Operator's Manual

ALLIS-CHALMERS

ALL-WHEEL-STEER LAWN TRACTOR SERIES 0

Models

AC23460AWS (49-State) (7800511)
AC23460AWS (California) (7800543)

Not for Reproduction

NOTE: Specifications are correct at time of printing and are subject to change without notice.
* Actual sustained engine power will likely be lower due to operating limitations and environmental factors. Please refer to 'Engine Power Rating Information' for further details.

ALLIS-CHALMERS®
www.allischalmerslawn.com

Manual No. 7103187 (Rev. '-', 2/19/2009)

Downloaded from www.Manualslib.com manuals search engine

Thank you for purchasing this quality-built Allis-Chalmers product. We are pleased that you've placed your confidence in the Allis-Chalmers brand. When operated and maintained according to the instructions in this manual, your Allis-Chalmers mower will provide many years of dependable service.

This manual contains safety information to make you aware of the hazards and risks associated with mowers and how to avoid them. Because Allis-Chalmers does not necessarily know all the applications this mower could be used for, it is important that you read and understand these instructions. Keep this manual near the mower for convenient reference.

This mower requires final assembly before use. Refer to the *Assembly* section of this manual for instructions on final assembly procedures. Follow the instructions completely.

Where to Find Us

You never have to look far to find Briggs & Stratton support and service for your mower. Consult your Yellow Pages. There are over 30,000 Briggs & Stratton authorized service dealers worldwide who provide quality service. You can also contact Customer Service at 1-800-837-6836, or on the Internet at www.allischalmerslawn.com.

Mower

Model Number _____

Serial Number _____

Engine

Model _____

Type _____

Trim _____

Date Purchased

☐☐ ☐☐ ☐☐

Not for Reproduction

ALLIS-CHALMERS is a registered trademark of Allis-Chalmers Manufacturing Company and is used under license.

Briggs & Stratton Yard Power Products Group
Copyright © 2009, Briggs & Stratton Corporation
Milwaukee, WI, USA. All Rights Reserved.

Downloaded from www.Manualslib.com manuals search engine

Table of Contents

Operator Safety 4
- Important Operator Safety Instructions 4
- International Pictorials 7

Assembly 8
- Parts Bag - Contents 8
- Installing the Seat 9
- Assembling the Steering Wheel 9
- Maintenance Free Battery 10
- IMPORTANT! Before You Start Mowing 11

Features and Controls 13

Operation 14
- Attachments 14
- Using Controls 14
- Driving and Stopping the Unit 15
- Mowing 18
- Engine Operation 20
- Tips 21

Maintenance 22
- Maintenance Schedule 22
- General Recommendations 23
- Inspection 23
- Adjustments 25
- Maintenance Free Battery 28
- Lubrication 29
- Mower Deck Maintenance 30
- Misc 36
- Storage 39

Troubleshooting 40

Specifications 42

Slope Guide 43

Warranties 47
- General Warranty 47

Not for Reproduction

WARNING

Battery posts, terminals and related accessories contain lead and lead compounds, chemicals known to the State of California to cause cancer and birth defects or other reproductive harm. Wash hands after handling.

WARNING

Engine exhaust, some of its constituents, and certain vehicle components contain or emit chemicals known to the State of California to cause cancer or other reproductive harm.

Downloaded from www.Manualslib.com manuals search engine

Important Operator Safety Instructions

WARNING: This powerful cutting machine is capable of amputating hands and feet and can throw objects that can cause injury and damage! Failure to comply with the following SAFETY instructions could result in serious injury or death to the operator or other persons. The owner of the machine must understand these instructions and must allow only persons who understand these instructions to operate machine. Each person operating the machine must be of sound mind and body and must not be under the influence of any substance, which might impair vision, dexterity or judgment. If you have any questions pertaining to your machine which your dealer cannot answer to your satisfaction, contact Customer Service. Phone: (1-800-837-6836).

Protection for Children

Tragic accidents can occur if the operator is not alert to the presence of children. Children are often attracted to the machine and the mowing activity. Children who have been given rides in the past may suddenly appear in the mowing area for another ride and be run over or backed over by the machine. Never assume that children will remain where you last saw them.

1. KEEP children out of the mowing area and under the watchful care of a responsible adult other than the operator.
2. DO NOT allow children in yard when machine is operated (even with the blade OFF).
3. DO NOT allow children or others to ride on machine, attachments or towed equipment (even with the blades OFF). They may fall and be seriously injured.
4. DO NOT allow pre-teenage children to operate machine.
5. ALLOW only responsible adults & teenagers with mature judgment under close adult supervision to operate machine.
6. DO NOT operate blades in reverse. STOP BLADES. LOOK and SEE behind and down for children, pets and hazards before and while backing.
7. USE EXTRA CARE when approaching blind corners, shrubs, trees, or other objects that may obscure vision.

Protection against Tipovers

Slopes are a major factor related to loss-of-control and tip-over accidents, which can result in severe injury or death. All slopes require extra CAUTION. If you cannot back up the slope or if you feel uneasy on the slope, DO NOT mow it. Use extra care with grass catchers or other attachments; these affect the handling and the stability of the machine. Refer to the Slope Guide at the end of this manual.

1. DO NOT operate machine on slopes exceeding 15 degrees (27% grade).
2. Exercise EXTREME CAUTION on slopes above 10 degrees (18% grade). Turn blades OFF when traveling uphill. Use a slow speed and avoid sudden or sharp turns.
3. DO NOT operate machine back and forth across face of slopes. Operate up and down. Practice on slopes with blades off.
4. AVOID starting, stopping or turning on slopes. If machine stops going uphill or tires lose traction, turn blades OFF and back slowly straight down the slope.
5. STAY ALERT for holes and other hidden hazards. Tall grass can hide obstacles. Keep away from ditches, washouts, culverts, fences and protruding objects.

Protection against Tipovers

(Continued From Previous Column)

6. KEEP A SAFE DISTANCE (at least 3 feet) away from edge of ditches and other drop offs. The machine could turn over if an edge caves in.
7. Always begin forward motion slowly and with caution.
8. Use weights or a weighted load carrier in accordance with instructions supplied with a grass catcher. DO NOT operate machine on slopes exceeding 10 degrees (18% grade) when equipped with grass catcher.
9. DO NOT put your foot on the ground to try to stabilize the machine.
10. DO NOT operate machine on wet grass. Reduced traction could cause sliding.
11. Choose a low enough speed setting so that you will not have to stop or shift on a slope. Tires may lose traction on slopes even though the brakes are functioning properly.
12. DO NOT operate machine under any condition where traction, steering or stability is doubtful.
13. Always keep the machine in gear when going down slopes. DO NOT shift to neutral (or actuate hydro roll release) and coast downhill.

Preparation

1. Read, understand, and follow instructions and warnings in this manual and on the machine, engine and attachments. Know the controls and the proper use of the machine before starting.
2. Only mature, responsible persons shall operate the machine and only after proper instruction.
3. Data indicates that operators age 60 and above, are involved in a large percentage of mower-related injuries. These operators should evaluate their ability to operate the mower safely enough to protect themselves and others from serious injury.
4. Handle fuel with extra care. Fuels are flammable and vapors are explosive. Use only an approved fuel container. DO NOT remove fuel cap or add fuel with engine running. Add fuel outdoors only with engine stopped and cool. Clean spilled fuel from machine. DO NOT smoke.
5. Practice operation of machine with BLADES OFF to learn controls and develop skills.
6. Check the area to be mowed and remove all objects such as toys, wire, rocks, limbs and other objects that could cause injury if thrown by blade or interfere with mowing.

Not for Reproduction

Downloaded from www.Manualslib.com manuals search engine

Important Operator Safety Instructions (Continued)

Protection against Tipovers

(Continued From Previous Column)

7. Keep people and pets out of mowing area. Immediately STOP blades, STOP engine, and STOP machine if anyone enters the area.
8. Check shields, deflectors, switches, blade controls and other safety devices frequently for proper operation and location.
9. Make sure all safety decals are clearly legible. Replace if damaged.
10. Protect yourself when mowing and wear safety glasses, a dust mask, long pants and substantial footwear.
11. Know how to STOP blades and engine quickly in preparation for emergencies.
12. Use extra care when loading or unloading the machine into a trailer or truck.
13. Check grass catcher components frequently for signs of wear or deterioration and replace as needed to prevent injury from thrown objects going through weak or worn spots.

Safe Handling of Gasoline

To avoid personal injury or property damage, use extreme care in handling gasoline. Gasoline is extremely flammable and the vapors are explosive.

1. Extinguish all cigarettes, cigars, pipes and other sources of ignition.
2. Use only an approved fuel container.
3. DO NOT remove fuel cap or add fuel with the engine running. Allow the engine to cool before refueling.
4. DO NOT refuel the machine indoors.
5. DO NOT store the machine or fuel container inside where there is an open flame, spark or pilot light such as on a water heater or other appliances.
6. DO NOT fill fuel containers inside a vehicle or on a truck or trailer bed with a plastic liner. Always place the containers on the ground away from the vehicle before filling.
7. Remove gas-powered equipment from the vehicle or trailer and refuel it on the ground. If this is not possible, then refuel equipment using a portable container, rather than a gasoline dispenser nozzle.
8. DO NOT start gas powered equipment in enclosed vehicles or trailers.
9. Keep the nozzle in contact with the rim of the fuel tank or container opening at all times until fueling is complete. DO NOT use a nozzle lock-open device
10. If fuel is spilled on clothing, change clothing immediately.
11. Never overfill a fuel tank. Replace fuel cap and tighten securely.

Operation

1. Mount and dismount machine from left side. Keep clear of discharge opening at all times.
2. Start engine from operator's seat, if possible. Make sure blades are OFF and parking brake is set.
3. DO NOT leave machine with engine running. STOP engine, STOP blades, SET brake, and Remove key before leaving operators position of any reason.
4. DO NOT operate machine unless properly seated with feet on feet rests or pedal(s).
5. STOP BLADES and ENGINE and make sure blades have stopped before removing grass catcher or unclogging mower to prevent loss of fingers or hand.
6. Blades must be OFF except when cutting grass. Set blades in highest position when mowing over rough ground.
7. Keep hands and feet away from rotating blades underneath deck. DO NOT place foot on ground while BLADES are ON or machine is in motion.
8. DO NOT operate machine without entire grass catcher or guards in place and working. DO NOT point discharge at people, passing cars, windows or doors.
9. Slow down before turning.
10. Watch out for traffic when near or crossing roadways.
11. STOP engine immediately after striking an obstruction. Inspect machine and repair damage before resuming operation.
12. Operate machine only in daylight or with good artificial light.
13. Exercise CAUTION when pulling loads. Limit loads to those you can safely control and attach loads to hitch plate as specified with attachment instructions.
14. On slopes, the weight of the towed equipment may cause loss of traction and loss of control. When towing, travel slowly and allow extra distance to stop.
15. DO NOT operate engine in enclosed areas. Engine exhaust gases contain carbon monoxide, a deadly poison.
16. DO NOT discharge material against a wall or obstruction. Material may ricochet back towards the operator.
17. Only use accessories approved by the manufacturer. See manufacturer's instructions for proper operation and installation of accessories.

Not for Reproduction

Downloaded from www.Manualslib.com manuals search engine

Important Operator Safety Instructions (Continued)

Towing

1. Tow only with a machine that has a hitch designed for towing. DO NOT attach towed equipment except at the hitch point.
2. Follow the manufacturer's recommendation for weight limits for towed equipment and towing on slopes.
3. DO NOT allow children or others on towed equipment.
4. On slopes, the weight of the towed equipment may cause loss of traction and loss of control.
5. Travel slowly and allow extra distance to stop.

Maintenance

1. DO NOT store machine or fuel container inside where fumes may reach an open flame, spark or pilot light such as in a water heater, furnace, clothes dryer or other gas appliance. Allow engine to cool before storing machine in an enclosure. Store fuel container out of the reach of children in a well ventilated, unoccupied building.
2. Keep engine free of grass, leaves or excess grease to reduce fire hazard and engine overheating.
3. When draining fuel tank, drain fuel into an approved container outdoors and away from open flame.
4. Check brakes frequently; adjust, repair or replace as needed.
5. Keep all bolts, nuts and screws properly tight. Check that all cotter pins are in proper position.

Maintenance

(Continued From Previous Column)

6. Always provide adequate ventilation when running engine. Exhaust gases contain carbon monoxide, an odorless and deadly poison.
7. Disconnect negative (black) cable from battery before performing maintenance or service. Cranking engine could cause injury.
8. DO NOT work under machine without safety blocks.
9. Service engine and make adjustments only when engine is stopped. Remove spark plug wire(s) from spark plug(s) and secure wire(s) away from spark plug(s).
10. DO NOT change engine governor speed settings or overspeed engine.
11. Lubricate machine at intervals specified in manual to prevent controls from binding.
12. Mower blades are sharp and can cut. Wrap the blades or wear heavy leather gloves and use CAUTION when handling them.
13. DO NOT test for spark by grounding spark plug next to spark plug hole; spark plug could ignite gas exiting engine.
14. Have machine serviced by an authorized dealer at least once a year and have the dealer install any new safety devices.
15. Maintain or replace safety and instruction labels as necessary.
16. Use only genuine replacement parts to assure that original standards are maintained.

Not for Reproduction

Downloaded from www.Manualslib.com manuals search engine

International Pictorials

IMPORTANT: Some of the following pictorials are located on your unit or on literature supplied with the product. Before you operate the unit, learn and understand the purpose for each pictorial.

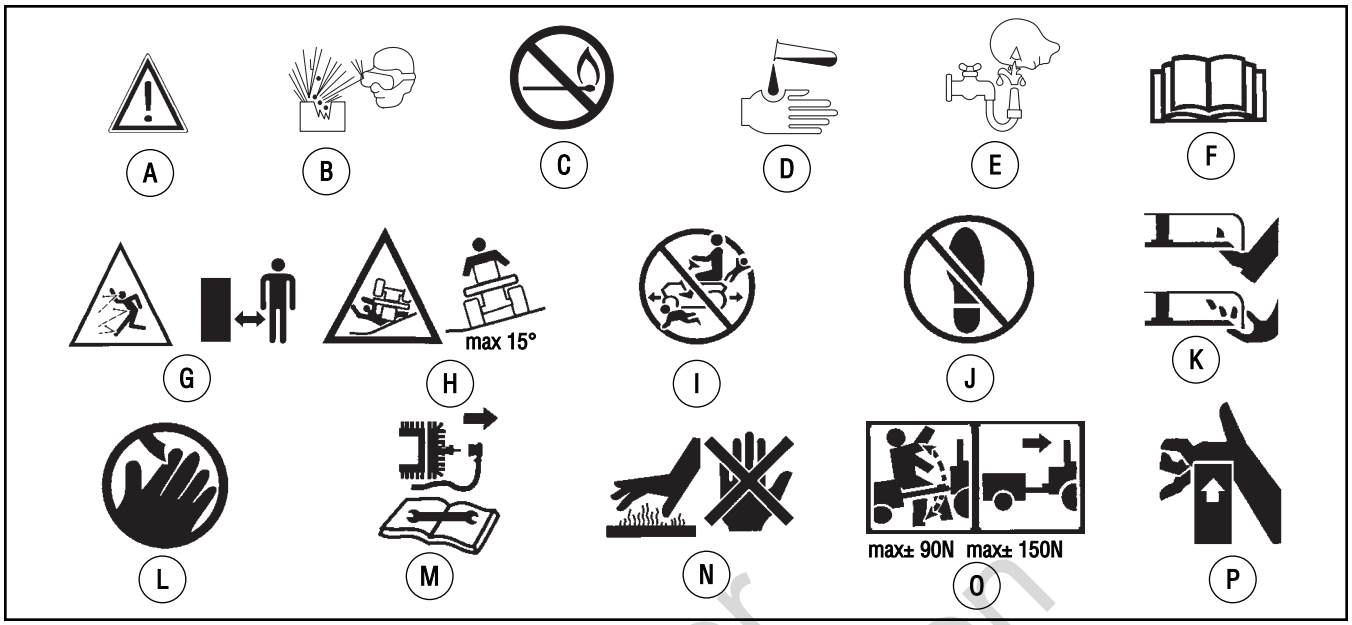

Figure 1: Safety warning pictorials

A - Warning
B - Shield Eyes. Explosive Gases Can Cause Blindness Or Injury.
C - No Sparks, Flames or Smoking.
D - Sulphuric Acid Can Cause Blindness Or Severe Burns
E - Flush Eyes Immediately With Water. Get Medical Help Fast.
F - IMPORTANT: Read Owner's Manual Before Operating This Machine.
G - WARNING: Thrown Objects. Keep Bystanders Away. Read User Instructions Before Operating This Machine.
H - WARNING: Do Not Use This Machine On Slopes Greater Than 15 Degrees.
I - DANGER: Keep People, Especially Children, Away From Unit.
J - DANGER: No Step.
K - DANGER: Keep Feet And Hands Away From Rotating Blade.
L- DANGER: Keep Hands Away From Rotating Blade.
M - DANGER: Disconnect Spark Plug Wire Before Servicing Unit.
N - WARNING: Hot Surface.
O - WARNING: Use Caution When Connecting Or Disconnecting Accessories.
P - WARNING: Crushed Fingers.

Not for Reproduction

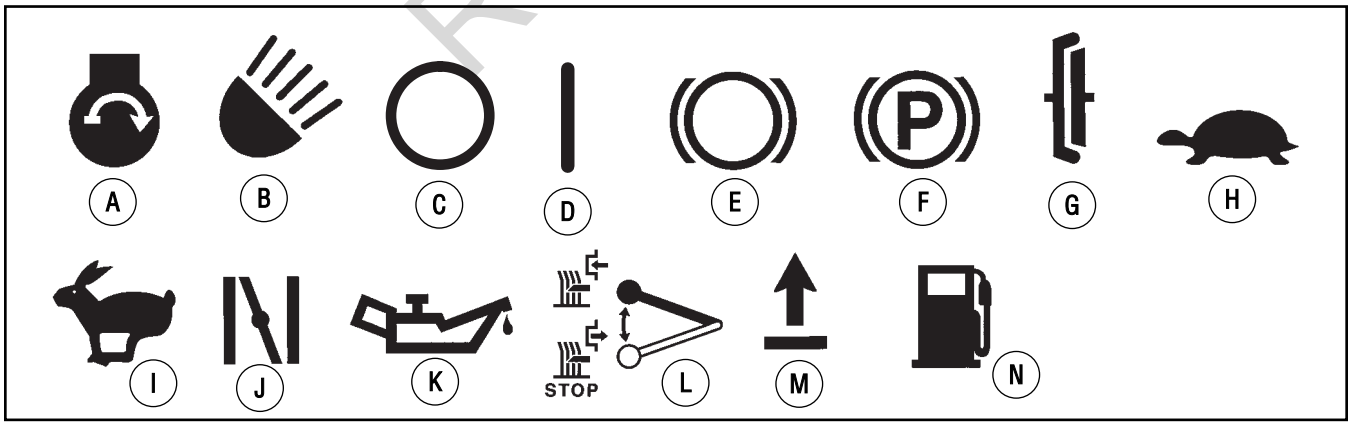

Figure 2: Control and operating pictorials

A - Engine start
B - Lights
C - Engine off
D - Engine on
E - Brake
F - Parking brake
G - Clutch
H - Slow
I - Fast
J - Choke
K - Oil
L - Blade rotation control
M - Raise
N - Fuel

Downloaded from www.Manualslib.com manuals search engine

Assembly

Read and follow the assembly and adjustment instructions for your mower.
All fasteners are in the parts bag. Do not discard any parts or material until the unit is assembled.

NOTE: In this instruction book, left and right describe the location of a part with the operator on the seat.

WARNING: Before doing any assembly or maintenance to the mower, remove the wire from the spark plug.

Parts Bag - Contents

The fasteners and other loose parts are shown below. The fasteners are shown full size. The quantity is shown in brackets ( ).

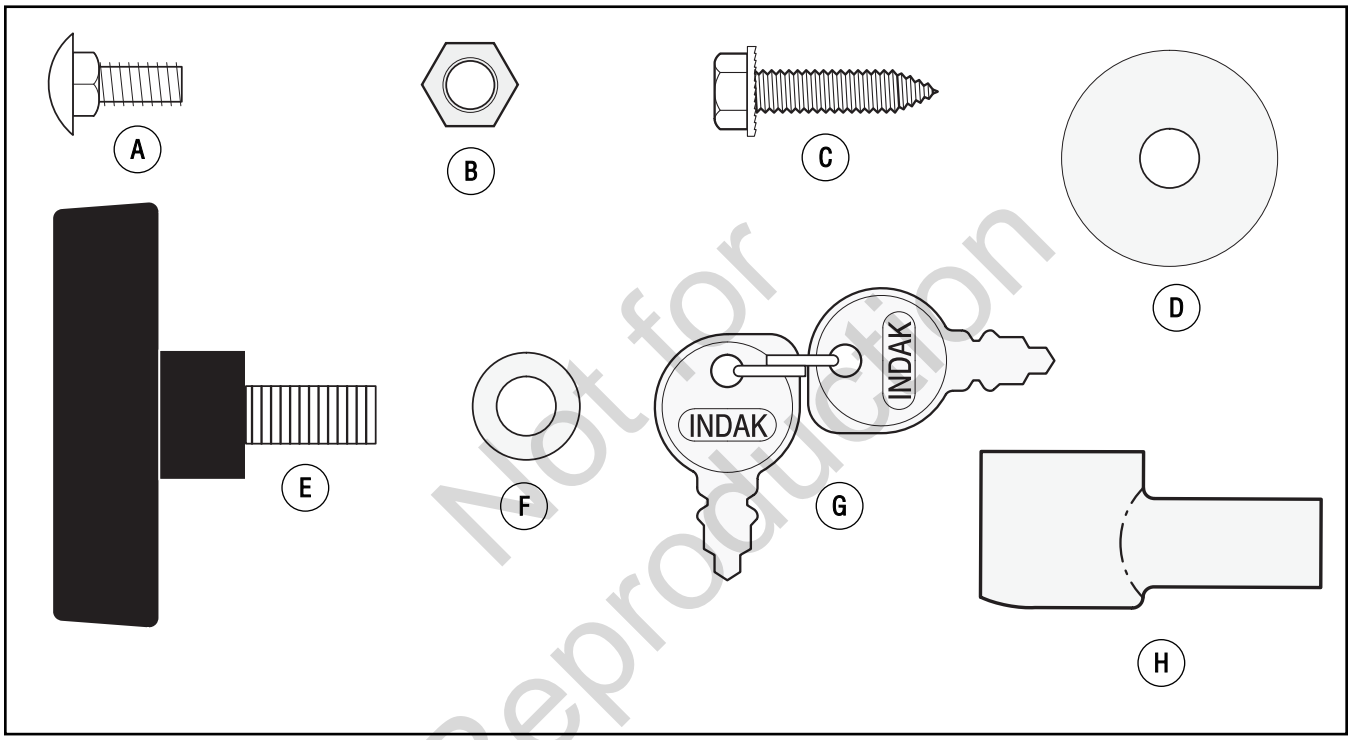

Not for Reproduction

Figure 3: Parts bag components

A - (2) Carriage bolt
B - (2) Hex nut
C - (1) Bolt
D - (1) Washer
E - (2) Knob
F - (2) Washer
G - (1) Keys & ring
H - (1) Terminal cover

Downloaded from www.Manualslib.com manuals search engine

Installing the Seat

How to Install the Seat

1. Carefully remove the plastic bag from the **seat**. Use the fasteners shown below to install the **seat**. The fasteners are shown at full size.

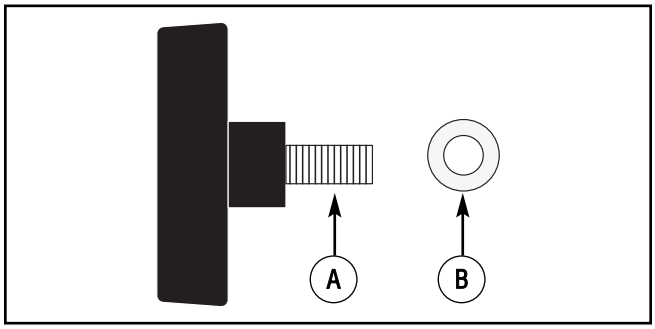

Figure 4: Seat parts

A - Wing bolt (Also see 'E' in Figure 3)
B - Washer (Also see 'F' in Figure 3)

NOTE: Fasteners may be attached to seat for shipping purposes, if so remove fasteners before proceeding.

2. Align the holes in the **seat hinge** to the holes in the **seat** (Figure 5). Fasten the seat to the **seat hinge** with the fasteners as shown.
3. Check the operating position of the **seat**. If the **seat** needs to be adjusted, loosen the two **wing bolts**. Slide the **seat** forward or backward along the **seat adjusting holes** as shown. Tighten the **wing bolts (A)**.

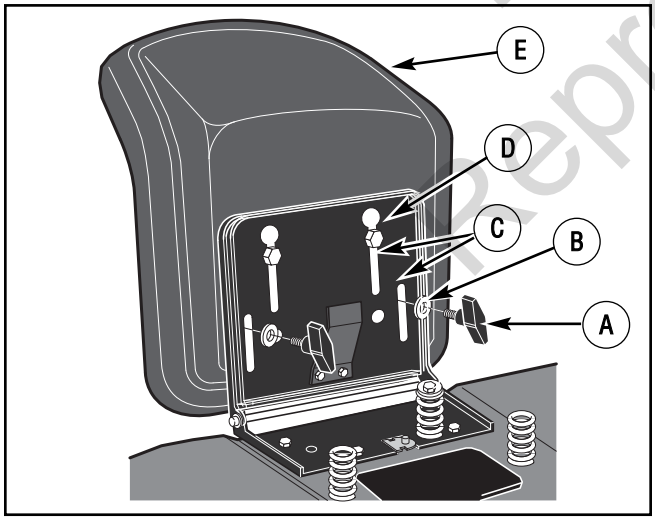

Figure 5: Seat

A - Wing bolt
B - Washer
C - Seat adjusting hole
D - Seat hinge
E - Seat

Assembling the Steering Wheel

How to Assemble the Steering Wheel

Tools Required: 3/8" Socket Wrench

Attach the steering wheel as follows:

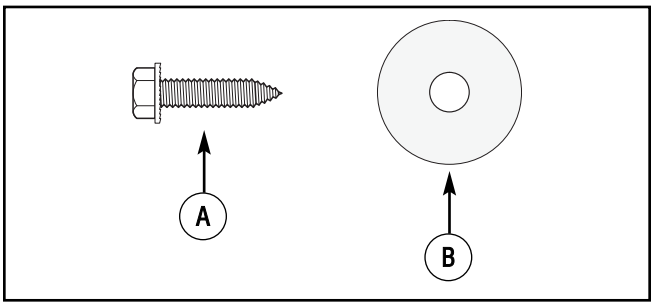

Figure 6: Steering wheel parts

A - Screw (Also see 'C' in Figure 3)
B - Washer (Also see 'D' in Figure 3)

1. Make sure the front wheels point forward.
2. Slide the **bellows** over the **steering post** (Figure 7).

   NOTE: Before attachment of the steering wheel, make sure that the front wheels point forward and are straight. For proper alignment of the steering wheel, see Figure 7.
3. Slide the **steering wheel** onto the **steering post**.
4. Use the fasteners shown above to secure the steering wheel. The fasteners are shown at full size. Tighten the screw until snug and then add 1/4 turn. DO NOT over tighten.
5. Attach the **cover** to the **steering wheel**.
6. Some models have an *optional* **decal** in the parts bag. Attach the **decal** to the center of the **steering wheel** as shown.

Not for Reproduction

Downloaded from www.Manualslib.com manuals search engine

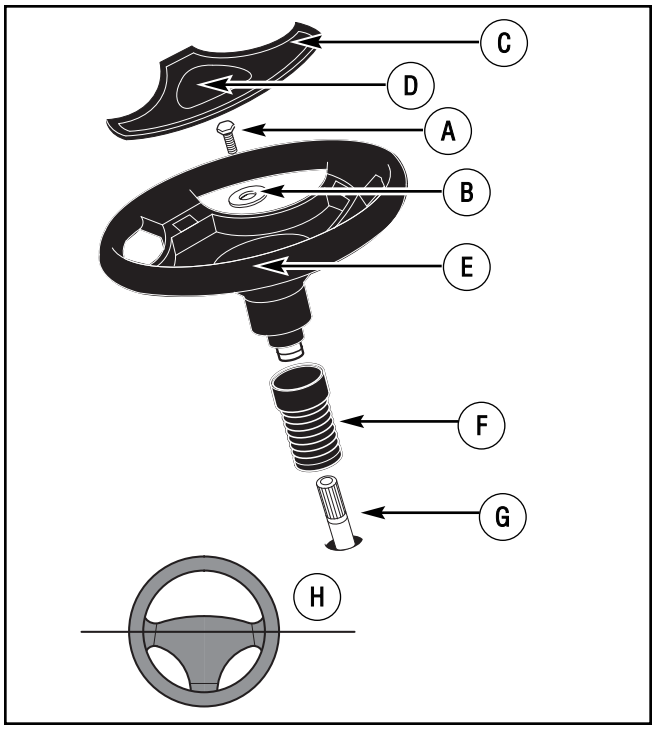

Figure 7: Steering post

A - Screw
B - Washer
C - Cover
D - Decal (Optional)
E - Steering wheel
F - Bellows
G - Steering post
H - Straight

Maintenance Free Battery

IMPORTANT: Before you attach the battery cables to the battery, check the battery date. The battery date tells if the battery must be charged.

1. Check the top and the side of the battery for the location of the **battery date** (Figure 9).
2. If the **battery** is put into service before the **battery date**, the battery cables can be attached without charging the **battery**. See "How To Install The Battery Cables".
3. If the **battery** is put into service *after* the **battery date**, the **battery** must be charged. See "How To Charge The Maintenance Free Battery".

How to Charge the Maintenance Free Battery

WARNING: When you charge the battery, do not smoke. Keep the battery away from any sparks. The fumes from the battery acid can cause an explosion.

1. Remove the **battery** and **battery tray**.
2. Remove the protective cap from the **battery terminal**.
3. Use a 12 volt battery charger to charge the **battery**. Charge at a rate of 6 amperes for one hour. If you do not have a battery charger, have an authorized service center charge the battery.
4. Install the **battery** and **battery tray**. Make sure the **positive (+) terminal** is on the left side.

How to Install the Battery Cables

WARNING: To prevent sparks, fasten the red cable to the positive (+) terminal before you connect the black cable.

Use the fasteners shown below to install the **battery cables**. The fasteners are shown at full size.

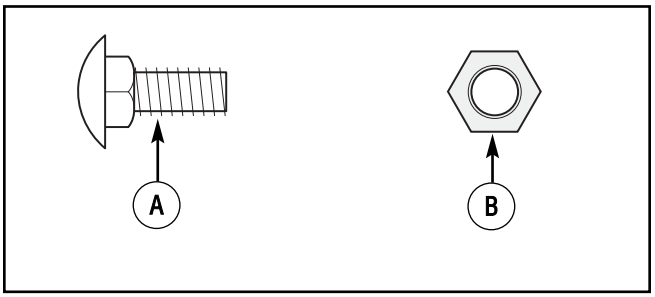

Figure 8: Battery cable parts

A - Carriage bolt (Also see 'A' in Figure 3)
B - Hex nut (Also see 'B' in Figure 3)

Not for Reproduction

Downloaded from www.Manualslib.com manuals search engine

1. Remove the protective cap from the **battery terminal**.
2. Fasten the **red cable** and **terminal cover** (if equipped) to the **positive (+) terminal** with the fasteners as shown (Figure 9).
3. Fasten the black cable to the negative (-) terminal with the fasteners as shown.

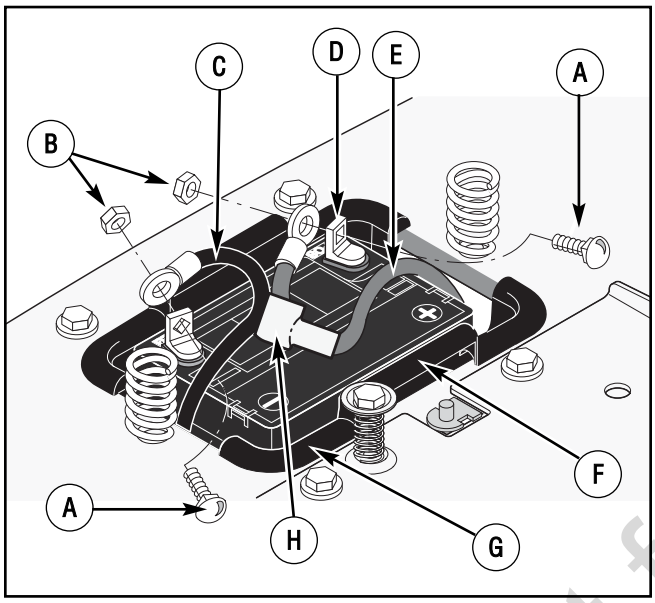

Figure 9: Battery

A - Carriage bolt
B - Hex nut
C - Black cable
D - Positive (+) terminal
E - Red cable
F - Battery
G - Battery tray
H - Terminal cover (Also see 'H' in Figure 3)

IMPORTANT! Before You Start Mowing

- Check the engine oil.
- Fill the fuel tank with gasoline.
- Check the air pressure of the tires.
- Check the level of the mower housing.
- Make sure the battery cables are attached.
- Make sure the wire is attached to the spark plug.

WARNING: Before doing any assembly or maintenance to the mower, remove the wire from the spark plug.

NOTE: In this instruction book, left and right describe the location of a part with the operator on the seat.

Operator Presence System (Seat)

The seat has an Operator Presence System to shut off the engine when the operator leaves the seat. This system is not intended for regular use in stopping the engine or the blade(s). Before leaving the seat, move the blade rotation control to the DISENGAGE position, shift to neutral, set the parking brake, and stop the engine.

How To Check The Safety Interlock Switches

To check the function of the safety interlock switches, follow the steps below.

1. Check the **blade rotation control switch**. Sit in the seat. Depress the clutch/brake pedal. Move the blade rotation control to the ENGAGE position. Turn the ignition switch to the START position. The engine should not start. If the engine starts, the switch is defective and must be replaced.
2. Check the **clutch/brake switch**. Sit in the seat. Move the blade rotation control to the DISENGAGE position. **DO NOT** depress the clutch/brake pedal. Turn the ignition switch to the START position. The engine should not start. If the engine starts, the switch is defective and must be replaced.
3. Check the **Operator Presence System switch**. **DO NOT** sit in the seat. Depress the clutch/brake pedal. Move the **blade rotation control** to the DISENGAGE position. Turn the ignition switch to the START position. The engine should not start. If the engine starts, the switch is defective and must be replaced.
4. Check the **Reverse Mowing Option (RMO) switch**. Sit in the seat. Depress the clutch/brake pedal. Move the blade rotation control to the DISENGAGE position. Start the engine and move the drive control to the reverse (R) position. With the engine running, move the blade rotation control to the ENGAGE position. The engine should stop running. If the engine continues to run, the **RMO switch** is defective and must be replaced.

Not for Reproduction

Downloaded from www.Manualslib.com manuals search engine

How to Prepare the Engine

NOTE: The engine was shipped from the factory filled with oil. Check the level of the oil. Add oil as needed.

NOTE: The operation of a new engine will sometimes result in a slight amount of smoke. This smoke is caused by paint or oil on or around the muffler. This is normal and only expected during initial operation.

A separate engine manual is also included with the unit. See this engine manual for the manufacturer's instructions for the type of gasoline and oil to use. Before you use the unit, read the information on safety, operation, maintenance, and storage.

WARNING: Follow the engine manufacturer's instructions for the type of gasoline and oil to use. Always use a safety gasoline container. Do not smoke when adding gasoline to the engine. When inside an enclosure, do not fill with gasoline. Before you add gasoline, stop the engine. Let the engine cool for several minutes.

IMPORTANT: This unit is equipped with an internal combustion engine and must not be used on or near any unimproved forest-covered, brush-covered or grass-covered land unless the engine's exhaust system is equipped with a spark arrester meeting applicable local or state laws (if any). If a spark arrester is used, it must be maintained in effective working order by the operator.

In the State of California the above is required by law (Section 4442 of the California Public Resources Code). Other states may have similar laws. Federal laws apply on federal lands. See an Authorized Service Center for a spark arrester for the muffler.

In some areas, local law requires the use of a resistor spark plug to control the ignition signals. See an Authorized Service Center for a resistor spark plug for the engine.

NOTE: Actual sustained horsepower will likely be lower due to operating limitations and environmental factors.

Check the Tires

NOTE: The tires may be over inflated for shipment.

Check the air pressure in the tires. Tires with too much air pressure will cause the unit to ride rough. Also, the wrong air pressure will keep the mower housing from cutting level. Recommended air pressure is 14 PSI (1 BAR).

Check the Level of the Mower Deck

Make sure the level of cut is still correct. After you mow a short distance, look at the area that was cut. If the mower deck does not cut level, see the instructions on "How To Level The Mower Deck" in the Maintenance section of this instruction book.

Not for Reproduction

Downloaded from www.Manualslib.com manuals search engine

Features and Controls

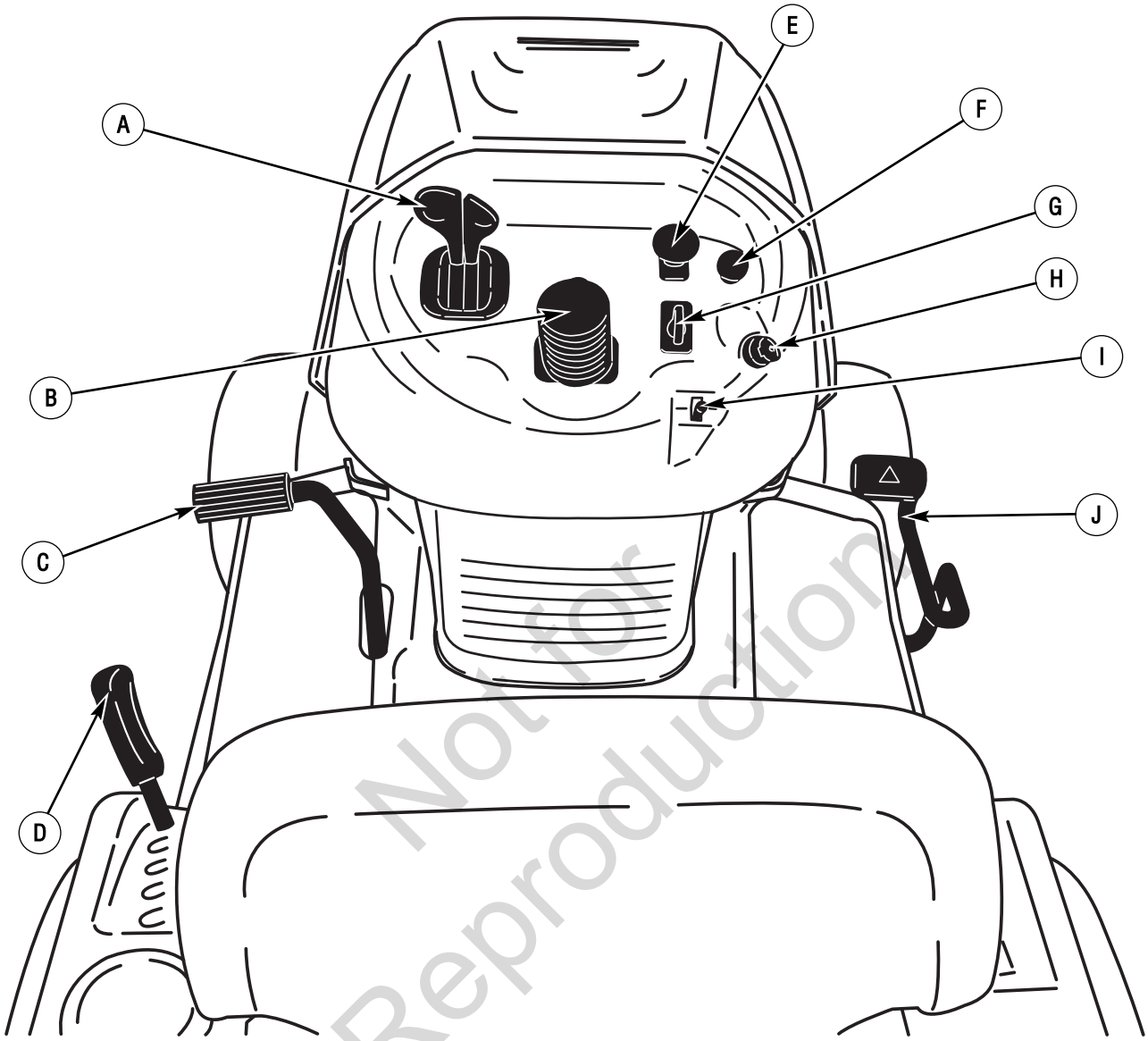

Not for Reproduction

A - Throttle Control / Choke Control Levers — Throttle control increases or decreases the speed of the engine. Choke control engages the choke to start a cold engine.

B - Steering Wheel (Removed for clarity) — Steers the unit.

C - Brake Pedal — Quickly stops the unit.

D - Deck Lift Lever — Changes the height of cut.

E - PTO Switch — Starts and stops the rotation of the blades.

F - Cruise Control — Locks ground speed in forward.

G - Reverse Mowing Option (RMO) — Allows engaging of mowing deck while traveling in reverse.

H - Ignition Switch — Starts and stops the engine. (Note: The headlight switch is incorporated into the ignition switch.)

I - Parking Brake Lever — Engages the brake when you leave the unit.

J - Speed Control Pedal — Changes the speed and the direction of the unit.

K - Automatic Drive Disconnect (not shown, located under the seat) — Disengages the transmission.

Downloaded from www.Manualslib.com manuals search engine

Operation

Attachments

This unit can use many different attachments.

For all pull-behind attachments or trailers, the maximum gross weight is 250 pounds. Gross weight is the weight of the attachment or trailer and any load that might be on or in it.

Do not operate on a slope that is greater than 10 degrees when using a pull-behind attachment or trailer. We have included a slope guide in this book to help you determine the slope on which you will be operating your unit. Never allow someone to stand or ride on or in an attachment or trailer.

Using Controls

How to Use the Throttle Control

Use the **throttle control** to increase or decrease the speed of the engine.

CAUTION: Always operate the engine with the throttle control in the FAST position. If the engine runs for several minutes at slower than the FAST position, the engine and transmission will overheat and can be damaged.

1. The FAST position is marked with a detent. For normal operation and when using a grass bagger, move the **throttle control** to the FAST position. For maximum charging of the battery and for a cooler running engine and transmission, operate the engine in the FAST position.
2. For transport and to tow pull behind attachments, control the ground speed with the speed control pedal.
3. The engine governor is set at the factory for maximum performance. Do not adjust the governor to increase the speed of the engine.

Not for Reproduction

Downloaded from www.Manualslib.com manuals search engine

How to Engage the Blades

The **PTO switch** is above and to the right of the steering wheel (Figure 10). Use the **PTO switch** to engage the blades.

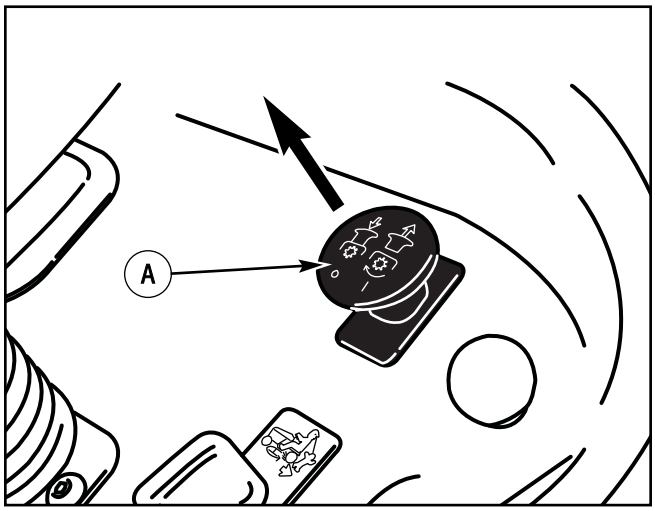

Figure 10: PTO switch

A - PTO switch (shown in the DISENGAGE position)

1. Before you start the engine, make sure the **PTO switch** is pushed down in the **DISENGAGE position**.
2. Pull the **PTO switch** up to the **ENGAGE position** to rotate the blades.

   NOTE: If the engine stops when you engage the blades, the seat switch is not activated. Make sure you sit in the middle of the seat. Also, make sure the wire is connected to the seat switch.
3. Push the **PTO switch** down to the **DISENGAGE position** to stop the blades. Before you leave the operator's position, make sure the blades have stopped rotating.
4. Before you ride the unit across a sidewalk or a road, push the **PTO switch** down to the **DISENGAGE position**.

WARNING: Always keep your hands and feet away from the blade, deflector opening, and the mower housing when the engine runs.

How to Use the Speed Control Pedal

The drive system uses a Hydrostatic Automatic Drive transmission. The Hydrostatic transmission is very easy to operate. This type of drive system does not require a shift lever or a clutch pedal.

The speed and direction of travel is controlled by a single **speed control pedal** operated with your right foot. Do not use the left brake pedal in normal operation. Only use the left brake pedal to quickly stop in an emergency.

Driving and Stopping the Unit

How to Drive Forward

1. The **automatic drive disconnect** must be in the DRIVE position (Figure 13).
2. Slowly release your left foot from the brake pedal.
3. Move the throttle control to the FAST position.
4. Slowly push the **speed control pedal** forward to the desired speed (Figure 11).
5. To increase forward speed, slowly move the speed control pedal forward. To reduce forward speed, slowly release the speed control pedal until the unit slows to the desired speed.

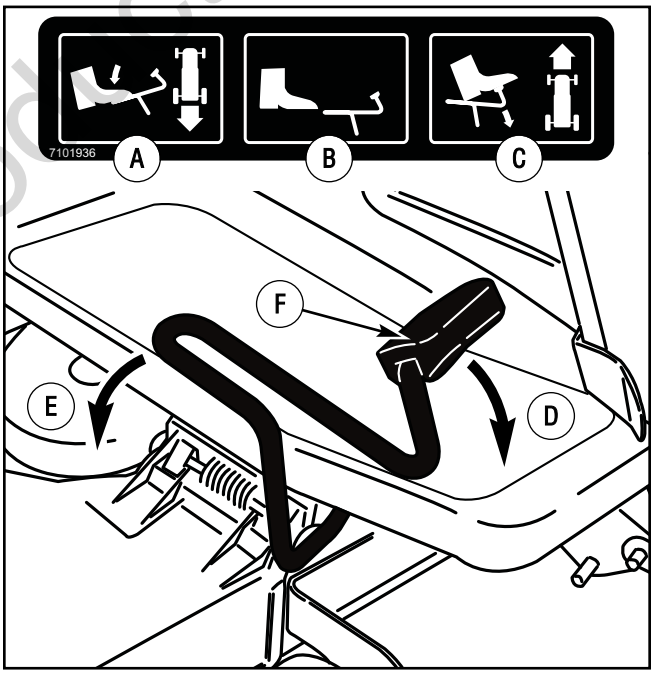

Figure 11: Speed control operation

A - Reverse
B - Neutral
C - Forward
D - Forward movement
E - Reverse movement
F - Speed control pedal

Not for Reproduction

Downloaded from www.Manualslib.com manuals search engine

How to Use the Cruise Control

To engage the cruise control:

1. Slowly push the **speed control pedal** forward to the desired speed (Figure 11).
2. Pull up on the **cruise control knob** (Figure 12). Release the **speed control pedal**. The unit should continue traveling forward at the desired speed.

   NOTE: The cruise control only operates in forward speeds.

To disengage the cruise control:

1. Push the **speed control pedal** (Figure 11), OR
2. Push the **brake pedal**.

WARNING: Do not engage the cruise control when driving on slopes, or when people or animals are in the vicinity.

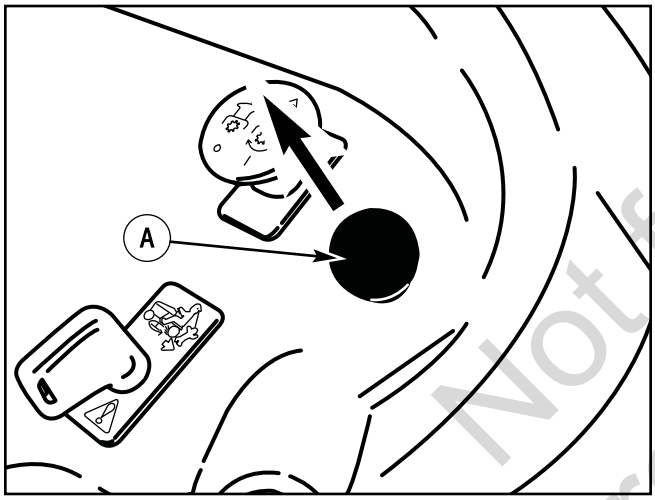

Figure 12: Cruise control

A - Cruise Control knob

How to Drive in Reverse

1. Look to the rear.
2. Slowly push the **speed control pedal** to the REVERSE position.

How to Change Direction

CAUTION: To change directions, do not use the left brake pedal. Use only the speed control pedal.

1. Slowly remove your foot from the **speed control pedal**. The **speed control pedal** will automatically return to the NEUTRAL position.
2. When the unit stops, slowly move the **speed control pedal** to the desired direction.

Speed Control Pedal Positions

The forward speed is controlled by the position of the **speed control pedal**. The following chart provides functions along with the **pedal positions**. Always operate the engine with the **throttle control** in the **FAST** position.

Function	Pedal Positon	Throttle Position
Trimming Snow Thrower	1/3	Fast Throttle
Bagging Grass	1/3 to 1/2	
Normal Mowing	1/2 to 2/3	
Easy Mowing Snow Blade	1/2 to 3/4	
Transport	FULL	
Pull Behind Attachments	1/3 to 1/2	

How to Disconnect the Transmission

To push the unit, use the **automatic drive disconnect** to release the transmission. The **automatic drive disconnect** is located under the seat.

1. The engine must be off.
2. Raise the seat. The **automatic drive disconnect** is under the seat.
3. Move and latch the **automatic drive disconnect** in the PUSH position (Figure 13). The transmission is now released and the unit can be pushed.

   NOTE: In cold weather, the heavy viscosity oil in the transmission will make the unit difficult to push.
4. To engage the transmission, unlatch the **automatic drive disconnect**. The transmission is now connected and ready to operate.

Not for Reproduction

Downloaded from www.Manualslib.com manuals search engine

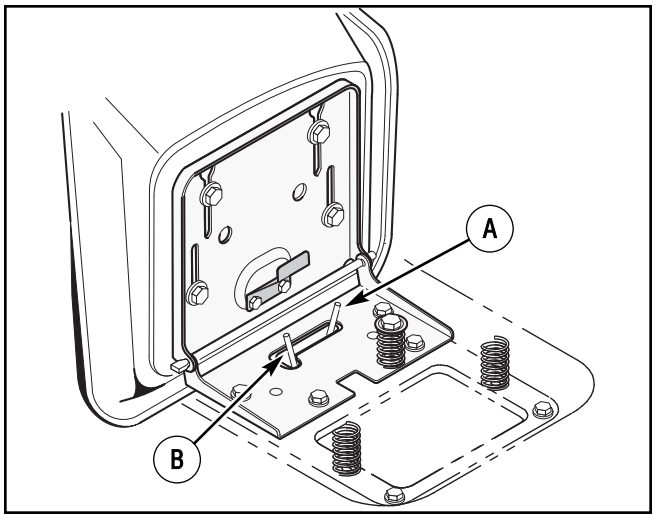

Figure 13: Automatic drive disconnect

A - Automatic drive disconnect DRIVE position
B - Automatic drive disconnect PUSH position

How to Set the Parking Brake

1. Completely push the brake pedal forward.
2. Lift the **parking brake lever** (Figure 14).
3. Remove your foot from the brake pedal and then release the **parking brake lever**. Make sure the parking brake will hold the unit.
4. To release the parking brake, completely push the brake pedal forward. The parking brake will automatically release.

WARNING: Before you leave the operator's position, move the speed control pedal to the neutral (N) position. Set the parking brake. Move the blade rotation control to the DISENGAGE position. Stop the engine and remove the ignition key.

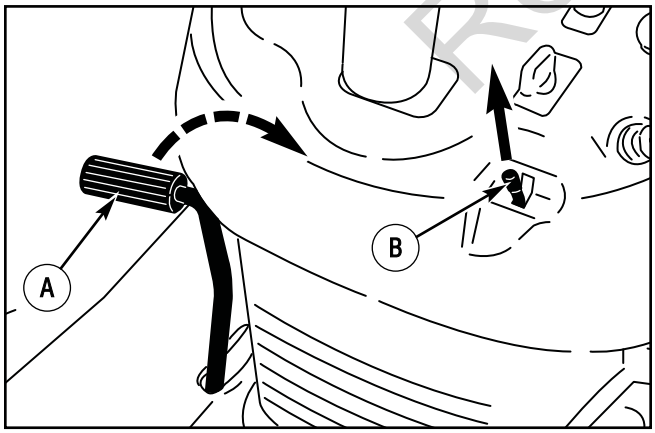

Figure 14: Parking brake

A - Brake pedal
B - Parking brake lever

How to Change the Cutting Height

To change the cutting height, raise or lower the **deck ift lever** as follows:

1. Move the **deck lift lever** forward to lower the mower housing and back to raise the mower deck (Figure 15).
2. When you ride on a sidewalk or road, move the deck lift lever to the highest position and disengage the blades (Figure 10).

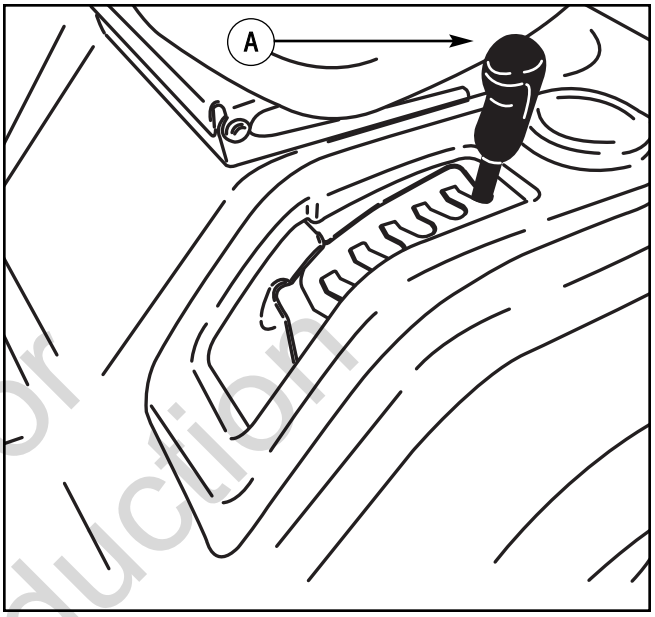

Figure 15: Lift control

A - Deck lift lever

How to Stop the Unit

1. Slowly remove your foot from the speed control pedal. The speed control pedal will automatically return to the NEUTRAL position and the unit will stop.
2. Move the blade rotation control to the DISENGAGE position.
3. Set the parking brake.

WARNING: Make sure the parking brake will hold the unit.

4. Move the throttle control to the SLOW position.
5. To stop the engine, turn the ignition key to the OFF position. Remove the key.

Not for Reproduction

Downloaded from www.Manualslib.com manuals search engine

How to Transport the Unit

To transport the unit, follow the steps below.

1. Disengage the blades.
2. Raise the deck lift lever to the highest position.
3. Move the throttle control to the FAST position.
4. Slowly push the speed control pedal forward to the desired speed.

Mowing

How to Operate the Mower Deck

WARNING: The deflector is a safety device. Do not remove the deflector. The deflector forces the discharged material toward the ground. Always keep the deflector in the down position. If the deflector is damaged, replace the deflector with an original equipment part from an authorized service center.

1. Start the engine.
2. Release the parking brake.
3. Move the deck lift lever to a height of cut position. In high or thick grass, cut the grass in the highest position first and then lower the mower deck to a lower position.

CAUTION: Do not operate with the mower deck in the LEVEL ADJUSTMENT position. If you operate in the LEVEL ADJUSTMENT position, the mower deck and blades can be damaged.

4. Move the throttle control to the SLOW position.
5. Engage the blades.
6. Move the throttle control to the FAST position.
7. Slowly push the speed control pedal to the desired speed.

   NOTE: When you mow in heavy grass or mow with a grass bagger, use a slow forward speed.
8. Make sure the level of cut set at the factory is still correct. After you mow a short distance, look at the area that was cut. If the mower deck does not cut level, see the instructions on “How To Level The Mower Deck” in the Maintenance section.

WARNING: For better control of the unit, always select a safe speed.

Reverse Mowing Option (RMO)

WARNING: Mowing in reverse can be hazardous to bystanders. Tragic accidents can occur if the operator is not alert to the presence of children. Never activate RMO if children are present. Children are often attracted to the unit and the mowing activity.

1. Engage the blades.
2. Insert the supplied key into the **RMO switch**, located to the right of the steering wheel bellows (Figure 16).
3. Turn the key. The L.E.D. light will illuminate, indicating thet the RMO feature has been activated. The mower deck can now be operated while the unit is traveling in reverse.
4. The reverse mowing option is deactivated when the blades are disengaged, and must be reactivated each time the blades are engaged, if desired.
5. Remove the key to restrict access to the RMO feature.

WARNING: The engine will shut off if the speed control pedal is moved into reverse while the blades are engaged and the RMO is not activated.

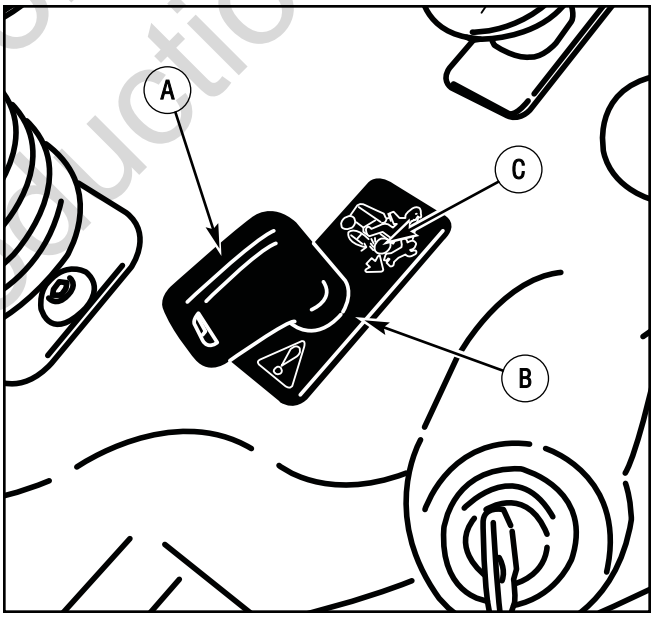

Figure 16: Reverse Mowing Option (RMO)

A - Key
B - RMO switch
C - L.E.D. light

Not for Reproduction

Downloaded from www.Manualslib.com manuals search engine

How to Operate the Unit on Hills

WARNING: Do not ride up or down slopes that are too steep to back straight up. Never ride the unit across a slope. See the "Slope Guide" in the back of this book for information on how to check slopes.

1. Control the speed only with the speed control pedal. Do not use the brake pedal on a hill.
2. To help prevent an accident, slowly move the speed control pedal. Avoid sudden turns or changes in speed.
3. To reduce forward speed when going down a hill, slowly release the speed control pedal until the unit slows to the desired speed.

How to Stop on a Hill

1. Avoid stopping on a hill. If you must quickly stop in an emergency, remove your right foot from the speed control pedal and quickly depress the left brake pedal.
2. Set the parking brake.
3. Before you dismount from the seat, move the throttle control to SLOW position, move the blade rotation control to the DISENGAGED position, turn off the engine and set the parking brake.

How to Start Operation on a Hill

1. Start the engine.
2. Move the blade rotation control to the ENGAGED position.
3. Move the throttle control to the FAST position.
4. Depress the brake pedal and release the parking brake. As you release the parking brake, push the speed control pedal to the desired speed.

WARNING: Slowly push the speed control pedal as you release the parking brake. The parking brake must be disengaged before the speed control pedal is able to engage the transmission.

All-Wheel Steering

Because both front and rear wheels turn, the tractor is very maneuverable. Because of the shorter turning radius, the tractor can operate closely around objects, such as shrubs and trees. However, because the rear wheels turn toward the object, the wheels could become wedged against a wall, tree, fence or other object. To free the wheels, do the following:

1. Disengage the blades.
2. Slightly turn the steering wheel away from the object. Do not sharply turn (more than 7 degrees) the steering wheel or the rear wheels will turn into the object.
3. Slowly back away from the object.

WARNING: Before backing up, always check behind for children, pets or other objects.

Not for Reproduction

Downloaded from www.Manualslib.com manuals search engine

Engine Operation

Before Starting the Engine

Check the Oil

NOTE: The engine was shipped from the factory filled with oil. Check the level of the oil. Add oil as needed. See the engine manufacturer's instructions for the type of gasoline and oil to use.

1. Make sure the unit is level.

   NOTE: Do not check the level of the oil while the engine runs.
2. Check the oil. Follow the procedure in the engine manufacturer's instructions.
3. If necessary, add oil until the oil reaches the FULL mark on the dipstick. The quantity of oil needed from ADD to FULL is shown on the dipstick. Do not add too much oil.

Add Gasoline

WARNING: Always use a safety gasoline container. Do not smoke when adding gasoline to the fuel tank. Do not add gasoline when you are inside an enclosure. Before you add gasoline, stop the engine and let the engine cool for several minutes.

Fill the fuel tank with regular unleaded gasoline. Do not use premium unleaded gasoline. Make sure the gasoline is fresh and clean. Leaded gasoline will increase deposits and shorten the life of the valves.

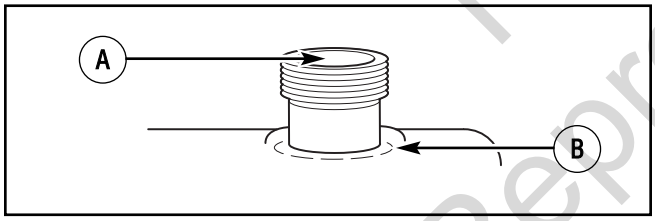

Figure 17: Gas tank

A - Fuel tank
B - Full line

CAUTION: A mixture of alcohol (ethanol or methanol) and gasoline (called gasohol), will attract moisture and cause acid deposits during storage. While the unit is in storage, the acids in the fuel can damage the fuel system.

To prevent engine problems with the fuel system, empty the fuel system before storage of 30 days or longer as follows.

1. Drain the fuel tank.
2. Start the engine. Let the engine run until the fuel lines and the carburetor are empty.
3. After storage, make sure you use fresh fuel. See the storage instructions for additional information.
4. Never use engine cleaner or carburetor cleaner in the fuel tank or permanent damage can occur.

Carburetor

Do not attempt to adjust the carburator. Engine adjustments and repairs should be performed only by an authorized dealer.

How to Start the Engine

WARNING: The electrical system has an operator presence system that includes a sensor switch for the seat. These components tell the electrical system if the operator is sitting on the seat. This system will stop the engine when the operator leaves the seat. For your protection, always make sure this system operates correctly.

NOTE: The engine will not start unless you depress the brake pedal or engage the parking brake and disengage the blades.

1. Push the brake pedal completely forward. Keep your foot on the pedal.
2. Make sure the blades are disengaged.
3. Move the throttle control completely forward to the FAST position.
4. Move the choke control completely forward.
5. Turn the ignition key to the START position. Release the key when the engine starts.

   NOTE: If the engine does not start after four or five tries, see the TROUBLESHOOTING CHART.
6. Turn off the choke, and slowly move the throttle control to the SLOW position.
7. Let a cold engine run for several minutes. Begin work when the engine is warm. To start a hot engine, move the throttle control to a position between FAST and SLOW.

Not for Reproduction

Downloaded from www.Manualslib.com manuals search engine

Tips

Operating Tips

1. Check the blade rotation control or the PTO clutch for correct adjustment. For the blades to disengage correctly, the adjustment must be correct.
2. Before you use the unit, check the oil in the engine and add oil if necessary.
3. If the engine will not start, first make sure the wire is attached to the spark plug.
4. Make sure all the belts are inside all the belt guides. See the instructions on how to remove and install the motion drive and mower drive belts.
5. Before you make an inspection, adjustment (except for the carburetor), or repair, make sure the wire from the spark plug is disconnected.
6. For longer life of the battery on electric start models, charge the battery every three months.
7. Use the speed control pedal to change the ground speed, not the throttle control.
8. Belt noise can occur when the blade is engaged. This noise is normal and does not affect the operation of the unit.

Mowing and Bagging Tips

1. For a lawn to look better, check the cutting level of the mower deck. See “How To Level The Mower Deck” in the Maintenance section.
2. For the mower deck to cut level, make sure the tires have the correct amount of air pressure.
3. Every time you use the unit, check the blade. If the blade is bent or damaged, immediately replace the blade. Also, make sure the nut for the blade is tight.
4. Keep the blades sharpened. Worn blades will cause the ends of the grass to turn brown.
5. Do not cut or bag grass that is wet. Wet grass will not discharge correctly. Let the grass dry before cutting.
6. Use the left side of the mower deck to trim near an object.
7. Discharge the cut grass onto the mowed area. The result is a more even discharge of cut grass.
8. When you mow large areas, start by turning to the right so that the cut grass will discharge away from shrubs, fences, driveways, etc. After one or two rounds, mow in the opposite direction making left turns until finished (Figure 18).

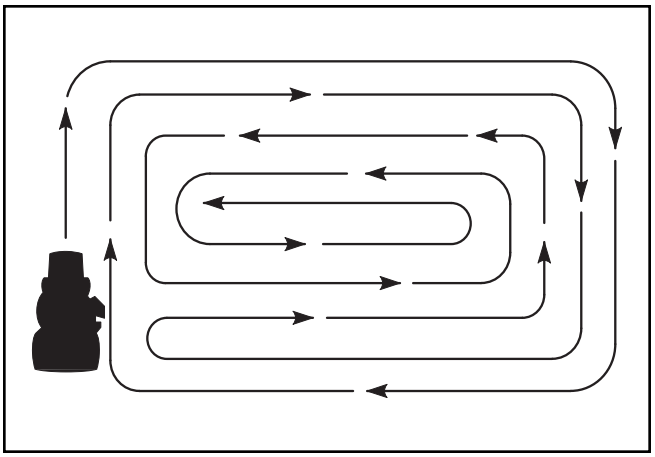

Figure 18: Mowing tips

9. If the grass is very high, cut two times to decrease the load on the engine. First cut with the mower housing in the highest position and then lower the mower housing for the second cut.
10. For better engine performance and an even discharge of the cut grass, always operate the engine with the throttle in FAST position.
11. When you use a bagger, operate the engine with the throttle in FAST position and the speed control pedal pushed 1/3 forward.
12. For better cutting performance and a quality cut, mow with the speed control pedal pushed 1/3 to 1/2 forward.
13. After each use, clean the bottom and top of the mower housing for better performance. Also, a clean mower housing will help prevent a fire.

Not for Reproduction

Downloaded from www.Manualslib.com manuals search engine

Maintenance

Maintenance Schedule

Frequency	Maintenance Required	Comments
Daily or before each use	Maintenance engine.	Refer to the Engine Owner's Manual.
	Examine blades.	Check for cracks, wear, and excessive damage.
	Remove debris from unit and mowing area.	
	Examine all rotating and sliding parts.	
	Check tire inflation.	Refer to the Maintenance section.
	Verify that the mower deck is level.	Refer to the Maintenance section.
	Examine V-belts.	Check for cracks, wear, and excessive damage.
	Check brake operation.	Refer to the Operation and Maintenance sections.
After completion of first 5 hours	Change oil.	Refer to the Engine Owner's Manual.
After 25 hours	Maintenance engine.	Refer to the Engine Owner's Manual.
	Remove, examine, sharpen, and balance blades.	Refer to Maintenance section.
	Check adjustments: a. Blade Rotation Control or PTO Clutch b. Brake c. Steering	Refer to Maintenance section.
	Lubricate chassis and mower deck.	Refer to Where to Lubricate instructions.
	Check the muffler: a. Torque b. For wear or burn out c. Condition of spark arrestor (if applicable).	Refer to Maintenance section.
Before storage of 30 days or more	Prepare engine for storage.	Refer to the Engine Owner's Manual.
	Drain fuel system.	Refer to warnings in the Owner's Manual.
	Add fuel stabilizer.	Refer to the Engine Owner's Manual.
	Prepare battery for storage: a. Remove from unit. b. Fully charge. c. Move to cool dry place.	

Not for Reproduction

Downloaded from www.Manualslib.com manuals search engine

General Recommendations

1. The owner's responsibility is to maintain this product. This will extend the life of the product and is also necessary to maintain warranty coverage.
2. Check the spark plug, drive brake, lubricate the unit, and clean the air filter once a year.
3. Check the fasteners. Make sure all fasteners are tight.
4. Follow the Maintenance section to keep the unit in good operating condition.

WARNING: Before you make an inspection, adjustment, or repair to the unit, disconnect the wire to the spark plug. Remove the wire from the spark plug to prevent the engine from starting by accident.

NOTE: Torque is measured in foot pounds (metric Nm). This measurement describes how tight a nut or bolt must be. The torque is measured with a torque wrench.

Inspection

How to Check the Muffler

Check the muffler every 50 hours. Make sure the muffler is correctly mounted and is not loose. If the muffler is worn or burnt, replace with a new muffler. A worn muffler is a fire hazard and can also damage the engine.

If you mount a spark arrester to the muffler, also check the spark arrester when you check the muffler. If the spark arrester is worn or damaged, replace it with a new spark arrester. See your nearest authorized service center for a spark arrester.

Inspect Blade

WARNING: Before you inspect or remove the blade, disconnect the wire to the spark plug. If the blade hits an object, stop the engine. Check the unit for damage. The blade has sharp edges. When you hold the blade, use gloves or cloth material to protect your hands.

If you keep the blade sharp and inspect the blade for damage, the blade will cut better and be more safe to operate. Frequently check the blade for excessive wear, cracks, or other damage. Frequently check the nut that holds the blade. Keep the nut tight. If the blade hits an object, stop the engine. Disconnect the wire to the spark plug. See if the blade is bent or damaged. Check the blade adapter for damage. Before you operate the unit, replace damaged parts with original equipment parts. See the authorized service center in your area. Every three years, have an authorized service person inspect the blade or replace the old blade with an original equipment part.

How to Remove and Install the Blade

1. Remove the mower housing. See the instructions on "How To Remove The Mower Housing".
2. Use a piece of wood to keep the blade from rotating.
3. Remove the **nut** that holds the blade (Figure 19).

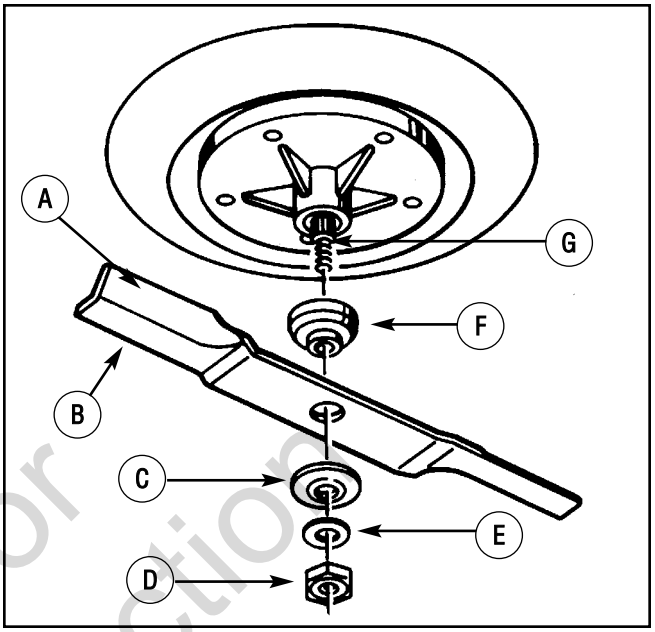

Figure 19: Removing the blades

A - Hi-lift edge up
B - Blade
C - Belleville washer
D - Nut
E - Washer
F - Blade adapter
G - Mandrel

4. Check the **blade** and the **blade adapter** according to the instructions for "Inspect Blade". Replace a badly worn or damaged blade with an original equipment **blade**. See an authorized service center in your area.
5. Clean the top and bottom of the mower housing. Remove all the grass and debris.
6. Mount the **blade** and **blade adapter** on the mandrel (Figure 19).
7. Mount the **blade** so that the **hi-lift edges** are up. If the **blade** is upside down, the **blade** will not cut correctly and can cause an accident.
8. Fasten the **blade** with the original washers and nut. Make sure the outside rim of the **Belleville washer** is against the **blade** (Figure 20).

WARNING: Always keep the nut tight that holds the blade. A loose nut or blade can cause an accident.

9. Tighten the nut that holds the blade to a torque of 35 foot pounds (47,5 N-m).

Not for Reproduction

Downloaded from www.Manualslib.com manuals search engine

10. Install the mower deck. See “How To Install The Mower Deck”.

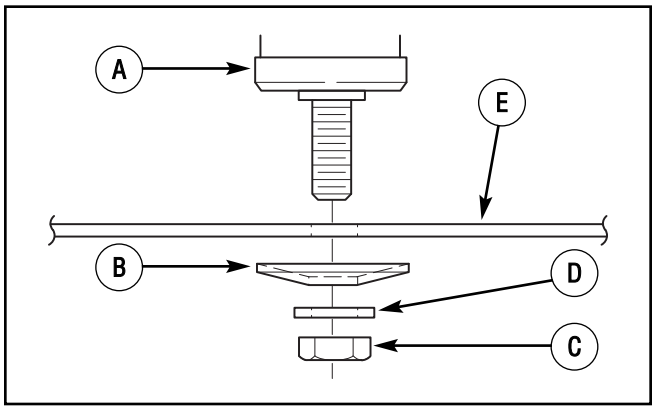

Figure 20: Blade assembly

A - Blade adapter
B - Belleville washer (Outside rim must be against the blade.)
C - Nut
D - Washer
E - Blade

How to Sharpen the Blade

WARNING: Vibration can be caused if the blade is not correctly balanced or if the blade is damaged. A blade that is damaged with cracks can break and cause an accident.

Keep a sharp edge on the **blade**. A **blade** that is not sharp will cause the tips of the grass to become brown.

1. Sharpen the **blade** two times a year or every 25 hours.
2. Remove the **blade** according to the instructions in “How To Remove And Install The Blade”.
3. Clean the **blade** with a brush, soap and water. Check the **blade**. Look for cracks, nicks, or other damage. Replace a badly worn or damaged blade with an original equipment blade. See an authorized service center in your area.
4. Sharpen the **blade** with a **file** (Figure 21). Make sure you keep the original bevel angle.
5. Make sure the **blade** is balanced. Use a **screwdriver** and hold the **blade** parallel to the **ground** (Figure 21). A **blade** that is balanced will stay parallel to the **ground**. If the **blade** is not balanced, the heavy end will rotate toward the **ground**. Sharpen the heavy end until the **blade** is balanced.
6. A new blade will cut better than a badly worn blade. Every three years, have an authorized service person inspect the blade or replace the old blade with an original equipment blade.
7. Assemble the **blade** according to the instructions “How To Remove And Install The Blade”.

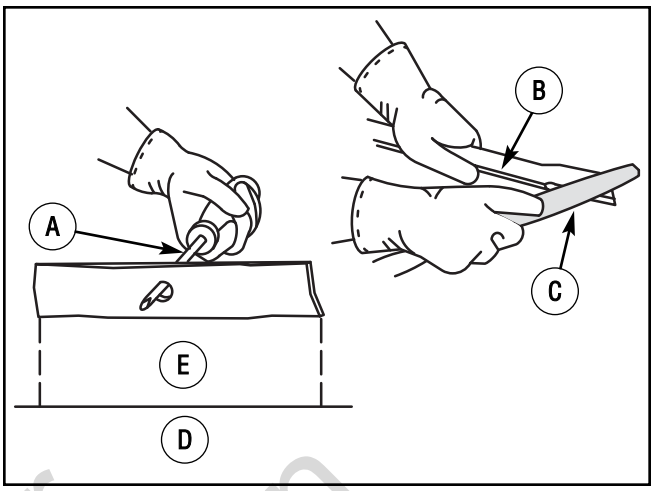

Figure 21: Sharpening the blades

A - Screwdriver
B - Blade
C - File
D - Ground
E - Blade is balanced when parallel to the ground

Not for Reproduction

Downloaded from www.Manualslib.com manuals search engine

Adjustments

How to Check and Adjust the PTO Clutch

Check the PTO clutch adjustment after the initial 25 hour break-in period and then after every 250 hours of operation. Also perform the following procedure if the clutch is slipping or will not engage, or if a new clutch has been installed.

WARNING: Before you make an inspection, adjustment, or repair to the unit, disconnect the wire to the spark plug. Remove the wire from the spark plug to prevent the engine from starting by accident.

1. Remove key from ignition switch and disconnect spark plug wires to prevent the possibility of accidental starting while the PTO is being adjusted.
2. Note the position of the 3 adjustment windows **(A, Figures 22 & 23)** in the side of the brake plate and the nylock adjustment nuts **(B)**.
3. Insert a .016”-.018” (0,40-0,45mm) feeler gauge **(C, Figure 23)** through each window, positioning the gauge between the rotor face and the armature face as shown.
4. Alternately tighten the adjustment nuts **(B)** until the rotor face and armature face just contacts the gauge.
5. Check the windows for an equal amount of tension when the gauge is inserted and removed, and make any necessary adjustments by tightening or loosening the adjustment nuts.

   NOTE: The actual air gap between the rotor and armature may vary even after performing the adjustment procedure. This is due to dimensional variations on component parts, and is an acceptable condition.
6. Check the mower blade stopping time. The mower blades and mower drive belt should come to a complete stop within five seconds after the electric PTO switch is turned off.

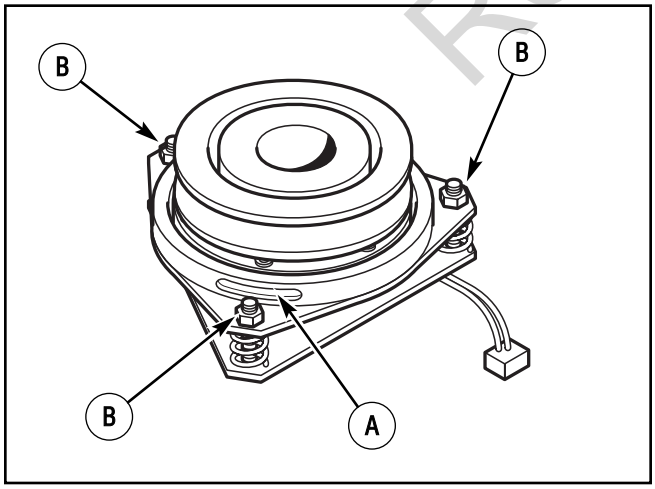

Figure 22: PTO clutch

A - Adjustment window (3)
B - Adjustment nut

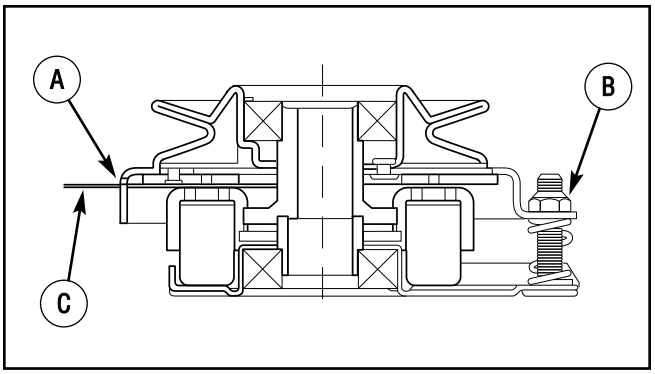

Figure 23: PTO clutch adjustment

A - Adjustment window
B - Adjustment nut
C - .016”-.018” (0,40-0,45mm) feeler gauge

Blade Brake Check

Mower blades and mower drive belt should come to a complete stop within five seconds after electric PTO switch is turned off.

1. With parking brake engaged, PTO disengaged and an operator in the seat, start the engine.
2. Have an assistant observe the mower drive belt through the opening between the frame and top of mower deck. Engage the PTO and wait several seconds. Disengage the PTO and check the amount of time it takes for the mower drive belt to stop.
3. If the mower drive belt does not stop within five seconds, perform the PTO Clutch Adjustment. If the belt still does not stop within 5 seconds, see your dealer.

Not for Reproduction

Downloaded from www.Manualslib.com manuals search engine

How to Check and Adjust the Motion Drive Belt

If the motion drive belt is loose, the belt will slip when; (1) going up a hill, (2) pulling a heavy load, or (3) the unit will not move forward. Adjust the belt as follows.

WARNING: Before you make an inspection, adjustment, or repair to the unit, disconnect the wire to the spark plug. Remove the wire from the spark plug to prevent the engine from starting by accident.

1. Check the routing of the motion drive belt. Make sure the belt is installed correctly and is inside all the belt guides.
2. Disconnect the **clutch link** from the **idler arm** (Figure 24).
3. Align the hole in the **brake lever** with the hole in the frame. Hold the **brake lever** in place with a **1/4 inch (6 mm) pin or bolt** (Figure 25).
4. Rotate the **clutch link** until the mounting hole in the **clutch link** is aligned with the hole in the **idler arm** as shown in Figure 24.
5. Connect the **clutch link** to the **idler arm** (Figure 24).
6. Remove the **1/4 inch (6 mm) pin** or bolt (Figure 25).

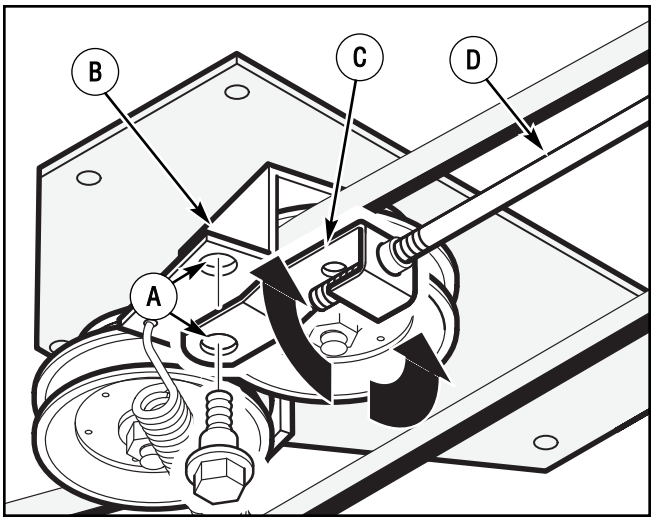

Figure 24: Aligning clutch link

A - Mounting holes
B - Idler arm
C - Clutch link
D - Clutch rod

7. If the belt still slips after the belt has been adjusted, then the motion drive belt is worn or damaged and must be replaced. See “Replacing The Motion Drive Belt”.

Not for Reproduction

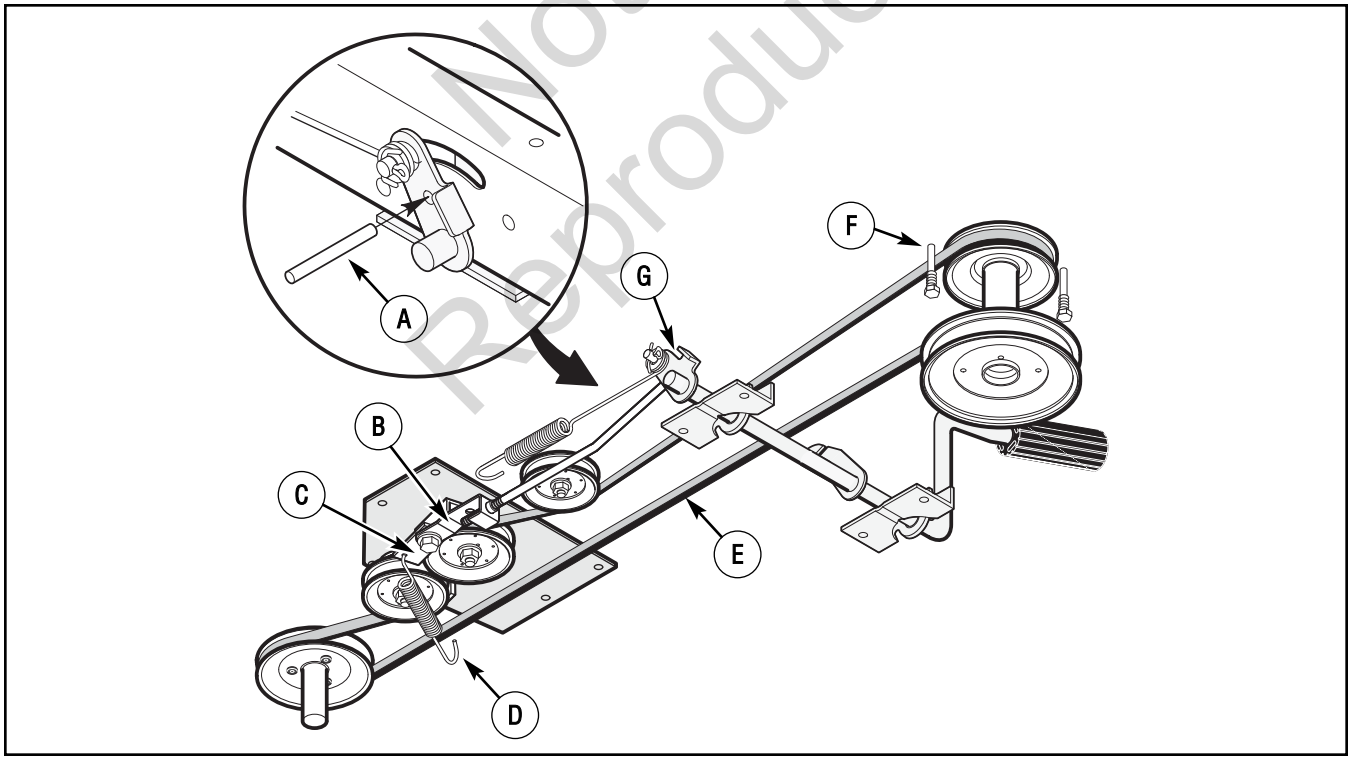

Figure 25: Adjusting motion drive belt

A - 1/4" (6mm) Pin or bolt
B - Clutch link
C - Idler arm
D - Idler spring
E - Motion drive belt
F - Belt guide
G - Brake lever

Downloaded from www.Manualslib.com manuals search engine

How to Check and Adjust the Drive Brake

Completely push the brake pedal forward. Set the parking brake. Move the automatic drive disconnect to the PUSH position. Push the unit. If the rear wheels rotate, adjust or replace the brake pads. Adjust the **drive brake** as follows.

1. The location of the **drive brake** is on the right side of the **gearbox** (Figure 26).
2. Make sure the parking brake is set and the automatic drive disconnect is in the PUSH position. Turn the **hex nut** in a clockwise direction until the rear wheels do not turn when the unit is pushed forward.
3. Release the parking brake and push the unit. If the unit does not roll, turn the **hex nut** in a counterclockwise direction until the unit rolls.
4. Set the parking brake. Push the unit. If the rear wheels do not turn, the **drive brake** is correctly adjusted. Release the parking brake.

WARNING: If you cannot correctly adjust the drive brake, replace the brake pads. Correct replacement parts and assistance are available from an authorized service center.

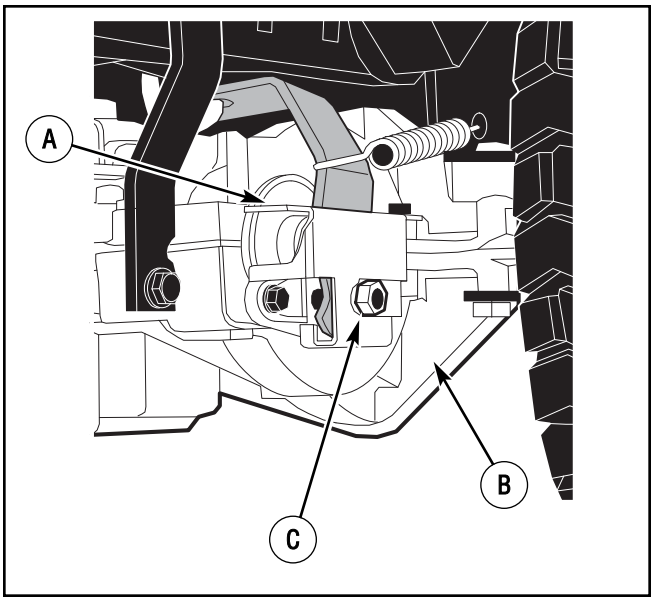

Figure 26: Adjusting drive brake

A - Drive brake
B - Gearbox
C - Hex nut

Not for Reproduction

Downloaded from www.Manualslib.com manuals search engine

Maintenance Free Battery

How to Remove the Battery

To charge or clean the **battery**, remove the **battery** from the unit as follows.

WARNING: To prevent sparks, disconnect the black battery cable from the negative (-) terminal before you disconnect the red cable.

WARNING: The battery contains sulfuric acid which is harmful to the skin, eyes, and clothing. If the acid gets on the body or clothing, wash with water.

1. Disconnect the **black cable** from the negative (-) terminal (Figure 27).
2. Disconnect the **red cable** from the **positive (+) terminal**.
3. Lift the **battery tray** and the **battery** out of the unit.

How to Clean the Battery

1. Remove the **battery**.
2. Wash the battery with a solution of one gallon of water and four tablespoons of baking soda (sodium bicarbonate). Make sure the solution does not get into the battery cells.
3. Clean the **terminals** and the ends of the **cables** with a wire brush.
4. Install the **battery**.
5. To prevent corrosion, apply grease to the **battery terminals**.

How to Charge the Battery

WARNING: When you charge the battery, do not smoke. Keep the battery away from any sparks. The fumes from the battery acid can cause an explosion.

1. Before you charge the **battery**, remove the **battery**.
2. To charge the **battery**, use a 12 volt battery charger. Charge at a rate of 6 amperes for 1 hour.
3. Install the **battery**.

WARNING: To prevent sparks, fasten the red cable to the positive (+) terminal before you connect the black cable.

4. Fasten the **red cable** and **terminal cover** (if equipped) to the **positive (+) terminal** with the fasteners as shown.
5. Fasten the **black cable** to the negative (-) terminal with the fasteners as shown (Figure 27).

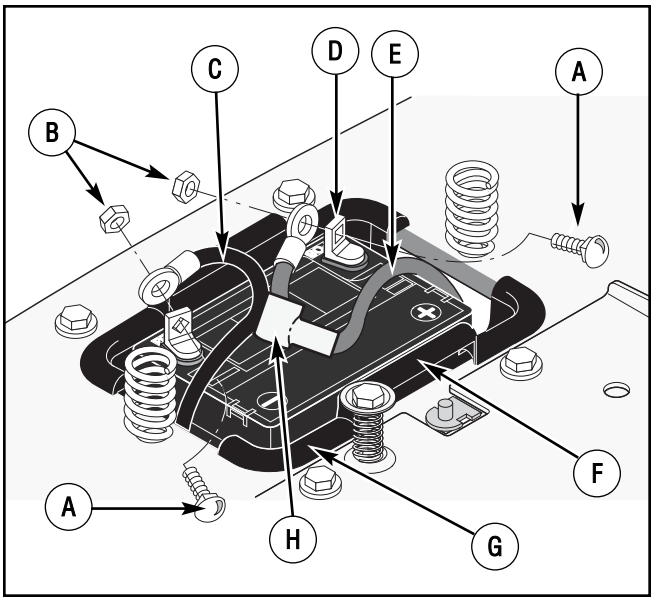

Figure 27: Battery

A - Carriage bolt
B - Hex nut
C - Black cable
D - Positive (+) terminal
E - Red cable
F - Battery
G - Battery tray
H - Terminal cover

Not for Reproduction

Downloaded from www.Manualslib.com manuals search engine

Lubrication

Where to Lubricate

Models with grease fittings: Lubricate with grease gun.

Apply grease with a brush to the areas shown.

Lubricate the areas shown with engine oil.

NOTE: Apply grease to the steering gear assembly.

CAUTION: If the unit is operated in dry areas that have sand, use a dry graphite spray to lubricate the unit.

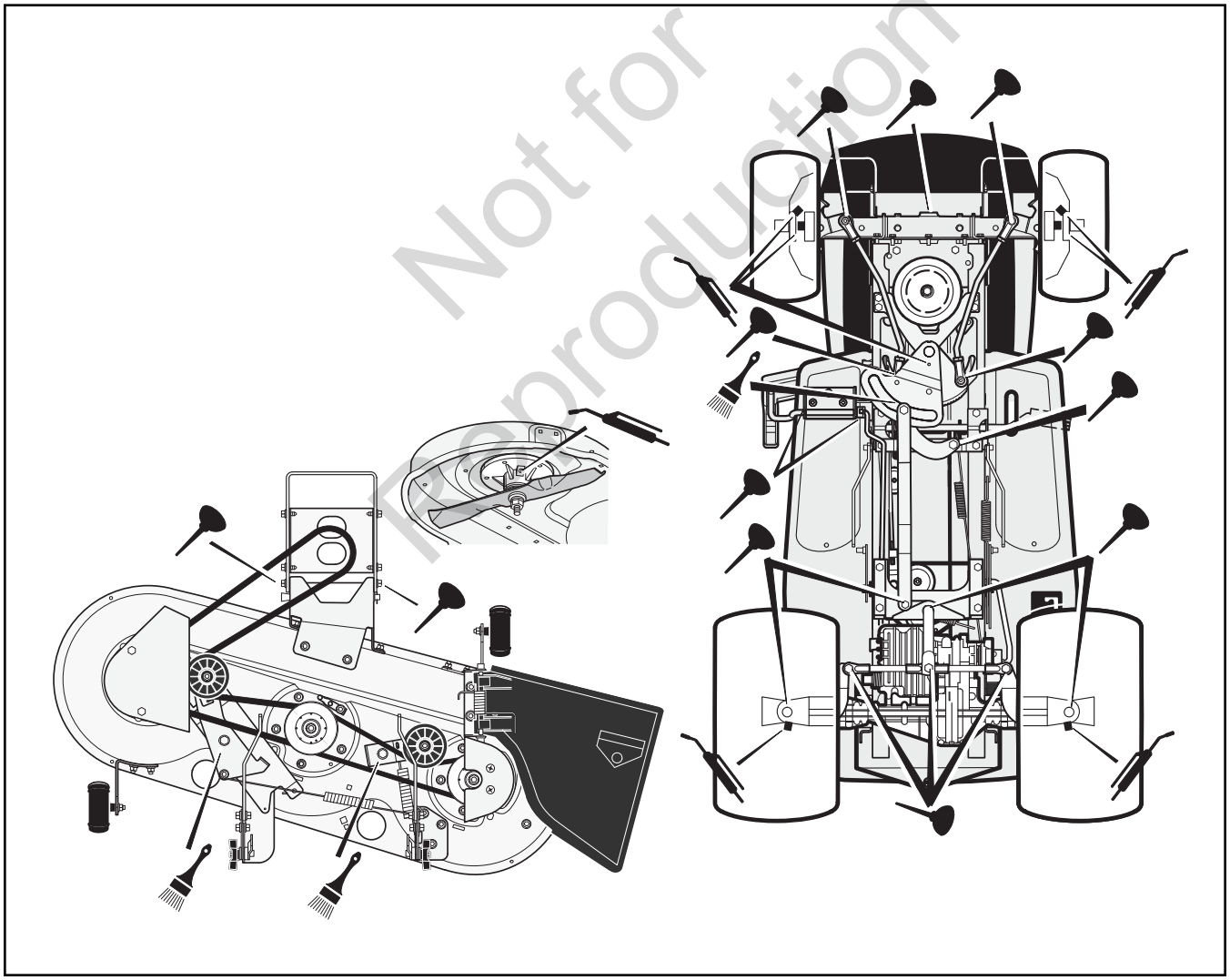

Figure 28: Lubrication areas

Not for Reproduction

Downloaded from www.Manualslib.com manuals search engine

How to Check the Fuel Filter

NOTE: Before you replace the fuel filter or the fuel line, the fuel tank must be empty.

If the **fuel filter** is dirty, the engine will run rough and have less performance. Remove the old filter (Figure 29). Replace the old filter with a new filter. Use an original equipment part. See an authorized service dealer in your area.

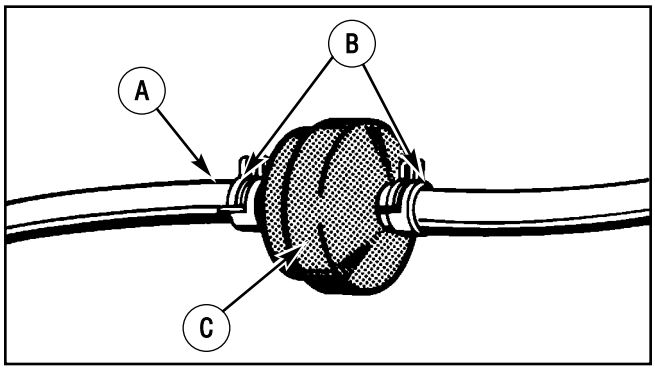

Figure 29: Fuel filter

A - Fuel line
B - Clips
C - Fuel filter (example only)

Check the Tires

Check the air pressure in the tires. Tires with too much air pressure will cause the unit to ride rough. Also, the wrong air pressure will keep the mower deck from cutting level. Recommended air pressure is 14 PSI (1 BAR) for both front and rear tires.

Mower Deck Maintenance

How to Remove the Mower Deck

1. Push the **PTO switch** down to the DISENGAGE position.
2. Open the deck level position cover, and move the **deck lift lever** to the level adjustment position (Figure 30).

WARNING: The deck lift lever is spring loaded. Make sure the deck lift lever is locked in the LEVEL ADJUSTMENT position.

3. Remove the hair pins and the washers from the **adjuster arms** (Figure 31). See illustrations “C” and “D”.
4. Remove the hair pins and washers from the **suspension links**. See illustrations “A” and “B”.

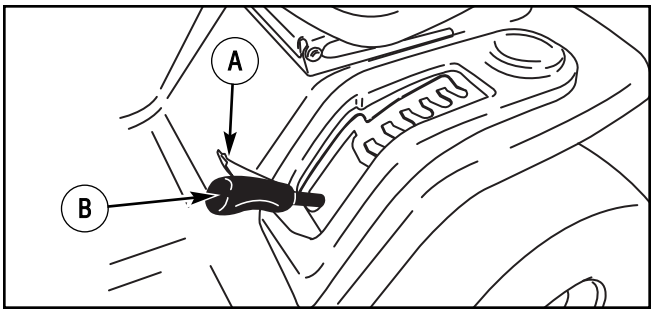

Figure 30: Deck lift lever

A - Deck level position cover (partially hidden)
B - Deck level adjustment position

5. Disconnect the **front hanger** from the axle support. See illustration “E”.
6. Remove the **mower drive belt** from the **clutch pulley**. See illustration “F”.
7. Pull the mower deck away from the right side of the unit.
8. To operate without the mower deck, move the deck lift lever to the TOP position.

How to Install the Mower Deck

1. Push the mower deck under the right side of the unit.
2. Put the **mower drive belt** around the **clutch pulley**. Make sure the “V” side of the **mower drive belt** is against the **clutch pulley**. Also, make sure the **mower drive belt** is not twisted. See illustration “F”.
3. Attach the **front hanger** to the axle support with the **hanger rod**. Fasten with the fasteners as shown. See illustration “E”.
4. Make sure the **mower drive belt** is between the **clutch pulley** and the two belt guides. See illustration “F”.
5. Attach the **suspension links** to the **lifter assembly**. Fasten with the washers and hair pins. See illustrations “A” and “B”.
6. Attach the right and the left **adjuster arms** to the suspension brackets. Fasten with the washers and hair pins. See illustrations “C” and “D”.
7. Make sure the mower deck is level. See the instructions on “How To Level The Mower Deck”.
8. Check the operation of the **PTO clutch**. See the instructions on “How To Adjust The PTO Clutch”.

Not for Reproduction

Downloaded from www.Manualslib.com manuals search engine

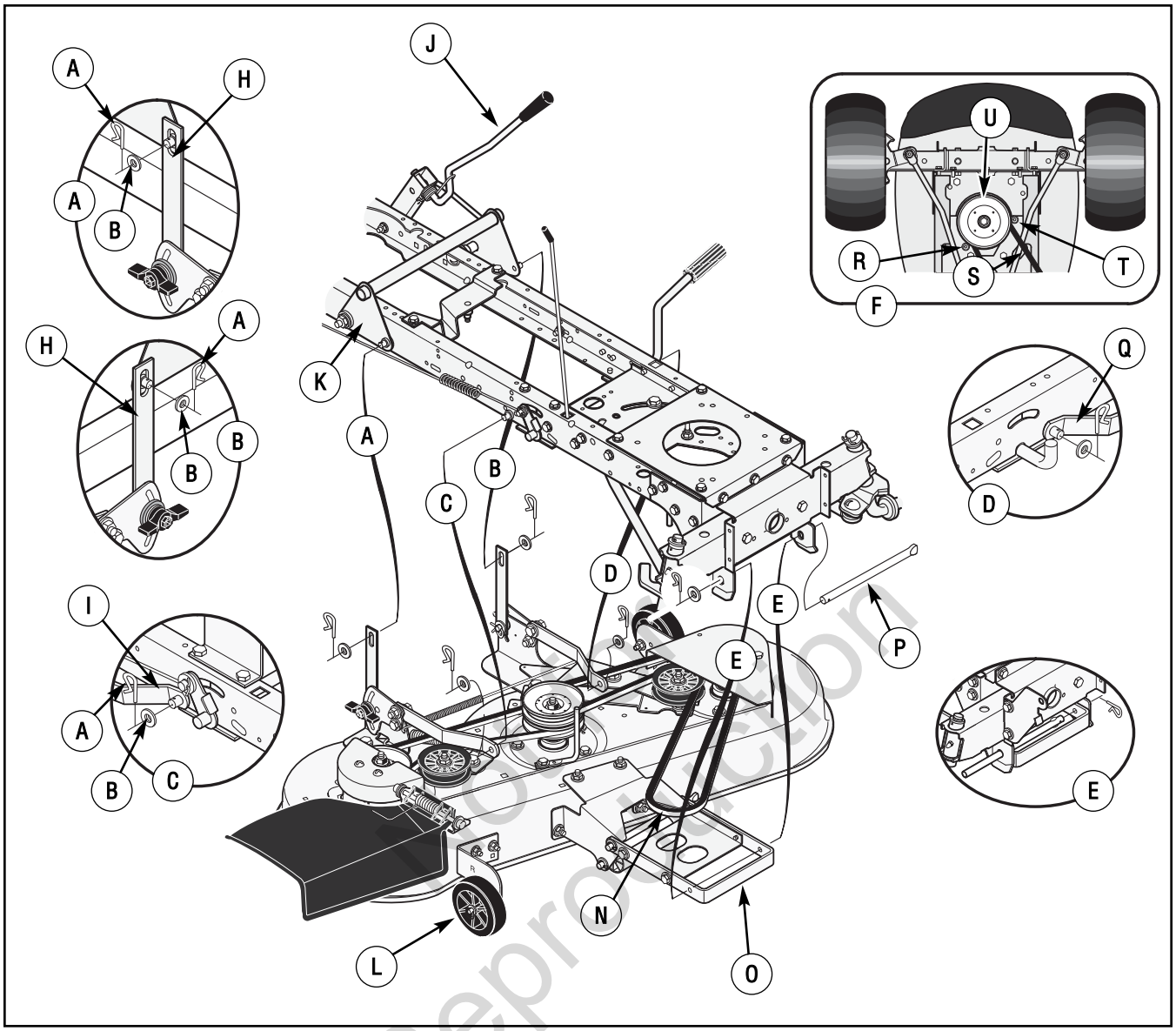

Figure 31: Mower deck assembly

A - View A
B - View B
C - View C
D - View D
E - View E
F - View F
G - Not Used
H - Suspension link
I - Adjuster arm
J - Deck lift lever
K - Lifter assembly
L - Gauge wheel
M - Not Used
N - Mower drive belt
O - Front hanger
P - Hanger rod
Q - Adjuster arm
R - Belt guide (Not on some models)
S - Mower driver belt
T - Belt guide (Not on some models)
U - Clutch pulley

Not for Reproduction

Downloaded from www.Manualslib.com manuals search engine

How to Adjust the Gauge Wheels

The axle bolts for the gauge wheels were mounted in the LOW cut position. To change the position of the gauge wheels, move the axle bolts as follows.

IMPORTANT: Before you adjust the gauge wheels, you must do the following. Make sure the mower deck is level. Make sure the height of cut is set at the height you want for your lawn. Mow a short distance on a flat level area and look at the area that was cut. If the mower deck does not cut level, see the instructions "How To Level The Mower Deck."

WARNING: Before you make an inspection, adjustment, or repair to the unit, disconnect the wire to the spark plug. Remove the spark plug wire to prevent the engine from starting by accident.

1. Remove the **gauge wheels** (Figure 32).
2. Mow a short distance on a flat level area to check the level of cut and the height of cut. Look at the **height of cut position number** on the **deck lift lever** (Figure 33).
3. Look at each **gauge wheel bracket**. There are 3 holes in each bracket and a number next to each hole. The number for the height of cut position on the **deck lift lever** indicates the correct hole to use on each **gauge wheel bracket** (Figure 34).
4. Assemble the axle bolts to the **gauge wheel brackets** using the correct hole in the bracket as indicated (Figure 34).

NOTE: If the height of cut position is changed by the deck lift lever, you must move the gauge wheels to the correct hole (Figure 34) to keep a level height of cut.

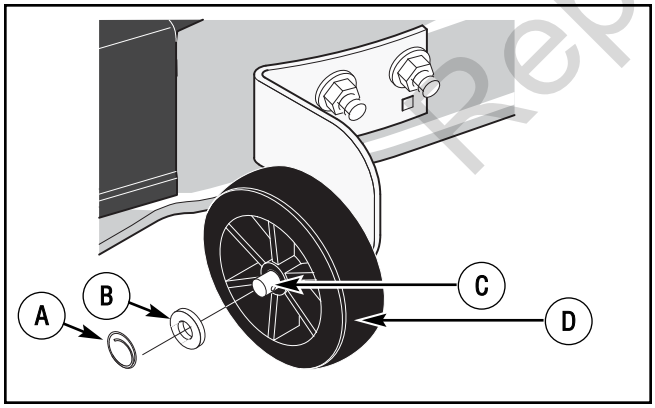

Figure 32: Gauge wheel assembly

A - Locking ring
B - Washer
C - Axle bolt
D - Gauge wheel

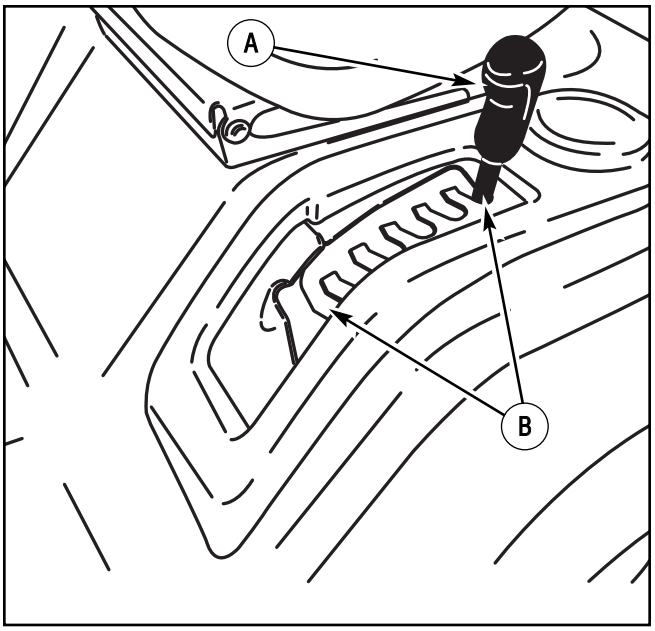

Figure 33: Deck lift lever

A - Deck lift lever
B - Cutting height positions

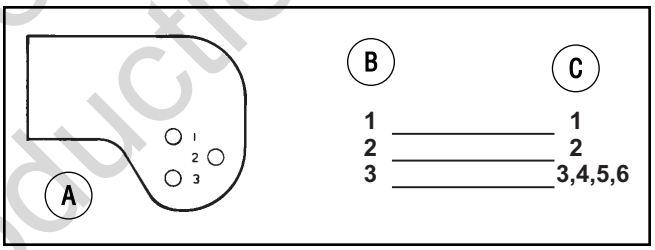

Figure 34: Gauge wheel bracket positions

A - Gauge wheel bracket
B - Wheel bracket hole no.
C - Lift lever position no.

How to Level the Mower Deck

If the mower deck is level, the blade will cut easier and the lawn will look better.

WARNING: Before you make an inspection, adjustment, or repair to the unit, disconnect the wire to the spark plug. Remove the spark plug wire to prevent the engine from starting by accident.

1. Make sure the unit is on a hard flat surface.
2. Check the air pressure in the tires. If the air pressure is incorrect, the mower housing will not cut level. Make sure the tires are inflated to 14 PSI (1 BAR).

IMPORTANT: On models equipped with gauge wheels, the gauge wheels must be removed to correctly adjust the level of the mower deck.

Not for Reproduction

Downloaded from www.Manualslib.com manuals search engine

3. Some models have gauge wheels on the mower deck. If equipped, remove the gauge wheels.
4. Move the **deck lift lever** to the LEVEL ADJUSTMENT position (Figure 35).

WARNING: The deck lift lever is spring loaded. Make sure the lift lever is locked in the LEVEL ADJUSTMENT position.

5. Loosen the left and right **adjuster knobs** (Figure 36). Push down on each side of the mower deck. Make sure both sides of the mower deck are setting on a flat surface. Also, make sure the lift links are loose and can easily move up or down.
6. Push down on the **lift links** and tighten the left and right **adjuster knobs** (Figure 36). Make sure the **adjuster knobs** are tight. If necessary, use a wrench to tighten the **adjuster knobs**. For plastic **adjuster knobs**, tighten to a torque of 7 foot pounds (9,5 Nm). For metal **adjuster knobs**, tighten to a torque of 10 foot pounds (13,5 Nm).
7. Raise the deck lift lever from the LEVEL ADJUSTMENT position to a CUTTING HEIGHT position (Figure 37).
8. If equipped, install the gauge wheels.
9. Mow for a short distance. If the height of cut is not level, repeat the above steps.

CAUTION: Do not operate with the mower deck in the LEVEL ADJUSTMENT position. If you operate in the LEVEL ADJUSTMENT position, the mower deck and blades can be damaged.

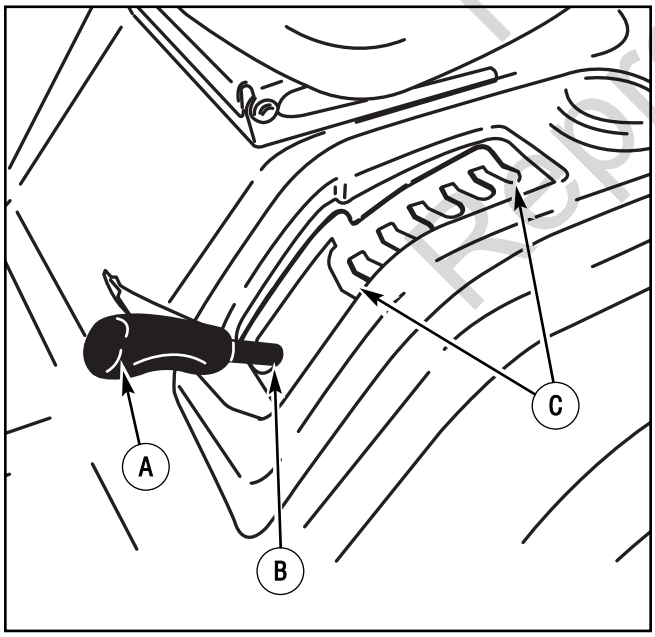

Figure 35: Lever adjustment

A - Deck lift lever
B - LEVEL ADJUSTMENT positon
C - CUTTING HEIGHT positions

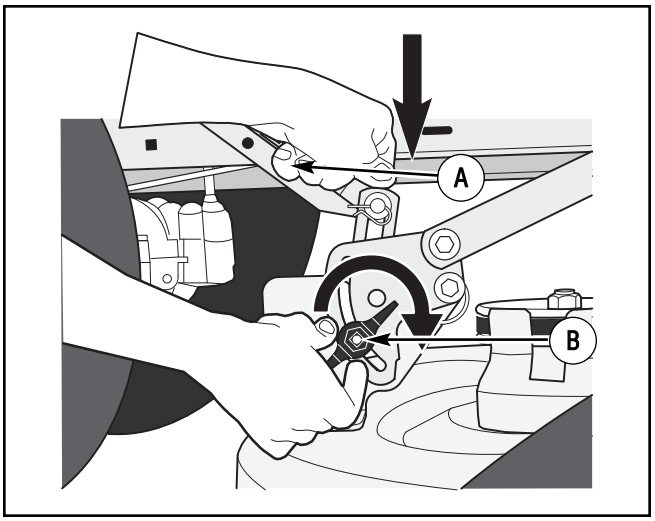

Figure 36: Loosening adjuster knobs

A - Lift link
B - Adjuster knobs

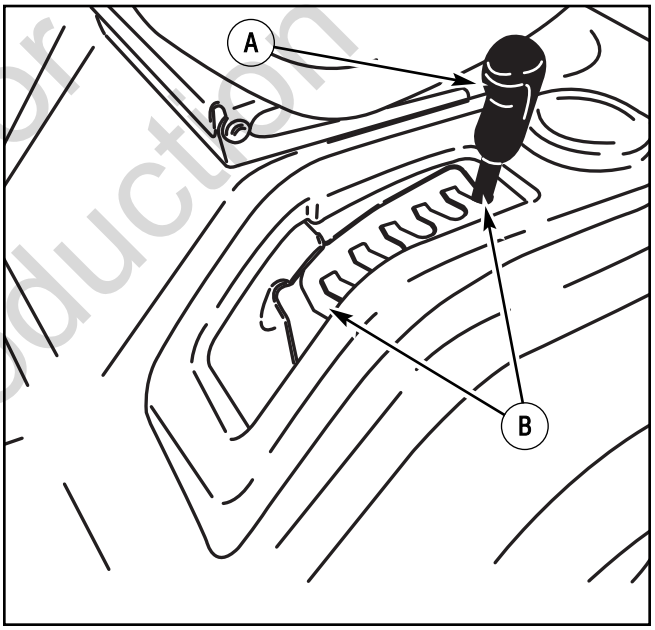

Figure 37: Cutting position

A - Deck lift lever
B - CUTTING HEIGHT positions

Replacing the Motion Drive Belt

The motion drive belt is designed for extremely long life, and with proper care and maintenance, it should last for the life of the unit. However, in the unlikely event that the motion drive belt should require replacement, it should be performed only by an authorized dealer.

Not for Reproduction

Downloaded from www.Manualslib.com manuals search engine

How to Replace the Primary Mower Drive Belt

1. Remove the mower deck. See the instructions on “How To Remove The Mower Deck”.
2. Remove the three **screws** from the **left pulley cover**. Remove the **pulley cover** (Figure 38).
3. To remove the **primary mower drive belt** from the **left mandrel pulley**, slide the **primary mower drive belt** between the **left mandrel pulley** and the **belt guides**.
4. Pull the **belt retainer** away from the **idler pulley**. Remove the **primary mower drive belt** from the **idler pulley**.
5. Remove the **primary mower drive belt** from the **stack pulley**.

   NOTE: Replace the primary mower drive belt with an original equipment belt from an authorized service center.
6. Install a new **primary mower drive belt**. Put the belt around the **stack pulley**. Make sure the **primary mower drive belt** is inside of the **belt guide**.
7. Pull the **belt retainer** away from the **idler pulley**. Put the flat side of the **primary mower drive belt** around the **idler pulley**.
8. Make sure the “V” side of the **primary mower drive belt** is against the **mandrel pulleys** as shown.
9. Make sure the **primary mower drive belt** is inside all the **belt guides**.
10. Assemble the **left pulley cover**.
11. Install the mower deck. See the instructions on “How To Install The Mower Deck”.
12. Before you mow, check the PTO clutch. See the instructions on “How To Adjust The PTO clutch”.

How to Replace the Secondary Mower Drive Belt

1. Remove the mower deck. See the instructions on “How To Remove The Mower Deck”.
2. Remove the **primary mower drive belt** from the **stack pulley** (Figure 38).
3. Remove the two **screws** from the **right pulley cover**. Remove the **pulley cover**.
4. Pull the **idler pulley** away from the **secondary mower drive belt**. Remove the belt from the **idler pulley**.
5. Remove the **secondary mower drive belt** from the **right mandrel pulley**.
6. Remove the **secondary mower drive belt** from the **stack pulley**.

   NOTE: Replace the secondary mower drive belt with an original equipment belt from an authorized service center.
7. Install a new **secondary mower drive belt**. Put the belt around the bottom of the **stack pulley**. Make sure the **secondary mower drive belt** is inside the **belt guide** next to the **stack pulley**.
8. Put the **secondary mower drive belt** around the **right mandrel pulley**.
9. Pull the **idler pulley** toward the front. Install the flat side of the **secondary mower drive belt** against the **idler pulley**.
10. Make sure the “V” side of the **secondary mower drive belt** is around the **right mandrel pulley**.
11. Assemble the **right pulley cover**.
12. Put the **primary mower drive belt** around the **stack pulley**.
13. Install the mower deck. See the instructions on “How To Install The Mower Deck”.
14. Before you mow, check the PTO clutch. See the instructions on “How To Adjust The PTO clutch”.

Not for Reproduction

Downloaded from www.Manualslib.com manuals search engine

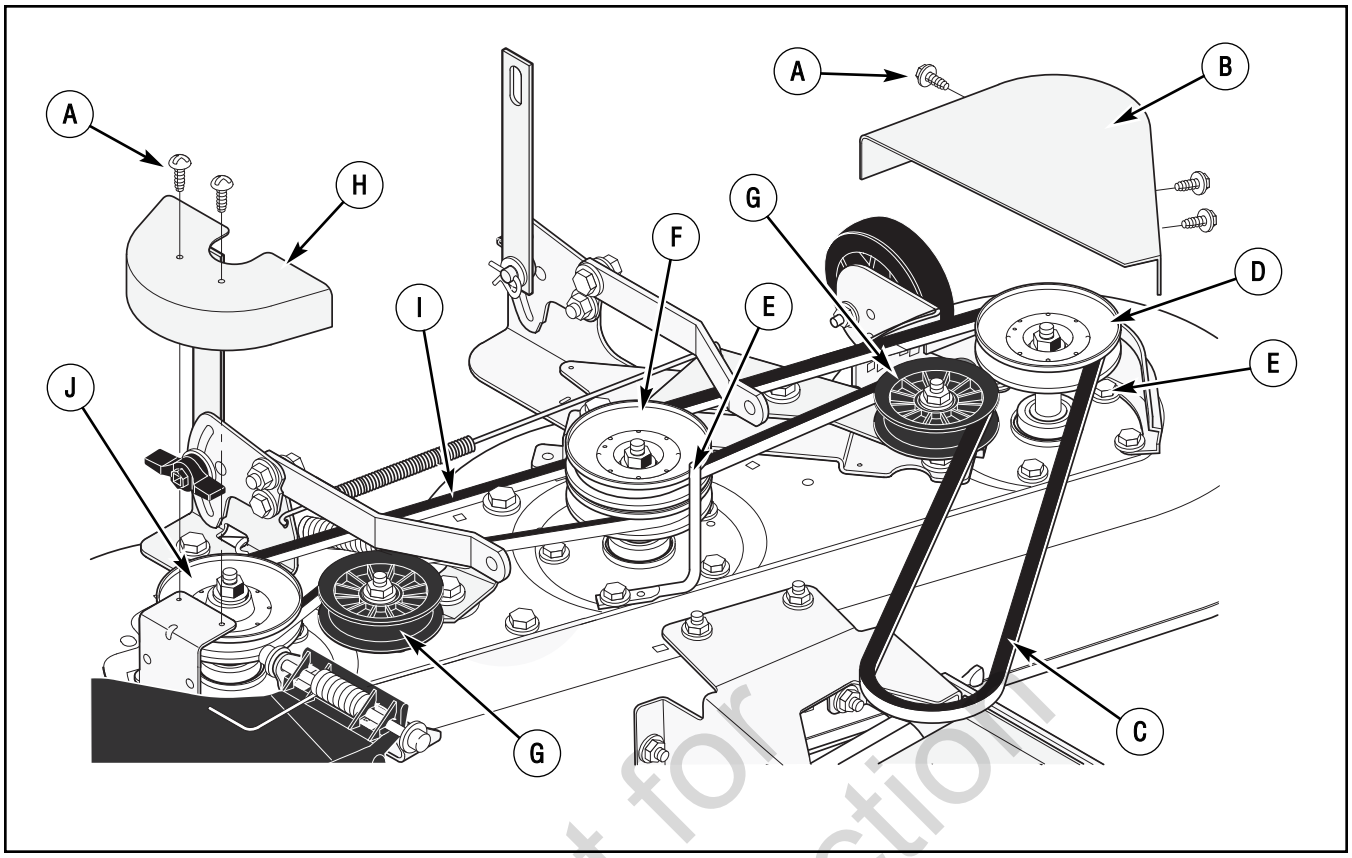

Figure 38: Mower drive belt assembly

A - Screw
B - Left pulley cover
C - Primary mower drive belt
D - Left mandrel pulley
E - Belt guides (Not used on some models)
F - Stack pulley
G - Idler pulleys
H - Right pulley cover
I - Secondary mower drive belt
J - Right mandrel pulley

Not for Reproduction

Downloaded from www.Manualslib.com manuals search engine

How to Install the Wheels

If the wheels must be removed for service, make sure they are installed as follows.

Front Wheel:

1. Make sure the **valve stem** is to the outside of the tractor. Slide the **front wheel** on the **spindle** (See Figure 39).
2. Fasten the **front wheel** with **washer** and **cotter pin**. Bend the ends of the **cotter pin** apart to keep the **front wheel** on the **spindle**.
3. If your model has **hub caps**, install the **hub caps**. Make sure the **washers** hold the **hub caps** in place.

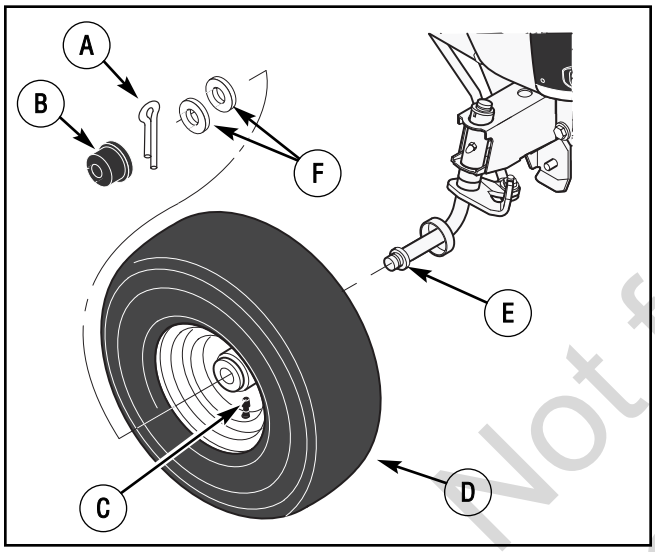

Figure 39: Front wheel assembly

A - Cotter pin
B - Hub cap
C - Valve stem
D - Front wheel
E - Spindle
F - Washers

Rear Wheel:

1. Make sure the **valve stem** is to the outside of the tractor. Mount the **rear wheel** to the **hub assembly** with the three **bolts**. (See Figure 40.)
2. Tighten the **bolts** to a torque of 50 ft. lbs.

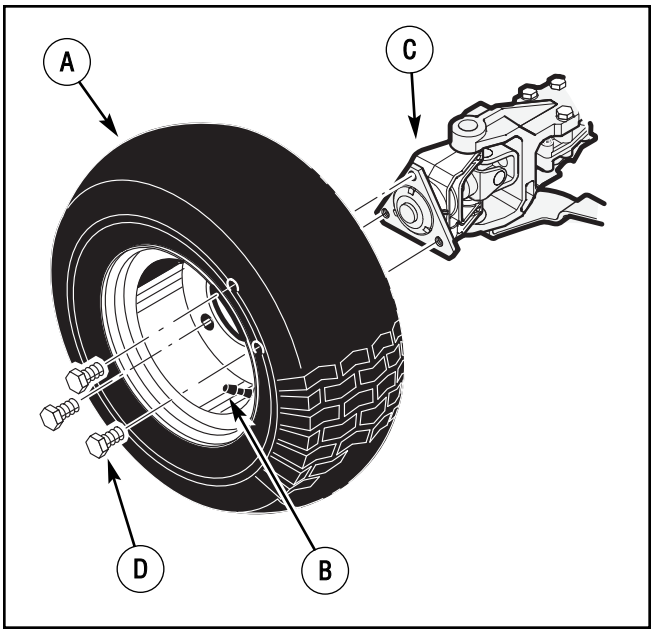

Figure 40: Rear wheel assembly

A - Rear wheel
B - Valve stem
C - Hub assembly
D - Bolt

Not for Reproduction

Downloaded from www.Manualslib.com manuals search engine

Wheel Alignment

Check the alignment of the wheels after the removal or replacement of any steering system parts as follows:

1. Turn the steering wheel so that the front wheels are pointing straight forward. Align the hole in the sector gear with the hole in the steering plate (see Figure 41).
2. To maintain alignment between the sector gear and the steering plate during this procedure, insert a 7/16 to 1/2 inch bolt or pin into the hole in the steering plate and through the steering sector gear (see Figure 42).
3. First, check measurements A, B, C1, and C2 (see Figure 42).
   - Measurement C1 should be equal to C2.
   - Measurement A should be 1/4 inch less than B.

   If the measurements are not correct, loosen the nut on the spindle arm carriage bolt on either the left or the right front spindle. Slightly move the wheel until the measurements are correct.
4. Again check measurements A, B, C1, and C2. If correct, tighten the spindle arm carriage bolt and nut.
5. Next, check measurements D, E, F1 and F2.
   - Measurements F1 should be equal to F2.
   - Measurement D should be 1/16 inch less than E.

   If the measurements are not correct, loosen the jam nuts on each of the rear tie rod ends (see Figure 42). Rotate the tie rods until the measurements are correct.
6. Again check measurements D, E, F1 and F2. If correct, tighten the jam nuts on each of the rear tie rod end.
7. Remove the bolt or pin used in step 2.

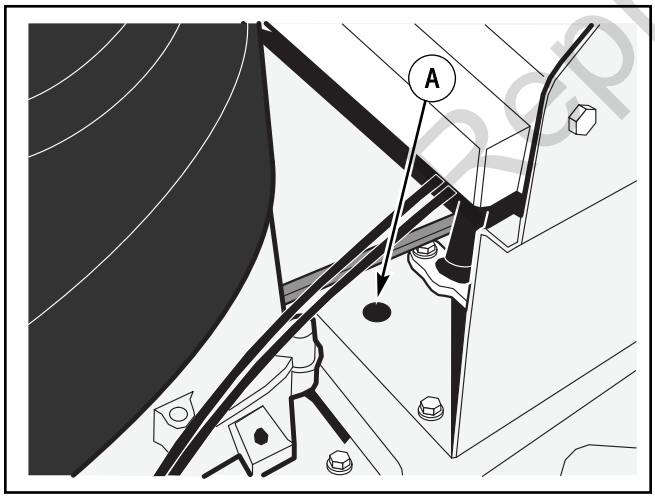

Figure 41: Alignment hole

A - Alignment hole

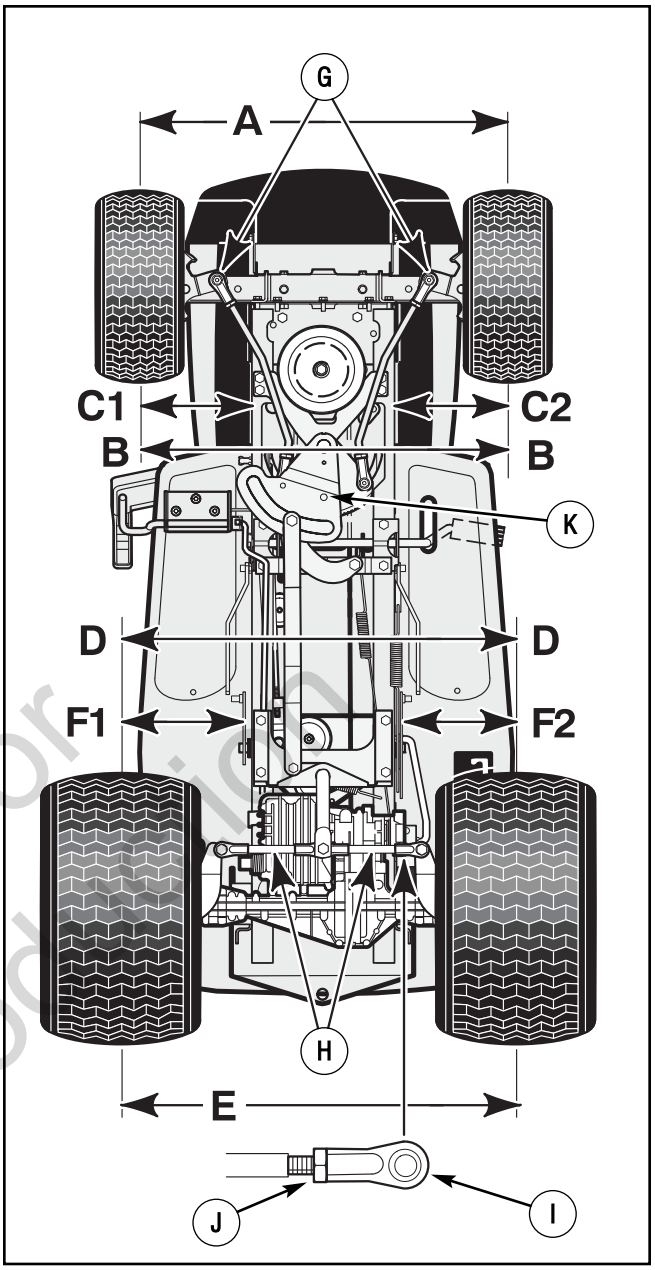

Figure 42: Wheel alignment

A-F - Alignment measuring points
G - Spindle arm carriage bolts
H - Rear tie rods
I - Tie rod end
J - Jam nut
K - Sector gear hole

Not for Reproduction

Downloaded from www.Manualslib.com manuals search engine

How to Replace the Fuse

If the fuse is blown, the engine will not start. The location of the fuse is behind the panel between the engine and the control console. Remove the fuse and replace with an automotive fuse of equivalent rating (Figure 43).

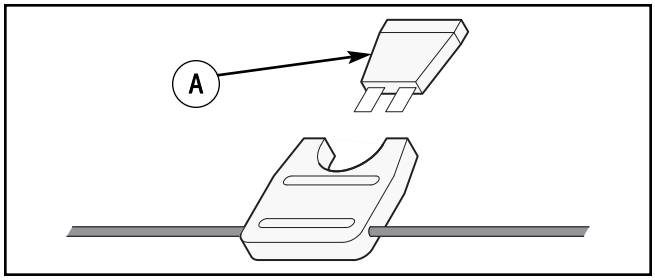

Figure 43: Fuse location

A - Automotive fuse

How to Replace the Light Bulb

1. Raise the tractor hood.
2. Turn the **light socket** until the tabs on the socket align with the notches in the **bezel** (Figure 44). Remove the **light socket**. Turn the **light bulb** and remove the bulb.
3. Install a new **light bulb**. Align the **light socket** with the notches in the **bezel** and turn the **light socket** to lock in position.

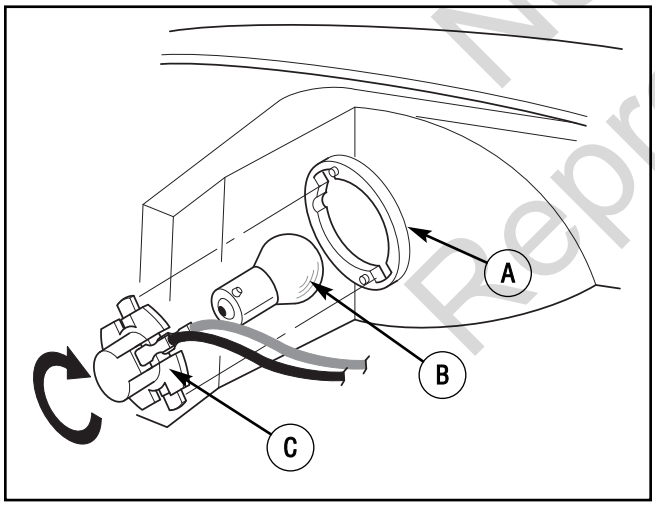

Figure 44: Light bulb replacement

A - Bezel
B - Light bulb
C - Light socket

How to Clean the Mower Deck

WARNING: Before you clean the mower deck, stop the engine and disconnect the wire to the spark plug.

Grass and other debris on top of the mower deck can keep the belt from working correctly. For safety and correct operation, frequently clean the top of the mower deck. Remove grass and debris from around the pulleys and other moving parts.

1. Clean the top of the mower deck.
2. After you cut the grass, clean the bottom of the mower deck.

Not for Reproduction

Downloaded from www.Manualslib.com manuals search engine

Storage (over 30 days)

At the end of each year, prepare the unit for storage as follows.

The Engine

For storage information, see the the engine manufacturer's instructions.

The Battery

1. Remove the battery.
2. Clean the battery terminals of any deposits.
3. Charge the battery. See the instructions on "How To Prepare And Charge The Battery".
4. Store the battery in a cool, dry place.

NOTE: After a long time in storage, charge the battery.

The Fuel System

WARNING: Do not drain the gasoline inside a building or near a fire. Do not smoke because the fumes from the fuel can cause an explosion.

1. Start the engine.
2. Run the engine until the fuel tank and the carburetor are out of fuel and the engine stops.
3. After storage, make sure you use fresh fuel.

Clean the Unit

1. Clean the dirt and grass from the engine.
2. Clean the mower housing.

Lubricate the Unit

See the "Lubrication" instructions in this book.

Not for Reproduction

Downloaded from www.Manualslib.com manuals search engine

Troubleshooting

Troubleshooting Chart

Problem	Correction
The engine will not start.	1. Follow the steps, “How To Start The Engine” in this book. 2. Electric-Start Models: Clean the battery terminals. Tighten the cables. 3. Drain the fuel tank. Clean the fuel line. Replace the fuel filter. 4. Remove the spark plug(s). Move the throttle to the SLOW position. Turn the ignition key to the ON position. Try to start the engine several times. Install the spark plug. 5. Replace the spark plug.
The engine will not turn over.	1. Follow the steps, “How To Start The Engine” in this book. 2. Electric-Start Models: Charge the battery. 3. Replace the fuse. 4. Check the wiring harness for damage or a loose connection. Repair the damaged wire. 5. Electric-Start Models: Replace the solenoid.
The engine is difficult to start.	1. Replace the spark plug. 2. Replace the fuel filter.
The engine does not run smooth or has a loss of power.	1. Check the oil. 2. Clean the air filter. 3. Clean the air screen. 4. Replace the spark plug. 5. Replace the fuel filter.
The engine does not run smooth at fast speed.	1. Replace the spark plug. 2. Adjust the throttle control. 3. Clean the air filter. 4. Replace the fuel filter.
The engine stops when the blades are engaged.	1. To activate the seat sensor, always sit in the middle of the seat. 2. Check the wiring harness for damage or a loose connection. Repair the damaged wire.
On slopes, the engine stops.	1. Mow up and down slopes. Never mow across a slope. 2. To activate the seat sensor, always sit in the middle of the seat.
The engine will not idle.	1. Replace the spark plug. 2. Clean the air filter. 3. Adjust the throttle control. 4. Drain the fuel tank. Clean the fuel line. Replace the fuel filter.
A hot engine causes a decrease in power.	1. Clean the air screen. 2. Check the oil. 3. Replace the fuel filter.
Excessive vibration.	1. Replace the blade. 2. Check for loose engine bolts. 3. Decrease the air pressure in the tires. 4. Check for a damaged belt or damaged pulley. Replace the damaged parts.

Not for Reproduction

Downloaded from www.Manualslib.com manuals search engine

Troubleshooting Chart Continued

Problem	Correction
The grass does not discharge correctly.	1. Stop the engine. Clean the mower deck. 2. Raise the height of cut. 3. Replace or sharpen the blade(s). 4 Use a slower ground speed. 5. Move the throttle control to the FAST position. 6. Replace the spring for the blade idler.
The mower housing does not cut level.	1. Check the air pressure in the tires. 2. Adjust the level of the mower deck. 3. Check the front axle. If the front axle does not freely pivot, loosen the axle bolt(s).
The mower blades will not rotate.	1. Check the mower drive belt(s). Make sure the belt(s) are installed correctly. 2. Replace the mower drive belt(s).
The unit will not move when the brake is released and the speed control pedal is depressed.	1. Release the automatic drive disconnect. 2. Check the motion drive belt. Make sure the belt is installed correctly. 3. Replace the motion drive belt.
The unit moves slower or stops when the speed control pedal is depressed.	1. Check the motion drive belt. Make sure the belt is installed correctly. 2. Replace the motion drive belt.
When the brake pedal is released, belt noise can be heard.	1. Temporary belt noise does not change the operation of the unit. If belt noise is continuous, check the routing of the belt. Make sure the belt is inside all belt guides.
The rear wheels spin over uneven terrain.	1. Check the front axle. If the front axle does not freely pivot, loosen the axle bolt(s).

Not for Reproduction

Downloaded from www.Manualslib.com manuals search engine

Specifications

Product Specifications	AC23460AWS
Deck Size (inches)	46
Height of Cut (inches)	1.5 - 4.0
Transmission Type	Hydro
Ground Speed - Fwd/Rev (mph)	0 - 5.0 / 0 - 2.5
Engine Power (hp)	23.0
Engine Displacement (cc)	721
Fuel Tank Capacity (gal)	2.2

Not for Reproduction

Downloaded from www.Manualslib.com manuals search engine

SLOPE GUIDE

SIGHT AND HOLD THIS GUIDE LEVEL WITH A VERTICAL TREE, A CORNER OF A STRUCTURE, A POWER LINE POLE, OR A FENCE.

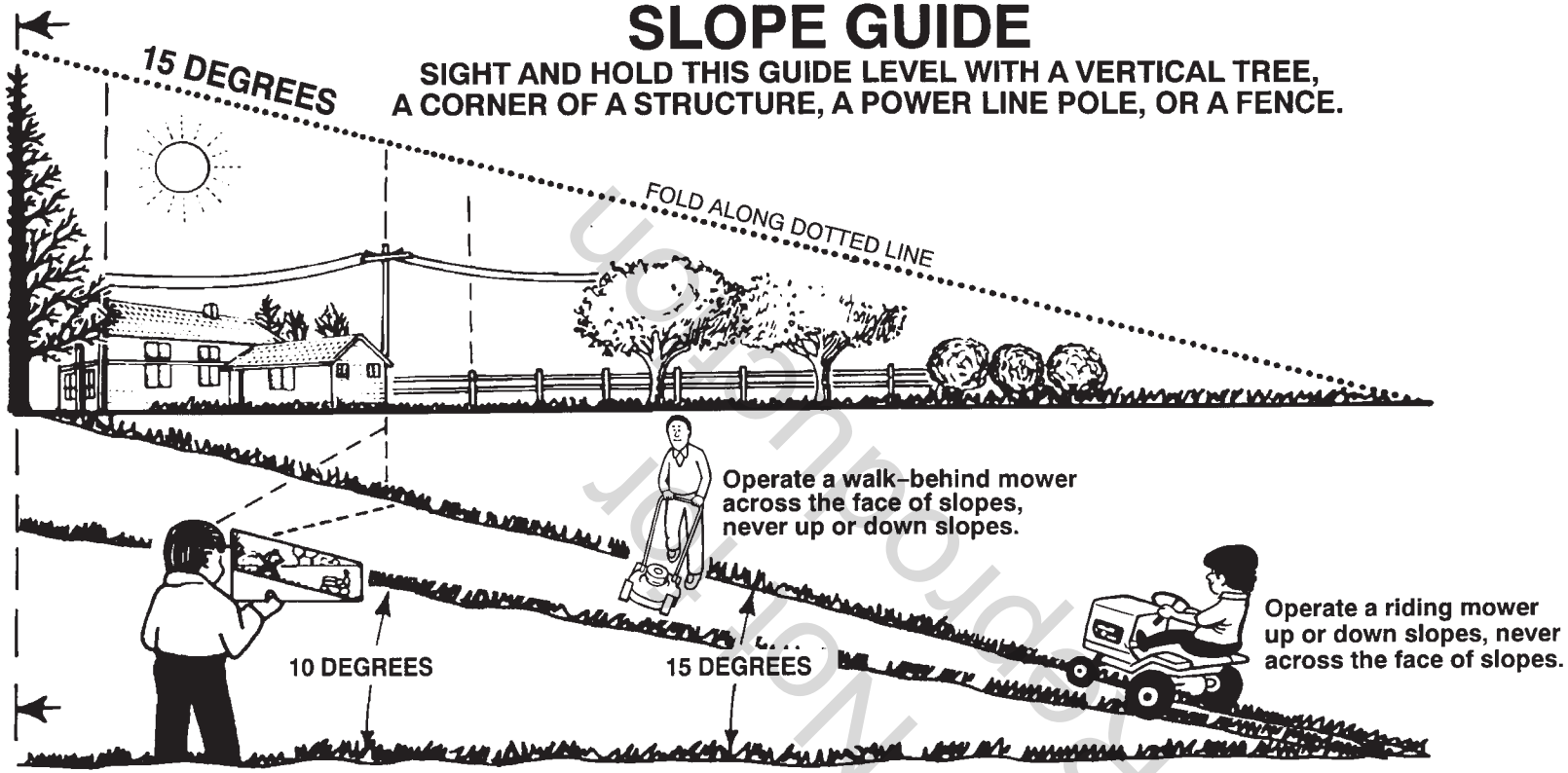

Not for Reproduction

On a riding mower to determine if a slope is safe to mow: (1) disengage the blade(s), (2) put the unit in reverse, and (3) try to back straight up the slope. If you can back up the slope, it is generally safe to mow. However, if you do not feel safe, or if you are not completely sure, use this guide and do not mow a slope that is greater than 15 degrees. If the riding mower is used with a pull-behind or rear mounted attachment, do not operate the unit on a slope that is greater than 10 degrees.

A 15 degree slope is a hill that increases in height at approximately 2.5 feet in 10 feet.
A 10 degree slope is a hill that increases in height at approximately 1.7 feet in 10 feet.

Use extreme care at all times, and avoid sudden turns or maneuvers. Follow other instructions in this manual for safety in mowing on slopes. Operate a riding mower up or down slopes, never across the face of slopes. Operate a walk-behind mower across the face of slopes, never up or down slopes. Use extra care when operating on or near slopes and obstructions.

CUT HERE TO USE SLOPE GUIDE

Downloaded from www.Manualslib.com manuals search engine

Notes

Not for Reproduction

Downloaded from www.Manualslib.com manuals search engine

Notes

Not for Reproduction

Downloaded from www.Manualslib.com manuals search engine

Notes

Not for Reproduction

Downloaded from www.Manualslib.com manuals search engine

BRIGGS & STRATTON POWER PRODUCTS GROUP, L.L.C. OWNER WARRANTY POLICY

Effective January 1, 2009 replaces all undated Warranties and all Warranties dated before January 1, 2008

LIMITED WARRANTY

Briggs & Stratton Power Products Group, LLC will repair and/or replace, free of charge, any part(s) of the equipment that is defective in material or workmanship or both. Briggs & Stratton Corporation will repair and/or replace, free of charge, any part(s) of the Briggs and Stratton engine* (if equipped) that is defective in material or workmanship or both. Transportation charges on product submitted for repair or replacement under this warranty must be borne by purchaser. This warranty is effective for the time periods and subject to the conditions stated below. For warranty service, find the nearest Authorized Service Dealer using our dealer locator at www.BriggsandStratton.com.

There is no other express warranty. Implied warranties, including those of merchantability and fitness for a particular purpose, are limited to one year from purchase or to the extent permitted by law. Liability for incidental or consequential damages are excluded to the extent exclusion is permitted by law.

Some states or countries do not allow limitations on how long an implied warranty lasts, and some states or countries do not allow the exclusion or limitation of incidental or consequential damages, so the above limitation and exclusion may not apply to you. This warranty gives you specific legal rights and you may also have other rights which vary from state to state or country to country.

WARRANTY PERIOD

Item	Consumer Use	Commercial Use:
Equipment	2 Years	90 Days
Engine*	2 Years	1 Year

The warranty period begins on the date of purchase by the first retail consumer or commercial end user, and continues for the period of time stated above. “Consumer use” means personal residential household use by a retail consumer. “Commercial use” means all other uses, including use for commercial, income producing or rental purposes. Once product has experienced commercial use, it shall thereafter be considered as commercial use for purposes of this warranty.

No warranty registration is necessary to obtain warranty on Briggs & Stratton products. Save your proof of purchase receipt. If you do not provide proof of the initial purchase date at the time warranty service is requested, the manufacturing date of the product will be used to determine warranty eligibility.

Not for Reproduction

ABOUT YOUR WARRANTY

We welcome warranty repair and apologize to you for being inconvenienced. Warranty service is available only through servicing dealers authorized by Briggs & Stratton or BSPPG, LLC.

Most warranty repairs are handled routinely, but sometimes requests for warranty service may not be appropriate. This warranty only covers defects in materials or workmanship. It does not cover damage caused by improper use or abuse, improper maintenance or repair, normal wear and tear, or stale or unapproved fuel.

Improper Use and Abuse - The proper, intended use of this product is described in the Operator’s Manual. Using the product in a way not described in the Operator’s Manual or using the product after it has been damaged will void your warranty. Warranty is not allowed if the serial number on the product has been removed or the product has been altered or modified in any way, or if the product has evidence of abuse such as impact damage, or water/chemical corrosion damage.

Improper Maintenance or Repair - This product must be maintained according to the procedures and schedules provided in the Operator’s Manual, and serviced or repaired using genuine Briggs & Stratton parts. Damage caused by lack of maintenance or use of non-original parts is not covered by warranty.

Normal Wear - Like all mechanical devices, your unit is subject to wear even when properly maintained. This warranty does not cover repairs when normal use has exhausted the life of a part or the equipment. Maintenance and wear items such as filters, belts, cutting blades, and brake pads (engine brake pads are covered) are not covered by warranty due to wear characteristics alone, unless the cause is due to defects in material or workmanship.

Stale Fuel - In order to function correctly, this product requires fresh fuel that conforms to the criteria specified in the Operator’s Manual. Damage caused by stale fuel (carburetor leaks, clogged fuel tubes, sticking valves, etc) is not covered by warranty.

* Applies to Briggs and Stratton engines only. Warranty coverage of non-Briggs and Stratton engines is provided by the engine manufacturer.

Downloaded from www.Manualslib.com manuals search engine

ALLIS-CHALMERS

ALL-WHEEL-STEER LAWN TRACTOR SERIES 0

Not for reproduction

Engine Power Rating Information: The gross power rating for individual gas engine models is labeled in accordance with SAE (Society of Automotive Engineers) code J1940 (Small Engine Power & Torque Rating Procedure), and rating performance has been obtained and corrected in accordance with SAE J1995 (Revision 2002-05). Torque values are derived at 3060 RPM; horsepower values are derived at 3600 RPM. Actual gross engine power will be lower and is affected by, among other things, ambient operating conditions and engine-to-engine variability. Given both the wide array of products on which engines are placed and the variety of environmental issues applicable to operating the equipment, the gas engine will not develop the rated gross power when used in a given piece of power equipment (actual "on-site" or net power). This difference is due to a variety of factors including, but not limited to, accessories (air cleaner, exhaust, charging, cooling, carburetor, fuel pump, etc.), application limitations, ambient operating conditions (temperature, humidity, altitude), and engine-to-engine variability. Due to manufacturing and capacity limitations, Briggs & Stratton may substitute an engine of higher rated power for this Series engine.

ALLIS-CHALMERS®
Briggs & Stratton Power Products Group, LLC
P.O. Box 702
Milwaukee, WI 53201-0702
1-800-837-6836
www.allischalmerslawn.com

Downloaded from www.Manualslib.com manuals search engine