https://truckmanualshub.com/

MODEL 6230 DISC
OPERATOR'S MANUAL

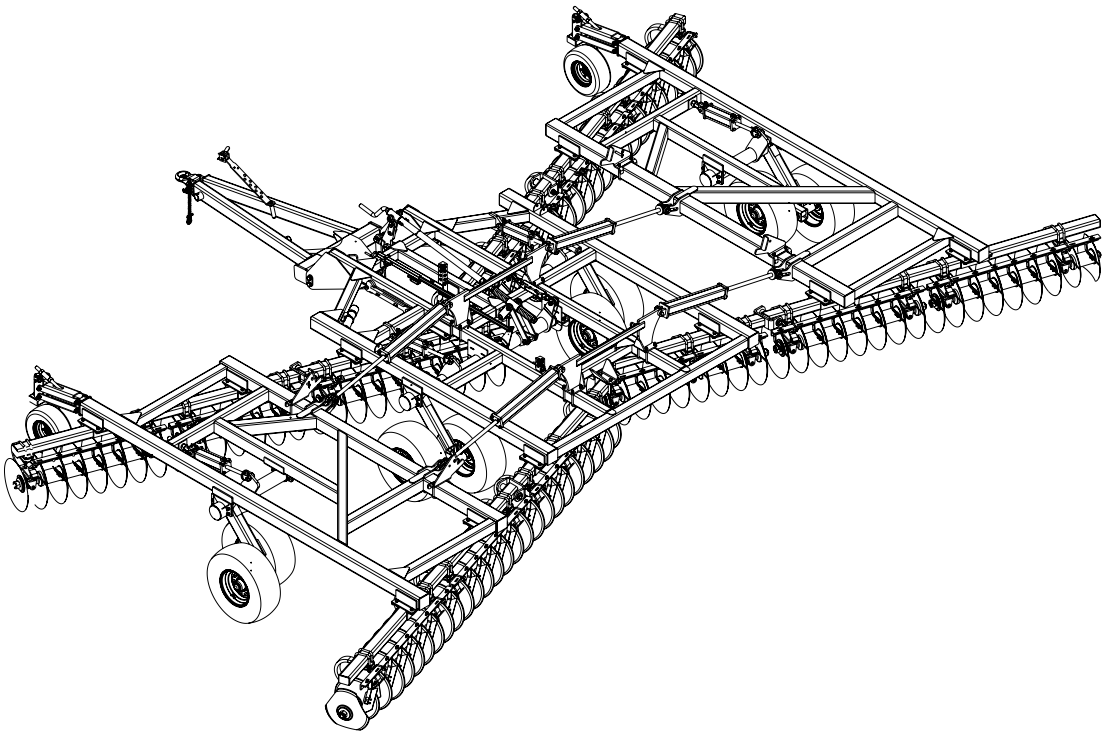

1900 NORTH STREET

MARYSVILLE, KANSAS 66508

(785) 562-5381

F-440-1106 **11/06**

https://truckmanualshub.com/

TILLAGE PRODUCT THREE YEAR LIMITED WARRANTY

Landoll Corporation warrants each new serial numbered Whole Good Tillage product, when properly assembled, adjusted, serviced, and normally operated, to be free from defects in materials and workmanship for a period of three (3) years, unless otherwise noted, from the date of delivery. Date of delivery shall be the date the Dealer places the product in the possession of the original retail purchaser, and must be confirmed by the Dealer submitting a properly completed Landoll Corporation Warranty Registration Form to the Landoll Corporation Warranty Department. Warranty starts the day the product is rented or leased. This limited warranty shall be transferable until the expiration date.

Landoll Corporation shall repair, or at its option, replace any part(s) of the product determined, by Landoll Corporation, to be defective. Landoll Corporation may request the return of part(s), freight prepaid via a carrier approved by the Landoll Warranty Staff, to Landoll Corporation for further evaluation. If the part is determined to be defective, Landoll Corporation will refund the freight charges incurred in returning the defective part(s), and will prepay replacement part(s) freight charges.

This limited warranty requires pre-authorization by the Landoll Corporation Warranty Staff of any warranty related utilization of components or labor, and is subject to specific exclusions and does not apply to any product which has been: 1) subjected to or operated in a manner which, at any time, have exceeded the product design limits: 2) repaired or altered outside our factory in any way so as, in the judgment of Landoll Corporation, to affect its stability or reliability: 3) subject to misuse, negligence, accident, or has been operated in a manner expressly prohibited in the instructions; or not operated in accordance with practices approved by Landoll Corporation. Operating the product in soils containing rocks, stumps or obstructions may void the warranty in its entirety. Excessive acres, consistent with non-seasonal very large farming operations, and, non-agricultural activities, may further limit the terms of this warranty.

The sole obligation of Landoll Corporation under this warranty shall be limited to repairing or replacing, at its option, part(s) which shall be identified to Landoll Corporation by way of a pre-authorized Landoll Corporation e-mail Warranty Claim Form Warranty, expressed or implied, will be denied on any product not properly registered with the Landoll Corporation Warranty Department within ten (10) days of the first retail sale. As stated above, Landoll Corporation Warranty Staff will identify components listed on a Warranty Claim required to be returned for further analysis. All parts returned to Landoll Corporation must be shipped with a Return Materials Authorization (RMA) provided by the Landoll Corporation Warranty Staff. Defective components must returned by the purchaser to Landoll Corporation with transportation and freight charges prepaid within fifteen (15) days after receipt of the RMA. The examination conducted by Landoll Corporation of returned parts shall disclose to its satisfaction the extent the component may be detective.

All parts and labor warranty MUST be pre-authorized by Landoll Corporation Warranty Staff. Failure to do so may result in no warranty payment of any kind. Labor will be reimbursed in accordance with published shop rates pre-approved by the Landoll Corporation Warranty Staff. Time authorized for specific work will be limited, where appropriate, to the hours listed in the Landoll Corporation authorized Labor Rate Guide.

USER'S OBLIGATION:

Read the Operator's Manual.

Understand the safe and correct operating procedures pertaining to the operation of the product.

Lubricate and maintain the product according to the maintenance schedule in the Operator's Manual.

Inspect machine and have parts repaired or replaced when continued use of the produce would cause damage or excessive wear to other parts.

Contact the Landoll Corporation Dealer for repair or replacement of defective parts. Mileage incurred by the Landoll Corporation Dealer is the customer's responsibility.

This 3-Year Limited Warranty SHALL NOT APPLY TO: (See Warranty Procedure Manual for details.)

- Ground Engaging Tools
- Vendor Warranty Only Parts

WARRANTY LABOR:

- Considered during the first year of warranty only.
- During the second and third year:
  Warranty labor is not covered.
  Customer is responsible for removing, replacing and returning the defective part(s) to the Landoll Corporation Dealer.

THIS WARRANTY IS EXPRESSLY IN LIEU OF ALL OTHER WARRANTIES OF MATERIAL, WORKMANSHIP, DESIGN, APPLICATION OR OTHERWISE WITH RESPECT TO ANY EQUIPMENT, WHETHER EXPRESS, IMPLIED OR STATUTORY, INCLUDING WARRANTIES OF MERCHANTABILITY AND FITNESS FOR A PARTICULAR PURPOSE, AND LANDOLL CORPORATION SHALL NOT BE LIABLE FOR SPECIAL OR CONSEQUENTIAL DAMAGES OF ANY KIND ON ACCOUNT OF ANY LANDOLL PRODUCT.

NO EMPLOYEE OR REPRESENTATIVE IS AUTHORIZED TO CHANGE THIS WARRANTY, VERBALLY OR IN WRITING, OR GRANT ANY OTHER WARRANTY.

LANDOLL CORPORATION, WHOSE POLICY IS ONE OF CONTINUOUS IMPROVEMENT, RESERVES THE RIGHT TO MAKE CHANGES WITHOUT OBLIGATION TO MODIFY PREVIOUSLY PRODUCED EQUIPMENT.

This warranty does not expand, enlarge upon or alter in any way, the warranties provided by the original manufacturers and suppliers of component parts and accessories. This warranty excludes such parts or accessories which are not defective, but may wear out and have to be replaced during the warranty period, including, but not limited to, light bulbs, paint, and the like. (Tire Warranties are expressly excluded from Landoll Corporation warranty herein.) Purchaser is expected to pay all repairs or replacement costs, in connection with this Agreement, including sales and other taxes immediately upon completion of work performed.

LIMITATION OF LIABILITY: Landoll Corporation shall not be liable to purchaser for any incidental or consequential damages suffered by the purchaser, including, but not limited to, any commercially reasonable charges, expenses or commissions incurred in connection with effecting cover or any other reasonable expense incident to the delay or other breach of warranty by Landoll Corporation, loss of anticipated profits, transportation expenses due to repairs, non-operation or increased expense of operation costs of purchased or replaced equipment, claim of customers, cost of money, any loss of use of capital or revenue, equipment rental, service trips, or for any special damage or loss of any nature arising at any time or from any cause whatsoever.

LIMITATION OF REMEDY: In the event of Landoll Corporation failure to repair the product subject to the warranty contained herein, the purchaser's sole and exclusive remedy against Landoll Corporation shall be for the repair or replacement of any defective part or parts of the product subject to work or repair within the time period and manner set forth herein. This exclusive remedy shall not be deemed to have failed of its essential purpose so long as Landoll Corporation is willing and able to repair or replace defective parts in the prescribed manner.

https://truckmanualshub.com/

MODEL 6230 DISC
OPERATOR'S MANUAL

PURCHASED FROM:_____ **DATE** ____ / ____ / ____

ADDRESS: _____

_____

_____

PHONE NO.: _____ **SERIAL NO.:** _____

https://truckmanualshub.com/

NOTES:

https://truckmanualshub.com/

Table of Contents

SECTION	DESCRIPTION	PAGE NO.
1	INTRODUCTION	1-1
2	STANDARD SPECIFICATIONS	2-1
3	ASSEMBLY INSTRUCTIONS	3-1
3-1	6230 DISC FRAME AND HITCH ASSEMBLY	3-3
3-2	LEVELER ASSEMBLY	3-5
3-3	MANUAL LEVELER	3-7
3-4	HYDRAULIC LEVELER (OPTIONAL)	3-9
3-5	HYDRAULIC DEPTH STOP TUBE ASSEMBLY	3-11
3-6	ELECTRONIC DEPTH STOP (OPTIONAL)	3-13
3-7	FOLD CYLINDER MOUNT	3-15
3-8	CENTER FRAME TIRES	3-17
3-9	DISC GANGS	3-17
3-10	WING FRAMES	3-19
3-11	HYDRAULIC INSTALLATION	3-32
3-12	LIGHT INSTALLATION	3-33
3-13	REAR TOW HITCH (OPTIONAL)	3-34
3-14	FINAL ASSEMBLY	3-35
4	OPERATION AND MAINTENANCE	4-1
4-1	TRACTOR PREPARATION	4-2
4-2	DISC PREPARATION	4-2
4-3	ATTACHING TO THE TRACTOR	4-3
4-4	HYDRAULIC LIFT SYSTEM	4-3
4-5	HYDRAULIC FOLD SYSTEM	4-5
4-6	GENERAL OPERATION	4-7
4-7	FIELD OPERATION	4-7
4-8	LEVELING (SIDE TO SIDE)	4-8
4-9	LEVELING (FRONT-TO-REAR)	4-10
4-10	HYDRAULIC LEVELER GAUGE ADJUSTMENT	4-11
4-11	VARIABLE RATIO ADJUSTMENT	4-12
4-12	HITCH ADJUSTMENT	4-13
4-13	SCRAPER ADJUSTMENT	4-14
4-14	HARROWS	4-15
4-15	FRONT GAUGE WHEELS	4-15
4-16	DISC BLADES	4-16
4-17	DEPTH STOP ADJUSTMENT (MANUAL)	4-17
4-18	ELECTRONIC DEPTH CONTROL ADJUSTMENT	4-18
4-19	WHEEL BEARING MAINTENANCE	4-19
4-20	HYDRAULIC MAINTENANCE	4-19
4-21	TRANSPORT	4-20
4-22	LUBRICATION MAINTENANCE	4-23
4-23	STORAGE	4-23
5	TROUBLESHOOTING GUIDE	5-1

https://truckmanualshub.com/

SAFETY PRECAUTIONS

THIS IS THE SAFETY ALERT SYMBOL. IT IS USED TO ALERT YOU TO POTENTIAL INJURY HAZARDS. OBEY ALL SAFETY MESSAGES THAT FOLLOW THIS SYMBOL TO AVOID POSSIBLE INJURY OR DEATH.

⚠DANGER — **DANGER INDICATES AN IMMINENTLY HAZARDOUS SITUATION WHICH, IF NOT AVOIDED, WILL RESULT IN DEATH OR SERIOUS INJURY.**

⚠WARNING — **WARNING INDICATES A POTENTIALLY HAZARDOUS SITUATION WHICH, IF NOT AVOIDED, COULD RESULT IN DEATH OR SERIOUS INJURY.**

⚠CAUTION — **CAUTION INDICATES A POTENTIALLY HAZARDOUS SITUATION WHICH, IF NOT AVOIDED, MAY RESULT IN MINOR OR MODERATE INJURY.**

CAUTION — **CAUTION USED WITHOUT THE SAFETY ALERT SYMBOL INDICATES A POTENTIALLY HAZARDOUS SITUATION WHICH, IF NOT AVOIDED, MAY RESULT IN PROPERTY DAMAGE.**

https://truckmanualshub.com/

INTRODUCTION 1

The Landoll 6230 Disc is a quality product designed to give years of trouble free performance. By following each section of this manual, your system will perform as designed for you and your operation.

SECTION 1 gives basic instructions on the use of this manual.

SECTION 2 gives product specifications. These specifications supply lengths and measures for your equipment. A Standard Bolt Torque Table is provided to give guidelines for bolt torques to be used when servicing this product.

SECTION 3 contains assembly instructions for your 6230 Disc. When these procedures are correctly followed, your equipment should provide you years of trouble-free operation and service.

SECTION 4 instructs how to operate your equipment before using it, and describes adjustments needed. It also gives practical advice for the care and maintenance of your Landoll equipment. Drawings in this section locate adjustment points on the equipment.

NOTE: IF THE EQUIPMENT IS IMPROPERLY ASSEMBLED OR MAINTAINED, THE WARRANTY IS VOID. IF YOU HAVE ANY QUESTIONS CONTACT:

LANDOLL CORPORATION
1900 NORTH STREET
MARYSVILLE, KANSAS 66508
or phone:
(785) 562-5381 or
(800) 428-5655
or FAX:
(785) 562-3240

SECTION 5 is a troubleshooting guide to aid in diagnosing and solving problems with the equipment.

PARTS LIST is a separate manual showing the various assemblies, subassemblies, and systems. Refer to that manual when ordering Landoll replacement parts. Order parts from your Landoll dealer.

WARRANTY The Warranty Registration form is included with the product documents. Fill it out and mail it within 15 days of purchase. The Warranty is printed inside the front cover.

NOTE: IMPROPER ASSEMBLY, MODIFICATION, OR MAINTENANCE OF YOUR LANDOLL MACHINE CAN VOID YOUR WARRANTY.

COMMENTS Address comments or questions regarding this publication to:

LANDOLL CORPORATION
1900 NORTH STREET
MARYSVILLE, KANSAS 66508
ATTENTION: PUBLICATIONS -DEPT. 55

https://truckmanualshub.com/

NOTES:

https://truckmanualshub.com/

STANDARD SPECIFICATIONS 2

MODEL NO.	WORKING WIDTH	TRANSPORT WIDTH	TRANSPORT HEIGHT	BLADE DIAMETER	NO. OF BLADES	NO. OF BEARINGS	TIRE SIZE AND PLY	SPINDLE SIZE	WHEEL BOLT PATTERN	ESTIMATED WEIGHT LBS.
6230-21	20-7"	13'-5"	9'-8"	22" or 24"	28/30	10/8	(6) 11L x 15 12 ply	2"	6 Bolt	10,810
6230-23	23'-4"	13'-5"	10'-11"	22" or 24"	32/34	12/10	(8) 11L x 15 12 ply	2"	6 Bolt	13,280
6230-26	26'-2"	13'-5"	12'-4"	22" or 24"	36/38	12/10	(8) 12.5L x 15 12 ply	2"	6 Bolt	15,010
6230-29	28'-11"	13'-5"	13'-8"	22" or 24"	40/42	14/12	(8) 12.5L x 15 12 ply	2"	6 Bolt	16,362
6230-30	30'-4"	17'-7"	12'-4"	22" or 24"	42/44	12/12	(8) 12.5L x 15 Load Range F	2-1/4"	8 Bolt	18,251
6230-33	33'-1"	17'-7"	13'-7"	22" or 24"	46/48	14/14	(8) 12.5L x 15 Load Range F	2-1/4"	8 Bolt	19,987
6230-36	35'-10"	17'-7"	14'-11"	22" or 24"	50/52	14/14	(8) 12.5L x 15 Load Range F	2-1/4"	8 Bolt	20,360

Specifications are subject to change without prior notification.

https://truckmanualshub.com/

LANDOLL CORPORATION
GENERAL TORQUE SPECIFICATIONS (REV. 4/97)

THIS CHART PROVIDES TIGHTENING TORQUES FOR GENERAL PURPOSE APPLICATIONS WHEN SPECIAL TORQUES ARE NOT SPECIFIED ON PROCESS OR DRAWING.
ASSEMBLY TORQUES APPLY TO PLATED NUTS AND CAPSCREWS ASSEMBLED WITHOUT SUPPLEMENTAL LUBRICATION (AS RECEIVED CONDITION). THEY DO NOT APPLY IF SPECIAL GRAPHITE MOLY-DISULFIDE OR OTHER EXTREME PRESSURE LUBRICANTS ARE USED.
WHEN FASTENERS ARE DRY (SOLVENT CLEANED), ADD 33% TO AS RECEIVED CONDITION TORQUE.
BOLT HEAD IDENTIFICATION MARKS INDICATE GRADE AND MAY VARY FROM MANUFACTURER TO MANUFACTURER.
THICK NUTS MUST BE USED ON GRADE 8 CAPSCREWS.
USE VALUE IN [ ] IF USING PREVAILING TORQUE NUTS.

TORQUE IS SPECIFIED IN FOOT POUNDS

UNC Size	SAE Grade 2		SAE Grade 5		SAE Grade 8		UNF Size	SAE Grade 2		SAE Grade 5		SAE Grade 8	
1/4-20	4	[5]	6	[7]	9	[11]	1/4-28	5	[6]	7	[9]	10	[12]
5/16-18	8	[10]	13	[16]	18	[22]	5/16-24	9	[11]	14	[17]	20	[25]
3/8-16	15	[19]	23	[29]	35	[43]	3/8-24	17	[21]	25	[31]	35	[44]
7/16-14	24	[30]	35	[43]	55	[62]	7/16-20	27	[34]	40	[50]	60	[75]
1/2-13	35	[43]	55	[62]	80	[100]	1/2-20	40	[50]	65	[81]	90	[112]
9/16-12	55	[62]	80	[100]	110	[137]	9/16-18	60	[75]	90	[112]	130	[162]
5/8-11	75	[94]	110	[137]	170	[212]	5/8-18	85	[106]	130	[162]	180	[225]
3/4-10	130	[162]	200	[250]	280	[350]	3/4-16	150	[188]	220	[275]	320	[400]
7/8-9	125	[156]	320	[400]	460	[575]	7/8-14	140	[175]	360	[450]	500	[625]
1-8	190	[237]	408	[506]	680	[850]	1-14	210	[263]	540	[675]	760	[950]
1-1/8-7	270	[337]	600	[750]	960	[1200]	1-1/8-12	300	[375]	660	[825]	1080	[1350]
1-1/4-7	380	[475]	840	[1050]	1426	[1782]	1-1/4-12	420	[525]	920	[1150]	1500	[1875]
1-3/8-6	490	[612]	110	[1375]	1780	[2225]	1-3/8-12	560	[700]	1260	[1575]	2010	[2512]
1/1-2-6	650	[812]	1460	[1825]	2360	[2950]	1/1-2-12	730	[912]	1640	[2050]	2660	[3325]

METRIC

COARSE THREAD METRIC CLASS 10.9 FASTENERS AND CLASS 10.0 NUTS AND THROUGH HARDENED FLAT WASHERS, PHOSPHATE COATED, ROCKWELL “C” 38-45.
USE VALUE IN [ ] IF USING PREVAILING TORQUE NUTS.

Nominal Thread Diameter mm	Standard Torque				Nominal Thread Diameter mm	Standard Torque			
	Newton-Meters		Foot-Pounds			Newton-Meters		Foot-Pounds	
6	10	[14]	7	[10]	20	385	[450]	290	[335]
7	16	[22]	12	[16]	24	670	[775]	500	[625]
8	23	[32]	17	[24]	27	980	[1105]	730	[825]
10	46	[60]	34	[47]	30	1330	[1470]	990	[1090]
12	80	[101]	60	[75]	33	1790	[1950]	1340	[1450]
14	125	[155]	90	[115]	36	2325	[2515]	1730	[1870]
16	200	[240]	150	[180]	39	3010	[3210]	2240	[2380]
18	275	[330]	205	[245]					

Table 2-1 General Torque Specifications

https://truckmanualshub.com/

LANDOLL CORPORATION
HYDRAULIC FITTING TORQUE SPECIFICATIONS
37° JIC, ORS, & ORB (REV. 10/97)

THIS CHART PROVIDES TIGHTENING TORQUES FOR HYDRAULIC FITTING APPLICATIONS WHEN SPECIAL TORQUES ARE NOT SPECIFIED ON PROCESS OR DRAWING.
ASSEMBLY TORQUES APPLY TO PLATED CARBON STEEL AND STAINLESS STEEL FITTINGS ASSEMBLED WITHOUT SUPPLEMENTAL LUBRICATION (AS RECEIVED CONDITION). THEY DO NOT APPLY IF SPECIAL GRAPHITE MOLY-DISULFIDE OR OTHER EXTREME PRESSURE LUBRICANTS ARE USED.
BRASS FITTINGS AND ADAPTERS - 65% OF THE TORQUE VALUE FOR STEEL. STAINLESS STEEL, ALUMINUM AND MONEL - THREADS ARE TO BE LUBRICATED.
TORQUE IS SPECIFIED IN FOOT POUNDS

PARKER BRAND FITTINGS

Dash Size	37 Degree JIC	O-Ring (ORS)	O-Ring Boss (ORB)
-4	11-13	15-17	13-15
-5	14-16	—	21-23
-6	20-22	34-36	25-29
-8	43-47	58-62	40-44
-10	55-65	100-110	57.5-62.5
-12	80-90	134-146	75-85
-16	115-125	202-218	109-121
-20	160-180	248-272	213-237
-24	185-215	303-327	238-262
-32	250-290	—	310-340

LANDOLL CORPORATION
HYDRAULIC FITTING TORQUE SPECIFICATIONS
37° JIC, ORS & ORB (REV. 10/97)

THIS CHART PROVIDES TIGHTENING TORQUES FOR HYDRAULIC FITTING APPLICATIONS WHEN SPECIAL TORQUES ARE NOT SPECIFIED ON PROCESS OR DRAWING.
ASSEMBLY TORQUES APPLY TO PLATED CARBON STEEL AND STAINLESS STEEL FITTINGS ASSEMBLED WITHOUT SUPPLEMENTAL LUBRICATION (AS RECEIVED CONDITION). THEY DO NOT APPLY IF SPECIAL GRAPHITE MOLY-DISULFIDE OR OTHER EXTREME PRESSURE LUBRICANTS ARE USED.
BRASS FITTINGS AND ADAPTERS - 65% OF THE TORQUE VALUE FOR STEEL.
TORQUE IS SPECIFIED IN FOOT POUNDS.

AEROQUIP BRAND FITTINGS

Dash Size	37 Degree JIC	O-Ring (ORS)	O-Ring Boss (ORB)
-4	11-12	10-12	14-16
-5	15-16	—	18-20
-6	18-20	18-20	24-26
-8	38-42	32-35	50-60
-10	57-62	46-50	72-80
-12	79-87	65-70	125-135
-14	—	—	160-180
-16	108-113	92-100	200-220
-20	127-133	125-140	210-280
-24	158-167	150-165	270-360
-32	245-258	—	—

Table 2-2 Hydraulic Fitting Torque Specifications

https://truckmanualshub.com/

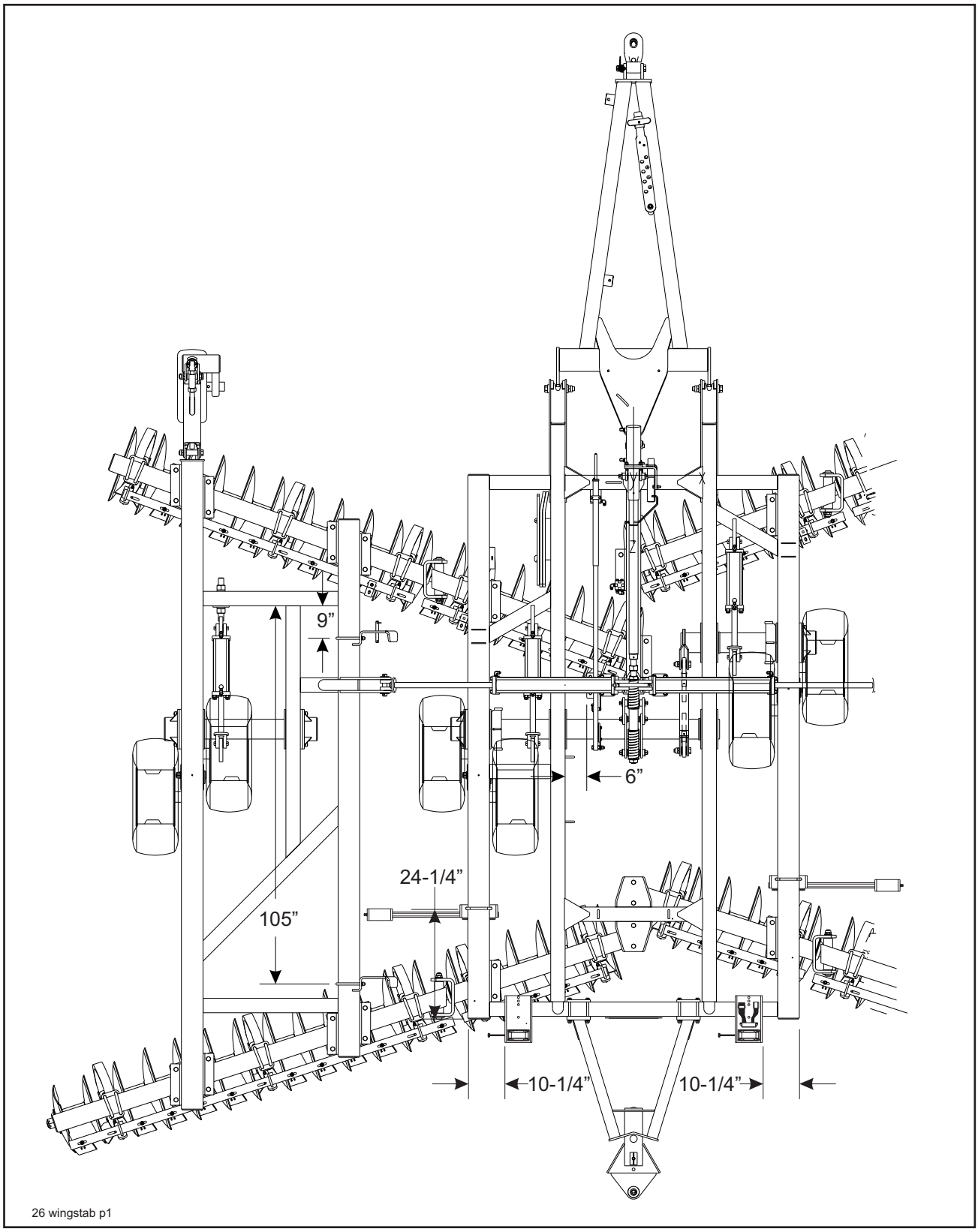

Figure 2-1 Wing Stabilizer and Light Bracket Placement (21' - 29' Models) (Left Half)

https://truckmanualshub.com/

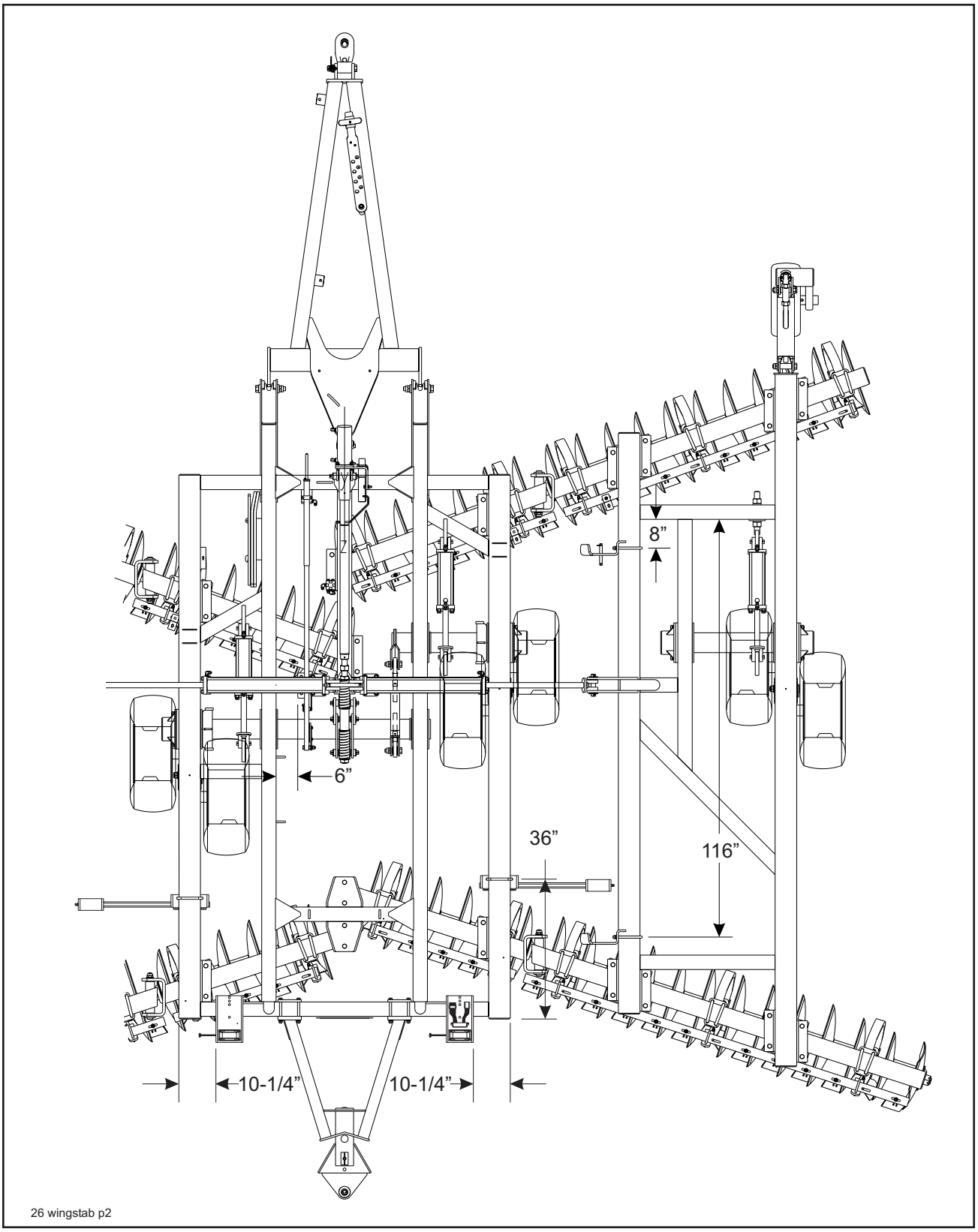

Figure 2-2 Wing Stabilizer and Light Bracket Placement (21' - 29' Models) (Right Half)

https://truckmanualshub.com/

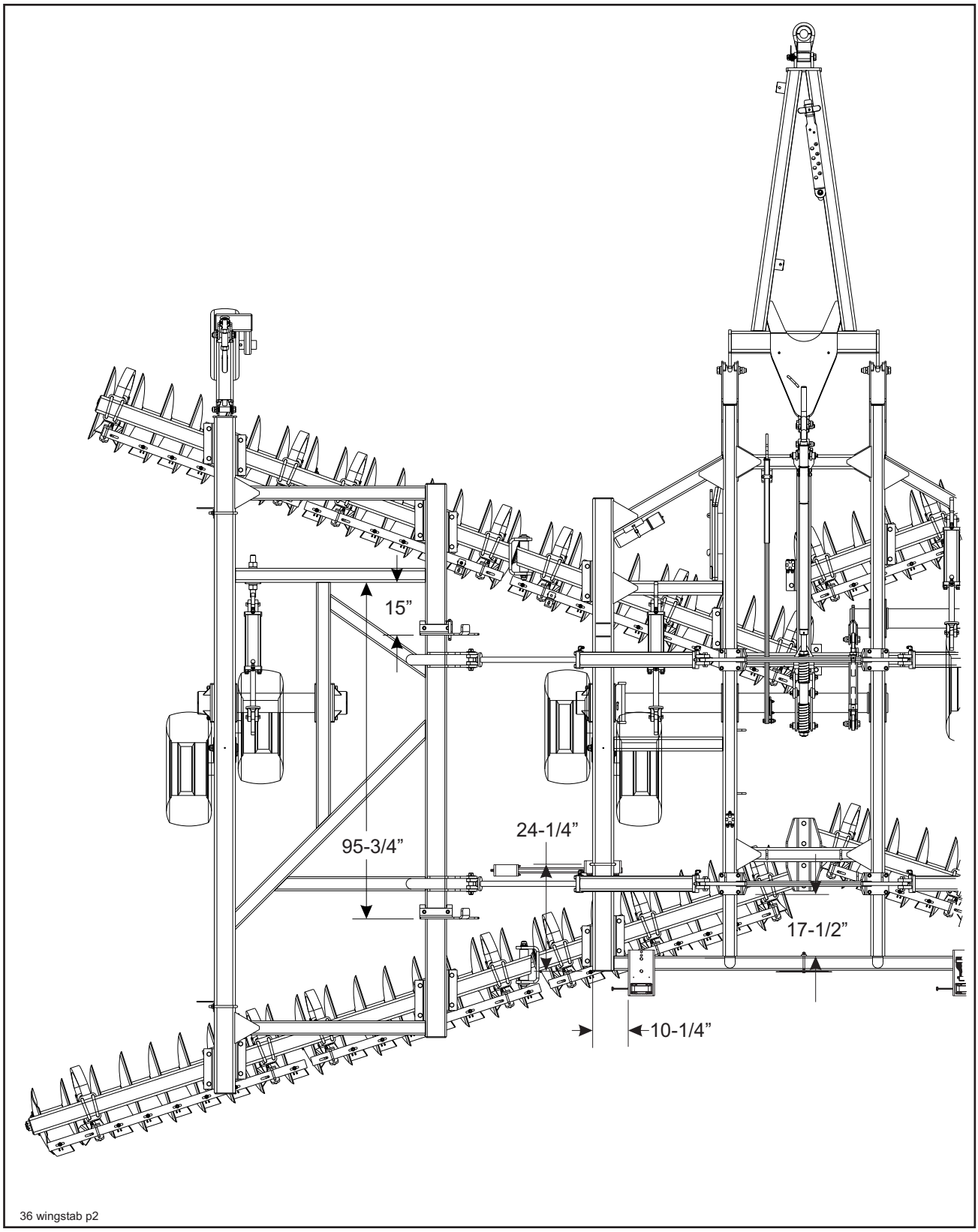

Figure 2-3 Wing Stabilizer and Light Bracket Placement (30' - 36' Models) (Left Half)

https://truckmanualshub.com/

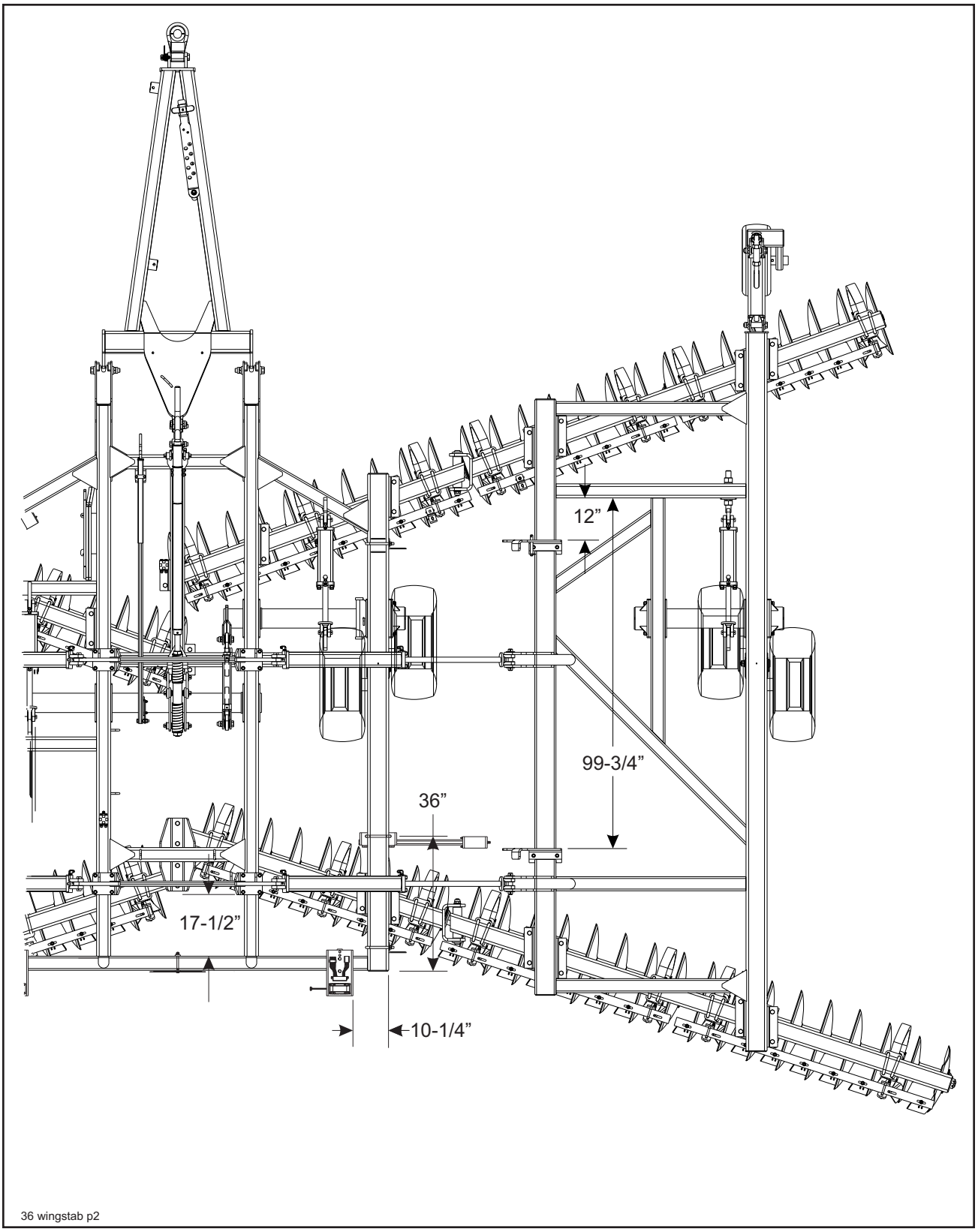

Figure 2-4 Wing Stabilizer and Light Bracket Placement (30' - 36' Models) (Right Half)

https://truckmanualshub.com/

https://truckmanualshub.com/

ASSEMBLY INSTRUCTIONS 3

It is very important that your new 6230 Disc be properly assembled, adjusted and lubricated before use. Illustrations to assist with the assembly process are provided in **Section 2, "Standard Specifications"**. They show proper disc gang, wing stabilizer bracket, and light mounting bracket spacing. Illustrations in this section show proper assembly procedures. Remove paint from grease fittings. Replace any grease fittings that are damaged or missing. Be sure to return screws, clips, etc., to their original locations.

To insure alignment of assemblies, **leave the nuts loose until completion** of final assembly. Use lock washers or flat washers as specified. Spread all cotter pins.

After completion of final assembly, tighten all nuts evenly to prevent misalignment, distortion or binding. Tighten all screws and nuts to the recommended torques shown in **Table 2-1, "Standard Bolt Torques"**.

⚠DANGER

DISC BLADES ARE EXTREMELY SHARP. EXERCISE EXTREME CARE WHEN WORKING ON OR NEAR DISC BLADES. DO NOT ALLOW DISCS TO ROLL OVER OR FALL ONTO ANY BODILY PART. DO NOT ALLOW WRENCHES TO SLIP WHEN WORKING NEAR DISC BLADES. NEVER PUSH WRENCHES TOWARD DISC BLADES. DO NOT CLIMB OVER MACHINE ABOVE DISC BLADES. FAILURE TO STAY CLEAR OF DISC BLADE EDGES CAN CAUSE SERIOUS PERSONAL INJURY OR DEATH.

⚠WARNING

DO NOT ATTEMPT TO LIFT HEAVY PARTS (SUCH AS THE FRAME, DISC GANGS, ROCK SHAFT, AND PULL HITCH) MANUALLY. USE A HOIST OR A FORK LIFT TO MOVE THESE PARTS INTO POSITION.

⚠DANGER

TO PREVENT ACCIDENTAL LOWERING:

1. ALL HYDRAULICALLY ELEVATED EQUIPMENT MUST BE LOCKED OUT USING THE CYLINDER LOCKOUTS:

2. LOWER EQUIPMENT TO THE GROUND WHILE SERVICING OR WHEN IT IS IDLE.

FAILURE TO TAKE MEASURES TO PREVENT ACCIDENTAL LOWERING MAY RESULT IN SERIOUS PERSONAL INJURY OR DEATH.

⚠CAUTION

BE SURE TO BLEED THE HYDRAULIC SYSTEM OF ALL AIR IN LINES AFTER INSTALLATION. FAILURE TO BLEED THE SYSTEM OF ALL AIR CAN RESULT IN IMPROPER MACHINE OPERATION.

⚠CAUTION

INCORRECT ADJUSTMENT OF DISC ADJUST RODS WILL CAUSE PERMANENT EQUIPMENT DAMAGE.

https://truckmanualshub.com/

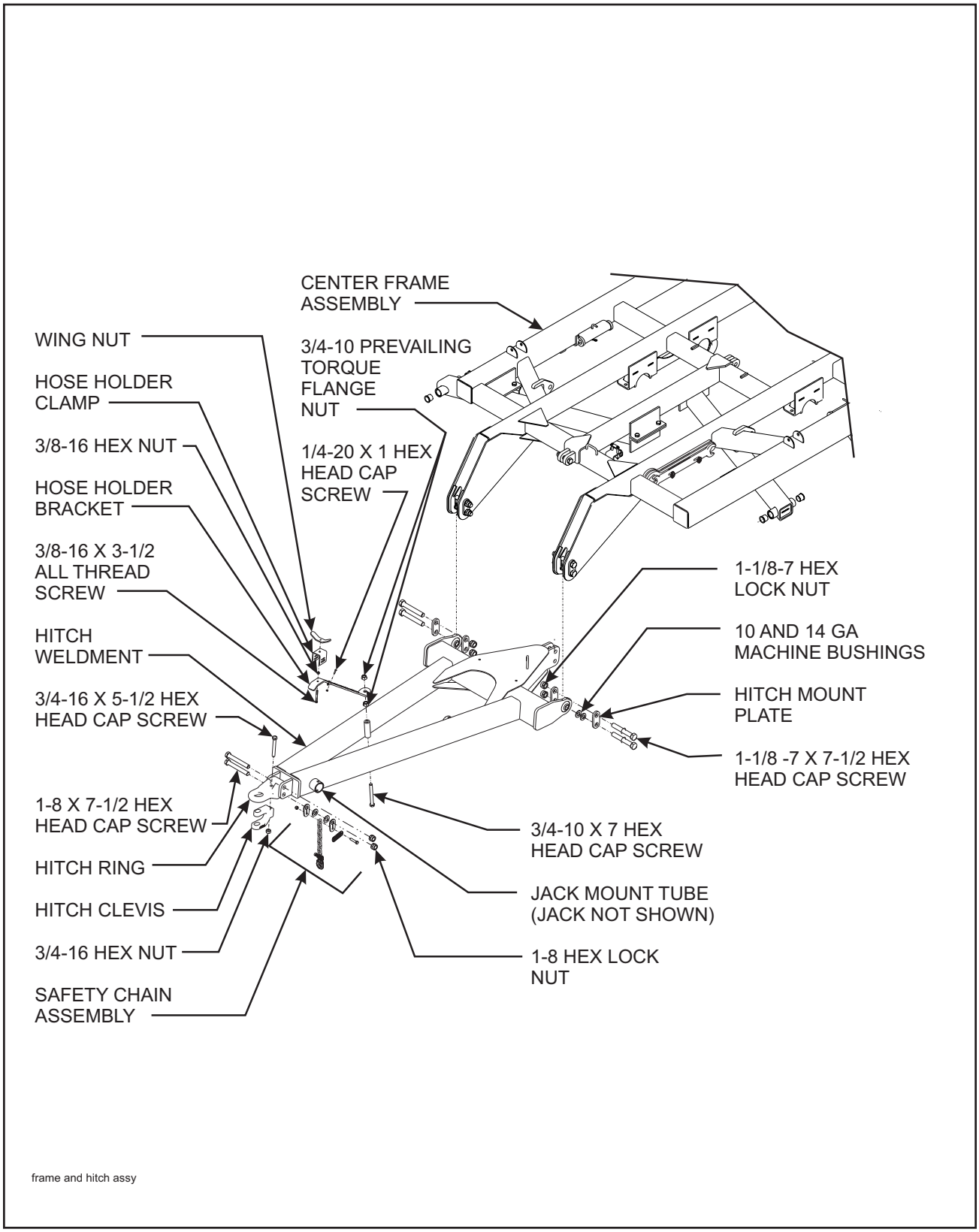

Figure 3-1 Frame and Hitch Assembly Installation

https://truckmanualshub.com/

3-1 6230 DISC FRAME AND HITCH ASSEMBLY

IMPORTANT

READ ALL SAFETY PRECAUTIONS AT THE FRONT OF THE SECTION BEFORE ATTEMPTING ANY OF THE FOLLOWING PROCEDURES.

3-1.1 Place the center frame assembly on stands approximately 36” high. The assembly area should be a large level area of sufficient size to accommodate the disc when fully assembled.

⚠WARNING

DO NOT ATTEMPT TO LIFT HEAVY PARTS (SUCH AS THE FRAME, DISC GANGS, ROCK SHAFT, AND PULL HITCH) MANUALLY. USE A HOIST OR A FORK LIFT TO MOVE THESE PARTS INTO POSITION.

3-1.2 Attach the hitch weldment to the front of the center frame using 1-1/8-7 x 7-1/2 hex head cap screws, machine bushings, hitch mounting plates, and hex lock nuts **(See Figure 3-1)**. Machine bushings are provided to remove the slack on each side of the ball joints and center the hitch. Use bushings as required.

Note: The hitch may be assembled in the upper or lower position depending on matching tractor drawbar height. See Section 4-12 for proper adjustment.

3-1.3 Move the tongue jack to the forward mounting tube and rotate to parking position to support the front of the hitch.

3-1.4 Insert a 3/4-10 x 7 hex head cap screw into the hose holder tube on the right side of the hitch from the bottom side so the threads point upward. Hold in place with a 3/4 prevailing torque flange nut with the flange pointing upward as well. Do not tighten this cap screw, so the hose holder bracket may pivot freely in this joint.

3-1.5 Slide the hose holder bracket over the screw and secure with another 3/4 prevailing torque flange nut.

3-1.6 Install a 3/8-16 x 3-1/2 all-thread screw in the front of the hose holder bracket and secure with a 3/8-16 hex nut.

3-1.7 Slide the hose holder clamp over the 3/8” screw and loosely start the wing nut on top of the clamp. Hydraulic hoses will be routed through the clamp after assembly.

Note: The clamp has two sides, so that extend hoses can be located on one side and retract hoses can be located on the other side for reference.

https://truckmanualshub.com/

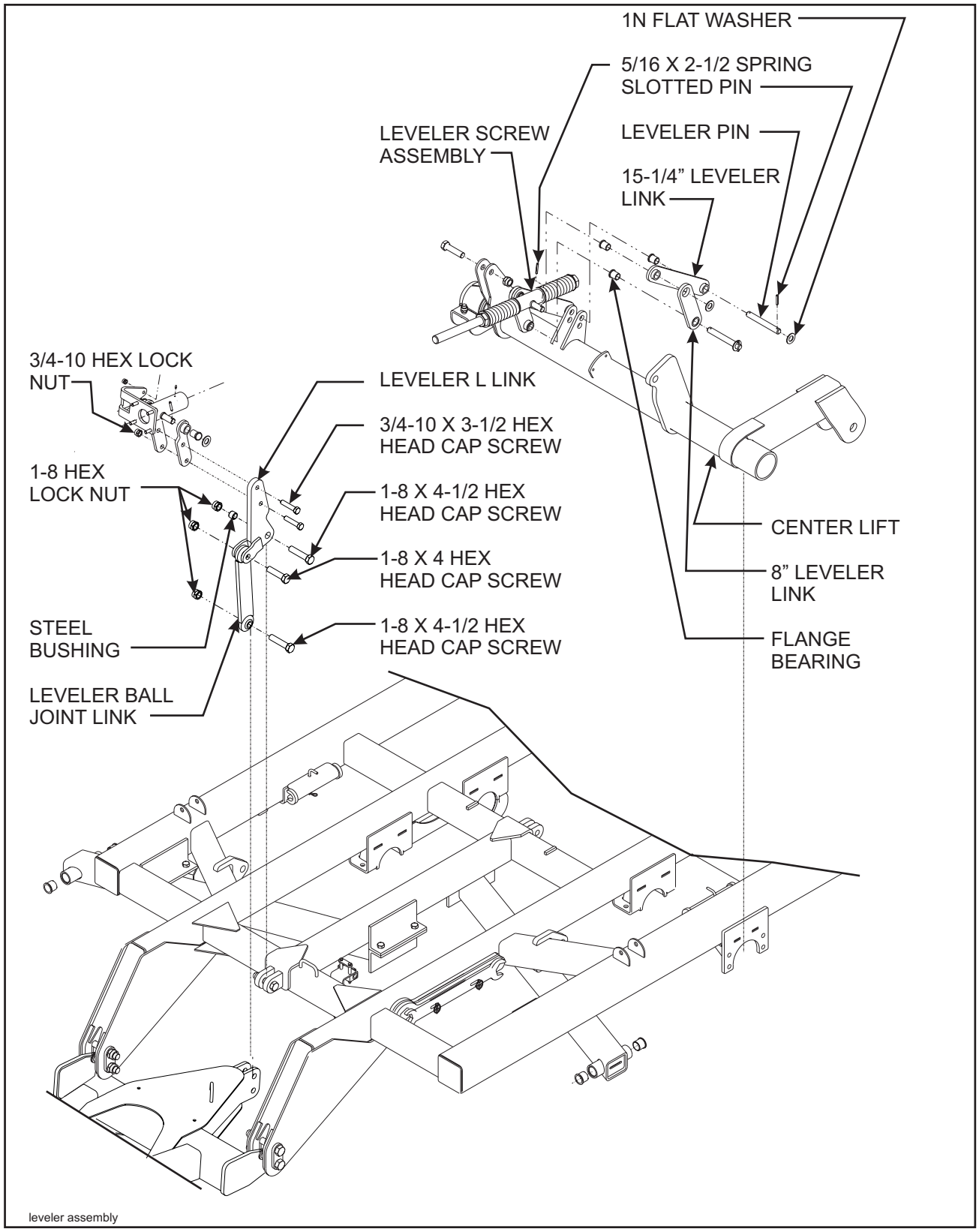

Figure 3-2 Leveler Assembly Installation

https://truckmanualshub.com/

3-2 LEVELER ASSEMBLY

3-2.1 Install a hardened steel wear bushing in the leveler L link **(See Figure 3-2)**.

3-2.2 Attach the leveler L link to the front mount of the center frame with a 1-8 x 4-1/2 hex head cap screw and hex lock nut.

3-2.3 With a 1-8 x 4 hex head cap screw and hex lock nut attach the leveler ball joint link to the leveler L link.

3-2.4 Connect the bottom end of the leveler ball joint link to the rear mounting holes of the hitch using a 1-8 x 4-1/2 hex head cap screw and hex lock nut.

Note: When the hitch is in the upper mounting position, the leveler ball joint link is mounted in the lower holes. When the hitch is in the lower position, the link is mounted in the top mounting holes. See Section 4-12 for proper adjustment.

3-2.5 Install plastic wear flange bearings into both ends of the 15-1/4” leveler links. Insert the bushings on the flat side of the link.

3-2.6 Insert plastic wear flange beariings into the round tube end of the 8” leveler links. Insert the wear bushing on the tube side of the link.

3-2.7 Slide one end of the 15-1/4” link over the leveler screw assembly. Slide the large end of the 8” link over the other link and secure with a 1” washer and 5/16” x 2-1/2 spring slotted pin. Repeat this for the other side of the leveler screw assembly.

3-2.8 Attach the bottom end of the 8” leveler links to center frame mount located in the middle of the frame using 1" x 7-7/8" leveler pin, washers, and 5/16" x 2-1/2" spring slotted pins.

3-2.9 Secure the rear of the 15-1/4” leveler links to the top holes of the mounting plates located on the center lift using 1" x 7-7/8" leveler pin, washers, and 5/16" x 2-1/2" spring slotted pins.

Note: If using a harrow attachment, see Section 4-11 on which mounting hole to use.

https://truckmanualshub.com/

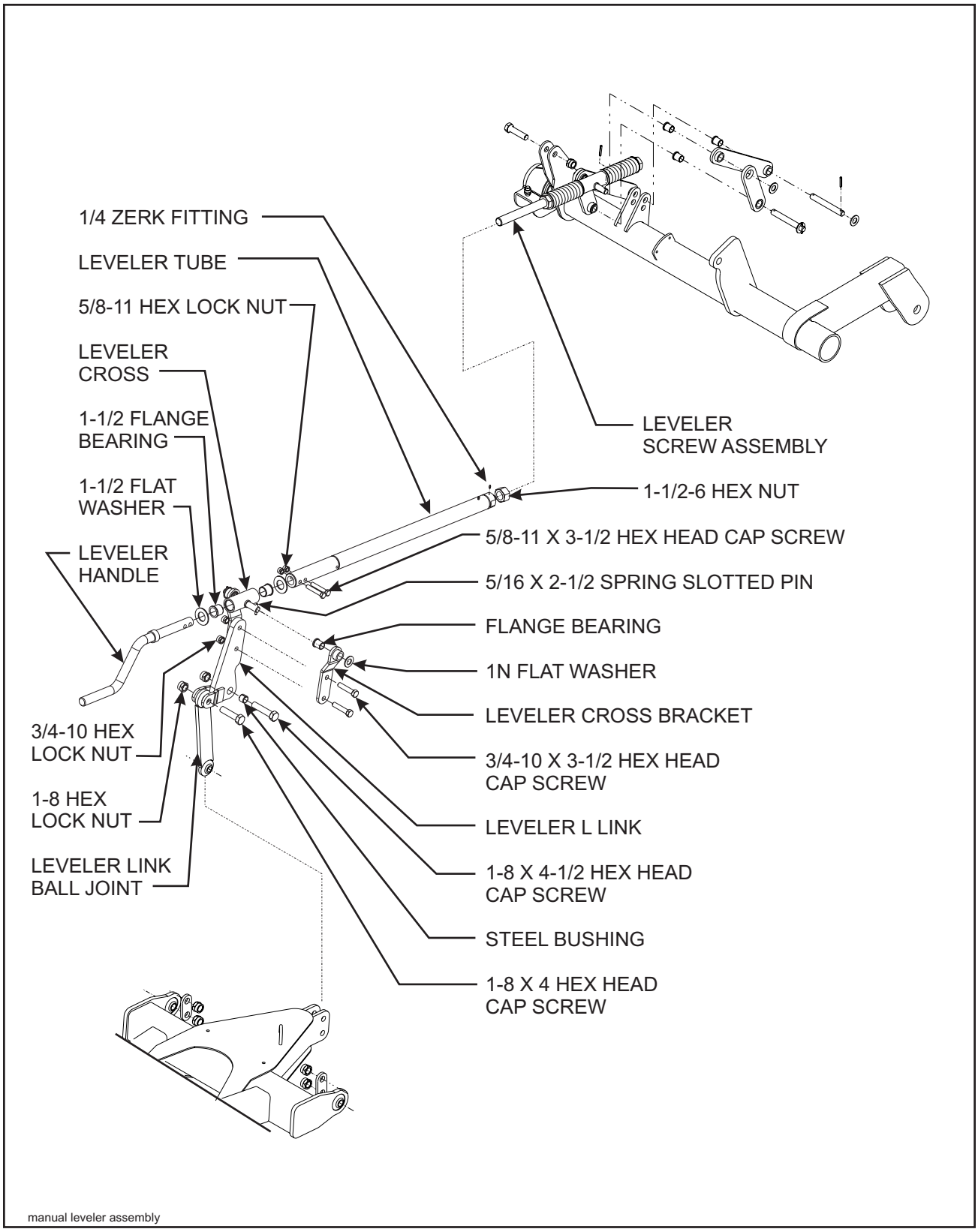

Figure 3-3 Manual Leveler Installation

https://truckmanualshub.com/

3-3 MANUAL LEVELER

3-3.1 Using the manual leveler, screw the leveler tube onto the leveler screw assembly **(See Figure 3-3)**. Initially leave approximately 3” of threads visible, further adjustment may be required. Rotate the tube so that the zerk hole in the threaded end is pointing upward.

3-3.2 Install the manual leveler handle assembly into the front end of the leveler tube and fasten with two 5/8-11 x 3-1/2 hex head cap screws and hex lock nuts. Insert a plastic wear flange bearing into the flat side of each leveler cross bracket. Slide the brackets over each side of the manual leveler cross and secure with washers and 5/16” x 2-1/2” spring slotted pins.

3-3.3 Attach the leveler cross brackets to the top of the leveler L link using 3/4-10 x 3-1/2 hex head cap screws and hex lock nuts.

3-3.4 Install a grease zerk in the threaded end of the leveler tube.

https://truckmanualshub.com/

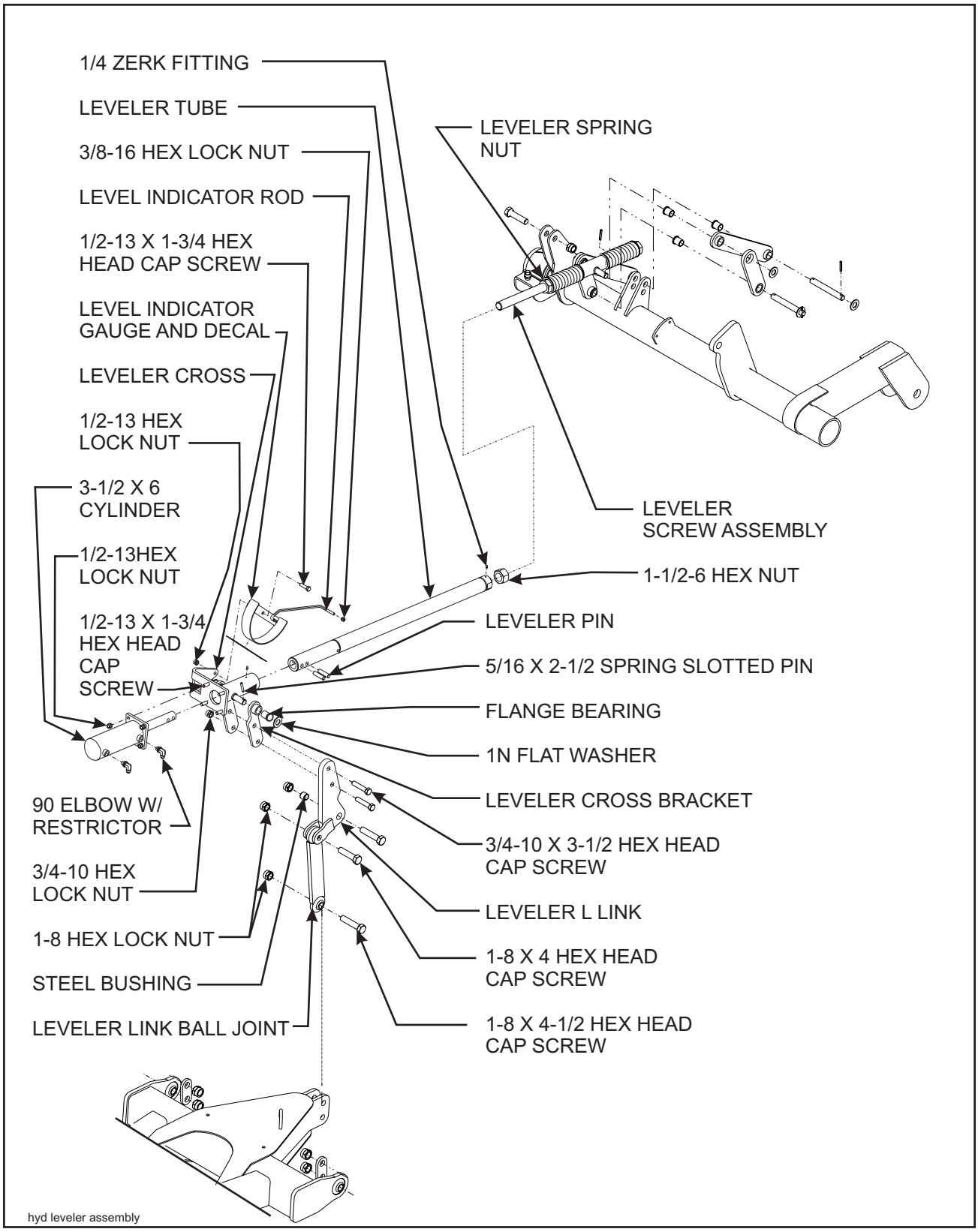

Figure 3-4 Hydraulic Leveler Installation

https://truckmanualshub.com/

3-4 HYDRAULIC LEVELER (OPTIONAL)

3-4.1 Thread a 1-1/2-6 hex nut onto the leveler screw assembly **(See Figure 3-4)**. Initially leave approximately 5” of threads visible between the 1-1/2-6 hex nut and the leveler spring nut. Further adjustment may be required.

3-4.2 Thread the leveler tube onto the leveler screw assembly until it contacts the 1-1/2-6 hex nut. Rotate the tube so the grease zerk hole in the threaded end points upward.

3-4.3 Slide the leveler cross over the front end of the leveler tube.

3-4.4 Insert the 3-1/2 x 6 hydraulic leveler cylinder into the front end of the leveler tube and pin using two 5/8” steel leveler pins. Rotate the cylinder so the hydraulic ports point to the left side of the implement.

3-4.5 Slide the leveler cylinder cross up to the cylinder and secure with 1/2-13 x 1-3/4 hex head cap screws and hex lock nuts. Install the screws from the back of the leveler cylinder cross, pointing forward for proper operating clearance. The indicator window of the leveler cylinder cross should point to the right side of the implement.

3-4.6 Insert a plastic wear flange bearing in each leveler cross bracket. Install the plastic wear flange bearing from the tube side of the bracket.

3-4.7 Slide the leveler cross brackets onto the leveler cylinder cross and secure with washers and 5/16” x 2-1/2” spring slotted pins.

3-4.8 Attach the leveler cross brackets to the top of the leveler L link using 3/4-10 x 3-1/2 hex head cap screws and hex lock nuts.

3-4.9 Install grease zerks in the threaded end of the leveler tube and the leveler cylinder cross.

3-4.10 With a 1/2-13 x 1-3/4 hex head cap screw and hex lock nut, attach the leveler indicator gauge to the leveler cylinder cross. Do not over tighten this screw, as the indicator gauge must be free to pivot about this joint.

3-4.11 Rotate the leveler tube so the cross-hole for the level indicator rod is horizontal. Wrench-flats are provided at the threaded end of the leveler tube to make this adjustment. Secure the 1-1/2-6 hex lock nut to prevent the leveler tube from rotating further.

3-4.12 Insert the threaded end of the leveler indicator rod through the leveler tube cross-hole and the other rod end through the bottom leveler indicator hole. Secure the indicator rod with a 3/8-16 hex lock nut.

https://truckmanualshub.com/

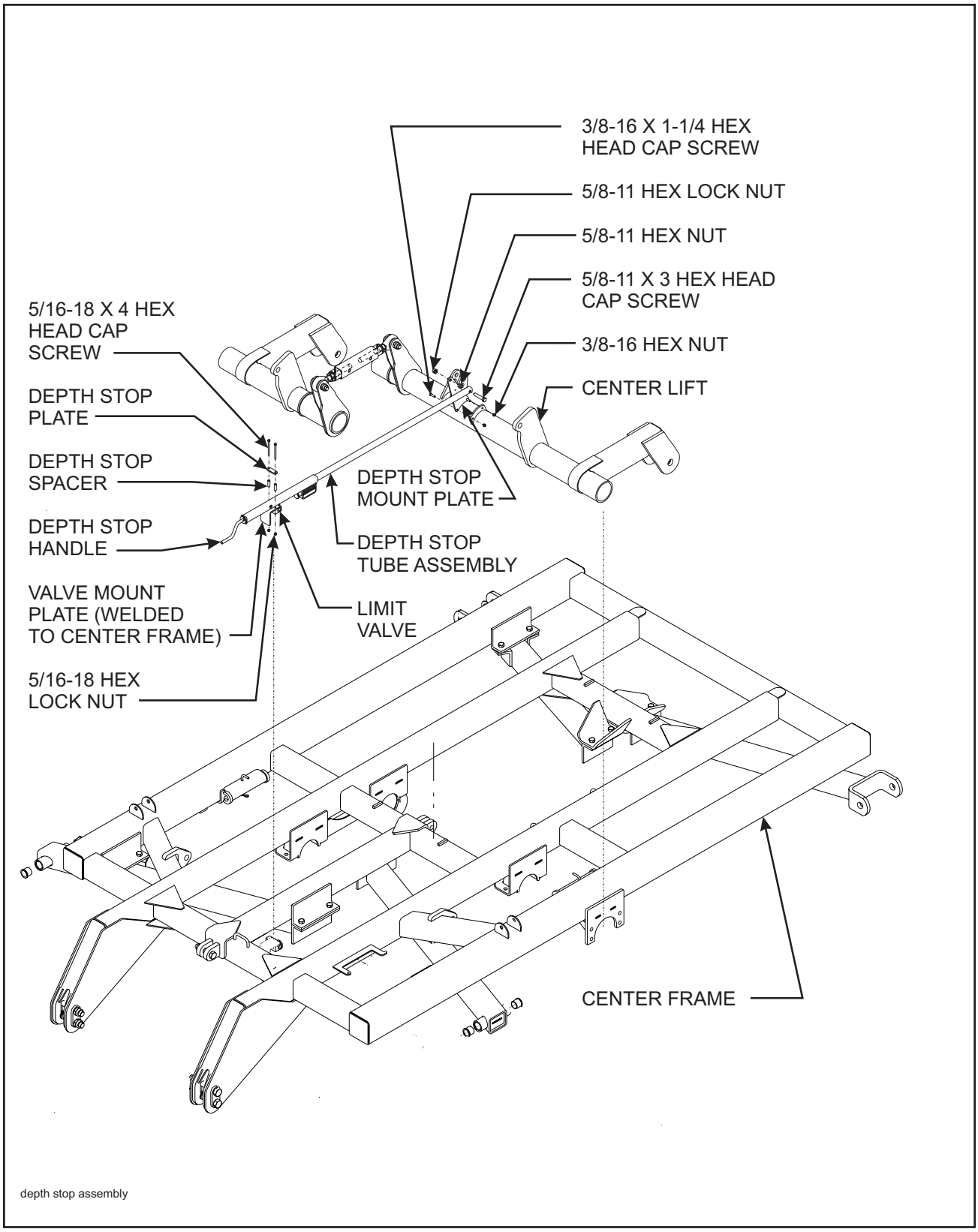

Figure 3-5 Hydraulic Depth Stop Assembly Installation

https://truckmanualshub.com/

3-5 HYDRAULIC DEPTH STOP TUBE ASSEMBLY

3-5.1 Lay the depth stop tube assembly on top of the center frame. Insert a 5/8-11 x 3 hex head cap screw in the rear hole of the tube assembly from the left side **(See Figure 3-5)**. Install a 5/8-11 hex nut on the screw. Do not over tighten, as the depth stop must pivot on this screw. Insert the screw through the depth stop mounting plate on the center lift and secure with a 5/8-11 hex lock nut.

3-5.2 Insert 90 deg elbow fittings in the back and right side of the limit valve.

3-5.3 Using 5/16-18 x 4 hex head cap screws secure the front end of the depth stop tube assembly to the top of the frame mount with the spacers, depth stop plate, and 5/16-18 hex lock nuts. Attach the limit valve to the bottom side of the center frame mount using these same screws.

Note: It may be necessary to leave these screws loose to attach the valve hoses later.

https://truckmanualshub.com/

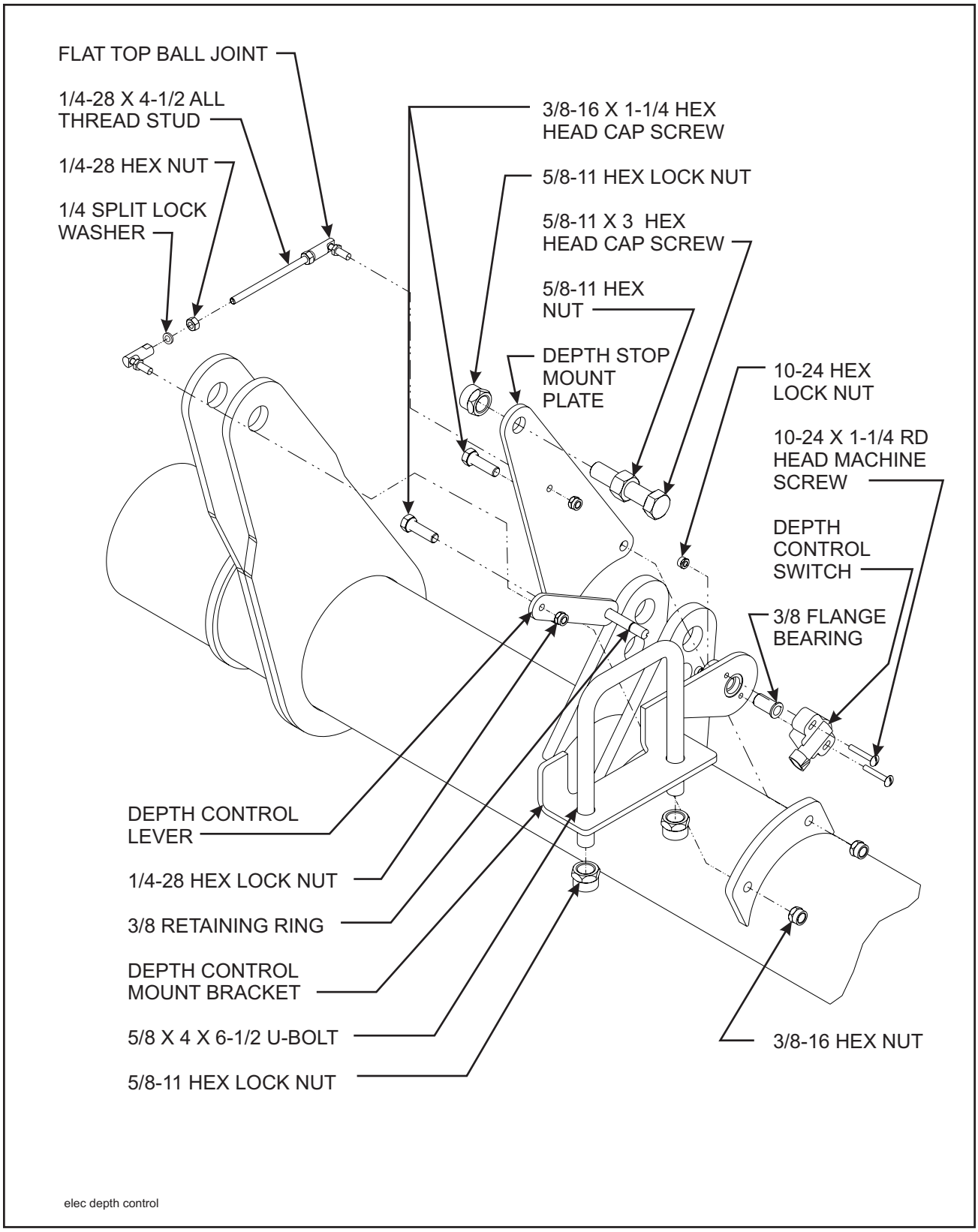

Figure 3-6 Electronic Depth Stop Installation

https://truckmanualshub.com/

3-6 ELECTRONIC DEPTH STOP (OPTIONAL)

3-6.1 Attach the electronic depth control mounting bracket to the middle cross bar of the center frame using a 5/8 x 4 x 6-1/2 u-bolt and hex lock nuts **(See Figure 3-6)**. **See Figures 2-1 - 2-4** for proper placement. The depth control lever should line-up with the depth stop mounting plate on the center lift.

3-6.2 Adjust the control rod linkage to 5-1/2" length and connect the depth control lever to the depth stop mounting plate.

3-6.3 Route the electrical cable from the front hitch, through the hose loops and connect to the depth control switch.

3-6.4 Fully retract (turn clockwise) the hydraulic depth stop, so that it does not interfere with the electronic depth stop operation.

3-6.5 Read and follow tractor operating instructions for setting and adjusting depth of the electronic depth control.

https://truckmanualshub.com/

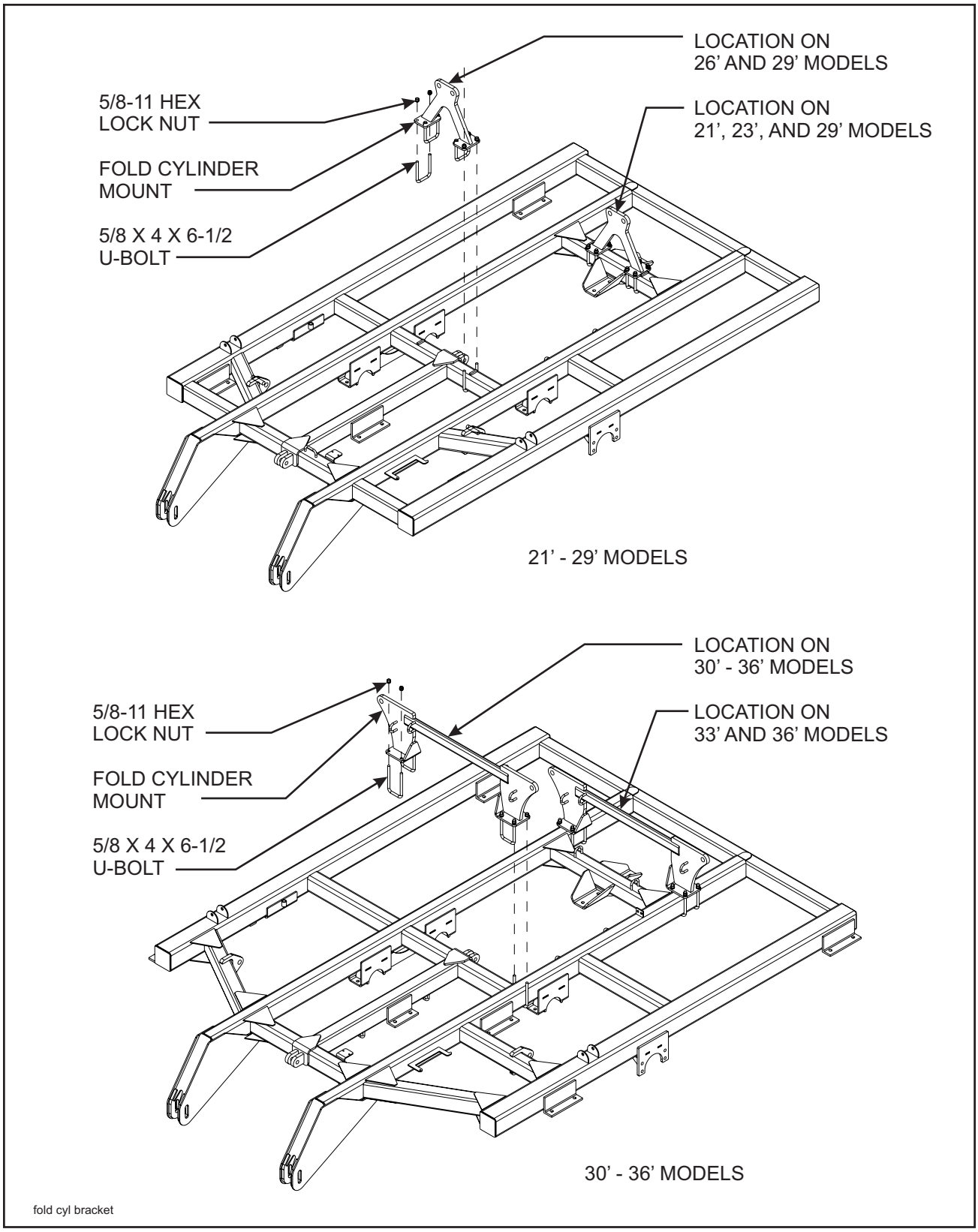

Figure 3-7 Fold Cylinder Mount Installation

https://truckmanualshub.com/

3-7 FOLD CYLINDER MOUNT

3-7.1 For 21'-23' models, assemble the fold cylinder mount to the rear cross bar where the center rear gangs meet in the frame **(See Figure 3-7)**. Attach using 5/8 x 4 x 6-1/2 u-bolts and hex lock nuts.

3-7.2 For 26' models, assemble the fold cylinder mount to the middle cross bar of the center frame (over the leveler spring assembly) using 5/8 x 4 x 6-1/2 u-bolts and hex lock nuts **(See Figure 3-7)**.

3-7.3 For 29' models, assemble two fold cylinder mounts to the center frame using 5/8 x 4 x 6-1/2 u-bolts and hex lock nuts **(See Figure 3-7)**. Place one mount on the middle cross bar over the leveler spring assembly, and the other mount over the rear cross bar where the center rear gang meets.

3-7.4 For 30' models, install the fold cylinder mount over the middle center frame cross bar (over the leveler spring assembly) **(See Figure 3-7)**. Attach using 5/8 x 4 x 6-1/2 u-bolts and hex lock nuts. Position the fold cylinder mount so that the hose loops point forward.

3-7.5 For 33'-36' models, assemble two fold cylinder mounts to the center frame using 5/8 x 4 x 6-1/2 u-bolts and hex lock nuts. Place one mount on the middle cross bar over the leveler spring assembly, and the other mount behind the rear cross bar where the center rear gangs meet. **See Figure 3-7** for proper placement. Position both fold cylinder mounts so that the hose loops point forward.

https://truckmanualshub.com/

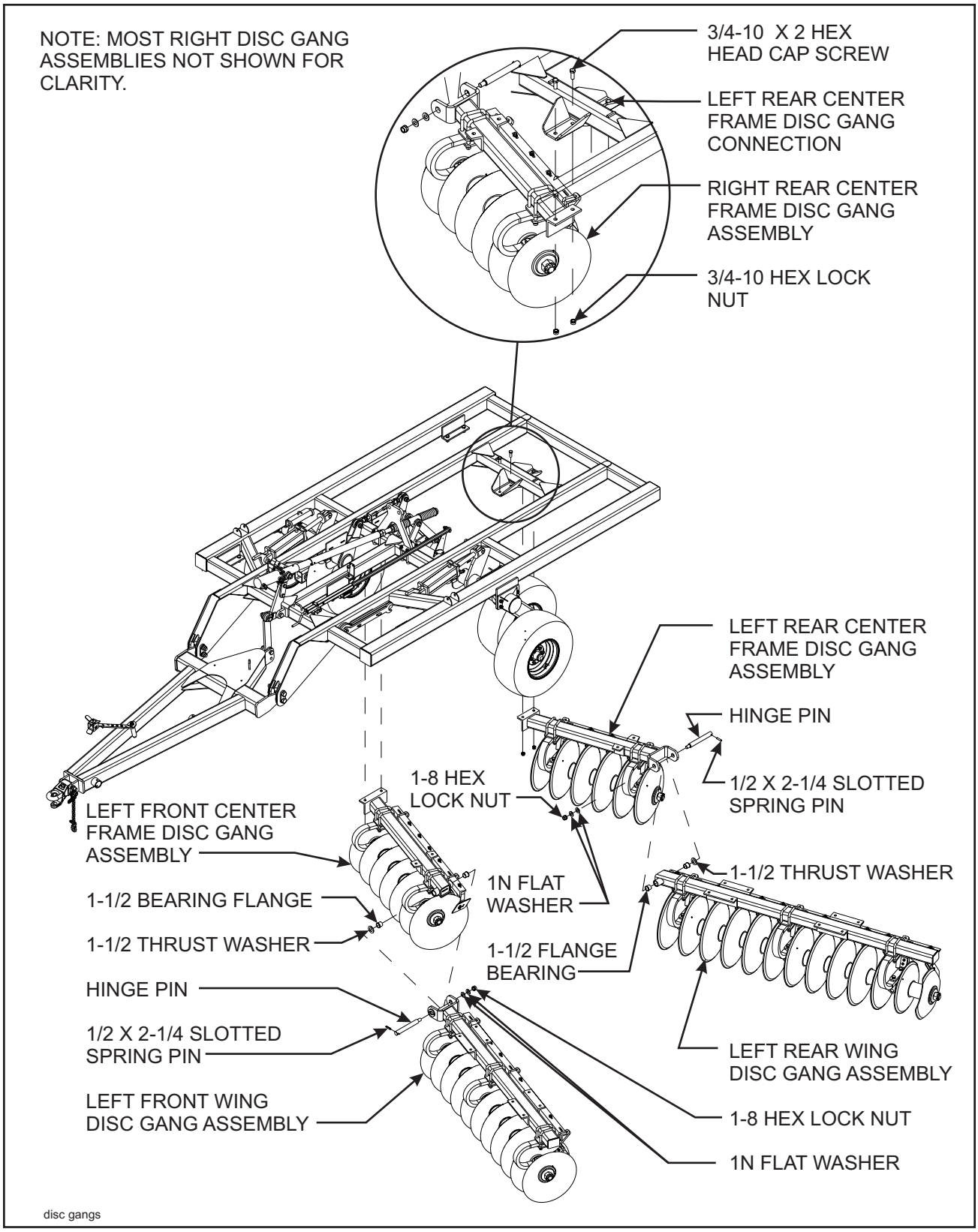

Figure 3-8 Disc Gang Installation

https://truckmanualshub.com/

3-8 CENTER FRAME TIRES

3-8.1 Install the tire and wheel assemblies on the center section.

3-9 DISC GANGS

⚠DANGER

DISC BLADES ARE EXTREMELY SHARP. EXERCISE EXTREME CARE WHEN WORKING ON OR NEAR DISC BLADES. DO NOT ALLOW DISCS TO ROLL OVER OR FALL ONTO ANY BODILY PART. DO NOT ALLOW WRENCHES TO SLIP WHEN WORKING NEAR DISC BLADES. NEVER PUSH WRENCHES TOWARD DISC BLADES. DO NOT CLIMB OVER MACHINE ABOVE DISC BLADES. FAILURE TO STAY CLEAR OF DISC BLADE EDGES CAN CAUSE SERIOUS PERSONAL INJURY OR DEATH.

3-9.1 Attach the disc gang assemblies to the center section using 3/4-10 x 2 grade 8 hex head cap screws and hex lock nuts **(See Figure 3-8)**. Use a 3/4-10 x 2-1/2 grade 8 hex head cap screw, manifold mounting bracket, and hex lock nut on the center front screw of the right front gang for all sizes.

3-9.2 21’, 23’, and 29’ models, require a 3/4-10 x 2-1/2 grade 8 hex head cap screw, manifold mounting bracket, and hex lock nut at the back hole of the center right rear gang.

3-9.3 On 30’-36’ models, use 3/4-10 x 2-1/2 grade 8 hex head cap screws at the center of each left front gang.

3-9.4 Insert plastic flange bearings into each end of round tube ends of the center and wing frame disc gang assemblies.

3-9.5 Install a 1/2 x 2-1/4 slotted spring pin in the end of each hinge pin.

3-9.6 Assemble each wing gang to the center frame gang using the hinge pin, 1-1/2 thrust washer, 1” washers, and 1-8 hex lock nut.

Note: The thrust washer is positioned on the front side of the hinge on the front gangs, and on the rear side of the hinge on the rear gangs.

3-9.7 Place the outer ends of the gang bars on stands so the wing gangs are level with the center section.

https://truckmanualshub.com/

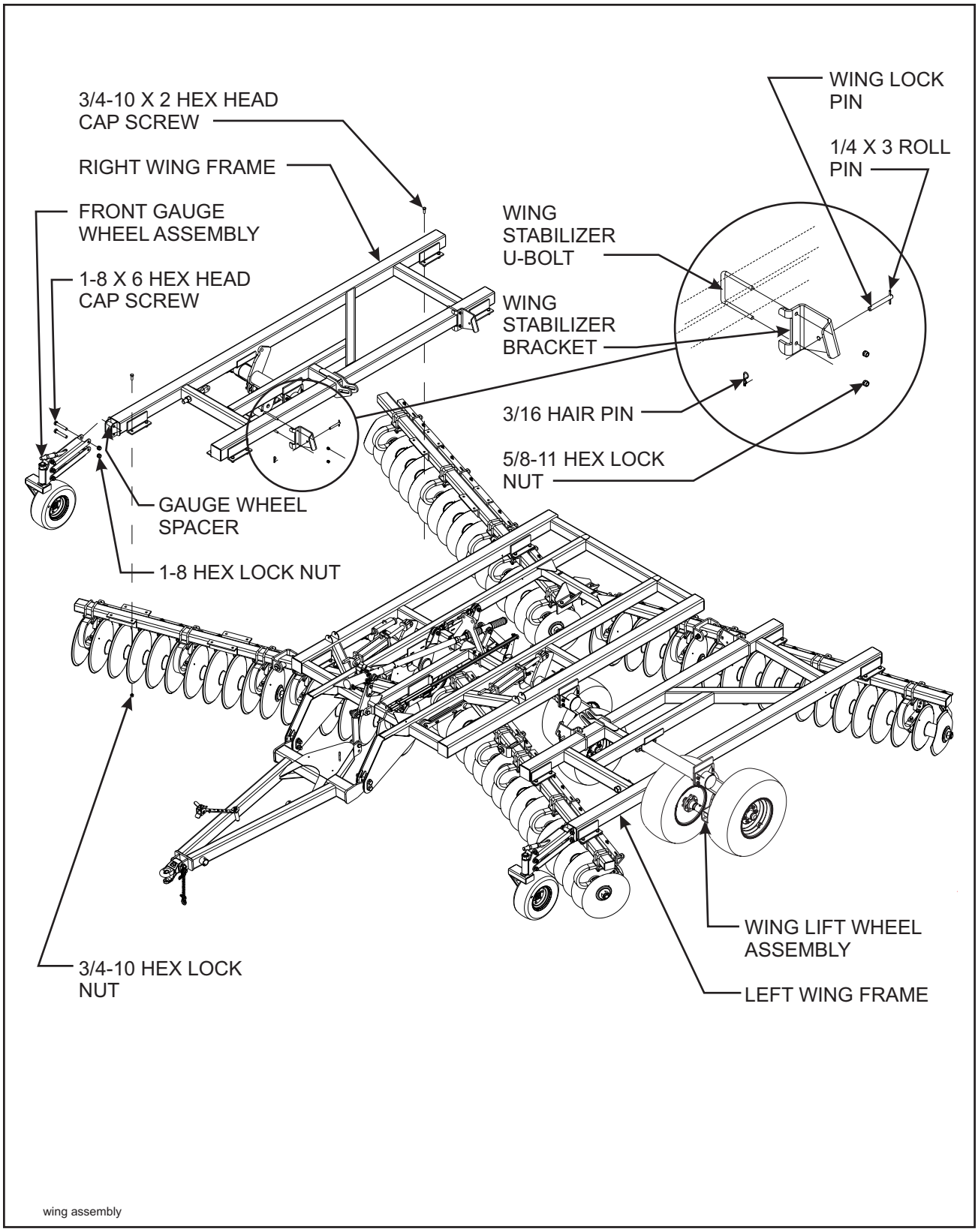

Figure 3-9 Wing Frame Installation

https://truckmanualshub.com/

3-10 WING FRAMES

3-10.1 Place the wing frames on top of the wing gang assemblies and attach using 3/4-10 x 2 hex head cap screws and hex lock nuts **(See Figure 3-9)**.

3-10.2 Assemble the tire and wheel assemblies to the wing frames.

3-10.3 Attach the front gauge wheel assemblies to the wing frames using 1-8 x 6 hex head cap screws, gauge wheel spacers, and hex lock nuts. Securely tighten the mounting screws to eliminate any slack and unnecessary wear.

3-10.4 Mount the wing stabilizer brackets to the wing frames using u-bolts and hex lock nuts. **See Figures 2-1 - 2-4** for placement dimensions.

Note: On 21'-29' models the wing stabilizers mount to the sides of the wing frame. On 30'-36' models the wing stabilizers mount to the tops of the wing frames.

3-10.5 Install a 1/4 x 3 roll pin in one end of each wing lock pin. Insert the pin in the round hole of the front wing stabilizers and secure with a 3/16 hair pin.

https://truckmanualshub.com/

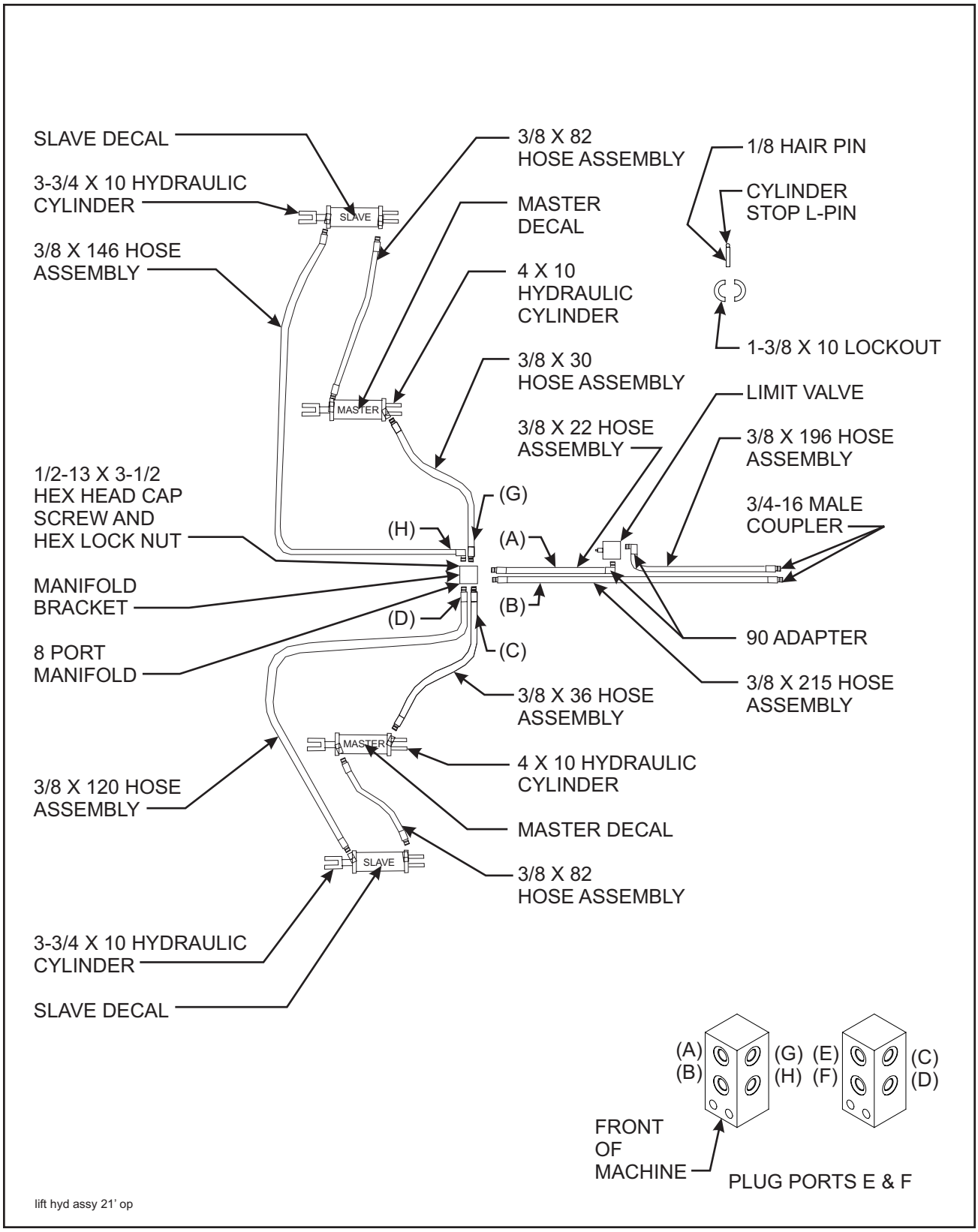

Figure 3-10 Lift Hydraulic Installation (21' Model)

https://truckmanualshub.com/

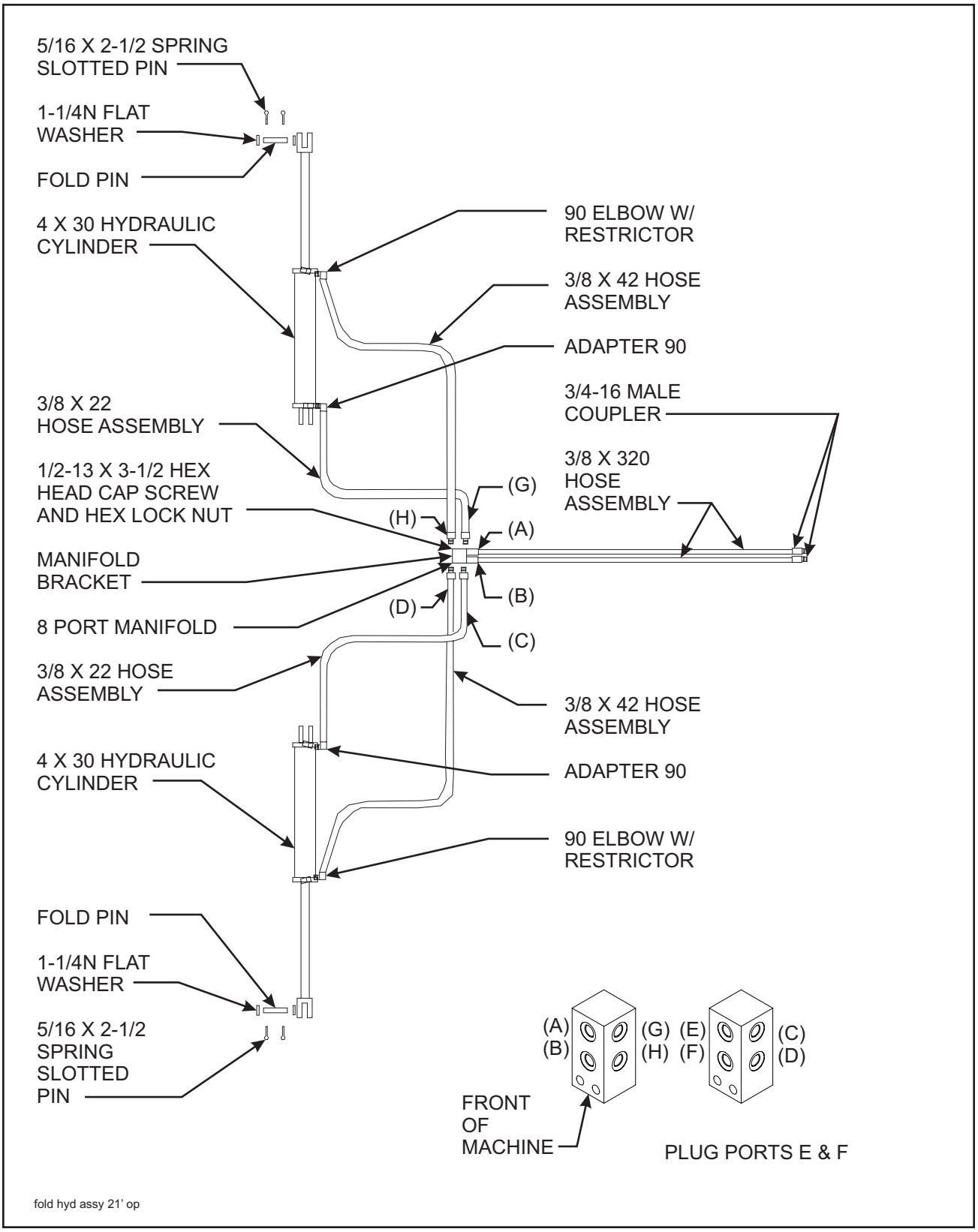

Figure 3-11 Fold Hydraulic Installation (21' Model)

https://truckmanualshub.com/

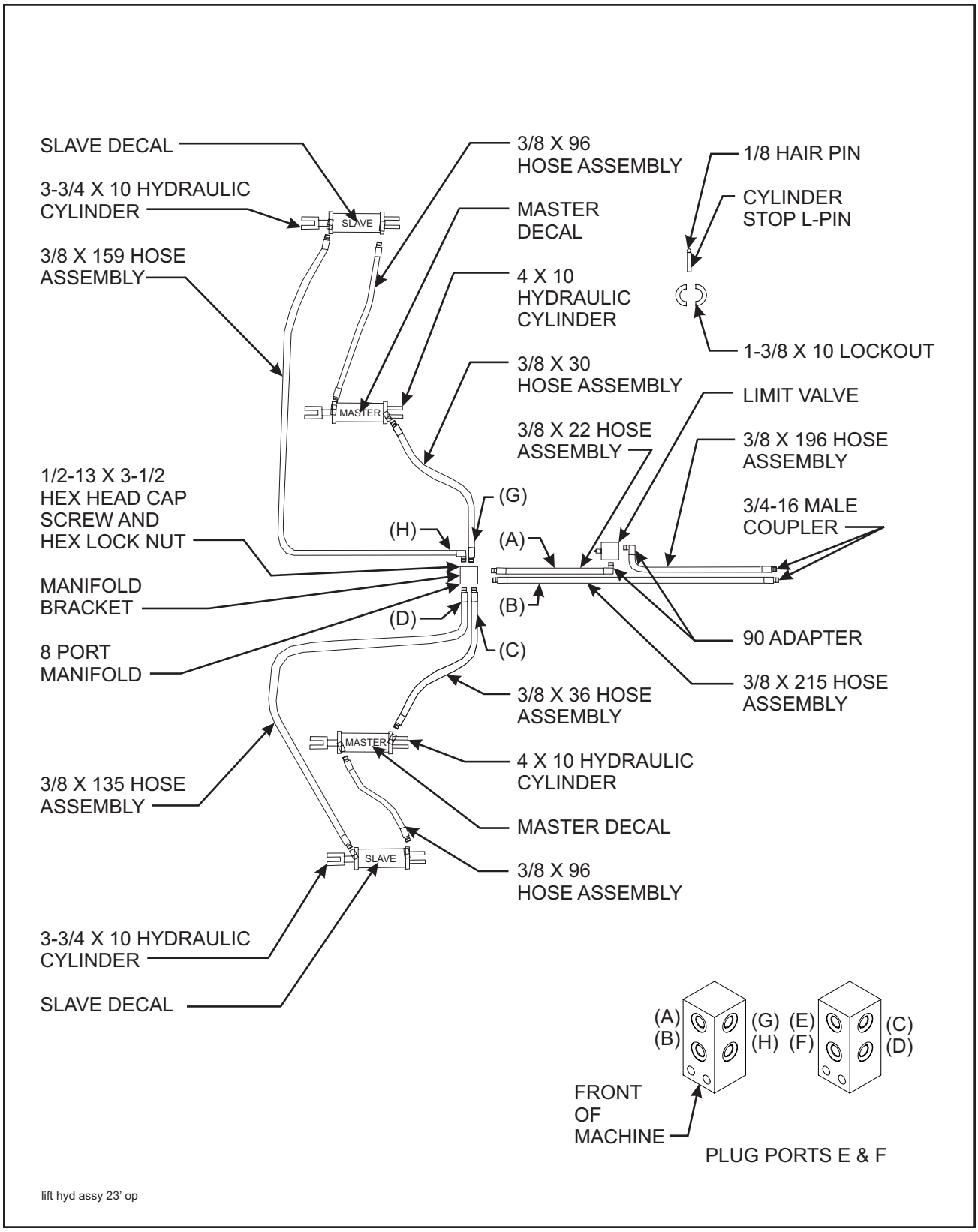

Figure 3-12 Lift Hydraulic Installation (23' Model)

https://truckmanualshub.com/

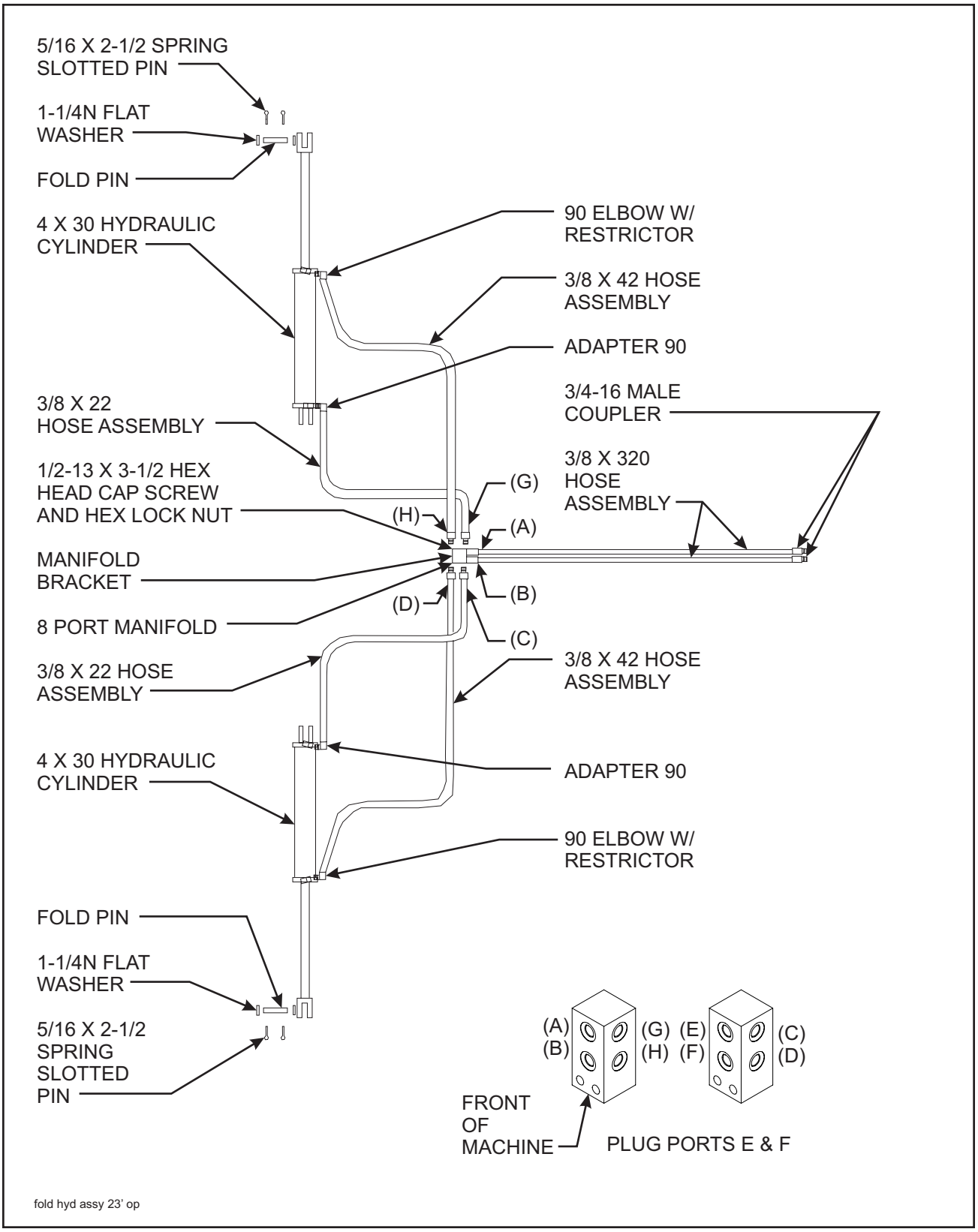

Figure 3-13 Fold Hydraulic Installation (23' Model)

https://truckmanualshub.com/

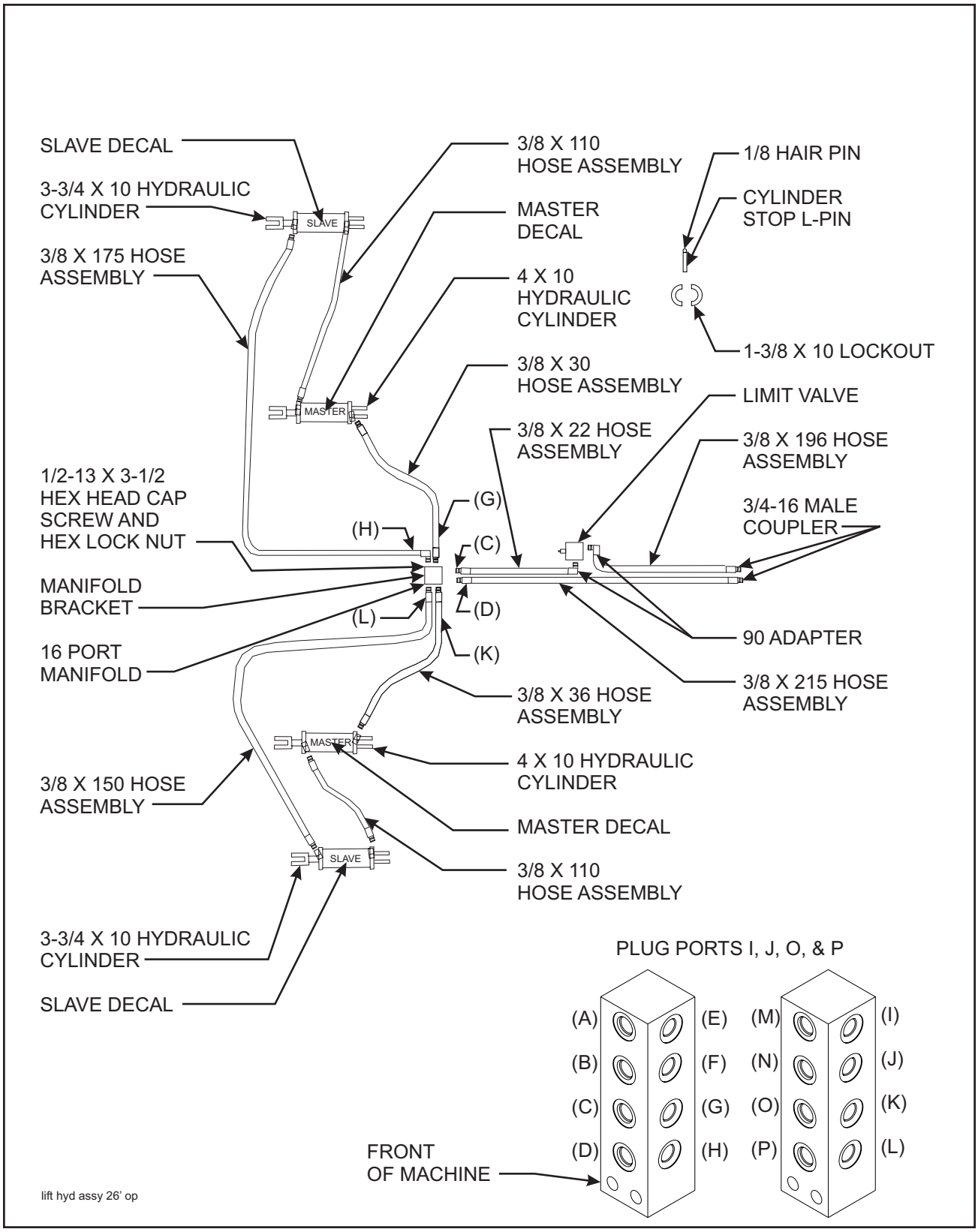

Figure 3-14 Lift Hydraulic Installation (26' Model)

https://truckmanualshub.com/

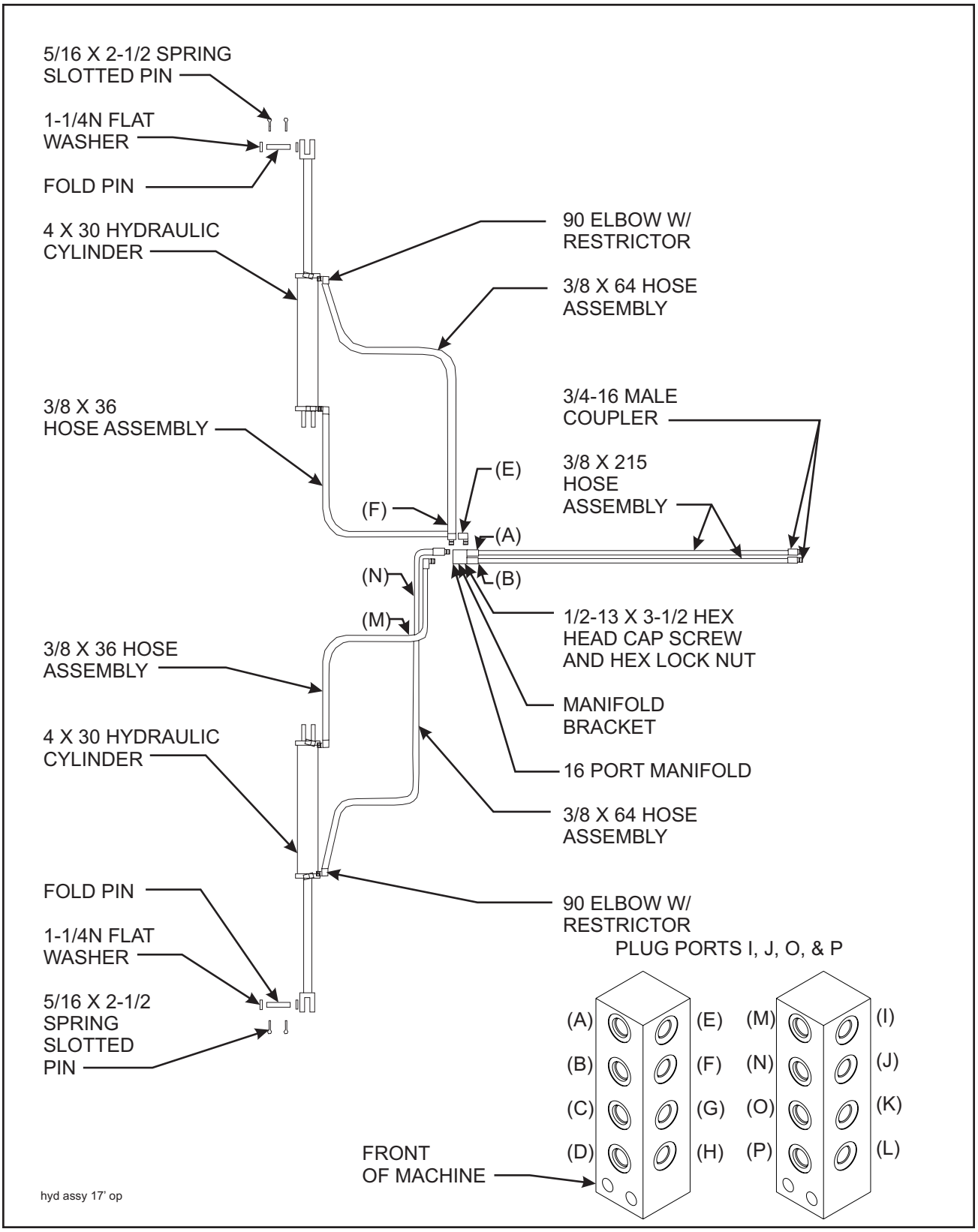

Figure 3-15 Fold Hydraulic Installation (26' Model)

https://truckmanualshub.com/

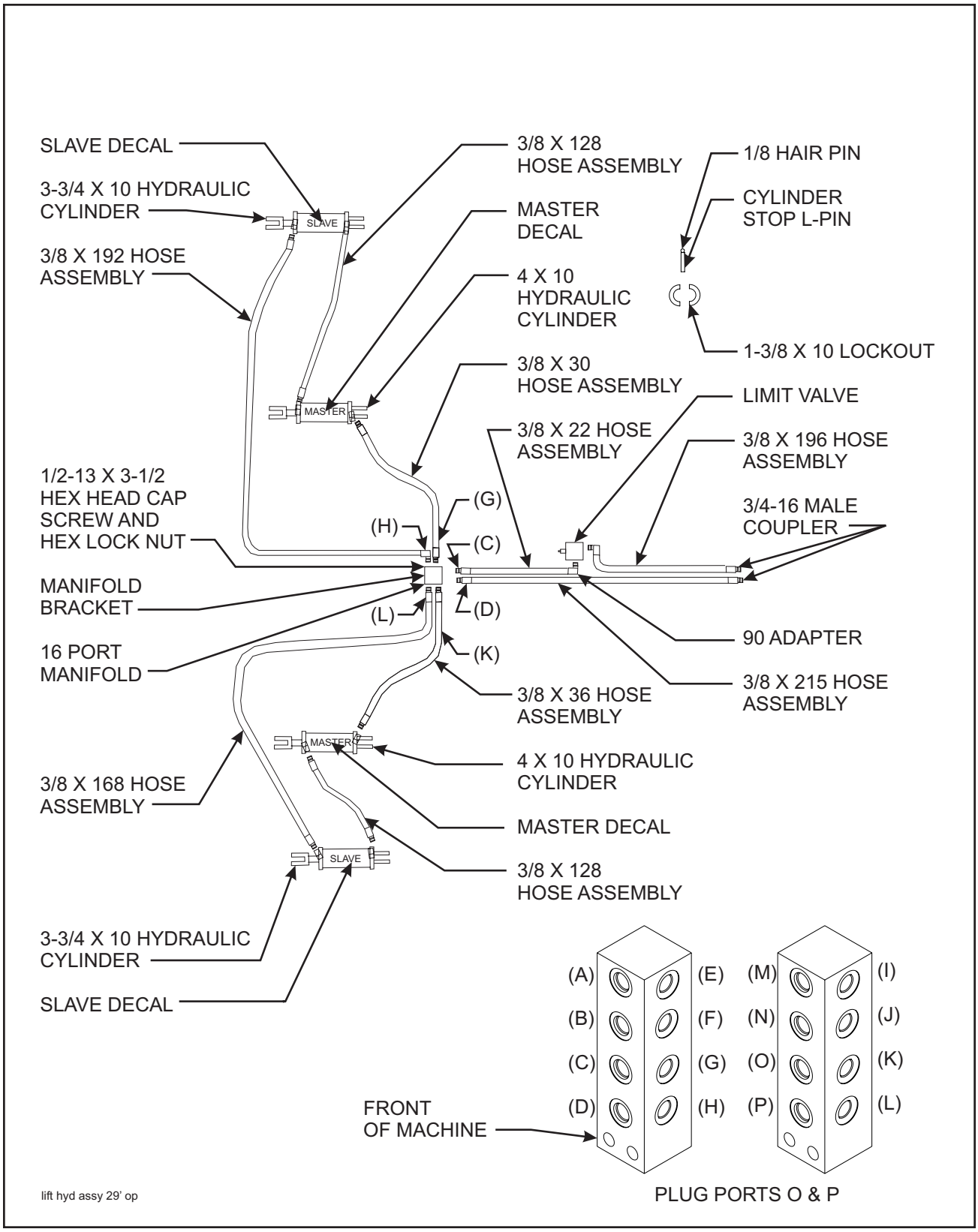

Figure 3-16 Lift Hydraulic Installation (29' Model)

https://truckmanualshub.com/

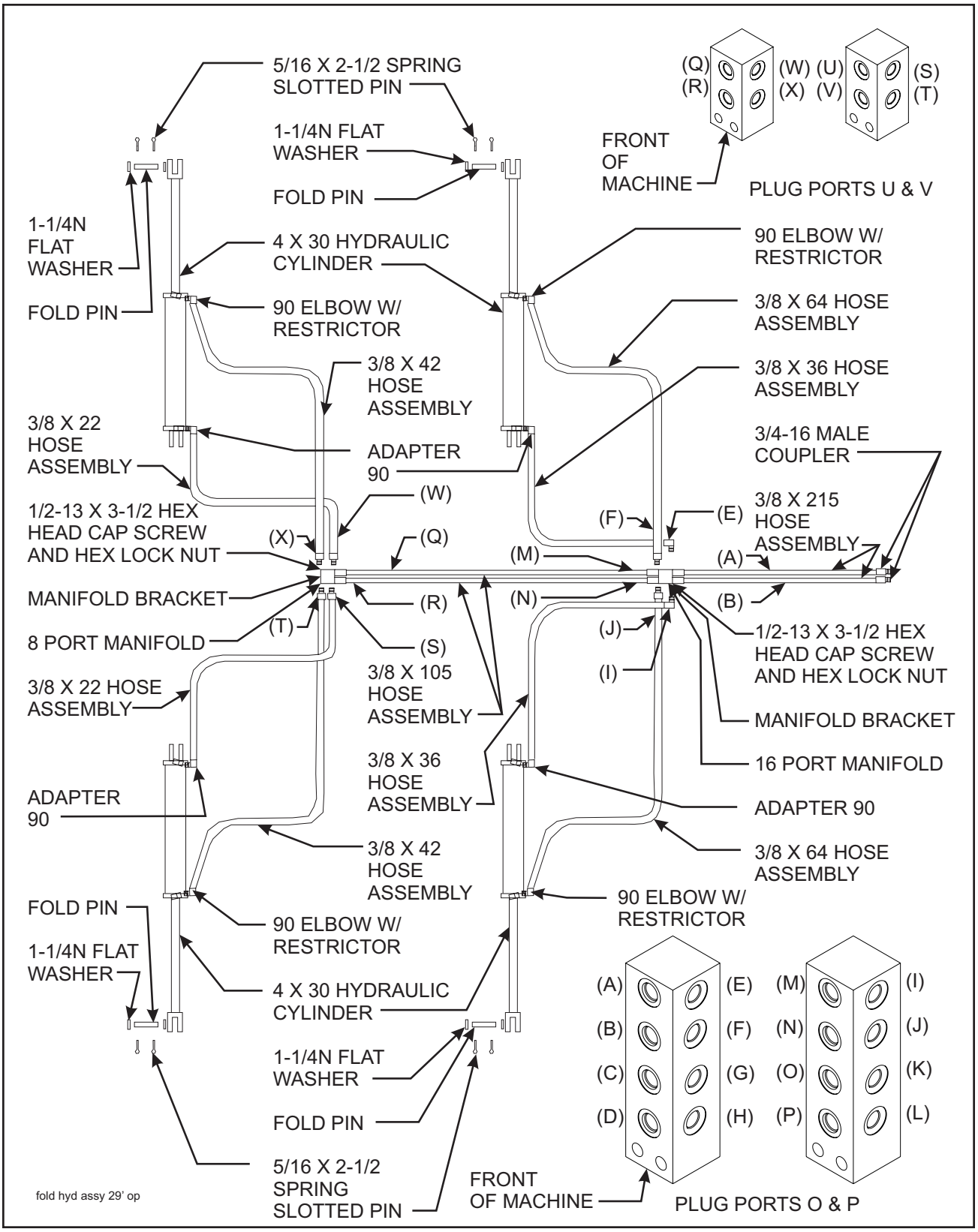

Figure 3-17 Fold Hydraulic Installation (29' Model)

https://truckmanualshub.com/

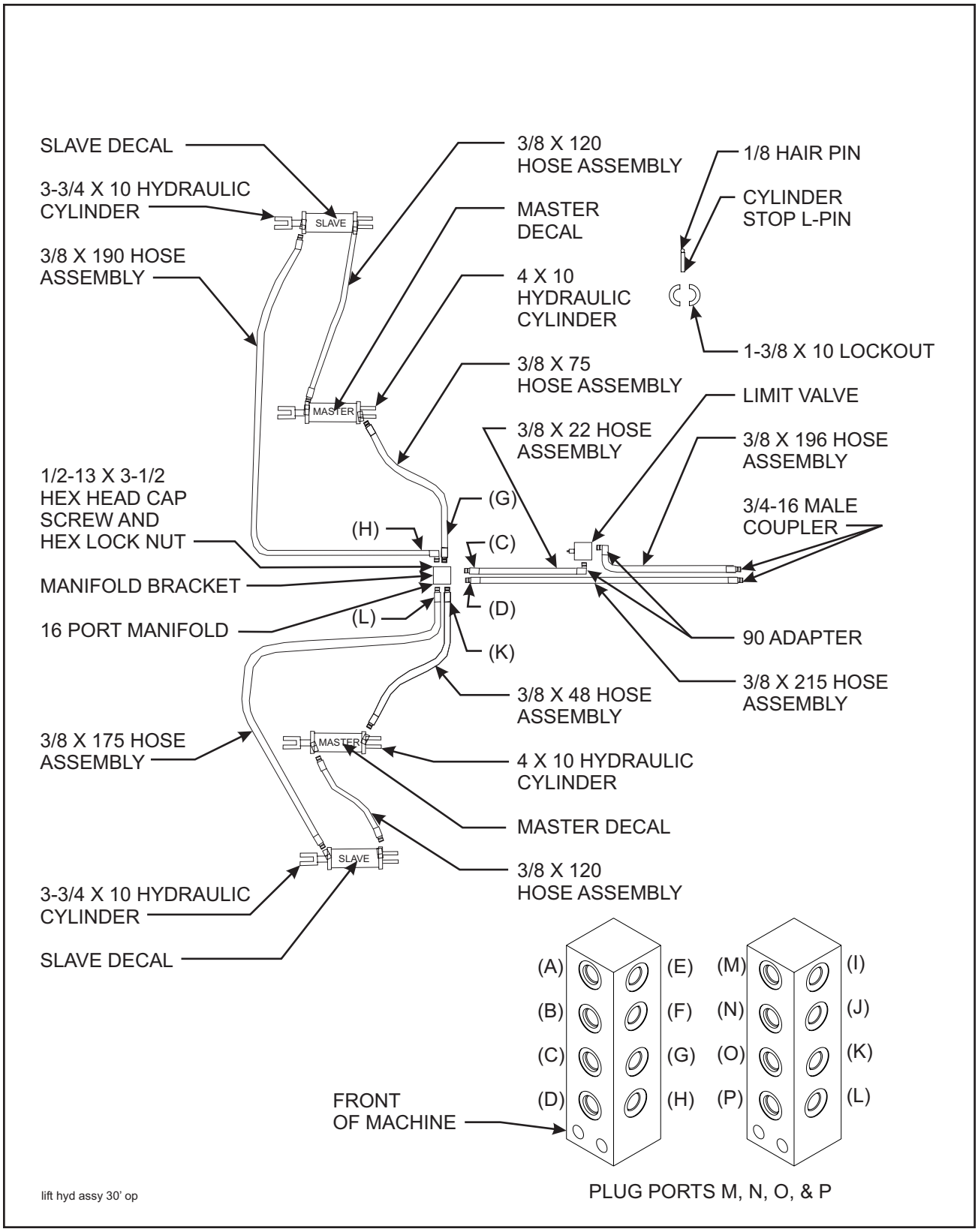

Figure 3-18 Lift Hydraulic Installation (30' Model)

https://truckmanualshub.com/

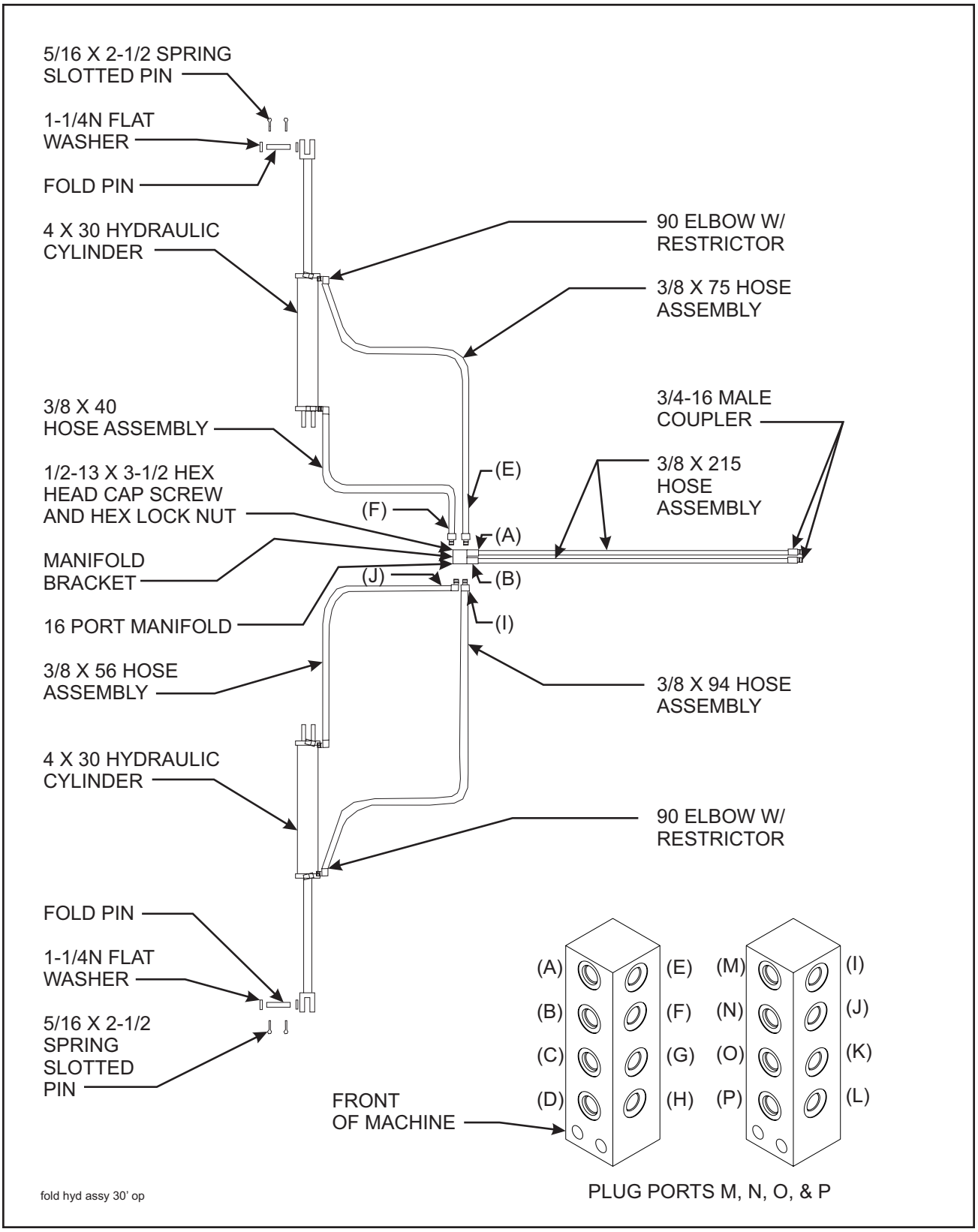

Figure 3-19 Fold Hydraulic Installation (30' Model)

https://truckmanualshub.com/

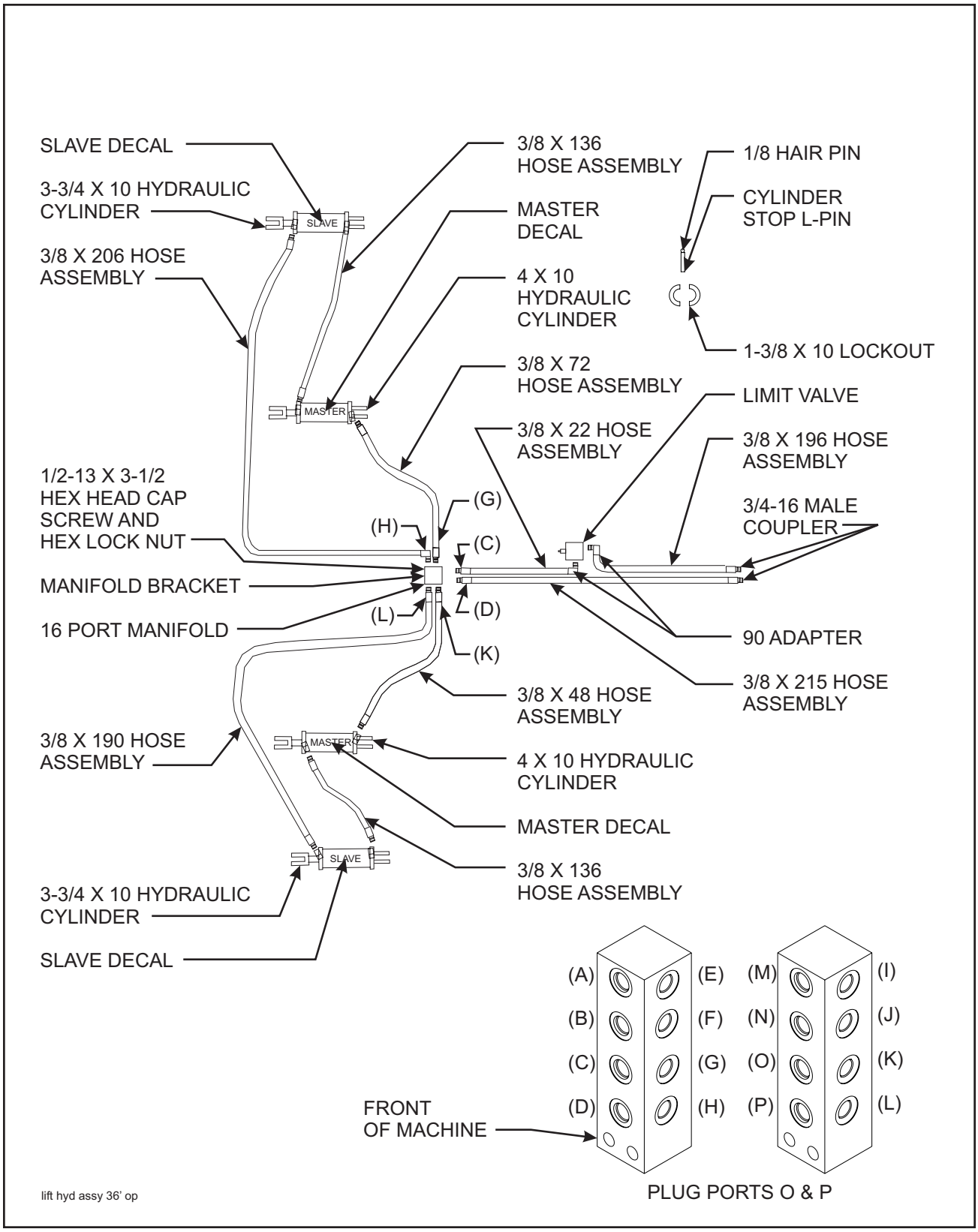

Figure 3-20 Lift Hydraulic Installation (33' and 36'' Models)

https://truckmanualshub.com/

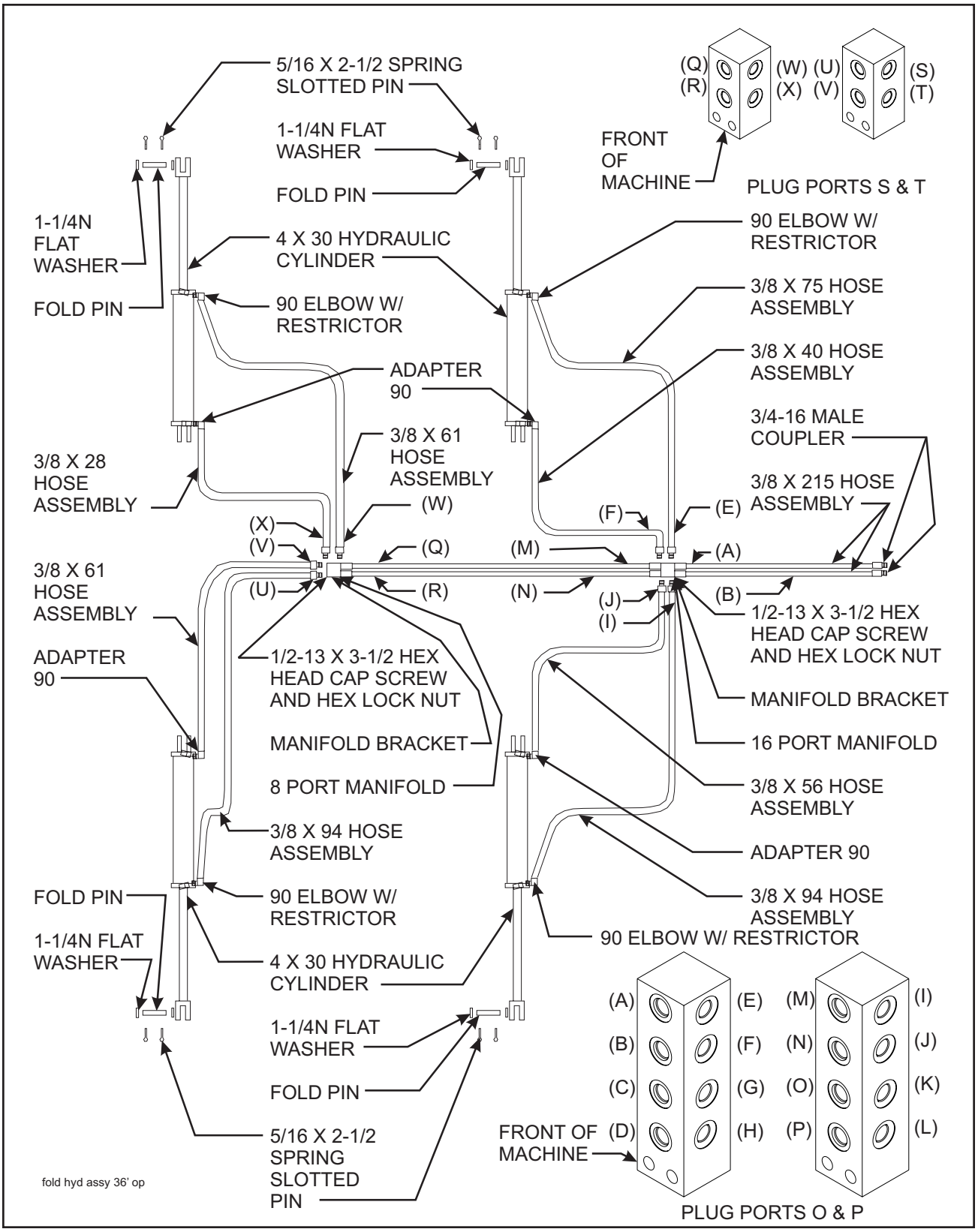

Figure 3-21 Fold Hydraulic Installation (33' and 36'' Models)

https://truckmanualshub.com/

3-11 HYDRAULIC INSTALLATION

Note: Refer to Figures 3-10 - 3-21 for lift and fold hydraulic diagrams for each disc model.

3-11.1 Install the 4 x 10 master lift cylinders on the center frame lifts and frame using the pins and roll pins provided.

3-11.2 Install the 3-3/4 x 10 slave lift cylinders on the wing frame lifts and adjustable anchor using the pins and roll pins provided.

3-11.3 Attach the base end of the 4 x 30 fold cylinder to the fold cylinders mounts on the center frame with the pins and roll pins provided. Position the cylinders so the hydraulic ports point forward.

3-11.4 Using a 1-1/4 x 6-1/8 fold pin, flat washers, and 5/16 x 2-1/2 roll pins, attach the rod end of the 4” x 30” cylinders to the slotted mounts on the wing frames.

3-11.5 Install 90 degree restrictor fittings in the rod end of each 4” x 30” cylinder.

CAUTION

RESTRICTORS ARE INSTALLED TO PREVENT UNCONTROLLED DROPPING OF WINGS. REMOVAL OF THESE RESTRICTORS, OR IMPROPER INSTALLATION CAN RESULT IN SERIOUS DAMAGE TO THE IMPLEMENT.

3-11.6 Install 90 degree regular adapter fittings in the base end of the 4” x 30” cylinders and both ends of all lift cylinders.

3-11.7 Install the front manifold to the manifold bracket on the front center gang using 1/2-13 x 3-1/2 hex head cap screws and hex lock nuts.

3-11.8 On 21’, 23’, 29’, 33’, & 36’ models, attach the manifold to the rear manifold brackets on the implement using 1/2-13 x 3-1/2 hex head cap screws and hex lock nuts. Install adapters in the front ports of this manifold.

3-11.9 Install lift system hoses per **Figures 3-10, 3-12, 3-14, 3-16, 3-18, and 3-20.**

3-11.10 Attach hose clamp brackets to the second slotted hole in each scraper bar from the hinge joint. Secure hoses to the brackets with hose clamps, 3/8-16 x 1-3/4 hex head cap screws, and hex lock nuts.

3-11.11 Install fold system hoses per **Figures 3-11, 3-13, 3-15, 3-17, 3-19, and 3-21.**

3-11.12 Install restrictors, hoses and couplers in the optional hydraulic leveler if so equipped **(See Section 3-4).**

3-11.13 Install plugs in any remaining open manifold, valve, or cylinder ports.

https://truckmanualshub.com/

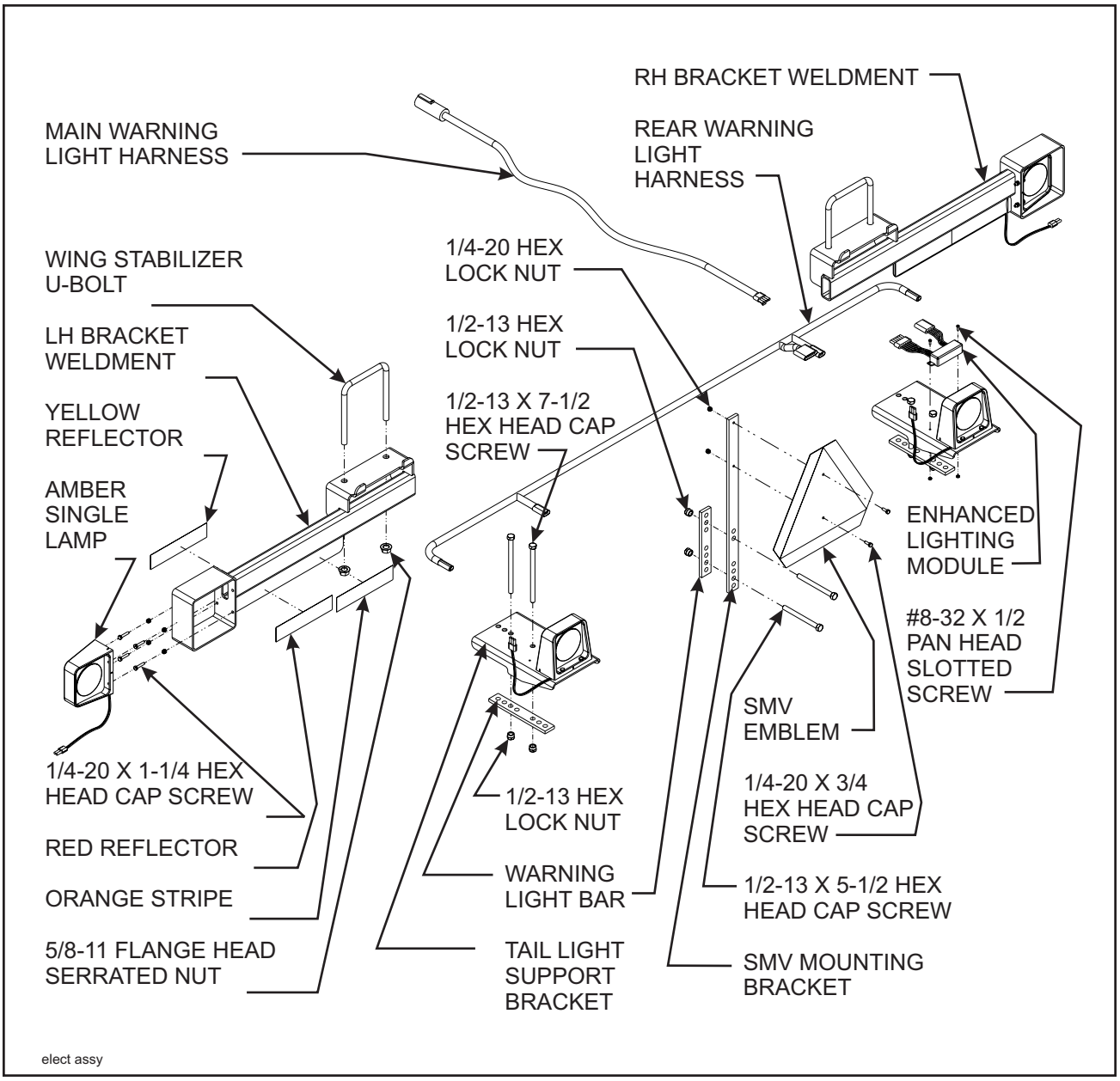

Figure 3-22 Light and SMV Bracket Installation

3-12 LIGHT INSTALLATION

3-12.1 Attach lights and mounting brackets to the center frames using u-bolts, 1/2-13 x 7-1/2 hex head cap screws, flange head serrated nuts, and hex lock nuts **(See Figure 3-22).**

3-12.2 Connect light harness to lights.

3-12.3 Attach SMV emblem and mounting bracket to rear center frame bar using 1/2-13 x 5-1/2 hex head cap screws, 1/4-20 x 3/4 hex head cap screws, and hex lock nuts. The SMV sign should be centered on the back bar of the frame.

https://truckmanualshub.com/

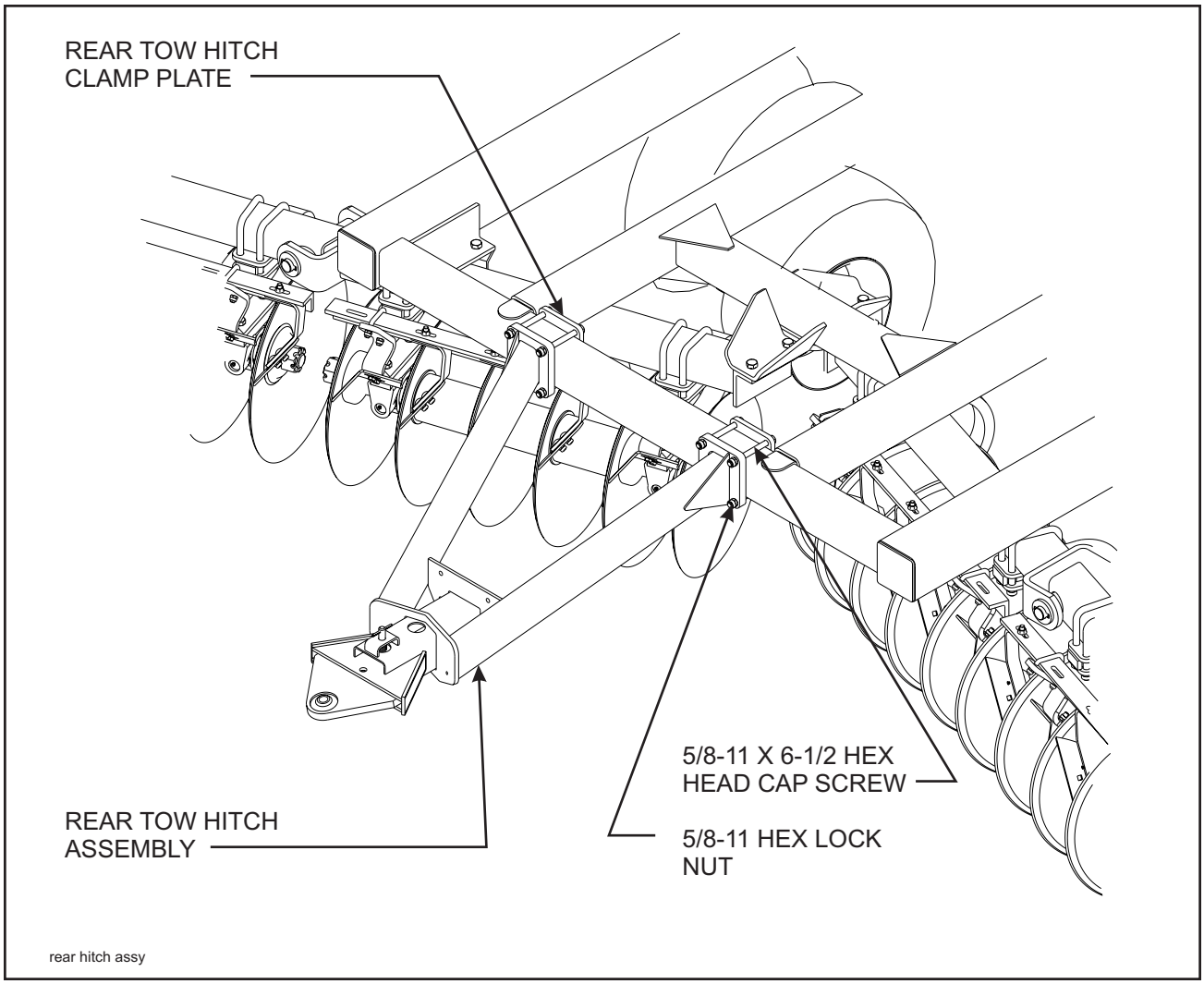

Figure 3-23 Rear Tow Hitch Installation

3-13 REAR TOW HITCH (OPTIONAL)

3-13.1 Attach the rear tow hitch assembly to the rear bar of the center frame using rear tow hitch clamp plates, 5/8-11 x 6-1/2 hex head cap screws, and hex lock nuts **(See Figure 3-23)**. The tow hitch should be centered on the back bar of the frame.

https://truckmanualshub.com/

3-14 FINAL ASSEMBLY

3-14.1 Attach a tractor to the implement and charge the lift system hydraulics as described is **Section 4-4**.

3-14.2 Install the transport locks on both 4 x 10 master cylinders on the center frame.

3-14.3 Connect the hydraulic hoses on the optional hydraulic leveler to the tractor (if equipped). Fully extend and retract the hydraulic leveler several times to remove any air. See **Section 4-10** for any further adjustments

3-14.4 The fold system must be purged of air and filled with oil BEFORE attempting to fold the implement. Air in the system will allow the wings to fall uncontrollably and may result in implement damage. Follow instructions for charging the hydraulic fold system **(See Section 4-5)**.

3-14.5 Connect lights to the tractor and verify operation.

3-14.6 Check tires for proper inflation

3-14.7 Level the disc from side to side as described in **Section 4-8**.

3-14.8 Inspect the final implement assembly, and verify that all bolts have been tightened, cotter pins spread, and that there are no leaking hydraulic connections.

3-14.9 Rotate each disc gang to verify that each gang rotates freely. Adjust any scrapers that may have shifted during shipment or assembly.

3-14.10 Lubricate the disc at all locations **(See Section 4-22)**.

3-14.11 Touch up with paint any areas that may have been scratched during moving, handling, or assembly.

3-14.12 Thoroughly read and understand the operating section before using the disc.

https://truckmanualshub.com/

NOTES:

https://truckmanualshub.com/

⚠ DANGER

NEVER ALLOW ANYONE TO RIDE ON THE 6230 DISC AT ANY TIME. ALLOWING A PERSON TO RIDE ON THE MACHINE CAN INFLICT SERIOUS PERSONAL INJURY OR DEATH TO THAT PERSON.

⚠ DANGER

DISC BLADES ARE EXTREMELY SHARP. EXERCISE EXTREME CARE WHEN WORKING ON OR NEAR DISC BLADES. DO NOT ALLOW DISCS TO ROLL OVER OR FALL ONTO ANY BODILY PART. DO NOT ALLOW WRENCHES TO SLIP WHEN WORKING NEAR DISC BLADES. NEVER PUSH WRENCHES TOWARD DISC BLADES. DO NOT CLIMB OVER MACHINE ABOVE DISC BLADES. FAILURE TO STAY CLEAR OF DISC BLADE EDGES CAN CAUSE SERIOUS PERSONAL INJURY OR DEATH.

⚠ WARNING

ALL HYDRAULICALLY ELEVATED EQUIPMENT MUST HAVE CYLINDER LOCKOUTS INSTALLED OR BE LOWERED TO THE GROUND, WHEN SERVICING OR WHEN EQUIPMENT IS IDLE. FAILURE TO TAKE PREVENTIVE MEASURES AGAINST ACCIDENTAL LOWERING CAN RESULT IN SERIOUS PERSONAL INJURY.

⚠ DANGER

ALWAYS LOCK THE TRACTOR DRAWBAR IN THE CENTER POSITION WHEN TRANSPORTING THE UNIT. FAILURE TO DO SO CAN RESULT IN SERIOUS INJURY OR DEATH AND CAUSE DAMAGE TO THE EQUIPMENT.

⚠ DANGER

WHEN TRANSPORTING THE UNIT, PLACE CYLINDER LOCKOUTS IN THE TRANSPORT LOCK POSITION AFTER FULLY EXTENDING THE CYLINDERS. INSERT THE LOCKOUT PINS TO SECURE THE CYLINDER LOCKOUTS. FAILURE TO LOCKOUT THE CYLINDERS CAN CAUSE THE UNIT TO SETTLE DURING TRANSPORT, WHICH CAN RESULT IN SERIOUS INJURY OR DEATH AND CAUSE DAMAGE TO THE EQUIPMENT.

⚠ CAUTION

WHEN TRANSPORTING FARM IMPLEMENTS ON PUBLIC ROADS, IT IS THE RESPONSIBILITY OF THE OPERATOR TO ABIDE BY STATE AND LOCAL LAWS CONCERNING WIDE LOADS, SPEED, SAFETY EMBLEMS AND SAFETY LIGHTING EQUIPMENT. DRIVE AT SAFE SPEEDS. PARTICULARLY WHEN ROUNDING CORNERS, CROSSING ROUGH GROUND OR DRIVING ON HILLSIDES, TO PREVENT TIPPING THE TRACTOR.

https://truckmanualshub.com/

4-1 TRACTOR PREPARATION

The Landoll 6230 Disc is designed to be pulled by tractor equipped with a double lip or clevis type hitch. If your tractor is not equipped as such, you need to purchase the hitch from your local tractor dealer. If your Disc is equipped with the clevis option, this should be removed. The clevis option is only for transport use.

Before attaching the Disc, prepare the tractor as follows:

4-1.1 Inflate the rear tractor tires equally and add ballast according to the tractor operator's manual.

4-1.2 Lock the tractor drawbar in the center position.

4-2 DISC PREPARATION

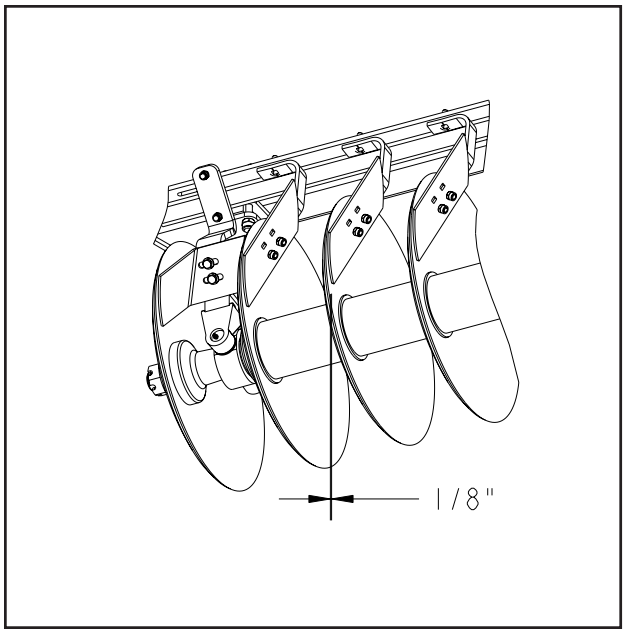

Figure 4-1 Disc Scraper Adjustment to Disc Blade

4-2.1 Prior to operating the 6230 Disc, inspect it thoroughly for good operating condition.

4-2.2 Replace worn or missing parts.

4-2.3 When the machine is new, check the bolt tightness after a few hours of operation. Tighten any loose nuts or bolts. Check the lift wheel lug bolts daily.

4-2.4 Check the lift wheel tire inflation. Inflate all tires equally to avoid side draft. Follow the tire manufacturer's recommended pressures listed on the sidewall of the tires.

4-2.5 Check disc scrapers for proper adjustment to the disc blade. **(See Figure 4-1).**

4-2.6 Lubricate the machine as shown in **Section 4-22 (See Figure 4-19).**

https://truckmanualshub.com/

4-3 ATTACHING TO THE TRACTOR

4-3.1 Align the tractor drawbar with the machine. Raise or lower the disc ring hitch, as needed, using the swivel jack. Attach the unit with proper size hitch pin.

4-3.2 Always place the swivel jack on the interior mount before setting the machine in motion.

4-3.3 Clean all hydraulic couplings and attach to the tractor.

4-3.4 Fully extend the hydraulic lift wheel cylinders, and place the cylinder lockouts in the transport lock position over the cylinder rods. Secure the lockouts with the lockout pins.

4-4 HYDRAULIC LIFT SYSTEM

The disc is equipped with a rephasing hydraulic lift system to raise and lower the unit in the field.

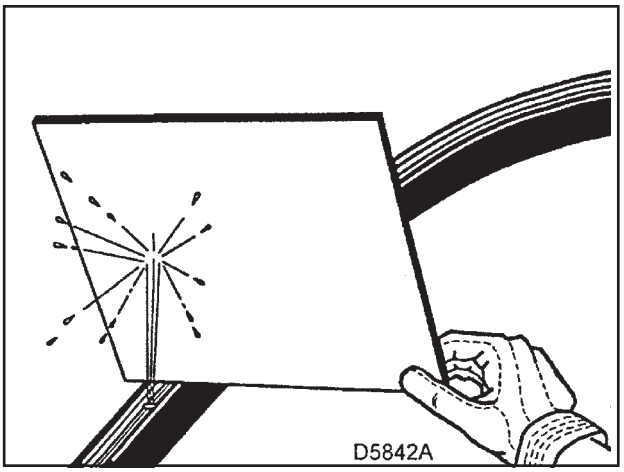

Figure 4-2 Hydraulic Leak Detection

⚠ WARNING

ESCAPING HYDRAULIC FLUID CAN CAUSE SERIOUS PERSONNEL INJURY. RELIEVE SYSTEM PRESSURE BEFORE REPAIRING, ADJUSTING, OR DISCONNECTING. WEAR PROPER HAND AND EYE PROTECTION WHEN SEARCHING FOR LEAKS. USE CARDBOARD INSTEAD OF HANDS (SEE FIGURE 4-2). KEEP ALL COMPONENTS (CYLINDERS, HOSES, FITTINGS, ETC.) IN GOOD REPAIR.

4-4.1 The rephasing hydraulic lift system contains smaller wing frame cylinders plumbed in series with larger center frame cylinders. It is important that the cylinders be connected in the proper series for the lift system to operate correctly. When the cylinders are fully extended and held in this position, oil is able to flow through the cylinders (or rephase) and allow the cylinders to operate in sync. This also allows the system to purge any air that may enter the system without having to loosen or crack hydraulic lines.

https://truckmanualshub.com/

4-4.2 The hydraulic system is not filled with oil and should be purged of air before transporting and field operations. Carefully hitch the disc to the tractor and connect the hydraulic lift hoses. Check to make sure the tractor hydraulic reservoir is full of the manufacturer's recommended oil. Slowly raise the machine, and continue to hold the hydraulic lever until all lift cylinders are fully extended. With all cylinders fully extended remove the 1-3/8 X 10 transport lockouts **(See Figure 4-3).** Store transport lockouts as shown in **Figure 4-4.** Lower and raise the unit to verify that all cylinders are working simultaneously throughout the stroke. If the cylinders are not working evenly or together, fully extend the lift cylinders and continue to hold the lever to purge any remaining air. Do not loosen any hoses or fittings. Recheck tractor reservoir to make sure it is within operating limits.

4-4.3 Always fully extend the cylinders and hold the lever to ensure the cylinders are rephased before starting any field operation. This will keep all cylinders in time and frame sections level when operating.

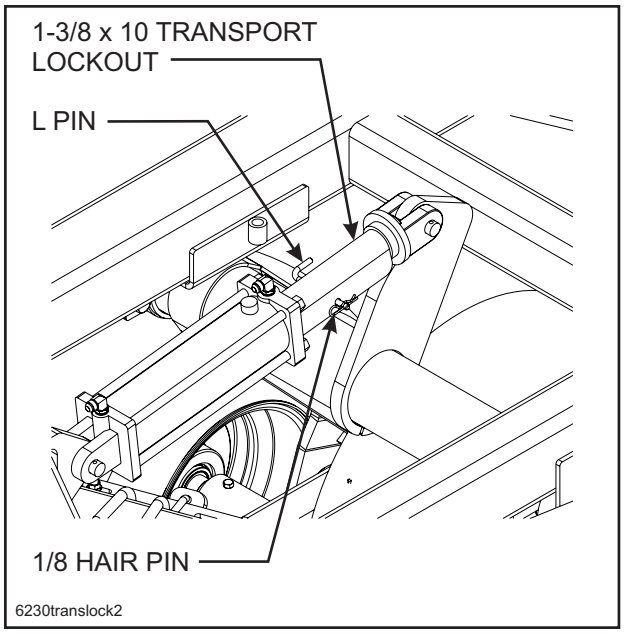

Figure 4-3 Installed Transport Locks

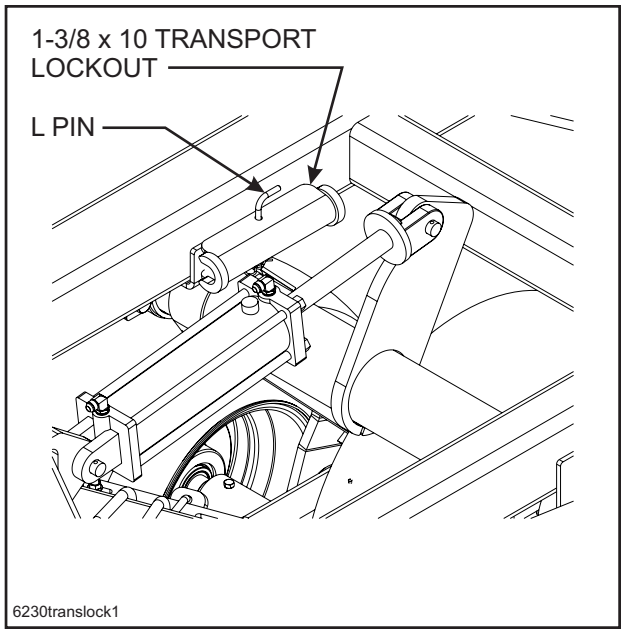

Figure 4-4 Stored Transport Locks

https://truckmanualshub.com/

4-5 HYDRAULIC FOLD SYSTEM

4-5.1 The disc is equipped with a hydraulic fold system to raise and lower the wing frames for narrow transport.

4-5.2 Be sure the system is fully charged with hydraulic oil before attempting to fold/unfold the unit. Air in the system can allow uncontrolled dropping of the wing frames causing serious personal injury or machine damage. The system needs to be charged with oil initially and any time the system has been opened for repair such as cylinder, hose, or fitting replacement/repair.

4-5.3 To charge the system, carefully hitch the disc to the tractor. Unpin the end(s) of the fold cylinders, and position them so they can extend and retract without contacting any frames or other parts. Check the tractor hydraulic fluid level to make sure it is full of the manufacturer's recommended hydraulic fluid. Connect the cylinder hoses to the tractor and fully extend and retract the cylinders several times. The cylinder rod travel should be smooth and positive when all air has been purged from the system. Due to large amounts of hydraulic oil required, recheck the tractor fluid level to make sure it is within proper operating limits.

4-5.4 The hydraulic fold system is equipped with restrictors in the rod end of cylinders to prevent uncontrolled falling of wing frames when unfolding. Removal or improper assembly of these restrictors can cause the machine to fold improperly and result in serious machine damage.

⚠ WARNING

ESCAPING HYDRAULIC FLUID CAN CAUSE SERIOUS PERSONNEL INJURY. RELIEVE SYSTEM PRESSURE BEFORE REPAIRING, ADJUSTING, OR DISCONNECTING. WEAR PROPER HAND AND EYE PROTECTION WHEN SEARCHING FOR LEAKS. USE CARDBOARD INSTEAD OF HANDS (SEE FIGURE 4-2). KEEP ALL COMPONENTS (CYLINDERS, HOSES, FITTINGS, ETC.) IN GOOD REPAIR.

https://truckmanualshub.com/

4-5.5 To fold/unfold the disc, find a level area large enough to accommodate the disc when it is fully unfolded. The tractor should be stopped and not moving with the unit fully raised. Remove the transport lock pins from the mounts and install them in the storage locations **(See Figures 4-5 and 4-6)**.

IMPORTANT

FAILURE TO REMOVE THE LOCK PINS WHEN UNFOLDING WILL RESULT IN SERIOUS DAMAGE TO THE IMPLEMENT. BE SURE OTHER PEOPLE AND PETS ARE A SAFE DISTANCE AWAY.

4-5.6 Slowly engage the tractor lever and fold/unfold the wing frames. When the wings are unfolded, continue holding the tractor lever to fully extend all fold cylinders. This will allow the wings to fully flex in the field.

4-5.7 When the unit is fully folded, remove the transport lock pins from the storage location and install in the mounts provided on each side of the machine.

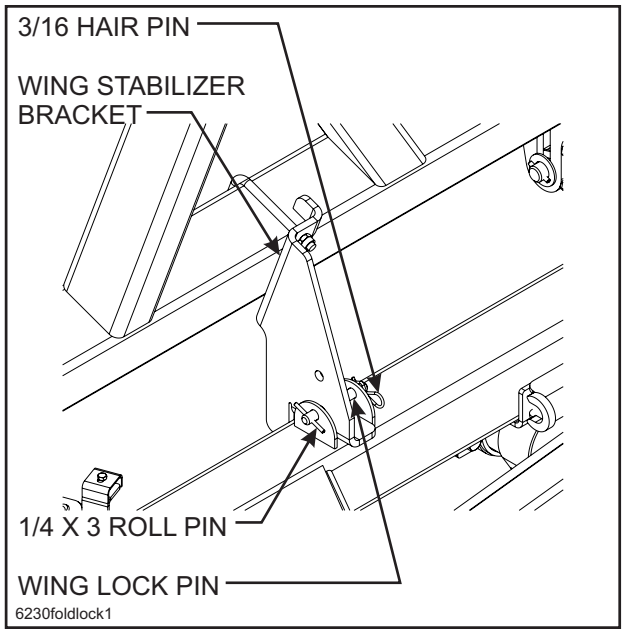

Figure 4-5 Installed Position of Transport Locks

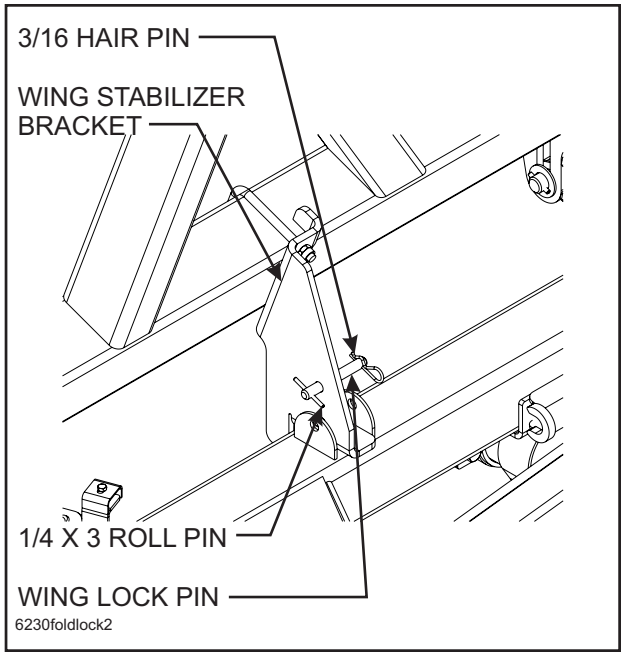

Figure 4-6 Stored Position of Transport Locks

https://truckmanualshub.com/

4-6 GENERAL OPERATION

4-6.1 The horsepower requirements are typically 8-10 horsepower per foot of cut. This will vary widely due to speed, depth, moisture, residue and types of soils. Local dealers can help in making recommendations for your areas.

4-6.2 Operating speed is typically 4.5-6 mph. Excessive speed can cause the unit to bounce, uneven depth, and create a ridge on the outside edges. Too low of speed may not allow the unit to properly fill in the center furrow.

4-6.3 Lift wheels must always be in contact with the ground and carrying some implement weight. Lift wheels are used to gauge the depth of each frame section and to control the leveling feature. Maximum discing depth can not be achieved by raising the lift wheels off the ground. Little or no weight on the lift wheels will cause the frame sections to gouge, side-draft, and buckle producing inconsistent cutting depth.

4-6.4 Do not turn with the disc in the ground, this can put excessive side load on the gangs and hitch. Raise the unit slightly when making turns to prevent gouging and pushing a ridge.

4-7 FIELD OPERATION

4-7.1 Raise the unit to take the weight off of the transport locks. Remove the transport locks from the lift cylinders (on the main frame only). Store the transport locks on the retainers above the main lift **(See Figure 4-4)**.

4-7.2 Remove the wing lock pins and store in the extra hole in the hinge bracket. Unfold the wings and extend the fold cylinders completely **(See Figure 4-6).**

⚠ CAUTION

FAILURE TO REMOVE WING LOCK PINS BEFORE UNFOLDING WINGS WILL CAUSE PERMANENT EQUIPMENT DAMAGE.

https://truckmanualshub.com/

4-8 LEVELING (SIDE TO SIDE)

4-8.1 Leveling the disc side-to-side involves leveling the wing frame to the center frame. The unit should be level side-to-side when operating in the field.

4-8.2 An adjustable radius rod connects the main lifts together on the center frame and keeps them operating in unison. The radius rod should be set at 24” pin centers **(See Figure 4-7)**. No further adjustment should be required. Any other adjustment other than this can severely damage frame and lift components.

4-8.3 To level the unit, verify that all tires are properly inflated, and that the center radius rod adjustment has been properly set. With the implement unfolded, raise the unit to fully extend the lift cylinders. Continue to hold the tractor lever 30-60 seconds to insure that the cylinders are fully extended and the rephasing lift system has been purged of air. Lower the unit until the disc blades are approximately 1” off the ground. On the center frame, measure the distance from the walking beam spindle to the bottom side of the frame **(See Figure 4-8).** Measure the same distance on the wing frame. The wing frames are generally set to the same distance or slightly higher than the center frame. Adjusting the anchor at the base end of each wing lift cylinder sets wing frame height **(See Figure 4-9)**.

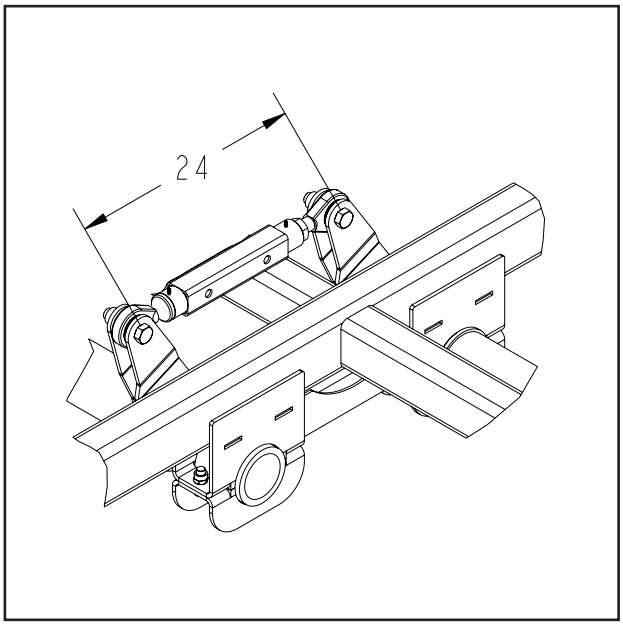

Figure 4-7 Radius Rod Measurement

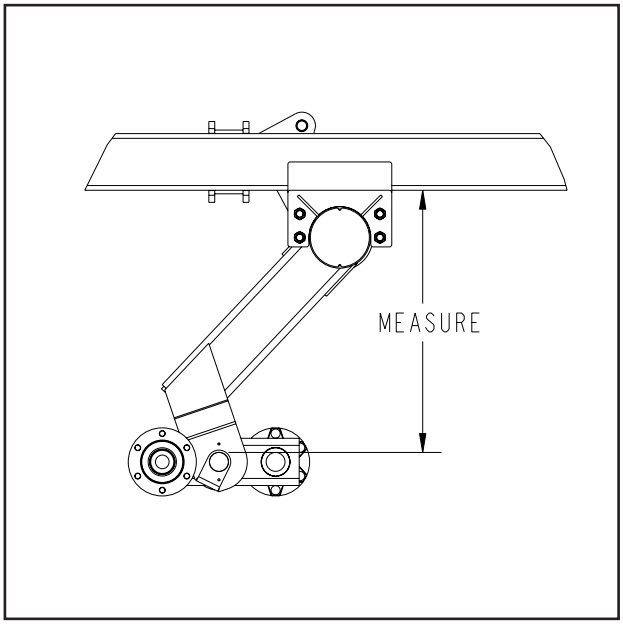

Figure 4-8 Leveling from Side to Side

https://truckmanualshub.com/

4-8.4 An adjusting wrench is provided to make this adjustment. It may be necessary to lower the wing to the ground and relieve weight on the cylinder anchor to make this adjustment. If required, fully raise the implement, lower to just above the ground, and re-verify measurements. Repeat as necessary and securely tighten the cylinder anchor when complete.

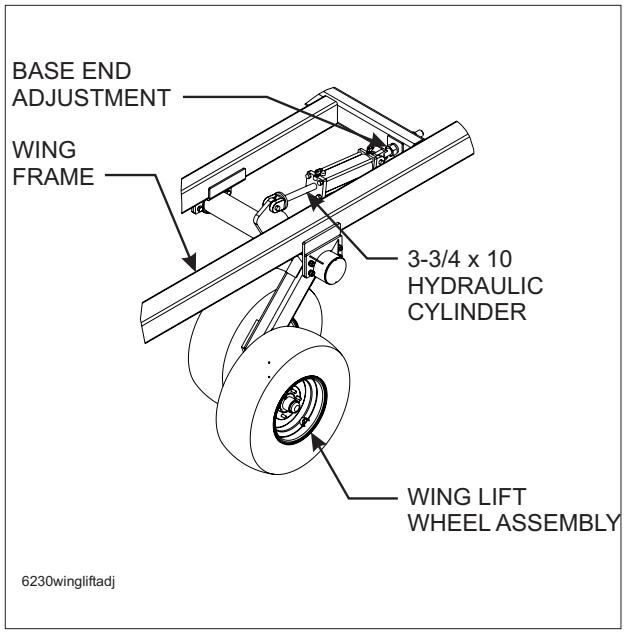

Figure 4-9 Wing Lift Adjustment

https://truckmanualshub.com/

4-9 LEVELING (FRONT-TO-REAR)

4-9.1 The leveling feature on the disc is used to keep the disc level when raising the unit from a working position to a transport position. The leveling feature is also used to level the unit from front-to-rear to perform a level discing operation in the field.

4-9.2 The unit should be level from front to rear and the soil behind the disc should be level without furrows or ridges. If there is a presence of a center ridge from the rear gangs, the rear gangs are too deep. If there is a furrow left from the rear gangs the front gangs are too deep.

Figure 4-10 Manual Leveler Adjustment

4-9.3 On machines with manual leveler adjustment, turn the leveler handle in or out to adjust the front-to-rear level **(See Figure 4-10)**. By turning the leveler handle in (clockwise) will lower the rear gangs in deeper. By turning the leveler screw out (counter-clockwise) will raise the rear gangs.

4-9.4 Implements with the optional hydraulic leveler, can make adjustments on-the-go from the tractor. A reference gauge is provided on the implement for a guide.

IMPORTANT

IMPROPERLY SET GAUGE WHEELS CAN PREVENT THE LEVELER FROM FUNCTIONING PROPERLY. LARGE ADJUSTMENTS, EITHER MANUALLY OR HYDRAULICALLY WILL REQUIRE ADJUSTMENT OF GAUGE WHEELS.

https://truckmanualshub.com/

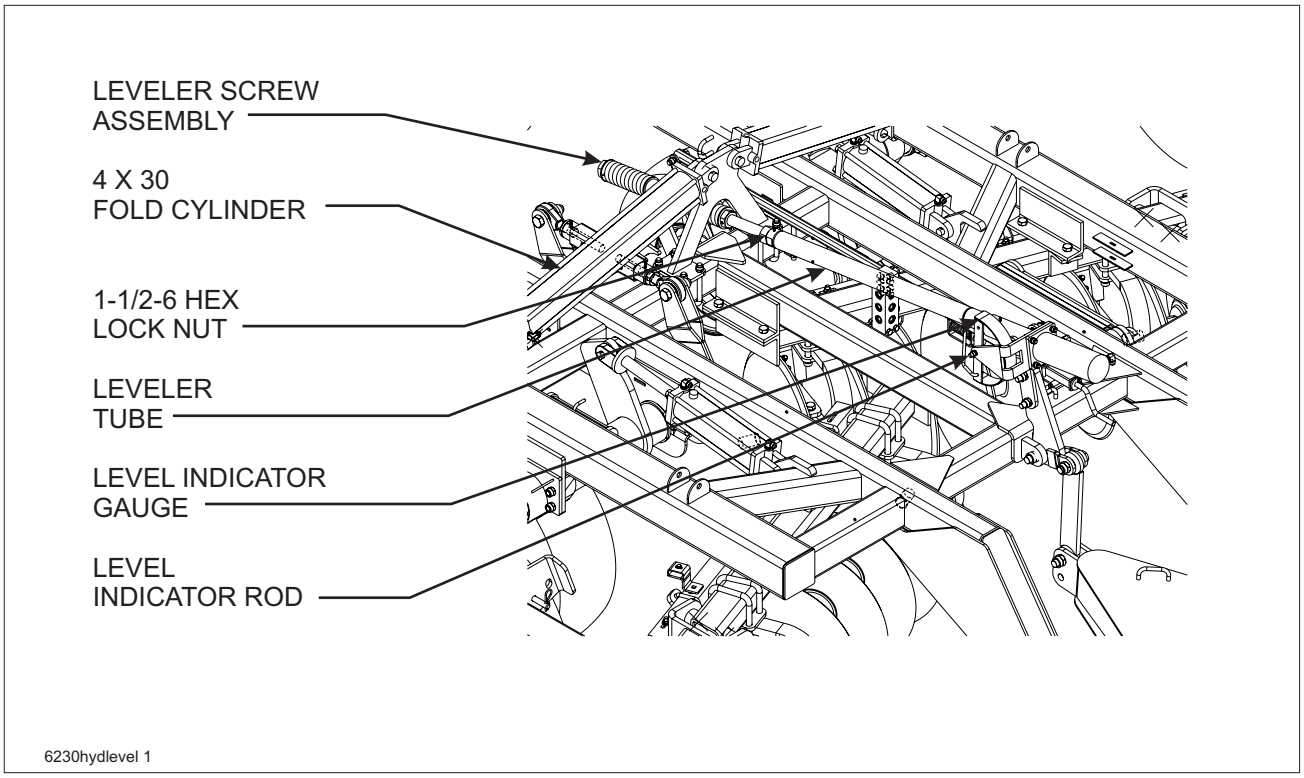

Figure 4-11 Hydraulic Leveler Gauge Adjustment

4-10 HYDRAULIC LEVELER GAUGE ADJUSTMENT

If a unit is equipped with an optional hydraulic leveler, and the unit is level in the field, but the reference gauge is not in the middle of the adjustment range, the gauge may be adjusted.

4-10.1 Lower the disc to the ground to remove the load on the leveler assembly.

4-10.2 Remove the level indicator rod from the leveler tube **(See Figure 4-11)**.

4-10.3 Loosen the 1-1/2-6 hex lock nut at the rear of the leveler tube (an adjustment wrench is provided for this).

4-10.4 Screw the leveler tube in or out. Insert the indicator rod to check if the reference gauge is centered. Adjust as required to center the reference gauge. Make sure the hole for the indicator rod is horizontal and tighten the locking nut on the leveler screw.

4-10.5 Install the level indicator rod in the leveler tube and level indicator gauge.

https://truckmanualshub.com/

4-11 VARIABLE RATIO ADJUSTMENT

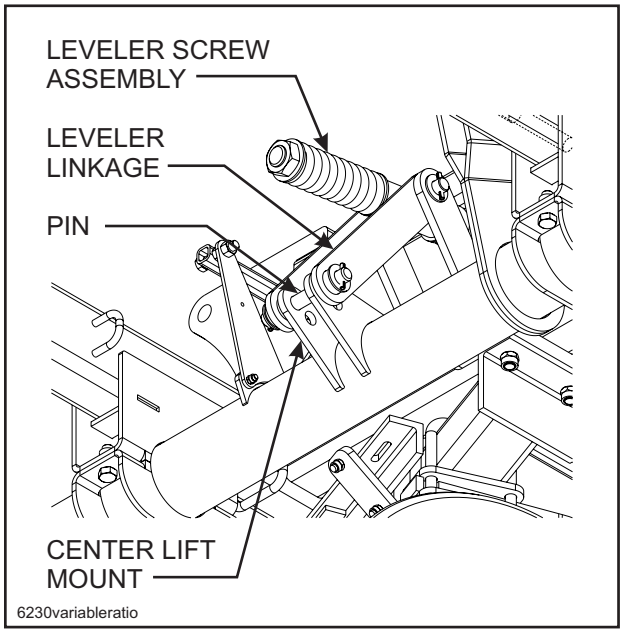

Figure 4-12 Variable Ratio Leveler Adjustment

The leveler is also equipped with a variable ratio adjustment. This is located at the rear of the leveler and above the center lift. Connect the leveler link to the top holes of the center lift mount for normal discing operations. The lower holes on the center lift, are for a reduced leveler ratio. This is useful when attaching harrows to the rear of the disc. The reduced leveling action help to pickup the heavier attachments quicker and provides more transport height when traveling.

4-11.1 To change the variable ratio adjustment, lower the implement to the ground and relieve the load on the lift system.

4-11.2 Extend or retract the leveler assembly (manual or hydraulic), until the load is removed from the leveler assembly.

4-11.3 Remove the pin through the leveler linkage and center lift mount **(See Figure 4-12)**.

4-11.4 Reinstall the pin and leveler linkage in the desired position. The leveler assembly will require some adjustment to connect to the new position.

https://truckmanualshub.com/

4-12 HITCH ADJUSTMENT

4-12.1 It is important for the disc to maintain a proper draft line with the tractor to do a level job of discing. The draft line will vary depending on soil conditions and tractor drawbar height. The disc is equipped with an adjustable hitch to help insure a proper draft line with the tractor.

4-12.2 Generally tractor drawbars greater than 20” tall will require the hitch to be in the upper position. Drawbars 20” and below should be in the lower position. Operating conditions may also influence the hitch adjustment.

4-12.3 A hitch adjustment that is too high will leave a center furrow, as the front of the disc will operate too deep. A low hitch adjustment can cause a center ridge, regardless of leveler setting.

IMPORTANT

EXCESSIVE DOWN PRESSURE WITH GAUGE WHEELS CAN ALSO CREATE A CENTER RIDGE REGARDLESS OF HITCH AND LEVELER SETTINGS.

4-12.4 To adjust the hitch **(See Figure 4-13)**:

- **a.** Lower the disc to the ground.
- **b.** Adjust the leveler screw (manual or hydraulic) in or out until the pressure is relieved on the leveling system **(See Sections 4-9 and 4-10).**
- **c.** Remove the 1-8 X 4 hex head cap screw and hardware from the leveler ball joint link at the center rear of the hitch weldment.
- **d.** Loosen, but do not remove the bolts that pass through the ball joint connections at the outer rear connections of the hitch.
- **e.** Remove the bolt through the two hole clamp plates (above or below) the rear connections of the hitch ball joint.
- **f.** Vertically raise or lower the hitch to the desired operating position.
- **g.** Reinstall the bolt through the two-hole clamp plates to secure the hitch in the new position.

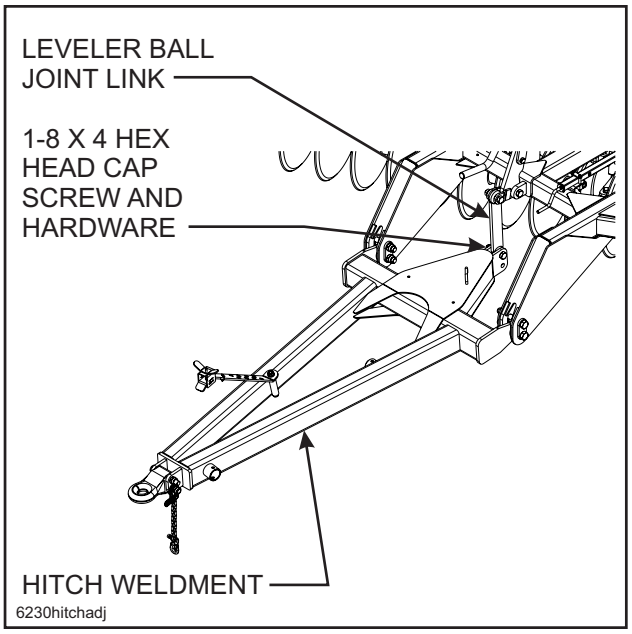

Figure 4-13 Hitch Adjustment

- **h.** Retighten all hitch bolts.
- **i.** Install the bolt in the leveler ball joint link in the new position at the rear of the hitch and retighten.

IMPORTANT

WHEN THE HITCH IS IN THE LOWER POSITION, THE LEVELER BALL JOINT LINK WILL BE IN THE UPPER MOUNTING HOLE AT THE REAR OF THE TONGUE. IF THE HITCH IS IN THE RAISED MOUNTING POSITION, THE LEVELER BALL JOINT LINK WILL BE IN THE LOWER HOLE AT THE REAR OF THE TONGUE.

https://truckmanualshub.com/

4-13 SCRAPER ADJUSTMENT

The disc is equipped with rigid scrapers at regular spools with dual scrapers at the disc bearings.

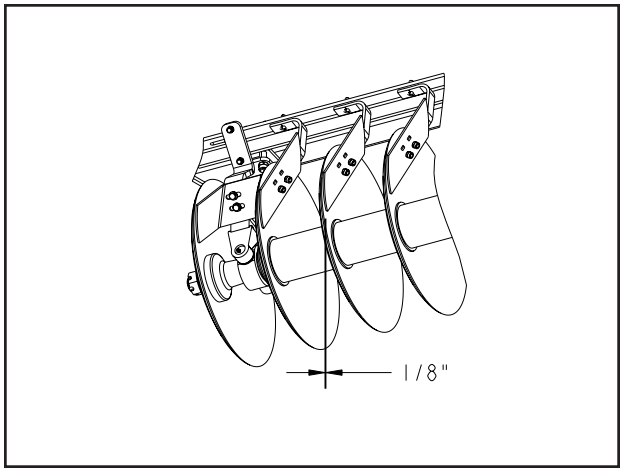

Figure 4-14 Scraper Adjustment

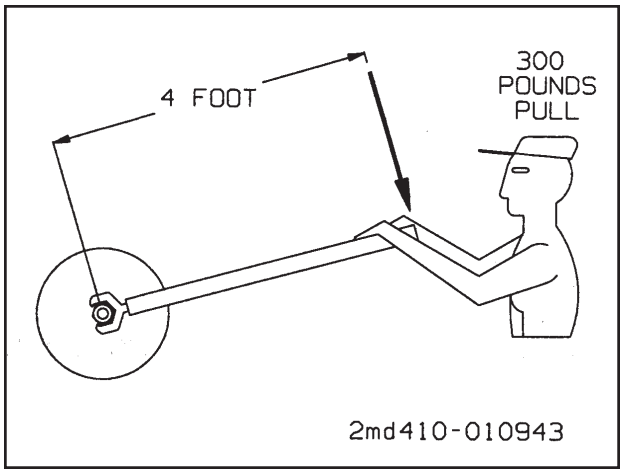

Figure 4-15 1,250 Foot-Pounds of Torque

4-13.1 Rigid scrapers should be set initially as close to the disc blade as possible without rubbing (approximately 1/8") **(See Figure 4-14).** A slotted hole at the top of each scraper is provided for individual adjustment. Adjustments may be made for entire gangs, by loosening the u-bolts around the angle-iron scraper bars and sliding the whole bar. Scraper arms are made of spring steel. In wet conditions, the scraper may be set against the disc blade and will function as a spring-loaded scraper.

4-13.2 Scraper blades have two positions and are reversible. The blades are initially set in the rear position to position scraper closer to the outer edge of the disc blade. This position will perform better in wet and heavier residue conditions. The blade may be moved forward for dryer conditions and climates where less scraper action is needed.

4-13.3 Dual scrapers are provided at the bearing locations to scrape the disc blade and to limit the amount of soil and residue carried into the bearing hanger. Scrapers can be individually adjusted in or out from the concave side of the disc blade.

CAUTION

TIGHTEN ALL 1-3/4" NUTS TO 1,250 FOOT-POUNDS OF TORQUE (SEE FIGURE 4-15.

https://truckmanualshub.com/

4-14 HARROWS

4-14.1 Refer to harrow manuals for operation and maintenance instructions.

4-15 FRONT GAUGE WHEELS

4-15.1 The disc is equipped with castering gauge wheels at the outer front corners of each wing. These gauge wheels are used to limit depth of the wings, and prevent gouging and buckling of wing frames.

4-15.2 Gauge wheels are not intended to carry the wing, but prevent excessive depth. Adjust the wheels to carry some weight, but not enough to hold the wing from reaching operating depth set with the main lift hydraulics.

IMPORTANT

EXCESSIVE DOWN PRESSURE CAN CAUSE THE IMPLEMENT TO THROW A CENTER RIDGE.

4-15.3 To adjust the gauge wheel depth, loosen and adjust the nuts on each side of the gauge wheel cross. A wrench is provided on the implement for this adjustment. All other connections should remain tight. Securely tighten the adjusting nuts when complete. Both gauge wheel assemblies should be set the same. Verify adjustment by measuring the length of the bolt centers of the gauge wheel adjustment rod.

https://truckmanualshub.com/

4-16 DISC BLADES

4-16.1 The 6230 disc is equipped with full concavity disc blades on both front and rear. This is 3” concavity for 24” diameter blades and 2-1/2” concavity for 22” diameter disc blades. The use of other concavity blades can give unpredictable results and is not recommended.

4-16.2 The 24” diameter blades are used for standard configuration with 4 ga (.256”) for use in heavier soils and occasional rock. 6 ga. (.197”) blades are recommended for lighter soils. When operating in rocky conditions 22” 4 ga. (.256”) blades are recommended.

4-16.3 Sharpening – In some cases there is a desire to sharpen disc blades for improved cutting. There are several people who roll-sharpen disc blades. Most disc blades used today are made of chrome-boron steel. The chrome-boron steel has a higher hardness than traditional carbon-steel blades for increased wear. Higher hardness makes roll sharpening more difficult often with mixed results, and is not covered by warranty. Disc blade manufacturers will not cover any alterations to blades other than the place of manufacture. Results from roll-sharpening damage may not be immediate, and may take more than a season to be noticeable. If you choose to sharpen disc blades, check with local dealers for reputable experienced sharpeners that will stand behind their work.

⚠ DANGER

DISC BLADES ARE EXTREMELY SHARP. EXERCISE EXTREME CARE WHEN WORKING ON OR NEAR DISC BLADES. DO NOT ALLOW DISCS TO ROLL OVER OR FALL ONTO ANY BODILY PART. DO NOT ALLOW WRENCHES TO SLIP WHEN WORKING NEAR DISC BLADES. NEVER PUSH WRENCHES TOWARD DISC BLADES. DO NOT CLIMB OVER MACHINE ABOVE DISC BLADES. FAILURE TO STAY CLEAR OF DISC BLADE EDGES CAN CAUSE SERIOUS PERSONAL INJURY OR DEATH.

https://truckmanualshub.com/

4-17 DEPTH STOP ADJUSTMENT (MANUAL)

The operating depth of the disc is controlled by a single-point depth stop. The stop is located at the center front of the machine.

4-17.1 Adjust the depth stop by turning the handle in (clockwise) to increase operating depth **(See Figure 4-16).** Turn the handle out (counter-clockwise) to decrease operating depth. One turn will equal approximately 3/16" adjustment in depth.

4-17.2 The gauge on the side of the depth stop tube gives a reference for depth setting. The "A" setting refers to maximum operating depth.

IMPORTANT

FOR MAXIMUM OPERATING DEPTH, THE LIFT WHEELS MUST BE IN CONTACT WITH THE GROUND AND CARRY SOME OF THE MACHINE WEIGHT. RAISING THE LIFT WHEELS OFF THE GROUND, PERMITS UNCONTROLLED DEPTH OF EACH FRAME SECTION AND DOES NOT ALLOW THE LEVELER TO FUNCTION PROPERLY.

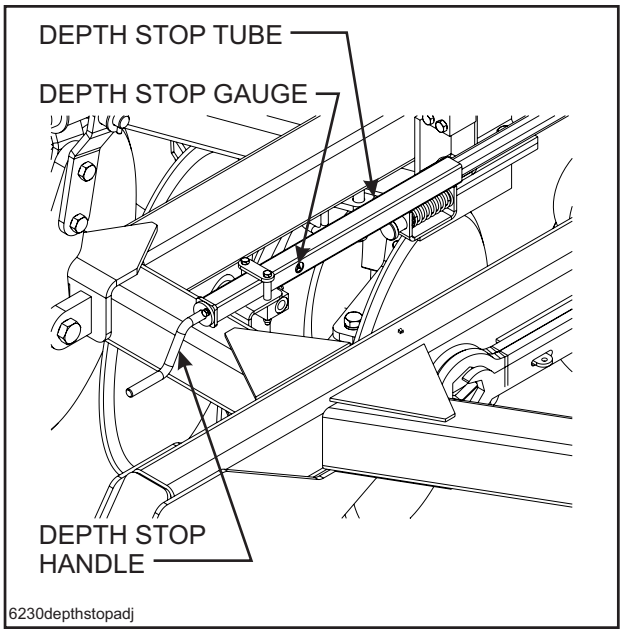

Figure 4-16 Depth Stop Adjustment (Manual)

https://truckmanualshub.com/

4-18 ELECTRONIC DEPTH CONTROL ADJUSTMENT

The optional Electronic depth control is available to work with John Deere 7720, 7820, 7920 (IVT™ transmisson only), 8000, and 9000 series tractors equipped with the TouchSet™ depth Control. This allows the operator to set one or more depth control stops from the tractor. TouchSet™ depth control must already be installed on the tractor to be able to use the electronic depth control.

4-18.1 To be able to use the Electronic Depth Control, adjust the connecting linkage between the depth control lever and the depth stop mounting plate to 5-1/2” length **(See Figure 3-6).**

4-18.2 Rotate the manual depth stop handle clockwise to fully retract the hydraulic depth stop. This will allow the electronic stop to function properly without being stopped inadvertently.

4-18.3 Connect the electronic depth control harness to the electrical connector at the rear of the tractor.

4-18.4 Read and follow the tractor manufacturer’s operating manual for operating and setting the depth from within the tractor cab.

4-18.5 **TouchSet, IVT are registered trademarks of John Deere.

https://truckmanualshub.com/

4-19 WHEEL BEARING MAINTENANCE

Wheel bearing maintenance should be performed at the beginning of every season of use. Check the wheel bearings periodically for excessive end play. If needed, adjust or replace them using the following procedure:

4-19.1 Place the frame on blocks or stands sufficient to lift the tire clear of the ground.

4-19.2 Remove the tire.

4-19.3 Remove the hub cap, cotter pin, slotted nut and washer.

4-19.4 Remove the hub. Clean and inspect the bearings and hub cavity. Replace any worn or defective parts.

4-19.5 Repack the bearings using a high-quality wheel bearing grease.

4-19.6 Slide the triple-lip seal onto the spindle. Do not install the seal into the hub.

4-19.7 Slide the inner bearing cone and hub onto the spindle.

4-19.8 Install the outer bearing cone, washer and slotted nut.

4-19.9 Tighten the slotted nut while rotating the hub until there is a slight resistance to wheel rotation. Then, back the slotted nut off one notch, until the wheel rotates freely without end play.

4-19.10 Slide the triple-lip seal to the hub and install the seal in the hub.

Note: The triple-lip seals should point away from the hub to keep contaminants out and allow grease to pass.

4-19.11 Install a new cotter pin and replace the hub cap.

4-20 HYDRAULIC MAINTENANCE

4-20.1 Check the tractor hydraulic fluid level per tractor owners manual and after any leakage. Check fluid level with the cylinders in the retracted position.

4-20.2 If a cylinder or valve leaks, disassemble the parts to determine the cause of the leak. Any time a cylinder is opened up, or whenever any seal replacement is necessary, it is advisable to clean all parts and replace all seals. Seal kits are available from your Landoll dealer.

4-20.3 Check all hydraulic hoses weekly. Look for binding or cracking. Replace all worn or defective parts immediately.

IMPORTANT

UNFOLD, LOWER THE UNIT TO THE GROUND, AND RELIEVE HYDRAULIC PRESSURE BEFORE ATTEMPTING TO SERVICE ANY HYDRAULIC COMPONENT.

4-20.4 Transport locks are provided to hold the implement in a raised position. Do not attempt to perform any service work under the implement without first installing the transport locks. Before servicing any hydraulic component, lower the implement to the ground and relieve all system pressure. If a hydraulic component is disconnected, repaired, or replaced, it will be necessary to purge the system of air before operation. **See Sections 4-4 and 4-5** on how to purge the hydraulic systems.

https://truckmanualshub.com/

4-21 TRANSPORT

4-21.1 Check and follow all federal, state, and local requirements before transporting the disc.

4-21.2 The disc should be transported only by tractor required for field operation. The implement weight should not exceed more than 1.5 times the tractor weight. Unless noted on the implement, maximum transport speed is 20 mph for the implement. Slow down when driving on rough roads. Reduce speed when turning, or on curves and slopes to avoid tipping.

4-21.3 A safety chain is provided with the implement to insure safe transport.

a. The safety chain should have a tensile strength equal to or greater than the gross weight of the implement. The chain is attached to the lower hitch clevis hole with two flat washers between the clamp plates to assure a tight connection. Always use a 1” diameter Grade 8 bolt for this connection.

b. Attach the safety chain to the tractor drawbar **(See Figure 4-17).** Provide only enough slack in the chain for turning. Do not use an intermediate chain support as the attaching point for the chain on the tractor. Do not pull the implement by the safety chain.

c. When unhitching from the tractor attach the hook end of the chain to a free link close to the hitch clevis for storage. This will keep the hook off the ground, reducing corrosion and keep the hook functioning properly.

d. Regularly inspect the safety chain for worn, stretched, or broken links and ends. Replace the safety chain if it is damaged or deformed in any way.

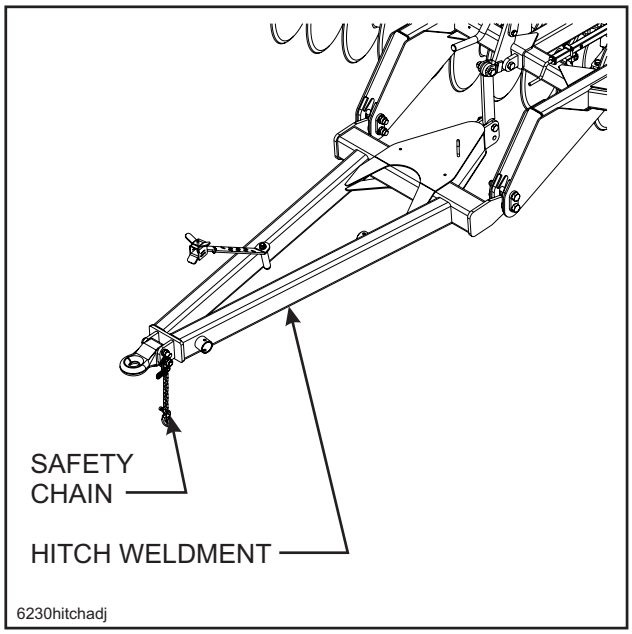

Figure 4-17 Hitch and Safety Chain

4-21.4 Check that tires are of proper size, load rating, and inflated to manufacture specifications before transporting. Check wheel lug bolts to insure tightness.

4-21.5 Know the transport heights and widths of the unit before transporting. Attachments such as leveling harrows can increase the transport dimensions of the implement. Use caution when transporting near bridges and power lines.

⚠ WARNING

ELECTROCUTION CAN OCCUR WITHOUT DIRECT CONTACT.

https://truckmanualshub.com/

4-21.6 Raise the unit to full transport height.

4-21.7 Install transport locks on both lift and fold systems. Do not depend solely on implement hydraulics for transport. **(See Figure 4-18).**

⚠ WARNING

FAILURE TO USE TRANSPORT LOCK PINS DURING TRANSPORT MAY RESULT IN PERMANENT EQUIPMENT DAMAGE, SERIOUS INJURY, OR DEATH.

4-21.8 Transport during daylight hours whenever possible. Always use flashing warning lights, except where such use is prohibited by law. Make sure lights, reflectors and SMV emblem are clearly visible and operating. Remove any obstructions such as dirt, mud, stalks or residue that restricts view before transporting.

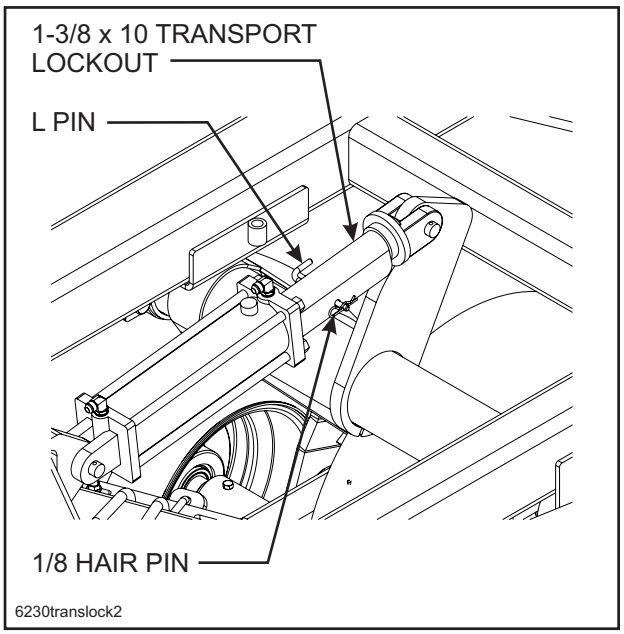

Figure 4-18 Installed Transport Locks

https://truckmanualshub.com/

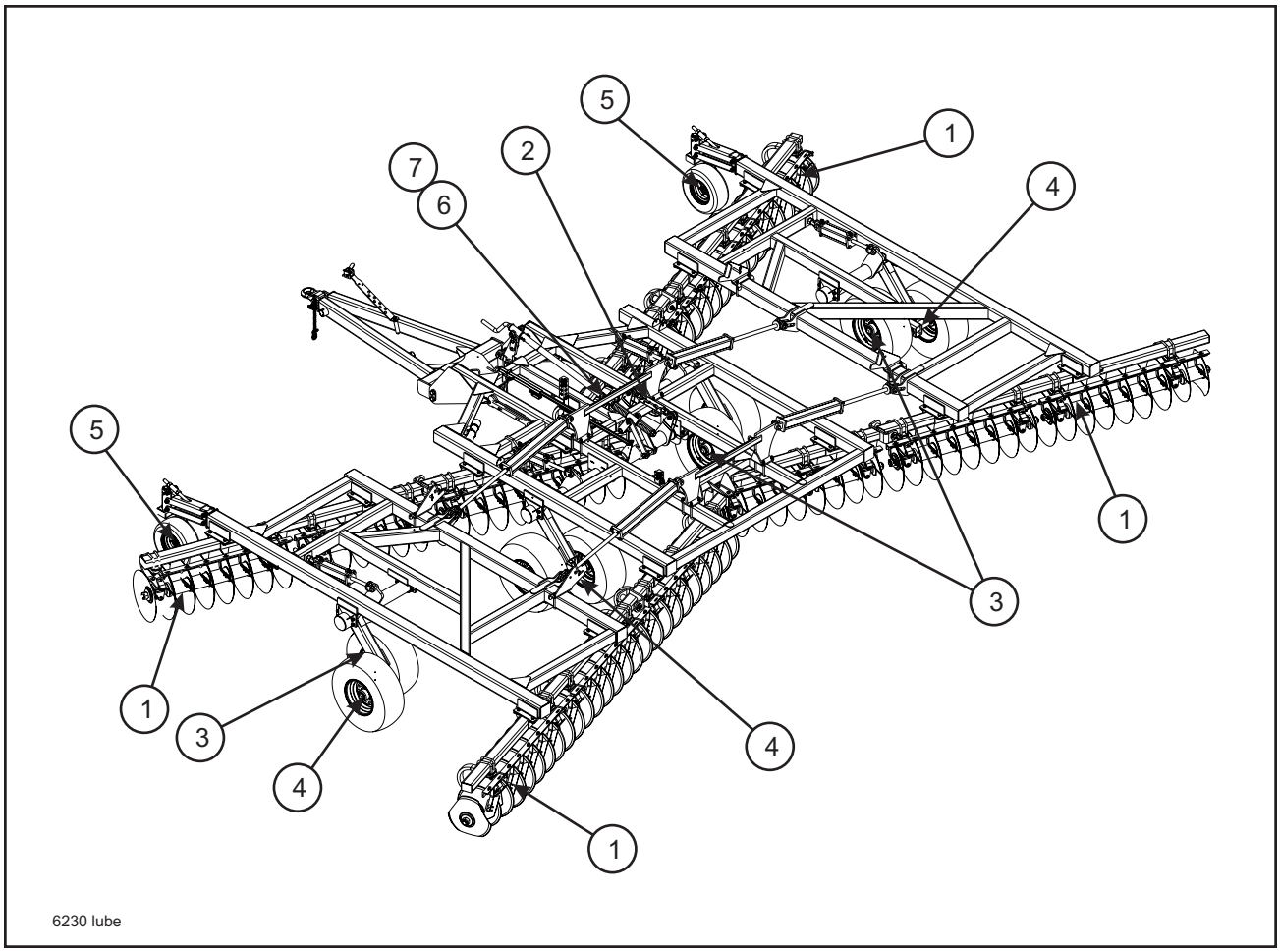

Figure 4-19 Lubrication Schedule

LUBRICATION TABLE			
ITEM	**DESCRIPTION**	**NO. OF LUBE POINTS**	**INTERVAL (Hours unless stated)**
1	Disc Gang Bearings	1 each	10
2	Radius Rod	2	50
3	Walking Tandem Hubs	1 each	50
4	Wheel Hubs	1 each	50
5	Front Gauge Wheel Hubs	1 each	50
6	Manual Leveler Tube	1	50
7	Hydraulic Leveler Tube (Optional)	1	50

Table 4-3 Lubrication Table

https://truckmanualshub.com/

4-22 LUBRICATION MAINTENANCE

4-22.1 **Table 4-3** specifies the number and the period of lubrication points on the 6230 Disc. Proper maintenance of your machine will, under normal operating conditions, help to keep it operating at or near its peak performance for an extended period of time. Proper maintenance is also a condition of keeping your warranty in good status **(See Figure 4-19).**

4-22.2 When lubricating the disc, SAE multi-purpose EP grease, or EP grease with 3-5% molybdenum sulfide is recommended. Wipe soil from fittings before greasing. Replace any lost or broken fittings immediately.

4-22.3 Disc gang bearings are equipped with triple-lip seals that will let grease pass and not harm the seal. Regular lubrication will maintain a full grease cavity and help purge any contaminants. Grease the bearings before long periods of storage to prevent moisture buildup within the bearing cavity.

4-22.4 Wheel seals and walking tandem seals, when properly installed, will allow grease to pass without harm to seals. Regular lubrication will extend service life, particularly in severe operating conditions.

4-22.5 The disc is equipped with maintenance-free bearings in the lifts, leveler, wing hinges and gauge wheel casters. These areas require no lubrication.

4-23 STORAGE

4-23.1 The service life of the Disc will be extended by proper off-season storage practices. Prior to storing the unit, complete the following procedures:

a. Completely clean the unit.

b. Inspect the machine for worn or defective parts. Replace as needed.

c. Repaint all areas where the original paint is worn off.

d. Grease all exposed metal surfaces of shanks, points and discs.

e. Apply a light coating of oil or grease to exposed cylinder rods to prevent them from rusting.

f. Lubricate each point of the machine as stated in **Section 4-8.**

4-23.2 Store the unit in a shed or under a tarpaulin to protect it from the weather. The ground tools and tires should rest on boards, or some other object, to keep them out of the soil.

4-23.3 If the unit must be stored outside, unfold the disc to prevent moisture buildup in the disc gang and wheel bearings.

4-23.4 If the unit is stored in the folded position, make sure the transport lock pins are installed to prevent wing frames settling.

https://truckmanualshub.com/

NOTES

https://truckmanualshub.com/

TROUBLESHOOTING GUIDE 5

The Troubleshooting Guide, shown below, is included to help you quickly locate problems that can happen using your 6230 Disc. Follow all safety precautions stated in the previous when making any adjustments to your machine.

PROBLEM	PROBABLE CAUSE:SOLUTION
UNIT NOT LEVEL, LEAVING CENTER RIDGE	**Leveler not adjusted properly:** adjust leveler, lower front gang
	Hitch adjustment too low: raise implement hitch point
	Gauge wheels carrying too much weight: raise gauge wheels
UNIT NOT LEVEL, LEAVING CENTER FURROW	**Leveler not adjusted properly:** adjust leveler, raise front gang
	Hitch adjustment too high: lower implement hitch point
UNIT NOT LEVEL, LEAVING RIDGE ON OUTSIDE OF UNIT	**Unit not level front to rear, front running too deep:** adjust unit to be level.
	Wings not level with center frame: adjust side to side level. Wings should typically be set even with or slightly higher than center section
	Operating speed too fast, front gang moving soil past rear gang: slow down to proper operating speed for field conditions.
	Hitch adjustment too high: lower implement hitch point.
	Gauge wheels too high, allowing wings to go to deep: properly reset gauge wheels.
UNEVEN DEPTH	**Frame not level side to side:** level center frame side to side.
	Wing frames and center frame not level: level wing frames to center frame
	Lift cylinders not in phase: Fully extend lift cylinders and hold hydraulic lever until all cylinders are fully extended
	Lift wheels not carrying enough weight: adjust depth stop and raise implement
	Fold cylinders not fully extended to allow wings to flex: extend fold cylinders fully.
	Tire pressure too low: check inflation
	Unit not level front to rear: adjust unit to be level.

https://truckmanualshub.com/

UNIT SIDE DRAFTS OR MOVES SIDE TO SIDE	**Lift wheels not carrying enough weight:** adjust depth stop and raise implement. **Unit not level front to rear:** adjust unit to be level. **Level unit side to side:** level center frame and wing frame to center frame side to side. **Gauge wheels too high, allowing wings to go to deep:** properly reset gauge wheels.
FRAMES BUCKLING, NOT EVEN	**Lift wheels not carrying enough weight:** adjust depth stop and raise implement **Wing frames and center frame not level to each other**: level wing frames to center frame **Gauge wheels not set correctly or uneven:** set gauge wheels properly.
WHEEL BEARING FAILURE	**Triple-lip seals not installed correctly:** install seals with the lips pointing outward away from the hub.
HYDRAULIC - LIFT CYLINDERS NOT FULLY EXTENDING	**Lift cylinders not in phase:** fully extend cylinders and hold hydraulic lever until all cylinders are fully extended. **Cylinders not installed in proper series:** Wing cylinders are smaller diameter than center cylinders. Reinstall cylinders properly. **Hoses not properly connected:** check hose routing
HYDRAULIC - ENTIRE UNIT SETTLING	**Depth stop valve not working:** repair valve
HYDRAULIC - UNIT SETTLING, ONE WING RAISING	**Center frame cylinder leaking internally on side of unit that wing is raising:** repair center master cylinder
HYDRAULIC - WING SETTLING	**Wing cylinder leaking:** repair cylinder
DISC GANG PLUGGING	**Scrapers set too far from disc blade:** adjust scrapers to meet disc blade closer and evenly. **Operating depth too deep:** raise unit. **Conditions too wet:** wait until conditions more favorable. **In drier conditions, set scraper farther away from disc blade to improve residue flow**
DISC GANG WILL NOT TURN OR PUSHES SOIL	**Scrapers set too tight:** readjust scrapers. **Depth set too deep for loose or wet conditions:** raise implement or wait until conditions are more favorable. **Gang bearing failure:** replace bearing

https://truckmanualshub.com/

DISC GANG BEARING SNAP RING POPS OUT	**Gang bearings installed incorrectly:** install bearings with snap ring away from concave side of disc blade.
SCRAPERS BUILD UP WITH EXCESSIVE SOIL/RESIDUE	**Scrapers set too far from disc blade:** readjust scrapers.
DISC BLADES LOOSE AND/OR SHEARING ROLL PIN	**Gang not tightened properly:** retighten gang shafts to 1250-1500 ft-lbs. If gangs have ran loose, gangs may require disassembly to remove soil to properly torque gang shafts. Replace any worn components, shafts/spools, etc.

https://truckmanualshub.com/

NOTES: