https://truckmanualshub.com/

Maintenance manual
CF65/CF65 (II)

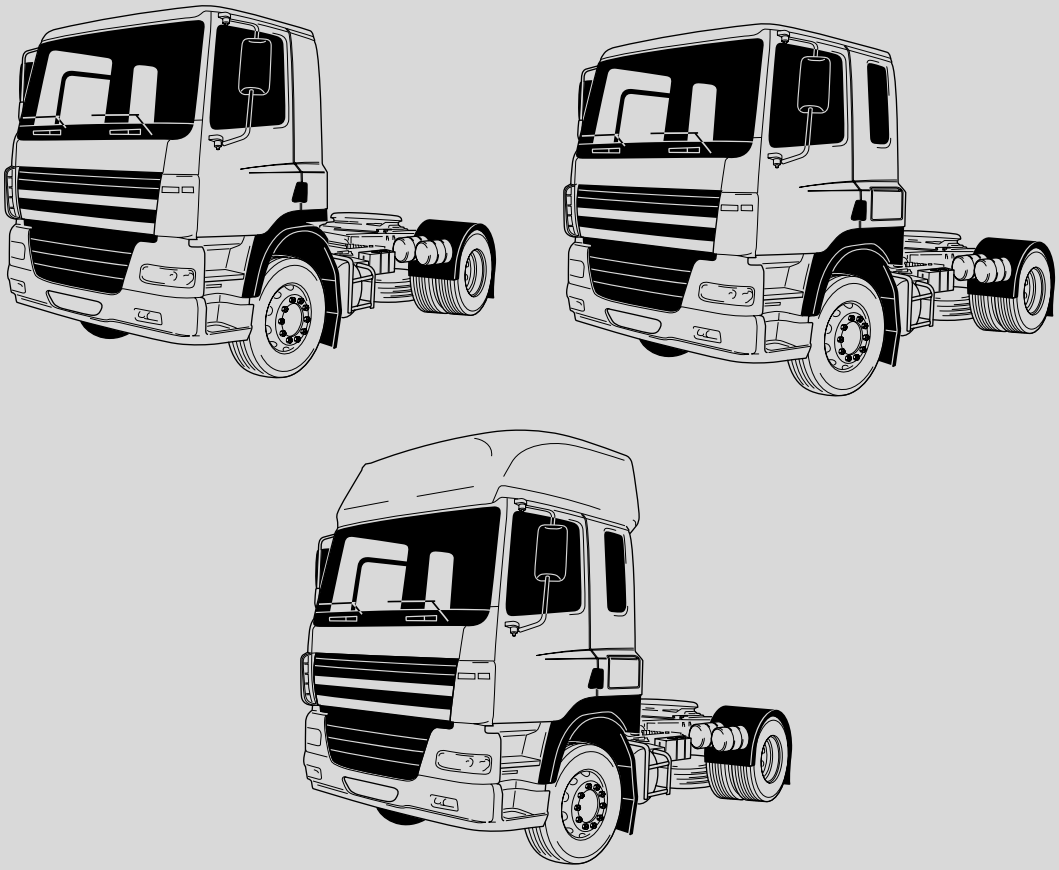

DAF

https://truckmanualshub.com/

https://truckmanualshub.com/

©200518 DAF Trucks N.V., Eindhoven,
The Netherlands.

In the interest of continuing product development, DAF reserves the right to change specifications or products at any time without prior notice.

No part of this publication may be reproduced and/or published by printing, by photocopying, on microfilm or in any way whatsoever without the prior consent in writing of DAF Trucks N.V.

https://truckmanualshub.com/

https://truckmanualshub.com/

TECHNICAL DATA 0

1

THREADED CONNECTIONS 2

FLUIDS, OIL AND LUBRICANTS 3

MAINTENANCE SCHEDULE 4

EXPLANATORY NOTES ON THE MAINTENANCE ACTIVITIES 5

https://truckmanualshub.com/

https://truckmanualshub.com/

0

CONTENTS

		Page	Date
1.	**ENGINE, COOLING SYSTEM AND FUEL SYSTEM**	1-1	200518
1.1	General	1-1	200518
1.2	Tightening torques	1-1	200518
1.3	Filling capacities	1-2	200518
2.	**STEERING GEAR AND BRAKE SYSTEM**	2-1	200518
2.1	General	2-1	200518
2.2	Tightening torques	2-1	200518
3.	**DRIVE AND CHASSIS**	3-1	200518
3.1	General	3-1	200518
3.2	Tightening torques	3-2	200518
3.3	Filling capacities	3-4	200518

https://truckmanualshub.com/

0

© 200518

https://truckmanualshub.com/

1. ENGINE, COOLING SYSTEM AND FUEL SYSTEM

1.1 GENERAL

Valve clearance

Inspection dimension, cold valve clearance	
Inlet	0.15 - 0.40 mm
Exhaust	0.40 - 0.75 mm
Setting dimension, cold valve clearance	
Inlet	0.25 mm
Exhaust	0.50 mm

1.2 TIGHTENING TORQUES

The tightening torques stated in this section are different from the standard tightening torques stated in the overview of the standard tightening torques. The other threaded connections which are not stated must therefore be tightened to the torque stated in the overview of standard tightening torques.

When attachment bolts and nuts are replaced, it is important that - unless stated otherwise - these bolts and nuts are of exactly the same length and property class as those removed.

Lubrication system

Oil drain plug	60 Nm

Valve cover

Valve cover attachment bolts	10 Nm

https://truckmanualshub.com/

0

1.3 FILLING CAPACITIES

Lubrication system

Total capacity (including oil cooler and oil filter)	approx. 19.5 litres
Sump capacity, maximum level	approx. 17.5 litres
Sump capacity, minimum level	approx. 15.4 litres

CF 65 cooling system

Cooling system	approx. 26 litres
With Allison gearbox	approx. 40 litres

CF65 (II) cooling system

Cooling system	approx. 23 litres

https://truckmanualshub.com/

2. STEERING GEAR AND BRAKE SYSTEM

2.1 GENERAL

Maximum steering ball joint axial clearance	1.5 mm

2.2 TIGHTENING TORQUES

The tightening torques stated in this section are different from the standard tightening torques stated in the overview of the standard tightening torques. The other threaded connections not specified must therefore be tightened to the torque stated in the overview of standard tightening torques.

When attachment bolts and nuts are replaced, it is important that - unless stated otherwise - these bolts and nuts are of exactly the same length and property class as those removed.

Bolt, steering column universal joint	56 Nm (1)

(1) Fit new original attachment bolt and self-locking nut.

https://truckmanualshub.com/

https://truckmanualshub.com/

3. DRIVE AND CHASSIS

3.1 GENERAL

Allison gearbox

The Allison MD3060 automatic gearbox is electronically controlled. The oil level can be read out via the selector keypad. This keypad is located next to the driver's seat. The oil level can also be checked using the dipstick.

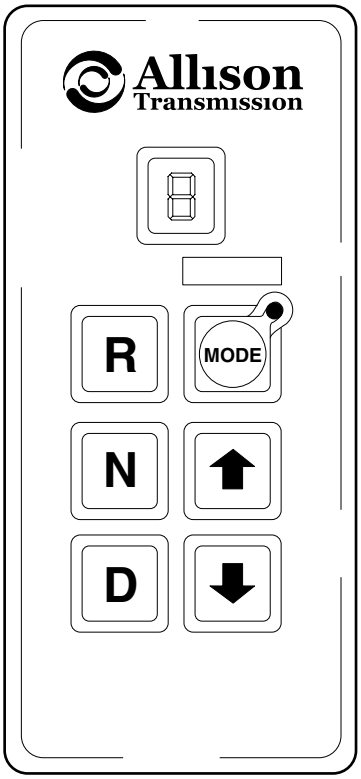

V300392

Dipstick readings:

"Cold add"	add when cold
"Cold full"	full when cold
"Hot add"	add when hot
"Hot full"	full when hot

The oil level when cold must be on the "Cold full" mark.

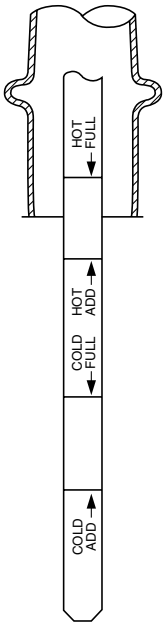

W 3 03 099

https://truckmanualshub.com/

0

3.2 TIGHTENING TORQUES

The tightening torques stated in this section are different from the standard tightening torques stated in the overview of the standard tightening torques. The other threaded connections not specified must therefore be tightened to the torque stated in the overview of standard tightening torques.

When attachment bolts and nuts are replaced, it is important that - unless stated otherwise - these bolts and nuts are of exactly the same length and property class as those removed.

ZF 6S-850 gearbox

Level check/filler plug (A)	50 Nm
Drain plug (B)	50 Nm

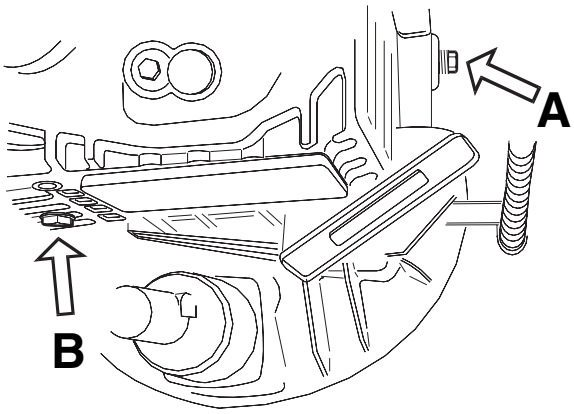

M3038

Eaton 6309 A gearbox

Level check/filler plug (1)	35 Nm
Drain plug/oil strainer (4)	44 Nm

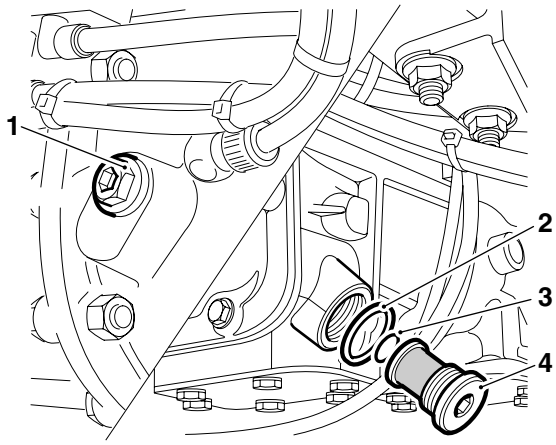

V3 00 376

https://truckmanualshub.com/

Allison gearbox

Drain plug (1)	28 Nm
Oil filter cover attachment bolts (2)	55 Nm

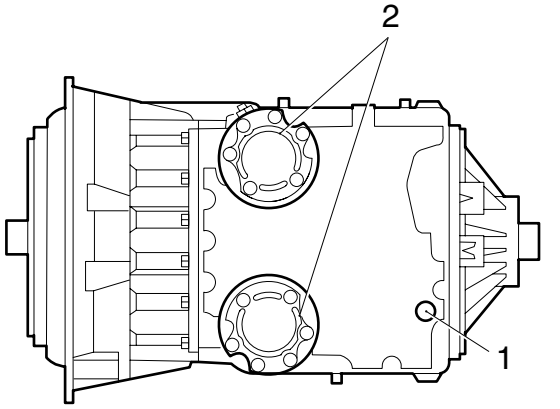

CF65 front axle

U-bolt nut, if flange nut M20, with yellow washer	450 Nm (1)
U-bolt nut, if yellow zinc-plated hexagonal nut M20, property class 10, with black washer	400 Nm (2)

(1) Evenly tighten the two U-bolt nuts alternately.
(2) The yellow zinc-plated hexagonal nut can be identified by the nut height, which is 1 x thread ∅. Evenly tighten the two U-bolt nuts alternately.

CF65 (II) front axle

U-bolt nut	537 Nm

CF65 rear axle

U-bolt nut (leaf suspension), if flange nut M24, with black washer	750 Nm (1)
U-bolt nut (leaf suspension), if yellow zinc-plated hexagonal nut M20, property class 10, with black washer	615 Nm (2)
U-bolt nut (air suspension), if black high hexagonal nut M24, property class 10, with black washer	770 Nm (3)
U-bolt nut (air suspension), if yellow zinc-plated hexagonal nut M20, property class 10, with black washer	615 Nm (2)

(1) Evenly tighten the two U-bolt nuts alternately.
(2) The yellow zinc-plated hexagonal nut can be identified by the nut height, which is 1 x thread ∅. Evenly tighten the two U-bolt nuts alternately.
(3) The high hexagonal nut can be identified by the nut height, which is 1.5 x thread ∅. Evenly tighten the two U-bolt nuts alternately.

https://truckmanualshub.com/

0

CF65 (II) rear axle

U-bolt nut, leaf suspension	700 Nm (1)
U-bolt nut, air suspension	615 Nm (1)

(1) Evenly tighten the two U-bolt nuts alternately.

Hubs and differentials

Filler and drain plugs/hub plugs (Torx)	85 Nm

3.3 FILLING CAPACITIES

Gearboxes

ZF 6S-850	approx. 7.5 litres
Eaton 6309 A	approx. 8.5 litres
Allison MD3060P with 4" sump	approx. 20 litres

Note:
The above filling capacities are approximate capacities, excluding external pipes and cooler.

1132 axle differential

Minimum caster	approx. 15 litres
Maximum caster	approx. 17.5 litres

https://truckmanualshub.com/

CONTENTS

	Page	Date
1. THREADED CONNECTIONS	1-1	200518
1.1 General	1-1	200518

2

https://truckmanualshub.com/

2

© 200518

https://truckmanualshub.com/

1. THREADED CONNECTIONS

1.1 GENERAL

The components may have threaded connections that have been treated with lubricant (dipped threaded connection). Galvanised bolts and nuts are wax dipped in the factory. Black annealed and phosphatised bolts and nuts are oil dipped. The advantage of using dipped nuts and bolts is that friction during tightening is reduced, so that the specified pre-tension force can be accurately obtained. The tightening torque can be reduced while the pre-tension force remains the same.

To achieve a small spread in the pre-tension force, the dipped threaded connection must be tightened accurately.
Therefore, always use a reliable torque wrench that provides a high degree of accuracy.

Note:
Have torque wrenches regularly inspected and calibrated.

Re-use of fasteners (bolt/nut/threaded end)

1. Clean the thread (take particular care to remove locking compound residues) and the clamping faces

2. Check the thread for damage.
   To do so, manually screw a new nut/bolt onto the thread to be checked.
   If the new nut/bolt cannot be fully hand-screwed onto the entire thread of the fastener to be checked, the fastener is not allowed to be re-used.

3. Apply one drop of engine oil to the upper turn of the bolt (threaded end)/lower turn of the nut and one drop to the clamping faces (other lubricants are not allowed).

4. If a locking compound has been specified, oil should not be applied to the thread.

https://truckmanualshub.com/

2

The following applies to all threaded connections (for both new and used vehicles):

- in the case of standard connections, apply the lubricant before fitting, and (re)tighten in accordance with the standard for dipped bolts;
- in the case of special connections, apply the lubricant before fitting, and (re)tighten in accordance with the values specified in the instructions.

The instructions for using lubricants also apply to new bolts from the warehouse. Dry threaded connections may not be used because of their highly variable friction coefficients.

Please consult the workshop manual for the specified tightening torque.

https://truckmanualshub.com/

CONTENTS

	Page	Date
1. SPECIFICATIONS	1-1	200518
1.1 General	1-1	200518

3

https://truckmanualshub.com/

3

https://truckmanualshub.com/

1. SPECIFICATIONS

1.1 GENERAL

IN ORDER TO SATISFY THE WARRANTY CONDITIONS AND GUARANTEE THE LIFESPAN, SAFETY AND RELIABILITY OF DAF PRODUCTS, IT IS OF THE UTMOST IMPORTANCE THAT THE CORRECT FLUIDS, OIL AND LUBRICANTS, COOLANT AND FUEL ARE USED AND THAT THE REQUIRED REPLACEMENT INTERVALS ARE OBSERVED.

Lubricant, engine coolant and fuel additives - of whatever type - must not be used except in those circumstances specified by DAF.

Always follow the safety instructions below and the instructions that are supplied with the product.

Ask your lubricant and fuel supplier(s) whether the products supplied comply with DAF specifications.

DAF is not liable for damage or problems in the following instances:

1. **use of oil of a lower grade than specified.**
2. **use of oil of a different viscosity than specified.**
3. **if the change interval is exceeded.**
4. **if fuel, lubricants or coolants have been used which do not meet the requirements specified by DAF.**

Avoid contact with:
Lubricants
Coolant
Fuel
Clutch fluid
In the event of contact with the skin: remove the liquid with paper or a cloth, wash with soap and water. If irritation persists, consult a doctor.
In the event of contact with the eyes: remove with a cloth and rinse with water. If irritation persists, consult a doctor.
If swallowed: DO NOT induce vomiting. Rinse mouth, drink two glasses of water and consult a doctor.
In the event of inhalation: get fresh air and rest.

Note:
Refer to the "Fluids and lubricants" specification manual for the prescribed fluid, oil and lubricant specifications.

https://truckmanualshub.com/

3

https://truckmanualshub.com/

CONTENTS

		Page	Date
1.	**MAINTENANCE INTERVALS**	1-1	200518
1.1	Maintenance schedule	1-1	200518
1.2	Explanatory notes on the maintenance schedule	1-2	200518
1.3	Effect of diesel fuel and PTO hours on maintenance intervals	1-4	200518
1.4	Maintenance in special operating conditions	1-4	200518
1.5	First service inspection	1-4	200518
2.	**MAINTENANCE ACTIVITIES**	2-1	200518
2.1	Overview of maintenance activities for the first service inspection	2-1	200518
2.2	Overview of annual maintenance activities	2-2	200518
2.3	Overview of mileage-dependent maintenance activities	2-4	200518

4

https://truckmanualshub.com/

4

https://truckmanualshub.com/

1. MAINTENANCE INTERVALS

1.1 MAINTENANCE SCHEDULE

The service intervals stated in the maintenance schedule are based on use of the oils and fuels specified by DAF.

Maintenance schedule CF65/ CF65 (II)		X service +	Y service 1x per YEAR +	
			(1)	
I 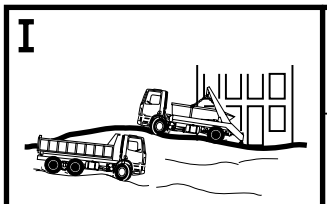		40.000 km	1 year max. 100.000 km	1 year max. 100.000 km
	Ext.		3 year max. 180.000 km	2 year max. 120.000 km
II 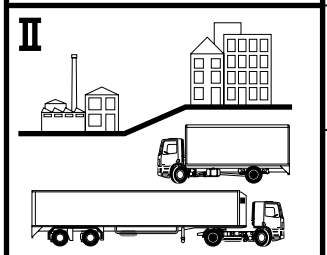		40.000 km	1 year max. 100.000 km	1 year max. 100.000 km
	Ext.		3 year max. 300.000 km	3 year max. 300.000 km
III 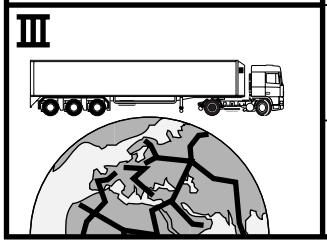		40.000 km	1 year max. 150.000 km	1 year max. 150.000 km
	Ext.		3 year max. 450.000 km	3 year max. 450.000 km

G000378-2

1. Automatic gearboxes are subject to different changing intervals; see maintenance schedule notes.
   Extended changing interval not permitted for ZF 6S-850 gearbox.

https://truckmanualshub.com/

1.2 EXPLANATORY NOTES ON THE MAINTENANCE SCHEDULE

Maintenance group classification
Depending on the use to which the vehicle is put, the vehicle is placed in maintenance group I, II or III.

Maintenance group I
Operation on building sites, in quarries, etc.

- Operation on unmetalled roads
- Traffic in dusty conditions
- Sanitation department vehicles
- Distribution transport with an annual mileage of up to 30,000 km.

4

Maintenance group II
Urban and regional transport

- Distribution traffic in urban areas
- Traffic between adjacent villages/cities

Maintenance group III
(Inter)national traffic

- Long-distance/very long-distance traffic

Standard changing interval
This is the standard changing interval symbol.

See the "Fluids and lubricants" specifications manual for the prescribed oil specification.

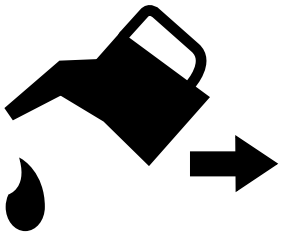

G0 00 230

Extended changing interval
This is the extended changing interval symbol.

If the prescribed oil specification and any additional conditions (see specification manual "Fluids and lubricants") are complied with, an extended changing interval may be applied.

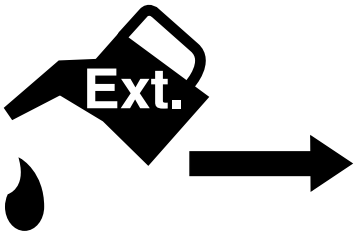

G0 00 229

https://truckmanualshub.com/

X service
This is the symbol for an X service.

An X service is a mileage-dependent maintenance check which consists of changing the engine oil plus a number of visual inspections.

Note:
An X service must be carried out at least once a year.

X service

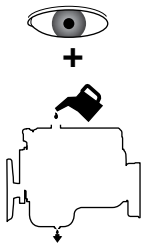

G000086

Y service
This is the symbol for a Y service.

A Y service is an annual maintenance check consisting of several maintenance activities plus changing of the gearbox and rear axle oil.

Note:
If the prescribed oil specification (see specification manual "Fluids and lubricants") is complied with, an extended changing interval may be applied.
Automatic gearboxes are subject to different changing intervals.

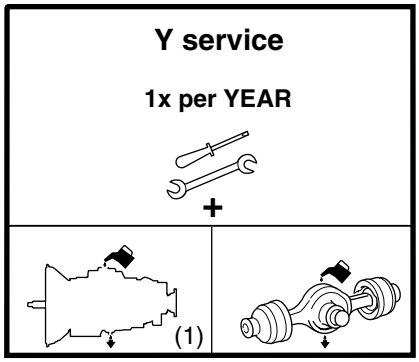

G000087

Automatic Allison gearbox	
Maintenance group I	Standard changing interval 1 year/maximum 40,000 km Extended changing interval 3 years/maximum 80,000 km
Maintenance group II	Standard changing interval 1 year/maximum 40,000 km Extended changing interval 3 years/maximum 160,000 km
Maintenance group III	Standard changing interval 1 year/maximum 40,000 km Extended changing interval 3 years/maximum 160,000 km

https://truckmanualshub.com/

1.3 EFFECT OF DIESEL FUEL AND PTO HOURS ON MAINTENANCE INTERVALS

Diesel fuels

Sulphur content	Engine oil change interval
> 0,2%	Halve interval to max. of 25,000 km

PTO hours
PTO hours should be converted into mileage according to the following formula:

1 PTO hour = 40 km

1.4 MAINTENANCE IN SPECIAL OPERATING CONDITIONS

Contact a DAF dealer/main branch or importer for vehicles used in very specific or heavy conditions.
The service intervals can be modified, if necessary, in consultation with the dealer/main branch or importer to fit the appropriate operating conditions.

1.5 FIRST SERVICE INSPECTION

The first service inspection should be carried out between the first 7,500 and 10,000 km or at most 8 weeks after delivery of the vehicle, whichever comes first.

Note:
If the vehicle is fitted with a clutch wear indicator, a mark (centre punch) should be made in the wear indicator cover.
The mark should be placed exactly opposite the middle of the indicator.
This mark is necessary to allow clutch wear to be evaluated.

https://truckmanualshub.com/

2. MAINTENANCE ACTIVITIES

2.1 OVERVIEW OF MAINTENANCE ACTIVITIES FOR THE FIRST SERVICE INSPECTION

O Adjust clutch wear indicator mark
O Change the oil filters on automatic gearbox

https://truckmanualshub.com/

2.2 OVERVIEW OF ANNUAL MAINTENANCE ACTIVITIES

ANNUAL MAINTENANCE ACTIVITIES (Y-SERVICE)

"Correct, if necessary, after inspection"

CAB AND ELECTRICAL SYSTEM

O Check pedal rubbers
O Check whether the latest version of the ITS manual is kept in the cab
O Replace interior filter element
O Check fluid level of cab tilting pump
O Check cab fastening

4

ENGINE, COOLING SYSTEM AND FUEL SYSTEM

O Replace air filter element
O Check air inlet dust trapping valve
O Check/adjust valve clearance - **see Note 4** Done O Yes O No
O Check coolant freezing point
O Change coolant - **see Note 1** Changed O Yes O No
O Change fuel fine filter

STEERING GEAR AND BRAKE SYSTEM

O Replace steering gear filter element - **see Note 5** Replaced O Yes O No
O Check steering ball joints
O Replace air dryer filter element
O Check compressor line - **See Note 6**
O Check brake cylinder fastening
O Check/adjust load-dependent control valve
O Check fastening of universal joint to steering box input shaft

DRIVE AND CHASSIS

O Change differential oil - **See Note 2** Changed O Yes O No
O Check operation of differential lock
O Check drive shaft play
O Change gearbox oil - **see Note 3** Changed O Yes O No
O Check trailer coupling
O Check superstructure attachment

OTHER ACTIVITIES

O Check whether there are any field actions that still need to be performed on the vehicle

https://truckmanualshub.com/

Note:

1. Every 2 years with coolant according to DAF specification 74001.
   Every 4 years with coolant according to DAF specification 74002.
2. For the changing interval see maintenance schedule in maintenance manual.
3. For the changing interval see maintenance schedule in maintenance manual.
   When changing the gearbox oil in an automatic gearbox, the gearbox oil filters must also be replaced.
4. Check the valve clearance at the 4th Y-service (at a maximum of 240,000 km) and then check and adjust, where necessary, every year (example: 4th - 5th - 6th year).
5. Every 2 years with CF65; does not apply to CF65 (II).
6. Does not apply to CF65 (II).

https://truckmanualshub.com/

2.3 OVERVIEW OF MILEAGE-DEPENDENT MAINTENANCE ACTIVITIES

MILEAGE-DEPENDENT MAINTENANCE ACTIVITIES (X-SERVICE)

"Correct, if necessary, after inspection"

CAB AND ELECTRICAL SYSTEM
O Check/clean battery terminals
O Check/top up battery fluid level

ENGINE, COOLING SYSTEM AND FUEL SYSTEM
O Change engine oil
O Replace oil filter
O Replace fuel prefilter/water separator filter element
O Check for fuel leaks
O Check poly V-belt Replaced O Yes O No
O Check components and hose connections for leaks
O Check radiator and intercooler for fouling
O Check exhaust system

STEERING GEAR AND BRAKE SYSTEM
O Check steering ball joint sleeve for damage
O Check steering oil level
O Check steering gear lines and connections
O Check brake components and brake system for leaks
O Check brake shoe thickness and brake disc

DRIVE AND CHASSIS
O Check clutch fluid level
O Check clutch wear indicator
O Check differential for leaks - **see Note 1**
O Check greased wheel hubs for leaks
O Check gearbox for leaks - **see Note 2**
O Clean gearbox vent and rear axle vent on offroad/semi-offroad vehicles
O Check shock absorbers for proper attachment and leaks
O Check condition and attachments of spring leaves, spring clamps and U-bolts
O Check hinge points and axle suspension fastening, air suspension
O Check air suspension bellows
O Check operation of automatic lubrication system
O Lubricate according to X-service lubrication schedule

OTHER ACTIVITIES
O Check whether there are any field actions that still need to be performed on the vehicle

https://truckmanualshub.com/

Note:

1. For the changing interval see maintenance schedule in maintenance manual.
2. For the changing interval see maintenance schedule in maintenance manual.
   When changing the gearbox oil in an automatic gearbox, the gearbox oil filters must also be replaced.

https://truckmanualshub.com/

https://truckmanualshub.com/

CONTENTS

		Page	Date
1.	**SAFETY INSTRUCTIONS**	1-1	200518
1.1	Safety instructions	1-1	200518
2.	**GENERAL**	2-1	200518
2.1	Introduction	2-1	200518
2.2	Technical information	2-1	200518
2.3	Warning symbol	2-2	200518
2.4	Environment	2-2	200518
2.5	Parts	2-3	200518
2.6	Maintenance guidelines	2-4	200518
3.	**INSPECTION AND ADJUSTMENT**	3-1	200518
	Cab and electrical system		
3.1	Checking pedal rubbers	3-1	200518
3.2	Checking the battery fluid level	3-2	200518
3.3	Checking the battery terminals	3-2	200518
3.4	Checking the fluid level of the cab tilting pump	3-3	200518
3.5	Check cab fastening	3-3	200518
	Engine, cooling system and fuel system		
3.6	Bleeding the fuel system	3-4	200518
3.7	Checking the engine oil level	3-6	200518
3.8	Inspection and adjustment, CE engine valve clearance	3-7	200518
3.9	Checking the poly V-belt	3-9	200518
3.10	Checking the coolant freezing point	3-10	200518
3.11	Checking for fuel leaks	3-11	200518
3.12	Checking the components and hose connections for leaks	3-11	200518
3.13	Checking the exhaust system	3-11	200518
3.14	Checking the radiator and intercooler for fouling	3-12	200518
3.15	Checking the air inlet dust trapping valve	3-12	200518
	Steering gear and brake system		
3.16	Checking fastening of universal joint to steering box input shaft	3-13	200518
3.17	Checking the steering ball joint sleeve for damage	3-14	200518
3.18	Checking the steering ball joints	3-15	200518
3.19	Checking the steering oil level	3-16	200518
3.20	Checking the steering gear lines and connections	3-17	200518
3.21	Inspecting the compressor line	3-18	200518
3.22	Checking the brake components and brake system for leaks	3-19	200518
3.23	Checking the brake cylinder fastening	3-19	200518
3.24	Checking the brake shoe thickness and brake disc	3-20	200518
3.25	Inspection and adjustment, load-dependent control valve, air suspension	3-22	200518
3.26	Inspection and adjustment, load-dependent control valve, leaf suspension	3-25	200518
	Drive and chassis		
3.27	Checking the differential for leaks	3-28	200518
3.28	Checking the operation of the differential lock	3-28	200518
3.29	Checking the drive shaft play	3-29	200518
3.30	Checking the trailer coupling	3-30	200518
3.31	Check the superstructure attachment	3-31	200518
3.32	Check the clutch fluid level	3-32	200518
3.33	Inspection and adjustment, clutch wear indicator	3-33	200518
3.34	Checking the gearbox for leaks	3-33	200518
3.35	Checking the automatic gearbox oil level	3-34	200518
3.36	Checking the greased wheel hubs for leaks	3-37	200518

5

https://truckmanualshub.com/

		Page	Date
3.37	Checking the shock absorbers for attachment and leaks	3-38	200518
3.38	Checking the condition and attachments of spring leaves, spring clamps and U-bolts	3-38	200518
3.39	Checking the hinge points and axle suspension fastening (air suspension)	3-38	200518
3.40	Checking the air suspension bellows	3-39	200518
3.41	Checking the operation of the automatic lubrication system	3-40	200518
4.	**REMOVAL AND INSTALLATION**	4-1	200518
	Cab and electrical system		
4.1	Removal and installation, interior filter element	4-1	200518
	Engine, cooling system and fuel system		
4.2	Removal and installation, air filter element	4-2	200518
4.3	Removal and installation, lubricating oil filter	4-4	200518
4.4	Removal and installation, fuel fine filter	4-5	200518
4.5	Removal and installation, fuel prefilter/water separator filter element	4-6	200518
4.6	Removal and installation, valve cover	4-8	200518
	Steering gear and brake system		
4.7	Removal and installation, steering gear filter element	4-9	200518
4.8	Removal and installation, air dryer filter element	4-10	200518
	Drive and chassis		
4.9	Removal and installation, automatic gearbox oil filters	4-12	200518
5.	**DRAINING AND FILLING**	5-1	200518
	Cab and electrical system		
5.1	Topping up battery fluid	5-1	200518
	Engine, cooling system and fuel system		
5.2	Draining and filling, engine oil	5-2	200518
5.3	Draining and filling coolant	5-3	200518
	Drive and chassis		
5.4	Draining and filling, differential	5-5	200518
5.5	Draining and filling the gearbox	5-6	200518
5.6	Filling grease supply of the automatic lubrication system	5-9	200518
6.	**CLEANING**	6-1	200518
6.1	Cleaning the battery poles	6-1	200518
6.2	Cleaning radiator and intercooler	6-2	200518
6.3	Cleaning the vehicle	6-4	200518
6.4	Cleaning gearbox vent(s)	6-5	200518
6.5	Cleaning rear axle vent	6-5	200518
7.	**LUBRICATION**	7-1	200518
7.1	Lubricate according to X service lubrication schedule	7-1	200518

https://truckmanualshub.com/

1. SAFETY INSTRUCTIONS

1.1 SAFETY INSTRUCTIONS

Comply with all the warnings and safety precautions given in this maintenance manual.

First read the instructions and warnings on the labels and stickers that are affixed to various components on the vehicle and follow them. They are provided for your safety and health, so do not ignore them.

Wear clean, fitted clothes and apply protective cream to unprotected parts of your body, if necessary.

Do not run the engine in an enclosed or unventilated area. In other words, make sure that the exhaust gases are effectively extracted.

Remain at a safe distance from rotating and/or moving components.

Never remove the filler cap from the cooling system when the engine is at operating temperature.

Be careful when changing the oil. Hot oil may cause serious injuries.
Various oils and lubricants used on the vehicle may constitute a health hazard.
Avoid unnecessary contact with drained oil.
Frequent contact damages the skin.
This also applies to engine coolant, windscreen washer fluid, refrigerant in air conditioning systems, battery acid and diesel fuel.
So avoid inhalation and direct contact.

When carrying out operations under the cab, make sure the cab is fully tilted.

To avoid a fire hazard, the engine, the exhaust system and their surroundings must be kept free of flammable fluids and material such as dead leaves and dirt.

https://truckmanualshub.com/

Where there is an engine encapsulation, if necessary, the encapsulation panels must be thoroughly cleaned after each inspection interval because of the risk of fire if the inside of the panels is dirty.

Always disconnect the earth connection of the battery before working on the vehicle.

Always use stands to support the chassis or components when working under the vehicle.
Always charge batteries in a properly ventilated area and avoid creating sparks and naked flames.
Fast charging should only be used in an emergency. When fast-charging, the battery positive and negative leads (+ and -) must be disconnected.

https://truckmanualshub.com/

2. GENERAL

2.1 INTRODUCTION

This maintenance manual describes all relevant maintenance activities. It also contains safety instructions, which must be strictly adhered to. Activities not described in this manual, e.g. replacing components, overhaul, fault-finding, etc., are described in the DAF workshop instructions.

This maintenance manual assumes that the mechanic is sufficiently experienced and has had the required instruction or training to carry out these maintenance activities in a safe and responsible manner.

The technical data and notes on the maintenance activities have been compiled with the utmost care.

2.2 TECHNICAL INFORMATION

The technical information in this maintenance manual, such as notes on maintenance activities and technical data required to carry out the maintenance activities in a safe manner, were up-to-date at the time this manual went to press. DAF reserves the right to make changes without prior notice.

Note:
Important changes relating to technical information that is not contained in this manual will be made available in TI sheets (Technical Information Sheet).

https://truckmanualshub.com/

2.3 WARNING SYMBOL

When text is accompanied by the warning symbol shown here, the information provided is essential for the health and safety of the mechanic.
This warning symbol is also shown if there are circumstances in which there is a vehicle safety hazard or damage to the vehicle could arise.

M0015

2.4 ENVIRONMENT

By carrying out the maintenance activities in a professional manner, on time and at regular intervals, you will help to reduce the impact on the environment.
This means, for example, noticing and remedying possible leakages in time and keeping the engine in an optimum condition (adjusting valves, replacing air filter element etc.), thus reducing the emission of harmful exhaust gasses.
It should be noted that oils and fluids contain harmful substances that have a negative impact on the environment.
That is why you should take care that drained oils and fluids and also discarded oil and fuel filters, are collected in separate receptacles or containers.
In short: **maintenance activities must be carried out in an environmentally aware manner**.

https://truckmanualshub.com/

2.5 PARTS

All DAF parts and components have been carefully attuned to each other, a decisive factor in ensuring the original DAF quality.
It is only logical, therefore, that the original DAF quality can be maintained best if original DAF parts and components are used when replacing parts or components.
As far as maintenance activities are concerned, this includes components such as windscreen-wiper blades, air-dryer elements, gaskets, V-belts and filters.
For example, if "non-original DAF filters" are used, the engine will be insufficiently protected against fine microscopic airborne dust particles, almost imperceptible metal swarf in the oil and dirt in the fuel, resulting in:

- premature replacing of cylinders, pistons, bearings, valves, injector pump and other moving parts
- reduced engine performance
- increased fuel consumption

Therefore, always use original DAF parts and components.

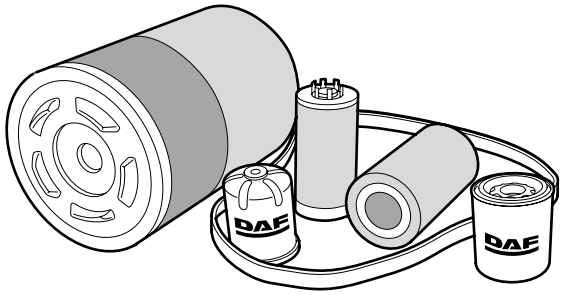

G000183

https://truckmanualshub.com/

2.6 MAINTENANCE GUIDELINES

- When carrying out maintenance activities on the vehicle, it is important that the work is performed under the cleanest possible conditions.
  Filler caps, lubricating points, filler and drain plugs should be cleaned before and after maintenance activities.
- When excessive leakage has been detected at oil seals and/or components, or in case of excessive drops in the oil level, a report should be made and the cause should be remedied.
- It is important to check the gearbox breathers, transfer box, rear axle and driven front axle regularly for fouling and blockages. If the breathers are blocked by dirt, overpressure may cause leaks.
- Depending on the circumstances in which the vehicle is used, e.g. on very bad roads or construction sites, important bolt connections such as the fifth wheel, spring suspension, U-bolts, trailer coupling, steering box attachment, superstructure attachments etc. should be inspected more often and, if necessary, be retightened.
- It is important that a visual inspection and test run are carried out following the maintenance activities.
  Particular attention should be paid to components directly related to driving safety.
- Once a service has been completed new information on the next service (mileage/ date) can be entered on the instrument panel display using DAVIE XD via the VIC.

© 200518

https://truckmanualshub.com/

3. INSPECTION AND ADJUSTMENT

3.1 CHECKING PEDAL RUBBERS

1. Check that the pedal rubbers are still securely mounted on the pedal.

2. Check that the pedal rubbers are not worn out and there is still sufficient tread.

https://truckmanualshub.com/

3.2 CHECKING THE BATTERY FLUID LEVEL

Avoid sparks and open flames in the vicinity of batteries.
Battery acid is an aggressive fluid.
In the event of contact with the skin: rinse the skin with plenty of water for a sustained period. If redness or pain persists, consult a doctor.
Remove any clothing affected and rinse with water.
In the event of contact with the eyes: rinse with plenty of water for at least 15 minutes and consult a doctor.
If swallowed: do NOT induce vomiting. Rinse the mouth, drink two glasses of water and consult a doctor.
In the event of inhalation: get fresh air, rest and consult a doctor.

1. Check the electrolyte level. The electrolyte level must be approx. 10 mm above the plates or up to the level indicator if available.

2. If necessary, top up the batteries, see chapter "Draining and filling".

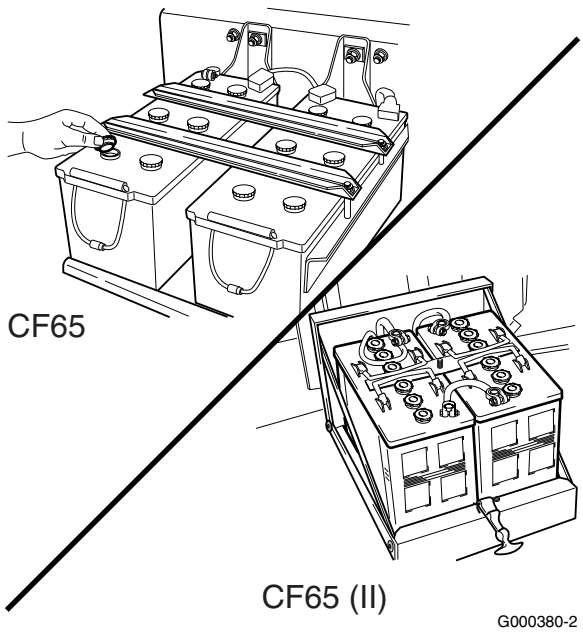

3.3 CHECKING THE BATTERY TERMINALS

1. Visually check the battery terminals for corrosion. Clean the battery terminals if necessary, see chapter on "Cleaning".

2. Check the attachment of the battery terminals.

https://truckmanualshub.com/

3.4 CHECKING THE FLUID LEVEL OF THE CAB TILTING PUMP

1. The fluid level must be checked when the cab is in the driving position.
2. The cock (2) should be in the "tilting back" position (anti-clockwise).
3. Unscrew the filler plug (1) 3 to 4 turns. Wait until the overpressure, if any, has left the reservoir. Remove filler plug (1).
4. Start pumping (maximum 5 pump strokes). Ensure that the pump lever is in the lowest position.
5. Check the fluid level. This level should be no more than 2 cm below the top of the filling opening. Top up if necessary.
6. Fit the filler plug (1) and hand tighten it.

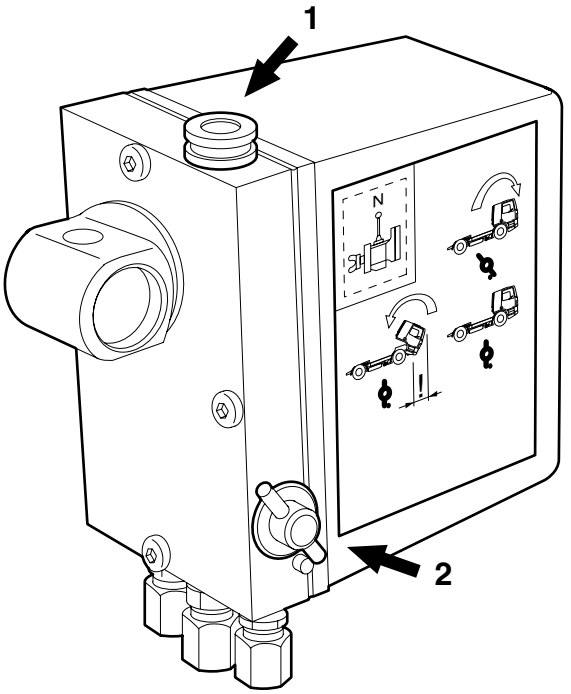

M201062

3.5 CHECK CAB FASTENING

1. Check that all attachment bolts are in place.
2. Visually inspect the attachment of the cab to the tilting mechanism.
3. Visually inspect the seals and condition of the tilting mechanism.

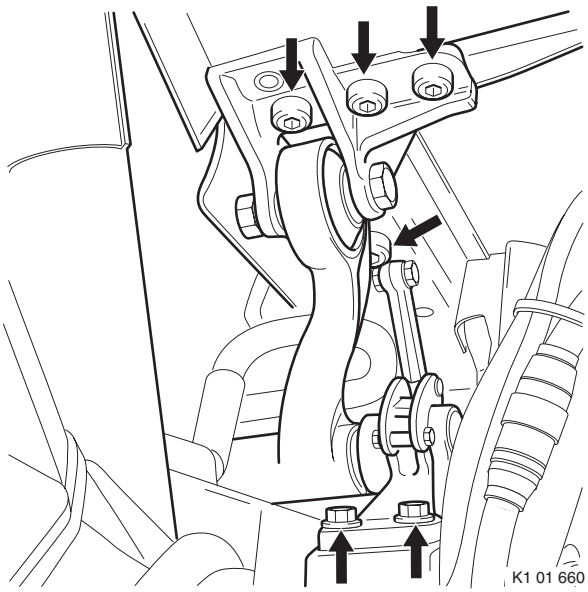
K1 01 660

https://truckmanualshub.com/

3.6 BLEEDING THE FUEL SYSTEM

When venting the fuel system, a quantity of fuel will escape. Collect the fuel and avoid the risk of fire.

Stop pumping as soon as a resistance is felt. If you continue pumping, the fuel system may become internally damaged.

Note:
When the hand pump is used, the fuel system will be automatically bled. Air will be fed back to the tank through the return pipe.

Racor fuel prefilter/water separator

1. Open the vent plug (2) a couple of turns.
2. Pump the primer pump (1) until fuel comes out of the vent plug (2).
3. Close the vent plug (2).
4. Use the primer pump until a clearly higher resistance is felt.

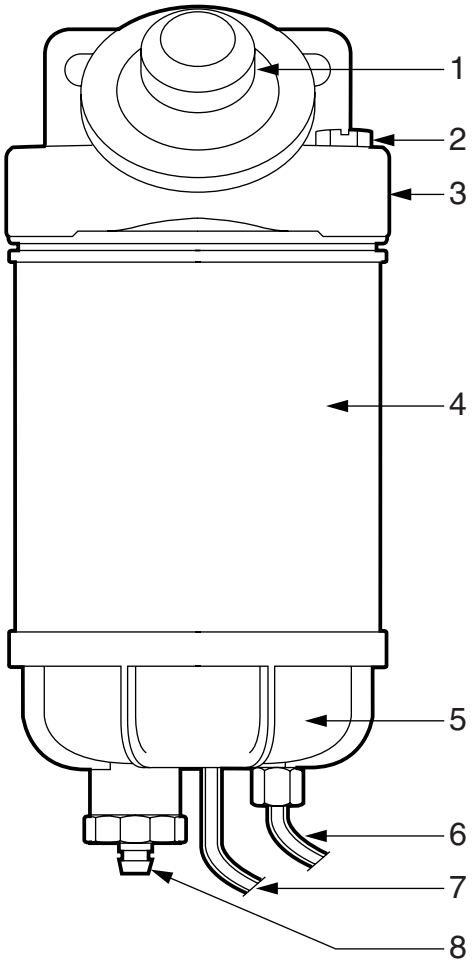

i400356

https://truckmanualshub.com/

Fleetguard fuel prefilter/water separator

1. Unscrew the button of the primer pump and pull it out.
2. Use the primer pump until a clearly higher resistance is perceptible.
3. Press the button and hand tighten it.

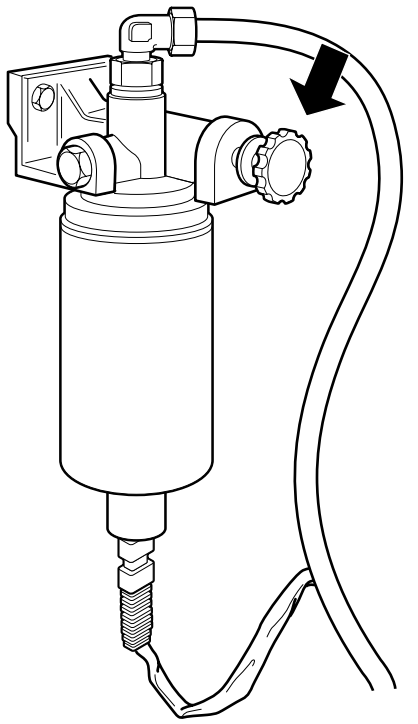

G000381-2

https://truckmanualshub.com/

3.7 CHECKING THE ENGINE OIL LEVEL

Checking the engine oil level

1. Ensure that the vehicle is entirely horizontal.
2. Pull the dipstick (2) out of the holder.
3. Wipe the dipstick clean with a lint-free cloth.
4. Put the dipstick back into the holder.
5. Pull the dipstick out again and check the oil level.

   Note:
   It takes approx. 20 minutes for all the oil to run into the sump when the engine is "warm". If the dipstick is checked immediately after switching the engine off or immediately after oil has been added, the level shown on the dipstick will be too low.

6. Fill oil through the filler opening (1) until the oil level reaches the maximum mark.
   See "Draining and filling". Always use the specified oil. Do not top up above maximum level.

   Note:
   For the difference between minimum and maximum engine oil level, see "Technical data".

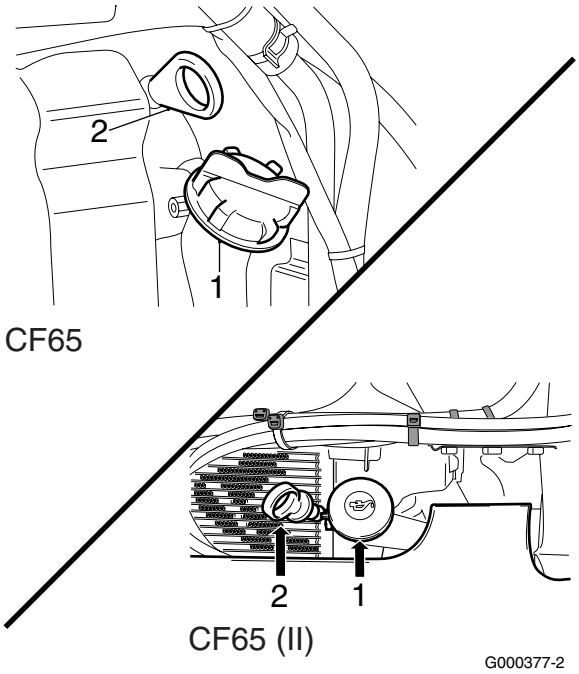

5

https://truckmanualshub.com/

3.8 INSPECTION AND ADJUSTMENT, CE ENGINE VALVE CLEARANCE

Note:
Inspection and adjustment of valve clearance must only be carried out when the engine is cold.

1. Remove the valve cover. See "Removal and installation".

2. Use an open-end spanner on the fan shaft to turn the crankshaft clockwise, as seen from the vibration damper end (this is the engine's normal direction of rotation), until the mark (A) is between the bolts (B) and the valves of cylinder 1 are in overlap position.

   Note:
   "Overlap" is the moment at which the inlet valves start opening and the exhaust valves stop closing.
   The inlet valves are operated by the short rockers and the exhaust valves by the long rockers.

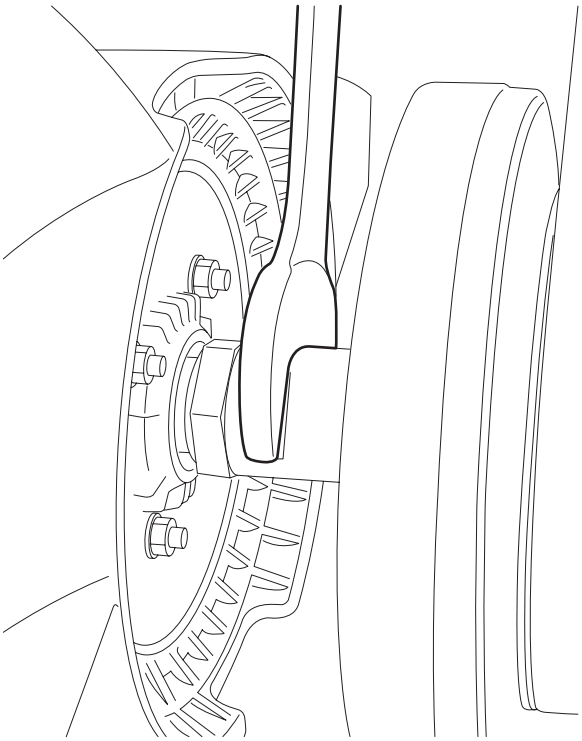

M201318

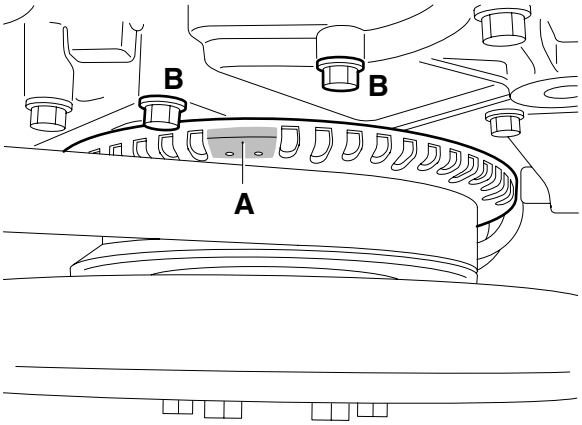

M201065

https://truckmanualshub.com/

3. Check/correct the valve clearance of the specified inlet and exhaust valves. Set the correct valve clearance by loosening the locknut and rotating the adjusting screw in the correct direction; see "Technical data" for the correct valve clearance.

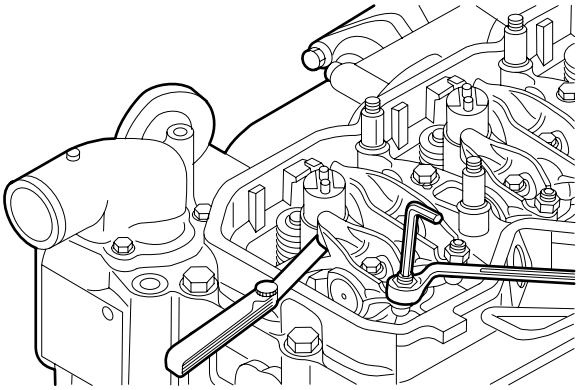

M201064

Cylinder	Inlet valve	Exhaust valve
1		
2		X
3	X	
4		X
5	X	
6	X	X

5

4. Using an open-end spanner on the fan shaft, turn the crankshaft one rotation further so that the mark (A) is once again between the bolts (B) and the valves of cylinder 6 overlap.

5. Check/correct the valve clearance of the specified inlet and exhaust valves. Set the correct valve clearance by loosening the locknut and rotating the adjusting screw in the correct direction; see "Technical data" for the correct valve clearance.

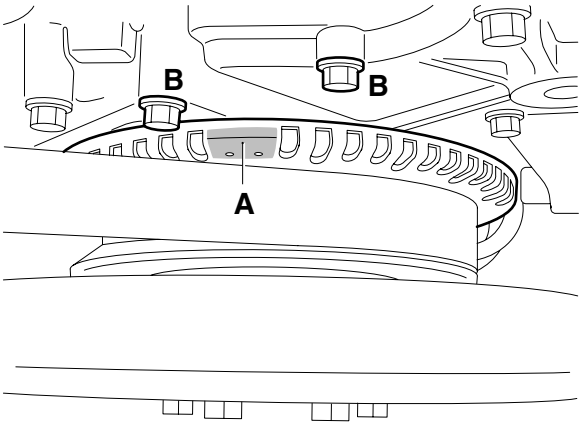

M201065

Cylinder	Inlet valve	Exhaust valve
1	X	X
2	X	
3		X
4	X	
5		X
6		

6. Fit the valve cover. See "Removal and installation".

https://truckmanualshub.com/

3.9 CHECKING THE POLY V-BELT

1. Check the poly-V-belt for damage and signs of serious wear.

2. Check the pulleys for damage, rust and grease deposits.
   Clean or replace the belt pulleys if necessary.

Note:
Pay special attention to the plastic pulleys and the water pump pulley.
Dirt can be scraped off the pulleys quite easily.
Take care not to damage the pulleys.

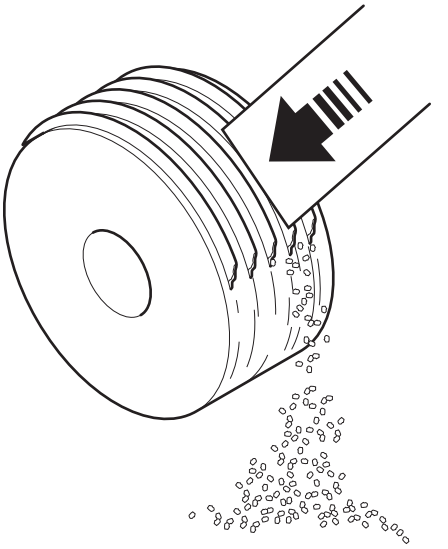

https://truckmanualshub.com/

3.10 CHECKING THE COOLANT FREEZING POINT

When the coolant is hot, there is an overpressure in the cooling system. Carefully remove the filler cap to release the overpressure.
Do not remove the filler cap when the engine is running.
Coolant is a toxic fluid. Contact with the skin should therefore be avoided.
In the event of contact with the skin: remove with paper or a cloth, wash with soap and water. If irritation persists, consult a doctor.
If swallowed: DO NOT induce vomiting. Rinse mouth, drink two glasses of water and consult a doctor.
In the event of inhalation: get some fresh air and rest.
In order to avoid damaging the cylinder block, do not top up a warm engine with coolant.

1. Check the anti-freeze content of the coolant. Fill the cooling system with anti-freeze, if this has not been done yet. Always use only coolants that meet DAF specifications.

2. Consult the manufacturer's instructions for the correct anti-freeze mixing ratio. Preferably, use 40% anti-freeze on an ethylene glycol base. At this percentage, not only good frost protection, but also good corrosion protection is guaranteed.

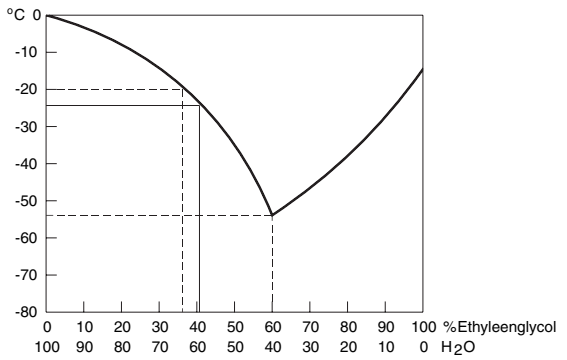

M2016

https://truckmanualshub.com/

3.11 CHECKING FOR FUEL LEAKS

1. Visually inspect all hose connections and fuel system components for leaks.

3.12 CHECKING THE COMPONENTS AND HOSE CONNECTIONS FOR LEAKS

1. Check all hose connections and cooling system components for leaks.
2. Check the hose connections and inlet system components.

3.13 CHECKING THE EXHAUST SYSTEM

1. Visually inspect the exhaust system for leaks.
2. Check the exhaust suspension points.
3. Check that no heat transfer (due to accumulated dirt, for example) can take place to the exhaust system area, such as pipes, components etc.

https://truckmanualshub.com/

3.14 CHECKING THE RADIATOR AND INTERCOOLER FOR FOULING

1. Visually inspect the radiator and intercooler for fouling If necessary, clean the radiator and intercooler, see "Cleaning".

3.15 CHECKING THE AIR INLET DUST TRAPPING VALVE

1. Check the condition of the rubber valves.

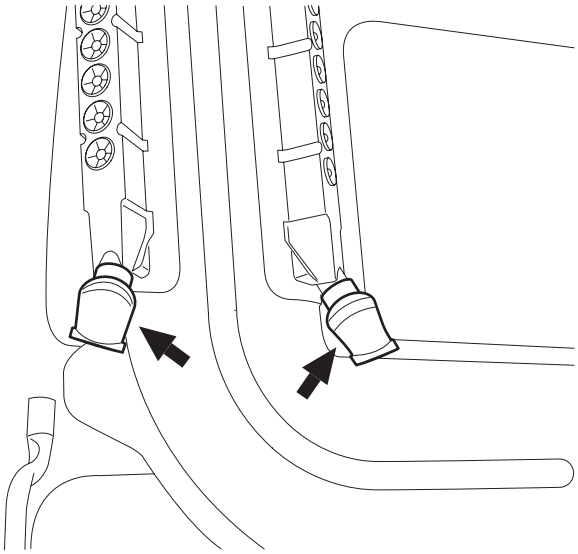

G000238

https://truckmanualshub.com/

3.16 CHECKING FASTENING OF UNIVERSAL JOINT TO STEERING BOX INPUT SHAFT

1. Check the universal joint for perceptible play. If perceptible play is detected, the affected part must be replaced.

2. Check whether there is any perceptible play between the spline connection of the universal joint and the steering box input shaft. If perceptible play is detected, the splines on the universal joint and those on the input shaft must be checked for wear. If wear is detected, the affected part must be replaced.

3. If there is noticeable play but the parts are not worn, the attachment bolt and nut must be replaced. Tighten the attachment bolt and nut to the specified torque, see "Technical data".

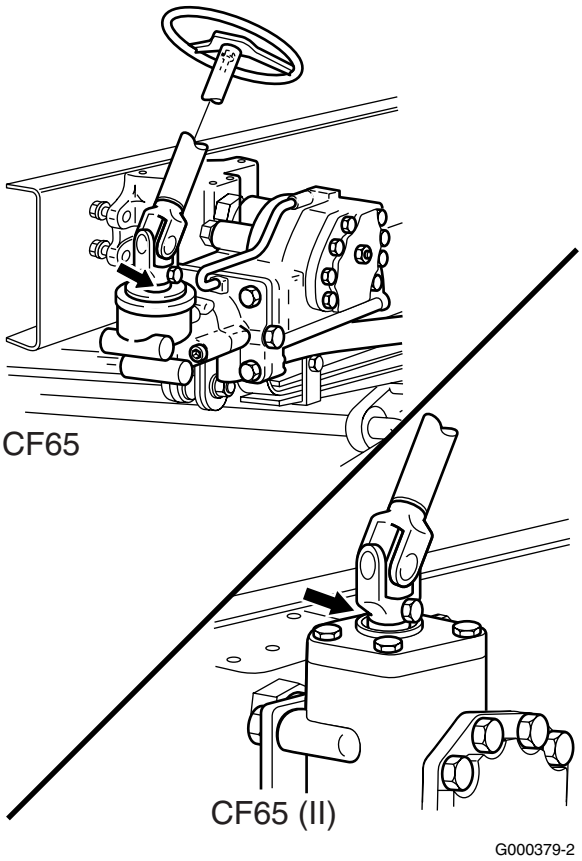

https://truckmanualshub.com/

3.17 CHECKING THE STEERING BALL JOINT SLEEVE FOR DAMAGE

Inspection, locking devices and dust cover

1. Check that the steering ball joint dust cover or seal is not damaged. Replace the steering ball joint if damaged.

2. If a castle nut is fitted, check that the locking devices are present and undamaged.

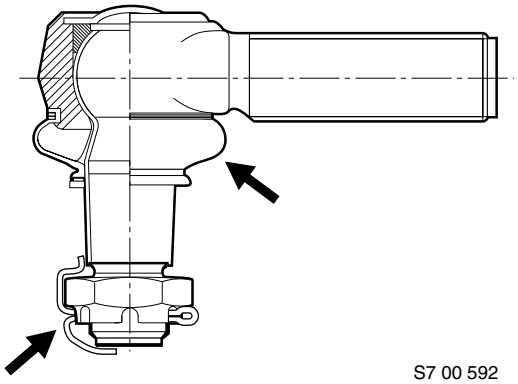

https://truckmanualshub.com/

3.18 CHECKING THE STEERING BALL JOINTS

Checking axial steering ball joint play

1. Check the axial steering-ball joint play using special tool (DAF no. 1329426)

2. First jack up the axle until the wheels come off the ground and put the axle on stands.

3. Make sure that the castle nut split pin (if fitted) at the nut does not come into contact with the head of the threaded end.

4. Screw the thrust washer (8) on to the threaded spindle.

5. Fit the spring retainer (3), spring (4) and pressure sleeve (6) into bracket (1). Fit the locking screw (5). It should be possible to move the pressure sleeve (6) freely.

   Note:
   Fit the correct pressure sleeve (6).
   The pressure sleeve (6) must abut the outer edge of the steering ball joint (7).

6. Loosen thrust bolt (2) until the pressure sleeve (6) with the flange abuts the bracket (A = 0 mm).

7. Fit the special tool over the steering ball joint (7) and turn the threaded spindle (9) by hand until the special tool is tight around the steering ball joint (7).

8. Tighten thrust bolt (2) until its head abuts bracket (1).

9. Measure play "A" between the pressure sleeve and the bracket using a feeler gauge. Compare the reading with the maximum permissible steering ball joint play, see "Technical data".
   If necessary, replace the steering ball joint.

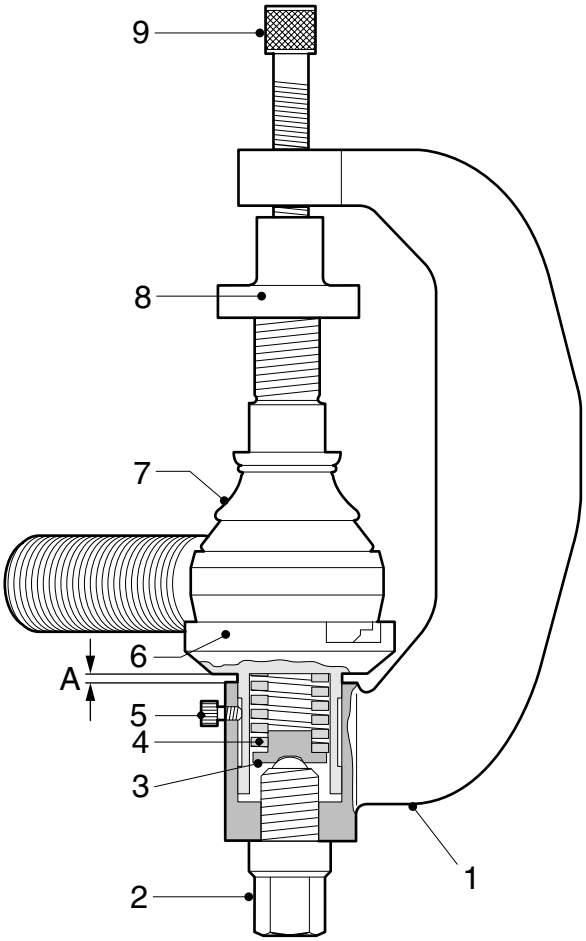

S700426

5

https://truckmanualshub.com/

3.19 CHECKING THE STEERING OIL LEVEL

1. Check the steering oil level when the engine is not running.
2. Clean the dipstick and its immediate surroundings to prevent any oil from entering the reservoir.
3. Check the fluid level in the reservoir using the dipstick.
4. The fluid level should be between the marks when the steering oil is "cold".

   Note:
   When the steering oil is at operating temperature, the level may be above the top mark on the dipstick.

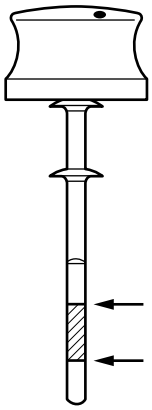

S7 00 676

https://truckmanualshub.com/

3.20 CHECKING THE STEERING GEAR LINES AND CONNECTIONS

1. Condition of the pipes
   - Check all pipes for tightness and wear. Where supply pipes are subject to negative pressure, it is particularly likely that porous pipes will give rise to problems (air in the system).
   - If in doubt, always replace the line.

2. Pipe connections
   - Check every pipe connection for leaks.

3. Line route
   - Pipes must not be twisted during assembly. To facilitate checking this, a mark may have been provided on the hose (sometimes in the form of text).
   - Pipes should not touch other parts (to prevent chafing).
   - The course pipes follow should not include any sharp bends; this applies especially to the flexible suction and return pipes.
   - Pipes should not be pinched off by other components.

https://truckmanualshub.com/

3.21 INSPECTING THE COMPRESSOR LINE

Remain at a safe distance from rotating and/or moving components.

Note:
If excessive values are measured, the inside of the air-dryer housing and the silencer on the vent should first be cleaned. Then repeat the inspection.

1. Bring the engine up to operating temperature.

2. Build up pressure in the brake system (pressure regulator must cut out).

3. When the engine is not running, remove the safety valve from the compressor line and replace it with a test nipple.

4. Connect a pressure gauge (measuring range 0-16 bar) to the test nipple.

5. Start the engine and run it at maximum engine speed.

6. If the **pressure regulator has switched off** (cut-off pressure reached, air dryer blown off) the pressure gauge must show a pressure lower than 2 bar; if the measured pressure is higher than the specified reading, the compressor line must be replaced.

   Note:
   If the pressure measured is too high, this indicates that there are excessive carbon deposits in the compressor line. The cause could be poor condition of the compressor (oil consumption).

7. Run the engine at idling speed.

8. Bleed the brake system until the cut-in pressure of the pressure regulator has been reached and switch off the engine. The indicator on the pressure gauge should not drop rapidly. If necessary, check the system for leaks. Pay special attention to the compressor line and the compressor.

9. Fit the safety valve.

© 200518

https://truckmanualshub.com/

3.22 CHECKING THE BRAKE COMPONENTS AND BRAKE SYSTEM FOR LEAKS

1. While operating the service brake, check whether any leaks occur in the brake system. If the brake system of a vehicle has been charged to the maximum pressure, it should generally be possible to drive the vehicle after a period of 16 hours of uninterrupted standstill, without having to first charge the brake system to adequate operating pressure. This implies a maximum pressure drop of approx. 0.4 bar per hour at normal system pressure.

   Note:
   Always connect auxiliary consumers and accessories to circuit 4.

3.23 CHECKING THE BRAKE CYLINDER FASTENING

1. Check that the brake cylinders do not move during operation of the service brake.

https://truckmanualshub.com/

3.24 CHECKING THE BRAKE SHOE THICKNESS AND BRAKE DISC

Version: Knorr SB 7000

1. Check whether guide bush (4) protrudes from guide sleeve (6) (C).
   If the guide bush (4) is level with the guide sleeve (6) (see detail A) the brake shoe and brake disc thicknesses should be checked.

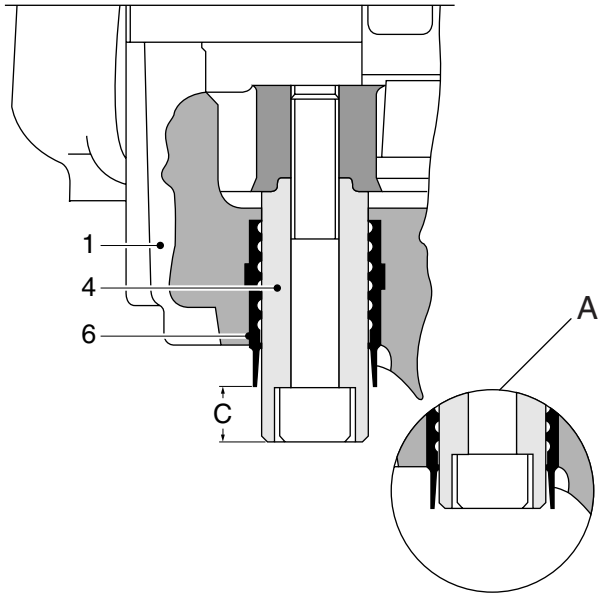

R600481

https://truckmanualshub.com/

Version: Knorr SN 7000

1. Check the transition between the ribbed part of the rubber cover and the smooth part (A). If the smooth part is rolled inwards, the brake shoe and brake disc thicknesses must be checked.

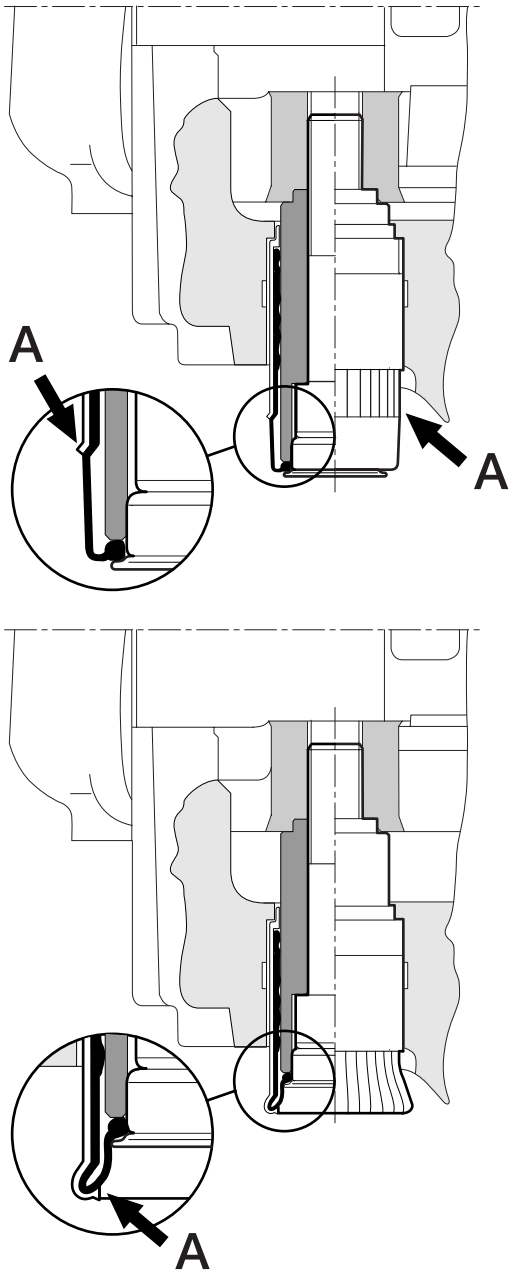

R600730

https://truckmanualshub.com/

3.25 INSPECTION AND ADJUSTMENT, LOAD-DEPENDENT CONTROL VALVE, AIR SUSPENSION

Explanatory notes on instruction plate for CF65

This plate is mounted on the rear door pillar of the vehicle. The information on the instruction plate relates to the axle loads, the delivery pressures and bellows pressures, following the sequence of the axles beneath the vehicle.

"1" refers to the (first) front axle, "2" to the following axle, etc.

If the vehicle is fitted with a relay valve in the front axle brake circuit, the box beneath the valve illustration will be blank. Throughout the column, a value of 8.1 bar has been filled in for "delivery pressure p2" under axle "1".

If the vehicle is equipped with a control valve instead of the relay valve mentioned, the box will contain a pressure ratio, e.g. "i = 1 : 1.5". The "delivery pressure p2" of axle "1" then indicates variable readings.

These values can be used to check the brake pressure values of the front axle and to carry out the inspection/adjustment below at the same time. To do this, connect a pressure gauge to the test connection of one of the front axle brake cylinders.

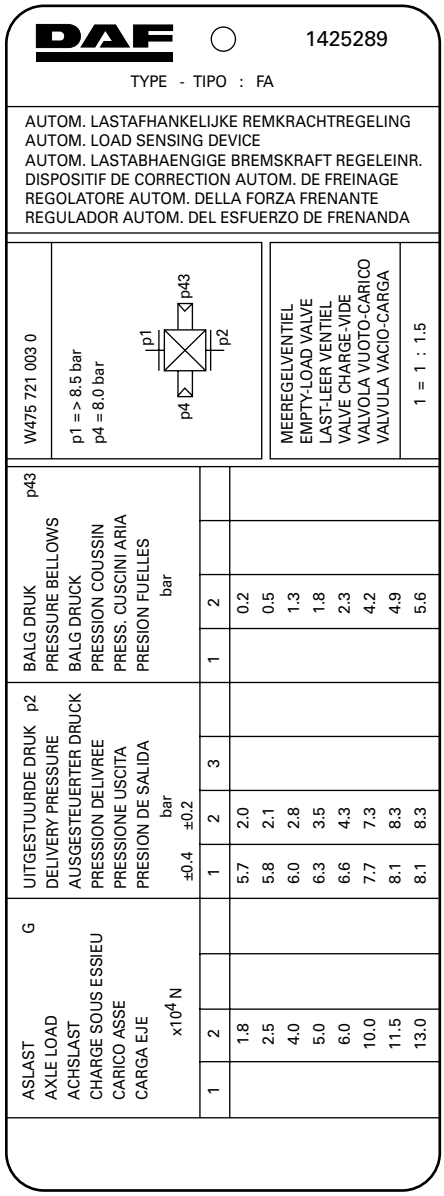

R600472

https://truckmanualshub.com/

Explanatory notes on instruction plate for CF65 (II)

This plate is mounted on the rear door pillar of the vehicle. The information contained on the plate relates to the axle loads, the output pressures and bellows pressures, in accordance with the order of axles beneath the vehicle.

So "1" is the front axle and "2" the rear axle. "G" stands for the load in kg.

These values can be used to check the brake pressure values of the front axle and to carry out the inspection/adjustment below at the same time. To do this, connect a pressure gauge to the test connection of one of the front axle brake cylinders.

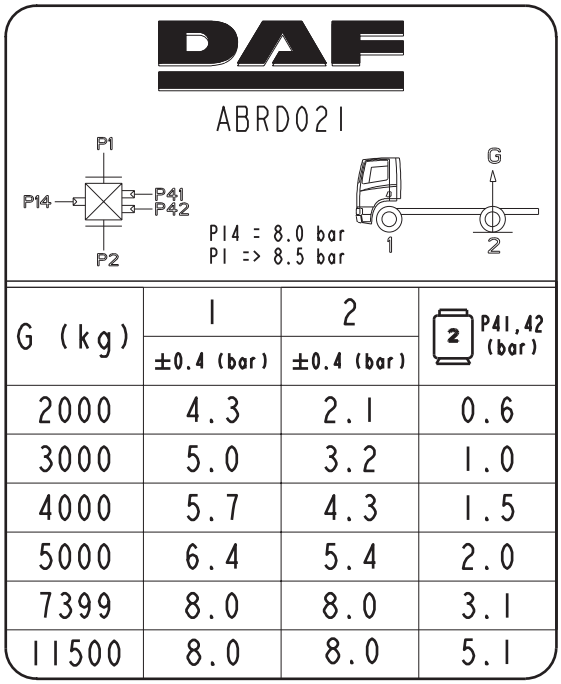

G (kg)	1 ±0.4 (bar)	2 ±0.4 (bar)	2 P41,42 (bar)
2000	4.3	2.1	0.6
3000	5.0	3.2	1.0
4000	5.7	4.3	1.5
5000	6.4	5.4	2.0
7399	8.0	8.0	3.1
11500	8.0	8.0	5.1

R600951

Inspection and adjustment, load-dependent control valve, air suspension

1. Check that the correct valve has been fitted (see instruction plate).
2. Connect pressure gauge (4) to the test connection close to connecting point ¼ on the load-dependent control valve (input pressure).
3. Connect pressure gauge (2) to the test connection on one of the brake cylinders (service brake connection) of the rear axle.
4. Connect a pressure gauge (43) with a pressure-reducing valve to the simulation connection near connections 41 and 42 of the load sensing valve (= simulated adjustable bellows pressure).
5. Make sure that the reservoir pressure is higher than 8.5 bar throughout the testing process.
6. Set the simulated bellows pressure to its **second lowest** value, as indicated on the instruction plate.
7. Depress the brake pedal until the pressure gauge (4) indicates a pressure of 8 bar.

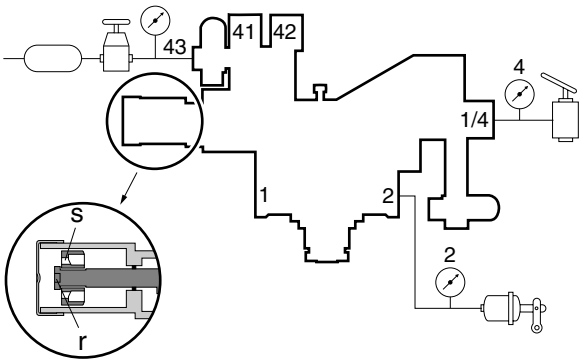

R600473

https://truckmanualshub.com/

8. Read the brake pressure of the rear axle on pressure gauge 2 and check that this brake pressure matches the one listed on the instruction plate in the table under "output pressure p2" to the rear axle.

9. If the measured value is not correct, depressurise connection (43) and, using a special tool (DAF no. 1329464), turn the adjusting nut (s):
   - brake pressure too high: unscrew the adjusting nut
   - brake pressure too low: screw in the adjusting nut.

   Note:
   When depressurising the simulation connection (pressure gauge 43), the air hose must remain connected to prevent the (actual) bellows pressure from accidentally activating the valve.
   The small socket head screw in the centre of the valve must not be adjusted.

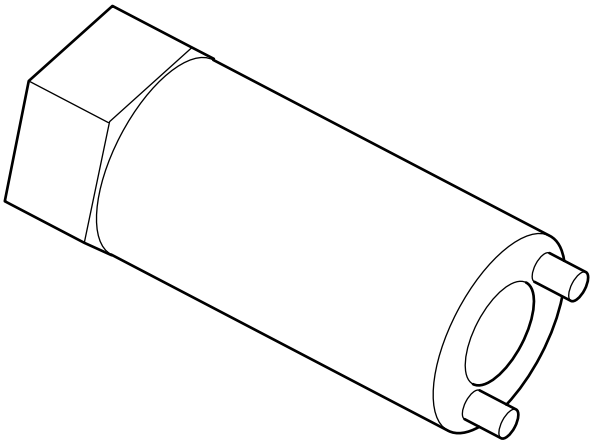

R600478

10. Repeat the procedure described in point 6 until the measured brake pressure value is within the tolerance limits.

11. Set the simulated bellows pressure to its **second highest** value, as indicated on the instruction plate.

12. Depress the brake pedal until the pressure gauge (4) indicates a pressure of 8 bar.

13. Read pressure gauge (2) and check that this brake pressure matches the pressure indicated in the table on the instruction plate.

14. If the measured reading is not correct, depressurise connection (43) and turn adjusting bolt (r) using a Torx screwdriver:
   - brake pressure too high: screw in the adjusting bolt
   - brake pressure too low: unscrew the adjusting bolt.

   Note:
   When depressurising the simulation connection (pressure gauge 43), the air hose must remain connected to prevent the (actual) bellows pressure from accidentally activating the valve.
   The small socket head screw in the centre of the valve must not be adjusted.

15. If the adjusting bolt (r) has been turned, repeat the procedure from point 6.

https://truckmanualshub.com/

3.26 INSPECTION AND ADJUSTMENT, LOAD-DEPENDENT CONTROL VALVE, LEAF SUSPENSION

Explanatory notes on instruction plate for CF65

This plate is mounted on the rear door pillar of the vehicle. The data on axle loads and delivery pressures are listed on the instruction plate in the sequence of the axles beneath the vehicle. "1" refers to the (first) front axle, "2" to the following axle, etc.

If the vehicle is fitted with a relay valve in the front axle brake circuit, the box beneath the valve illustration will be blank. Throughout the column, a value of 8.1 bar has been filled in for "delivery pressure p2" under axle "1".

If the vehicle is equipped with a control valve instead of the relay valve mentioned, the box will contain a pressure ratio, e.g. "i = 1 : 1.5". The "delivery pressure p2" of axle "1" then indicates variable readings.

These values can be used to check the brake pressure values of the front axle and to carry out the inspection/adjustment below at the same time. To do this, connect a pressure gauge to the test connection of one of the front axle brake cylinders.

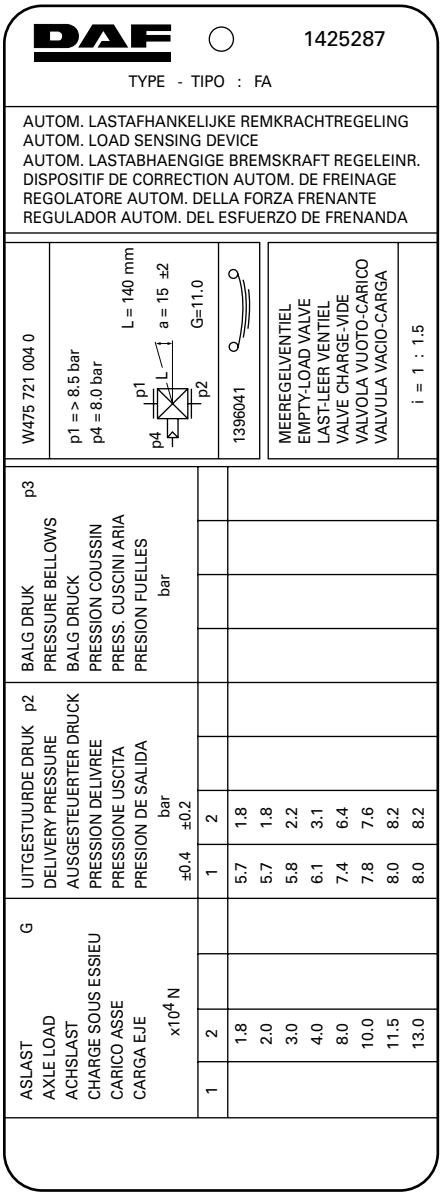

R600479

https://truckmanualshub.com/

Explanatory notes on instruction plate for CF65 (II)

This plate is mounted on the rear door pillar of the vehicle. The data relating to axle loads and output pressures are listed on the instruction plate following the sequence of the axles beneath the vehicle.

So "1" is the front axle and "2" the rear axle. "G" stands for the load in kg.

These values can be used to check the brake pressure values of the front axle and to carry out the inspection/adjustment below at the same time. To do this, connect a pressure gauge to the test connection of one of the front axle brake cylinders.

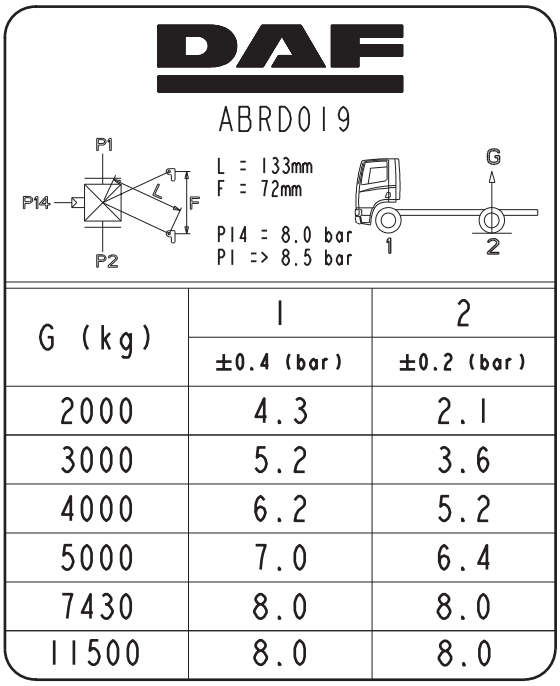

G (kg)	1	2
	±0.4 (bar)	±0.2 (bar)
2000	4.3	2.1
3000	5.2	3.6
4000	6.2	5.2
5000	7.0	6.4
7430	8.0	8.0
11500	8.0	8.0

R600944

Inspection and adjustment, load-dependent control valve, leaf suspension

1. Measure the weight plus load of the rear axle(s).
2. Check the attachment of the control lever and its ease of operation.
3. Check whether the correct valve and the correct springs have been fitted (for information, see the instruction plate).
4. Check the length of the control lever (see "L" on the instruction plate).
5. Connect pressure gauge (4) to the test connection close to connecting point ¼ on the load-dependent control valve (input pressure).
6. Connect pressure gauge (2) to the test connection on one of the brake cylinders (service brake connection) of the rear axle.
7. Make sure that the reservoir pressure is higher than 8.5 bar throughout the testing process.
8. Depress the brake pedal until the pressure gauge (4) indicates a value of 8 bar.

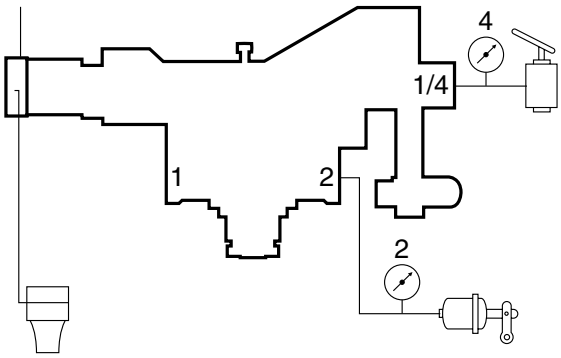

R600562

https://truckmanualshub.com/

9. Read the brake pressure of the rear axle from pressure gauge 2 and check that this value matches the one listed on the instruction plate in the table under "output pressure p2" to the rear axle.

10. Correct, if necessary, the brake pressure by moving the rubber sleeve (1) in relation to the vertical connecting rod. **On no account** change the length L of the (horizontal) control lever.

11. Remove the rubber sleeve (2) and move the control lever towards maximum load. Check that the output pressure is now allowed through (almost) without reduction.

Note:
The small socket head screw in the centre of the valve must not be adjusted.

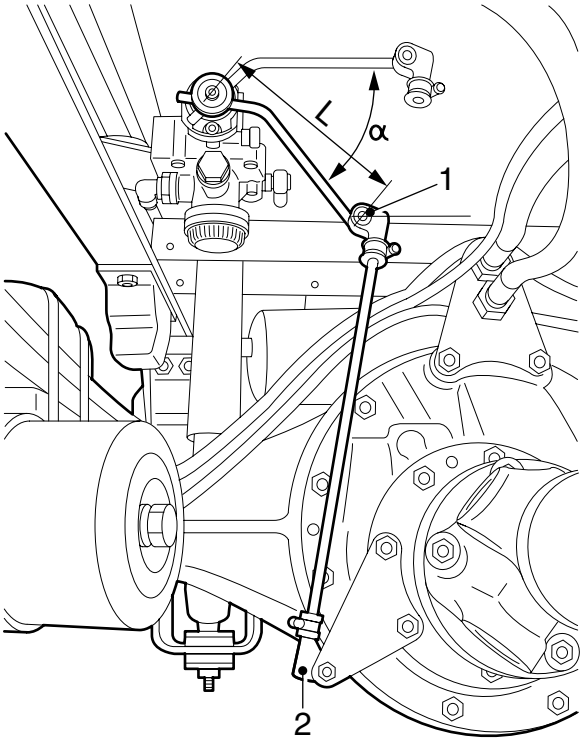

R600781

https://truckmanualshub.com/

3.27 CHECKING THE DIFFERENTIAL FOR LEAKS

1. Visually inspect the differential for leaks.

3.28 CHECKING THE OPERATION OF THE DIFFERENTIAL LOCK

1. Jack up the rear axle and support the axle on stands.
2. Bring the air system to operating pressure.
3. Engage the differential lock. The warning indicator should now be active.
4. Check that there is a "rigid" connection between the driven wheels.
5. Disengage the differential lock. The warning light should now go out and the "rigid" connection between the driven wheels should be broken.

https://truckmanualshub.com/

3.29 CHECKING THE DRIVE SHAFT PLAY

1. Check the universal joints and suspension bearing for play and damage.

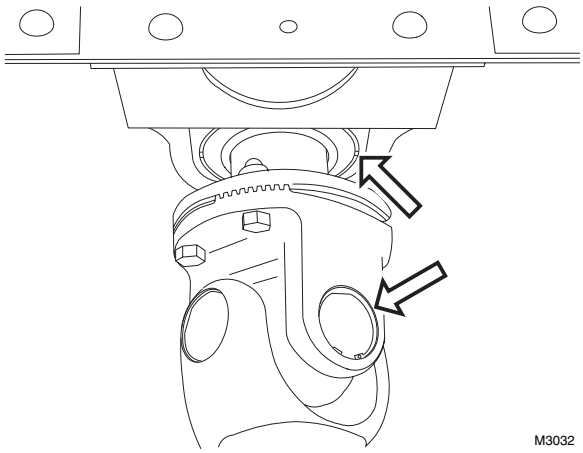

2. Check the sliding joint for axial and radial play.

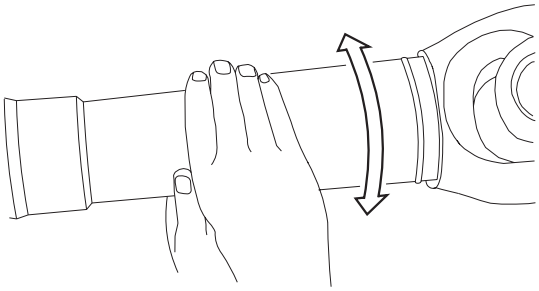

3. There must be no clearly perceptible play on the universal joints, suspension bearing and the sliding joint.

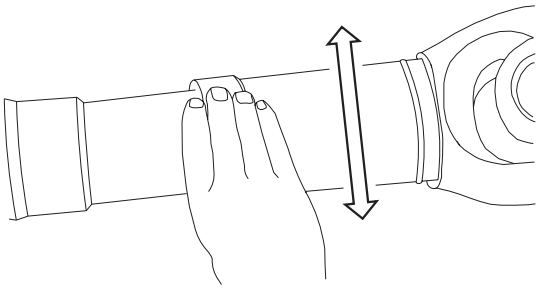

https://truckmanualshub.com/

3.30 CHECKING THE TRAILER COUPLING

1. Check the vertical play of the arched pin.
2. Check the radial play of the arched pin.

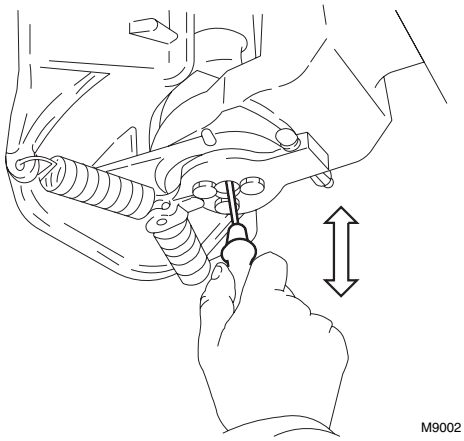

3. Check the vertical and horizontal play of the coupling jaw.

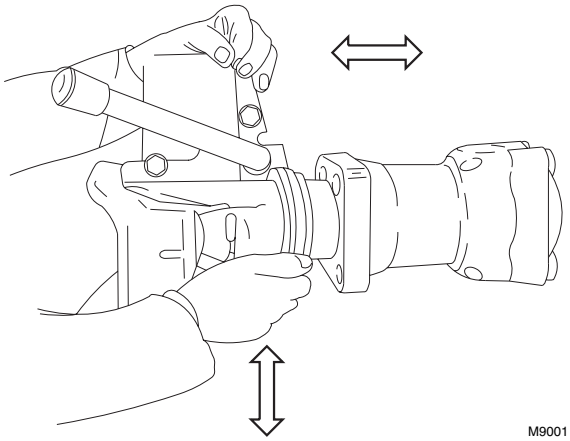

4. Check the diameter of the arched pin.
5. Check the attachment of the trailer coupling and the rear cross member.

   Note:
   For maximum play values, consult the manufacturer's instructions or the specified legal requirements.

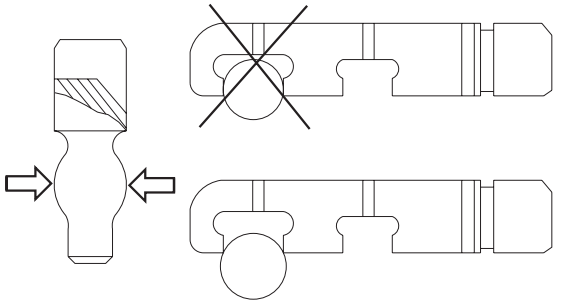

https://truckmanualshub.com/

3.31 CHECK THE SUPERSTRUCTURE ATTACHMENT

1. Check that all attachment bolts are in place.

2. Visually check the attachment of the superstructure for faults. See the DAF superstructure instructions.

https://truckmanualshub.com/

3.32 CHECK THE CLUTCH FLUID LEVEL

Hydraulic fluid is toxic and can therefore have a damaging effect on your health.
Hence avoid any direct or indirect physical contact.
As hydraulic fluid is also a corrosive fluid, it may damage the paintwork of the vehicle.
Avoid any contact between hydraulic fluid and paintwork.
Always use new and clean hydraulic fluid which has been kept in a sealed container and meets the specifications.
Hydraulic fluid which has absorbed water (from the ambient air) may have an adverse effect on the operation of the clutch system.
Avoid any contact with mineral oil. Even one drop of mineral oil in the system will damage the seals.

1. Check that the fluid level is between the (A) and (B) marks when the cab is in the driving position.

2. Mark (C) applies to fully tilted cabs.

3. Hand tighten the reservoir sealing cap.

   Note:
   There is an air bleed vent in the cap that may be closed if the cap is tightened with too great a force.
   If the air bleed vent is closed off, residual pressure will build up in the system.

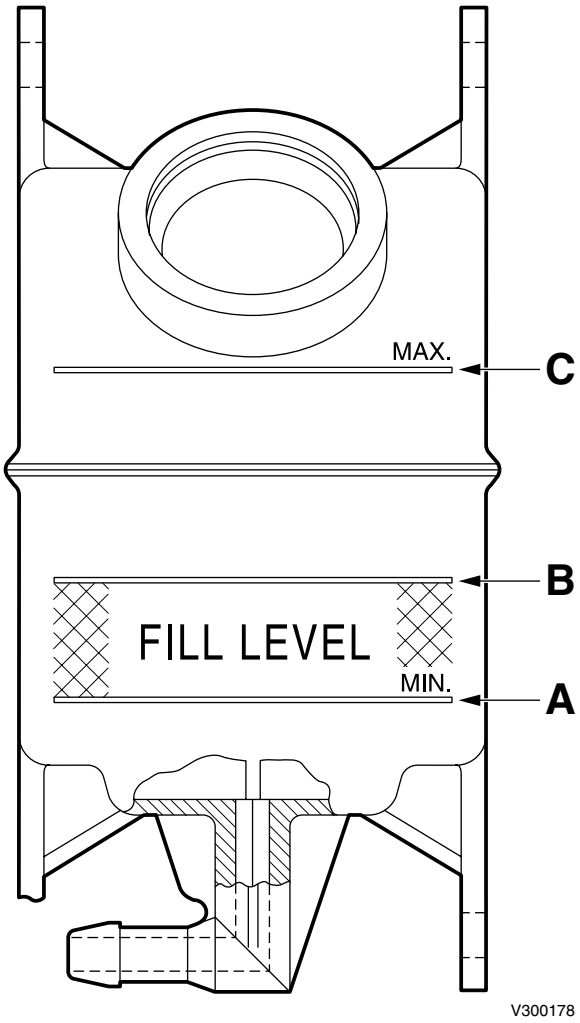

https://truckmanualshub.com/

3.33 INSPECTION AND ADJUSTMENT, CLUTCH WEAR INDICATOR

Checking the wear indicator of clutch with automatically adjusting clutch release assembly

1. Check visually whether the indicator (2) is still directly opposite the mark (1) on the cover.
   If the indicator is no longer level with the mark on the cover, this means that the clutch plate is about 80% worn.

Note:
The maximum movement of the indicator is around 5 mm.

Adjusting the wear indicator of automatically adjusting clutch release assembly

1. Using a centre punch, make a mark (1) on the wear indicator cover.
   The mark (1) should be placed exactly opposite to the indicator (2), to show the original position accurately.

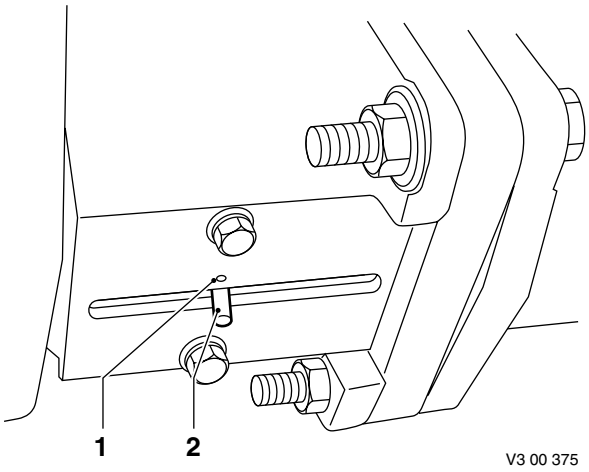

Checking the wear indicator of clutch without automatically adjusting clutch release assembly

1. Check the position of the indicator (1) relative to the end mark (3) on the indicator cover (2).
   As the clutch plate wears, the indicator (1) will move towards the end mark (3). When the indicator (1) reaches the end mark (3), it may be assumed that the clutch plate is due to be replaced.

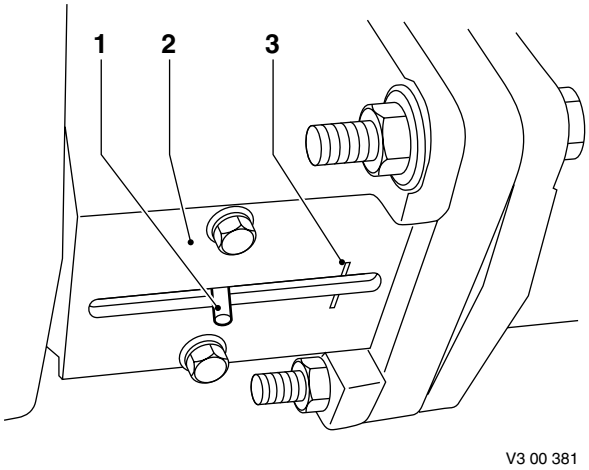

3.34 CHECKING THE GEARBOX FOR LEAKS

1. Visually check the gearbox for leaks.

https://truckmanualshub.com/

3.35 CHECKING THE AUTOMATIC GEARBOX OIL LEVEL

Checking cold oil level with dipstick

1. Place the vehicle on a flat and level surface.
2. Make sure that the gearbox is in neutral and allow the engine to run for several minutes.
3. Apply the service brake, switch the gearbox to **D**, then to **N** and finally switch the gearbox to **R**. The purpose of this is to fill the hydraulic system.
4. Switch the gearbox to the parking position and release the service brake.
5. Remove the dipstick when the engine is idling and wipe the dipstick clean with a lintfree cloth.

   Note:
   To take the dipstick out of the holder, the sealing cap must be held tightly while the dipstick is turned anti-clockwise.
6. Put the dipstick back.

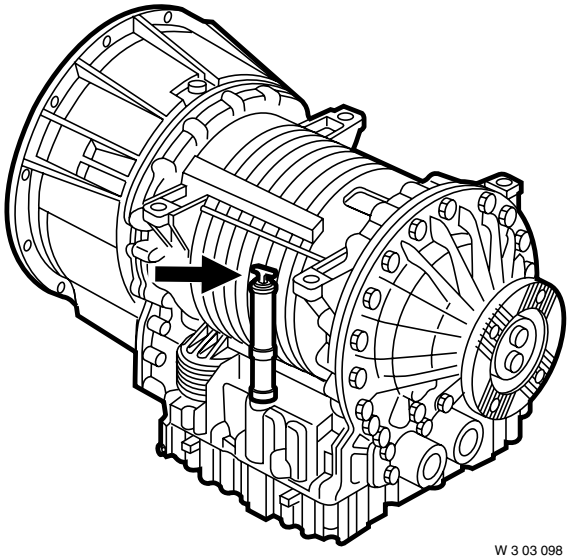

W 3 03 098

7. Remove the dipstick and check the oil level. The oil level should be between the "Cold add" and the "Cold full" marks.
8. Clean the dipstick with a lintfree cloth and put the dipstick back.
9. Remove the dipstick and check the oil level again.
10. Oil needs to be added when the oil level is below the "Cold add" mark.
11. Check the oil level in the gearbox at operating temperature.

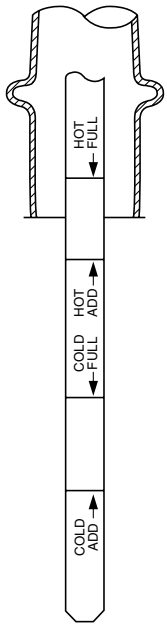

W 3 03 099

https://truckmanualshub.com/

Checking hot oil level with dipstick

1. Bring the gearbox up to operating temperature (approx. 71°C - 93°C).

2. Remove the dipstick when the engine is idling and wipe the dipstick clean with a lintfree cloth.

   Note:
   To take the dipstick out of the holder, the sealing cap must be held tightly while the dipstick is turned anti-clockwise.

3. Put the dipstick back.

4. Remove the dipstick and check the oil level.

5. The oil level should be between the "Hot add" and the "Hot full" marks.

6. Clean the dipstick with a lintfree cloth and put the dipstick back.

7. Remove the dipstick and check the oil level again.

8. Oil needs to be added when the oil level is below the "Hot add" mark.

9. Oil needs to be drained when the oil level is above the "Hot full" mark.

   Note:
   The oil level must be checked at least twice. If there are differences between the measurements, check the vent for clogging.

https://truckmanualshub.com/

Checking oil level with selector keypad

1. Apply the parking brake, put the gearbox in neutral and bring the gearbox to operating temperature (approx. 71ºC - 93ºC).

2. Run the engine at idling speed for 2 minutes.

3. Press both arrow keys on the selector keypad simultaneously. The display now shows the letters **O** and **L**.

   Note:
   O and **L**stand for **O**il **L**evel.

4. When the oil level is correct, the letters **O - K** appear on the display.
   When the oil level is too high, this is indicated by **HI** followed by the number of litres in excess.
   When the oil level is too low, this is indicated by **LO** followed by the number of litres lacking.
   For example:
   LO-02 means that two litres have to be added.
   HI-03 means that three litres have to be drained.

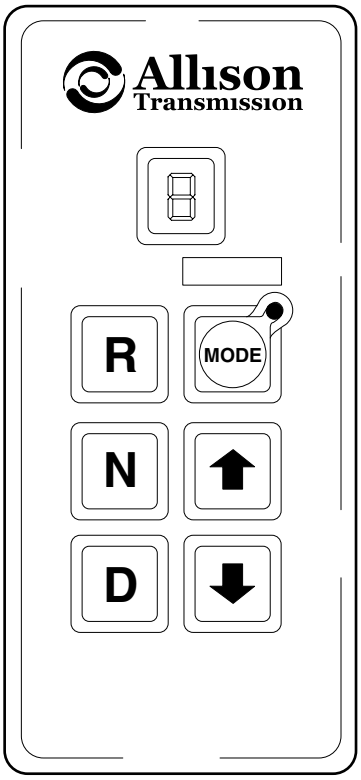

V300392

5

https://truckmanualshub.com/

3.36 CHECKING THE GREASED WHEEL HUBS FOR LEAKS

1. Check the wheel hubs for leaks.

Note:
If there are serious grease marks on the brake disc side of the wheel hub, this could indicate excessive use of assembly grease on new or recently assembled wheel hubs.
On wheel hubs that have not been assembled recently, serious grease marks could indicate a leak in the seal (1). This means that the entire hub unit must be replaced.
Serious oil leakage on the driven rear axle hubs could indicate that the O-ring (2) is not sealing correctly.
If there is an oil leak the hub unit should be dismantled to remedy the problem.

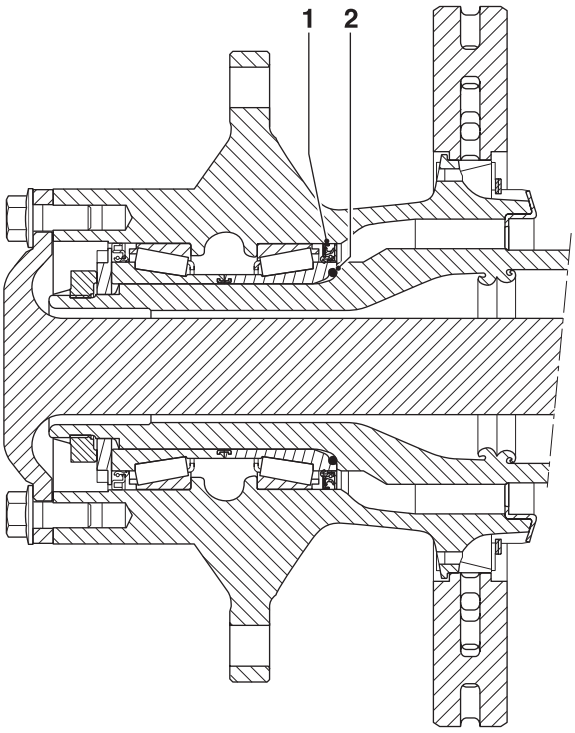

G0 00 271

https://truckmanualshub.com/

3.37 CHECKING THE SHOCK ABSORBERS FOR ATTACHMENT AND LEAKS

1. Visually inspect the attachment of the shock absorbers and for any leaks.

3.38 CHECKING THE CONDITION AND ATTACHMENTS OF SPRING LEAVES, SPRING CLAMPS AND U-BOLTS

Checking U-bolts

1. Visually inspect the condition and attachment of the U-bolts.

2. When retightening the U-bolt nuts, the attachment nut **must not be slackened first** and then tightened to the specified torque; see "Technical data".

3.39 CHECKING THE HINGE POINTS AND AXLE SUSPENSION FASTENING (AIR SUSPENSION)

Torque rod

1. Check the attachment of the torque rod and torque rod supports.

2. Check the pivots of the torque rod for wear and play.

Stabiliser bar

1. Check the attachment of the stabiliser bar and stabiliser bar support.

2. Check the pivots of the stabiliser bar for wear and play.

Ball joints three-point fixation

1. Check the attachment of the ball joints and three-point fixation support.

2. Check the ball joint housing for surface cracks.

3. Check the dust cover for damage.

https://truckmanualshub.com/

3.40 CHECKING THE AIR SUSPENSION BELLOWS

1. Raise the chassis to driving height using the remote control.

2. Clean the air bellows using a cleaning cloth or a soap solution, if required.

3. Check the air bellows for cracks and damage. If there are any cracks or damage through which the webbing is visible, the air bellows should be replaced.

4. Check the air bellows, bellows seating and air line connections for leaks.
   Check that the air bellows are not chafing against air lines, etc. when in the driving position.

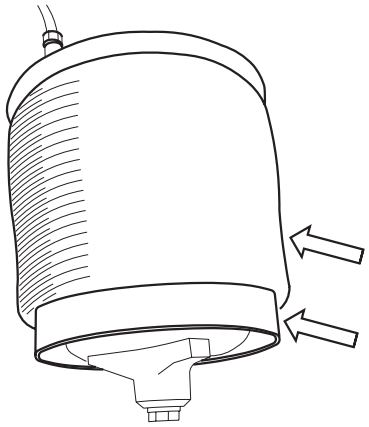

https://truckmanualshub.com/

3.41 CHECKING THE OPERATION OF THE AUTOMATIC LUBRICATION SYSTEM

1. Check the system for line fractures and operation of the jets.
2. Check whether all lubricating points are lubricated.
3. Check the lubricant level in the reservoir. If necessary, top up the reservoir, see chapter "Draining and filling".

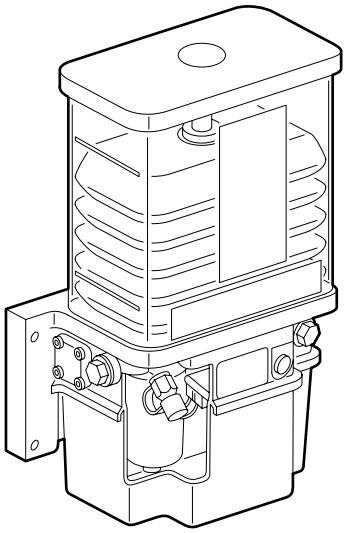

C900331

https://truckmanualshub.com/

4. REMOVAL AND INSTALLATION

4.1 REMOVAL AND INSTALLATION, INTERIOR FILTER ELEMENT

Removing interior filter

1. Open the grille.
2. Push the locknut on the filter casing to one side and remove the filter element.

Fitting interior filter

1. Fit the filter element.
2. Push the filter element into the locknut on the filter casing.
3. Close the grille.

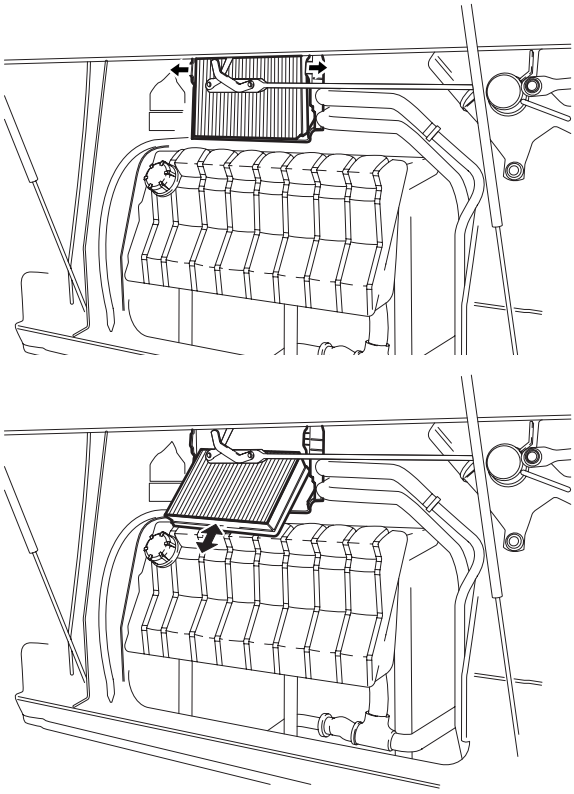

K1 01 033

https://truckmanualshub.com/

4.2 REMOVAL AND INSTALLATION, AIR FILTER ELEMENT

Removing the air filter element

1. Loosen all the clamping brackets (1) of the air filter cover (2).
2. Remove the air filter cover (2).
3. Remove the air filter element (3).
4. Clean the inside of the air filter housing and the air filter cover.

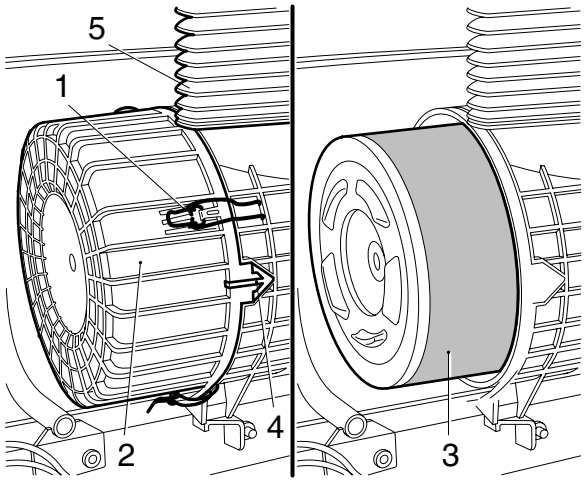

i400443

5. When replacing the air filter element, reset the air filter indicator, if fitted, by pressing the button on the indicator.

Installing the air filter element

Note:
Only fit an original DAF fire retardant air filter element.
The side of the fire retardant air filter element contains the text "FIRE RETARDANT".

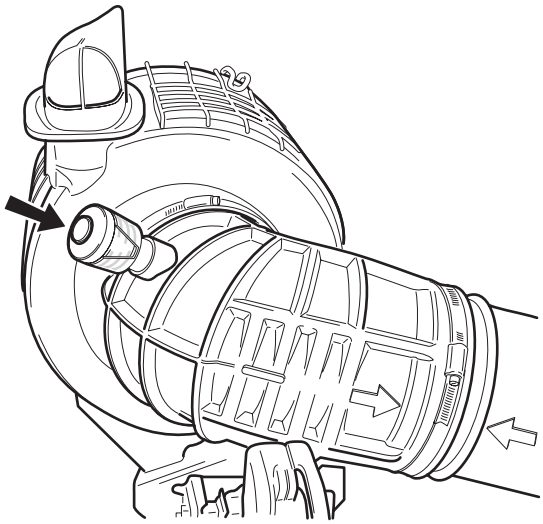
i400869

https://truckmanualshub.com/

1. Fit the air filter element (3) in the air filter housing.
2. Fit the air filter cover. Note the arrow (4) on the air filter cover (2).
3. Fit all the clamping brackets (1).
4. Check that the flexible sealing bellows (5) on the air intake is not damaged. Replace if necessary.

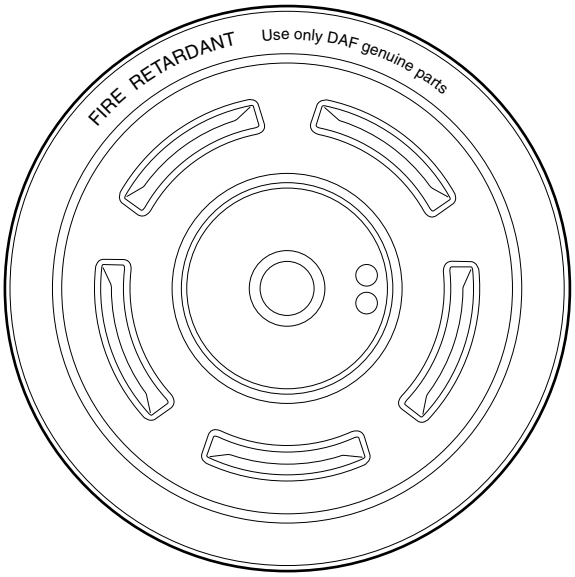

i400949

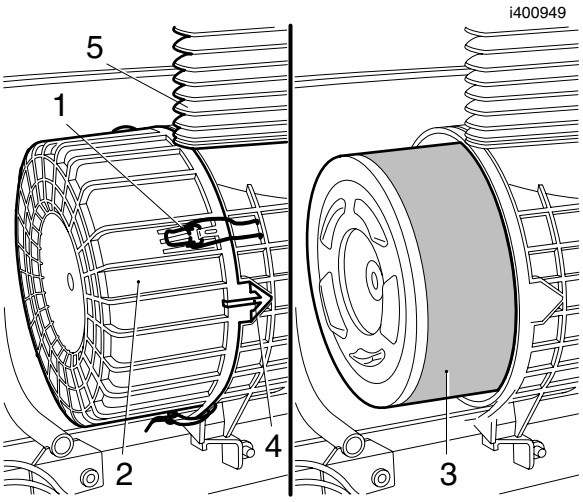

i400443

https://truckmanualshub.com/

4.3 REMOVAL AND INSTALLATION, LUBRICATING OIL FILTER

To prevent skin injury, avoid unnecessary contact with the drained lubricating oil.

Be careful when changing the oil. Hot oil may cause serious injuries.

Removing the lubricating oil filter

1. Place a tray beneath the lubricating oil filter.
2. Clean the area surrounding the filter element if this is very dirty.
3. Remove the filter element by turning it anti-clockwise. Collect the oil that comes out.
4. Remove the O-ring if it has not been removed already.

Installing the lubricating oil filter

1. Lightly oil the filter element sealing ring.
2. Fill the filter element with clean oil. Use the specified oil.
3. Fit the filter element onto the housing. Tighten the filter element until the sealing ring abuts. Tighten the filter element a further ¾ to 1 turn by hand.
4. Run the engine for a short time and check that the lubricating oil filter is correctly sealed.
5. Check the oil level and correct if necessary. Use the specified oil.

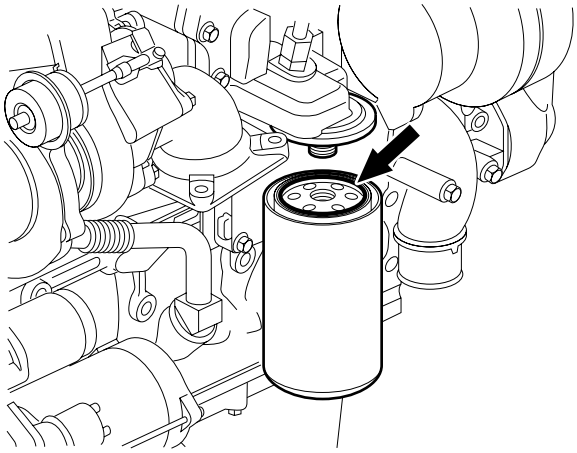

G0 00 207

https://truckmanualshub.com/

4.4 REMOVAL AND INSTALLATION, FUEL FINE FILTER

When removing the fuel fine filter, a quantity of fuel will escape. Collect the fuel and avoid the risk of fire.

Removing the fuel fine filter

1. Place a container beneath the fuel fine filter and remove the filter.

   Note:
   The fuel fine filter is a disposable filter and must therefore not be cleaned and re-used.

Installing the fuel fine filter

Note:
Do not fill the fine filter with fuel until it has been fitted. The fine filter is filled with fuel by the primer pump after it has been fitted. This considerably reduces the risk of dirt getting into the fuel system.

1. Check by hand whether the coupling piece for the filter attachment is securely attached.

2. Lightly lubricate the filter sealing ring with clean engine oil.

3. Fit the filter element onto the housing. Tighten the filter element until the sealing ring abuts. Tighten the filter element a further ½ to ¾ turn by hand.

4. Bleed the fuel system. See "Inspection and adjustment".

5. Start the engine and check the fuel system for leaks. If necessary, retighten the filter by hand.

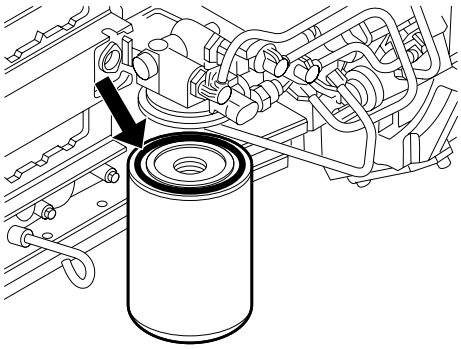

G0 00 201

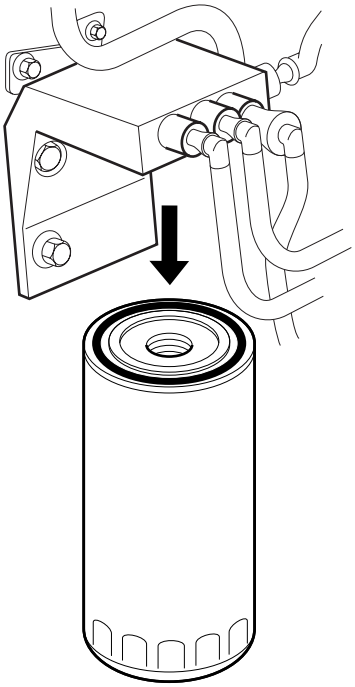

i400964

5

https://truckmanualshub.com/

4.5 REMOVAL AND INSTALLATION, FUEL PREFILTER/WATER SEPARATOR FILTER ELEMENT

When removing the fuel prefilter/ water separator, a quantity of fuel will escape. Collect the fuel and avoid the risk of fire.

Racor fuel prefilter/water separator

Removing the fuel prefilter/water separator filter element

1. Place a tray beneath the filter to capture any escaping fuel.
2. Drain the fuel from the filter element by unscrewing the vent plug (2) and opening the drain plug (8).
3. If fitted, disconnect the water sensor (6) and the heating element (7) connectors.
4. Remove the filter element (4) together with the bottom cover (5) and clean the O-ring seal.

Installing the fuel prefilter/water separator filter element

1. Apply a thin layer of engine oil to the O-ring and the new sealing ring.
2. Fit the bottom cover (5) onto the new filter element (4).
3. Fit the bottom cover (5) together with the new filter element (4) onto the filter housing (3).
4. Hand-tighten the new filter.
5. If fitted, attach the water sensor and heating element connectors.
6. Bleed the fuel system. See "Inspection and adjustment".
7. Start the engine and check for leaks. If necessary, retighten the filter element (4) of the fuel prefilter/water separator by hand.

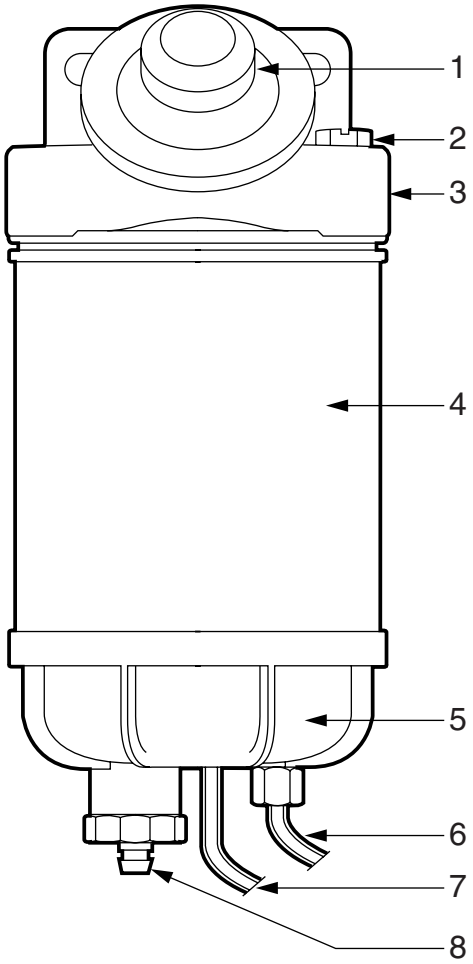

i400356

https://truckmanualshub.com/

Fleetguard fuel prefilter/water separator

Removing the fuel prefilter/water separator filter element

1. Place a tray beneath the filter to capture any escaping fuel.
2. Remove the plug (3) from the water sensor (2).
3. Remove the filter element (1) of the fuel prefilter/water separator by turning it anti-clockwise.
4. Remove the water sensor (2) from the filter element (1).

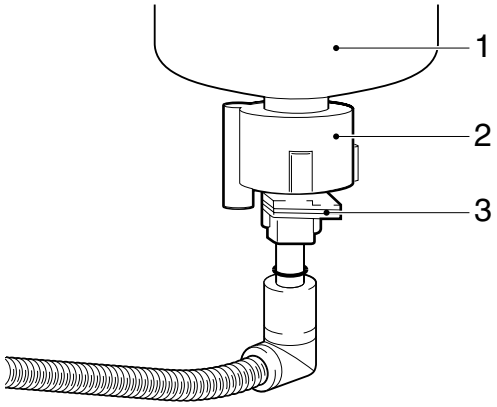

G0 00 220

Installing the fuel prefilter/water separator filter element

1. Check by hand whether the coupling piece for the filter attachment is securely attached.
2. Lightly lubricate the sealing ring with engine oil.
3. Fit the fuel prefilter/water separator filter element (1) until the sealing ring abuts. Tighten the filter element a further ½ to ¾ turn by hand.
4. Turn the water sensor (2) onto the filter element until it abuts. Tighten the water sensor by about a further ⅛ - ¼ turn.

   Note:
   Over-tightening the water sensor (2) may damage the sensor and/or cause leakage.
5. Fit the plug (3) on the water sensor (2).
6. Bleed the fuel system. See "Inspection and adjustment".
7. Start the engine and check for leaks. If necessary, retighten the filter element (1) of the fuel prefilter/water separator by hand.

5

https://truckmanualshub.com/

4.6 REMOVAL AND INSTALLATION, VALVE COVER

When the engine or parts of the engine are opened, dirt can get in. This may cause serious damage to the engine. The engine should therefore be cleaned thoroughly before any parts are opened.

Removing the valve cover

1. Clean the area around the valve cover.
2. Remove the banjo bolt and the attachment of the plastic crankcase breather tube.
3. Remove the valve cover attachment nuts.
4. Remove the valve cover.

Installing the valve cover

1. Clean the sealing surface of the valve sleeve and the valve cover.
2. Check the valve cover gasket. If the valve cover gasket is not damaged, it may be re-used.
3. Fit the valve cover gasket to the valve cover.
4. Fit the valve cover.
5. Fit the valve cover attachment nuts and tighten them to the specified torque; see "Technical data".
6. Fit the plastic crankcase breather tube and the banjo bolt to the valve cover.

https://truckmanualshub.com/

4.7 REMOVAL AND INSTALLATION, STEERING GEAR FILTER ELEMENT

Removing the steering gear filter element

1. Clean the reservoir cover, so that absolutely no dirt can get into the reservoir.
2. Remove the cover (3).
3. Rotate the filter holder (5) a quarter turn. Slowly remove the filter holder (5) together with the filter element (6) from the reservoir (1).

   Note:
   The filter holder and filter element must be removed from the reservoir (1) with care so that no dirt remains in the reservoir (1).
4. Remove the filter element (6) from the filter holder (5).

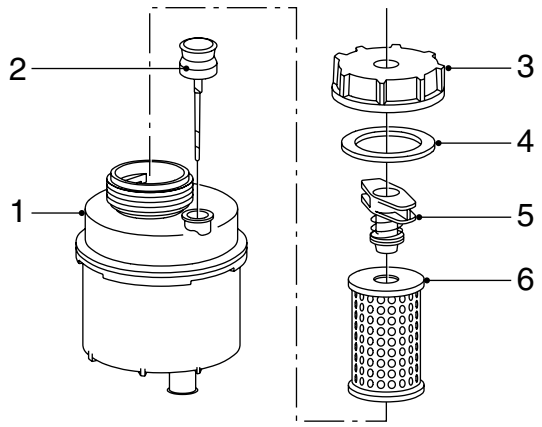

S7 00 689

Installing the steering gear filter element

1. Fit a new filter element (6) in the filter holder (5).
2. Fit the filter holder (5) together with the filter element (6) in the reservoir (1) and rotate the filter holder (5) a quarter turn. Make sure that the filter holder (5) engages in its locking element.
3. Check the sealing ring (4) for damage and replace if necessary.
4. Fit the cover (3).
5. Check the fluid level using the dipstick (2); see chapter "Inspection and adjustment".

5

https://truckmanualshub.com/

4.8 REMOVAL AND INSTALLATION, AIR DRYER FILTER ELEMENT

Note:
To be certain that the air dryer is functioning properly, the air reservoirs should regularly be checked for condensation. If more than the normal amount of water is drained off repeatedly, the air dryer element must be replaced. Under normal circumstances the element must be replaced at least once per year.

Removing air dryer filter element

1. Vent the air dryer by allowing it to regenerate or by loosening the compressor line (1), so that the interior of the air dryer is depressurised.
2. Remove the filter element by turning it anti-clockwise using a filter strap spanner.
3. Dispose of the drying element as if it were an oil filter.
4. Clean the air dryer internally.

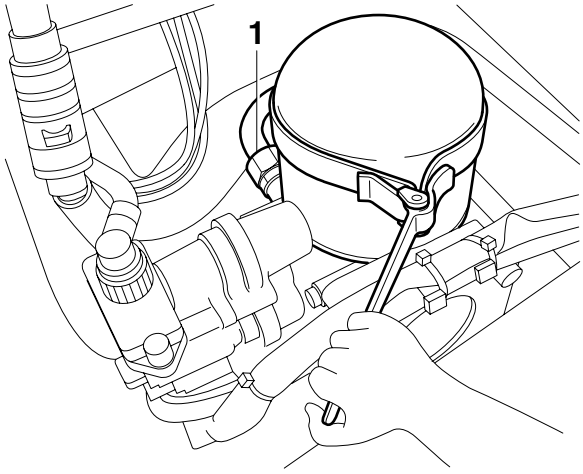

R600525

5. Check the air dryer threaded connection (2) for damage and then lubricate it sparingly with grease.

Installing the air dryer filter element

1. Lubricate the sealing ring of the new filter element sparingly with grease.
2. Fit the filter element by manually tightening it until the sealing ring abuts. Then tighten the element by hand (approx. 1 turn).
3. Fasten the compressor line (1).
4. Pressurise the system and then check the air dryer for any air leaks.

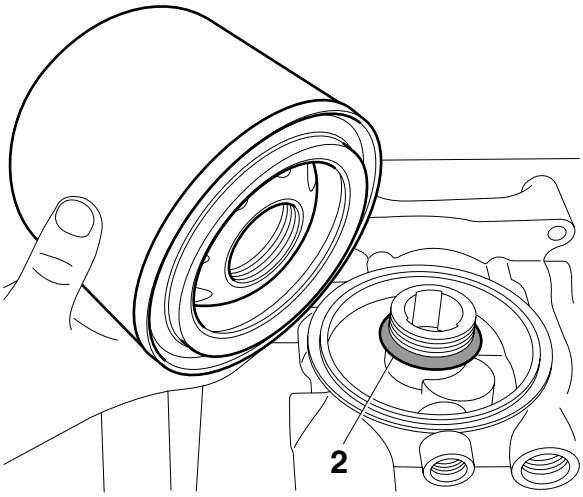

R600526

https://truckmanualshub.com/

5. Using a water-resistant felt pen, write on the sticker the latest date by which the dryer element must be replaced (not later than 1 year after the date of fitting).

R600523

5

https://truckmanualshub.com/

4.9 REMOVAL AND INSTALLATION, AUTOMATIC GEARBOX OIL FILTERS

To prevent skin injury, avoid unnecessary contact with the drained oil.

Removing automatic gearbox oil filters

1. Remove the attachment bolts from the filter covers (2) and remove the filter covers. Collect any oil that is flowing out.
2. Remove the oil filters from the oil sump.
3. Remove the various O-rings from the filter covers.
4. If a gasket is used, remove the any pieces of the gasket left on the filter covers and the contact surfaces.

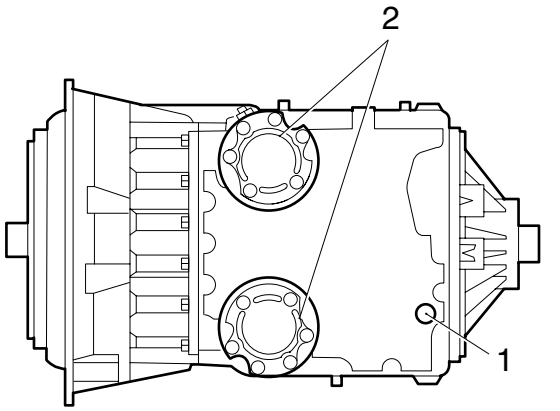

V300371

Fitting automatic gearbox oil filters

1. Lightly lubricate the new O-rings with clean gearbox oil and fit the various O-rings to the filter covers.

   Note:
   Compare the new O-rings to the old O-rings to ensure that the correct O-rings are used.
2. If a gasket is used, fit a new gasket to the filter cover.
3. Lightly lubricate the rubber inner ring of the oil filters with clean gearbox oil and fit the oil filters to the filter covers.
4. Fit the filter covers together with the oil filters to the gearbox and tighten the attachment bolts to the specified torque, see main group "Technical data".
5. Check the oil level, see chapter "Inspection and adjustment".

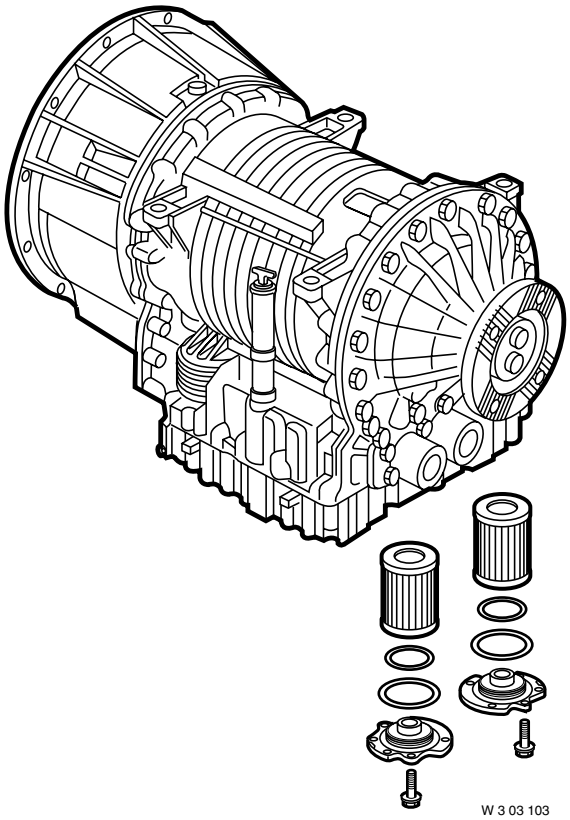
W 3 03 103

https://truckmanualshub.com/

5. DRAINING AND FILLING

5.1 TOPPING UP BATTERY FLUID

Avoid sparks and open flames in the vicinity of batteries.
Battery acid is an aggressive fluid.
In the event of contact with the skin: rinse the skin with plenty of water for a sustained period. If redness or pain persists, consult a doctor.
Remove any clothing affected and rinse with water.
In the event of contact with the eyes: rinse with plenty of water for at least 15 minutes and consult a doctor.
If swallowed: do NOT induce vomiting. Rinse the mouth, drink two glasses of water and consult a doctor.
In the event of inhalation: get fresh air, rest and consult a doctor.

Topping up battery fluid

1. Clean the top of the battery. If the top of the battery has acid on it, it should be rinsed with water.

2. Remove the plugs and top up the batteries with distilled water to approximately 10 mm above the plates or up to the "max" indicator level.

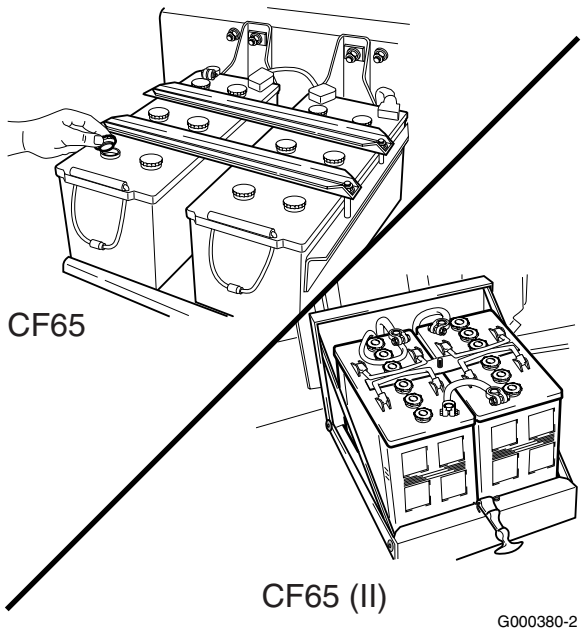

https://truckmanualshub.com/

5.2 DRAINING AND FILLING, ENGINE OIL

To prevent skin injury, avoid unnecessary contact with the drained oil.

Draining engine oil

1. Ensure that the vehicle is standing on a flat and level surface.
2. Drain the engine oil at operating temperature via the drain plug in the oil sump.
3. Replace the drain plug sealing ring and tighten the drain plug to the specified torque; see "Technical data".

Filling, engine oil

1. Fill the engine through the oil filler pipe (1) with the specified quantity of engine oil; see "Technical data".
2. Check the engine oil level; see "Inspection and adjustment".

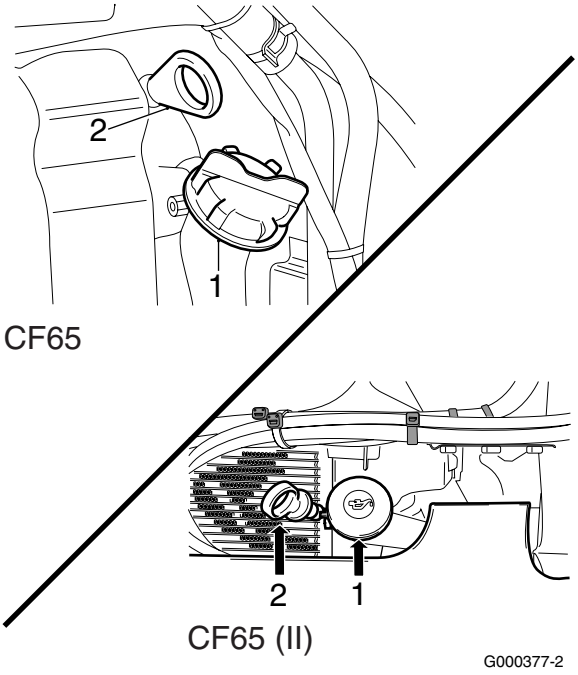

https://truckmanualshub.com/

5.3 DRAINING AND FILLING COOLANT

In order to avoid damaging the engine block, do not top up a warm engine with cold coolant.
Coolant is a toxic fluid and must be handled with care.
Protect skin and eyes.
Coolant is harmful to the environment; after use, it should be processed as industrial chemical waste.
When the coolant is hot, there is overpressure in the cooling system. When removing the filler cap, allow the overpressure to escape by first loosening the filler cap one turn.

Draining the cooling system

1. Turn the heater temperature control knob to the maximum "hot" setting.
2. Remove the cooling system filler cap.
3. Collect the coolant. To do this, place a suitable container under the drain point.
4. Drain the cooling system at the radiator via drain plug B.
5. Flush the cooling system.
6. Fit the drain plug (B).

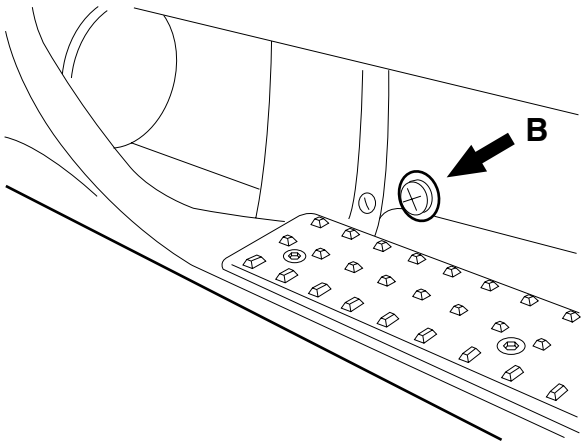

G000182

Filling/venting the cooling system

1. Turn the heater temperature control knob in the cab to the maximum "hot" setting.
2. Fill the cooling system with the specified coolant up to the fill opening of the expansion tank.
3. Start the engine and continue to top up the cooling system.
4. The cooling system is self-bleeding. Venting will be audible during topping up. Continue topping up until venting is no longer audible.
5. Close the cooling system and allow the engine to warm up until the thermostat has opened.
6. Stop the engine and check the coolant level on the transparent rear side of the expansion tank; add more coolant if necessary.

https://truckmanualshub.com/

If the vehicle is fitted with water cab heater

1. Run the engine at idling speed.
2. Switch on the cab heater using the rocker switch on the dashboard.
3. Turn the heater temperature control knob in the cab to the maximum "hot" setting.
4. Switch on the heater fan.
5. Set the rocker switch on the thermostat in the cab to position 1.

   Note:
   Combustion will start after approximately one minute.
6. Allow the cab heater to operate for approximately 15 minutes.
7. Check the coolant level again; top up with coolant if necessary.

© 200518

https://truckmanualshub.com/

5.4 DRAINING AND FILLING, DIFFERENTIAL

To prevent skin injury, avoid unnecessary contact with the drained oil.

Draining the 1132 axle differential

1. Position the vehicle on a level surface.
2. Remove the level check/filler plug (1) and the drain plug (2) using the special Torx wrench (DAF no. 1329493). Drain the oil.
3. Fit the drain plug using the special Torx wrench (DAF no. 1329493) and tighten it to the specified torque; see "Technical data".

Filling the 1132 axle differential

1. Fill the differential gear via the level check/ filling opening (1) with the specified quantity of oil; see "Technical data".
2. Check the oil level after approx. 5 minutes: it should reach up to the level check/filler plug.
3. Fit the level check/filler plug (1) using the special Torx wrench (DAF no. 1329493) and tighten to the specified torque; see "Technical data".

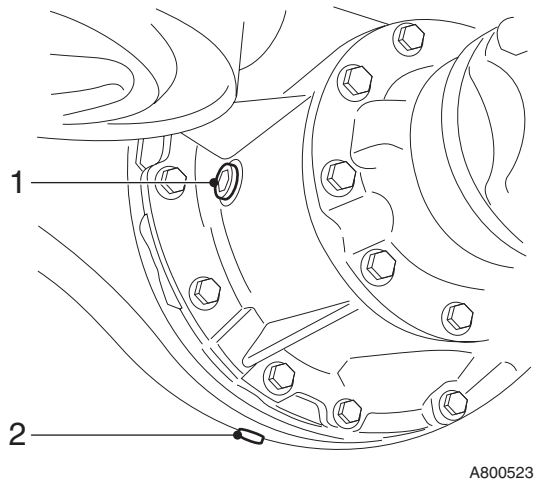

5

https://truckmanualshub.com/

5.5 DRAINING AND FILLING THE GEARBOX

To prevent skin injury, avoid unnecessary contact with the drained oil.

ZF 6S-850 gearbox

Draining the gearbox

1. Place the vehicle on a level and horizontal surface.
2. Drain the gearbox at operating temperature using plug (B).

Filling the gearbox

1. Clean the drain plug and fit it, tightening to the specified torque; see "Technical data".
2. Fill the oil through level check/filler opening (A) until the oil reaches the rim of the filler opening.
3. After filling the gearbox, tighten the level check plug to the specified torque; see "Technical data".

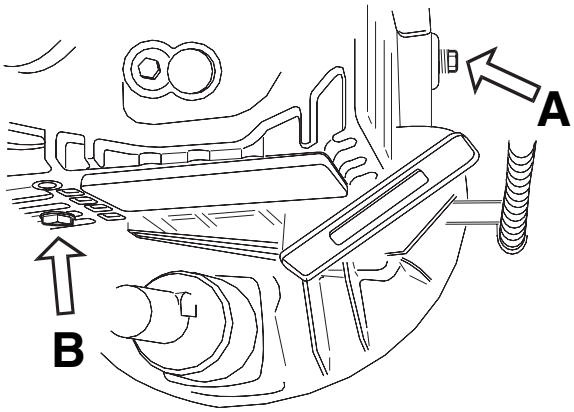

M3038

Eaton 6309A gearbox

To prevent skin injury, avoid unnecessary contact with the drained oil.

Draining the gearbox

1. Place the vehicle on a level and horizontal surface.

   Note:
   Drain the gearbox at operating temperature.

2. Remove the combined drain plug/oil strainer (4) and level check/filler plug (1) and drain the oil.
3. Clean the oil strainer (4) in a suitable solvent and dry thoroughly.

Filling the gearbox

1. Check and replace the O-ring (3) and the sealing ring (2), if necessary.
2. Fit the combined drain plug/oil strainer, tightening it to the specified torque; see "Technical data".

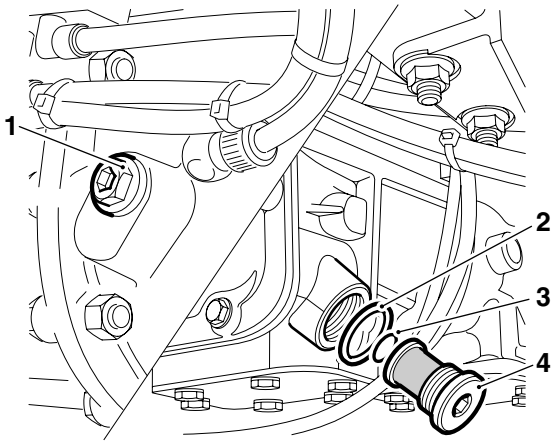

V3 00 376

https://truckmanualshub.com/

3. Fill the oil through level check/filler opening (1) until the oil reaches the rim of the filler opening.

4. Fit the level check/filler plug, tightening it to the specified torque; see "Technical data".

Allison MD3060P automatic gearbox

To prevent skin injury, avoid unnecessary contact with the drained oil.

Draining the gearbox

1. Bring the gearbox to operating temperature (approx. 71°C - 93°C) to allow the oil to drain more quickly and more fully.

2. Place the vehicle on a level and horizontal surface.

3. Remove the drain plug (1) from the gearbox oil sump.

4. Remove the oil filters (2) (see chapter "Removal and installation").

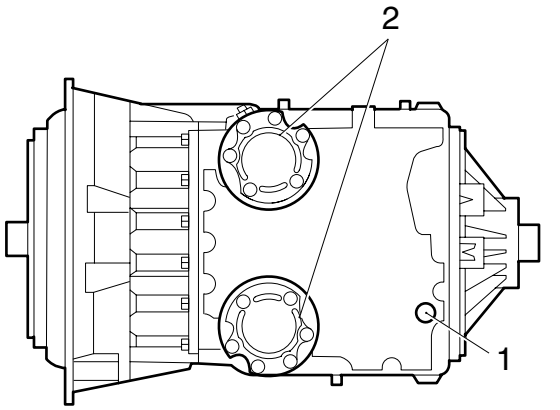

V300371

Filling the gearbox

1. Clean the drain plug (1) and, fitted with a new sealing ring, tighten it to the specified torque; see "Technical data".

2. Fit the oil filters (2) (see chapter "Removal and installation").

3. Fill the gearbox through the dipstick holder with the specified oil quantity; see "Technical data".

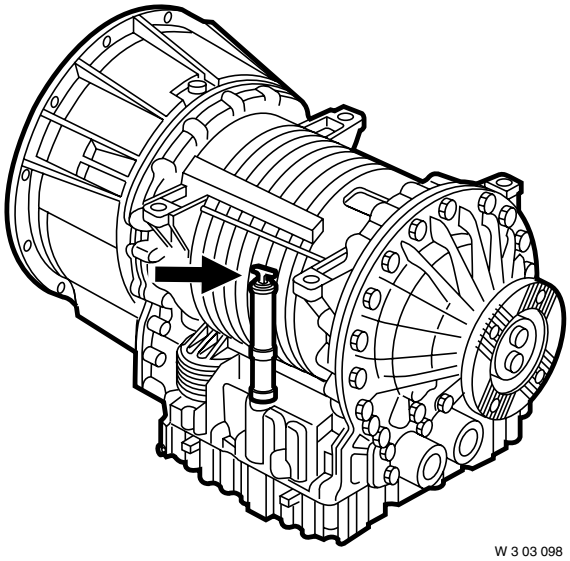

W 3 03 098

https://truckmanualshub.com/

4. Check that the oil level reaches the "Cold full" mark.

   Note:
   To take the dipstick out of the holder, the sealing cap must be held tightly while the dipstick is turned anti-clockwise.

5. Check the oil level using the selector keypad (see chapter "Inspection and adjustment").

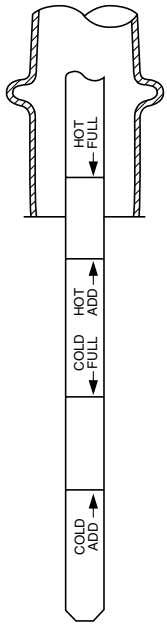

W 3 03 099

https://truckmanualshub.com/

5.6 FILLING GREASE SUPPLY OF THE AUTOMATIC LUBRICATION SYSTEM

1. Remove the dust cover from the filler coupling.

2. Connect the filler hose to the filler coupling. Ensure that the filler hose is completely filled with grease so that no air bubbles can get into the system.

3. Fill the reservoir to the specified maximum level.

   Note:
   When filling the reservoir, the air above the follower piston will escape. This air will flow down through an opening in the piston line and escape from the pump through the right-angled coupling. Normally a small amount of grease will escape from this coupling during venting.

4. Remove the filler hose from the filler coupling.

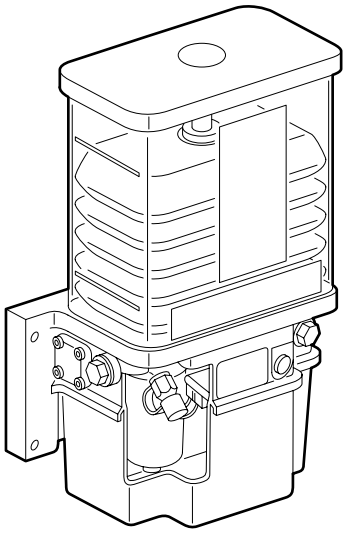

C900331

https://truckmanualshub.com/

5

https://truckmanualshub.com/

6. CLEANING

6.1 CLEANING THE BATTERY POLES

Avoid sparks and open flames in the vicinity of batteries.
Battery acid is an aggressive fluid.
In the event of contact with the skin: rinse the skin with plenty of water for a sustained period. If redness or pain persists, consult a doctor.
Remove any clothing affected and rinse with water.
In the event of contact with the eyes: rinse with plenty of water for at least 15 minutes and consult a doctor.
If swallowed: do NOT induce vomiting. Rinse the mouth, drink two glasses of water and consult a doctor.
In the event of inhalation: get fresh air, rest and consult a doctor.

1. Disconnect the earth lead from the battery terminal.
2. Disconnect the positive lead from the battery terminal.
3. Clean the battery terminals, battery cables and the top of the battery (oxide and dirt discharge the battery).
4. If the top of the battery has acid on it, it should be rinsed with water.
5. Grease the battery terminals with Vaseline.
6. Check the earth lead connection to the chassis and grease the connection with Vaseline.
7. Fit the positive lead to the battery terminal.
8. Fit the earth lead to the battery terminal.
9. Check the routing and attachment of the battery cables.

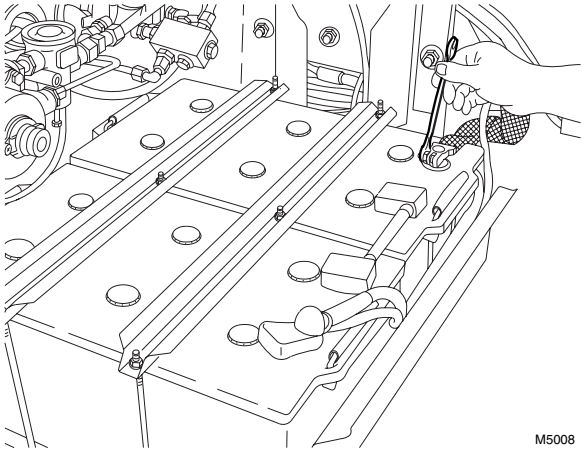

5

https://truckmanualshub.com/

6.2 CLEANING RADIATOR AND INTERCOOLER

Inhalation of dust may have serious consequences for your health. Take the necessary precautions, such as wearing goggles and a facemask.

Key to drawing:

1 Solder up
2 Solder
3 Quick-release coupling for air hose
4 Steel pipe, ∅ 10 mm
5 6 x ∅ 1.5 mm between holes, with a centre-to-centre distance between the holes of 7 mm, drilled on one side

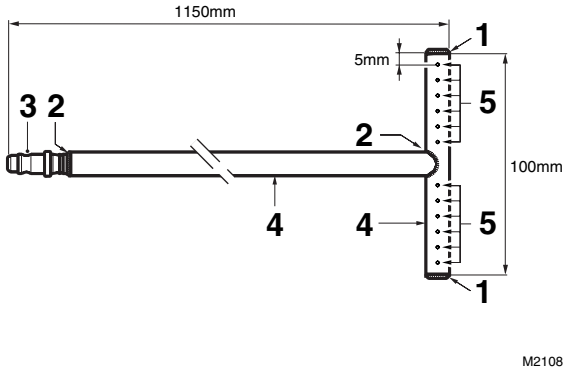

5

Note:
With the aid of a simple tool, the radiator and the intercooler can be blow-cleaned.
The tool (radiator cleaner) cannot be ordered from DAF. It should be manufactured by you according to the drawing.

1. Remove the protective screen, if applicable, by removing the attachment bolts.

2. Clean the protective screen, if applicable, with a hard brush, and blow-clean with compressed air.

3. Insert radiator cleaner (4) between intercooler (1) and radiator (2) with the air holes facing the intercooler (1).

4. Apply air pressure to the radiator cleaner (4) and continue blow-cleaning the intercooler (1) until no more dirt comes out.

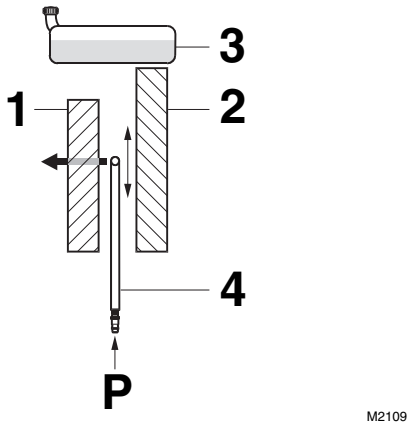

https://truckmanualshub.com/

5. Turn the radiator cleaner (4) over, turning the holes towards the radiator (2), and blow-clean the radiator (2).

6. If applicable, fit the protective screen using the attachment bolts.

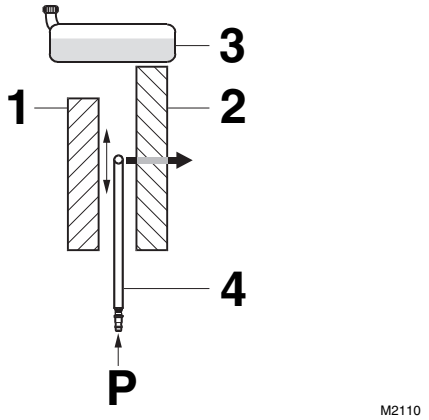

https://truckmanualshub.com/

6.3 CLEANING THE VEHICLE

Before cleaning the vehicle, check the engine, axles, gearbox, etc. for leaks. Having cleaned the vehicle, it will no longer be possible to check for leaks during the maintenance activities.

- Make sure that doors, windows and roof hatch are securely closed during cleaning.
- When cleaning the universal joint on the steering box, the spider seals may be forced open by the high-pressure jet of water, so that the grease behind them is flushed away. As a result, the spider may get stuck, so that the steering will "jam".
- Do not spray directly onto steering ball joints.
- There is a vent on the power steering fluid reservoir of the steering gear. Water may enter the reservoir via this vent, which will cause damage to the steering gear.
- When cleaning the radiator/intercooler element, be careful not to damage the fins.
- Do not aim the high-pressure cleaner jet too long at the air conditioning system condenser. As a result of the high temperature, the pressure in the system will rise too high, which may cause damage to the system.
- Make sure that no water can enter the differential and gearbox via the vents.
- Make sure that no water can enter via the reservoir vents of clutch, brakes, trailing axle, etc.
- The engine and engine compartment can be cleaned with a high-pressure cleaner. Make sure in this case not to spray directly onto seals, electrical components, such as the starter motor, alternator, etc.
- If an engine encapsulation is fitted, the encapsulation panels must be thoroughly cleaned after each maintenance job because of the risk of fire if the inside of the panels is dirty.
- Do not aim the high-pressure cleaner jet at electrical connections such as connectors, lighting ducts, etc.
- Make sure that during vehicle cleaning no water enters the air-intake system through the air intake or the flexible seals of the inlet.
- Do not aim the high-pressure cleaner jet at the gear lever unit.
- Do not aim the high-pressure cleaner jet directly at the drive shaft seals, such as the seals of the spider, intermediate bearing and sliding joint.
- When the vehicle has been cleaned, it must be lubricated again with a grease gun or through the central lubrication system. This is important because it prevents the penetration of moisture and dirt at the various pivots.

https://truckmanualshub.com/

6.4 CLEANING GEARBOX VENT(S)

Cleaning gearbox vent(s)

1. Clean the vent(s) and the surrounding area.
2. Remove the vent(s) from the gearbox.
3. Rinse the vent(s) in a cleaning fluid.
4. Blow the vent(s) dry from the inside using compressed air.
5. Install the vent(s) on the gearbox.

6.5 CLEANING REAR AXLE VENT

Cleaning rear axle vent

1. Clean the vent and the surrounding area.
2. Remove the vent from the rear axle.
3. Rinse the vent in a cleaning fluid.
4. Blow the vent dry from the inside using compressed air.
5. Fit the vent to the rear axle.

https://truckmanualshub.com/

5

https://truckmanualshub.com/

7. LUBRICATION

7.1 LUBRICATE ACCORDING TO X SERVICE LUBRICATION SCHEDULE

Lubrication
Check whether the lubricating points stated below are applicable.

Note:
The lubricating points marked below with an (S) indicate that the lubricating point is positioned on both the left and right hand side of the vehicle.

Lubricating stub axles (S)

1. To ensure that the grease can penetrate adequately, the stub axles should be lubricated in unloaded condition. The front axle should therefore be completely jacked up.

2. Lubricate the stub axles until grease comes out.

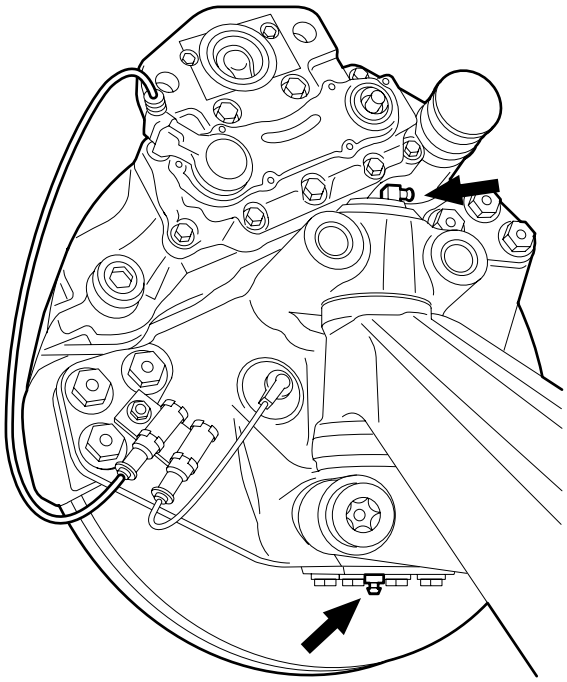

G000189

Lubricating the trailer coupling

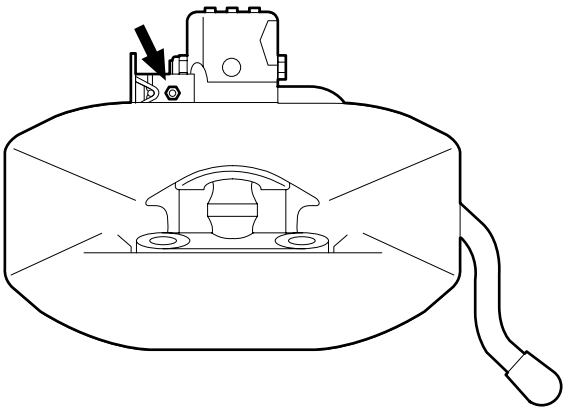

G000188

https://truckmanualshub.com/

5

https://truckmanualshub.com/

https://truckmanualshub.com/

English
Printed in the Netherlands DW13280404