posted to FarmPhoto.com
MASSEY FERGUSON
7274

posted to FarmPhoto.com
MASSEY FERGUSON

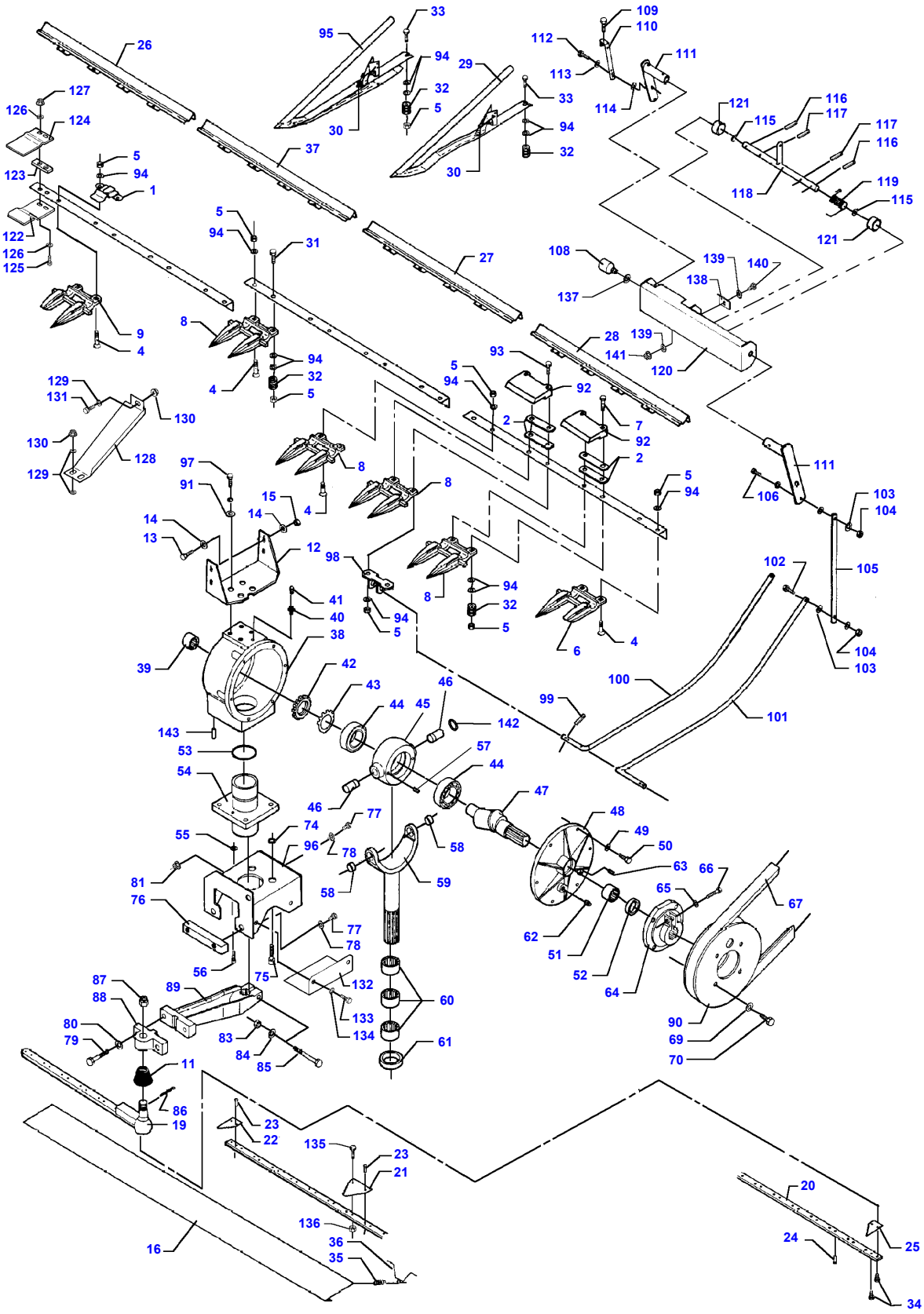
26
95
33
94
32
5
30
29
33
94
32
30
109
110
112
111
113
114
121
116
115
117
117
116
118
119
115
121
127
126
124
123
5
94
1
122
126
125
37
5
94
31
27
108
139
140
138
137
9
4
8
94
32
5
4
28
139
141
120
93
5
94
92
129
131
130
130
128
129
2
7
92
2
8
97
91
15
14
4
14
13
12
8
5
94
111
106
103
104
98
102
105
41
40
38
94
5
8
94
32
5
6
4
39
42
43
44
45
46
100
99
101
104
103
143
53
142
57
44
54
46
77
47
74
96
78
58
48
49
50
55
81
76
58
59
63
66
65
67
62
51
52
64
77
78
56
75
132
87
89
88
80
79
83
84
85
133
134
60
61
90
69
70
11
86
19
23
22
135
23
21
136
36
35
16
20
24
25
34

D-ZAZA-008-B

https://truckmanualshub.com/

Item	Part Number	Qty	Description	Comments
1	**D28283934**	19	Clip	20' - 6,16M
	D28283934	21	Clip	22' - 6,77M
2	**D28230292**	4	Shim	
4	**D40551500**	X	Bolt	
5	D41010800	X	Nut	
6	**D44104700**	1	Finger	Left Hand
7	D40067600	X	Screw	
8	**D44104500**	39	Finger	20' - 6,16M
	D44104500	43	Finger	22' - 6,77M
9	**D44104600**	1	Finger	Right Hand
11	**D44120500**	1	Cap	
12	D28283104	1	Support	Up to Serial or Engine Number 939559
13	339337X1	2	Cap Screw	M8 X 30
14	D20400414	4	Washer	
15	394367X1	2	Locknut	
16	D28230830	2	Guard	22' - 6,77M
	D28230831	1	Guard	20' - 22' 6,16M - 6,77M
	D28200314	1	Guard	20' - 6,16M
	D28200738	1	Guard	20' -6,16M
19	D28283010	2	Knife Back	20' - 6,16M
	D28283865	2	Blade	22' - 6,77M
	D28283011	2	Toggle	
20	D28281492	2	Knife Back	20' - 6,16M
	D28281493	2	Knife Back	22' - 6,77M
21	**D44103700**	X	Tr Knife Blades	[D]
22	**D44103800**	2	Half Section	
23	**D41306100**	X	Rivet	[D]
24	**D41306200**	X	Rivet	[D]
25	**D44104000**	2	Half Section	Left Hand
26	D18283701	1	Stone Trap	
27	D18283705	1	Stone Trap	22' - 6,77M
	D18283706	1	Stone Trap	20' - 6,16M
28	D18283702	1	Stone Trap	
29	D49040900	X	Ear Lifter	
30	D49040400	X	Spring	
31	339019X1	X	Cap Screw	M10 X 50
32	D49040600	X	Roller	
33	339019X1	X	Cap Screw	M10 X 50
34	339560X1	2	Cap Screw	M6 X 16
35	D26500317	2	Spring	(16)
36	D28230841	2	Spring	(16)
37	D18283704	1	Stone Trap	22' - 6,77M
38	D28281324	1	Wobble Drive	[B] Cpl.
	D44127800	1	Box	[B] (38)
	D28281324	1	Wobble Drive	[C] (38) Cpl.
	D44126500	1	Box	[C] (38)
39	D44128800	1	Bearing Needle	(38)
40	D44129400	1	Connector	(38)
41	D46116500	1	Valve	(38)
42	D44129100	1	Nut	(38)
43	D44129200	1	Washer	(38)
44	D41668400	2	Roller Bearing	(38)
45	D44127900	1	Housing	[B] (38)
	D44126400	1	Housing	[C] (38)
46	D44128000	2	Journal	[B] (38)
	D44125900	1	Journal	[C] (38)
47	D44129300	1	Shaft	(38)
48	D44128200	1	Cover	[B] (38)
	D44126300	1	Cover	[C] (38)

https://truckmanualshub.com/

Item	Part Number	Qty	Description	Comments
49	D41102100	6	Washer	(38) A8
50	339123X1	6	Cap Screw	(38) M8 X 20
51	D41669700	1	Bearing Needle	(38)
52	D45412000	1	Gasket	(38)
53	D45481500	1	O Ring	(38)
54	D44128300	1	Bearing Carrier	[B] (38)
54	D44126200	1	Bearing Carrier	[C] (38)
55	D41102100	2	Washer	(38) A8
56	D40697200	2	Screw	[B] (38)
56	D40697700	2	Screw	[C] (38)
57	D40639600	2	Pin	[B] (38)
58	D44128400	2	Bush	[B] (38)
58	D44126100	2	Bush	[C] (38)
59	D44128500	1	Yoke	[B] (38)
59	D44126000	1	Yoke	[C] (38)
60	D41669800	3	Bearing Needle	(38)
61	D45409500	1	Gasket	(38)
62	D44128600	1	Plug	(38)
63	D45236200	1	Plug	(38)
64	D44127100	1	Hub	(38)
65	D41100900	1	Spring Washer	(38)
66	D40694000	1	Screw	(38)
67	**D41985600**	1	Belt	
69	D20400426	4	Washer	
70	1440716X1	4	Cap Screw	M12 X 30
74	D20400523	4	Spacer	
75	D40465400	4	Screw	
76	D28283103	1	Clamp	
77	390419X1	5	Cap Screw	M16 X 40
78	D20400461	5	Washer	
79	D40698400	2	Screw	
80	D20400438	2	Washer	
81	1442739X1	2	Locknut	M16
83	1442190X1	1	Locknut	M12
84	D20400428	1	Washer	
85	390826X1	1	Cap Screw	M12 X 100
86	391423X1	1	Split Pin	Diameter 4 X 40
87	**D41054300**	1	Nut	
88	D44126900	1	Flange	
89	D44127000	1	Swivel Arm	
90	D44127200	1	Pulley	
91	D28280986	4	Washer	
92	**D28260362**	X	Clip	
93	1441671X1	X	Screw Special	M10 X 50
94	D20400419	X	Washer	
95	D49040300	X	Ear Lifter	
96	D18283109	1	Support	
97	339337X1	4	Cap Screw	M8 X 30
98	D28284356	4	Union	[A]
99	339662X1	8	Roll Pin	[A] Diameter 6 X 28
100	D28284257	2	Sensor	[A]
101	D28284258	2	Sensor	[A]
102	D40405300	4	Screw	[A]
103	D20400506	20	Washer	[A]
104	394367X1	8	Locknut	[A] M8
105	D28284223	4	Link	[A]

https://truckmanualshub.com/

Item	Part Number	Qty	Description	Comments
106	339009X1	4	Cap Screw	[A] M8 X 35
108	D28780523	2	Potentiometer	[A]
109	D40464900	2	Screw	[A]
110	D28780845	2	Rod	[A]
111	D28284225	4	Lever	AUTO LEVEL 22' - 6,77M
111	D28284234	4	Lever	[A]
112	339804X1	2	Cap Screw	[A] M6 X 25
113	D20400404	2	Washer	[A]
114	1441462X1	2	Locknut	[A] M6
115	D28200551	4	Washer	[A]
116	D42611900	8	Pin	[A]
117	339052X1	4	Roll Pin	[A] Diameter 6 X 40
118	D28284232	2	Shaft	[A]
119	D28284389	2	Spring	[A]
120	D28284229	2	Support	AUTO LEVEL 22' - 6,77M
121	D28284456	4	Bush	[A]
122	D28281576	1	Plate	
123	D28281575	1	Shim	
124	D28281574	1	Plate	
125	339010X1	2	Cap Screw	M8 X 40
126	D20400506	2	Washer	
127	394367X1	2	Locknut	M8
128	D28281572	1	Guard	
129	D20400506	3	Washer	
130	D41017500	3	Locknut	
131	339761X1	1	Cap Screw	M8 X 25
132	D28281706	1	Guard	
133	339124X1	2	Cap Screw	M8 X 16
134	D20400506	2	Washer	
135	339560X1	X	Cap Screw	M6 X 16
136	1441462X1	X	Locknut	M6
137	D20400441	1	Washer	
138	D28284268	2	Stop	
139	D20400416	4	Washer	
140	339123X1	2	Cap Screw	M8 X 20
141	394367X1	2	Locknut	M8
142	D45483000	1	O Ring	[C]
143	D42650400	2	Pin	

FOOTNOTE [A] OPTIONAL EQUIPMENT AUTO LEVEL
FOOTNOTE [B] USED ONLY IN KNIFE DRIVES WITH 6 HOLES IN BEARING HOUSING BOTTOM
FOOTNOTE [C] USED ONLY IN KNIFE DRIVES WITH 8HOLES IN BEARING HOUSING BOTTOM AND BULGES SIDES
FOOTNOTE [D] OPTIONAL

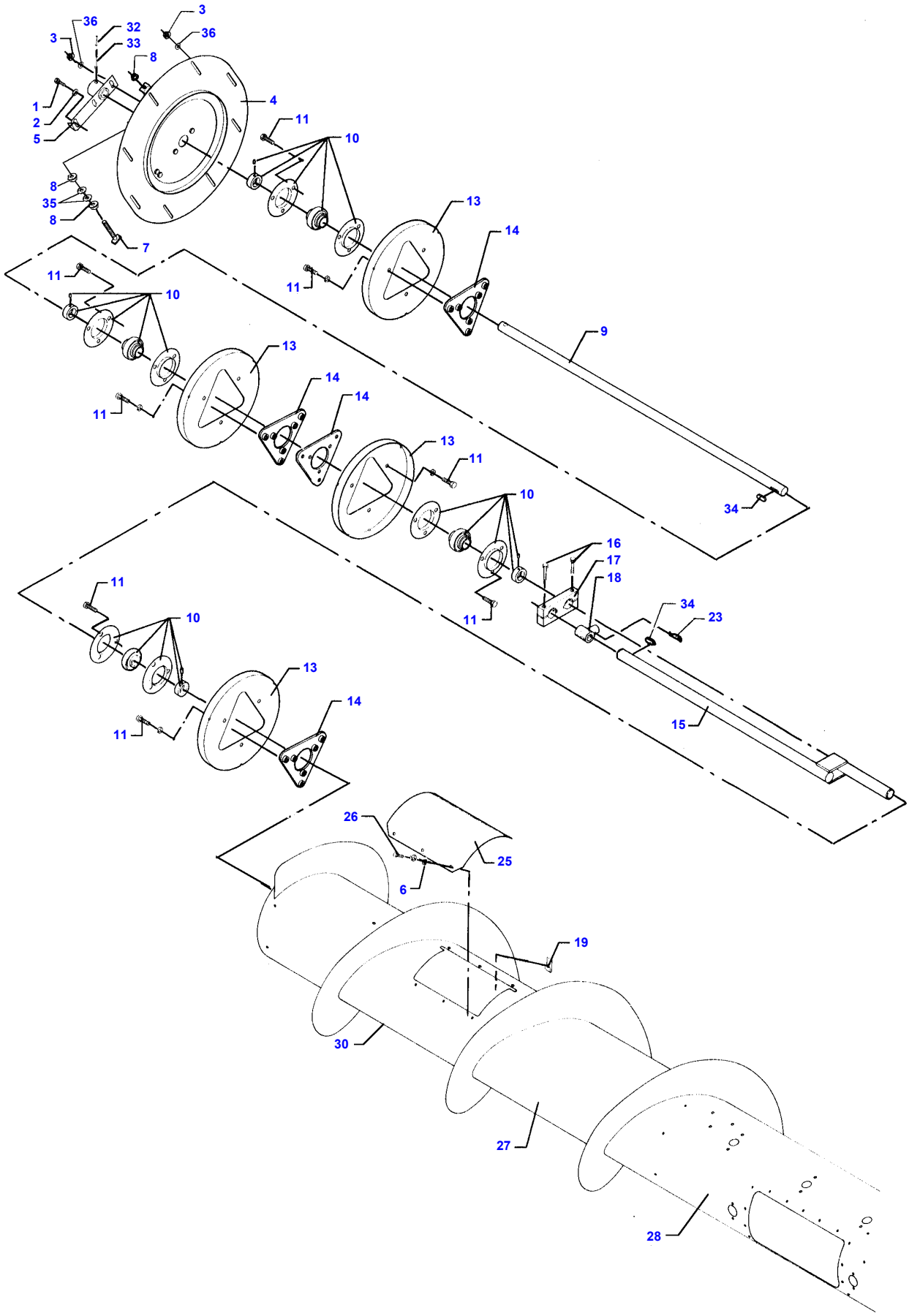

D-ZAZB-004-A

https://truckmanualshub.com/

Item	Part Number	Qty	Description	Comments
1	339124X1	1	Cap Screw	M8 X 16
2	D20400506	1	Washer	
3	D41017500	10	Locknut	
4	D18280040	1	Plate	Right Hand
5	D28283029	1	Adjuster	
6	391038X1	6	Flat Washer	
7	D28211023	1	Bolt	
8	1440329X1	2	Locknut	M10
9	D28283037	1	Shaft	20' - 6,16M
				Up to Serial or Engine Number 940147
	D28283871	1	Shaft	22' - 6,77M
				Up to Serial or Engine Number 940147
	D28284655	1	Shaft	20' - 6,16M
				From Serial or Engine Number 940148
	D28284661	1	Crankshaft	22' - 6,77M
				From Serial or Engine Number 940148
10	D41707800	4	Bearing	
11	339814X1	24	Cap Screw	M10 X 35
13	D28280014	4	Plate	
14	D28283847	4	Bearing Plate	
15	D28285977	1	Crankshaft	
16	3009498X1	2	Cap Screw	M10 X 55
17	D28283039	1	Arm	
18	**D28251831**	15	Bearing Carrier	
19	D43428200	6	Nut	M6
23	D28283853	15	Hair Pin	
25	D18283070	1	Cover	Up to Serial or Engine Number 939559
	D18285312	1	Cover	From Serial or Engine Number 939560
26	339666X1	6	Cap Screw	M6 X 20
27	D18283125	1	Table Auger	20' - 6,16M
				Up to Serial or Engine Number 940147
	D18283870	1	Table Auger	22' - 6,77M
				Up to Serial or Engine Number 940147
	D18285991	1	Table Auger	20' - 6,16M
				From Serial or Engine Number 940148
	D18285992	1	Table Auger	22' - 6,77M
				From Serial or Engine Number 940148
28	D28283012	1	Body	
30	D28283034	1	Body	Right Hand 20' - 6,16M
				Up to Serial or Engine Number 940147
	D28286012	1	Body	Right Hand 20' - 6,16M
				From Serial or Engine Number 940148
	D28283876	1	Body	Right Hand 22' - 6,77M
				Up to Serial or Engine Number 940147
	D28286013	1	Body	Right Hand 22' - 6,77M
				From Serial or Engine Number 940148
32	1441645X1	1	Pin	Diameter 8 X 55
33	D42625300	1	Pin	Diameter 13 X 56
34	339441X1	2	Key Parallel	
35	D20400471	2	Washer	
36	D20400414	X	Washer	

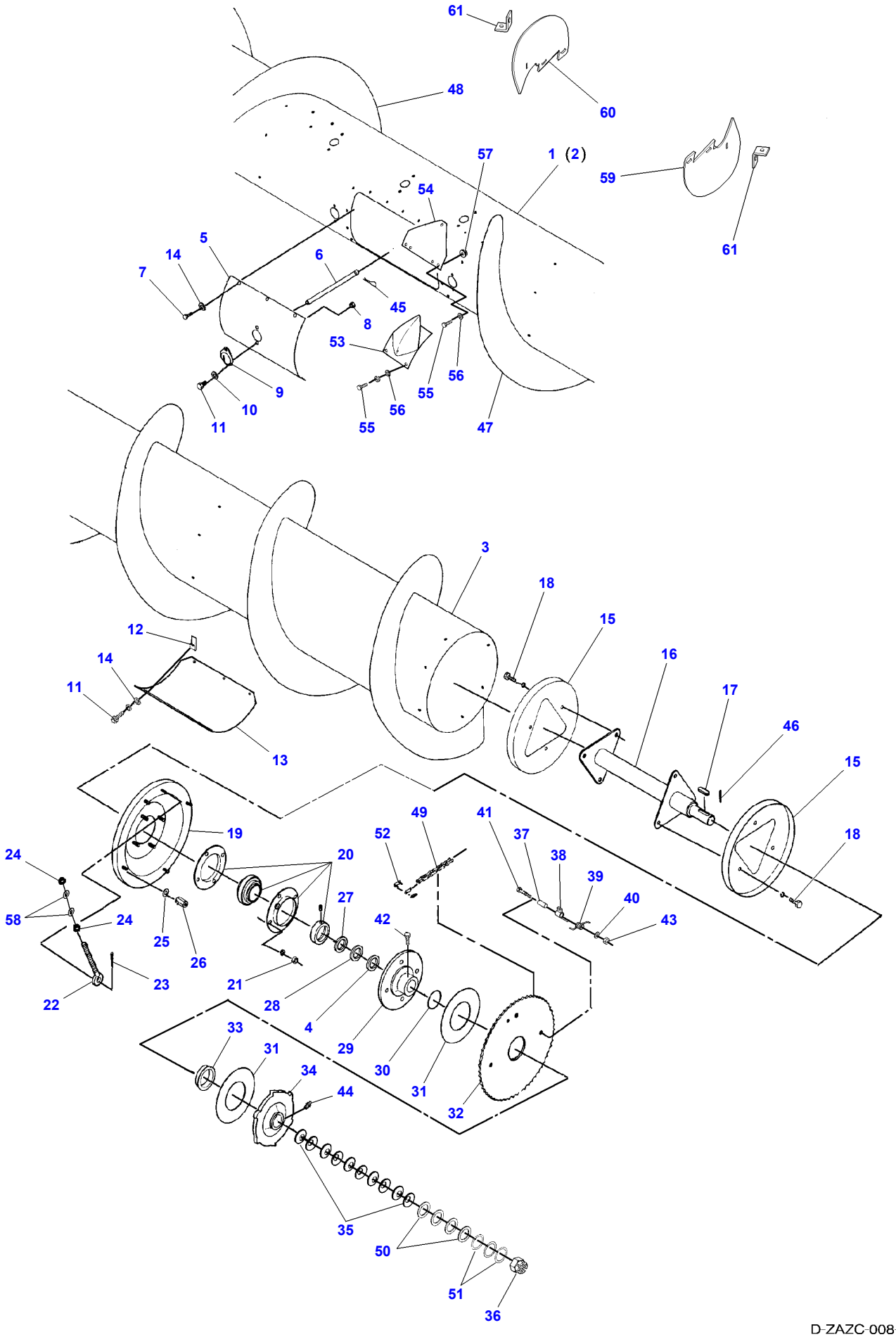
61
48
60
57
1 (2)
59
54
61
5
14
7
6
45
8
53
56
9
55
10
56
11
55
47
3
18
15
12
16
14
17
11
46
13
15
49
41
19
52
37
18
24
20
38
39
27
40
58
24
42
43
25
26
23
21
22
28
4
33
29
31
30
34
31
44
32
35
50
51
36

D-ZAZC-008-A

https://truckmanualshub.com/

Item	Part Number	Qty	Description	Comments
1	D18283125	1	Table Auger	20' - 6,16M
				Up to Serial or Engine Number 940147
	D18283870	1	Table Auger	22' - 6,77M
				Up to Serial or Engine Number 940147
	D18285991	1	Table Auger	20' - 6,16M
				From Serial or Engine Number 940148
	D18285992	1	Table Auger	22' - 6,77M
				From Serial or Engine Number 940148
2	D28283012	1	Body	
3	D28283875	1	Body	Left Hand 22' - 6,77M
	D28286006	1	Body	Left Hand 20'- 6,16M
4	D41653500	X	Washer	[A]
5	D18283078	1	Cover	
6	D28283815	15	Finger	
7	339560X1	X	Cap Screw	M6 X 16
8	1441462X1	X	Locknut	M6
9	D28283060	15	Bush	
10	D20400404	X	Washer	
11	339666X1	X	Cap Screw	M6 X 20
12	D43428200	6	Nut	M6
13	D18283070	1	Cover	Up to Serial or Engine Number 939559
	D18285312	1	Cover	From Serial or Engine Number 939560
14	391038X1	6	Flat Washer	
15	D28280014	2	Plate	
16	D28283007	1	Drive Shaft	
17	D43106800	1	Key	
18	3009491X1	6	Cap Screw	M10 X 20
19	D18283053	1	Plate	
20	D41716500	1	Bearing	
21	3009695X1	4	Nut	M12
22	D28281387	1	Screw	
23	339531X1	1	Split Pin	Diameter 4 X 35
24	339402X1	2	Nut	M10
25	D20400415	4	Washer	
26	D28280729	4	Nut	
27	D41653500	X	Washer	
28	D41653500	4	Washer	
29	D28283004	1	Washer	
30	D45481600	1	O Ring	
31	D45904300	2	Friction Disc	
32	D28283008	1	Sprocket	Up to Serial or Engine Number 937852
	D28286047	1	Sprocket	From Serial or Engine Number 937853
33	D28283000	1	Insert	Up to Serial or Engine Number 937852
	D28286049	1	Insert	From Serial or Engine Number 937853
34	D28286166	1	Clutch Disc	
35	D41112400	10	Washer	
36	D41054100	1	Castle Nut	
37	D28281431	1	Spacer	From Serial or Engine Number 940222
	D28282429	1	Bush	From Serial or Engine Number 941444
38	D28281432	1	Support	From Serial or Engine Number 941444
	D28282430	1	Dog	From Serial or Engine Number 940222
39	D28283006	1	Spring	From Serial or Engine Number 940222
	D28282433	1	Spring	From Serial or Engine Number 941444
40	390734X1	1	Flat Washer	From Serial or Engine Number 940222
41	3009498X1	1	Cap Screw	M10X55
				From Serial or Engine Number 940222
42	339761X1	1	Cap Screw	M8 X 25
43	1440329X1	1	Locknut	M10
				From Serial or Engine Number 940222
44	1441858X1	1	Grease Fitting	M6
45	D28283853	15	Hair Pin	
46	354066X1	1	Split Pin	5/32" X 1
47	D28280005	1	Auger	20' - 6,16M
				Up to Serial or Engine Number 939455
	D28280067	1	Auger	22' - 6,77M
				Up to Serial or Engine Number 939455
	D28286019	1	Auger	20' - 6,16M
				From Serial or Engine Number 939649
	D28286021	1	Auger	22' - 6,77M
				From Serial or Engine Number 939649

https://truckmanualshub.com/

Table Auger Left Hand - Freeflow - 20-22'

Item	Part Number	Qty	Description	Comments
48	D28280006	1	Auger	20' - 6,16M Up to Serial or Engine Number 939455
48	D28280068	1	Auger	22' - 6,77M Up to Serial or Engine Number 939455
48	D28286018	1	Auger	20' - 6,16M From Serial or Engine Number 939649
48	D28286020	1	Auger	22' - 6,77M From Serial or Engine Number 939649
49	**D42329300**	1	Chain	
50	D20400520	4	Spacer	
51	D20400522	3	Spacer	
52	**D42365100**	1	Link	
53	D28283294	4	Spike	
54	D28281694	4	Threaded Part	Up to Serial or Engine Number 61489
55	339123X1	20	Cap Screw	M8 X 20
56	D20400506	20	Washer	
57	394367X1	12	Locknut	M8
58	D20400471	2	Washer	
59	D28285967	1	Auger Extension	
60	D28285968	1	Auger Extension	
61	D28285981	2	Bracket	

FOOTNOTE [A] OPTIONAL

MF 7274/7278 COMBINE, |-> 61123 for 7274 and |-> 61115 for 7278 - 3906105

D-ZAZD-016-B

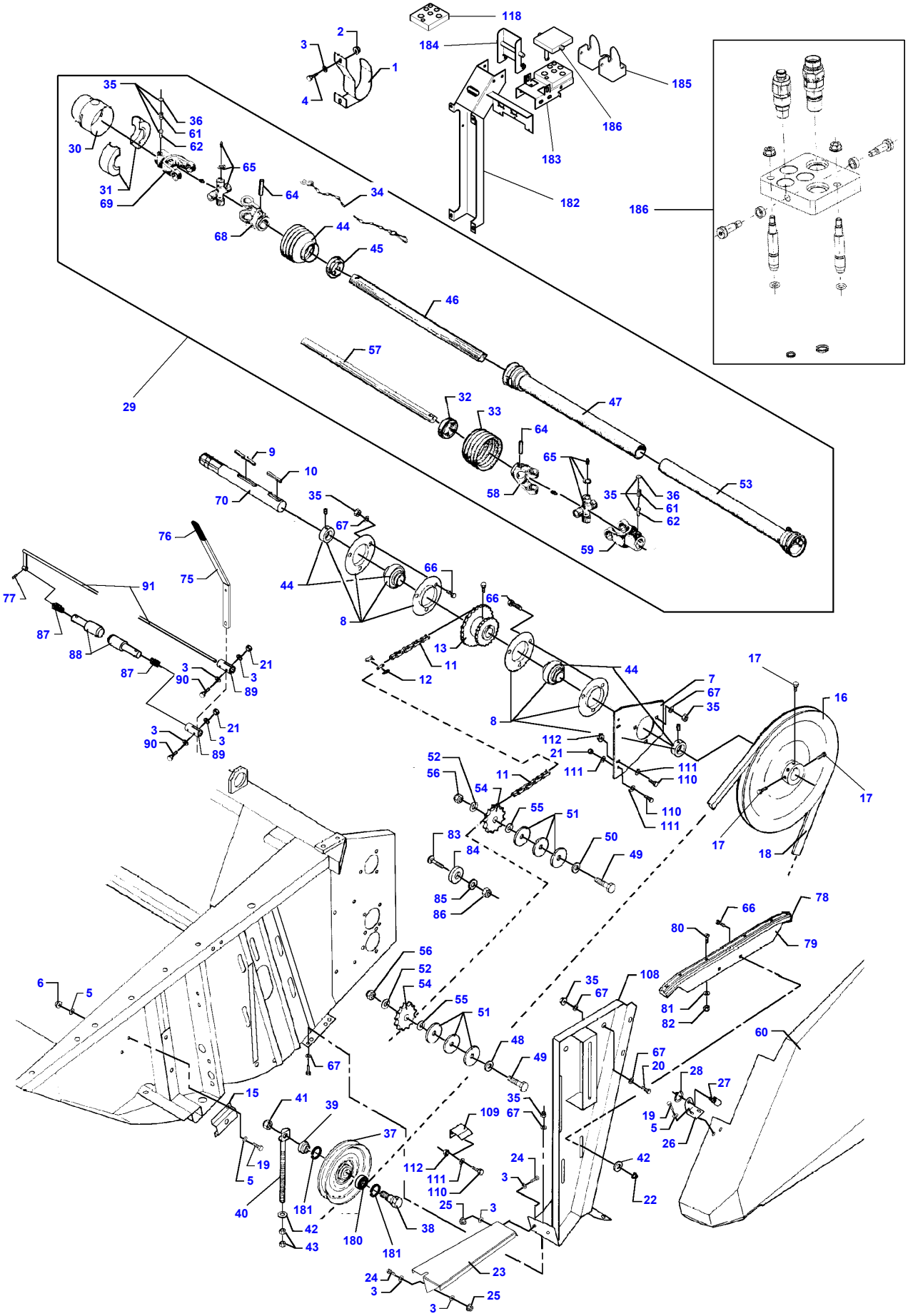

D-ZAZD-016-B

https://truckmanualshub.com/

Item	Part Number	Qty	Description	Comments
1	D28281345	1	Stirrup	
2	394367X1	X	Locknut	M8
3	D20400506	X	Washer	
4	339124X1	X	Cap Screw	M8 X 16
5	391038X1	X	Flat Washer	
6	1441462X1	X	Locknut	M6
7	D28285302	1	Bearing Carrier	
8	D41707800	2	Bearing	
9	D43114900	1	Key	
10	1441579X1	1	Key Parallel	
11	**D42329300**	1	Chain	
12	**D42365100**	1	Link	
13	D28280225	1	Sprocket	
15	D28281578	1	Retainer	
16	D28285423	1	Pulley	
17	D40697900	3	Screw	
18	**D41985600**	1	Belt	
19	339666X1	X	Cap Screw	M6 X 20
20	3009492X1	4	Cap Screw	M10 X 25
21	394367X1	X	Locknut	M8
22	1440329X1	X	Locknut	M10
23	D28281570	1	Plate	
24	339761X1	3	Cap Screw	M8 X 25
25	394367X1	3	Locknut	M8
26	D28281577	1	Angle.	
27	D43427500	1	Pin	
28	1440988X1	1	Snapring	
29	D45609100	1	Shaft	20' - 6,16M Up to Serial or Engine Number 942481
	D28273974	1	Shaft	20' -6,16M From Serial or Engine Number 942482 WWHU
	D45609300	1	Shaft	22' - 6,77M Up to Serial or Engine Number 942481
	D28273973	1	Shaft	22' - 6,77M From Serial or Engine Number 942482 WWHU
30	D45632900	1	Bush	
31	D45633000	1	Ring	
32	D45630700	1	Ring	
33	D45630500	1	Guard	
34	D45681800	2	Chain	
35	D45632400	2	Tube	
36	D45645700	2	Washer	
37	D28760574	1	Pulley	Valid from machine/table no,can be used in new as well as in older machines 938215
38	D28760156	1	Screw	
39	D28760155	1	Bush	
40	D28260181	1	Bolt	
41	1442739X1	X	Locknut	M16
42	D20400416	X	Washer	
43	339402X1	X	Nut	M10
44	D45630400	1	Guard	
45	D45630600	1	Ring	
46	D45631100	1	Tube	20' - 6,16M
	D45633700	1	Tube	22' - 6,77M
47	D45631900	1	Tube	20' - 6,16M
	D45633900	1	Tube	22' - 6,77M
48	D28181284	1	Washer	
49	391889X1	2	Cap Screw	M16 X 70
50	D20400463	1	Washer	
51	D20400460	6	Washer	
52	D20400459	2	Washer	
53	D45632300	1	Tube	
54	D41716800	2	Tightener	
55	D20400516	X	Spacer	[B]
56	1442739X1	2	Locknut	M16
57	D45631500	1	Tube	
58	D45630100	1	Yoke	
59	D45633200	1	Yoke	

https://truckmanualshub.com/

Item	Part Number	Qty	Description	Comments
60	D18281583	1	Guard	
61	D45667300	2	Spring	
62	D45665300	2	Pin	
64	D42619100	2	Pin	
65	D45630300	2	Hub	
66	1442456X1	8	Screw Special	M10 X 30
67	D20400419	X	Washer	
68	D45630200	1	Yoke	
69	D45633100	1	Yoke	
70	D28284404	1	Shaft	
74	D45140037	2	Screw	[A,C]
75	D28285536	1	Lever	
76	D43484900	1	Lever	
77	D42612200	X	Pin	
78	D28280787	1	Rail	
79	D18281365	1	Crossmember	
80	D40609300	6	Screw	
81	D20400466	6	Washer	
82	D41087200	6	Locknut	M4
83	D40073100	1	Screw	
84	D28280981	1	Spacer	
85	D20400459	1	Washer	
86	1442739X1	1	Locknut	M16
87	D27100794	2	Spring	
88	D28283200	1	Shaft	
89	D28285535	2	Fork	
90	339168X1	X	Cap Screw	M8 X 50
91	D28285531	1	Journal	
92	D45140038	2	Ring	[A,C] Up to Serial or Engine Number 59115
108	D18283090	1	Plate	
109	D18283098	1	Union	
110	339123X1	X	Cap Screw	M8 X 20
111	D20400506	X	Washer	
112	394367X1	X	Locknut	M8
118	D28285492	1	Rubber Patch	
180	SKF62042RS	1	Bear. 6204 2rs	Valid from machine/table no,can be used in new as well as in older machines 938215
181	339199X1	2	Circlip	Valid from machine/table no,can be used in new as well as in older machines 938215
182	D28285518	1	Bracket	
183	D28285519	1	Support	CPL.
184	D28285497	1	Support	
185	D28285494	1	Stirrup	
186	D45140044	1	Clutch	CPL. See Page - Reference Number 001-0034

FOOTNOTE [A] OPTIONAL EQUIPMENT
FOOTNOTE [B] OPTIONAL
FOOTNOTE [C] NOT ILLUSTRATED

https://truckmanualshub.com/

MF 7274/7278 COMBINE, |-> 61123 for 7274 and |-> 61115 for 7278 - 3906105

D-ZAZE-009-A

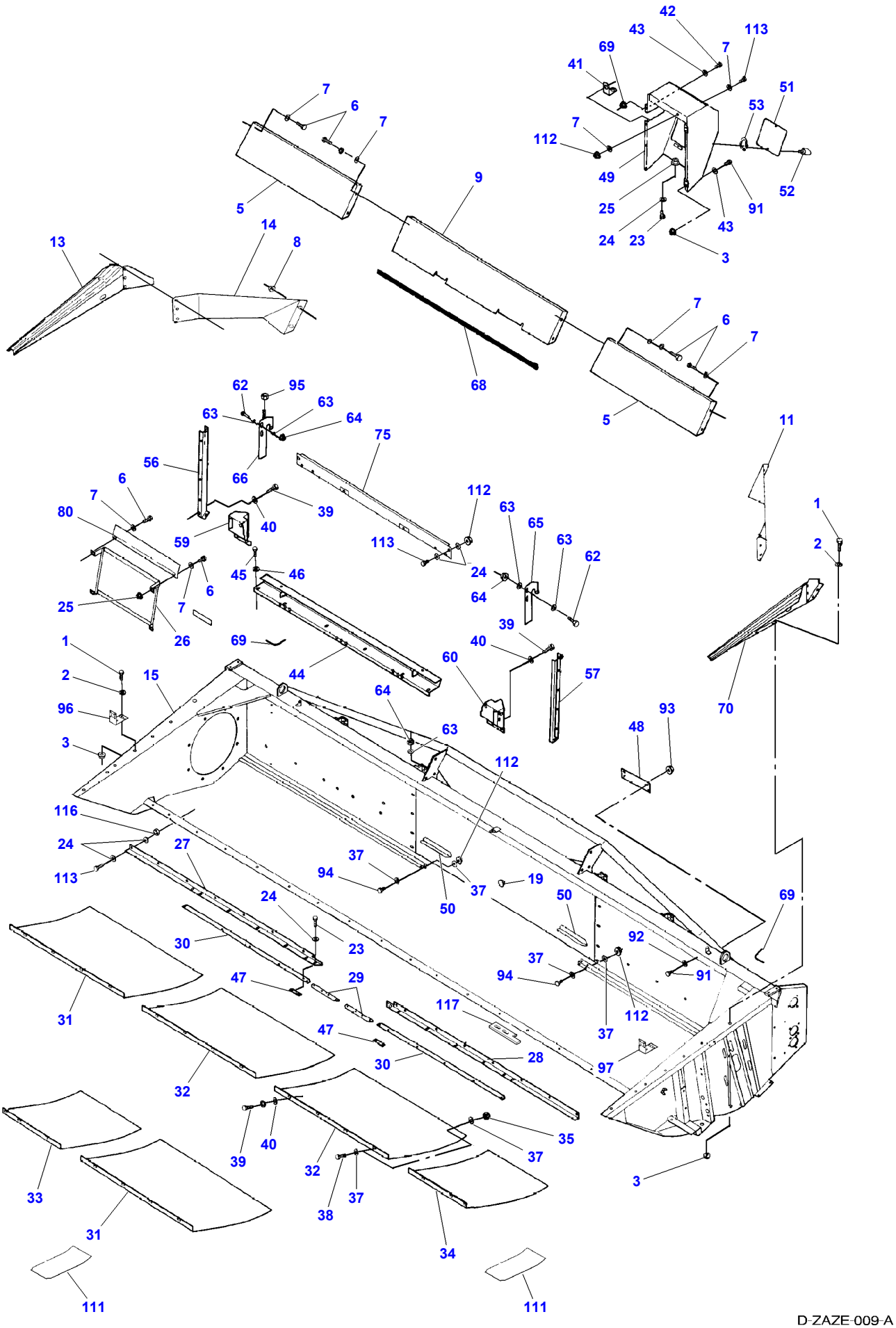

D-ZAZE-009-A

https://truckmanualshub.com/

Item	Part Number	Qty	Description	Comments
1	339560X1	X	Cap Screw	M6 X 16
2	391038X1	X	Flat Washer	
3	1441462X1	X	Locknut	M6
5	D18283238	2	Cowl	20' - 6,16M
	D18283862	2	Cowl	22' - 6,77M
6	339123X1	X	Cap Screw	M8 X 20
7	D20400506	X	Washer	
8	394367X1	X	Locknut	M8
9	D18283236	1	Cowl	
11	D18283233	1	Cowl	
13	D18283516	1	Side	Up to Serial or Engine Number 939455
	D18285507	1	Side	From Serial or Engine Number 939649
14	D18283232	1	Cowl	Right Hand
15	D18285504	1	Table	20' - 6,16M
				Up to Serial or Engine Number 939455
	D18285505	1	Table	22' - 6,77M
				Up to Serial or Engine Number 939455
	D18286026	1	Table	20' - 6,16M
				From Serial or Engine Number 939649
	D18286027	1	Table	22' - 6,77M
				From Serial or Engine Number 939649
19	D45745300	X	Plug	
23	339123X1	X	Cap Screw	M8 X 20
24	D20400506	X	Washer	
25	394367X1	X	Locknut	M8
26	D28285263	1	Retainer	22' - 6,77M
	D18285767	1	Bracket	20' - 6,16M
27	D28281806	1	Deflector	20' - 6,16M
	D28281808	1	Deflector	Right Hand 22' - 6,77M
28	D28281805	1	Deflector	20' - 6,16M
	D28281807	1	Deflector	Left Hand 22' - 6,77M
29	D28282634	2	Retainer	Valid from machine/table no,can be used in new as well as in older machines 60316
30	D28283324	2	Deflector	20' - 6,16M
	D28283861	2	Deflector	22' - 6,77M
31	D28283256	4	Wearplate	20' - 6,16M
	D28283256	3	Wearplate	22' - 6,77M
32	D28283255	2	Wearplate	22' - 6,77M
33	D28283253	1	Wearplate	Right Hand
34	D28283254	1	Wearplate	Left Hand
35	394367X1	X	Locknut	M8
37	D20400506	X	Washer	
38	D40405300	X	Screw	
39	3009493X1	X	Cap Screw	M10 X 30
40	D20400419	X	Washer	
41	D18250648	1	Clip	
42	339666X1	5	Cap Screw	M6 X 20
43	D20400405	5	Washer	
44	D18285529	1	Profile	
45	3009493X1	8	Cap Screw	M10 X 30
46	D20400415	8	Washer	
47	D28283321	4	Clamp	
48	D18285613	1	Cover	
49	D18284331	1	Guard	
50	D28283406	2	Deflector	
51	D18280958	1	Cover	
52	D43427500	2	Pin	
53	1440988X1	2	Snapring	
56	D18285775	1	Support	
57	D18285776	1	Support	
59	D18285752	1	Bracket	
60	D18285756	1	Bracket	
62	339881X1	4	Cap Screw	M16 X 60
63	D28181284	9	Washer	
64	1442739X1	5	Locknut	M16
65	D18285739	1	Hook	
66	D18285738	1	Hook	
68	D28283557	X	Tensioner	
69	D28782178	X	Seal Section	Length 5 M
70	D18283938	1	Plate	Left Hand
75	D18285218	1	Plate	[A]
80	D28285264	1	Guard	22' - 6,77M

https://truckmanualshub.com/

Item	Part Number	Qty	Description	Comments
80	D18285763	1	Protection.	20' - 6,16M
91	339560X1	X	Cap Screw	M6 X 16
92	D20400404	X	Washer	
93	1441462X1	X	Locknut	M6
94	339337X1	4	Cap Screw	M8 X 30
95	339034X1	1	Nut	M16
96	D28780381	2	Retainer	[C]
97	D28780381	1	Retainer	[B]
111	D28284101	2	Plate	
112	394367X1	X	Locknut	M8
113	339761X1	X	Cap Screw	M8 X 25
116	339169X1	X	Nut	M8
117	D28285011	1	Lock Support	

FOOTNOTE [A] OPTIONAL EQUIPMENT AUTO LEVEL
FOOTNOTE [B] OPTIONAL EQUIPMENT ELECTRIC - VERTICAL KNIFE LEFT
FOOTNOTE [C] OPTIONAL EQUIPMENT ELECTRIC VERTICAL KNIFE RIGHT

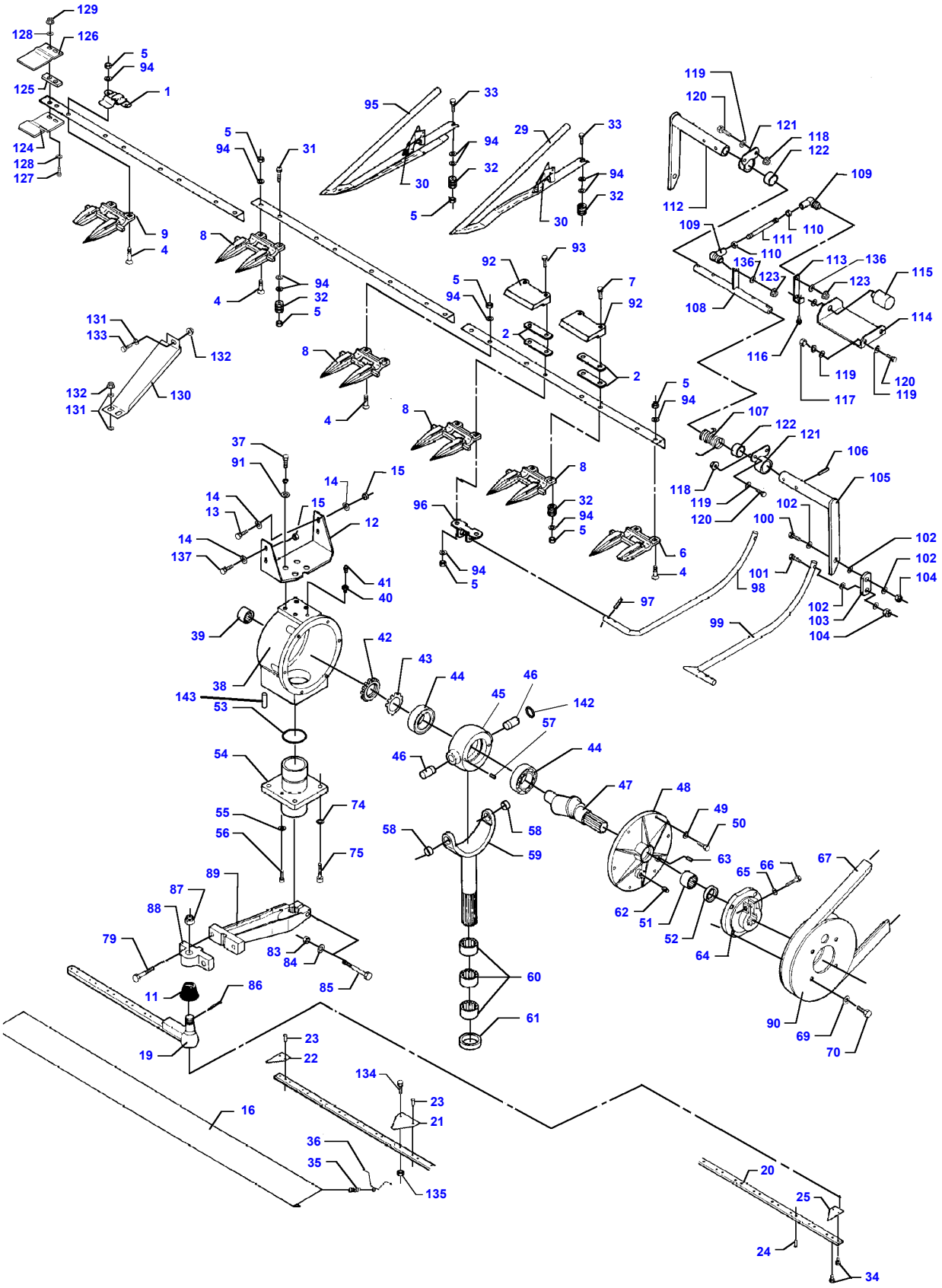
129
128
126
5
94
125
1
124
128
127
9
4
5
94
31
8
4
94
32
5
95
33
94
32
30
5
29
33
94
32
30
119
120
121
118
122
112
109
109
110
111
110
136
123
113
136
123
115
108
114
116
119
120
119
117
131
133
132
132
131
130
8
4
92
93
5
94
7
92
2
2
5
94
8
107
122
121
106
105
118
119
120
102
100
102
102
104
101
98
102
103
104
99
37
91
14
15
14
13
15
12
14
137
41
40
96
94
5
8
32
94
5
6
4
97
39
38
143
53
42
43
44
45
46
142
57
44
46
54
55
56
74
75
58
58
59
47
48
49
50
63
65
66
67
62
51
52
64
89
87
88
79
83
84
85
60
61
11
86
19
90
69
70
23
22
134
23
21
16
36
35
135
20
25
24
34

D-ZAZF-011-B

https://truckmanualshub.com/

Item	Part Number	Qty	Description	Comments
1	**D28283934**	19	Clip	20' - 6,16M
	D28283934	21	Clip	22' - 6,77M
2	**D28230292**	4	Shim	
4	**D40551500**	X	Bolt	
5	339402X1	X	Nut	M10
6	**D44104700**	1	Finger	Left Hand
7	D40067600	X	Screw	
8	**D44104500**	39	Finger	20' - 6,16M
	D44104500	43	Finger	22' - 6,77M
9	**D44104600**	1	Finger	Right Hand
11	**D44120500**	1	Cap	
12	D28283104	1	Support	Up to Serial or Engine Number 939559
13	339337X1	2	Cap Screw	M8 X 30
14	D20400414	4	Washer	
15	394367X1	2	Locknut	M8
16	D28230830	2	Guard	22' - 6,77M
	D28230831	1	Guard	20' - 22'
				6,16M - 6,77M
	D28200314	1	Guard	20' - 6,16M
	D28200738	1	Guard	20' - 6,16M
19	D28283009	2	Blade	18' - 5,56M
				CPL.
	D28283010	2	Knife Back	20' - 6,16M
				CPL.
	D28283865	2	Blade	22' - 6,77M
				CPL.
	D28283011	2	Toggle	
20	D28281492	2	Knife Back	20' - 6,16M
	D28281493	2	Knife Back	22' - 6,77M
21	**D44103700**	X	Tr Knife Blades	
22	**D44103800**	X	Half Section	
23	**D41306100**	X	Rivet	
24	**D41306200**	X	Rivet	
25	**D44104000**	1	Half Section	
29	D49040900	X	Ear Lifter	
30	D49040400	X	Spring	
31	339019X1	X	Cap Screw	M10 X 50
32	D49040600	21	Roller	20' - 6,16M
	D49040600	23	Roller	22' - 6,77M
33	339019X1	X	Cap Screw	M10 X 50
34	339560X1	2	Cap Screw	M6 X 16
35	D26500317	4	Spring	(16)
36	D28230841	4	Spring	(16)
37	339337X1	4	Cap Screw	M8 X 30
38	D28281324	1	Wobble Drive	[B]
				Cpl.
	D44127800	1	Box	[B]
				(38)
	D44126500	1	Box	[C]
				(38)
39	D44128800	1	Bearing Needle	(38)
40	D44129400	1	Connector	(38)
41	D46116500	1	Valve	(38)
42	D44129100	1	Nut	(38)
43	D44129200	1	Washer	(38)
44	D41668400	2	Roller Bearing	(38)
45	D44127900	1	Housing	[B]
				(38)
	D44126400	1	Housing	[C]
				(38)
46	D44128000	2	Journal	[B]
				(38)
	D44125900	1	Journal	[C]
				(38)
47	D44129300	1	Shaft	(38)
48	D44128200	1	Cover	[B]
				(38)
	D44126300	1	Cover	[C]
				(38)
49	D41102100	6	Washer	(38)

https://truckmanualshub.com/

Item	Part Number	Qty	Description	Comments
50	339123X1	6	Cap Screw	(38)
				M8 X 20
51	D41669700	1	Bearing Needle	(38)
52	D45412000	1	Gasket	(38)
53	D45481500	1	O Ring	(38)
54	D44128300	1	Bearing Carrier	[B]
				(38)
54	D44126200	1	Bearing Carrier	[C]
				(38)
55	D41102100	2	Washer	(38)
56	D40697200	2	Screw	[B]
				(38)
56	D40697700	2	Screw	[C]
				(38)
57	D40639600	2	Pin	[B]
				(38)
58	D44128400	2	Bush	[B]
				(38)
58	D44126100	2	Bush	[C]
				(38)
59	D44128500	1	Yoke	[B]
				(38)
59	D44126000	1	Yoke	[C]
				(38)
60	D41669800	3	Bearing Needle	(38)
61	D45409500	1	Gasket	(38)
62	D44128600	1	Plug	(38)
63	D45236200	1	Plug	(38)
64	D44127100	1	Hub	(38)
65	D41100900	1	Spring Washer	(38)
66	D40694000	1	Screw	(38)
67	**D41986300**	1	V Belt	
69	D20400426	4	Washer	
70	1440716X1	4	Cap Screw	M12 X 30
74	D20400522	4	Spacer	
75	D40465100	4	Screw	
79	D40698400	2	Screw	
83	1442190X1	1	Locknut	M12
84	D20400426	1	Washer	
85	390826X1	1	Cap Screw	M12 X 100
86	391423X1	1	Split Pin	Diameter 4 X 40
87	**D41054300**	1	Nut	
88	D44126900	1	Flange	
89	D44127000	1	Swivel Arm	
90	D44127200	1	Pulley	
91	D28280986	4	Washer	Up to Serial or Engine Number 939559
92	**D28260362**	2	Clip	
93	1441671X1	X	Screw Special	M10 X 50
94	D20400419	X	Washer	
95	D49040300	X	Ear Lifter	
96	D28284356	4	Union	[A]
97	339662X1	8	Roll Pin	[A]
				Diameter 6 X 28
98	D28284259	2	Sensor	[A]
99	D28284260	2	Sensor	[A]
100	339337X1	4	Cap Screw	[A]
				M8 X 30
101	D40405300	4	Screw	[A]
102	D20400506	20	Washer	[A]
103	D28284363	4	Link	[A]
104	394367X1	8	Locknut	[A]
				M8
105	D28284227	2	Lever	[A]
106	D42611900	8	Pin	[A]
107	D28281693	2	Spring	[A]
108	D28284232	2	Shaft	[A]
109	D46437300	4	Toggle	[A]
110	D41010600	4	Nut	[A]
				M6
111	D28780446	2	Rod	[A]
112	D28284226	2	Lever	[A]

https://truckmanualshub.com/

Item	Part Number	Qty	Description	Comments
113	D28284361	2	Connecting Link	[A]
114	D28284360	2	Plate	[A]
115	**D28780523**	2	Potentiometer	[A]
116	D40464900	2	Screw	[A]
117	339169X1	4	Nut	[A]
				M8
118	394367X1	8	Locknut	[A]
				M8
119	D20400506	16	Washer	[A]
120	339123X1	12	Cap Screw	[A]
				M8 X 20
121	D28284458	4	Bearing Bush	[A]
122	D28284456	4	Bush	[A]
123	1441462X1	2	Locknut	[A]
				M6
124	D28281576	1	Plate	
125	D28281575	1	Shim	
126	D28281574	1	Plate	
127	339010X1	2	Cap Screw	M8 X 40
128	D20400506	2	Washer	
129	394367X1	2	Locknut	M8
130	D18281572	1	Guard	
131	D20400506	3	Washer	
132	394367X1	3	Locknut	M8
133	339761X1	1	Cap Screw	M8 X 25
134	339560X1	X	Cap Screw	M6 X 16
135	1441462X1	X	Locknut	M6
136	D20400404	4	Washer	
137	D40405300	2	Screw	
142	D45483000	1	O Ring	[C]
143	D42650400	2	Pin	

FOOTNOTE [A] OPTIONAL EQUIPMENT AUTO LEVEL
FOOTNOTE [B] USED ONLY IN KNIFE DRIVES WITH 6 HOLES IN BEARING HOUSING BOTTOM
FOOTNOTE [C] USED ONLY IN KNIFE DRIVES WITH 8HOLES IN BEARING HOUSING BOTTOM AND BULGES SIDES

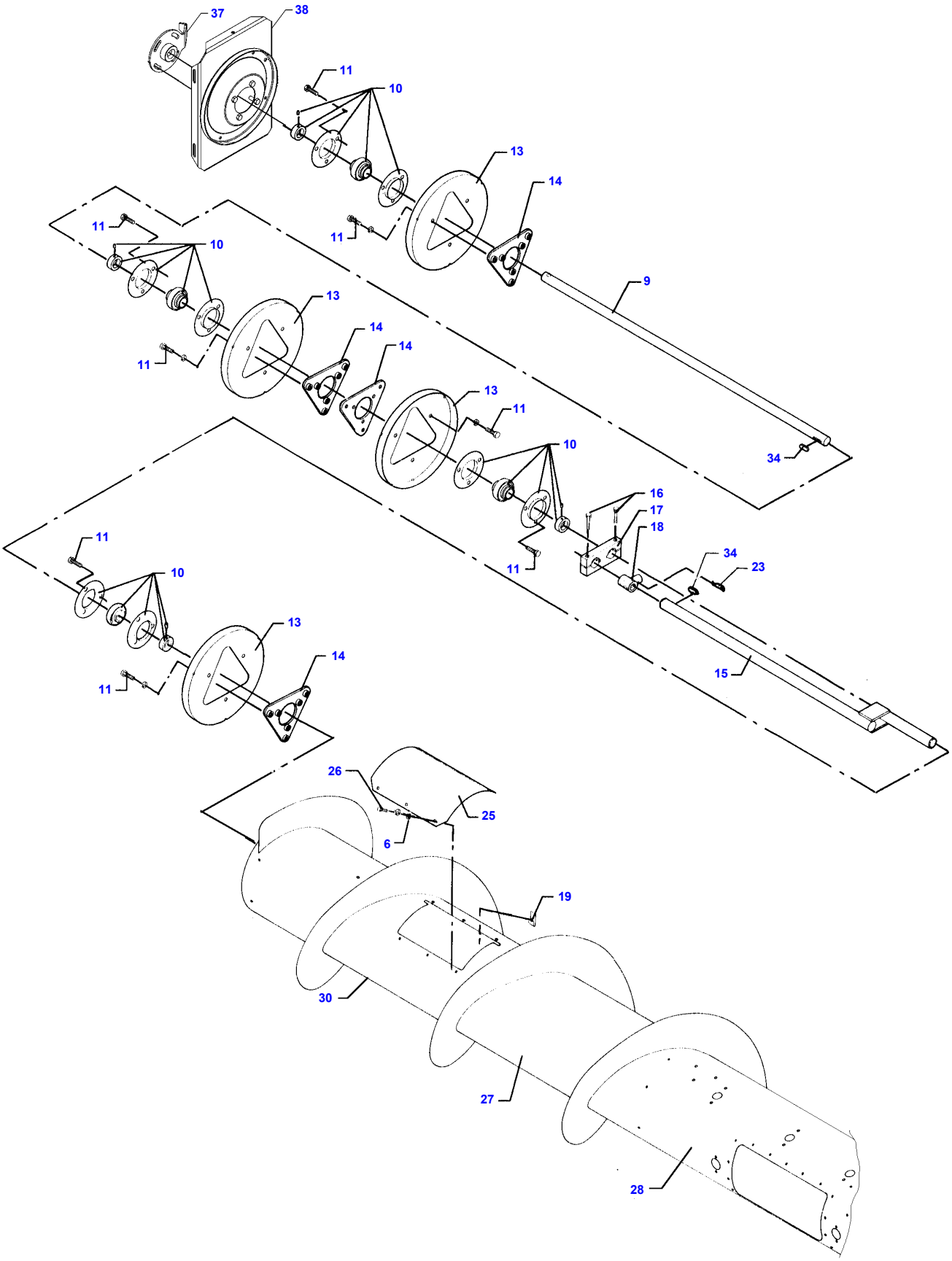

D-ZAZG-007-A

https://truckmanualshub.com/

Item	Part Number	Qty	Description	Comments
6	391038X1	12	Flat Washer	
9	D28283037	1	Shaft	20' - 6,16M
				Up to Serial or Engine Number 939559
	D28283871	1	Shaft	22' - 6,77M
				Up to Serial or Engine Number 939559
	D28285997	1	Shaft	20' - 6,16M
				From Serial or Engine Number 939560
	D28285797	1	Auger	22' - 6,77M
				From Serial or Engine Number 939560
10	D41707800	4	Bearing	
11	339814X1	24	Cap Screw	M10 X 35
13	D28280014	4	Plate	
14	D28283847	4	Bearing Plate	
15	D28285977	1	Crankshaft	
16	3009498X1	2	Cap Screw	M10 X 55
17	D28283039	1	Arm	
18	**D28251831**	15	Bearing Carrier	
19	D43428200	6	Nut	M6
23	D28283853	15	Hair Pin	
25	D18283070	1	Cover	Up to Serial or Engine Number 939559
	D18285312	1	Cover	From Serial or Engine Number 939560
26	339666X1	6	Cap Screw	M6 X 20
27	D18283953	1	Table Auger	20'-6,16M
				Up to Serial or Engine Number 939559
	D18285986	1	Table Auger	20'-6,16M
				From Serial or Engine Number 939560
	D18284500	1	Table Auger	22' - 6,77M
				Up to Serial or Engine Number 939559
	D28286153	1	Auger	22'-6,77M
				From Serial or Engine Number 939560
	D28285985	1	Table Auger	18' - 5,56M
28	D28283012	1	Body	
30	D28283034	1	Body	Right Hand 20' - 6,16M
				Up to Serial or Engine Number 940147
	D28286007	1	Body	Right Hand 20' - 6,16M
				From Serial or Engine Number 940148
	D28283876	1	Body	Right Hand 22' - 6,77M
34	339441X1	2	Key Parallel	
37	D28285130	1	Fitting	From Serial or Engine Number 939560
38	D28285102	1	Cover	

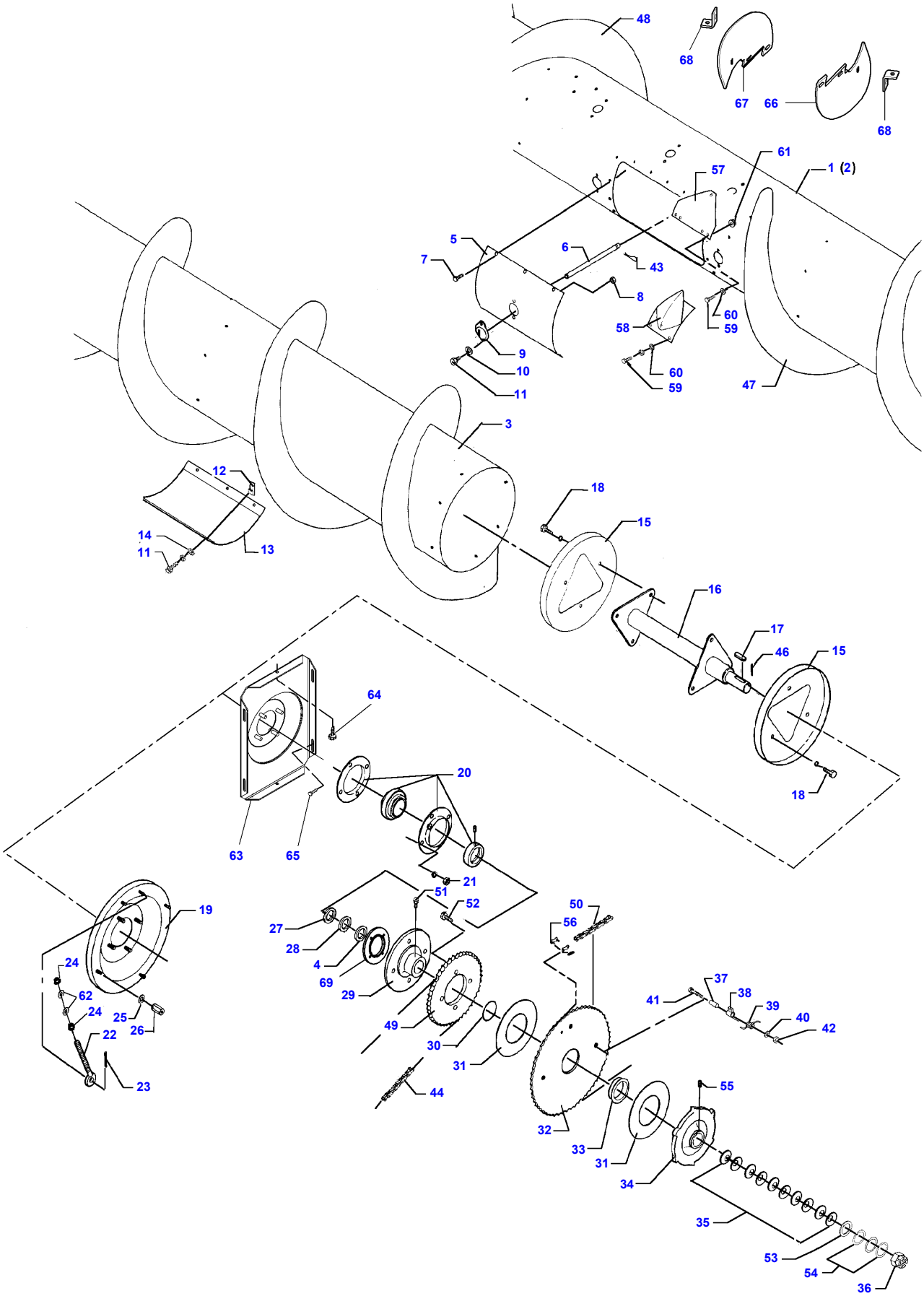
48
68
67
66
68
61
57
1 (2)
5
7
6
43
8
60
59
58
9
10
11
60
59
47
3
12
14
11
13
18
15
16
17
46
15
18
64
20
63
65
21
51
52
19
27
28
4
69
29
50
56
24
62
24
25
26
22
23
49
30
31
44
41
37
38
39
40
42
32
33
31
34
55
35
53
54
36

D-ZAZH-011-B

https://truckmanualshub.com/

Item	Part Number	Qty	Description	Comments
1	D18283953	1	Table Auger	20' - 6,16M Up to Serial or Engine Number 939559
	D18285986	1	Table Auger	20'-6,16M From Serial or Engine Number 939560
	D18284500	1	Table Auger	22' - 6,77M Up to Serial or Engine Number 939559
	D28286153	1	Auger	22'-6,77M From Serial or Engine Number 939560
	D28285985	1	Table Auger	18' - 5,56M
2	D28283012	1	Body	
3	D28286006	1	Body	Left Hand 20' - 6,16M
	D28283875	1	Body	Left Hand 22' - 6,77M
4	D41653500	2	Washer	
5	D18283078	1	Cover	
6	**D28283815**	15	Finger	
7	339560X1	8	Cap Screw	M6 X 16
8	1441462X1	X	Locknut	M6
9	**D28283060**	15	Bush	
10	D20400404	X	Washer	
11	339666X1	X	Cap Screw	M6 X 20
12	D43428200	6	Nut	M6
13	D18283070	1	Cover	Up to Serial or Engine Number 939559
	D18285312	1	Cover	From Serial or Engine Number 939560
14	391038X1	6	Flat Washer	
15	D28280014	2	Plate	
16	D28285100	1	Drive Shaft	
17	D43106800	1	Key	
18	339814X1	X	Cap Screw	M10 X 35
19	D18283053	1	Plate	Up to Serial or Engine Number 939559
20	D41716500	1	Bearing	
21	3009695X1	4	Nut	M12
22	D28281387	1	Screw	Up to Serial or Engine Number 939559
	D28384055	1	Idler	From Serial or Engine Number 939560
23	339129X1	1	Split Pin	Diameter 3,2 X 25
24	339402X1	2	Nut	M10
25	D20400416	4	Washer	
26	D28280729	4	Nut	Up to Serial or Engine Number 939559
27	D41653500	X	Washer	[C]
28	D41653500	4	Washer	[C]
29	D28283004	1	Washer	
30	D45481600	1	O Ring	
31	**D45904300**	2	Friction Disc	
32	D28283153	1	Sprocket	Up to Serial or Engine Number 937883 20'-22' 6,16 - 6,77 M
	D28286046	1	Sprocket	From Serial or Engine Number 937898 Up to Serial or Engine Number 940322 22' - 6,77 M
	D28286046	1	Sprocket	From Serial or Engine Number 937898 20' - 6,16 M
	D28285443	1	Sprocket	From Serial or Engine Number 940323 22' - 6,77 M
33	D28283000	1	Insert	Up to Serial or Engine Number 937883
	D28286049	1	Insert	From Serial or Engine Number 937898
34	D28286166	1	Clutch Disc	22' - 6,77M
35	D41112400	10	Washer	
36	D41054100	1	Castle Nut	
37	D28281431	1	Spacer	
	D28282429	1	Bush	From Serial or Engine Number 941444
38	D28281432	1	Support	From Serial or Engine Number 941444
39	D28282433	1	Spring	From Serial or Engine Number 941444
40	D20400507	1	Spacer	From Serial or Engine Number 940222
41	3009498X1	1	Cap Screw	M10 X 55 From Serial or Engine Number 940222
42	1440329X1	1	Locknut	M10 From Serial or Engine Number 940222
43	D28283853	15	Hair Pin	
44	**D42332800**	1	Chain	
46	354066X1	1	Split Pin	5/32" X 1
47	D28286016	1	Auger	Right Hand 20' - 6,16M
	D28284502	1	Auger	Right Hand 22' - 6,77M

https://truckmanualshub.com/

Item	Part Number	Qty	Description	Comments
48	D28286017	1	Auger	Left Hand 20' - 6,16M
48	D28284501	1	Auger	Left Hand 22' - 6,77M
49	D28283182	1	Sprocket	
50	**D42329200**	1	Chain	
51	339761X1	1	Cap Screw	M8 X 25
52	339123X1	4	Cap Screw	M8 X 20
53	D20400520	1	Spacer	
54	D20400523	4	Spacer	
55	1441858X1	1	Grease Fitting	M6
56	**D42365500**	1	Link	
57	D28281694	4	Threaded Part	[A] Up to Serial or Engine Number 61489
58	D28283297	4	Finger	[A] Up to Serial or Engine Number 61489
59	339123X1	20	Cap Screw	[A] M8 X 20
60	D20400506	20	Washer	[A]
61	394367X1	12	Locknut	[A] M8
62	D20400471	2	Washer	
63	D28285102	1	Cover	From Serial or Engine Number 939560
64	D40633300	2	Pin	From Serial or Engine Number 939560
65	390809X1	4	Screw Special	From Serial or Engine Number 939560 M10 X 25
66	D28285974	1	Auger	
67	D28285975	1	Auger	
68	D28285981	2	Bracket	
69	D28285426	1	Shim	

FOOTNOTE [A] OPTIONAL EQUIPMENT STANDARD COMBINE, STANDARD EQUIPMENT AUTO LEVEL COMBINE,SLOPES

FOOTNOTE [C] OPTIONAL

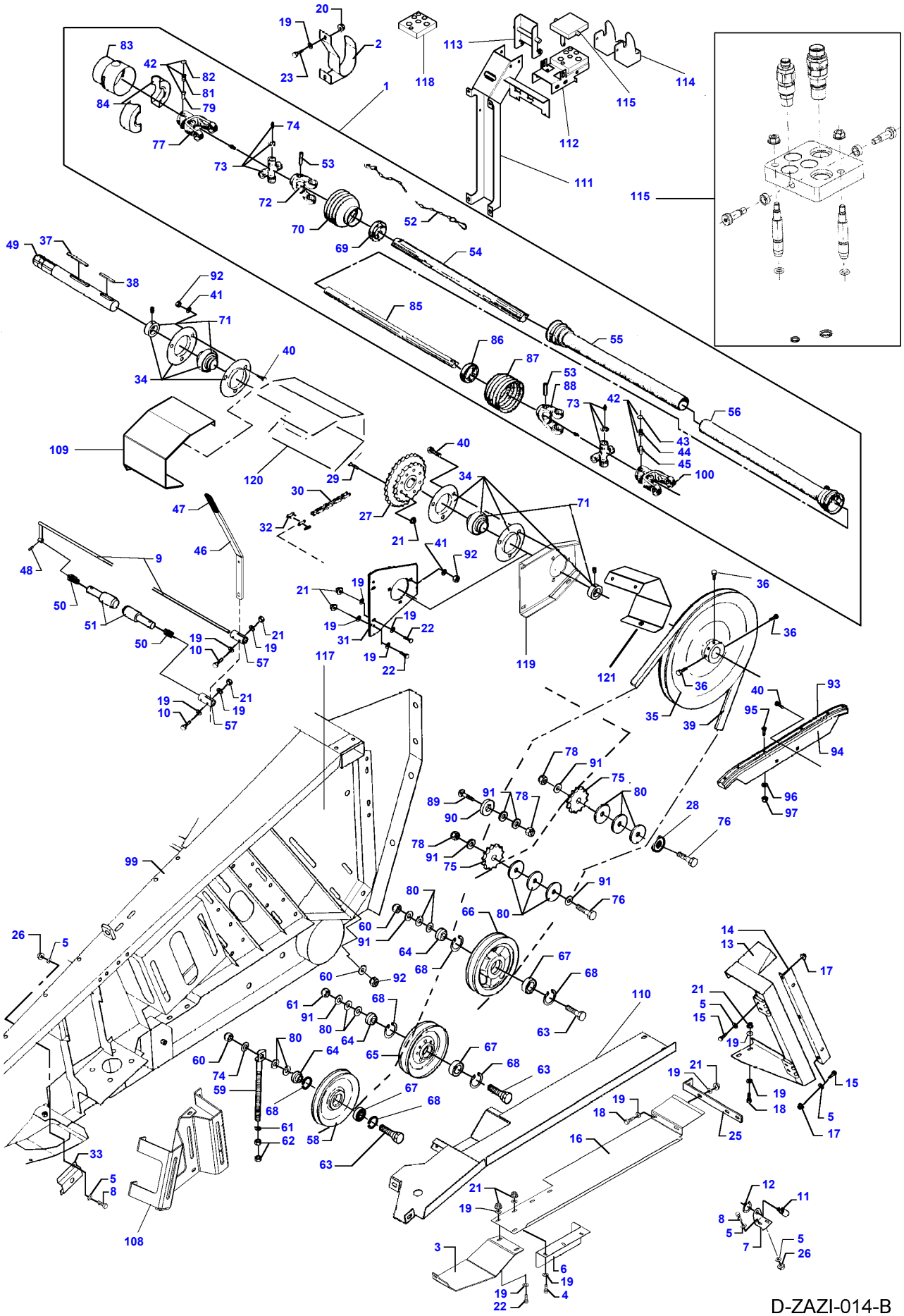
D-ZAZI-014-B

https://truckmanualshub.com/

Item	Part Number	Qty	Description	Comments
1	D45609100	1	Shaft	20' - 6,16M Up to Serial or Engine Number 942481
	D28273974	1	Shaft	20' - 6,16M From Serial or Engine Number 942482 WWHU
	D45609300	1	Shaft	22' - 6,77M Up to Serial or Engine Number 942981
	D28273973	1	Shaft	22' - 6,77M From Serial or Engine Number 942482 WWHU
2	D28281345	1	Stirrup	
3	D28281709	1	Guard	Up to Serial or Engine Number 939559
4	339123X1	X	Cap Screw	Repairs and replaces d40404900
5	D20400470	X	Washer	
6	D28281708	1	Protection.	Replace and repair. Old interchangeable with new D18281708 Up to Serial or Engine Number 939559
7	D28281577	1	Angle.	Up to Serial or Engine Number 939559
8	D40402600	X	Cap Screw	
9	D28285117	1	Rod	
10	D40423900	X	Cap Screw	
11	D43427500	1	Pin	
12	D42555500	1	Circlip	
13	D18280541	1	Post	Up to Serial or Engine Number 939559
14	D18280550	1	Angle.	Up to Serial or Engine Number 939559
15	D40402400	X	Cap Screw	
16	D28281707	1	Plate	Up to Serial or Engine Number 939559
17	1441462X1	X	Locknut	
18	D40405100	X	Cap Screw	
19	D20400506	X	Washer	
20	394367X1	X	Locknut	
21	394367X1	X	Locknut	
22	D40405000	X	Cap Screw	
23	D40404700	X	Cap Screw	
25	D28283924	1	Reinforcement	Up to Serial or Engine Number 939559
26	1441462X1	X	Locknut	Replace and repair. Old not interchangeable with new D41087400
27	D28285385	1	Gear	
28	D20400460	1	Washer	
29	D40423600	8	Cap Screw	
30	**D42329200**	1	Chain	
31	D28284766	1	Support	Up to Serial or Engine Number 942481
32	**D42365500**	1	Link	
33	D28281578	1	Retainer	Up to Serial or Engine Number 939559
34	D41707800	2	Bearing	
35	D28285423	1	Pulley	
36	D40697900	3	Screw	
37	D43114900	1	Key	
38	D43105000	1	Key	
39	**D41986300**	1	V Belt	
40	D40066800	6	Screw Special	
41	D20400419	6	Washer	
42	D45632400	2	Tube	
43	D45645700	2	Washer	
44	D45667300	2	Spring	
45	D45665300	2	Pin	
46	D28285127	1	Lever	
47	D43484900	1	Lever	
48	D42612200	X	Pin	
49	D28285125	1	Shaft	Up to Serial or Engine Number 941712
	D28286164	1	Shaft	From Serial or Engine Number 941713 Up to Serial or Engine Number 942481
	D28274027	1	Shaft	From Serial or Engine Number 942482
50	D27100794	2	Spring	
51	D28283200	1	Shaft	
52	D45681800	2	Chain	
53	D42619100	2	Pin	
54	D45631100	1	Tube	20' - 6,16M
	D45633700	1	Tube	22' - 6,77M
55	D45631900	1	Tube	20' - 6,16M
	D45633900	1	Tube	22' - 6,77M
56	D45632300	1	Tube	20' - 22' 6,16M - 6,77M

https://truckmanualshub.com/

Item	Part Number	Qty	Description	Comments
57	D28285126	2	Fork	
58	D28760574	1	Pulley	Valid from machine/table no,can be used in new as well as in older machines 938215
59	D28260181	1	Bolt	Up to Serial or Engine Number 939559
60	D41087900	3	Locknut	
61	D20400416	X	Washer	
62	D41010800	X	Nut	
63	D28760156	3	Screw	
64	D28760155	3	Bush	
65	D28752130	1	Pulley	
66	D28280819	1	Pulley	
67	339599X1	3	Bear. 6204 2rs	
68	339199X1	6	Circlip	
69	D45630600	1	Ring	
70	D45630400	1	Guard	
71	D41663400	2	Ball Bearing	
72	D45630200	1	Yoke	
73	D45630300	2	Hub	
74	D43001600	2	Grease Fitting	
75	D41716800	2	Tightener	
76	D40433600	2	Cap Screw	
77	D45633100	1	Yoke	[A]
78	D41087900	X	Locknut	
79	D45665300	2	Pin	
80	D20400460	X	Washer	
81	D45667300	2	Spring	
82	D45645700	2	Washer	
83	D45632900	1	Bush	
84	D45633300	1	Tube	
85	D45631500	1	Tube	20' - 22' 6,16M - 6,77M
86	D45630700	1	Ring	
87	D45630500	1	Guard	
88	D45630100	1	Yoke	
89	D40073100	1	Screw	
90	D28280981	1	Spacer	
91	D28181284	X	Washer	
92	1440329X1	X	Locknut	Repairs and replaces D41087600
93	D28280787	1	Rail	
94	D28281365	1	Crossmember	Replace and repair. Old interchangeable with new D18281365
95	D40609300	6	Screw	
96	D20400466	6	Washer	
97	D41087200	6	Locknut	
99	D18285512	1	Table Housing	20' - 6,16M Up to Serial or Engine Number 939559
99	D18285828	1	Housing	20' - 6,16M From Serial or Engine Number 939560
99	D18285513	1	Housing	22' - 6,77M Up to Serial or Engine Number 939559
99	D18285827	1	Housing	22' - 6,77M From Serial or Engine Number 939560 Up to Serial or Engine Number 942481
99	D28273743	1	Housing	20' - 6,16M From Serial or Engine Number 942482
99	D28273732	1	Housing	22' - 6,77M From Serial or Engine Number 942482
100	D45633200	1	Yoke	[A]
108	D18285089	1	Bracket	From Serial or Engine Number 939560 Up to Serial or Engine Number 940199
108	D18285454	1	Bracket	From Serial or Engine Number 940200
109	D18285795	1	Guard	From Serial or Engine Number 939560 Up to Serial or Engine Number 940199
109	D28285290	1	Shield	From Serial or Engine Number 940200 Up to Serial or Engine Number 942481
110	D28285366	1	Guard	From Serial or Engine Number 939560
111	D28285518	1	Bracket	
112	D28285519	1	Support	CPL.
113	D28285497	1	Support	
114	D28285494	1	Stirrup	
115	D45140044	1	Clutch	CPL. See Page - Reference Number 001-0034

https://truckmanualshub.com/

Item	Part Number	Qty	Description	Comments
117	D28285445	1	Bracket	[C]
118	D28285492	1	Rubber Patch	
119	D28284766	1	Support	From Serial or Engine Number 942482
120	D28284767	1	Shield	From Serial or Engine Number 942482
121	D28284832	1	Shield	

FOOTNOTE [A] DELIVERED IN SETS
FOOTNOTE [C] ORDER D28285445 + D18285413

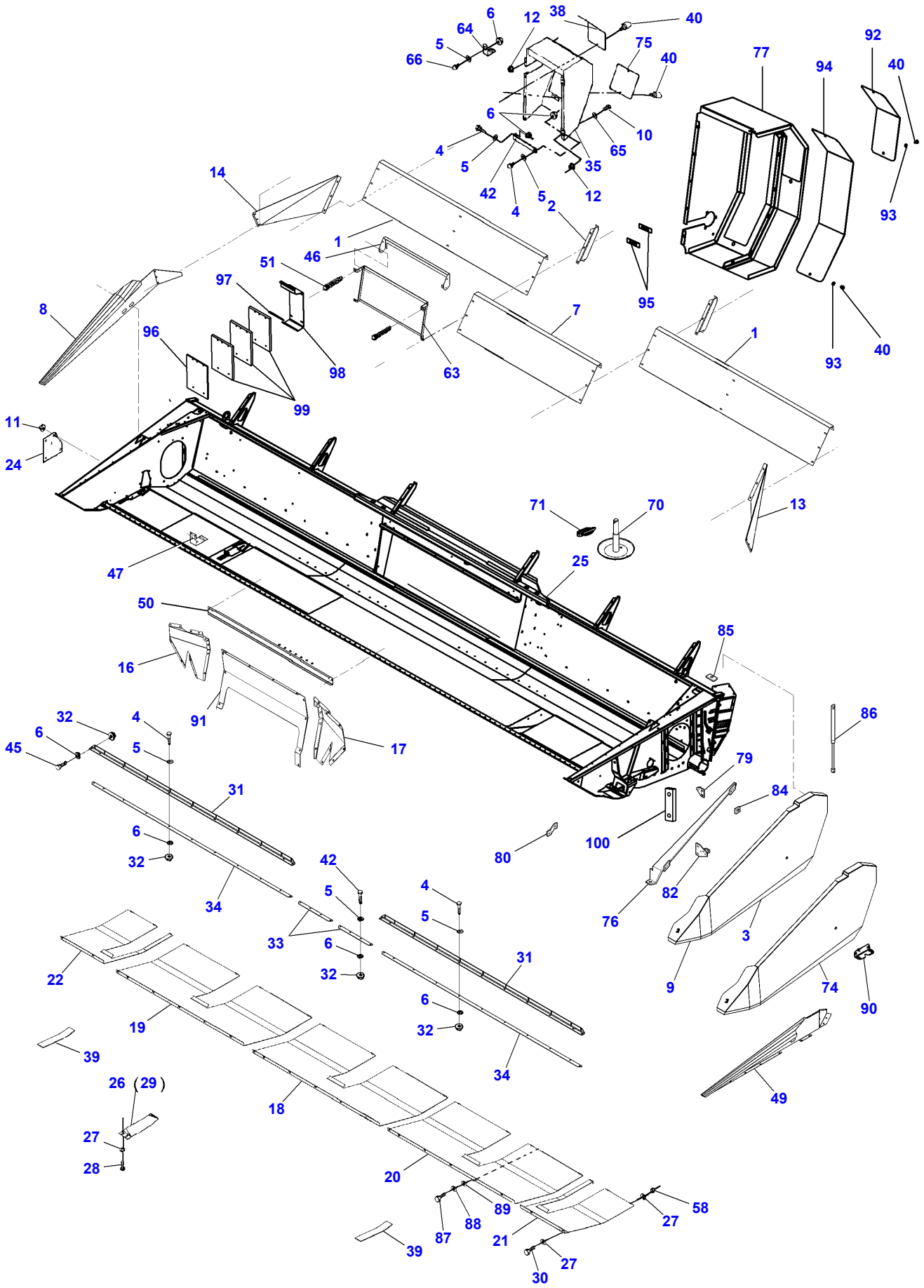
6
12
38
40
64
5
66
75
40
77
94
92
40
6
10
4
65
5
35
42
5
12
4
2
93
14
1
46
51
97
95
8
7
96
98
63
1
93
40
99
11
24
71
70
13
47
25
50
85
16
91
86
32
4
6
45
5
17
79
31
84
6
100
32
80
42
82
34
5
4
76
5
3
33
6
31
22
32
9
74
90
6
19
32
39
34
49
26 (29)
18
27
28
20
89
58
88
27
87
21
39
27
30

D-ZAAZ-014-A

https://truckmanualshub.com/

Item	Part Number	Qty	Description	Comments
1	D18273992	2	Plate	Right Hand 20' - 6,16M
	D18273993	2	Plate	Left Hand 20' - 6,16M
	D18273990	2	Plate	Right Hand 22' - 6,77M
	D18273991	2	Plate	Left Hand 22' - 6,77M
2	D18285124	2	Support	
3	D18280552	1	Guard	Up to Serial or Engine Number 939559
4	339123X1	X	Cap Screw	Repairs and replaces D40404900
5	D20400506	X	Washer	
6	394367X1	X	Locknut	
7	D18284669	1	Guard	
8	D18283554	1	Panel	
9	D18281582	1	Guard	Up to Serial or Engine Number 939559
10	D40402400	X	Cap Screw	
11	D20400404	X	Washer	
12	1441462X1	X	Locknut	
13	D18285122	1	Guard	
14	D18285121	1	Guard	
16	D28284741	1	Guard	Right Hand
17	D28284743	1	Guard	Left Hand
18	D28280255	4	Wearplate	[A] Replace and repair. Old interchangeable with new D18280255 22' - 6,77M Up to Serial or Engine Number 939559
	D28285811	2	Wearplate	[A] 22'-6,77M From Serial or Engine Number 939560
	D28280256	3	Wearplate	[A] Replace and repair. Old interchangeable with new D18280256 20' - 6,16M Up to Serial or Engine Number 939559
	D28285078	1	Wearplate	[A] 20'-6,16M From Serial or Engine Number 939560
19	D28285812	1	Wearplate	[A] 22' - 6,77M From Serial or Engine Number 939560
	D28285085	1	Wearplate	[A] 20'-6,16M From Serial or Engine Number 939560
20	D28285813	1	Wearplate	[A] 22' - 6,77M From Serial or Engine Number 939560
	D28285084	1	Wearplate	[A] 20' - 6,16M From Serial or Engine Number 939560
21	D28280253	1	Wearplate	[A] 22' - 6,77M Up to Serial or Engine Number 939559
	D28280257	1	Wearplate	[A] Left Hand 20' - 6,16M Replace and repair. Old interchangeable with new D18280257 Up to Serial or Engine Number 939559
	D28285082	1	Wearplate	[A] 20' - 22' 6,16M - 6,77M From Serial or Engine Number 939560
22	D28280254	1	Wearplate	[A] Right Hand 22' - 6,77M Up to Serial or Engine Number 939559
	D28280258	1	Wearplate	[A] Right Hand 20' - 6,16M Replace and repair. Old interchangeable with new D18280258 Up to Serial or Engine Number 939559
	D28285081	1	Wearplate	[A] From Serial or Engine Number 939560
24	D28280359	1	Shutter	
25	D28273743	1	Housing	20'-6,16M
	D28273732	1	Housing	22' - 6,77M
26	D28251486	3	Cover	20' - 6,16M Up to Serial or Engine Number 939559
	D28251486	4	Cover	22' - 6,77M
27	D20400506	X	Washer	

https://truckmanualshub.com/

Item	Part Number	Qty	Description	Comments
28	D20400470	X	Washer	
29	D28285194	3	Cover	20' - 6,16M
29	D28285194	4	Cover	22' - 6,77M
30	D40423700	X	Cap Screw	
31	D28285651	2	Angle.	20' - 6,16M
31	D28285652	2	Angle.	22' - 6,77M
32	D41010700	X	Nut	
33	D28285197	2	Scraper	
34	D28286127	2	Stripper	20' - 6,16M
34	D28286128	2	Scraper	22' - 6,77M
35	D18283723	1	Panel	Up to Serial or Engine Number 939559
38	D18280965	1	Cover	Up to Serial or Engine Number 939559
39	D28283984	2	Wearplate	
40	D43427500	4	Pin	
42	D28283924	1	Reinforcement	Up to Serial or Engine Number 939559
45	D40405000	X	Cap Screw	
46	D28285264	1	Guard	22' - 6,77M
46	D18285763	1	Protection.	20' - 6,16M
47	D28780381	X	Retainer	
49	D18285590	1	Side	
50	D18285801	1	Plate	Up to Serial or Engine Number 939559
50	D28285375	1	Plate	From Serial or Engine Number 939560
51	D18285097	1	Brace	
58	394367X1	X	Locknut	
63	D28285263	1	Retainer	22' - 6,77M
63	D18285767	1	Bracket	20' - 6,16M
64	D18250648	1	Clip	
65	D20400470	X	Washer	
66	D40404700	X	Cap Screw	
70	D28286101	1	Support	
71	D41446200	1	Split Pin	
74	D18284758	1	Guard	
75	D28285446	1	Console	From Serial or Engine Number 939560
76	D18285175	1	Shield	From Serial or Engine Number 939560
77	D18284755	1	Guard	From Serial or Engine Number 939560
79	D18285293	1	Support	From Serial or Engine Number 939560
				Up to Serial or Engine Number 940199
79	D28285447	1	Console	From Serial or Engine Number 940200
80	D18285097	1	Brace	From Serial or Engine Number 939560
				Up to Serial or Engine Number 940199
82	D28285446	1	Console	From Serial or Engine Number 939560
84	D28285271	3	Dog	From Serial or Engine Number 939560
85	D28285289	1	Support	From Serial or Engine Number 939560
86	D45056600	1	Gas Strut	From Serial or Engine Number 939560
				Up to Serial or Engine Number 940199
86	D45050060	1	Gas Strut	From Serial or Engine Number 940200
87	D40407800	26	Cap Screw	
88	D41101900	26	Spring Washer	
89	D20400419	26	Washer	
90	D43419900	1	Lock	
91	D28273980	1	Plate	
92	D18284752	1	Guard	
93	D42555500	1	Circlip	
94	D18274034	1	Guard	
95	D43427300	1	Spring	
96	D28274181	1	Plate	
97	D28274049	1	Plate	
98	D28274048	1	Plate	
99	D28282847	1	Plate	
100	D28285487	2	Bracket	

FOOTNOTE [A] BOTH AL AND STD

https://truckmanualshub.com/

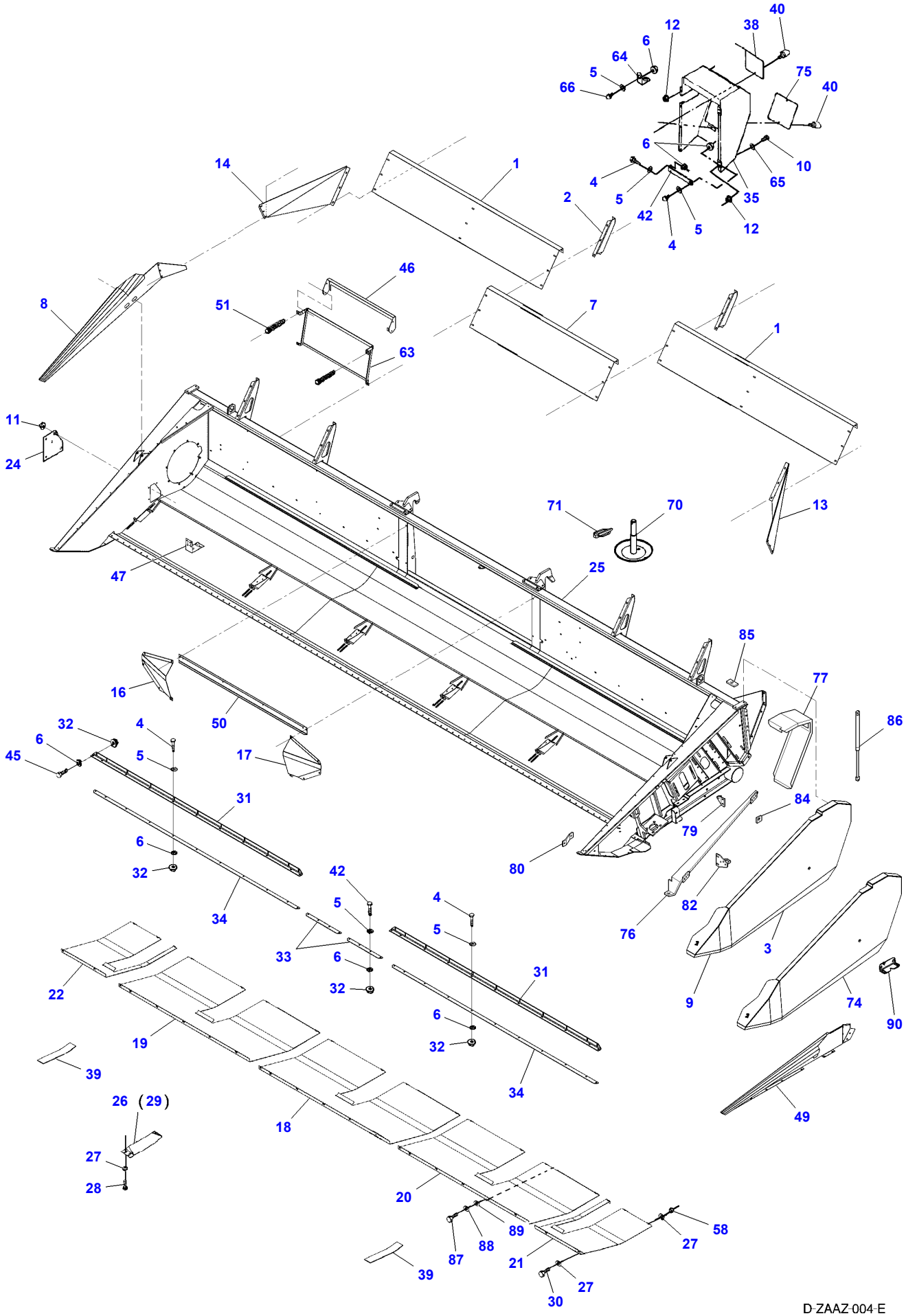

https://truckmanualshub.com/

Item	Part Number	Qty	Description	Comments
1	D18285663	2	Plate	20' - 6,16M
	D18285664	2	Plate	22' - 6,77M
2	D18285124	2	Support	
3	D18280552	1	Guard	Up to Serial or Engine Number 939559
4	339123X1	X	Cap Screw	Repairs and replaces D40404900
5	D20400506	X	Washer	
6	394367X1	X	Locknut	
7	D18284669	1	Guard	
8	D18283554	1	Panel	
9	D18281582	1	Guard	Up to Serial or Engine Number 939559
10	D40402400	X	Cap Screw	
11	D20400404	X	Washer	
12	1441462X1	X	Locknut	
13	D18285122	1	Guard	
14	D18285121	1	Guard	
16	D18285313	1	Guard	Right Hand Up to Serial or Engine Number 939559
	D28285373	1	Guard	From Serial or Engine Number 939560 Right Hand
17	D18285314	1	Guard	Left Hand Up to Serial or Engine Number 939559
	D28285374	1	Guard	From Serial or Engine Number 939560 Left Hand
18	D28280255	4	Wearplate	[A] Replace and repair. Old interchangeable with new D18280255 22' - 6,77M Up to Serial or Engine Number 939559
	D28285811	2	Wearplate	[A] 22'-6,77M From Serial or Engine Number 939560
	D28280256	3	Wearplate	[A] Replace and repair. Old interchangeable with new D18280256 20' - 6,16M Up to Serial or Engine Number 939559
	D28285078	1	Wearplate	[A] 20'-6,16M From Serial or Engine Number 939560
19	D28285812	1	Wearplate	[A] 22' - 6,77M From Serial or Engine Number 939560
	D28285085	1	Wearplate	[A] 20'-6,16M From Serial or Engine Number 939560
20	D28285813	1	Wearplate	[A] 22' - 6,77M From Serial or Engine Number 939560
	D28285084	1	Wearplate	[A] 20'-6,16M From Serial or Engine Number 939560
21	D28280253	1	Wearplate	[A] 22' - 6,77M Up to Serial or Engine Number 939559
	D28280257	1	Wearplate	[A] Left Hand 20' - 6,16M Replace and repair. Old interchangeable with new D18280257 Up to Serial or Engine Number 939559
	D28285082	1	Wearplate	[A] 20' - 22' 6,16M - 6,77M From Serial or Engine Number 939560
22	D28280254	1	Wearplate	[A] Right Hand 22' - 6,77M Up to Serial or Engine Number 939559
	D28280258	1	Wearplate	[A] Right Hand 20' - 6,16M Replace and repair. Old interchangeable with new D18280258 Up to Serial or Engine Number 939559
	D28285081	1	Wearplate	[A] From Serial or Engine Number 939560
24	D28280359	1	Shutter	
25	D18285512	1	Table Housing	20' - 6,16M Up to Serial or Engine Number 939559

https://truckmanualshub.com/

Item	Part Number	Qty	Description	Comments
25	D18285828	1	Housing	20'-6,16M
				From Serial or Engine Number 939560
25	D18285513	1	Housing	22' - 6,77M
				Up to Serial or Engine Number 939559
25	D18285827	1	Housing	22' - 6,77M
				From Serial or Engine Number 939560
26	D28251486	3	Cover	20' - 6,16M
				Up to Serial or Engine Number 939559
26	D28251486	4	Cover	22' - 6,77M
27	D20400506	X	Washer	
28	D20400470	X	Washer	
29	D28285194	3	Cover	20' - 6,16M
29	D28285194	4	Cover	22' - 6,77M
30	D40423700	X	Cap Screw	
31	D28285651	2	Angle.	20' - 6,16M
31	D28285652	2	Angle.	22' - 6,77M
32	D41010700	X	Nut	
33	D28285197	2	Scraper	
34	D28286127	2	Stripper	20' - 6,16M
34	D28286128	2	Scraper	22' - 6,77M
35	D18283723	1	Panel	Up to Serial or Engine Number 939559
38	D18280965	1	Cover	Up to Serial or Engine Number 939559
39	D28283984	2	Wearplate	
40	D43427500	4	Pin	
42	D28283924	1	Reinforcement	Up to Serial or Engine Number 939559
45	D40405000	X	Cap Screw	
46	D28285264	1	Guard	22' - 6,77M
46	D18285763	1	Protection.	20' - 6,16M
47	D28780381	X	Retainer	
49	D18285590	1	Side	
50	D18285801	1	Plate	Up to Serial or Engine Number 939559
50	D28285375	1	Plate	From Serial or Engine Number 939560
51	D18285097	1	Brace	
58	394367X1	X	Locknut	
63	D28285263	1	Retainer	22' - 6,77M
63	D18285767	1	Bracket	20' - 6,16M
64	D18250648	1	Clip	
65	D20400470	X	Washer	
66	D40404700	X	Cap Screw	
70	D28286101	1	Support	
71	D41446200	1	Split Pin	
74	D18284758	1	Guard	From Serial or Engine Number 939560
75	D28285446	1	Console	From Serial or Engine Number 939560
76	D18285175	1	Shield	From Serial or Engine Number 939560
77	D18285104	1	Guard	From Serial or Engine Number 939560
79	D18285293	1	Support	From Serial or Engine Number 939560
				Up to Serial or Engine Number 940199
79	D28285447	1	Console	From Serial or Engine Number 940200
80	D18285097	1	Brace	From Serial or Engine Number 939560
				Up to Serial or Engine Number 940199
82	D28285446	1	Console	From Serial or Engine Number 939560
84	D28285271	3	Dog	From Serial or Engine Number 939560
85	D28285289	1	Support	From Serial or Engine Number 939560
86	D45056600	1	Gas Strut	From Serial or Engine Number 939560
				Up to Serial or Engine Number 940199
86	D45050060	1	Gas Strut	From Serial or Engine Number 940200
87	D40407800	26	Cap Screw	
88	D41101900	26	Spring Washer	
89	D20400419	26	Washer	
90	D43419900	1	Lock	

FOOTNOTE [A] BOTH AL AND STD

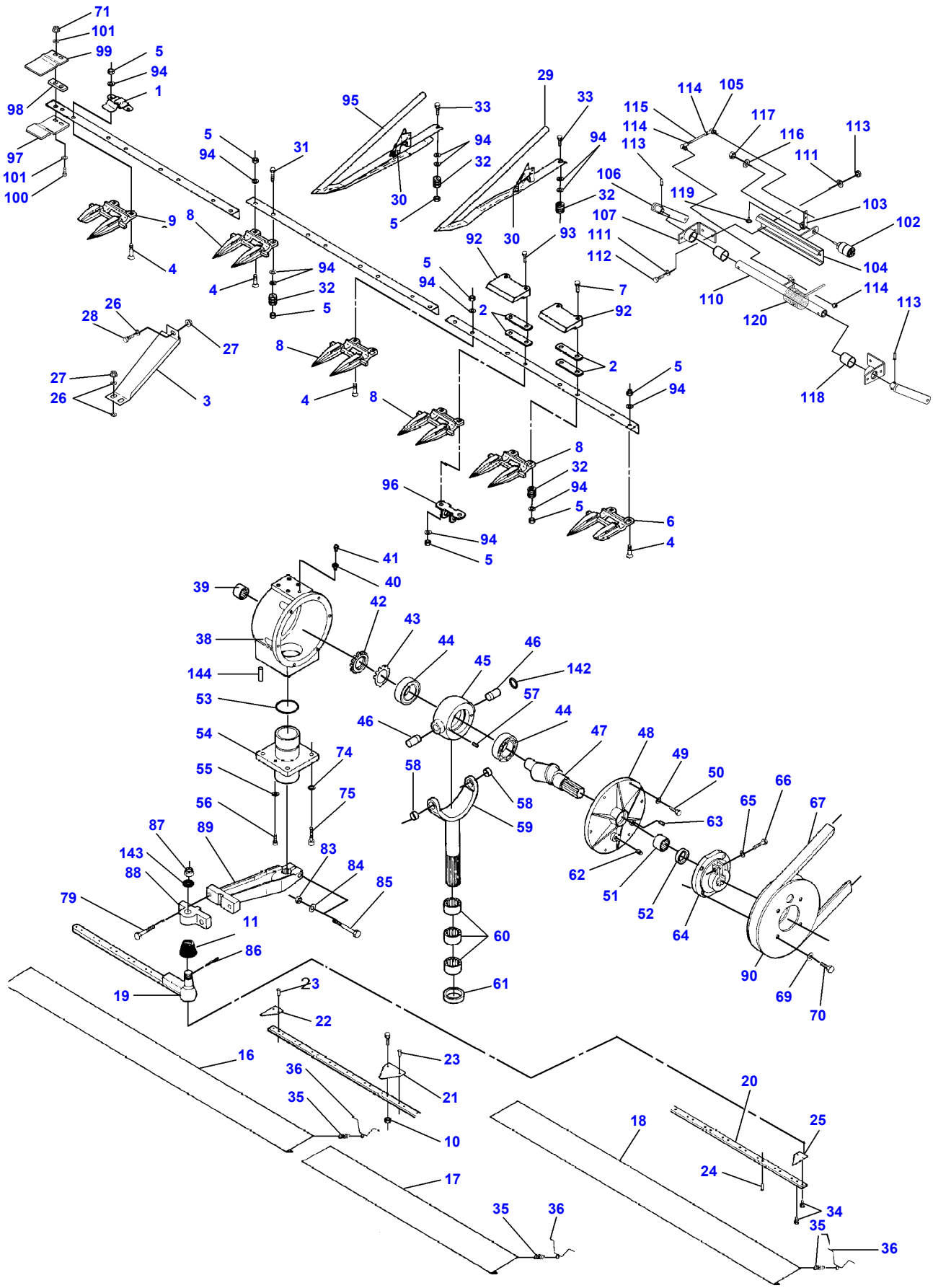
71
101
99
5
94
1
98
97
101
100
9
4
5
94
31
8
4
94
32
5
95
33
94
32
30
5
29
33
94
32
30
92
93
5
94
2
7
92
2
5
94
26
28
27
27
26
3
8
4
8
8
32
94
5
96
94
5
6
4
114
105
115
114
113
117
116
113
111
106
119
103
107
102
111
112
104
110
114
120
113
118
41
40
39
42
43
38
44
46
45
142
144
53
57
44
46
54
47
48
49
74
55
58
50
66
75
58
65
67
56
59
63
87
89
83
143
84
88
85
62
79
51
52
11
64
60
86
90
19
23
61
69
70
22
16
23
36
21
35
20
18
25
10
24
17
34
35
36
35
36

D-ZAAA-006-B

https://truckmanualshub.com/

Item	Part Number	Qty	Description	Comments
1	**D28283934**	24	Clip	
2	**D28230292**	4	Shim	
3	D18281572	1	Guard	
4	**D40551500**	X	Bolt	
5	339402X1	X	Nut	M10
6	**D44104700**	1	Finger	Left Hand
7	D40067600	2	Screw	
8	**D44104500**	55	Finger	
9	**D44104600**	1	Finger	Right Hand
10	1441462X1	X	Locknut	M6
11	**D44120500**	1	Cap	
16	D28230830	X	Guard	
	D28230842	X	Guard	
	D28230845	X	Guard	
17	D28230843	X	Guard	
18	D28230830	X	Guard	
	D28230844	X	Guard	
	D28230842	X	Guard	
19	D28285042	1	Knife	CPL.
	D28283011	2	Toggle	
20	D28285041	2	Knife Back	
21	**D44103700**	X	Tr Knife Blades	
22	**D44103800**	X	Half Section	
23	**D41306100**	X	Rivet	
24	**D41306200**	X	Rivet	
25	**D44104000**	X	Half Section	Left Hand
26	D20400506	3	Washer	
27	394367X1	3	Locknut	M8
28	339123X1	1	Cap Screw	M8 X 20
29	D49040900	X	Ear Lifter	
30	D49040400	X	Spring	
31	339019X1	X	Cap Screw	M10 X 50
32	D49040600	X	Roller	
33	339019X1	X	Cap Screw	M10 X 50
34	339560X1	X	Cap Screw	M6 X 16
35	D26500317	X	Spring	
36	D28230841	X	Spring	
38	D28281067	1	Wobble Drive	[A]
	D44127800	1	Box	[A]
	D28281324	1	Wobble Drive	[B]
				CPL.
	D44126500	1	Box	[B]
39	D44128800	1	Bearing Needle	
40	D44129400	1	Connector	
41	D46116500	1	Valve	
42	D44129100	1	Nut	
43	D44129200	1	Washer	
44	D41668400	2	Roller Bearing	
45	D44127900	1	Housing	[A]
	D44126400	1	Housing	[B]
46	D44128000	2	Journal	[A]
	D44125900	1	Journal	[B]
47	D44129300	1	Shaft	
48	D44128200	1	Cover	[A]
	D44126300	1	Cover	[B]
49	D41102100	6	Washer	
50	339123X1	6	Cap Screw	M8 X 20
51	D41669700	1	Bearing Needle	
52	D45412000	1	Gasket	
53	D45481500	1	O Ring	
54	D44128300	1	Bearing Carrier	[A]
	D44126200	1	Bearing Carrier	[B]
55	D41102100	2	Washer	
56	D40697200	2	Screw	[A]
	D40697700	2	Screw	[B]
57	D40639600	2	Pin	[A]
58	D44128400	2	Bush	[A]
	D44126100	2	Bush	[B]
59	D44128500	1	Yoke	[A]
	D44126000	1	Yoke	[B]
60	D41669800	3	Bearing Needle	

https://truckmanualshub.com/

Item	Part Number	Qty	Description	Comments
61	D45409500	1	Gasket	
62	D44128600	1	Plug	
63	D45236200	1	Plug	
64	D44127100	1	Hub	
65	D41100900	1	Spring Washer	
66	D40694000	1	Screw	
67	**D41986300**	1	V Belt	
69	D20400426	4	Washer	
70	1440716X1	4	Cap Screw	M12 X 30
71	394367X1	2	Locknut	M8
74	D20400522	4	Spacer	
75	D40465100	4	Screw	
79	D40698400	2	Screw	
83	1442190X1	X	Locknut	M12
84	D20400428	1	Washer	
85	390826X1	1	Cap Screw	M12 X 100
86	391423X1	1	Split Pin	Diameter 4 X 40
87	**D41054300**	1	Nut	
88	D44126900	1	Flange	
89	D44127000	1	Swivel Arm	
90	D44127200	1	Pulley	
92	**D28260362**	2	Clip	
93	1441671X1	X	Screw Special	M10 X 50
94	D20400419	X	Washer	
95	D49040300	X	Ear Lifter	
96	D28284356	4	Union	
97	D28281576	1	Plate	
98	D28281575	1	Shim	
99	D28281574	1	Plate	
100	339009X1	2	Cap Screw	M8 X 35
101	D20400506	2	Washer	
102	**D28780523**	2	Potentiometer	
103	D28284361	2	Connecting Link	
104	D28285250	2	Support	
105	D46437300	4	Toggle	
106	D28285198	4	Arm	
107	D28285073	2	Clamp	
108	D28285072	2	Bush	[C]
109	339390X1	4	Pin	[C] Diameter 8 X 30
110	D28285251	2	Shaft	
111	D20400413	16	Washer	
112	339761X1	8	Cap Screw	M8 X 25
113	394367X1	8	Locknut	M8
114	D41010600	4	Nut	M6
115	D28780446	2	Rod	
116	D20400404	2	Washer	
117	1441462X1	2	Locknut	M6
118	D28284456	4	Bush	
119	D40464900	2	Screw	
120	D28285087	2	Spiral	
142	D45483000	1	O Ring	[B]
143	D20400438	1	Washer	
144	D42650400	2	Pin	

FOOTNOTE [A] USED ONLY IN KNIFE DRIVES WITH 6 HOLES IN BEARING HOUSING BOTTOM
FOOTNOTE [B] USED ONLY IN KNIFE DRIVES WITH 8HOLES IN BEARING HOUSING BOTTOM AND BULGES SIDES
FOOTNOTE [C] NOT ILLUSTRATED

https://truckmanualshub.com/

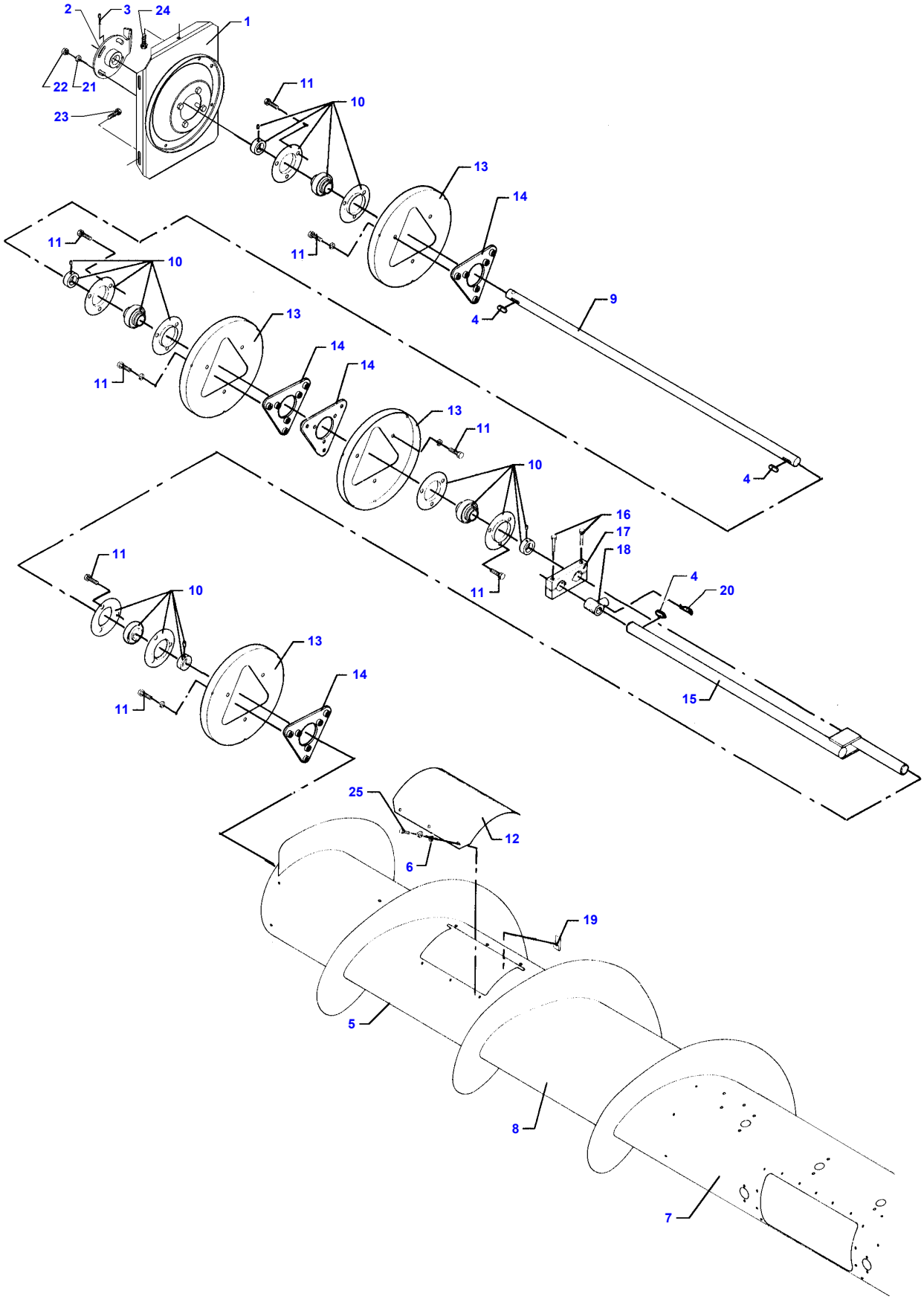

D-ZAAB-004-A

https://truckmanualshub.com/

Feeder Drum Right Hand - Powerflow- - 25'

Item	Part Number	Qty	Description	Comments
1	D28285102	1	Cover	
2	D28285130	1	Fitting	
3	D40633000	1	Pin	
4	339441X1	2	Key Parallel	
5	D28285135	1	Tube	
6	391038X1	X	Flat Washer	
7	D28285028	1	Tube	
8	D28286141	1	Auger	
9	D28285129	1	Shaft	
10	D41707800	2	Bearing	
11	339814X1	X	Cap Screw	M10 X 35
12	D28283070	2	Cover	Up to Serial or Engine Number 936541
	D18285312	2	Cover	From Serial or Engine Number 936551
13	D28280014	4	Plate	
14	D28283847	4	Bearing Plate	
15	D28285977	1	Crankshaft	Valid from machine/table no,can be used in new as well as in older machines 937426
16	3009498X1	2	Cap Screw	M10 X 55
17	D28283039	1	Arm	
18	**D28251831**	19	Bearing Carrier	
19	D43428200	12	Nut	M6
20	D28283853	X	Hair Pin	
21	D20400423	4	Flat Washer	
22	1442190X1	4	Locknut	M12
23	390809X1	4	Screw Special	M10 X 25
24	D40409400	1	Screw Metric	
25	339666X1	6	Cap Screw	M6 X 20

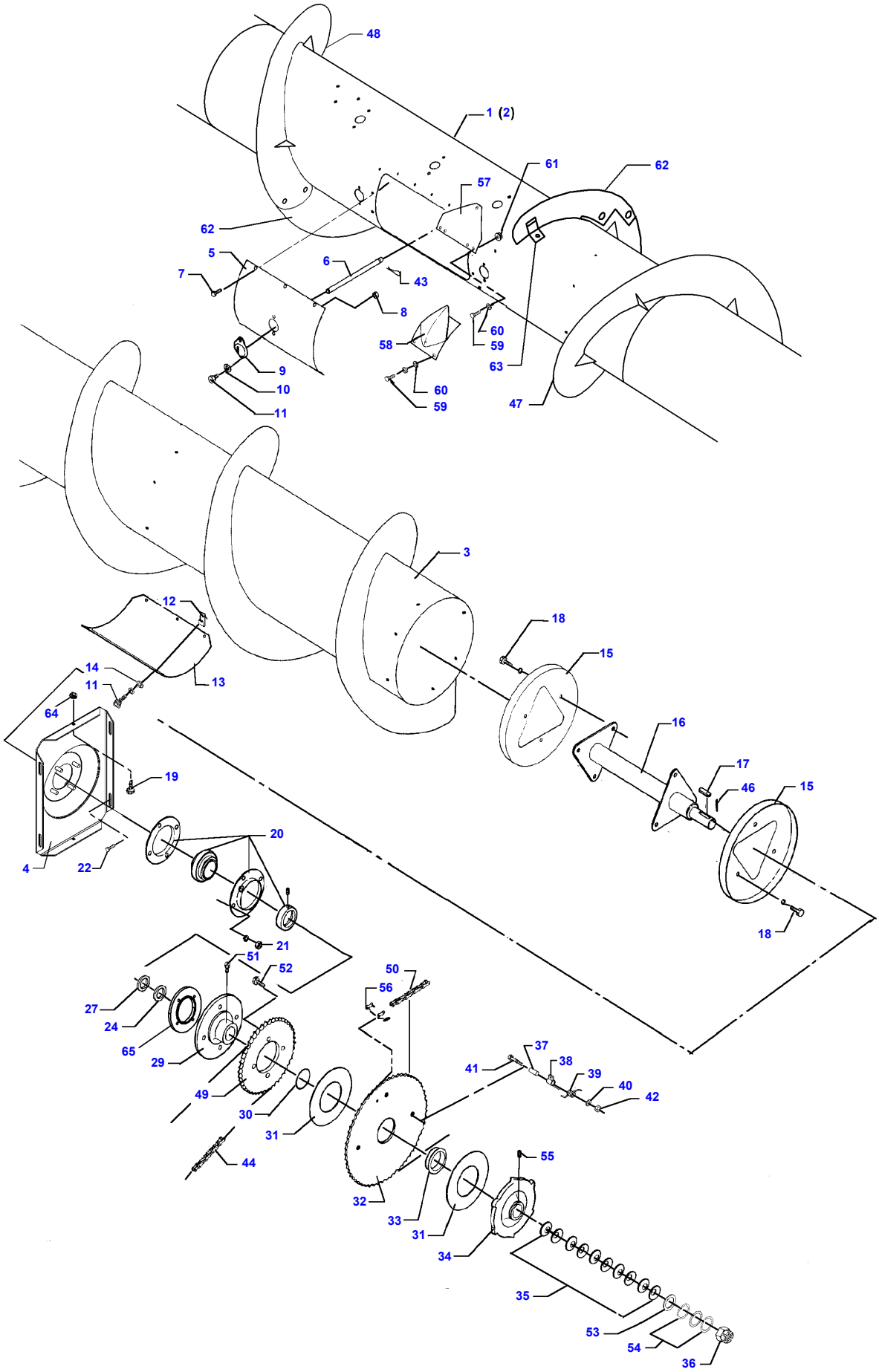
48
1 (2)
61
62
57
62
5
7
6
43
8
60
59
58
63
9
10
11
60
59
47
3
12
18
15
14
11
13
64
16
17
46
15
19
20
4
22
18
21
51
52
50
56
27
24
65
29
37
38
39
40
42
41
49
30
31
44
55
32
33
31
34
35
53
54
36

D-ZAAC-004-C

https://truckmanualshub.com/

Item	Part Number	Qty	Description	Comments
1	D28286141	1	Auger	
2	D28285028	1	Tube	
3	D28285134	1	Tube	
4	D28285102	1	Cover	
5	D28283078	1	Cover	
6	**D28283815**	19	Finger	
7	339560X1	8	Cap Screw	M6 X 16
8	1441462X1	X	Locknut	M6
9	**D28283060**	19	Bush	
10	D20400404	X	Washer	
11	339666X1	X	Cap Screw	M6 X 20
12	D43428200	6	Nut	M6
13	D18283070	X	Cover	Up to Serial or Engine Number 939559
	D18285312	X	Cover	From Serial or Engine Number 939560
14	391038X1	6	Flat Washer	
15	D28280014	2	Plate	
16	D28285100	1	Drive Shaft	Valid from machine/table no,can be used in new as well as in older machines 936551
17	339441X1	1	Key Parallel	
18	339814X1	X	Cap Screw	M10 X 35
19	D40409400	1	Screw Metric	
20	D41716500	1	Bearing	
21	3009695X1	4	Nut	M12
22	390809X1	4	Screw	M10 X 25
			Special	
24	D41653500	1	Washer	
27	D41653500	1	Washer	
29	D28283004	1	Washer	
30	D45481600	1	O Ring	
31	**D45904300**	2	Friction Disc	
32	D28283153	4	Sprocket	Up to Serial or Engine Number 937883
	D28286046	4	Sprocket	From Serial or Engine Number 937898
				Up to Serial or Engine Number 940322
	D28285443	4	Sprocket	From Serial or Engine Number 940323
33	D28283000	1	Insert	Up to Serial or Engine Number 937883
	D28286049	1	Insert	From Serial or Engine Number 937898
34	D28286166	1	Clutch Disc	
35	D41112400	10	Washer	
36	D41054100	1	Castle Nut	
37	D28281431	1	Spacer	From Serial or Engine Number 940222
	D28282429	1	Bush	From Serial or Engine Number 941444
38	D28281432	1	Support	From Serial or Engine Number 941444
	D28282430	1	Dog	From Serial or Engine Number 940222
39	D28283006	1	Spring	From Serial or Engine Number 940222
	D28282433	1	Spring	From Serial or Engine Number 941444
40	390734X1	1	Flat Washer	From Serial or Engine Number 940222
41	3009498X1	1	Cap Screw	M10X55
				From Serial or Engine Number 940222
42	1440329X1	1	Locknut	M10
				From Serial or Engine Number 940222
43	D28283853	X	Hair Pin	
44	**D42332800**	1	Chain	
46	354066X1	1	Split Pin	5/32" X 1
47	D28285031	1	Spiral	
48	D28285029	1	Spiral	
49	D28283182	1	Sprocket	Up to Serial or Engine Number 940322
	D28285470	1	Sprocket	From Serial or Engine Number 940323
50	**D42329200**	1	Chain	
51	339761X1	1	Cap Screw	M8 X 25
52	339123X1	4	Cap Screw	M8 X 20
53	D20400520	1	Spacer	
54	D20400522	4	Spacer	
55	1441858X1	1	Grease Fitting	
56	**D42365500**	1	Link	
57	D28281694	4	Threaded	[A]
			Part	Up to Serial or Engine Number 61489
58	D28283297	4	Finger	[A]
				Up to Serial or Engine Number 61489
59	339123X1	X	Cap Screw	M8 X 20
60	D20400506	X	Washer	
61	394367X1	X	Locknut	M8

https://truckmanualshub.com/

Item	Part Number	Qty	Description	Comments
62	D28285974	1	Auger	Valid from machine/table no,can be used in new as well as in older machines 937426 Left Hand
62	D28285975	1	Auger	Valid from machine/table no,can be used in new as well as in older machines 937426 Right Hand
63	D28285981	2	Bracket	Valid from machine/table no,can be used in new as well as in older machines 937426
64	339402X1	2	Nut	M10
65	D28285426	1	Shim	

FOOTNOTE [A] OPTIONAL EQUIPMENT STANDARD COMBINE, STANDARD EQUIPMENT AUTO LEVEL COMBINE,SLOPES

https://truckmanualshub.com/

MF 7274/7278 COMBINE, |-> 61123 for 7274 and |-> 61115 for 7278 - 3906105

D-ZAAD-011-C

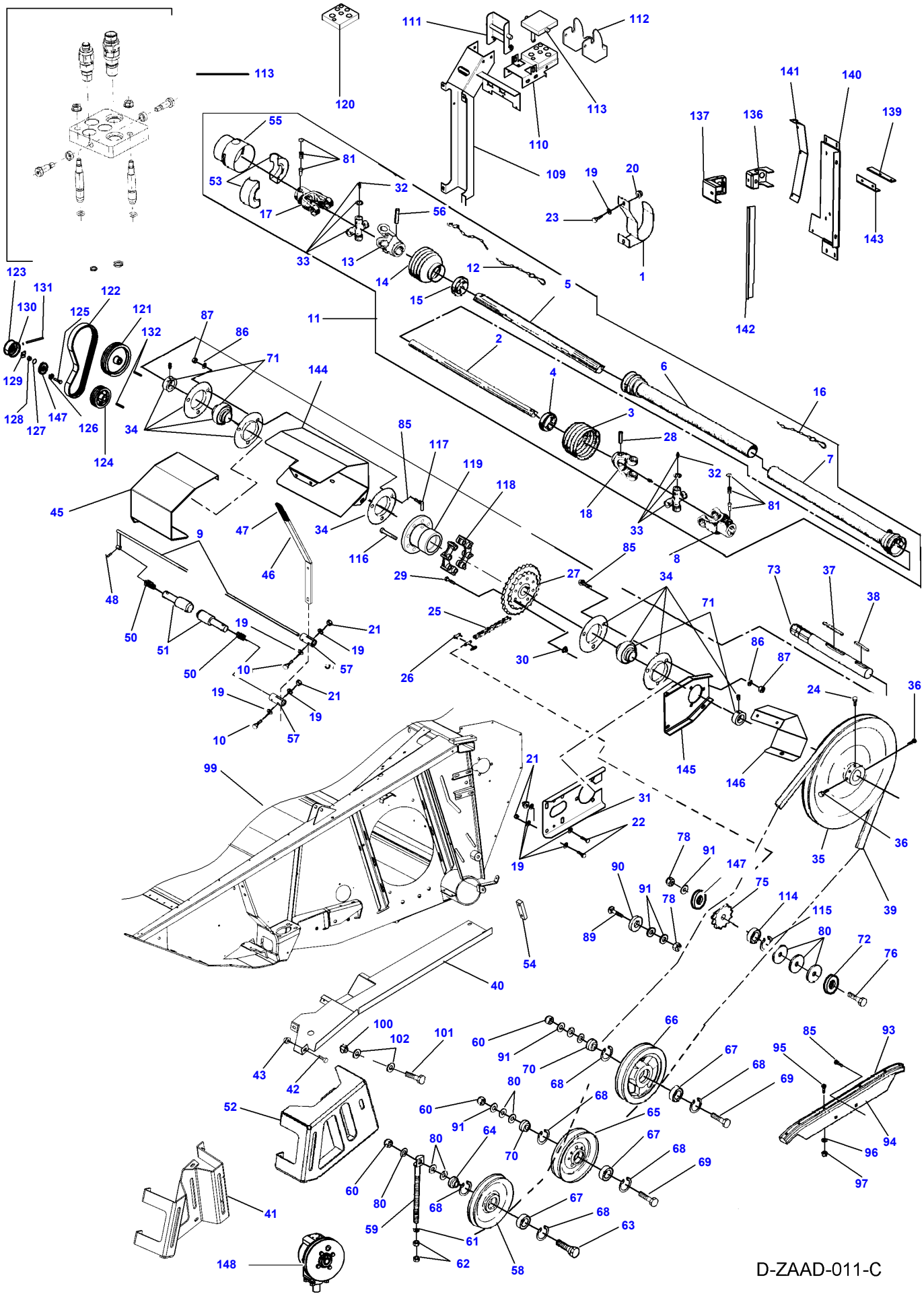

D-ZAAD-011-C

https://truckmanualshub.com/

Item	Part Number	Qty	Description	Comments
1	D28281345	1	Stirrup	
2	D45634600	1	Tube	
3	D45634900	1	Guard	
4	D45635100	1	Shield	
5	D45634500	1	Tube	
6	D45634800	1	Tube	
7	D45634700	1	Tube	
8	D45634100	2	Yoke	
9	D28285117	1	Rod	Up to Serial or Engine Number 942481
	D28274027	1	Shaft	From Serial or Engine Number 942482
10	D40423900	X	Cap Screw	
11	D45609500	1	Shaft	From Serial or Engine Number 939286
				Up to Serial or Engine Number 942481
	D28273972	1	Shaft	From Serial or Engine Number 942482
				WWHU
12	D45635500	1	Chain	
13	D45634400	1	Yoke	
14	D45635000	1	Guard	
15	D45635200	1	Shield	
16	D45681800	1	Chain	
17	D45634200	1	Yoke	From Serial or Engine Number 940490
18	D45634300	1	Yoke	
19	D20400506	X	Washer	
20	394367X1	X	Locknut	
21	394367X1	X	Locknut	
22	339123X1	X	Cap Screw	Repairs and replaces D40404900
23	D40404700	X	Cap Screw	
24	D40466200	X	Setscrew	
25	**D42333700**	1	Chain	Up to Serial or Engine Number 61489
	D28273950	1	Chain	From Serial or Engine Number 61490
26	D42367100	1	Link	From Serial or Engine Number 940323
	D42365100	1	Link	Up to Serial or Engine Number 940322
27	D28285385	1	Gear	Up to Serial or Engine Number 940322
	D28285427	1	Sprocket	From Serial or Engine Number 940323
28	D42619000	1	Pin	
29	D42618900	8	Pin	
30	394367X1	8	Locknut	
31	D18285413	1	Bearing Carrier	Up to Serial or Engine Number 942481
32	D43001600	2	Grease Fitting	(33)
33	D45622700	2	Spider	
34	D41701700	1	Flange	Up to Serial or Engine Number 942481
	D41707800	1	Bearing	From Serial or Engine Number 942482
35	D28285423	1	Pulley	
36	D40466700	2	Cap Screw	
37	D43114900	1	Key	Up to Serial or Engine Number 941712
	D43155200	1	Gib Key	From Serial or Engine Number 941713
38	D43105000	1	Key	
39	**D41986300**	1	V Belt	
40	D18285177	1	Guard	
41	D18285089	1	Bracket	From Serial or Engine Number 939560
				Up to Serial or Engine Number 940199
	D18285454	1	Bracket	From Serial or Engine Number 940200
				Up to Serial or Engine Number 940489
42	339123X1	3	Cap Screw	Repairs and replaces D40404900
	D40405000	3	Cap Screw	
43	394367X1	6	Locknut	
45	D28285290	1	Shield	Up to Serial or Engine Number 942481
46	D28285127	1	Lever	
47	D43484900	1	Lever	
48	D42612200	X	Pin	
50	D27100794	2	Spring	
51	D28283200	1	Shaft	
52	D28285485	1	Bracket	From Serial or Engine Number 940490
53	D45635400	1	Profile	
54	D28285487	1	Bracket	
55	D45635300	1	Cone	
56	D42618900	1	Pin	
57	D28285126	2	Fork	
58	D28760574	1	Pulley	From Serial or Engine Number 938215
59	D28384055	1	Idler	Up to Serial or Engine Number 942481
	D28274040	1	Stem	From Serial or Engine Number 942482

https://truckmanualshub.com/

Item	Part Number	Qty	Description	Comments
60	D41087800	3	Locknut	
61	D20400416	X	Washer	Up to Serial or Engine Number 942481
61	D28274047	X	Washer	From Serial or Engine Number 942482
62	1440329X1	X	Locknut	Repairs and replaces D41087600
63	D28760156	1	Screw	Up to Serial or Engine Number 942481
63	D28250444	1	Bolt	From Serial or Engine Number 942482
64	D28760155	1	Bush	
65	D28752130	1	Pulley	
66	D28280819	1	Pulley	
67	339599X1	3	Bear. 6204 2rs	
68	339199X1	6	Circlip	
69	D28760156	2	Screw	
70	D28760155	2	Bush	
71	D41663400	2	Ball Bearing	
72	D20400460	1	Washer	
73	D28286164	1	Shaft	Up to Serial or Engine Number 942481
73	D28274026	1	Shaft	From Serial or Engine Number 942482
75	D41716800	X	Tightener	Up to Serial or Engine Number 940322
75	D28285473	X	Tensioner	From Serial or Engine Number 940323
76	D40433600	X	Cap Screw	
78	D41087900	X	Locknut	
80	D20400460	X	Washer	
81	D45632400	2	Tube	
85	D40066800	2	Screw Special	
86	D20400419	2	Washer	
87	1440329X1	2	Locknut	Repairs and replaces D41087600
89	D40073100	1	Screw	
90	D28280981	1	Spacer	
91	D28181284	X	Washer	
93	D28280787	1	Rail	
94	D28281365	1	Crossmember	Replace and repair. Old interchangeable with new D18281365
95	D40609300	6	Screw	
96	D20400466	6	Washer	
97	D41087200	6	Locknut	
99	D28285400	1	Table	25' - 7,60M Up to Serial or Engine Number 942481
99	D28284721	1	Table	25' - 7,60M From Serial or Engine Number 942482
99	D18285827	1	Housing	22' - 6,77M Up to Serial or Engine Number 942481
99	D28273732	1	Housing	22' - 6,77M From Serial or Engine Number 942481
100	1440329X1	6	Locknut	Repairs and replaces D41087600
101	D40407900	1	Cap Screw	
101	D40407800	5	Cap Screw	
102	D20400419	2	Washer	
102	D20400471	10	Washer	
109	D28285518	1	Bracket	
110	D28285519	1	Support	CPL.
111	D28285497	1	Support	
112	D28285494	1	Stirrup	
113	D45140044	1	Clutch	CPL. See Page - Reference Number 001-0034
114	339599X1	2	Bear. 6204 2rs	
115	339199X1	2	Circlip	From Serial or Engine Number 940323
116	D40433800	8	Screw	From Serial or Engine Number 940323
117	D42650400	1	Pin	From Serial or Engine Number 940323
118	D28285429	2	Bush	From Serial or Engine Number 940323 Up to Serial or Engine Number 941712
118	D28285491	1	Spacer	From Serial or Engine Number 941713
119	D28285428	1	Hub	[C] From Serial or Engine Number 940323 Up to Serial or Engine Number 941774
119	D28286163	1	Hub	From Serial or Engine Number 941775
120	D28285492	1	Rubber Patch	
121	D28274025	1	Pulley	From Serial or Engine Number 942482 WWHU
122	D28274029	1	Belt	From Serial or Engine Number 942482 WWHU
123	D28274030	1	Pulley	From Serial or Engine Number 942482 WWHU

https://truckmanualshub.com/

Item	Part Number	Qty	Description	Comments
124	D28274024	1	Drive	From Serial or Engine Number 942482 WWHU
125	D28760156	1	Screw	From Serial or Engine Number 942482 WWHU
126	339599X1	1	Bear. 6204 2rs	From Serial or Engine Number 942482 WWHU
127	D28760155	1	Bush	From Serial or Engine Number 942482 WWHU
128	D42513700	1	Circlip	From Serial or Engine Number 942482 WWHU
129	D28274039	1	Support	From Serial or Engine Number 942482 WWHU
130	D28274040	1	Stem	From Serial or Engine Number 942482 WWHU
131	D28274038	1	Pin	From Serial or Engine Number 942482 WWHU
132	D43105550	1	Key	From Serial or Engine Number 942482 WWHU
133	D28284736	1	Pin	[B] From Serial or Engine Number 942482 WWHU
134	D28284737	1	Plate	[B] From Serial or Engine Number 942482 WWHU
135	D28284738	1	Beam	[B] From Serial or Engine Number 942482 WWHU
136	D28284728	2	Guide	From Serial or Engine Number 942482 WWHU
137	D28273799	2	Guide	From Serial or Engine Number 942482 WWHU
138	D28284740	1	Bracket	[B] From Serial or Engine Number 942482 WWHU
139	D28285197	2	Scraper	From Serial or Engine Number 942482 WWHU
140	D28284726	1	Plate	From Serial or Engine Number 942482 WWHU
141	D28284727	1	Plate	From Serial or Engine Number 942482 WWHU
142	D28284734	1	Beam	From Serial or Engine Number 942482 WWHU
143	D28284739	1	Bracket	From Serial or Engine Number 942482 WWHU
144	D28284768	1	Shield	From Serial or Engine Number 942482
145	D28284766	1	Support	From Serial or Engine Number 942482
146	D28284832	1	Shield	
147	D28380003	1	Ring	
148	D28281324	1	Wobble Drive	

FOOTNOTE [B] NOT ILLUSTRATED
FOOTNOTE [C] ORDER D28286163 + D28286164 + D43155200

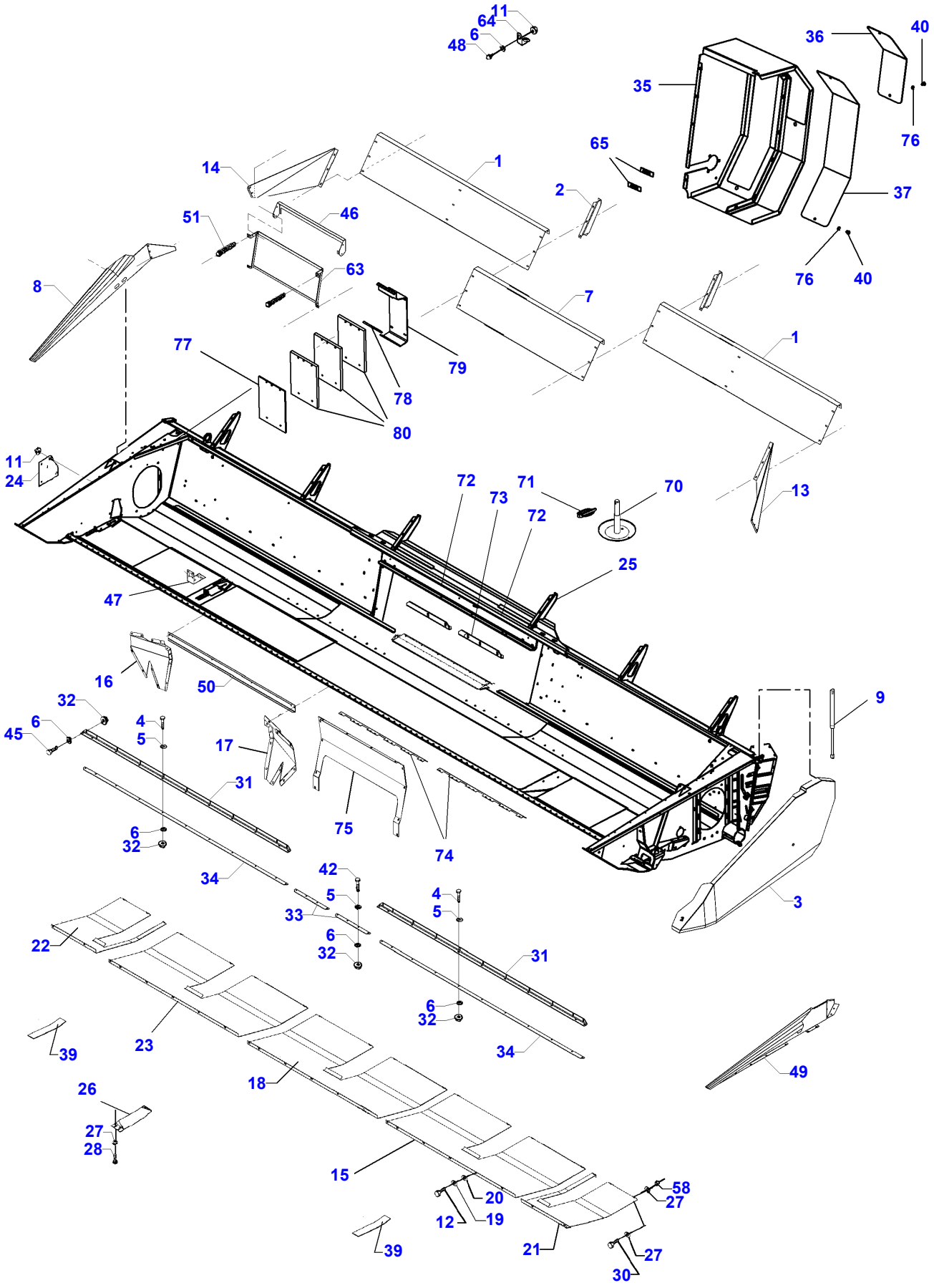
11
64
6
48
36
40
35
76
65
14
1
2
37
51
46
63
76
40
8
7
1
77
79
78
80
11
24
72
71
70
13
73
72
25
47
16
50
9
32
6
45
4
5
17
31
75
6
32
74
34
42
5
33
4
5
3
22
6
32
31
6
32
39
23
34
49
26
18
27
28
15
58
27
20
12
19
39
21
27
30

D-ZAAE-006-A

https://truckmanualshub.com/

Item	Part Number	Qty	Description	Comments
1	D18284750	1	Plate	Right Hand
	D18284749	1	Plate	Left Hand
2	D18285124	2	Support	
3	D18284758	1	Guard	
4	339170X1	18	Screw Special	M8 X 20
5	D41102100	18	Washer	
6	D20400506	X	Washer	
7	D18284669	1	Guard	
8	D18283554	1	Panel	Right Hand
9	D45056600	1	Gas Strut	From Serial or Engine Number 939560
				Up to Serial or Engine Number 940199
	D45050060	1	Gas Strut	From Serial or Engine Number 940200
10	339123X1	X	Cap Screw	[B]
				M8 X 20
11	394367X1	X	Locknut	M8
12	3009493X1	26	Cap Screw	M10 X 30
13	D18285122	1	Guard	
14	D18285121	1	Guard	
15	D28285085	1	Wearplate	[A]
				Left Hand
16	D28284741	1	Guard	Right Hand
				From Serial or Engine Number 930560
17	D28284743	1	Guard	Left Hand
				From Serial or Engine Number 930560
18	D28285078	2	Wearplate	[A]
				Replace and repair. Old interchangeable with new D18285078
19	D41101900	26	Spring	
			Washer	
20	D20400419	26	Washer	
21	D28285081	1	Wearplate	[A]
				Left Hand
22	D28285082	1	Wearplate	[A]
				Right Hand
23	D28285084	1	Wearplate	[A]
				Right Hand
24	D28280359	1	Shutter	
25	D28284721	1	Table	
26	D18285194	4	Cover	
	D28285524	4	Cover	OPTIONAL RAPE
27	D20400506	48	Washer	
28	D40476100	X	Cap Screw	M8 X 20
30	339010X1	24	Cap Screw	M8 X 40
31	D18285113	2	Angle.	
32	339169X1	18	Nut	M8
33	D28285197	2	Scraper	
34	D28286129	2	Scraper	
35	D18284755	1	Guard	
36	D18284752	1	Guard	
37	D18274034	1	Guard	
39	D28283984	2	Wearplate	
40	D43427500	X	Pin	
42	339149X1	4	Screw Special	M8 X 30
45	339761X1	X	Cap Screw	M8 X 25
46	D28285264	1	Guard	
47	D28780381	X	Retainer	
48	339124X1	X	Cap Screw	M8 X 16
49	D18285590	1	Side	Left Hand
50	D18285801	1	Plate	Up to Serial or Engine Number 930559
	D28285375	1	Plate	From Serial or Engine Number 930560
51	D28710853	2	Spring	
58	394367X1	24	Locknut	M8
63	D28285263	1	Retainer	
64	D18250648	1	Clip	
65	D43427300	2	Spring	
70	D28286101	1	Support	
71	D41446200	1	Split Pin	
72	D28285318	2	Support	
73	D18285322	1	Plate	Valid from machine/table no,can be used in new as well as in older machines
				937426
74	D18285979	5	Plate	
75	D28273980	1	Plate	

https://truckmanualshub.com/

Item	Part Number	Qty	Description	Comments
76	D42555500	1	Circlip	
77	D28274181	1	Plate	
78	D28274049	1	Plate	
79	D28274048	1	Plate	
80	D28282847	1	Plate	

FOOTNOTE [A] BOTH AL AND STD
FOOTNOTE [B] NOT ILLUSTRATED

https://truckmanualshub.com/

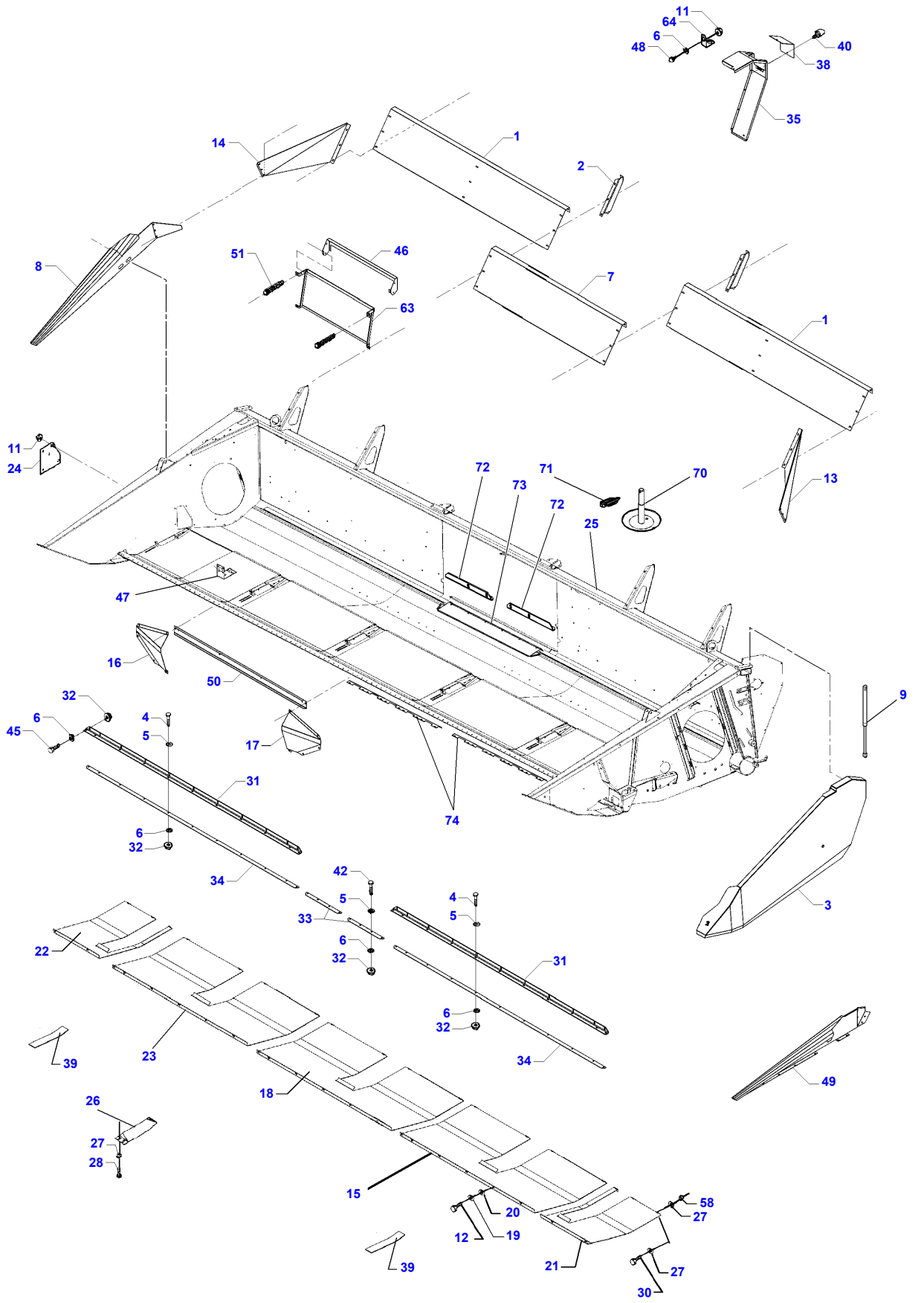

D-ZAAE-005-B

https://truckmanualshub.com/

Item	Part Number	Qty	Description	Comments
1	D18285119	1	Plate	
2	D18285124	2	Support	
3	D18285172	1	Guard	
4	339170X1	18	Screw Special	M8 X 20
5	D41102100	18	Washer	
6	D20400506	X	Washer	
7	D18285120	1	Guard	
8	D18283554	1	Panel	Right Hand
9	D45056600	1	Gas Strut	From Serial or Engine Number 939560 Up to Serial or Engine Number 940199
	D45050060	1	Gas Strut	From Serial or Engine Number 940200
10	339123X1	X	Cap Screw	[B] M8 X 20
11	394367X1	X	Locknut	M8
12	3009493X1	26	Cap Screw	M10 X 30
13	D18285122	1	Guard	
14	D18285121	1	Guard	
15	D28285085	1	Wearplate	[A] Left Hand
16	D18285313	1	Guard	Right Hand Up to Serial or Engine Number 930559
	D28285373	1	Guard	Right Hand From Serial or Engine Number 930560
17	D18285314	1	Guard	Left Hand Up to Serial or Engine Number 930559
	D28285374	1	Guard	Left Hand From Serial or Engine Number 930560
18	D28285078	2	Wearplate	[A] Replace and repair. Old interchangeable with new D18285078
19	D41101900	26	Spring Washer	
20	D20400419	26	Washer	
21	D28285081	1	Wearplate	[A] Left Hand
22	D28285082	1	Wearplate	[A] Right Hand
23	D28285084	1	Wearplate	[A] Right Hand
24	D28280359	1	Shutter	
25	D18285000	1	Table	Up to Serial or Engine Number 937774
	D28285400	1	Table	From Serial or Engine Number 937775
26	D18285194	4	Cover	
	D28285524	4	Cover	OPTIONAL RAPE
27	D20400506	48	Washer	
28	D40476100	X	Cap Screw	M8 X 20
30	339010X1	24	Cap Screw	M8 X 40
31	D28285113	2	Deflector	
32	339169X1	18	Nut	M8
33	D28285197	2	Scraper	
34	D28286129	2	Scraper	
35	D18285104	1	Guard	
38	D18285268	1	Cover	
39	D28283984	2	Wearplate	
40	D43427500	X	Pin	
42	339149X1	4	Screw Special	M8 X 30
45	339761X1	X	Cap Screw	M8 X 25
46	D28285264	1	Guard	
47	D28780381	X	Retainer	
48	339124X1	X	Cap Screw	M8 X 16
49	D18285590	1	Side	Left Hand
50	D18285801	1	Plate	Up to Serial or Engine Number 930559
	D28285375	1	Plate	From Serial or Engine Number 930560
51	D28710853	2	Spring	
58	394367X1	24	Locknut	M8
63	D28285263	1	Retainer	
64	D18250648	1	Clip	
70	D28286101	1	Support	
71	D41446200	1	Split Pin	
72	D28285318	2	Support	
73	D18285322	1	Plate	Valid from machine/table no,can be used in new as well as in older machines 937426

https://truckmanualshub.com/

Item	Part Number	Qty	Description	Comments
74	D18285979	5	Plate	

FOOTNOTE [A] BOTH AL AND STD
FOOTNOTE [B] NOT ILLUSTRATED

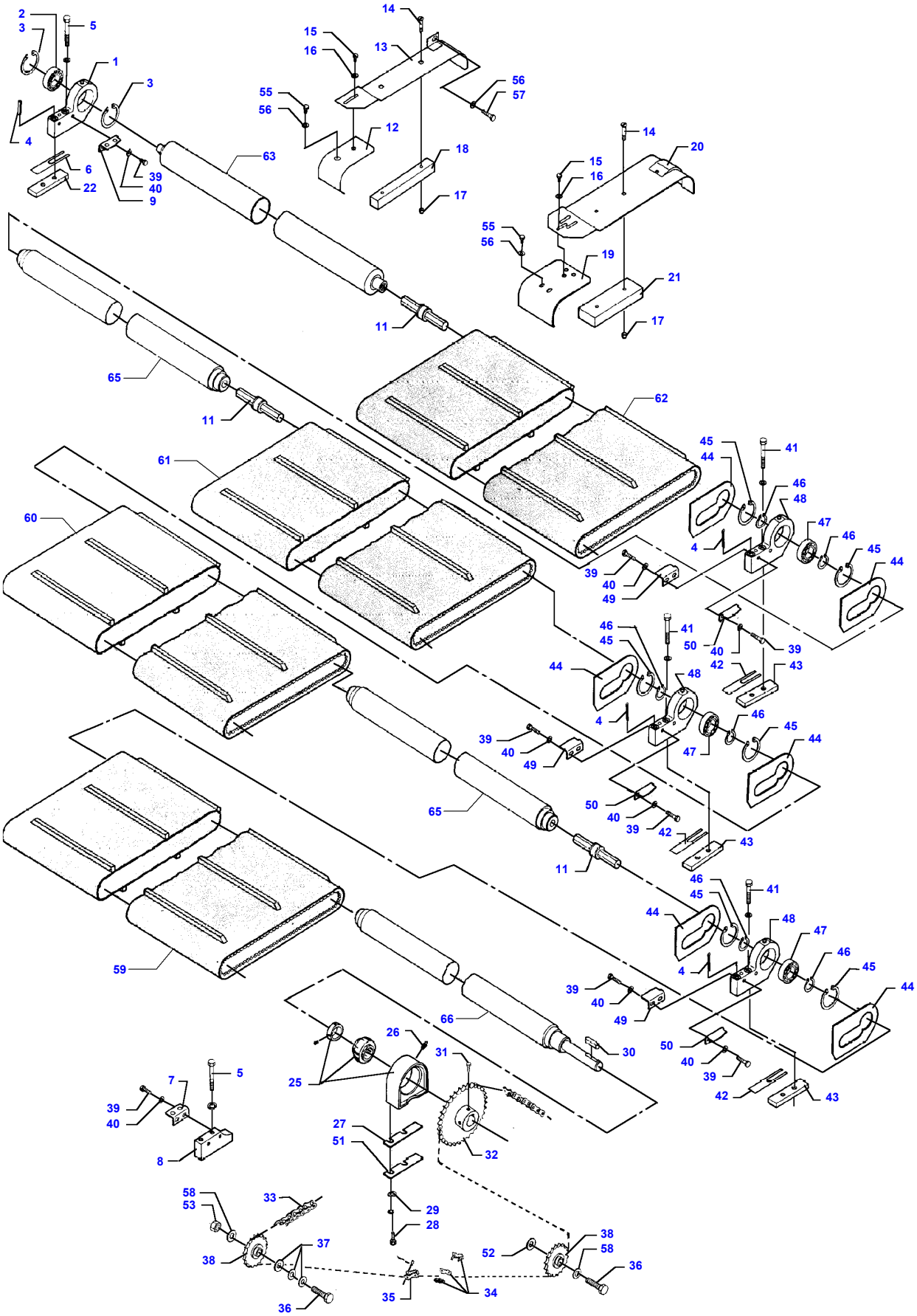
2
3
5
1
3
4
6
22
39
40
9
63
14
15
16
13
55
56
12
18
17
56
57
14
20
15
16
55
56
19
21
17
11
65
11
62
61
60
45
44
41
46
48
47
46
45
44
4
39
40
49
46
45
41
50
40
39
42
43
44
48
4
46
45
44
47
39
40
49
50
40
39
42
43
65
11
46
45
41
44
48
47
46
45
44
4
39
40
49
59
66
26
31
30
50
40
39
42
43
25
7
5
39
40
8
27
51
32
58
53
33
29
28
38
37
38
52
58
36
36
35
34

D-ZAAJ-001-A

https://truckmanualshub.com/

Item	Part Number	Qty	Description	Comments
1	D28251562	1	Bearing Carrier	CPL.
	D28251581	1	Bearing Carrier	(1)
2	D41715600	1	Ball Bearing	(1)
3	1440479X1	2	Circlip	(1)
4	339055X1	6	Pin	Diameter 8 X 40
5	339365X1	X	Cap Screw	M10 X 80
6	D28251519	X	Shim	[J]
7	D28251380	1	Bracket	Right Hand
8	D28251419	1	Bracket	
9	D28251379	6	Bracket	Left Hand
11	D28251565	4	Shaft	
12	D18281700	1	Plate	Right Hand 20' - 6,16M
	D28282255	1	Plate	Right Hand 22' - 6,77M
				Valid from machine/table no,can be used in new as well as in older machines 937475
	D18284383	1	Shield	18' - 5,56M
13	D18281703	1	Plate	Right Hand 20' - 6,16M
	D28282258	1	Plate	Right Hand 22' - 6,77M
				Valid from machine/table no,can be used in new as well as in older machines 937475
14	D40064000	X	Screw	
15	339123X1	X	Cap Screw	M8 X 20
16	D20400506	X	Washer	
17	394367X1	X	Locknut	M8
18	D28281310	2	Guide	Valid from machine/table no,can be used in new as well as in older machines 937533
19	D28281698	3	Shield	20' - 6,16M
	D28281698	4	Shield	22' - 6,77M
	D18284375	4	Shield	18' - 5,56M
20	D28281699	3	Shield	20' - 6,16M
	D28281699	4	Shield	22' - 6,77M
	D18284377	4	Shield	18' - 5,56M
21	D28281311	2	Guide	Valid from machine/table no,can be used in new as well as in older machines 937533
22	D28251146	1	Strap	Up to Serial or Engine Number 939559
				20'- 6,16M
	D28285303	1	Strap	From Serial or Engine Number 939560
				20' - 6,16M
	D28280923	1	Dog	22' - 6,77M
25	D41715800	1	Bearing Carrier	
26	339608X1	1	Grease Nipple	
27	D28251448	X	Shim	[J]
28	390799X1	X	Cap Screw	M10 X 40
29	D20400419	X	Washer	
30	D43104900	1	Key	
31	D40466200	2	Setscrew	
32	D28251161	1	Sprocket	Number of teeth/spines 32
	D28251163	2	Sprocket	[I]
33	D42332800	1	Chain	
34	D42363100	1	Link	
35	D42363500	1	Link	
36	391889X1	2	Cap Screw	M16 X 70
37	D20400460	4	Washer	
38	D41712300	2	Tensioner	
39	339123X1	X	Cap Screw	M8 X 20
40	D20400506	X	Washer	
41	D40693100	X	Screw	
42	D28251445	X	Shim	[J]
43	D28251146	X	Strap	Up to Serial or Engine Number 939559
	D28285303	X	Strap	From Serial or Engine Number 939560
44	D28251420	8	Control	
45	339437X1	8	Circlip	
46	339469X1	8	Circlip	
47	D41716300	4	Ball Bearing	
48	D28251583	4	Bearing Carrier	22' - 6,77M
	D28251583	3	Bearing Carrier	20' - 6,16M
49	D28251417	4	Scraper	Left Hand 22' - 6,77M
50	D28251418	4	Scraper	Right Hand
51	D28281522	X	Shim	[J]
52	D20400516	X	Spacer	[J]

https://truckmanualshub.com/

Item	Part Number	Qty	Description	Comments
53	1442739X1	1	Locknut	M16
55	339230X1	X	Cap Screw	M6 X 10
56	391038X1	X	Flat Washer	
57	339560X1	1	Cap Screw	M6 X 16
58	D28181284	2	Washer	
59	D28250932	1	Band	20' - 22' 6,16M - 6,77M
60	D28250931	1	Band	22' - 6,77M
60	D28250932	1	Band	20' - 6,16M
61	D28250931	1	Band	22' - 6,77M
61	D28250932	1	Band	20' - 6,16M
62	D28250931	1	Band	22' - 6,77M
62	D28250932	1	Band	20' - 6,16M
63	D28284108	1	Roller	18' -20' - 22' 5,56M - 6,16M 6,77M
65	D28284145	3	Roller	22' - 6,77M
65	D28284145	2	Roller	18' - 5,56M
65	D28284109	2	Roller	20' - 6,16M
66	D28284110	1	Roller	18' -20' - 22' 5,56M - 6,16M 6,77M
67	D44742000	1	Kit, Repair	[A]

FOOTNOTE [A] NOT ILLUSTRATED
FOOTNOTE [I] OPTIONAL EQUIPMENT
FOOTNOTE [J] OPTIONAL EQUIPMENT AUTO LEVEL

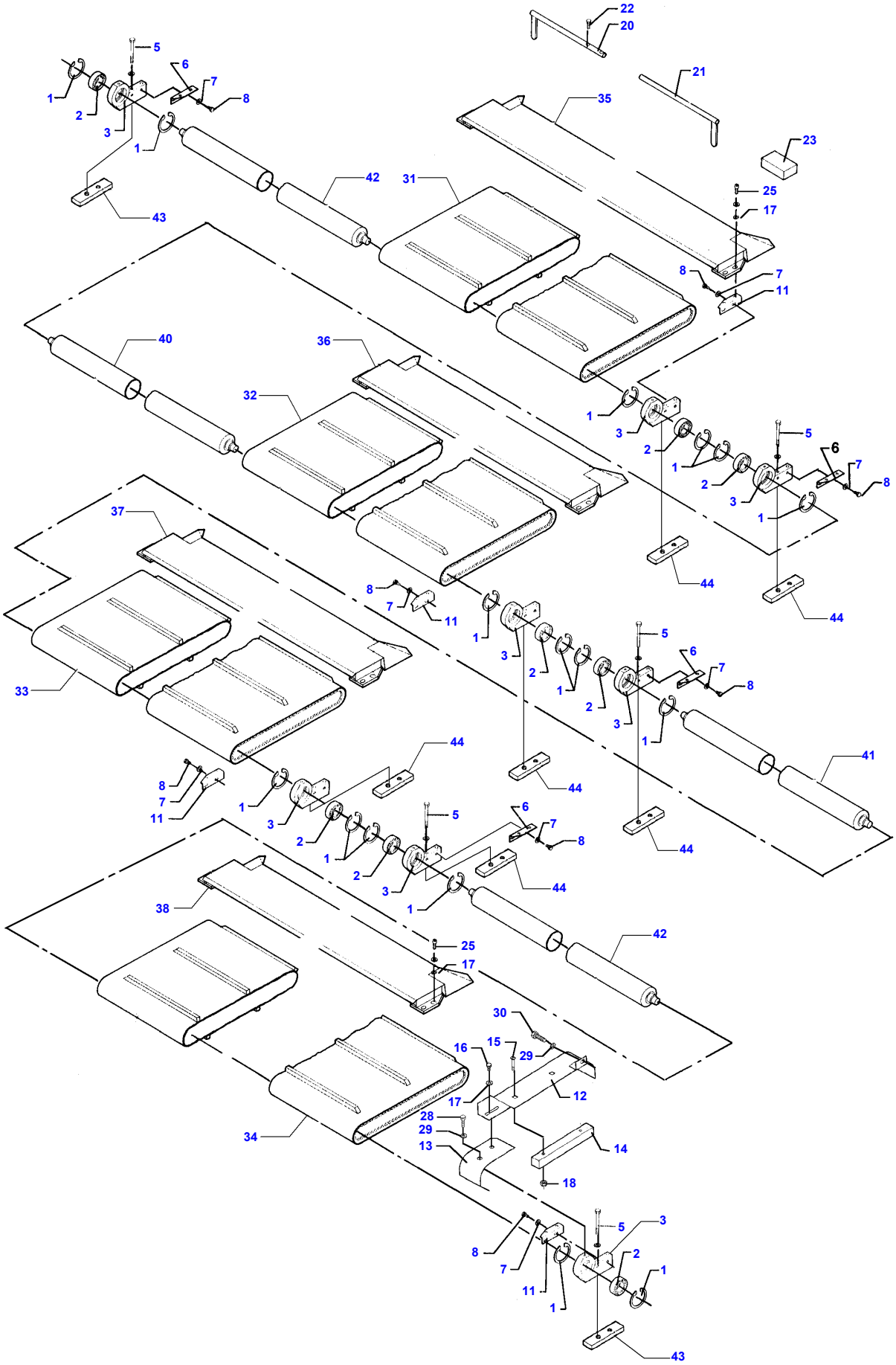
22
20
21
35
23
5
6
7
8
1
2
3
1
42
31
43
25
17
8
7
11
40
36
32
1
3
2
1
2
3
1
5
6
7
8
44
44
37
8
7
11
1
3
2
1
2
3
1
5
6
7
8
33
44
41
44
8
7
11
1
3
2
1
2
3
1
5
6
7
8
44
44
38
42
25
17
30
16
15
29
17
12
28
29
13
14
34
18
5
3
8
7
2
1
11
1
43

D-ZAAK-001-A

https://truckmanualshub.com/

Item	Part Number	Qty	Description	Comments
1	1440479X1	16	Circlip	20' - 6,16M
	1440479X1	20	Circlip	22' - 6,77M
2	D41715600	8	Ball Bearing	20' - 6,16M
	D41715600	10	Ball Bearing	22' - 6,77M
3	D28251582	8	Bearing Carrier	20' - 6,16M
	D28251582	10	Bearing Carrier	22' - 6,77M
5	339365X1	16	Cap Screw	M10 X 80
6	D28251380	4	Bracket	Right Hand 20' - 6,16M
	D28251380	5	Bracket	Right Hand 22' - 6,77M
7	D20400506	16	Washer	20' - 6,16M
	D20400506	20	Washer	22' - 6,77M
8	D40697400	16	Screw	20' - 6,16M
	D40697400	20	Screw	22' - 6,77M
11	D28251379	4	Bracket	Left Hand 20' - 6,16M
	D28251379	5	Bracket	Left Hand 22' - 6,77M
12	D18281702	1	Shield	Left Hand 20' - 6,16M
	D28282257	1	Plate	Right Hand 22' - 6,77M
				Valid from machine/table no,can be used in new as well as in older machines 937475
13	D18281701	1	Shield	Left Hand 20' - 6,16M
	D18282256	1	Plate	Right Hand 22' - 6,77M
				Valid from machine/table no,can be used in new as well as in older machines 937475
14	D28281310	2	Guide	Valid from machine/table no,can be used in new as well as in older machines 937533
15	D40064000	X	Screw	
16	339123X1	X	Cap Screw	M8 X 20
17	D20400506	X	Washer	
18	394367X1	X	Locknut	M8
20	D28251543	1	Tool	
	D28251545	1	Tool	(20)
21	D28251544	1	Tool	(20)
22	D43385200	2	Screw	(20)
23	D28251547	1	Adjuster	(20)
25	391148X1	16	Hex Socket	20' - 6,16M
			Screw	M8 X 20
	391148X1	20	Hex Socket	22' - 6,77M
			Screw	M8 X 20
28	339230X1	X	Cap Screw	M6 X 10
29	391038X1	X	Flat Washer	
30	339560X1	1	Cap Screw	M6 X 16
31	D28250932	1	Band	20' - 22'
				6,16M -6,77M
32	D28250931	1	Band	22' - 6,77M
	D28250932	1	Band	20' - 6,16M
33	D28250931	2	Band	22' - 6,77M
	D28250932	1	Band	20' - 6,16M
34	D28250932	1	Band	20' - 6,16M
	D28250931	1	Band	22' - 6,77M
35	D28281562	1	Scraper	20' - 22'
				6,16 - 6,77M
36	D28281563	1	Scraper	22' - 6,16M
	D28281562	1	Scraper	20' - 6,16M
37	D28281563	2	Scraper	22' - 6,77M
	D28281562	1	Scraper	20' - 6,16M
38	D28281562	1	Scraper	20' - 22'
				6,16M - 6,77M
40	D28285817	3	Roller	22' - 6,77M
	D28285817	2	Roller	18' - 5,56M
41	D28285142	4	Roller	20' - 6,16M
42	D28285142	2	Roller	18'- 5,56M
				22'-6,77M
43	D28285303	X	Strap	20' - 6,16M
	D28280923	X	Dog	22' - 6,77M
44	D28285303	X	Strap	

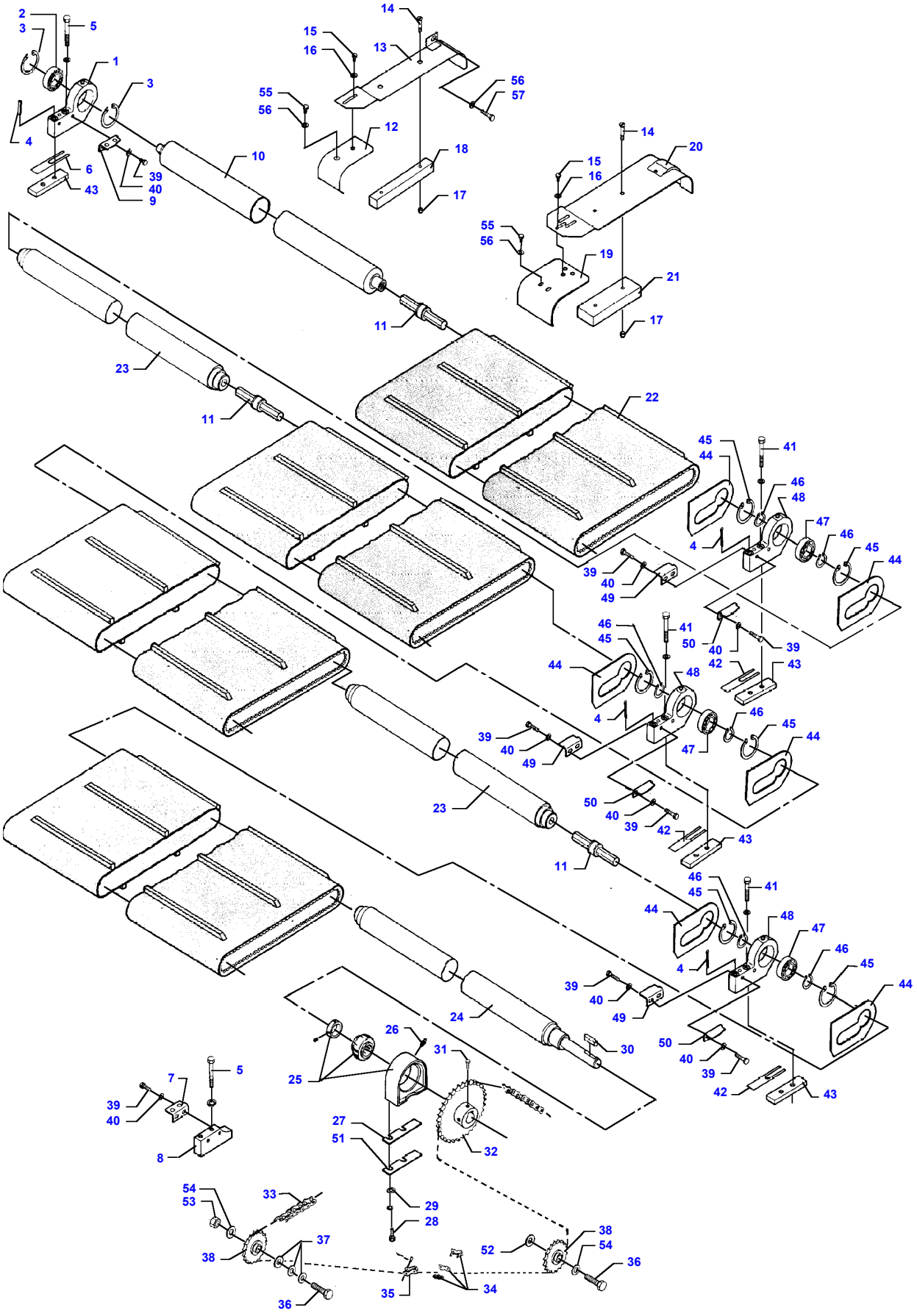
2
3
5
1
3
4
6
43
39
40
9
10
14
15
16
13
55
56
12
18
17
56
57
14
20
15
16
55
56
19
21
17
11
23
11
22
45
44
41
46
48
47
46
45
44
4
39
40
49
46
45
41
50
40
39
42
43
44
48
4
46
45
44
47
39
40
49
50
40
39
42
43
23
11
46
45
41
44
48
47
46
45
44
4
39
40
49
24
30
50
40
39
42
43
26
31
25
5
7
39
40
8
27
51
32
54
53
33
29
28
38
37
38
52
54
36
36
35
34

D-ZAAJ-002-A

https://truckmanualshub.com/

Item	Part Number	Qty	Description	Comments
1	D28251562	1	Bearing Carrier	CPL.
	D44742000	X	Kit, Repair	(1)
	D28251581	1	Bearing Carrier	(1)
2	D41715600	1	Ball Bearing	(1)
3	1440479X1	2	Circlip	(1)
4	339055X1	4	Pin	Diameter 8 X 40
5	339365X1	4	Cap Screw	M10 X 80
6	D28251519	X	Shim	[A]
7	D28251380	1	Bracket	Right Hand
8	D28251419	1	Bracket	
9	D28251379	1	Bracket	Left Hand
10	D28284108	1	Roller	Replace and repair. Old not interchangeable with new D18284108
11	D28251565	4	Shaft	
12	D28284372	1	Shield	Right Hand
13	D18284385	1	Shield	Right Hand
14	D28281311	2	Guide	Valid from machine/table no,can be used in new as well as in older machines 937533
15	339123X1	X	Cap Screw	M8 X 20
16	D20400506	X	Washer	
17	394367X1	X	Locknut	M8
18	D28281310	2	Guide	Valid from machine/table no,can be used in new as well as in older machines 937533
19	D28281698	4	Shield	
20	D28281699	4	Shield	
21	D28281311	4	Guide	Valid from machine/table no,can be used in new as well as in older machines 937533
22	D28250932	5	Band	
23	D28284109	3	Roller	Replace and repair. Old not interchangeable with new D18284109
24	D28284110	1	Roller	Replace and repair. Old not interchangeable with new D18284110
25	D41715800	1	Bearing Carrier	
26	339608X1	1	Grease Nipple	
27	D28251448	X	Shim	[A]
28	390799X1	X	Cap Screw	M10 X 40
29	D20400419	X	Washer	
30	D43104900	1	Key	
31	D40466200	2	Setscrew	
32	D28251161	1	Sprocket	
33	**D42332800**	1	Chain	
34	D42363100	1	Link	
35	**D42363500**	1	Link	
36	391889X1	2	Cap Screw	M16 X 70
37	D20400460	X	Washer	
38	D41712300	2	Tensioner	
39	339123X1	X	Cap Screw	M8 X 20
40	D20400506	X	Washer	
41	D40693100	X	Screw	
42	D28251445	X	Shim	
43	D28285303	15	Strap	
44	D28251420	8	Control	
45	339437X1	8	Circlip	
46	339469X1	8	Circlip	
47	D41716300	4	Ball Bearing	
48	D28251583	4	Bearing Carrier	
49	D28251417	4	Scraper	Left Hand
50	D28251418	4	Scraper	Right Hand
51	D28281522	X	Shim	[A]
52	D20400516	X	Spacer	[A]
53	1442739X1	1	Locknut	M16
54	D28181284	2	Washer	
55	339230X1	X	Cap Screw	M6 X 10
56	391038X1	X	Flat Washer	
57	339560X1	1	Cap Screw	M6 X 16

FOOTNOTE [A] OPTIONAL

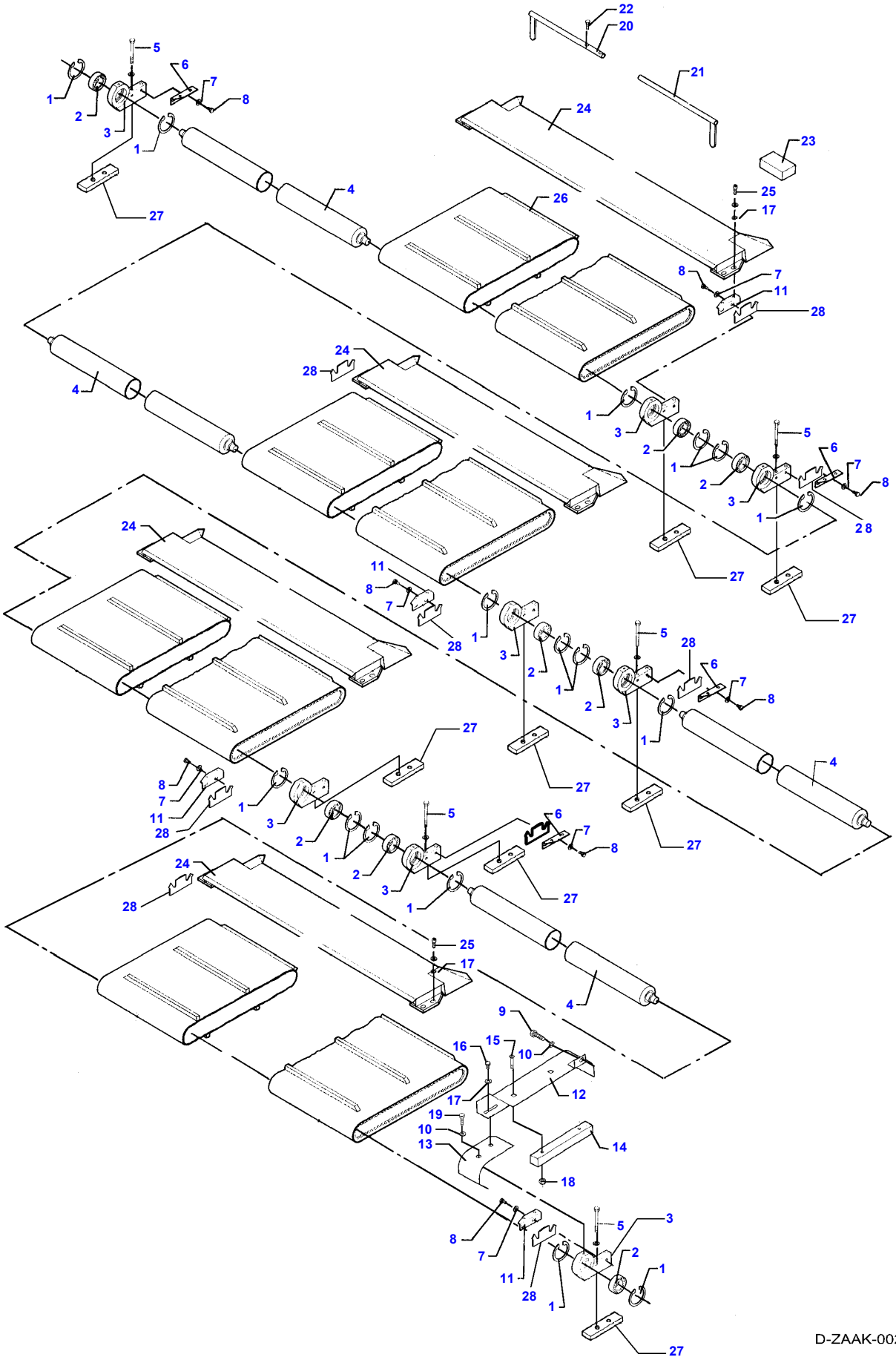
D-ZAAK-002-B

https://truckmanualshub.com/

Item	Part Number	Qty	Description	Comments
1	1440479X1	X	Circlip	
2	D41715600	X	Ball Bearing	
3	D28251582	X	Bearing Carrier	
4	D28285142	X	Roller	
5	339365X1	X	Cap Screw	M10 X 80
6	D28251380	X	Bracket	
7	D20400506	X	Washer	
8	D40697400	X	Screw	
9	339560X1	X	Cap Screw	M6 X 16
10	391038X1	X	Flat Washer	
11	D28251379	4	Bracket	
12	D28284381	X	Shield	Left Hand
13	D28284374	X	Shield	Left Hand
14	D28281310	2	Guide	
15	D40064000	X	Screw	
16	339123X1	X	Cap Screw	M8 X 20
17	D20400506	X	Washer	
18	394367X1	X	Locknut	M8
19	339230X1	X	Cap Screw	M6 X 10
20	D28251543	1	Tool	
	D28251545	1	Tool	(20)
21	D28251544	1	Tool	(20)
22	D43385200	2	Screw	(20)
23	D28251547	1	Adjuster	(20)
24	D28281562	5	Scraper	
25	391148X1	16	Hex Socket Screw	M8 X 20
26	D28250932	5	Band	
27	D28285303	X	Strap	
28	D28285489	X	Shim	Thickness 2MM
	D28285488	X	Shim	Thickness 1MM

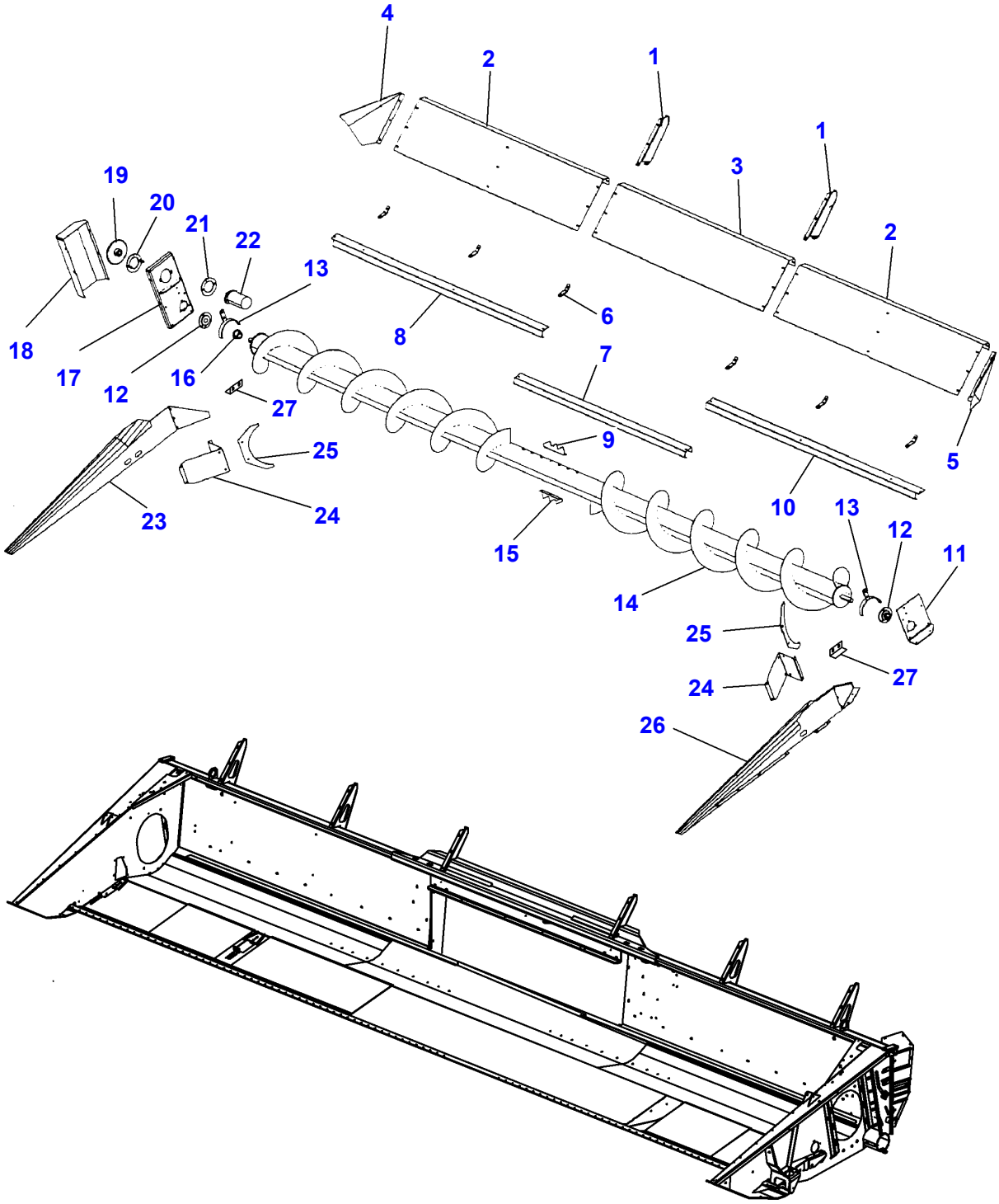
4
2
1
1
3
2
19
20
21
22
13
6
8
18
17
12
16
7
27
9
25
5
23
24
10
13
12
11
15
14
25
27
24
26

D-ZAAY-003-A

https://truckmanualshub.com/

Item	Part Number	Qty	Description	Comments
1	D18285124	2	Support	
2	D18273992	1	Plate	Right Hand 20' 6,16M
	D18273993	1	Plate	Left Hand 20' - 6,16M
	D18273990	1	Plate	Right Hand 22' - 6,77M
	D18273991	1	Plate	Left Hand 22' - 6,77M
	D18284750	1	Plate	Right Hand 25' - 7,60M
	D18284749	1	Plate	Left Hand 25' - 7,60M
3	D18284669	1	Guard	
4	D28282326	1	Guard	
5	D28282327	1	Guard	
6	D28282287	1	Clamp	
7	D28282288	1	Clamp	
8	D28282291	1	Strip	20' - 6,16M
	D28282293	1	Strip	22' - 6,77M
	D28282295	1	Stripper	25' - 7,60M
9	D28282304	1	Slat	Right Hand 667MM
	D28282302	1	Dog	Right Hand 229MM
	D28282303	1	Dog	Right Hand 448MM
10	D28282292	1	Strip	20' - 6,16M
	D28282294	1	Strip	22' - 6,77M
	D28282296	1	Stripper	25' - 7,60M
11	D28282284	1	Guard	
12	D41709600	2	Bearing	
13	D28282299	2	Rail	
14	D28282316	1	Auger	20' - 6,16M
	D28282315	1	Auger	22' - 6,77M
	D28282314	1	Auger	25' - 7,60M
15	D28282307	1	Slat	Left Hand 667MM
	D28282305	1	Dog	Left Hand 229MM
	D28282306	1	Dog	Left Hand 448MM
16	D28281339	1	Drive	
17	D28282283	1	Bracket	
18	D28282285	1	Guard	
19	D28281338	1	Sprocket	Number of teeth/spines 34
20	D28650018	1	Plate	
21	D28650101	1	Plate	
22	D45120700	1	Hydraulic Motor	
23	D18283554	1	Panel	
24	D28282301	2	Deflector	
25	D28282328	2	Plate	
26	D18285590	1	Side	
27	D28281390	1	Shim	Thickness 1 MM
	D28281391	1	Shim	

https://truckmanualshub.com/

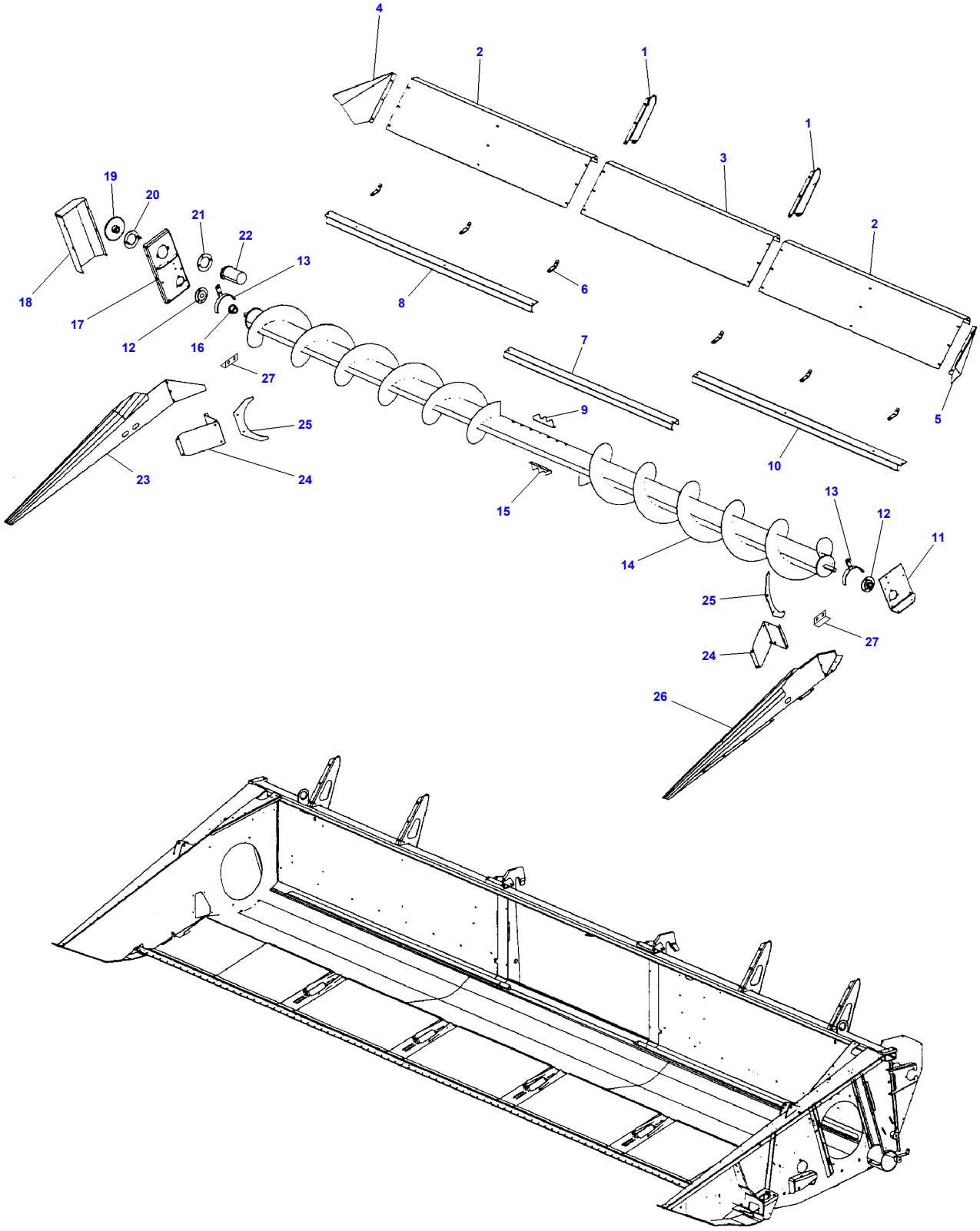

D-ZAAY-001-A

https://truckmanualshub.com/

Item	Part Number	Qty	Description	Comments
1	D18285124	2	Support	
2	D18285663	2	Plate	20' - 6,16M
	D18285664	2	Plate	22' - 6,77M
	D18285119	2	Plate	25' - 7,60M
3	D18285120	1	Guard	
4	D28282326	1	Guard	
5	D28282327	1	Guard	
6	D28282287	1	Clamp	
7	D28282288	1	Clamp	
8	D28282291	1	Strip	20' - 6,16M
	D28282293	1	Strip	22' - 6,77M
	D28282295	1	Stripper	25' - 7,60M
9	D28282304	1	Slat	Right Hand 667MM
	D28282302	1	Dog	Right Hand 229MM
	D28282303	1	Dog	Right Hand 448MM
10	D28282292	1	Strip	20' - 6,16M
	D28282294	1	Strip	22' - 6,77M
	D28282296	1	Stripper	25' - 7,60M
11	D28282284	1	Guard	
12	D41709600	2	Bearing	
13	D28282299	2	Rail	
14	D28282316	1	Auger	20' - 6,16M
	D28282315	1	Auger	22' - 6,77M
	D28282314	1	Auger	25' - 7,60M
15	D28282307	1	Slat	Left Hand 667MM
	D28282305	1	Dog	Left Hand 229MM
	D28282306	1	Dog	Left Hand 448MM
16	D28281339	1	Drive	
17	D28282283	1	Bracket	
18	D28282285	1	Guard	
19	D28281338	1	Sprocket	Number of teeth/spines 34
20	D28650018	1	Plate	
21	D28650101	1	Plate	
22	D45120700	1	Hydraulic Motor	
23	D18283554	1	Panel	
24	D28282301	2	Deflector	
25	D28282328	2	Plate	
26	D18285590	1	Side	
27	D28281390	1	Shim	Thickness 1 MM
	D28281391	1	Shim	

https://truckmanualshub.com/

MF 7274/7278 COMBINE, |-> 61123 for 7274 and |-> 61115 for 7278 - 3906105

D-ZABZ-010-B

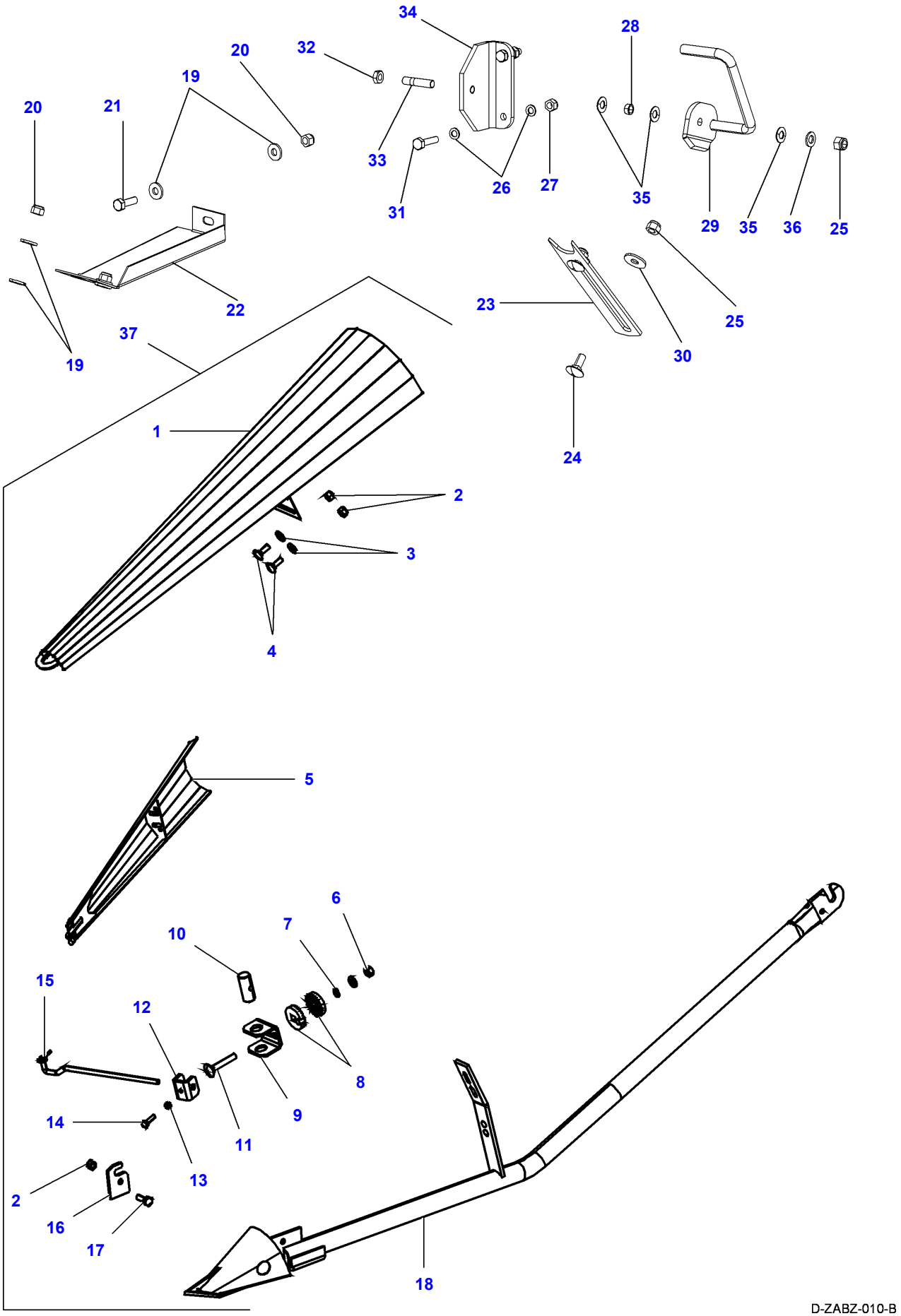

https://truckmanualshub.com/

Item	Part Number	Qty	Description	Comments
1	D28282361	1	Plate	(37)
2	1440329X1	3	Locknut	(37)
3	D20400426	3	Washer	(37)
4	1442456X1	2	Screw Special	(37)
5	D28282367	1	Blade	(37)
6	3009695X1	1	Nut	(37)
7	D41100900	1	Spring Washer	(37)
8	D28230488	2	Clutch	(37)
9	D28282364	1	Bracket	(37)
10	D28282368	1	Bracket	(37)
11	D40070900	1	Screw	(37)
12	D28282369	1	Clamp	(37)
13	339169X1	1	Nut	(37)
14	391561X1	1	Cap Screw	(37)
15	D28282372	1	Arm	(37)
16	D28282375	1	Locking Plate	(37)
17	3009493X1	1	Cap Screw	(37)
18	D28282417	1	Support	(37)
19	D20400506	2	Washer	
20	D41087500	2	Locknut	
21	D40405000	1	Cap Screw	
22	D28281572	1	Guard	Up to Serial or Engine Number 943264
	D28286669	1	Shield	From Serial or Engine Number 943265
23	D28251588	1	Plate	
24	D40070200	1	Screw Metric	
25	D41087700	2	Locknut	
26	D20400507	2	Spacer	
27	D41087600	1	Locknut	
28	D28285165	1	Bush	
29	D28285162	1	Arm	Left Hand
	D28285185	1	Arm	Right Hand
30	D20400423	1	Flat Washer	
31	D40408100	1	Cap Screw	
32	D41012100	1	Locknut	
33	D40385500	1	Bolt	
34	D28286050	1	Support	
35	D41112300	3	Washer	
36	D20400426	1	Washer	
37	D28282498	1	Divider	Cpl.

https://truckmanualshub.com/

MF 7274/7278 COMBINE, |-> 61123 for 7274 and |-> 61115 for 7278 - 3906105

D-ZABZ-011-A

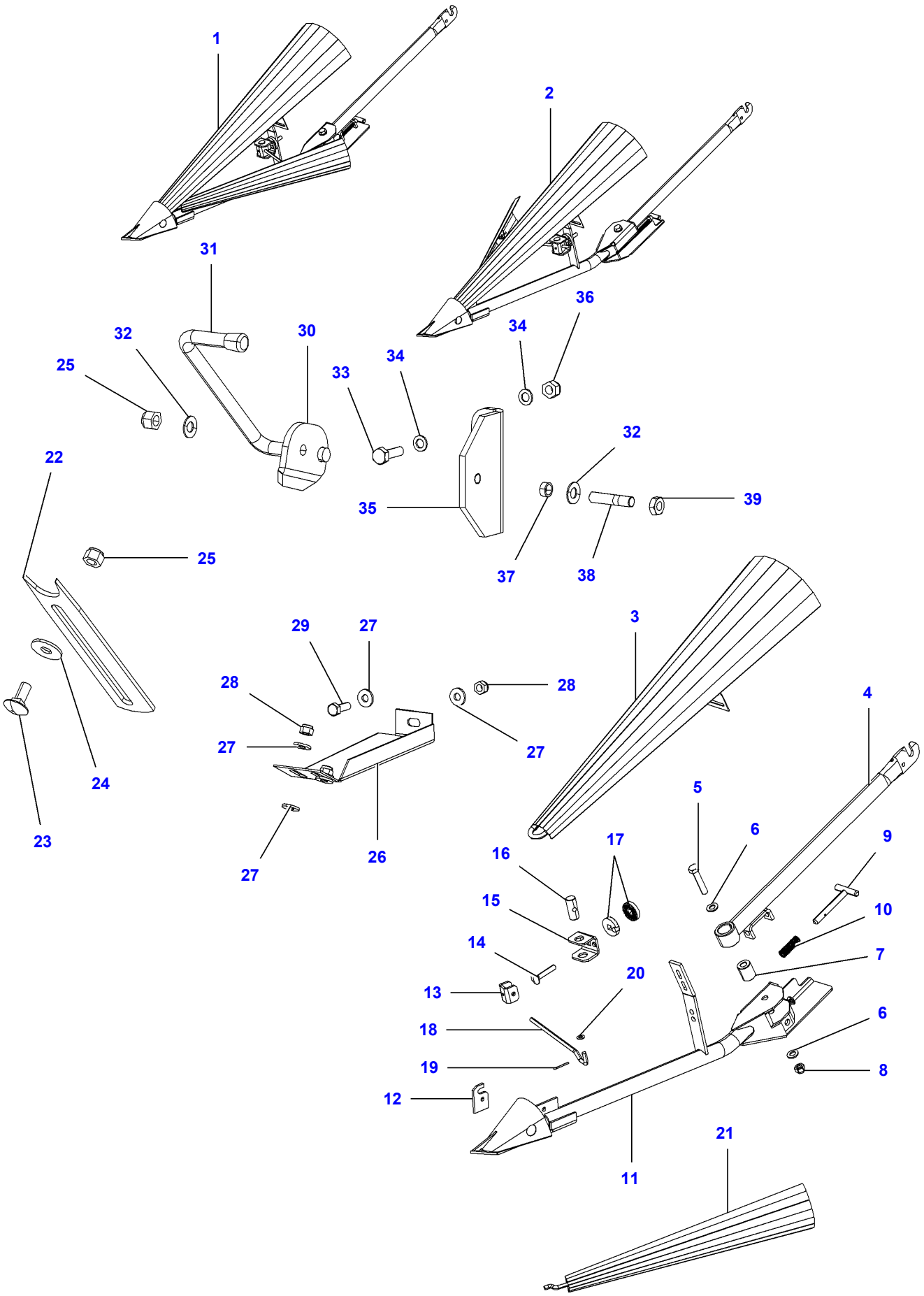

D-ZABZ-011-A

https://truckmanualshub.com/

Item	Part Number	Qty	Description	Comments
1	D28286597	1	Divider	Right Hand Cpl.
2	D28286596	1	Divider	Left Hand Cpl.
3	D28282361	1	Plate	
4	D28282756	1	Pipe	
5	390864X1	1	Cap Screw	
6	339027X1	2	Washer Metric	
7	D28282760	1	Bush	
8	391237X1	1	Nut Metric	
9	D28273825	1	Coupling	
10	D28273827	1	Spring	
11	D28282758	1	Pipe	Left Hand
	D28282758	1	Pipe	Right Hand
12	D28282375	1	Locking Plate	
13	D28282369	1	Clamp	
14	D40070900	1	Screw	
15	D28282364	1	Bracket	
16	D28282368	1	Bracket	
17	D28230488	2	Clutch	
18	D28282372	1	Arm	
19	D41408900	1	Split Pin	
20	D20400471	1	Washer	
21	D28282367	1	Blade	
22	D28251588	1	Plate	
23	D40070200	1	Screw Metric	
24	D20400423	1	Flat Washer	
25	D41087700	2	Locknut	
26	D28281572	1	Guard	
	D28286669	1	Shield	From Serial or Engine Number 943265
27	D20400506	4	Washer	
28	D41087500	2	Locknut	
29	D40405000	1	Cap Screw	
30	D28285185	1	Arm	Right Hand
	D28285162	1	Arm	Left Hand
31	D45750300	1	Ferrule	
32	D41112300	1	Washer	
33	D40407900	1	Cap Screw	
34	D20400507	2	Spacer	
35	D28286050	1	Support	
36	D41087600	1	Locknut	
37	D28285165	1	Bush	
38	D40385500	1	Bolt	
39	D41012100	1	Locknut	

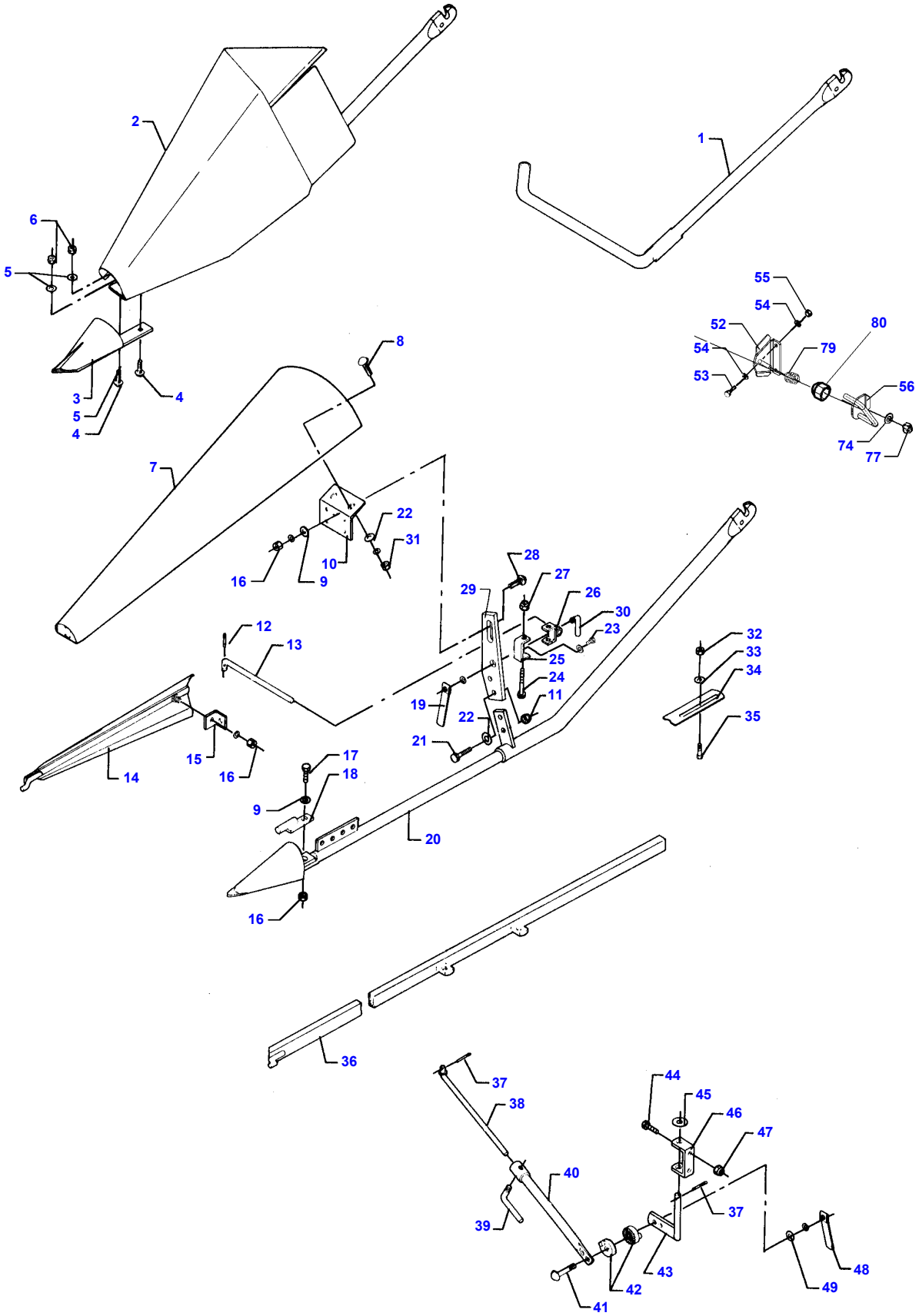
2
1
6
5
55
54
52
80
54
79
53
56
8
3
5
4
4
74
77
7
22
31
10
16
9
28
27
29
26
30
23
12
13
25
24
11
19
22
21
32
33
34
35
15
16
14
17
18
9
20
16
36
37
38
44
45
46
47
40
39
37
43
42
41
48
49

D-ZABZ-008-A

https://truckmanualshub.com/

Item	Part Number	Qty	Description	Comments
1	D18251600	1	Divider	
2	D28251604	1	Divider	RH + LH
	D18251602	1	Divider	(2) Left Hand
	D18251603	1	Divider	(2) Right Hand
3	D18260226	2	Point	(2)
4	1442456X1	4	Screw Special	(2) M10 X 30
5	D20400471	4	Washer	(2)
6	1440329X1	4	Locknut	(2) M10
7	D18282361	1	Divider	
8	385370X1	2	Bolt	(7) M8 X 25
9	D20400471	3	Washer	(7)
10	D18230447	1	Plate	(7)
11	394367X1	2	Locknut	(7) M8
12	1442034X1	1	Split Pin	(7) Diameter 4 X 20
13	D18282367	1	Blade	(7)
14	D28282375	1	Locking Plate	(7)
15	D27200313	1	Angle.	(7)
16	339402X1	3	Nut	(7) M10
17	390799X1	1	Cap Screw	(7) M10 X 40
18	D17200640	1	Stop	(7)
19	D27300323	1	Locknut	(7)
20	D28282417	1	Support	(7)
21	339761X1	2	Cap Screw	(7) M8 X 25
22	D20400506	4	Washer	(7)
23	D28230467	1	Mounting	(7)
	D40211200	1	Screw	(23)
24	339891X1	1	Cap Screw	(23) M8 X 80
25	D28282369	1	Clamp	(23)
26	D28282364	1	Bracket	(23)
27	394367X1	1	Locknut	(23) M8
28	390809X1	2	Screw Special	(7) M10 X 25
29	D18250549	1	Plate	(7)
30	D28282368	1	Bracket	(7)
31	339169X1	2	Nut	(7) M8
32	1442190X1	2	Locknut	M12
33	D20400423	2	Flat Washer	
34	D28251588	2	Plate	
35	D40070200	2	Screw Metric	M8 X 20
36	D28230487	1	Wing Tip	
	D28230480	1	Wing Tip	(36)
37	354076X1	2	Split Pin	(36) 3/16" X 1
38	D28230482	1	Support	(36)
39	D27200364	1	Grip	(36)
40	D28230486	1	Pipe	(36)
41	339226X1	1	Screw Special	(36) M6 X 16
	D40070900	1	Screw	(36) M12
42	D28230488	2	Clutch	(36)
43	D28230473	1	Support	(36)
44	3009492X1	2	Cap Screw	(36) M10 X 25
45	D20400518	1	Spacer	(36)
46	D28230472	1	Bracket	(36)
47	1440329X1	2	Locknut	(36) M10

https://truckmanualshub.com/

Item	Part Number	Qty	Description	Comments
48	D27300323	1	Locknut	(36) 1/2 WG
48	D28284403	1	Locknut	(36) M12
49	D20400426	1	Washer	(36)
52	D28285166	2	Bracket	Up to Serial or Engine Number 939559
52	D28286051	1	Bracket	From Serial or Engine Number 939560
53	339814X1	4	Cap Screw	M10 X 35
54	D20400507	8	Spacer	
55	1440329X1	4	Locknut	M10
56	D28285185	1	Arm	Right Hand
56	D28285162	1	Arm	Left Hand
74	D20400537	2	Spacer	
77	1442190X1	2	Locknut	M12
79	D28285165	2	Bush	
80	D45750300	1	Ferrule	

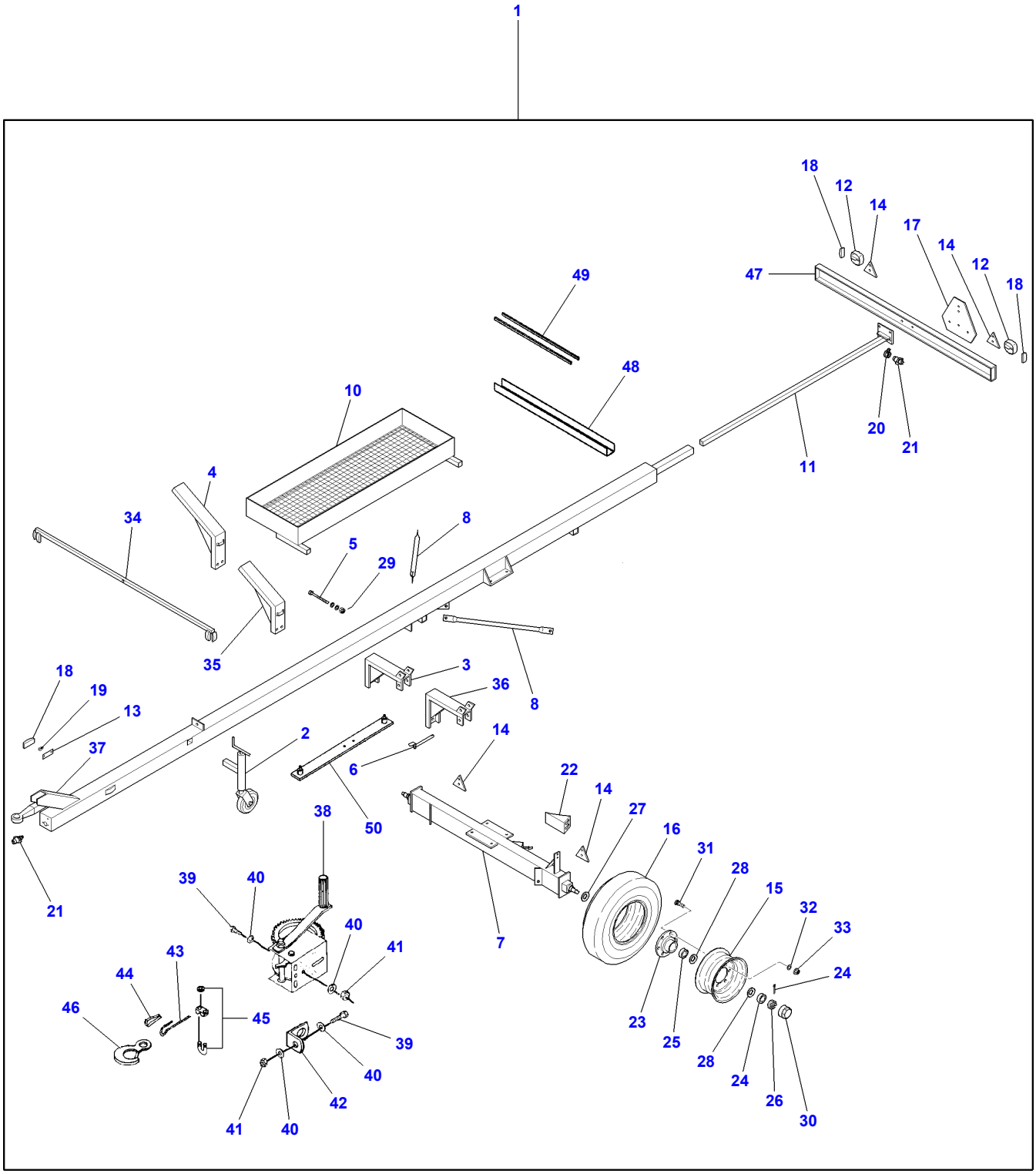
1
18
12
14
17
14
12
18
47
49
48
10
20
21
11
4
34
8
5
29
35
3
36
8
18
19
13
37
2
14
6
22
14
27
16
31
28
15
32
33
24
38
50
21
39
40
40
41
7
43
44
46
45
39
40
42
41
40
23
25
28
24
26
30

D-ZABA-007-B

https://truckmanualshub.com/

Item	Part Number	Qty	Description	Comments
1	D28282399	1	Trailer	[A] 18' - 25' 5,56 - 7,60M
	D28282400	1	Trailer	[A] 12'- 16' 3,72 - 4,95M
	D28282401	1	Trailer	[C] 18' - 25' 5,56 - 7,60M
	D28282402	1	Trailer	[C] 12' - 16' 3,72 - 4,95M
	D28282403	1	Trailer	[B] 18' - 25' 5,56 - 7,60M
	D28282404	1	Trailer	[B] 12' - 16' 3,72 - 4,95M
2	D28282642	1	Wheel	CPL.
3	D28282490	2	Bracket	Left Hand FREEFLOW
4	D28282485	2	Bracket	Right Hand POWERFLOW
5	D28282389	2	Kit, Bolt	
6	D28283693	4	Bolt	
7	D28282391	1	Axle	
8	D28282390	2	Stay	
10	D28282398	1	Support	
11	D28282393	1	Clevis Pin	
12	D45000228	2	Light	
13	D45084600	6	Reflector	
14	D45083900	4	Reflector	
15	D28282392	2	Wheel Rim	
16	D46731800	2	Tyre	
17	D45084500	1	Reflector	
18	D45000268	8	Side Lamp	
19	D45081300	6	Bulb	
20	D45005200	1	Electric Socket	
21	D45005300	2	Electric Socket	
22	D45907200	2	Shoe	
23	D46743600	2	Housing	
24	D41663000	2	Bearing Taper	
25	950579M1	2	Roller Bearing	
26	D41049500	2	Nut	
27	D46743400	2	Ring	
28	D46743500	2	Ring	
29	339037X1	2	Split Pin	Diameter 5 X 50
30	D46743700	2	Cap	
31	D46743800	12	Bolt	
32	339448X1	12	Spring Washer	
33	339447X1	12	Nut	M18
34	D28282395	1	Front Light	
35	D28282495	2	Bracket	Right Hand FREEFLOW
36	D28282480	2	Bracket	Left Hand POWERFLOW
37	D28282609	1	Bracket	CPL
38	D45906700	1	Capstan	[D]
39	339761X1	3	Cap Screw	[D] M8 X 25
40	D20400506	6	Washer	[D]
41	394367X1	3	Locknut	[D] M8
42	D28284042	1	Bracket	[D]
43	D28284143	1	Pipe	[D]
	D28282153	1	Rail	[D] (43)
44	D43409000	1	Thimble	[D] (43)
45	D43405900	2	Bracket	[D] (43)
46	D43410400	1	Hook	[D] (43)
47	D28282540	1	Plate	
48	D28282645	2	Support	

https://truckmanualshub.com/

Item	Part Number	Qty	Description	Comments
49	D28282647	4	Protective Strip	
50	D28282633	1	Bracket	

FOOTNOTE [A] WITHOUT TRAILER BRAKING
FOOTNOTE [B] WITH TRAILOR BRAKING
FOOTNOTE [C] FOR ITALY ONLY
FOOTNOTE [D] OPTIONAL EQUIPMENT

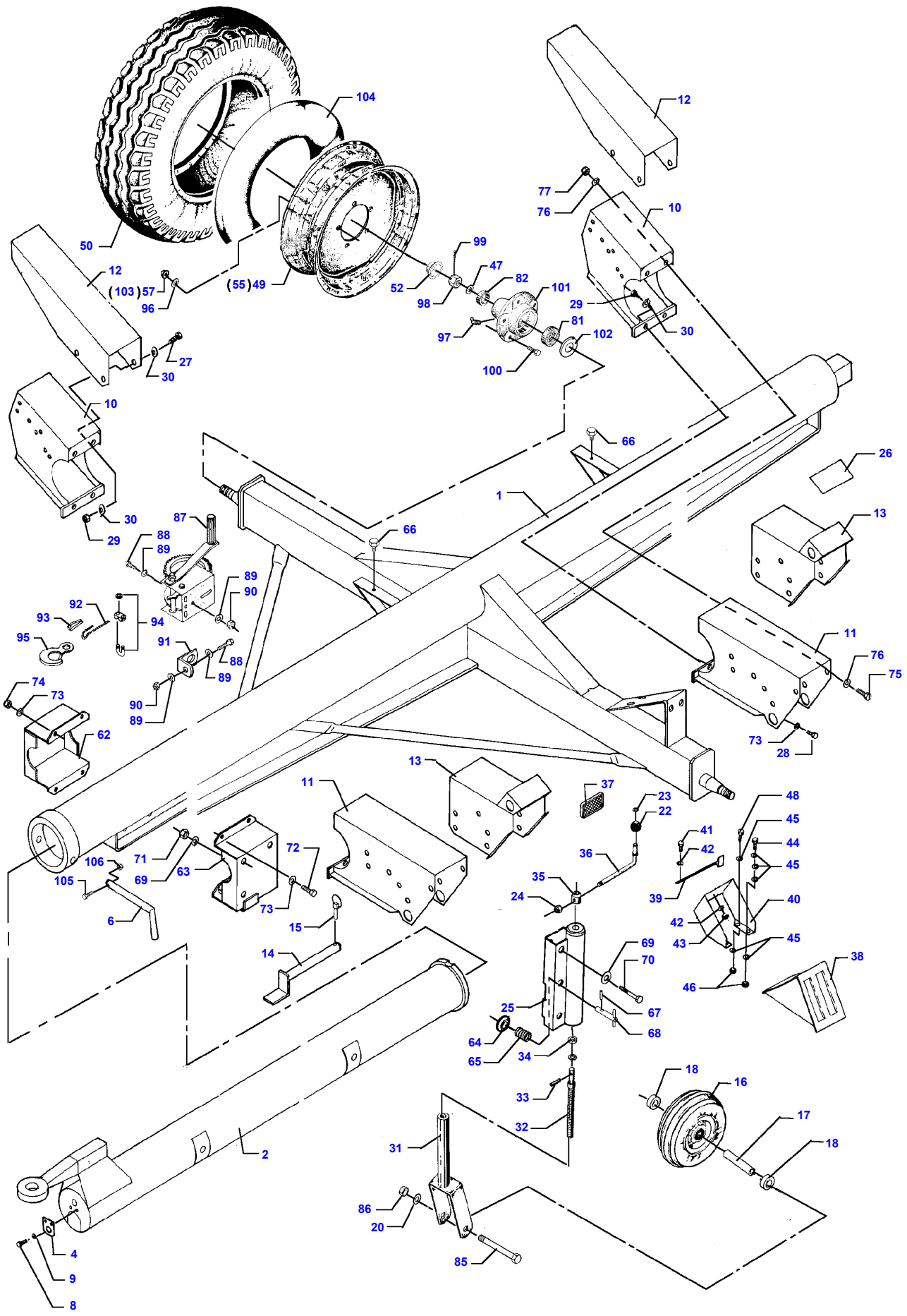
104
12
77
76
10
50
99
47
82
101
12
(103)57
(55)49
52
98
29
96
81
97
102
30
27
30
100
10
66
26
1
13
30
87
29
88
89
66
89
90
92
93
94
95
91
88
89
11
76
75
74
73
90
89
62
73
28
13
11
37
23
22
48
45
41
44
42
72
36
45
106
71
63
35
105
69
24
39
40
73
6
15
42
43
45
14
69
70
38
46
25
67
68
64
65
34
18
16
33
17
32
18
31
2
86
20
85
4
9
8

D-ZABA-009-A

https://truckmanualshub.com/

Item	Part Number	Qty	Description	Comments
1	D28285150	1	Rod	22' - 25' 6,77M - 7,60M
	D28285151	1	Rod	[A] 22' - 25' 6,77M - 7,60M
	D28283658	1	Trailer	20' - 6,16M
	D28283960	1	Trailer	[A] 20' - 6,16M
2	D28285145	1	Rod	22' - 25' 6,77M - 7,60M
	D28283668	1	Drawbar	
4	D28250748	1	Support	
6	D28283633	1	Screw	
8	D40402400	2	Cap Screw	
9	D20400404	2	Washer	
10	D28283675	2	Bracket	
11	D28283676	2	Bracket	
12	D28283678	2	Support	
13	D28283683	2	Support	
14	D28283693	2	Bolt	
15	D41446200	2	Split Pin	
16	D46721700	1	Wheel	
17	D28250317	1	Bush	
18	D28250305	2	Spacer	
20	D20400459	2	Washer	
22	D28200609	1	Ball	
23	D20400466	1	Washer	
24	D41087700	1	Locknut	
25	D28284035	1	Pipe	
26	D49138600	1	Transfer	
27	D40410900	16	Cap Screw	
28	D40411100	4	Cap Screw	
29	D41087700	20	Locknut	
30	D20400423	32	Flat Washer	
31	D28250340	1	Pipe	
32	D28250337	1	Spindle	
33	D42612000	1	Pin	
34	D41597100	1	Ball Bearing	
35	D28250356	1	Hub	
36	D28250327	1	Lever	
37	D45084600	6	Reflector	
38	D45907200	2	Shoe	
39	D28260477	2	Retainer	(39)
40	D28283963	2	Retainer	(39)
41	D40402400	2	Cap Screw	(39)
42	D20400404	4	Washer	(39)
43	1441462X1	2	Locknut	(39) Replace and repair. Old not interchangeable with new D41087400
44	D40405100	4	Cap Screw	
45	D20400413	28	Washer	
46	394367X1	4	Locknut	
47	D20400459	2	Washer	
48	339123X1	4	Cap Screw	Repairs and replaces D40404900
49	D28284453	2	Wheel	[C]
50	D46735600	2	Tyre	
52	D46723900	2	Cap	
55	D28284452	2	Wheel Rim	[B]
57	D41021500	10	Nut	M 12
62	D28284043	1	Bracket	
63	D28284048	1	Bracket	
64	D28284490	2	Spacer	
65	D28700136	1	Spring	
66	D43385200	2	Screw	
67	D41410800	1	Split Pin	
68	D28250355	1	Pin	
69	D20400522	2	Spacer	
70	D40418800	1	Screw	
71	D41088100	1	Locknut	
72	D40411100	4	Cap Screw	
73	D20400426	14	Washer	
74	D41087700	2	Locknut	

https://truckmanualshub.com/

Item	Part Number	Qty	Description	Comments
75	D40435100	4	Screw	
76	D28181284	8	Washer	
77	D41087900	4	Locknut	
81	339481X1	2	Bearing Taper	
82	D41661100	2	Bearing Taper	
85	D40435600	1	Screw	
86	D41087900	1	Locknut	
87	D45906700	1	Capstan	[D]
88	D40405000	3	Cap Screw	[D]
89	D20400506	6	Washer	[D]
90	394367X1	3	Locknut	[D]
91	D28284042	1	Bracket	[D]
92	D28284143	1	Pipe	[D]
92	D28782153	X	Wire	[D] (92) 5 M
93	D43409000	1	Thimble	[D] (92)
94	D43405900	2	Bracket	[D] (92)
95	D43410400	1	Hook	[D] (92)
96	D41111200	10	Clip	[B]
97	D43001500	2	Grease Fitting	[B]
98	D41048700	2	Castle Nut	[B]
99	D41408800	2	Split Pin	[B]
100	D46728300	10	Bolt	M 14
101	D46729200	2	Housing	[B]
102	D46727400	2	Seal	[B]
103	D41013000	10	Nut	M 14
104	D46707400	2	Hose	
105	D40423600	1	Cap Screw	
106	394367X1	1	Locknut	

FOOTNOTE [A] EQUIPMENT REQUIRED AND APPROVED BY THE TOV AUTHORITIES
FOOTNOTE [B] FOR HUB WITH M14 HUB BOLTS
FOOTNOTE [C] FOR HUB WITH M14 HUB BOLTS, INCL.POS 50,51,55,104
FOOTNOTE [D] OPTIONAL EQUIPMENT

https://truckmanualshub.com/

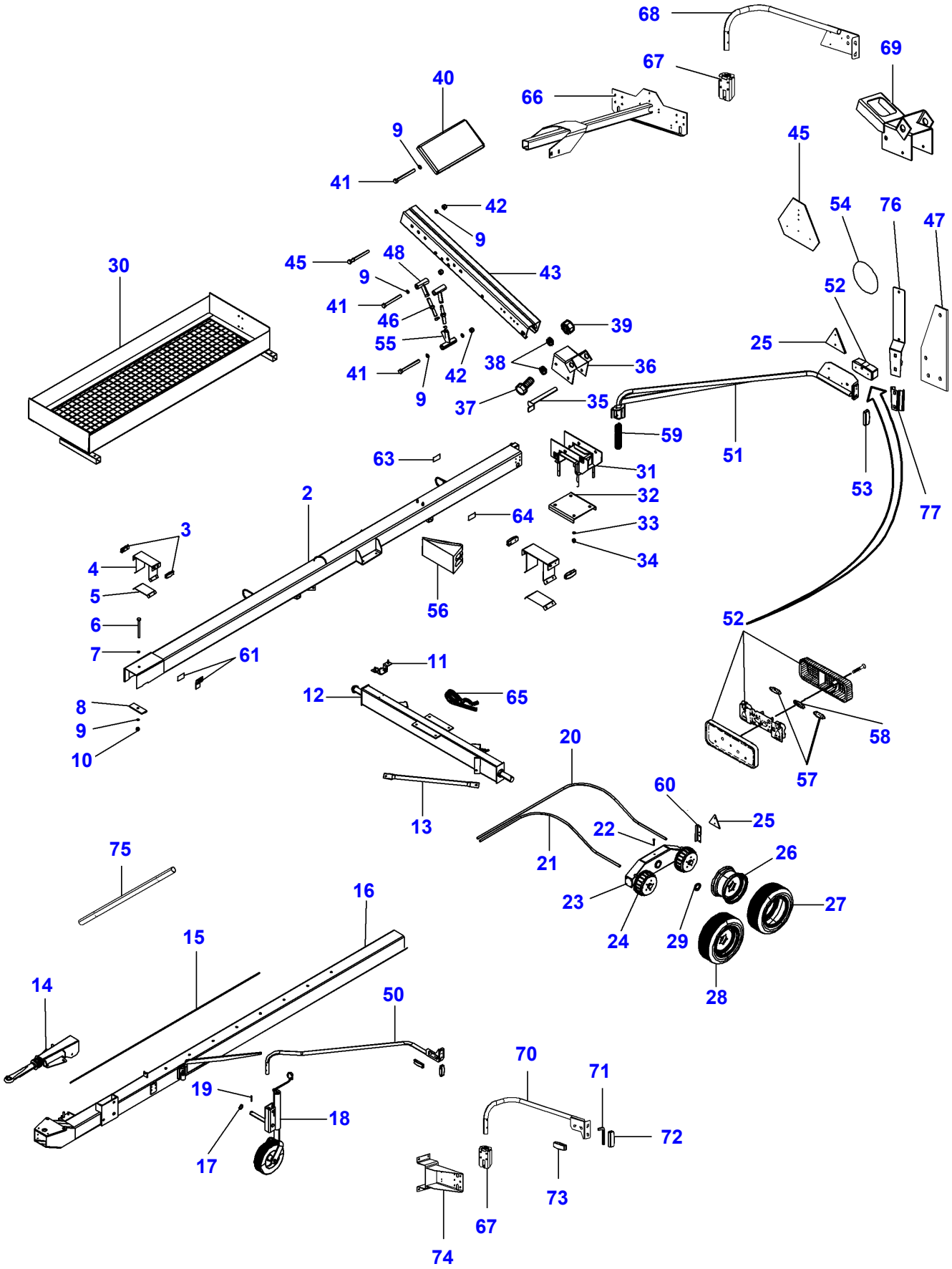

D-ZABE-001-B

https://truckmanualshub.com/

Item	Part Number	Qty	Description	Comments
1	D28282879	1	Trailer	[A,C] CPL.
	D28284430	1	Trailer	[A,C,D] CPL. From Serial or Engine Number
2	D28282725	1	Pipe	
	D28282993	1	Pipe	[D] From Serial or Engine Number
3	D45000268	8	Side Lamp	
4	D28282870	2	Bracket	
5	D28282871	2	Plate	
6	D40437800	1	Screw	
7	D20400438	18	Washer	
8	D28282789	1	Bracket	
9	D20400438	18	Washer	
10	D41088100	9	Locknut	
11	D28282449	1	Bracket	
12	D28282885	1	Shaft	
13	D28282390	2	Stay	
14	D46745603	1	Brake	
15	D28282892	1	Drawbar	
16	D28282887	1	Pipe	
	D28284419	1	Pipe	[D] From Serial or Engine Number
17	D20400439	1	Washer	
18	D28282470	1	Wheel	
19	D42618900	1	Pin	
20	D46745608	2	Cable	
21	D46745607	2	Cable	
22	D28282867	2	Pipe	
23	D28282881	1	Support	Left Hand
	D28282884	1	Support	Right Hand
	D28282986	1	Support	[D] Left Hand From Serial or Engine Number
	D28282988	1	Support	[D] Right Hand From Serial or Engine Number
24	D46745601	1	Brake	Left Hand
	D46745606	1	Brake	Right Hand
25	D45083900	4	Reflector	
26	D28284450	4	Wheel Rim	
27	D46734701	4	Tyre	
28	D46745611	4	Wheel	CPL.
29	D28282807	2	Washer	
30	D28282398	1	Support	
31	D28282720	2	Bracket	
32	D28282783	2	Plate	
33	D20400462	8	Washer	
34	D41087900	8	Locknut	
35	D28283693	2	Bolt	
36	D28282865	2	Support	
	D28282967	2	Support	[D] From Serial or Engine Number
37	D40411000	8	Cap Screw	
38	D20400473	X	Washer	
39	1440329X1	X	Locknut	Repairs and replaces D41087600
40	D28282730	2	Support	
41	D40437501	6	Screw	
42	D41088100	9	Locknut	
43	D28282728	2	Bracket	
	D28282963	2	Bracket	[D] From Serial or Engine Number
45	D45084500	1	Reflector	
46	D28282782	2	Spindle	
47	D28282983	1	Plate	
48	D28282746	2	Bolt	
49	D20400426	16	Washer	[A] Diameter 13/24X2.5
50	D28282816	1	Arm	Left Hand FRONT
	D28282817	1	Arm	Right Hand FRONT

https://truckmanualshub.com/

Item	Part Number	Qty	Description	Comments
51	D28282793	1	Bracket	Right Hand REAR
51	D28282795	1	Bracket	Left Hand REAR
52	D45077100	1	Lh Rear Lamp	Left Hand
52	D45077300	1	Rh Rear Lamp	Right Hand
53	D45084600	8	Reflector	
54	D49160400	1	Decal	20KM
55	D28282780	X	Bolt	
56	D45907200	X	Shoe	
57	**621235M1**	4	Bulb 12v 21w	
58	**3002706X1**	2	Bulb 12v 10w	
59	D28185545	1	Comp.Spring	
60	D28282820	2	Bracket	
61		X	Decal	[B]
62	D49100161	2	Decal	[A]
63		X	Decal	[B]
64		X	Decal	[B]
65	D27100120	1	Hair Pin	
66	D28282948	1	Bracket	[D]
				From Serial or Engine Number
67	D28282895	1	Bracket	[D]
				From Serial or Engine Number
68	D28282954	1	Bracket	[D]
				Right Hand
				From Serial or Engine Number
68	D28282956	1	Bracket	[D]
				Left Hand
				From Serial or Engine Number
69	D28282967	1	Support	[D]
				From Serial or Engine Number
70	D28282974	1	Bracket	[D]
				Right Hand
				From Serial or Engine Number
70	D28282972	1	Bracket	[D]
				Left Hand
				From Serial or Engine Number
71	D44735900	1	Seal Section	[D]
				From Serial or Engine Number
72	D45000268	1	Side Lamp	[D]
				From Serial or Engine Number
73	D45080005	1	Head Light	[D]
				From Serial or Engine Number
74	D28282976	1	Support	[D]
				From Serial or Engine Number
75	D28284429	1	Plate	[D]
				From Serial or Engine Number
76	D45084501	1	Plate	[D]
				From Serial or Engine Number
77	D45084502	1	Plate	[D]
				From Serial or Engine Number

FOOTNOTE [A] NOT ILLUSTRATED
FOOTNOTE [B] NOT SUPLLIED
FOOTNOTE [C] WITH TRAILOR BRAKING
FOOTNOTE [D] FROM SERIAL NO. 5001

https://truckmanualshub.com/

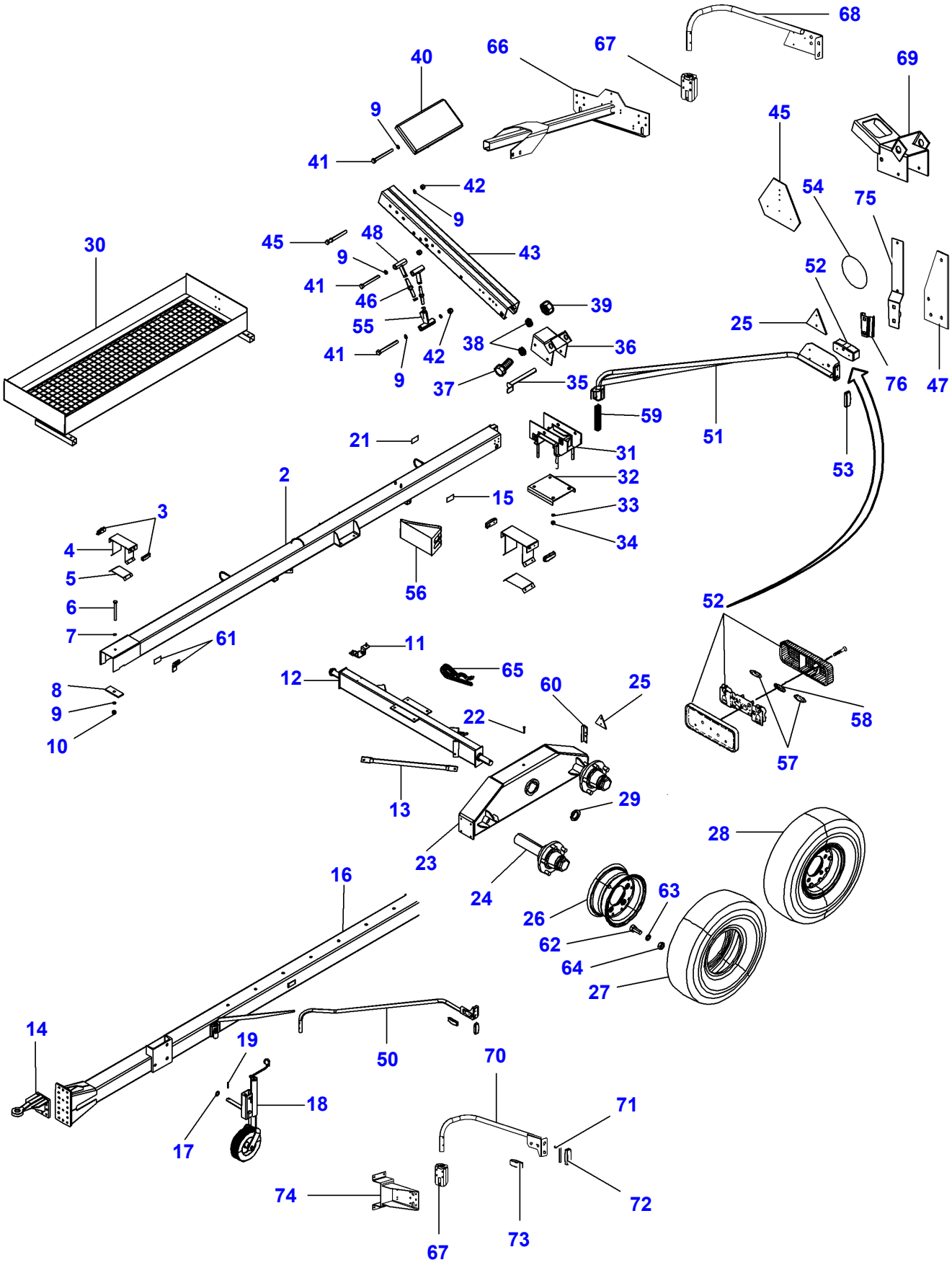

D-ZABD-001-B

https://truckmanualshub.com/

Item	Part Number	Qty	Description	Comments
1	D28282837	1	Trailer	[C,A]
				CPL.
	D28282995	1	Trailer	[C,A,D]
2	D28282725	1	Pipe	
	D28282993	1	Pipe	[D]
3	D45000268	8	Side Lamp	
4	D28282870	2	Bracket	
5	D28282871	2	Plate	
6	D40437800	1	Screw	
7	D20400438	18	Washer	
8	D28282789	1	Bracket	
9	D20400438	18	Washer	
10	D41088100	9	Locknut	
11	D28282449	1	Bracket	
12	D28282885	1	Shaft	
	D28282936	1	Shaft	From Serial or Engine Number 2177
13	D28282390	2	Stay	
14	D28284424	1	Drawbar	Repairs and replaces D28282896
15		X	Decal	[B]
16	D28282785	1	Pipe	
	D28282994	1	Pipe	[D]
17	D20400439	1	Washer	
18	D28282470	1	Wheel	
19	D42618900	1	Pin	
20	D49100161	2	Decal	[A]
21		X	Decal	[B]
22	D28282867	2	Pipe	
23	D28282866	1	Support	
	D28282937	1	Support	From Serial or Engine Number 2177
	D28282960	1	Support	[D]
				Left Hand
	D28282962	1	Support	[D]
				Right Hand
24	D46745600	1	Hub	
25	D45083900	4	Reflector	
26	D28284450	4	Wheel Rim	
	D46745612	4	Wheel Rim	[D]
27	D46734700	4	Tyre	
	D46745613	4	Tyre	[D]
28	D28284451	4	Wheel	CPL.
	D46745611	4	Wheel	[D]
29	D28282807	2	Washer	
	D28282943	2	Washer	From Serial or Engine Number 2177
30	D28282398	1	Support	
31	D28282720	2	Bracket	
32	D28282783	2	Plate	
33	D20400462	8	Washer	
34	D41087900	8	Locknut	
35	D28283693	2	Bolt	
36	D28282865	2	Support	
	D28282967	2	Support	[D]
37	D40411000	8	Cap Screw	
38	D20400473	X	Washer	
39	1440329X1	X	Locknut	Repairs and replaces D41087600
40	D28282730	2	Support	
41	D40437501	6	Screw	
42	D41088100	9	Locknut	
43	D28282728	2	Bracket	
	D28282963	2	Bracket	[D]
45	D45084500	1	Reflector	
46	D28282782	2	Spindle	
47	D28282983	1	Plate	
48	D28282746	2	Bolt	
49	D20400426	16	Washer	[A]
				Diameter 13/24X2.5
50	D28282816	1	Arm	Left Hand FRONT
	D28282817	1	Arm	Right Hand FRONT
51	D28282793	1	Bracket	Right Hand REAR
	D28282795	1	Bracket	Left Hand REAR
52	D45077100	1	Lh Rear Lamp	Left Hand
	D45077300	1	Rh Rear Lamp	Right Hand

https://truckmanualshub.com/

Item	Part Number	Qty	Description	Comments
53	D45084600	8	Reflector	
54	D49160400	1	Decal	20KM
55	D28282780	X	Bolt	
56	D45907200	X	Shoe	
57	**621235M1**	4	Bulb 12v 21w	
58	**3002706X1**	2	Bulb 12v 10w	
59	D28185545	1	Comp.Spring	
60	D28282820	2	Bracket	
61		X	Decal	[B]
62	D40407700	X	Cap Screw	
63	D20400503	X	Washer	
64	D41010800	X	Nut	
65	D27100120	1	Hair Pin	
66	D28282948	1	Bracket	[D]
67	D28282895	1	Bracket	[D]
68	D28282954	1	Bracket	[D] Right Hand
68	D28282956	1	Bracket	[D] Left Hand
69	D28282967	1	Support	
70	D28282974	1	Bracket	[D] Right Hand
70	D28282972	1	Bracket	[D] Left Hand
71	D44735900	1	Seal Section	[D]
72	D45000268	1	Side Lamp	[D]
73	D45080005	1	Head Light	[D]
74	D28282976	1	Support	[D]
75	D45084501	1	Plate	[D]
76	D45084502	1	Plate	[D]

FOOTNOTE [A] NOT ILLUSTRATED
FOOTNOTE [B] NOT SUPLLIED
FOOTNOTE [C] WITHOUT TRAILER BRAKING
FOOTNOTE [D] FROM SERIAL NO. 5001

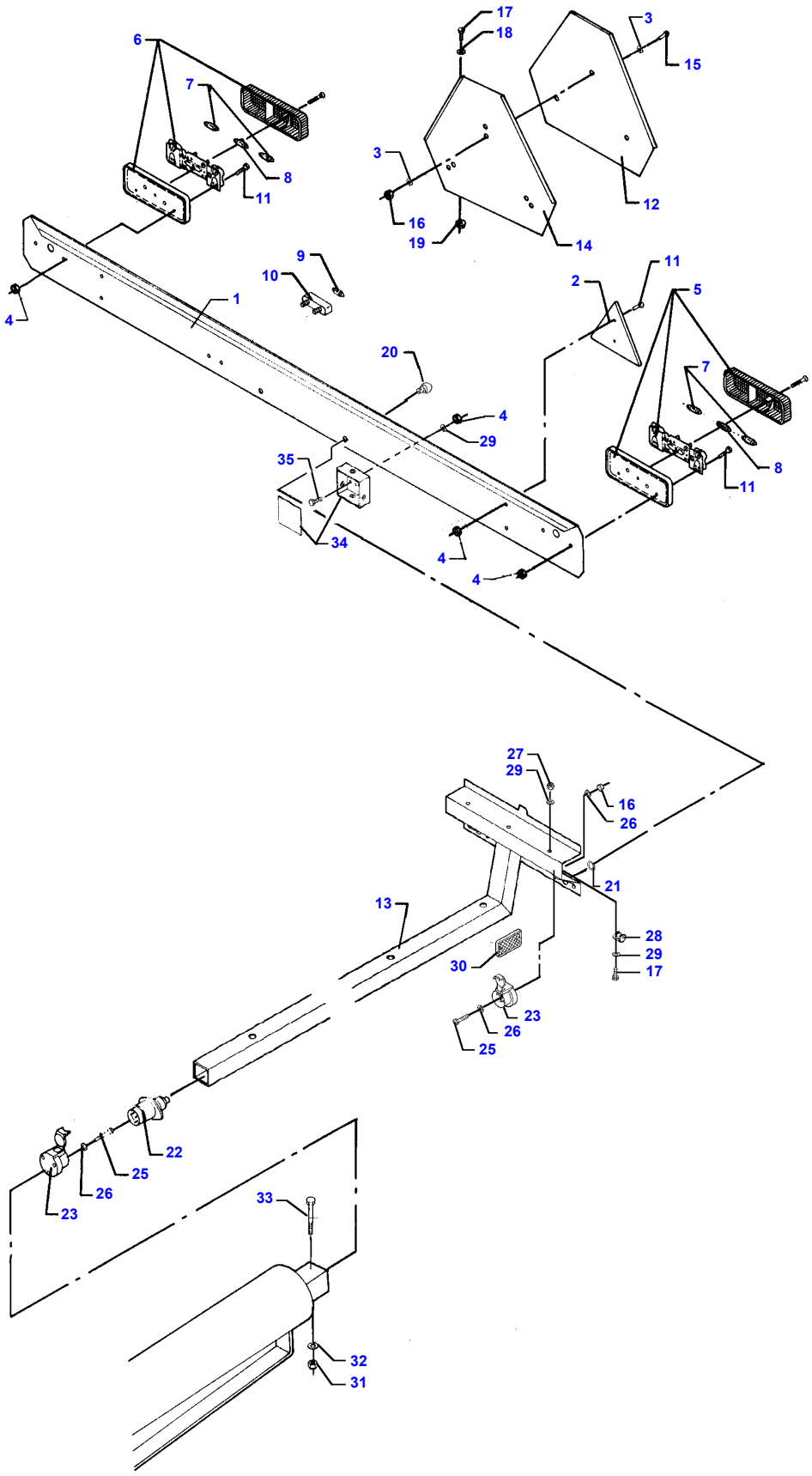
17
18
3
15
6
7
8
11
3
16
19
12
14
9
10
1
4
11
2
5
20
4
29
7
35
8
11
34
4
4
27
29
16
26
21
13
28
29
17
30
23
26
25
22
25
26
23
33
32
31

D-ZABB-003-A

https://truckmanualshub.com/

Item	Part Number	Qty	Description	Comments
1	D28285744	X	Bar	
	D28285770	1	Ramp	Valid from machine/table no,can be used in new as well as in older machines 937065
2	D45083900	2	Reflector	
3	D20400400	6	Washer	
4	D41010500	10	Nut	
5	D45077100	1	Lh Rear Lamp	Left Hand
6	D45077300	1	Rh Rear Lamp	Right Hand
7	**621235M1**	4	Bulb 12v 21w	
8	**3002706X1**	2	Bulb 12v 10w	
9	D45080900	2	Bulb	
10	D45085500	2	Head Light	
11	390958X1	8	Screw	M5 X 16
12	D45084500	1	Reflector	
13	D28285152	1	Support	
14	D28251559	1	Support	
15	3001162X1	3	Cap Screw	M4 X 16
16	D41010400	3	Nut	
17	339560X1	3	Cap Screw	M6 X 16
18	D20400453	3	Washer	
19	1441462X1	3	Locknut	M6
20	D43427500	2	Pin	
21	1440988X1	2	Snapring	
22	D45005300	1	Electric Socket	
23	D45005200	2	Electric Socket	
25	D40351600	3	Screw Metric	
26	D20400400	3	Washer	
27	1441462X1	1	Locknut	M6
28	D45729400	1	Clamp	
29	D20400404	4	Washer	
30	D45084600	2	Reflector	
31	1442190X1	1	Locknut	M12
32	D20400426	1	Washer	
33	391885X1	1	Cap Screw	M12 X 90
34	D28781903	1	Connector	
35	339804X1	2	Cap Screw	M6 X 25

https://truckmanualshub.com/

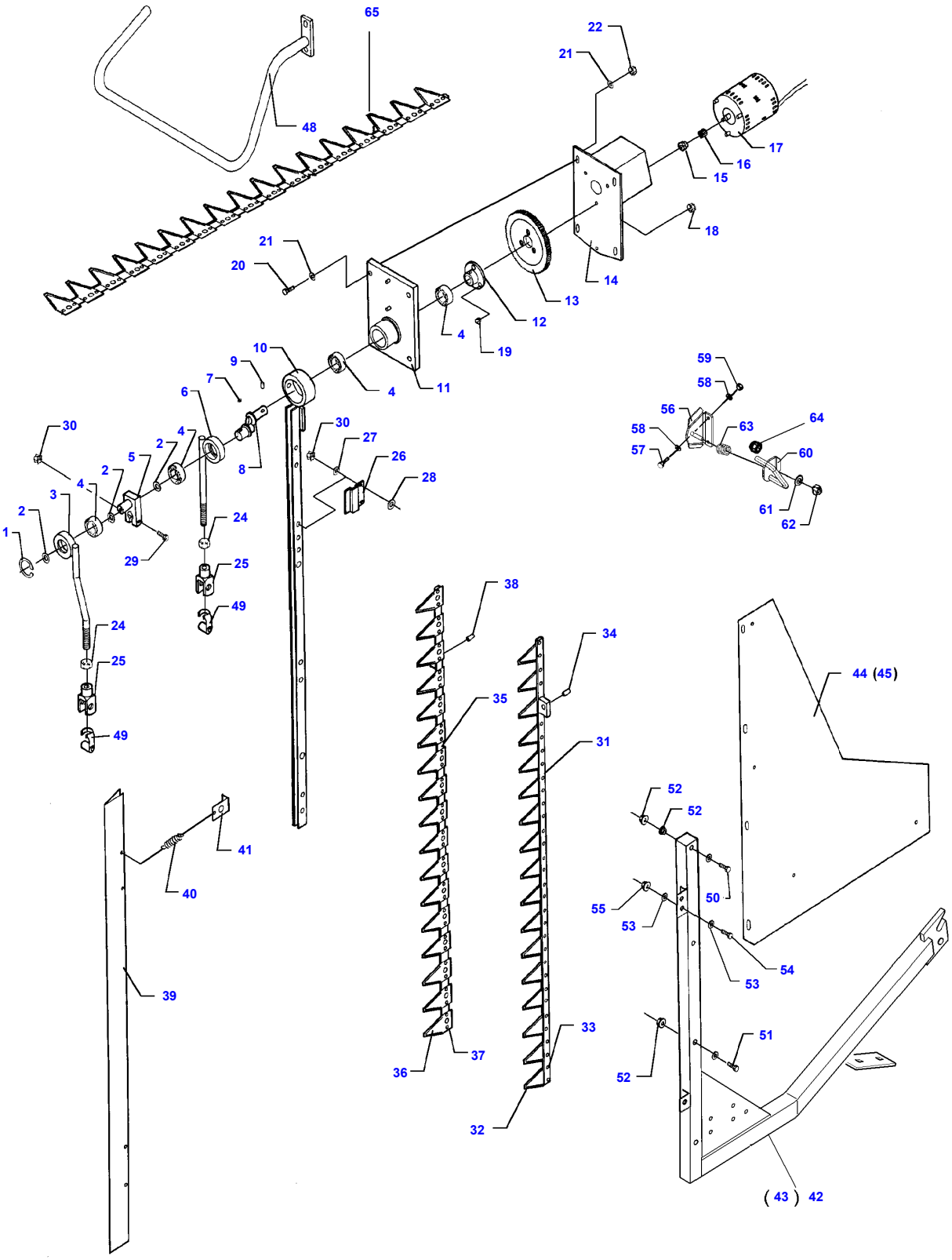

D-ZABC-003-B

https://truckmanualshub.com/

Item	Part Number	Qty	Description	Comments
1	1440475X1	1	Circlip	
2	D20400441	X	Washer	
3	D28284090	1	Bracket	Valid from machine/table no,can be used in new as well as in older machines 936512
4	391057X1	4	Bear. 6004 2rs	
5	D28284087	1	Crank	
6	D28284289	1	Conrod	Valid from machine/table no,can be used in new as well as in older machines 936512
7	D43100900	1	Key	
8	D28284084	1	Crank	
9	339071X1	1	Roll Pin	Diameter 6 X 30
10	D28284291	1	Knife	Valid from machine/table no,can be used in new as well as in older machines 936512
11	D28284292	1	Bearing Shell	Valid from machine/table no,can be used in new as well as in older machines 936512
12	D28284069	1	Hub	
13	D28284081	1	Gear	
14	D28284090	1	Bracket	
15	D28284111	1	Nut	
16	D28284080	1	Pinion	
17	D45070083	1	Electric Motor	
18	D40688000	3	Screw	
19	D41010600	3	Nut	M6
20	339019X1	4	Cap Screw	M10 X 50
21	D20400471	8	Washer	
22	339402X1	4	Nut	M10
24	339079X1	2	Nut	M14
25	D45905200	2	Fork Head	
26	D28284094	8	Clip	
27	D20400500	X	Spacer	
28	D20400506	32	Washer	
29	339010X1	16	Cap Screw	M8 X 40
30	394367X1	16	Locknut	M8
31	D28284060	1	Knife	
	D28284105	1	Knife Back	(31)
32	D44104100	17	Knife	(31)
33	D41314900	34	Rivet	(31)
34	D43360800	1	Bush	(31)
35	D28284061	1	Knife	
	D28284104	1	Knife Back	(35)
36	D44104100	17	Knife	(35)
37	D41314900	34	Rivet	(35)
38	D43360800	1	Bush	(35)
39	D28284124	1	Guard	
40	D26500317	2	Spring	
41	D28284125	2	Retainer	
42	D28285169	1	Bracket	[B]
43	D28285168	1	Bracket	[A]
44	D28285187	1	Guard	[B]
45	D28285189	1	Guard	[A]
48	D28284107	1	Deflector	
49	D45904800	2	Pin	
50	D40422400	X	Screw	
51	D40422300	X	Cap Screw	M6 X 55
52	1441462X1	X	Locknut	M6
53	D20400419	2	Washer	
54	3009495X1	1	Cap Screw	M10 X 40
55	1440329X1	1	Locknut	M10
56	D28285166	2	Bracket	Up to Serial or Engine Number 939559
	D28286051	1	Bracket	From Serial or Engine Number 939560
57	339814X1	4	Cap Screw	M10 X 35
58	D20400507	8	Spacer	
59	1440329X1	4	Locknut	M10
60	D28285185	1	Arm	Right Hand
	D28285162	1	Arm	Left Hand
61	D20400537	2	Spacer	
62	1442190X1	2	Locknut	M12
63	D28285165	2	Bush	
64	D45750300	1	Ferrule	
65	D28284269	1	Knife	

FOOTNOTE [A] OPTIONAL EQUIPMENT ELECTRIC - VERTICAL KNIFE LEFT
FOOTNOTE [B] OPTIONAL EQUIPMENT ELECTRIC VERTICAL KNIFE RIGHT

1

Ved skift af kniv, skal man sikre sig at knivbladene ligger an mod fingrenes skæreflader uden at presse mod disse.

When changing knife, please ensure that the blades are in contact with the fingers without pressing against them.

Beim Wechsel der Messern müssen die Klingen dicht an den Fingern liegen, ohne sie zu pressen.

En changeant le couteau, faire attention que la section soit en contact avec la surface du doigt sans appuyer sur celui-ci.

49158800

2

10	
12	
14	
16	
18	
20	
22	
26	

49143100

Ved ændring af tromlehastighed skal fjederstramhed på tromlekobling justeres.

When changing table auger revolutions adjust the spring tension of the table auger clutch.

Bei Änderung der Einzugschneckenumdrehungen die Federspannung der Einzugschneckenkupplung einstellen.

En Changeant la vitesse de rotation de la vis d'alimentation ajuster la tension du ressort de l'embrayage de la vis d'alimentation.

High Speed: L = 28,5 ± 0,2

Low Speed: L = 26 ± 0,2

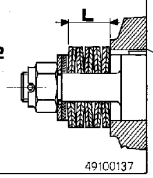

49100137

3

Al cambiar la velocidad del sinfin de cabezal ajustar la tensión del embrague del sinfin de cabezal.

Al cambiamento della volocità di rotazione della coclea regolare la tensione della molla della frizione della coclea.

Velocidad alta L = 28,5 ± 0,2

Velocidad baja L = 26 ± 0,2

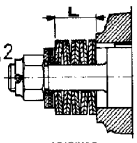

49100195

5

Al cambiar la cuchilla, asegurarse de que las hojas estén en contacto con los dedos pero sin apretarse contra ellos.

Cambiando la lama fare attenzione la lama sia a contatto con la superfice del dente senza però appoggiarcisi sopra.

49100192

4

6

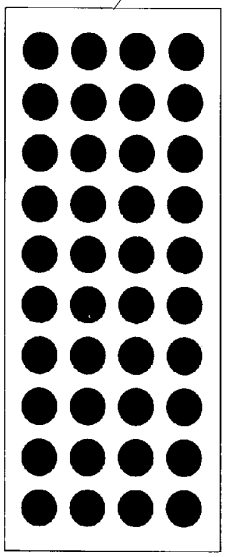

7

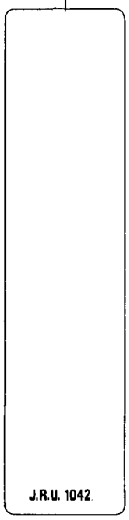

D-AR11-001-A

https://truckmanualshub.com/

Item	Part Number	Qty	Description	Comments
1	D49158800	1	Decal	
2	D49143100	1	Transfer	
3	D49100137	1	Decal	
4	D49100192	1	Decal	
5	D49100195	1	Decal	
6	D49178500	40	Decal	[A]
	D49178600	40	Decal	[B]
	D49178700	40	Decal	[C]
	D49178800	40	Decal	[D]
7	D49138600	1	Transfer	[A]
	D49138700	1	Transfer	[D]

FOOTNOTE [A] YELLOW
FOOTNOTE [B] RED
FOOTNOTE [C] BLUE
FOOTNOTE [D] WHITE

https://truckmanualshub.com/

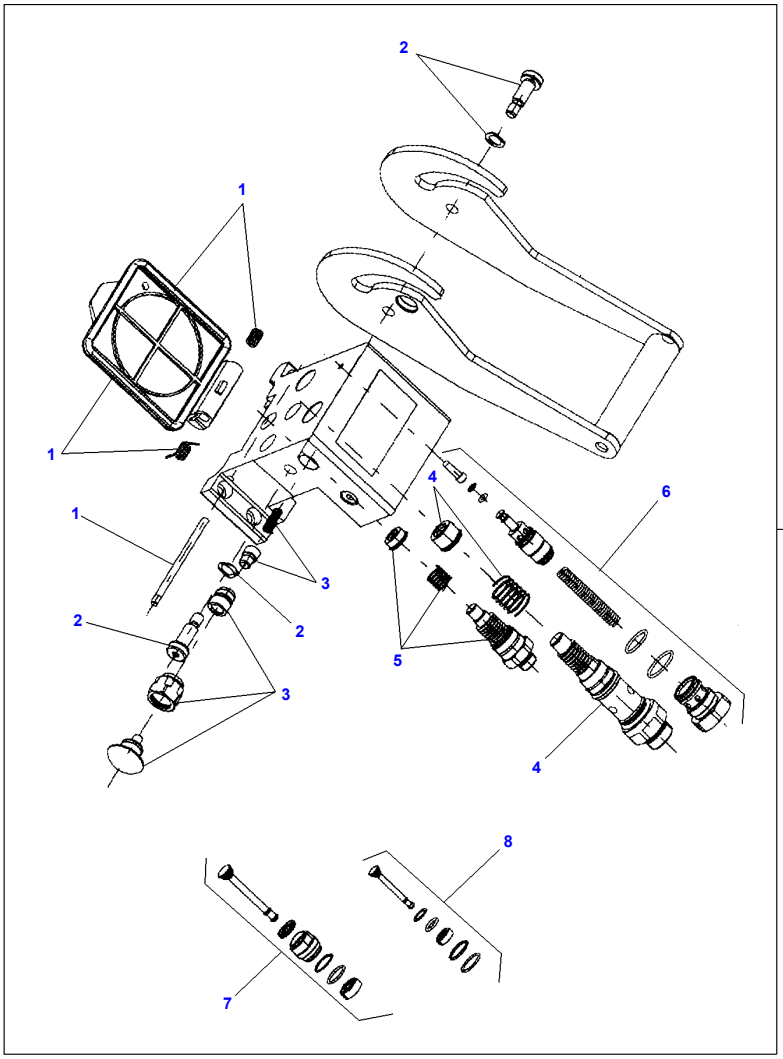

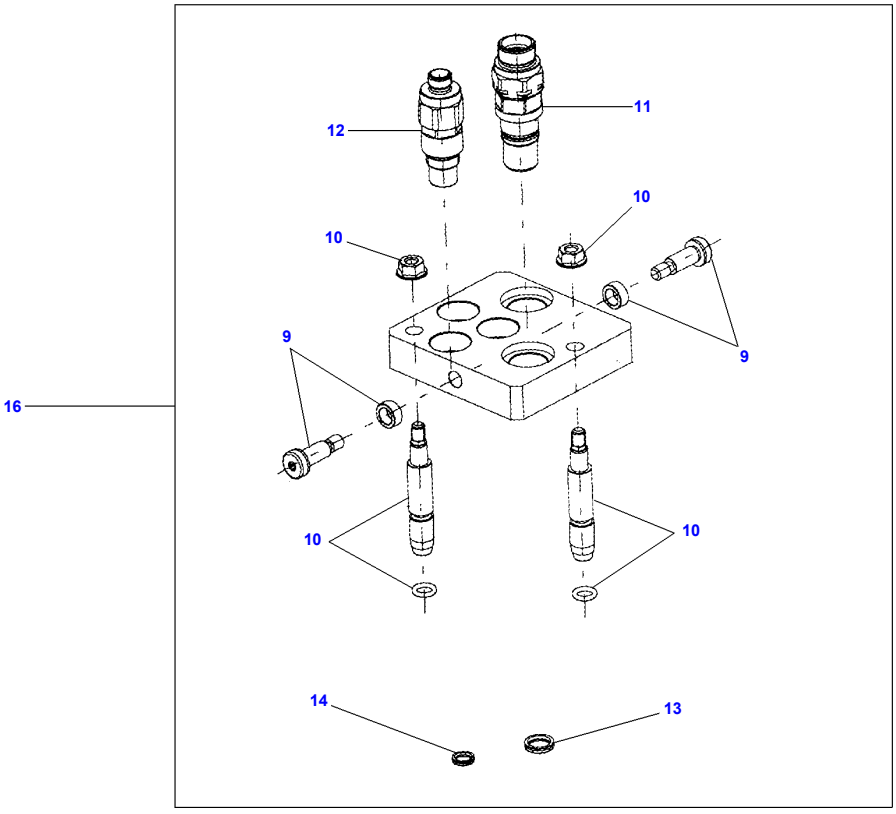

D-BA61-001-A

https://truckmanualshub.com/

Item	Part Number	Qty	Description	Comments
1	D45140051	1	Cover	(15)
2	D45140052	1	Screw	(15)
3	D45140053	1	Lock	(15)
4	D45140054	1	Coupling	(15)
5	D45140055	1	Union	(15)
6	D45140056	1	Pressure Valve	(15)
7	D45140057	1	Pressure Valve	(15)
8	D45140058	1	Pressure Valve	(15)
9	D45140045	1	Roller	(16)
10	D45140046	1	Steering	(16)
11	D45140047	1	Coupling	(16)
12	D45140048	1	Coupling	(16)
13	D45140049	1	Ring	(16)
14	D45140050	1	Ring	(16)
15	D45140043	1	Clutch	CPL.
16	D45140044	1	Clutch	CPL.

https://truckmanualshub.com/

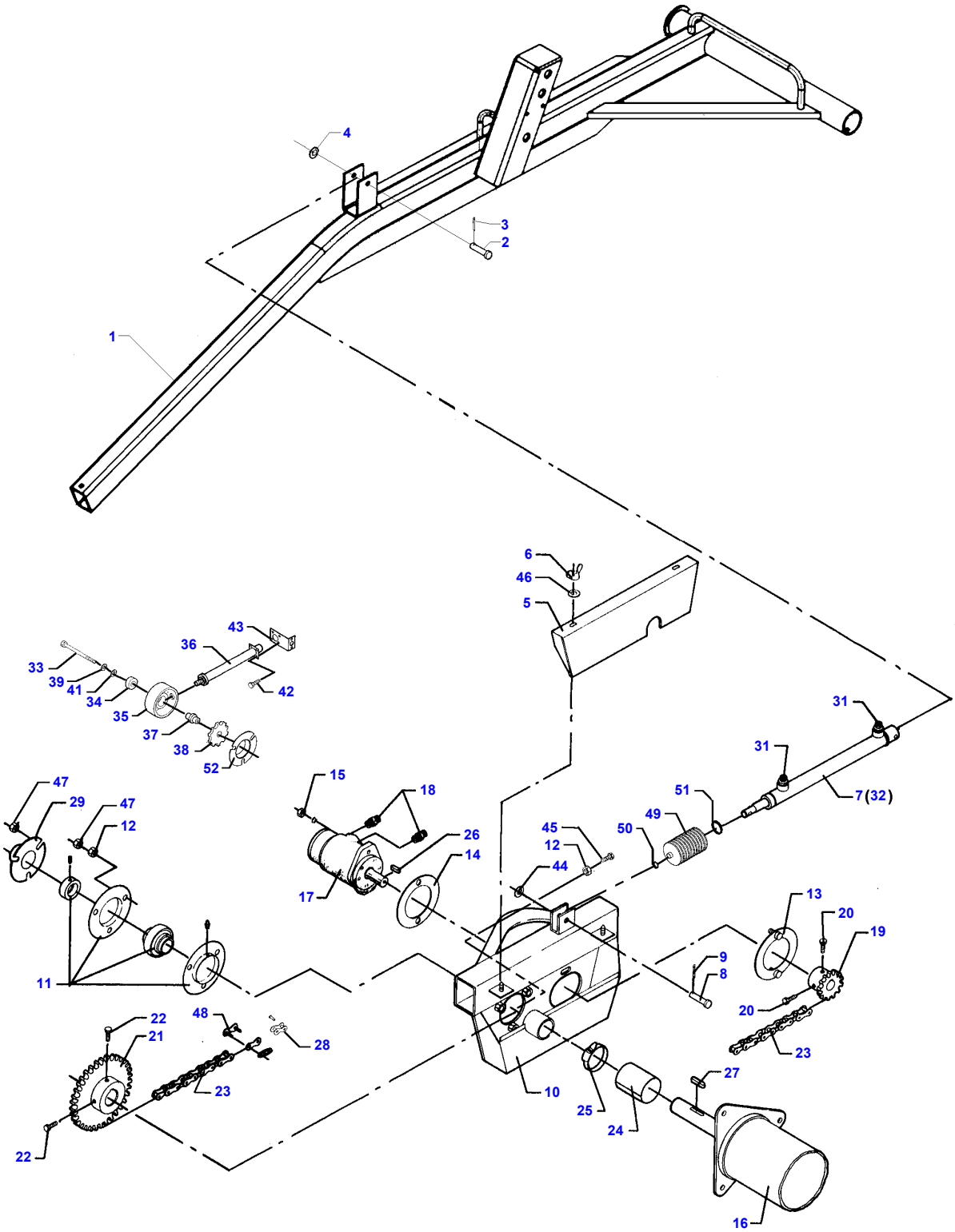

D-ZBZD-004-A

https://truckmanualshub.com/

Item	Part Number	Qty	Description	Comments
1	D18685026	1	Frame	Right Hand FREEFLOW
	D28685024	1	Frame	Right Hand POWERFLOW
2	D28280383	1	Pin	
3	354066X1	1	Split Pin	5/32" X 1
4	D20400471	1	Washer	
5	D28680046	1	Cover	
6	339106X1	2	Wing Nut	M8
7	D45140014	1	Cylinder	20' - 6,16M
				22' - 6,77M
				25' - 7,60M
	D45100028	1	Cylinder	18' - 5,56M
8	D28280382	1	Pin	
9	354066X1	1	Split Pin	5/32" X 1
10	D28680055	1	Housing	
11	D41707800	1	Bearing	
12	339402X1	4	Nut	M10
13	D28650018	1	Plate	
14	D28650101	1	Plate	
15	3009695X1	2	Nut	M12
16	D28680151	1	Reel Tube	20' - 6,16M
	D28680267	1	Reel Tube	25' - 7,60M
				Valid from machine/table no,can be used in new as well as in older machines
				941149
	D28680278	1	Reel Tube	22'- 6,77M
17	D45120700	1	Hydraulic	
			Motor	
18	D45250700	2	Union	
19	D28650023	1	Sprocket	
20	339124X1	3	Cap Screw	25' - 7,60M
				M8 X 16
	339123X1	2	Cap Screw	M8 X 20
21	D28680013	1	Sprocket	
22	339337X1	2	Cap Screw	M8 X 30
23	**D42325700**	1	Chain	
24	D28680087	1	Tube	
25	338617X1	1	Hose Clip	Diameter 40-60
26	D43103400	1	Key	
27	1440375X1	1	Key Parallel	
28	D42363200	1	Link	
29	D28761977	1	Cover	
31	D45250000	2	Union	
32	D45140016	1	Kit, Gasket	20' - 6,16M
				22' - 6,77M
				25' - 7,60M
	D45110020	1	Kit	18' - 5,56M
33	339814X1	1	Cap Screw	[A]
				M10 X 35
34	D28781020	1	Sensor	[A]
	1440487X1	1	Bear. 6203 2rs	[A]
				(34)
35	D28751223	1	Cup	[A]
				(34)
36	D28781016	1	Sensor	[A]
				(34)
37	D28751218	1	Journal	[A]
				(34)
38	D28750922	1	Wheel	[A]
				(34)
39	D41101900	1	Spring Washer	[A]
41	D20400419	1	Washer	[A]
42	D40740400	4	Screw	[A]
43	D28780772	1	Retainer	[A]
44	D20400505	1	Spacer	
45	D40408400	1	Bolt Metric	
46	D20400414	2	Washer	
47	394367X1	6	Locknut	M8
48	D42363100	1	Link	
49	D28281626	1	Rubber	
50	D45007800	1	Retainer	
51	D45050037	1	Retainer	
52	D28281517	1	Cover	[A]

https://truckmanualshub.com/

Item	Part Number	Qty	Description	Comments

FOOTNOTE [A] OPTIONAL EQUIPMENT REEL/FIELD PRESSURE ADJUSTMENT

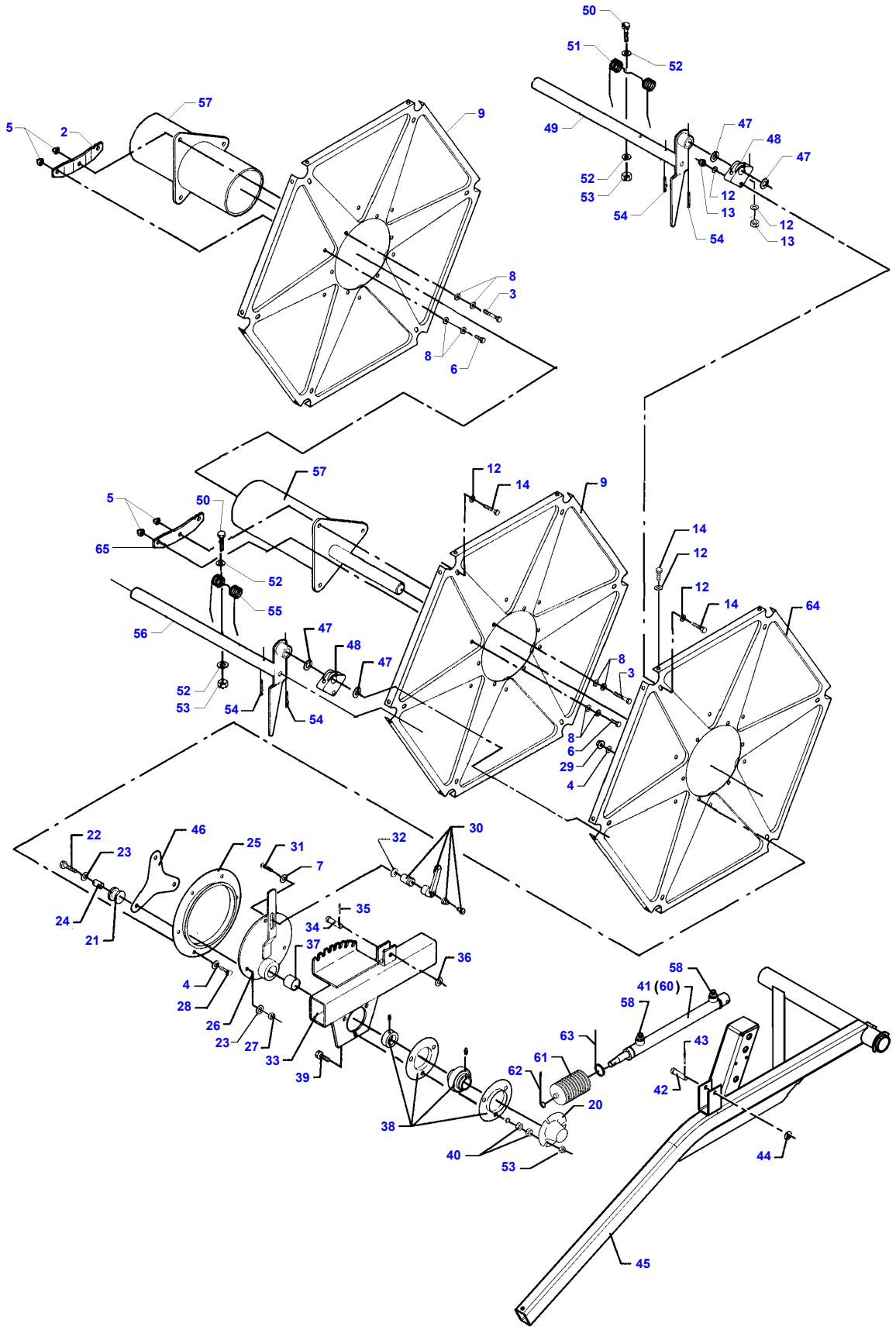
50
51
52
49
47
48
47
52
53
12
54
13
54
12
13
57
9
5
2
8
3
8
6
57
12
14
9
5
50
65
52
55
56
47
48
47
52
53
54
54
14
12
12
14
64
8
3
8
6
29
4
22
23
46
25
31
7
32
30
24
21
35
34
37
36
4
28
26
23
27
33
39
58
41 (60)
58
63
61
62
20
38
40
53
43
42
44
45

D-ZBZB-009-B

https://truckmanualshub.com/

Item	Part Number	Qty	Description	Comments
2	D28660051	6	Dog	
3	339761X1	X	Cap Screw	M8 X 50
4	D20400506	X	Washer	
5	394367X1	X	Locknut	M8
6	339124X1	X	Cap Screw	M8 X 16
7	D20400518	1	Spacer	
8	D20400413	X	Washer	
	D20400506	X	Washer	25' - 7,60M
9	D28680276	3	Plate	Valid from machine/table no,can be used in new as well as in older machines 941149
12	D20400403	X	Washer	
13	1441462X1	X	Locknut	M6
14	339804X1	X	Cap Screw	M6 X 25
20	D28761977	1	Cover	
21	D28660005	3	Roller	
22	339019X1	3	Cap Screw	M10 X 50
	3009498X1	3	Cap Screw	25' - 7,60M
				M10 X 55
23	D20400416	3	Washer	
	D20400471	3	Washer	25' - 7,60M
24	D28660143	3	Bush	
25	D28660036	1	Ring	Up to Serial or Engine Number 941148
	D28680277	1	Ring	From Serial or Engine Number 941149
26	D28680097	1	Plate	
27	1440329X1	3	Locknut	M10
28	339123X1	6	Cap Screw	M8 X 20
29	394367X1	6	Locknut	M8
30	D43387500	1	Lever	
31	390787X1	1	Screw Special	M12 X 25
32	D20400426	1	Washer	
33	D28680054	1	Housing	
34	D28280382	1	Pin	
35	354066X1	1	Split Pin	5/32" X 1
36	D20400505	1	Spacer	
37	D43338200	1	Lining	(26)
38	D41707800	1	Bearing	
39	3009493X1	3	Cap Screw	M10 X 30
	390799X1	3	Cap Screw	25' - 7,60M
				M10 X 40
40	339402X1	3	Nut	M10
41	D45140011	1	Cylinder	20' - 6,16M
				22' - 6,77M
				25' - 7,60M
	D45100027	1	Cylinder	18' - 5,56M
42	D28280383	1	Pin	
43	354066X1	1	Split Pin	5/32" X 1
44	D20400471	1	Washer	
45	D18685025	1	Frame	Left Hand FREEFLOW
	D28685023	1	Frame	Left Hand POWERFLOW
46	D28680120	1	Plate	
47	D20400586	X	Washer	
48	D28680117	X	Bearing Carrier	
49	D28680273	3	Bar	Left Hand 25' - 7,60M
				Valid from machine/table no,can be used in new as well as in older machines 941149
	D28680142	3	Bar	Left Hand 22' - 6,77M
				Up to Serial or Engine Number 937165
	D28680261	3	Bar	Left Hand 22' - 6,77M
				From Serial or Engine Number 937166
	D28680147	3	Bar	Left Hand 20' - 6,16M
				Up to Serial or Engine Number 937165
	D28680257	3	Bar	Left Hand 20' - 6,16M
				From Serial or Engine Number 937166
	D28680281	3	Bar	22' + 25'
				6,77M - 7,60M
				From Serial or Engine Number 941149
50	339168X1	X	Cap Screw	M8 X 50
51	**D28680130**	X	Spring	
52	D20400506	X	Washer	
53	394367X1	X	Locknut	M8
54	339037X1	X	Split Pin	Diameter 5 X 50
55	**D28680131**	3	Spring	

https://truckmanualshub.com/

Item	Part Number	Qty	Description	Comments
56	D28680274	3	Bar	Left Hand 25' - 7,60M
				Valid from machine/table no,can be used in new as well as in older machines 941149
56	D28680140	3	Bar	Left Hand 22' - 6,77M
				Up to Serial or Engine Number 937165
56	D28680262	3	Bar	Left Hand 22' - 6,77M
				From Serial or Engine Number 937166
56	D28680148	3	Bar	Left Hand 20' - 6,16M
				Up to Serial or Engine Number 937165
56	D28680258	3	Bar	Left Hand 20' - 6,16M
				From Serial or Engine Number 937166
56	D28680282	3	Bar	22' + 25'
				6,77M - 7,60M
				From Serial or Engine Number 941149
57	D28680278	1	Reel Tube	22' - 6,77M
57	D28680151	1	Reel Tube	20' - 6,16M
57	D28680267	1	Reel Tube	25' - 7,60M
				Valid from machine/table no,can be used in new as well as in older machines 941149
58	D45250000	2	Union	PACOMA
60	D45140015	1	Kit, Gasket	20' - 6,16M
				22' - 6,77M
				25' - 7,60M
60	D45110019	1	Kit, Joint	18' - 5,56M
61	D28281626	1	Rubber	
62	D45007800	1	Retainer	
63	D45050037	1	Retainer	
64	D28680240	1	Plate	[A]
				Up to Serial or Engine Number 941148
64	D28680276	1	Plate	From Serial or Engine Number 941149
65	D28680026	6	Bridle	

FOOTNOTE [A] ORDER D28680276 + D28680277

https://truckmanualshub.com/

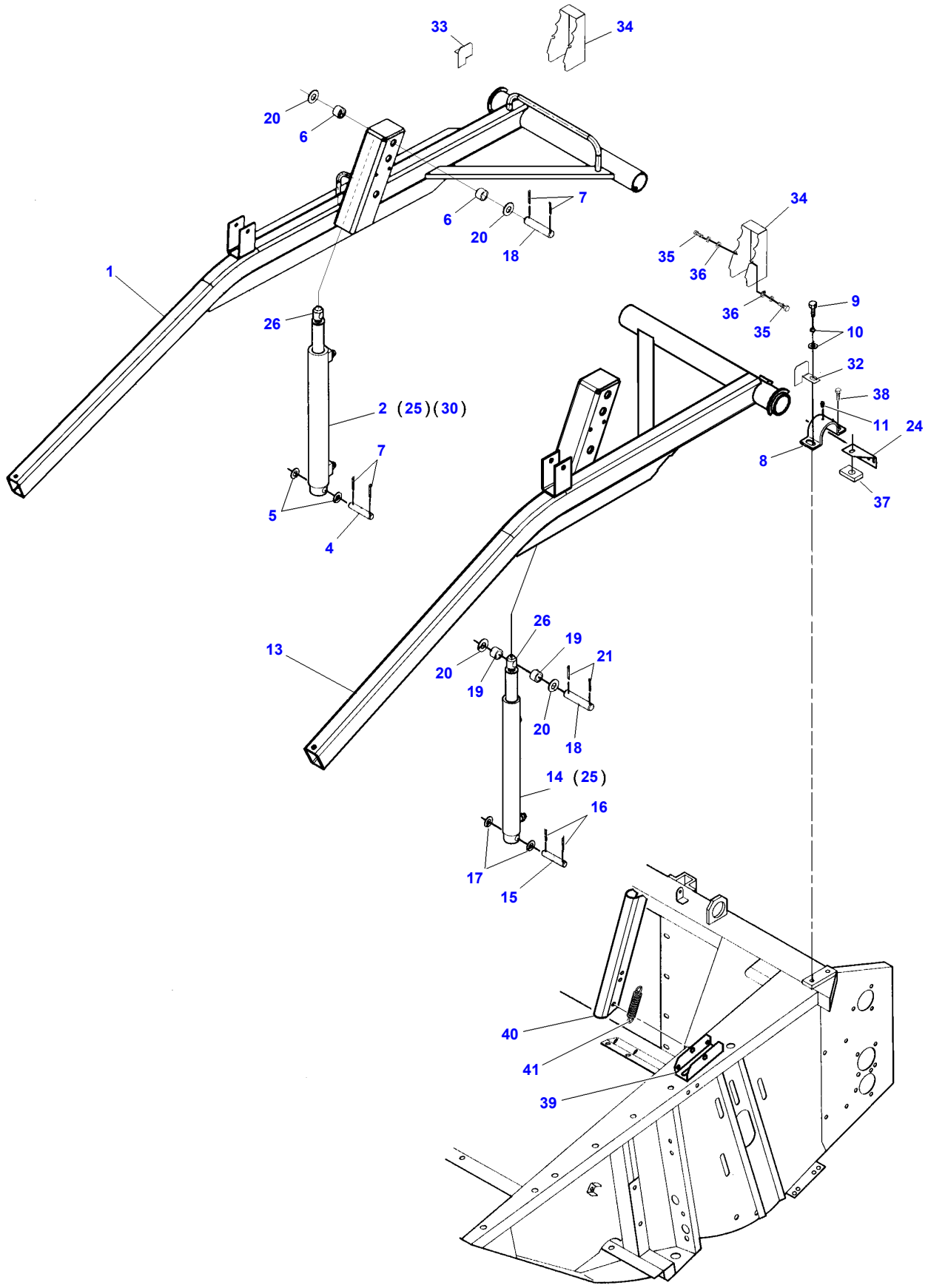

D-ZBZC-006-A

https://truckmanualshub.com/

Item	Part Number	Qty	Description	Comments
1	D18685026	1	Frame	Right Hand FREEFLOW
	D28685024	1	Frame	Right Hand POWERFLOW
2	D45100066	1	Cylinder	
4	D28280236	1	Pin	
5	D20400518	2	Spacer	
6	D28751140	2	Spacer	
7	354066X1	4	Split Pin	5/32" X 1
8	D28283300	2	Half Flange	
9	339139X1	2	Cap Screw	M12 X 25
10	D20400424	2	Washer	
11	1441858X1	2	Grease Fitting	M6
13	D18685025	1	Frame	Left Hand FREEFLOW
	D28685023	1	Frame	Left Hand POWERFLOW
14	D45100067	1	Cylinder	
15	D28280236	1	Pin	
16	354066X1	2	Split Pin	5/32" X 1
17	D20400518	2	Spacer	
18	D28280237	2	Pin	
19	D28751140	2	Spacer	
20	D20400520	4	Spacer	
21	354066X1	4	Split Pin	5/32" X 1
24	D18283251	1	Retainer	
25	D41042700	2	Nut	
26	D45100044	2	Extension	
30	D45110089	1	Kit, Seal	SERTA
32	D28680025	1	Angle.	
33	D28680024	1	Angle.	
34	D28281518	2	Guard	
35	339560X1	4	Cap Screw	M6 X 16
36	D20400404	4	Washer	
37	D28283835	2	Support	
38	1440716X1	2	Cap Screw	M12 X 30
39	D28685027	2	Console	
40	D28685015	2	Stand	
41	D28710853	2	Spring	

https://truckmanualshub.com/

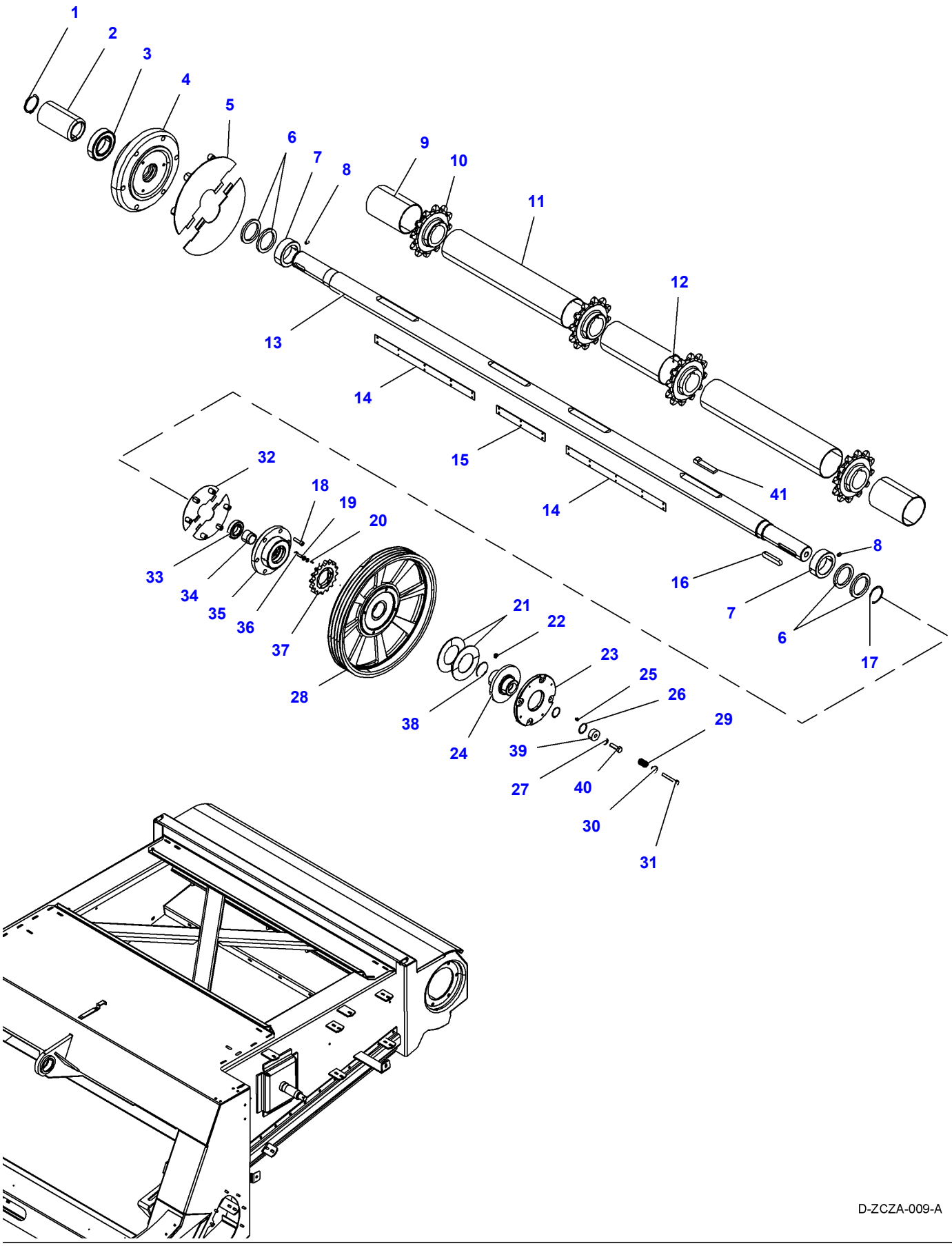

D-ZCZA-009-A

https://truckmanualshub.com/

Item	Part Number	Qty	Description
1	D42504300	1	Circlip
2	D28283846	1	Bush
3	D41623300	2	Bear. 6210 2rs
4	D28280112	1	Bearing
5	D28285386	4	Cover
6	D43501500	4	Felt Ring
7	D28286108	2	Insert
8	D40632000	1	Stud
9	D28286107	2	Protection.
10	D28281304	4	Sprocket
11	D28281840	2	Protection.
12	D28281874	1	Protection.
13	D28283598	1	Shaft
	D28283593	1	Shaft
14	D28281870	2	Plate
15	D28281871	1	Plate
16	D43107900	1	Key
17	D42596900	1	Tightener
18	D40694100	1	Screw
19	D41101900	1	Spring Washer
20	D20400471	1	Washer
21	**D45904300**	2	Friction Disc
22	D41012100	1	Locknut
23	D28280116	1	Plate
24	D28280118	1	Hub
25	D43001600	1	Grease Fitting
26	D42596900	2	Tightener
27	D20400459	1	Washer
28	D28280120	1	Pulley
29	D28286052	4	Comp.Spring
30	D28251025	4	Washer
31	D40429200	1	Cap Screw
32	D28285386	1	Cover
33	D41623300	1	Bear. 6210 2rs
34	D28280252	1	Ring
35	D28280112	2	Bearing
36	D40407900	1	Cap Screw
37	D28281618	1	Sprocket
38	D45481200	1	O Ring
39	D28280261	1	Ring
40	D40433200	1	Cap Screw
41	D43162000	1	Gib Key

https://truckmanualshub.com/

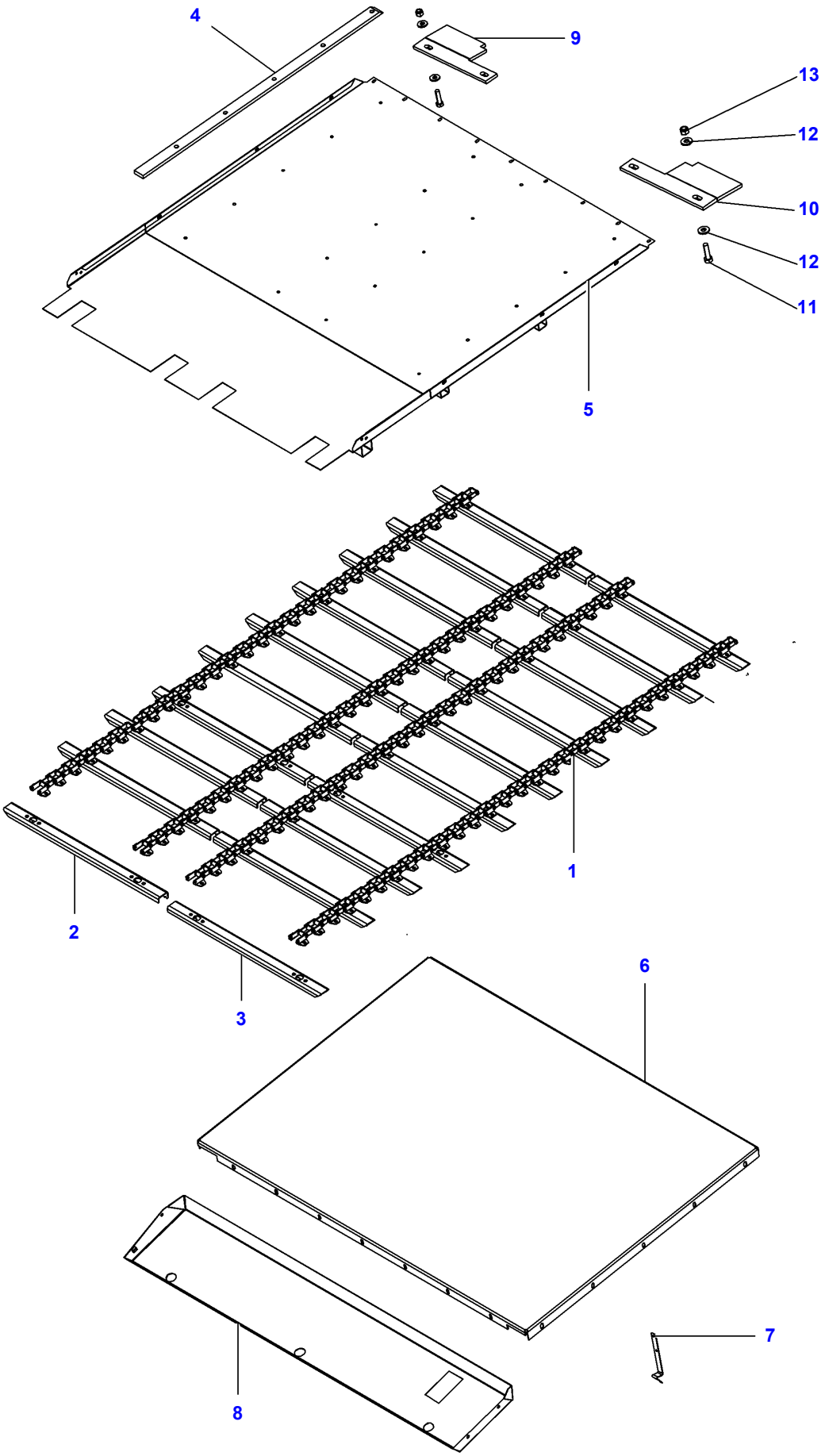

D-ZCZB-010-B

https://truckmanualshub.com/

Item	Part Number	Qty	Description	Comments
1	D28285326	1	Chain	
2	D28285406	1	Slat	[A] Right Hand From Serial or Engine Number 58522
	D28285324	1	Slat	[B] Right Hand Up to Serial or Engine Number 58521
3	D28285407	1	Slat	[A] Left Hand From Serial or Engine Number 58522
	D28285325	1	Slat	[B] Left Hand Up to Serial or Engine Number 58521
4	D28281247	1	Guide	
5	D28281705	1	Plate	
6	D28273919	1	Plate	Up to Serial or Engine Number 62004
7	D28260477	1	Retainer	
8	D28286232	1	Plate	
9	6217801M1	1	Bracket	
10	6217802M1	1	Bracket	
11	D40405100	1	Cap Screw	
12	D20400506	1	Washer	
13	D41087500	1	Locknut	

FOOTNOTE [A] STANDARD
FOOTNOTE [B] AUTO LEVEL

https://truckmanualshub.com/

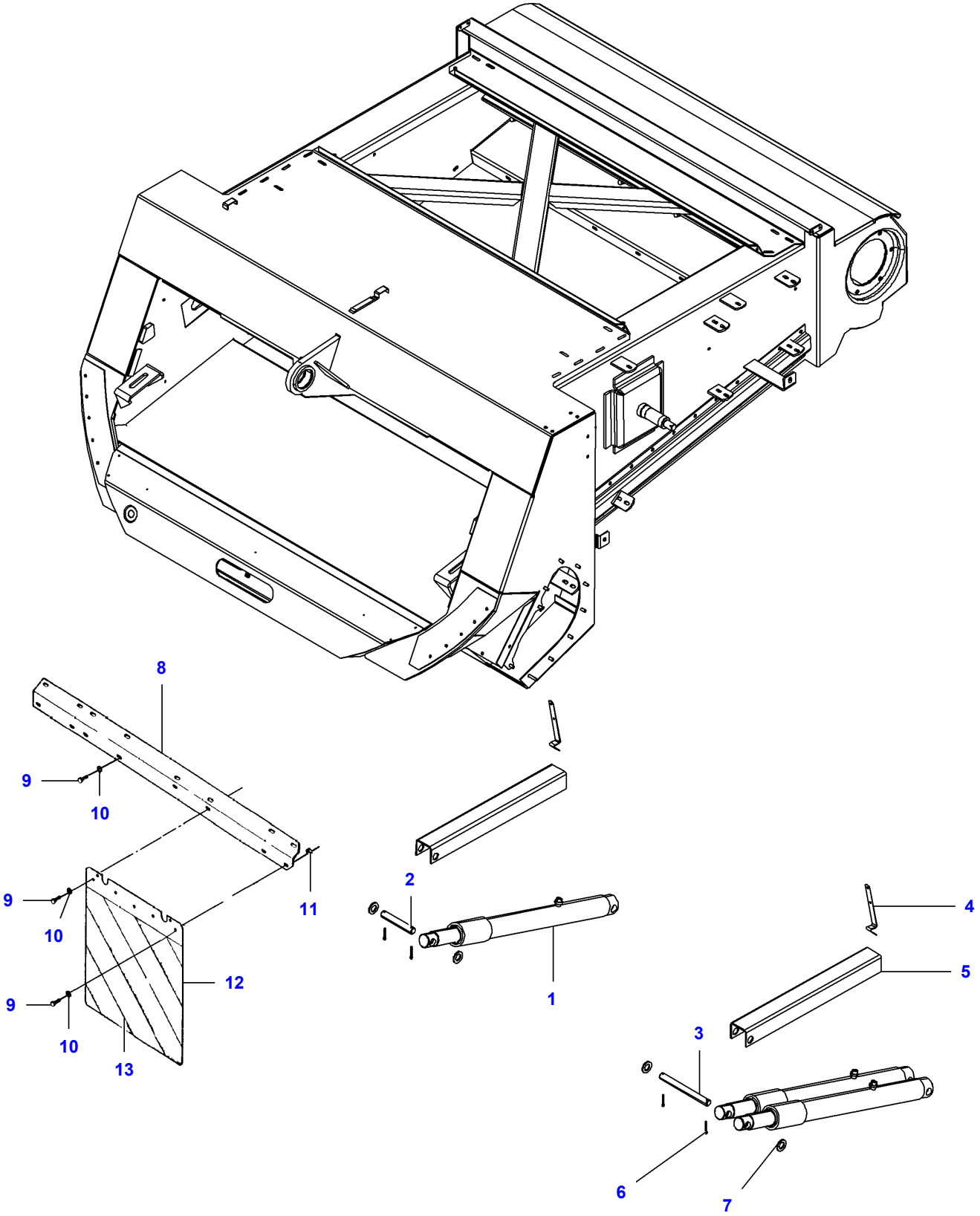

D-ZCZD-013-B

https://truckmanualshub.com/

Item	Part Number	Qty	Description	Comments
1	D45140002	1	Ram	
	D45110087	1	Kit, Seal	
2	D28181856	1	Clevis Pin	
3	D28181857	1	Clevis Pin	
4	D28260477	1	Retainer	
5	D28284123	1	Stop	
6	D41410700	1	Split Pin	
7	D20400467	1	Washer	
8	D28181073	2	Suspension	
9	339666X1	X	Cap Screw	M6 X 20
10	391038X1	X	Flat Washer	
11	394367X1	X	Locknut	M8
12	D28761501	2	Plate	
13	D49157500	4	Decal	

https://truckmanualshub.com/

MF 7274/7278 COMBINE, |-> 61123 for 7274 and |-> 61115 for 7278 - 3906105

D-ZCZF-014-C

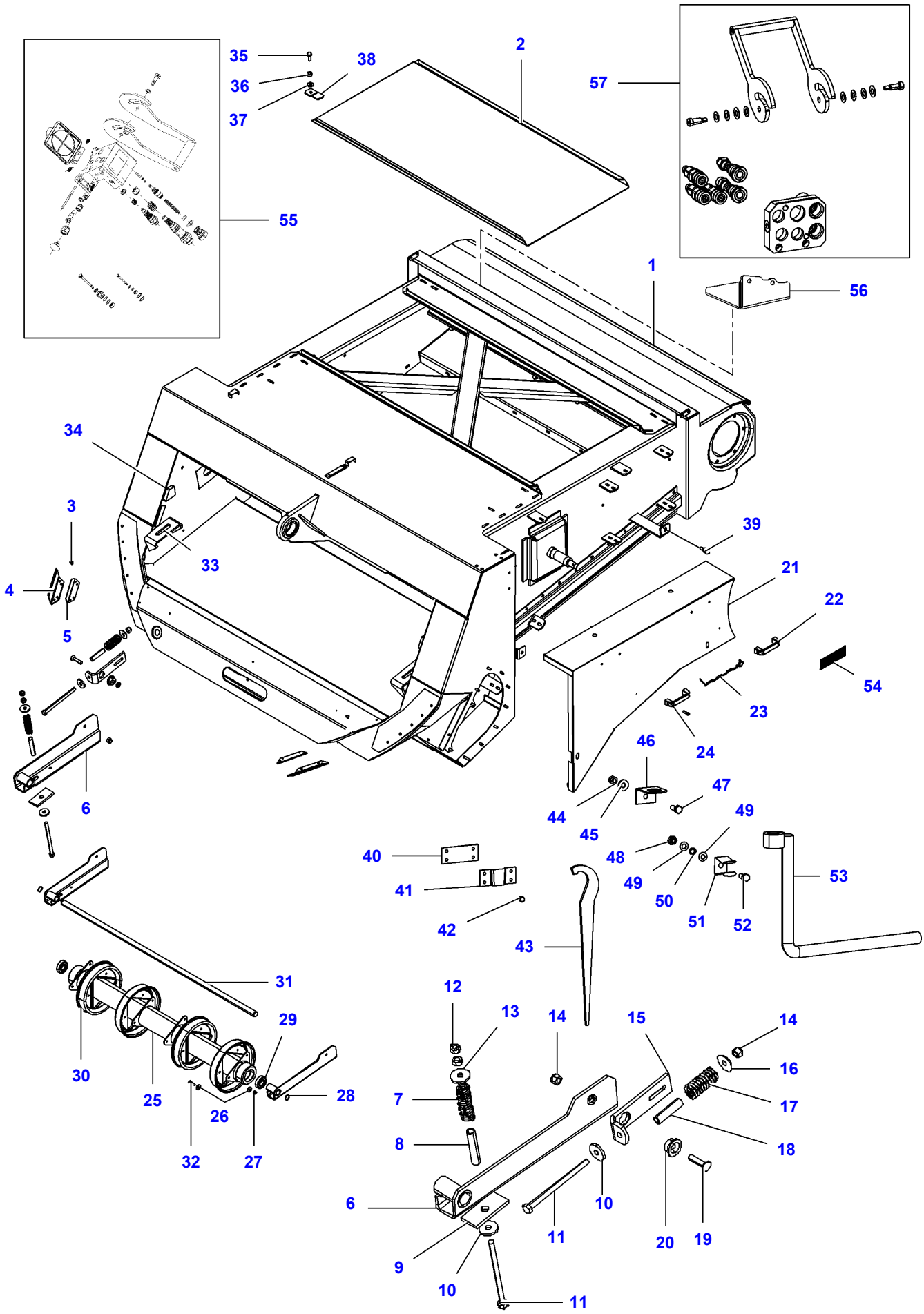

D-ZCZF-014-C

https://truckmanualshub.com/

Item	Part Number	Qty	Description	Comments
1	D28274102	1	Housing	Repairs and replaces D28273725
2	D28282086	2	Shutter	
3	D41397900	1	Rivet	
4	D28281853	1	Seal	
5	D28281854	1	Clamp	
6	D28281966	1	Bracket	Right Hand
	D28281963	1	Bracket	Left Hand
7	D28281798	2	Spring	
8	D28281799	2	Pipe	
9	D28280537	2	Plate	
10	D20400425	2	Washer	
11	D40413200	2	Screw	
12	D41010900	1	Nut	
13	D20400425	1	Washer	
14	D41087700	2	Locknut	
15	D28288151	2	Support	
16	D28260383	2	Indicator	
17	D28280309	2	Spring	
18	D28280489	2	Spacer	
19	D40605600	1	Screw Metric	
20	D28281777	2	Bush	
21	D28273963	1	Cover	
22	D43386900	1	Grip	
23	D28274066	1	Chain	
24	D40690400	1	Screw	
25	D28281960	1	Shaft	
26	D20400415	2	Washer	
27	1440329X1	1	Locknut	Repairs and replaces D41087600
28	D42502800	2	Circlip	
29	D41629000	2	Bear. 6306 2rs	
30	D28281245	4	Cup	
31	D28281767	1	Shaft	
32	D40407900	1	Cap Screw	
33	D28281957	1	Anglepiece	
34	D28282232	2	Anglepiece	
35	339123X1	1	Cap Screw	Repairs and replaces D40404900
36	D41102100	1	Washer	
37	D20400506	1	Washer	
38	D28281771	1	Support	
39	D28270235	1	Pin	
40	D28284891	1	Plate	Up to Serial or Engine Number 62017
41	D28284892	1	Plate	Up to Serial or Engine Number 62017
42	3010934X1	X	Rivet	Up to Serial or Engine Number 62000
43	D28280440	1	Tool	Up to Serial or Engine Number 62000
44	D41087500	X	Locknut	
45	D20400506	X	Washer	
46	D28284893	1	Plate	
47	D40404900	X	Cap Screw	
48	D41029700	X	Nut	
49	D20400413	X	Washer	
50	D41102100	X	Washer	
51	D28860313	1	Retainer	
52	D40404700	X	Cap Screw	
53	D28284820	1	Handle	
54	D44735900	X	Seal Section	Thickness 0,53M
55	D45140043	1	Clutch	CPL.
				See Page - Reference Number 001-0034
				Up to Serial or Engine Number 62017
56	D28286680	1	Bracket	Repairs and replaces 6223377M91
57	71409797	1	Coupler Head	CPL.
				From Serial or Engine Number 62018

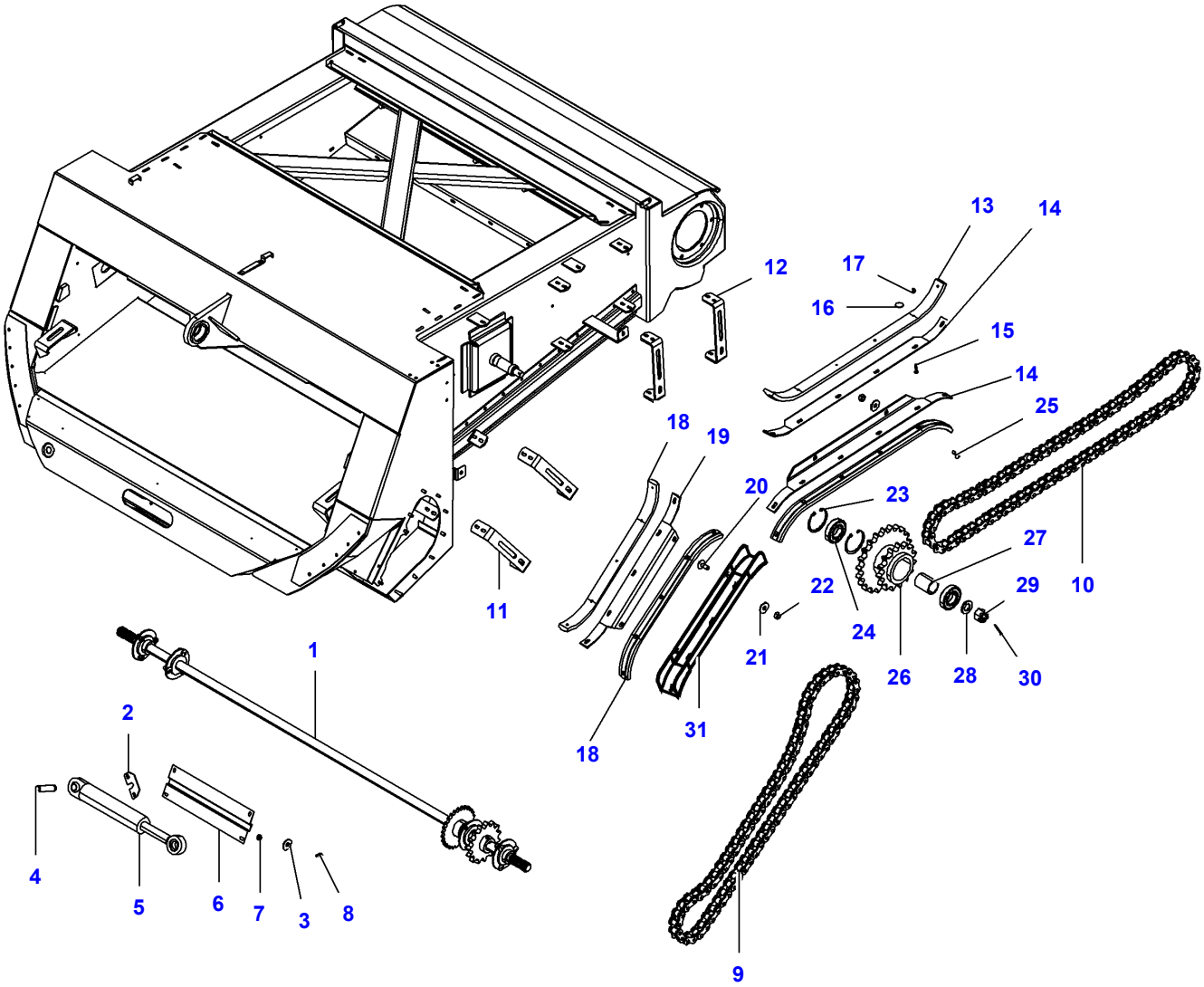
13
14
12
17
16
15
14
25
18
19
20
23
27
22
29
10
11
24
21
26
28
30
1
31
2
18
4
5
6
7
3
8
9

D-AAZI-001-C

https://truckmanualshub.com/

Item	Part Number	Qty	Description	Comments
1	D28274058	1	Shaft	
2	D28281783	1	Plate	
3	D41102100	4	Washer	
4	D28284399	1	Pin	
5	D45120073	1	Ram	STANDARD
	D45100029	1	Ram	AUTO LEVEL
6	D28281779	1	Cover	
7	D20400506	4	Washer	
8	339123X1	4	Cap Screw	Repairs and replaces D40404900
9	D28273942	1	Chain	
10	D28273943	1	Chain	
11	D28273941	2	Tie	
12	D28281296	2	Support	
13	D28273933	2	Reinforcement	
14	D28273934	2	Rail	
15	D40600900	4	Screw Metric	
16	D20400404	4	Washer	
17	D41087400	4	Locknut	
18	D28273929	2	Reinforcement	
19	D28273924	1	Rail	
20	D47000100	1	Gasket	
21	D20400423	2	Flat Washer	
22	D41010900	2	Nut	
23	D42515400	2	Circlip	
24	D41623100	2	Bear. 6208 2rs	
25	D40070100	1	Screw Special	
26	D28273928	1	Sprocket	
27	D28270234	1	Bush	
28	D20400674	1	Washer	
29	D41049100	1	Castle Nut	
30	D41411100	1	Split Pin	
31	D28284824	1	Bracket	

https://truckmanualshub.com/

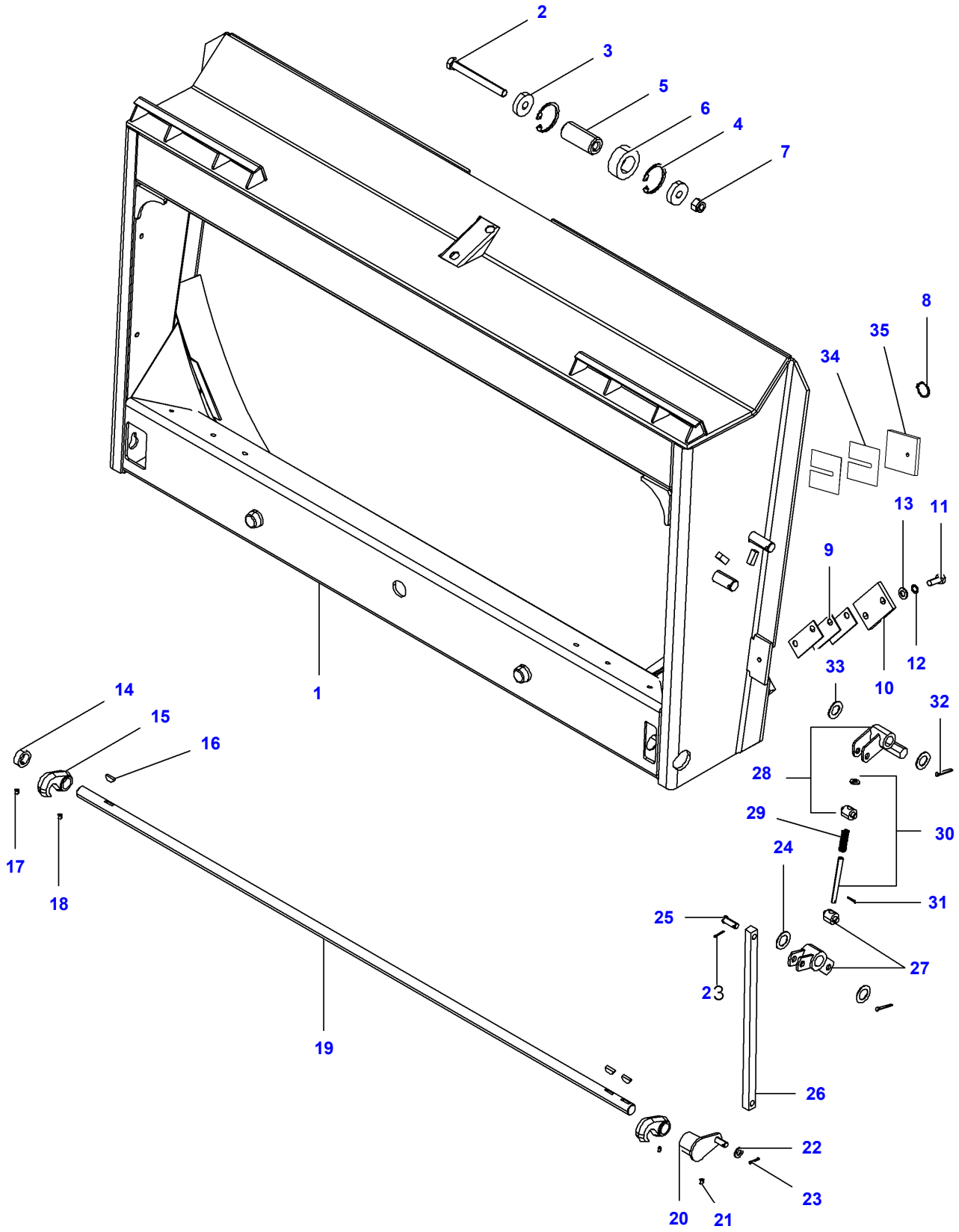

https://truckmanualshub.com/

Item	Part Number	Qty	Description	Comments
1	D28282715	1	Frame	
2	D40435100	1	Screw	
3	D28280441	2	Washer	
4	D42514800	2	Circlip	
5	D28281782	1	Pin	
6	D45698700	1	Toggle	
7	D41087900	1	Locknut	
8	D42502800	1	Circlip	
9	D28281810	6	Shim	
10	D28281781	2	Plate	
11	D40410900	1	Cap Screw	
12	D41100900	1	Spring Washer	
13	D20400426	1	Washer	
14	D28270233	1	Bush	
	6205713M1	1	Bush	From Serial or Engine Number 61935
15	D28270229	2	Hook	
	71317841	2	Hook	From Serial or Engine Number 61935
16	D43172050	3	Key	
17	D40200650	1	Screw	
18	D40200750	1	Roll Pin	
19	D28270230	1	Axle	
	054409P1	1	Axle	From Serial or Engine Number 61935
20	D28270228	1	Crank	
	D28274175	1	Crank	From Serial or Engine Number 61490
	71375564	1	Crank	From Serial or Engine Number 61935
21	D40202850	1	Roll Pin	
22	D20400426	1	Washer	
23	D41405800	1	Split Pin	
24	D20400530	1	Spacer	
25	D45905950	1	Pin	
26	D28270241	1	Lever	
	054410P1	1	Lever	From Serial or Engine Number 61935
27	D28270227	1	Pivot	
	71375559	1	Pivot	From Serial or Engine Number 61935
28	D28270226	1	Latch	
	71375556	1	Crank	From Serial or Engine Number 61935
29	D28270243	1	Spring	
	71314833	1	Spring	From Serial or Engine Number 61935
30	D28270225	1	Shaft	
	71314843	1	Shaft	From Serial or Engine Number 61935
31	D41405800	1	Split Pin	
32	D41410800	1	Split Pin	
33	D20400468	4	Washer	
34	060305P1	4	Shim	From Serial or Engine Number 61935
35	060289P1	2	Plate	From Serial or Engine Number 61935

https://truckmanualshub.com/

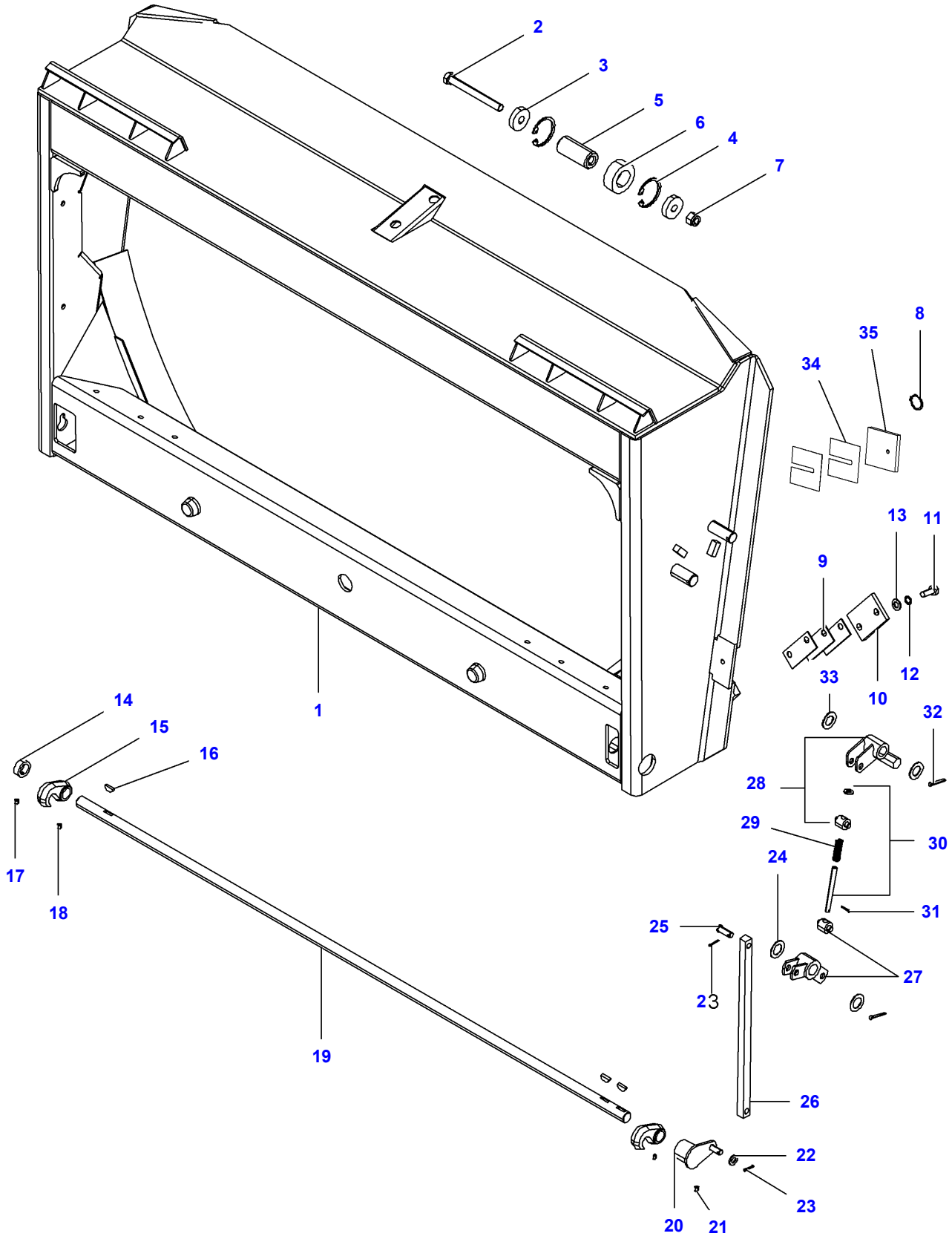

D-AAZH-002-B

https://truckmanualshub.com/

Item	Part Number	Qty	Description	Comments
1	D28286259	1	Frame	
2	D40435100	1	Screw	
3	D28280441	2	Washer	
4	D42514800	2	Circlip	
5	D28281782	1	Pin	
6	D45698700	1	Toggle	
7	D41087900	1	Locknut	
8	D42502800	1	Circlip	
9	D28281810	6	Shim	
10	D28281781	2	Plate	
11	D40410900	1	Cap Screw	
12	D41100900	1	Spring Washer	
13	D20400426	1	Washer	
14	D28270233	1	Bush	
	6205713M1	1	Bush	From Serial or Engine Number 61935
15	D28270229	1	Hook	
	71317841	2	Hook	From Serial or Engine Number 61935
16	D43172050	3	Key	
17	D40200650	1	Screw	
18	D40200750	1	Roll Pin	
19	D28270230	1	Axle	
	054409P1	1	Axle	From Serial or Engine Number 61935
20	D28270228	1	Crank	
	D28274175	1	Crank	From Serial or Engine Number 61490
	71375564	1	Crank	From Serial or Engine Number 61935
21	D40202850	1	Roll Pin	
22	D20400426	1	Washer	
23	D41405800	1	Split Pin	
24	D20400530	1	Spacer	
25	D45905950	1	Pin	
26	D28270241	1	Lever	
	054410P1	1	Lever	From Serial or Engine Number 61935
27	D28270227	1	Pivot	
	71375559	1	Pivot	From Serial or Engine Number 61935
28	D28270226	1	Latch	
	71375556	1	Crank	From Serial or Engine Number 61935
29	D28270243	1	Spring	
	71314833	1	Spring	From Serial or Engine Number 61935
30	D28270225	1	Shaft	
	71314843	1	Shaft	From Serial or Engine Number 61935
31	D41405800	1	Split Pin	
32	D41410800	1	Split Pin	
33	D20400468	4	Washer	
34	060305P1	4	Shim	From Serial or Engine Number 61935
35	060289P1	2	Plate	From Serial or Engine Number 61935

https://truckmanualshub.com/

D-ZCAZ-005-A

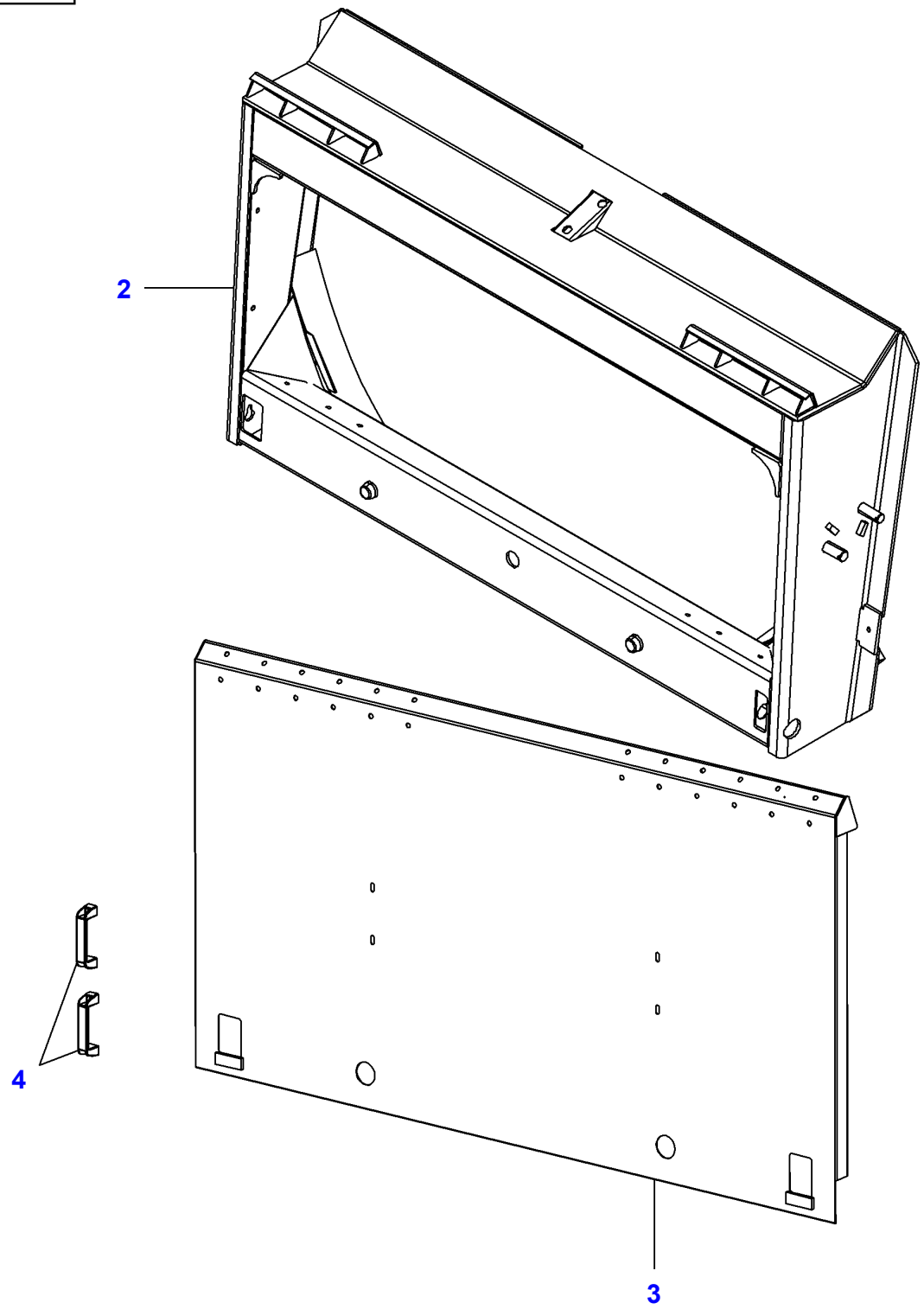

https://truckmanualshub.com/

Item	Part Number	Qty	Description	Comments
2	D28273917	1	Adaptor	[A]
	D28273918	1	Adaptor	[B]
3	D28286291	1	Cover	
4	D43386900	2	Grip	

FOOTNOTE [A] STANDARD
FOOTNOTE [B] WITH AUTO LEVEL

https://truckmanualshub.com/

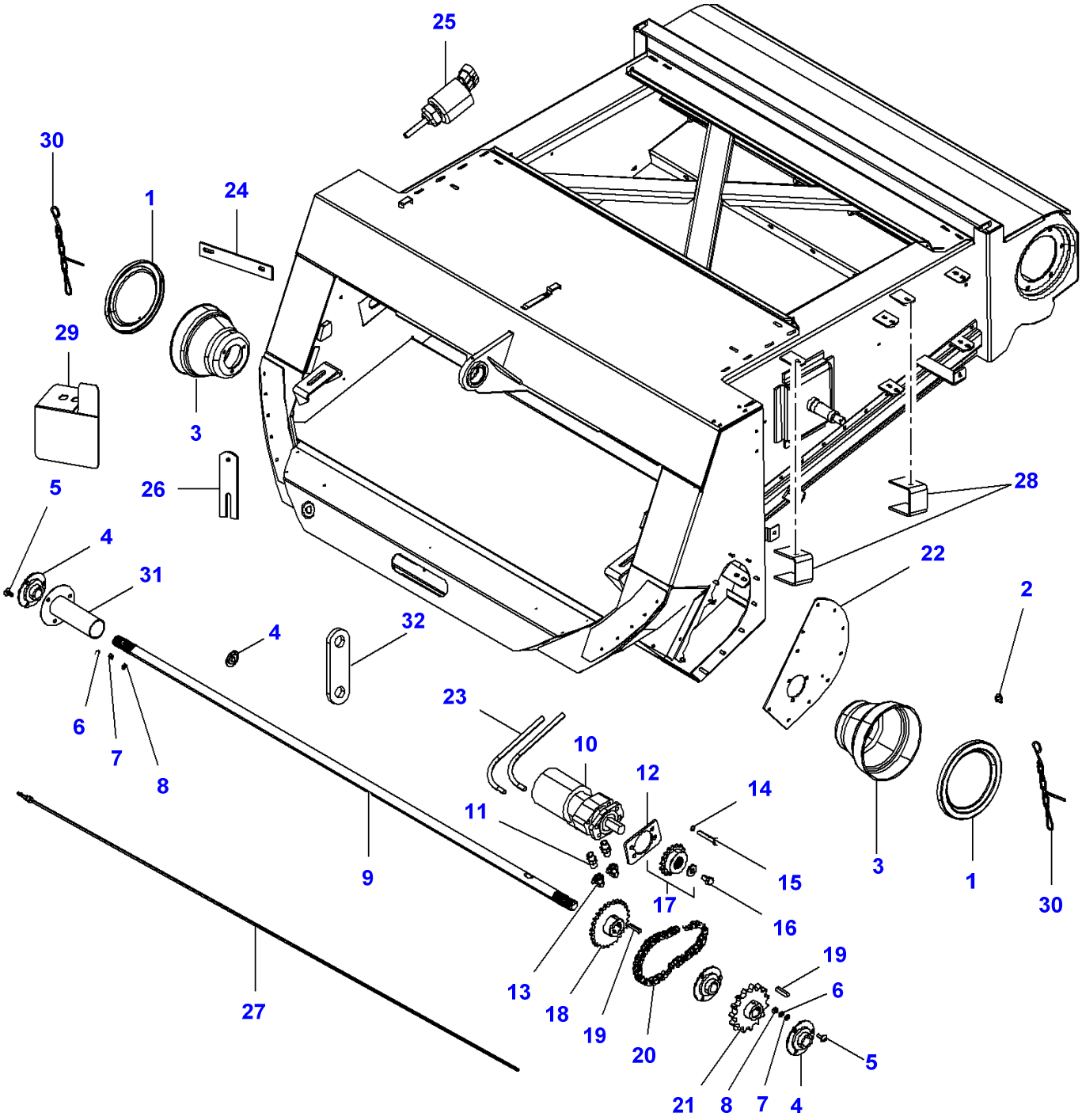

D-ZCZJ-003-D

https://truckmanualshub.com/

Item	Part Number	Qty	Description	Comments
1	D28274204	2	Cover	
2	D43385200	2	Screw	
3	D28274203	2	Cover	
4	D41707800	4	Bearing	
5	D40066700	2	Screw Special	
6	D20400507	2	Spacer	
7	D41101900	2	Spring Washer	
8	D41010800	2	Nut	
9	D28274058	1	Shaft	CPL.
	D28284815	1	Shaft	
10	D45120025	1	Engine	
11	D45257300	2	Union	
12	D28273811	1	Plate	
13	D45264100	2	Union	
14	D41100900	1	Spring Washer	
15	D40468050	1	Screw	
16	D40458300	1	Screw	
17	D28281981	1	Sprocket	
18	D28284812	1	Sprocket	
19	D43105850	2	Pin	
20	D28273804	1	Chain	
21	D28273932	1	Sprocket	
22	D28273806	1	Plate	
23	D45130035	2	Hydraulic Hose	
	D45130142	2	Hose	From Serial or Engine Number 61490
24	D28286106	1	Cover	
25	D28782915	1	Potentiometer	
26	D28286105	1	Chock	
27	D28274789	1	Pipe	
28	D28286268	1	Support	
29	D28284830	2	Shield	
30	D42380602	2	Chain	
31	D28284414	1	Hub	
32	D28286791	1	Bracket	
33	D45120030	1	Kit, Gasket	[A,B] (10)
34	D45120031	1	Kit, Bearing	[A,C] (10)

FOOTNOTE [A] NOT ILLUSTRATED
FOOTNOTE [B] ENGINE
FOOTNOTE [C] CLUTCH

https://truckmanualshub.com/

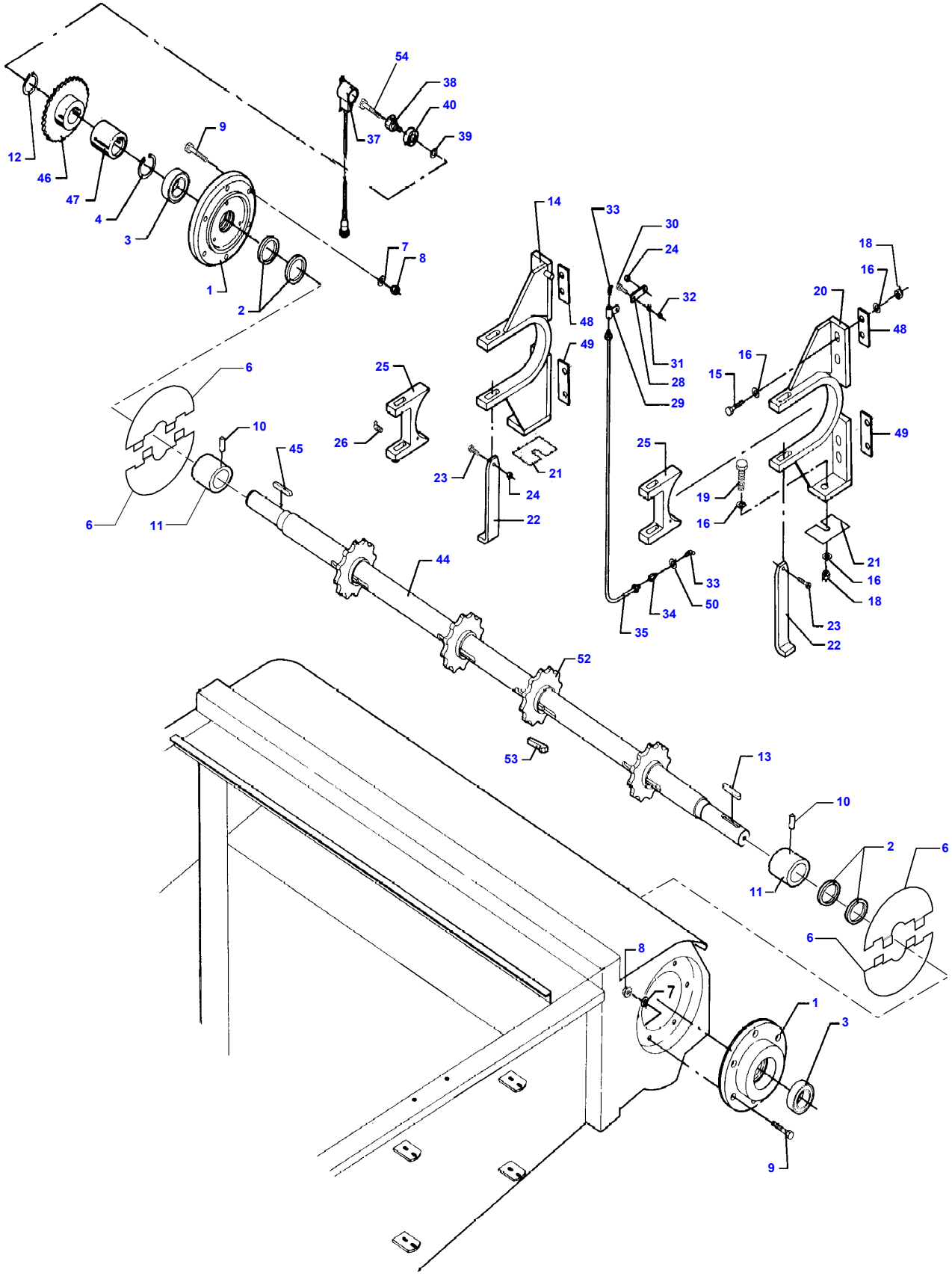

D-ZCZA-008-A

https://truckmanualshub.com/

Item	Part Number	Qty	Description	Comments
1	D28280112	2	Bearing	
2	D43501500	4	Felt Ring	
3	1440572X1	2	Bear. 6210 2rs	Right Hand
4	1440516X1	1	Circlip	Left Hand
6	D28285386	4	Cover	
7	D20400426	12	Washer	
8	1442190X1	12	Locknut	M12
9	D40694100	12	Screw	
10	D40632000	2	Stud	
11	D28286108	2	Insert	
12	391129X1	1	Circlip	
13	D43107900	1	Key	
14	D28281309	1	Bearing	
15	391889X1	8	Cap Screw	M16 X 70
16	D28181284	20	Washer	
18	1442739X1	5	Locknut	M16
19	D40433700	1	Screw	
20	D28280984	1	Bearing	
21	D28280142	12	Shim	
22	D28280138	2	Pin	
23	339337X1	1	Cap Screw	M8 X 30
24	394367X1	2	Locknut	M8
25	D28281552	2	Stop	
26	D43002700	2	Grease Fitting	
28	D28281478	1	Mounting	
29	D43009200	1	Bracket	
30	339666X1	1	Cap Screw	M6 X 20
31	D20400404	1	Washer	
32	1441462X1	1	Locknut	M6
33	D43002700	2	Grease Fitting	
34	D43009500	1	Connector	
35	D28281479	1	Tube	
37	**D28780514**	1	Sensor	
38	**D28780516**	1	Inductive Sensor	
39	D20400419	1	Washer	
40	1440487X1	1	Bear. 6203 2rs	
44	D28283598	1	Shaft	CPL.
	D28283593	1	Shaft	
45	D43107500	1	Key	
46	D28283544	1	Sprocket	
47	D28283846	1	Bush	[A]
	D28283545	1	Spacer	[B]
48	D28281663	2	Support	
49	D28281662	2	Support	
50	D20400453	1	Washer	
52	D28282479	4	Sprocket	(44)
53	D43162000	4	Gib Key	(44)
54	D40692400	1	Screw	

FOOTNOTE [A] WITH ELECTRIC REVERSING GEAR
FOOTNOTE [B] WITH HYDRAULIC REVERSING GEAR

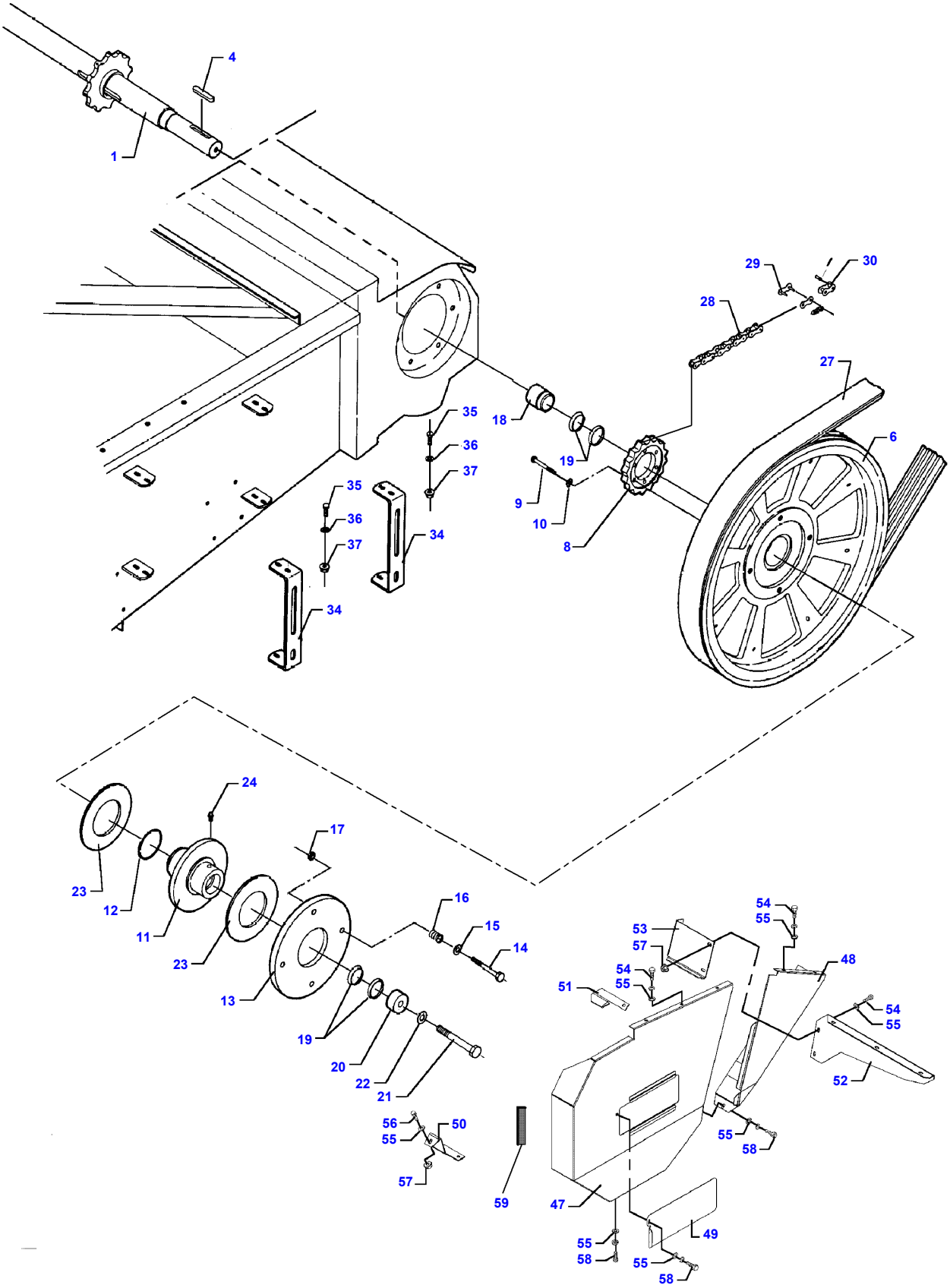
1
4
29
30
28
27
6
18
19
9
10
8
35
36
37
34
24
17
23
12
11
16
15
14
13
20
22
21
56
55
50
57
59
53
54
48
51
52
47
49
58

D-ZCZC-004-C

https://truckmanualshub.com/

Item	Part Number	Qty	Description	Comments
1	D28283598	1	Shaft	CPL.
	D28283593	1	Shaft	
4	D43107900	4	Key	
6	D28280120	1	Pulley	
8	D28281618	1	Sprocket	
9	339814X1	6	Cap Screw	M10 X 35
10	D20400471	6	Washer	
11	D28280118	1	Hub	
12	D45481200	1	O Ring	
13	D28280116	1	Plate	
14	390826X1	4	Cap Screw	M12 X 100
15	D28251025	4	Washer	
16	D28286052	4	Comp.Spring	
17	D41012100	4	Locknut	
18	D28280252	1	Ring	
19	D42596900	2	Tightener	
20	D28280261	1	Ring	
21	339214X1	1	Cap Screw	M16 X 50
22	D20400459	1	Washer	
23	**D45904300**	1	Friction Disc	
24	3008923X1	1	Grease Fitting	
27	**D41979800**	1	Belt	
28	**D42334600**	1	Chain	
29	**D42367700**	1	Connecting Link	
30	**D42367800**	1	Link	
34	D28281296	2	Support	
35	339761X1	8	Cap Screw	M8 X 25
36	D20400506	8	Washer	
37	394367X1	8	Locknut	M8
47	D28186327	1	Shield	
48	D28186691	1	Shield	Left Hand
49	D28184441	1	Cover	
50	D28181107	1	Bracket	
51	D28181106	1	Bracket	
52	D28185321	1	Bracket	
53	D28181126	1	Bracket	
54	339123X1	X	Cap Screw	M8 X 20
55	D20400506	X	Washer	
56	339761X1	X	Cap Screw	M8 X 25
57	394367X1	X	Locknut	M8
58	D40476100	2	Cap Screw	M8 X 20
59	D44735900	1	Seal Section	Thickness 0,7M

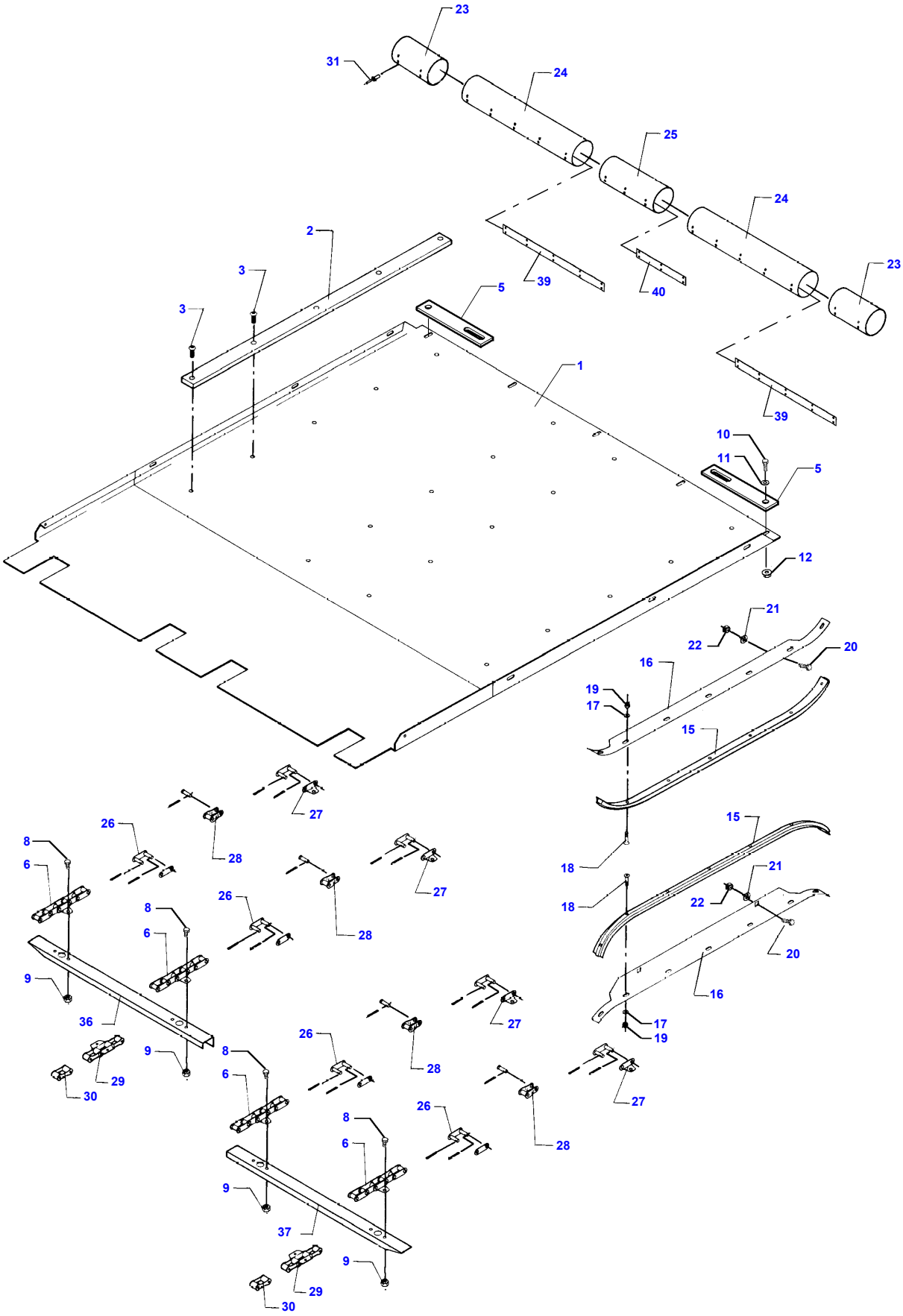
23
31
24
25
24
23
2
3
3
5
39
40
1
39
10
11
5
12
21
22
20
16
19
17
15
27
26
28
8
6
27
26
28
8
6
9
36
9
29
30
15
21
18
18
22
20
16
17
19
27
26
28
8
6
27
26
28
8
6
9
37
9
29
30

D-ZCZB-009-A

https://truckmanualshub.com/

Item	Part Number	Qty	Description	Comments
1	D28281705	1	Plate	
2	D28281247	4	Guide	
3	D40685000	20	Screw	
5	D28281410	2	Cover	
	D28286106	2	Cover	
6	D28285326	4	Chain	38,4MM
	D28286407	1	Chain	Right Hand CPL. From Serial or Engine Number 58522
	D28286408	1	Chain	Left Hand CPL. From Serial or Engine Number 58522
8	3009491X1	160	Cap Screw	(6) M10X20
9	1440329X1	160	Locknut	(6) M10
10	339123X1	13	Cap Screw	M8 X 20
11	D20400506	13	Washer	
12	394367X1	5	Locknut	M8
15	D28281557	2	Rail	(15)
	D28280540	2	Rail	
16	D18281315	2	Reinforcement	(15)
17	D20400404	14	Washer	(15)
18	D40600900	14	Screw Metric	(15)
19	1441462X1	14	Locknut	(15) M6
20	390787X1	4	Screw Special	M12 X 25
21	D20400423	4	Flat Washer	
22	3009695X1	4	Nut	M12
23	D28286107	2	Protection.	
24	D28281840	2	Protection.	
25	D28281874	2	Protection.	
26	**D42350800**	4	Connecting Link	(6)
27	**D42350700**	1	Connecting Link	
28	**D42350900**	8	Link	(6)
29	**D42350600**	1	Link	
30	**D42354900**	1	Link	
31	D41397200	34	Rivet	
36	D28285324	20	Slat	(6) Up to Serial or Engine Number 58521 Right Hand
	D28285406	20	Slat	(6) Right Hand From Serial or Engine Number 58522
37	D28285325	20	Slat	(6) Up to Serial or Engine Number 58521 Left Hand
	D28285407	20	Slat	(6) From Serial or Engine Number 58522 Left Hand
39	D28281870	2	Plate	
40	D28281871	1	Plate	

https://truckmanualshub.com/

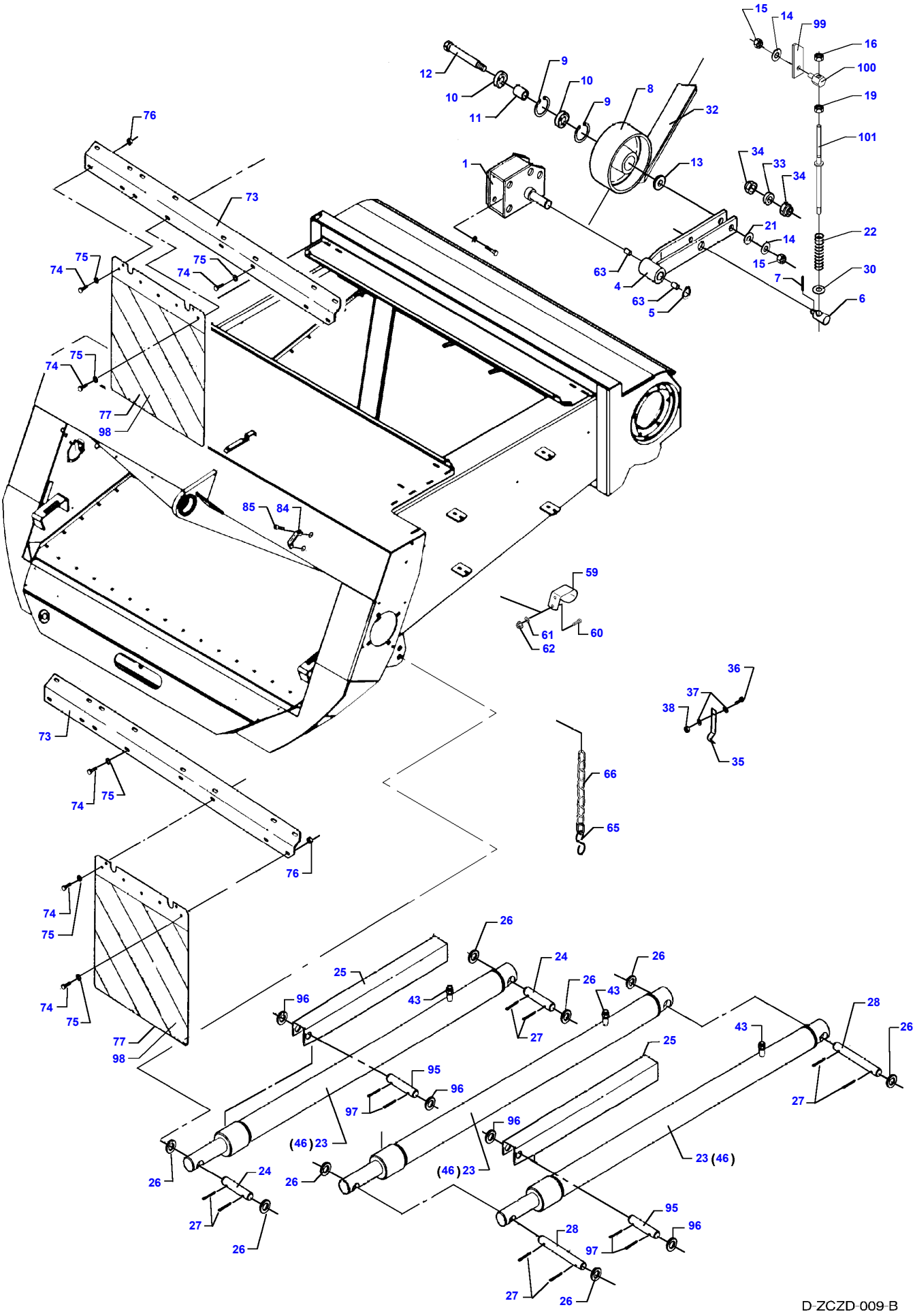

https://truckmanualshub.com/

Item	Part Number	Qty	Description	Comments
1	D28785719	1	Bracket	
2	391561X1	4	Cap Screw	[A] M10 X 45
3	D20400419	4	Washer	[A]
4	D28786659	1	Lever	Valid from machine/table no,can be used in new as well as in older machines 57068 - CPL.
	D28787003	1	Arm	
5	1440476X1	1	Circlip	
6	D28780030	1	Pivot	
7	339129X1	1	Split Pin	Diameter 3,2 X 25
8	D28880196	1	Pulley	
9	339199X1	2	Circlip	
10	SKF62042RS	2	Bear. 6204 2rs	
11	D28780007	1	Ring	
12	D28780008	1	Bolt	
13	D28380003	1	Ring	
14	D20400459	2	Washer	
15	1442739X1	2	Locknut	M16
16	3764827M1	1	Nut	M16
19	3764827M1	14	Nut	M16
21	D20400460	1	Washer	
22	D28210881	1	Comp.Spring	
23	D45140002	2	Ram	
24	D28282040	2	Clevis Pin	
25	D28284123	2	Stop	
26	D20400467	8	Washer	
27	354078X1	8	Split Pin	3/16" X 1-1/4
28	D28181857	1	Clevis Pin	
30	D28181284	1	Washer	
32	D41979800	1	Belt	
33	D28780776	1	Spacer	
34	D28780777	2	Eccentric	
35	D28260477	2	Retainer	
36	339666X1	2	Cap Screw	M6 X 20
37	D20400470	4	Washer	
38	1441462X1	2	Locknut	M6
43	D45250800	X	Union	
46	D45110087	2	Kit, Seal	SERTA
59	D28181714	2	Hinge	
60	339123X1	4	Cap Screw	M8 X 20
61	D20400506	4	Washer	
62	394367X1	4	Locknut	M8
63	D43364800	2	Bush	(4)
65	D28181230	1	Chain	
66	D42386000	2	Hook	
73	D28181073	2	Suspension	
74	339666X1	X	Cap Screw	M6 X 20
75	391038X1	X	Flat Washer	
76	394367X1	X	Locknut	M8
77	D28761501	2	Plate	
84	D43386900	2	Grip	
85	391148X1	4	Hex Socket Screw	M8 X 20
95	D28181856	2	Clevis Pin	
96	D20400467	4	Washer	
97	354078X1	4	Split Pin	3/16" X 1-1/4
98	D49157500	4	Decal	
99	D28280789	1	Perforated Plate	
100	D28280790	1	Nut	
101	D28280802	1	Tie Rod	

FOOTNOTE [A] NOT ILLUSTRATED

https://truckmanualshub.com/

MF 7274/7278 COMBINE, |-> 61123 for 7274 and |-> 61115 for 7278 - 3906105

D-ZCZF-012-B

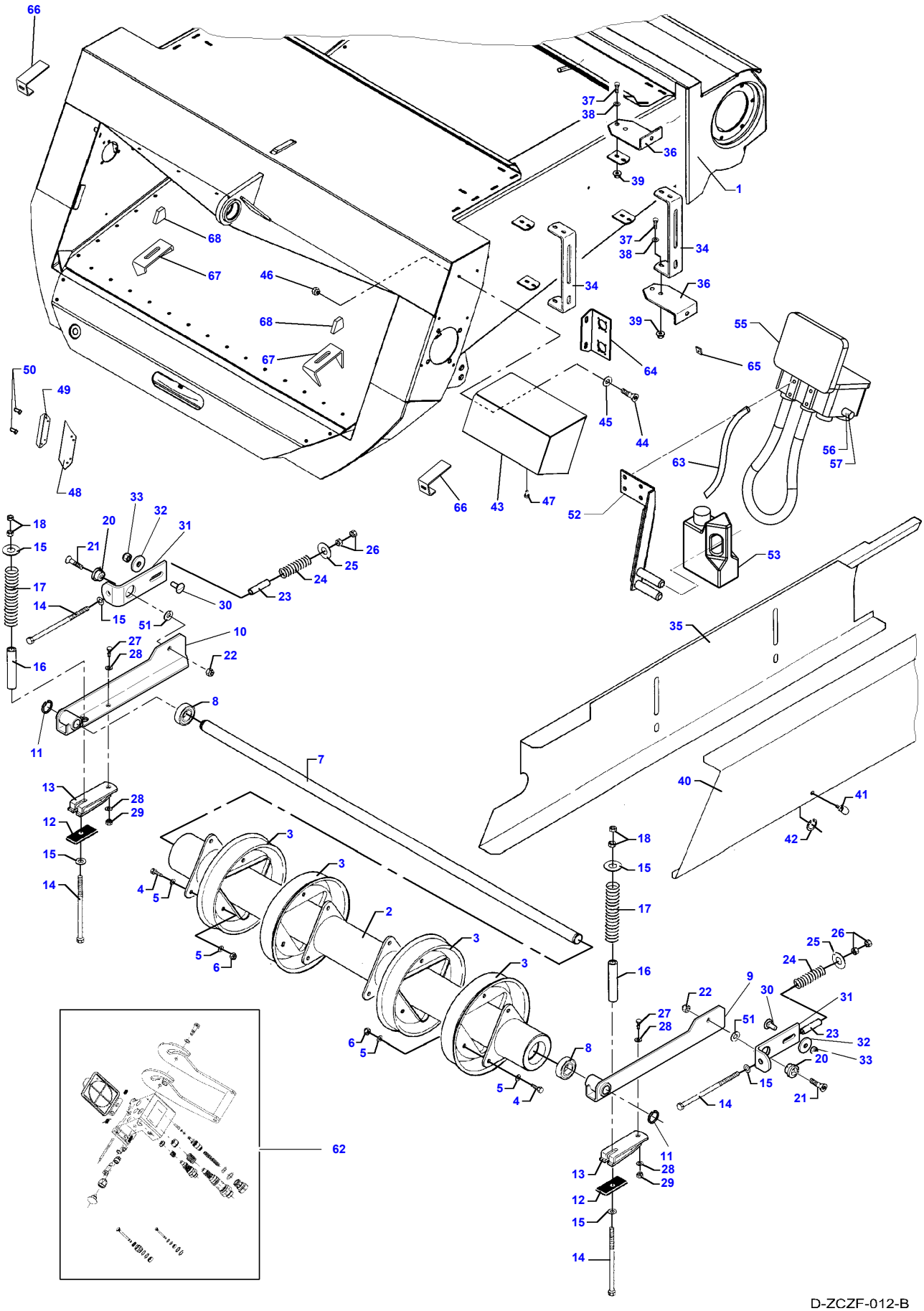

https://truckmanualshub.com/

Item	Part Number	Qty	Description	Comments
1	D28285677	X	Conveyor	CPL.
	D28285678	X	Conveyor	CPL.AUTO LEVEL
	D18282340	1	Conveyor	
2	D18281960	1	Shaft	
3	D18281245	4	Cup	
4	339814X1	12	Cap Screw	M10 X 35
5	D20400415	24	Washer	
6	1440329X1	12	Locknut	M10
7	D28281767	1	Shaft	
8	390384X1	2	Bear. 6306 2rs	
9	D18281963	1	Bracket	
10	D18281966	1	Bracket	
11	1440477X1	2	Circlip	
12	D28280537	2	Plate	
13	D28281374	2	Chock	[A]
	D28286105	1	Chock	
14	D40413200	4	Screw	
15	D20400425	10	Washer	
16	D28281799	2	Pipe	
17	D28281798	2	Spring	
18	3009695X1	2	Nut	M12
20	D28281777	2	Bush	
21	D40605600	2	Screw Metric	
22	1442190X1	2	Locknut	M12
23	D28280489	2	Spacer	
24	D28280309	2	Spring	
25	D28260383	2	Indicator	
26	3009695X1	4	Nut	M12
27	339337X1	2	Cap Screw	[A]
				M8 X 30
28	D20400506	4	Washer	[A]
29	394367X1	2	Locknut	[A]
				M8
30	390809X1	2	Screw Special	M10X25
31	D28288151	2	Support	
32	D20400420	2	Washer	
33	1440329X1	2	Locknut	M10
34	D28281296	2	Support	
35	D18281809	1	Shield	[C]
	D18281982	1	Cowl	[D]
36	D18282081	4	Support	
37	339337X1	8	Cap Screw	M8 X 30
38	D20400506	8	Washer	
39	394367X1	8	Locknut	M8
40	D18281780	1	Shield	
41	D43427500	4	Pin	
42	1440988X1	4	Snapring	
43	D18285284	1	Case Assy	
44	339123X1	4	Cap Screw	M8 X 20
45	D20400506	4	Washer	
46	394367X1	4	Locknut	M8
47	D45744000	1	Plug	
48	D28281853	2	Seal	
49	D18281854	2	Clamp	
50	D41397900	4	Rivet	
51	D20400456	2	Washer	
52		X	Not Used	
53		X	Not Used	
55		X	Not Used	
56	D45140037	2	Screw	[B]
57		X	Not Used	
59	D45140037	4	Screw	[C,E]
62	D45140043	1	Clutch	See Page - Reference Number 001-0034/15
				CPL.
63	D45702000	1	Hose	
64	D28285521	1	Retainer	
65	D28281280	1	Mounting	[F]
				(1)
66	D28281759	2	Reinforcement	[F]
				(1)

https://truckmanualshub.com/

Item	Part Number	Qty	Description	Comments
67	D28281957	2	Anglepiece	[F] (1)
68	D28282232	2	Anglepiece	[F] (1)

FOOTNOTE [A] MAIZE EQUIPMENT
FOOTNOTE [B] OPTIONAL EQUIPMENT
FOOTNOTE [C] COMBINE WITHOUT HYDRAULIC REVERSING
FOOTNOTE [D] COMBINE WITH HYDRAULIC REVERSING
FOOTNOTE [E] NOT ILLUSTRATED
FOOTNOTE [F] WELDED PART

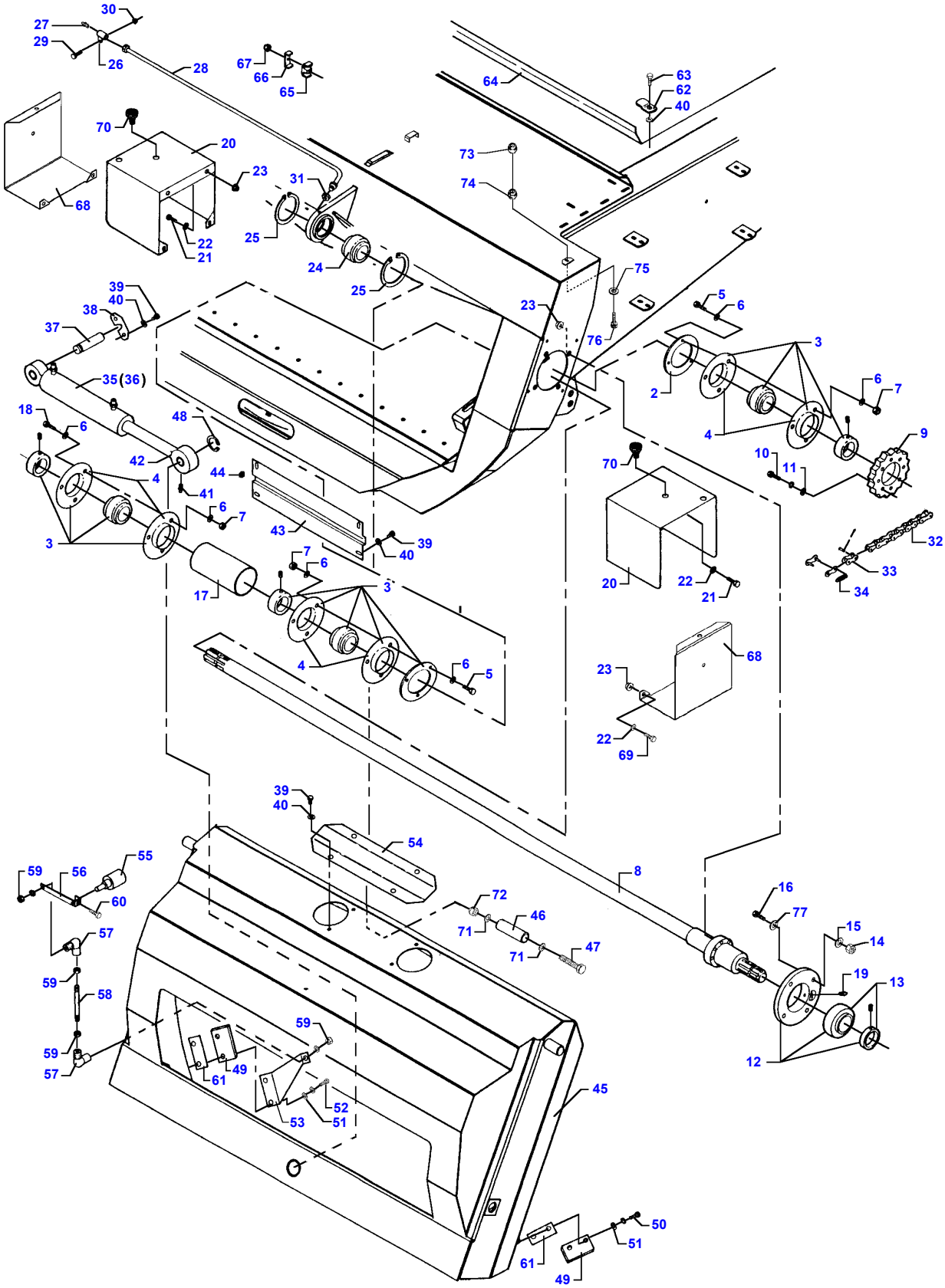
30
27
29
26
28
67
66
65
64
63
62
40
70
20
23
31
73
74
68
22
21
25
24
25
75
39
40
38
37
23
5
6
76
3
35(36)
2
6
7
18
6
48
4
9
42
44
10
11
4
41
70
6
7
43
39
40
32
3
7
6
33
17
3
20
22
21
34
4
6
5
68
23
22
69
39
40
54
55
59
56
60
8
72
16
77
46
71
15
14
57
71
47
19
13
59
58
59
59
57
61
49
12
45
52
53
51
50
51
61
49

D-ZCZG-004-A

https://truckmanualshub.com/

Item	Part Number	Qty	Description	Comments
2	D28284368	2	Shim	
3	D41707800	3	Bearing	
4	D41701700	6	Flange	
5	3009493X1	6	Cap Screw	M10 X 30
6	D20400507	12	Spacer	
7	339402X1	6	Nut	M10
8	D28281789	1	Shaft	CPL.
	D28281769	1	Shaft	
	D28281788	1	Hub	
9	D28281617	1	Sprocket	
10	339009X1	8	Cap Screw	M8 X 35
11	D20400506	8	Washer	
12	D41716400	1	Bearing	
13	D41716400	1	Bearing	
14	1442739X1	4	Locknut	M16
15	D20400462	4	Washer	
16	339214X1	4	Cap Screw	M16 X 50
17	D28281772	1	Shield	
18	3009492X1	3	Cap Screw	M10 X 25
19	339608X1	1	Grease Nipple	
20	D28282251	2	Shield	
21	339123X1	4	Cap Screw	M8 X 20
22	D20400506	8	Washer	
23	394367X1	8	Locknut	M8
24	D45698700	1	Toggle	
25	D42514800	2	Circlip	
26	D43009200	1	Bracket	
27	D43002600	1	Grease Fitting	
28	D28780803	1	Tube	
29	339666X1	1	Cap Screw	M6 X 20
30	1441462X1	1	Locknut	M6
31	D43009500	1	Connector	
32	D42334600	1	Chain	
33	D42367800	1	Link	
34	D42367700	1	Connecting Link	
35	D45100029	1	Ram	AUTO LEVEL
	D45120073	1	Ram	STANDARD
36	D45110085	1	Kit, Seal	
37	D28284399	1	Pin	
38	D28281783	1	Plate	
39	339123X1	X	Cap Screw	M8 X 20
40	D20400506	X	Washer	
41	1441858X1	1	Grease Fitting	
42	D45698900	1	Toggle	
43	D18281779	1	Cover	
44	D44740400	X	Gasket	Length 2 M
45	D18281909	1	Frame	
46	D28281782	1	Pin	
47	D40435100	1	Screw	
48	1440477X1	1	Circlip	
49	D18281781	2	Plate	
50	339139X1	2	Cap Screw	M12 X 25
51	D20400426	4	Washer	
52	1440716X1	2	Cap Screw	M12 X 30
53	D18281787	1	Bracket	
54	D18281792	1	Cover	
55	D28780523	1	Potentiometer	
56	D18281785	1	Rod	
57	D46437300	2	Toggle	
58	D28281784	1	Rod	
59	D41010600	4	Nut	M6
60	339560X1	1	Cap Screw	M6 X 16
61	D28281810	X	Shim	[A]
62	D18281771	1	Support	
63	339124X1	2	Cap Screw	M8 X 16
64	D18282086	1	Shutter	
65	D45739400	3	Support	
66	D28750784	3	Bracket	
67	1441462X1	3	Locknut	M6
68	D28282460	2	Shield	
69	D40405300	4	Screw	

https://truckmanualshub.com/

Item	Part Number	Qty	Description	Comments
70	D43385200	2	Screw	
71	D28280441	2	Washer	
72	1442739X1	1	Locknut	M16
73	1441462X1	1	Locknut	M6
74	1441462X1	1	Locknut	M6
75	D20400404	1	Washer	
76	339804X1	1	Cap Screw	M6 X 25
77	D20400461	4	Washer	

FOOTNOTE [A] OPTIONAL

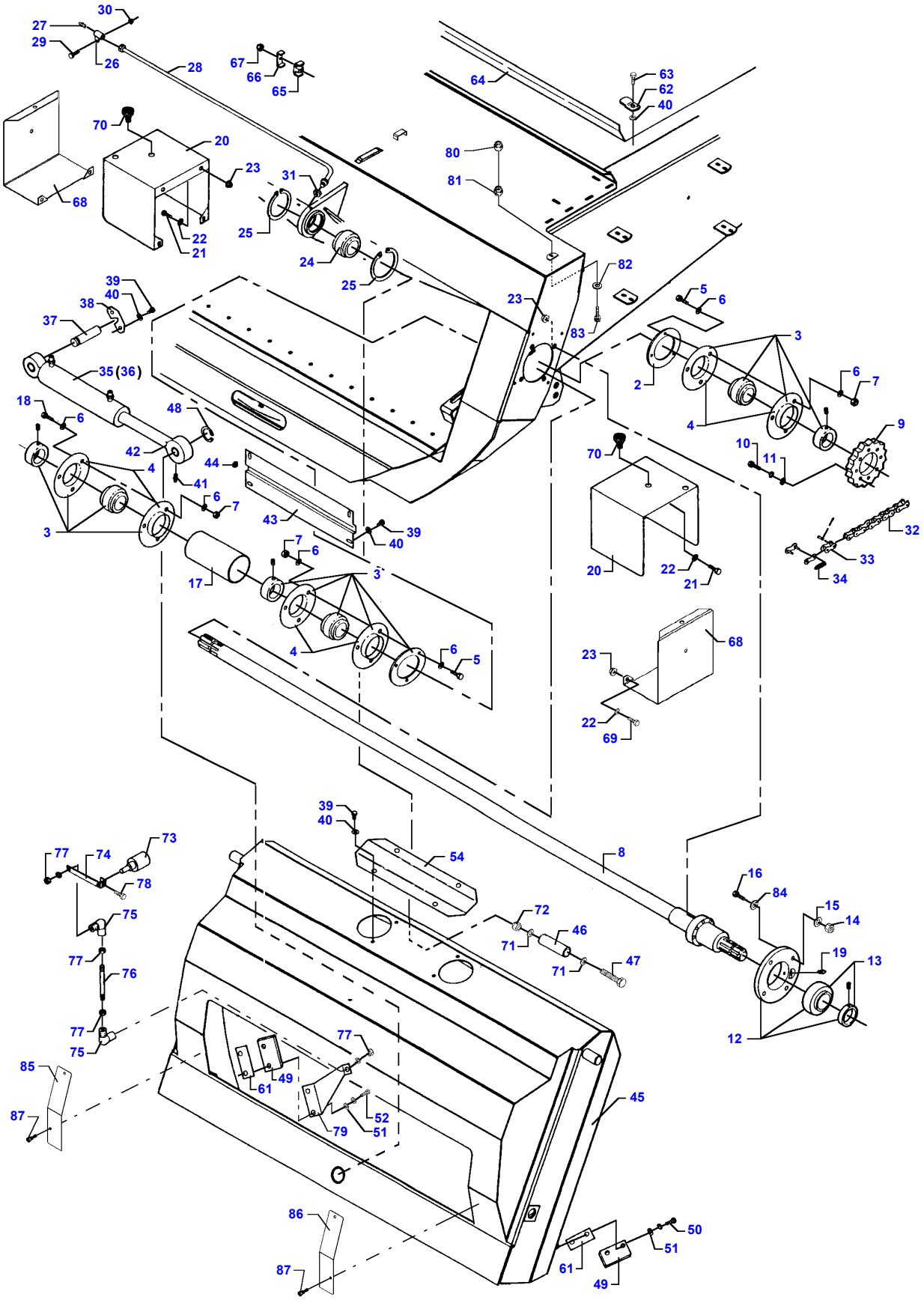
30
27
29
26
28
67
66
65
64
63
62
40
70
20
23
31
80
81
68
22
21
25
24
25
82
39
40
38
37
23
5
6
83
3
35(36)
2
6
7
18
6
48
4
9
42
4
44
10
11
41
70
6
7
43
39
40
32
3
7
6
33
17
3
20
22
21
34
4
6
5
68
23
22
69
39
40
54
8
73
77
74
78
16
84
15
14
75
72
46
71
19
13
77
76
71
47
77
75
12
77
85
49
61
45
87
52
79
51
86
50
51
87
61
49

D-ZCZH-004-A

https://truckmanualshub.com/

Item	Part Number	Qty	Description	Comments
2	D28284368	2	Shim	
3	D41707800	3	Bearing	
4	D41701700	6	Flange	
5	3009493X1	6	Cap Screw	M10 X 30
6	D20400507	12	Spacer	
7	339402X1	6	Nut	M10
8	D28281789	1	Shaft	CPL.
	D28281769	1	Shaft	
	D28281788	1	Hub	
9	D28281617	1	Sprocket	
10	339009X1	8	Cap Screw	M8 X 35
11	D20400506	8	Washer	
12	D41716400	1	Bearing	
13	D41716400	1	Bearing	
14	1442739X1	4	Locknut	M16
15	D20400462	4	Washer	
16	339214X1	4	Cap Screw	M16 X 50
17	D28281772	1	Shield	
18	3009492X1	3	Cap Screw	M10 X 25
19	339608X1	1	Grease Nipple	
20	D28282251	2	Shield	
21	339123X1	4	Cap Screw	M8 X 20
22	D20400506	8	Washer	
23	394367X1	8	Locknut	M8
24	D45698700	1	Toggle	
25	D42514800	2	Circlip	
26	D43009200	1	Bracket	
27	D43002600	1	Grease Fitting	
28	D28780803	1	Tube	
29	339666X1	1	Cap Screw	M6 X 20
30	1441462X1	1	Locknut	M6
31	D43009500	1	Connector	
32	**D42334600**	1	Chain	
33	**D42367800**	1	Link	
34	**D42367700**	1	Connecting Link	
35	D45120073	1	Ram	STANDARD
	D45120029	1	Pressure Valve	AUTO LEVEL
36	D45110085	1	Kit, Seal	
37	D28284399	1	Pin	
38	D28281783	1	Plate	
39	339123X1	X	Cap Screw	M8 X 20
40	D20400506	X	Washer	
41	1441858X1	1	Grease Fitting	
42	D45698900	1	Toggle	
43	D18281779	1	Cover	
44	D44740400	X	Gasket	Length 2 M
45	D18281908	1	Frame	
46	D28281782	1	Pin	
47	D40435100	1	Screw	
48	1440477X1	1	Circlip	
49	D18281781	2	Plate	
50	339139X1	2	Cap Screw	M12 X 25
51	D20400426	4	Washer	
52	1440716X1	2	Cap Screw	M12 X 30
54	D18281792	1	Cover	
57	D20400521	2	Spacer	[C]
61	D28281810	X	Shim	[B]
62	D18281771	1	Support	
63	339124X1	2	Cap Screw	M8 X 16
64	D18282086	1	Shutter	
65	D45739400	3	Support	
66	D28750784	3	Bracket	
67	1441462X1	3	Locknut	M6
68	D28282460	2	Shield	
69	D40405300	4	Screw	
70	D43385200	2	Screw	
71	D28280441	2	Washer	
72	1442739X1	1	Locknut	M16
73	**D28780523**	1	Potentiometer	
74	D18281785	1	Rod	
75	D46437300	2	Toggle	

https://truckmanualshub.com/

Item	Part Number	Qty	Description	Comments
76	D28281784	1	Rod	
77	D41010600	2	Nut	M6
78	339560X1	1	Cap Screw	M6 X 16
79	D18281787	1	Bracket	
80	1441462X1	1	Locknut	M6
81	1441462X1	1	Locknut	M6
82	D20400404	1	Washer	
83	339804X1	1	Cap Screw	M6 X 25
84	D20400461	4	Washer	
85	D28281878	1	Cover	[A]
86	D28281879	1	Cover	[A]
87	D40685000	4	Screw	[A]

FOOTNOTE [A] COVER PLATES ARE USED FOR RYE GRASS ONLY
FOOTNOTE [B] OPTIONAL
FOOTNOTE [C] NOT ILLUSTRATED

https://truckmanualshub.com/

MF 7274/7278 COMBINE, |-> 61123 for 7274 and |-> 61115 for 7278 - 3906105

D-ZCZI-004-A

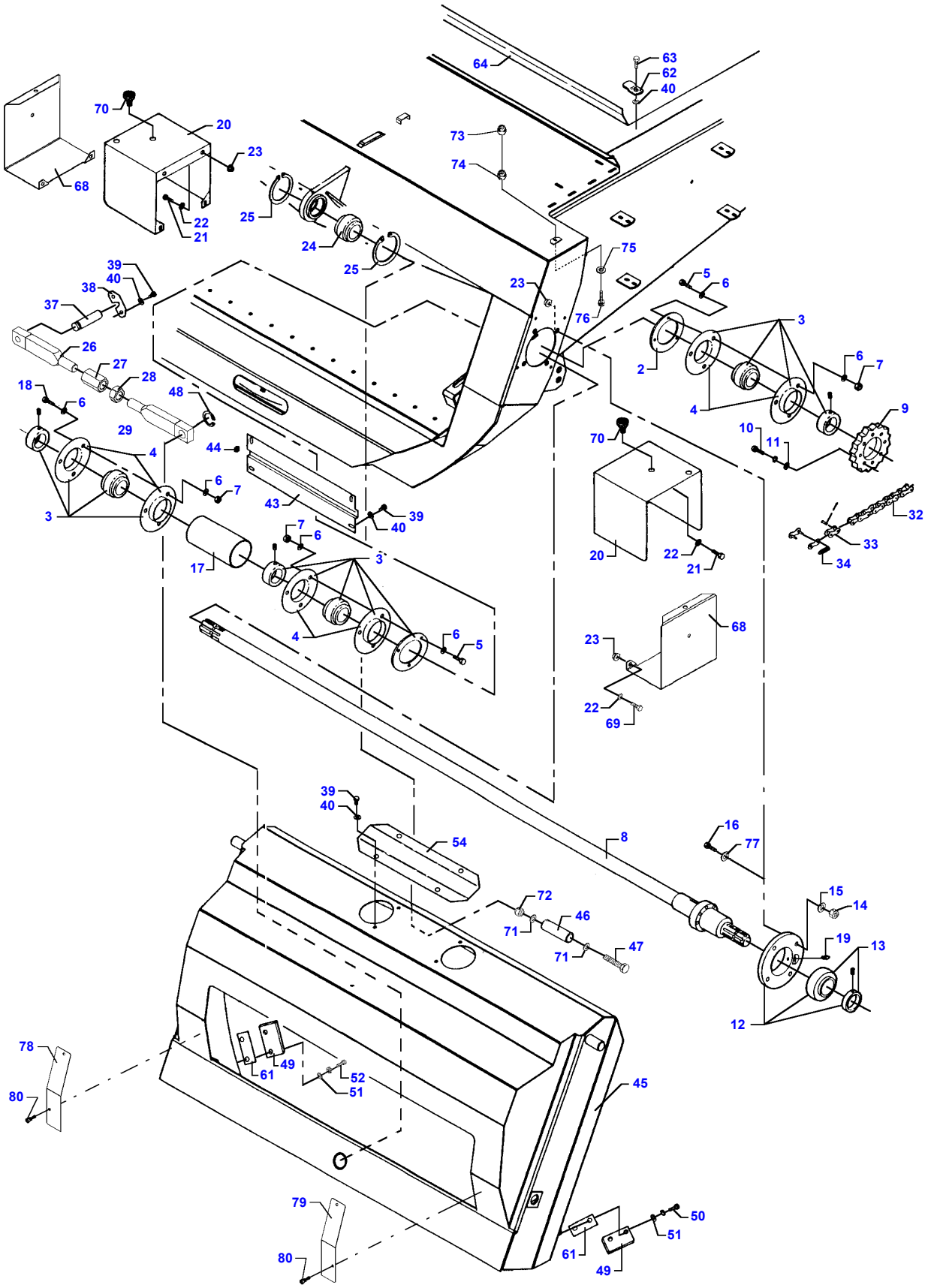

D-ZCZI-004-A

https://truckmanualshub.com/

Item	Part Number	Qty	Description	Comments
2	D28284368	2	Shim	
3	D41707800	3	Bearing	
4	D41701700	6	Flange	
5	3009493X1	6	Cap Screw	M10 X 30
6	D20400507	12	Spacer	
7	339402X1	6	Nut	M10
8	D28281789	1	Shaft	CPL.
	D28281769	1	Shaft	
	D28281788	1	Hub	
9	D28281617	1	Sprocket	
10	339009X1	8	Cap Screw	M8 X 35
11	D20400506	8	Washer	
12	D41716400	1	Bearing	
13	D41716400	1	Bearing	
14	1442739X1	4	Locknut	M16
15	D20400462	4	Washer	
16	339214X1	4	Cap Screw	M16 X 50
17	D28281772	1	Shield	
18	3009492X1	3	Cap Screw	M10 X 25
19	339608X1	1	Grease Nipple	
20	D28282251	2	Shield	
21	339123X1	4	Cap Screw	M8 X 20
22	D20400506	8	Washer	
23	394367X1	8	Locknut	M8
24	D45698700	1	Toggle	
25	D42514800	2	Circlip	
26	D28281820	1	Link	Right Hand
27	D28281825	1	Nut	
28	390340X1	1	Nut	M30
29	D28281819	1	Link	Left Hand
32	D42334600	1	Chain	
33	D42367800	1	Link	
34	D42367700	1	Connecting Link	
37	D28284399	1	Pin	
38	D28281783	1	Plate	
39	339123X1	X	Cap Screw	M8 X 20
40	D20400506	X	Washer	
43	D18281779	1	Cover	
44	D44740400	X	Gasket	Length 2 M
45	D18281908	1	Frame	
46	D28281782	1	Pin	
47	D40435100	1	Screw	
48	1440477X1	1	Circlip	
49	D18281781	2	Plate	
50	339139X1	2	Cap Screw	M12 X 25
51	D20400426	4	Washer	
52	1440716X1	2	Cap Screw	M12 X 30
54	D18281792	1	Cover	
61	D28281810	X	Shim	[B]
62	D18281771	2	Support	
63	339124X1	2	Cap Screw	M8 X 16
64	D18282086	1	Shutter	
68	D28282460	2	Shield	
69	D40405300	4	Screw	
70	D43385200	2	Screw	
71	D28280441	2	Washer	
72	1442739X1	1	Locknut	M16
73	1441462X1	1	Locknut	M6
74	1441462X1	1	Locknut	M6
75	D20400404	1	Washer	
76	339804X1	1	Cap Screw	M6 X 25
77	D20400461	4	Washer	
78	D28281878	1	Cover	Right Hand
79	D28281879	1	Cover	Left Hand
80	D40685000	4	Screw	[A]

FOOTNOTE [A] COVER PLATES ARE USED FOR RYE GRASS ONLY
FOOTNOTE [B] OPTIONAL

https://truckmanualshub.com/

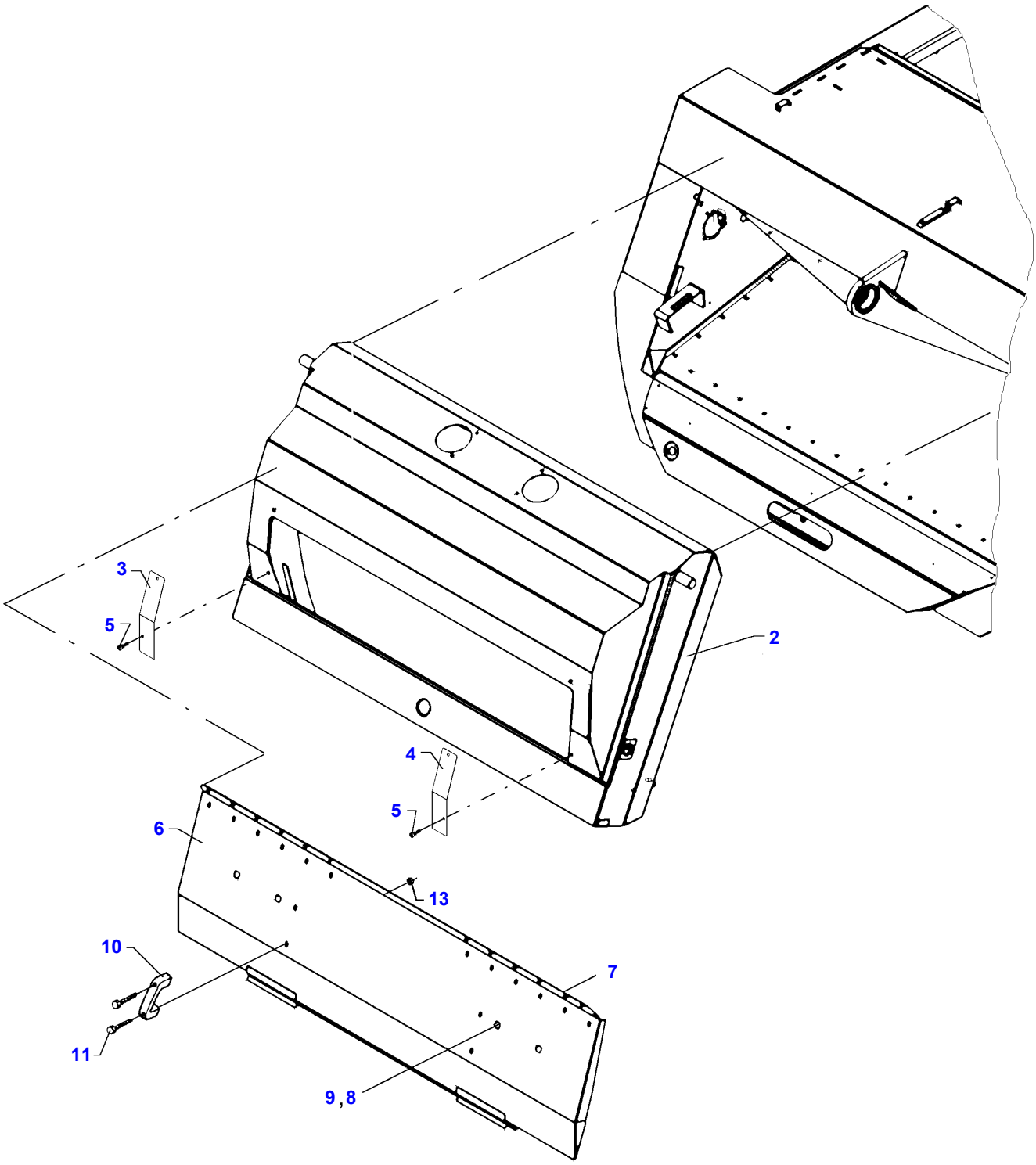

D-ZCAZ-004-A

https://truckmanualshub.com/

Item	Part Number	Qty	Description	Comments
2	D18281908	1	Frame	
	D18281909	1	Frame	AUTO LEVEL
3	D28281878	1	Cover	Right Hand
4	D28281879	1	Cover	Left Hand
5	D40685000	2	Screw	
6	D18280969	1	Plate	
7	D43429400	2	Latch	
8	D43429200	2	Housing	
9	D43429300	2	Punch	
10	D43386900	2	Grip	
11	391148X1	4	Hex Socket Screw	M8 X 20
13	394367X1	4	Locknut	M8

https://truckmanualshub.com/

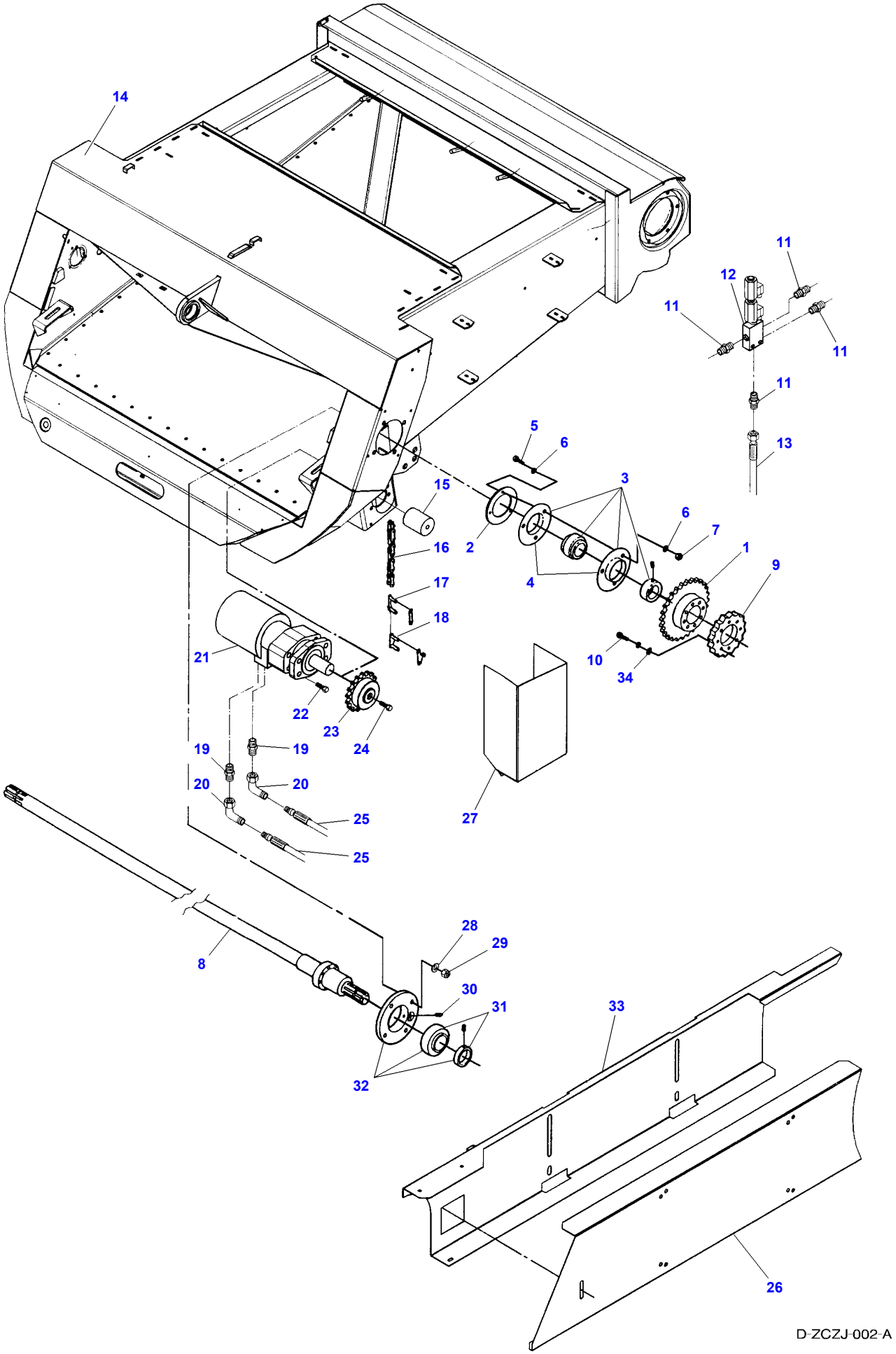

https://truckmanualshub.com/

Item	Part Number	Qty	Description	Comments
1	D28281961	1	Sprocket	
2	D28284368	1	Shim	
3	D41707800	1	Bearing	
4	D41701700	1	Flange	
5	3009493X1	1	Cap Screw	M10 X 30
6	D20400507	2	Spacer	
7	339402X1	1	Nut	M10
8	D28281789	1	Shaft	CPL.
	D28281769	1	Shaft	
	D28281788	1	Hub	
9	D28281617	1	Sprocket	Number of teeth/spines 16
10	339891X1	1	Cap Screw	M8 X 80
11	D45255200	4	Connector	
12	D45110095	1	Pressure Valve	
13	D45132500	1	Hydr. Hose	
14	D18282340	1	Conveyor	
15	D28281954	1	Transducer	
16	D42339300	1	Chain	
17	D42365900	1	Link	
18	D42366000	1	Link	
19	D45257300	2	Union	
20	D45264100	4	Union	
21	D45120025	1	Engine	
22	D40446500	4	Screw	
23	D28281981	1	Sprocket	
24	D40458300	1	Screw	
25	D45130035	2	Hydraulic Hose	
	D45130142	2	Hose	From Serial or Engine Number 61490
26	D18281780	1	Shield	
27	D18281983	1	Guard	
28	D20400462	1	Washer	
29	1442739X1	1	Locknut	M16
30	339608X1	1	Grease Nipple	M10
31	D41716400	1	Bearing	
32	D41716400	1	Bearing	
33	D18281982	1	Cowl	
	D18282109	1	Cowl	
34	D20400506	1	Washer	
35	D45120030	1	Kit, Gasket	[A,B]
	D45120031	1	Kit, Bearing	[A,C]
				(21)

FOOTNOTE [A] NOT ILLUSTRATED
FOOTNOTE [B] ENGINE
FOOTNOTE [C] CLUTCH

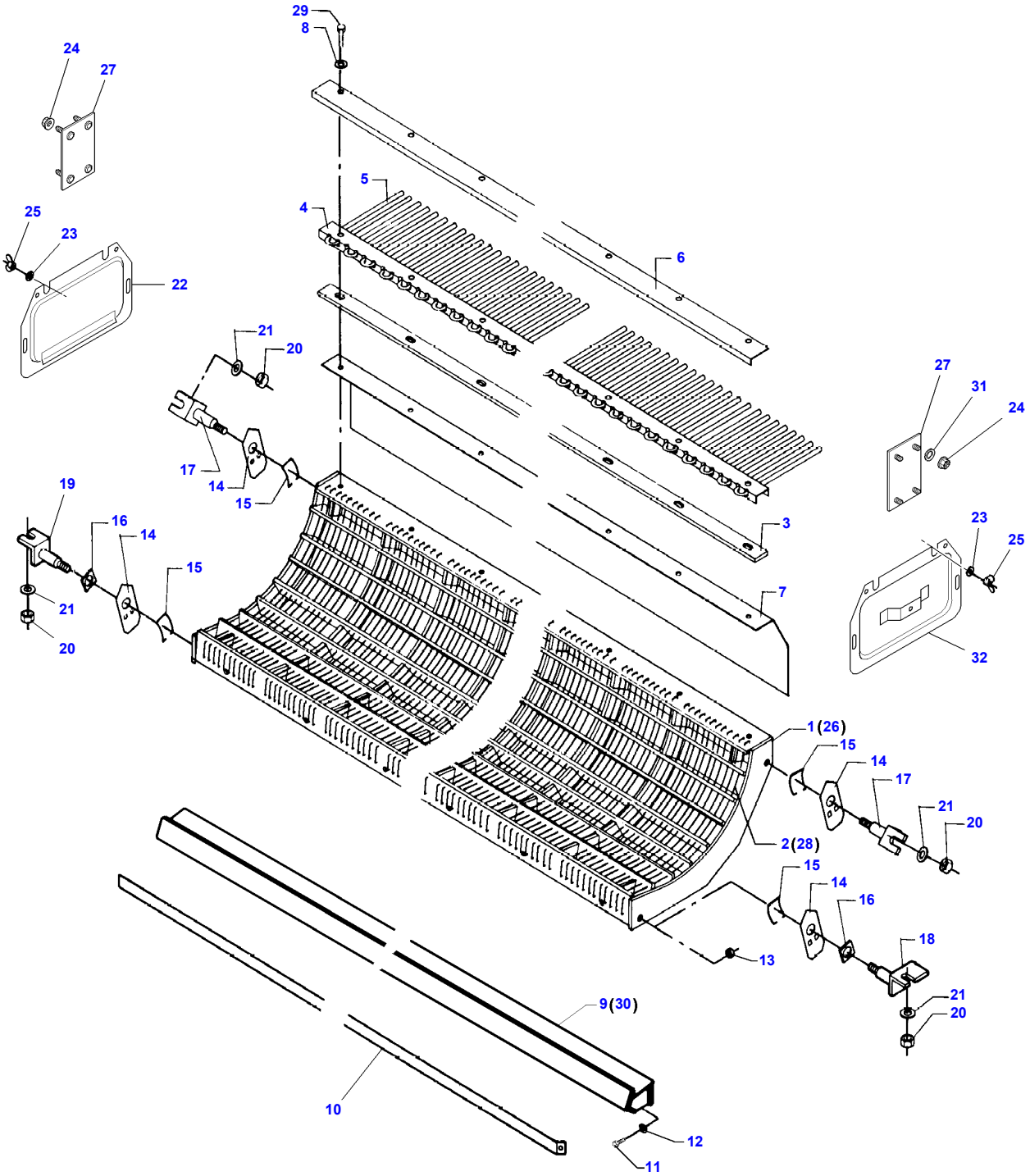
29
8
24
27
5
4
25
23
22
6
21
20
27
31
24
17
14
15
19
16
14
15
3
23
25
7
21
20
32
1(26)
15
14
17
21
20
2(28)
15
14
16
18
13
21
20
9(30)
10
12
11

D-ZDZA-004-C

https://truckmanualshub.com/

Item	Part Number	Qty	Description	Comments
1	D28380519	1	Concave	
2	D28380075	X	Wire	
3	D28380596	1	Washer	
4	D28380598	1	Perforated Plate	
5	D28350257	30	Tine	
6	D28380599	1	Perforated Plate	
7	D28380597	1	Shield	
8	D20400415	15	Washer	
9	D28380401	1	Concave	
10	D28380191	1	Blade	1,5 X 30 Length 2850 mm
	D28380449	9	Plate	[E] 1,5 X 40 Length 3500 mm
	D28380379	9	Sieve	[E] 1,5 X 45
11	339814X1	7	Cap Screw	M10 X 35
12	D20400419	7	Washer	
13	1440329X1	7	Locknut	M10
14	D28350146	4	Plate	
15	D28350031	4	Spring	
16	D28350037	2	Gauge	
17	D28380621	2	Journal	Valid from machine/table no,can be used in new as well as in older machines 58460
18	D28380622	1	Journal	Valid from machine/table no,can be used in new as well as in older machines 57867
19	D28385087	1	Journal	
20	339034X1	4	Nut	M16
21	D28181284	4	Washer	
22	D28185271	1	Cover	
23	D20400506	8	Washer	
24	394367X1	8	Locknut	M8
25	339106X1	4	Wing Nut	M8
26	D28380504	1	Concave	[A]
27	D28184058	2	Plate	
28	D28380493	X	Wire	[A]
29	D40425900	15	Screw	
30	D28380495	1	Concave	[A]
31	D20400506	8	Washer	
32	D28185626	1	Cover	

FOOTNOTE [A] OPTIONAL EXTRA MAIZE
FOOTNOTE [E] FOR CLOVER

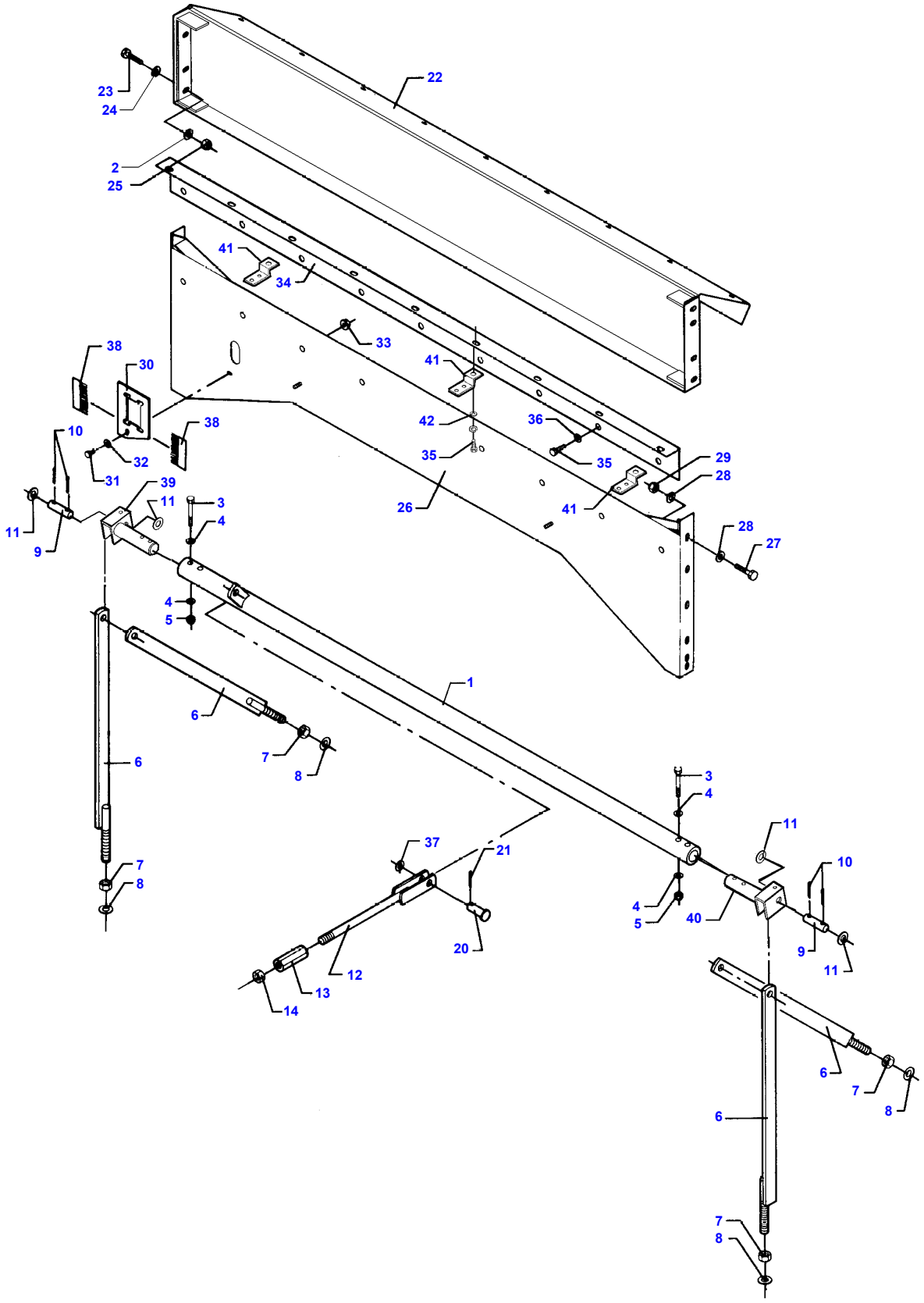
22
23
24
2
25
41
34
33
38
30
41
42
36
10
38
32
35
35
29
28
31
39
11
3
4
26
41
28
27
11
9
4
5
1
6
7
8
6
3
4
11
37
21
10
7
8
4
5
40
20
9
11
12
13
14
6
7
8
6
7
8

D-ZDZB-001-A

https://truckmanualshub.com/

Item	Part Number	Qty	Description	Comments
1	D28380144	1	Shaft	
2	D20400424	8	Washer	
3	3009500X1	4	Cap Screw	M10 X 65
4	D20400471	8	Washer	
5	1440329X1	4	Locknut	M10
6	D28380142	4	Suspension	
7	339034X1	8	Nut	M16
8	D28181284	8	Washer	
9	D28384050	2	Pin	Valid from machine/table no,can be used in new as well as in older machines 60435
10	D28384049	2	Clamp	Valid from machine/table no,can be used in new as well as in older machines 60435
11	1441462X1	2	Locknut	Valid from machine/table no,can be used in new as well as in older machines 60435 M6
12	D28980635	1	Rod	
13	D28884116	1	Nut	
14	339034X1	1	Nut	M16
20	D41486000	1	Clevis Pin	
21	354066X1	1	Split Pin	5/32" X 1
22	D28180195	1	Support	
23	3009509X1	8	Cap Screw	M12 X 45
24	D20400426	8	Washer	
25	1442190X1	8	Locknut	M12
26	D28181201	1	Plate	
27	3009509X1	12	Cap Screw	M12 X 45
28	D20400426	24	Washer	
29	1442190X1	12	Locknut	M12
30	D28181144	1	Plate	Repairs and replaces D28180188
31	339560X1	1	Cap Screw	M6 X 16
32	391038X1	1	Flat Washer	
33	1441462X1	1	Locknut	M6
34	D28181088	1	Reinforcement	
35	3009493X1	X	Cap Screw	M10 X 30
36	D20400471	8	Washer	
37	D20400461	1	Washer	
38	D28180246	2	Brush	
39	D28380312	1	Arm	Right Hand
40	D28384047	1	Arm	Left Hand
41	D28780694	3	Support	
42	D20400416	X	Washer	

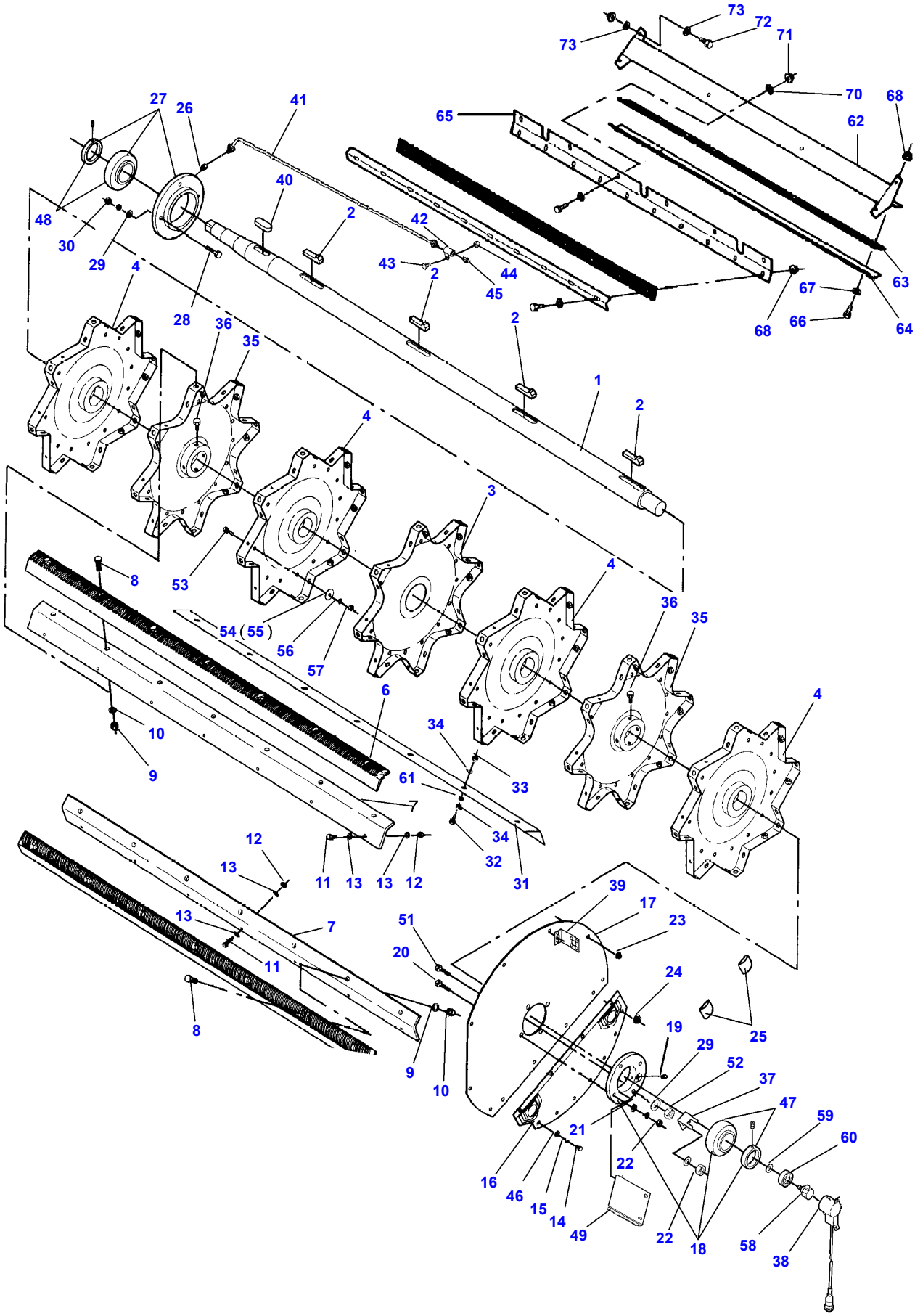
73
72
71
73
70
68
62
65
27
26
41
40
48
30
29
4
2
42
43
44
45
2
28
36
35
2
1
2
4
3
8
53
54 (55)
56
57
4
36
35
6
10
9
34
33
61
34
32
31
4
12
13
11
13
13
12
39
17
23
13
7
51
20
11
24
8
9
10
19
29
52
37
47
59
60
25
21
22
16
46
15
14
49
22
18
58
38
D-ZDZC-009-B

https://truckmanualshub.com/

Item	Part Number	Qty	Description	Comments
1	D28380169	1	Threshing Cyl	
	D28380314	1	Shaft	(1)
2	D43160200	4	Gib Key	(1)
3	D28380084	4	Spider	(1)
4	D28380085	4	Spider	(1)
6	D28080862	2	Kit, Beater Bar	(1)
				Left Hand
	D28080861	2	Kit, Beater Bar	(1)
				Right Hand
7	D28380089	8	Support	(1)
8	3009509X1	56	Cap Screw	(1)
				M12 X 45
9	1442190X1	56	Locknut	(1)
				M12
10	D20400424	56	Washer	(1)
11	D40425000	56	Cap Screw	(1)
				M8 X 35
12	394367X1	X	Locknut	(1)
				M8
13	D20400408	X	Washer	(1)
14	339124X1	4	Cap Screw	M8 X 16
15	D20400506	4	Washer	
16	D28380576	1	Shutter	
17	D28385011	1	Cover	
18	D41715000	1	Bearing	
19	339608X1	1	Grease Nipple	
20	390912X1	3	Cap Screw	M12 X 40
21	D20400446	4	Washer	
22	3009695X1	4	Nut	M12
23	394367X1	8	Locknut	M8
24	394367X1	7	Locknut	M8
25	D27300181	4	Shutter	
26	D43009600	2	Adaptor	
27	D41716400	1	Bearing	
28	3009509X1	4	Cap Screw	M12 X 45
29	D20400446	4	Washer	
30	3009695X1	4	Nut	M12
31	D28380494	8	Plate	[A]
32	339814X1	X	Cap Screw	[A]
				M10 X 35
33	1440329X1	X	Locknut	[A]
				M10
				Repairs and replaces D41087600
34	D20400473	X	Washer	[A]
35	D28380202	2	Hub	(1)
36	D40693800	8	Screw	(1)
37	D28780749	1	Retainer	
38	D28780514	1	Sensor	
39	D28780772	1	Retainer	
40	D43110600	1	Key	
41	D28780803	1	Tube	
42	D43009200	1	Bracket	
43	339666X1	1	Cap Screw	M6 X 20
44	1441462X1	1	Locknut	M6
45	339003X1	1	Grease Nipple	
46	D20400506	4	Washer	
47	D41713200	1	Ball Bearing	
48	D41716400	1	Bearing	
49	D28181126	1	Bracket	
51	D40411400	1	Screw Metric	
52	D41012100	1	Locknut	
53	3009493X1	X	Cap Screw	[B]
				M10 X 30
54	D20400421	X	Washer	[B]
55	D20400422	X	Washer	[B]
56	D41101900	X	Spring Washer	[B]
57	339402X1	X	Nut	[B]
				M10
58	D28780516	1	Inductive Sensor	
59	D20400419	1	Washer	
60	1440487X1	1	Bear. 6203 2rs	

https://truckmanualshub.com/

Item	Part Number	Qty	Description	Comments
61	D20400423	X	Flat Washer	[A]
62	D28380193	1	Deflector	
63	D28380132	2	Scraper	
64	D28380133	2	Rail	
65	D28380131	1	Deflector	
66	339337X1	20	Cap Screw	M8 X 30
67	D20400506	20	Washer	
68	394367X1	22	Locknut	M8
69	3009493X1	6	Cap Screw	[C] M10 X 30
70	D20400416	12	Washer	
71	1440329X1	6	Locknut	M10
72	3009493X1	X	Cap Screw	M10 X 30
73	D20400416	8	Washer	

FOOTNOTE [A] MAIZE EQUIPMENT
FOOTNOTE [B] OPTIONAL
FOOTNOTE [C] NOT ILLUSTRATED

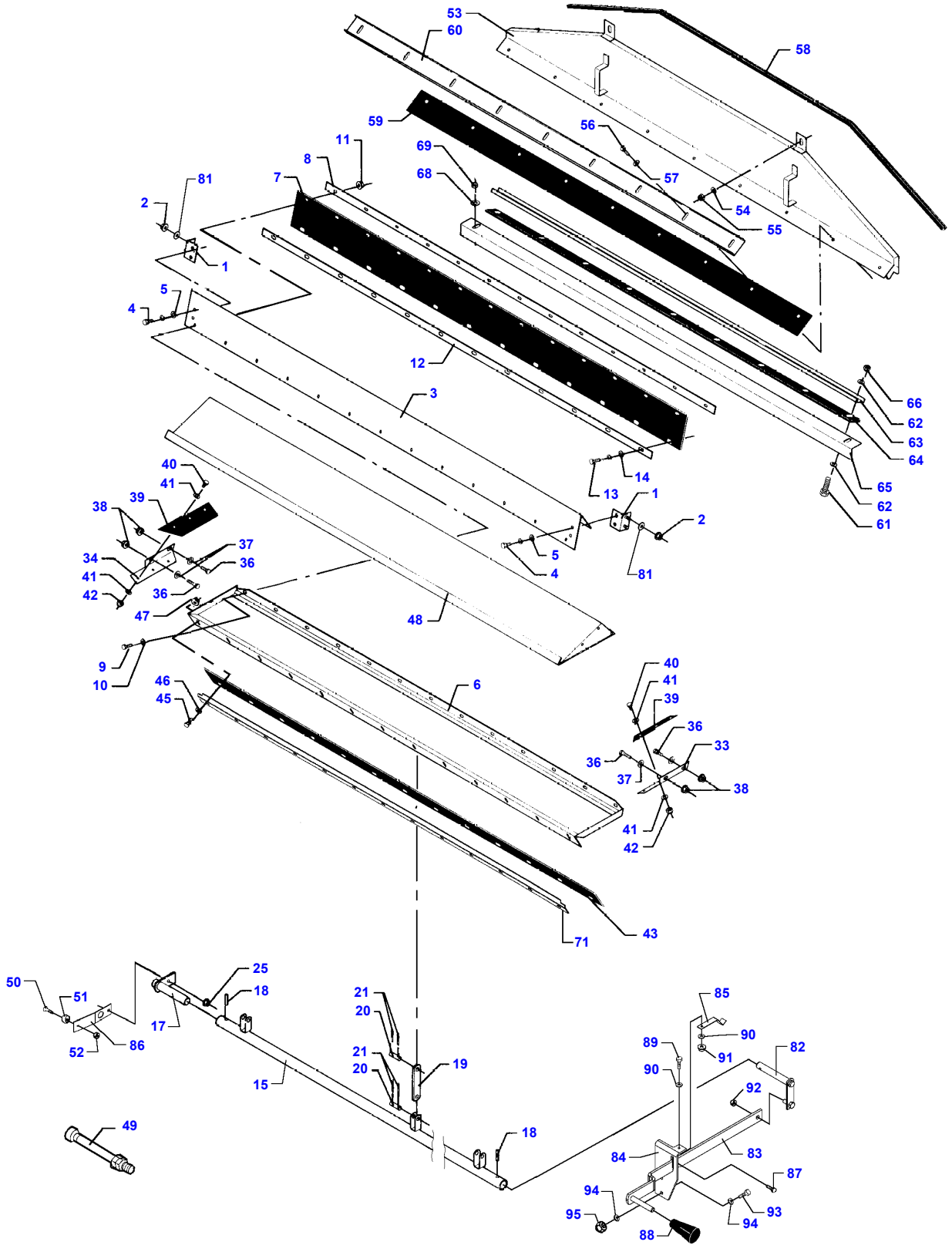
53
60
58
59
56
11
69
8
68
57
81
7
54
2
55
1
5
4
12
3
66
62
63
64
40
41
14
13
1
65
62
61
38
39
2
37
34
36
5
41
4
81
42
36
47
48
9
10
46
6
40
41
45
39
36
33
36
37
38
41
42
43
71
25
50
18
51
21
20
85
17
90
89
82
52
86
21
20
19
91
90
15
92
49
18
84
83
87
94
93
95
94
88

D-ZDZD-001-A

https://truckmanualshub.com/

Item	Part Number	Qty	Description	Comments
1	D28380105	2	Elbow	
2	1440329X1	4	Locknut	M10
3	D28380380	1	Plate	
4	3009492X1	4	Cap Screw	M10 X 25
5	D20400471	4	Washer	
6	D28380117	1	Stone Trap	
7	D28380107	1	Curtain	
8	D28380108	1	Plate	
9	339804X1	13	Cap Screw	M6 X 25
10	391038X1	13	Flat Washer	
11	1441462X1	13	Locknut	M6
12	D28380109	1	Washer	
13	339761X1	12	Cap Screw	M8 X 25
14	D20400506	12	Washer	
15	D28380110	1	Shaft	
17	D28380112	1	Support	
18	339071X1	2	Roll Pin	Diameter 6 X 30
19	D28380113	3	Strap	
20	D28600299	6	Pin	
21	354057X1	12	Split Pin	1/8" X 3/4
25	1441462X1	1	Locknut	M6
33	D28380118	1	Bat	
34	D28380119	1	Bat	
36	339761X1	4	Cap Screw	M8 X 25
37	D20400506	4	Washer	
38	394367X1	4	Locknut	M8
39	D28380148	2	Seal	
40	339560X1	6	Cap Screw	M6 X 16
41	D20400404	12	Washer	
42	1441462X1	6	Locknut	M6
43	D28380171	1	Strip	
45	339761X1	13	Cap Screw	M8 X 25
46	D20400506	13	Washer	
47	394367X1	13	Locknut	M8
48	D28380163	1	Plate	[B]
49	D28780365	1	Sensor	
50	3000025X1	1	Screw	M4 X 25
51	D45010092	1	Magnet	
52	D41010400	1	Nut	
53	D28180632	1	Cover	
54	D20400419	2	Washer	
55	1440329X1	2	Locknut	M10
56	339123X1	9	Cap Screw	M8 X 20
57	D20400506	9	Washer	
58	D44740600	X	Strip	Length 25 M
59	D28180409	1	Seal	
60	D28180628	1	Rail	
61	339337X1	9	Cap Screw	M8 X 30
62	D20400506	18	Washer	
63	D28180630	1	Rail	
64	D28180629	1	Deflector	
65	D28180627	1	Profile	
66	394367X1	9	Locknut	M8
68	D20400415	2	Washer	
69	339402X1	4	Nut	M10
71	D28380172	1	Plate	[A]
81	D20400416	4	Washer	
82	D28385013	1	Shaft	
83	D28385016	1	Grip	
84	D28385017	1	Console	
85	D28385008	1	Spring	
86	D28385009	1	Bracket	
87	D40690000	1	Screw	
88	D43389700	1	Grip	
89	339666X1	1	Cap Screw	M6 X 20
90	391038X1	2	Flat Washer	
91	1441462X1	1	Locknut	M6
92	1442190X1	1	Locknut	M12
93	339814X1	2	Cap Screw	M10 X 35
94	D20400507	4	Spacer	
95	1440329X1	2	Locknut	M10

https://truckmanualshub.com/

Item	Part Number	Qty	Description	Comments

FOOTNOTE [A] STANDARD COMBINE
FOOTNOTE [B] MAIZE EQUIPMENT

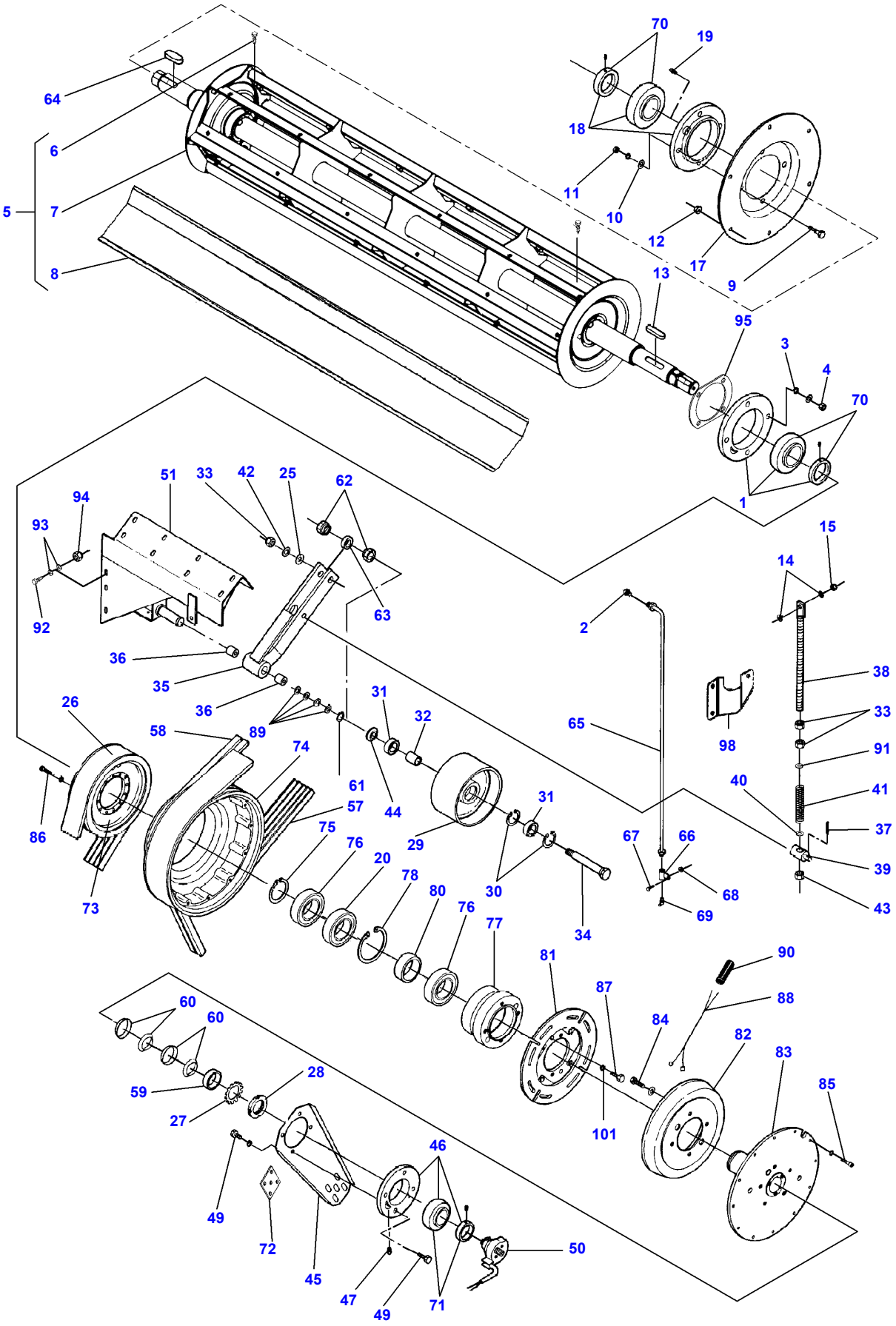
70
19
64
18
6
11
5
7
10
12
17
8
13
9
95
3
4
70
1
51
33
42
25
62
94
93
15
14
92
63
2
36
38
35
36
31
32
33
26
58
89
65
98
91
74
61
40
41
57
44
31
37
86
75
76
29
67
66
39
20
78
30
68
73
80
76
69
43
77
34
81
90
87
88
60
60
84
82
83
59
28
85
27
101
46
49
72
50
45
47
49
71

D-ZDZE-008-C

https://truckmanualshub.com/

Item	Part Number	Qty	Description	Comments
1	D41717300	1	Bearing	CPL.
2	D43009900	1	Grease	M8X1
3	D20400446	4	Washer	
4	3009695X1	4	Nut	M12
5	D28385021	1	Rear Beater	
6	D40697900	2	Screw	(5)
7	D28385022	1	Beater	(5)
8	D28380423	6	Plate	(5)
9	3009509X1	4	Cap Screw	M12 X 45
10	D20400446	4	Washer	
11	3009695X1	4	Nut	M12
12	394367X1	6	Locknut	M8
13	D43159000	1	Key	
14	D20400471	2	Washer	
15	1440329X1	1	Locknut	M10
17	D28380103	1	Cover	
18	D41717300	1	Bearing	CPL.
19	339003X1	1	Grease Nipple	M8
20	D41617700	1	Bear. 6015 2RS	
25	D20400460	1	Washer	
26	**D41979800**	1	Belt	
27	D28780617	1	Kit, Washer	
28	D25700322	1	Nut	
29	D28780486	1	Pulley	
30	339199X1	2	Circlip	
31	SKF62042RS	2	Bear. 6204 2rs	
32	D28780007	1	Ring	
33	339034X1	2	Nut	M16
34	D28780008	1	Bolt	
35	D28786659	1	Lever	CPL.
	D28787003	1	Arm	
36	D43364800	2	Bush	(35)
37	339129X1	1	Split Pin	Diameter 3,2 X 25
38	D28380011	1	Tie Rod	
39	D28780030	1	Pivot	
40	D20400459	2	Washer	
41	D28210881	1	Comp.Spring	
42	D20400459	1	Washer	
43	1442739X1	1	Locknut	M16
44	D28380003	1	Ring	
45	D28380020	1	Yoke	
46	D41711000	1	Flange	
47	1441858X1	1	Grease Fitting	
49	3009507X1	4	Cap Screw	M12 X 35
50	D28780404	1	Retainer	
51	D28780830	1	Tensioner	
52	D40425900	4	Screw	[A]
57	**D41990059**	1	Belt	See Page - Reference Number 011-0001/45
58	**D41990001**	2	V Belt	See Page - Reference Number 006-0006
59	D28380195	1	Bush	
60	D42595900	2	Tightener	
61	1440476X1	1	Circlip	
62	D28780777	2	Eccentric	
63	D28780776	1	Spacer	
64	D43110600	1	Key	
65	D28780803	1	Tube	
66	D43009200	1	Bracket	
67	339560X1	1	Cap Screw	M6 X 16
68	1441462X1	1	Locknut	M6
69	339003X1	1	Grease Nipple	
70	D41717400	2	Bearing Assy	
71	D41705700	X	Ball Bearing	
72	D28380178	1	Dog	
73	D28380300	1	Clutch	CPL.
	D28380700	1	Clutch	From Serial or Engine Number 61365
				CPL.
	D28380047	1	Pulley	(73)
74	D28380045	1	Pulley	(73)
75	D42505500	1	Circlip	(73)
76	D41617700	2	Bear. 6015 2RS	(73)
77	D28380285	1	Bearing Carrier	(73)

https://truckmanualshub.com/

Item	Part Number	Qty	Description	Comments
77	D28380701	1	Hub	(73)
				From Serial or Engine Number 61365
78	D42516700	1	Circlip	(73)
80	D28380658	1	Ring	(73)
80	D28380703	1	Spacer	(73)
				From Serial or Engine Number 61365
81	D45060300	1	Plate	(73)
81	D45080168	1	Magnet	(73)
				From Serial or Engine Number 61365
82	D45060200	1	Magnet	(73)
82	D45080169	1	Plate	(73)
				From Serial or Engine Number 61365
83	D28380286	1	Hub	(73)
83	D28380702	1	Hub	(73)
				From Serial or Engine Number 61365
84	D40410700	4	Screw	(73)
84	D40464200	4	Screw	(73)
				From Serial or Engine Number 61365
85	1440349X1	12	Hex Socket Screw	(73)
				M8 X 30
86	339337X1	12	Cap Screw	(73)
				M8 X 30
87	339139X1	4	Cap Screw	(73)
				M12 X 25
87	D40464300	4	Screw	(73)
				From Serial or Engine Number 61365
88	D28850906	1	Harness	(73)
89	D20400531	4	Spacer	
90	D28751867	X	Sheath	
90	D28380704	X	Flexible Pipe	From Serial or Engine Number 61365
91	D28181284	1	Washer	
92	D40407200	4	Cap Screw	M10 X 45
93	D20400473	8	Washer	
94	D41092500	4	Nut	
95	D28385023	1	Shim	
96	D41102100	1	Washer	[A]
97	D41100900	1	Spring Washer	[A]
98	D28285889	1	Bracket	[D]
99	D45010003	2	Plug	[A]
100	D45067900	2	Cap	[A]
101	D41652600	4	Washer	

FOOTNOTE [A] NOT ILLUSTRATED

https://truckmanualshub.com/

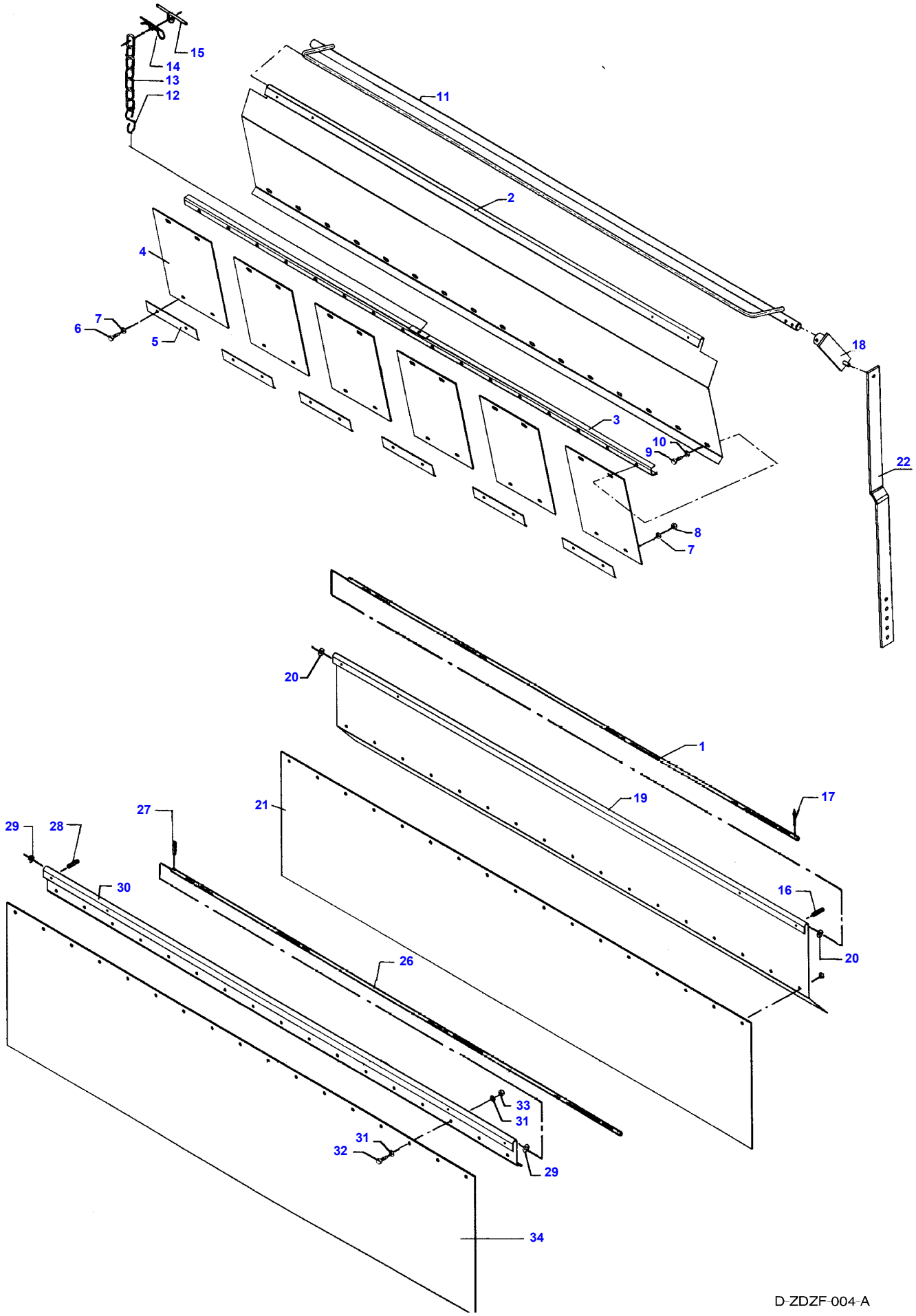

https://truckmanualshub.com/

Item	Part Number	Qty	Description	Comments
1	D28180133	2	Shaft	
2	D28380529	3	Guard	
3	D28380530	1	Rail	
4	D28380528	6	Plate	
5	D28380527	6	Reinforcement	
6	339761X1	12	Cap Screw	M8 X 25
7	D20400506	24	Washer	
8	1441462X1	12	Locknut	M6
9	339666X1	12	Cap Screw	M6 X 20
10	D20400405	24	Washer	
11	D28380535	1	Suspension	
12	D42386000	1	Hook	
13	D28180405	1	Chain	
14	D27100120	1	Hair Pin	
15	D21100341	1	Retainer	
16	354066X1	14	Split Pin	5/32" X 1
17	D44358000	6	Hair Pin	
18	D28380538	1	Arm	
19	D28181019	1	Cowl	
20	D20400419	84	Washer	
21	D28181903	1	Guard	
22	D28285618	1	Rod	
26	D28180133	1	Shaft	[A]
27	D44358000	X	Hair Pin	[A]
28	354066X1	X	Split Pin	[A] 5/32" X 1
29	D20400419	X	Washer	[A]
30	D28181723	1	Guard	[A]
31	D20400405	X	Washer	[A]
32	339560X1	X	Cap Screw	[A] M6 X 16
33	1441462X1	X	Locknut	[A] M6
34	D28181710	1	Guard	[A]

FOOTNOTE [A] FOR MACHINES WITHOUT ROTARY SEPARATOR

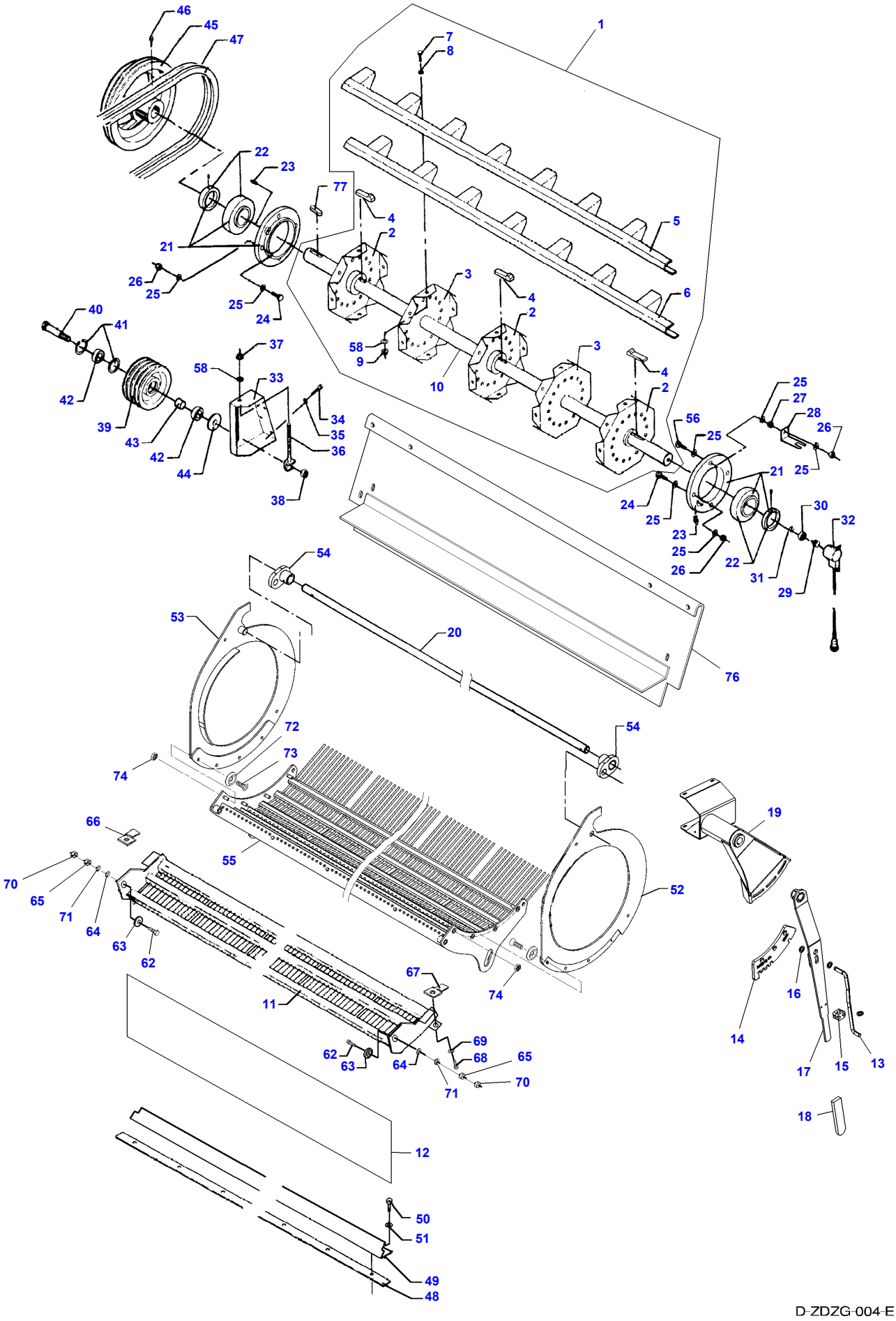
46
45
47
1
7
8
22
23
77
4
2
5
21
26
25
3
6
25
24
40
41
37
58
9
10
42
58
33
34
35
36
39
43
42
44
38
56
25
27
28
26
21
25
24
25
23
25
26
22
30
32
31
29
54
53
20
76
72
73
74
54
19
66
55
70
65
71
64
63
62
52
67
74
11
69
68
65
62
63
64
71
70
16
14
17
15
13
18
12
50
51
49
48
D-ZDZG-004-E

https://truckmanualshub.com/

Item	Part Number	Qty	Description	Comments
1	D28380260	1	Cylinder	
2	D28380258	3	Plate	(1)
3	D28380256	2	Spider	(1)
4	D43154900	3	Gib Key	(1)
5	D28380254	4	Batt	(1)
6	D28380255	4	Batt	(1)
7	339814X1	40	Cap Screw	(1) M10 X 35
8	D20400415	40	Washer	(1)
9	1440329X1	40	Locknut	(1) M10
10	D28380259	1	Shaft	(1)
11	D28380382	1	Beater	
	D28380346	2	Wire	Length 120 mm
	D28380347	2	Wire	Length 140 mm
	D28380348	74	Wire	Length 208 mm
12	D28380203	1	Guard	
13	D28385047	1	Pawl	Valid from machine/table no,can be used in new as well as in older machines 58301
14	D28385043	1	Scale	Valid from machine/table no,can be used in new as well as in older machines 58301
15	D45730008	1	Clamp	Valid from machine/table no,can be used in new as well as in older machines 58301
16	339072X1	3	Washer	Valid from machine/table no,can be used in new as well as in older machines 58301
17	D28385044	1	Lever	Valid from machine/table no,can be used in new as well as in older machines 58301
18	D43484900	1	Lever	Valid from machine/table no,can be used in new as well as in older machines 58301
19	D28385048	1	Mounting	Valid from machine/table no,can be used in new as well as in older machines 58301
20	D28380439	1	Shaft	
21	D41711000	2	Flange	
22	D41705700	2	Ball Bearing	
23	1441858X1	2	Grease Fitting	
24	390912X1	8	Cap Screw	M12 X 40
25	D20400426	16	Washer	
26	1442190X1	8	Locknut	M12
27	3009695X1	1	Nut	M12
28	D28780611	1	Retainer	
29	**D28780516**	1	Inductive Sensor	
30	1440487X1	1	Bear. 6203 2rs	
31	D20400419	1	Washer	
32	**D28780514**	1	Sensor	
33	D28380234	1	Bracket	
34	390799X1	3	Cap Screw	M10 X 40
35	D20400415	3	Washer	
36	D28211025	1	Bolt	
37	339402X1	2	Nut	M10
38	1442739X1	1	Locknut	M16
39	D28380242	1	Pulley	
40	D28480090	1	Bolt	
41	339199X1	2	Circlip	
42	SKF62042RS	2	Bear. 6204 2rs	
43	D28780007	1	Ring	
44	D28380235	1	Washer	
45	D28380244	1	Pulley	
46	3009493X1	2	Cap Screw	M10 X 30
47	**D41990007**	2	Belt	See Page - Reference Number 011-0002/98
48	D28380291	1	Shim	
49	D28380261	1	Extension	
50	3009493X1	8	Cap Screw	M10 X 30
51	D20400415	8	Washer	
52	D28380583	1	Plate	Left Hand
53	D28380584	1	Plate	Right Hand
54	D28380440	2	Eccentric	
55	D28385035	1	Concave	Valid from machine/table no,can be used in new as well as in older machines 58301
	D28380632	78	Wire	
56	391198X1	1	Cap Screw	M12 X 50

https://truckmanualshub.com/

Item	Part Number	Qty	Description	Comments
58	D20400471	41	Washer	
62	3009507X1	2	Cap Screw	M12 X 35
63	D28380356	2	Bush	
64	D20400426	2	Washer	
65	3009695X1	2	Nut	M12
66	D28380359	1	Lock	
67	D28380360	1	Lock	
68	3009493X1	2	Cap Screw	M10 X 30
69	D20400473	2	Washer	
70	D41012100	2	Locknut	
71	D20400537	2	Spacer	
72	D28380586	2	Washer	
73	D40606100	8	Screw	
74	1440329X1	8	Locknut	M10
76	D28382147	1	Cover	
77	D43107500	1	Key	

https://truckmanualshub.com/

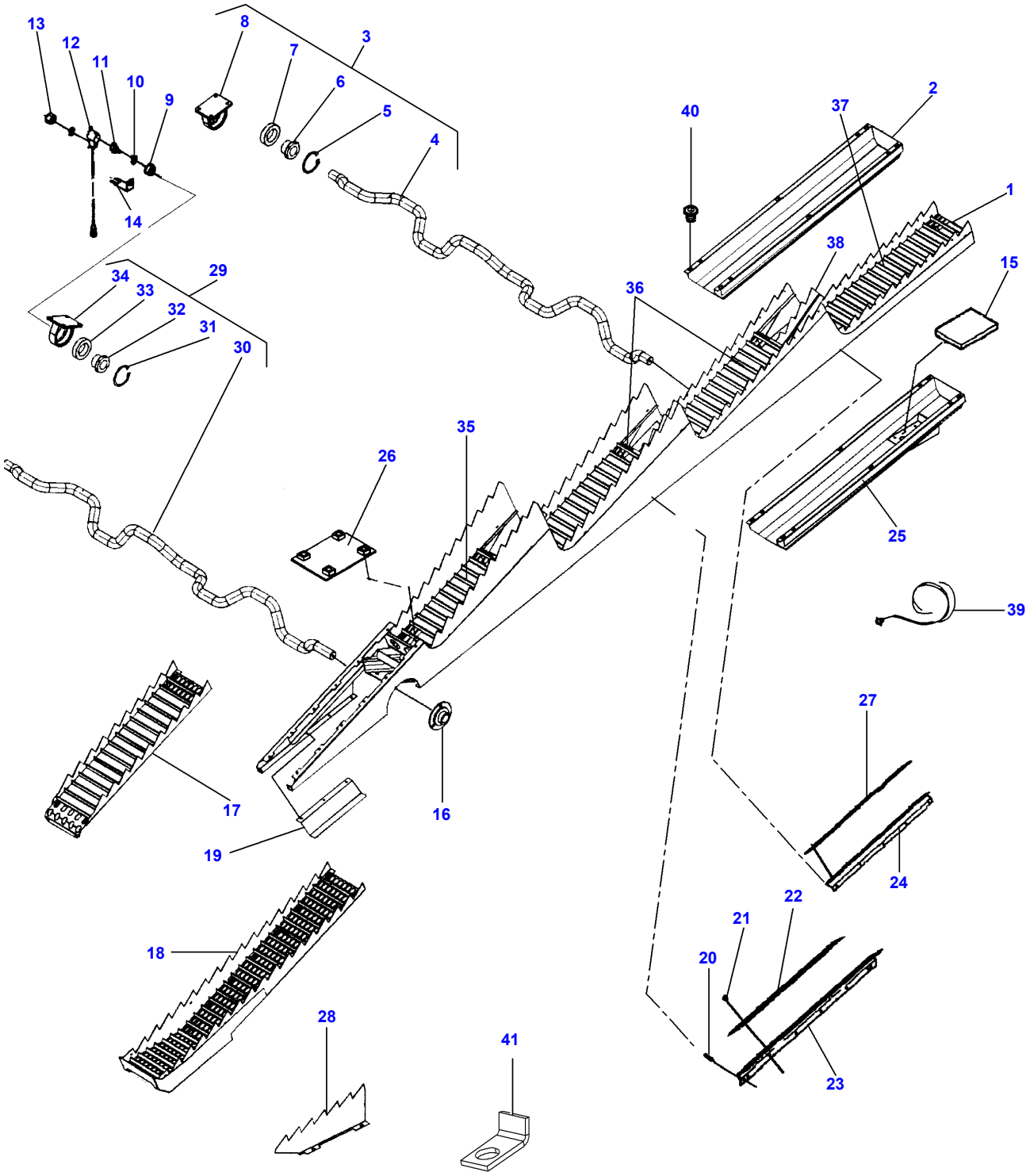

https://truckmanualshub.com/

Item	Part Number	Qty	Description	Comments
1	D28485200	8	Walker	
2	D28485585	6	Bottom	[A] Valid from machine/table no,can be used in new as well as in older machines 6115
3	D28485353	1	Shaft	BACK, CPL.
4	D28485114	1	Shaft	(3) BACK
5	1440516X1	2	Circlip	(3)
6	D41641800	8	Ring	(3)
7	D41622200	8	Bearing	(3)
8	D28485139	8	Housing	(3)
9	1440487X1	X	Bear. 6203 2rs	
10	D20400419	X	Washer	
11	D28780516	X	Inductive Sensor	
12	D28780514	1	Sensor	
13	D41010800	X	Nut	
14	D28780522	1	Support	
15	D44900774	1	Sensor	
16	D41707800	X	Bearing	
17	D28485195	8	Facing	
18	D28485280	8	Facing	
19	D28485269	1	Plate	
20	D41397300	X	Rivet	
21	D43427400	48	Fastener	
22	D28450637	2	Bush	
23	D28450536	2	Plate	
24	D28480301	2	Plate	
25	D28485582	2	Bottom	[A] Valid from machine/table no,can be used in new as well as in older machines 61115
26	D28485188	8	Clamp	
27	D28480300	2	Seal	
28	D28480825	X	Side	
29	D28485352	1	Shaft	FRONT, CPL. Up to Serial or Engine Number 7826
	D28485466	1	Crank	From Serial or Engine Number 7827 FRONT CPL.
30	D28485112	1	Shaft	(29) FRONT Up to Serial or Engine Number 7826
	D28485458	1	Crank	(29) FRONT From Serial or Engine Number 7827
31	1440516X1	2	Circlip	(29)
32	D41641800	8	Ring	(29)
33	D41622200	8	Bearing	(29)
34	D28485139	8	Housing	(29)
35	D28485205	1	Facing	FRONT
36	D28485206	2	Facing	MIDDLE
37	D28485207	1	Facing	BACK
38	D28485208	3	Raiser	
39	D44900775	1	Harness	
40	D45750500	1	Plug	
41	D28480659	1	Retainer	

FOOTNOTE [A] THE STRAW WALKER BOTTOMS MUST BE REPLACED SET BY S ET

https://truckmanualshub.com/

MF 7274/7278 COMBINE, |-> 61123 for 7274 and |-> 61115 for 7278 - 3906105

D-ZEZB-003-B

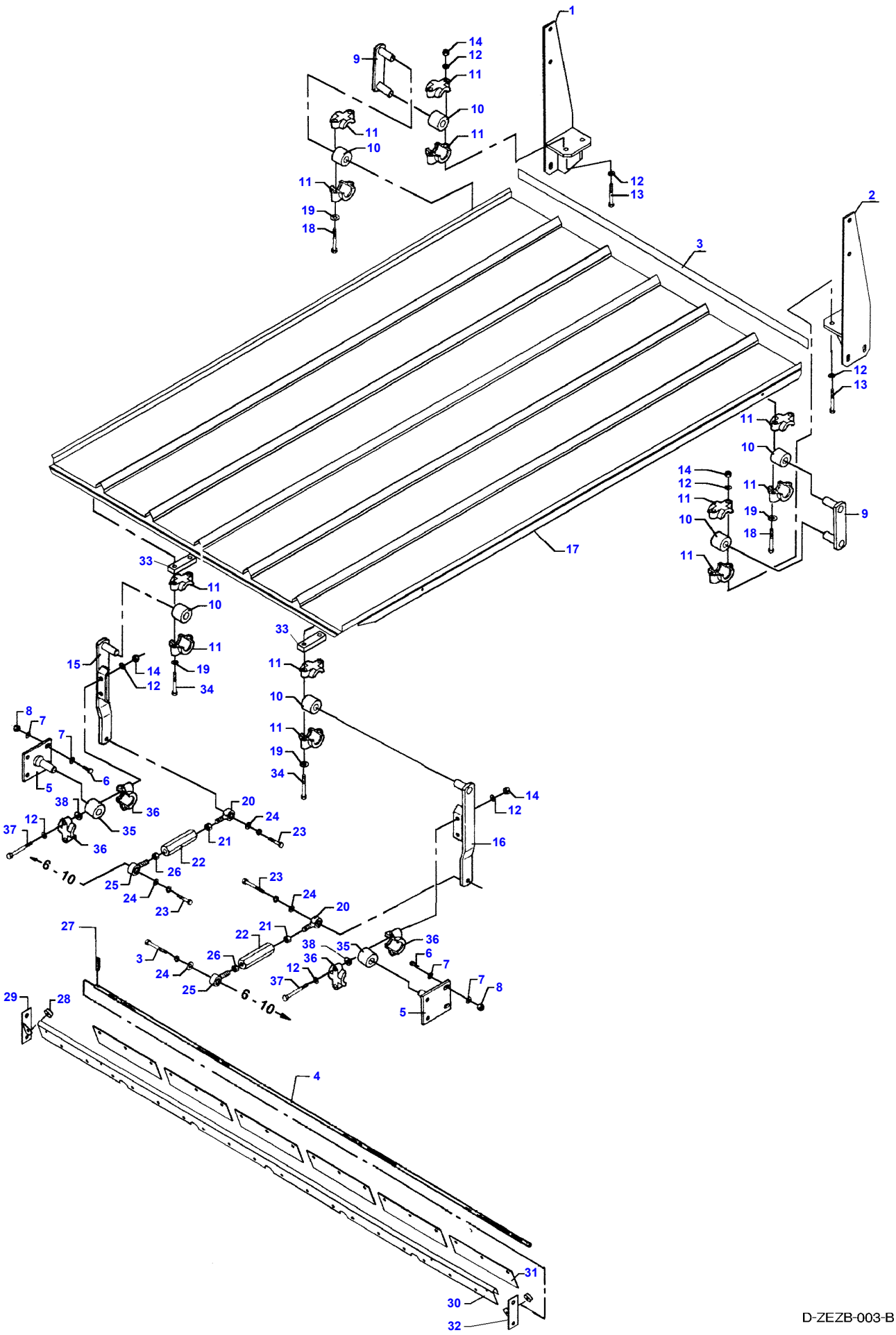

https://truckmanualshub.com/

Item	Part Number	Qty	Description	Comments
1	D28186058	1	Bracket	
2	D28186038	1	Bracket	
3	D28485465	1	Edge	
4	D28480835	1	Clevis Pin	
5	D28480682	2	Bracket	
6	339337X1	X	Cap Screw	M8 X 30
7	D20400506	X	Washer	
8	394367X1	X	Locknut	M8
9	D28480897	2	Arm	
10	D28450420	2	Bush	
11	D28430010	4	Half Flange	
12	D20400419	X	Washer	
13	D40426500	X	Screw	
14	1440329X1	X	Locknut	M10
15	D28485460	1	Arm	Valid from machine/table no,can be used in new as well as in older machines 59410
16	D28485462	1	Arm	
17	D28485130	1	Pan	
18	3009501X1	X	Cap Screw	M10 X 70
19	D20400415	X	Washer	
20	D45698800	2	Toggle	
21	3009695X1	X	Nut	M12
22	D28480838	2	Bolt	
23	3009507X1	X	Cap Screw	M12 X 35
24	D20400424	X	Washer	
25	D45699000	2	Toggle	
26	D41014400	X	Nut	
27	354050X1	X	Split Pin	3/32" X 1
28	D44718300	2	Plug	
29	D28480832	1	Console	
30	D28485259	1	Band	
31	D28480828	6	Rubber Strap	
32	D28480833	1	Console	
33	D28585114	2	Shim	
34	D40426500	2	Screw	
35	D46481700	2	Vibration Mount	
36	D28485224	4	Bracket	
37	3009503X1	X	Cap Screw	M10 X 90
38	D28480862	2	Shim	

https://truckmanualshub.com/

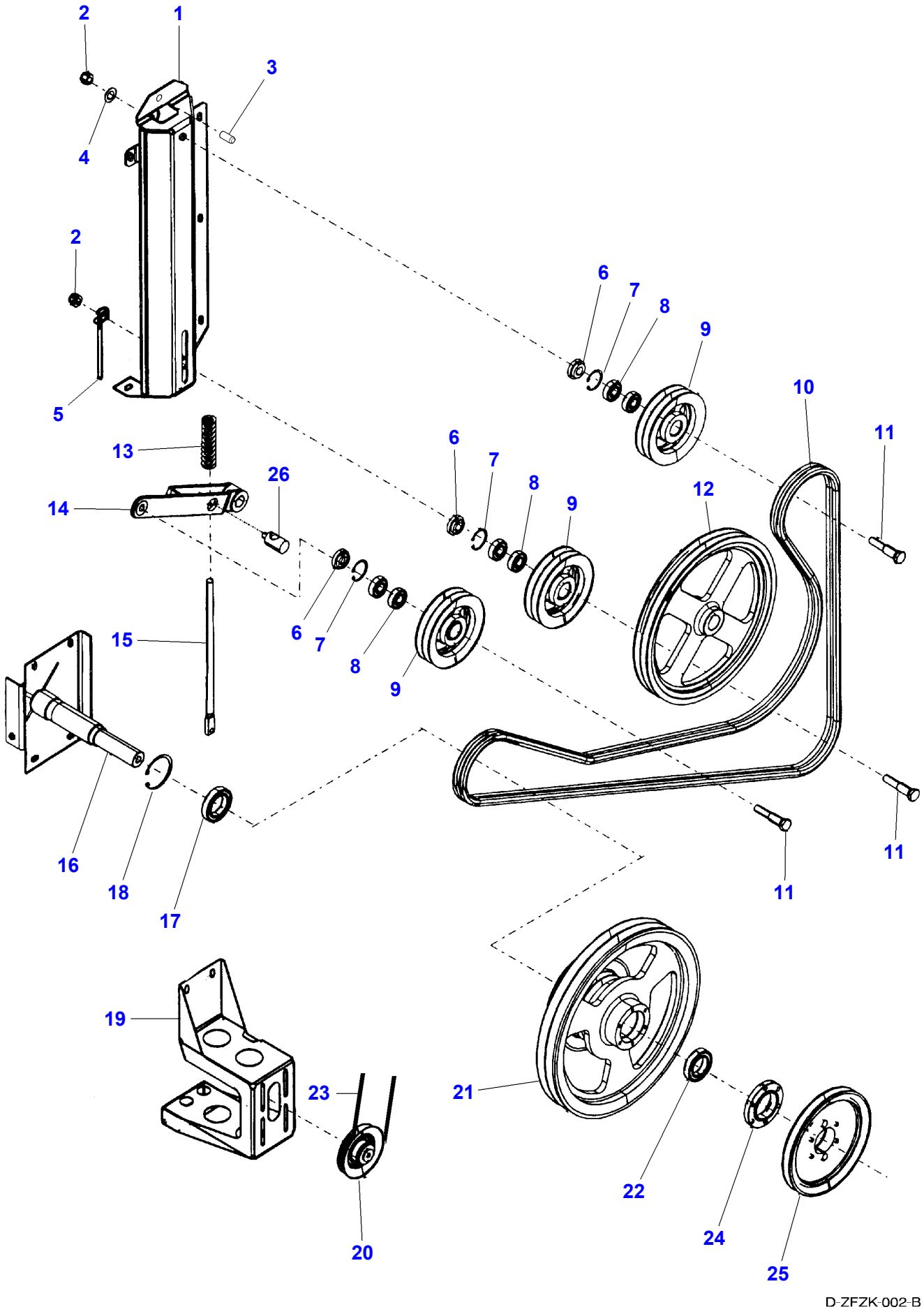

https://truckmanualshub.com/

Item	Part Number	Qty	Description	Comments
1	D28285609	1	Bracket	
2	1442739X1	2	Locknut	M16
3	D28285616	1	Pin	(1)
4	D20400463	1	Washer	
5	D28211025	1	Bolt	
6	D28880354	3	Spacer	
7	339199X1	3	Circlip	
8	SKF62042RS	6	Bear. 6204 2rs	
9	D28480822	3	Pulley	
10	**D41975300**	1	Belt	
11	D28250444	3	Bolt	
12	D28885042	1	Pulley	
	D28285527	1	Pulley	[A]
13	D28485365	1	Spring	
14	D28880495	1	Lever	
15	D28380011	1	Tie Rod	
16	D28480588	1	Bracket	
17	391347X1	1	Bear. 6010 2rs	
18	339437X1	1	Circlip	
19	D28485399	1	Support	
20	D28782735	1	Pulley	
21	D28285941	1	Pulley	
22	SKF60092RS	1	Bear. 6009 2rs	
23	D41921801	1	Belt	Valid from machine/table no,can be used in new as well as in older machines 61075 Repairs and replaces D41921800
24	D28485348	1	Cover	
25	D28485388	1	Pulley	
26	D28780030	1	Pivot	

FOOTNOTE [A] MAIZE EQUIPMENT

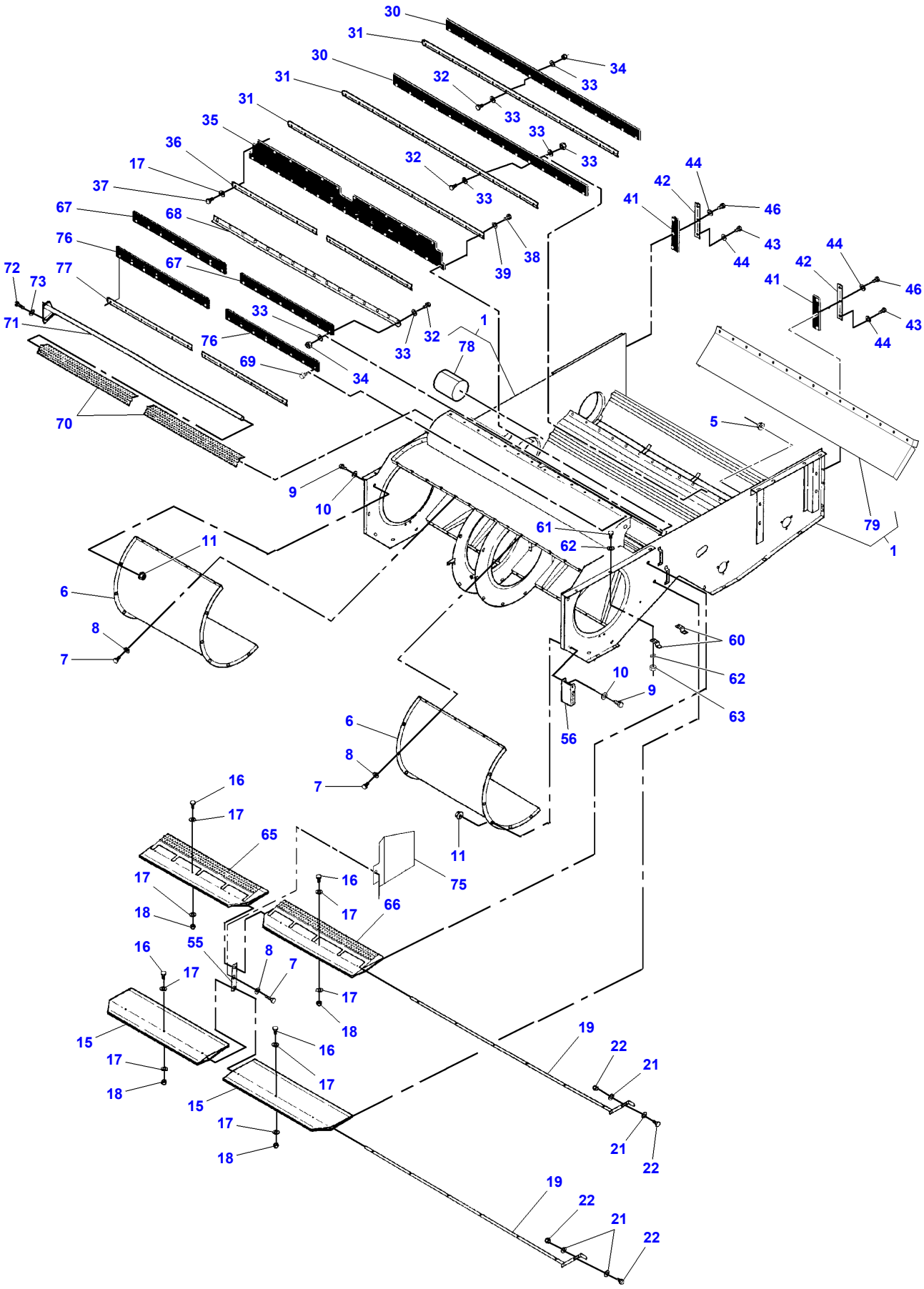
30
31
30
31
31
35
36
17
37
67
68
76
67
72
73
77
71
33
76
69
70
34
33
32
33
32
33
33
33
38
39
1
78
44
42
41
46
43
44
44
42
41
46
43
44
5
79
1
9
10
61
62
11
6
8
7
60
62
10
9
63
56
6
8
7
11
16
17
65
17
18
16
17
66
75
16
55
8
7
17
17
18
15
17
18
16
17
15
17
18
19
22
21
21
22
19
22
21
22
D-ZFZA-004-A

https://truckmanualshub.com/

Item	Part Number	Qty	Description	Comments
1	D28480704	1	Housing	
5	394367X1	4	Locknut	M8
6	D28480171	2	Cover	
7	339123X1	X	Cap Screw	M8 X 20
8	D20400506	X	Washer	
9	339123X1	20	Cap Screw	M8 X 20
10	D20400506	20	Washer	
11	394367X1	20	Locknut	M8
15	D28480566	2	Plate	
16	339262X1	12	Cap Screw	M6 X 30
17	D20400470	36	Washer	
18	1441462X1	12	Locknut	M6
19	D28480211	2	Shaft	
20	339123X1	2	Cap Screw	[B] M8 X 20
21	D20400506	4	Washer	
22	394367X1	2	Locknut	M8
30	D28480158	2	Seal	
31	D28480157	3	Rail	
32	339666X1	X	Cap Screw	M6 X 20
33	391038X1	X	Flat Washer	
34	1441462X1	X	Locknut	M6
35	D28480744	1	Gasket	
36	D28480173	2	Rail	
37	339804X1	12	Cap Screw	M6 X 25
38	339666X1	15	Cap Screw	M6 X 20
39	391038X1	X	Flat Washer	
41	D28480363	2	Seal	
42	D28480362	2	Rail	
43	339123X1	2	Cap Screw	M8 X 20
44	D20400506	7	Washer	
46	339337X1	3	Cap Screw	M8 X 30
55	D28480740	1	Support	
56	D28784378	1	Pipe	
60	D28780694	2	Support	
61	390799X1	2	Cap Screw	M10 X 40
62	D20400473	4	Washer	
63	1440329X1	2	Locknut	M10
65	D28480749	1	Plate	Right Hand
66	D28480750	1	Plate	Left Hand
67	D28480706	4	Gasket	
68	D28480741	1	Gasket	
69	D43427400	16	Fastener	
70	D28480745	2	Gate	
71	D28480751	1	Shaft	
72	339761X1	1	Cap Screw	M8 X 25
73	D20400411	1	Washer	
75	D28480770	1	Plate	
76	D28480834	2	Seal	
77	D28480831	2	Support	
78	D28480206	1	Tube	(1)
79	D28480153	1	Bottom	(1)

FOOTNOTE [B] NOT ILLUSTRATED

https://truckmanualshub.com/

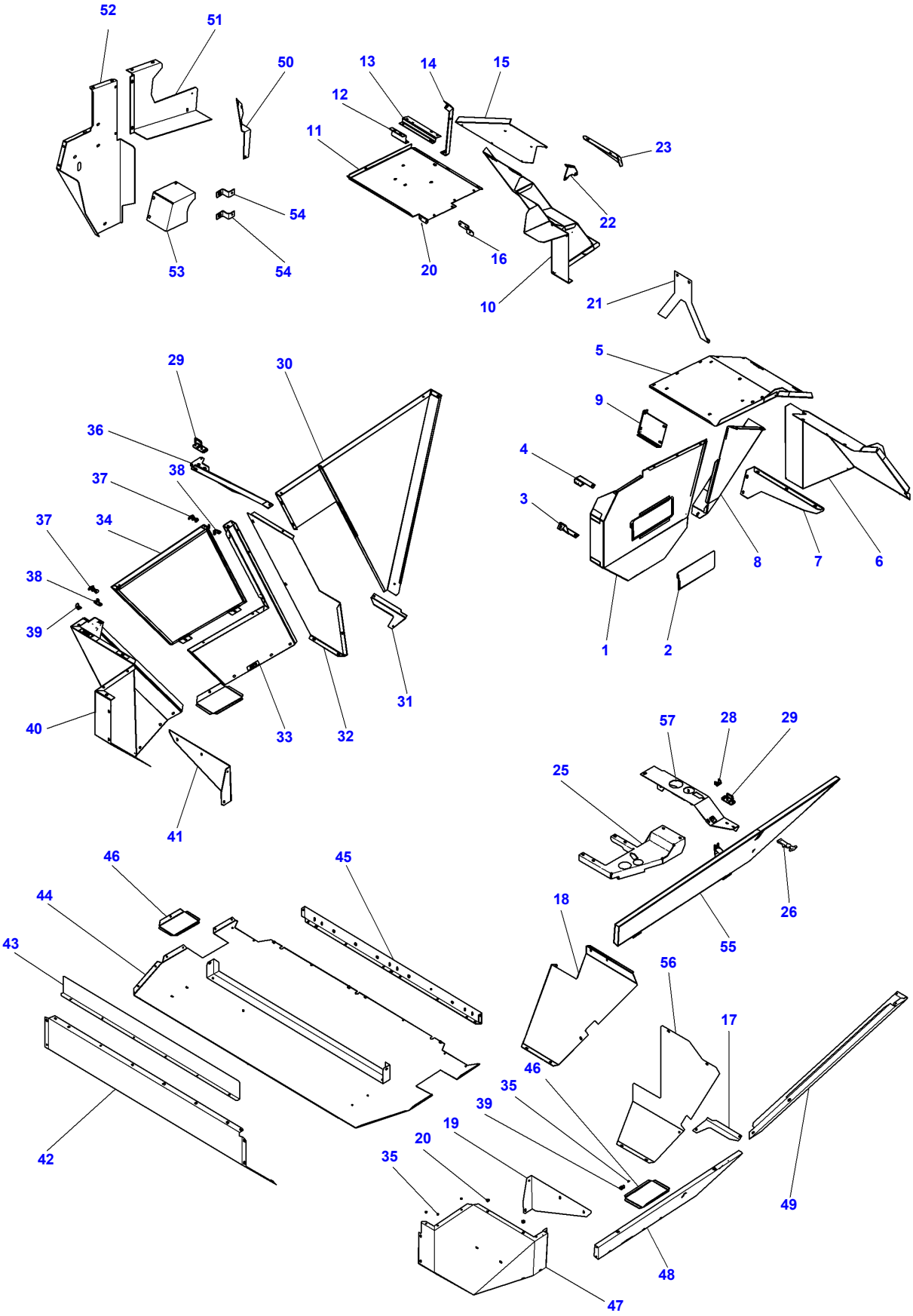

D-ZFZB-007-D

https://truckmanualshub.com/

Item	Part Number	Qty	Description	Comments
1	D28186327	1	Shield	
2	D28184441	1	Cover	
3	D28181107	1	Bracket	
4	D28181106	1	Bracket	
5	D28186692	1	Guard	
6	D28186694	1	Guard	
7	D28185321	1	Bracket	
8	D28186691	1	Shield	
9	D28181126	1	Bracket	
10	D28186669	1	Guard	
11	D28485419	1	Guard	
12	D28185631	1	Bracket	
13	D28185630	1	Bracket	
14	D28185356	1	Brace	
15	D28186670	1	Guard	
16	D28185999	1	Bracket	
17	D28186728	1	Strut	
18			Not Used	
19	D28186774	1	Guard	
20	D44731100	2	Grommet	
21	D28186689	1	Guard	
22	D28186732	1	Bracket	
23	D28186731	1	Bracket	
25	D28782712	1	Retainer	
26	D44737100	1	Rubber Strap	
28	D28120289	1	Retainer	
29	D28181157	2	Clamp	
30	D28186734	1	Plate	
31	D28186727	1	Strut	
32	D28186785	1	Plate	
33	D28186675	1	Guard	
34	D28186674	1	Side	
35	D45742200	9	Plug	
36	D28186786	1	Locking Plate	
37	D44737200	2	Rubber Strap	
38	D28186787	2	Retainer	
39	D28186790	2	Stop	
40	D28186726	1	Guard	
41	D28186788	1	Bracket	
42	D28485412	1	Guard	
43	D28480605	1	Plate	
44	D28485414	1	Base Plate	
45	D28480423	1	Profile	
46	D28186722	2	Hatch	
47	D28186717	1	Guard	
48	D28186723	1	Guard	
49	D28186718	1	Corner	
50	D28186737	1	Strut	
51	D28186738	1	Shield	
52	D28186495	1	Guard	
53	D28186493	1	Guard	
54	D28186496	1	Guard	
55	D28186853	1	Hatch	
56	D28186854	1	Plate	Thickness 0,7M
57	D28782738	1	Locking Plate	
58	D44735900	1	Seal Section	[A]

FOOTNOTE [A] NOT ILLUSTRATED

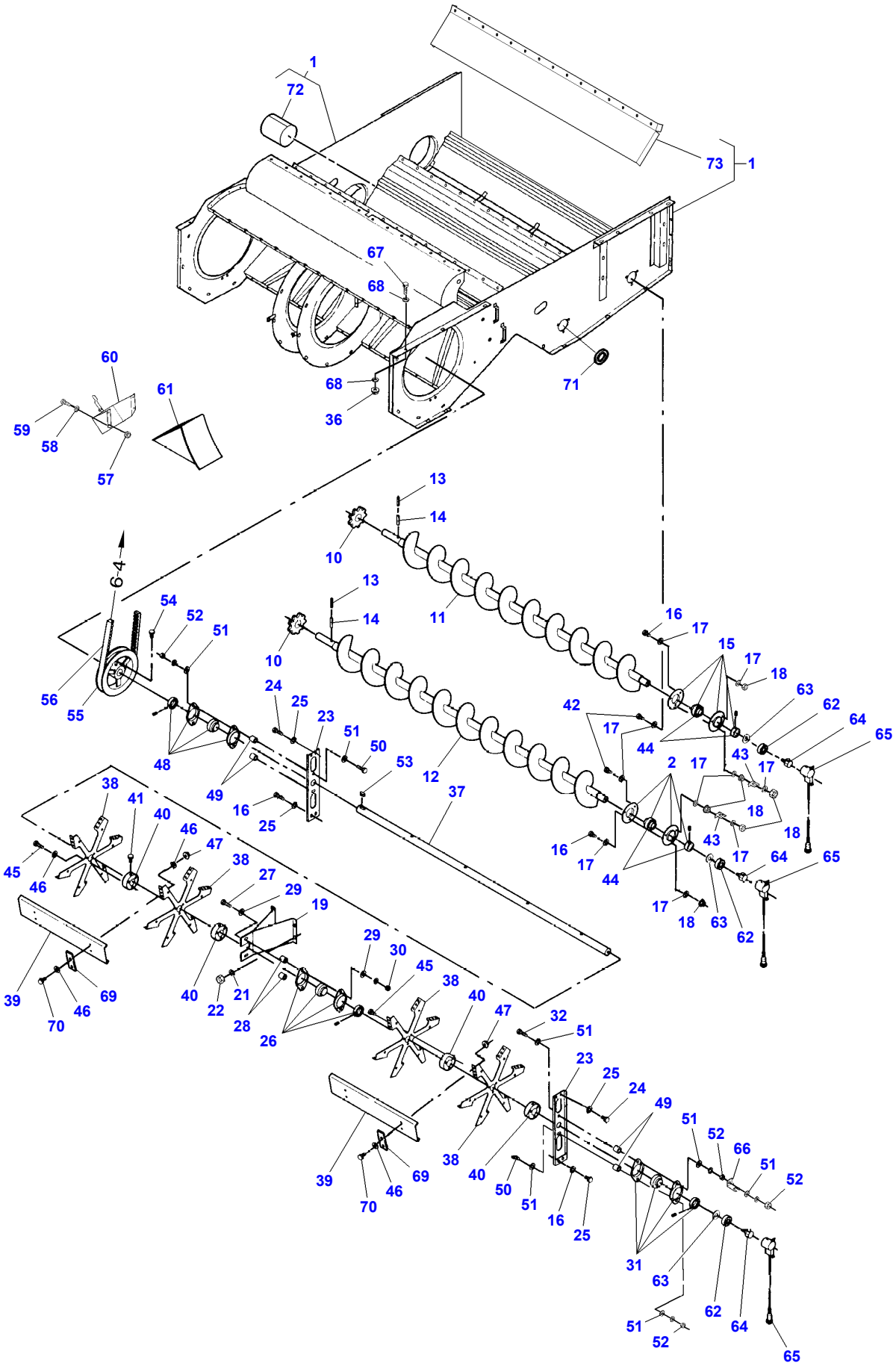
1
72
73
1
67
68
68
36
71
60
61
59
58
57
13
14
10
11
6-4
54
52
51
56
55
13
14
10
16
17
15
17
18
63
62
64
65
42
17
44
43
17
2
17
18
18
43
17
64
65
16
17
44
17
18
63
62
24
25
23
51
50
53
12
37
48
49
16
25
38
41
40
46
47
45
46
38
27
29
19
39
70
46
69
40
22
21
28
26
29
30
45
38
40
47
32
51
23
25
24
49
51
52
66
51
52
39
70
46
69
38
40
50
51
16
25
31
63
62
64
51
52
65

D-ZFZC-004-B

https://truckmanualshub.com/

Item	Part Number	Qty	Description	Comments
1	D28480704	1	Housing	
2	D41706200	1	Bearing	
10	D28580448	2	Sprocket	
11	D28480361	1	Auger	
12	D28485000	1	Auger	
13	395557X1	2	Spirol Pin	Diameter 5 X 50
14	339307X1	2	Pin	Diameter 8 X 50
15	D41709600	1	Bearing	
16	3009492X1	4	Cap Screw	M10 X 25
17	D20400471	14	Washer	
18	339402X1	8	Nut	M10
19	D28480165	1	Bracket	
21	D20400506	4	Washer	
22	394367X1	4	Locknut	M8
23	D28480366	2	Stay	
24	3009491X1	4	Cap Screw	M10 X 20
25	D20400419	X	Washer	
26	D41710100	1	Bearing	
27	D40411400	2	Screw Metric	
28	D28480172	2	Spacer	
29	D20400426	4	Washer	
30	3009695X1	2	Nut	M12
31	D41710100	1	Bearing	
32	D40411600	1	Screw Metric	
36	1440329X1	10	Locknut	M10
37	D28480325	1	Shaft	
38	D28480185	2	Fan	
	D28440130	4	Hub	(38)
39	D28480174	12	Fan	(38)
40	D28480162	4	Bush	(38)
41	3009493X1	X	Cap Screw	(38) M10 X 30
42	390799X1	2	Cap Screw	(38) M10 X 40
43	D28780522	2	Support	(38)
44	D41716000	2	Ball Bearing	(38)
45	339761X1	12	Cap Screw	(38) M8 X 25
46	D20400506	X	Washer	(38)
47	394367X1	48	Locknut	(38) M8
48	D41710100	1	Bearing	
49	D28480172	4	Spacer	
50	D40411400	3	Screw Metric	
51	D20400426	9	Washer	
52	3009695X1	5	Nut	M12
53	D43106200	1	Key	
54	3009492X1	2	Cap Screw	M10 X 25
55	D28480763	1	Pulley	
	D28480807	1	Pulley	[A]
56	**D41981100**	1	Belt	See Page - Reference Number 006-0005/26
	D41981400	1	V Belt	[A] See Page - Reference Number 006-0005/26
57	394367X1	3	Locknut	M8
58	D20400506	3	Washer	
59	339761X1	3	Cap Screw	M8 X 25
60	D45907501	1	Retainer	[B] Repairs and replaces D45907500
61	D45907001	1	Wedge	[B] Repairs and replaces D45907000
62	1440487X1	3	Bear. 6203 2rs	
63	D20400419	3	Washer	
64	**D28780516**	3	Inductive Sensor	
65	**D28780514**	3	Sensor	
66	D28780611	1	Retainer	
67	390799X1	10	Cap Screw	M10 X 40
68	D20400473	20	Washer	
69	D28482107	24	Support	(38)
70	339337X1	48	Cap Screw	M8 X 30
71	D28485349	1	Reinforcement	
72	D28480206	1	Tube	(1)

https://truckmanualshub.com/

Item	Part Number	Qty	Description	Comments
73	D28480153	1	Bottom	(1)

FOOTNOTE [A] REDUCED MAIN FAN SPEED
FOOTNOTE [B] OPTIONAL EQUIPMENT

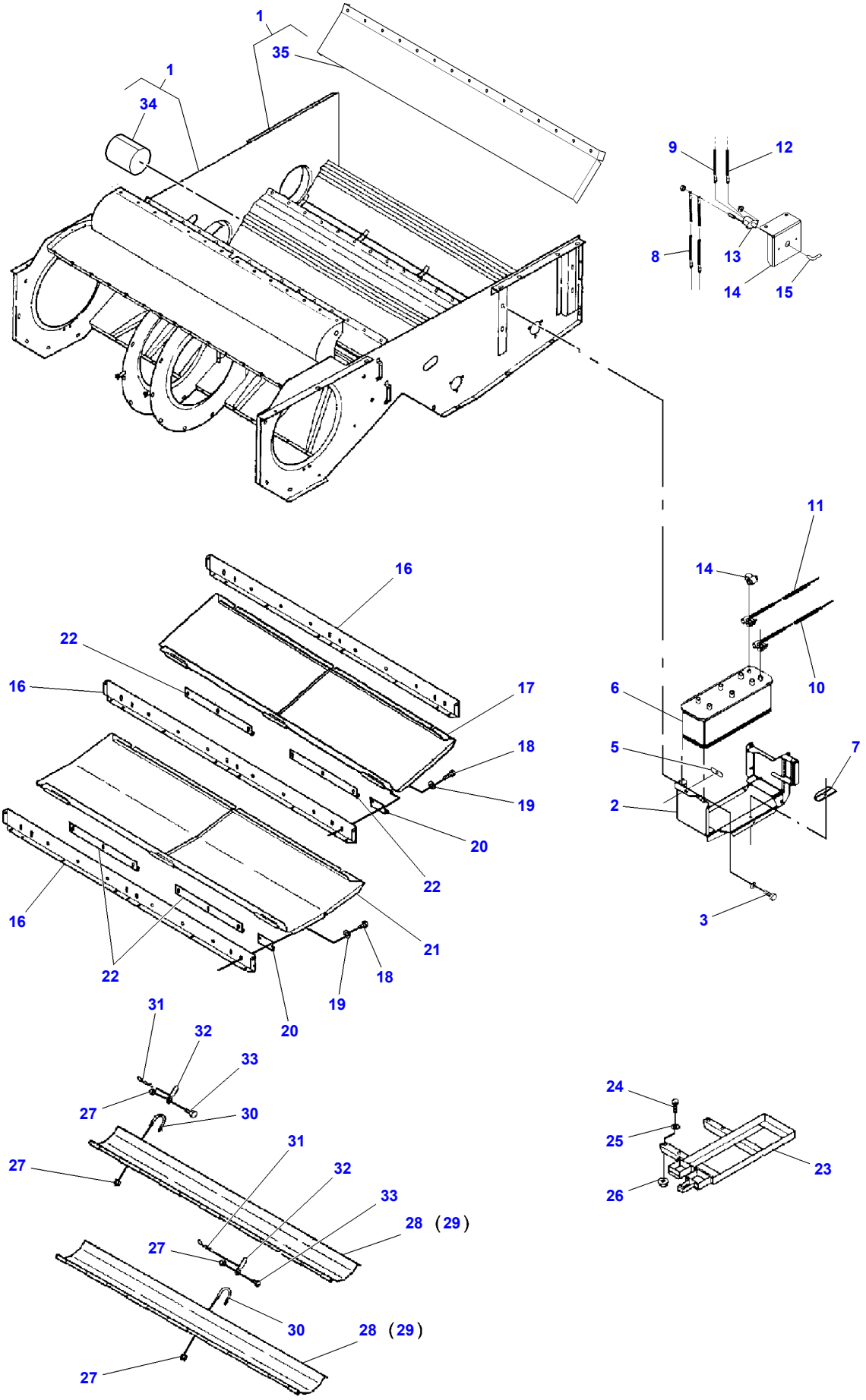
1
35
1
34
9
12
8
13
14
15
11
14
16
22
16
17
6
10
18
5
7
19
2
20
22
16
21
3
22
18
19
20
31
32
33
27
30
24
25
31
27
32
23
33
26
28 (29)
27
30
28 (29)
27
D-ZFZD-006-A

https://truckmanualshub.com/

Item	Part Number	Qty	Description	Comments
1	D28480704	1	Housing	
2	D28485104	1	Support	
3	339123X1	X	Cap Screw	M8 X 20
5	D28485242	1	Support	
6	D44900588	1	Battery	
7	D28485263	1	Support	
8	D28785916	2	Hose	
9	D28781896	1	Cable	
10	D28781896	1	Cable	
11	D28781929	1	Cable	
12	D28785946	1	Hose	
13	D45059800	1	Switch	
14	D28485264	1	Bracket	
15	D45060055	1	Spanner	
16	D28480423	3	Profile	
17	D28480411	1	Shutter	
18	339761X1	X	Cap Screw	M8 X 25
19	D20400506	X	Washer	
20	D28480417	1	Hinge	
21	D28480413	X	Shutter	
22	D28480478	X	Chock	
23	D28181516	1	Retainer	
24	339761X1	4	Cap Screw	M8 X 25
25	D20400506	4	Washer	
26	394367X1	4	Locknut	M8
27	1441462X1	X	Locknut	M6
28	D28480156	2	Shutter	
29	D28480447	2	Shutter	[A]
30	D28560165	6	U Bolt	
31	D27100120	6	Hair Pin	
32	D28560162	6	Lever	
33	339804X1	X	Cap Screw	M6 X 25
34	D28480206	1	Tube	(1)
35	D28480153	1	Bottom	(1)

FOOTNOTE [A] OPTIONAL EQUIPMENT FOR PEAS

https://truckmanualshub.com/

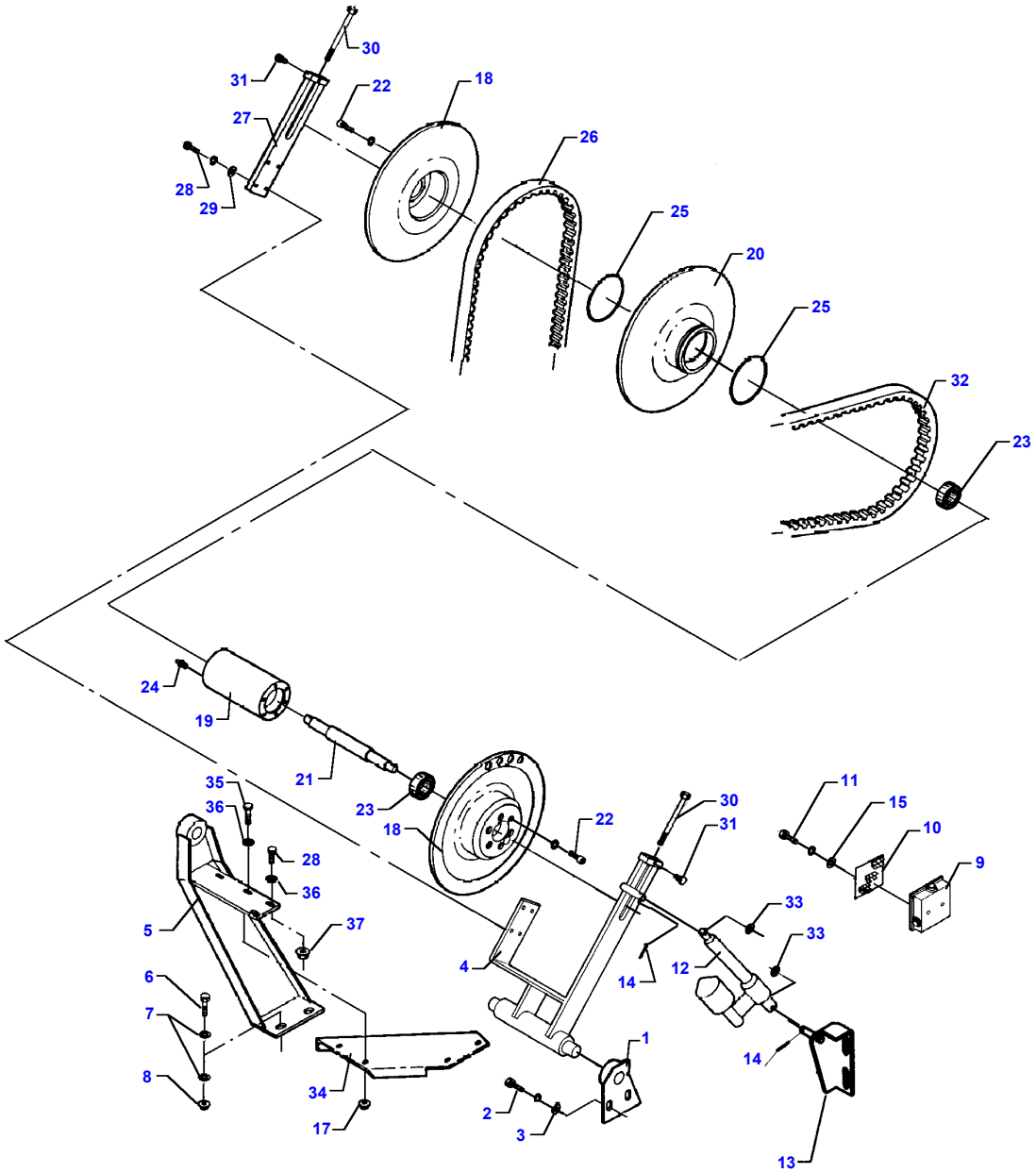

D-ZFZE-004-A

https://truckmanualshub.com/

Item	Part Number	Qty	Description	Comments
1	D28480203	1	Bracket	
2	3009492X1	2	Cap Screw	M10 X 25
3	D20400471	2	Washer	
4	D28480739	1	Fork	
5	D28480869	1	Bracket	
6	339814X1	2	Cap Screw	M10 X 35
7	D20400416	4	Washer	
8	1440329X1	2	Locknut	M10
9	D28781903	1	Connector	
10	D28780326	1	Plate	
11	339560X1	2	Cap Screw	M6 X 16
12	D45080018	1	Adjustement Eng.	
13	D28485350	1	Bracket	
14	D40445900	2	Pin	
15	D20400453	2	Washer	
17	D20400416	2	Washer	
18	D28480324	1	Variator	
	D28480140	2	Variator	(18)
19	D28480321	1	Bearing Carrier	(18)
20	D28480144	1	Washer	(18)
21	D28480316	1	Shaft	(18)
22	D40690400	12	Screw	(18)
				M8 X 25
23	391360X1	2	Bear. 6304 2rs	(18)
24	1441858X1	1	Grease Fitting	(18)
25	D45476400	2	O Ring	(18)
26	**D41981100**	1	Belt	
	D41981400	1	V Belt	
27	D28480317	1	Fork	
28	339337X1	6	Cap Screw	M8 X 30
29	D20400506	4	Washer	
30	D40409400	2	Screw Metric	
31	339230X1	2	Cap Screw	M6 X 10
32	**D41981200**	1	Belt	See Page - Reference Number 011-0002/90
33	D20400537	2	Spacer	
34	D28480866	1	Bracket	
35	339761X1	6	Cap Screw	M8 X 25
36	D20400506	6	Washer	
37	394367X1	6	Locknut	M8

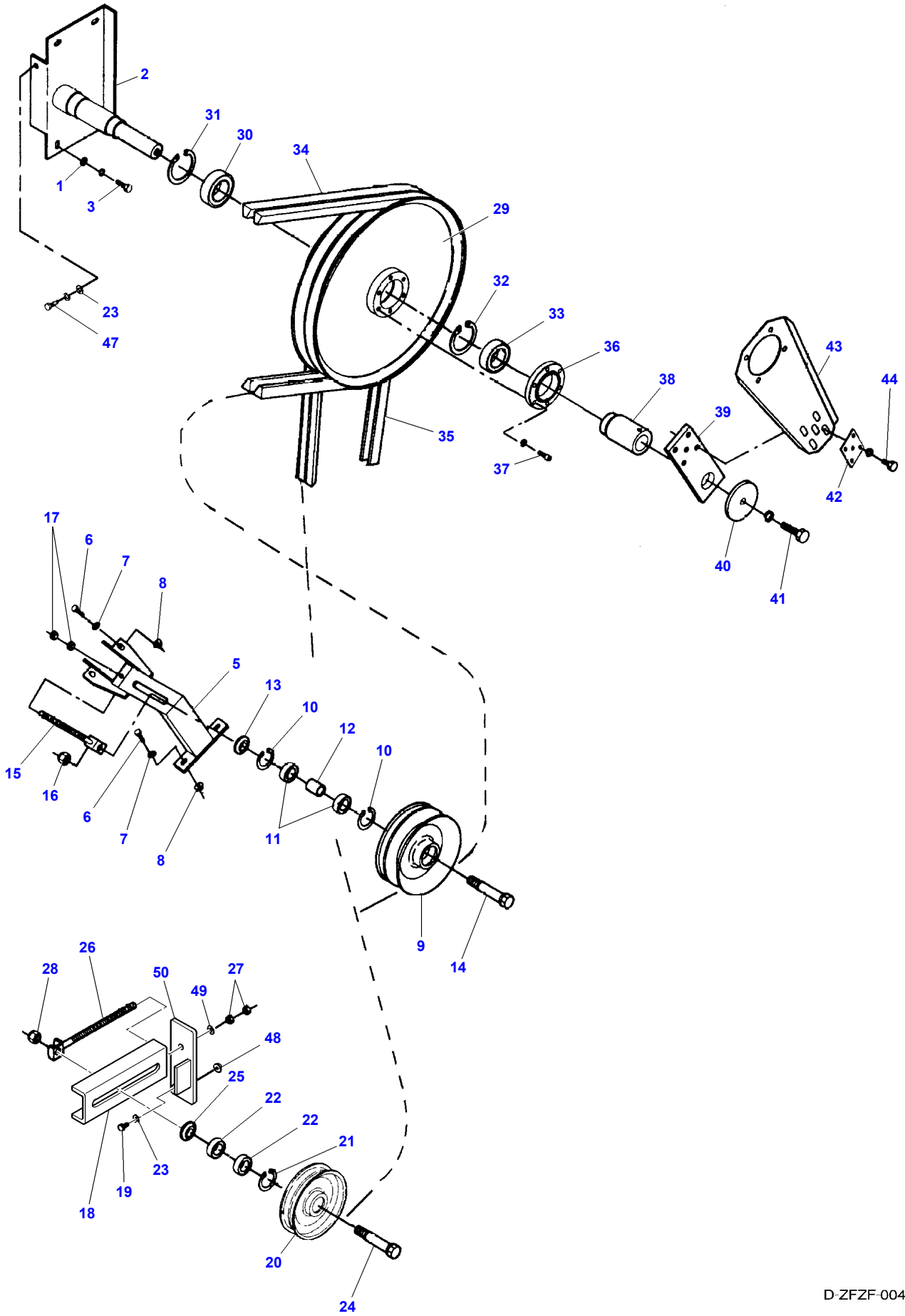
2
31
30
34
1
3
29
23
47
32
33
36
43
38
44
39
35
37
42
40
41
17
6
7
8
5
13
10
12
10
15
16
6
7
8
11
9
14
26
28
50
27
49
48
25
22
22
21
23
19
18
20
24
D-ZFZF-004-C

https://truckmanualshub.com/

Item	Part Number	Qty	Description	Comments
1	D20400473	4	Washer	
2	D28480588	1	Bracket	
3	D40407200	4	Cap Screw	M10 X 45
5	D28480245	1	Bracket	
6	339761X1	4	Cap Screw	M8 X 25
7	D20400414	4	Washer	
8	394367X1	4	Locknut	M8
9	D28384052	1	Pulley	
10	339199X1	2	Circlip	
11	SKF62042RS	2	Bear. 6204 2rs	
12	D28384054	1	Spacer	
13	D28380003	1	Ring	
14	D28384053	1	Bolt	
15	D28211025	1	Bolt	
16	1442739X1	1	Locknut	M16
17	339402X1	2	Nut	M10
18	D28480384	1	Bracket	
19	D40407200	2	Cap Screw	M10 X 45
20	D28250441	1	Pulley	
21	339199X1	1	Circlip	
22	SKF62042RS	2	Bear. 6204 2rs	
23	D20400416	3	Washer	
24	D28250444	1	Bolt	
25	D28480457	1	Spacer	
26	D28850316	1	Bolt	
27	339402X1	2	Nut	M10
28	1442739X1	1	Locknut	M16
29	D28480895	1	Washer	
30	391347X1	1	Bear. 6010 2rs	
31	339437X1	1	Circlip	
32	D42515100	1	Circlip	
33	SKF60092RS	1	Bear. 6009 2rs	
34	**D41990001**	2	V Belt	See Page - Reference Number 004-0005/58
35	**D41933900**	1	Kit, V Belt	See Page - Reference Number 006-0007/37
36	D28485348	1	Cover	
37	D40690400	6	Screw	M8 X 25
38	D28480091	1	Bush	
39	D28380018	1	Bracket	
40	D28750882	1	Washer	
41	390419X1	1	Cap Screw	M16 X 40
42	D28380178	1	Dog	
43	D28380020	1	Yoke	
44	3009507X1	5	Cap Screw	M12 X 35
47	390799X1	2	Cap Screw	M10 X 40
48	D41092500	3	Nut	
49	D20400415	2	Washer	
50	D28480252	1	Bracket	(18)

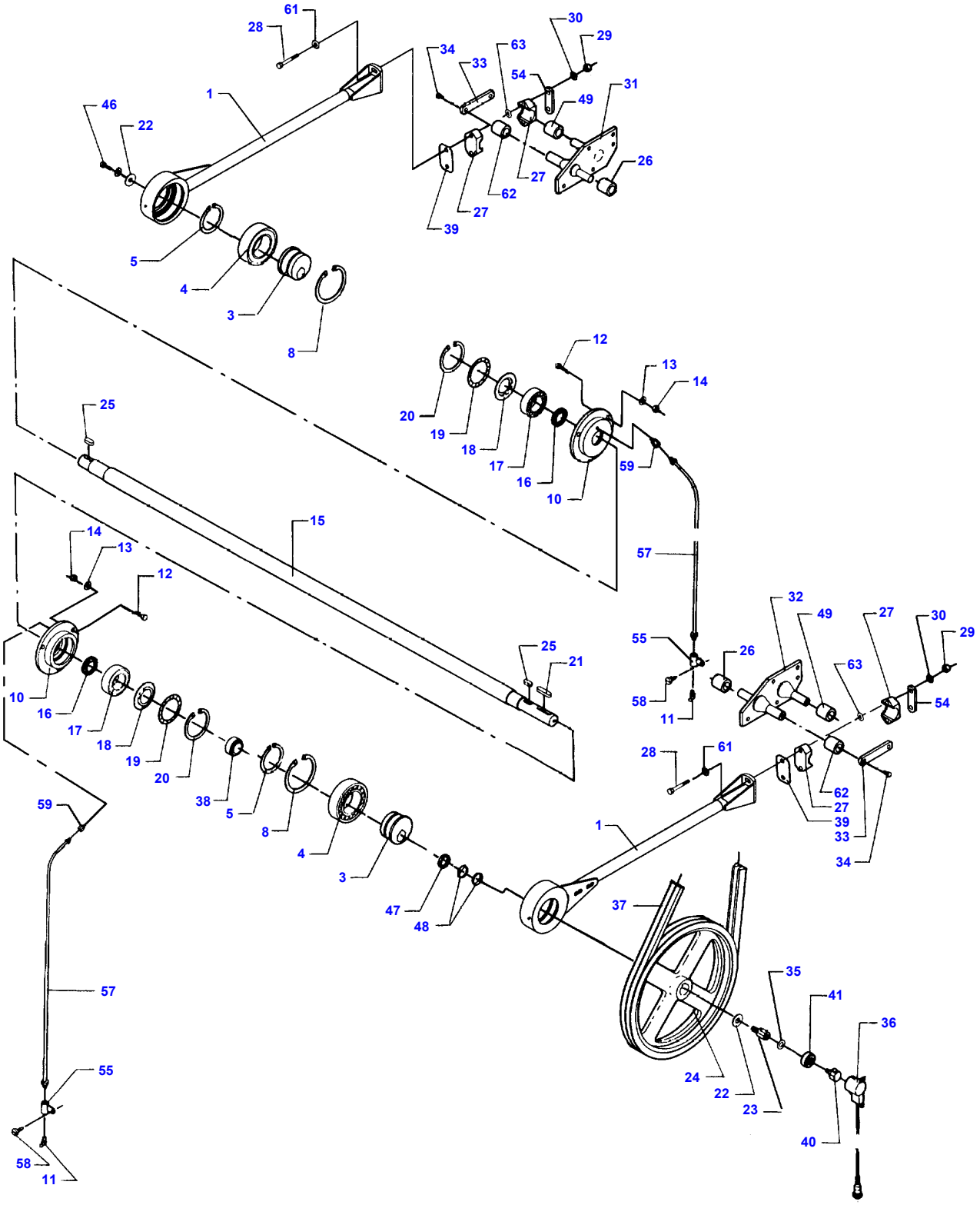
61
28
30
29
34
33
63
54
31
49
1
46
22
26
27
62
27
39
5
4
3
8
12
13
14
20
19
18
17
16
10
59
25
15
57
32
49
27
30
29
55
26
63
58
11
54
14
13
12
25
21
10
16
17
18
19
20
38
5
8
4
3
28
61
62
27
39
33
34
1
47
48
37
59
57
35
41
36
55
24
22
23
40
58
11

D-ZFZG-001-B

https://truckmanualshub.com/

Item	Part Number	Qty	Description	Comments
1	D28482436	2	Rod	Valid from machine/table no,can be used in new as well as in older machines 60416 For Italy only or any text in Italian only
3	D28482214	2	Eccentric	
4	D41615000	2	Ball Bearing	
5	D42506300	2	Circlip	
8	D42517200	2	Circlip	
10	D28480258	2	Bearing Carrier	
11	339003X1	2	Grease Nipple	
12	3009493X1	6	Cap Screw	M10 X 30
13	D20400471	6	Washer	
14	1440329X1	6	Locknut	M10
15	D28480266	1	Shaft	
16	D45478900	2	Ring	
17	SKF62082RS	2	Bear. 6208 2rs	
18	D45427500	2	Seal	
19	D41679500	2	Spacer	
20	1440516X1	2	Circlip	
21	1441579X1	1	Key Parallel	
22	D25400068	2	Washer	
23	D28780419	1	Threaded Part	
24	D28480460	1	Pulley	
25	339460X1	2	Key Parallel	
26	D28480268	2	Bush	
27	D28480526	4	Union	
28	D40439600	4	Cap Screw	M10 X 90
29	D41092500	4	Nut	
30	D20400419	4	Washer	
31	D28480888	1	Support	Right Hand
32	D28480887	1	Support	Left Hand
33	D28480129	2	Link	
34	3009492X1	4	Cap Screw	M10 X 25
35	D20400419	1	Washer	
36	**D28780514**	1	Sensor	
37	**D41933900**	1	Kit, V Belt	See Page - Reference Number 006-0006/35
38	D28480264	1	Bush	
39	D28480430	X	Chock	[A]
40	**D28780516**	1	Inductive Sensor	
41	1440487X1	1	Bear. 6203 2rs	
46	3009492X1	1	Cap Screw	M10 X 25
47	D28480467	1	Ring	
48	D42596500	1	Tightener	
49	D46481600	2	Bush	
54	D28480571	2	Dog	
55	D43009200	2	Bracket	
57	D28780831	2	Tube	
58	339666X1	2	Cap Screw	M6 X 20
59	D43009500	2	Connector	
61	D41112500	4	Washer	
62	D46481800	2	Bush	
63	D20400507	2	Spacer	

FOOTNOTE [A] QUANTITY AS REQUIRED

https://truckmanualshub.com/

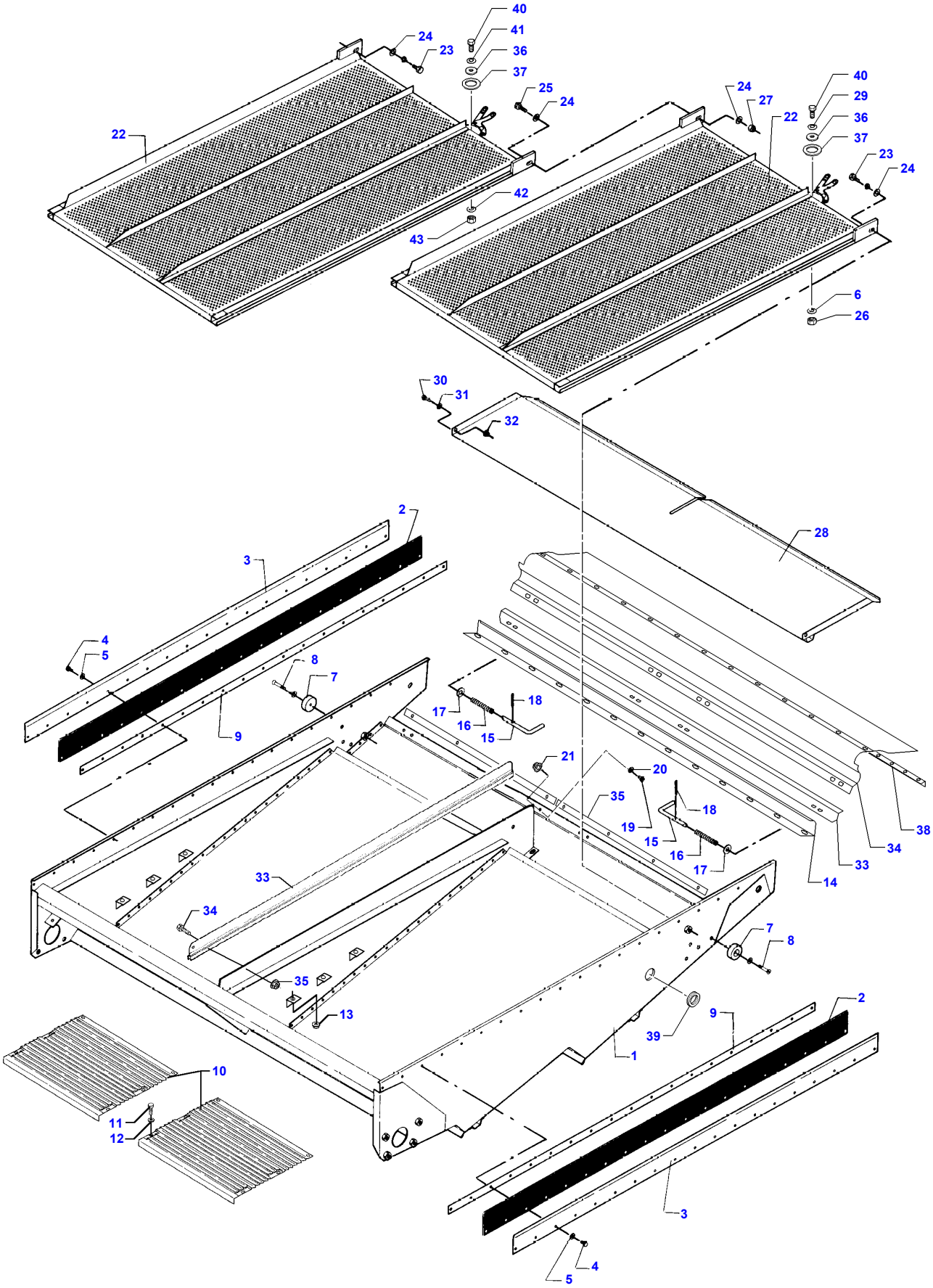

D-ZFZH-001-A

https://truckmanualshub.com/

Item	Part Number	Qty	Description	Comments
1	D28485167	1	Shaker Shoe	use D28485379 if combine with electric sieves
	D28480537	1	Shaker Shoe	(1) use d28482339 if combine with electric sieves
2	D28480541	2	Gasket	(1)
3	D28480540	2	Plate	(1)
4	339666X1	X	Cap Screw	(1) M6 X 20
5	391038X1	X	Flat Washer	(1)
6	D41112600	2	Cup Spring	
7	D28480097	2	Washer	(1)
8	1441585X1	2	Screw Metric	(1)
9	D28480496	2	Shim	(1)
10	D28480758	2	Plate	(1)
11	339123X1	8	Cap Screw	(1) M8 X 20
12	D20400506	8	Washer	(1)
13	394367X1	8	Locknut	(1) M8
14	D28485248	1	Profile	(1)
15	D28485364	2	Lever	(1)
16	D27200158	2	Spring	(1)
17	D20400426	2	Washer	(1)
18	339129X1	2	Split Pin	(1) Diameter 3,2 X 25
19	339560X1	8	Cap Screw	(1) M6 X 16
20	391038X1	8	Flat Washer	(1)
21	1441462X1	8	Locknut	(1) M6
22	D28480099	2	Sieve	
	D28480309	2	Sieve	[A,C] Diameter 2,5 MM
	D28480310	2	Sieve	[A,D] Diameter 5 MM
23	339139X1	2	Cap Screw	M12 X 25
24	D20400426	4	Washer	
25	1440716X1	1	Cap Screw	M12 X 30
26	394367X1	2	Locknut	M8
27	1442190X1	1	Locknut	M12
28	D28480450	1	Plate	[A,B]
29	D41112900	2	Cup Spring	
30	339123X1	2	Cap Screw	[A,B] M8 X 20
31	D20400500	2	Spacer	[A,B]
32	394367X1	2	Locknut	[A,B] M8
33	D28485250	1	Rail	
34	D28485446	1	Cover	
35	D28482350	2	Strip	
36	D28482231	2	Washer	
37	D45715900	2	Friction Disc	
38	D28480076	1	Rail	
39	D44732500	X	Grommet	
40	385370X1	2	Bolt	M8 X 25
41	D41112900	2	Cup Spring	
42	D41112600	2	Cup Spring	
43	394367X1	2	Locknut	M8

FOOTNOTE [A] OPTIONAL EQUIPMENT
FOOTNOTE [B] FOR MAIZE
FOOTNOTE [C] FOR CLOVER
FOOTNOTE [D] FOR RAPESEED

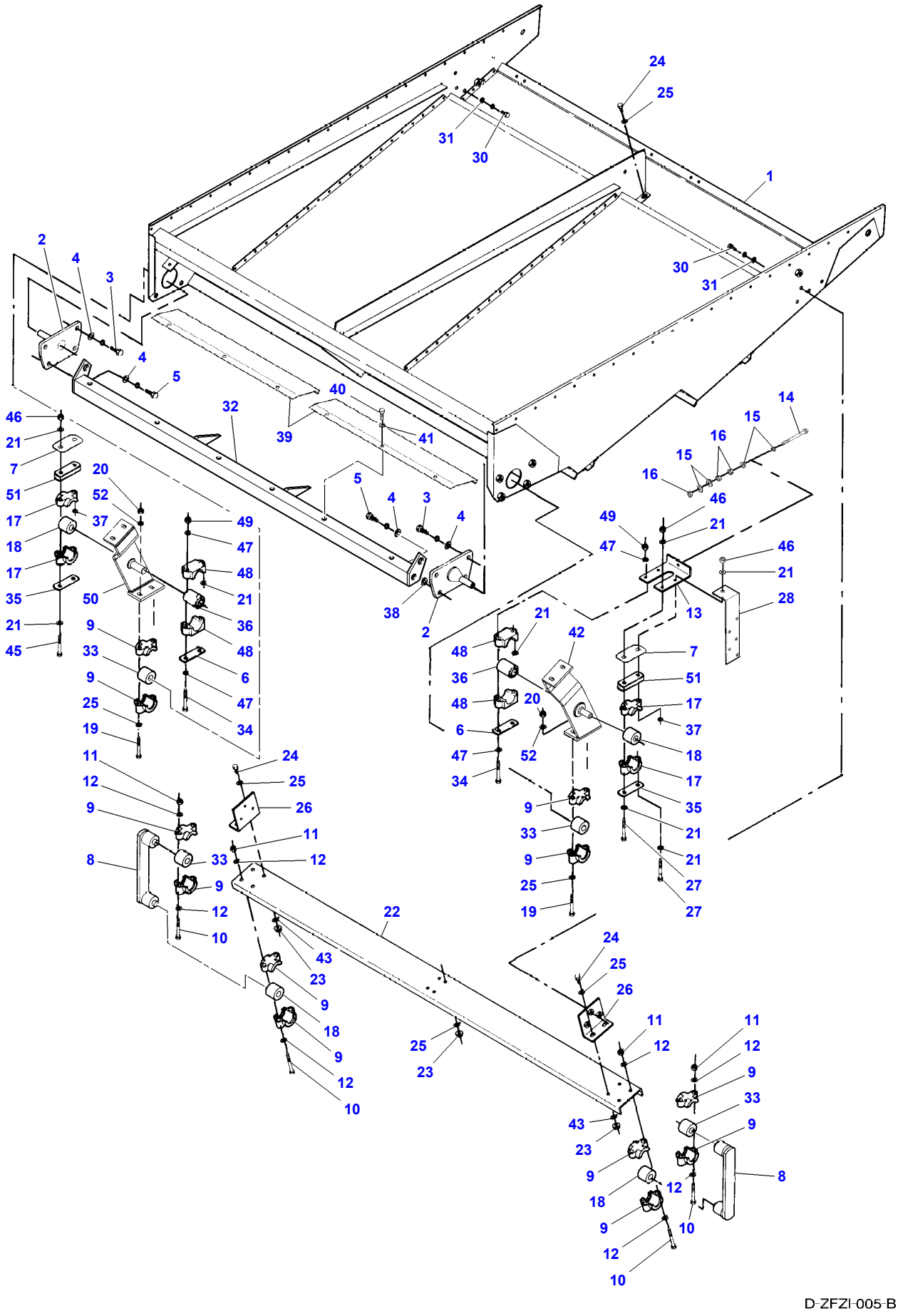
24
25
31
30
1
2
4
3
30
31
4
5
40
32
39
41
46
21
7
51
17
18
17
35
21
45
20
52
37
50
49
47
48
21
36
48
6
47
34
9
33
9
25
19
11
12
9
8
33
9
12
10
5
4
3
4
38
2
14
15
16
15
16
46
49
21
47
46
21
28
13
21
42
48
36
48
6
47
34
20
52
7
51
17
37
18
17
35
21
21
27
27
9
33
9
25
19
24
25
26
11
12
22
43
23
9
18
9
12
10
25
23
24
25
26
11
12
43
23
9
18
9
12
10
11
12
9
33
9
8
12
10

D-ZFZI-005-B

https://truckmanualshub.com/

Item	Part Number	Qty	Description	Comments
1	D28480537	1	Shaker Shoe	USE D28485379 IF COMBINE WITH ELECT SIEVES
2	D28480505	2	Support	CPL
	D28480081	2	Bracket	(2)
3	1440716X1	6	Cap Screw	M12 X 30
4	D20400537	8	Spacer	
5	390912X1	2	Cap Screw	M12 X 40
6	D28485226	X	Clamp	
7	D28485234	X	Plate	
8	D28480909	2	Arm	
9	D28430010	8	Half Flange	
10	D40426500	8	Screw	
11	1440329X1	8	Locknut	M10
12	D20400419	16	Washer	
13	D28485227	1	Plate	
14	390122X1	1	Cap Screw	M10 X 80
15	D20400419	4	Washer	
16	339402X1	3	Nut	M10
17	D28485224	8	Bracket	
18	D46481700	4	Vibration Mount	(2)
	D28450420	4	Bush	(8)
19	D40438900	6	Screw	
20	D41092500	X	Nut	
21	D20400426	X	Washer	
22	D28480127	1	Profile	
23	1440329X1	8	Locknut	M10
24	3009493X1	8	Cap Screw	M10 X 30
25	D20400419	8	Washer	
26	D28480114	2	Angle.	
27	390171X1	X	Cap Screw	M12 X 120
28	D28782403	1	Retainer	
30	3009491X1	6	Cap Screw	M10 X 20
31	D20400419	6	Washer	
32	D28480502	1	Stay	
33	D28450420	4	Bush	
34	390806X1	4	Cap Screw	M12 X 130
35	D28480860	2	Clamp	
36	D46481600	2	Bush	
37	D28480862	2	Shim	
38	D20400513	X	Spacer	[B]
39	D28480761	2	Plate	
40	339123X1	6	Cap Screw	M8 X 20
41	D20400506	6	Washer	
42	D28485219	1	Arm	Left Hand CPL.
	D28485217	1	Arm	Left Hand
43	D20400416	4	Washer	
45	D40429600	2	Screw	
46	1442190X1	X	Locknut	M12
47	D20400426	8	Washer	
48	D28485223	4	Bracket	
49	1442190X1	4	Locknut	M12
50	D28485220	1	Arm	Right Hand CPL.
	D28485218	1	Arm	Right Hand
51	D28485225	X	Connector	
52	D20400473	4	Washer	

FOOTNOTE [B] OPTIONAL

https://truckmanualshub.com/

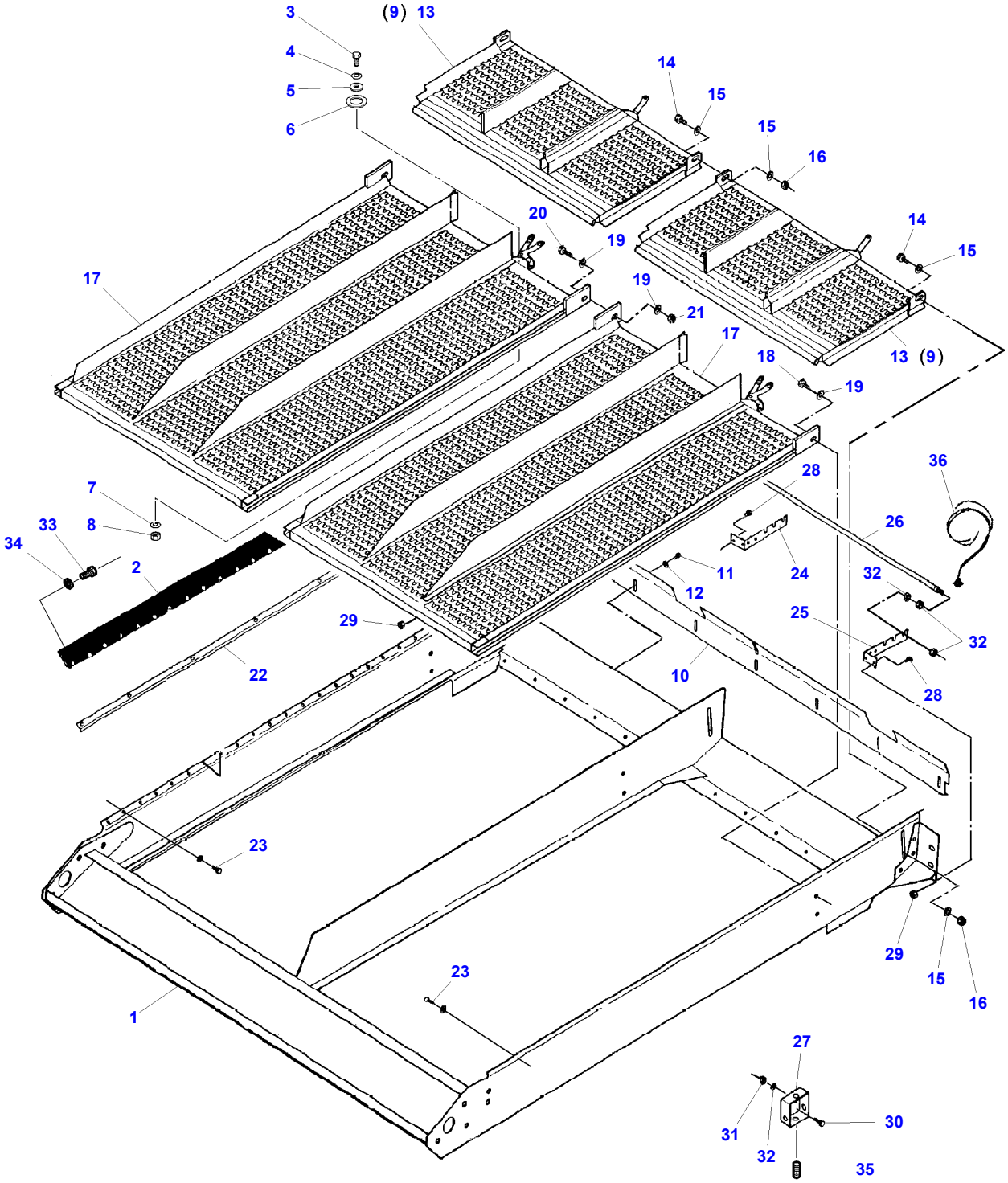

D-ZFAZ-004-A

https://truckmanualshub.com/

Item	Part Number	Qty	Description	Comments
1	D28485258	1	Shaker Shoe	USE D28485378 IF COMBINE WITH ELECT SIEVES CPL
	D28480542	1	Shaker Shoe	(1) USE D28482322 IF COMBINE WITH ELECT SIEVES
2	D28480546	2	Gasket	(1)
3	385370X1	X	Bolt	M8 X 25
4	D41112900	X	Cup Spring	
5	D28482231	2	Washer	
6	D45715900	2	Friction Disc	
7	D41112600	X	Cup Spring	
8	394367X1	X	Locknut	M8
9	D28480783	2	Control	[C]
10	D28480992	1	Plate	
11	339666X1	7	Cap Screw	M6 X 20
12	391038X1	7	Flat Washer	
13	D28480101	2	Extension	[D]
	D28480432	2	Grille	[A,E]
14	339139X1	3	Cap Screw	M12 X 25
15	D20400426	6	Washer	
16	1442190X1	3	Locknut	M12
17	D28480100	2	Sieve	
	D28480431	2	Sieve	[A,E]
	D28480451	2	Sieve	[A] GREAPLE 23
18	339139X1	2	Cap Screw	M12 X 25
19	D20400426	4	Washer	
20	1440716X1	1	Cap Screw	M12 X 30
21	1442190X1	1	Locknut	M12
22	D28480545	2	Rail	(1)
23	D40688200	2	Screw Metric	
24	D28780774	1	Support	[B] Right Hand
25	D28780773	1	Support	[B] Left Hand
26	D44900624	1	Sensor	[B] Repairs and replaces D45062700
27	D28781903	1	Connector	
28	339666X1	4	Cap Screw	M6 X 20
29	D41010600	4	Nut	M6
30	392383X1	2	Screw	
31	D41010500	2	Nut	
32	392310X1	6	Nut	[B] M10
33	339123X1	14	Cap Screw	M8 X 20
34	D20400506	16	Washer	
35	D45090071	1	Plug	
36	D45050067	1	Harness	

FOOTNOTE [A] OPTIONAL EQUIPMENT
FOOTNOTE [B] OPTIONAL EQUIPMENT GRAIN LOSS INDICATOR
FOOTNOTE [C] OPTIONAL EQUIPMENT STANDARD COMBINE, STANDARD EQUIPMENT AUTO LEVEL COMBINE,SLOPES
FOOTNOTE [D] STANDARD COMBINE
FOOTNOTE [E] FOR MAIZE

https://truckmanualshub.com/

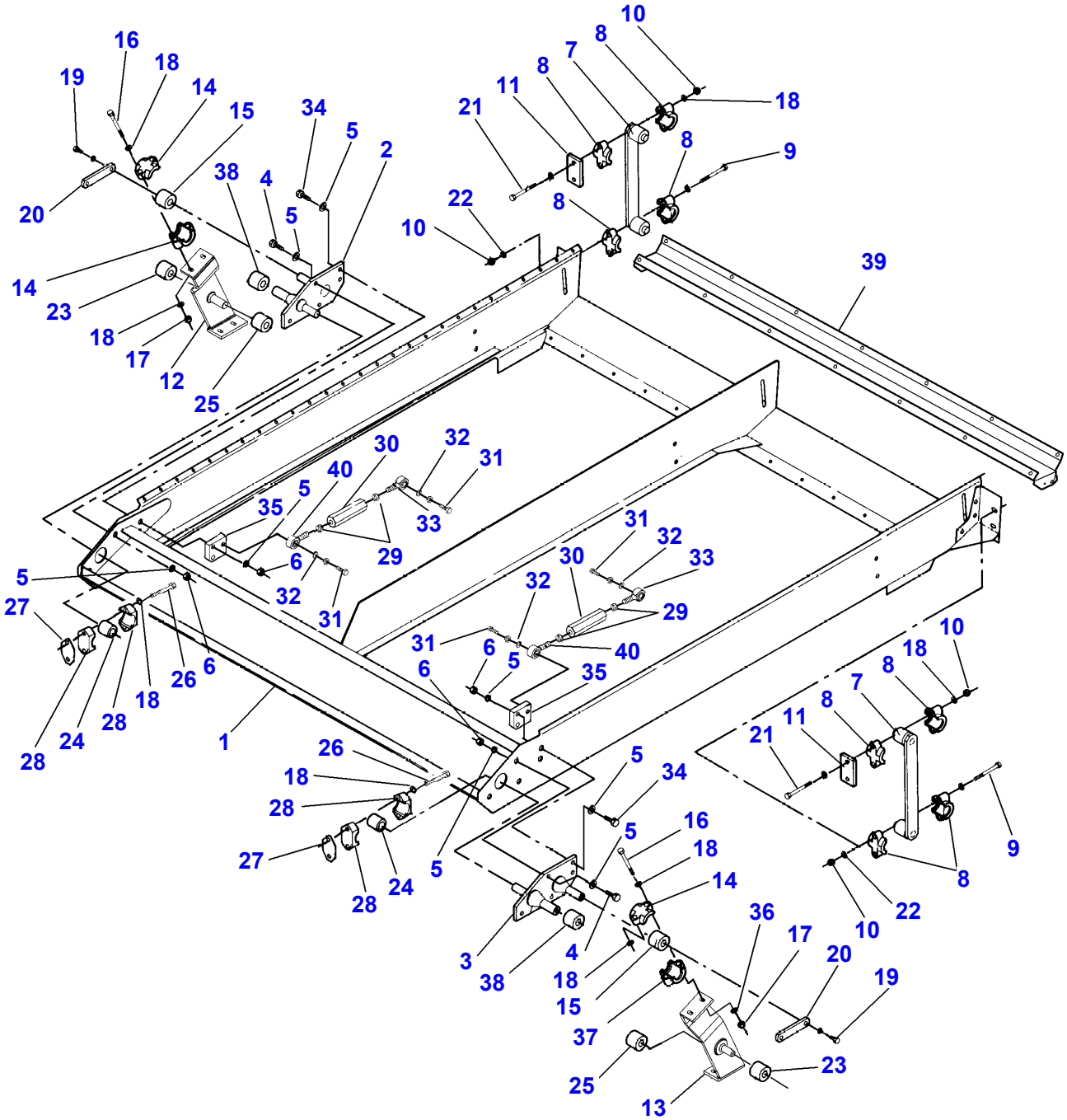

D-ZFAA-001-B

https://truckmanualshub.com/

Item	Part Number	Qty	Description	Comments
1	D28485258	1	Shaker Shoe	USE D28485378 IF COMBINE WITH ELECT SIEVES CPL
	D28480542	1	Shaker Shoe	(1) USE D28482322 IF COMBINE WITH ELECT SIEVES
2	D28480888	1	Support	Right Hand
3	D28480887	1	Support	Left Hand
4	3009507X1	6	Cap Screw	M12 X 35
5	D20400537	20	Spacer	
6	1442190X1	10	Locknut	M12
7	D28480911	2	Arm	
8	D28430010	8	Half Flange	
9	D40426500	4	Screw	
10	1440329X1	8	Locknut	M10
11	D28480235	2	Shim	
12	D28485220	1	Arm	Right Hand CPL.
	D28485218	1	Arm	(12) Right Hand
13	D28485219	1	Arm	Left Hand CPL.
	D28485217	1	Arm	(13) Left Hand
14	D28485244	4	Bracket	
15	D46481600	2	Bush	
16	3009503X1	4	Cap Screw	M10 X 90
17	1440329X1	4	Locknut	M10
18	D20400426	8	Washer	
19	3009492X1	4	Cap Screw	M10 X 25
20	D28480129	2	Link	
21	3009503X1	4	Cap Screw	M10 X 90
22	D20400473	4	Washer	
23	D46481700	2	Vibration Mount	(12)
	D46481700	2	Vibration Mount	(13)
24	D28480268	4	Bush	
25	D46481600	2	Bush	(12)
	D46481600	2	Bush	(13)
26	D40426500	4	Screw	
27	D28480105	2	Plate	
28	D28480270	4	Half Flange	
29	3009695X1	4	Nut	M12
30	D28480838	2	Bolt	
31	3009507X1	4	Cap Screw	M12 X 35
32	D20400424	4	Washer	
33	D45698800	2	Toggle	
34	D40411400	4	Screw Metric	
35	D28480694	2	Support	
36	D20400473	2	Washer	
37	D28485223	4	Bracket	
38	D46481800	X	Bush	
39	D28485323	1	Seal	
40	D45699000	2	Toggle	

https://truckmanualshub.com/

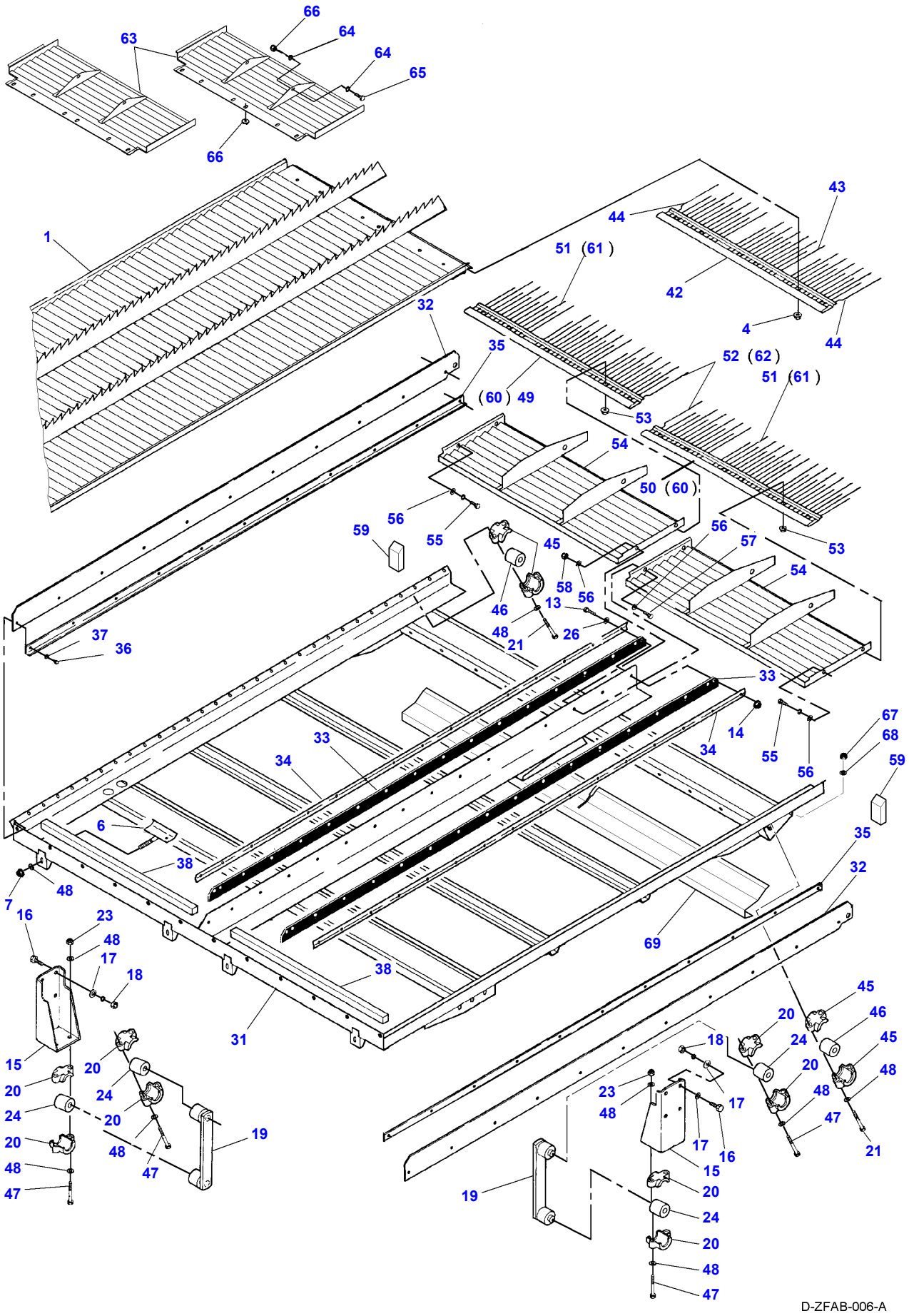

https://truckmanualshub.com/

Item	Part Number	Qty	Description	Comments
1	D28480820	2	Pan	
4	394367X1	12	Locknut	M8
6	D28480012	4	Hook	
7	1440329X1	4	Locknut	M10
13	339262X1	9	Cap Screw	M6 X 30
14	1441462X1	9	Locknut	M6
15	D28480070	2	Bracket	
16	1440716X1	8	Cap Screw	M12 X 30
17	D20400426	16	Washer	
18	3009695X1	8	Nut	M12
19	D28480909	2	Arm	
20	D28430010	8	Half Flange	
21	D40426500	4	Screw	MF 7278 CEREA
	D40438900	4	Screw	
23	1440329X1	6	Locknut	M10
24	D28450420	4	Bush	(19)
26	391038X1	9	Flat Washer	
31	D28480830	1	Frame	
	D28480816	1	Frame	(31)
32	D28480529	2	Gasket	(31)
33	D28480531	2	Gasket	(31)
34	D28480530	2	Rail	(31)
35	D28480528	2	Rail	(31)
36	339123X1	22	Cap Screw	(31) M8 X 20
37	D20400506	22	Washer	(31)
38	D44740400	X	Gasket	(31) Length 2 M
42	D28480764	2	Rake	
43	D28450458	32	Pin	
44	D28482119	4	Pin	
45	D28480270	2	Half Flange	
46	D28480268	2	Bush	
47	339365X1	8	Cap Screw	M10 X 80
48	D41112500	12	Washer	
49	D28480338	1	Rake	
50	D28480340	1	Rake	
51	D28450458	17	Pin	(49)
	D28450458	17	Pin	(50)
52	D28482119	1	Pin	(49)
	D28482119	1	Pin	(50)
53	394367X1	12	Locknut	M8
54	D28480725	2	Table	
55	339124X1	4	Cap Screw	M8 X 16
56	D20400506	8	Washer	
57	339010X1	2	Cap Screw	M8 X 40
58	394367X1	2	Locknut	M8
59	D28480929	2	Seal	
60	D28084225	2	Rake	[B]
61	D28480734	32	Pin	[B]
62	D28480735	4	Pin	[B]
63	D28480886	2	Extension	[A]
64	D20400404	20	Washer	[A]
65	339124X1	4	Cap Screw	[A] M8 X 16
66	394367X1	16	Locknut	[A] M8
67	D41092500	4	Nut	
68	D20400473	4	Washer	
69	D28480719	1	Plate	(31)

FOOTNOTE [A] OPTIONAL EQUIPMENT
FOOTNOTE [B] MAIZE EQUIPMENT

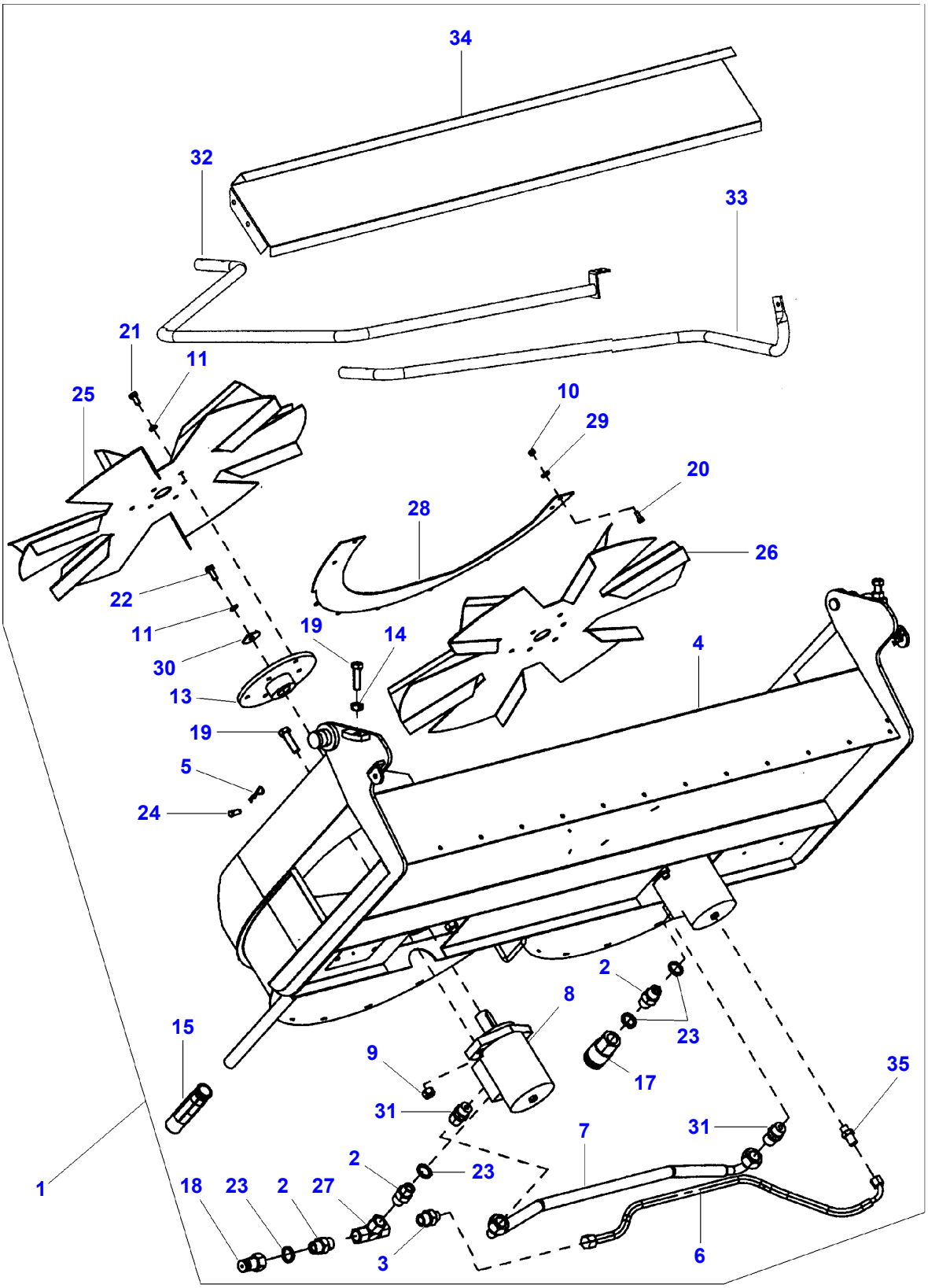
34
32
33
21
11
25
10
29
20
28
26
22
11
30
13
19
14
4
19
5
24
2
8
23
15
9
17
35
31
7
31
2
23
1
18
23
2
27
3
6

D-ZFAC-007-A

https://truckmanualshub.com/

Item	Part Number	Qty	Description	Comments
1	D28086796	1	Spreader	8SW CPL.
				From Serial or Engine Number 59115
	D28086532	1	Spreader	Up to Serial or Engine Number 60426
2	D49080209	3	Adaptor	
3	D49070076	1	Connection	
4	D49080211	1	Housing	
5	D44358000	2	Hair Pin	
6	D49080213	1	Pipe	
7	D49080215	1	Pipe	
8	D49080216	2	Hydraulic Motor	
	D49080227	1	Kit, Seal	
9	1442190X1	4	Locknut	M12
10	1441462X1	10	Locknut	M6
11	D41102100	14	Washer	
13	D49080224	2	Hub	
14	3009695X1	2	Nut	M12
15	D49060088	1	Lever	
17	D49080217	1	Union	
18	D49080218	1	Union	
19	D40412700	2	Bolt	M12 X 120
20	339560X1	10	Cap Screw	M6 X 16
21	339124X1	12	Cap Screw	M8 X 16
22	339123X1	2	Cap Screw	M8 X 20
23	D49080226	4	Seal	
24	D49080137	2	Screw	
25	D49080142	1	Rotor	
26	D49080144	1	Rotor	
27	D49080225	1	Adaptor	
28	D49080220	1	Shield	
29	D20400470	10	Washer	
30	D20400410	2	Washer	
31	D49080221	2	Adaptor	
32	D49080222	1	Tube	
33	D49080223	1	Tube	
34	D49080146	1	Guide	
35	D49080208	1	Adaptor	

https://truckmanualshub.com/

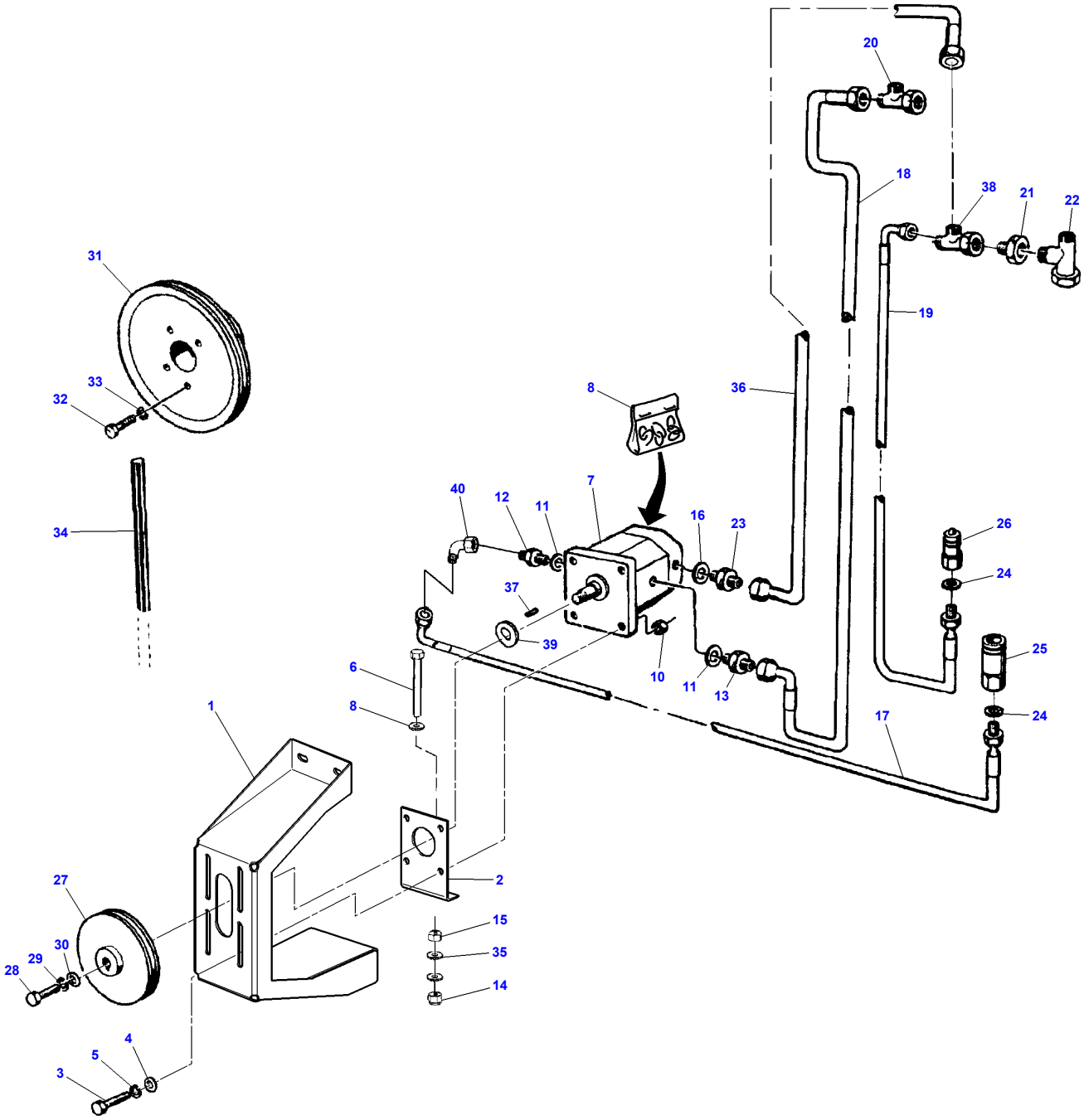

https://truckmanualshub.com/

Item	Part Number	Qty	Description	Comments
1	D28485399	1	Support	Valid from machine/table no,can be used in new as well as in older machines 61075
2	D28485398	1	Bracket	
3	339337X1	4	Cap Screw	M8 X 30
4	D20400506	4	Washer	
5	D41102100	4	Washer	
6	D40412700	1	Bolt	M12 X 120
7	D45120059	1	Hydraulic Pump	
8	D45120032	1	Kit, Seal	
9	339337X1	4	Cap Screw	[A] M8 X 30
10	394367X1	4	Locknut	M8
11	D45420100	1	Seal	3/4"
	D45420300	1	Gasket	1/2"
12	D45217400	1	Nipple	
13	D45247400	1	Nipple	
14	1442190X1	1	Locknut	M12
15	3009695X1	1	Nut	M12
16	D45420300	1	Gasket	
17	D45130068	1	Hose	Length 5500 mm
18	D45130069	1	Hose	Length 4000 mm
19	D45130070	1	Hose	Length 5000 mm
20	D45266500	1	Fork	
21	D45273200	1	Union	
22	D45266800	1	Union	
23	D45252700	1	Union	
24	D45713700	2	Gasket	Valid from machine/table no,can be used in new as well as in older machines 58975
25	D45135000	1	Union	
26	D45134900	1	Union	
27	D28485390	1	Pulley	
28	339123X1	1	Cap Screw	M8 X 20
29	D41102100	1	Washer	
30	D20400408	1	Washer	
31	D28485388	1	Pulley	
32	339368X1	4	Cap Screw	M8 X 60
33	D41102100	4	Washer	
34	**D41921500**	1	V Belt	
35	D20400426	3	Washer	
36	D45266300	1	Union	
37	D43102400	1	Key	
38	D45266300	1	Union	
39	D45120039	1	Ring	
40	D45265200	1	Union	

FOOTNOTE [A] NOT ILLUSTRATED

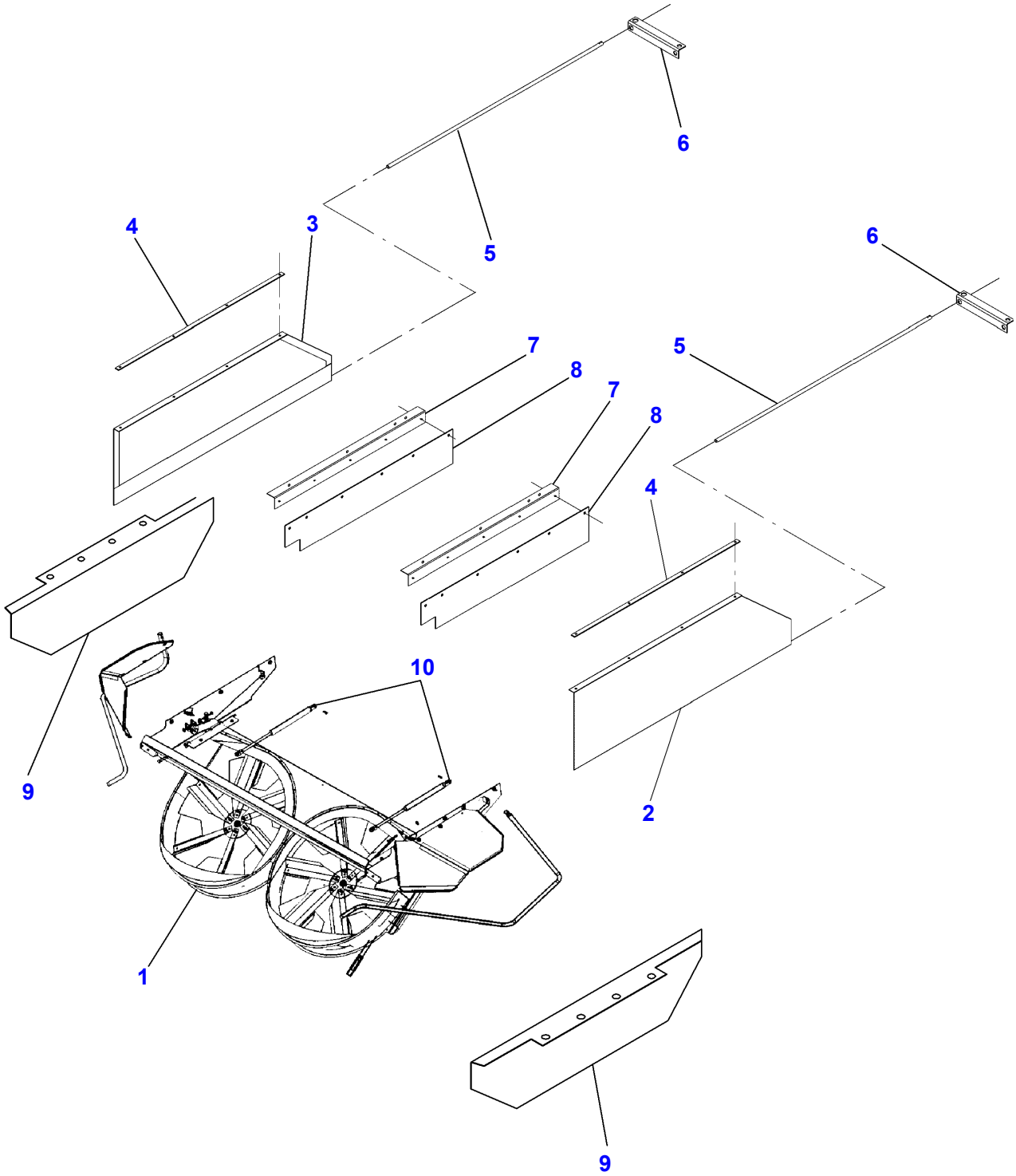

D-ZFAE-003-B

https://truckmanualshub.com/

Item	Part Number	Qty	Description	Comments
1	D28086796	1	Spreader	From Serial or Engine Number 59115
	D28086532	1	Spreader	Up to Serial or Engine Number 60426
2	D28185783	1	Panel	
3	D28185784	1	Panel	
4	D28185975	2	Rod	
5	D28185976	2	Tube	
6	D28185785	2	Support	
7			Not Used	
8	D28186020	2	Side	
			Not Used	
9	D28186666	2	Side	
10	D49080148	2	Cylinder	

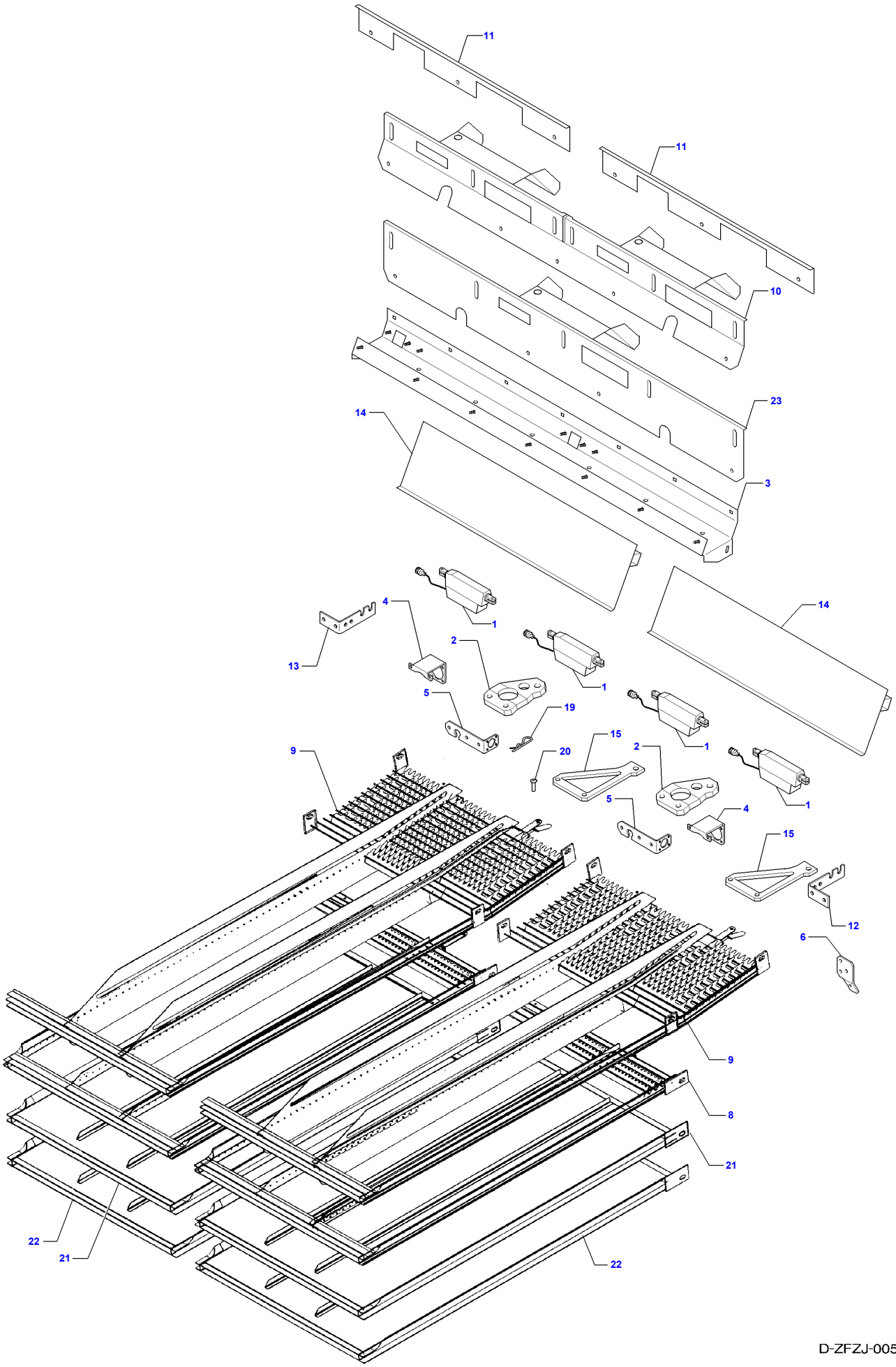
11
11
10
23
14
3
14
4
1
2
13
1
5
19
15
9
20
2
1
5
4
1
15
12
6
9
8
21
22
21
22
D-ZFZJ-005-C

https://truckmanualshub.com/

Item	Part Number	Qty	Description	Comments
1	D28482313	4	Actuator	
2	D28482314	2	Bracket	
3	D28482330	1	Support	
4	D28482343	2	Stop	
5	D28482347	2	Stop	
6	D28482348	1	Console	
8	D28482374	2	Sieve	
9	D28482378	2	Sieve	
10	D28482387	1	Rake	
11	D28482391	2	Plate	
12	D28482396	1	Support	
13	D28482397	1	Support	
14	D28482399	2	Profile	
15	D28482400	2	Bracket	
19	D44358000	8	Hair Pin	
20	D45905500	8	Bolt	
21	D28482381	2	Grille	Diameter 2,50 mm
22	D28482382	2	Grille	Diameter 5,00 mm
23	D28482393	1	Plate	

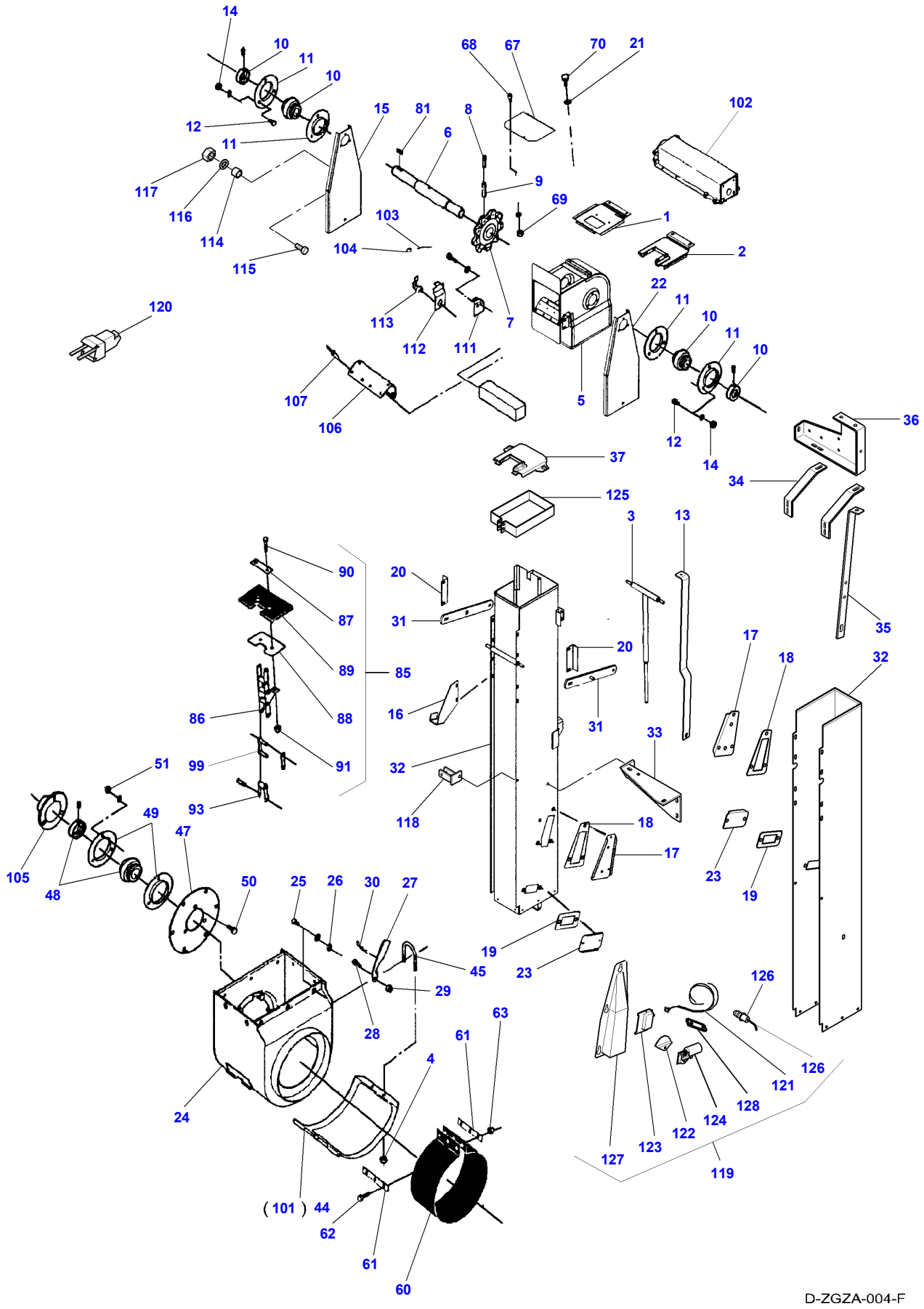
14
10
11
10
12
11
117
116
114
115
15
81
8
6
9
69
103
104
7
68
67
70
21
102
1
2
22
11
10
11
10
5
12
14
36
34
37
125
3
13
35
120
113
112
111
107
106
90
87
89
85
88
86
91
99
93
20
31
16
32
118
20
31
33
18
17
17
18
32
23
19
51
49
47
105
48
50
25
26
30
27
45
29
28
19
23
126
126
121
128
124
122
123
127
119
63
61
4
24
(101) 44
62
61
60
D-ZGZA-004-F

https://truckmanualshub.com/

Item	Part Number	Qty	Description	Comments
1	D28585144	1	Cover	[A]
2	D28580478	1	Cover	[B] Valid from machine/table no,can be used in new as well as in older machines 60416
3	D28585125	1	Rod	
4	1441462X1	X	Locknut	M6
5	D28585300	1	Head	Valid from machine/table no,can be used in new as well as in older machines 59088
6	D28585022	1	Shaft	
7	D28580448	1	Sprocket	
8	395557X1	1	Spirol Pin	Diameter 5 X 50
9	339307X1	1	Pin	Diameter 8 X 50
10	412260M1	2	Ball Bearing	
11	D41708700	4	Flange	
12	339124X1	6	Cap Screw	M8 X 16
13	D28585331	1	Stay	
14	339169X1	6	Nut	M8
15	D28585139	1	Bracket	
16	D28585142	1	Plate	
17	D28585128	1	Plate	
18	D28585138	1	Seal	
19	D28585140	1	Seal	
20	D28585122	2	Guide	
21	D20400506	X	Washer	
22	D28585124	1	Bracket	
23	D28585133	1	Plate	
24	D28585296	1	Bottom	[D] Valid from machine/table no,can be used in new as well as in older machines 59088
25	1441267X1	12	Screw	M6 X 16
26	1441462X1	12	Locknut	M6
27	D28560162	1	Lever	
28	339804X1	1	Cap Screw	M6 X 25
29	1441462X1	1	Locknut	M6
30	D27100120	1	Hair Pin	
31	D28585132	2	Arm	
32	D28585329	1	Housing	Valid from machine/table no,can be used in new as well as in older machines 59088
33	D28580118	1	Bracket	
34	D28580250	2	Bracket	
35	D28582012	1	Stay	
36	D28181404	1	Bracket	
37	D28580401	1	Cover	
44	D28585295	1	Bottom	[D] Valid from machine/table no,can be used in new as well as in older machines 59088
45	D28560165	1	U Bolt	
47	D28580245	1	Bearing Plate	
48	D41708600	1	Ball Bearing	
49	D41708800	2	Bearing Flange	
50	D40407000	3	Screw	
51	339402X1	3	Nut	M10
60	D28480219	1	Plate	
61	D28550247	2	Plate	
62	339666X1	3	Cap Screw	M6 X 20
63	1441462X1	3	Locknut	M6
67	D28580406	1	Cover	
68	D40688000	4	Screw	
69	1441462X1	4	Locknut	M61
70	339011X1	2	Cap Screw	M8 X 45
81	D43103200	1	Key	
85	D28585175	1	Chain	
86	D42350300	1	Chain	
87	D28550323	30	Plate	
88	D28585026	30	Plate	
89	D28585021	30	Rubber Piece	
90	339337X1	60	Cap Screw	M8 X 30
91	394367X1	60	Locknut	M8
93	D42350900	1	Link	
99	D42350800	1	Connecting Link	

https://truckmanualshub.com/

Item	Part Number	Qty	Description	Comments
101	D28585344	1	Lid	[C]
102	D28780630	1	Sensor	CPL.
103	D01906800	X	Wire	
104	D43407400	1	Seal	
105	D28761667	1	Cover	
106	D28585070	1	Cover	
107	D41399800	8	Rivet	
111	D28580334	1	Hinge	(112)
112	D28580336	1	Lock	
113	D43423000	1	Lock	(112)
114	D28550012	1	Support	
115	D40064300	1	Screw	
116	D20400414	1	Washer	
117	394367X1	1	Locknut	M8
118	D28785679	1	Console	
119	D44900691	1	Moisture Meter	
120	D28080944	1	Kit	CPL.
				MICRO-TRAC KIT
120	D28782797	1	Sensor	
120	D44900896	2	Finger	
120	D28782927	1	Sensor	MICRO-TRAC
121	D44900867	1	Wiring Harness	(119)
122	D46150301	1	Plate	(119)
123	D44900859	1	Control Box	(119)
124	D44900857	1	Wiper Motor	(119)
125	D44709601	1	Foam	
126	D28781726	1	Indicator	(119)
127	D44900858	1	Housing	(119)
128	D46150301	1	Plate	(122)

FOOTNOTE [A] YIELDMETER
FOOTNOTE [B] MICROTRAC
FOOTNOTE [C] OPTIONAL EQUIPMENT FOR PEAS
FOOTNOTE [D] UP TO SERIAL NUMBER 59087 ORDER D28585295 AND D28585296

https://truckmanualshub.com/

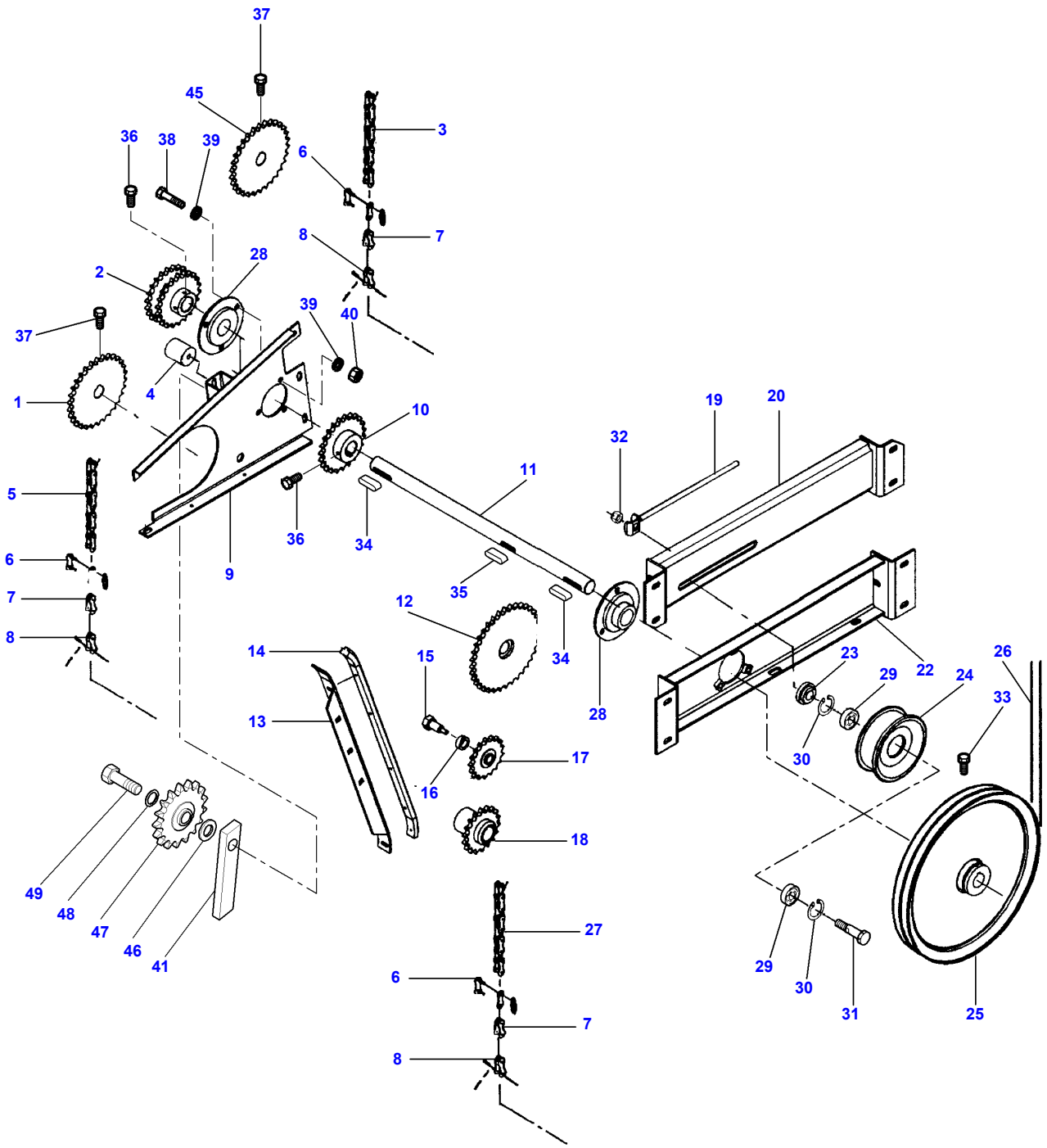

https://truckmanualshub.com/

Item	Part Number	Qty	Description	Comments
1	D28585107	1	Sprocket	
2	D28585340	1	Sprocket	
3	**D42325100**	1	Chain	
4			Not Used	
5	**D42326200**	1	Chain	
6	D42363100	1	Link	
7	**D42362400**	1	Inner Link	
8	D42364200	1	Inner Link	
9	D28585109	1	Bracket	
10	D28585103	1	Sprocket	
11	D28585339	1	Shaft	
12	D28585106	1	Sprocket	
13	D28281365	1	Crossmember	[A]
14	D28280787	1	Rail	[A]
15	D28585135	1	Bolt	[A]
16	D28585076	1	Washer	[A]
17	D41717900	1	Sprocket	[A]
18	D28585104	1	Sprocket	[A]
19	D28580206	1	Tightener	
20	D28585112	1	Bracket	
22	D28585100	1	Bracket	
23	D28880354	1	Spacer	
24	D28585113	1	Roller	
25	D28585102	1	Pulley	
26	**D41929000**	2	V Belt	
27	**D42328100**	1	Chain	
28	D41709600	1	Bearing	
29	339599X1	2	Bear. 6204 2rs	
30	339199X1	2	Circlip	
31	D28580205	1	Bolt	
32	1442739X1	1	Locknut	M16
33	D40466700	2	Cap Screw	M10 X 25
34	D43103700	2	Key	
35	1440375X1	1	Key Parallel	
36	D40466900	4	Screw	
37	D40697100	4	Screw	
38	3009493X1	3	Cap Screw	M10 X 30
39	390734X1	9	Flat Washer	
40	339402X1	3	Nut	M10
41	D28585181	2	Bridle	
45	D28585107	1	Sprocket	FOR MAIZE
	D28281338	1	Sprocket	STANDARD
46	D20400459	1	Washer	
47	D41717900	1	Sprocket	
48	D20400462	1	Washer	
49	391120X1	1	Cap Screw	M16 X 45

FOOTNOTE [A] RETURN ELEVATOR

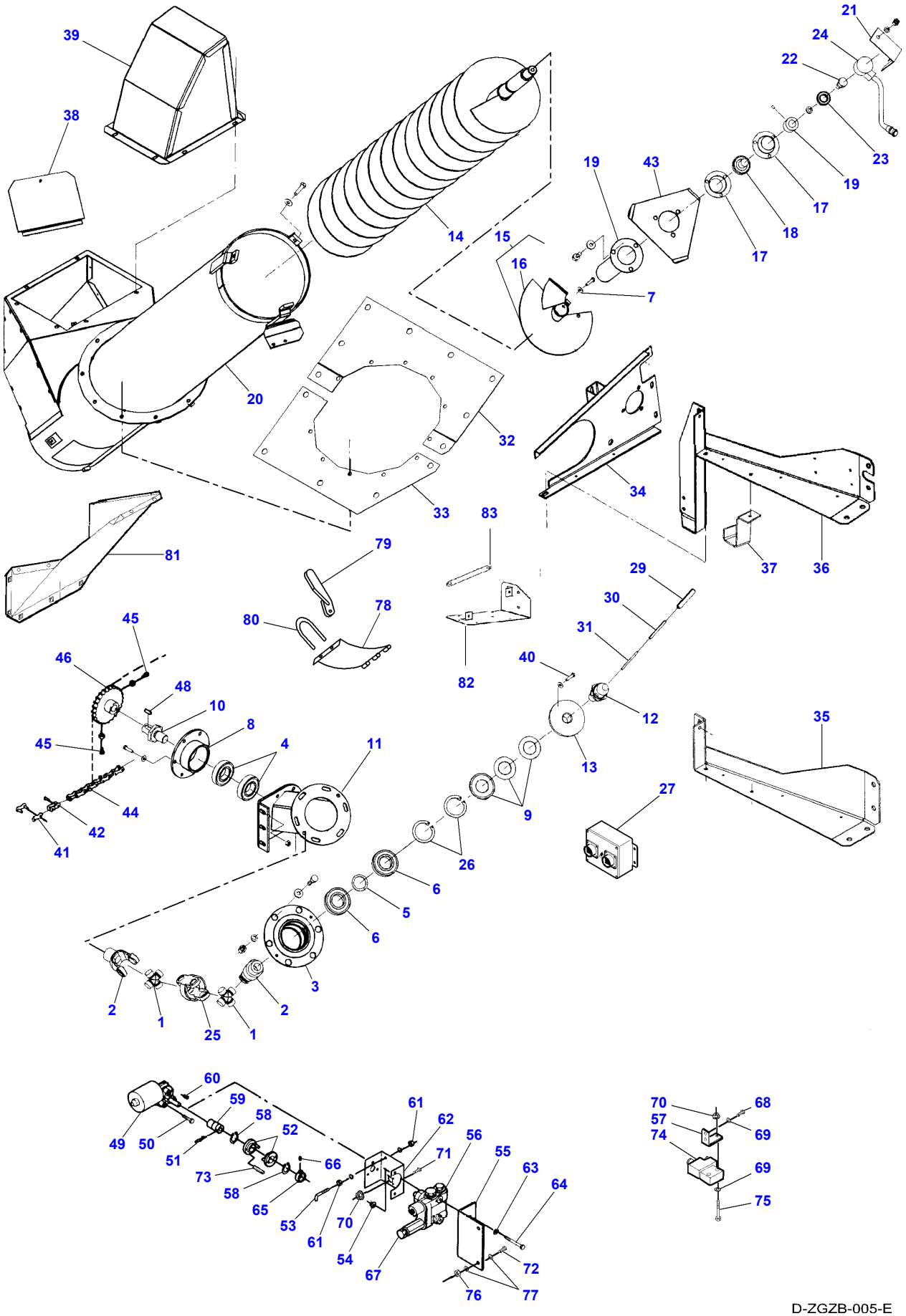
39
38
21
24
22
23
19
43
19
17
18
17
14
15
16
7
20
32
33
34
37
36
83
79
81
29
30
31
78
80
82
45
46
48
10
8
4
11
40
12
13
35
45
44
42
41
9
27
26
6
5
6
3
2
1
25
1
2
60
59
58
52
49
50
51
73
58
65
53
61
66
61
62
71
56
55
63
64
70
54
67
72
76
77
70
68
57
74
69
69
75
D-ZGZB-005-E

https://truckmanualshub.com/

Item	Part Number	Qty	Description	Comments
1	D45623000	2	Spider	
2	D28580057	2	Fork	
3	D28580413	1	Bearing Housing	
4	SKF62072RS	1	Bear. 6207 2rs	
5	D27700245	1	Spacer	
6	D41624100	2	Bearing Assy	
7	339123X1	1	Cap Screw	M8 X 20
8	D28580027	1	Bearing Assy	
9	D41679900	1	Seal	
10	D28580060	1	Stud	
11	D28585030	1	Adaptor	
12	D28580251	1	Pin	
13	D28580414	1	Washer	
14	D28585033	1	Auger	
	D28585185	1	Auger	[A]
15	D28585035	1	Section	
	D28585184	1	Section	MAIZE/RICE
16	D28585036	1	Flight	[B] (15)
17	D41708700	2	Flange	
18	412260M1	1	Ball Bearing	
19	D28850886	1	Guard	
20	D28885637	1	Filler	
21	D28780522	1	Support	
22	**D28780516**	1	Inductive Sensor	
23	1440487X1	1	Bear. 6203 2rs	
24	**D28780514**	1	Sensor	
25	D45626500	1	Fork	
26	D42515100	2	Circlip	
27	D28782504	1	Case Assy	
29	D42625600	1	Pin	
30	390949X1	1	Pin	Diameter 8 X 70
31	390950X1	1	Roll Pin	Diameter 5 X 70
32	D28585054	1	Plate	
33	D28585053	1	Plate	
34	D28585109	1	Bracket	
35			Not Used	
36	D28188492	1	Bracket	
37	D28785681	1	Holder	
38	D28580258	1	Trap	
39	D28585046	1	Inlet	
40	339230X1	1	Cap Screw	M6 X 10
41	**D42362400**	1	Inner Link	
42	D42363100	X	Link	
	D42363200	X	Link	
43	D28580301	1	Bearing Plate	
44	**D42326200**	X	Chain	
45	D40697100	X	Screw	
46	D28585107	X	Sprocket	
48	D43103700	X	Key	
49	D28080790	1	Wiper Motor	
50	D28782149	3	Bolt	
51	390538X1	1	Roll Pin	Diameter 5 X 24
52	D28780802	2	Washer	
53	D28780801	1	Screw	
54	394367X1	1	Locknut	M8
55	D28980999	1	Support	
56	D45110069	1	Pressure Valve	(84)
57	D28780959	1	Holder	
58	1440476X1	2	Circlip	
59	D28981003	1	Union	
60	D43170300	1	Key	
61	D41010600	2	Nut	M6
62	D28981001	1	Support	
63	D20400506	2	Washer	
64	339891X1	2	Cap Screw	M8 X 80
65	D28981086	1	Ring	
66	D40632000	1	Stud	
67	D28251484	1	Non Return Valve	(84)
68	339666X1	2	Cap Screw	M6 X 20
69	D20400404	4	Washer	

https://truckmanualshub.com/

Item	Part Number	Qty	Description	Comments
70	1441462X1	3	Locknut	M6
71	D40741200	8	Screw	
72	390799X1	2	Cap Screw	M10 X 40
73	D42608700	1	Pin	
74	D45110095	1	Pressure Valve	
75	391884X1	2	Cap Screw	M6 X 50
76	1440329X1	2	Locknut	M10
77	D20400416	4	Washer	
78	D28885638	1	Cover	
79	D28560162	1	Lever	
80	D28560165	1	U Bolt	
81	D28180703	1	Shield	
82	D28186852	1	Bracket	
83	D28186847	1	Rod	
84	D28781196	1	Flow Regulator	[C] CPL.
85	D45120076	1	Electrovalve	[C] (56)
86	D45120077	1	Solenoid	[C] (56)
87	D45110011	1	Kit, Seal	[C] (56)

FOOTNOTE [A] MAIZE EQUIPMENT
FOOTNOTE [B] INCLUDED IN D28585035
FOOTNOTE [C] NOT ILLUSTRATED

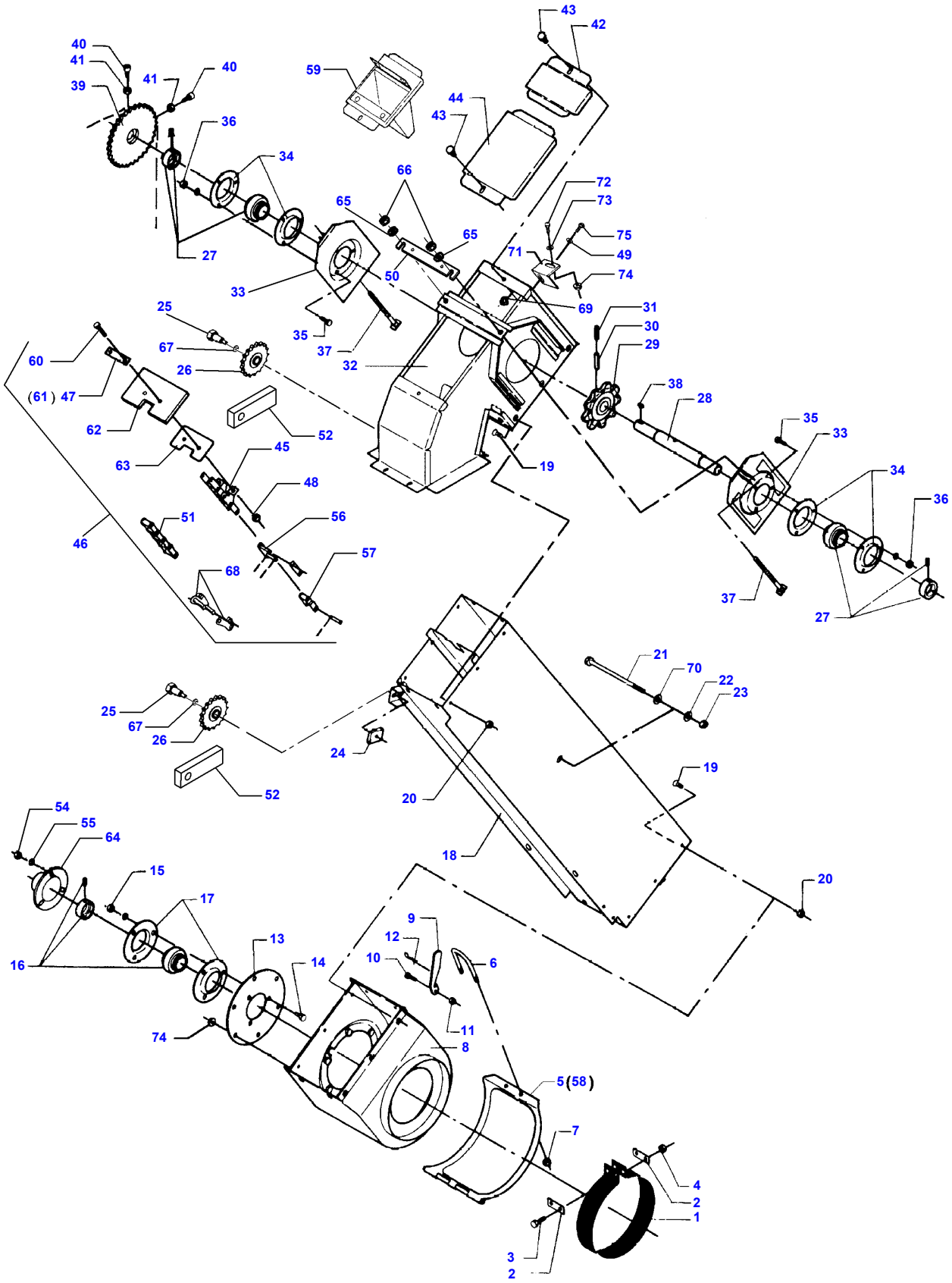
43
42
40
41
39
41
40
59
44
43
36
34
66
72
73
65
65
75
49
71
74
27
33
50
69
31
30
29
25
35
37
32
67
26
60
(61) 47
38
28
62
52
35
33
63
45
19
34
48
36
51
56
46
57
68
37
27
21
70
22
23
25
67
26
24
52
20
19
54
55
64
18
15
20
17
9
12
13
10
6
16
14
11
74
8
5(58)
7
4
2
1
3
2

D-ZGZC-005-D

https://truckmanualshub.com/

Item	Part Number	Qty	Description	Comments
1	D28480218	1	Plate	
2	D28480217	2	Plate	
3	339560X1	2	Cap Screw	M6 X 16
4	1441462X1	2	Locknut	M6
5	D28580048	1	Bottom Part	[C]
				Valid from machine/table no,can be used in new as well as in older machines 59088
6	D28560165	1	U Bolt	
7	1441462X1	2	Locknut	M6
8	D28580052	1	Cover	[D]
				Valid from machine/table no,can be used in new as well as in older machines 59088
9	D28560162	1	Lever	
10	339804X1	1	Cap Screw	M6 X 25
11	1441462X1	1	Locknut	M6
12	D27100120	1	Hair Pin	
13	D28580245	1	Bearing Plate	
14	D40407000	3	Screw	
15	339402X1	3	Nut	M10
16	D41708600	1	Ball Bearing	
17	D41708800	2	Bearing Flange	
18	D28580445	1	Housing	
19	1441267X1	20	Screw	M6 X 16
20	1441462X1	20	Locknut	M6
21	D40430300	1	Screw	
22	D20400426	1	Washer	
23	1442190X1	1	Locknut	M12
24	D28580219	1	Dog	
25	D28585135	2	Bolt	
26	D41717900	X	Sprocket	
27	412260M1	2	Ball Bearing	
28	D28580443	1	Shaft	
29	D28580448	1	Sprocket	
30	339307X1	1	Pin	Diameter 8X50
31	395557X1	1	Spirol Pin	Diameter 5 X 50
32	D28580444	1	Riser	
33	D28580221	2	Bearing Plate	
34	D41708700	4	Flange	
35	339123X1	6	Cap Screw	M8 X 20
36	339169X1	6	Nut	M8
37	D28520060	2	Bolt	
38	D43103100	1	Key	
39	D28585340	1	Sprocket	
40	D40466900	2	Screw	
41	339169X1	2	Nut	M8
42	D28580097	1	Shutter	
43	D43385200	2	Screw	
44	D28580222	1	Shutter	
45	D42350300	1	Chain	
46	D28580348	1	Chain	
47	D28550323	1	Plate	
48	394367X1	28	Locknut	M8
49	D20400416	X	Washer	
50	D28580433	1	Plate	
51	D42351300	1	Chain	
52	D28585181	2	Bridle	
54	1440329X1	3	Locknut	M10
55	D20400471	1	Washer	
56	D42351400	1	Link	
57	D42351200	1	Link	
58	D28580295	1	Cover	[B]
59	D28780853	1	Sensor	[A]
60	339337X1	28	Cap Screw	M8 X 30
61	D28550323	14	Plate	
62	D28580137	14	Plate	
63	D28550372	14	Plate	
64	D28761667	1	Cover	
65	D20400471	2	Washer	
66	D28580432	2	Nut	
67	D20400414	2	Washer	
68	D42350400	1	Link	
69	1440329X1	1	Locknut	M10
70	D20400425	X	Washer	

https://truckmanualshub.com/

Item	Part Number	Qty	Description	Comments
71	D28585343	1	Bracket	
72	339761X1	1	Cap Screw	M8 X 25
73	D20400506	1	Washer	
74	394367X1	1	Locknut	M8
75	3009492X1	1	Cap Screw	M10 X 25

FOOTNOTE [A] RETURNS VOL. MONITOR
FOOTNOTE [B] OPTIONAL EQUIPMENT FOR PEAS
FOOTNOTE [C] UP TO SERIAL NUMBER 59087ORDER ALSO D28585290
FOOTNOTE [D] UP TO SERIAL NUMBER 59087ORDER ALSO D28585291

https://truckmanualshub.com/

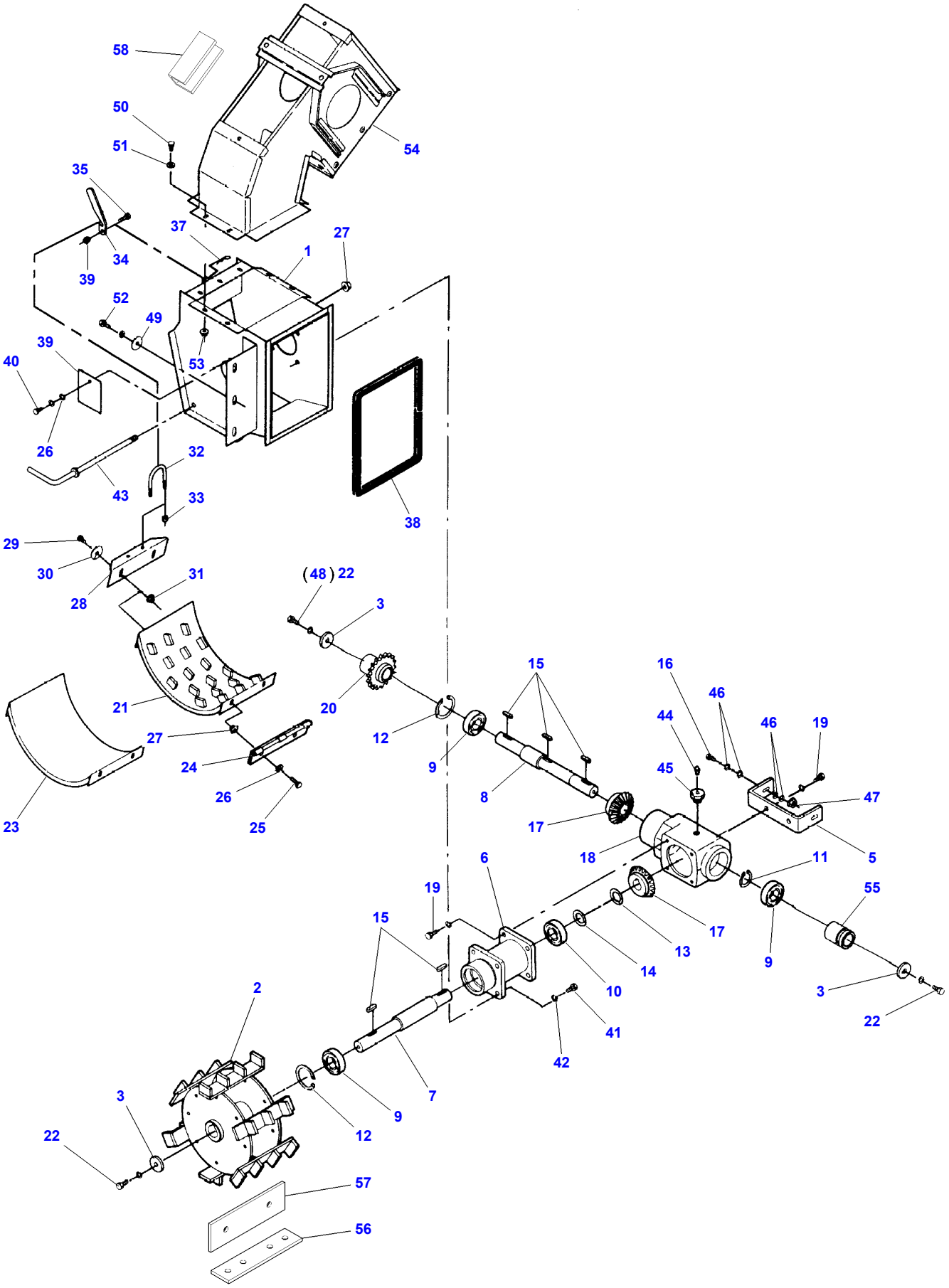

D-ZGZD-003-C

https://truckmanualshub.com/

Item	Part Number	Qty	Description	Comments
1	D28580360	1	Housing	
2	D28580243	1	Cylinder	
3	D20400421	3	Washer	
4	D28580214	1	Angle Drive	[A]
5	D28580211	1	Support	(4)
6	D28580407	1	Bearing Carrier	(4)
7	D28580209	1	Shaft	(4)
8	D28580210	1	Drive Shaft	(4)
9	SKF62062RS	3	Bear. 6206 2rs	(4)
10	1440494X1	1	Bear. 6206	(4)
11	1440477X1	1	Circlip	(4)
12	1440479X1	2	Circlip	(4)
13	D42598800	5	Washer	(4)
14	D42598900	5	Washer	(4)
15	D43103400	5	Key	(4)
16	339337X1	2	Cap Screw	(4) M8 X 30
17	D28580010	2	Gear	(4)
18	D28580216	1	Gear Case Assy.	(4)
19	3009492X1	6	Cap Screw	(4) M10 X 25
20	D28585104	1	Sprocket	
21	D28580230	1	Cover	
22	D40466700	2	Cap Screw	M10 X 25
23	D28580318	1	Cover	CPL.
	D28580232	1	Cover	
24	D28580189	1	Hinge	
25	339761X1	2	Cap Screw	M8 X 25
26	D20400506	3	Washer	
27	394367X1	3	Locknut	M8
28	D28580248	1	Plate	
29	339123X1	2	Cap Screw	M8 X 20
30	D20400410	2	Washer	
31	394367X1	2	Locknut	M8
32	D28560165	1	U Bolt	
33	1441462X1	2	Locknut	M6
34	D28560162	1	Lever	
35	339804X1	1	Cap Screw	M6 X 25
36	1441462X1	1	Locknut	[A] M6
37	D27100120	1	Hair Pin	
38	D44740600	X	Strip	Length 25 M
39	D28580182	1	Cover	
40	339124X1	1	Cap Screw	M8 X 16
41	339814X1	4	Cap Screw	M10 X 35
42	D20400419	4	Washer	
43	D28580247	2	Rod	
44	D46116500	1	Valve	
45	D28580296	1	Plug	
46	D20400414	4	Washer	
47	394367X1	2	Locknut	M8
48	D40466500	1	Setscrew	
49	D20400416	3	Washer	
50	339666X1	7	Cap Screw	M6 X 20
51	391038X1	7	Flat Washer	
52	3009493X1	3	Cap Screw	M10 X 30
53	1441462X1	5	Locknut	M6
54	D28580444	1	Riser	
55	D28585136	1	Bush	
56	D28580403	3	Plate	
57	D28580404	3	Deflector	
58	D28580439	1	Bracket	(54) FOR D28580444

FOOTNOTE [A] NOT ILLUSTRATED

https://truckmanualshub.com/

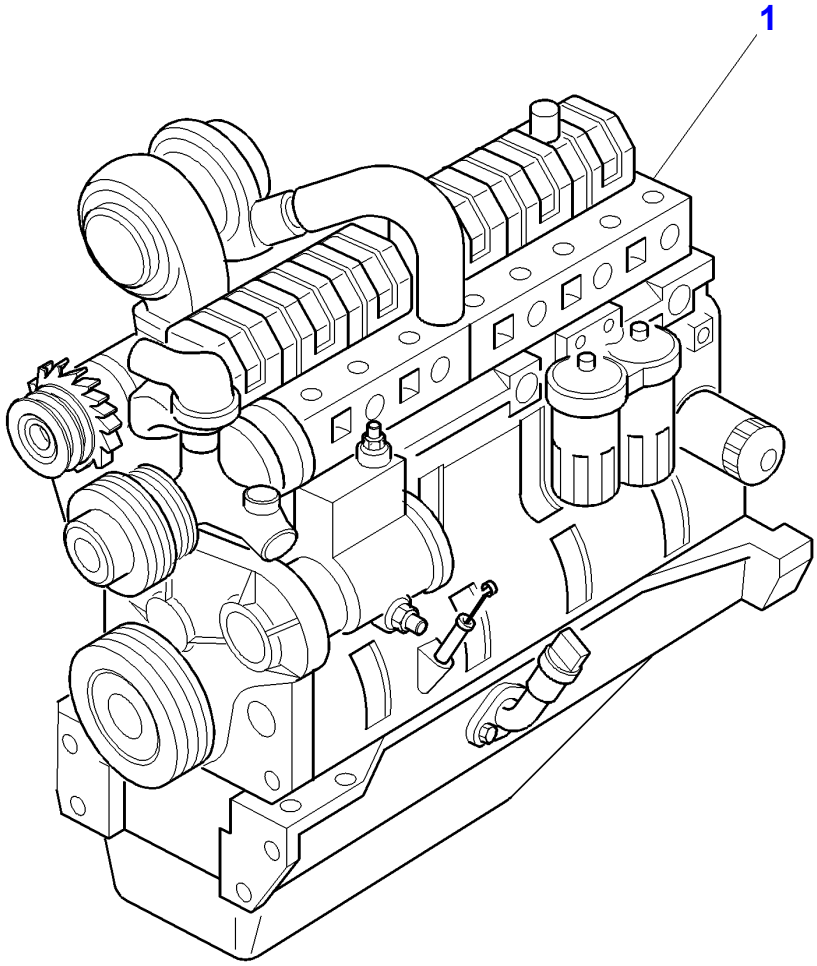

D-HB01-002-B

https://truckmanualshub.com/

Item	Part Number	Qty	Description	Comments
1	V832960591	1	Engine	645 DSBAEL 7278
	V832960589	1	Engine	645 DSBAEL 7274
	V835261476	1	Engine	84CTA-4V 7274 Up to Serial or Engine Number U1001
	V835261376	1	Engine	84CTA-4V 7278 Up to Serial or Engine Number U1001
	V835276178	1	Engine	84CTA-4V 7274 From Serial or Engine Number U1001
	V835276179	1	Engine	84CTA-4V 7278 From Serial or Engine Number U1001
2	V862960591X	1	Short Engine	[A] 645 DSBAEL 7278
	V862960589X	1	Short Engine	[A] 645 DSBAEL 7274
	V865261476X	1	Short Engine	[A] 84CTA-4V 7274 Up to Serial or Engine Number U1001
	V865261376X	1	Short Engine	[A] 84CTA-4V 7278 Up to Serial or Engine Number U1001
	V865276178X	1	Short Engine	[A] 84CTA-4V 7474 From Serial or Engine Number U1001
	V865276179X	1	Short Engine	[A] 84CTA-4V 7278 From Serial or Engine Number U1001

FOOTNOTE [A] NOT ILLUSTRATED

https://truckmanualshub.com/

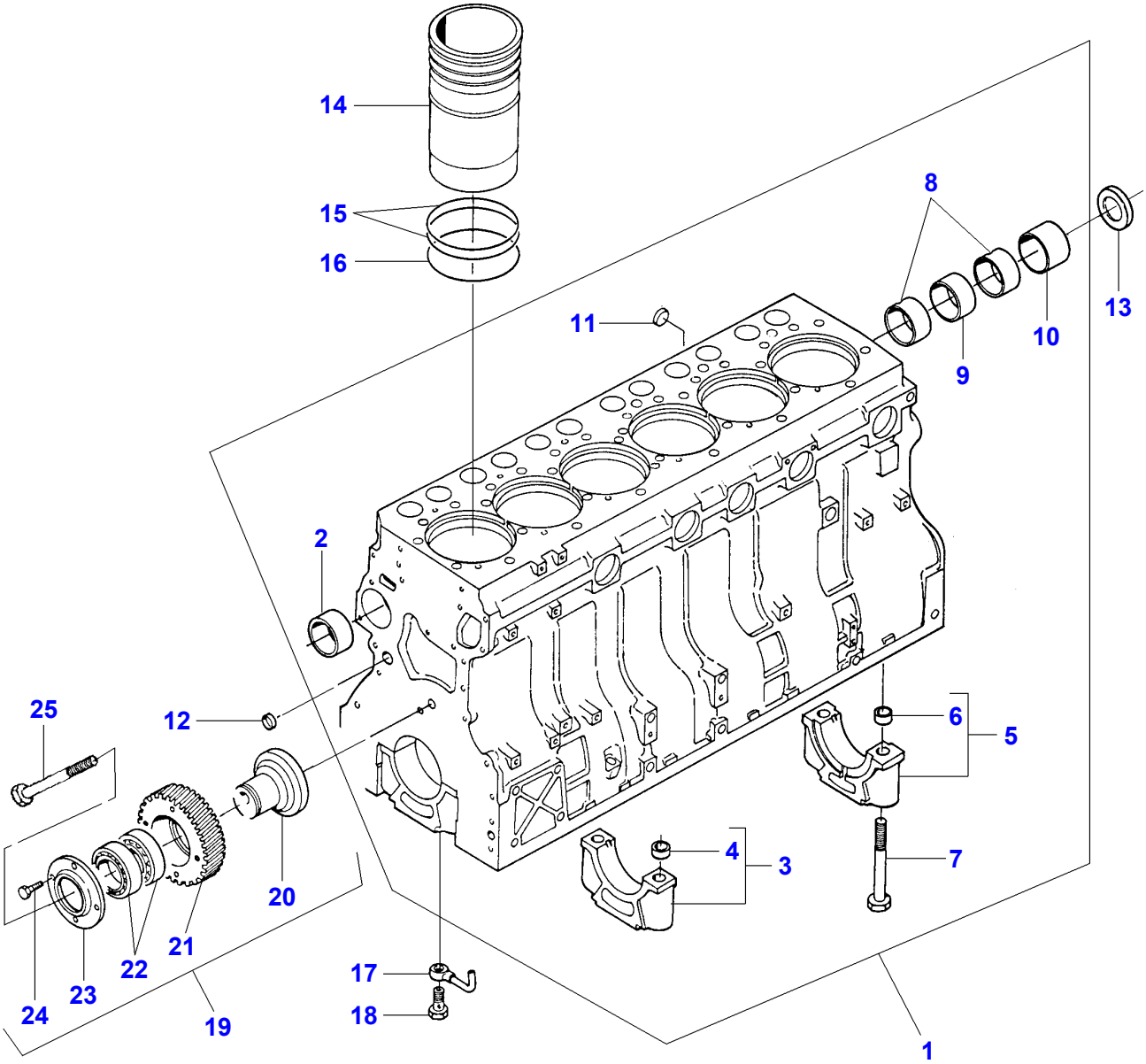

https://truckmanualshub.com/

Item	Part Number	Qty	Description	Comments
1	V836859155	1	Cylinder Block	Up to Serial or Engine Number L17960 7278
	V836866592	1	Cylinder Block	From Serial or Engine Number L17961 7278
	V836866592	1	Cylinder Block	
2	V836322610	1	Bush	(1) Up to Serial or Engine Number L17960 7278
	V836866069	1	Bush	(1) From Serial or Engine Number L17961 7278
	V836866069	1	Bush	(1) 7274
	V836866036	X	Bush	(1) Diameter +0,4MM 7274
3		6	Bearing Carrier	(1) Not serviced,order REF.1
4	V836214478	12	Bush	(3)
5		1	Bearing Carrier	(1) Not serviced,order REF.1
6	V836214478	2	Bush	(5)
7	V529903180	14	Screw	(1)
8	V836852460	2	Bush	(1) Diameter + 0,2 mm No 3
	V836852466	2	Bush	Diameter + 0,2 mm No 2 , 4
9	V836852459	1	Bush	(1)
10	V836852461	1	Bush	(1)
	V836852467	1	Bush	Diameter +0.2MM
11	V640016018	1	Plug	(1)
12	V640016016	4	Plug	[A]
13	V836852744	1	Plug	
14	V836855445	6	Liner	7274
	V836867048	6	Liner	7278
	V836859581	6	Liner	Thickness 9,08mm
	V836859582	6	Liner	Thickness 9,13mm
	V836859583	6	Liner	Thickness 9,23mm
15	V836855446	12	O Ring	[A]
16	V836855447	6	O Ring	[A]
17	V836846231	6	Pipe	
18	V836338601	6	Valve	
19	V836855563	1	Gear	
20	V836855562	1	Shaft	(19)
21	V836855560	1	Gear	(19)
22	V610072109	2	Bearing Assy	(19)
23	V836855561	1	Flange	(19)
24	V528801362	4	Bolt	(19) M8X16
25	V581705910	1	Screw	M14X70

FOOTNOTE [A] INCLUDED IN V836840994

https://truckmanualshub.com/

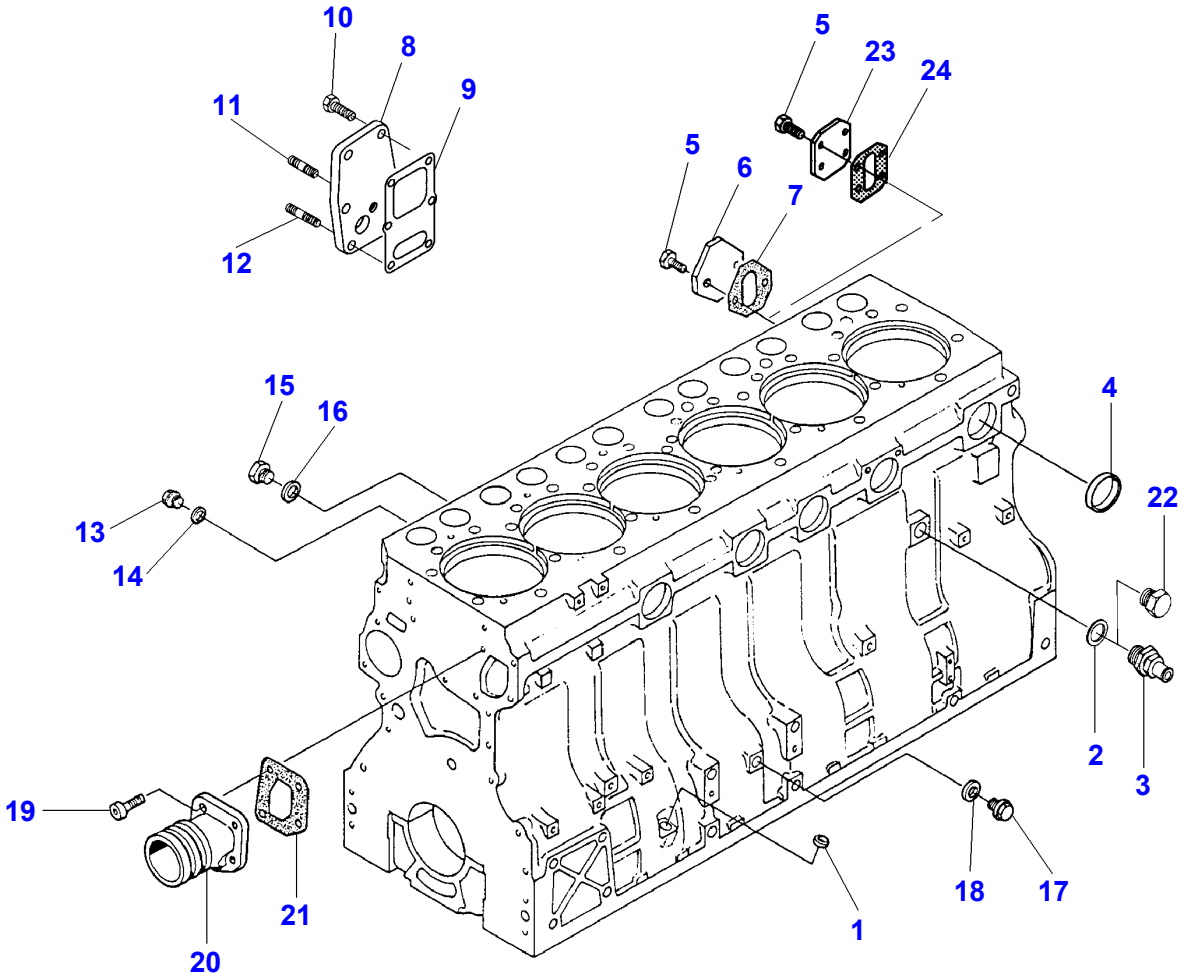

https://truckmanualshub.com/

Item	Part Number	Qty	Description	Comments
1	V640016012	1	Plug	
2	V615881824	1	Seal	[A]
3	V836664377	1	Cock	
4	V640016040	5	Plug	
5	V528801362	2	Bolt	M8X16
6	V836647400	1	Cover	7274
7	V836647401	1	Gasket	[A] MF7274
8	V836855678	1	Cover	
9	V836322852	1	Gasket	[A]
10	V528801380	9	Bolt	M8X20
11	V546801360	1	Bolt	M8X16
12	V546801400	1	Bolt	M8X25
13	V640325110	5	Plug	
14	**V615871014**	5	Seal	[A]
15	V836119079	1	Plug	
16	V615881620	1	Seal	[A]
17	V640325014	1	Plug	
18	V615881420	1	Gasket	[A]
19	VHC9326	4	Screw	M8X20
20	V836855629	1	Sleeve	
21	V836855554	1	Gasket	[A]
22	V836019756	1	Plug	
23	V836866957	1	Cover	7278
24	V836866958	1	Gasket	MF7278

FOOTNOTE [A] INCLUDED IN V836840994

https://truckmanualshub.com/

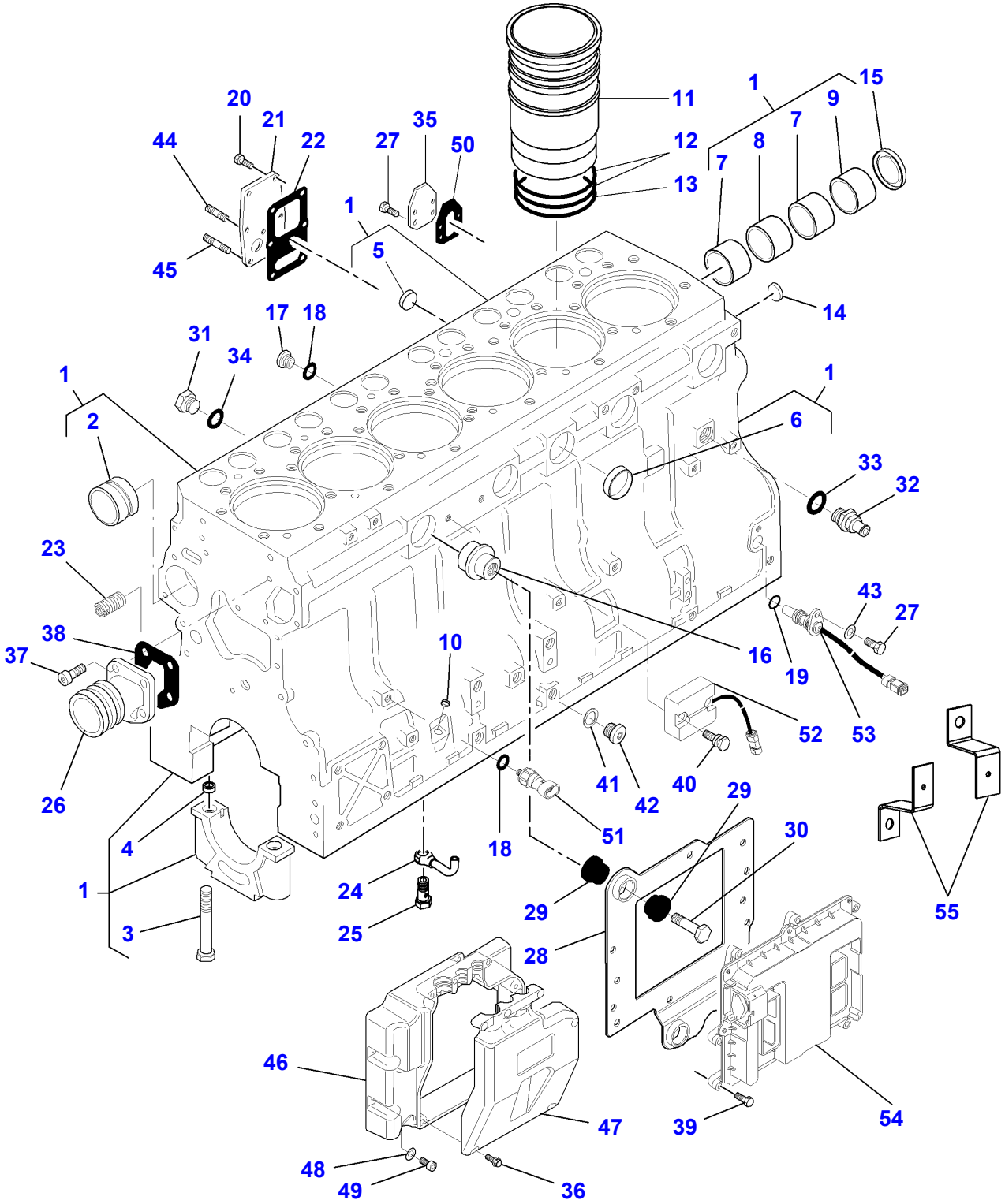

D-HB02-010-C

https://truckmanualshub.com/

Item	Part Number	Qty	Description	Comments
1	V836867046	1	Cylinder Block	Up to Serial or Engine Number U1001
2	V836866069	1	Bush	(1)
	V836866036	X	Bush	Thickness +0,4 MM
3	V529903180	14	Screw	(1)
4	V836214478	24	Bush	(1)
5	V640016018	1	Plug	(1)
6	V640016040	4	Plug	(1)
7	V836852460	2	Bush	(1)
8	V836852459	1	Bush	(1)
9	V836852461	1	Bush	(1)
10	V640016012	1	Plug	
11	V836867048	6	Liner	
	V836867050	X	Liner	Thickness 9,08 MM
12	V836855446	12	O Ring	[A]
13	V836855447	6	O Ring	[A]
14	V640016016	4	Plug	
15	V836852744	1	Plug	
16	V837069057	1	Plug	
17	V640325110	5	Plug	
18	**V615871014**	5	Seal	[A]
19	V614601524	1	O Ring	
20	V528801380	5	Bolt	M8 X 20
21	V836855678	1	Cover	
22	V836322852	1	Gasket	[A]
23	V836859153	1	Nipple	
24	V837070021	6	Pipe	
25	V836338601	6	Valve	
26	V836855629	1	Sleeve	
27	V528801362	5	Bolt	M8 X 16
28	V837070147	1	Bracket	
29	V837069052	6	Bush	
30	V837069056	3	Screw	
31	V836119079	1	Plug	
32	V836664377	1	Cock	
33	V615881624	1	Seal	[A]
				Up to Serial or Engine Number U1001
	V615881824	1	Seal	[A]
				From Serial or Engine Number U1001
34	V615881620	1	Seal	[A]
35	V836866957	1	Cover	
36	V836866958	1	Gasket	[A]
37	V581804600	4	Hex Socket Screw	M8 X 20
38	V836855554	1	Gasket	[A]
39	V529801102	8	Screw	M6 X 25
40	V837070197	2	Screw	
41	V615881420	1	Gasket	[A]
42	V640325014	1	Plug	
43	V500050840	1	Washer	
44	V546801360	1	Bolt	M8 X 16
45	V546801400	1	Bolt	M8 X 25
46	V837070285	1	Cover	
47	V837070286	1	Cover	
48	V500150642	5	Washer	
49	V581804182	5	Screw	M6 X 16
50	V590253388	6	Screw	5.1 X 14
51		X	Sensor	See Page - Reference Number 008-0049
52		X	Module	See Page - Reference Number 008-0049
53		X	Speed Sensor	See Page - Reference Number 008-0049
54		X	Control Unit	See Page - Reference Number 008-0049
55	D28787498	2	Support	

FOOTNOTE [A] INCLUDED IN KIT V837062628

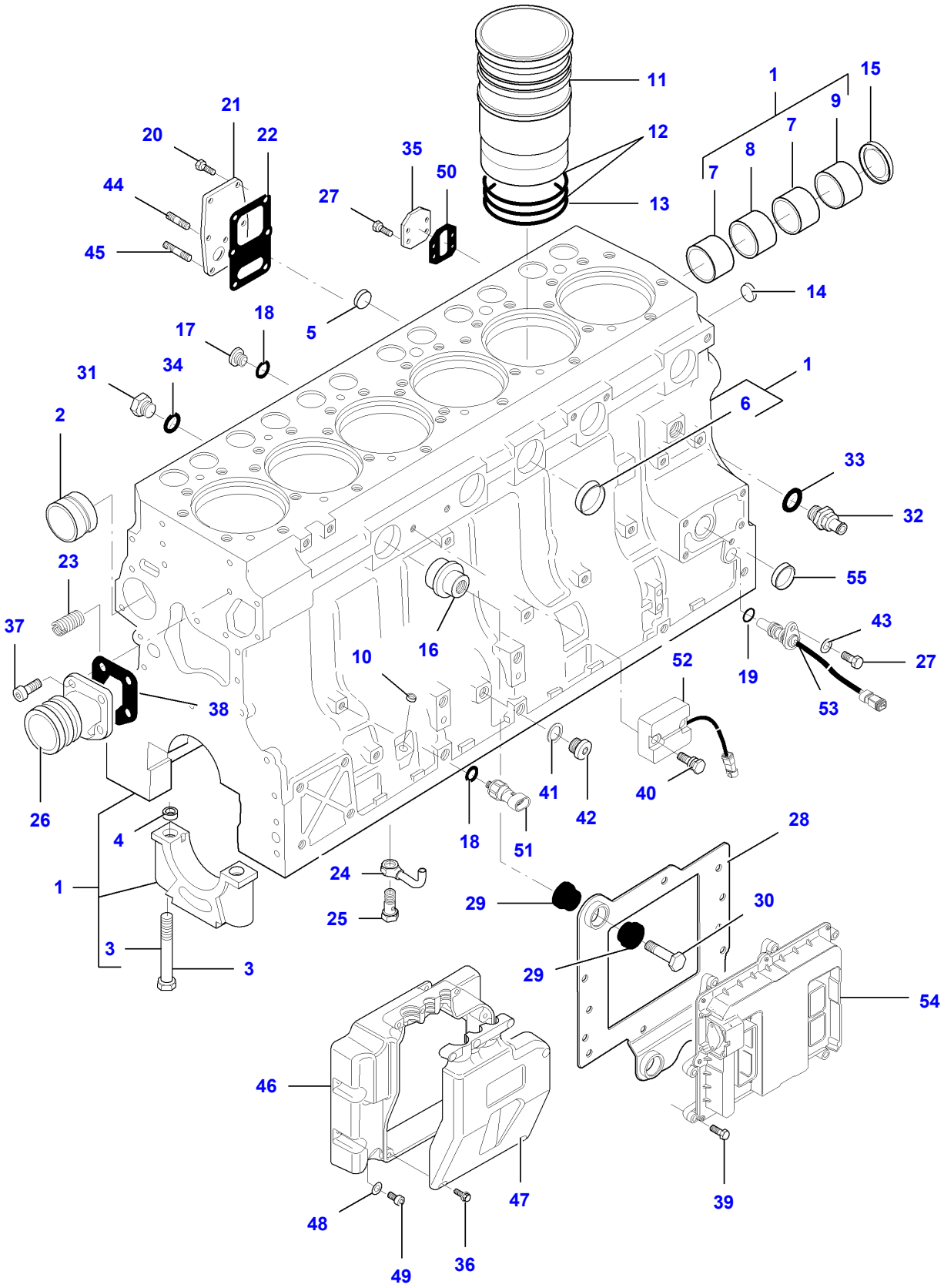
11
1
15
9
7
8
7
12
13
21
20
22
35
50
27
44
45
14
5
18
17
31
34
1
6
2
33
32
23
55
37
16
43
27
10
52
19
53
38
26
41
42
40
4
18
51
28
1
24
29
30
25
3
3
29
54
46
47
39
48
49
36

D-HB02-011-A

https://truckmanualshub.com/

Item	Part Number	Qty	Description	Comments
1	V836873095	1	Cylinder Block	From Serial or Engine Number U1001
2	V836866069	1	Bush	(1)
	V836866036	X	Bush	Thickness +0,4 MM
3	V529903180	14	Screw	(1)
4	V836214478	24	Bush	(1)
5	V640016018	1	Plug	(1)
6	V640016040	4	Plug	(1)
7	V836852460	2	Bush	(1)
8	V836852459	1	Bush	(1)
9	V836852461	1	Bush	(1)
10	V640016012	1	Plug	
11	V836867048	6	Liner	
	V836867050	X	Liner	Thickness 9,08 MM
12	V836855446	12	O Ring	[A]
13	V836855447	6	O Ring	[A]
14	V640016016	4	Plug	
15	V836852744	1	Plug	
16	V837069057	1	Plug	
17	V640325110	5	Plug	
18	**V615871014**	5	Seal	[A]
19	V614601524	1	O Ring	
20	V528801380	5	Bolt	M8 X 20
21	V836855678	1	Cover	
22	V836322852	1	Gasket	[A]
23	V836859153	1	Nipple	
24	V837070021	6	Pipe	
25	V836338601	6	Valve	
26	V836855629	1	Sleeve	
27	V528801362	5	Bolt	M8 X 16
28	V837070147	1	Bracket	
29	V837069052	6	Bush	
30	V837069056	3	Screw	
31	V836119079	1	Plug	
32	V836664377	1	Cock	
33	V615881624	1	Seal	[A]
				Up to Serial or Engine Number U1001
	V615881824	1	Seal	[A]
				From Serial or Engine Number U1001
34	V615881620	1	Seal	[A]
35	V836866957	1	Cover	From Serial or Engine Number U1001
36	V590253388	6	Screw	
37	V581804600	4	Hex Socket Screw	M8 X 20
38	V836855554	1	Gasket	[A]
39	V529801102	8	Screw	M6 X 25
40	V837070197	2	Screw	
41	V615881420	1	Gasket	[A]
42	V640325014	1	Plug	
43	V500050840	1	Washer	
44	V546801360	1	Bolt	M8 X 16
45	V546801400	1	Bolt	M8 X 25
46	V837070285	1	Cover	
47	V837070286	1	Cover	
48	V500150642	5	Washer	
49	V581804182	5	Screw	M6 X 16
50	V836866958	1	Gasket	[A]
51		X	Sensor	See Page - Reference Number 008-0049
52		X	Module	See Page - Reference Number 008-0049
53		X	Speed Sensor	See Page - Reference Number 008-0049
54		X	Control Unit	See Page - Reference Number 008-0049
55	V640016035	1	Plug	Up to Serial or Engine Number U1001

FOOTNOTE [A] INCLUDED IN KIT V837062628

https://truckmanualshub.com/

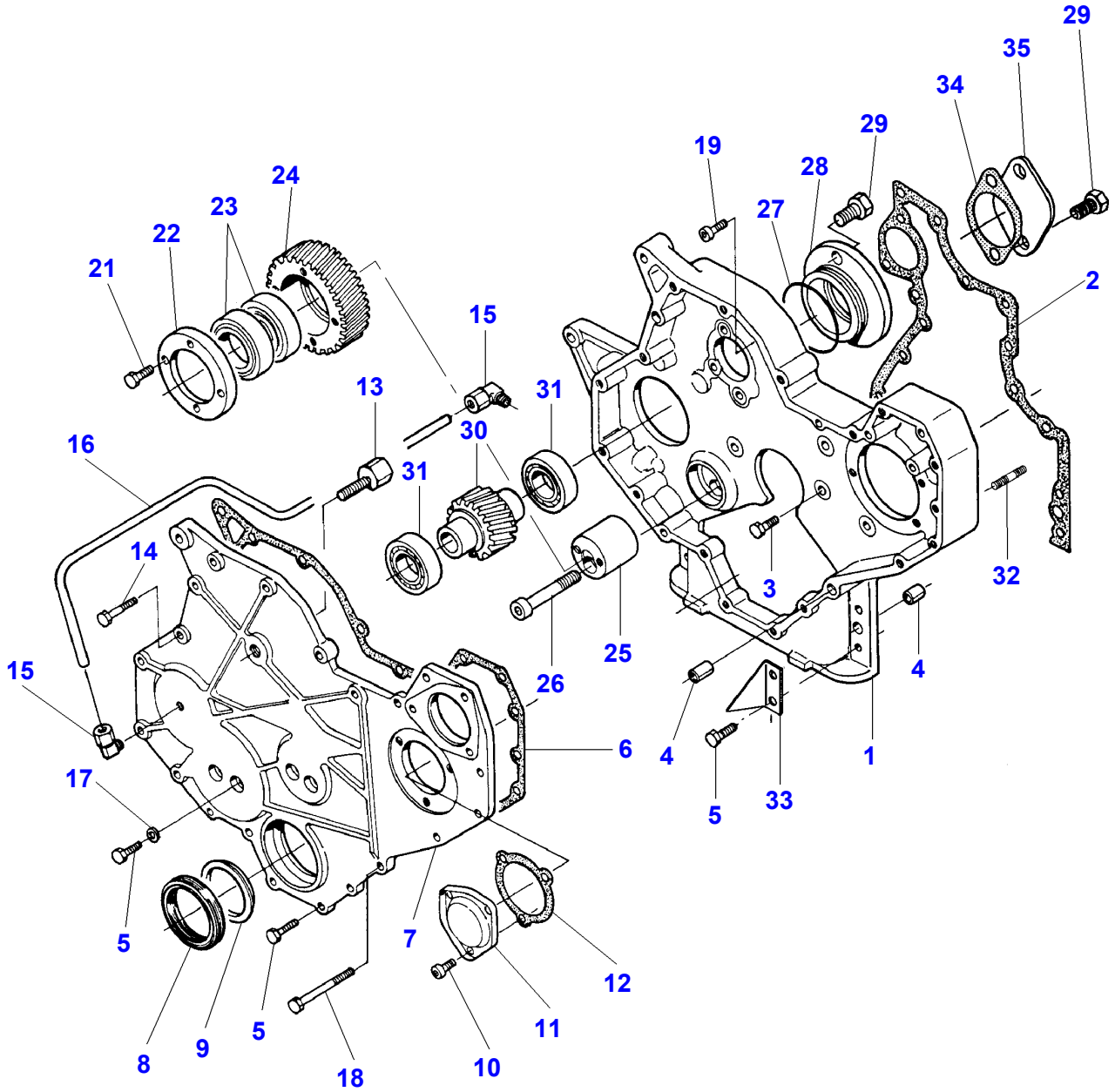

https://truckmanualshub.com/

Item	Part Number	Qty	Description	Comments
1	V836859199	1	Gear Case Assy.	
2	V836647419	1	Gasket	[A]
3	V528801380	9	Bolt	
4	V598359850	4	Pin	
5	V528801400	12	Bolt	
6	V836859201	1	Gasket	[A]
7	V836859200	1	Housing	
8	V836840883	1	Oil Seal	[A]
9	V836855636	1	Gasket	
10	V581804570	3	Screw	
11	V836136717	1	Cover	
12	V836129946	1	Gasket	[A]
13	V836855526	1	Restrictor	
14	V528801410	6	Adjusting Screw	
15	V641166006	2	Elbow Union	
16	V836855853	1	Pipe	
17	V615870814	4	Washer	[A]
18	V529801530	2	Screw	
19	VHC9326	1	Screw	
20	V836855567	1	Gear	[B]
21	V528801400	4	Bolt	(20)
22	V836855565	1	Ring	(20)
23	V610072109	2	Bearing Assy	(20)
24	V836855564	1	Gear	(20)
25	V836855566	1	Sleeve	(20)
26	V581705910	1	Screw	
27	V614609430	1	O Ring	[A]
28	V836855651	1	Cover	
29	V528802610	2	Screw	
30	V836855652	1	Gear	
31	VLA1014	2	Ball Bearing	Repairs and replaces V610060096
32	V546801860	4	Stud	
33	V836859588	1	Angle.	
34	V836864459	1	Gasket	
35	V836864458	1	Cover	

FOOTNOTE [A] INCLUDED IN V836840994
FOOTNOTE [B] NOT ILLUSTRATED

https://truckmanualshub.com/

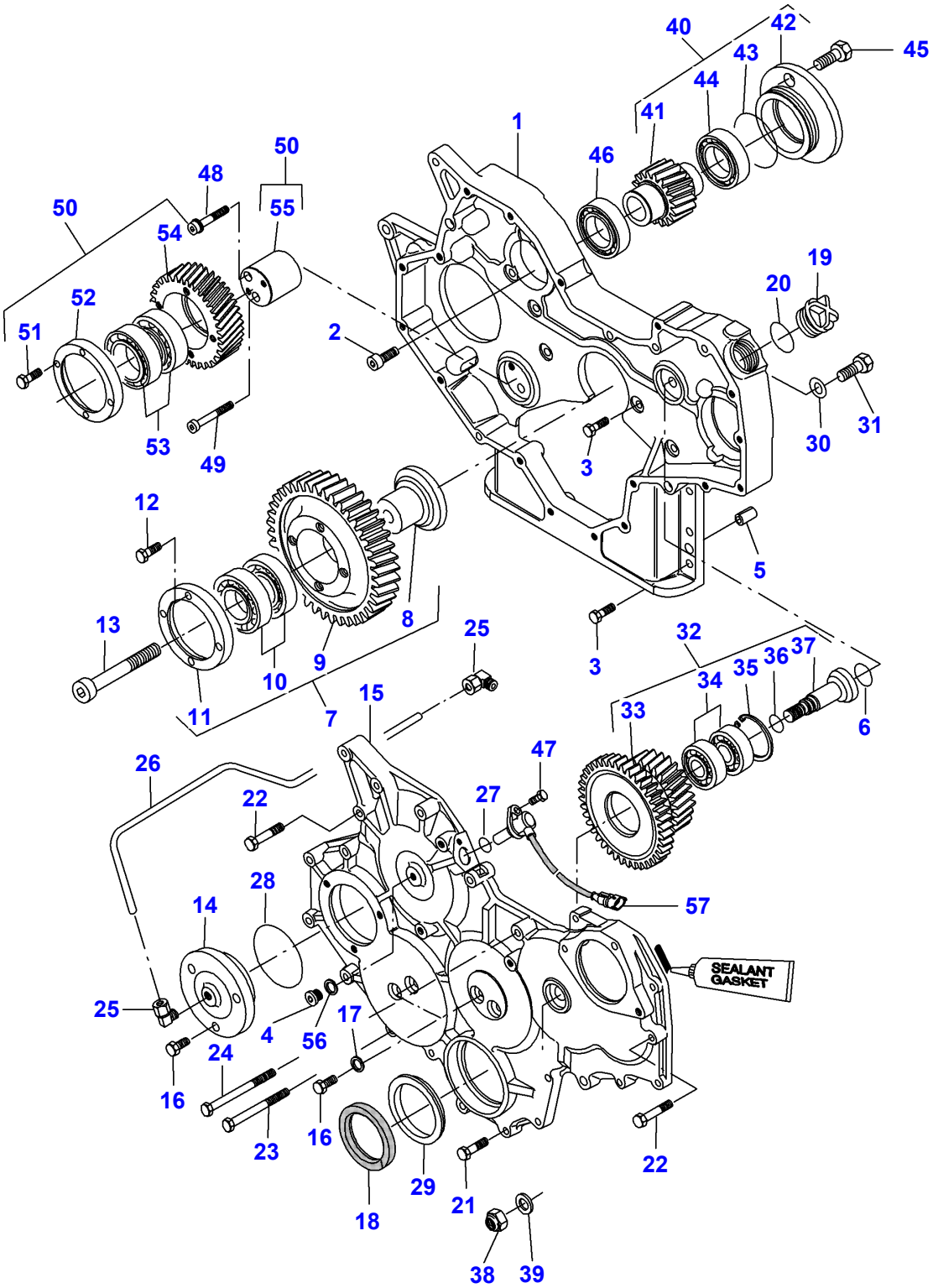

DHB03-009-A

https://truckmanualshub.com/

Item	Part Number	Qty	Description	Comments
1	V837070107	1	Housing	
2	V581804620	2	Screw	M8X25
3	V528801400	12	Bolt	M8X25
4	V640325110	1	Plug	
5	V598359850	2	Pin	
6	**V614601924**	1	O Ring	
7	V837070001	1	Gear	
8	V836855562	1	Shaft	(7)
9	V837070000	1	Gear	(7)
10	V610072109	2	Bearing Assy	(7)
11	V836855565	1	Ring	(7)
12	V528901400	4	Screw	(7)
				M8X25
13	V581705910	1	Screw	M14X70
14	V837070179	1	Cover	
15	V837070108	1	Timing Case	
16	V528801380	7	Bolt	M8X20
17	V615870814	4	Washer	
18	V836840883	1	Oil Seal	
19	V836017927	1	Plug	
20	V614603540	1	O Ring	
21	V528801410	10	Adjusting Screw	M8X30
22	V529801440	9	Bolt	M8X45
23	V529801510	1	Bolt	M8X50
24	V529801540	1	Screw	M8X95
25	V641166006	2	Elbow Union	
26	V836867775	1	Pipe	
27	V614601524	1	O Ring	
	V614601718	1	O Ring	From Serial or Engine Number U1001
28	V614606825	1	O Ring	
29	V836855636	1	Gasket	
30	V500951200	1	Washer	
31	V528902200	1	Screw	M12X25
	V581705420	1	Screw	M12X25
				From Serial or Engine Number U1001
32	V837070072	1	Gear	
33	V837070113	1	Gear	(32)
34	V610073040	2	Bearing	(32)
35	V617330052	1	Circlip	(32)
36	V614601324	1	O Ring	(32)
37	V837069069	1	Shaft	(32)
38	V504601400	1	Nut	M14
39	V837069070	1	Washer	
40	V837070137	1	Gear	
41	V837070005	1	Shaft	(40)
42	V836855651	1	Cover	(40)
43	V614609430	1	O Ring	(40)
44	V610060096	1	Ball Bearing	(40)
45	V528802602	2	Screw	M14X25
46	V610060096	1	Ball Bearing	
47	V528801062	1	Bolt	M6X16
48	V580704670	1	Screw	M8X50
49	V581704710	1	Screw	M8X70
50	V837070004	1	Gear	
51	V528901400	4	Screw	(50)
				M8X25
52	V836855565	1	Ring	(50)
53	V610072109	2	Bearing Assy	(50)
54	V837070002	1	Gear	(50)
55	V837070003	1	Shaft	(50)
56	**V615871014**	1	Seal	
57			Speed Sensor	See Page - Reference Number 008-0049

https://truckmanualshub.com/

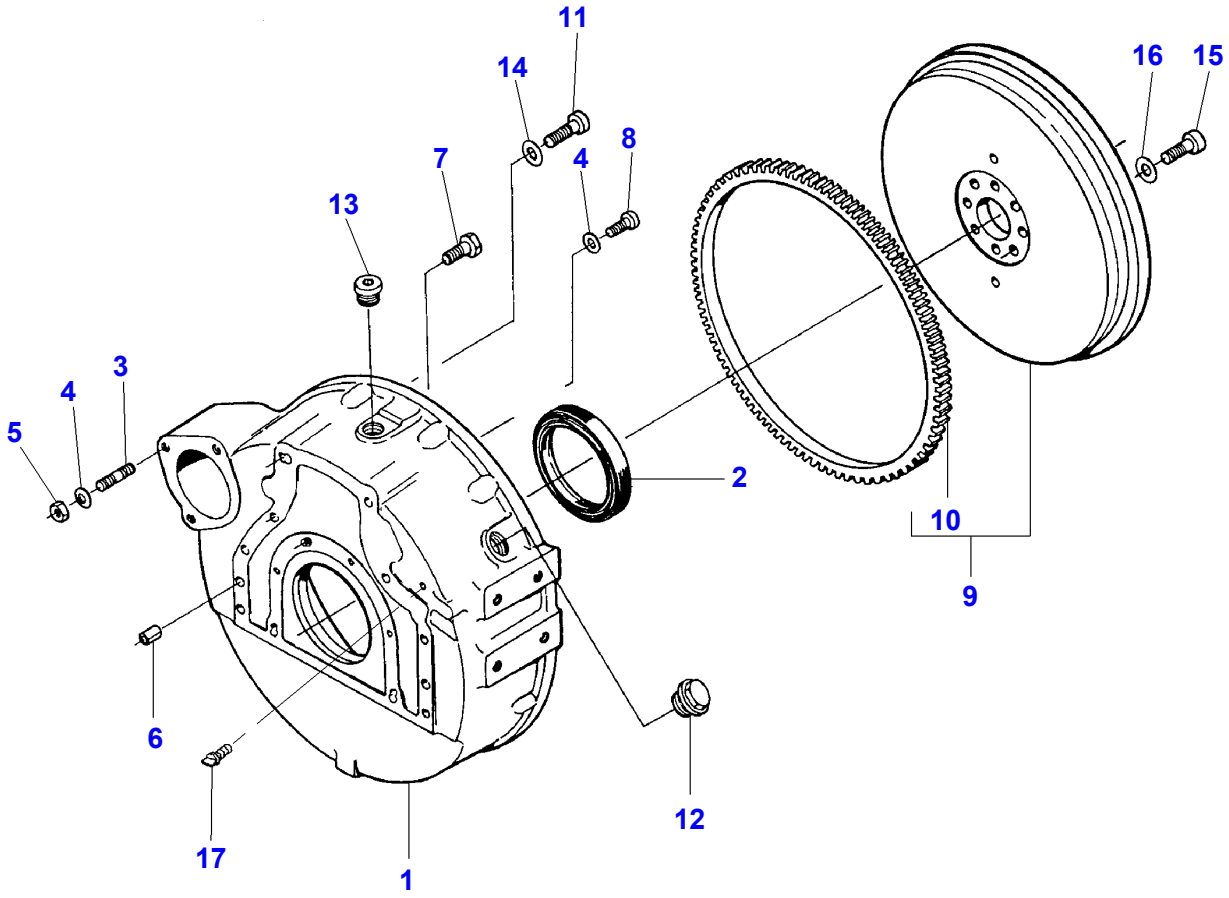

D-HB04-006-B

https://truckmanualshub.com/

Item	Part Number	Qty	Description	Comments
1	V836647440	1	Flywheel Housing	
2	V836840884	1	Oil Seal	TYPE 645DSBAEL
	V614500002	1	Seal	TYPE 84CTA-4V FROM R16351
	V836020054	1	Spacer	Thickness 2mm
3	V546801800	3	Bolt	M10X25
4	V500951000	6	Washer	
5	V504801000	3	Nut	M10
6	V598359850	2	Pin	
7	V529802230	6	Screw	M12X40
8	V581705030	6	Screw	M10X30
9	V836855909	1	Flywheel	
10	V836117970	1	Annular Gear	(9)
11	V581705440	2	Screw	M12X35
12	V640045126	1	Plug	
13	V640325018	1	Plug	
14	V500951200	1	Washer	
15	V529702630	8	Screw	
16	V500951400	8	Washer	
17	V836859311	1	Plug	

https://truckmanualshub.com/

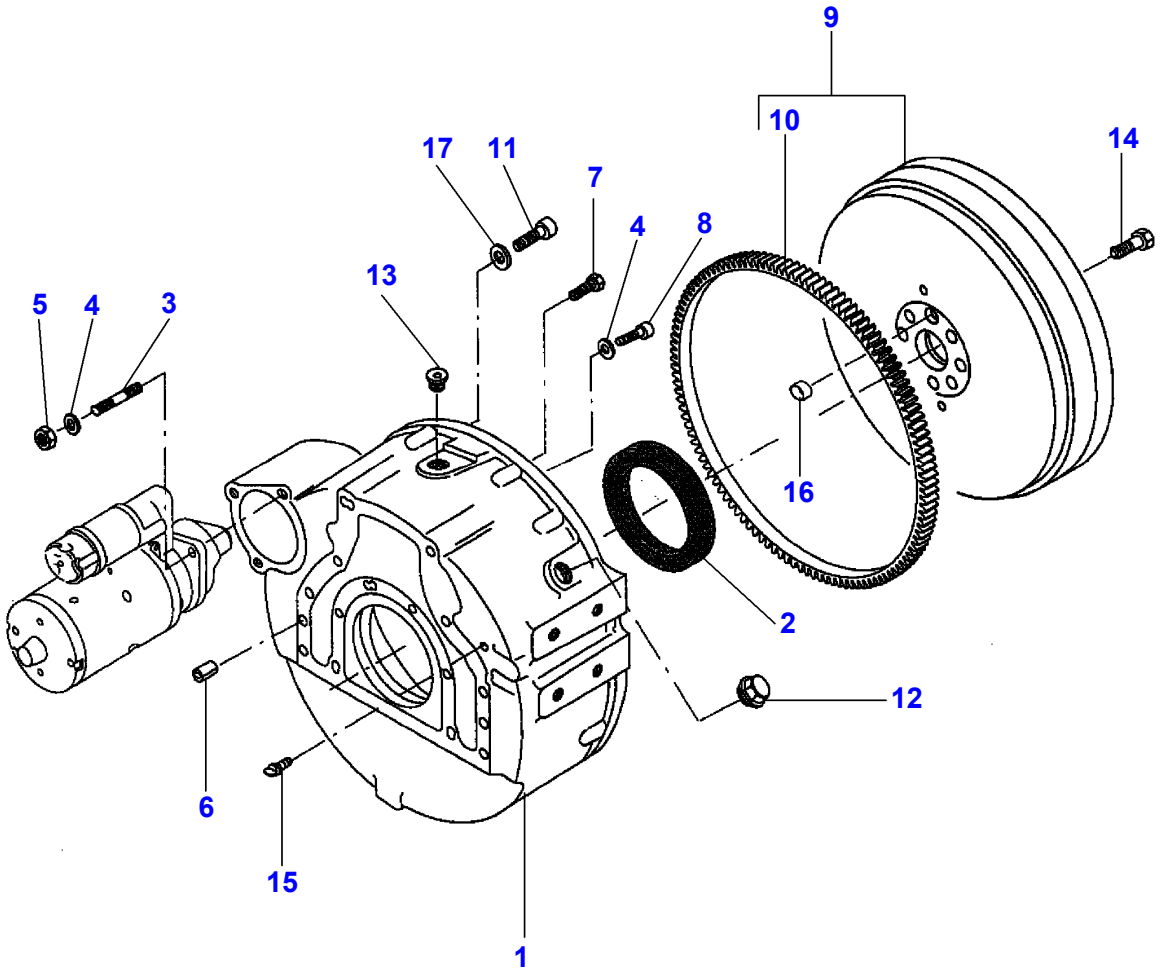

https://truckmanualshub.com/

Item	Part Number	Qty	Description	Comments
1	V836647440	1	Flywheel Housing	
2	V836840884	1	Oil Seal	
	V836020054	X	Spacer	Thickness 2MM
3	V546801800	3	Bolt	M10X25
4	V500951000	6	Washer	
5	V504801000	3	Nut	M10
6	V598359850	2	Pin	
7	V528902220	6	Bolt	M12X35
8	V581705030	6	Screw	M10X30
9	V836855909	1	Flywheel	
10	V836117970	1	Annular Gear	(9)
11	V581705440	2	Screw	M12X35
12	V640045126	1	Plug	
13	V640325018	1	Plug	
14	V529702630	8	Screw	
15	V836859311	1	Plug	
16	V500951400	8	Washer	
17	V500951200	1	Washer	

https://truckmanualshub.com/

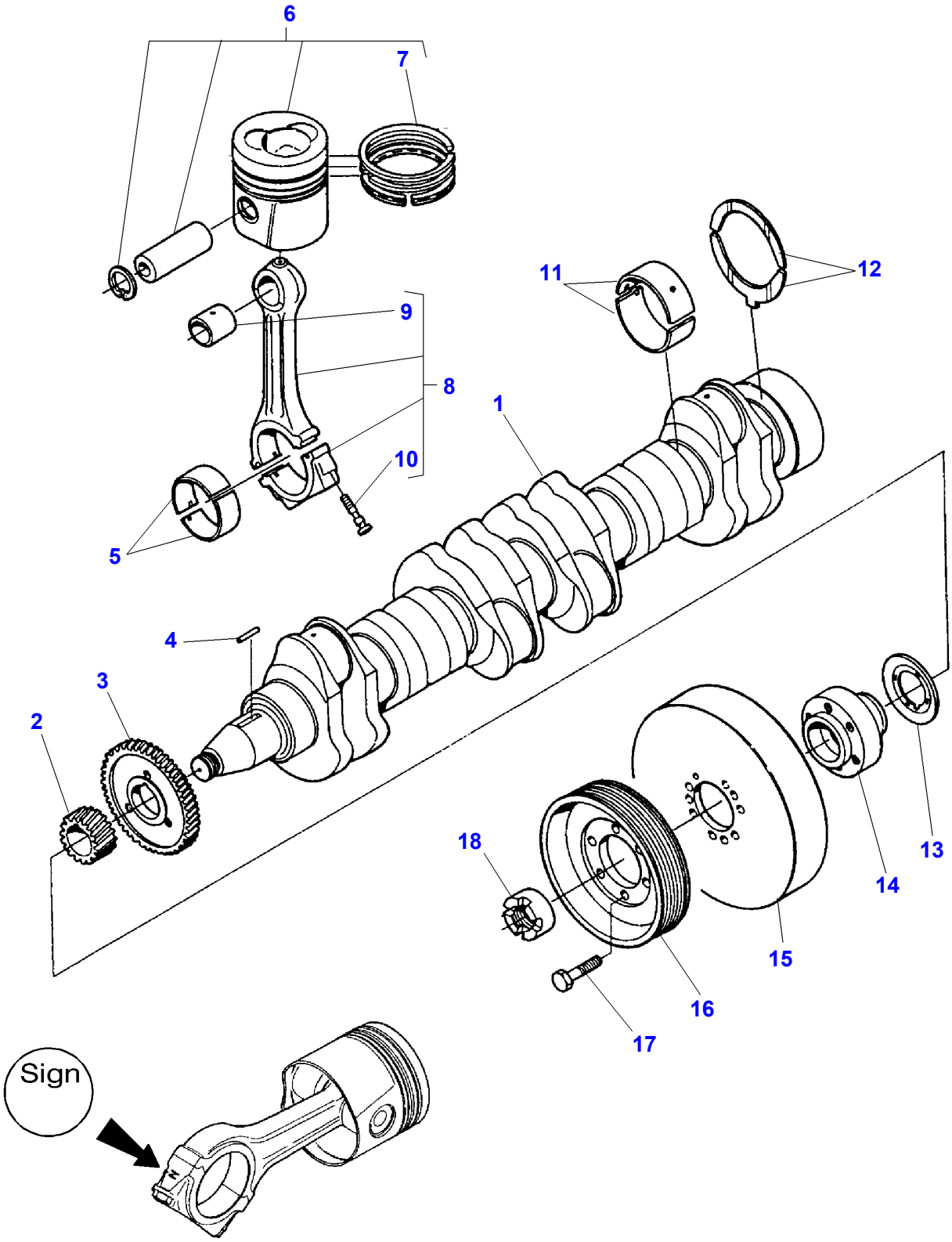

https://truckmanualshub.com/

Item	Part Number	Qty	Description	Comments
1	V836855910	1	Crankshaft	
2	V836855559	1	Gear	
3	V836855558	1	Gear	
4	V836855525	1	Key	
5	V836336302	6	Bearing	STANDARD
	V836338650	X	Bearing	Diameter 72,731MM 72,750MM
	V836338651	X	Bearing	Diameter 72,481MM 72,500MM
	V836338652	X	Bearing	Diameter 71,981MM 72,000MM
	V836338653	X	Bearing	Diameter 71,481MM 71,500MM
6	V836840886	6	Piston	
7	V836840887	6	Kit, Piston Ring	(6)
8	V836355175	X	Conrod	2931-2950g C
	V836355176	X	Conrod	2951-2970g D
	V836352751	X	Conrod	2971-2990g E
	V836352752	X	Conrod	2991-3010g F
	V836352753	X	Conrod	3011-3030g G
	V836352754	X	Conrod	3031-3050g H
	V836352755	X	Conrod	3051-3070g I
	V836352756	X	Conrod	3071-3090g J
	V836352757	X	Conrod	3091-3110g K
	V836352758	X	Conrod	3111-3130g L
	V836352759	X	Conrod	3131-3150g M
	V836352760	X	Conrod	3151-3170g N
	V836352761	X	Conrod	3171-3190g O
	V836352762	X	Conrod	3191-3210g P
	V836352763	X	Conrod	3211-3230g R
	V836352764	X	Conrod	3231-3250g S
	V836352765	X	Conrod	3251-3270g T
	V836352766	X	Conrod	3271-3290g U
	V836352767	X	Conrod	3291-3310g V
	V836352768	X	Conrod	3311-3330g X
	V836352769	X	Conrod	3331-3350g Y
	V836352770	X	Conrod	3351-3370g Z
9	V836336297	6	Bush	(8)
	V836338606		Bush	(8) Diameter +0,5mm
10	V836336296	12	Screw	(8)
11	V836840944	7	Main Bearing	STANDARD
	V836840978	X	Main Bearing	Diameter 89,735MM 89,770MM
	V836840979	X	Main Bearing	Diameter 89,485MM 89,520MM
	V836840980	X	Main Bearing	Diameter 88,985MM 89,020MM
	V836840981	X	Main Bearing	Diameter 88,485MM 88,520MM
12	V836840945	2	Thrust Washer	STANDARD
	V836840982	X	Thrust Washer	0,1MM
	V836840983	X	Thrust Washer	0,2MM
13	V836855637	1	Ring	
14	V836855641	1	Hub	
15	V836840882	1	Shock Absorber	
16	V836855690	1	Pulley	
17	V528902230	6	Screw	
18	V836322221	1	Nut	

https://truckmanualshub.com/

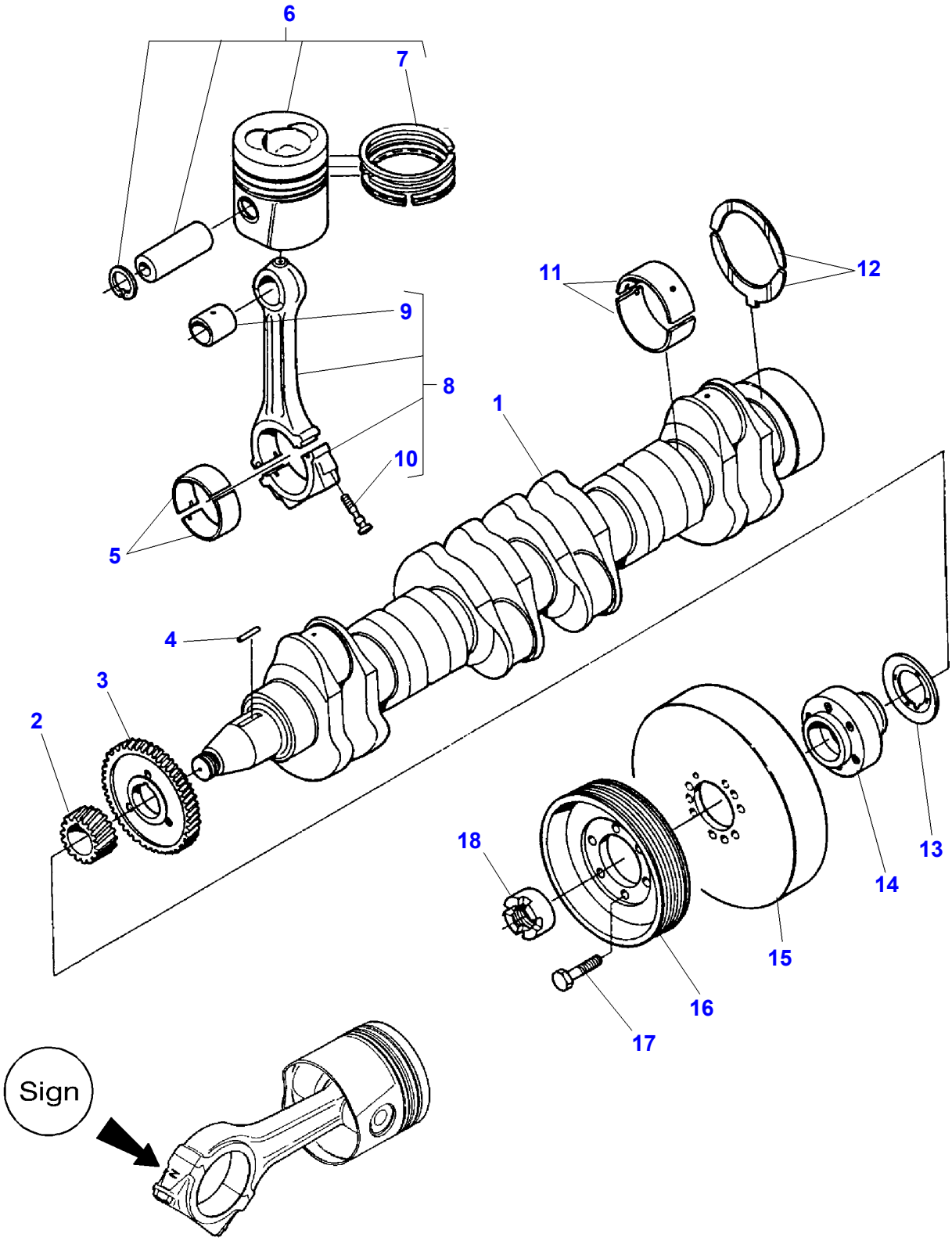

D-HB05-008-A

https://truckmanualshub.com/

Item	Part Number	Qty	Description	Comments
1	V836855910	1	Crankshaft	
2	V836855559	1	Gear	
3	V836855558	1	Gear	
4	V836855525	1	Key	
5	V836336302	6	Bearing	STANDARD
	V836338650	X	Bearing	Diameter 72,731MM 72,750MM
	V836338651	X	Bearing	Diameter 72,481MM 72,500MM
	V836338652	X	Bearing	Diameter 71,981MM 72,000MM
	V836338653	X	Bearing	Diameter 71,481MM 71,500MM
6	V836840886	6	Piston	
7	V836840887	1	Kit, Piston Ring	(6)
8	V836864101	X	Conrod	2230-2249g E
	V836864102	X	Conrod	2250-2269g F
	V836864103	X	Conrod	2270-2289g G
	V836864104	X	Conrod	2290-2309g H
	V836864105	X	Conrod	2310-2329g I
	V836864106	X	Conrod	2330-2349g J
	V836864107	X	Conrod	2350-2369g K
9	V836864288	6	Bush	(8)
	V836338606	X	Bush	(8) Diameter +0,5mm
10	V836864141	12	Screw	(8)
11	V836840944	7	Main Bearing	STANDARD
	V836840978	X	Main Bearing	Diameter 89,735MM 89,770MM
	V836840979	X	Main Bearing	Diameter 89,485MM 89,520MM
	V836840980	X	Main Bearing	Diameter 88,985MM 89,020MM
	V836840981	X	Main Bearing	Diameter 88,485MM 88,520MM
12	V836840945	2	Thrust Washer	STANDARD
	V836840982	X	Thrust Washer	0,1MM
	V836840983	X	Thrust Washer	0,2MM
13	V836855637	1	Ring	
14	V836855641	1	Hub	
15	V836840882	1	Shock Absorber	
16	V836855690	1	Pulley	From Serial or Engine Number K 9565
17	V528902230	6	Screw	
18	V836322221	1	Nut	

https://truckmanualshub.com/

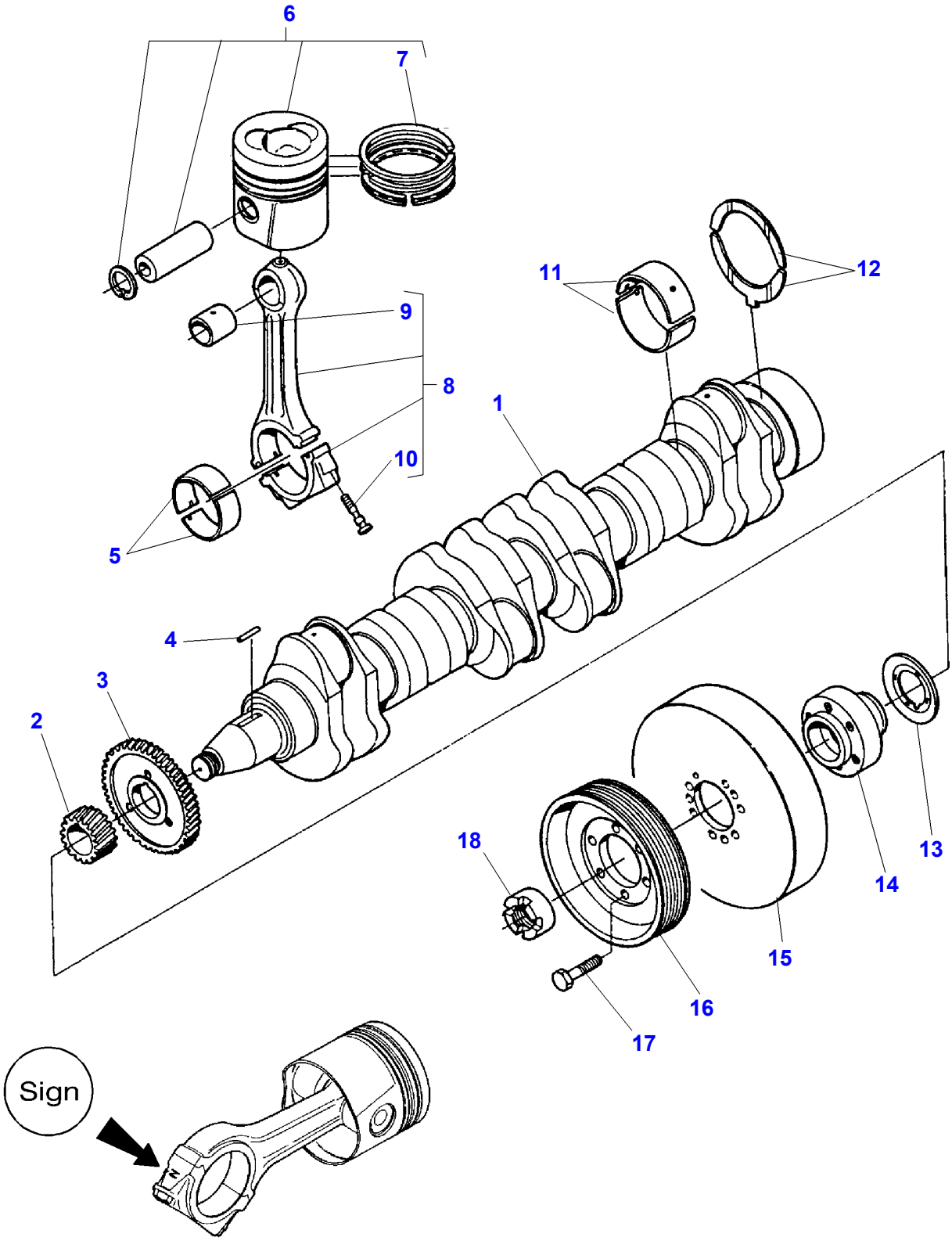

D-HB05-009-A

https://truckmanualshub.com/

Item	Part Number	Qty	Description	Comments
1	V836855910	1	Crankshaft	
2	V836855559	1	Gear	
3	V836855558	1	Gear	
4	V836855525	1	Key	
5	V836336302	6	Bearing	STANDARD
	V836338650	X	Bearing	Diameter 72,731MM 72,750MM
	V836338651	X	Bearing	Diameter 72,481MM 72,500MM
	V836338652	X	Bearing	Diameter 71,981MM 72,000MM
	V836338653	X	Bearing	Diameter 71,481MM 71,500MM
6	V836866182	6	Piston	
7	V836840887	6	Kit, Piston Ring	(6)
8	V836864101	X	Conrod	2230-2249g E
	V836864102	X	Conrod	2250-2269g F
	V836864103	X	Conrod	2270-2289g G
	V836864104	X	Conrod	2290-2309g H
	V836864105	X	Conrod	2310-2329g I
	V836864106	X	Conrod	2330-2349g J
	V836864107	X	Conrod	2350-2369g K
9	V836864288	6	Bush	(8)
	V836338606	X	Bush	(8) Diameter +0,5mm
10	V836864141	12	Screw	(8)
11	V836840944	7	Main Bearing	STANDARD
	V836840978	X	Main Bearing	Diameter 89,735MM 89,770MM
	V836840979	X	Main Bearing	Diameter 89,485MM 89,520MM
	V836840980	X	Main Bearing	Diameter 88,985MM 89,020MM
	V836840981	X	Main Bearing	Diameter 88,485MM 88,520MM
12	V836840945	2	Thrust Washer	STANDARD
	V836840982	X	Thrust Washer	0,1MM
	V836840983	X	Thrust Washer	0,2MM
13	V836855637	1	Ring	
14	V836855641	1	Hub	
15	V836840882	1	Shock Absorber	
16	V836855690	1	Pulley	
17	V528902230	6	Screw	
18	V836322221	1	Nut	

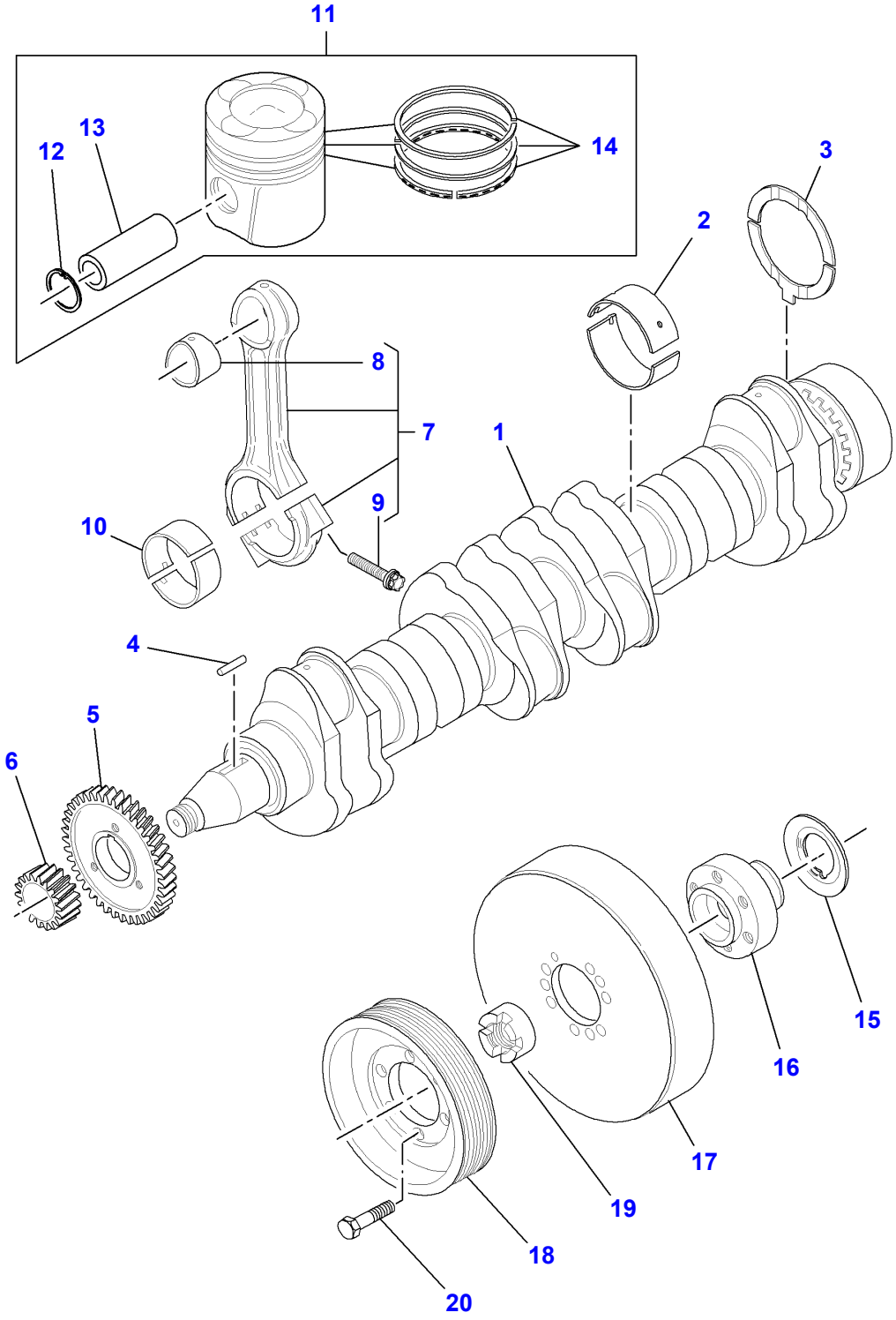

D-HB05-011-A

https://truckmanualshub.com/

Item	Part Number	Qty	Description	Comments
1	V837069088	1	Crankshaft	
2	V836840944	7	Main Bearing	STANDARD
	V836840978	X	Main Bearing	Diameter 89,735 MM 89,770 MM
	V836840979	X	Main Bearing	Diameter 89,485 MM 89,520 MM
	V836840980	X	Main Bearing	Diameter 88,985 MM 89,020 MM
	V836840981	X	Main Bearing	Diameter 88,485 MM 88,520 MM
3	V836840945	2	Thrust Washer	STANDARD
	V836840982	X	Thrust Washer	0,10 MM
	V836840983	X	Thrust Washer	0,20 MM
4	V836855525	1	Key	
5	V836855558	1	Gear	
6	V837069060	1	Gear	
7	V836340948	6	Conrod	
	V836864101	X	Conrod	2230-2249g E
	V836864102	X	Conrod	2250-2269g F
	V836864103	X	Conrod	2270-2289g G
	V836864104	X	Conrod	2290-2309g H
	V836864105	X	Conrod	2310-2329g I
	V836864106	X	Conrod	2330-2349g J
	V836864107	X	Conrod	2350-2369g K
8	V836864288	6	Bush	(7)
	V836338606	X	Bush	Diameter + 0,5 MM
9	V836864141	12	Screw	(7)
10	V836336302	6	Bearing	STANDARD Up to Serial or Engine Number U1001
	V837062996	6	Bearing	STANDARD From Serial or Engine Number U1001
	V836338650	X	Bearing	Diameter 72,731 MM 72,750 MM
	V836338651	X	Bearing	Diameter 72,481 MM 72,500 MM
	V836338652	X	Bearing	Diameter 71,981 MM 72,000 MM
	V836338653	X	Bearing	Diameter 71,481 MM 71,500 MM
11	V837070185	6	Piston	STANDARD Up to Serial or Engine Number U1001
	V837073230	6	Piston	STANDARD From Serial or Engine Number U1001
12		12	Circlip	(11) Not serviced,order REF. 11
13		6	Clevis Pin	(11) Not serviced,order REF. 11
14	V836840887	6	Kit, Piston Ring	(11)
15	V836855637	1	Ring	
16	V836855641	1	Hub	
17	V836840882	1	Shock Absorber	M12 X 40
18	V836855690	1	Pulley	
19	V836322221	1	Nut	
20	V528902230	6	Screw	M12 X 40

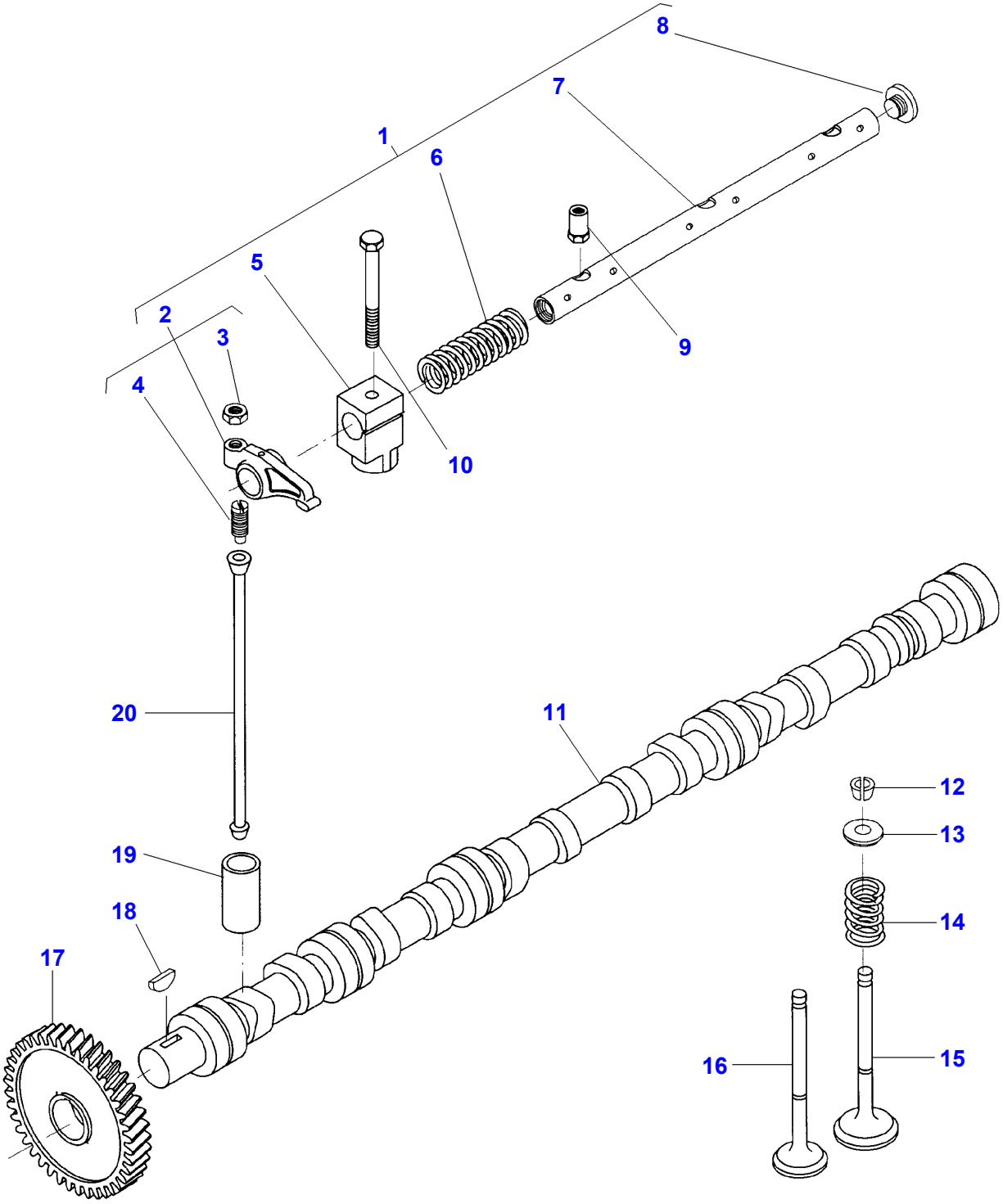

D-HB06-006-B

https://truckmanualshub.com/

Item	Part Number	Qty	Description	Comments
1	V836667043	2	Rocker Shaft	Repairs and replaces V836666610
2	V836666608	12	Rocker	(1)
3	V512861000	12	Nut	(2)
4	V836655866	12	Adjusting Screw	(2)
5	V836655869	6	Bracket	(1) 7278
	V836666609	6	Bracket	(1) /7274
6	V836655884	4	Spring	(1)
7	V836655870	2	Shaft	(1)
8	V836655899	4	Plug	(1)
9	V836655406	4	Nut	
10	V529801910	2	Bolt	
11	V836862528	1	Camshaft	Up to Serial or Engine Number L17960 7278
	V836324661	1	Bush	Diameter + 0,4 mm
	V836862528	1	Camshaft	From Serial or Engine Number L17961 7278 Replace and repair. Old not interchangeable with new V836866054
	V836862528	1	Camshaft	7274 Replace and repair. Old not interchangeable with new V836866054
12	V836646382	24	Cotter	
13	V836646381	12	Cup	
	V836652269		Ring	Diameter + 0,2 mm Exhaust Echapp.
	V836855347		Ring	Diameter + 0,2 mm Inlet Admiss.
14	V836646380	12	Spring	
15	V836646356	6	Inlet Valve	
16	V836646357	6	Exhaust Valve	
17	V836855568	1	Gear	
18	V603305760	1	Key	
19	V836014264	12	Tappet	
20	V836355872	12	Rod	

https://truckmanualshub.com/

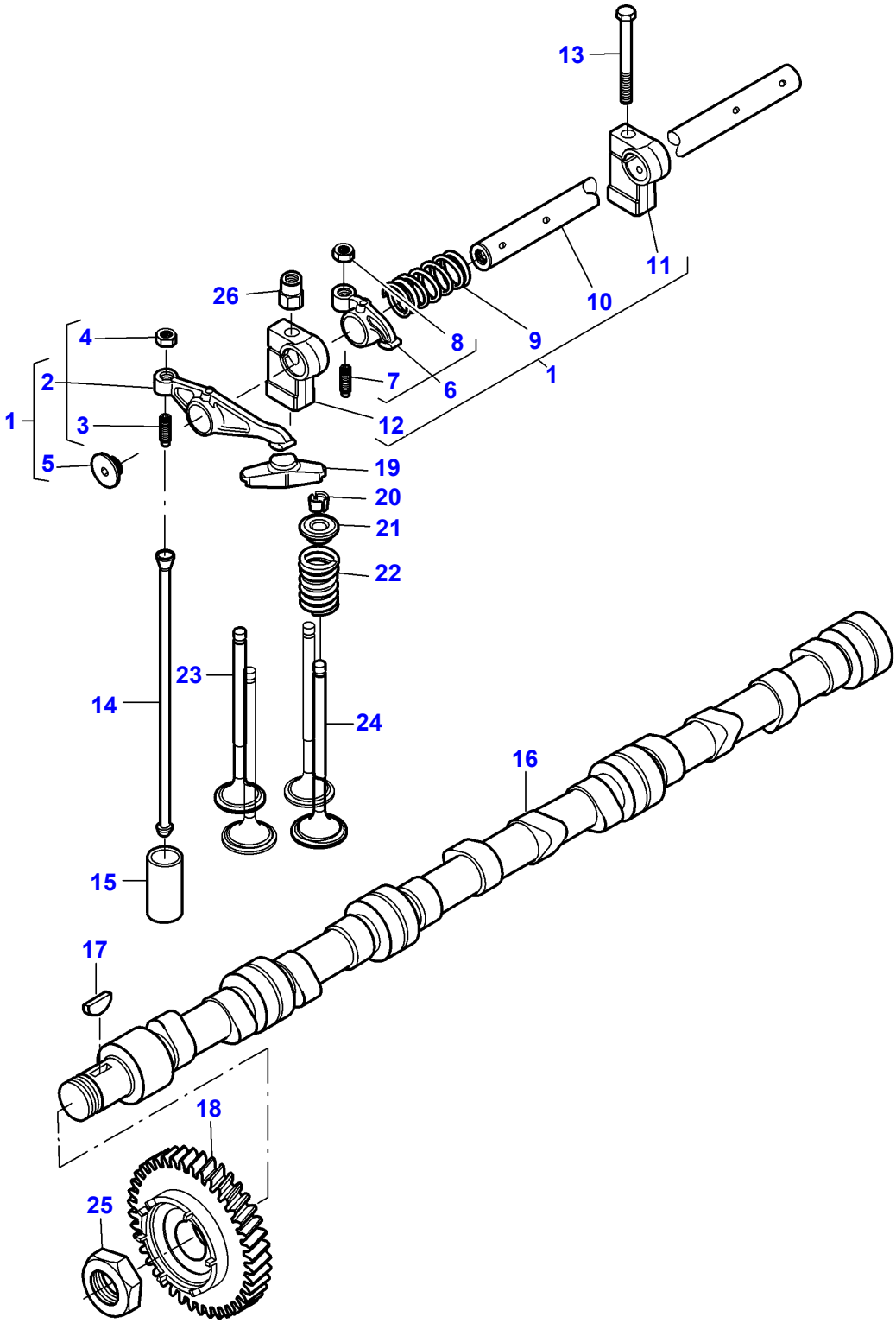

D-HB06-007-A

https://truckmanualshub.com/

Item	Part Number	Qty	Description	Comments
1	V837069016	1	Rocker Shaft	
2	V837069011	1	Rocker	[A]
				(1)
3	V837069023	6	Adjusting Screw	(2)
4	V512861000	6	Nut	(2)
5	V837069020	4	Plug	(1)
6	V837069013	6	Rocker	[B]
				(1)
7	V837069023	6	Adjusting Screw	(6)
8	V512861000	6	Nut	(6)
9	V837069019	4	Spring	(1)
10	V837069015	2	Rocker Shaft	(1)
11	V837069018	2	Bracket	(1)
12	V837069017	4	Bracket	(1)
13	V529801920	2	Screw	M10 X 85
14	V837069014	12	Pushrod	
15	V836014264	12	Tappet	
16	V837070148	1	Camshaft	
17	V603305760	1	Key	
18	V837070036	1	Gear	
19	V837073089	12	Guide	
20	V837064910	48	Cotter	
21	V837069004	24	Spring Seat	
22	V837069005	24	Spring	
23	V837069002	12	Exhaust Valve	
24	V837069003	12	Inlet Valve	
25	V837069085	1	Nut	
26	V836655406	4	Nut	

FOOTNOTE [A] FOR VALVE INLET
FOOTNOTE [B] FOR VALVE EXHAUST

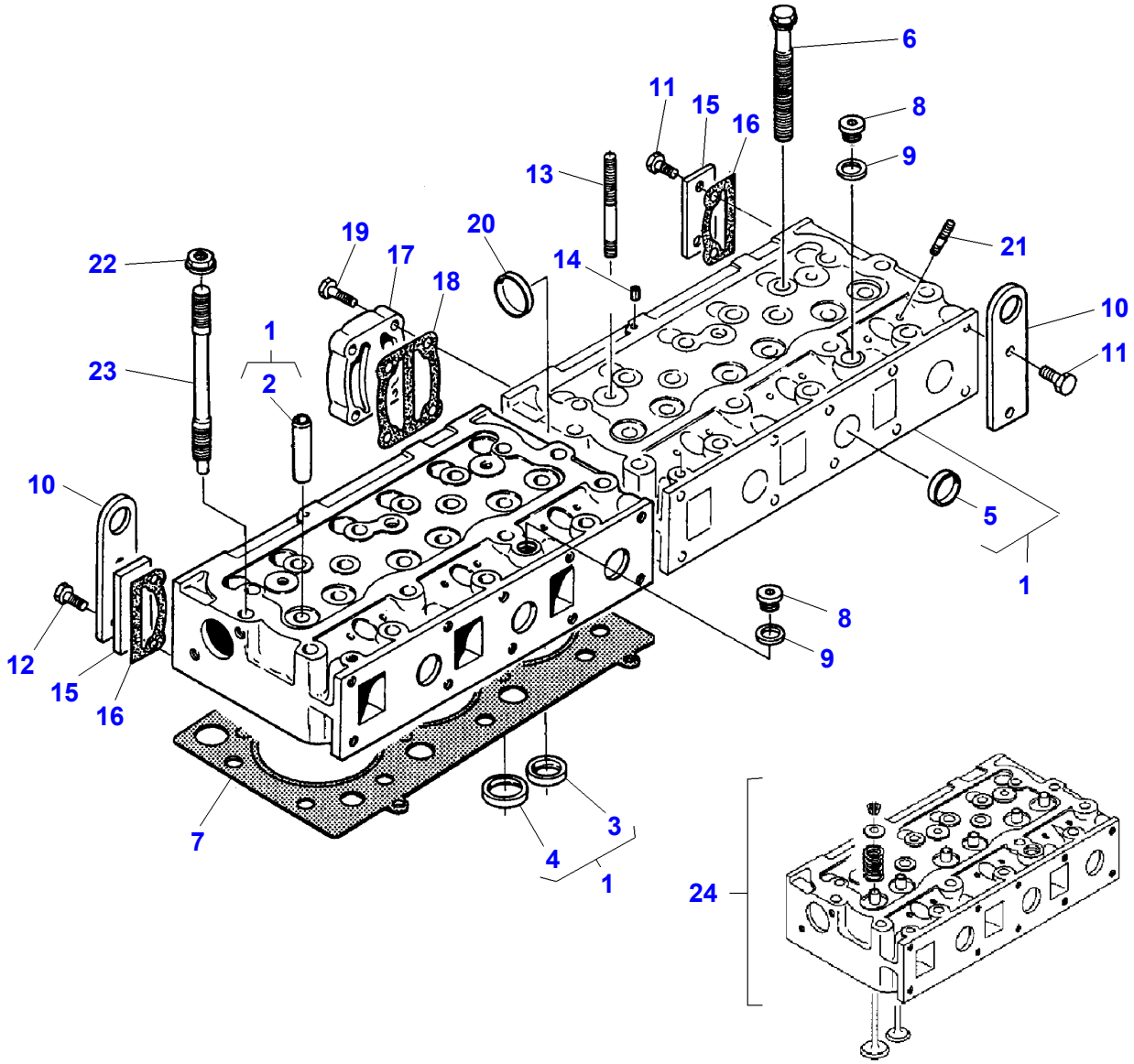
6
11
15
16
8
9
13
20
19
17
18
14
21
22
1
2
23
10
11
10
5
1
8
9
12
15
16
7
3
4
1
24

https://truckmanualshub.com/

Item	Part Number	Qty	Description	Comments
1	V836855381	2	Cylinder Head	
2	V836647601	12	Guide	(1)
3	V836647600	6	Valve Seat	(1) EXHAUST
4	V836647936	6	Valve Seat	(1) INLET
5	V836647942	10	Plug	(1)
6	V836859104	32	Screw	
7	V837070290	2	Head Gasket	[A] Repairs and replaces V836664155 Repairs and replaces V836666302
8	V640325018	1	Plug	
9	V615881822	1	Seal	[A]
10	V836859722	2	Plate	Replace and repair. Old not interchangeable with new V836855349
11	V528801800	4	Bolt	M10X25
12	V528801820	2	Screw	M10X35
13	V546801900	4	Stud	M10X75
14	V595959140	2	Pin	
15	V836855350	2	Plate	
16	V836837391	2	Gasket	[A] Repairs and replaces v836855417 Replace and repair. Old not interchangeable with new V836866215
17	V836855348	1	Connector	
18	V836867390	1	Gasket	[A] Repairs and replaces v836855418 Replace and repair. Old not interchangeable with new V836866214
19	V528901830	4	Screw	
20	V640016045	1	Plug	
21	V546901435	21	Stud	M8X40
22	V836859110	2	Nut	
23	V836859109	2	Stud	
24	V836640897	2	Kit, Cyl. Head	

FOOTNOTE [A] INCLUDED IN V836840993

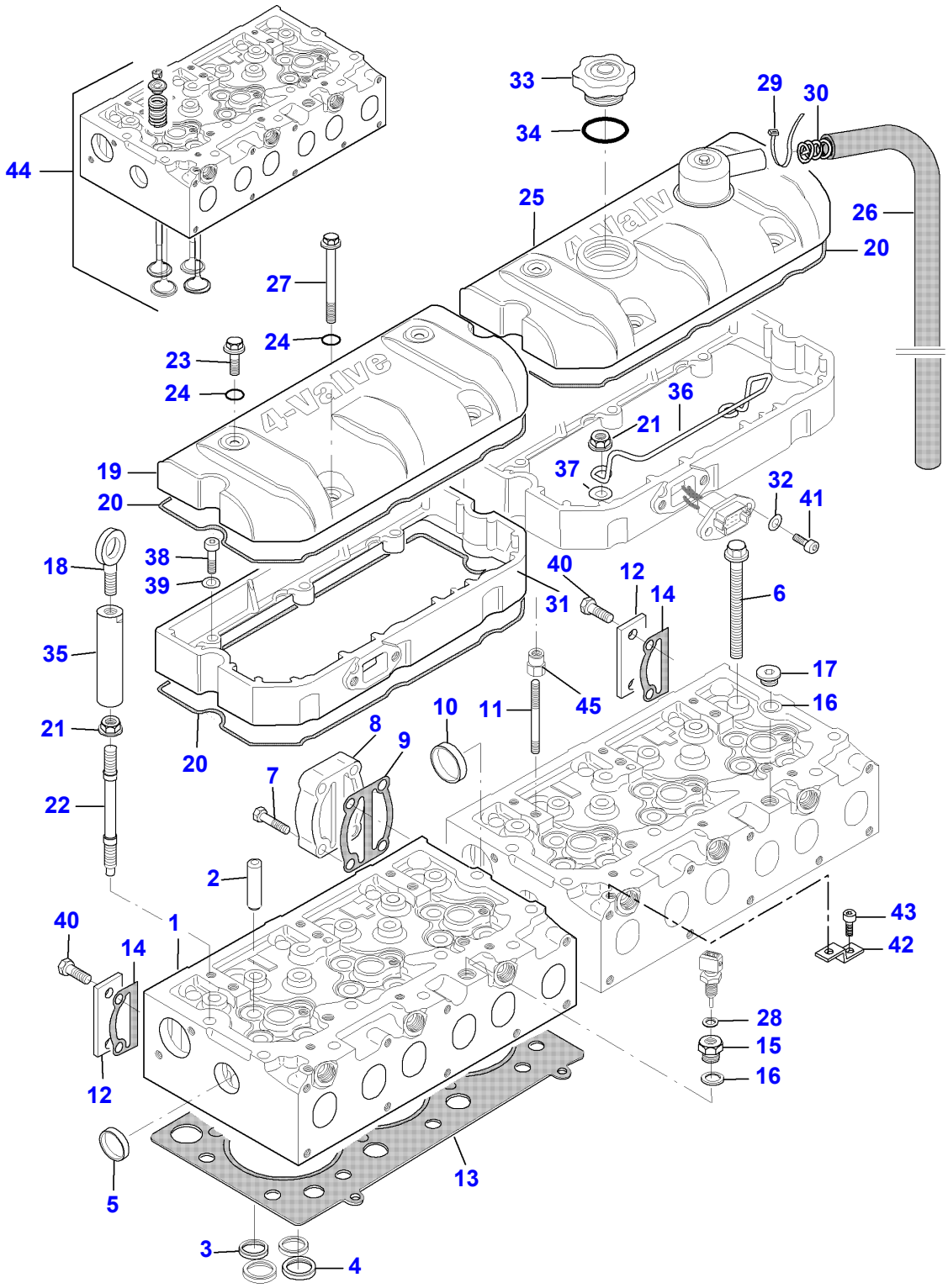
44
33
34
29
30
25
26
20
27
24
23
24
36
21
37
19
20
32
41
18
38
39
40
31
12
14
6
35
17
16
21
10
11
45
8
9
7
20
22
2
40
1
14
43
42
28
15
16
12
5
13
3
4

D-HB07-005-A

https://truckmanualshub.com/

Item	Part Number	Qty	Description	Comments
1	V837069001	2	Cylinder Head	
2	V837064906	24	Valve Guide	(1)
3	V837064907	12	Valve Seat	(1) EXHAUST
4	V837064908	12	Valve Seat	(1) INLET
5	V836647942	4	Plug	(1)
6	V837069025	27	Screw	
7	V528801830	4	Screw	M10X40
8	V836855348	1	Connector	
9	V836867390	1	Gasket	[A]
10	V640016045	1	Plug	
11	V546801900	4	Stud	M10X75
12	V836855350	2	Plate	
13	V837070290	2	Head Gasket	[A]
14	V836867753	2	Gasket	[A] Repairs and replaces V836867391
15	V836119643	1	Plug	
16	V615881822	2	Seal	[A]
17	V640325018	1	Plug	
18	V836640752	2	Shackle	
19	V837069022	1	Cover	
20	V837069024	4	Gasket	[A]
21	V836859110	9	Nut	
22	V836859109	7	Stud	
23	V540801780	4	Bolt	M10X20
24	V614901030	8	O Ring	[A]
25	V837070194	1	Cover	
26	V837070346	1	Pipe	Length 1150MM
27	V540801910	4	Screw	M10X80
28	**V615881418**	1	Seal	[A]
29	V835329746	1	Cable Tie	
30	V837070343	1	Spring	
31	V837069021	2	Frame	
32	V500150842	4	Washer	
33	V836338733	1	Plug	
34	V614604740	1	O Ring	[A]
35	V836867567	2	Nut	M12/M16
36	V837069026	1	Bracket	
37	V500951200	4	Washer	
38	V581804630	6	Screw	M8X30
39	V500950800	6	Lock Washer	
40	V528801800	4	Bolt	M10X25
41	V581804602	4	Screw	M8X20
42	V836747849	1	Bracket	
43	V581804582	1	Screw	M8X16
44	V837062565	2	Cylinder Head	
45		X	Nut	See Page - Reference Number 008-0015

FOOTNOTE [A] INCLUDED IN KIT V837062627

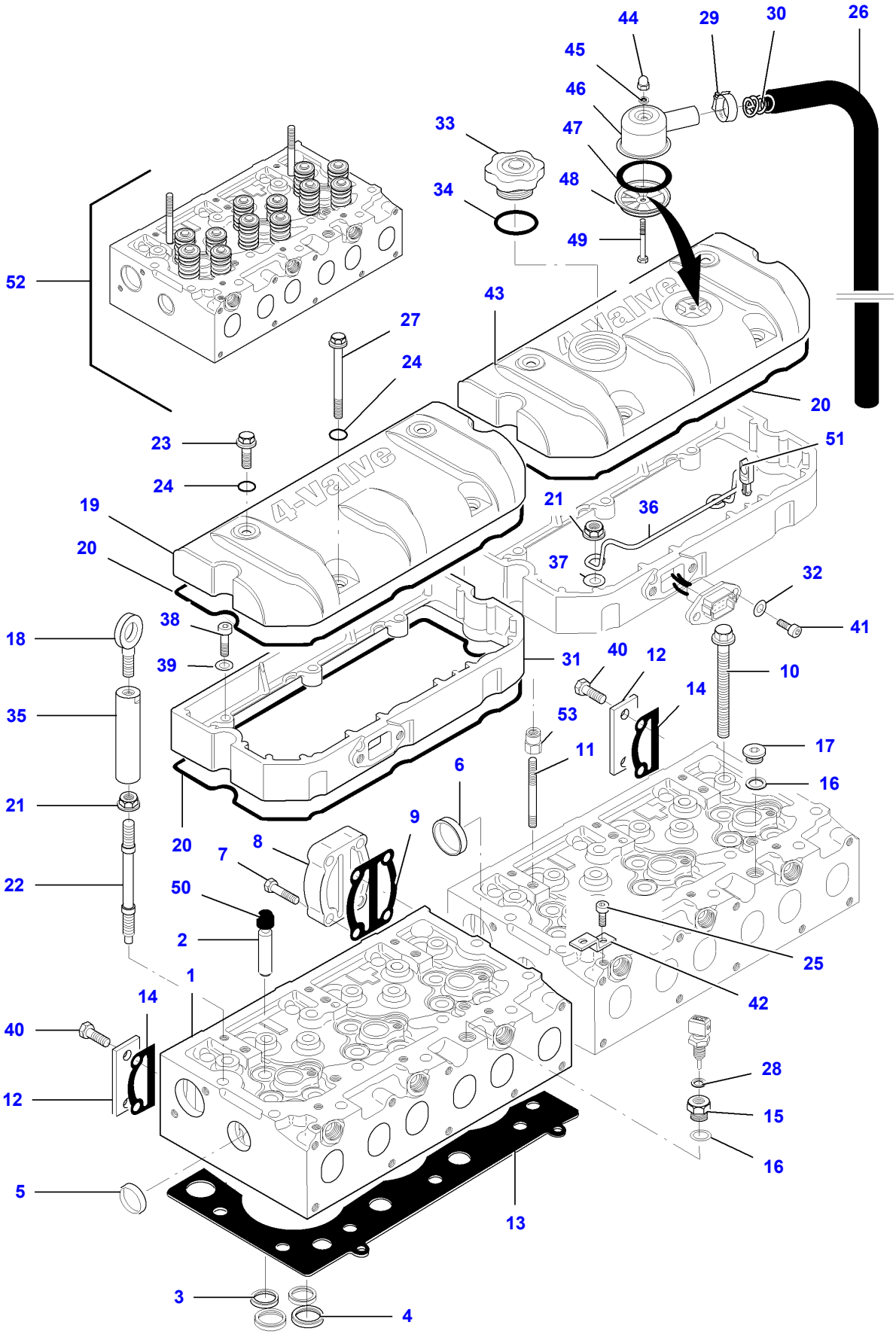
44
29
30
26
45
46
47
33
48
34
49
52
43
27
24
20
23
51
24
19
21
36
20
37
32
41
38
18
39
31
40
12
10
14
35
53
17
11
6
16
21
9
20
8
7
22
50
2
25
1
42
14
40
28
12
15
16
5
13
3
4

https://truckmanualshub.com/

Item	Part Number	Qty	Description	Comments
1		2	Cylinder Head	
2	V837073174	24	Valve Guide	(1)
3	V837064907	12	Valve Seat	(1) EXHAUST
4	V837064908	12	Valve Seat	(1) INLET
5	V836647942	4	Plug	(1)
6	V640016045	1	Plug	(1)
7	V528801830	4	Screw	M10X40
8	V836855348	1	Connector	
9	V836867752	1	Gasket	[A]
10	V837069025	31	Screw	From Serial or Engine Number U1001
11	V546801900	4	Stud	M10X75
12	V836855350	2	Plate	
13	V837070290	2	Head Gasket	[A]
14	V836867753	2	Gasket	[A] Repairs and replaces V836867391
15	V836119643	1	Plug	
16	V615881822	2	Seal	[A]
17	V640325018	1	Plug	
18	V836640752	2	Shackle	
19	V837069022	1	Cover	
20	**V837067881**	4	Gasket	[A]
21	V836859110	3	Nut	From Serial or Engine Number U1001
22	V836859109	3	Stud	
23	V540801780	4	Bolt	M10X20
24	V614901030	8	O Ring	[A]
25	V581804582	1	Screw	M8X16
26	V837070346	1	Pipe	Length 1150MM
27	V540801910	4	Screw	M10X80
28	**V615881418**	1	Seal	[A]
29	V602078532	1	Hose Clip	
30	V837070343	1	Spring	
31	V837069021	2	Frame	
32	V500150842	4	Washer	
33	V836338733	1	Plug	M50X2
	V836659968	1	Cap	M50X4
34	V614704850	1	O Ring	[A]
35	V836867567	2	Nut	M12/M16
36	V837069026	1	Bracket	Up to Serial or Engine Number U1001
37	V500951200	4	Washer	Up to Serial or Engine Number U1001
38	V581804630	6	Screw	M8X30
39	V500950800	6	Lock Washer	
40	V528801800	4	Bolt	M10X25
41	V581804602	4	Screw	M8X20
42	V836747849	1	Bracket	
43	V837070448	1	Cover	M8X16
44	V519600602	1	Nut	(43) M6
45	V836667508	1	Seal	(43)
46	V837070442	1	Breather	(43)
47	V836667459	1	Gasket	(43)
48	V837070443	1	Cup	(43)
49	V528801172	1	Screw	(43) M6X60
50	V837073165	24	Gasket	[A]
51	V837073227	4	Bracket	From Serial or Engine Number U1001
52	V837073233	1	Cylinder Head	FRONT
	V837073234	1	Cylinder Head	REAR
53		1	Nut	See Page - Reference Number 008-0015

FOOTNOTE [A] INCLUDED IN KIT V837062627

https://truckmanualshub.com/

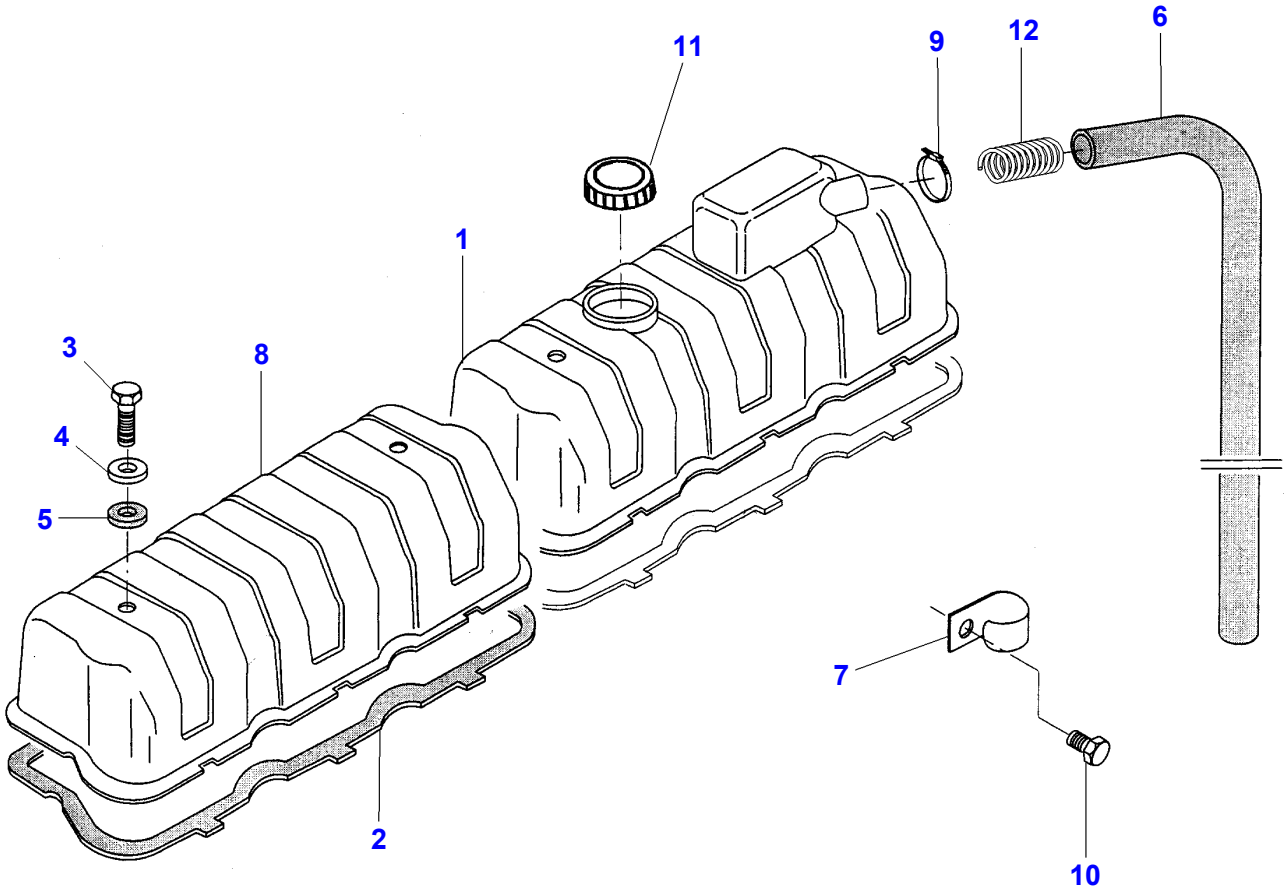

D-HB08-007-C

https://truckmanualshub.com/

Item	Part Number	Qty	Description	Comments
1	V836859626	1	Valve Cover	
2	**V836646360**	2	Gasket	[A]
3	V528801780	4	Screw	M10X20
4	V836119855	4	Washer	
5	**V836012841**	4	Gasket	[A]
6	V836659529	1	Hose Flexible	
7	V836659539	1	Band	
8	V836846448	1	Valve Cover	
9	V651754720	1	Cable Tie	
10	V528801740	1	Screw	M10X10
11	V836659697	1	Cap	
12	V836859587	1	Spring	

FOOTNOTE [A] INCLUDED IN V836840993

https://truckmanualshub.com/

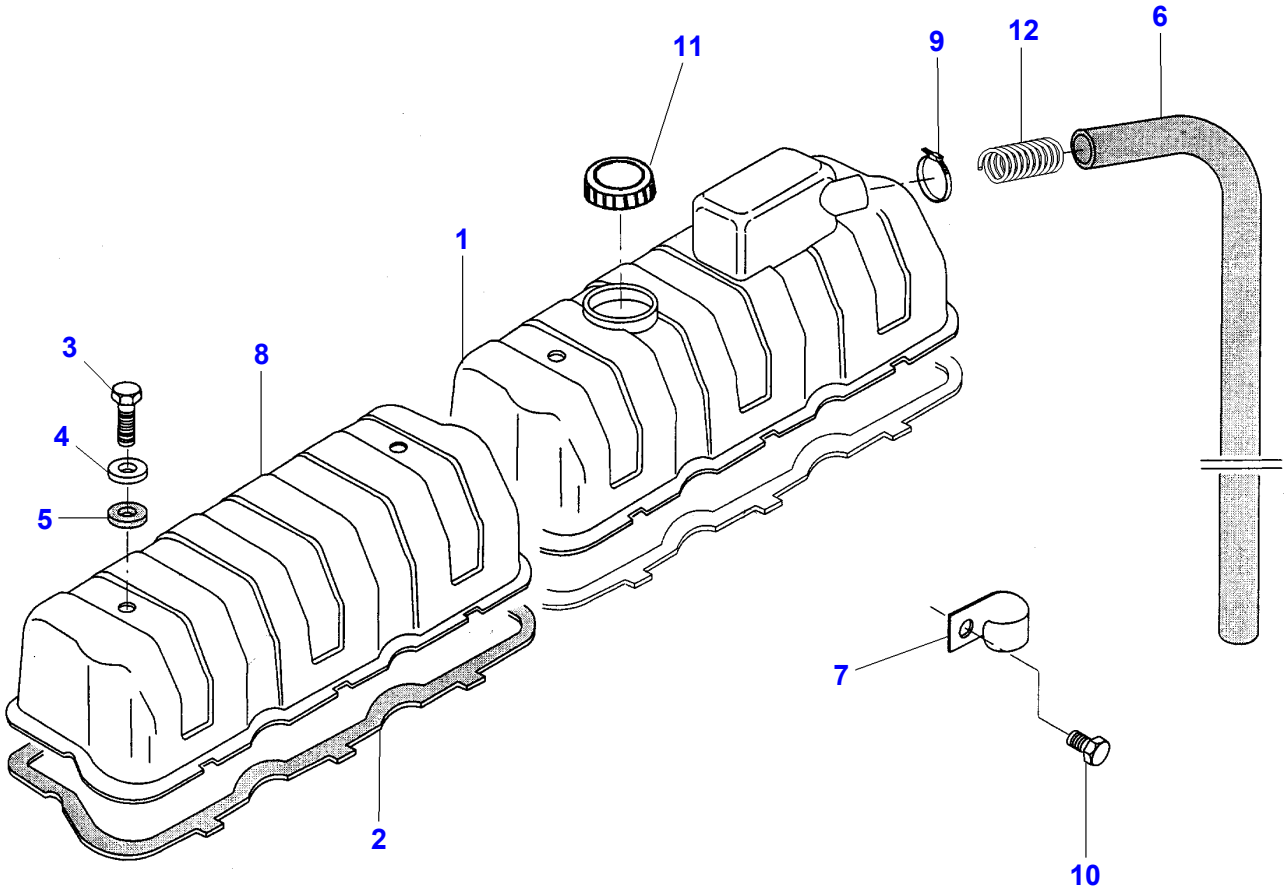

D-HB08-007-C

https://truckmanualshub.com/

Item	Part Number	Qty	Description	Comments
1	V836859626	1	Valve Cover	
2	**V836646360**	2	Gasket	[A]
3	V528801780	4	Screw	M10X20
4	V836119855	4	Washer	
5	**V836012841**	4	Gasket	[A]
6	V836659529	1	Hose Flexible	
7	V836659539	1	Band	
8	V836846448	1	Valve Cover	
9	V651754720	1	Cable Tie	
10	V528801740	1	Screw	M10X10
11	V836659697	1	Cap	
12	V836859587	1	Spring	

FOOTNOTE [A] INCLUDED IN V836840993

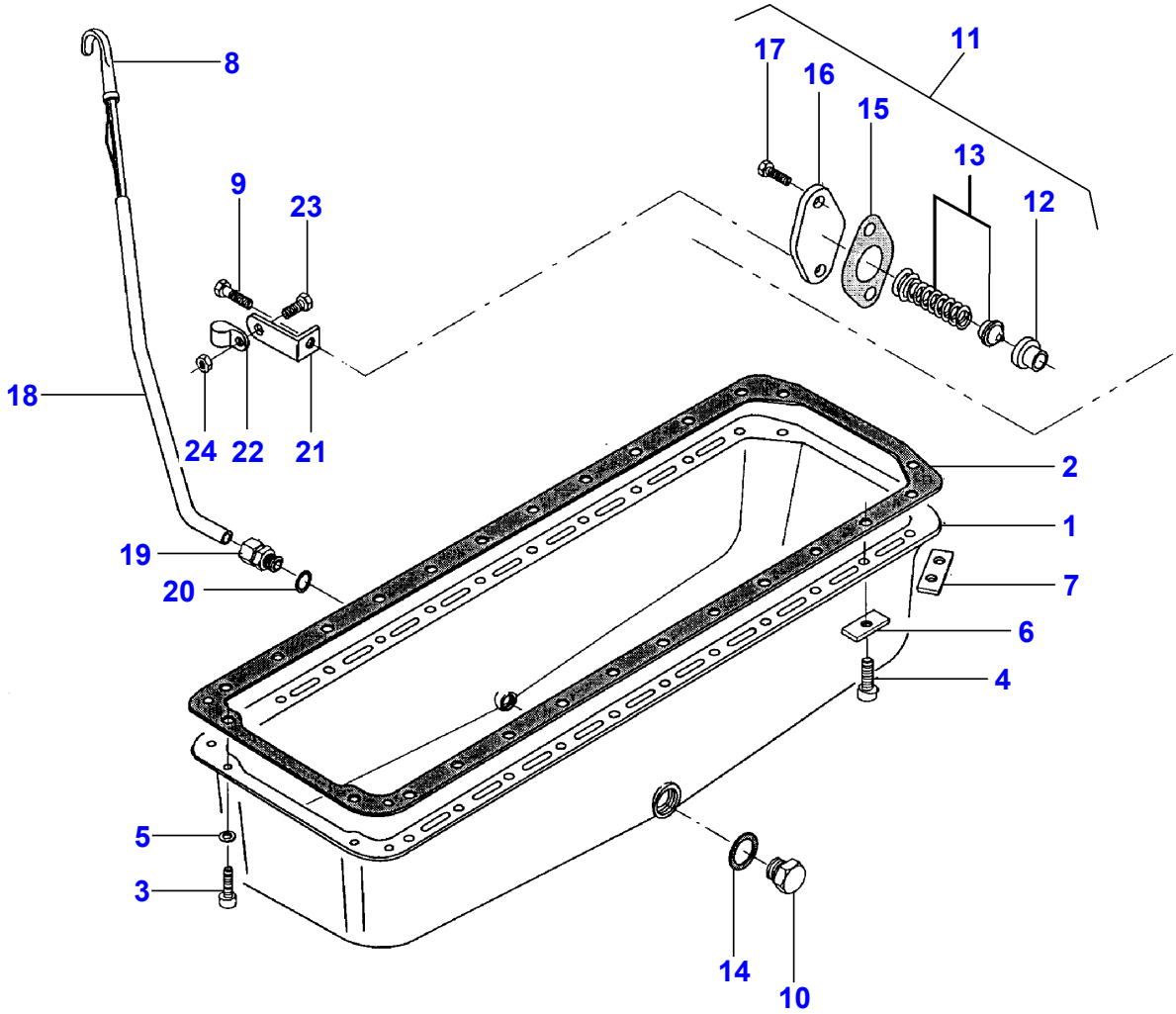

D-HB10-010-B

https://truckmanualshub.com/

Item	Part Number	Qty	Description	Comments
1	V836347308	1	Oil Sump	
2	V836322538	1	Gasket	
3	V581804600	4	Hex Socket Screw	
4	V581805000	24	Screw	
5	V500950800	4	Lock Washer	
6	V836859560	20	Washer	
7	V836859561	2	Washer	
8	V836346298	1	Dipstick	Up to Serial or Engine Number METAL
	V836867888	1	Oil Dipstick	From Serial or Engine Number PLASTIC RED
9	V529801430	1	Screw	
10	V640045022	1	Plug	
11	V836662130	1	Control Valve	
12	V836659521	1	Valve Seat	(11)
13	V836667650	1	Kit, Valve	(11)
14	**V615882227**	1	Gasket	
15	V836322190	1	Gasket	(11)
16	V836659524	1	Cover	(11)
17	V528801380	1	Bolt	(11)
18	V836859563	1	Pipe	Up to Serial or Engine Number WITH DIPSTICK V836346298
	V836867889	1	Pipe	From Serial or Engine Number WITH DIPSTICK V836867888
19	V641086012	1	Union	
20	V615881620	1	Seal	Up to Serial or Engine Number WITH DIPSTICK V836346298
	V615881622	1	Seal	From Serial or Engine Number WITH DIPSTICK V836867888
21	V836652081	1	Support	
22	V602060612	1	Fastener	
23	V528801380	1	Bolt	
24	V504800800	1	Nut	

https://truckmanualshub.com/

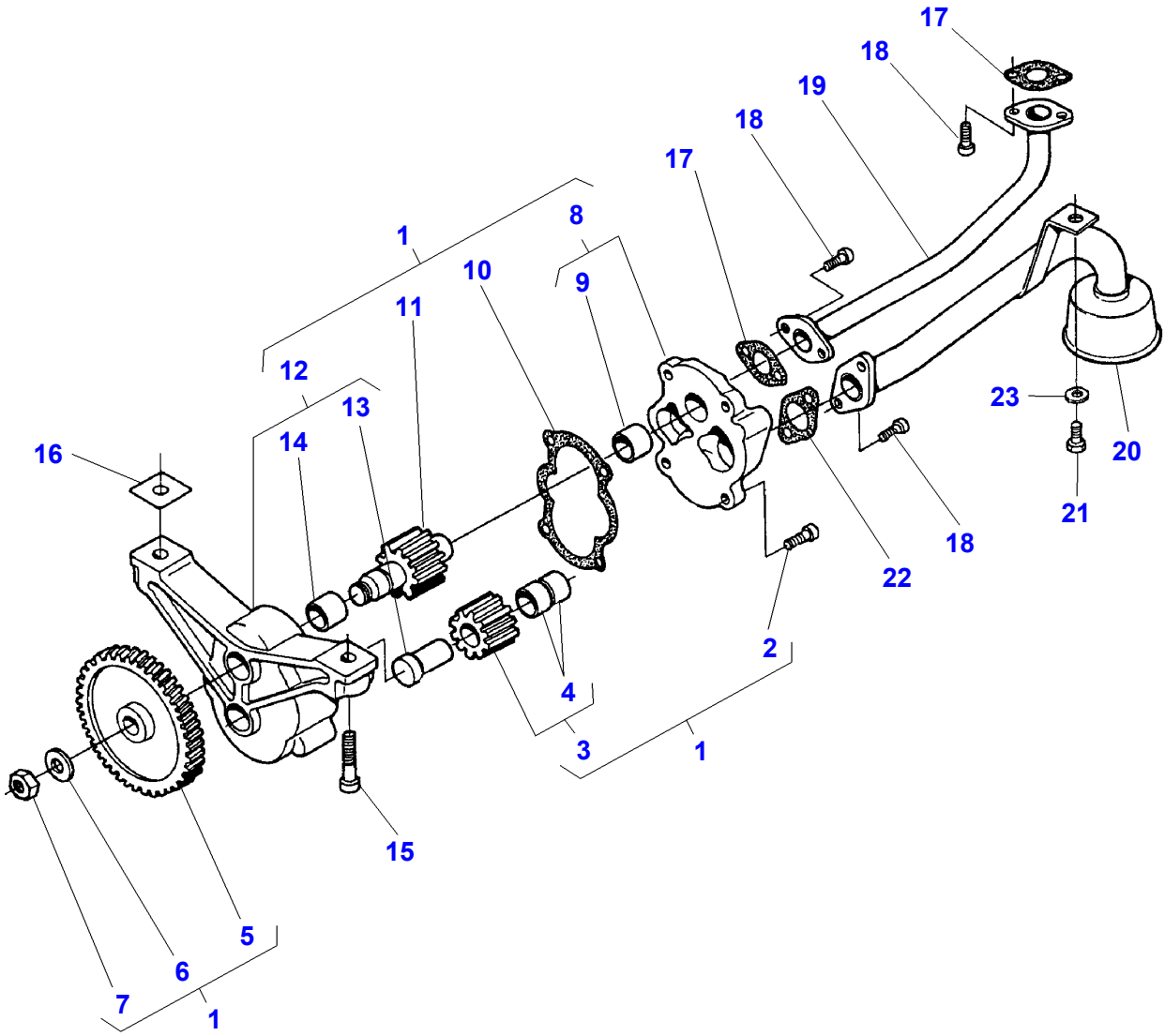

D-HB11-006-B

https://truckmanualshub.com/

Item	Part Number	Qty	Description	Comments
1	V836855300	1	Oil Pump	
2	V528801380	4	Bolt	(1) M8X20
3	V836338180	1	Gear	(1)
4	V836322909	2	Bush	(3)
5	V836338667	1	Gear	(1)
6	V836122910	1	Washer	(1)
7	V504861000	1	Nut	(1)
8	V836855297	1	Cover	(1)
9	V836322909	1	Bush	(8)
10	V836338188	1	Gasket	(1)
11	V836338182	1	Gear	(1)
12	V836338186	1	Frame	(1)
13	V836322906	1	Shaft	(12)
14	V836322909	1	Bush	(12)
15	V581805050	2	Screw	M10X40
16	V836007871	X	Shim	
17	V836008449	2	Gasket	
18	V581804600	6	Hex Socket Screw	M8X20
19	V836855673	1	Pipe	
20	V836855674	1	Strainer	
21	V528801360	1	Screw	M8X16
22	V836338201	1	Gasket	
23	V500150840	1	Washer	

https://truckmanualshub.com/

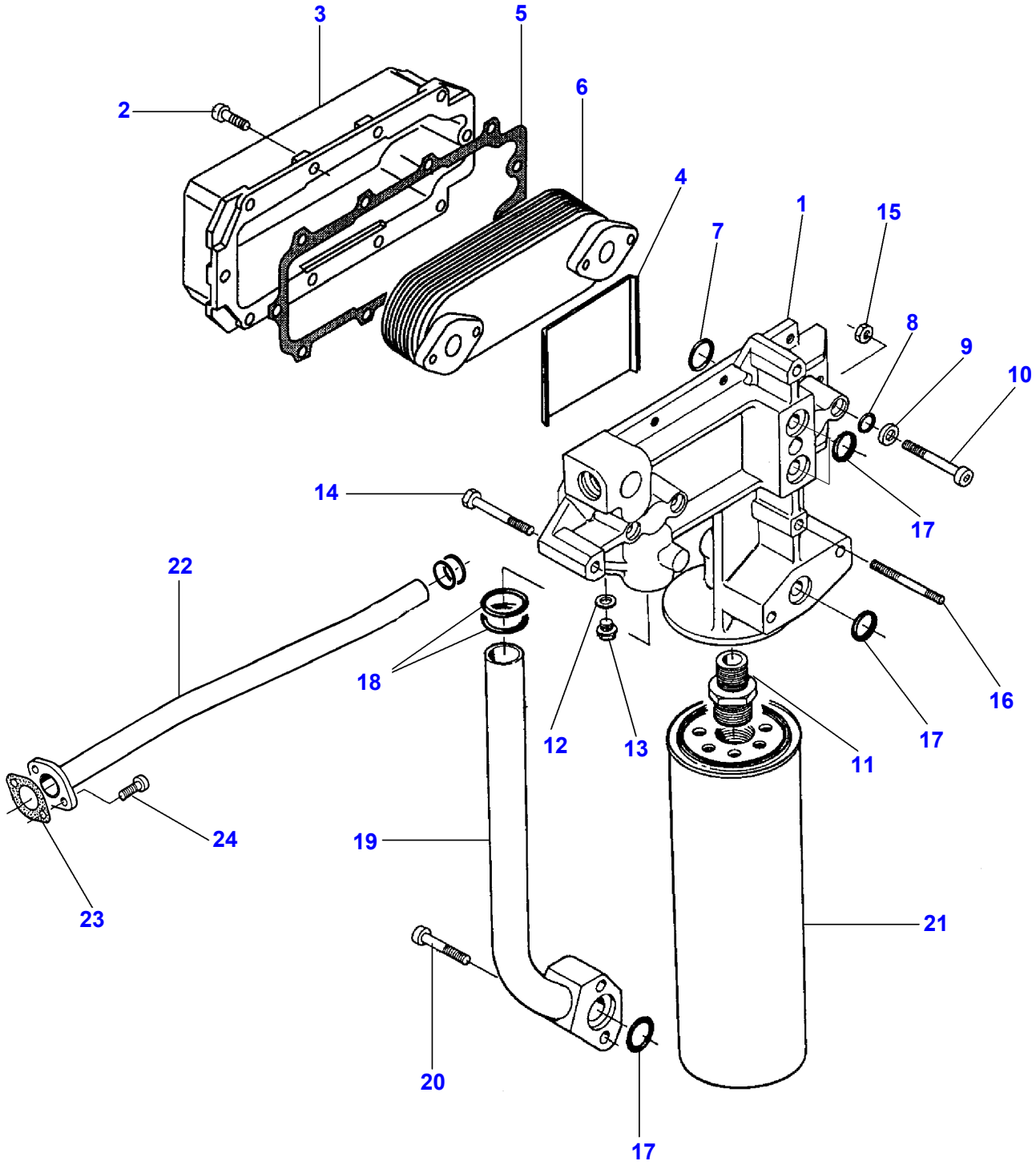

D-HB12-006-C

https://truckmanualshub.com/

Item	Part Number	Qty	Description	Comments
1	V836855522	1	Oil Cooler	
2	V581804620	10	Screw	(1) M8X25
3	V836855519	1	Housing	(1)
4	V836855521	1	Guide	(1)
5	V836855520	1	Gasket	(1)
6	**V836855484**	1	Element	(1)
7	V614602030	2	O Ring	(1)
8	V614600724	4	O Ring	(1)
9	V836855517	4	Washer	(1)
10	V581804690	4	Screw	(1) M8X60
11	V836338512	1	Union	(1)
12	V615881216	1	Gasket	(1)
13	V640305012	1	Plug	(1)
14	V581804690	4	Screw	M8X60
15	V504800800	1	Nut	M8
16	V546801490	1	Bolt	M8X70
17	V614602030	4	O Ring	
18	V614602430	2	O Ring	
19	V836855523	1	Pipe	
20	V581804650	2	Screw	M8X40
21	**V836336459**	1	Oil Filter	FOR ENG 645DBAEL
	V836362567	1	Oil Filter	From Serial or Engine Number ENG 84CTA-4V (36459)
22	V836855639	1	Pipe	
23	V836322190	1	Gasket	
24	V581804600	1	Hex Socket Screw	

https://truckmanualshub.com/

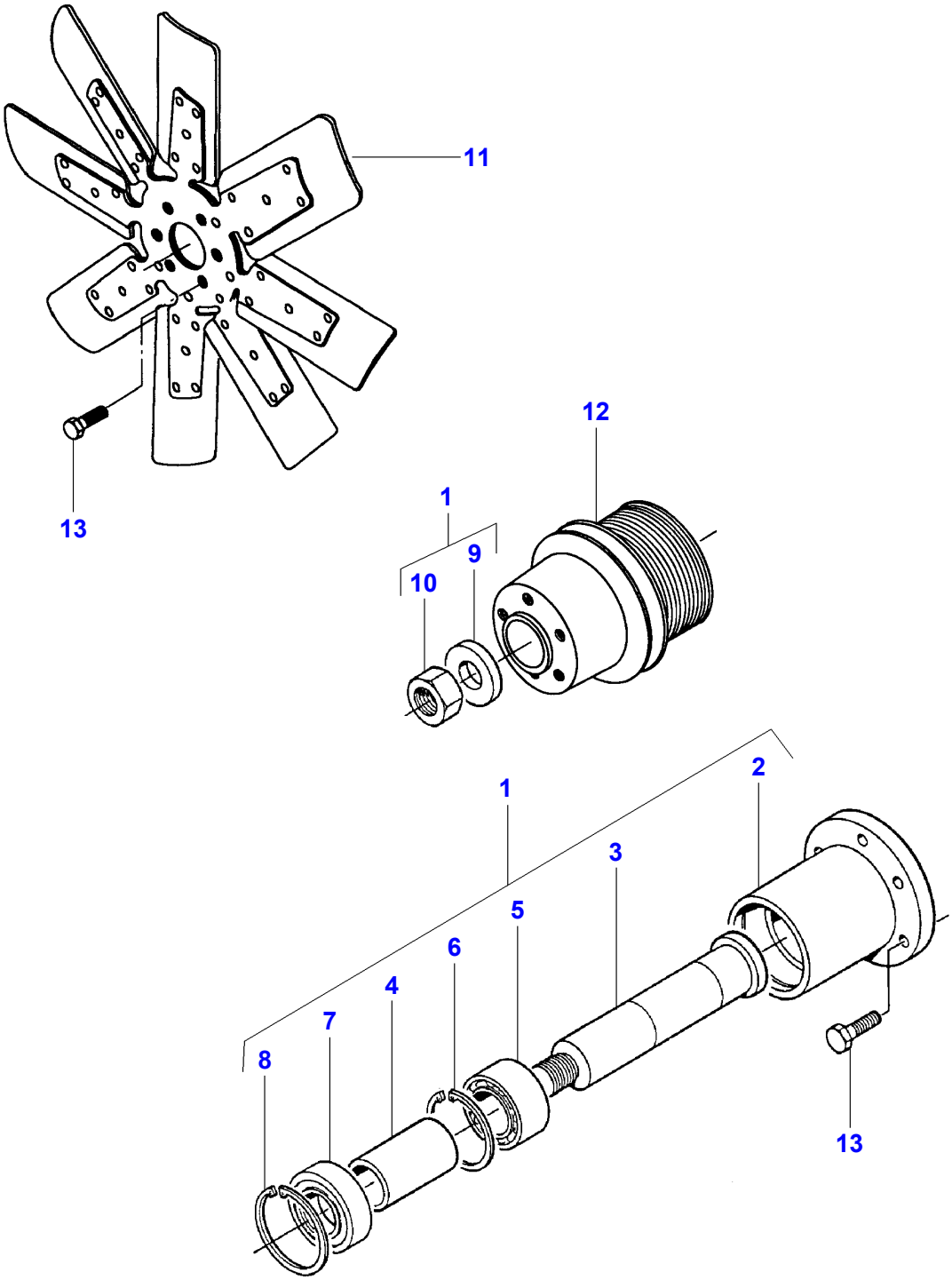

D-HB42-004-B

https://truckmanualshub.com/

Item	Part Number	Qty	Description	Comments
1	V836855762	1	Kit, Shaft	
2	V836855758	1	Hub	(1)
3	V836855755	1	Shaft	(1)
4	V836855757	1	Sleeve	(1)
5	V610032060	1	Bearing Assy	(1)
6	V617350062	1	Circlip	(1)
7	V610063064	1	Bear. 6306 Rs	(1)
8	V617330072	1	Circlip	(1)
9	V836855756	1	Washer	(1)
10	V504602002	1	Nut	(1)
11	V836867656	1	Fan	
12	**V836859288**	1	Belt	
13	V528801810	12	Screw	

https://truckmanualshub.com/

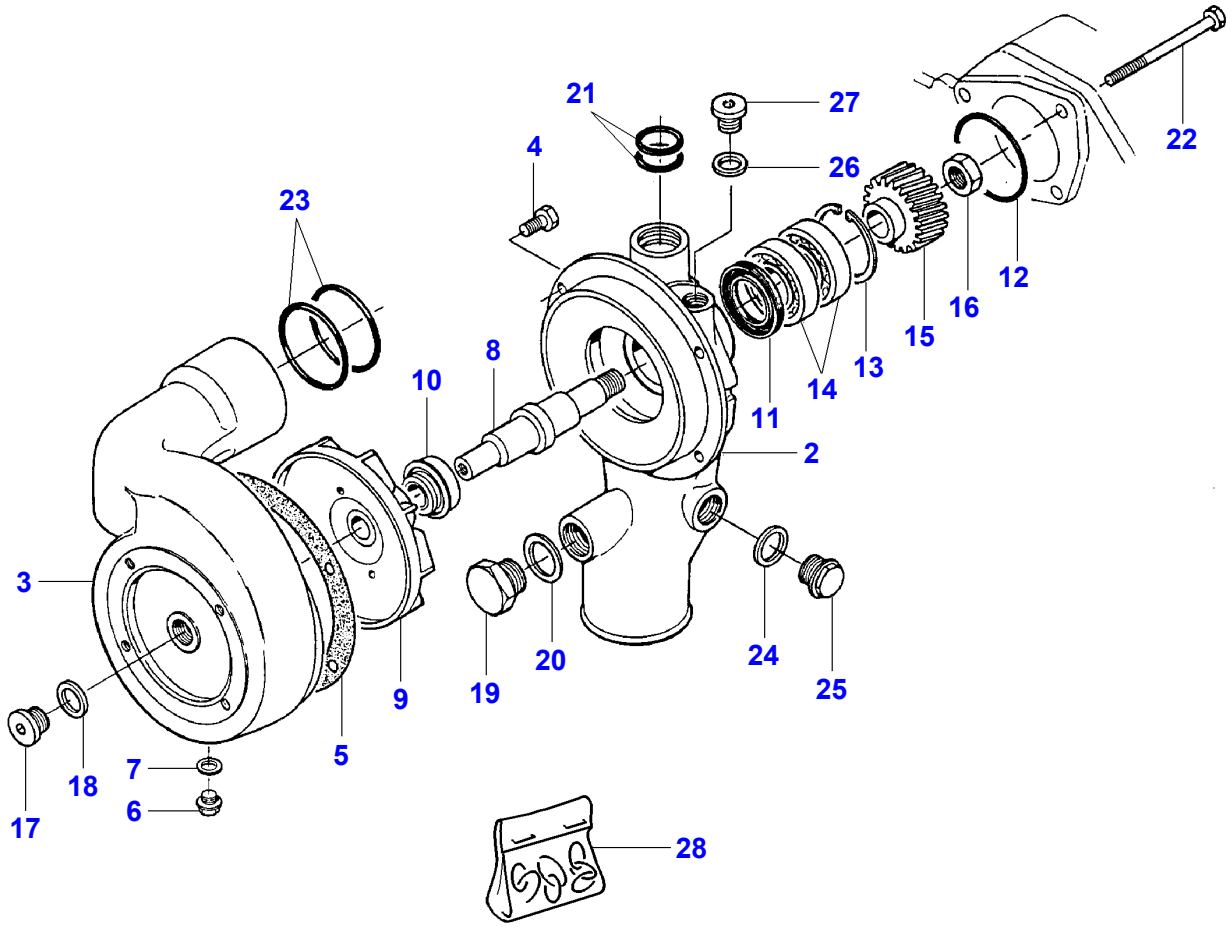

https://truckmanualshub.com/

Item	Part Number	Qty	Description	Comments
1	**V836859202**	1	Water Pump	[D]
2	V836859457	1	Frame	(1)
3	V836859168	1	Water Pump	(1)
4	V528801362	4	Bolt	(1)
5	V836855625	1	Gasket	[C]
				(1)
6	V640305012	1	Plug	(1)
7	V615881216	1	Gasket	[C]
				(1)
				Replace and repair. Old not interchangeable with new V615871216
8	V836859456	1	Shaft	[C]
				(1)
9	V836866735	1	Impeller	[C]
				(1)
				Repairs and replaces V836855948
10	V836859452	1	Gasket	[C]
				(1)
11	V614103247	1	Gasket	[C]
				(1)
12	V614606230	1	O Ring	[A,C]
				(1)
13	V617330052	1	Circlip	[C]
				(1)
14	V610072050	2	Bearing Assy	[C]
				(1)
15	V836855569	1	Gear	(1)
16	V504601600	1	Nut	[C]
				(1)
17	V640325018	1	Plug	(1)
18	V615881822	1	Seal	[C]
				(1)
19	V640045126	1	Plug	(1)
20	V615892631	1	Seal	[C]
				(1)
21	V614602430	1	O Ring	[B,C]
				(1)
22	V529801530	3	Screw	
23	V614604958	2	O Ring	[A,C]
24	**V615882227**	1	Gasket	[A]
25	V640045022	1	Plug	
26	V615881822	1	Seal	[A]
27	V640325018	1	Plug	
28	V836862271	1	Kit, Repair	

FOOTNOTE [A] INCLUDED IN V836840994
FOOTNOTE [B] INCLUDED IN V836840993
FOOTNOTE [C] INCLUDED IN V836862271
FOOTNOTE [D] NOT ILLUSTRATED

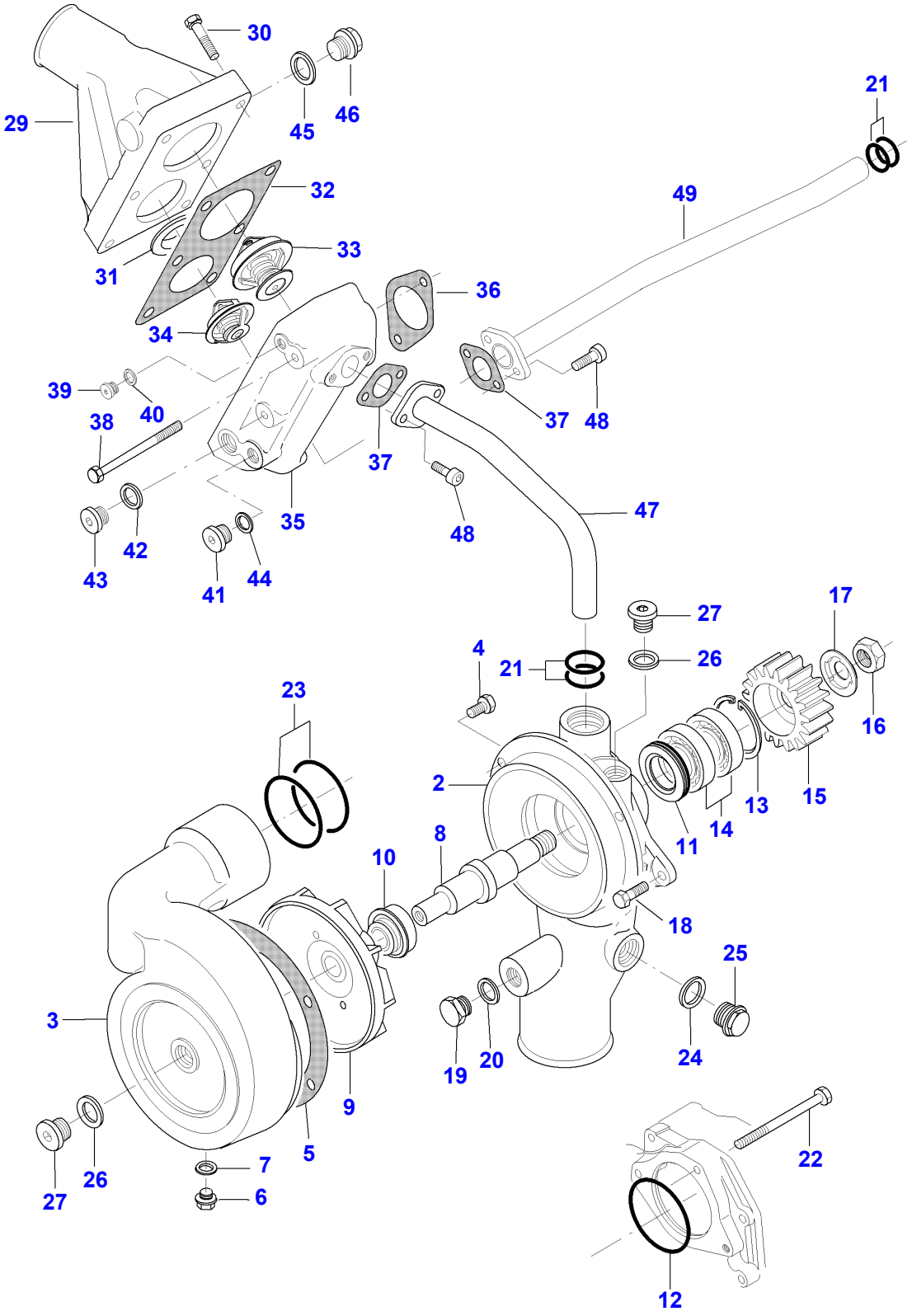
30
29
45
46
21
32
49
33
31
36
34
39
40
38
37
48
37
47
35
48
42
43
41
44
27
17
4
21
26
23
16
2
13
15
14
11
8
10
18
25
3
24
19
20
9
5
22
7
26
27
6
12

D-HB13-004-A

https://truckmanualshub.com/

Item	Part Number	Qty	Description	Comments
1	V837070075	1	Water Pump	[D]
2	V837069076	1	Housing	(1)
3	V837069077	1	Housing	(1)
4	V528801362	4	Bolt	(1) M8X16
5	V836855625	1	Gasket	[C] (1)
6	V640305012	1	Plug	(1)
7	V615881216	1	Gasket	[C] (1)
8	V837069078	1	Shaft	[C] (1)
9	V836866735	1	Impeller	[C] (1) Repairs and replaces V836855948
10	V836859452	1	Gasket	[C] (1)
11	V614703042	1	Oil Seal	[C] (1)
12	V614607930	1	O Ring	[C,B] (1)
13	V617330047	1	Circlip	[C] (1)
14	V610072040	2	Bearing	[C] (1)
15	V837070074	1	Gear	(1)
16	V504601600	1	Nut	[C] (1)
17	V837070184	1	Ring	(1) M8X20
18	V528801380	1	Bolt	M8X20
19	V836119079	1	Plug	
20	V615881620	1	Seal	[C]
21	V614602430	1	O Ring	[C,A]
22	V529801520	2	Screw	M8X85
23	V614604958	1	O Ring	[C,B]
24	**V615882227**	1	Gasket	[B]
25	V640045022	1	Plug	
26	V615881822	1	Seal	[B]
27	V640325018	2	Plug	
28	V837062617	1	Kit, Repair	[D]
29	V836855602	1	Housing	
30	V529801430	6	Screw	M8X40
31	V836336425	1	Washer	
32	V836855603	1	Gasket	[A]
33	**V836331590**	1	Thermostat	83¦C
34	**V836015156**	1	Thermostat	79¦C
35	V836855601	1	Housing	
36	V836646393	1	Gasket	[A]
37	V836322190	2	Gasket	[A]
38	V529801550	2	Screw	M8X100
39	V640325110	1	Plug	
40	**V615871014**	1	Seal	[A]
41	V640325014	1	Plug	
42	V615881822	1	Seal	[A]
43	V640325018	1	Plug	
44	**V615881418**	1	Seal	[A]
45	**V615882227**	1	Gasket	[A]
46	V640045022	1	Plug	
47	V837070020	1	Pipe	
48	V581804600	4	Hex Socket Screw	M8X20
49		X	Pipe	See Page - Reference Number 008-0022

FOOTNOTE [A] INCLUDED IN KIT V837062627
FOOTNOTE [B] INCLUDED IN KIT V837062628
FOOTNOTE [C] INCLUDED IN V837062617
FOOTNOTE [D] NOT ILLUSTRATED

https://truckmanualshub.com/

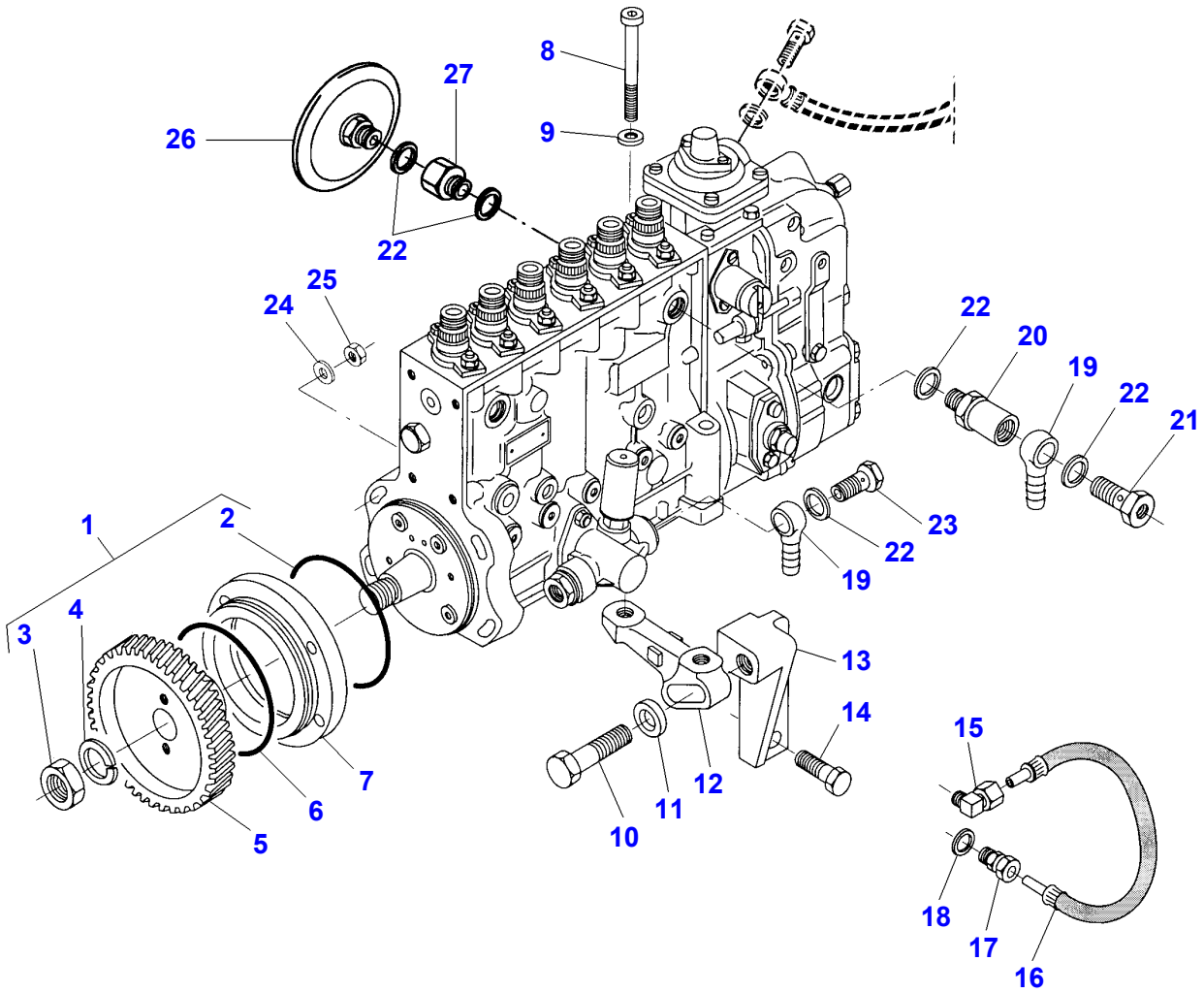

D-HB14-008-A

https://truckmanualshub.com/

Item	Part Number	Qty	Description	Comments
1	V836854997	1	Injection Pump	7274
	V836854990	1	Injection Pump	7278
2	V614609930	1	O Ring	[A]
				(1)
3	V505612000	1	Nut	(1)
4	V500452002	1	Washer	(1)
5	V836855986	1	Gear	
6	V614609930	1	O Ring	[A]
7	V836855996	1	Ring	
8	V581805150	2	Screw	M10X90
9	V500151050	2	Washer	
10	V529803072	1	Screw	M16X60
11	V836655994	1	Washer	
12	V836855987	1	Support	
13	V836855993	1	Support	
14	V528802640	2	Screw	M14X40
15	V641166006	1	Elbow Union	
16	V836120491	1	Oil Pipe	
17	V641086006	1	Connection	
18	**V615871014**	1	Seal	[A]
19	V640255210	2	Pipe	
20	V836330959	1	Valve	
21	V835336944	1	Screw	
22	V615881420	7	Gasket	[A]
23	V640435010	1	Screw	
24	V500051052	4	Washer	
25	V504801000	4	Nut	
26	V836316814	1	Pressure Valve	
27	V836336934	1	Union	

FOOTNOTE [A] INCLUDED IN V836840994

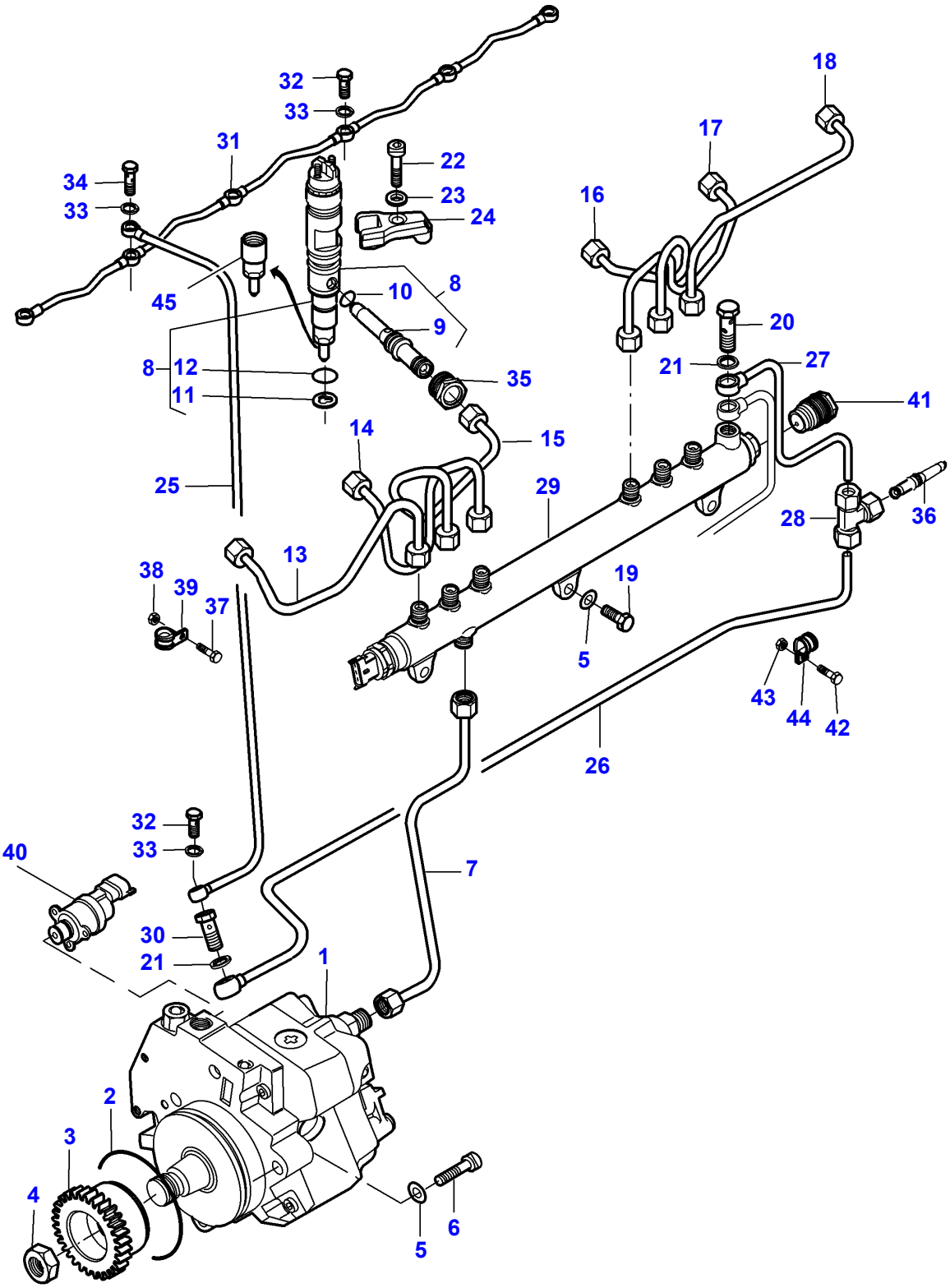
32
33
31
34
33
22
23
24
18
17
16
45
10
8
9
20
8
12
11
35
21
27
41
14
15
25
29
28
36
13
38
39
37
19
5
43
44
42
26
32
33
40
7
30
21
1
2
3
4
5
6

https://truckmanualshub.com/

Item	Part Number	Qty	Description	Comments
1	V837069146	1	Injection Pump	
2	V837069147	1	O Ring	[B] (1)
3	V837070073	1	Gear	
4	V504611802	1	Nut	M18
5	V500950800	4	Lock Washer	
6	V581704650	3	Screw	M8 X 40
7	V837070249	1	Pipe	
8	V837062629	6	Injector	
9		1	Tube	(8) Not serviced,order REF. 8
10	V837069314	1	Ring	[A] (8)
11	V837069032	1	Seal	[A] (8)
12	V837069313	1	Seal	[A] (8)
13	V837070077	1	Fuel Line	CYL. No 1
14	V837070078	1	Fuel Line	CYL. No 2
15	V837070079	1	Fuel Line	CYL. No 3
16	V837070080	1	Fuel Line	CYL. No 4
17	V837070081	1	Fuel Line	CYL. No 5
18	V837070082	1	Fuel Line	CYL. No 6
19	V528801380	3	Bolt	M8 X 20
20	V640425008	1	Screw	
21	V615881216	5	Gasket	[A]
22	V581704660	6	Screw	M8 X 45
23	V837070121	6	Washer	
24	V837069007	6	Fastener	
25	V837070277	1	Fuel Pipe	
26	V837070258	1	Fuel Pipe	
27	V837070255	1	Fuel Pipe	
28	V641436008	1	Union	
29	V837069050	1	Fuel Pipe	
30	V837070314	1	Screw	
31	V837069027	1	Pipe	
32	V640435005	6	Banjo Bolt	
33	V615870812	14	Gasket	[A]
34	V640425005	1	Screw	
35	V837069268	6	Nut	
36	V837067801	1	Pipe	
37	V528800782	3	Screw	M5 X 20
38	V504600502	3	Nut	M5
39	V602070605	1	Band	
40	V837071191	1	Control Valve	(1)
41	V837069409	1	Pressure Valve	(29)
42	V528801082	3	Screw	M6X20
43	V510600602	3	Nut	M6
44	V602074608	5	Clamp	
45	V837069408	1	Nozzle	(8)

FOOTNOTE [A] INCLUDED IN KIT V837062627
FOOTNOTE [B] INCLUDED IN KIT V837062628

https://truckmanualshub.com/

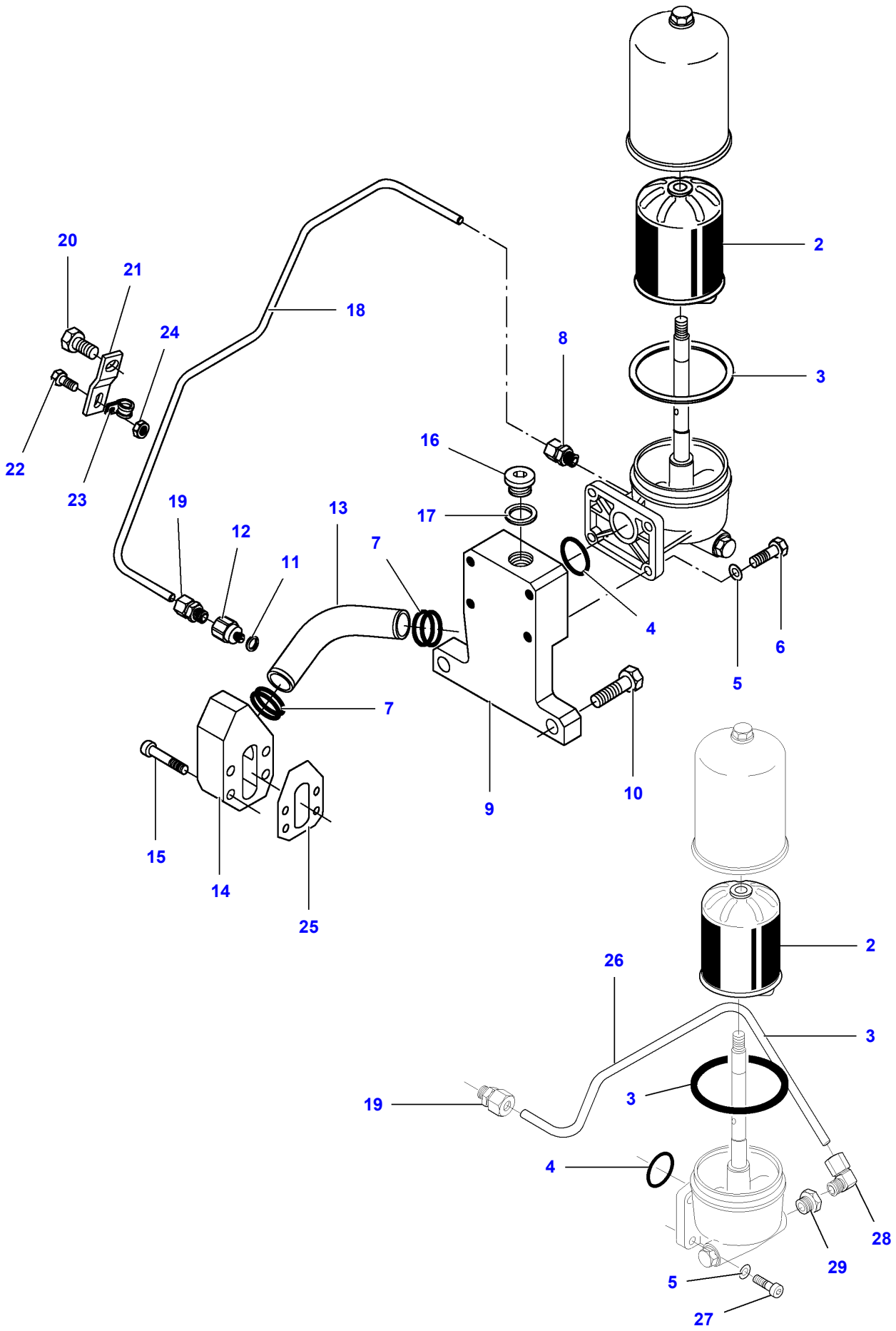

D-LD98-001-B

https://truckmanualshub.com/

Item	Part Number	Qty	Description	Comments
1	V836359603	1	Oil Filter	[A]
				From Serial or Engine Number 61490
2	**V836362228**	1	Kit, Rotor Assy.	(1)
3	**V836362229**	1	Gasket	(2)
4	V836664226	1	O Ring	(1)
5	V500951000	4	Washer	
6	V528801810	4	Screw	M10X30
7	V614903430	4	O Ring	
8	V641830008	1	Union	
9	V837067970	1	Reducing Union	
10	V528803042	2	Screw	M16X45
11	V615871016	1	O Ring	
12	V836120022	1	Connection	
13	V837067968	1	Pipe	
14	V837067969	1	Reducing Union	
15	V581804630	4	Screw	M8X30
16	V640325039	1	Plug	
17	V615893946	1	Ring	
18	V837067967	1	Pipe	
19	V641016008	1	Union	
20	V528802602	1	Screw	M14X25
21	V837070381	1	Support	
22	V528801380	1	Bolt	M8X20
23	V602060610	1	Band	
24	V504800800	1	Nut	M8
25	V836866958	1	Gasket	
26	V836873282	1	Pipe	From Serial or Engine Number U1001
27	V581705030	4	Screw	M10X30
28	V641166008	1	Elbow Union	From Serial or Engine Number U1001
29	V836673155	1	Union	From Serial or Engine Number U1001

FOOTNOTE [A] NOT ILLUSTRATED

https://truckmanualshub.com/

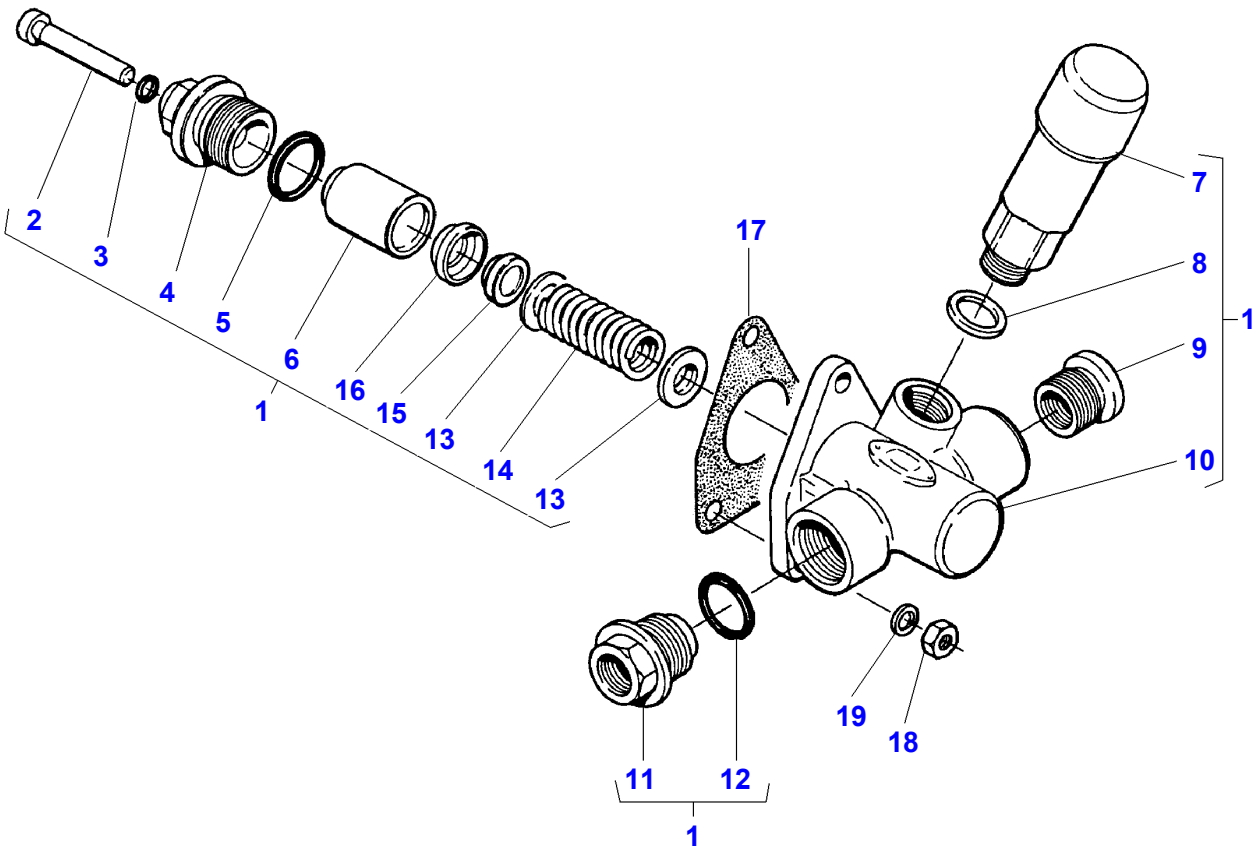

https://truckmanualshub.com/

Item	Part Number	Qty	Description	Comments
1	**V836362023**	1	Fuel Pump	
2	V836362024	1	Lever	(1)
3	V836362025	1	O Ring	[A]
				(1)
4	V836340069	1	Body	(1)
5	V836362027	1	O Ring	[A]
				(1)
6	V835339877	1	Plunger	(1)
7	V835339884	1	Pump	(1)
8	V615881620	1	Seal	(1)
9	V836340067	1	Union	(1)
10		1	Housing	(1)
				Not serviced,order REF. 1
11	V835340971	1	Union	[A]
				(1)
12	V835340972	1	O Ring	[A]
				(1)
13	V835339879	2	Washer	(1)
14	V836362026	1	Spring	(1)
15	V835339880	1	Pressure Valve	[A]
				(1)
16	V835339882	1	Gasket	(1)
17	V836329194	1	Gasket	
18	V504600602	3	Nut	M6
19	V500450602	3	Washer	
20	V836862418	1	Parts Pack	[B]

FOOTNOTE [A] INCLUDED IN REPAIR KIT V836862418
FOOTNOTE [B] NOT ILLUSTRATED

https://truckmanualshub.com/

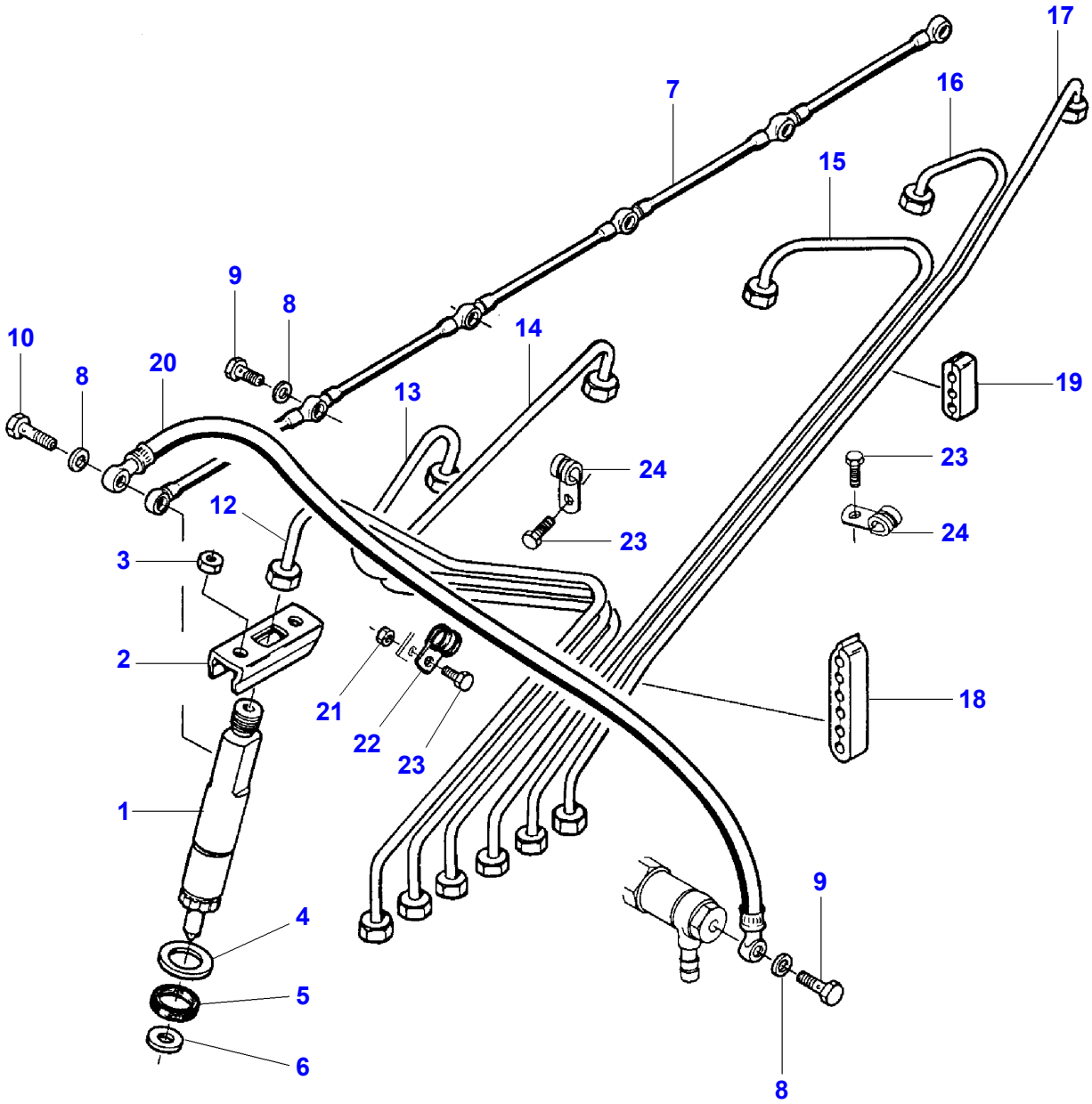

D-HB16-001-C

https://truckmanualshub.com/

Item	Part Number	Qty	Description	Comments
1	V836854992	6	Atomiser	
2	V835331103	6	Retainer	
3	V504800800	12	Nut	
4	**V836652170**	6	Washer	
5	**V835336276**	6	Seal	[A]
6	**V899901495**	6	Oil Seal	[A]
7	V836847522	1	Pipe	
8	V615870710	13	Seal	[A]
9	V835331289	5	Screw	
10	V835336943	1	Screw	
11	V836866670	1	Kit, Pipe	[B]
12		1	Tail Pipe	(11) CYL NO. 1 Not serviced,order REF.11
13		1	Tail Pipe	(11) CYL. NO.2 Not serviced,order REF.11
14		1	Tail Pipe	(11) CYL.NO 3 Not serviced,order REF.11
15		1	Tail Pipe	(11) CYL.NO 4 Not serviced,order REF.11
16		1	Tail Pipe	(11) CYL.NO 5 Not serviced,order REF.11
17		1	Tail Pipe	(11) CYL.NO 6 Not serviced,order REF.11
18	V836664521	1	Clamp	(11)
19	V836664518	2	Clamp	(11)
20	V835336942	1	Tube	
21	V504600502	1	Nut	
22	V602069813	1	Clamp	
23	V528800762	3	Screw	
24	V602070605	2	Band	[C]

FOOTNOTE [A] INCLUDED IN V836840993
FOOTNOTE [B] NOT ILLUSTRATED
FOOTNOTE [C] NON AFFECTE

https://truckmanualshub.com/

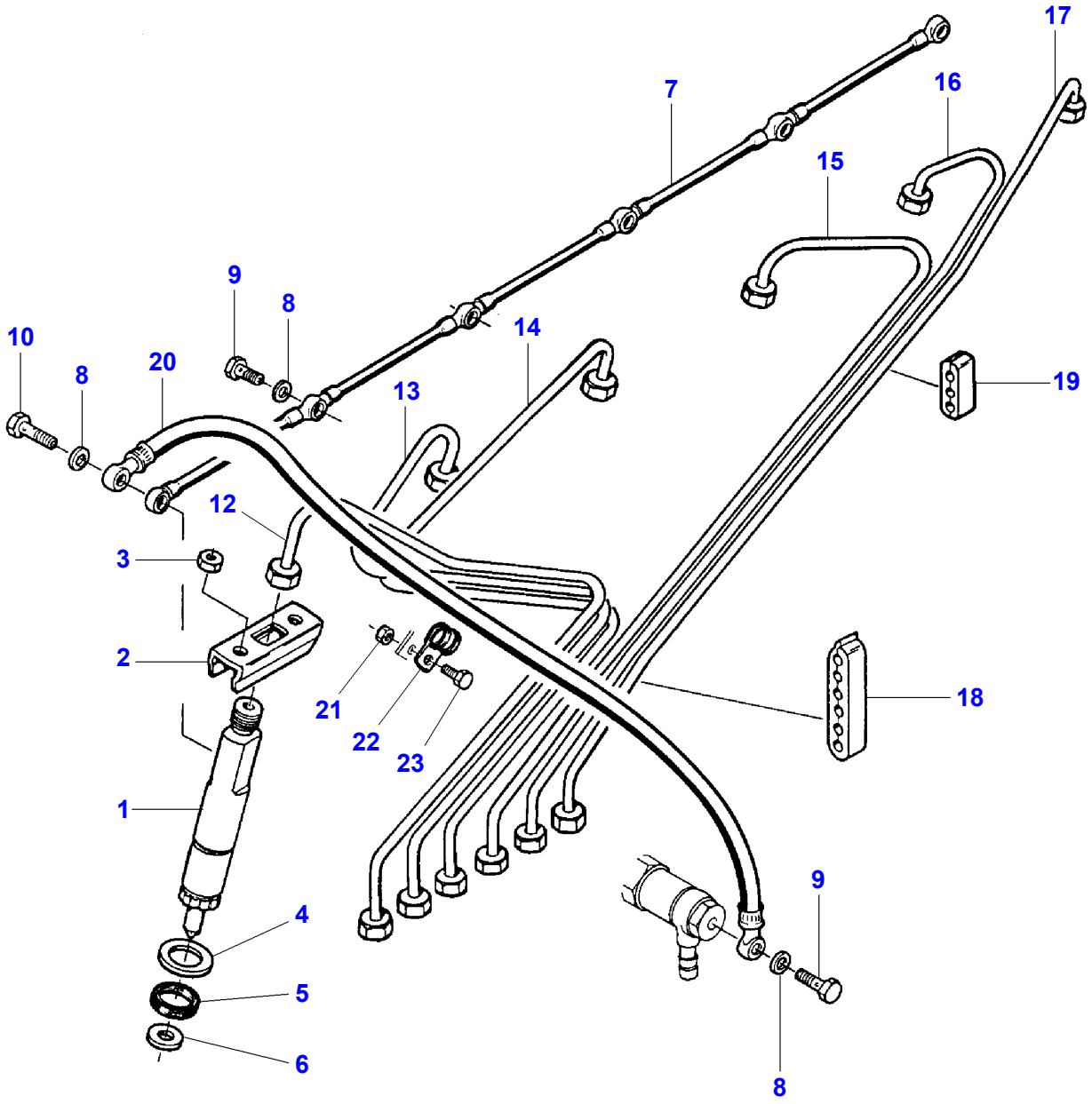

D-HB16-008-A

https://truckmanualshub.com/

Item	Part Number	Qty	Description	Comments
1	V836354615	6	Atomiser	
2	V835331103	6	Retainer	
3	V504800800	12	Nut	
4	**V836652170**	6	Washer	
5	**V835336276**	6	Seal	[A]
6	**V899901495**	6	Oil Seal	[A]
7	V836847522	1	Pipe	
8	V615870710	13	Seal	[A]
9	V835331289	5	Screw	
10	V835336943	1	Screw	
11	V836866670	1	Kit, Pipe	[B]
12		1	Tail Pipe	(11) CYL.NO 1 Not serviced,order REF.11
13		1	Tail Pipe	(11) CYL.NO 2 Not serviced,order REF.11
14		1	Tail Pipe	(11) CYL.NO 3 Not serviced,order REF.11
15		1	Tail Pipe	(11) CYL.NO 4 Not serviced,order REF.11
16		1	Tail Pipe	(11) CYL.NO 5 Not serviced,order REF.11
17		1	Tail Pipe	(11) CYL.NO 6 Not serviced,order REF.11
18	V836664521	1	Clamp	(11)
19	V836664518	2	Clamp	(11)
20	V835336942	1	Tube	
21	V504600502	1	Nut	
22	V602069813	1	Clamp	
23	V528800762	1	Screw	

FOOTNOTE [A] INCLUDED IN V836840993
FOOTNOTE [B] NOT ILLUSTRATED

https://truckmanualshub.com/

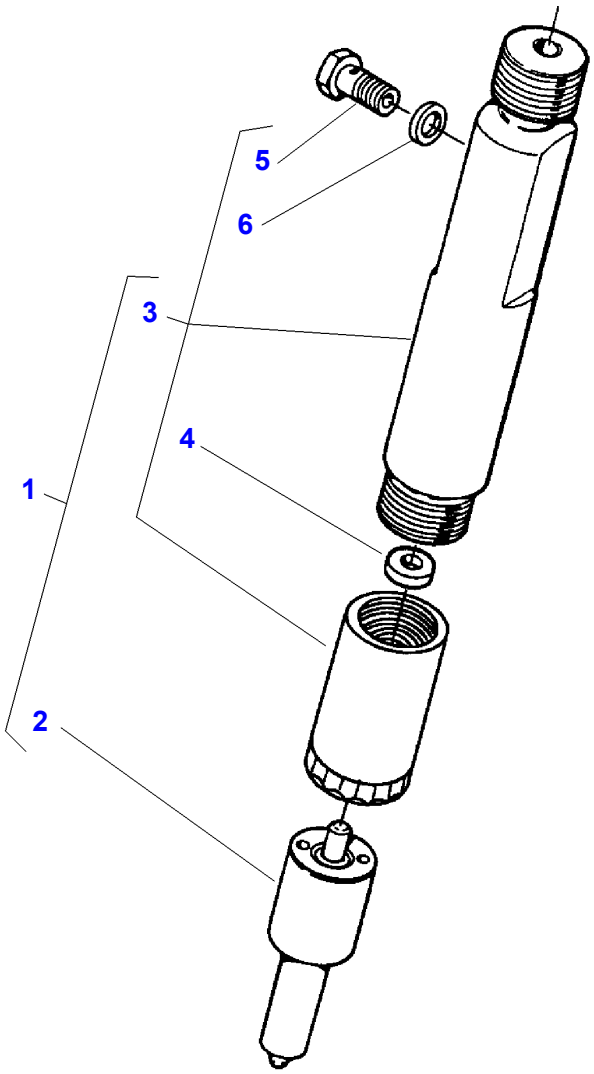

D-HB17-004-A

https://truckmanualshub.com/

Item	Part Number	Qty	Description	Comments
1	V836854929	1	Atomiser	270BAR 7274
	V836854992	1	Atomiser	270BAR 7278
2	V836854930	1	Nozzle	(1) 7274
	V836854991	1	Nozzle	(1) 7278
3		1	Atomiser Body	(1) Not serviced,order REF. 1
4	V836862000	X	Chock	(3) Thickness 1 MM
	V836862001	X	Chock	(3) Thickness 1,05MM
	V836862002	X	Chock	(3) Thickness 1,10MM
	V836862003	X	Chock	(3) Thickness 1,15MM
	V836862004	X	Chock	(3) Thickness 1,20MM
	V836862005	X	Chock	(3) Thickness 1,25MM
	V836862006	X	Chock	(3) Thickness 1,30MM
	V836862007	X	Chock	(3) Thickness 1,35MM
	V836862008	X	Chock	(3) Thickness 1,40MM
	V836862009	X	Chock	(3) Thickness 1,45MM
	V836862010	X	Chock	(3) Thickness 1,50MM
	V836862011	X	Chock	(3) Thickness 1,55MM
	V836862012	X	Chock	(3) Thickness 1,60MM
	V836862013	X	Chock	(3) Thickness 1,65MM
	V836862014	X	Chock	(3) Thickness 1,70MM
	V836862015	X	Chock	(3) Thickness 1,75MM
	V836862016	X	Chock	(3) Thickness 1,80MM
	V836862017	X	Chock	(3) Thickness 1,85MM
	V836862018	X	Chock	(3) Thickness 1,90MM
	V836862019	X	Chock	(3) Thickness 1,95MM
5	V835331289	1	Screw	(3)
6	V615870710	2	Seal	(3)

https://truckmanualshub.com/

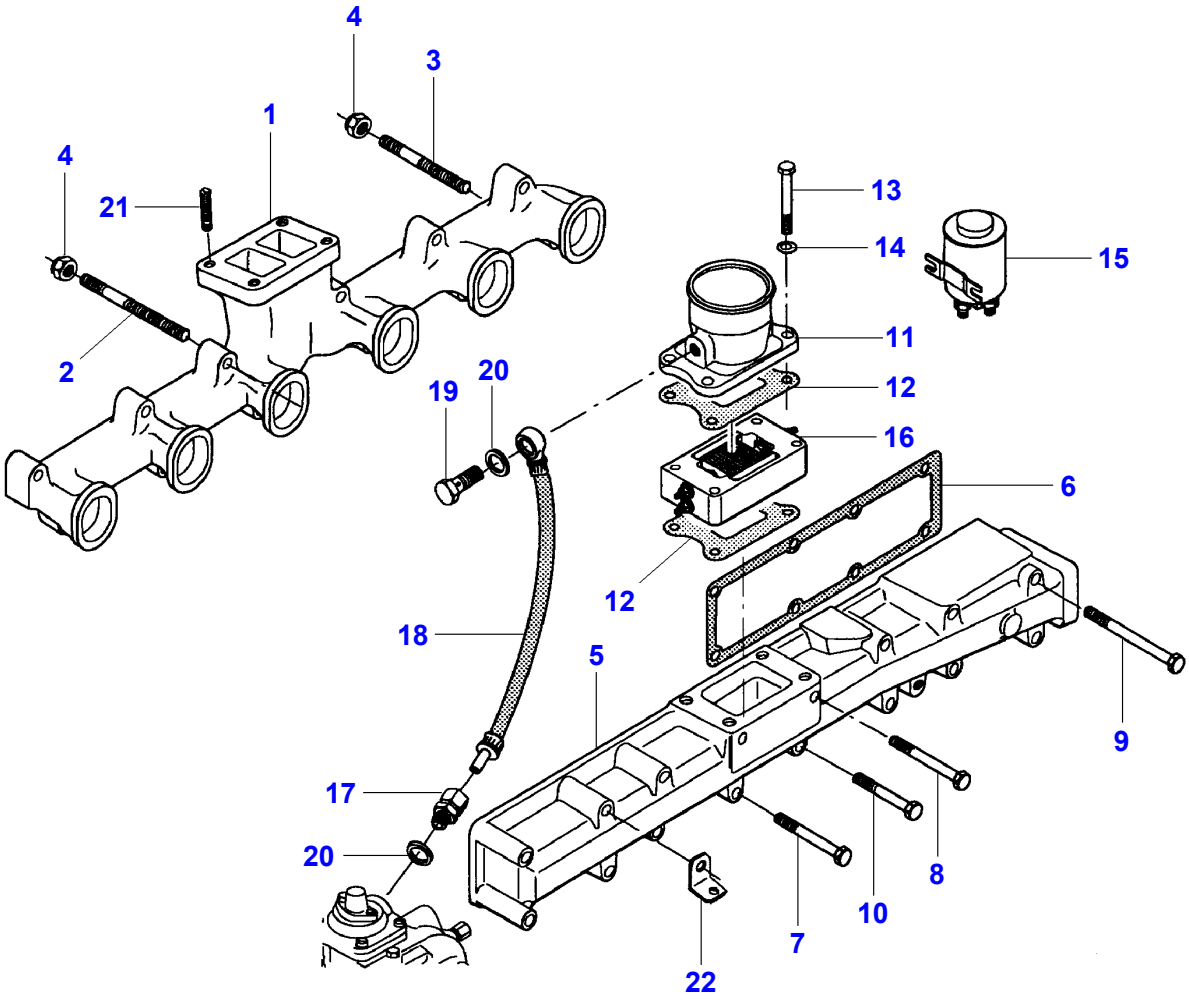

https://truckmanualshub.com/

Item	Part Number	Qty	Description	Comments
1	V836855506	1	Exhaust Manifold	
2	V836859034	10	Stud	
3	V836859188	2	Bolt	
4	V513601002	12	Nut	
5	V836847493	1	Intake Manifold	
6	V836847496	2	Gasket	[A]
7	V529801510	8	Bolt	
8	V529801530	3	Screw	
9	V529801562	2	Screw	
10	V529801470	2	Bolt	
11	V836866152	1	Pipe	
12	V836847532	2	Gasket	[A]
13	V529801480	4	Bolt	
14	V500950800	4	Lock Washer	
15	V836864497	1	Solenoid	12V/200A 7274
	V836666759	1	Solenoid	12V/150A 7278
16	**V836864398**	1	Heater	
17	V641086008	1	Valve	
18	V836852301	1	Tube	
19	V640435008	2	Banjo Bolt	
20	V615881216	4	Gasket	[A]
21	V836855774	1	Angle.	
22	V546801800	4	Bolt	

FOOTNOTE [A] INCLUDED IN V836840993

https://truckmanualshub.com/

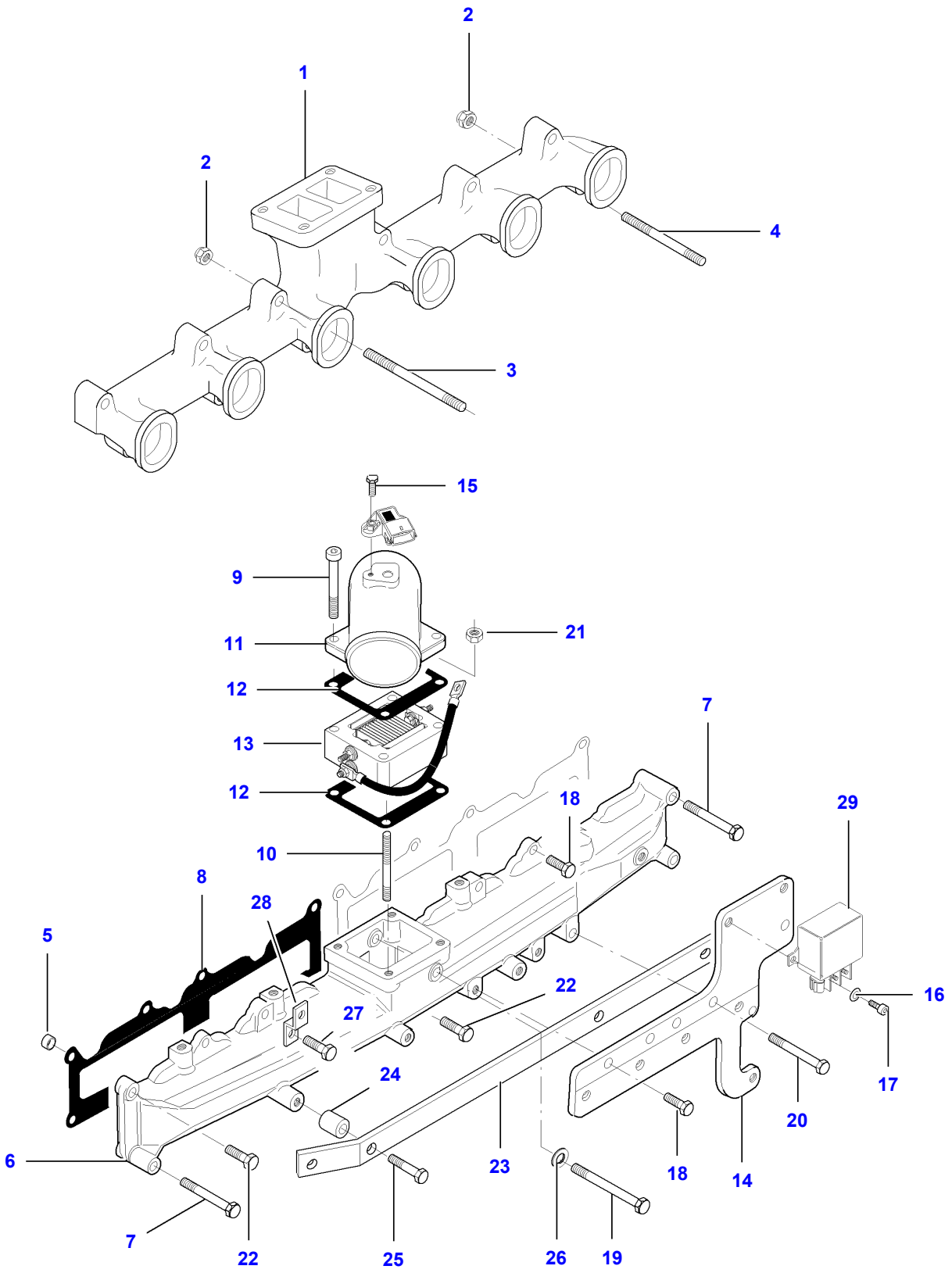

https://truckmanualshub.com/

Item	Part Number	Qty	Description	Comments
1	V836855506	1	Exhaust Manifold	
2	V513601002	12	Nut	
3	V836859034	10	Stud	M10 X 130
4	V836859188	2	Bolt	M10 X 100
5	V598355365	1	Dowel	
6	V837070219	1	Intake Manifold	
7	V529801470	3	Bolt	M8 X 60
8	V837069009	2	Gasket	[A]
9	V581804702	3	Screw	M8 X 65
10	V546801490	1	Bolt	M8 X 70
11	V836867642	1	Pipe	
12	V837067345	2	Gasket	[A]
13	V837067295	1	Heater	12V
14	V837070228	1	Plate	
15	V528801082	1	Screw	M6X20
16	V500050642	2	Washer	M6
17	V581804182	2	Screw	M6 X 16
18	V528801400	4	Bolt	M8 X 25
19	V528901550	1	Screw	M8 X 100
20	V529801530	2	Screw	M8 X 90
21	V504800800	1	Nut	M8
22	V528801410	8	Adjusting Screw	M8 X 30
23	V837070328	1	Support	
24	V836119384	2	Sleeve	
25	V529801440	2	Bolt	M8 X 45
26	V836015967	1	Washer	
27	V528801420	1	Bolt	M8 X 35
28	V836747849	1	Bracket	
29	**V837069047**	1	Solenoid	12V

FOOTNOTE [A] INCLUDED IN KIT V837062627

https://truckmanualshub.com/

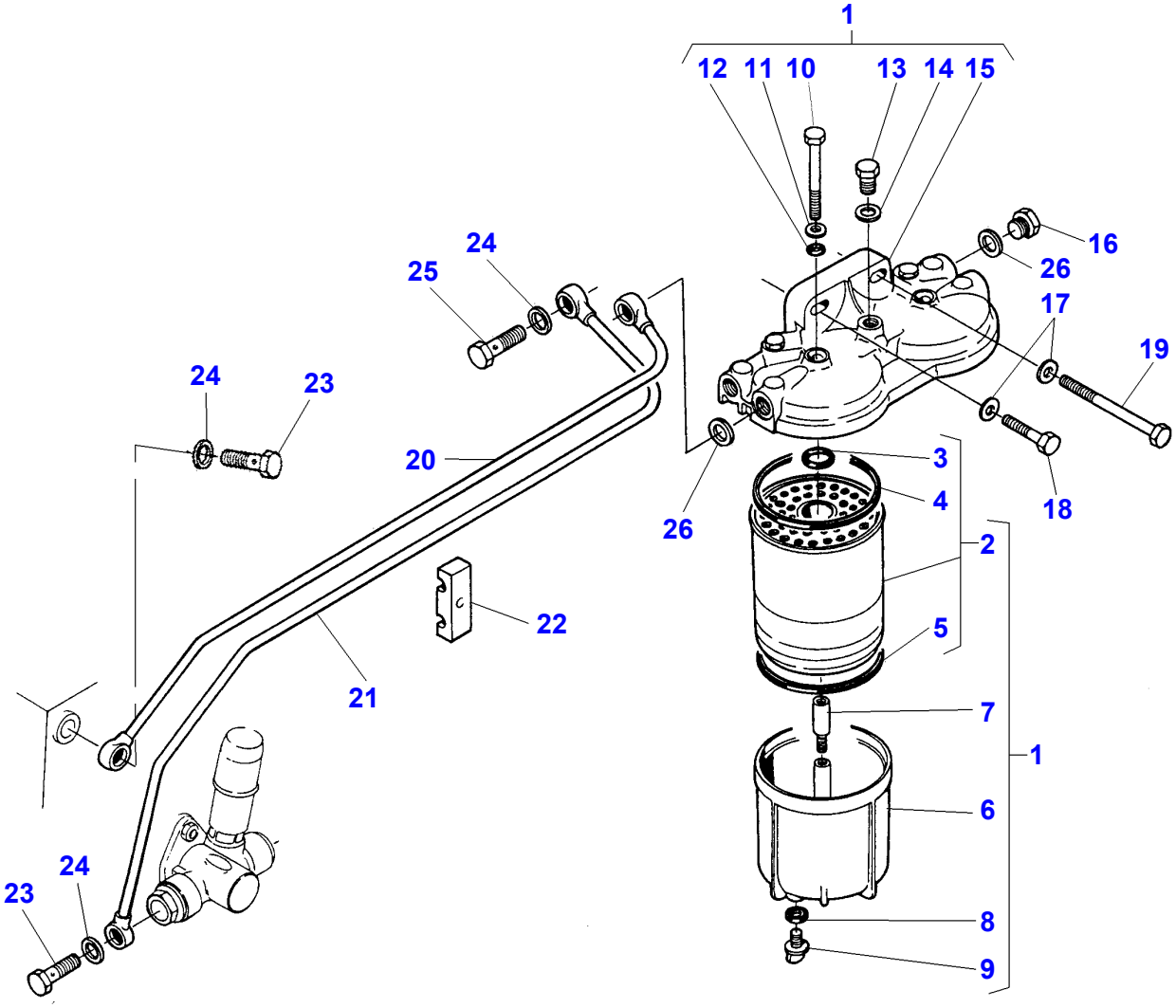

https://truckmanualshub.com/

Item	Part Number	Qty	Description	Comments
1	V836339370	1	Fuel Filter	
2	**1896287M91**	2	Fuel Element	(1) CAV Alternative 3405419M1
	3405419M2	2	Fuel Element	Alternative 1896287M91
3	V836015142	1	O Ring	(2)
4	**V835330014**	1	Gasket	(2)
5	**V835330015**	1	Gasket	(2)
6	V836340045	2	Bowl	(1)
7	V836339372	2	Stud	(1)
8	**V836015147**	2	Gasket	(1)
9	V836015148	2	Plug	(1)
10	V836015149	2	Screw	(1)
11	**V836015918**	2	Washer	(1)
12	**V836015919**	2	O Ring	(1)
13	V836015958	1	Plug	(1)
14	**V615871014**	1	Seal	[A] (1)
15	V836015959	1	Cover	(1)
16	V836117323	2	Plug	
17	V836120989	2	Flat Washer	
18	V528801420	1	Bolt	
19	V529801550	1	Screw	
20	V836855989	1	Tail Pipe	
21	V836855988	1	Tube	
22	V836655527	2	Band	
23	V640435010	2	Screw	
24	**V615881418**	6	Seal	[A]
25	V836429560	2	Screw	
26	V615581317	4	Seal	[A]

FOOTNOTE [A] INCLUDED IN V836840993

https://truckmanualshub.com/

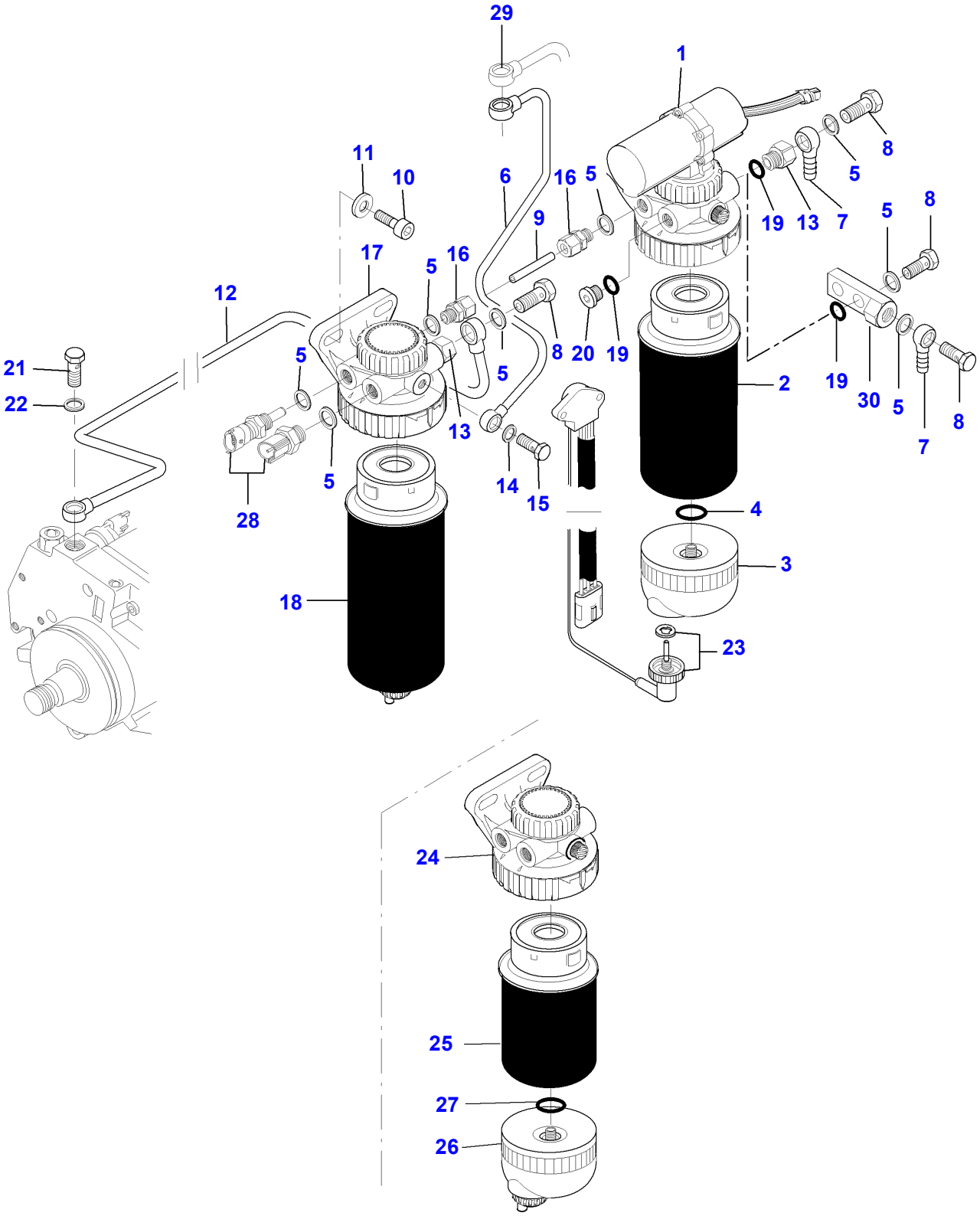

D-HB18-013-B

https://truckmanualshub.com/

Item	Part Number	Qty	Description	Comments
1	V836867602	1	Prefilter	
2	**V836867591**	1	Fuel Element	(1)
3	V836862051	1	Separator	(1)
4	**V836862496**	1	O Ring	(3)
5	V615881420	10	Gasket	[A]
6	V837070253	1	Fuel Pipe	
7	V640255210	1	Pipe	
8	V640435010	2	Screw	
9	V837070223	1	Fuel Line	
10	V581705030	4	Screw	M10X30
11	V836122910	4	Washer	
12	V837070252	1	Fuel Pipe	
13	V836336934	2	Union	
14	**V615871014**	2	Seal	[A]
15	V640435006	1	Banjo Bolt	
16	V641086010	2	Union	
17	V836867593	1	Fuel Filter	
18	**V836867595**	1	Fuel Element	(17)
19	V614601125	2	O Ring	[A]
20	V640325014	2	Plug	
21	V640435008	1	Banjo Bolt	
22	V615881216	2	Gasket	[A]
23	V836866576	1	Sensor	WATER
24	**V836859713**	1	Pre-Filter	
25	**V836859302**	1	Container	(24)
26	V836862051	1	Separator	(24)
27	**V836862496**	1	O Ring	(26)
28		X	Sensor	See Page - Reference Number 008-0049
29		X	Fuel Pipe	See Page - Reference Number 008-0027
30	V837073391	1	Union	From Serial or Engine Number U1001

FOOTNOTE [A] INCLUDED IN KIT V837062628

https://truckmanualshub.com/

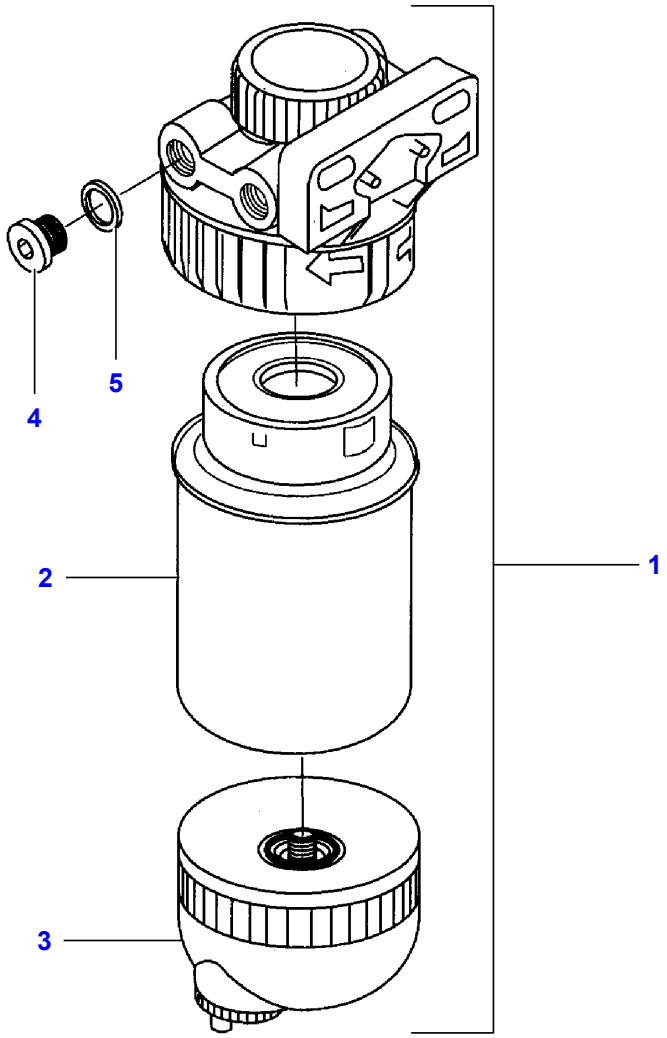

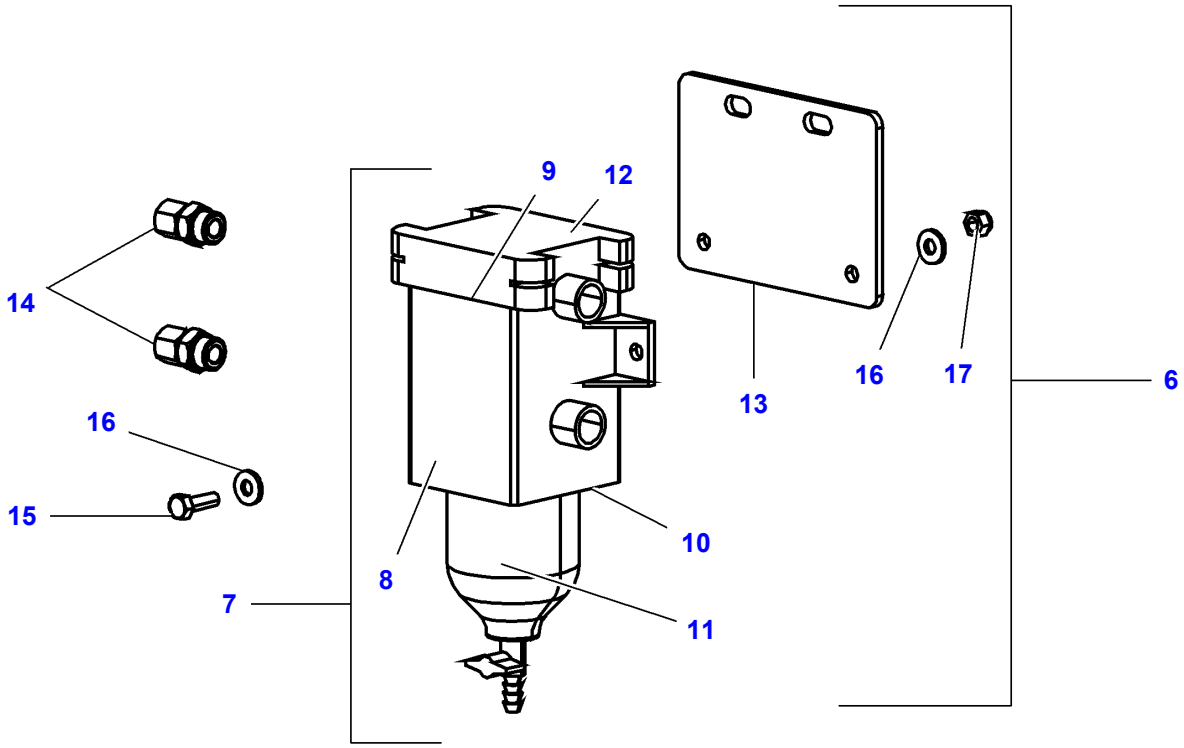

D-HB30-006-C

https://truckmanualshub.com/

Item	Part Number	Qty	Description	Comments
1	**V836859713**	1	Pre-Filter	
2	**V836859302**	1	Container	(1)
3	V836862051	1	Separator	(1)
4	V640325014	2	Plug	
5	**V615881418**	2	Seal	
6	D28782945	1	Pre-Filter	From Serial or Engine Number 61810
7	D46490049	1	Container	(6) From Serial or Engine Number 61810
8	71412027	1	Filter	(7) From Serial or Engine Number 61810
9	71412028	1	Gasket	(7) From Serial or Engine Number 61810
10	71412029	1	Gasket	(7) From Serial or Engine Number 61810
11	71412030	1	Bowl	(7) From Serial or Engine Number 61810
12	71412031	1	Lid	(7) From Serial or Engine Number 61810
13	D28787497	1	Plate	(6) From Serial or Engine Number 61810
14	D45255901	2	Union	(6) From Serial or Engine Number 61810
15	D40405000	2	Cap Screw	(6) From Serial or Engine Number 61810
16	D20400506	4	Washer	(6) From Serial or Engine Number 61810
17	D41087500	2	Locknut	(6) From Serial or Engine Number 61810

https://truckmanualshub.com/

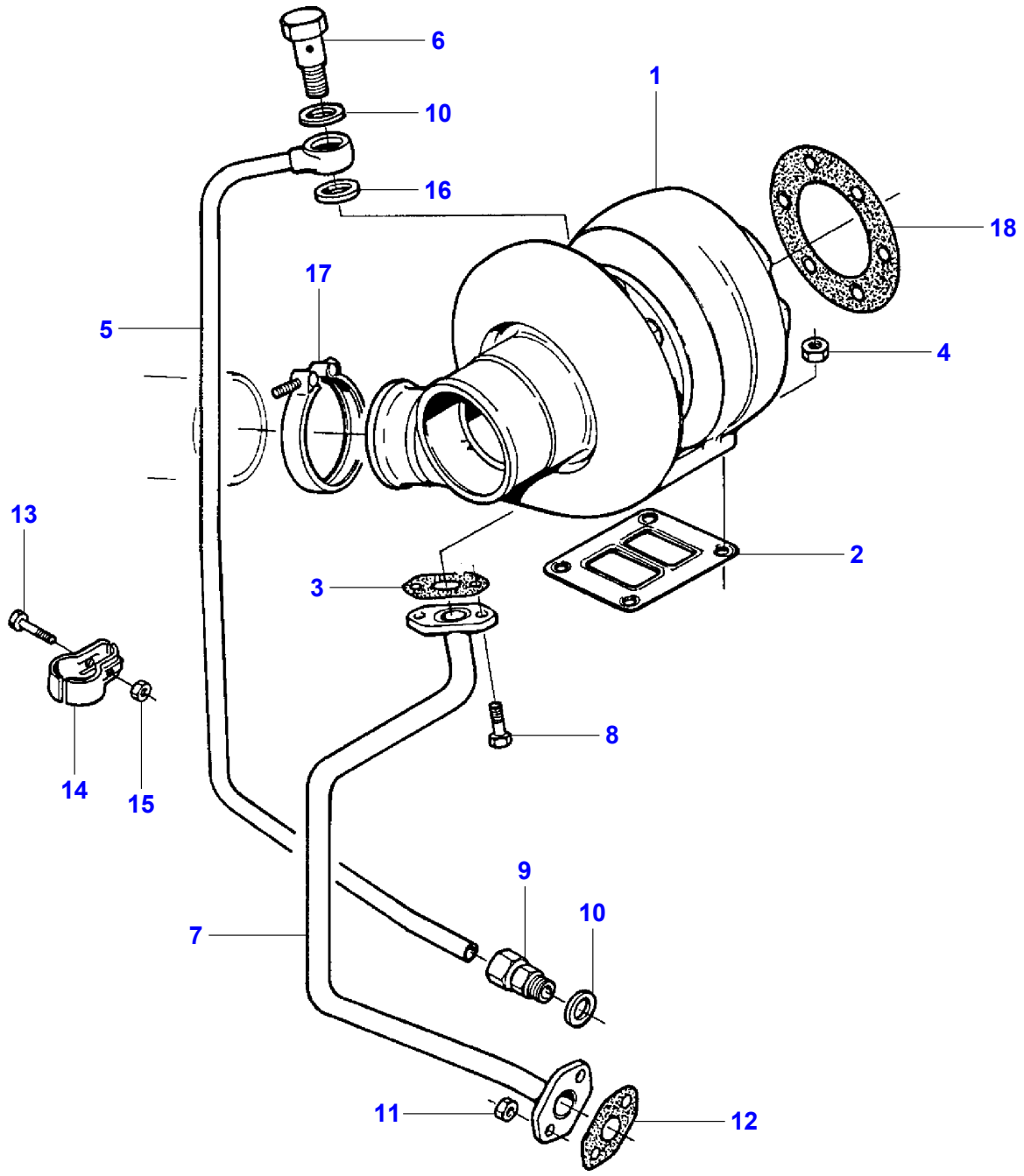

D-HB21-001-B

https://truckmanualshub.com/

Item	Part Number	Qty	Description	Comments
1	V836840885	1	Turbocharger	
2	**V836840992**	1	Gasket	(1)
3	V836866809	1	Gasket	(1) Replace and repair. Old not interchangeable with new V836324580
4	V521601000	4	Nut	
5	V836859136	1	Tail Pipe	
6	V836855714	1	Screw	
7	V836859137	1	Tail Pipe	
8	V528801380	2	Bolt	
9	V641086012	1	Union	
10	V615881620	1	Seal	
11	V504800800	2	Nut	
12	V836866809	1	Gasket	Replace and repair. Old not interchangeable with new V836324580
13	V529801112	1	Screw	
14	V835324324	2	Bracket	
15	V504600602	1	Nut	
16	V615881420	1	Gasket	
17	V836840930	1	Clamp	
18	V886325175	1	Gasket	

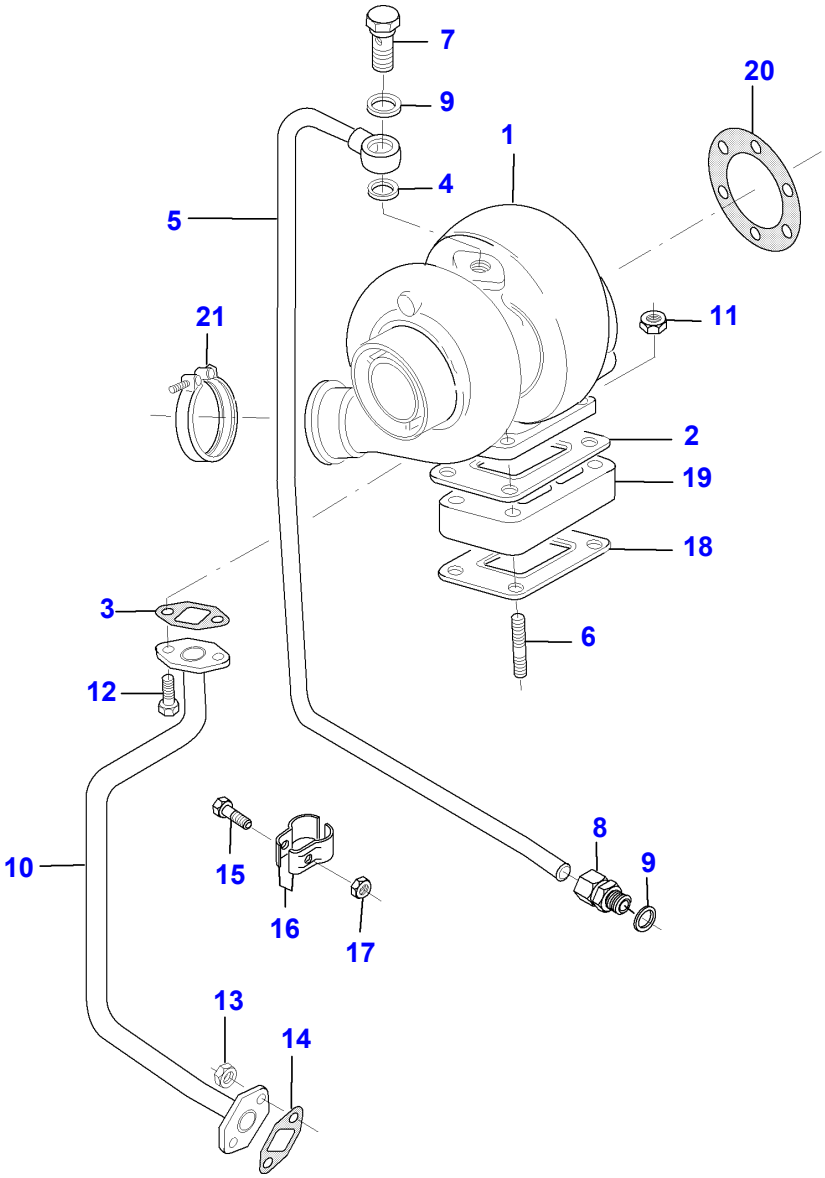

D-HB21-009-A

https://truckmanualshub.com/

Item	Part Number	Qty	Description	Comments
1	V837070171	1	Turbocharger	
2	**V836840992**	1	Gasket	[A] (1)
3	V836866809	1	Gasket	[A] (1)
4	V615881420	1	Gasket	[A]
5	V836867822	1	Pipe	
6	V546701850	4	Bolt	M10X50
7	V836855714	1	Screw	
8	V641086012	1	Union	
9	V615881620	2	Seal	[A]
10	V836867823	1	Pipe	
11	V521601000	4	Nut	
12	V528801380	2	Bolt	M8X20
13	V504800800	2	Nut	M8
14	V836866809	1	Gasket	
15	V529801112	1	Screw	M6X30
16	V835324324	2	Bracket	
17	V504600602	1	Nut	M6
18	**V836840992**	1	Gasket	
19	V836855709	1	Flange	
20	V886325175	1	Gasket	[A]
21	V836840930	1	Clamp	

FOOTNOTE [A] INCLUDED IN KIT V837062627

https://truckmanualshub.com/

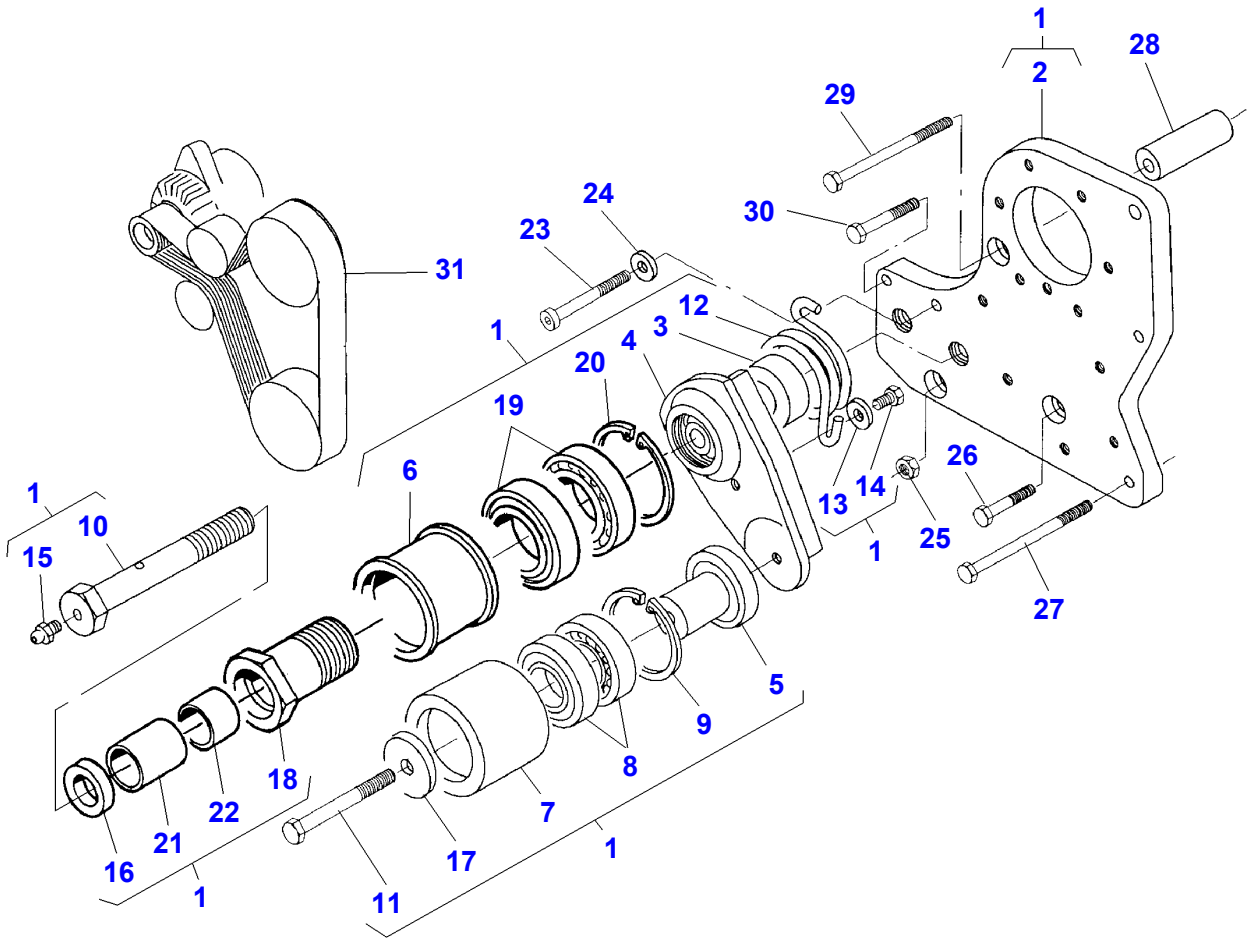

https://truckmanualshub.com/

Item	Part Number	Qty	Description	Comments
1	V836864296	1	Tensioner	
2	V836855935	1	Plate	(1)
3	V836859348	1	Shaft	(1)
4	V836859347	1	Support	(1)
5	V836855789	1	Shaft	(1)
6	V836859683	1	Roll	(1)
7	V836855666	1	Roll	(1)
8	339581X1	2	Bear. 6205 2rs	(1)
9	V617330052	1	Circlip	(1)
10	V836859357	1	Screw	(1)
11	V529701880	1	Screw	(1)
12	V836855689	1	Spring	(1)
13	V836120989	1	Flat Washer	(1)
14	V528801360	1	Screw	(1)
15	V644611006	1	Grease Fitting	(1)
16	V836859356	1	Plate	(1)
17	V836855941	1	Plate	(1)
18	V836859684	1	Shaft	(1)
19	V610060085	2	Bearing Assy	(1)
20	V617330068	1	Circlip	(1)
21	V836859364	1	Bush	(1)
22	V836859363	1	Bush	(1)
23	V529801520	1	Screw	
24	V836120989	1	Flat Washer	
25	V504801000	1	Nut	
26	V529801440	1	Bolt	
27	V529801562	2	Screw	
28	V836855934	2	Sleeve	
29	V529801550	1	Screw	
30	V529801470	1	Bolt	
31	V685121585	1	V Belt	

https://truckmanualshub.com/

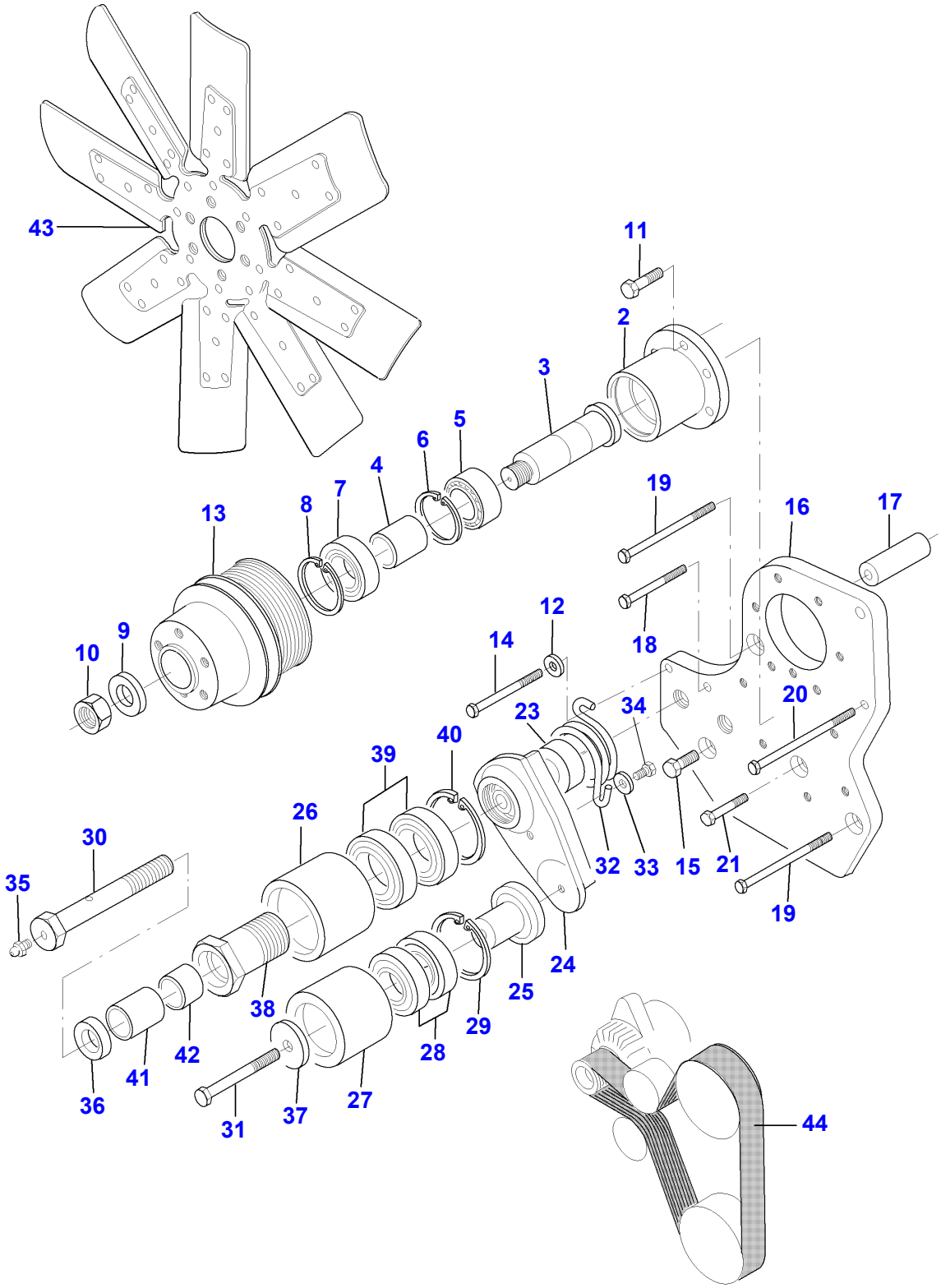

D-HB23-012-A

https://truckmanualshub.com/

Item	Part Number	Qty	Description	Comments
1	V836855762	1	Kit, Shaft	[A]
2	V836855758	1	Hub	(1)
3	V836855755	1	Shaft	(1)
4	V836855757	1	Sleeve	(1)
5	V610032060	1	Bearing Assy	(1)
6	V617350062	1	Circlip	(1)
7	V610063064	1	Bear. 6306 Rs	(1)
8	V617330072	1	Circlip	(1)
9	V836855756	1	Washer	(1)
10	V504602002	1	Nut	(1)
				M20
11	V528801810	6	Screw	M10X30
12	V836120989	1	Flat Washer	
13	**V836859288**	1	Belt	
14	V529801490	1	Screw	M8X70
15	V528801800	1	Bolt	M10X25
16	V836855935	1	Plate	
17	V836855934	2	Sleeve	
18	V529801470	1	Bolt	M8X60
19	V529801550	2	Screw	M8X100
20	V529801562	1	Screw	M8X110
21	V529801450	1	Screw	M8X50
22	V836864296	1	Tensioner	[A]
23	V836859348	1	Shaft	(22)
24	V836859347	1	Support	(22)
25	V836855789	1	Shaft	(22)
26	V836859683	1	Roll	(22)
27	V836855666	1	Roll	(22)
28	339581X1	2	Bear. 6205 2rs	(22)
29	V617330052	1	Circlip	(22)
30	V836859357	1	Screw	(22)
31	V529701880	1	Screw	(22)
				M10X65
32	V836855689	1	Spring	(22)
33	V836120989	1	Flat Washer	(22)
34	V528801360	1	Screw	(22)
				M8X16
35	V644611006	1	Grease Fitting	(22)
36	V836859356	1	Plate	(22)
37	V836855941	1	Plate	(22)
38	V836859684	1	Shaft	(22)
39	V610060085	2	Bearing Assy	(22)
40	V617330068	1	Circlip	(22)
41	V836859364	1	Bush	(22)
42	V836859363	1	Bush	(22)
43	V836867656	1	Fan	
44	**V685121585**	1	V Belt	

FOOTNOTE [A] NOT ILLUSTRATED

https://truckmanualshub.com/

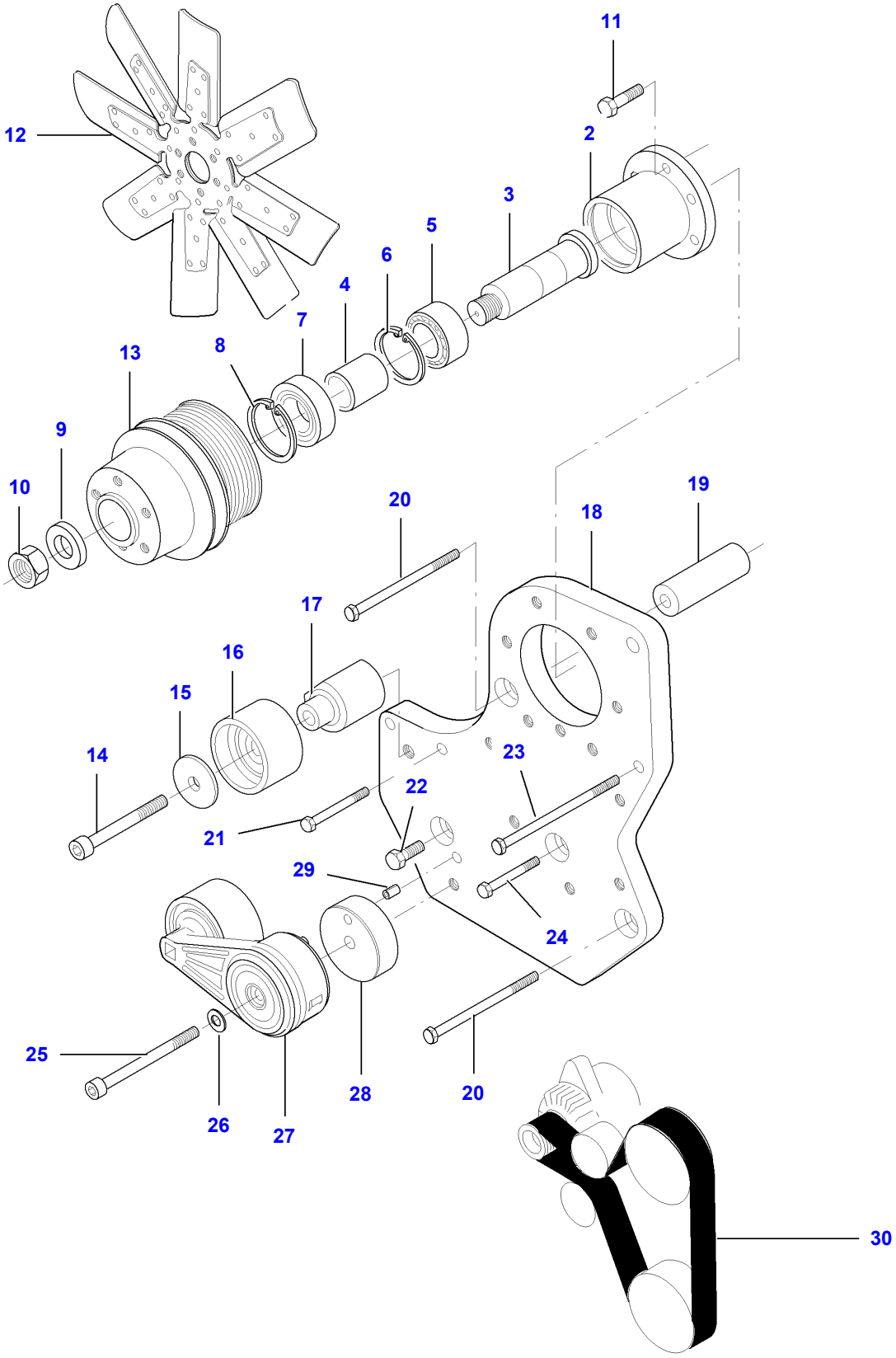

D-HB23-013-A

https://truckmanualshub.com/

Item	Part Number	Qty	Description	Comments
1	V836855762	1	Kit, Shaft	[A]
2	V836855758	1	Hub	(1)
3	V836855755	1	Shaft	(1)
4	V836855757	1	Sleeve	(1)
5	V610032065	1	Bearing	(1)
6	V617350062	1	Circlip	(1)
7	V610063064	1	Bear. 6306 Rs	(1)
8	V617330072	1	Circlip	(1)
9	V836855756	1	Washer	(1)
10	V504602002	1	Nut	(1)
				M20
11	V528801810	6	Screw	M10X30
12	V836867656	1	Fan	Diameter 850
13	V836859288	1	Belt	
14	V581705570	1	Hex Socket Screw	M12X100
15	V836866312	1	Flange	M10X25
16	V836866321	1	Roller	
17	V837073198	2	Shaft	
18	V837073197	1	Plate	
19	V836855934	2	Sleeve	
20	V529801550	1	Screw	M8X100
21	V529801470	2	Bolt	M8X60
22	V528801800	1	Bolt	M10X25
23	V529801562	1	Screw	M8X110
24	V529801450	1	Screw	M8X50
25	V581705180	1	Screw	M10X110
26	V500151050	1	Washer	
27	V837073101	1	Tensioner	
28	V836867902	1	Spacer	
29	V595954600	1	Pin	
30	V685121530	1	Screw	

FOOTNOTE [A] NOT ILLUSTRATED

https://truckmanualshub.com/

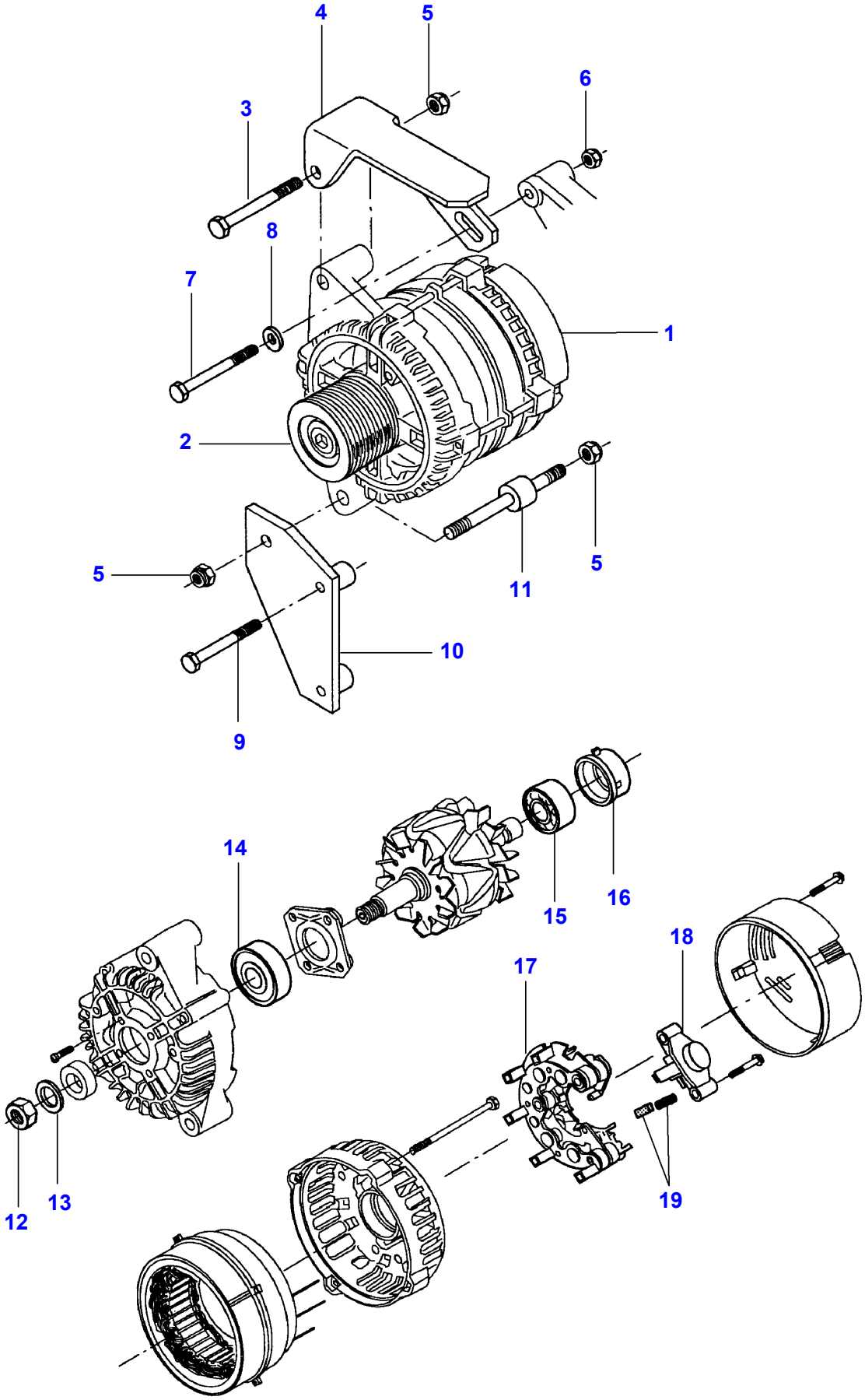

D-HB24-010-B

https://truckmanualshub.com/

Item	Part Number	Qty	Description	Comments
1	V836864048	1	Alternator	12V/150A
2	V836864142	1	Pulley	
3	V529801910	1	Bolt	
4	V836855928	1	Bracket	
5	V510601002	3	Nut	
6	V510600802	1	Nut	
7	V529801510	1	Bolt	
8	V836120989	1	Flat Washer	
9	V529801490	2	Screw	
10	V836855956	1	Bracket	
11	V836855957	1	Screw	7278
	V836866341	1	Screw	7274
12	V515601602	1	Nut	(1)
13	V500451602	1	Washer	(1)
14	V836862378	1	Bearing Assy	(1)
15	V836862380	1	Bearing Assy	(1)
16	V836862379	1	Chock	(1)
17	V836862381	1	Rectifier	(1)
18	V836862382	1	Regulator	(1)
19	V836862383	1	Kit, Brush	(1)

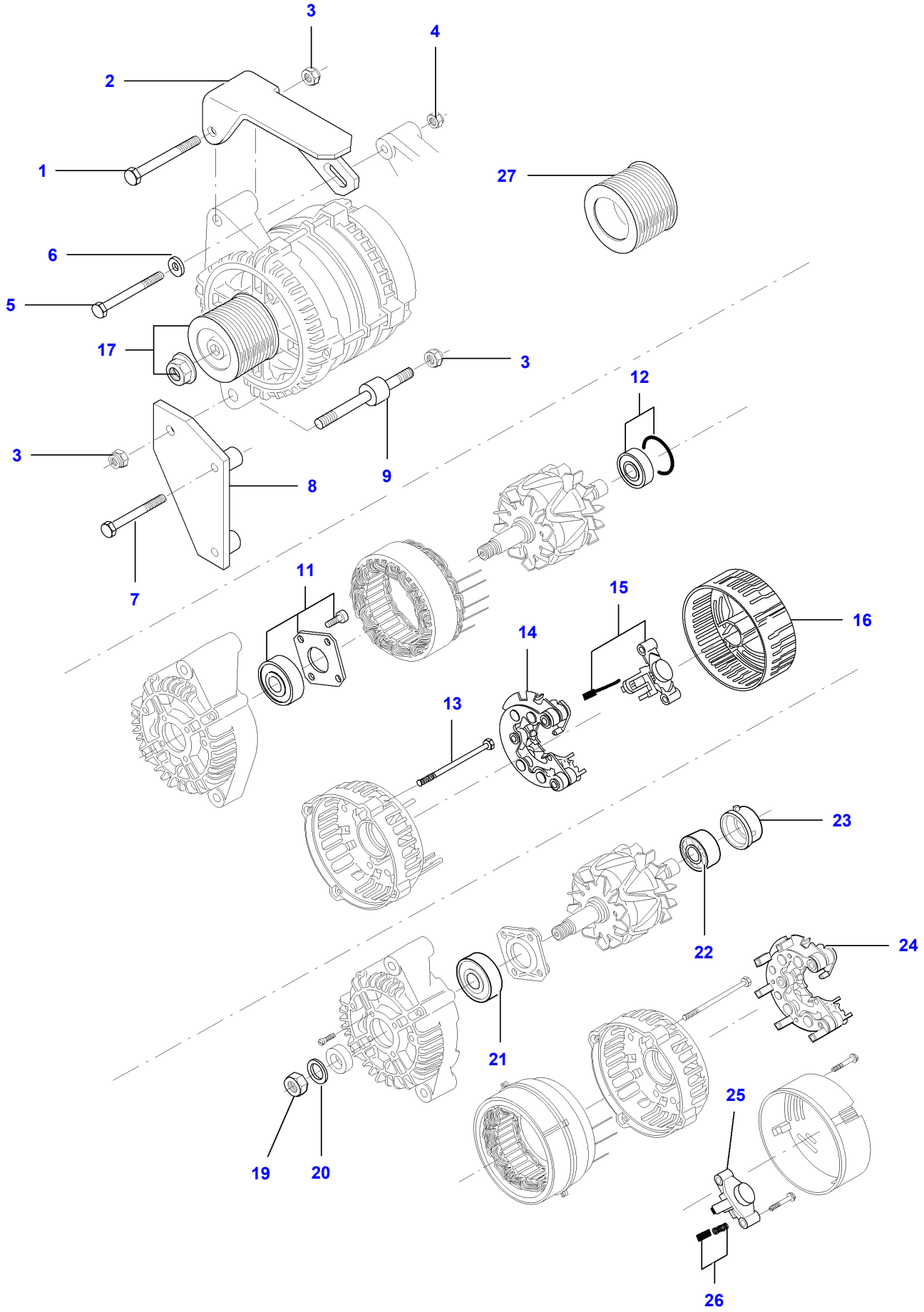

D-HB24-011-B

https://truckmanualshub.com/

Item	Part Number	Qty	Description	Comments
1	V529801910	1	Bolt	M10X80
2	V836855928	1	Bracket	
3	V510601002	3	Nut	M10
4	V510600802	1	Nut	M8
5	V529801510	1	Bolt	M8X80
6	V836120989	1	Flat Washer	
7	V529801490	2	Screw	M8X70
8	V836855956	1	Bracket	
9	V836866341	1	Screw	
10	V836667315	1	Alternator	[A]
11	V836662619	1	Bearing	(10)
12	V836662622	1	Bearing	(10)
13	V836662620	1	Screw	(10)
14	V836662623	1	Rectifier	(10)
15	V836662625	1	Regulator	(10)
16	V836662624	1	Cover	(10)
17	V836662621	1	Pulley	(10)
18	V836864048	1	Alternator	[A]
				From Serial or Engine Number T 18426
	V836673344	1	Alternator	[A,B]
				Repairs and replaces V836864048
19	V515601602	1	Nut	(18)
20	V500451602	1	Washer	(18)
21	V836862378	1	Bearing Assy	(18)
22	V836862380	1	Bearing Assy	(18)
23	V836862379	1	Chock	(18)
24	V836862381	1	Rectifier	(18)
25	V836862382	1	Regulator	(18)
26	V836862383	1	Kit, Brush	(25)
27	V836864142	1	Pulley	From Serial or Engine Number T 18426

FOOTNOTE [A] NOT ILLUSTRATED
FOOTNOTE [B] DETAILS TO BE ADVISED

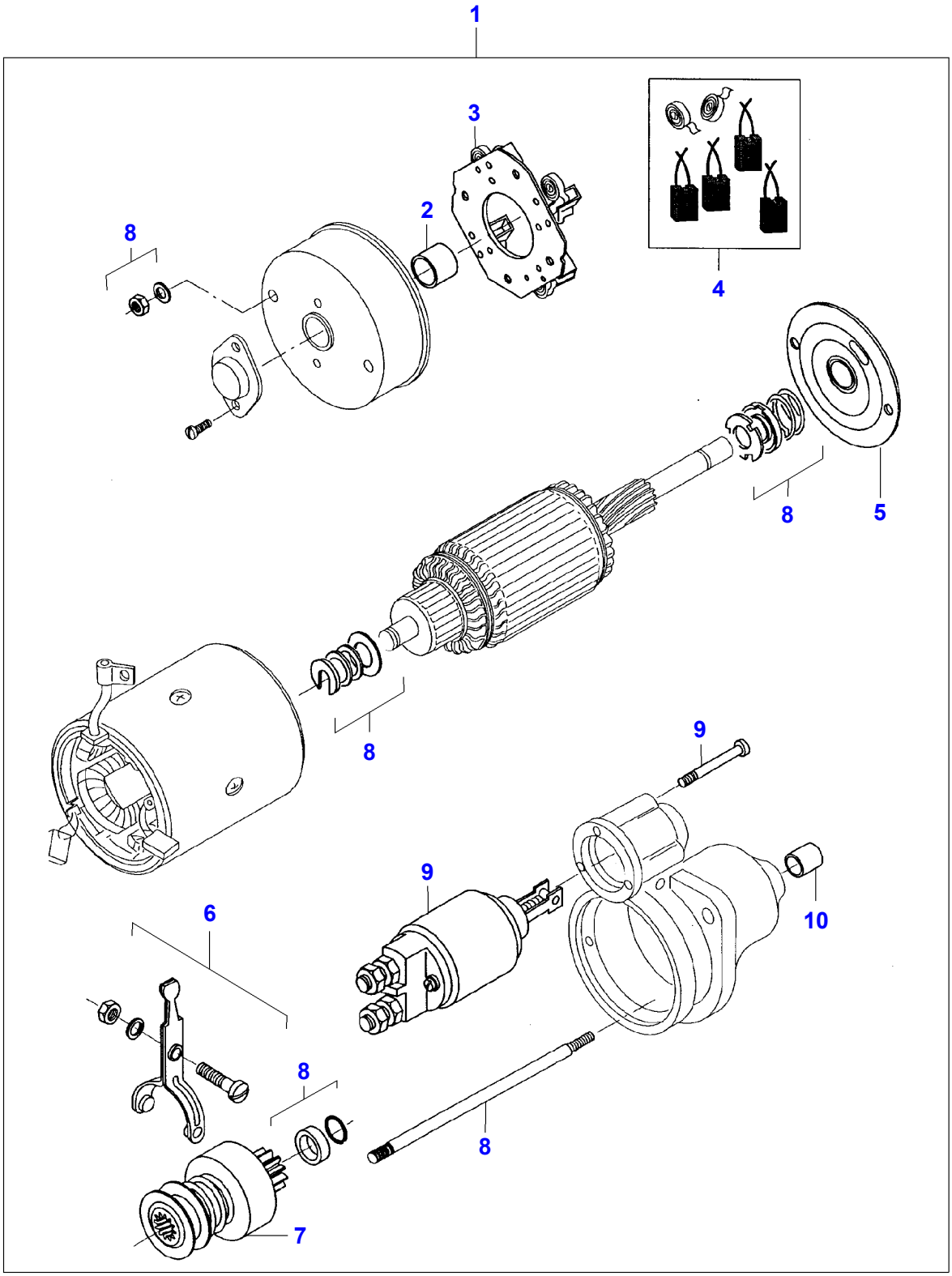

D-HB25-007-B

https://truckmanualshub.com/

Item	Part Number	Qty	Description	Comments
1	V836662073	1	Startermotor	
2	V836640951	1	Bush	(1)
3	V836662091	1	Clamp	(1)
4	V836662092	1	Kit, Brush	(1)
5	V836640954	1	Plate	(1)
6	V836640955	1	Control	(1)
7	V836662093	1	Drive Gear	(1)
8	V836662094	1	Kit, Gasket	(1)
9	V836640958	1	Solenoid	(1)
10	V836662095	1	Bush	(1)

https://truckmanualshub.com/

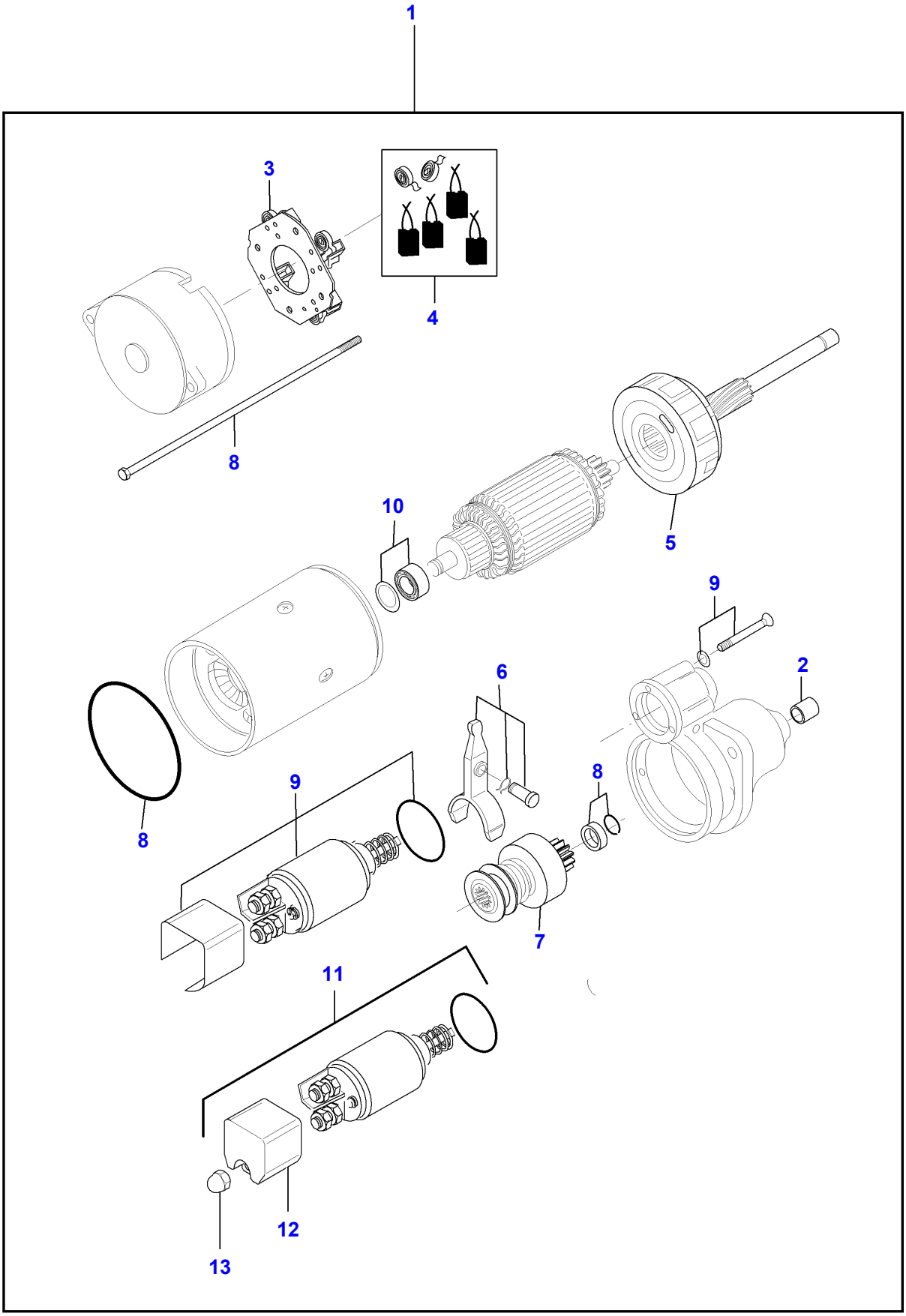

D-HB25-009-B

https://truckmanualshub.com/

Item	Part Number	Qty	Description	Comments
1	V836866817	1	Startermotor	Up to Serial or Engine Number 12V/4,2KW
	V836873290	1	Startermotor	From Serial or Engine Number 12V/4,2KW
2	V836862454	1	Bush	(1)
3	V836862461	1	Clamp	(1)
4	V836862462	1	Kit, Brush	(3)
5	V836862458	1	Shaft	(1)
6	V836862457	1	Shift Lever Assy	(1)
7	V836862456	1	Drive Gear	(1)
8	V836862460	1	Additional Parts	(1)
9	V836862455	1	Solenoid	(1)
				WITH STARTER MOT
				V836866817
10	V836862459	1	Bearing	(1)
11	V836662709	1	Solenoid	(1)
				WITH STARTER MOT
				V836873290
12	V836662700	1	Cover	(11)
13	V836662701	1	Nut	(11)

https://truckmanualshub.com/

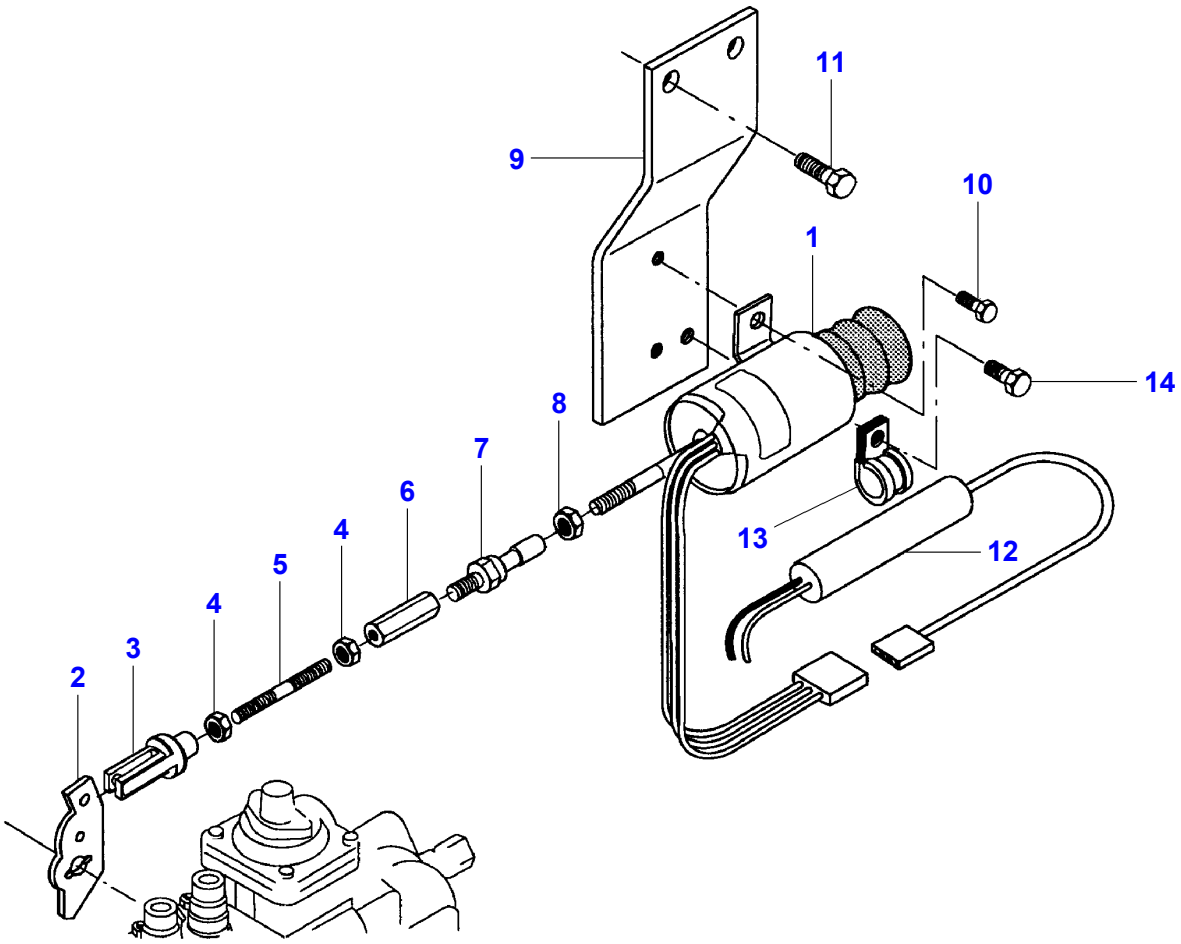

D-HB44-008-B

https://truckmanualshub.com/

Item	Part Number	Qty	Description	Comments
1	V836664211	1	Stop Solenoid	12V
2	V836664210	1	Lever	
3	V835339319	1	Fork	
4	V504600502	2	Nut	
5	V836864285	1	Stem	
6	V836864286	1	Nut	
7	V836664287	1	Stem	
8	V504600602	1	Nut	
9	V836859706	1	Support	
	V836866774	1	Support	
10	V528801062	2	Bolt	
11	V528801760	2	Screw	
12	V836659691	1	Relay	
13	V602074620	1	Clamp	
14	V528801360	1	Screw	

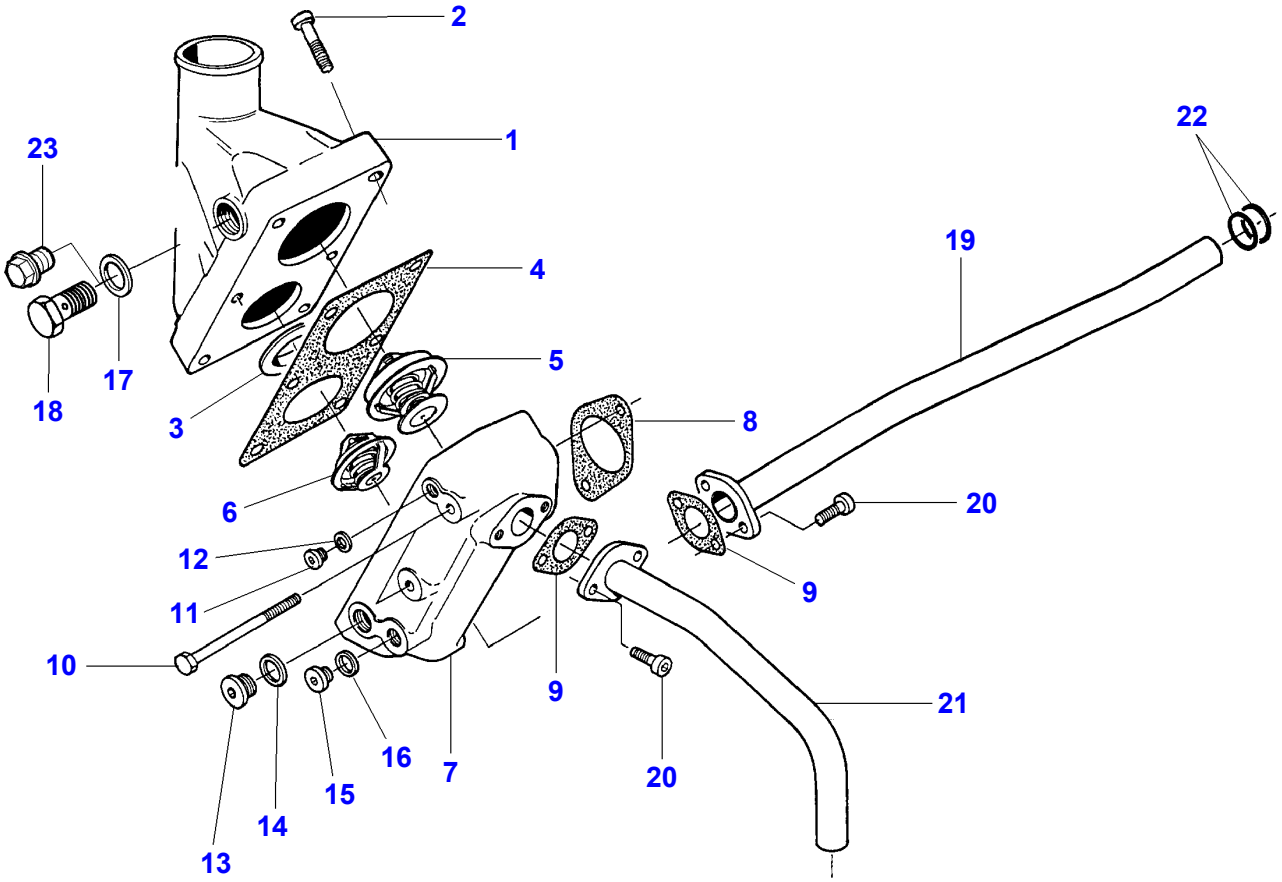

D-HB09-003-B

https://truckmanualshub.com/

Item	Part Number	Qty	Description	Comments
1	V836855602	1	Housing	
2	V581804650	6	Screw	M8X40
3	V836336425	1	Washer	
4	V836855603	1	Gasket	[C]
5	**V836331590**	1	Thermostat	[A]
6	**V836015156**	1	Thermostat	[B]
7	V836855601	1	Housing	
8	V836646393	1	Gasket	[C]
9	V836322190	2	Gasket	[C]
10	V529801550	2	Screw	M8X100
11	V640325110	1	Plug	
12	**V615871014**	1	Seal	[C]
13	V640325018	1	Plug	
14	V615881822	1	Seal	[C]
15	V640325014	1	Plug	
16	**V615881418**	1	Seal	[C]
17	**V615882227**	1	Gasket	[C]
18	V640435018	1	Banjo Bolt	[A]
19	V836855639	1	Pipe	
20	VHC9326	4	Screw	
21	V836855672	1	Pipe	
22	V614602430	2	O Ring	[C]
23	V640045022	1	Plug	

FOOTNOTE [A] OPENS AT 83 DEGREES
FOOTNOTE [B] OPENS AT 79 DEGREES
FOOTNOTE [C] INCLUDED IN V836840993

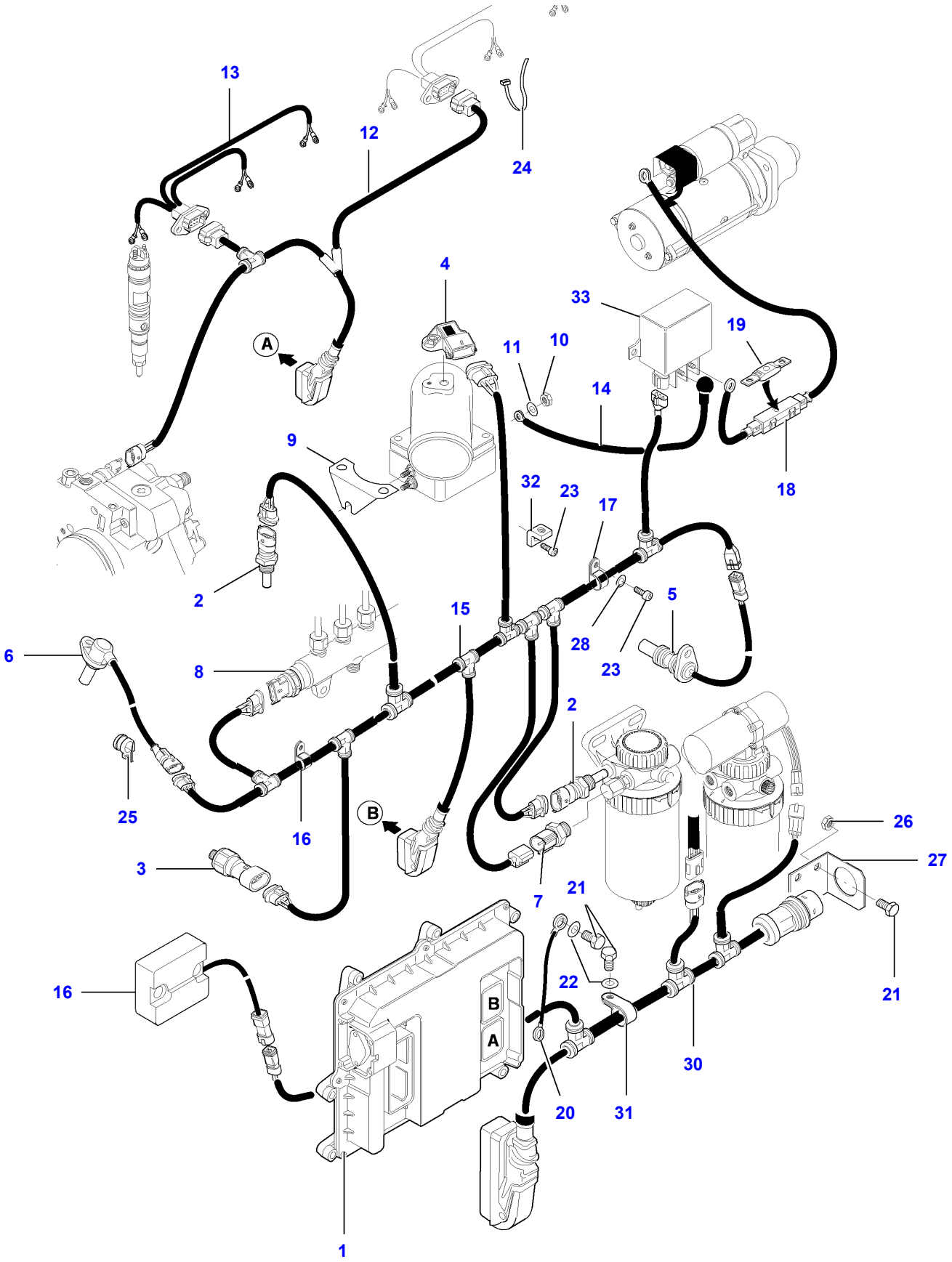
13
12
24
4
33
19
A
11
10
14
9
18
32
23
17
2
15
5
6
8
28
23
2
25
16
B
26
3
27
7
21
16
22
21
B
A
30
20
31
1

https://truckmanualshub.com/

Item	Part Number	Qty	Description	Comments
1	V837069216	1	Control Unit	From Serial or Engine Number 84.510 MF7274 84.509 MF7278 Up to Serial or Engine Number U1001
	V837071189	1	Control Unit	From Serial or Engine Number 84.545 MF7274 84.548 MF7278 From Serial or Engine Number U1001
2	**V836667732**	2	Sensor	
3	**V837070201**	1	Sensor	
4	**V836666980**	1	Sensor	
5	**V837069150**	1	Speed Sensor	
6	**V837070189**	1	Speed Sensor	
7	**V837070209**	1	Pressure Switch	
8	**V837069410**	1	Sensor	
9	V837070130	1	Earth Strap	Up to Serial or Engine Number S 5910
10	V504600602	2	Nut	M6
11	V500050642	2	Washer	
12	V837070049	1	Harness	INJECTORS
13	V837070048	2	Harness	INJECTORS
14	V837070055	1	Wire	
15	V837070050	1	Harness	SENSORS
16	V837073181	1	Clip	(15)
17	V837073182	3	Clip	(15)
18	V837070054	1	Wire	
19	V836864541	1	Fuse	(15) 250A
20	V837070292	1	Earth Strap	
21	V528801360	3	Screw	M8X16
22	V500150842	2	Washer	
23	V581804182	5	Screw	M6X16
24	V651755320	5	Cable Tie	
25	V602060610	2	Band	
26	V504800800	1	Nut	M8
27	V836866831	1	Support	
28	V500050642	4	Washer	
29	V837070198	1	Module	[A] Up to Serial or Engine Number 84.510 MF7274 84.509 MF7278 Up to Serial or Engine Number U1001
30	V837070051	1	Harness	CONNECTOR
31	V837073183	1	Band	(30)
32	V837073199	1	Support	
33	**V837069047**	1	Solenoid	12V

FOOTNOTE [A] NOT ILLUSTRATED

https://truckmanualshub.com/

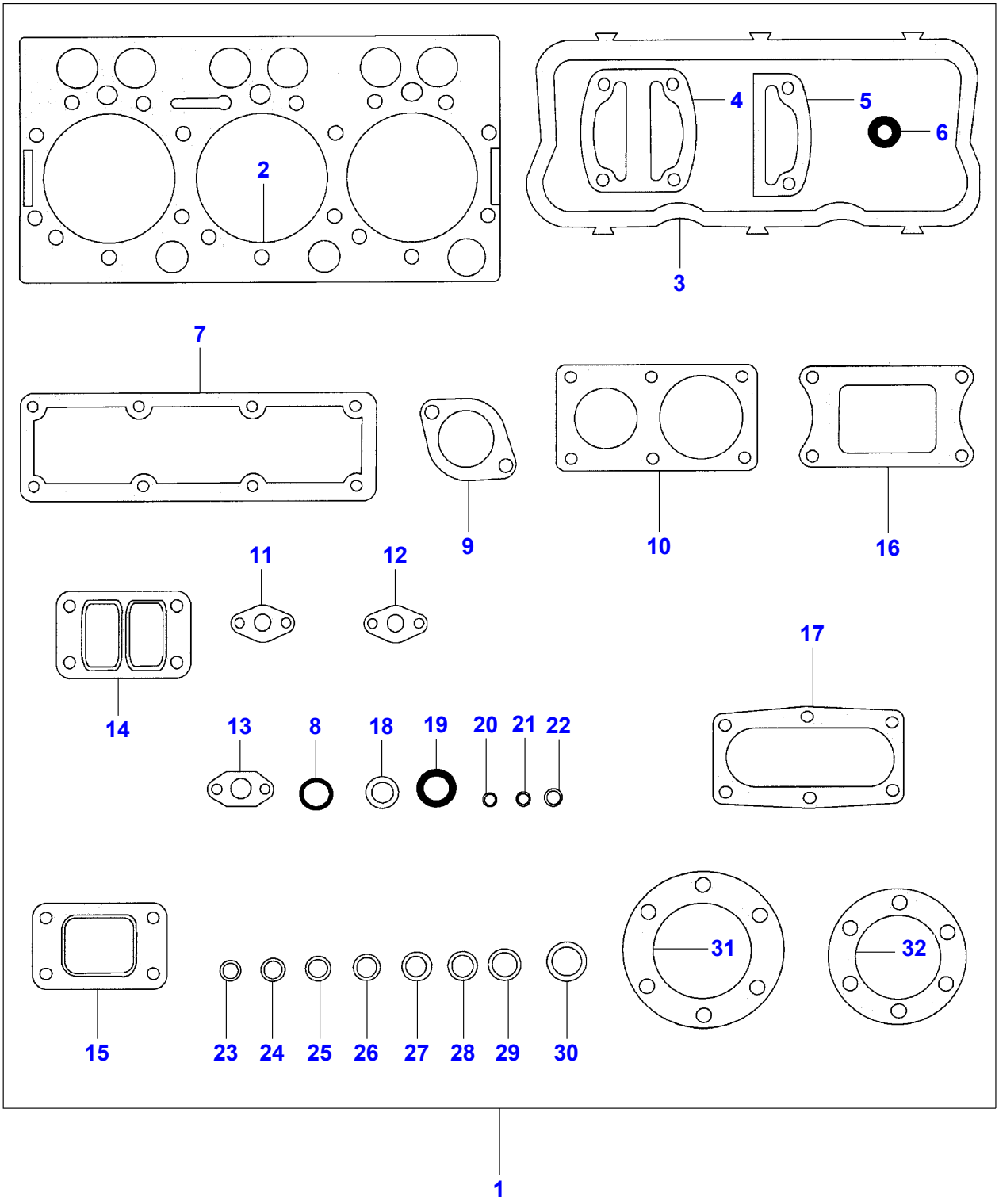

D-HB28-007-B

https://truckmanualshub.com/

Item	Part Number	Qty	Description	Comments
1	**V836840993**	1	Kit, Joint	
2	V837070290	2	Head Gasket	Replace and repair. Old not interchangeable with new V836664155 Repairs and replaces V836666302
3	**V836646360**	2	Gasket	
4	V836855418	1	Gasket	
5	V836855417	2	Gasket	
6	**V836012841**	4	Gasket	
7	V836847496	2	Gasket	
8	V614602430	4	O Ring	
9	V836646393	1	Gasket	
10	V836855603	1	Gasket	
11	V836322190	2	Gasket	
12	V836866808	1	Gasket	Replace and repair. Old not interchangeable with new V836308344
13	V836866809	2	Gasket	Replace and repair. Old not interchangeable with new V836324580
14	**V836840992**	1	Gasket	
15	V836316726	2	Gasket	
16	V836847532	1	Gasket	
17	V836855744	1	Gasket	
18	**V899901495**	6	Oil Seal	
19	**V835336276**	6	Seal	
20	V615870710	7	Seal	
21	V836355435	6	Seal	
22	V615870812	3	Gasket	
23	**V615871014**	1	Seal	
24	V615881216	4	Gasket	
25	V615581317	2	Seal	
26	**V615881418**	7	Seal	
27	V615881420	1	Gasket	
28	V615881620	2	Seal	
29	V615881822	3	Seal	
30	**V615882227**	1	Gasket	
31	V886325175	1	Gasket	
32	V836338985	1	Gasket	

https://truckmanualshub.com/

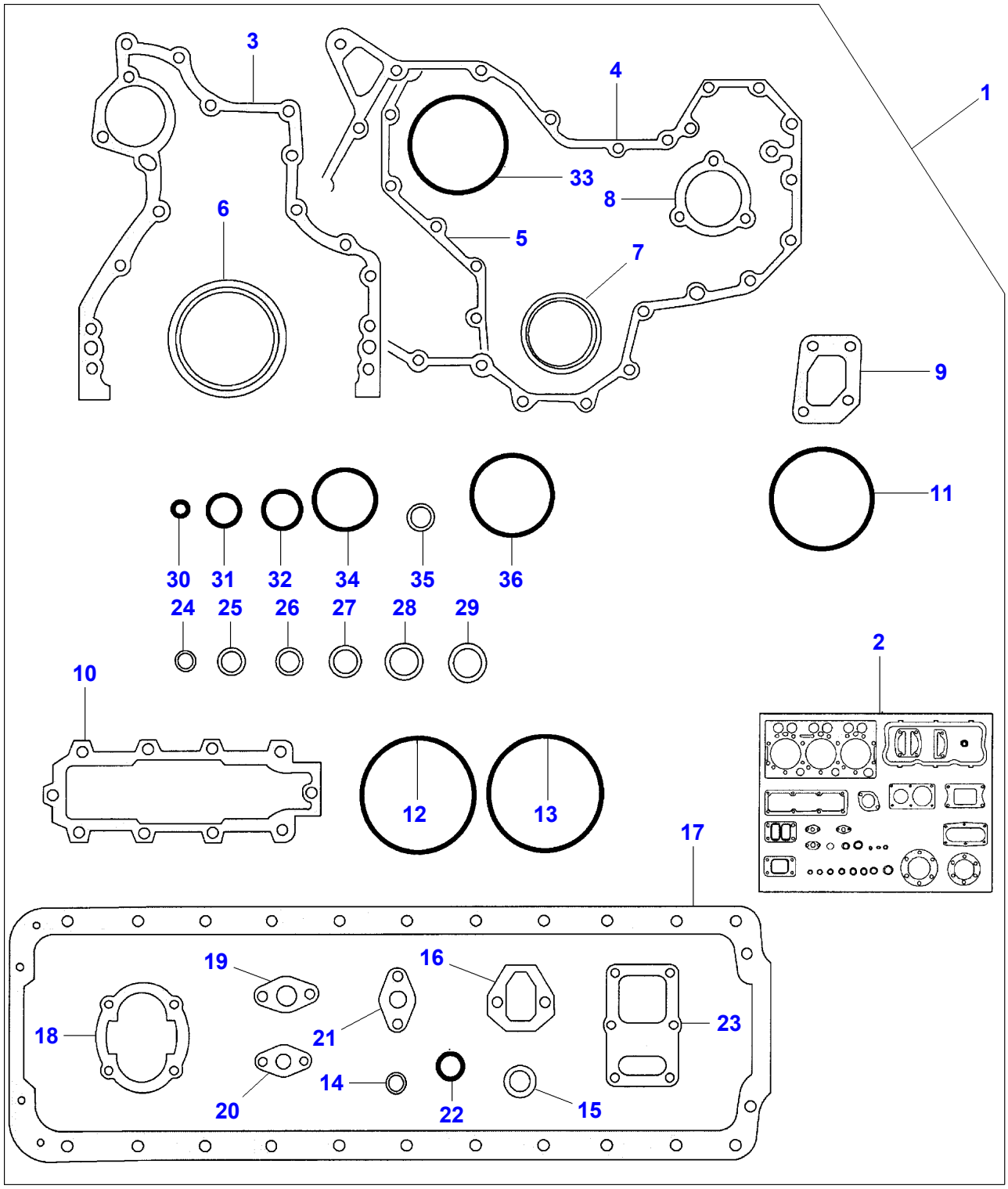

D-HB28-008-B

https://truckmanualshub.com/

Item	Part Number	Qty	Description	Comments
1	**V836840994**	1	Kit, Joint	
2	**V836840993**	1	Kit, Joint	(1)
3	V836647419	1	Gasket	
4	V836859201	1	Gasket	
5	V836859152	1	Gasket	
6	V836840884	1	Oil Seal	
7	V836840883	1	Oil Seal	
8	V836129946	1	Gasket	
9	V836855554	1	Gasket	
10	V836855520	1	Gasket	
11	V614609930	2	O Ring	
12	V836855446	12	O Ring	
13	V836855447	6	O Ring	
14	V640016016	4	Plug	
15	**V615882227**	2	Gasket	
16	V836647401	1	Gasket	
17	V836322538	1	Gasket	
18	V836338188	1	Gasket	
19	V836338201	1	Gasket	
20	V836008449	2	Gasket	
21	V836322190	1	Gasket	
22	**V615882227**	1	Gasket	
23	V836322852	1	Gasket	
24	**V615871014**	6	Seal	
25	V615881216	3	Gasket	
26	V615881420	8	Gasket	
27	V615881620	2	Seal	
28	V615881822	1	Seal	
29	V615881824	1	Seal	
30	V614600724	4	O Ring	
31	V614602030	6	O Ring	
32	V614602430	2	O Ring	
33	V614609430	1	O Ring	
34	V614604958	2	O Ring	
35	V615870814	4	Washer	
36	V614606230	1	O Ring	

https://truckmanualshub.com/

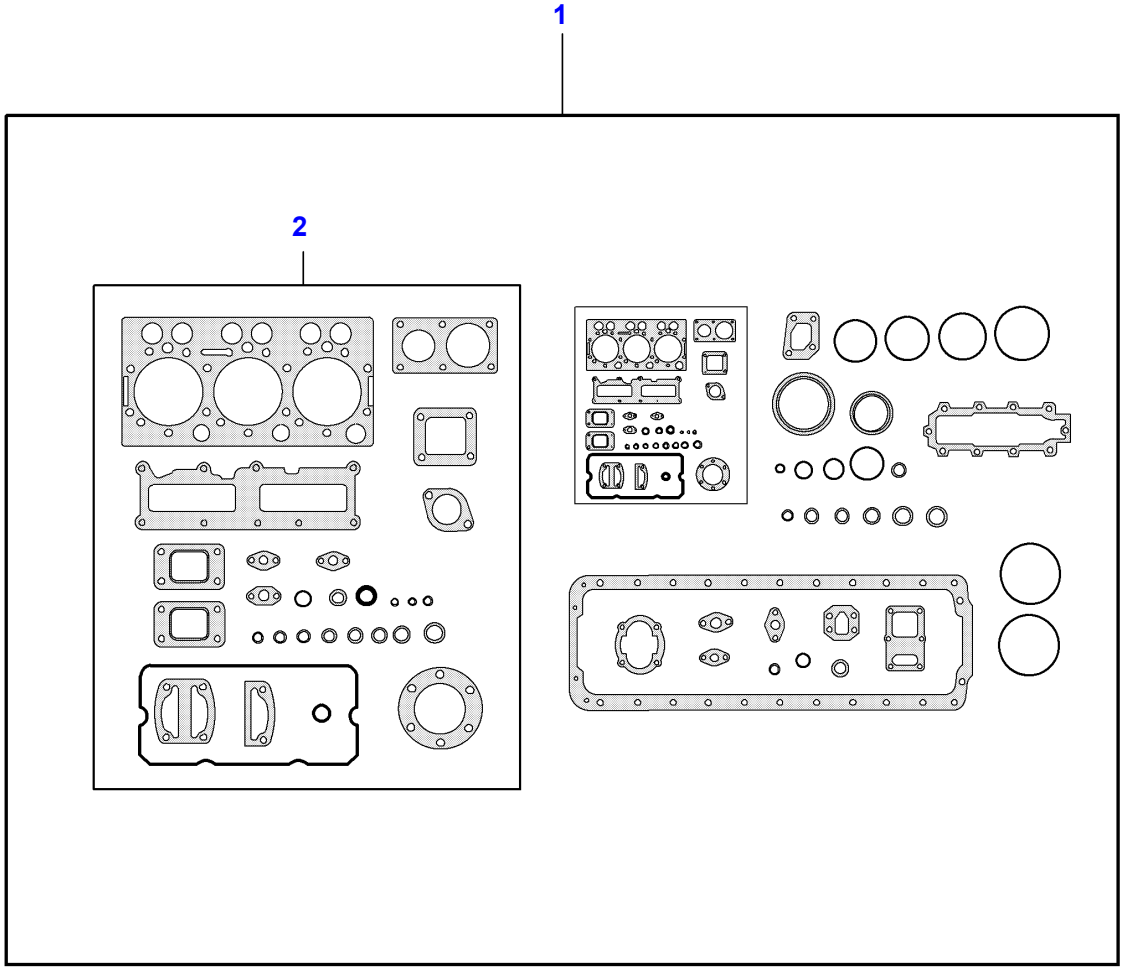

D-HB28-009-A

https://truckmanualshub.com/

Item	Part Number	Qty	Description	Comments
1	V837062628	1	Kit, Gasket	
2	V837062627	1	Kit, Gasket	(1)

https://truckmanualshub.com/

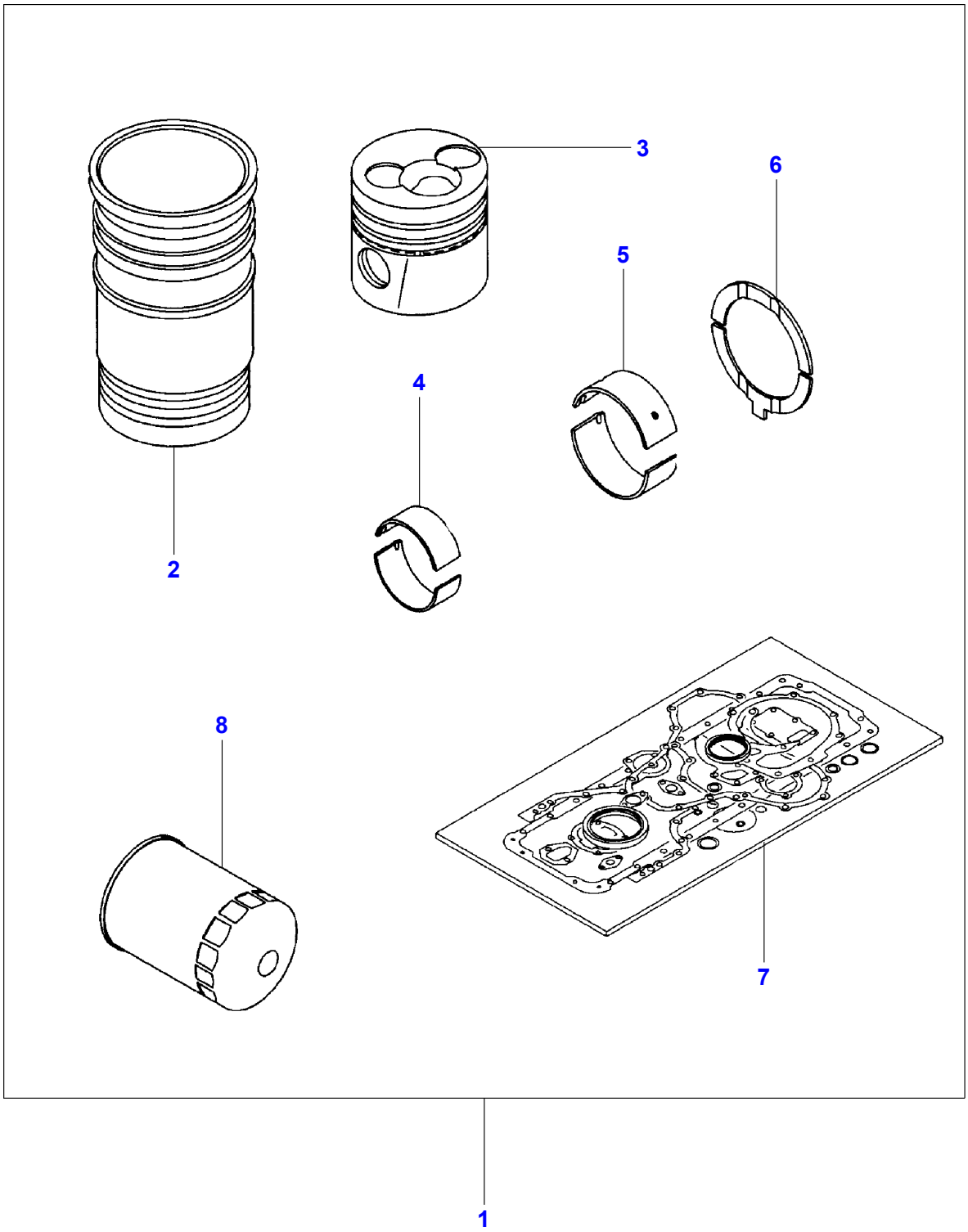

D-HB31-007-B

https://truckmanualshub.com/

Item	Part Number	Qty	Description	Comments
1	V836840995	1	Kit, Repair	
2	V836855445	6	Liner	7274
	V836867048	6	Liner	7278
3	V836840886	6	Piston	7274
	V836866182	6	Piston	7278
4	V836336302	6	Bearing	
5	V836840944	7	Main Bearing	
6	V836840945	2	Thrust Washer	
7	**V836840994**	1	Kit, Joint	
8	**V836336459**	1	Oil Filter	

https://truckmanualshub.com/

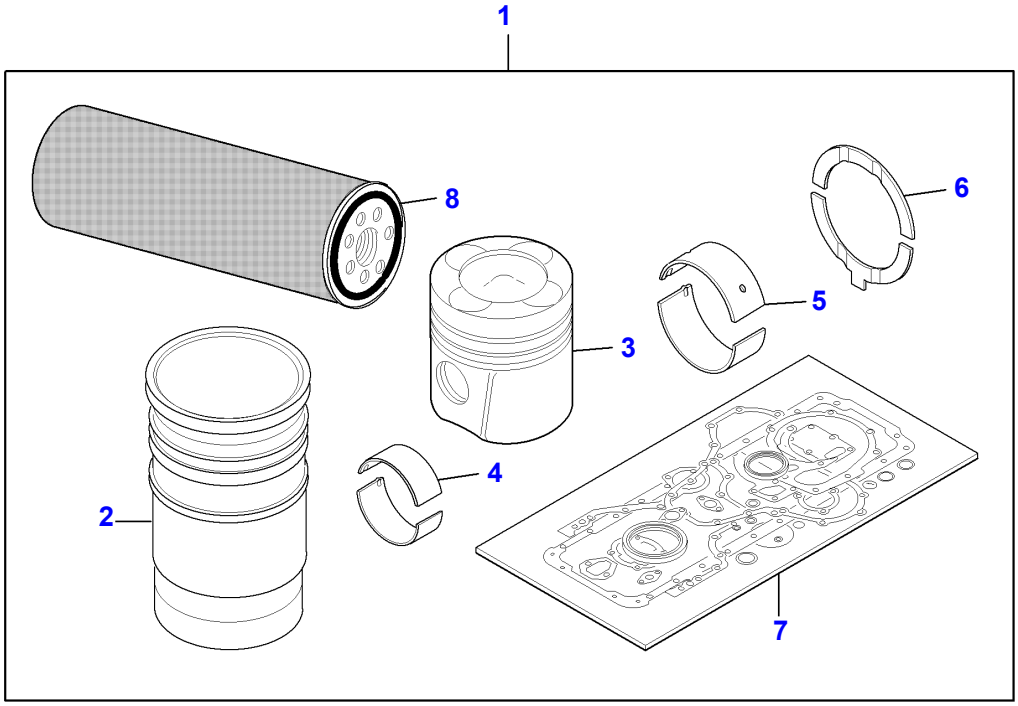

D-HB31-008-A

https://truckmanualshub.com/

Item	Part Number	Qty	Description	Comments
1	V837062626	1	Kit, Repair	
2	V836867048	6	Liner	(1)
3	V837070185	6	Piston	(1)
4	V836336302	6	Bearing	(1)
5	V836840944	7	Main Bearing	(1)
6	V836840945	2	Thrust Washer	(1)
7	V837062628	1	Kit, Gasket	(1)
8	**V836362567**	1	Oil Filter	(1)
				From Serial or Engine Number (36459)

https://truckmanualshub.com/

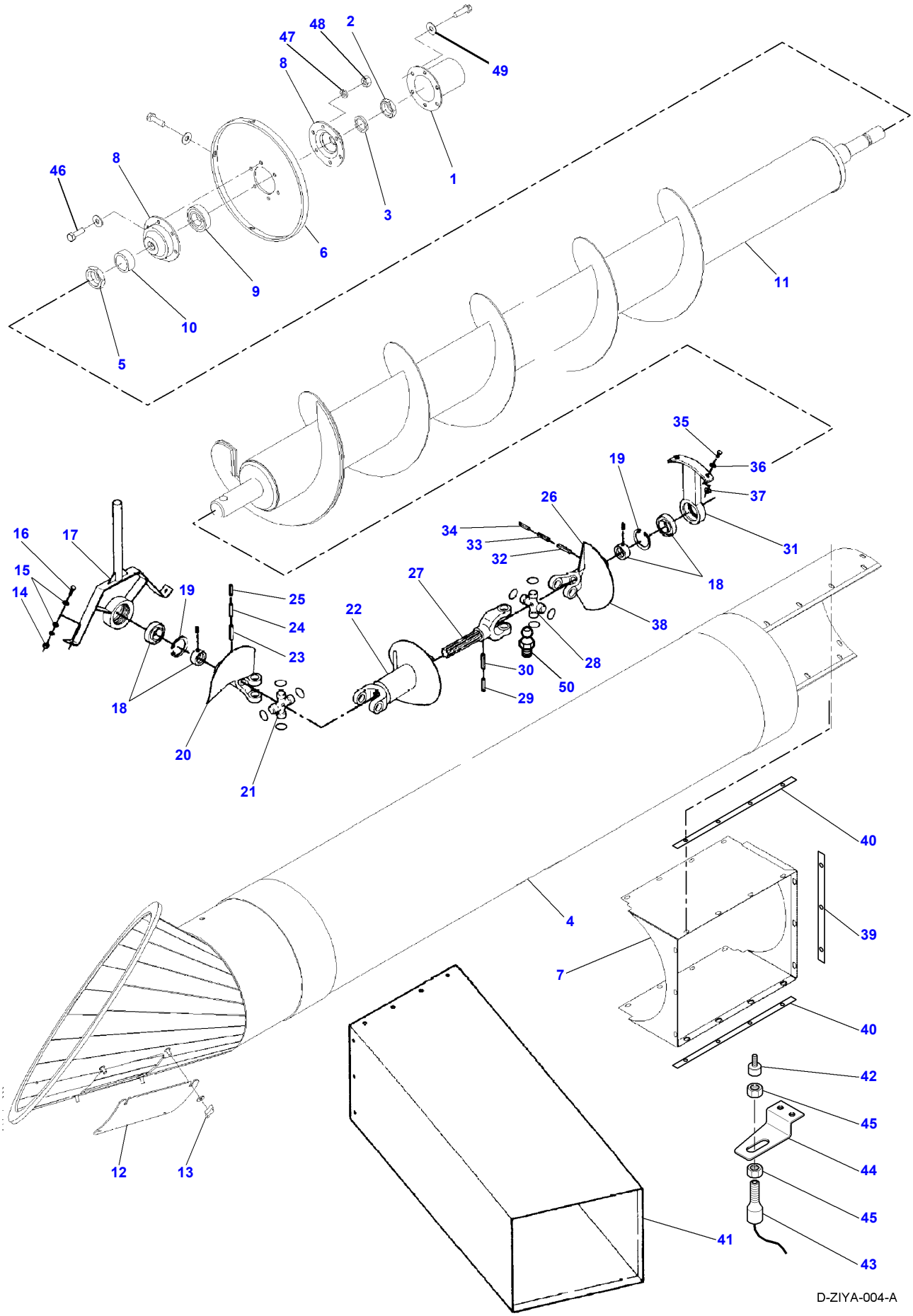

https://truckmanualshub.com/

Item	Part Number	Qty	Description	Comments
1	D18851122	1	Cap	
2	D41034100	1	Nut	
3	D28800328	2	Spacer	
4	D28880650	1	Pipe	Valid from machine/table no,can be used in new as well as in older machines 59088
5	D41034400	1	Nut	
6	D18880046	1	Plate	
7	D18880034	1	Funnel	
8	D28200239	2	Bearing Carrier	
9	SKF62072RS	1	Bear. 6207 2rs	
10	D28830693	1	Spacer	
11	D28880395	1	Auger	
12	D18880366	1	Gate	
13	D41057300	1	Wing Nut	
14	339402X1	2	Nut	M10
15	D20400416	4	Washer	
16	3009493X1	2	Cap Screw	M10 X 30
17	D28880230	1	Bracket	
18	D41663400	2	Ball Bearing	
19	1440480X1	2	Circlip	
20	D28880083	1	Auger	
	D28850839	1	Yoke	(20)
21	D45622700	1	Spider	(20)
22	D28880073	1	Auger	(20)
23	D42625600	1	Pin	
24	390949X1	1	Pin	Diameter 8 X 70
25	390950X1	2	Roll Pin	Diameter 5 X 70
26	D28880053	1	Yoke	
	D28880051	1	Yoke	(26)
27	D28880052	1	Fork	(26)
28	D45622700	1	Spider	(26)
29	339414X1	1	Pin	Diameter 6 X 60
30	391220X1	1	Pin	Diameter 10 X 45
31	D28880045	1	Bracket	
32	D42625400	1	Pin	
33	339194X1	1	Pin	Diameter 8 X 60
34	339249X1	1	Roll Pin	Diameter 5 X 60
35	339337X1	2	Cap Screw	M8 X 30
36	D20400506	2	Washer	
37	394367X1	2	Locknut	M8
38	D28880382	1	Spiral	
39	D28880030	1	Rail	
40	D28880031	2	Rail	
41	D28880032	1	Canvas	[A]
	D28880323	1	Canvas	[B]
42	**D45010092**	1	Magnet	
43	D28782585	1	Sensor	
44	D28787378	1	Support	
45	D41098000	1	Nut	
46	D40405100	X	Cap Screw	
47	D41102100	X	Washer	
48	D41010700	X	Nut	
49	D20400413	X	Washer	
50	D43002600	2	Grease Fitting	

FOOTNOTE [A] OPTIONAL EQUIPMENT, LONG.
FOOTNOTE [B] OPTIONAL EQUIPMENT, SHORT

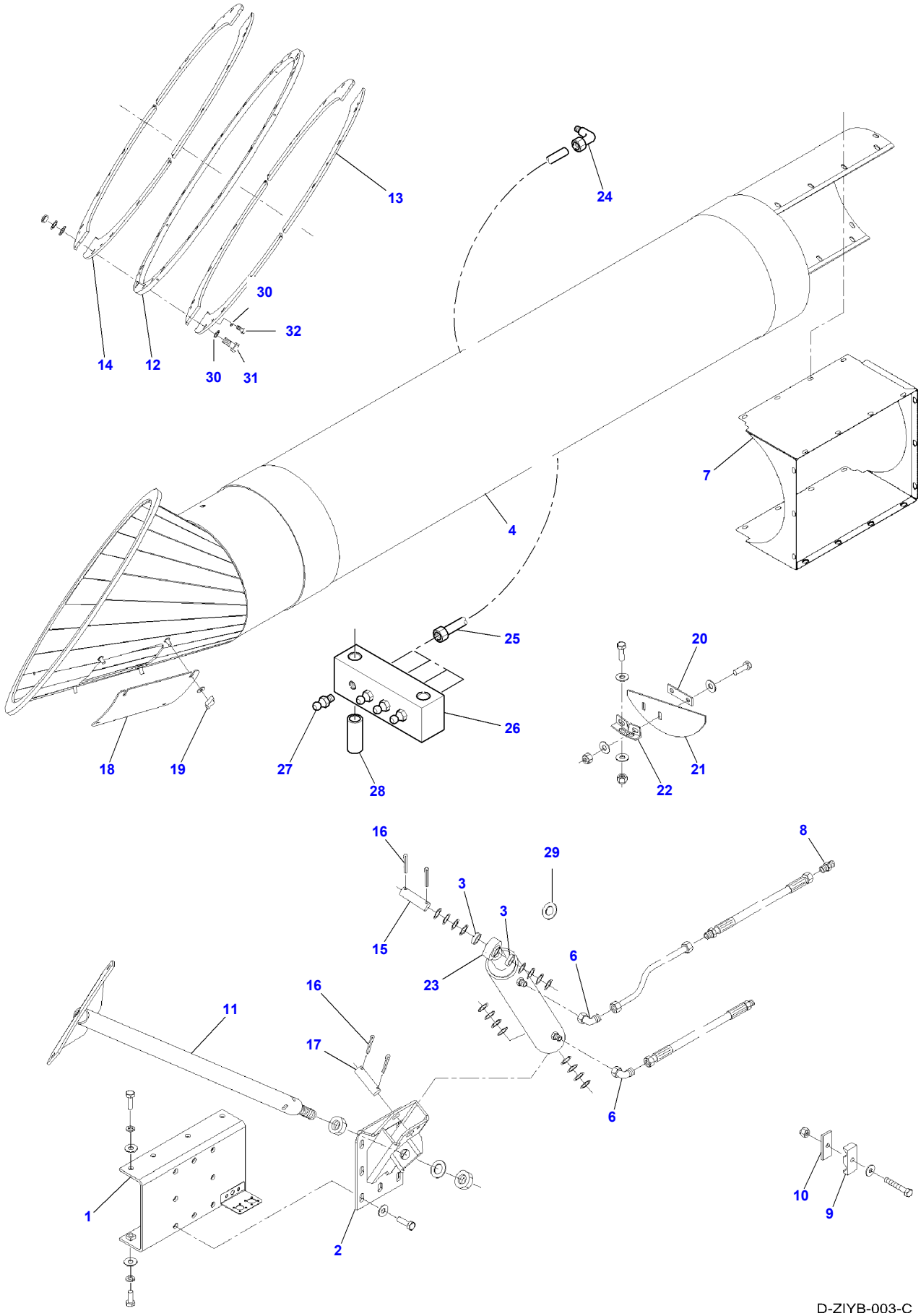
13
24
30
32
14
12
30
31
7
4
25
20
26
18
19
27
28
22
21
16
29
8
3
3
15
6
23
16
11
17
6
1
10
9
2
D-ZIYB-003-C

https://truckmanualshub.com/

Item	Part Number	Qty	Description	Comments
1	D28885861	1	Support	
2	D28880283	1	Bracket	
3	D20400537	2	Spacer	
4	D28880650	1	Pipe	Valid from machine/table no,can be used in new as well as in older machines 59088
6	D45263900	2	Union	
7	D18880034	1	Funnel	
8	D45254000	1	Union	
9	D45739100	1	Support	
10	D28750783	1	Reinforcement	
11	D28880330	1	Reinforcement	
12	D28880462	1	Flange	
13	D18880498	4	Flange	
14	D28880499	4	Flange	
15	D28750214	1	Clevis Pin	
16	354078X1	4	Split Pin	3/16" X 1-1/4
17	D28850877	1	Pin	
18	D18880366	1	Gate	
19	D41057300	1	Wing Nut	
20	D28851026	1	Plate	
21	D28880024	1	Stop	
22	D28851025	1	Retainer	
23	D45100065	1	Ram	
24	D43008100	1	Connector	
25	D28885250	1	Tube	Length 525 mm
	D28885251	1	Tube	Length 675 mm
	D28885252	1	Tube	Length 1115 mm
	D28885253	1	Tube	Length 1685 mm
26	D28885249	1	Block	
27	339003X1	4	Grease Nipple	AM8
28	D28660143	2	Bush	
29	D45120071	1	Segment	
30	D20400424	1	Washer	
31	D40439900	1	Screw	
32	D40411400	1	Screw Metric	

https://truckmanualshub.com/

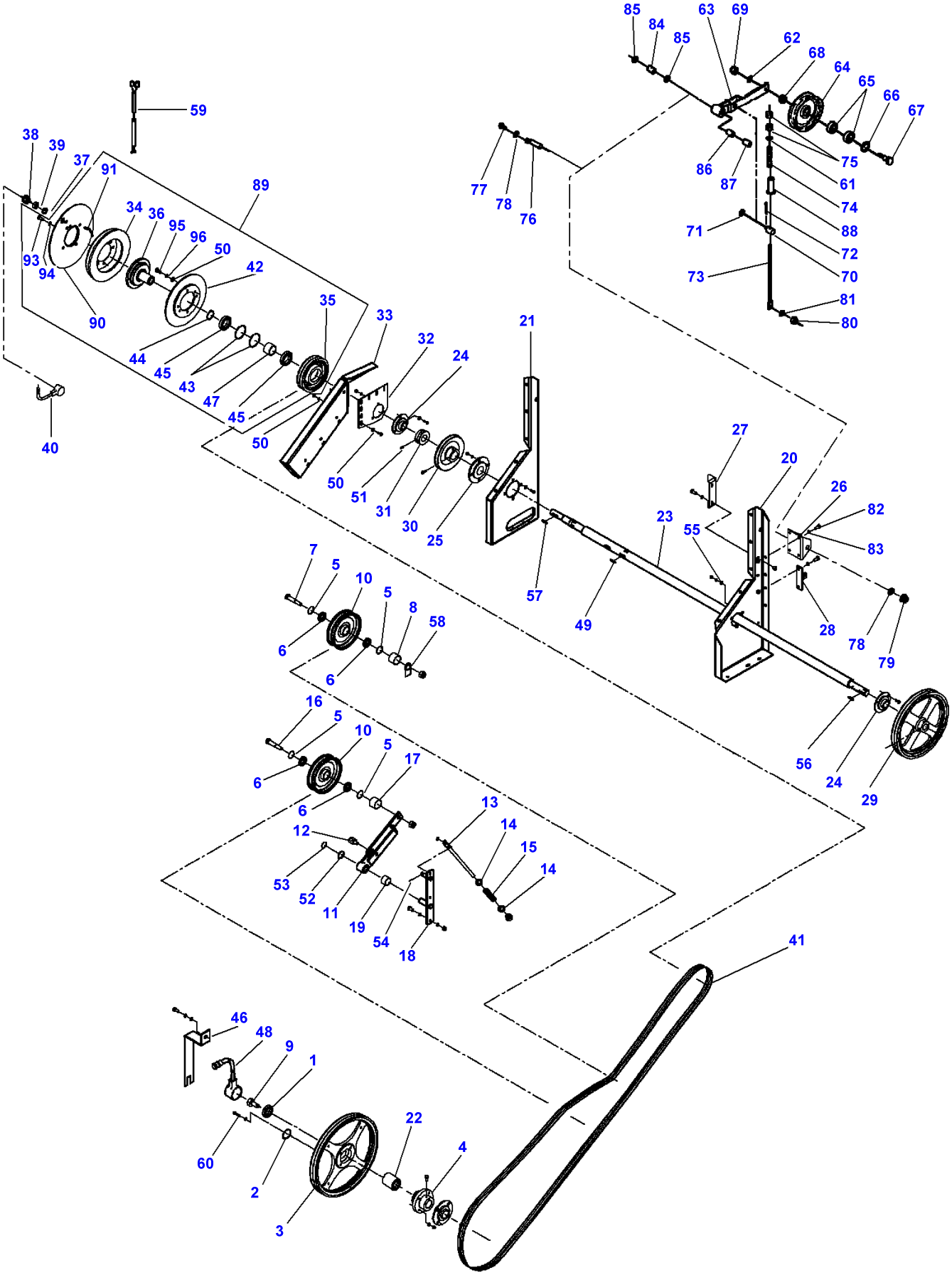

D-ZIZC-006-D

https://truckmanualshub.com/

Item	Part Number	Qty	Description	Comments
1	1440487X1	1	Bear. 6203 2rs	
2	D42505800	1	Circlip	
3	D28885163	1	Pulley	
4	D28885162	1	Flange	
5	339199X1	4	Circlip	
6	SKF62042RS	4	Bear. 6204 2rs	
7	D28885049	1	Bolt	
8	D28885047	1	Spacer	
9	**D28780516**	1	Inductive Sensor	
10	D28250441	2	Pulley	
11	D28880495	1	Lever	
12	D28880473	1	Pin	
13	D28380011	1	Tie Rod	
14	D28181284	2	Washer	
15	D28210881	1	Comp.Spring	
16	D28250444	1	Bolt	
17	D28880354	1	Spacer	
18	D28885046	1	Shaft	
19	D28885048	1	Spacer	
20	D28885633	1	Bracket	Left Hand
21	D28885632	1	Bracket	Right Hand
				From Serial or Engine Number 57674
	D28885632	1	Bracket	Right Hand
22	D28885444	1	Sleeve	
23	D28885635	1	Counter Shaft	
24	D41707900	2	Bearing	
25	D41715000	1	Bearing	
26	D28880359	1	Support	
27	D28885043	1	Support	
28	D28880361	1	Clamp	
29	D28885042	1	Pulley	
30	D28785072	1	Pulley	
31	D28786225	1	Pulley	
32	D28885634	1	Bearing Plate	
33	D28880194	1	Bracket	
34	D45060200	1	Magnet	(89)
	D45080168	1	Magnet	(89)
				From Serial or Engine Number 61365
35	D28885060	1	Pulley	
	D28885578	1	Pulley	(89)
				From Serial or Engine Number 61365
36	D28885065	1	Hub	(89)
37	D42596300	1	Tightener	
38	1441410X1	1	Nut	M22
39	D28882101	1	Flange	
40	D28780404	1	Retainer	
41	**D41978800**	1	Belt	
42	D45080033	1	Plate	(89)
	D45080169	1	Plate	(89)
				From Serial or Engine Number 61365
43	339437X1	2	Circlip	(89)
44	391129X1	1	Circlip	(89)
45	391347X1	2	Bear. 6010 2rs	(89)
46	D28780724	1	Retainer	
47	D28885066	1	Bush	(89)
48	**D28780514**	1	Sensor	
49	339441X1	1	Key Parallel	
50	D20400473	16	Washer	(89)
51	D40609000	1	Pin	
52	D20400530	1	Spacer	
53	1440476X1	1	Circlip	
54	354059X1	1	Split Pin	1/8" X 1
55	D20400507	3	Spacer	
56	339441X1	1	Key Parallel	
57	D43107500	1	Key	
58	D28251476	1	Retainer	
59	D28851037	1	Harness	
60	D40464600	2	Bolt	M8 X 65
61	D28181284	1	Washer	
62	D20400459	1	Washer	
63	D28880495	1	Lever	

https://truckmanualshub.com/

Item	Part Number	Qty	Description	Comments
64	D28250441	1	Pulley	Diameter 200 mm
65	SKF62042RS	2	Bear. 6204 2rs	
66	339199X1	1	Circlip	
67	D28250444	1	Bolt	
68	D28880354	1	Spacer	
69	1442739X1	1	Locknut	M16
70	D28780030	1	Pivot	
71	D20400429	1	Washer	
72	339129X1	1	Split Pin	Diameter 3,2 X 25
73	D28380011	1	Tie Rod	
74	D28210881	1	Comp.Spring	
75	339034X1	2	Nut	M16
76	D28880360	1	Pin	
77	339560X1	2	Cap Screw	M6 X 16
78	D20400404	3	Washer	
79	1441462X1	1	Locknut	M6
80	1440329X1	1	Locknut	M10
81	D20400471	4	Washer	
82	339814X1	11	Cap Screw	M10 X 35
83	D20400416	20	Washer	
84	D28880489	1	Bush	
85	D20400530	2	Spacer	
86	D43364000	1	Bush	
87	D43364300	1	Bush	
88	D28780318	1	Guide	
89	D28885067	1	Clutch	CPL.
89	D28885576	1	Clutch	From Serial or Engine Number 61365
90	D28885577	1	Plate	CPL. (89) From Serial or Engine Number 61365
91	D28885579	1	Guard	CPL. (89) From Serial or Engine Number 61365
92	D44731100	1	Grommet	[A] (89)
93	1440716X1	4	Cap Screw	(89)
94	D41100900	4	Spring Washer	(89)
95	D40464300	4	Screw	(89)
96	D41652600	4	Washer	(89)

FOOTNOTE [A] NOT ILLUSTRATED

https://truckmanualshub.com/

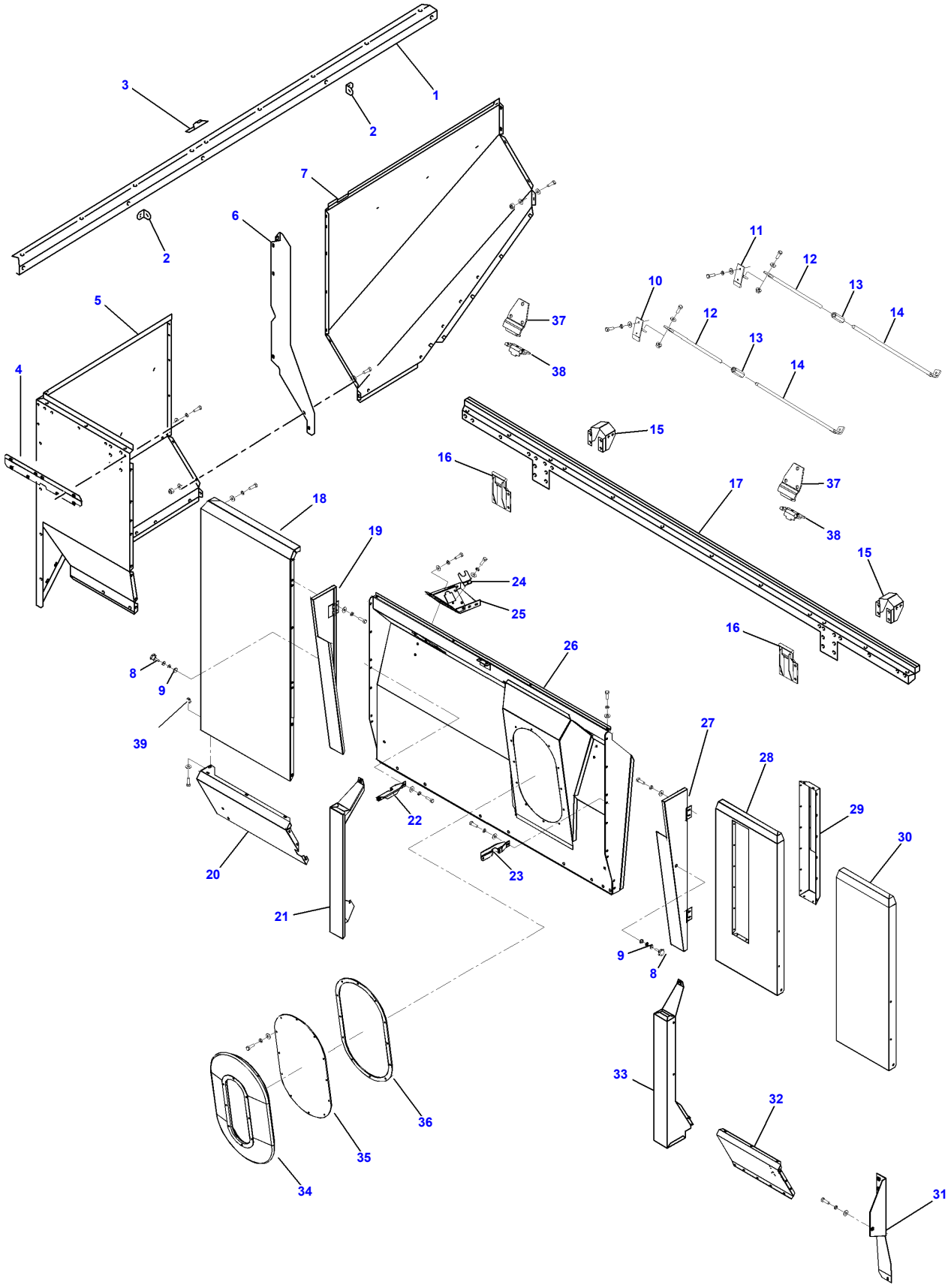

D-ZIZD-008-B

https://truckmanualshub.com/

Item	Part Number	Qty	Description	Comments
1	D28885706	1	Plate	
2	D28885803	2	Support	10500L
3	D28885831	1	Support	
4	D18885308	1	Plate	
5	D18885662	1	Guard	
6	D28885721	1	Stay	
7	D18885664	1	Plate	
8	D43385300	1	Screw	
9	D44731100	1	Grommet	
10	D28880309	1	Tensioner	Right Hand
11	D28880293	1	Tensioner	Left Hand
12	D28880305	2	Reinforcement	
13	D28884116	2	Nut	
14	D28880302	2	Reinforcement	
15	D28885698	2	Support	
16	D28885856	2	Support	
17	D28885704	1	Plate	
18	D18885656	1	Guard	
19	D28185712	1	Panel	Right Hand
20	D28186563	1	Guard	
	D18187018	1	Guard	From Serial or Engine Number 61490
21	D28186747	1	Guard	
22	D28885817	1	Bracket	
23	D28885817	1	Bracket	
24	D28880287	1	Cover	
25	D28885297	1	Case Assy	
26	D18885658	1	Panel	
27	D28185704	1	Cover	Left Hand
28	D18186145	1	Guard	
29	D18186146	1	Ladder	
30	D18186148	1	Grip	[A]
31	D28185706	1	Bracket	
32	D28186147	1	Guard	
33	D28186698	1	Guard	
34	D28985586	1	Bellows	
35	D28985571	1	Window	
36	D18985572	1	Plate	
37	D28885852	2	Strap	
38	D28885853	2	Strap	
39	D45742200	2	Plug	

FOOTNOTE [A] ELECTRIC GRAIN TANK HATCH

https://truckmanualshub.com/

MF 7274/7278 COMBINE, |-> 61123 for 7274 and |-> 61115 for 7278 - 3906105

D-ZIZD-009-E

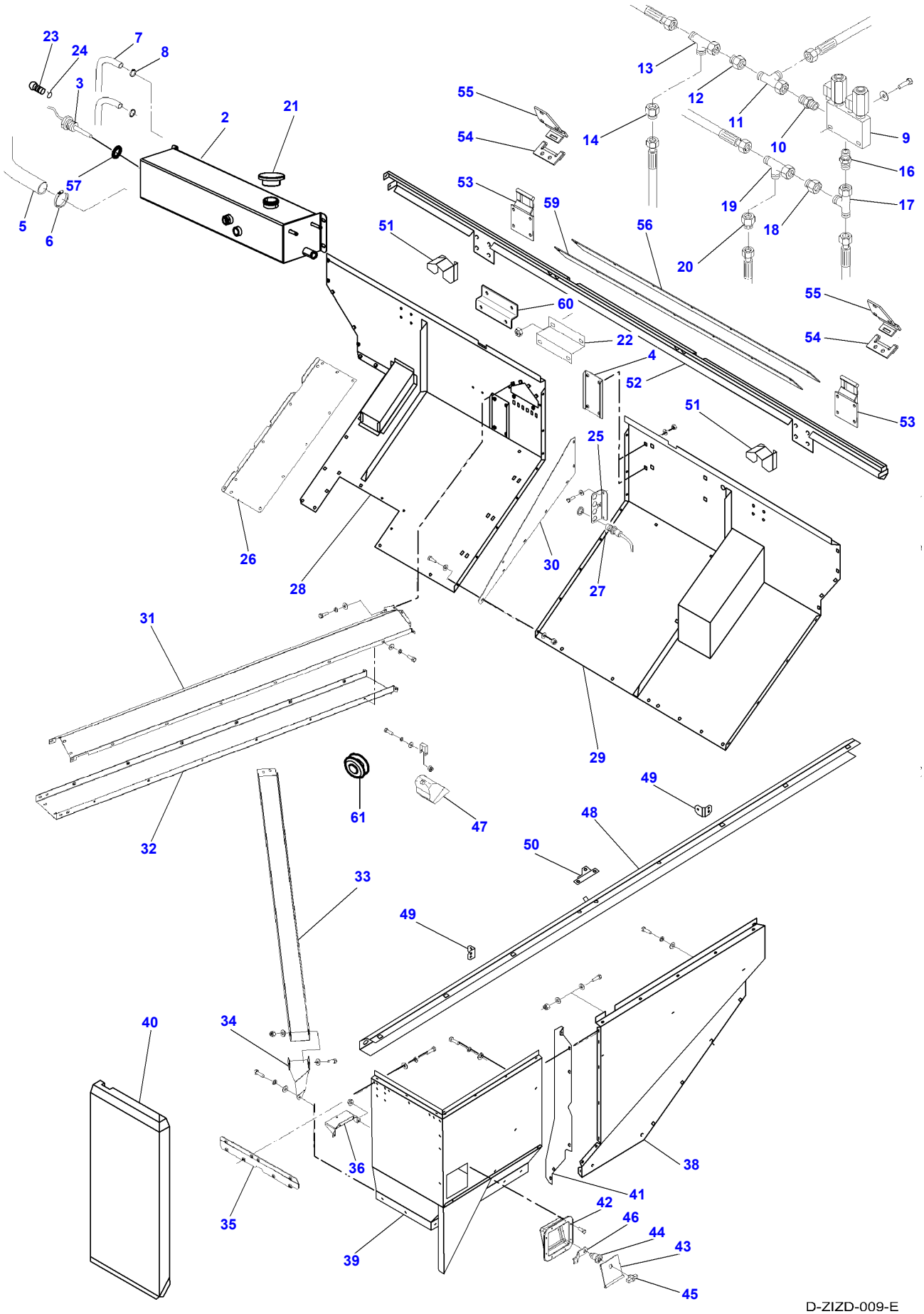

https://truckmanualshub.com/

Item	Part Number	Qty	Description	Comments
2	D28787041	1	Expansion Tank	
	D28787423	1	Valve Block	(2)
3	D45082400	1	Sensor	Valid from machine/table no,can be used in new as well as in older machines 59965
4	D28785411	1	Support	
5	D44748200	X	Hose	
6	D45729700	1	Clamp	
7	D44717000	X	Fuel Hose	
8	D45729700	4	Clamp	
9	D45110070	1	Block	
10	D45255500	1	Union	
11	D45266800	1	Union	
12	D45273100	1	Reducer	
13	D45266600	1	Union	
14	D45272000	1	Connector	
16	D45251500	1	Union	
17	D45266600	1	Union	
18	D45272800	1	Union	
19	D45266200	1	Union	
20	D45272100	1	Connector	
21	D46490094	1	Cap	
22	D28785384	1	Console	
23	D45750100	1	Cap	
24	D45738900	1	Hose Clip	
25	D28780748	1	Retainer	
26	D18885219	1	Guard	
27	D28780531	1	Warn Indicator	
28	D18885674	1	Plate	Right Hand
29	D18885672	1	Plate	Left Hand
30	D18885022	1	Brace	
31	D28885333	1	Case Assy	
32	D28885332	1	Case Assy	
33	D28885434	1	Chute	
34	D28885430	1	Profile	
35	D18885308	1	Plate	
36	D28181054	1	Support	
38	D18885671	1	Plate	Left Hand
39	D18885667	1	Panel	Left Hand
40	D18885676	1	Panel	
41	D28885722	1	Brace	
42	D28181052	1	Frame Assy	
43	D28181056	1	Trap	
44	D43429200	1	Housing	
45	D43429300	1	Punch	
46	D43429400	1	Latch	
47	D45084700	1	Worklight	
48	D28885702	1	Plate	
49	D28885803	2	Support	10500L
50	D28885831	1	Support	
51	D28885856	2	Support	
52	D28885701	1	Plate	
53	D28885678	2	Support	
54	D28885852	2	Strap	
55	D28885853	2	Strap	
56	D28885859	1	Reinforcement	
57	D46488800	1	Gasket	
59	D44745200	X	Seal	[A] Length 10M
60	D28786605	1	Plate	
61	D44732700	1	Grommet	
62	D45080107	1	Control Light	[B]

FOOTNOTE [A] CUT TO REQUIRED LENGTH
FOOTNOTE [B] NOT ILLUSTRATED

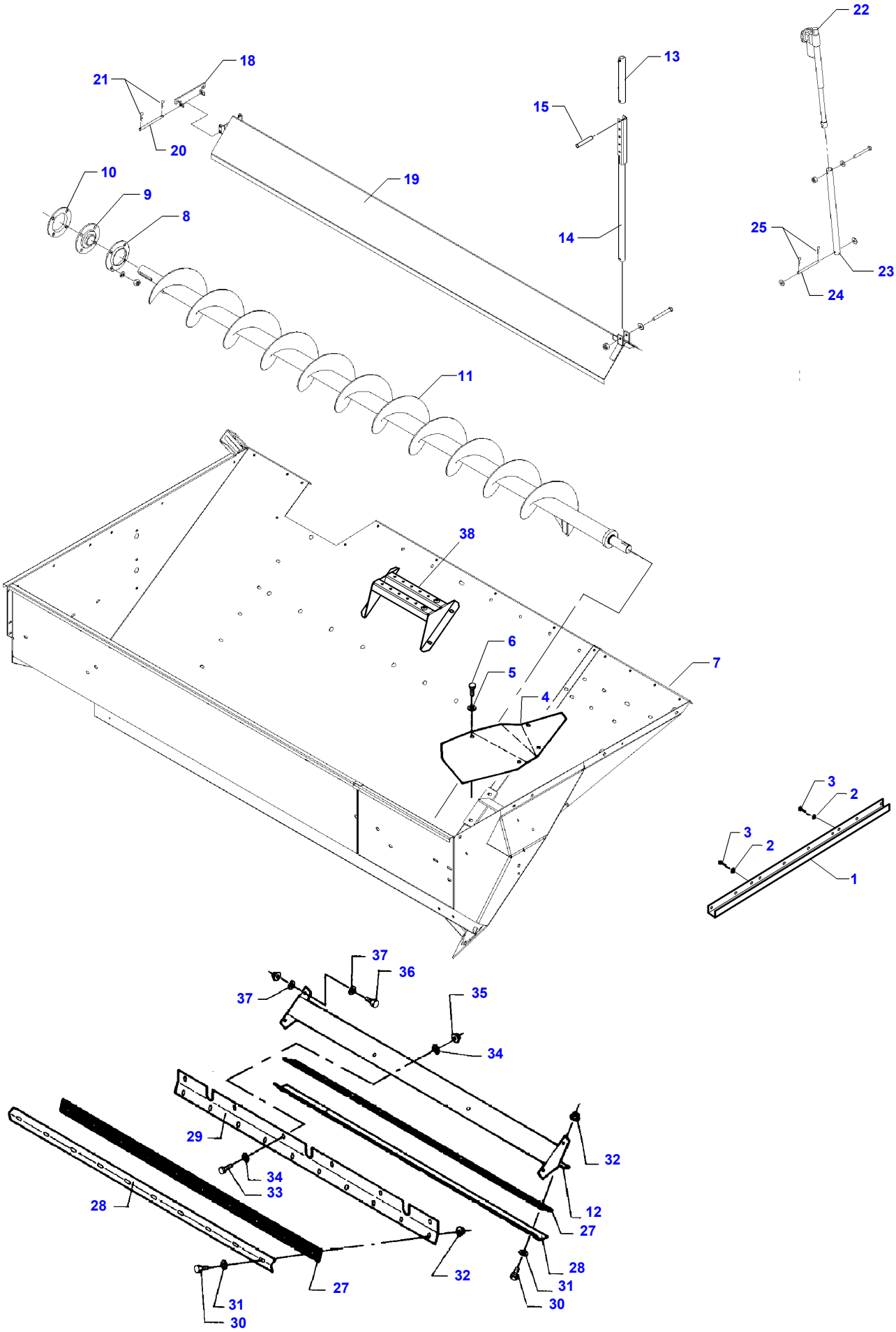
22
18
13
21
15
20
10
19
9
8
14
25
23
24
11
38
6
7
5
4
3
2
3
2
1
37
36
37
35
34
29
32
34
33
12
28
27
28
32
31
27
31
30
30

D-ZIZE-007-B

https://truckmanualshub.com/

Item	Part Number	Qty	Description	Comments
1	D28880377	1	Profile	
2	D20400506	X	Washer	
3	339337X1	X	Cap Screw	M8 X 30
4	D28880234	1	Plate	
5	D20400405	4	Washer	
6	339560X1	4	Cap Screw	M6 X 16
7	D28880220	1	Bottom	
8	D41705600	1	Flange	
9	D41705700	1	Ball Bearing	
10	D41714700	1	Flange	
11	D28885555	1	Auger	Replace and repair. Old not interchangeable with new D28885165
				Valid from machine/table no,can be used in new as well as in older machines 57269
	D28885556	1	Auger	[B]
	D28885551	1	Shaft	Right Hand
12	D28380193	1	Deflector	
13	D28885616	1	Tube	
14	D28880338	1	Rod	
15	D28230632	1	Pin	
18	D28851231	1	Hinge	
19	D28880241	1	Plate	
20	D28851230	1	Hinge	
21	D44358000	2	Hair Pin	
22	D44900996	1	Ram	[A]
23	D28885240	1	Lever	[A]
24	D28230632	1	Pin	[A]
25	354066X1	2	Split Pin	[A]
				5/32" X 1
27	D28380132	2	Scraper	
28	D28380133	2	Rail	
29	D28380131	1	Deflector	
30	339337X1	20	Cap Screw	M8 X 30
31	D20400506	20	Washer	
32	394367X1	22	Locknut	M8
33	3009493X1	6	Cap Screw	M10 X 30
34	D20400416	12	Washer	
35	1440329X1	6	Locknut	M10
36	3009493X1	X	Cap Screw	M10 X 30
37	D20400416	8	Washer	
38	D28580446	3	Support	Valid from machine/table no,can be used in new as well as in older machines 60416

FOOTNOTE [A] OPTIONAL EQUIPMENT
FOOTNOTE [B] GRASS SEED AUGER

https://truckmanualshub.com/

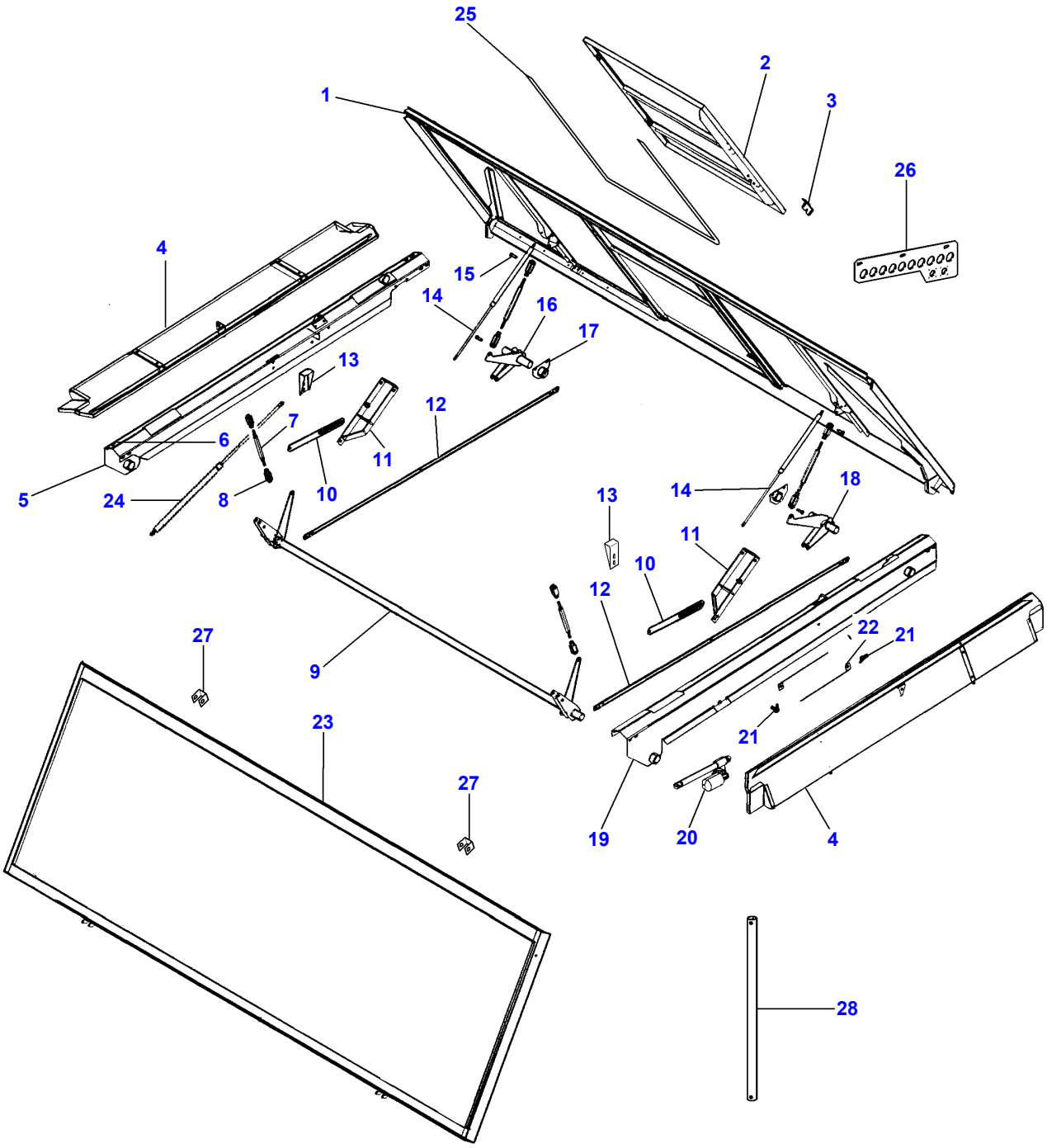

D-ZIZF-015-D

https://truckmanualshub.com/

Item	Part Number	Qty	Description	Comments
1	D18885653	1	Shutter	
2	D18885659	1	Plate	
3	D43419900	1	Lock	
4	D28885807	2	Side	10500L
5	D28885798	1	Frame	
6	D45904600	4	Clevis	
7	D28885692	4	Rod	
8	D45904500	4	Clevis	
9	D28885687	1	Rod	
10	D28885814	2	Lever	10500L
11	D28885820	2	Lever	10500L
12	D28885691	1	Lever	
13	D28885727	2	Support	
14	D45080017	2	Gas Strut	
15	D45904700	4	Bolt	
16	D28885812	1	Lever	
17	D28885720	2	Support	
18	D28885689	1	Lever	
19	D28885695	1	Frame	
20	D44900996	1	Ram	
21	D46436200	2	Toggle	
22	D28885832	2	Strap	10500L
23	D18885654	1	Shutter	
24	D45050057	1	Cylinder	
25	D44745200	1	Seal	Length 10 M
26	D28885624	1	Holder	
27	D28885520	4	Latch	
28	D28885851	1	Rod	

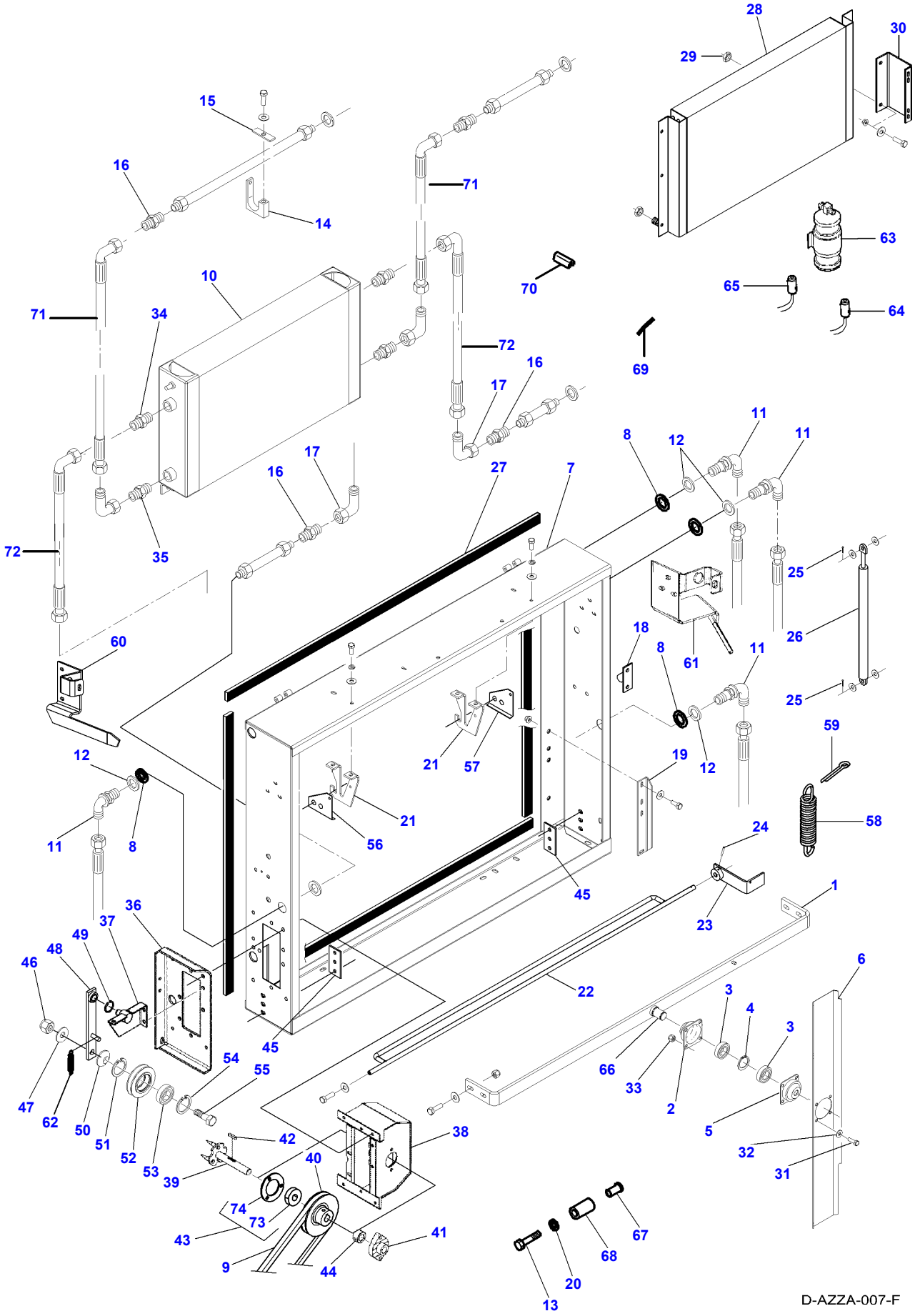
28
30
29
15
16
71
14
63
10
70
65
64
71
34
72
69
16
17
11
8
12
11
17
16
27
7
72
35
25
60
18
26
8
61
11
25
59
12
21
57
19
12
21
58
11
8
56
24
45
1
36
37
23
49
48
46
6
22
3
4
3
45
54
55
66
33
47
62
50
51
52
53
2
5
42
38
32
40
39
31
74
73
43
41
67
9
44
68
20
13
D-AZZA-007-F

https://truckmanualshub.com/

Item	Part Number	Qty	Description	Comments
1	D28787490	1	Bracket	Up to Serial or Engine Number 61489
	D28273841	1	Bracket	From Serial or Engine Number 61490
2	D28770432	1	Bearing Carrier	
3	339581X1	2	Bear. 6205 2rs	
4	1440476X1	1	Circlip	
5	D28770432	1	Bearing Carrier	
6	D28784196	1	Blade	
7	D28787275	1	Bracket	Up to Serial or Engine Number 61489
	D28273829	1	Bracket	From Serial or Engine Number 61490
8	D28785495	X	Spacer	
9	**D28786813**	1	Belt	[A]
10	D28782277	1	Oil Cooler	
11	D45269900	4	Connector	
12	D20400439	16	Washer	
13	339745X1	1	Cap Screw	M8 X 45
14	D45739700	1	Support	
15	D28784251	1	Plate	
16	D45254500	3	Union	
17	D45264300	3	Connectors	
18	D28786523	1	Support	
19	D28784240	1	Reinforcement	
20	D20400506	1	Washer	
21	D28781548	2	Support	
22	D28786212	1	Rod	Up to Serial or Engine Number 61489
	D28273838	1	Rod	From Serial or Engine Number 61490
23	D28786118	1	Pedal	
24	1440394X1	1	Roll Pin	Diameter 4 X 30
25	D41404200	6	Split Pin	
26	D45056700	2	Gas Strut	
27	D44740600	X	Strip	Length 25 M
28	D28784065	1	Condenser	
29	D28784082	2	Nut	
30	D28784198	2	Union	
31	339123X1	4	Cap Screw	M8 X 20
32	D20400506	4	Washer	
33	394367X1	4	Locknut	M8
34	D45251500	4	Union	
35	D45264300	2	Connectors	
36	D28786635	1	Plate	
37	D28786228	1	Bracket	
38	D28786834	1	Support	Up to Serial or Engine Number 61489
	D28273834	1	Bracket	From Serial or Engine Number 61490
39	D28788536	1	Clevis Pin	Valid from machine/table no,can be used in new as well as in older machines 58952
40	D28786226	1	Pulley	
41	D41717100	1	Bearing	Up to Serial or Engine Number 61489
	D41717101	1	Bearing	From Serial or Engine Number 61490
42	D43102300	1	Key	
43	D41713600	1	Bearing	Up to Serial or Engine Number 61489
	D41713601	1	Bearing	From Serial or Engine Number 61490
44	D28781721	1	Ring	
45	D28786838	2	Plate	
46	339034X1	1	Nut	M16
47	D20400459	1	Washer	
48	D28786766	1	Arm	Up to Serial or Engine Number 61489
	D28273882	1	Arm	From Serial or Engine Number 61490
49	D42501400	1	Circlip	
50	D28380003	1	Ring	
51	339126X1	1	Circlip	
52	D28785815	1	Roller	
53	339581X1	1	Bear. 6205 2rs	
54	339126X1	1	Circlip	
55	D28760328	1	Bolt	
56	D28781549	1	Lock	
57	D28781550	1	Lock	
58	D28761862	1	Tension Spring	
59	1442034X1	1	Split Pin	Diameter 4 X 20
60	D28787316	1	Support	Up to Serial or Engine Number 61489
	D28273858	1	Support	From Serial or Engine Number 61490
61	D28787318	1	Support	Up to Serial or Engine Number 61489
	D28273870	1	Support	From Serial or Engine Number 61490

https://truckmanualshub.com/

Item	Part Number	Qty	Description	Comments
62	D28761057	1	Spring	
63	D45070017	1	Filter	
64	D45070023	1	Switch	HIGH PRESSURE
65	D45080063	1	Pressure Switch	LOW PRESSURE
66	D28784180	1	End	(1)
67	D41028300	1	Bush	
68	D28786878	1	Spacer	
69	D44735900	1	Seal Section	0,3m
69		1	Not Used	
70	D44744800	1	Profile	0,20m
70		1	Not Used	
71	D45130030	2	Hydr. Hose	
72	D45130037	2	Hydraulic Hose	
73	D41713602	1	Roller	(43) From Serial or Engine Number 61490
74	D41713603	1	Gasket	(43) From Serial or Engine Number 61490

FOOTNOTE [A] AVAILABLE IN LENGHT OF 1,5 M - TO BE ADAPTED ACCORDING TO MACHINE TYPE

https://truckmanualshub.com/

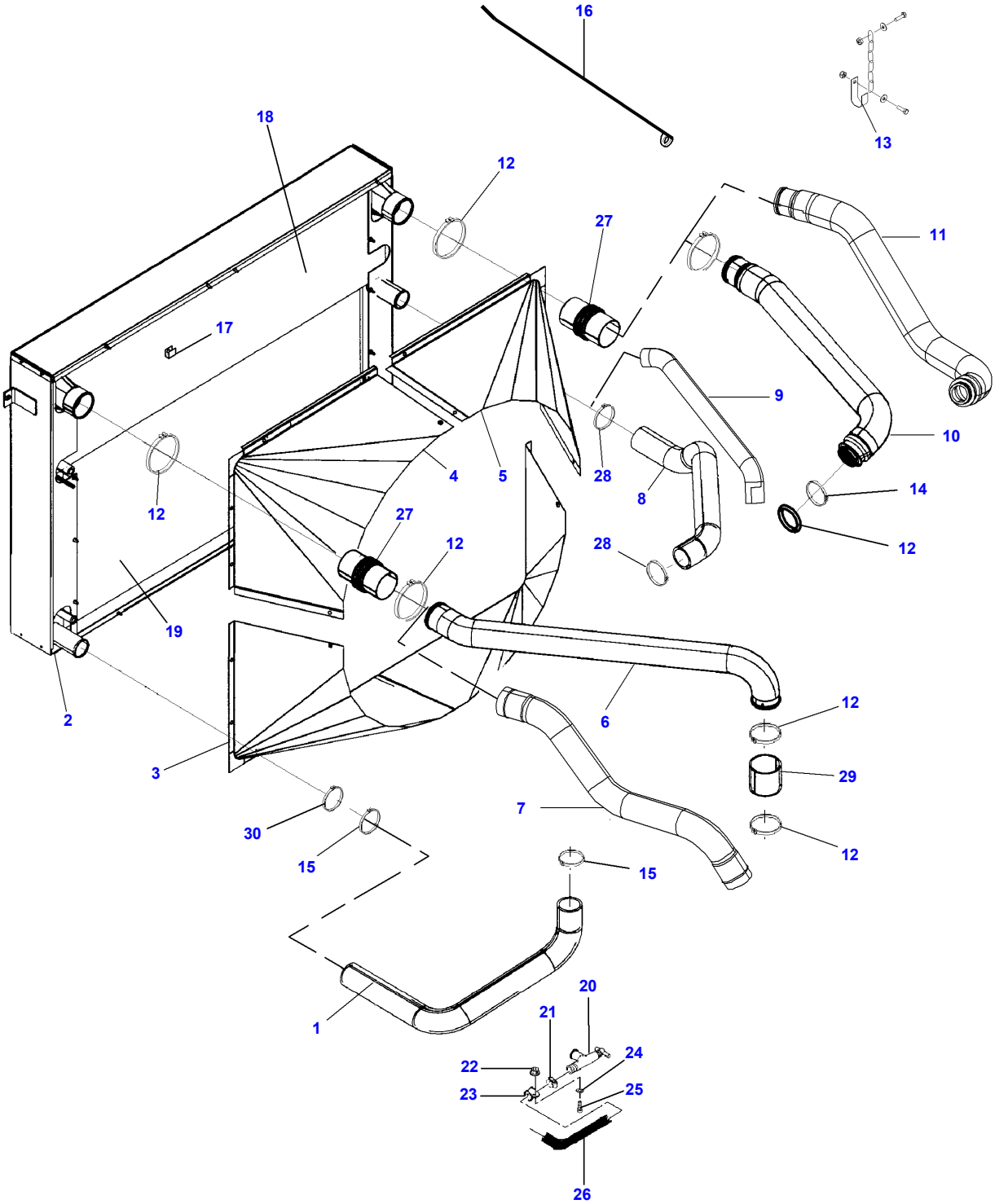

D-AZZB-008-G

https://truckmanualshub.com/

Item	Part Number	Qty	Description	Comments
1	D28787132	1	Tube	
2	D28787273	1	Cooler	Up to Serial or Engine Number 61489
	D28787491	1	Cooler	From Serial or Engine Number 61490
3	D28787269	1	Guard	Up to Serial or Engine Number 61489
	D28273823	1	Guard	From Serial or Engine Number 61490
4	D28787301	1	Guard	Up to Serial or Engine Number 61489
	D28273822	1	Guard	From Serial or Engine Number 61490
5	D28787268	1	Guard	Up to Serial or Engine Number 61489
	D28273821	1	Guard	From Serial or Engine Number 61490
6	D28787145	1	Tube	Up to Serial or Engine Number 61489
7	D28273863	1	Tube	From Serial or Engine Number 61490
8	D28787129	1	Tube	Up to Serial or Engine Number 61489
9	D28273867	1	Tube	From Serial or Engine Number 61490
10	D28787131	1	Tube	Up to Serial or Engine Number 61489
11	D28273865	1	Tube	From Serial or Engine Number 61490
12	D46440053	6	Clamp	
13	D28788720	1	Strap	
14	D45482200	1	O Ring	
15	D45731300	2	Clamp	Up to Serial or Engine Number 61489
16	D28788453	1	Stay	
17	D28788454	1	Retainer	
18	D28787271	1	Intercooler	(2) Up to Serial or Engine Number 61489
	D28273901	1	Intercooler	(2) From Serial or Engine Number 61490
19	D28787272	1	Water Cooler	(2) Up to Serial or Engine Number 61489
	D28273902	1	Water Cooler	(2) From Serial or Engine Number 61490
20	D45718800	1	Cock	
21	3000483X1	1	Hose Clip	Diameter 16-22
22	1441462X1	1	Locknut	M6
23	D45730400	1	Clamp	
24	391038X1	1	Flat Washer	
25	339560X1	1	Cap Screw	M6 X 16
26	D28782930	1	Hose	
27	D46485700	2	Sleeve	
28	1440860X1	2	Hose Clip	Diameter 60-80
29	D46484301	1	Hose	
30	D45734200	1	Hose Clip	From Serial or Engine Number 61490

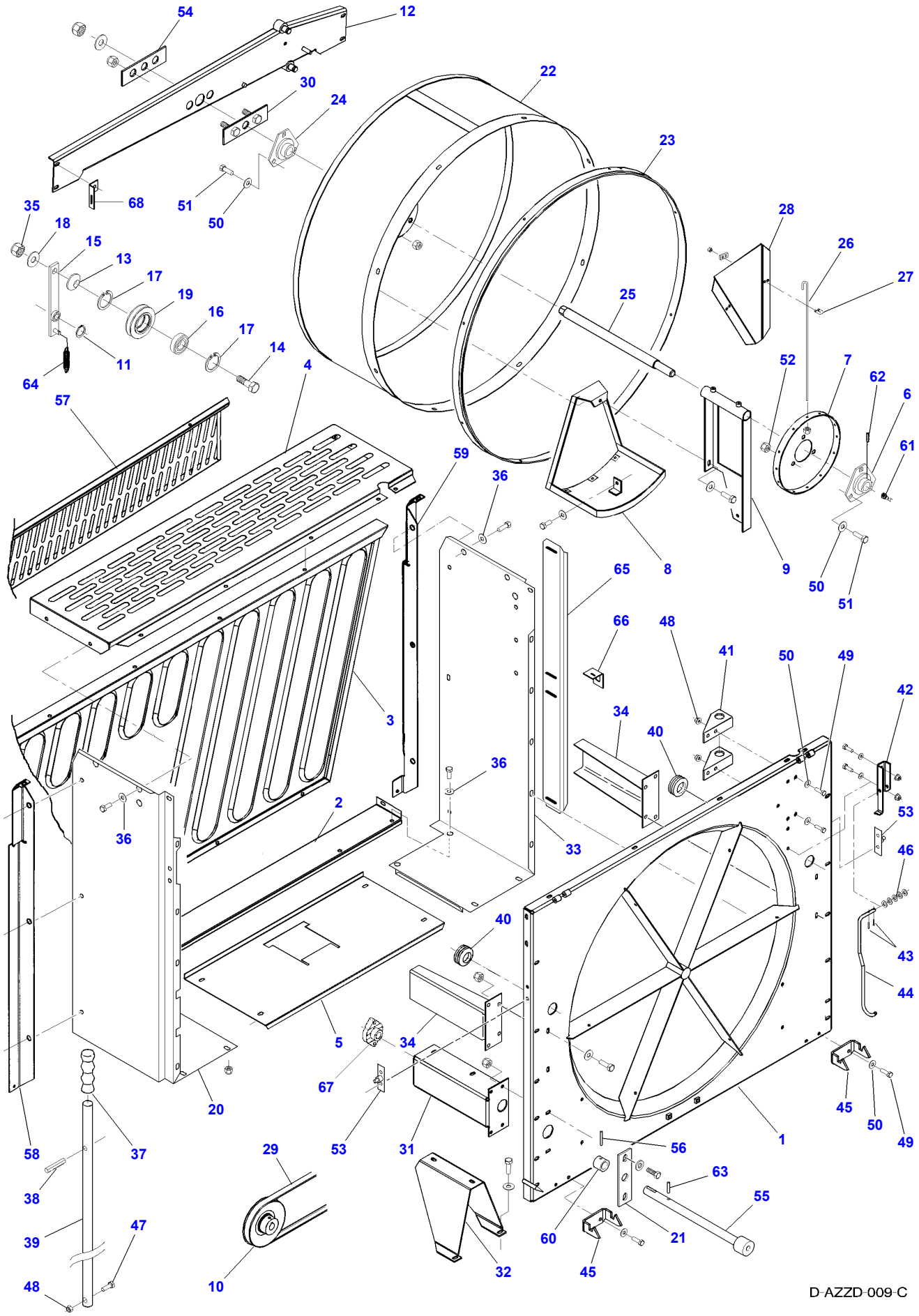
54
12
22
30
24
23
68
51
50
35
18
15
13
17
19
16
17
14
11
64
28
26
27
25
52
7
62
6
61
57
4
59
36
8
9
50
51
65
66
48
41
50
49
42
34
40
3
36
2
36
33
53
46
40
43
44
5
34
67
20
45
50
49
58
37
29
53
31
56
1
38
63
55
39
47
60
21
48
10
32
45
D-AZZD-009-C

https://truckmanualshub.com/

Item	Part Number	Qty	Description	Comments
1	D28786209	1	Plate	Valid from machine/table no,can be used in new as well as in older machines 57229
2	D28787304	1	Base Plate	
3	D18186749	1	Grille	
4	D28186752	1	Shelf	
5	D28784231	1	Plate	
6	D41713600	1	Bearing	
7	D28780096	1	Hub	
8	D28781043	1	Plate	
9	D28781045	1	Bracket	
10	D28780114	1	Pulley	
11	D42501400	1	Circlip	
12	D28785952	1	Support	Valid from machine/table no,can be used in new as well as in older machines 57229
13	D28380003	1	Ring	
14	D28760328	1	Bolt	
15	D28786092	1	Arm	Valid from machine/table no,can be used in new as well as in older machines 57229
16	339581X1	1	Bear. 6205 2rs	
17	339126X1	2	Circlip	
18	D20400459	1	Washer	
19	D28785815	1	Roller	
20	D28787302	1	Plate	Left Hand
21	D28781198	1	Plate	
22	D28780984	1	Strainer	
23	D28781010	1	Seal	
24	D41713600	1	Bearing	
25	D28788537	1	Shaft	Valid from machine/table no,can be used in new as well as in older machines 58952
26	D28780094	12	Spoke	
27	D43405900	2	Bracket	
28	D28781763	1	Blade	
29	D41990019	1	V Belt	
30	D28780954	1	Plate	
31	D28781155	1	Bearing Carrier	
32	D28786227	1	Reinforcement	
33	D28787303	1	Plate	Right Hand
34	D28781157	2	Bracket	
35	339034X1	1	Nut	M16
36	D20400411	X	Washer	
37	D43384000	1	Lever	
38	D42609300	1	Pin	
39	D28781146	1	Lever	
40	D44732500	2	Grommet	
41	D28781145	2	Union	
42	D28781762	1	Support	
43	D41404200	1	Split Pin	
44	D28781761	1	Support	
45	D28788532	2	Hook	Valid from machine/table no,can be used in new as well as in older machines 58912
46	D20400413	6	Washer	
47	339009X1	1	Cap Screw	M8 X 35
48	394367X1	5	Locknut	M8
49	339761X1	8	Cap Screw	M8 X 25
50	D20400506	X	Washer	
51	339123X1	6	Cap Screw	M8 X 20
52	394367X1	2	Locknut	M8
53	D28786522	2	Support	
54	D28780966	1	Plate	
55	D28781716	1	Shaft	
56	339071X1	1	Roll Pin	Diameter 6 X 30
57	D18186751	1	Shield	
58	D28186753	1	Stiffener	
59	D28186754	1	Stiffener	
60	D28781695	1	Ring	
61	D28781721	1	Ring	
62	D40632000	1	Stud	
63	1440911X1	1	Roll Pin	Diameter 3,5 X 30
64	D28761057	2	Spring	
65	D28186796	1	Strut	
66	D28787328	1	Bracket	
67	D41717100	1	Bearing	
68	D28781534	1	Support	

https://truckmanualshub.com/

MF 7274/7278 COMBINE, |-> 61123 for 7274 and |-> 61115 for 7278 - 3906105

D-AZZE-010-E

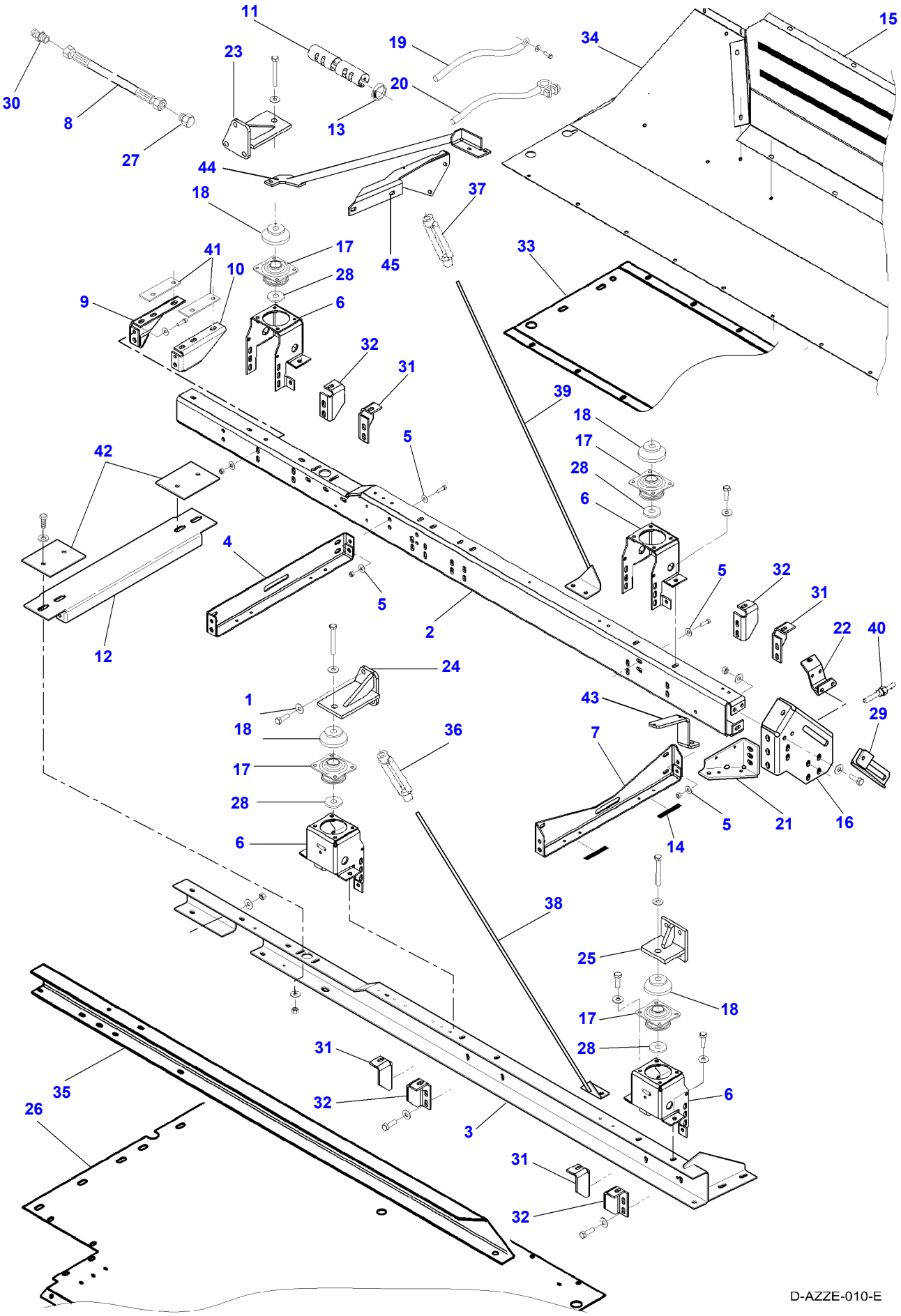

https://truckmanualshub.com/

Item	Part Number	Qty	Description	Comments
1	D20400426	X	Washer	
2	D28785606	1	Member	Right Hand
3	D28787478	1	Member	Left Hand
				Valid from machine/table no,can be used in new as well as in older machines 60771
4	D28784172	1	Crossmember	
5	D20400473	X	Washer	
6	D28784171	4	Support	
7	D28785043	1	Stay	
8	D45130033	1	Hydr. Hose	
9	D28784252	1	Support	Right Hand
10	D28784253	1	Support	Left Hand
11	D28280782	1	Guard	
12	D28787270	1	Bracket	
13	338617X1	1	Hose Clip	Diameter 40-60
14	D28782178	X	Seal Section	Length 5 M
15	D28181837	1	Step	
16	D28786869	1	Bracket	
17	D46406600	4	Damper	
18	D28781296	4	Spacer	
19	D28781928	1	Harness	
20	D28785949	1	Cable	
21	D28786567	1	Plate	
22	D28786592	1	Support	
23	D28785210	1	Suspension	
24	D28785210	1	Suspension	
25	D28770293	1	Suspension	
26	D28786464	1	Roof	
27	D28781170	1	Plug	
28	D28781297	4	Spacer	
29	D28786870	1	Actuator	
30	D45251100	1	Union	
31	D28785166	4	Plate	
32	D28785167	4	Plate	
33	D28185279	1	Roof	
34	D28181850	1	Roof	
35	D28786491	1	Support	
36	D41035100	1	Tensioner	
37	D41035100	1	Tensioner	
38	D28787321	1	Stem	Up to Serial or Engine Number 61489
	D28273861	1	Rod	From Serial or Engine Number 61490
39	D28787320	1	Stem	Up to Serial or Engine Number 61489
	D28273871	1	Rod	From Serial or Engine Number 61490
40	D28786881	1	Pivot	
41	D28781111	2	Shim	
42	D28788343	2	Plate	
43	D28787512	1	Support	
44	D28787505	1	Rod	
45	D28787504	1	Bracket	

https://truckmanualshub.com/

MF 7274/7278 COMBINE, |-> 61123 for 7274 and |-> 61115 for 7278 - 3906105
D-AZYF-004-H

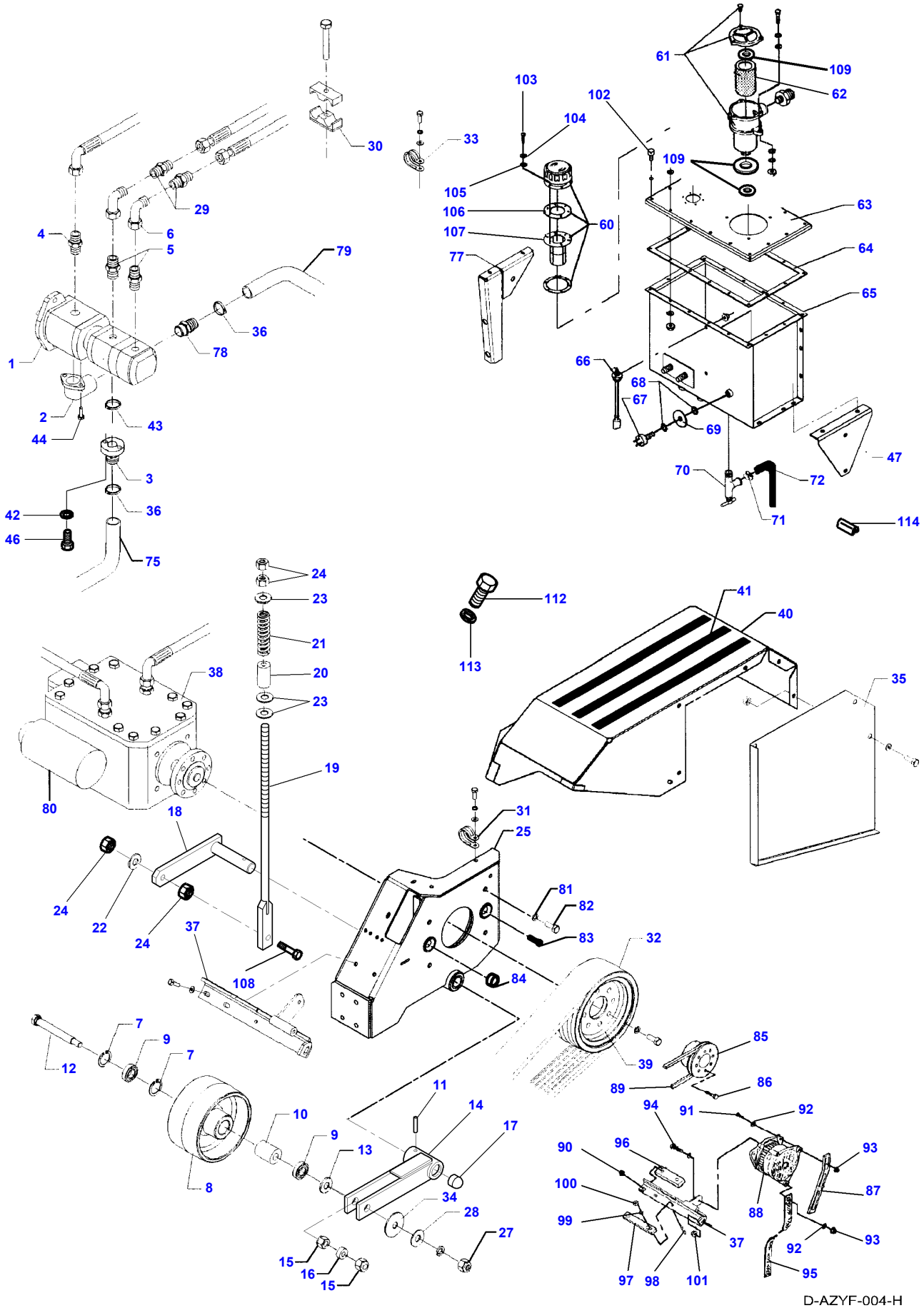

https://truckmanualshub.com/

Item	Part Number	Qty	Description	Comments
1	D45166900	1	Pump	
2	D45239900	1	Connector	
3	D28786485	2	Connector	
4	D45251500	1	Union	
5	D45250700	2	Union	
6	D45264100	1	Union	
7	339199X1	2	Circlip	
8	D28780900	1	Pulley	
9	SKF62042RS	2	Bear. 6204 2rs	
10	D28780007	1	Ring	
11	D42621900	1	Pin	
12	D28780008	1	Bolt	
13	D28380003	1	Ring	
14	D28782527	1	Arm	
15	D28780777	2	Eccentric	
16	D28780776	1	Spacer	
17	D45744200	1	Ferrule	
18	D28787403	1	Arm	
19	D28782790	1	Spindle	Valid from machine/table no,can be used in new as well as in older machines 60583
20	D28787998	1	Pipe	
21	D28210881	1	Comp.Spring	
22	D41100900	1	Spring Washer	
23	D20400423	5	Flat Washer	
24	3009695X1	4	Nut	M12
25	D28787247	1	Support	
27	1442739X1	X	Locknut	M16
28	D20400459	1	Washer	
29	D45272200	1	Union	
30	D45736700	2	Support	
31	D28250656	2	Arm	
32	**D41990045**	1	Belt	See Page - Reference Number 010-0006/40 Valid from machine/table no,can be used in new as well as in older machines 60503
33	D45730400	2	Clamp	
34	D20400437	1	Washer	
35	D28787079	1	Plate	
36	338616X1	2	Hose Clip	Diameter 32-50
37	D28781312	1	Bracket	
38	D45169900	1	Pump	
	D45169900	1	Pump	From Serial or Engine Number 60050 MF 7274-78 CEREA
39	D28780058	1	Pulley	
40	D28787077	1	Cover	
41	D44740800	X	Strip	Length 18 M
42	D41102100	2	Washer	
43	D45463600	1	O Ring	
44	D40692500	2	Screw	
46	D40690400	2	Screw	
47	D28786783	1	Support	
60	**D45103000**	1	Filter	
61	D45165800	1	Return Fl.Filter	
62	**D45165900**	1	Filter	
63	D28781818	1	Plate	
64	D28781819	1	Kit, Seal	
65	D28787072	1	Bottom	
66	D45080021	1	Dipstick	
67	D44900617	1	Sensor	
68	D45201600	2	Packing	
69	D28780947	1	Washer	
70	D28360189	1	Tap	Repairs and replaces D46422300
71	3000483X1	1	Hose Clip	Diameter 16-22
72	D28782176	X	Hose	Length 6 M
75	D28786449	1	Suction Pipe	
77	D28786818	1	Union	
78	D28885052	1	Union	
79	D28782310	1	Hose	Diameter 32 mm
80	**D45161300**	1	Oil Filter	
81	D20400426	4	Washer	
82	D40693800	4	Screw	

https://truckmanualshub.com/

Item	Part Number	Qty	Description	Comments
83	D40418500	2	Cap Screw	M20 X 55
84	D43367400	1	Bush	
85	D28781123	1	Pulley	
86	339269X1	8	Cap Screw	M10 X 100
87	D28780603	1	Tensioner	
88	D46446700	1	Alternator	Up to Serial or Engine Number 61489
88	V836673344	1	Alternator	From Serial or Engine Number 61490 Repairs and replaces V836673344
89	**D41904200**	1	Belt	
90	D41092500	2	Nut	
91	339761X1	2	Cap Screw	M8 X 25
92	D20400506	3	Washer	
93	394367X1	3	Locknut	M8
94	D40425100	1	Screw	
95	D28760642	1	Earth Strap	
96	D28780002	1	Union	
97	D28780001	1	Union	
98	3009493X1	1	Cap Screw	M10 X 30
99	D20400471	1	Washer	
100	1440329X1	1	Locknut	M10
101	394367X1	X	Locknut	M8
102	D46480900	1	Buffer	
103	D40749100	1	Screw Metric	
104	D45715300	1	Washer	
105	D45715100	1	Washer	
106	D45145800	1	Seal	
107	D45103100	1	Gasket	
108	3009509X1	1	Cap Screw	
109	D45166800	1	Kit, Seal	
112	D40693800	4	Screw	
113	D20400426	4	Washer	
114	D44744800	X	Profile	Thickness 0,15M

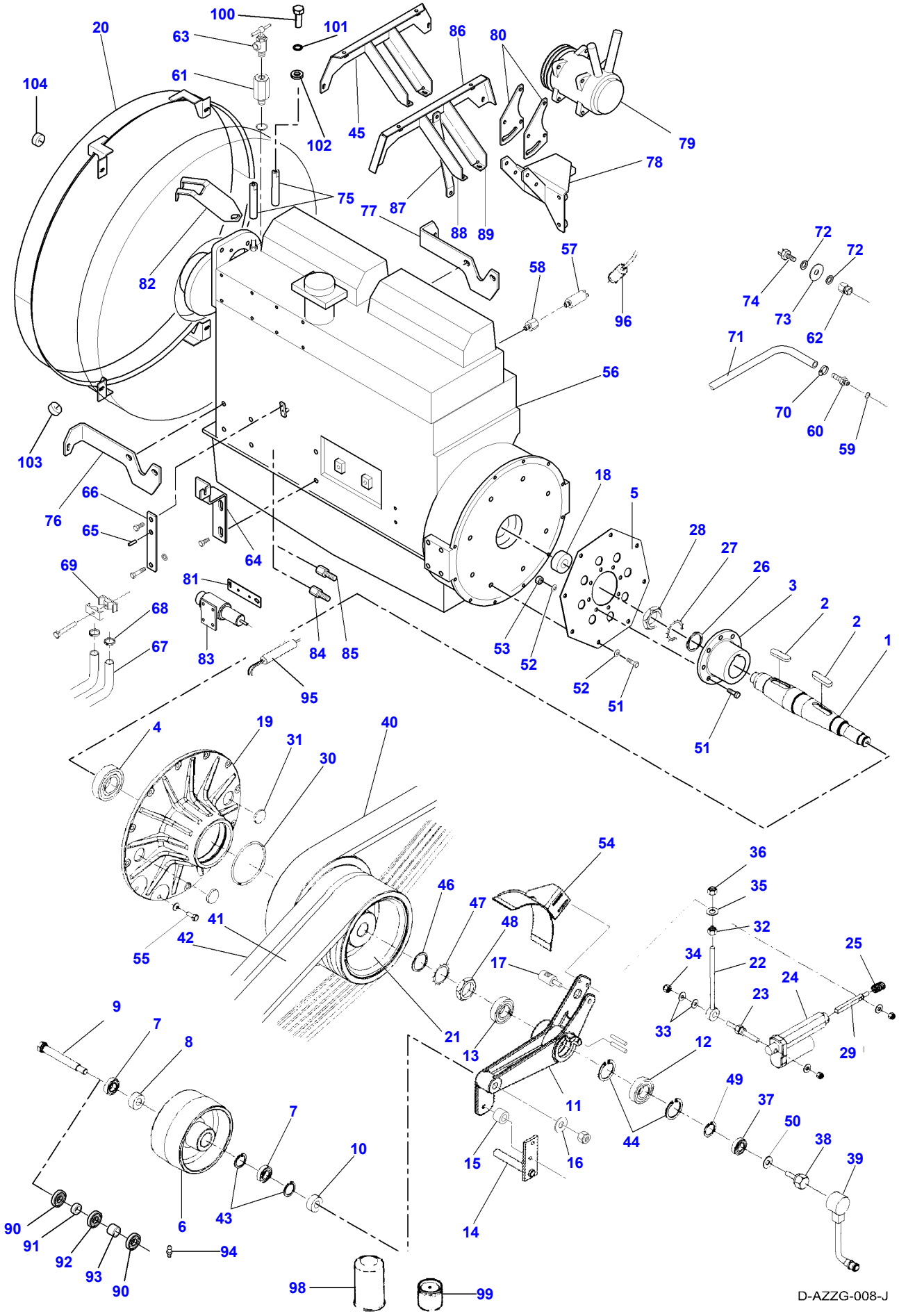
100
101
20
63
86
80
104
61
102
45
79
78
75
77
87
88
89
72
72
57
58
82
74
73
96
62
71
56
70
60
59
103
18
5
66
76
65
28
27
64
26
69
81
3
2
68
2
67
83
84
85
53
52
1
95
52
51
51
4
19
31
40
30
54
36
35
46
47
48
32
41
42
55
17
34
22
25
24
23
9
7
8
21
13
33
12
29
49
11
37
7
50
10
44
38
15
16
39
90
6
43
14
91
92
94
93
90
98
99
D-AZZG-008-J

https://truckmanualshub.com/

Item	Part Number	Qty	Description	Comments
1	D28783912	1	Shaft	From Serial or Engine Number 61718
2	D43110600	1	Key	
3	D28780615	1	Hub	
4	D41629600	1	Ball Bearing	
5	D28788738	1	Plate	
6	D28780486	1	Pulley	
7	SKF62042RS	2	Bear. 6204 2rs	
8	D28780007	1	Ring	
9	D28780008	1	Bolt	
10	D28380003	1	Ring	
11	D28787005	1	Lever	
12	SKF62062RS	1	Bear. 6206 2rs	
13	SKF62072RS	1	Bear. 6207 2rs	
14	D28785519	1	Guard	
15	D28780224	1	Spacer	
16	D20400517	1	Spacer	
17	D28780250	1	Pin	
18	D28780805	1	Bush	
19	D28780061	1	Bearing Carrier	
20	D28787143	1	Fan Shell	Diameter 865MM 7274/7278
	D28787501	1	Fan Shell	From Serial or Engine Number 61490
21	D28785025	1	Pulley	
22	D28780843	1	Bolt	
23	D28786881	1	Pivot	
24	D44900894	1	Actuator	
25	D28786568	1	Spring	
26	D25700260	1	Washer	
27	D28780617	1	Kit, Washer	
28	D25700322	1	Nut	
29	D28780247	1	Bolt	
30	D45470800	1	O Ring	
31	D45746700	2	Plug	
32	3009695X1	1	Nut	M12
33	D20400459	2	Washer	
34	1442739X1	1	Locknut	M16
35	D20400423	1	Flat Washer	
36	3009695X1	1	Nut	M12
37	1440487X1	1	Bear. 6203 2rs	
38	**D28780516**	1	Inductive Sensor	
39	**D28780514**	1	Sensor	
40	**D41990045**	1	Belt	Valid from machine/table no,can be used in new as well as in older machines 60503
41	**D41990064**	1	Belt	
42	**D41978100**	1	V Belt	
43	339199X1	2	Circlip	
44	1440479X1	2	Circlip	
45	D28785230	1	Bracket	[A]
46	D28730018	1	Washer	
47	D28710736	1	Lock Washer	
48	D28710073	1	Nut	
49	1440477X1	1	Circlip	
50	D20400416	1	Washer	
51	3009492X1	X	Cap Screw	M10 X 25
52	D41112500	X	Washer	
53	339402X1	8	Nut	M10
54	D28785370	1	Band	
55	3009493X1	12	Cap Screw	M10 X 30
56	D46490013	1	Engine	MF 7278 Up to Serial or Engine Number 61489
	D46490048	1	Engine	MF 7278 From Serial or Engine Number 61490 Up to Serial or Engine Number 62092
	D46490011	1	Engine	MF 7274 Up to Serial or Engine Number 61489
	D46490047	1	Engine	MF 7274 From Serial or Engine Number 61490 Up to Serial or Engine Number 62072
	D46490051	1	Engine	MF7278 From Serial or Engine Number 62093

https://truckmanualshub.com/

Item	Part Number	Qty	Description	Comments
56	D46490050	1	Engine	MF7274
				From Serial or Engine Number 62093
57	D44900586	1	Fluid Pr.Switch	
58	D28786520	1	Nipple	
59	D45711200	1	Gasket	
60	D28785115	1	Connector	
61	D28785053	1	Reducer	Valid from machine/table no,can be used in new as well as in older machines 60416
				Up to Serial or Engine Number 61489
61	D28273868	1	Reducer	From Serial or Engine Number 61490
62	D28786662	1	Nipple	
63	D28360189	2	Tap	Repairs and replaces D46422300
64	D28786671	1	Clamp	
65	D28751580	1	Stud	
66	D28786794	2	Lever	
67	D28784525	X	Hose	[B]
				Length 5 M
68	3000483X1	2	Hose Clip	Diameter 16-22
69	D45736700	2	Support	
70	3000483X1	1	Hose Clip	Diameter 16-22
71	D28782175	1	Fuel Hose	[B]
				Length 5 M
72	D45201600	2	Packing	
73	D28780947	1	Washer	
74	D44900617	1	Sensor	
75	D28785226	2	Extension	
76	D28787261	1	Bracket	
77	D28787262	1	Bracket	
78	D28785109	1	Console	Up to Serial or Engine Number 61489
78	D28273854	1	Console	From Serial or Engine Number 61490
79	D45080062	1	Compressor	
80	D28785046	2	Bracket	
81	D28788542	1	Plate	
82	D28788591	1	Plate	
83	D46440048	1	Stop Solenoid	
84	D28760746	1	Threaded Part	
85	D28761073	1	Threaded Part	
86	D28782912	1	Bracket	
87	D28787471	1	Stay	
88	D28785238	1	Bracket	(86)
89	D28785239	1	Support	(86)
90	339599X1	2	Bear. 6204 2rs	
91	D28782758	1	Ring	
92	D41618100	1	Ball Bearing	
93	D28782757	1	Spacer	
94	D43001500	1	Grease Fitting	
95	V836659691	1	Relay	
96	D28780881	1	Cap	
97	D46440047	1	Relay	[C]
				(83)
98	**D46447400**	1	Oil Filter	
99	**1896287M91**	1	Fuel Element	
100	D40404900	2	Cap Screw	
101	D41102100	2	Washer	
102	D20400506	2	Washer	
103	D46482000	2	Damper	
104	D46482001	2	Damper	

FOOTNOTE [A] ORDER D28782912 + D28787471
FOOTNOTE [B] CUT TO REQUIRED LENGTH
FOOTNOTE [C] NOT ILLUSTRATED

https://truckmanualshub.com/

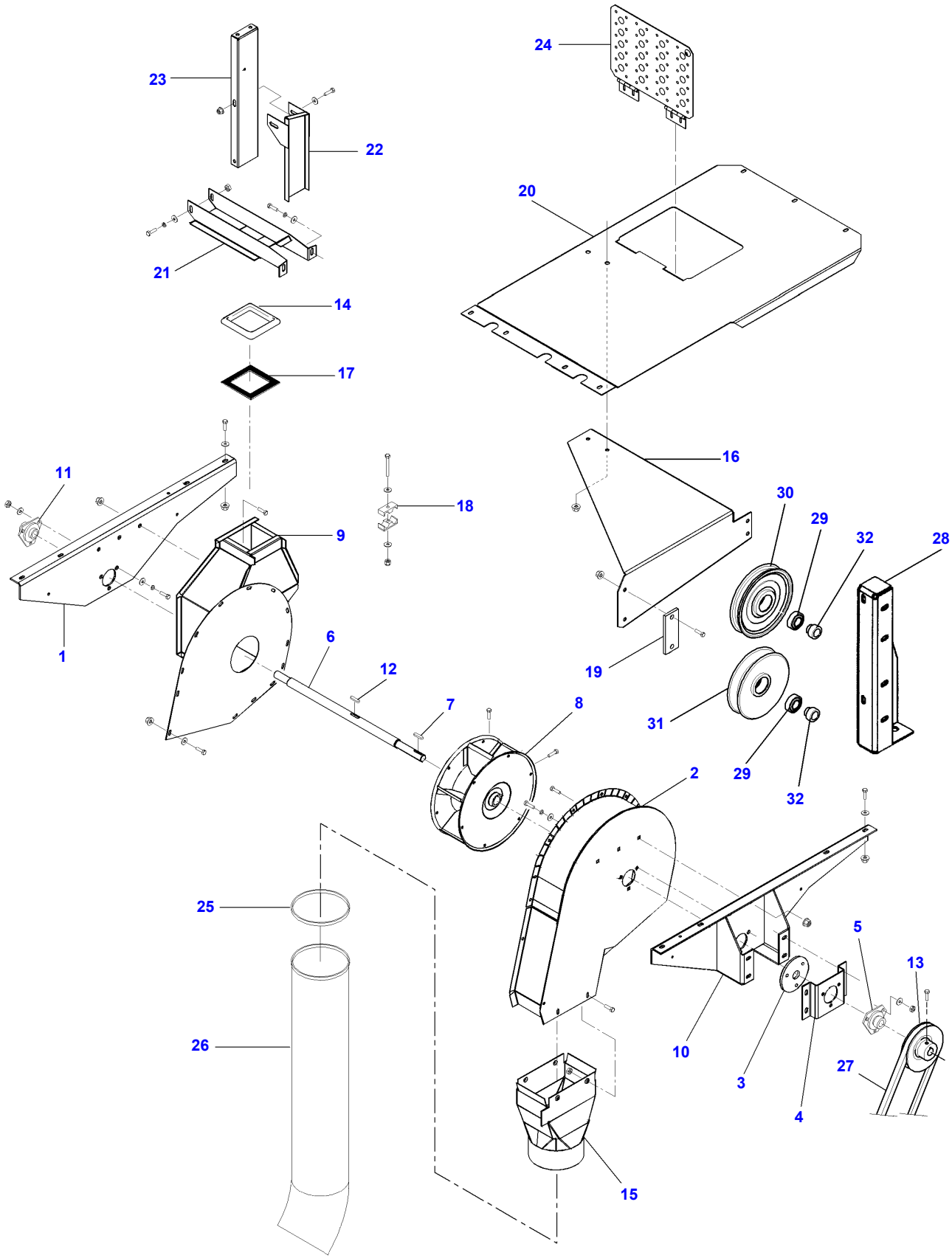

D-AZZH-003-C

https://truckmanualshub.com/

Item	Part Number	Qty	Description	Comments
1	D28782347	1	Bracket	
2	D28788493	1	Housing	
3	D28782092	1	Plate	
4	D28782105	1	Bearing Carrier	
5	D41713700	1	Bearing	
6	D28782256	1	Shaft	
7	D43103400	1	Key	
8	D28780586	1	Fan	
9	D28788499	1	Cover	
10	D28782349	1	Bracket	
11	D41713700	1	Bearing	
12	D43102300	1	Key	
13	D28780113	1	Pulley	
14	D28782164	X	Gasket	[A] Length 5 M
15	D28782258	1	Channel	
16	D28185993	1	Bracket	
17	D28782178	X	Seal Section	[A] Length 5 M
18	D45736700	1	Support	
19	D28185994	1	Support	
20	D28186752	1	Shelf	STAGE II
21	D28780786	1	Shroud	
22	D28780779	1	Shroud	
23	D28780783	1	Bracket	
24	D18184285	1	Cover	
25	D45731400	X	Clamp	
26	D28786865	1	Hose	
27	**D41939300**	1	Belt	
28	D28785572	1	Bracket	
29	339599X1	2	Bear. 6204 2rs	
30	D28760574	1	Pulley	
31	D28752130	1	Pulley	
32	D28760155	2	Bush	

FOOTNOTE [A] CUT TO REQUIRED LENGTH

https://truckmanualshub.com/

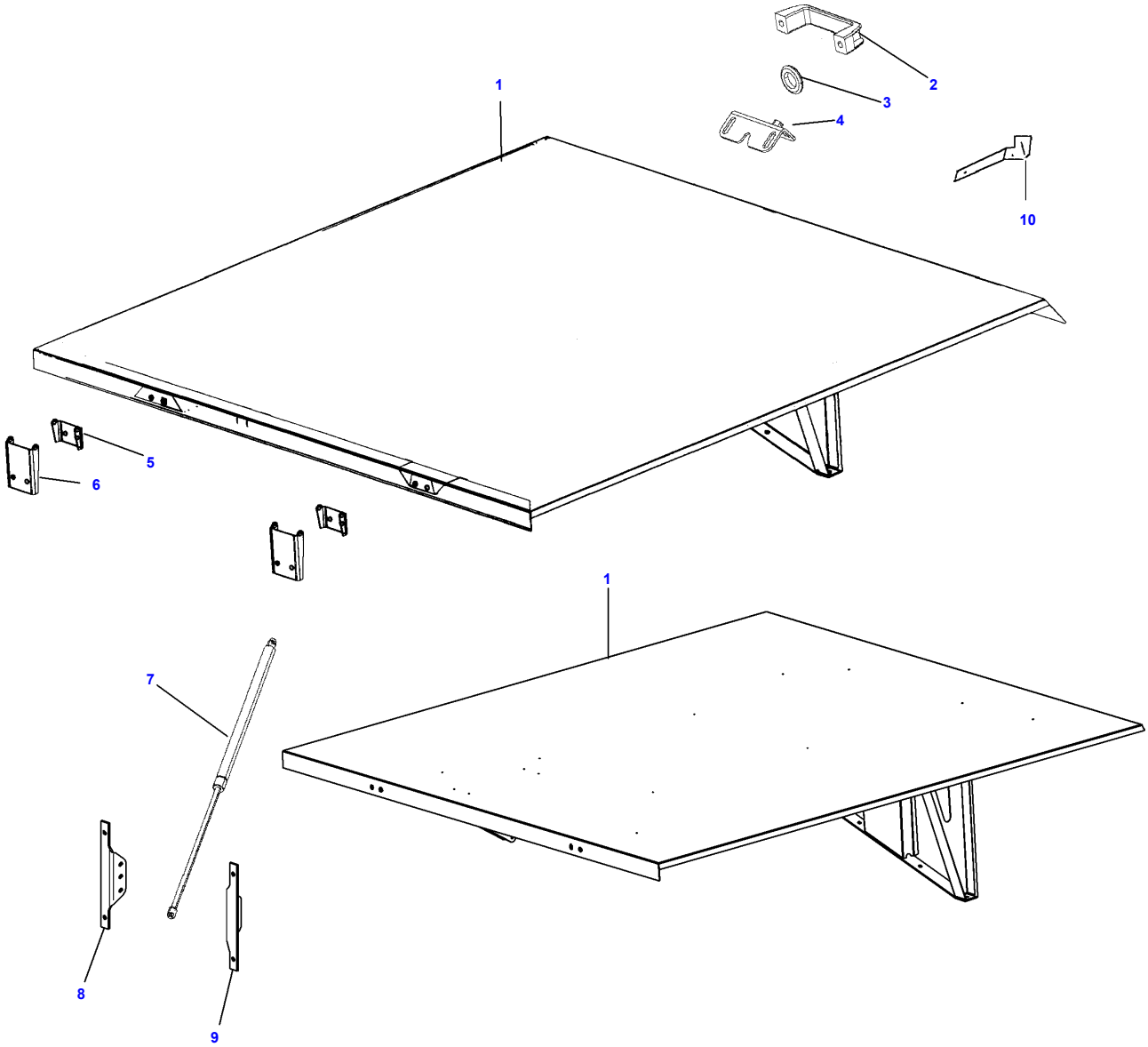

D-AZZJ-001-C

https://truckmanualshub.com/

Item	Part Number	Qty	Description	Comments
1	D28788311	1	Bonnet	Up to Serial or Engine Number 61489
	D28273844	1	Bonnet	From Serial or Engine Number 61490
2	D43386900	1	Grip	
3	D44732700	1	Grommet	
4	D43419900	1	Lock	
5	D28788309	2	Hinge	
6	D28788308	2	Hinge	
7	D45056700	1	Gas Strut	
8	D28788350	1	Bracket	
9	D28788350	1	Bracket	
10	D28286307	1	Lock	From Serial or Engine Number 61490

https://truckmanualshub.com/

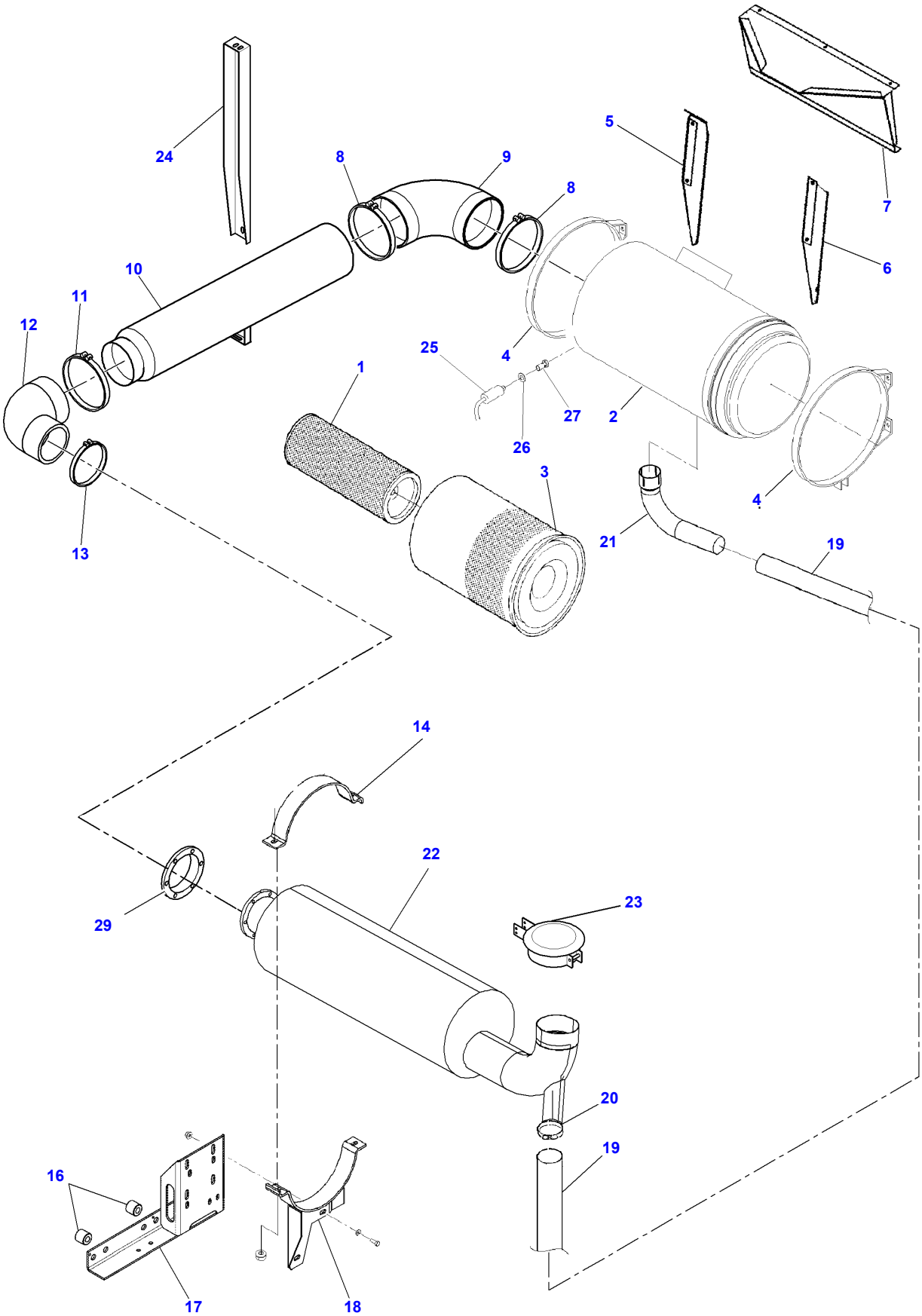

D-AZAZ-008-E

https://truckmanualshub.com/

Item	Part Number	Qty	Description	Comments
1	**D46483900**	1	Filter	(2)
2	D46483700	1	Air Filter	CPL.
3	**D46483800**	1	Filter	(2)
4	D46483600	2	Band	
5	D28186299	1	Bracket	
6	D28186298	1	Bracket	
7	D28186239	1	Support	
8	D45733900	2	Hose Clip	
9	D46486100	1	Rubber Sleeve	
10	D28786880	1	Pipe	
11	D45733700	1	Hose Clip	
12	D46444900	1	Hose	
13	338620X1	1	Hose Clip	Diameter 80-100
14	D28780147	1	Tensioner	
16	D28786827	2	Pin	
17	D28785178	1	Bracket	
18	D28785270	1	Bracket	
19	D28788534	1	Ejector	Valid from machine/table no,can be used in new as well as in older machines 58912
20	338617X1	X	Hose Clip	Diameter 40-60
21	D28786516	1	Pipe	
22	D28787260	1	Silencer	Up to Serial or Engine Number 61489
	D28273888	1	Silencer	From Serial or Engine Number 61490
23	D46483200	1	Cap	
24	D28788456	1	Bracket	
25	D46442400	1	Indicator	
26	D20400417	1	Washer	
27	D45717900	1	Union	
28	D46483500	6	Latch	[A]
29	D46445600	1	Gasket	

FOOTNOTE [A] NOT ILLUSTRATED

https://truckmanualshub.com/

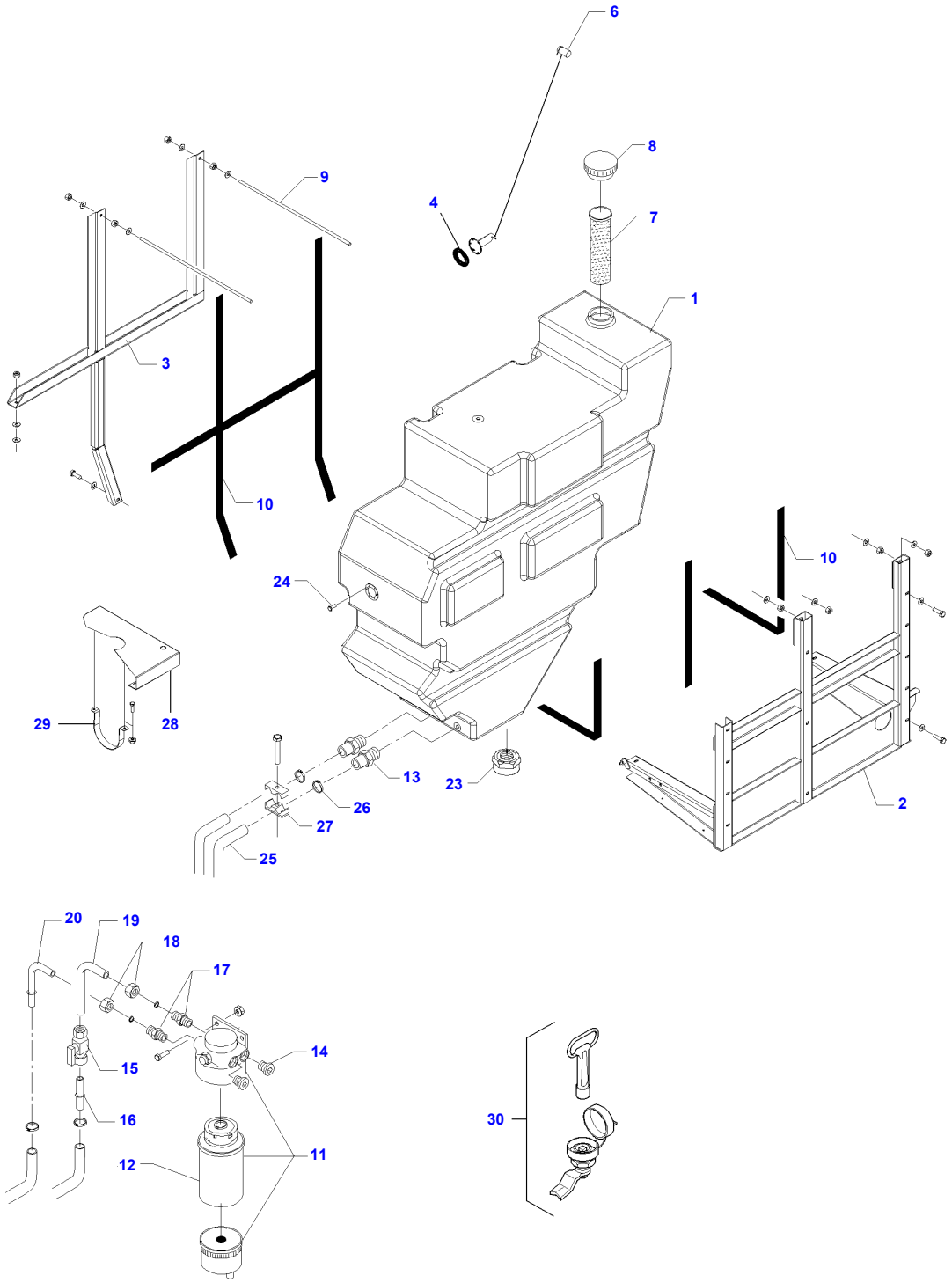

D-AZAA-008-C

https://truckmanualshub.com/

Item	Part Number	Qty	Description	Comments
1	D28785535	1	Tank	
2	D28785520	1	Console	
3	D28785530	1	Support	
4	1426488M1	1	Gasket	Replace and repair. Old interchangeable with new D45080036
6	D28785601	1	Fuel Gauge	
7	D46403500	1	Fuel Filter	
8	D45080038	1	Tank Cap	
9	D28781582	2	Threaded Part	
10	D44745300	X	Rubber	[A] Length 5 M
11	D46446500	1	Sediment Bowl	CPL
12	D46443000	1	Element	(11)
13	D28785576	2	Connector	
14	D45236700	2	Screw	
15	D45713000	1	Valve	
16	D45716800	1	Union	
17	D45761000	2	Nipple	
18	D46446000	2	Union	
19	D28785732	1	Band	
20	D45735300	1	Connector	
23	D45080039	1	Plug	
24	D40741100	6	Screw	
25	D28784525	X	Hose	[A] Length 5 M
26	3000483X1	2	Hose Clip	Diameter 16-22
27	D45739200	2	Support	
28	D28785533	1	Bracket	
29	D28185671	1	Holder	
30	D43425200	1	Key	
	D43425300	1	Nut	
	D43425400	1	Packing	
	D43425500	1	O Ring	
	D43425600	1	Cap	
	D43425700	1	Rod	
	D43425800	1	Screw	
	D43425900	1	Lock	

FOOTNOTE [A] CUT TO REQUIRED LENGTH

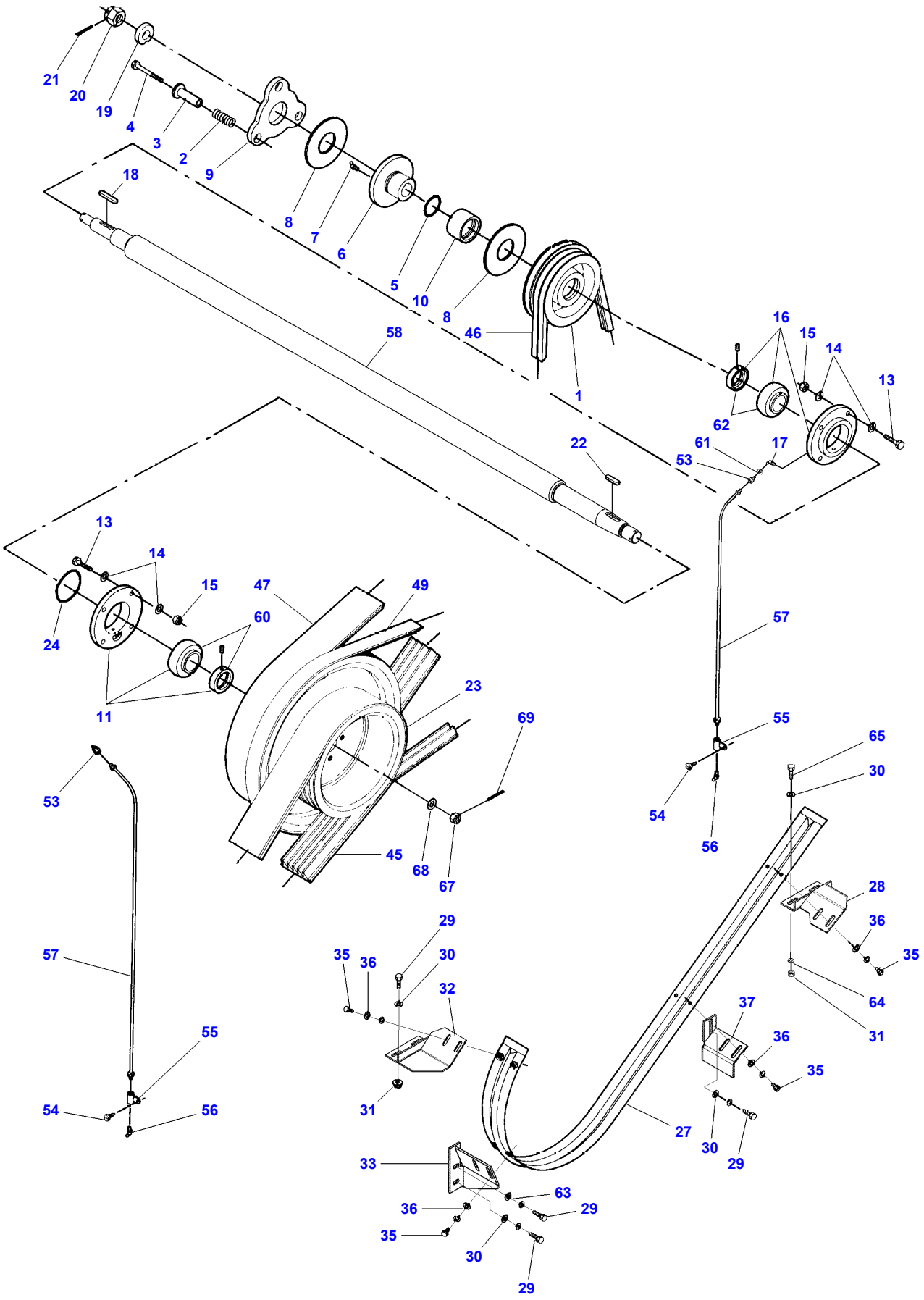
21
20
19
4
3
2
9
18
8
7
6
5
10
8
46
58
1
16
15
14
13
62
61
17
53
22
13
14
15
47
49
60
24
11
23
69
57
55
65
30
53
54
56
45
68
67
28
36
35
29
35
36
30
32
64
31
37
36
35
57
55
54
56
31
27
30
29
33
63
36
29
35
30
29

D-AAZA-006-A

https://truckmanualshub.com/

Item	Part Number	Qty	Description	Comments
1	D28780480	1	Clutch	
	D28780813	1	Pulley	(1)
2	D28260098	3	Comp.Spring	(1)
3	D28780809	1	Bush	(1)
4	D40466800	3	Screw	(1)
5	D45465600	1	O Ring	(1)
6	D28780482	1	Hub	(1)
7	3008923X1	1	Grease Fitting	(1)
8	**D45903800**	2	Friction Disc	(1)
9	D28780478	1	Plate	(1)
10	D28780810	1	Lining	(1)
11	D41717800	1	Bearing Flange	
13	339881X1	8	Cap Screw	M16 X 60
14	D20400459	16	Washer	
15	1442739X1	8	Locknut	M16
16	D41711000	1	Flange	
17	D43001700	1	Grease Fitting	
18	D43104900	1	Key	
19	D28780475	1	Washer	
20	339046X1	1	Castle Nut	M24
21	354078X1	1	Split Pin	3/16" X 1-1/4
22	D43106400	1	Key	
23	D28785635	1	Pulley	
24	D28785854	1	Spacer	
27	D28787996	1	Protection.	Valid from machine/table no,can be used in new as well as in older machines 58301
28	D28785348	1	Support	
29	3009493X1	X	Cap Screw	M10 X 30
30	D20400416	X	Washer	
31	1440329X1	2	Locknut	M10
32	D28785342	1	Support	
33	D28785344	1	Support	
35	339124X1	8	Cap Screw	M8 X 16
36	D20400506	8	Washer	
37	D28785346	1	Bracket	
45	**D41990059**	1	Belt	See Page - Reference Number 004-0005/57
46	**D41929000**	2	V Belt	See Page - Reference Number 007-0002/26
47	**D41990064**	1	Belt	See Page - Reference Number 010-0006/41
49	**D41979600**	1	Belt	
	D41990049	1	Belt	[B]
53	D43009500	1	Connector	
54	D40743100	2	Screw	
55	D43009200	2	Bracket	
56	D43002600	2	Grease Fitting	
57	D28780803	2	Tube	
58	D28785855	1	Counter Shaft	
60	D41717600	1	Bearing	(11)
61	D20400453	1	Washer	
62	D41705700	1	Ball Bearing	
63	D20400471	1	Washer	
64	D20400473	2	Washer	
65	339814X1	2	Cap Screw	M10 X 35
67	D41054900	1	Castle Nut	
68	D41652800	1	Bush	
69	354416X1	1	Split Pin	3/16" X 2-1/2

FOOTNOTE [B] REDUCED CHOP SPEED

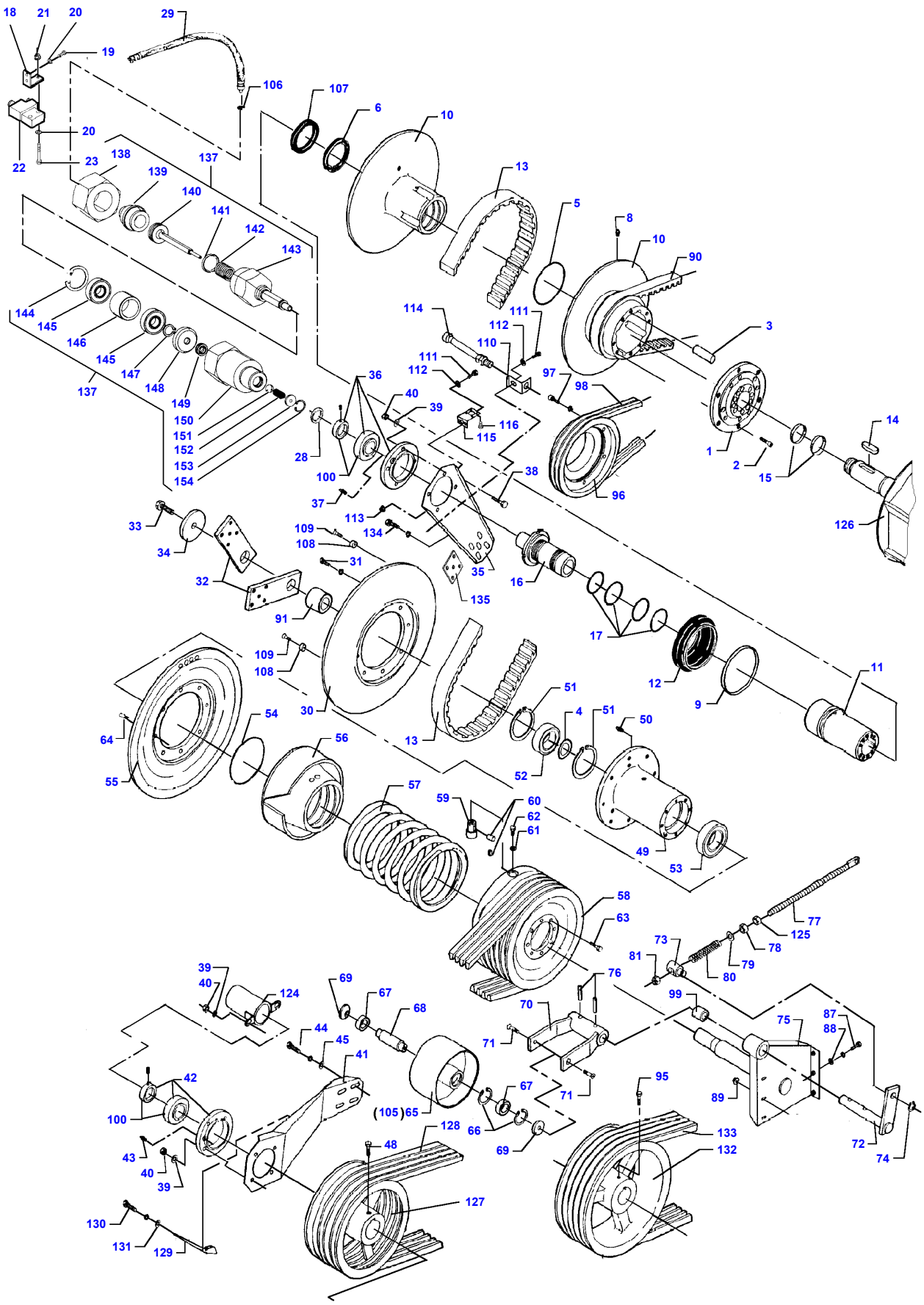
18
21
20
29
19
106
107
6
10
20
22
23
138
137
139
140
141
142
143
13
5
8
10
90
144
145
146
145
147
148
137
149
150
151
152
153
154
114
111
112
110
111
112
3
36
40
39
97
98
116
115
28
100
37
38
96
1
2
15
14
126
33
34
109
108
113
134
31
35
16
32
91
135
17
109
108
30
12
9
11
51
4
51
50
64
54
56
13
52
55
57
59
60
62
61
49
53
58
63
77
125
73
78
81
79
80
76
39
40
124
69
67
68
70
99
75
87
88
44
45
41
71
42
67
71
95
89
100
(105)65
128
66
69
133
132
72
74
43
40
39
48
127
130
131
129

D-AAZB-001-B

https://truckmanualshub.com/

Item	Part Number	Qty	Description	Comments
1	D28080609	1	Epicyclic	(1)
	D28382095	1	Variator	
	D28380221	1	Cover	(1)
2	D40607100	18	Screw	(1)
3	D28380024	4	Pin	(1)
4	D41654800		Washer	Thickness 1 MM
	D41654900		Shim	Thickness 2 MM
5	D45471500	1	O Ring	(1)
6	D45403600	1	Gasket	(1)
8	1441858X1	1	Grease Fitting	(1)
9	D45039100	3	Cable Tie	(1)
10	D28380301	1	Variator	(1)
11	D28380298	1	Bush	(1)
12	D28380031	1	Bellows	(1)
13	D41980500		Belt	
14	D43110600	1	Key	
15	D42596800	1	Tightener	
16	D28380184	1	Bush	
17	D45467100	4	O Ring	
18	D28780959	1	Holder	
19	339666X1	1	Cap Screw	
20	D20400404	2	Washer	
21	1441462X1	1	Locknut	
22	D45110095	1	Pressure Valve	
23	391884X1	1	Cap Screw	
28	D45420100	1	Seal	
29	D45130078	2	Hydraulic Hose	
30	D28380063	1	Washer	
31	3009493X1	8	Cap Screw	M10 X 30
32	D28380018	2	Bracket	
33	390419X1	1	Cap Screw	M16 X 40
34	D28750882	1	Washer	
35	D28380020	1	Yoke	
36	D41711000	1	Flange	
37	1441858X1	1	Grease Fitting	
38	3009507X1	8	Cap Screw	M12 X 35
39	D20400424	8	Washer	
40	3009695X1	8	Nut	M12
41	D28380168	1	Support	
42	D41711000	1	Flange	
43	1441858X1	1	Grease Fitting	
44	339139X1	8	Cap Screw	M12 X 25
45	D20400424	8	Washer	
48	3009493X1	2	Cap Screw	M10 X 30
49	D28380040	1	Variator	(49)
	D28385025	1	Variator	
50	1441858X1	1	Grease Fitting	(49)
51	D42516400	2	Circlip	(49)
52	391069X1	1	Bear. 6309 2rs	(49)
53	3009404X1	1	Bear. 6310 2rs	(49)
54	D45472100	1	O Ring	(49)
55	D28380041	1	Spacer	(49)
56	D28380046	1	Variator	(49)
57	D28385024	1	Spring	(49)
58	D28380039	1	Pulley	(49)
59	D28380303	2	Retainer	(49)
60	D28380304	2	Wearplate	(49)
61	D20400415	2	Washer	(49)
62	3009491X1	2	Cap Screw	(49) M10 X 20
63	390799X1	8	Cap Screw	(49) M10 X 40
64	1441584X1	8	Screw Metric	(49)
65	D28380189	1	Pulley	
66	339199X1	2	Circlip	
67	SKF62042RS	2	Bear. 6204 2rs	
68	D28380001	1	Bolt	
69	D28380003	2	Ring	
70	D28380009	1	Rocker Arm	
71	1441584X1	2	Screw Metric	
72	D28380005	1	Arm	

https://truckmanualshub.com/

Item	Part Number	Qty	Description	Comments
73	D28760334	1	Bracket	
74	1440475X1	1	Circlip	
75	D28385555	1	Bracket	Valid from machine/table no,can be used in new as well as in older machines 58256
76	D42621900	2	Pin	
77	D28380011	1	Tie Rod	
78	339034X1	1	Nut	M16
79	D28181284	1	Washer	
80	D28210881	1	Comp.Spring	
81	1442739X1	1	Locknut	M16
87	390799X1	6	Cap Screw	M10 X 40
88	D20400415	3	Washer	
89	1440329X1	3	Locknut	M10
90	**D41981200**	1	Belt	
91	D28385557	1	Bush	Valid from machine/table no,can be used in new as well as in older machines 58256
95	390799X1	1	Cap Screw	[A] M10 X 40
96	D28380231	1	Washer	[C]
97	D40692300	6	Screw	[C]
98	**D41990007**	2	Belt	[C]
99	D43367400	1	Bush	
100	D41705700	2	Ball Bearing	
105	D28380313	1	Pulley	[A]
106	D45232400	1	Washer	
107	D45403700	1	Gasket	
108	**D45010092**	2	Magnet	[D]
109	D40316400	2	Screw Metric	[D]
110	D28780967	1	Sensor	[D]
111	339560X1	2	Cap Screw	[D] M6 X 16
112	D20400404	2	Washer	[D]
113	1441462X1	2	Locknut	[D] M6
114	D28780971	1	Sensor	[D]
115	D28780772	1	Retainer	[D]
116	D40740400	4	Screw	[D]
124	D28380229	1	Tube	
125	3764827M1	1	Nut	M16
126	D28385022	1	Beater	
127	D28380002	1	Pulley	
128	**D41982300**	1	Kit, Belt	
129	D28180928	1	Bracket	
130	339123X1	2	Cap Screw	M8 X 20
131	D20400506	2	Washer	
132	D28380170	1	Pulley	[A]
133	**D41982000**	1	Kit, Belt	[A]
134	3009507X1	5	Cap Screw	M12 X 35
135	D28380178	1	Dog	
136	D28081039	1	Kit, Service	[E,B]
137	D28382051	1	Coupling	(136)
138	D45211300	1	Union	(137)
139	D45272000	1	Connector	(137)
140	D28382050	1	Piston	(137)
141	D45482900	1	O Ring	(137)
142	D44351400	1	Spring	(137)
143	D28382048	1	Shaft	(137)
144	1440968X1	1	Circlip	(137)
145	D41616400	2	Ball Bearing	(137)
146	D28710333	1	Bush	(137)
147	D42500700	1	Circlip	(137)
148	D28382052	1	Spacer	(137)
149	D45404300	1	Seal	(137)
150	D28382049	1	Housing	(137)
151	D41648000	1	Ball	(137)
152	D44351500	1	Spring	(137)
153	D28382091	1	Guide	(137)
154	D42510600	1	Circlip	(137)
155	D28781308	1	Washer	[E] (136)

https://truckmanualshub.com/

Item	Part Number	Qty	Description	Comments
156	D28782528	1	Wiring Harness	[E] (136)
157	D28782553	1	Tube	[E] (136)
158	D45110095	1	Pressure Valve	[E] (136)
159	D45130046	1	Hose	[E] (136)
160	D45130078	2	Hydraulic Hose	[E] (136)
161	D45252600	4	Union	[E] (136)
162	D45258000	1	Union	[E] (136)
163	D45263900	2	Union	[E] (136)
164	D45266900	1	Connector	[E] (136)
165	D45730600	1	Divider	[E] (136)
166	D28081021	1	Instructions	[E] (136)

FOOTNOTE [A] OPTIONAL EQUIPMENT
FOOTNOTE [B] SERVICE KIT IS AVAILABLE FOR COMBINES MANUFACTURED BEFORE COMBINE NO . 58301
FOOTNOTE [C] FOR MACHINES WITH GRAIN SEPARATOR
FOOTNOTE [D] OPTIONAL EQUIPMENT STANDARD COMBINE, STANDARD EQUIPMENT AUTO LEVEL COMBINE,SLOPES
FOOTNOTE [E] NOT ILLUSTRATED

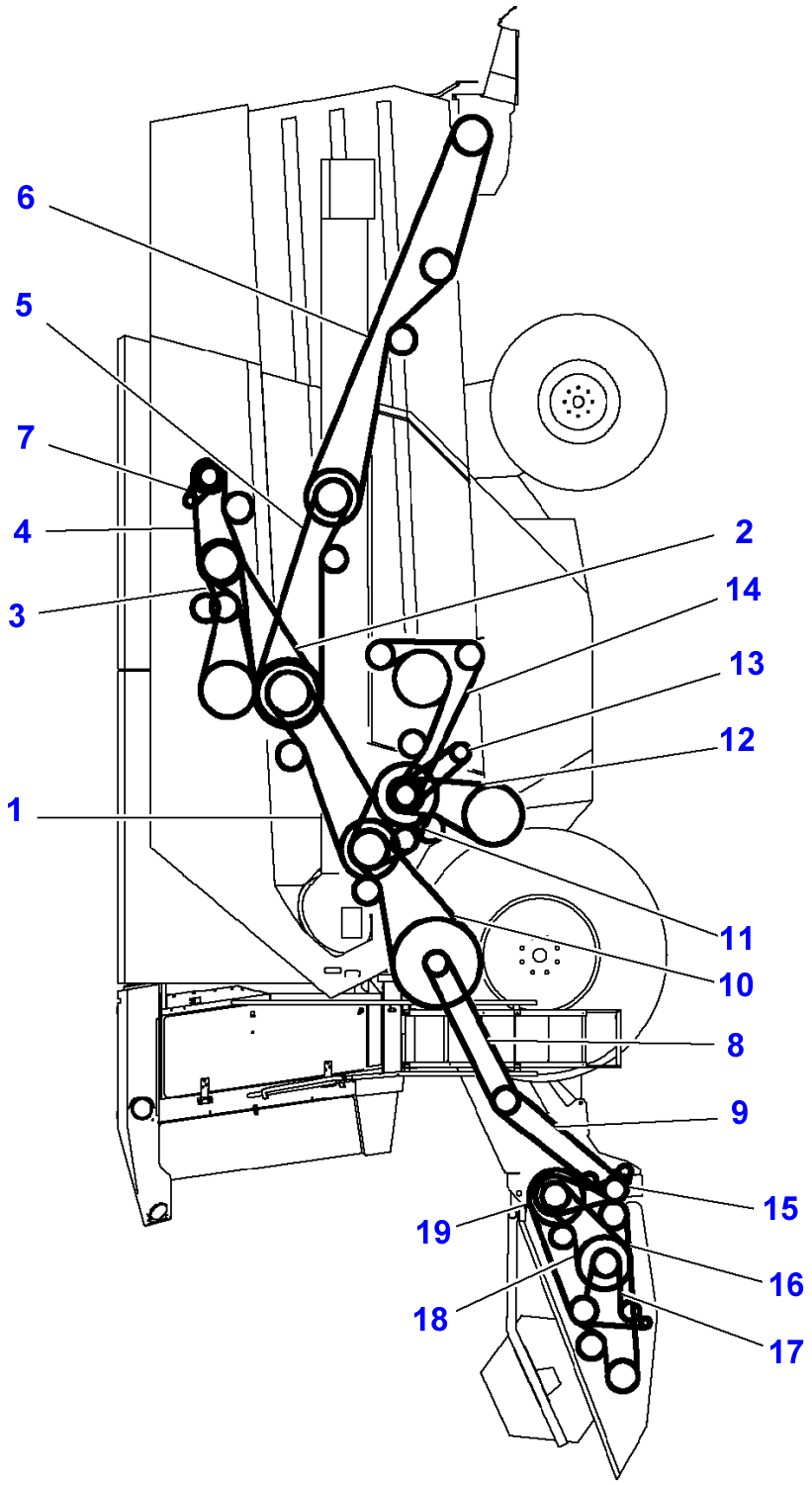

D-AAZC-007-D

https://truckmanualshub.com/

Item	Part Number	Qty	Description	Comments
1	**D41990059**	1	Belt	[B,C]
2	**D41990064**	1	Belt	[A,B]
3	**D41978100**	1	V Belt	[A,I]
4	**D41990045**	1	Belt	[A,J]
				Valid from machine/table no,can be used in new as well as in older machines 60503
5	**D41979600**	1	Belt	[B,K]
	D41990049	1	Belt	[B,K,N,Z]
6	**D41977900**	1	Belt	[K,L,Z]
	D41978400	1	Belt	[K,L,N]
7	**D41904200**	1	Belt	[J,M]
8	**D42329300**	1	Chain	[E,X]
9	D28273942	1	Chain	[U,V]
10	**D41979800**	1	Belt	[C,D]
11	**D41990001**	2	V Belt	[C,F]
12	**D41933900**	1	Kit, V Belt	[F,H]
				SET
13	D41921801	1	Belt	[F,O]
				SET
14	**D41975300**	1	Belt	[F,G]
15	D28273804	1	Chain	[V,P]
16	**D41986300**	1	V Belt	[R,Y]
17	**D42332800**	1	Chain	[X,Q]
18	D28273950	1	Chain	[X,R]
19	D28274029	1	Belt	[R,V]

FOOTNOTE [A] DIESEL ENGINE
FOOTNOTE [B] COUNTER SHAFT
FOOTNOTE [C] REAR BEATER
FOOTNOTE [D] UPPER FEEDER SHAFT
FOOTNOTE [E] INTERMEDIARY FEEDER SHAFT
FOOTNOTE [F] INTERMED.SHAFT
FOOTNOTE [G] STRAW SHAKER CRANK
FOOTNOTE [H] ECCENTRIC SHAFT
FOOTNOTE [I] DISCHARGE AUGER SHAFT
FOOTNOTE [J] TRACTION PUMP
FOOTNOTE [K] INTERMEDIARY DRIVE F. STRAW CHOPPER
FOOTNOTE [L] STRAW CHOPPER
FOOTNOTE [M] ELECTRIK VERTICAL KNIFE
FOOTNOTE [N] REDUCED CHOP SPEED
FOOTNOTE [O] PUMP FOR CHAFF SPREADER
FOOTNOTE [P] FOR REVERSING MOTOR
FOOTNOTE [Q] BAND ROLLER
FOOTNOTE [R] COUNTER SHAFT FOR TABLE
FOOTNOTE [U] COUNTERDRIVE ON MAIN CROP ELEVATOR
FOOTNOTE [V] TRANSMISSION SHAFT FOR TABLE
FOOTNOTE [X] FEEDER DRUM
FOOTNOTE [Y] KNIFE DRIVE
FOOTNOTE [Z] REDUCED REVOLUTIONS

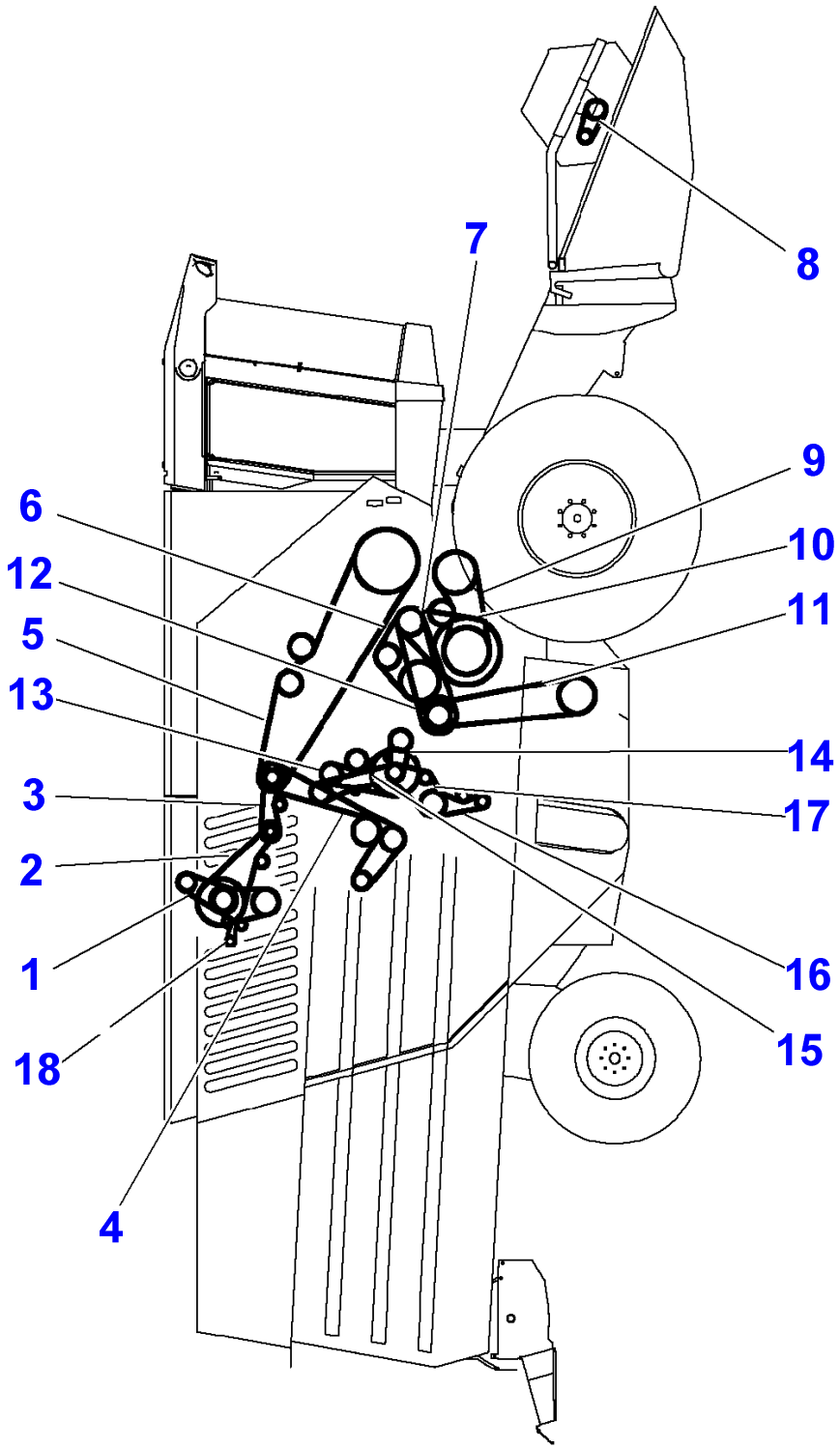
7
8
9
6
10
12
11
5
13
14
3
17
2
1
16
18
15
4

https://truckmanualshub.com/

Item	Part Number	Qty	Description	Comments
1	**D41990027**	1	Belt	[V]
2	**D41990019**	1	V Belt	[Y,K]
3	**D28786813**	1	Belt	[I,Y]
4	**D41939300**	1	Belt	[I,S]
5	**D41978800**	1	Belt	[I,T]
6	**D41990007**	1	Belt	[C,H]
7	**D41980500**	1	Belt	[C,M]
8	**D42325700**	1	Chain	[G]
9	**D41982300**	1	Kit, Belt	[M,N]
10	**D41982000**	1	Kit, Belt	[M,N,Q]
11	**D41981100**	1	Belt	[O,Z]
	D41981400	1	V Belt	[Z,L]
12	**D41981200**	1	Belt	[C,Z]
13	**D41929000**	1	V Belt	[B,J]
14	**D42326200**	1	Chain	[F,J]
15	**D42325100**	1	Chain	[R,J]
	D42328600	1	Chain	[P,R,J]
16	**D42328100**	1	Chain	[Y,E]
17	D42328101	1	Chain	[J,Y]
18	**V685121585**	1	V Belt	[A,W]

FOOTNOTE [A] DIESEL ENGINE
FOOTNOTE [B] COUNTER SHAFT
FOOTNOTE [C] REAR BEATER
FOOTNOTE [E] RETURN THRESHER
FOOTNOTE [F] FILLING AUGER
FOOTNOTE [G] REEL DRIVE
FOOTNOTE [H] GRAIN SEPARATOR
FOOTNOTE [I] DISCHARGE AUGER SHAFT
FOOTNOTE [J] INTERMED.SHAFT
FOOTNOTE [K] ELECTRICAL ROTARY SCREEN
FOOTNOTE [L] REDUCED MAIN FAN SPEED
FOOTNOTE [M] COUNTER DRIVE, VARIATOR
FOOTNOTE [N] THRESHING DRUM
FOOTNOTE [O] MAIN FAN
FOOTNOTE [P] INCREASED REVOLUTIONS
FOOTNOTE [Q] REDUCED REVOLUTIONS
FOOTNOTE [R] FILL ELEVATOR
FOOTNOTE [S] DUST EXTRACTOR
FOOTNOTE [T] DISCHARGE AUGER
FOOTNOTE [V] AIR CONDITIONED
FOOTNOTE [W] ALTERNATOR
FOOTNOTE [Y] RETURN ELEVATOR
FOOTNOTE [Z] MAIN FAN VARIATOR

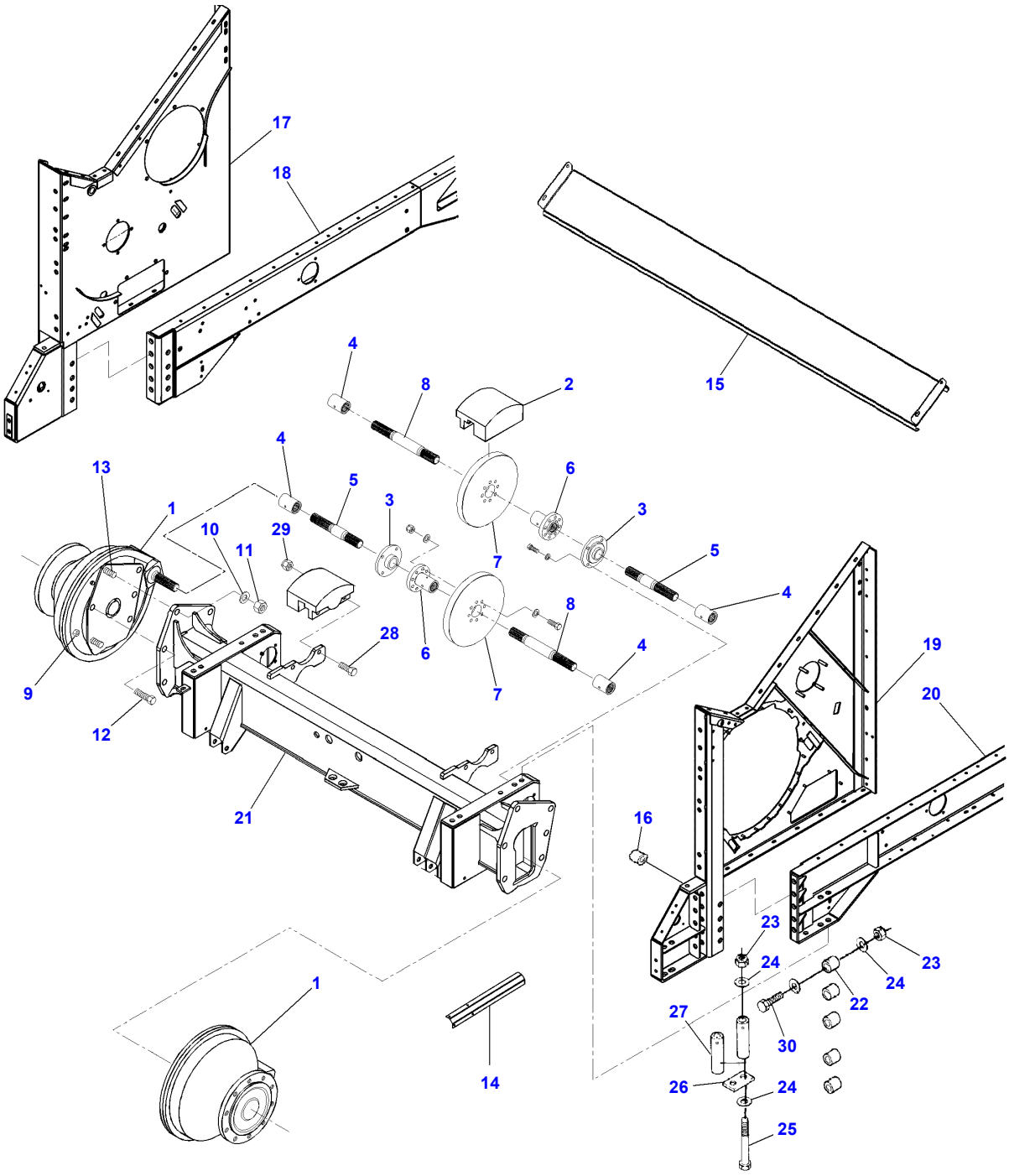
17
18
15
4
8
2
4
13
5
6
1
3
3
10
29
11
7
5
4
8
28
6
4
19
9
7
20
12
21
16
23
24
23
24
1
22
27
30
14
26
24
25

D-ABZV-002-C

https://truckmanualshub.com/

Item	Part Number	Qty	Description	Comments
1	D46140066	2	Final Drive	
	D46140073	2	Final Drive	From Serial or Engine Number 61933
2	D46140016	2	Kit, Brake	
3	D41715000	2	Bearing	
4	D46149400	4	Sleeve	
5	D28185365	2	Counter Shaft	
6	D28185289	2	Hub	
7	D46140069	2	Brake Disc	
8	D28186178	2	Counter Shaft	
9	D46116600	2	Vent	
10	D46140096	12	Washer	
11	D46140095	2	Nut	
12	D46140094	4	Bolt	
13	D46140097	2	Stud	
14	D28185600	1	Plate	
15	D28186144	1	Plate	
16	D28185628	4	Spacer	
17	D28186141	1	Side	Right Hand
18	D28181859	1	Side	
19	D28185911	1	Plate	Left Hand
20	D28181858	1	Side	
21	D28186625	1	Front Axle	
22	D28180088	10	Spacer	
23	3010067X1	X	Locknut	M20
24	D20400437	X	Washer	
25	D40437800	X	Screw	
26	D28181161	2	Bracket	
27	D28180058	4	Pipe	
28	D40437300	4	Cap Screw	M20 X 65
29	3009747X1	4	Nut	M20
30	D40437200	1	Screw	

https://truckmanualshub.com/

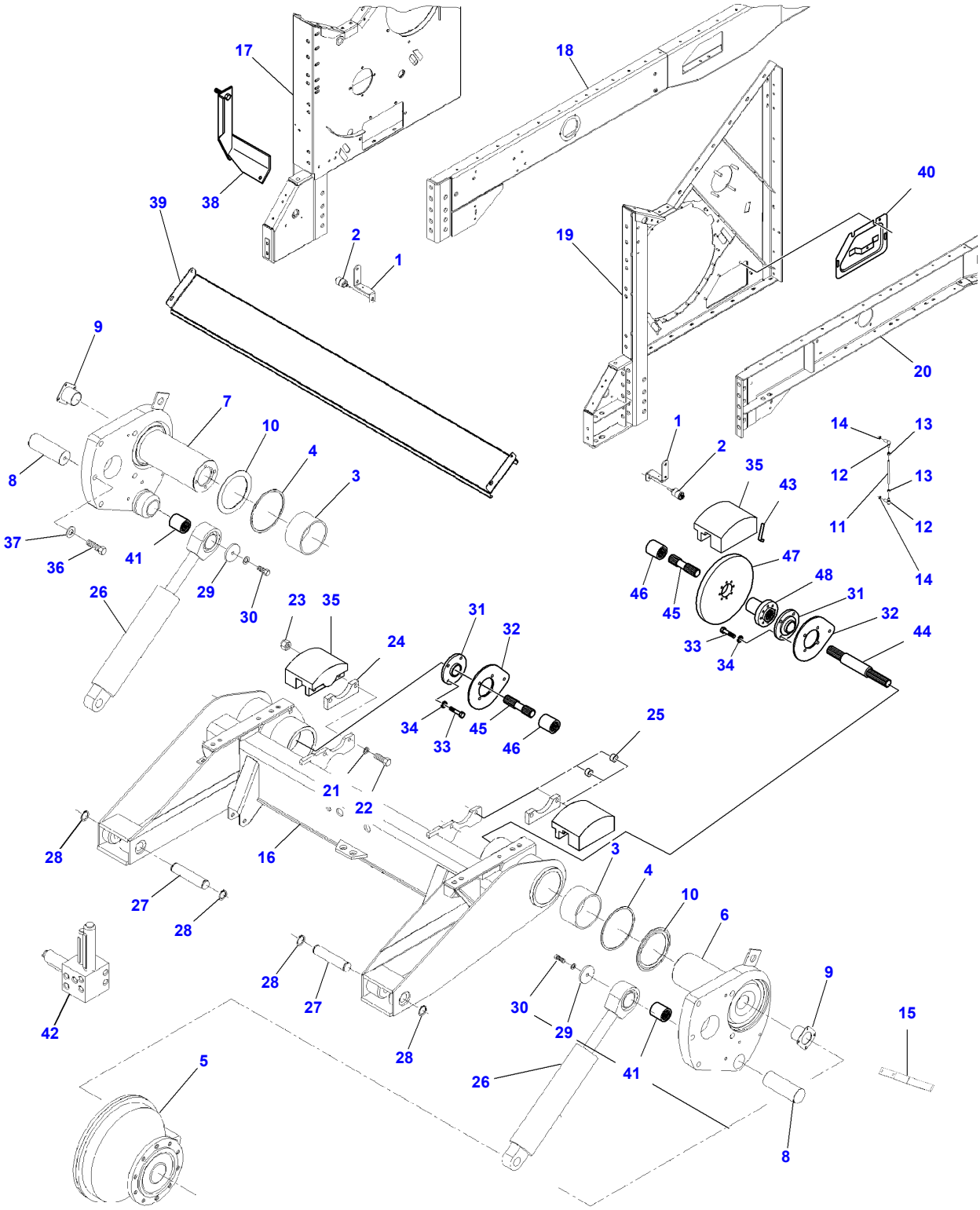

D-ABZW-002-C

https://truckmanualshub.com/

Item	Part Number	Qty	Description	Comments
1	D28185689	2	Support	
2	D28780523	2	Potentiometer	
3	D43338500	6	Casing	
4	D45479600	4	Ring	
5	D46140066	1	Final Drive	
	D46140073	1	Final Drive	From Serial or Engine Number 61933
6	D28185641	1	Final Drive	
7	D28185640	1	Final Drive	
8	D28185645	2	Pin	
9	D28185690	2	Seal	
10	D28181652	2	Spacer	
11	D28780446	2	Rod	
12	D46437300	4	Toggle	
13	D41010600	2	Nut	M6
14	D20400453	2	Washer	
15	D28185696	1	Scraper	
16	D28186624	1	Shaft	
17	D28186141	1	Side	
18	D28181859	1	Side	Right Hand
19	D28185911	1	Plate	Left Hand
20	D28181858	1	Side	
21	D20400438	8	Washer	
22	D40437200	4	Screw	
23	3010067X1	4	Locknut	M20
24	D28186254	2	Spacer	
25	D28180059	2	Pipe	
26	D45100026	2	Cylinder	
27	D28181647	2	Bolt	
28	391129X1	4	Circlip	
29	D28750882	2	Washer	
30	391889X1	2	Cap Screw	M16 X 70
31	D28185694	2	Bearing Carrier	
32	D28185673	2	Washer	
33	D40431900	8	Screw	
34	D20400428	16	Washer	
35	D46140016	2	Kit, Brake	
36	D40449900	5	Screw	
37	D41102000	4	Spring	
38	D28284574	1	Bracket	
39	D28186144	1	Plate	
40	D28185626	1	Cover	
41	D45699100	2	Bush	
42	D45110094	1	Pressure Valve	Repairs and replaces D41100094
43	D28780845	1	Rod	
44	D28185363	1	Counter Shaft	
45	D28186179	2	Counter Shaft	
46	D46149400	2	Sleeve	
47	D46140069	1	Brake Disc	
48	D28185289	1	Hub	

https://truckmanualshub.com/

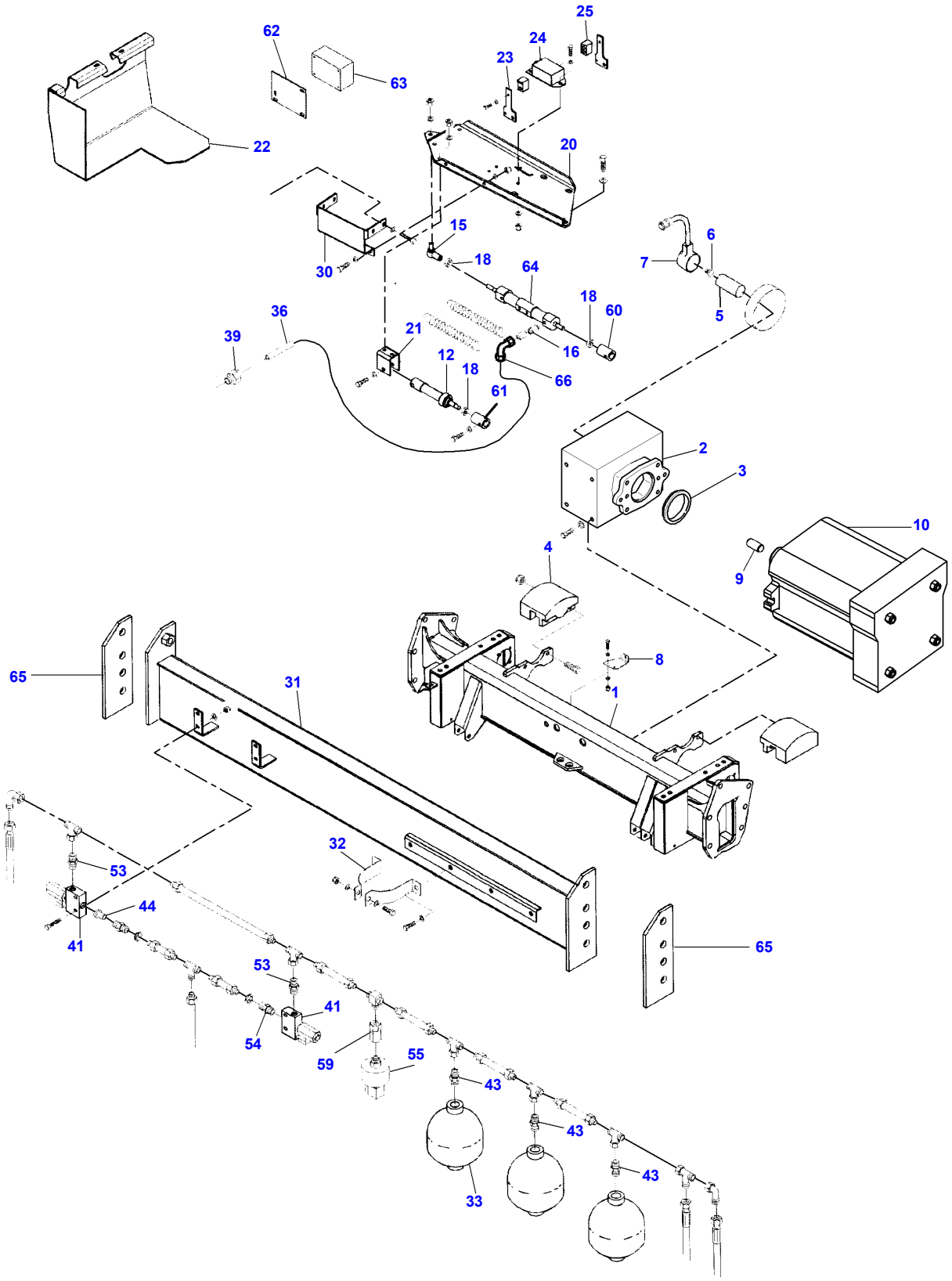

https://truckmanualshub.com/

Item	Part Number	Qty	Description
1	D28185312	1	Shaft
2	D46140058	1	Gearbox
3	D28185936	1	Ring
4	D46140016	2	Kit, Brake
5	D28186503	1	Guard
6	**D28780516**	1	Inductive Sensor
7	**D28780514**	1	Sensor
8	D28186505	1	Bracket
9	D46140078	1	Connector
10	D45165100	1	Hydraulic Motor
12	D45140010	1	Cylinder
15	D46436200	1	Toggle
16	D45258000	6	Union
18	D41012000	3	Nut
20	D28182366	1	Bracket
21	D28182381	1	Bracket
22	D28186504	1	Sensor
23	D28185674	2	Bracket
24	D28785685	1	Sensor
25	D28785689	2	Magnet
30	D28185173	1	Bracket
31	D28185090	1	Profile
32	D28752408	6	Support
33	D45100300	3	Accumulator
36	D45130076	6	Hydr. Hose
39	D45252800	6	Union
41	D45110054	2	Valve
43	D45250500	3	Union
44	D28780319	1	Washer
53	D45250800	2	Union
54	D45255200	2	Connector
55	D28781255	1	Sensor
59	D45277000	1	Connector
60	D28185108	1	Adaptor
61	D28182364	1	Adaptor
62	D28182368	1	Console
63	D45120027	1	Block
64	D45140009	1	Cylinder
65	D28185096	2	Plate
66	D28780988	2	Oil Pipe

https://truckmanualshub.com/

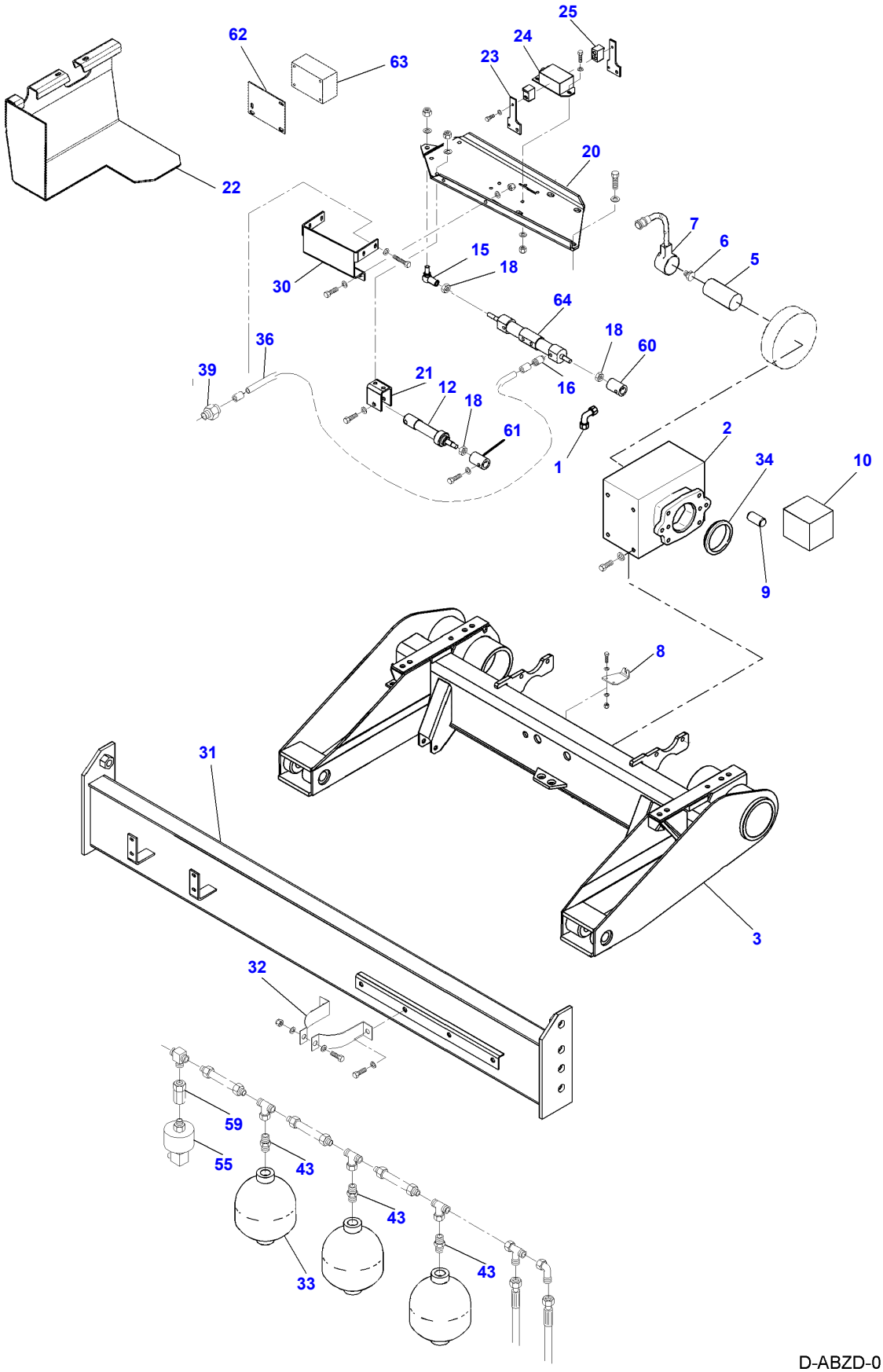

D-ABZD-010-C

https://truckmanualshub.com/

Item	Part Number	Qty	Description
1	D28780988	2	Oil Pipe
2	D46140058	1	Gearbox
3	D28186624	1	Shaft
5	D28186503	1	Guard
6	**D28780516**	1	Inductive Sensor
7	**D28780514**	1	Sensor
8	D28185614	1	Bracket
9	D46140078	1	Connector
10	D45165100	1	Hydraulic Motor
12	D45140010	1	Cylinder
15	D46436200	1	Toggle
16	D45258000	6	Union
18	D41012000	3	Nut
20	D28182366	1	Bracket
21	D28182381	1	Bracket
22	D28186504	1	Sensor
23	D28185674	2	Bracket
24	D28785685	1	Sensor
25	D28785689	2	Magnet
30	D28185173	1	Bracket
31	D28185090	1	Profile
32	D28752408	6	Support
33	D45100300	3	Accumulator
34	D28185936	1	Ring
36	D45130076	6	Hydr. Hose
39	D45252800	6	Union
43	D45250500	3	Union
55	D28781255	1	Sensor
59	D45277000	1	Connector
60	D28185108	1	Adaptor
61	D28182364	1	Adaptor
62	D28182368	1	Console
63	D45120027	1	Block
64	D45140009	1	Cylinder

https://truckmanualshub.com/

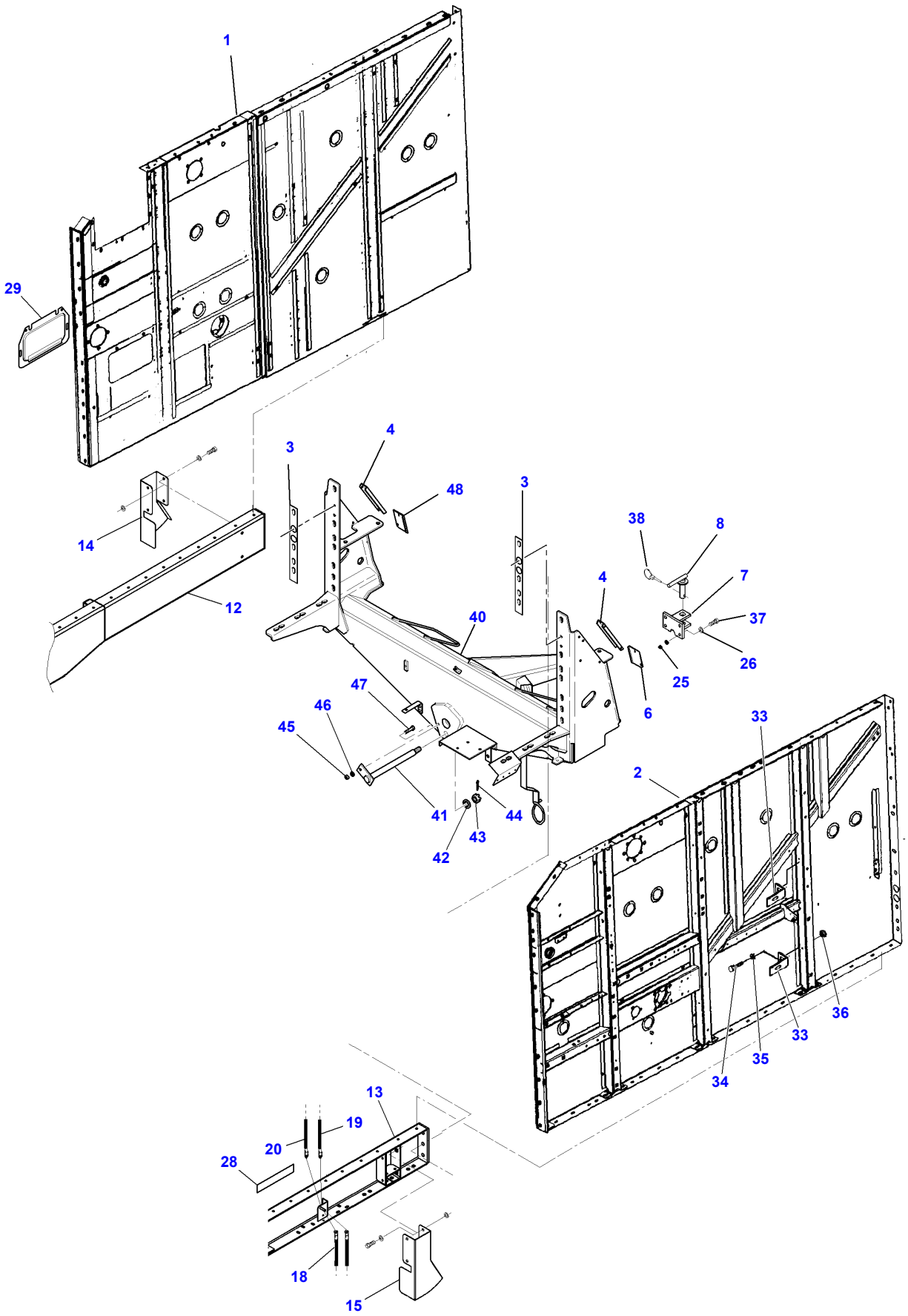

D-ABZE-006-D

https://truckmanualshub.com/

Item	Part Number	Qty	Description	Comments
1	D28186005	1	Side	
2	D28186004	1	Side	
3	D28180152	1	Shim	
4	D28186572	1	Plate	
5	D43359700	1	Part	[E]
6	D28186581	1	Plate	Left Hand
7	D28150801	1	Hook	
	D45906900	1	Hook	[C,B]
	D45907400	1	Hook	For Germany only or any text in German only
8	D28150802	1	Bolt	
12	D28181859	1	Side	Right Hand
13	D28181858	1	Side	Left Hand
14	D28181558	1	Guard	Right Hand
15	D28181559	1	Guard	Left Hand
18	D28785917	2	Hose	
19	D28785947	1	Hose	
20	D28781929	1	Cable	
25	339079X1	4	Nut	
26	D20400428	8	Washer	
28	D44748700	X	Gasket	Length 0,60
29	D28185271	2	Cover	
33	D28751238	4	Bracket	
34	D40422700	4	Cap Screw	
35	D20400404	4	Washer	
36	1441462X1	4	Locknut	
37	391177X1	4	Bolt Metric	
38	D41446200	1	Split Pin	
40	D28186190	1	Axle Housing	
41	D28186189	1	Shaft	
42	D20400540	1	Washer	
43	D41054900	1	Castle Nut	
44	D41411300	1	Pin	
45	D41010900	1	Nut	
46	D20400426	1	Washer	
47	D40411300	1	Cap Screw	
48	D28186580	1	Plate	Right Hand

FOOTNOTE [B] WITH AUTOMATIC HITCH
FOOTNOTE [C] OPTIONAL
FOOTNOTE [E] NOT ILLUSTRATED

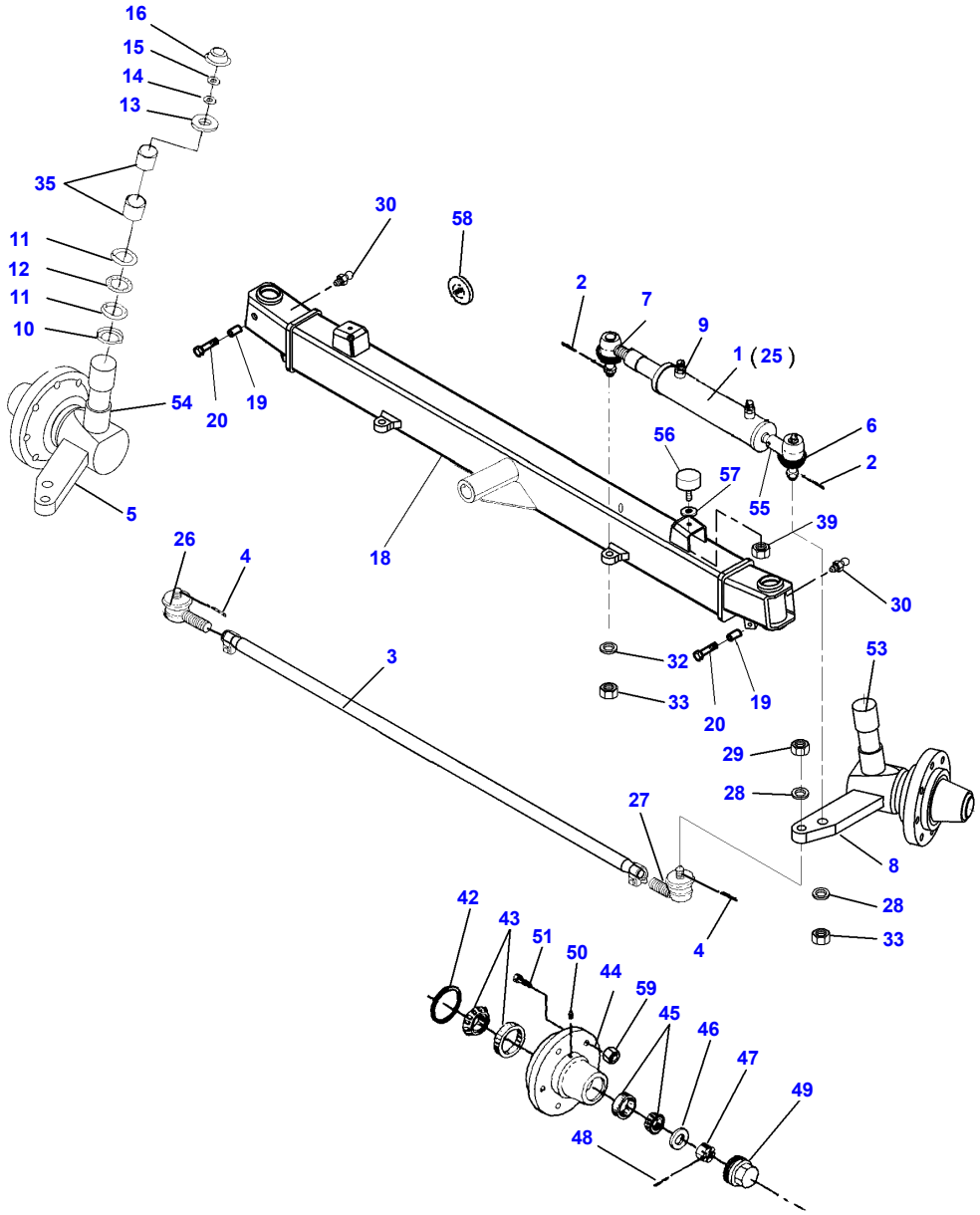
16
15
14
13
35
11
12
11
10
54
5
20
19
30
58
2
7
9
1 (25)
6
2
56
57
55
39
30
18
26
4
3
32
33
20
19
53
29
28
27
8
28
33
4
42
43
51
50
44
59
45
46
47
49
48

D-ABZE-008-E

https://truckmanualshub.com/

Item	Part Number	Qty	Description	Comments
1	D45120068	2	Cylinder	
2	339531X1	2	Split Pin	Diameter 4 X 35
3	D45907600	1	Rod	
4	354066X1	2	Split Pin	5/32" X 1
5	D46727700	1	Steering Axle	CPL.
6	D45934100	1	Joint.	
7	D45934200	1	Joint.	
8	D46727800	1	Steering Axle	
9	D45250800	4	Union	
10	D28182292	2	Bearing Shell	
11	D41659000	4	Washer	
12	D41658000	2	Washer	
13	D28185590	2	Washer	
14	D42599000	2	Washer	
15	D42502800	2	Circlip	
16	D45745700	2	Cover	
18	D28186182	1	Rear Axle	
19	D28186111	2	Spacer	
20	D40414000	2	Screw Metric	
25	D45120067	1	Kit, Seal	
26	D45907800	1	Toggle	Right Hand
27	D45910100	1	Toggle	Left Hand
28	D20400438	4	Washer	
29	D41048800	2	Groove Nut	
30	D43001500	2	Grease Fitting	
32	D20400519	2	Washer	
33	D41054300	2	Nut	
35	D43338400	2	Bush	
39	D46140089	2	Nut	
42	D46729700	1	Ring	(5)
	D46729700	1	Ring	(8)
43	D41663100	1	Roller Bearing	(5)
	D41663100	1	Roller Bearing	(8)
44	D46729300	1	Housing	(5)
	D46729300	1	Housing	(8)
45	D41662700	1	Bearing Taper	(5)
	D41662700	1	Bearing Taper	(8)
46	D46729500	1	Washer	(5)
	D46729500	1	Washer	(8)
47	D41048200	1	Nut	(5)
	D41048200	1	Nut	(8)
48	D41415200	1	Pin	(5)
	D41415200	1	Pin	(8)
49	D46723300	1	Cover	(5)
	D46723300	1	Cover	(8)
50	D43000300	1	Grease Fitting	(5)
	D43000300	1	Grease Fitting	(8)
51	D46728200	6	Bolt	(5)
	D46728200	6	Bolt	(8)
53	D46729800	1	Hub	(8) Left Hand
54	D46729900	1	Hub	(5) Right Hand
55	D42605100	2	Pin	
56	D49050046	2	Stop	
57	D20400425	2	Washer	
58	D45085600	2	Reflector	
59	D41021800	X	Nut	

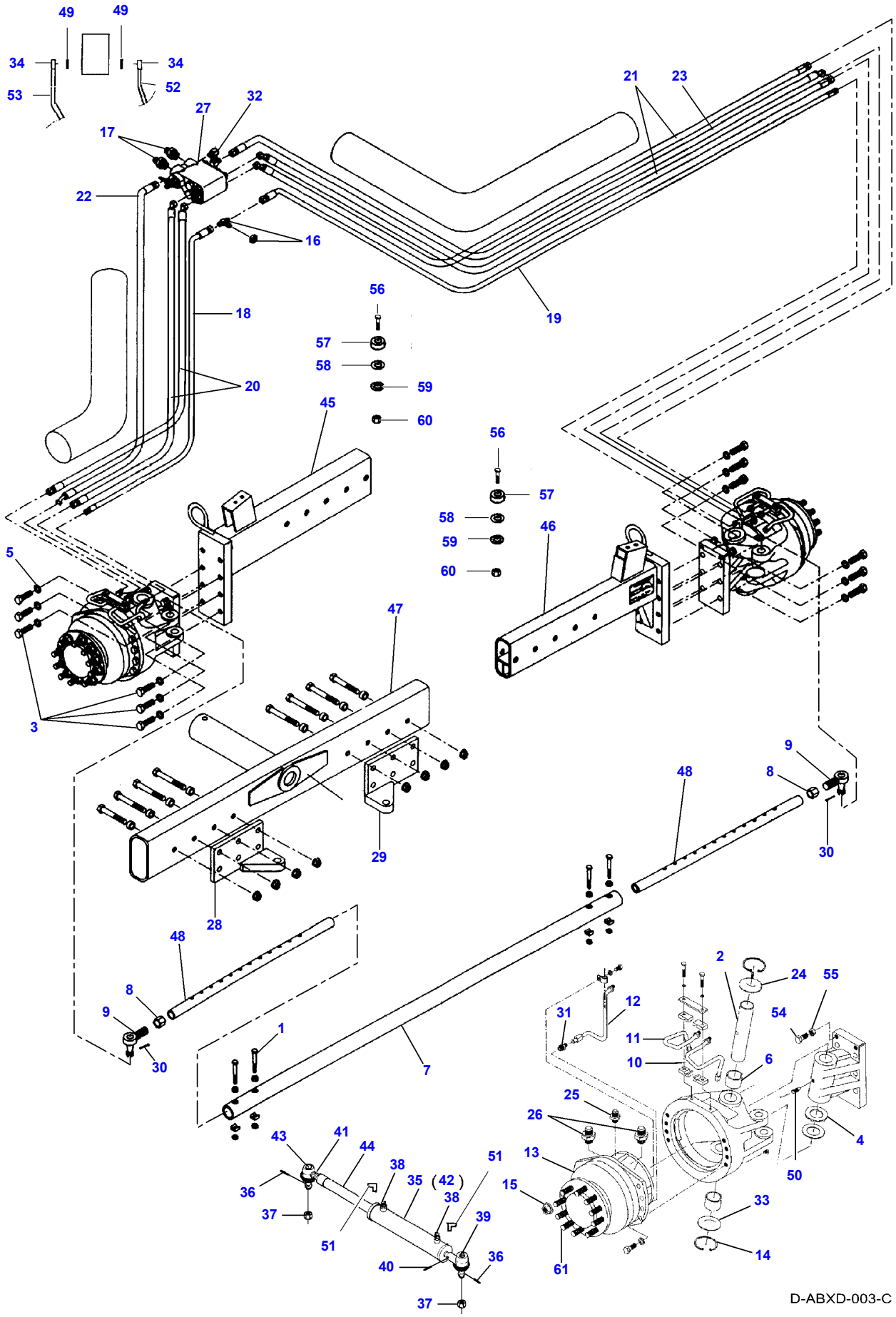
49
49
34
34
53
52
27
32
17
22
16
21
23
18
19
56
57
58
59
60
20
45
56
57
58
59
60
46
5
47
3
9
8
48
30
29
28
48
8
9
30
1
7
2
24
55
12
31
54
11
10
6
25
26
4
43
41
44
38
51
13
50
36
35 (42)
38
15
33
37
39
51
40
36
61
14
37
D-ABXD-003-C

https://truckmanualshub.com/

Item	Part Number	Qty	Description	Comments
1	D40468100	4	Screw	
2	D49066800	1	Shaft	
3	D49080186	12	Screw	
4	D49067000	1	Thrust Washer	
5	D20400437	12	Washer	
6	D49066900	2	Bush	
7	D49060096	1	Tube	
8	D49060094	2	Nut	
9	D49067300	2	Toggle	
10	D49080180	1	Oil Pipe	
11	D49080179	1	Oil Pipe	
12	D49080178	1	Oil Pipe	
13	D49080187	1	Motor	
14	D49068000	2	Ring	
15	D49067700	10	Nut	
16	D49080185	1	T-Piece	
17	D49080184	2	Connection	
18	D49080189	1	Hydraulic Hose	
19	D49080190	1	Hydraulic Hose	
20	D49080191	2	Hydraulic Hose	
21	D49080192	2	Hydraulic Hose	
22	D49070088	1	Hydraulic Hose	
23	D49080193	1	Hydraulic Hose	
24	D49080177	1	Plug	
25	D49080181	1	Connection	
26	D49080182	2	Connection	
27	D49080188	1	Pressure Valve	
28	D49080194	1	Bracket	Left Hand
29	D49080195	1	Bracket	Right Hand
30	D41406200	2	Split Pin	Diameter 3,2 X 40
31	D49080183	1	Connection	
32	D49070099	1	Valve	
33	D49067900	1	Plug	
34	D28186650	1	Adaptor	
35	D49050057	1	Steering Cyl	
36	339531X1	1	Split Pin	(35) Diameter 4 X 35
37	**D41054300**	2	Nut	(35)
38	D45255100	2	Union	(35)
39	D49050009	1	Knuckle Joint	(35)
40	1440394X1	1	Roll Pin	(35) Diameter 4 X 30
41	D49050016	2	Nut	(35)
42	D49050058	1	Kit	(35)
43	D49050009	1	Knuckle Joint	(35)
44	D45100092	1	Cylinder Rod	(35)
45			Not Used	
46			Not Used	
47			Not Used	
48	D49080161	2	Tube	
49	D45482700	2	O Ring	
50	D43001700	1	Grease Fitting	
51	D45258600	3	Union	
52	D49080166	1	Hydraulic Hose	
53	D49080167	1	Hydraulic Hose	
54	D49080162	1	Screw	
55	D49080164	1	Nut	
56	D40426300	2	Cap Screw	
57	D28181904	2	Damper	
58	D20400471	2	Washer	
59	D41101900	2	Spring Washer	
60	1440329X1	2	Locknut	Repairs and replaces D41087600
61	D49067800	10	Bolt	

https://truckmanualshub.com/

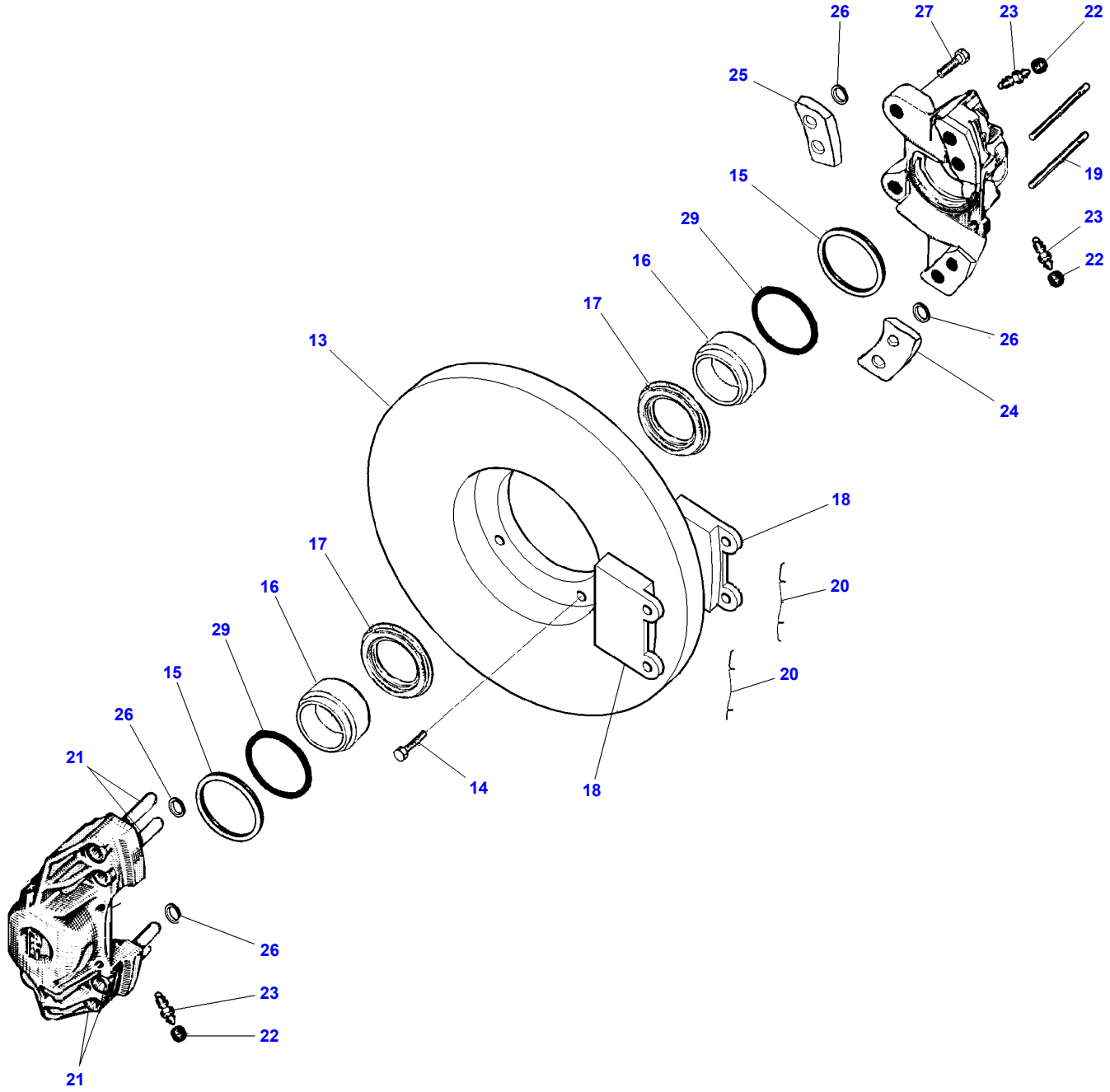

https://truckmanualshub.com/

Item	Part Number	Qty	Description	Comments
13	D46140069	2	Brake Disc	
14	339139X1	8	Cap Screw	M12 X 25
15	D46140016	1	Kit, Brake	
	D46140026	2	O Ring	(15)
16	D46140027	2	Piston	(15)
17	D46140028	2	Kit, Gasket	(15)
18	D46140029	1	Kit, Brake	(15)
19	D46140030	2	Pin	(15)
				Up to Serial or Engine Number 60540
	D46140071	1	Kit, Pin	(15)
				From Serial or Engine Number 60541
20	D46140031	2	Spring	(15)
				Up to Serial or Engine Number 60567
	D46140072	1	Spring	(15)
				From Serial or Engine Number 60568
21	D40696700	4	Screw	(15)
22	D45908600	3	Cap	(15)
23	D46140034	3	Valve	(15)
24	D46140033	1	Spacer	(15)
25	D46140033	1	Spacer	(15)
				Left Hand
26	D45482400	4	O Ring	(15)
27	D40437300	2	Cap Screw	M20 X 65
29	D46140035	2	Seal	

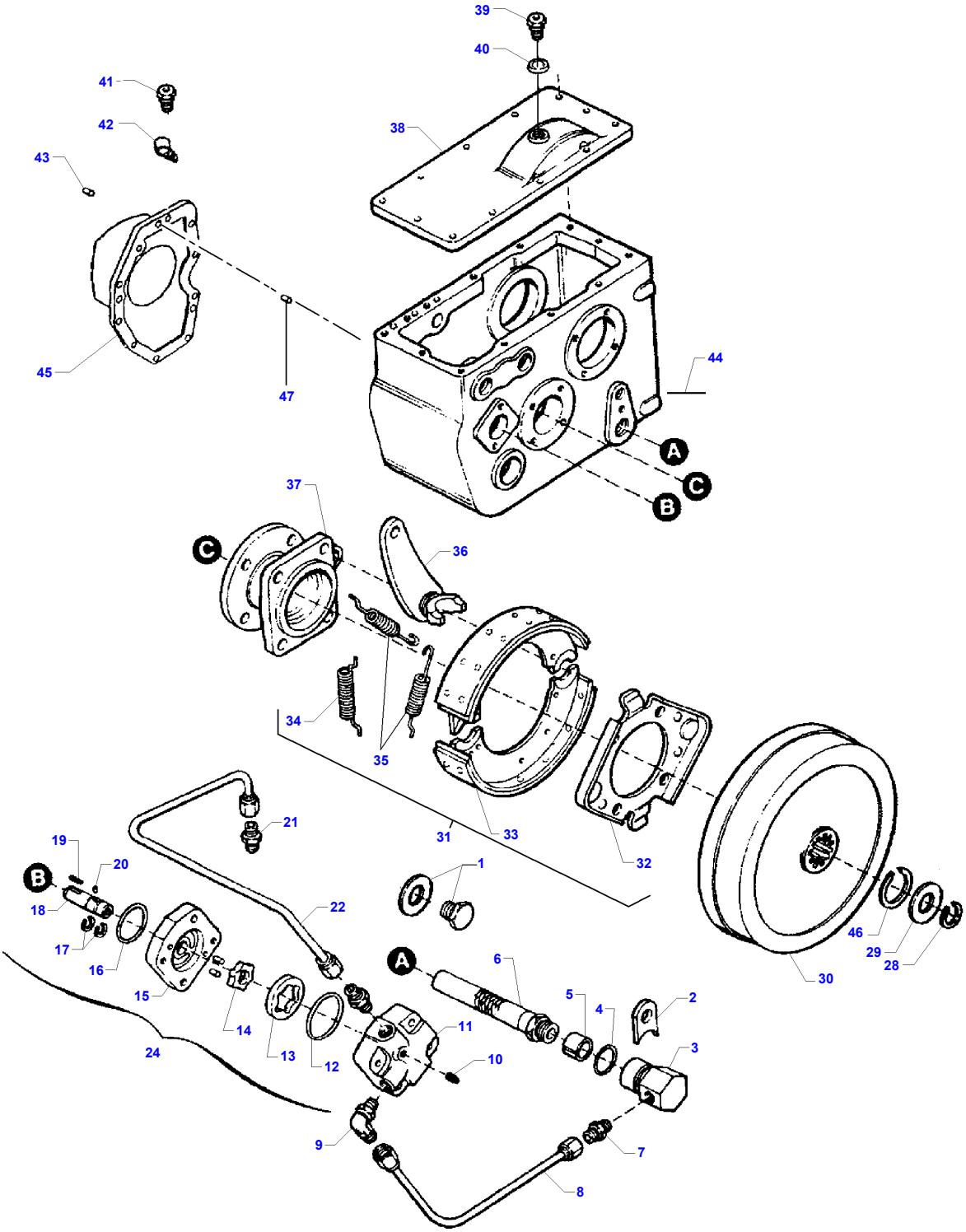
39
40
41
42
43
38
45
47
44
A
C
B
37
C
36
34
35
31
33
32
21
19
20
B
18
17
16
15
22
1
A
6
5
4
2
3
14
13
12
11
10
24
9
7
8
46
29
28
30

D-ABZH-004-B

https://truckmanualshub.com/

Item	Part Number	Qty	Description	Comments
1	70225441	1	Plug	
	70226012	X	Gasket	
2	71183535	1	Retainer	
	70926115	1	Bolt Unc	1/2"-13 X 3/4
	353439X1	1	Lock Washer	1/2"
3	71183536	1	Front Grille	
4	70925919	1	O Ring	
5	71183828	1	Magnet	
6	71183747	1	Front Grille	
7	846337	1	Union	
8	71183750	1	Tube	
9	70921402	1	Elbow Union	
10	70901651	1	Plug	
11	71184147	1	Housing	
12	70924186	1	O Ring	
13	71335782	1	Rotor	
14	Y730804	2	Pin	
15	71184148	1	Cover	
16	70930911	1	O Ring	
17	1026105M1	2	Clip	
18	71335783	1	Shaft	
19	71184145	1	Key	
20	71335784	1	Pin	
21	846634	2	Union	9/16"-18
22	D46140059	1	Lub.Oil Pipe	
24	71406298	1	Pump	
	70922823	2	Cap Screw	
28	70932861	1	Ring	
29	70919393	1	Washer	
30	71183170	1	Brake Drum	
31	71171602	1	Brake	Repairs and replaces D28186128
32	71177930	1	Support	(31)
	354276X1	4	Bolt Unc	1/2"-13 X 1-1/4
	704031	4	Nut Unc	1/2"-13
33	71171602	1	Brake	(31)
34	74906602	1	Spring	(31)
	79021668	X	Locker	
	79021648	X	Primer	
35	74906603	2	Spring	(31)
36	71305651	1	Lever	
37	D46140063	1	Gearbox	
38	71183439	1	Cover	
	354276X1	12	Bolt Unc	1/2"-13 X 1-1/4
39	70225441	1	Plug	
40	**70226012**	1	Gasket	
41	**7751605**	1	Plug	Replace and repair. Old interchangeable with new 71313115
42	70923690	1	Elbow	
43	70926551	1	Pin	
44	71398334	1	Housing	
45	D46140062	1	Housing	
46	70932862	1	Ring	
47	D46140059	1	Lub.Oil Pipe	

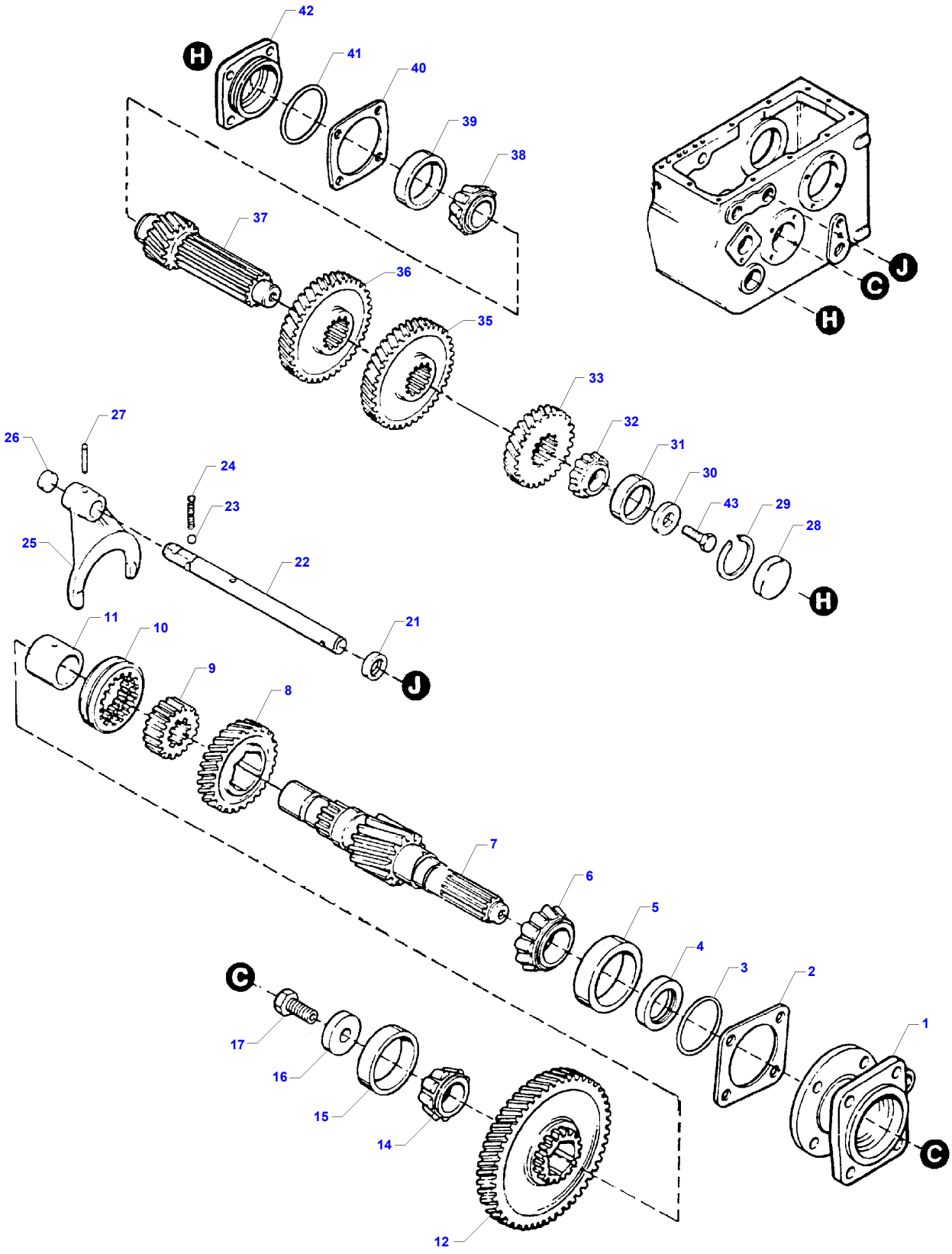
42
41
40
39
38
37
36
35
33
32
31
30
43
29
28
27
26
24
23
25
22
21
11
10
9
8
7
6
5
4
3
2
1
17
16
15
14
12
H
J
C

D-ABZI-002-A

https://truckmanualshub.com/

Item	Part Number	Qty	Description	Comments
1	D46140058	1	Gearbox	
	354276X1	4	Bolt Unc	1/2"-13 X 1-1/4
2	71377712	X	Shim	Thickness .05
	71377713	X	Shim	Thickness .0076
	71377714	X	Shim	Thickness .127
	71377715	X	Shim	Thickness .177
	71377716	X	Shim	Thickness .254
3	70923808	1	O Ring	
4	71162565	1	Oil Seal	
5	71377722	1	Bearing Cup	
6	71377723	1	Bearing Cone	
7	D46140064	1	Shaft	
8	71377416	1	Gear	
9	71160040	1	Collar	
10	71195328	1	Coupling	
11	71377711	1	Bush	
12	71377417	1	Gear	
14	71377535	1	Bearing	
15	71377534	1	Bearing	
16	71177386	1	Washer	
17	71183403	1	Cap Screw	
21	71160303	1	Oil Seal	
	79021668	X	Locker	
	79021648	X	Primer	
	79021669	X	Loctite	
22	71377549	1	Stem	
23	70917579	1	Ball	
24	71160067	1	Spring	
25	71300507	1	Fork	
26	70930798	1	Plug	
27	863456	1	Pin	
28	71317628	1	Plug	
29	71184144	1	Ring	
30	71177385	1	Washer	
31	71160001	1	Bearing Cup	
32	70927952	1	Bearing Cone	
33	71377411	1	Gear	
35	71377412	1	Gear	
36	71377413	1	Gear	
37	71377414	1	Shaft	
38	15853X	1	Bearing Cone	
39	712208	1	Bearing Cup	Repairs and replaces 70230068
40	71186745	X	Shim	Thickness 0.05
	71186746	X	Shim	Thickness 0.076
	71175961	X	Shim	Thickness 0.127
	71175962	X	Shim	Thickness 0.177
	71175963	X	Shim	Thickness 0.254
41	70923816	1	O Ring	
42	71377410	1	Retainer	
	353691X1	4	Bolt Unc	3/8"-16 X 1
43	354276X1	1	Bolt Unc	1/2"-13 X 1-1/4

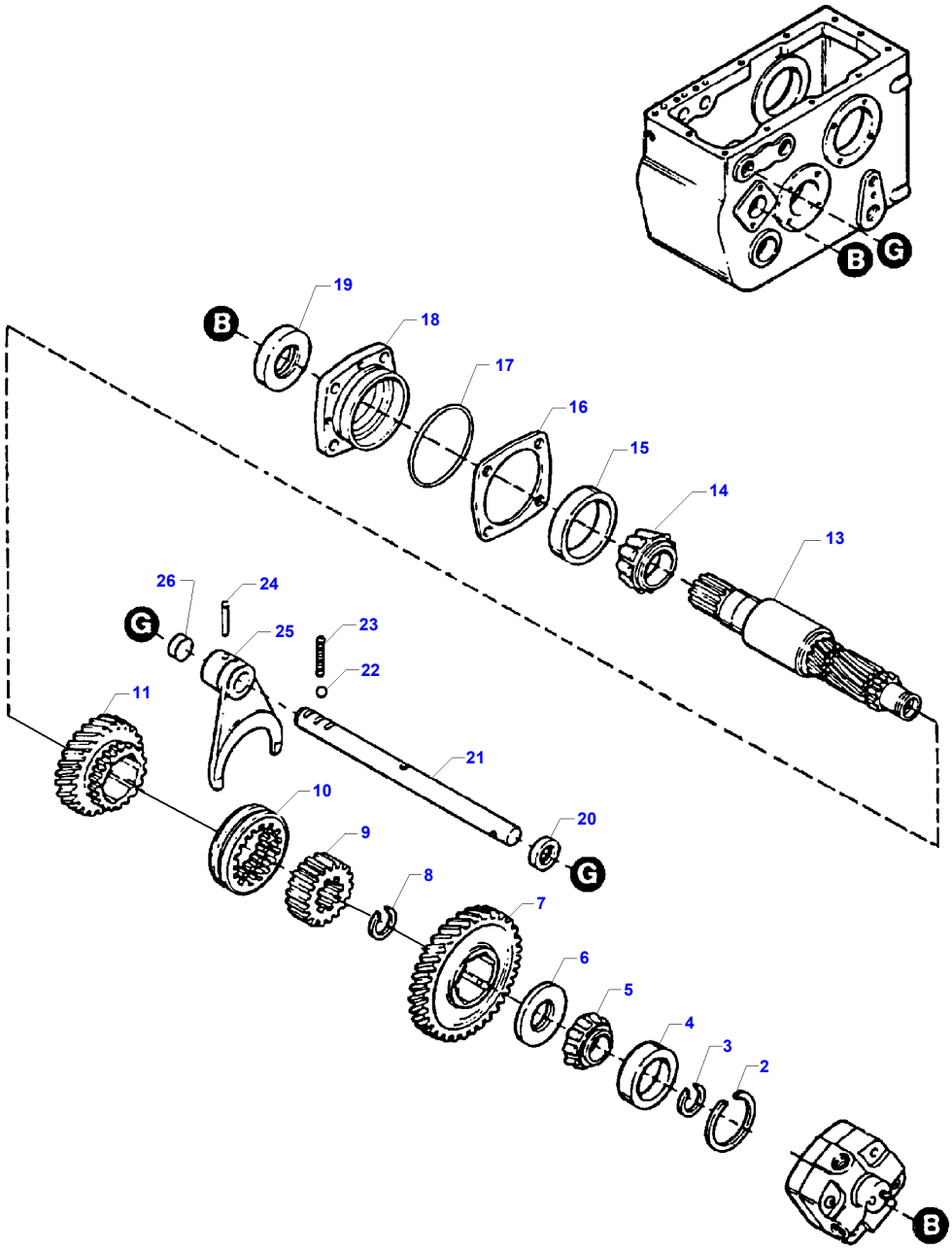

D-ABAZ-002-B

https://truckmanualshub.com/

Item	Part Number	Qty	Description	Comments
2	71184144	1	Ring	
3	71184133	X	Ring	Thickness 1.803
	71302467	X	Ring	Thickness 1.828
	71302468	X	Ring	Thickness 1.854
	71302469	X	Ring	Thickness 1.905
	71184134	X	Ring	Thickness 1.879
	71184135	X	Ring	Thickness .077
	71302471	X	Ring	Thickness 1.981
	79021669	2	Loctite	
	79021648	X	Primer	
	79021668	X	Locker	
4	71160001	1	Bearing Cup	
5	70927952	1	Bearing Cone	
6	71178888	1	Spacer	
7	71377408	1	Gear	
8	71183839	2	Bush	
	71184140	4	Pin	
9	71160040	1	Collar	
10	71195328	1	Coupling	
11	71377407	1	Gear	
13	71377409	1	Shaft	
14	70234608	1	Bearing Cone	
15	70234607	1	Bearing Cup	
16	71186745	X	Shim	Thickness 0.05
	71186746	X	Shim	Thickness 0.076
	71175961	X	Shim	Thickness 0.127
	71175962	X	Shim	Thickness 0.177
	71175963	X	Shim	Thickness 0.254
17	**70923816**	1	O Ring	
18	71190292	1	Bearing Carrier	
	353691X1	4	Bolt Unc	3/8"-16 X 1
19	71162565	1	Oil Seal	
20	71160303	1	Oil Seal	
21	71377548	1	Rail	
22	70917579	1	Ball	
23	71160067	1	Spring	
24	863456	1	Pin	
25	71300509	1	Fork	
26	70930798	1	Plug	

https://truckmanualshub.com/

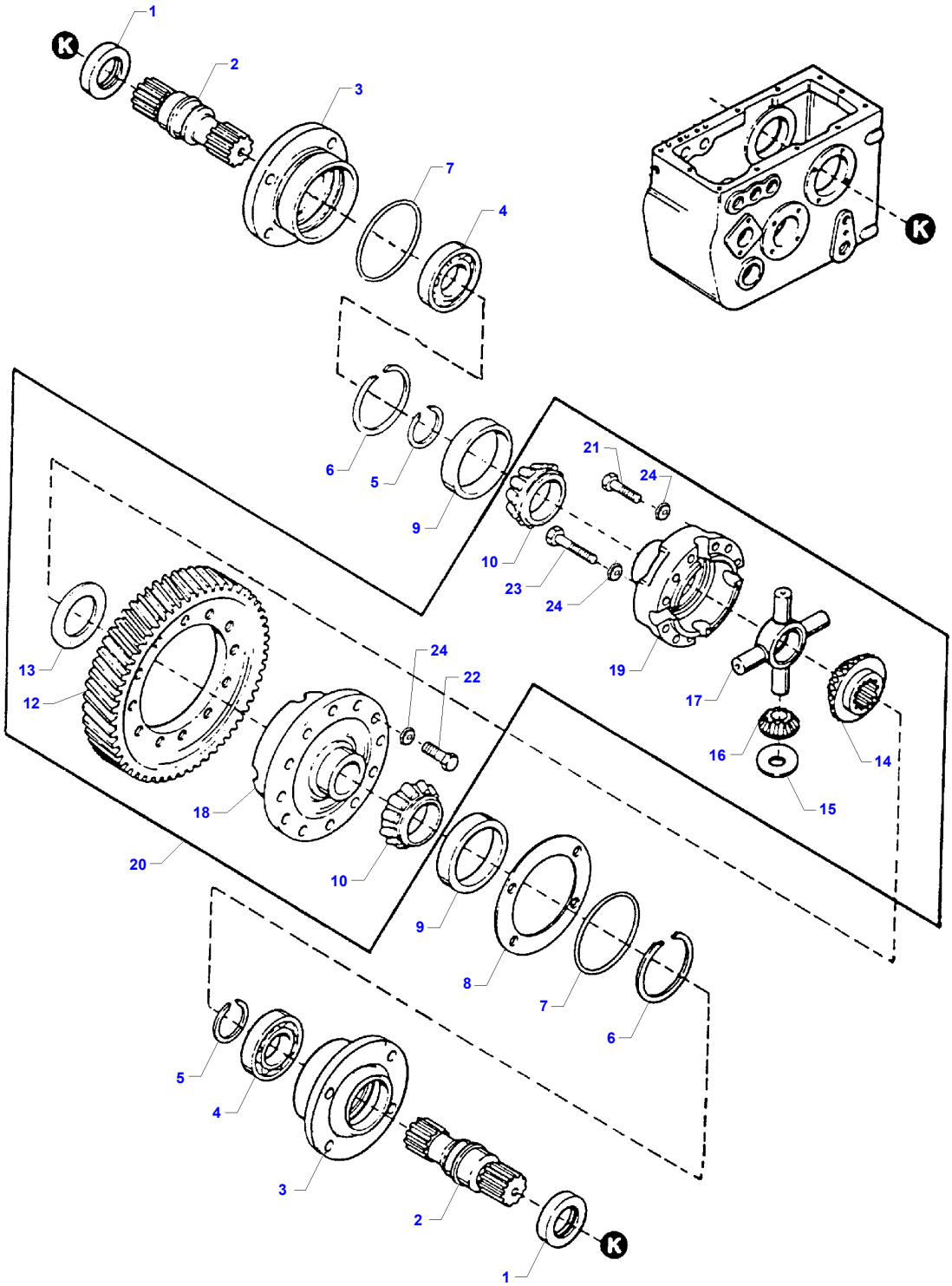

D-ABAA-002-A

https://truckmanualshub.com/

Item	Part Number	Qty	Description	Comments
1	71377724	2	Oil Seal	
2	71377547	2	Shaft	
3	71377707	2	Carrier	
	353727X1	12	Bolt Unc	5/8"-11 X 1-3/4
4	70042847	2	Ball Bearing	
5	71160055	2	Ring	
6	70927321	2	Ring	
7	70923594	2	O Ring	
8	71377717	X	Shim	Thickness .0050
	71377718	X	Shim	Thickness .0076
	71377719	X	Shim	Thickness .127
	71377720	X	Shim	Thickness .177
	71377721	X	Shim	Thickness .254
9	70930426	2	Bearing Cup	
10	70930424	2	Bearing Cone	
12	71398330	1	Gear	
13	71160085	2	Washer	
14	71344598	2	Gear	
15	71347782	4	Washer	
16	71344597	4	Pinion	
17	71347777	1	Spider.	
18	71386867	1	Case	
19	71386866	1	Case	
20	71398327	1	Differential	
	79021668	X	Locker	
	79021648	X	Primer	
	79021669	X	Loctite	
	71387506	1	Kit	
21	70927469	4	Bolt Unc	
22	70923154	4	Screw Unc	1/2"-13 X 1-1/2
23	354661X1	8	Bolt Unc	1/2"-13 X 3-3/4
24	705541	16	Flat Washer	1/2"

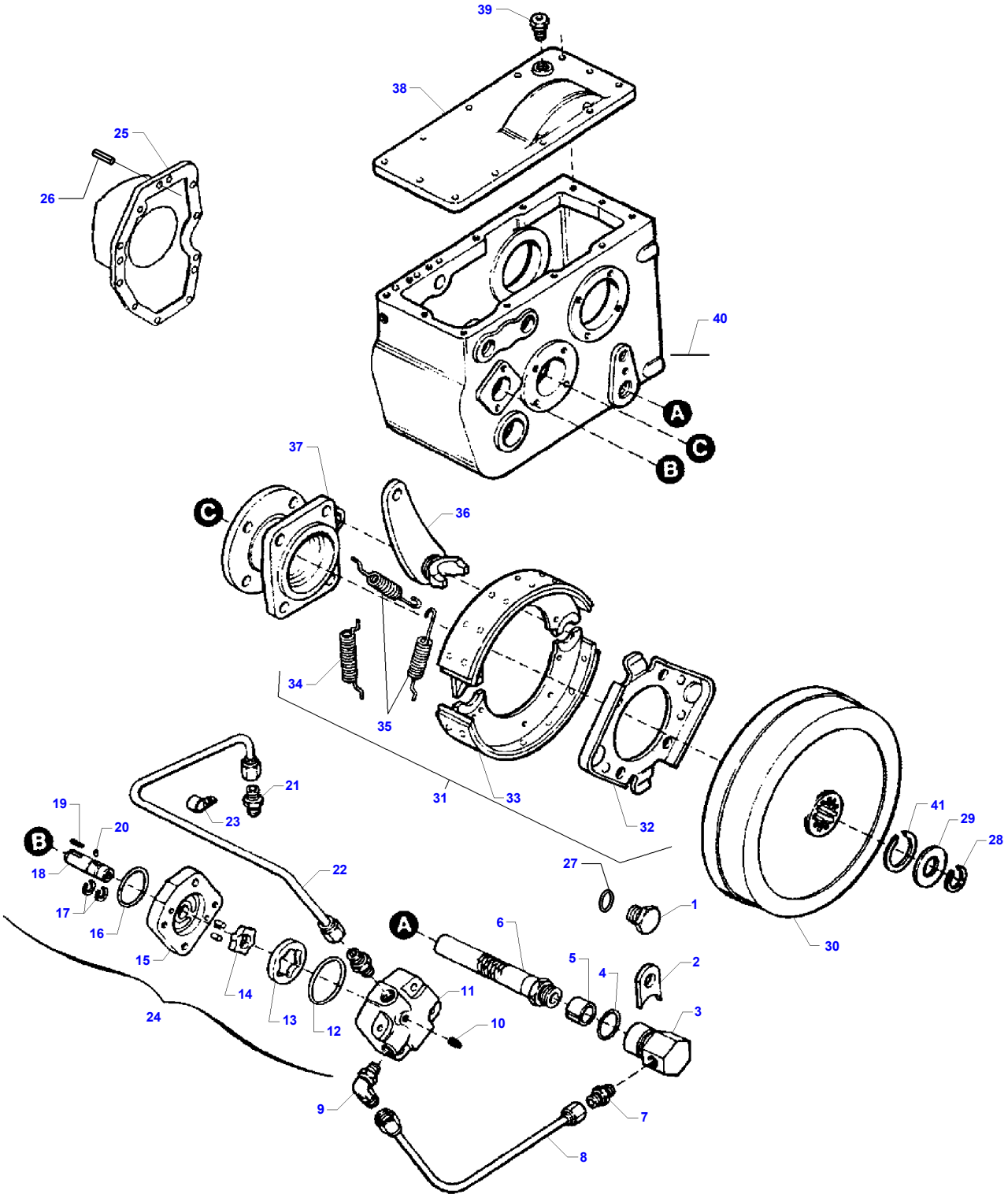
39
38
25
26
40
A
C
B
37
C
36
34
35
31
33
32
21
23
19
20
B
18
17
16
15
22
27
1
30
41
29
28
A
6
5
4
2
3
14
13
12
11
10
24
9
7
8

D-ABZH-003-A

https://truckmanualshub.com/

Item	Part Number	Qty	Description	Comments
1	70225441	1	Plug	
2	71183535	1	Retainer	
	354404X1	1	Bolt Unc	
	353439X1	1	Lock Washer	
3	71183536	1	Front Grille	
4	70925919	1	O Ring	
5	71183828	1	Magnet	
6	71183747	1	Front Grille	
7	846337	1	Union	
8	71183750	1	Tube	
9	70921402	1	Elbow Union	
10	70901651	1	Plug	
11	71184147	1	Housing	
12	70924186	1	O Ring	
13	71335782	1	Rotor	
14	Y730804	2	Pin	
15	71184148	1	Cover	
16	70930911	1	O Ring	
17	1026105M1	2	Clip	
18	71335783	1	Shaft	
19	71184145	1	Key	
20	71335784	1	Pin	
21	846634	2	Union	
22	71373449	1	Tube Assy	
23	70930609	1	Clamp	
	390735X1	1	Flat Washer	
24	71406298	1	Pump	
	354264X1	2	Bolt Unc	
25	D28185789	1	Housing	
26	70926551	3	Pin	
27	**70226012**	1	Gasket	
28	70932861	1	Ring	
29	70919393	1	Washer	
30	71183170	1	Brake Drum	
31	71171602	1	Brake	Repairs and replaces D28186128
32	71177930	1	Support	(31)
	354276X1	4	Bolt Unc	
	704031	4	Nut Unc	
33	71379789	1	Kit, Shoe	(31)
34	74906602	1	Spring	(31)
	79021668	X	Locker	
	79021648	X	Primer	
35	74906603	2	Spring	(31)
36	71171275	1	Lever	
37	71171269	1	Adaptor	
38	71169242	1	Cover	
	354276X1	12	Bolt Unc	
39	71166154	1	Vent	
40	71398334	1	Housing	
41	70932862	1	Ring	

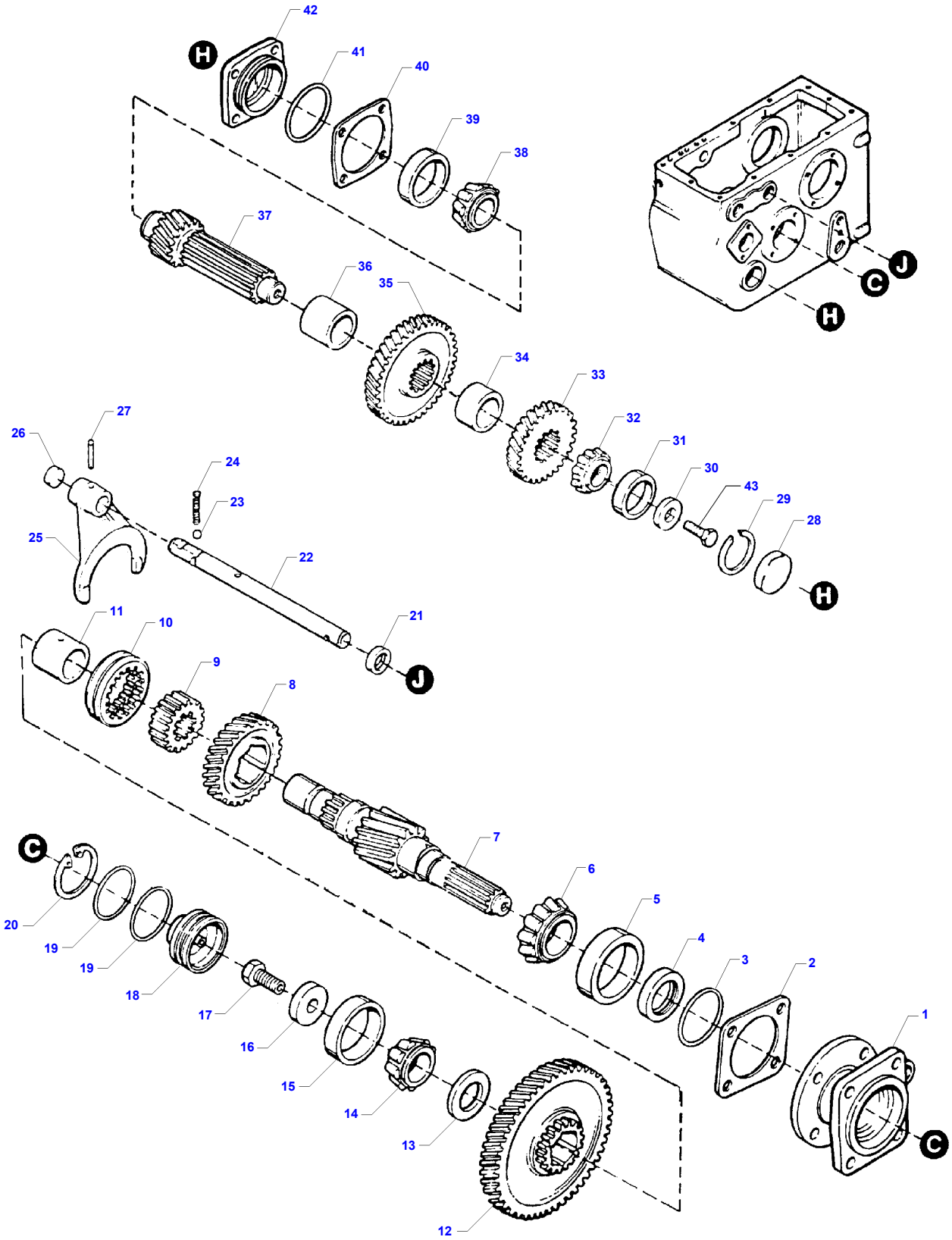
42
41
40
39
38
37
36
35
34
33
32
31
30
43
29
28
27
26
24
23
25
22
21
11
10
9
8
7
6
5
4
3
2
1
20
19
19
18
17
16
15
14
13
12
H
H
J
J
C
C
C

D-ABZI-001-A

https://truckmanualshub.com/

Item	Part Number	Qty	Description	Comments
1	71171269	1	Adaptor	
	354276X1	4	Bolt Unc	
2	71186743	X	Shim	Thickness .002
	71186744	X	Shim	Thickness .003
	71166170	X	Shim	Thickness .005
	71166171	X	Shim	Thickness .007
	71166172	X	Shim	Thickness .010
3	70923816	1	O Ring	
4	71162565	1	Oil Seal	
5	71160044	1	Bearing Cup	
6	71160043	1	Bearing Cone	
7	71184656	1	Shaft	
8	71318842	1	Gear	
9	71160040	1	Collar	
10	71195328	1	Coupling	
11	71183530	1	Bush	
12	71369276	1	Gear	
13	71160022	1	Spacer	
14	70927090	1	Bearing	
15	70927091	1	Bearing	
16	71177386	1	Washer	
17	71183403	1	Cap Screw	
18	71183737	1	Manifold	
19	70937004	2	O Ring	
20	700712375	1	Ring	
21	71160303	1	Oil Seal	
	79021668	X	Locker	
	79021648	X	Primer	
	79021669	X	Loctite	
22	71318610	1	Rail	
23	70917579	1	Ball	
24	71160067	1	Spring	
25	71300507	1	Fork	
26	70930798	1	Plug	
27	863456	1	Pin	
28	71317628	1	Plug	
29	71184144	1	Ring	
30	71177385	1	Washer	
31	71160001	1	Bearing Cup	
32	70927952	1	Bearing Cone	
33	71169156	1	Gear	
34	71169161	1	Spacer	
35	71169155	1	Gear	
36	71183735	1	Spacer	
37	71368368	1	Shaft	
38	70234608	1	Bearing Cone	
39	70234607	1	Bearing Cup	
40	71186741	X	Shim	Thickness .002
	71186742	X	Shim	Thickness .003
	71160011	X	Shim	Thickness .005
	71160012	X	Shim	Thickness .007
	71160013	X	Shim	Thickness .010
41	70923581	1	O Ring	
42	71160010	1	Retainer	
	353691X1	4	Bolt Unc	
43	354276X1	1	Bolt Unc	

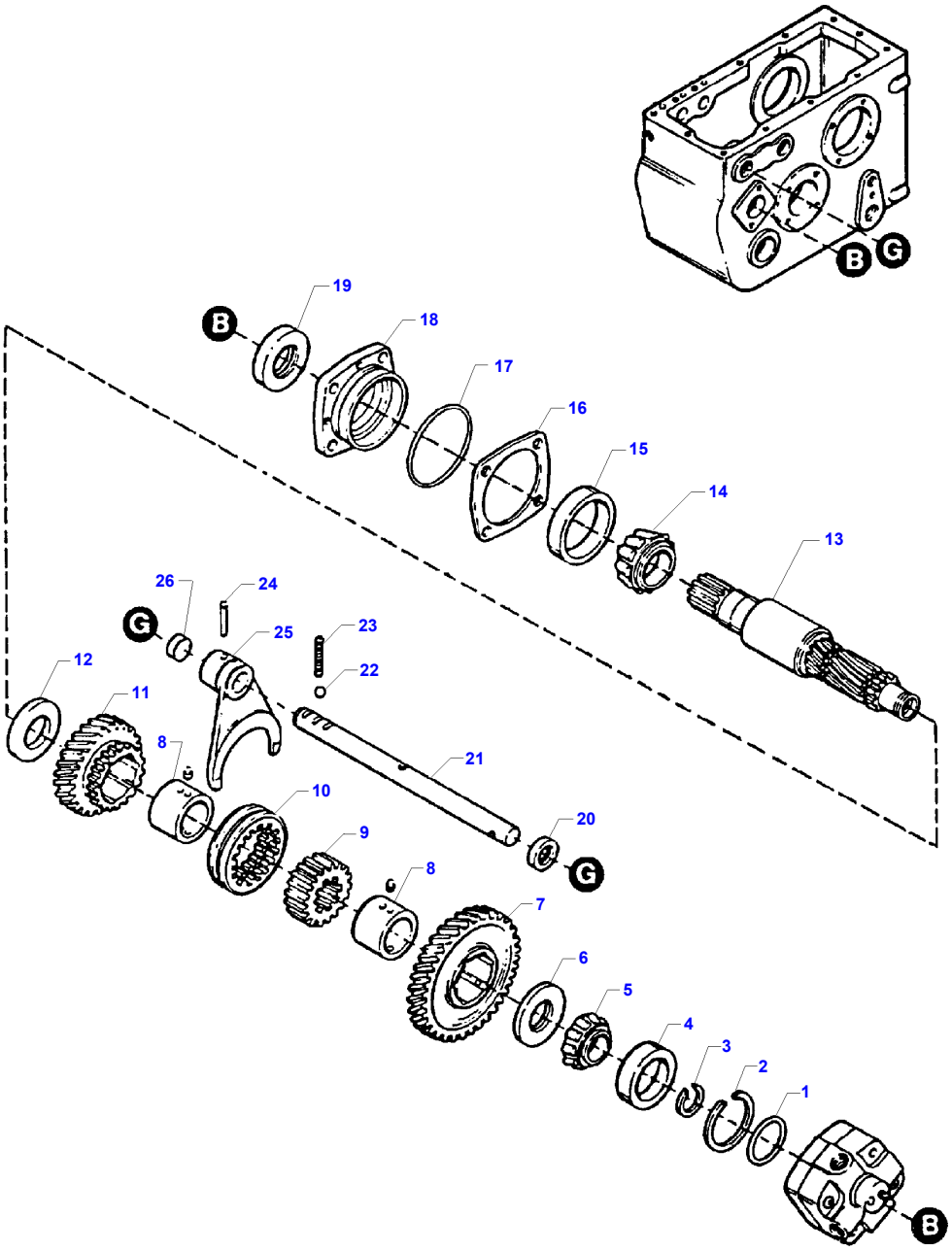

D-ABAZ-001-A

https://truckmanualshub.com/

Item	Part Number	Qty	Description	Comments
1	70930911	1	O Ring	
2	71184144	1	Ring	
3	71184128	X	Ring	Thickness .056
	71184129	X	Ring	Thickness .059
	71184130	X	Ring	Thickness .062
	71184131	X	Ring	Thickness .065
	71184132	X	Ring	Thickness .068
	71184134	X	Ring	Thickness .074
	71184135	X	Ring	Thickness .077
	79021669	2	Loctite	
	79021648	X	Primer	
	79021668	X	Locker	
4	71160001	1	Bearing Cup	
5	70927952	1	Bearing Cone	
6	71178888	1	Spacer	
7	71318846	1	Gear	
8	71183843	2	Bush	
	71184140	4	Pin	
9	71160019	1	Collar	
10	71195328	1	Coupling	
11	71318840	1	Gear	
12	71160022	1	Spacer	
13	71183841	1	Shaft	
14	70234608	1	Bearing Cone	
15	70234607	1	Bearing Cup	
16	71186745	X	Shim	Thickness .002
	71186746	X	Shim	Thickness .003
	71175961	X	Shim	Thickness .005
	71175962	X	Shim	Thickness .007
	71175963	X	Shim	Thickness .010
17	**70923816**	1	O Ring	
18	71190292	1	Bearing Carrier	
	353691X1	4	Bolt Unc	
19	71162565	1	Oil Seal	
20	71160303	1	Oil Seal	
21	71338892	1	Rail	
22	70917579	1	Ball	
23	71160067	1	Spring	
24	863456	1	Pin	
25	71300509	1	Fork	
26	70930798	1	Plug	

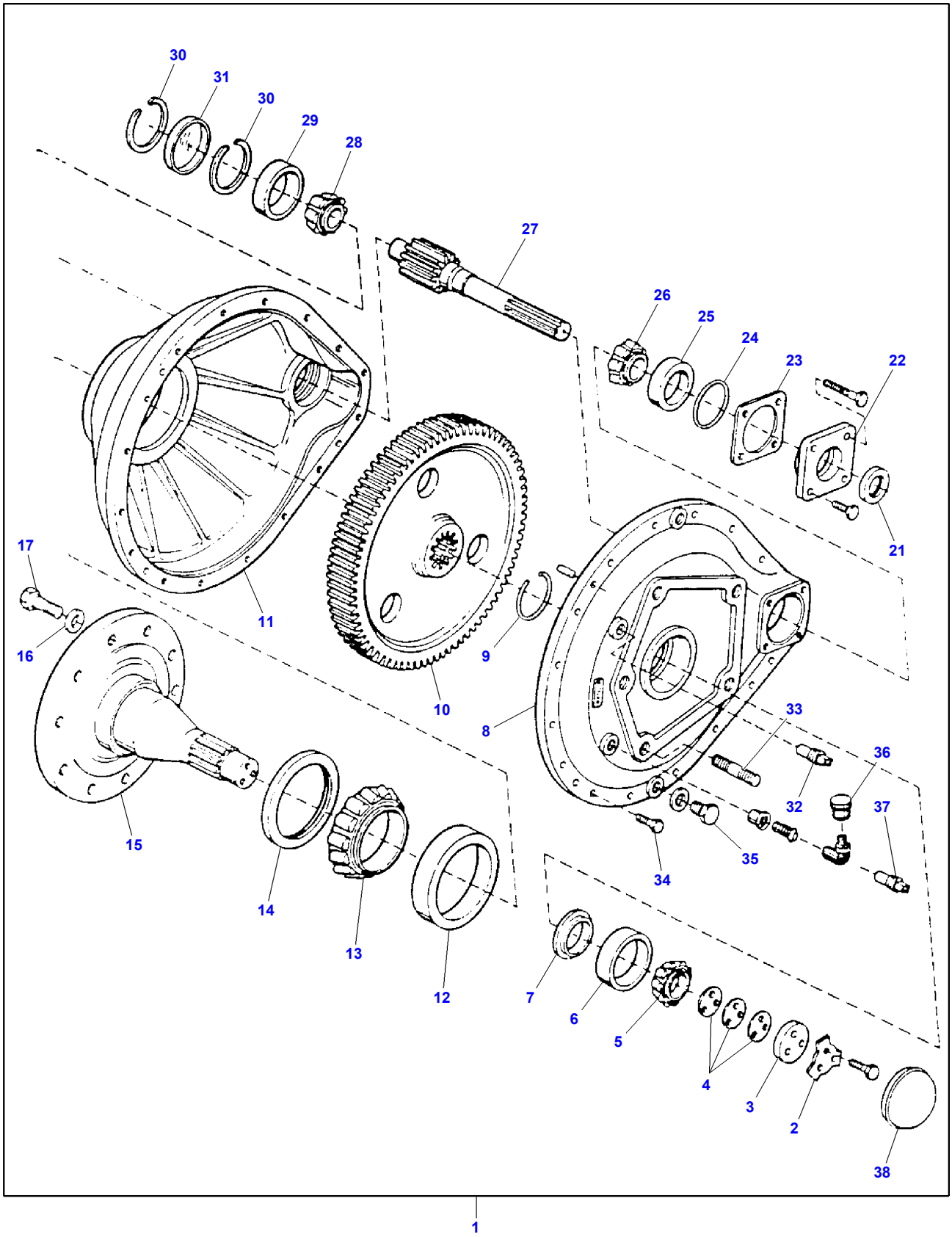
30
31
30
29
28
27
26
25
24
23
22
21
17
16
11
9
10
8
33
36
32
37
15
35
34
14
13
12
7
6
5
4
3
2
38
1

D-ABAB-008-B

https://truckmanualshub.com/

Item	Part Number	Qty	Description	Comments
1	D46140066	2	Final Drive	
	D46140073	2	Final Drive	From Serial or Engine Number 61933
2	71304265	2	Plate	
3	70950388	3	Screw	
	71391572	2	Plate	
4	71304262	2	Shim	Thickness .005
	71304263	2	Shim	Thickness .007
	71304264	2	Shim	Thickness .010
5	70930884	2	Bearing Cone	
6	70930883	2	Bearing Cup	
7	71304266	2	Spacer	
8	71373573	2	Housing	
	70950386	14	Cap Screw	
	LC2312031	X	Clear.Sil.310ml	
	70926551	6	Pin	
9	71304267	1	Ring	
10	71389647	2	Gear	
11	71334701	2	Housing	
12	7713860	2	Bearing Cup	
13	71314481	2	Bearing Cone	
14	7744477	2	Oil Seal	
	71370926	20	Spacer	
15	71327595	2	Axle	
16	705665	20	Washer	7/8"
17	70925806	20	Bolt Unc	
21	700717365	2	Oil Seal	
22	71304292	2	Retainer	
	70950377	4	Cap Screw	
	70950417	4	Cap Screw	
23	71166170	2	Shim	Thickness .127
	71166171	2	Shim	Thickness .178
	71166172	2	Shim	Thickness .254
24	70923816	2	O Ring	
25	71162782	2	Bearing Cup	
26	71162781	2	Bearing Cone	
27	71389646	2	Gear	
	71400417	2	Gear	From Serial or Engine Number 61933
28	70210011	2	Cone	
29	70210012	2	Bearing Cup	
30	70933295	4	Ring	
31	71304271	2	Plug	
	355619X1	6	Flat Washer	3/8"
	70950264	6	Cap Screw	
32	71340437	2	Vent	
	7751605	2	Plug	Replace and repair. Old interchangeable with new 71313115
	70912094	2	Bush	
	70923690	2	Elbow	
33	71311546	4	Stud	
	70933817	4	Cap Screw	
	71339238	4	Washer	
	7704778	4	Nut	
	79021648	X	Primer	
	70936750	X	Loctite	
34	71183757	4	Gasket	
35	71369299	4	Plug	
36	71312323	2	Cap	
	70901480	2	Nipple	
	70921419	2	Elbow	
	70901840	2	Bush	
37	3008469	2	Plug	Replace and repair. Old not interchangeable with new 70904224
38	71304261	2	Cap	

https://truckmanualshub.com/

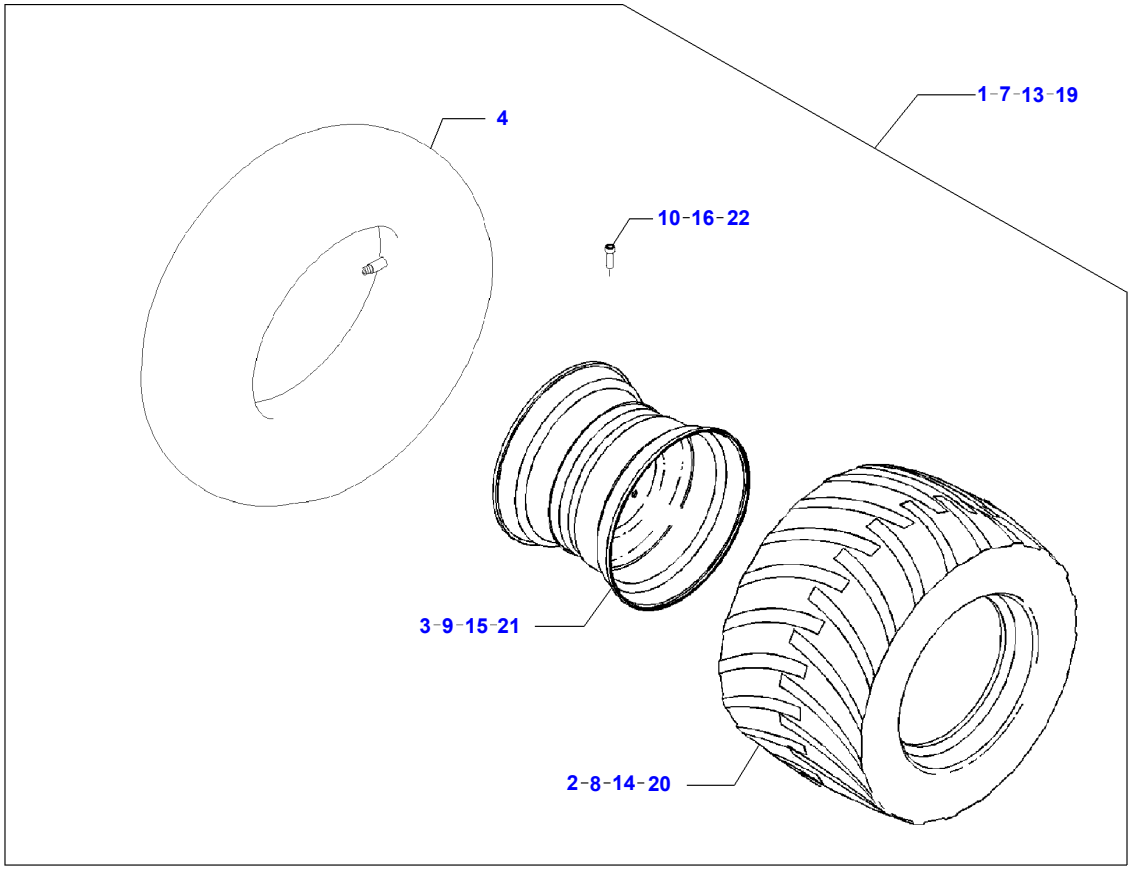

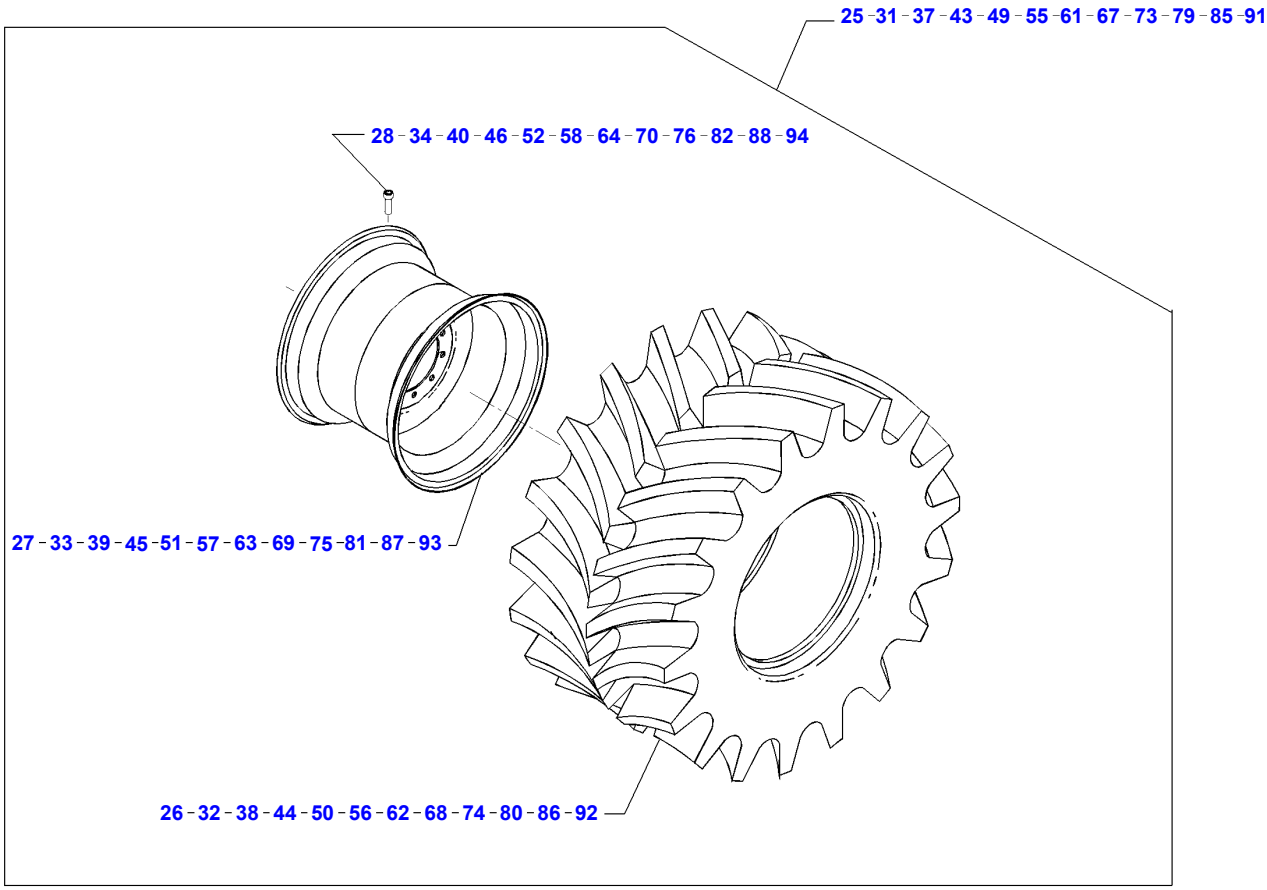

D-ABZL-004-A

https://truckmanualshub.com/

Item	Part Number	Qty	Description	Comments
1	D28185881	X	Wheel	Right Hand CPL.
	D28185882	X	Wheel	Left Hand CPL.
2	D46733200	X	Tyre	(1) 15,5/80-24
3	D28185875	X	Wheel Rim	(1) 15,5/80-24
4	D46708400	X	Tyre Tube	(1) 14,9-24
7	D28182350	X	Wheel	Right Hand CPL.
	D28182351	X	Wheel	Left Hand CPL.
8	D46732800	X	Tyre	(7) 500/60-26,5
9	D28182347	X	Wheel Rim	(7) 16,00X26,5
10	D46738700	X	Pressure Valve	(7)
13	D28186980	X	Wheel	Right Hand CPL.
	D28186981	X	Wheel	Left Hand CPL.
	D28186990	X	Wheel	Right Hand CPL. From Serial or Engine Number 61106
	D28186991	X	Wheel	Left Hand CPL. From Serial or Engine Number 61106
14	D46732800	X	Tyre	(13) 500/60-26,5
15	D28186974	X	Wheel Rim	(13) 16,00X26,5
16	D46738700	X	Pressure Valve	(13)
19	D28185889	X	Wheel	Right Hand CPL.
	D28185890	X	Wheel	Left Hand CPL.
20	D46732700	X	Tyre	(19) MF7274 600/55-26,5
21	D28185879	X	Wheel Rim	(19) MF7274 20,00X26,5
22	D46738700	X	Pressure Valve	(19) MF7274
25	D28182376	X	Wheel	Right Hand CPL.
	D28182377	X	Wheel	Left Hand CPL.
26	D46732700	X	Tyre	(25) 600/55-26,5
27	D28182356	X	Wheel Rim	(25) 600/55-26,6
28	D46738700	X	Pressure Valve	(25)
31	D28185836	X	Wheel	Right Hand CPL. MICHELIN
	D28185837	X	Wheel	Left Hand CPL. MICHELIN
32	D46735300	X	Tyre	(31) 1050/50R32
33	D28185810	X	Wheel Rim	(31) DH36X32
34	D46738700	X	Pressure Valve	(31)
37	D28186340	X	Wheel	Right Hand CPL.
	D28186341	X	Wheel	Left Hand CPL.
38	D46732200	X	Tyre	(37) 900/55R32
39	D28185814	X	Wheel Rim	(37) DH27X32
40	D46738700	X	Pressure Valve	(37)
43	D28186067	X	Wheel	Right Hand CPL.CONTINENTAL
	D28186068	X	Wheel	Left Hand CPL.CONTINENTAL
44	D46732000	X	Tyre	(43) 650/75R32
45	D28186065	X	Wheel Rim	(43) DH21X32
46	D46738700	X	Pressure Valve	(43)
49	D28186903	X	Wheel	Right Hand CPL.CONTINENTAL
	D28186904	X	Wheel	Left Hand CPL.CONTINENTAL
50	D46732000	X	Tyre	(49) 650/75R32
51	D28186901	X	Wheel Rim	(49) DH21AX32
52	D46738700	X	Pressure Valve	(49)
55	D28186910	X	Wheel	Right Hand CPL.GOODYEAR

https://truckmanualshub.com/

Item	Part Number	Qty	Description	Comments
55	D28186911	X	Wheel	Left Hand CPL.GOODYEAR
56	D46732400	X	Tyre	(55) 800/65R32
57	D28186908	X	Wheel Rim	(55) DW27AX32
58	D46738700	X	Pressure Valve	(55)
61	D28186917	X	Wheel	Right Hand CPL. MICHELIN
61	D28186918	X	Wheel	Left Hand CPL. MICHELIN
62	D46735300	X	Tyre	(61) 1050/50R32
63	D28186915	X	Wheel Rim	(61) DW36AX32
64	D46738700	X	Pressure Valve	(61)
67	D28186969	X	Wheel	Right Hand CPL.
67	D28186970	X	Wheel	Left Hand CPL.
68	D46732200	X	Tyre	(67) 900/55R32
69	D28186922	X	Wheel Rim	(67) DW27AX32
70	D46738700	X	Pressure Valve	(67)
73	D28186931	X	Wheel	Right Hand CPL. GOODYEAR
73	D28186932	X	Wheel	Left Hand CPL. GOODYEAR
74		X	Not Used	
75		X	Not Used	
76		X	Not Used	
79	D28186945	X	Wheel	Right Hand CPL.CONTINENTAL
79	D28186946	X	Wheel	Left Hand CPL.CONTINENTAL
80		X	Not Used	
81		X	Not Used	
82		X	Not Used	
85	D28186953	X	Wheel	Right Hand CPL. GOODYEAR
85	D28186954	X	Wheel	Left Hand CPL. GOODYEAR
86		X	Not Used	
87		X	Not Used	
88		X	Not Used	
91	D28186979	X	Wheel	Right Hand CPL. MICHELIN
91	D28186982	X	Wheel	Left Hand CPL. MICHELIN
92		X	Not Used	
93		X	Not Used	
94		X	Not Used	

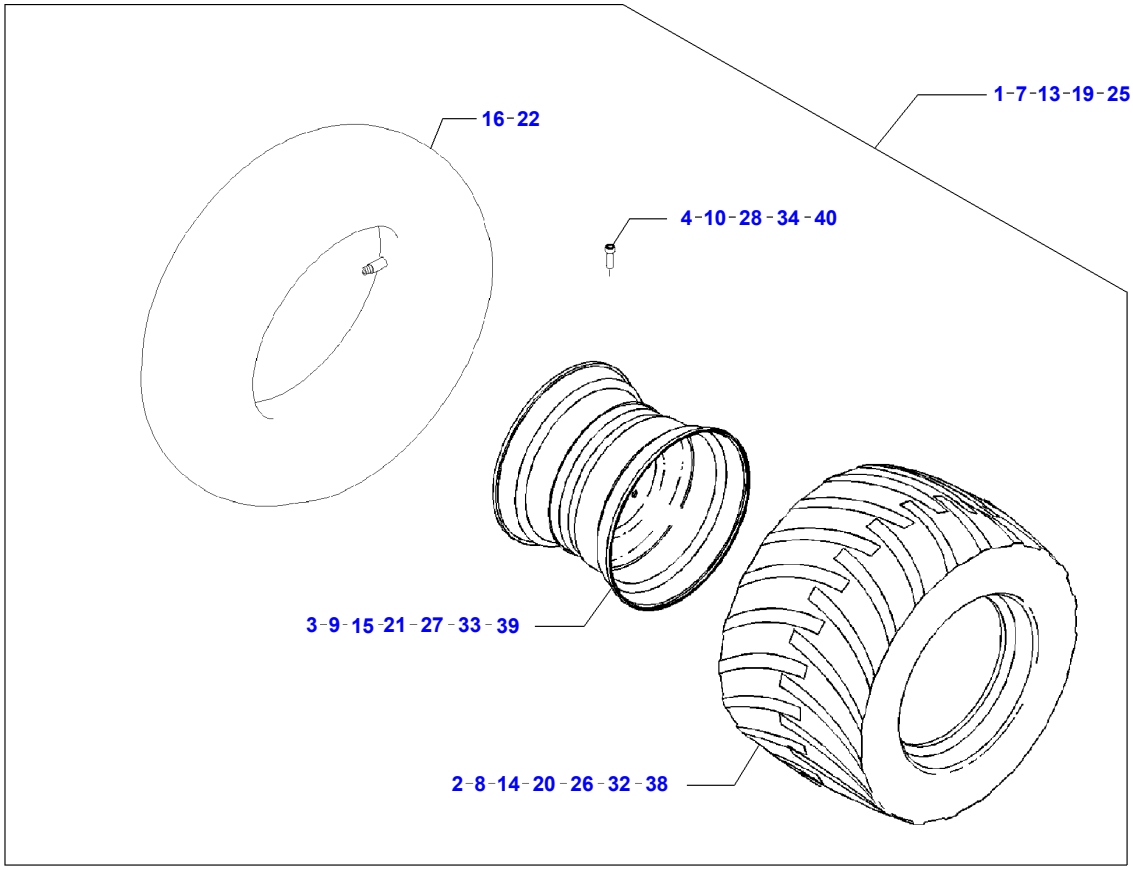
1-7-13-19-25-31-37
16-22
4-10-28-34-40
3-9-15-21-27-33-39
2-8-14-20-26-32-38

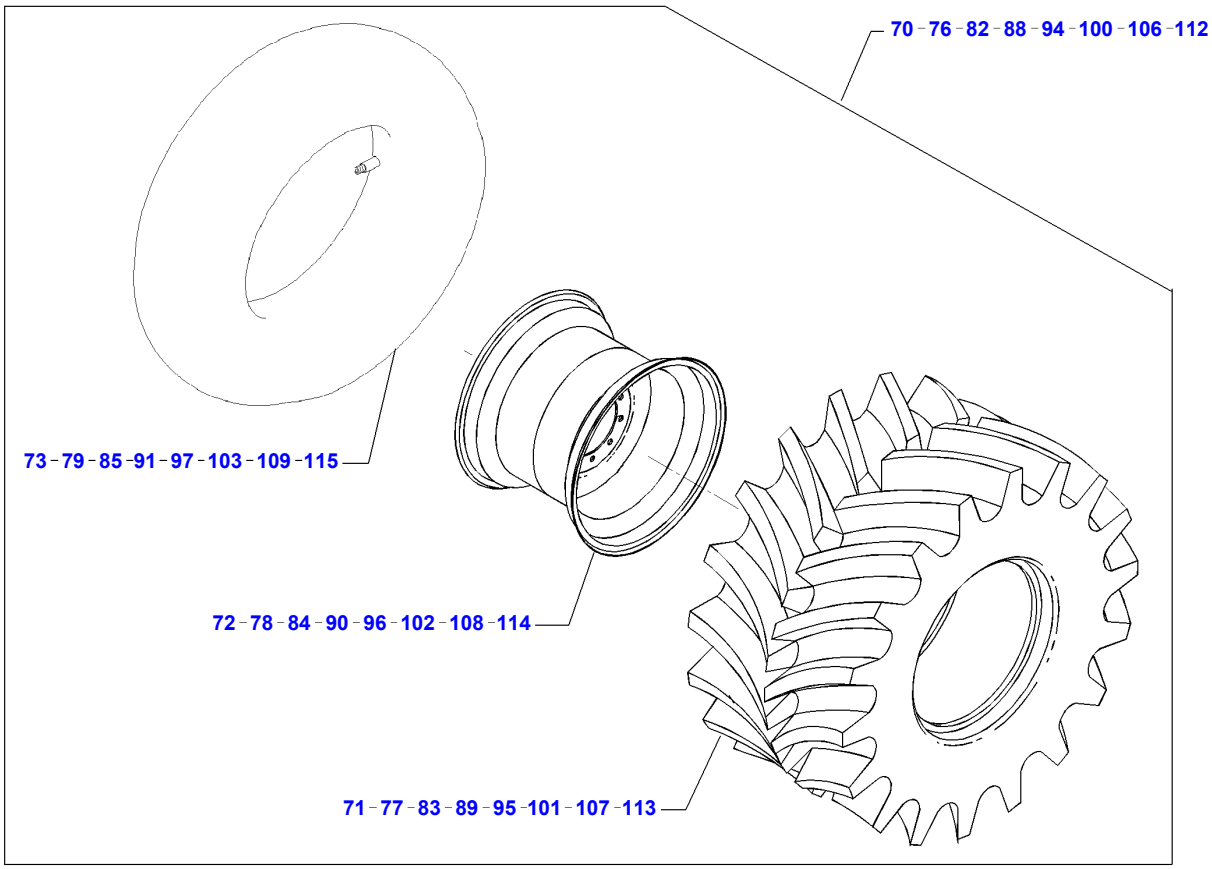
70-76-82-88-94-100-106-112
73-79-85-91-97-103-109-115
72-78-84-90-96-102-108-114
71-77-83-89-95-101-107-113

D-ABZM-004-A

https://truckmanualshub.com/

Item	Part Number	Qty	Description	Comments
1	D28182370	X	Wheel	Right Hand CPL. 4WD
	D28182371	X	Wheel	Left Hand CPL. 4WD
2	D46732800	X	Tyre	(1) 500/60-26,5
3	D28182353	X	Wheel Rim	(1) 500/60-26,6
4	D46738700	X	Pressure Valve	(1)
7	D28182376	X	Wheel	Right Hand CPL. 4WD
	D28182377	X	Wheel	Left Hand CPL. 4WD
8	D46732700	X	Tyre	(7) 600/55-26,5
9	D28182356	X	Wheel Rim	(7) 600/55-26,5
10	D46738700	X	Pressure Valve	(7)
13	D28186102	X	Wheel	Right Hand CPL. 4WD
	D28186103	X	Wheel	Left Hand CPL. 4WD
14	D46733200	X	Tyre	(13) 15,5/80-24
15	D28186100	X	Wheel Rim	(13) 15,5/80-24
16	D46708400	X	Tyre Tube	(13) 14,9-24
19	D28185881	X	Wheel	Right Hand CPL.
	D28185882	X	Wheel	Left Hand CPL.
20	D46733200	X	Tyre	(19) 15,5/80-24
21	D28185875	X	Wheel Rim	(19) 15,5/80-24
22	D46708400	X	Tyre Tube	(19) 14,9-24
25	D28185889	X	Wheel	Right Hand CPL.
	D28185890	X	Wheel	Left Hand CPL.
26	D46732700	X	Tyre	(25) 600/55-26,5
27	D28185879	X	Wheel Rim	(25) 20,00X26,5
28	D46738700	X	Pressure Valve	(25)
31	D28182350	X	Wheel	Right Hand CPL.
	D28182351	X	Wheel	Left Hand CPL.
32	D46732800	X	Tyre	(31) 500/60-26,5
33	D28182347	X	Wheel Rim	(31) 16,00X26,5
34	D46738700	X	Pressure Valve	(31)
37	D28186980	X	Wheel	Right Hand CPL.
	D28186981	X	Wheel	Left Hand CPL.
	D28186990	X	Wheel	Right Hand CPL. From Serial or Engine Number 61106
	D28186991	X	Wheel	Left Hand CPL. From Serial or Engine Number 61106
38	D46732800	X	Tyre	(37) 500/60-26,5
39	D28186974	X	Wheel Rim	(37) 16,00X26,5
40	D46738700	X	Pressure Valve	(37)
70	D28185840	X	Wheel	Right Hand CPL.
	D28185841	X	Wheel	Left Hand CPL.
71	D46732600	X	Tyre	(70) 620/75R34
72	D28185812	X	Wheel Rim	(70) DW20AX34
73	D46738800	X	Tyre Tube	(70) 23,1-34
76	D28185844	X	Wheel	Right Hand CPL.
	D28185845	X	Wheel	Left Hand CPL.
77	D46732400	X	Tyre	(76) 800/65R32
78	D28185814	X	Wheel Rim	(76) DH27X32
79	D46738100	X	Tyre Tube	(76) 30,5L-32
82	D28186346	X	Wheel	Right Hand CPL

https://truckmanualshub.com/

Item	Part Number	Qty	Description	Comments
82	D28186347	X	Wheel	Left Hand CPL.
83	D46732200	X	Tyre	(82) 900/55R32
84	D28185814	X	Wheel Rim	(82) DH27X32
85	D46738100	X	Tyre Tube	(82) 30,5L-32
88	D28186924	X	Wheel	Right Hand CPL.GOODYEAR
88	D28186925	X	Wheel	Left Hand CPL.GOODYEAR
89	D46732400	X	Tyre	(88) 800/65R32
90	D28186922	X	Wheel Rim	(88) DH27AX32
91	D46738100	X	Tyre Tube	(88) 30,5L-32
94	D28186951	X	Wheel	Right Hand CPL.GOODYEAR
94	D28186950	X	Wheel	Left Hand CPL.GOODYEAR
95	D46732200	X	Tyre	(94) 900/55R32
96	D28186922	X	Wheel Rim	(94) DW27AX32
97	D46738100	X	Tyre Tube	(94) 30,5L-32
100	D28186957	X	Wheel	Right Hand CPL.GOODYEAR
100	D28186958	X	Wheel	Left Hand CPL.GOODYEAR
101		X	Not Used	
102		X	Not Used	
103		X	Not Used	
106	D28186961	X	Wheel	Right Hand CPL.CONTINENTAL
106	D28186962	X	Wheel	Left Hand CPL.CONTINENTAL
107		X	Not Used	
108		X	Not Used	
109		X	Not Used	
112	D28186965	X	Wheel	Right Hand CPL.GOODYEAR
112	D28186966	X	Wheel	Left Hand CPL.GOODYEAR
113		X	Not Used	
114		X	Not Used	
115		X	Not Used	

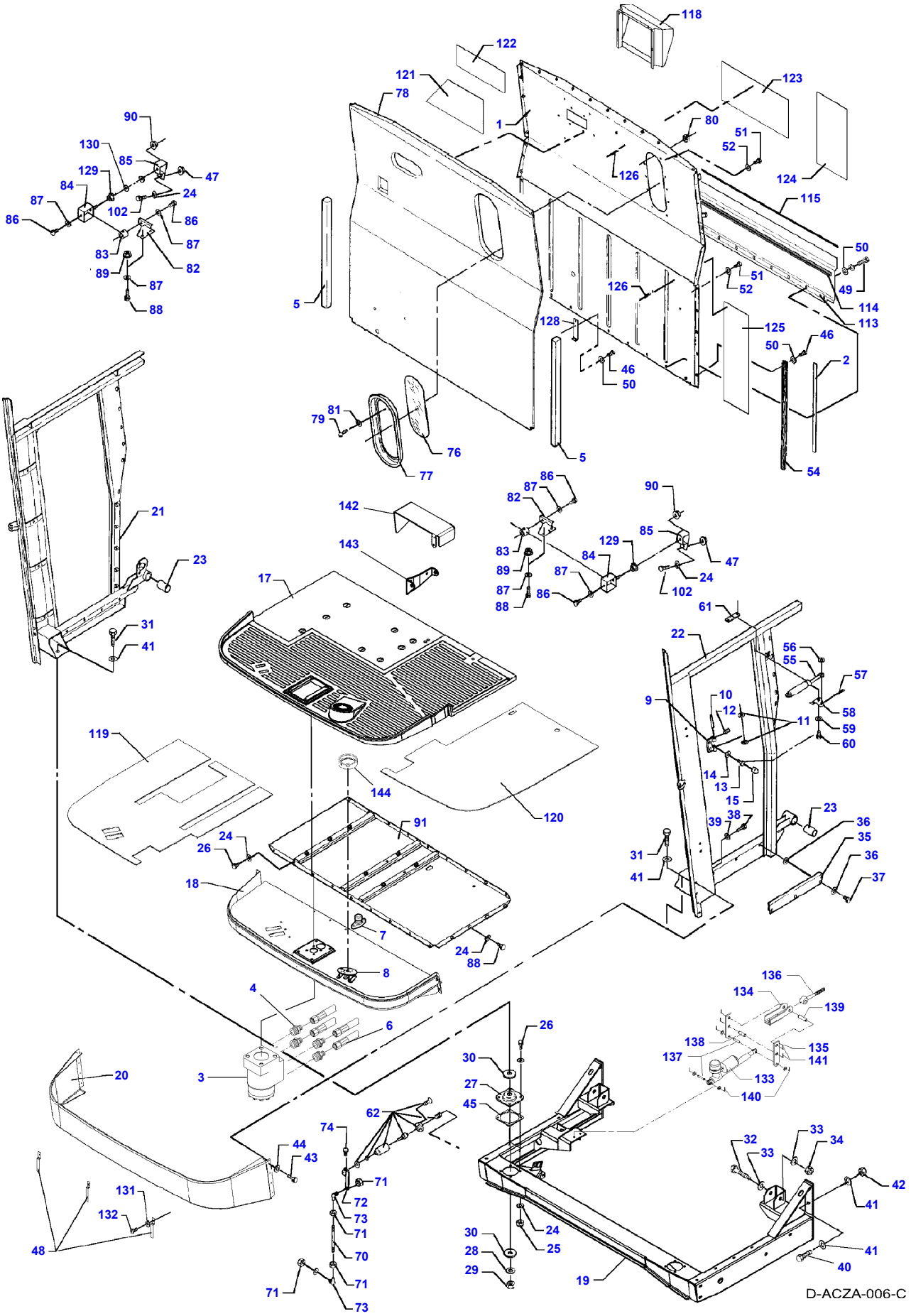
118
122
121
78
123
1
80
51
52
126
124
115
90
130
85
47
129
84
24
87
102
86
86
87
83
82
89
87
88
5
50
51
52
49
114
113
126
128
125
46
50
2
46
50
81
79
76
77
5
54
86
87
82
90
142
85
129
83
84
47
89
87
24
87
86
102
88
21
143
23
17
61
22
31
41
56
55
57
9
10
12
11
58
59
60
119
144
14
13
15
120
23
91
39
38
36
35
24
26
31
36
41
37
18
7
24
88
8
4
136
134
139
6
26
138
135
137
141
133
20
3
30
27
140
45
62
74
32
33
34
44
43
33
42
71
41
131
72
73
132
71
24
30
25
48
70
28
41
29
40
19
71
71
73
D-ACZA-006-C

https://truckmanualshub.com/

Item	Part Number	Qty	Description	Comments
1	D28980576	1	Side	
2	D28980953	5	Strip	
3	D45169500	1	Pressure Valve	
	D45120029	1	Pressure Valve	For Italy only or any text in Italian only
4	D45252700	4	Union	
5	D28980853	2	Lining	
6	D45130026	4	Hydr. Hose	
7	D45050045	1	Switch	
8	D28989012	1	Support	(18)
9	D28980512	2	Hinge	
10	D42694100	2	Pin	
11	D43406400	4	Washer	
12	D40630100	4	Pin	
13	3009492X1	4	Cap Screw	M10 X 25
14	D20400419	4	Washer	
15	D45744700	4	Protection.	
17	D28981712	1	Mat	
18	D28981714	1	Frame	
19	D28981687	1	Suspension	
20	D28981358	1	Trim	
21	D28981368	1	Frame	Right Hand
	D28981857	1	Frame	From Serial or Engine Number 61242 Right Hand
22	D28981367	1	Frame	Left Hand
23	D46480600	2	Damper	
24	D20400506	X	Washer	
25	394367X1	8	Locknut	M8
26	339761X1	8	Cap Screw	M8 X 25
27	D46480400	2	Damper	
28	D20400429	2	Washer	
29	D41087800	2	Locknut	
30	D20400460	4	Washer	
31	D40431500	2	Screw Metric	
32	D40437700	2	Screw	
33	D20400441	4	Washer	
34	3010067X1	2	Locknut	M20
35	D28980926	1	Strip	
36	D20400506	6	Washer	
37	339124X1	3	Cap Screw	M8 X 16
38	3009492X1	6	Cap Screw	M10 X 25
39	D20400419	6	Washer	
40	1441602X1	8	Bolt Metric	
41	D20400430	8	Washer	
42	D41087800	6	Locknut	
43	D40749100	8	Screw Metric	
44	D20400466	8	Washer	
45	D28981388	2	Spacer	
46	339123X1	3	Cap Screw	M8 X 20
47	394367X1	X	Locknut	M8
48	D28980509	3	Support	
49	339124X1	9	Cap Screw	M8 X 16
50	D20400506	9	Washer	
51	391074X1	27	Cap Screw	M6 X 12
52	391038X1	31	Flat Washer	
54	D28760642	1	Earth Strap	
55	D45061800	1	Gas Strut	
56	D20400500	2	Spacer	
57	354057X1	2	Split Pin	1/8" X 3/4
58	D28980456	1	Bracket	
59	391038X1	3	Flat Washer	
60	339666X1	3	Cap Screw	M6 X 20
61	D28980571	1	Threaded Part	
62	**D28780523**	1	Potentiometer	
70	D28787070	1	Rod	
71	D41010600	4	Nut	M6
72	D28787068	1	Arm	
73	D46437300	2	Toggle	
74	339560X1	1	Cap Screw	M6 X 16
76	D28980222	1	Window	
77	D28981223	1	Frame	
78	D28981821	1	Cladding	

https://truckmanualshub.com/

Item	Part Number	Qty	Description	Comments
79	D40688000	10	Screw	
80	1441462X1	10	Locknut	M6
81	D20400404	10	Washer	
82	D28980984	2	Bracket	
83	D46480700	2	Buffer	
84	D28980987	2	Stirrup	
85	D28880301	2	Tensioner	
86	339124X1	4	Cap Screw	M8 X 16
87	D20400506	4	Washer	
88	339123X1	X	Cap Screw	M8 X 20
89	394367X1	4	Locknut	M8
90	1440329X1	4	Locknut	M10
91	D28981563	1	Plate	
102	339337X1	4	Cap Screw	M8 X 30
106	D20400453	6	Washer	[B]
107	339560X1	6	Cap Screw	[B] M6 X 16
113	D28981236	1	Shield	
114	D44741200	X	Strip	[A] Length 5 m
115	D44740600	X	Strip	[A] Length 25 m
118	D28981327	1	Duct	
119	D28981564	1	Plate	
120	D28981715	1	Plate	
121	D28981520	1	Sound Reduction	
122	D28981820	1	Sound Reduction	
123	D28981523	1	Sound Reduction	
124	D28981521	1	Sound Reduction	
125	D28981524	1	Sound Reduction	
126	D41397400	32	Rivet	
128	D28980468	1	Support	
129	339402X1	2	Nut	M10
130	D20400416	4	Washer	
131	D20400506	3	Washer	
132	339124X1	3	Cap Screw	M8 X 16
133	D28785467	1	Actuator	
134	D28981541	1	Top	
135	D28981543	2	Arm	
136	D28981544	1	Rod	
137	D28981552	2	Bolt	
138	D28981553	1	Bolt	
139	D28981554	1	Bolt	
140	391403X1	4	Split Pin	Diameter 3,2 X 32
141	339531X1	4	Split Pin	Diameter 4 X 36
142	D28981746	1	Plate	
143	D28981745	1	Clip	
144	D28981733	1	Support	

FOOTNOTE [A] CUT TO REQUIRED LENGTH
FOOTNOTE [B] NOT ILLUSTRATED

https://truckmanualshub.com/

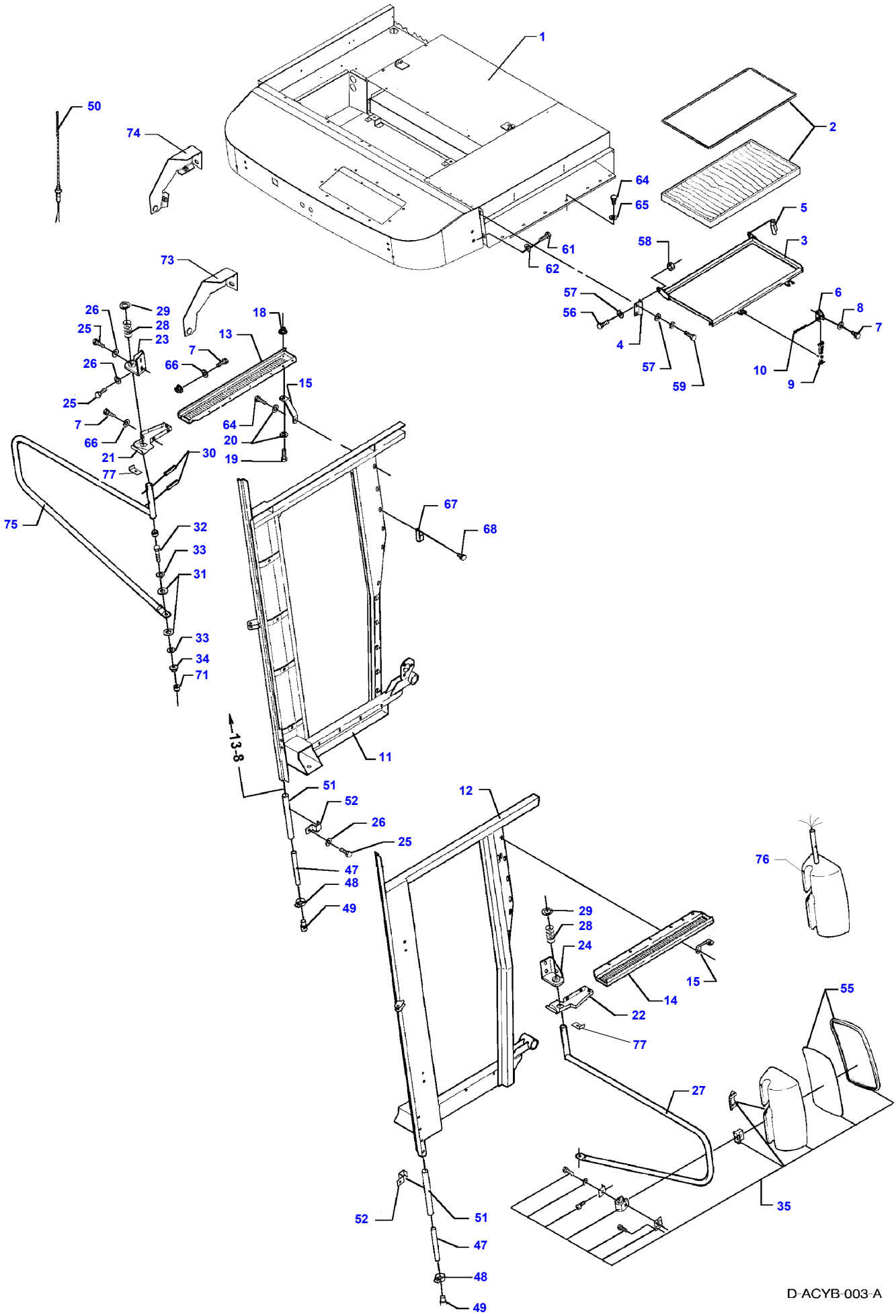

https://truckmanualshub.com/

Item	Part Number	Qty	Description	Comments
1	D28981801	1	Roof	
2	D28980100	1	Cab Filter	
3	D28981106	1	Frame	
4	D28980713	1	Hinge	
5	D28980713	1	Hinge	
6	D28981118	2	Holder	
7	339560X1	10	Cap Screw	M6 X 16
8	391038X1	10	Flat Washer	
9	D44737200	2	Rubber Strap	
10	391423X1	2	Split Pin	Diameter 4 X 40
11	D28981368	1	Frame	Right Hand
	D28981857	1	Frame	From Serial or Engine Number 61242
				Right Hand
12	D28981367	1	Frame	Left Hand
13	D28980891	1	Intake	Right Hand
14	D28980892	1	Intake	Left Hand
15	D28980890	2	Stay	
18	1441462X1	1	Locknut	M6
19	339560X1	X	Cap Screw	M6 X 16
20	391038X1	X	Flat Washer	
21	D28981496	1	Cover	Right Hand
22	D28981465	1	Cover	Left Hand
23	D28980758	1	Bracket	Right Hand
24	D28980757	1	Bracket	Left Hand
25	339761X1	X	Cap Screw	M8 X 25
26	D20400506	X	Washer	
27	D28981717	1	Arm	
28	D28760286	2	Spring	
29	D20400531	2	Spacer	
30	D42662500	4	Pin	
31	D28980752	4	Washer	
32	339009X1	2	Cap Screw	M8 X 35
33	D20400506	4	Washer	
34	394367X1	2	Locknut	M8
35	D45086300	2	Mirror	
47	D28782171	X	Hose	[B]
				Length 3 m
48	D45039100	2	Cable Tie	[A]
				A. C.
49	D45070044	2	Pressure Valve	
50	D45086600	1	Aerial Long	
51	D28782172	X	Hose	[B]
				Length 5 m
52	D28981051	2	Retainer	
55	D45083300	1	Mirror Glass	
56	339123X1	2	Cap Screw	M8 X 20
57	D20400506	6	Washer	
58	394367X1	2	Locknut	M8
59	339124X1	4	Cap Screw	M8 X 16
61	3009491X1	4	Cap Screw	M10 X 20
62	D20400419	4	Washer	
64	D40749100	8	Screw Metric	
65	D20400466	8	Washer	
66	D20400404	6	Washer	
67	D45058300	1	Hook	
68	D40741200	2	Screw	
71	D45744900	2	Protection.	
73	D28981469	1	Hinge	Left Hand
74	D28981468	1	Hinge	
75	D28981720	1	Arm	
76	D44900759	1	Mirror	Left Hand
	D44900760	1	Mirror	Right Hand
77	D28981817	2	Bracket	(22)

FOOTNOTE [A] OPTIONAL EQUIPMENT
FOOTNOTE [B] CUT TO REQUIRED LENGTH

https://truckmanualshub.com/

MF 7274/7278 COMBINE, |-> 61123 for 7274 and |-> 61115 for 7278 - 3906105

D-ACYC-004-B

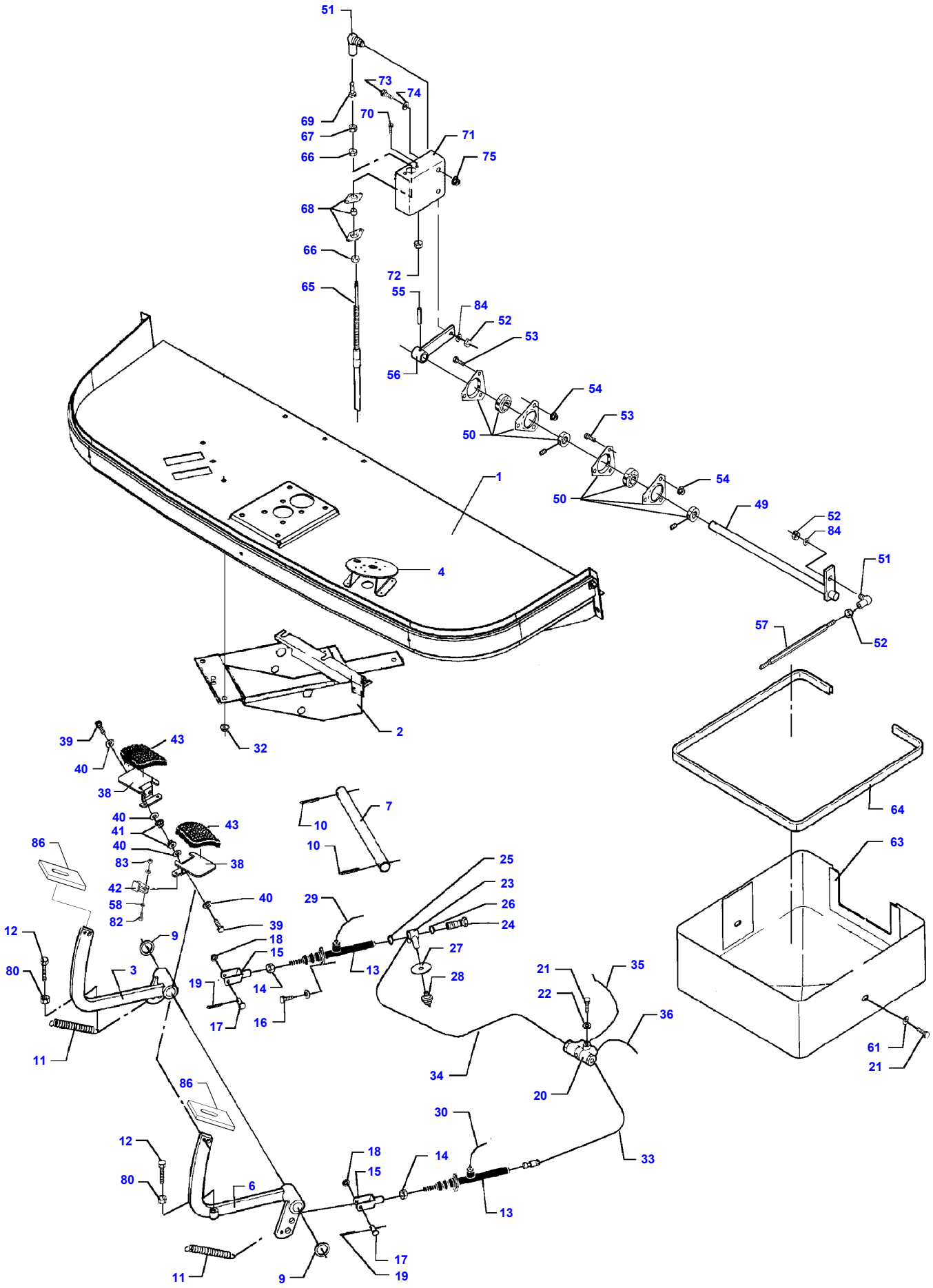

D-ACYC-004-B

https://truckmanualshub.com/

Item	Part Number	Qty	Description	Comments
1	D28981714	1	Frame	
2	D28981669	1	Bracket	
3	D28985768	1	Brake Pedal	
4	D28989012	1	Support	(1)
6	D28985768	1	Brake Pedal	
7	D28981670	1	Shaft	
9	D43319300	2	Bush	
10	354416X1	2	Split Pin	3/16" X 2-1/2
11	D28800460	2	Spring	
12	339337X1	2	Cap Screw	M8 X 30
13	D45908000	2	Ram	
14	339402X1	2	Nut	M10
15	D45905300	2	Fork Head	
16	339761X1	4	Cap Screw	M8 X 25
17	D45905500	2	Bolt	
18	D45905600	2	Washer	
19	354057X1	2	Split Pin	1/8" X 3/4
20	D45908100	1	Ram	
21	339124X1	3	Cap Screw	M8 X 16
22	D20400506	1	Washer	
23	D45908400	1	Connector	
24	D45908500	1	Screw	
25	D45713600	1	Gasket	
26	D45713700	1	Gasket	
27	D28780948	1	Washer	
28	D45908300	1	Switch	
29	D28980948	1	Pipe	Right Hand
30	D28980947	1	Pipe	Left Hand
32	394367X1	6	Locknut	M8
33	D28985953	1	Tube	Right Hand
34	D28985953	1	Tube	Right Hand
35	D28980944	1	Pipe	Right Hand
36	D28980945	1	Pipe	Left Hand
38	D28981203	2	Brake Pedal	RH + LH
39	339804X1	4	Cap Screw	M6 X 25
40	D20400404	8	Washer	
41	1441462X1	4	Locknut	M6
42	D28981584	1	Pawl	
43	D44719500	1	Rubber	
49		X	Not Used	
50		X	Not Used	
51		X	Not Used	
52		X	Not Used	
53		X	Not Used	
54		X	Not Used	
55		X	Not Used	
56		X	Not Used	
57		X	Not Used	
58	D20400466	2	Washer	
61	D20400506	1	Washer	
63	D28980684	1	Cover	
64	D28782160	X	Gasket	[A] Length 10 m
65	D46439500	1	Cable	
66	D46434600	2	Nut	(65) M12
67	D41010600	1	Nut	(65) M6
68	D46434800	1	Toggle	
69	D28760913	1	Bolt	
70	339666X1	2	Cap Screw	M6 X 20
71	D28980806	1	Bracket	
72	1441462X1	2	Locknut	M6
73	3009493X1	2	Cap Screw	M10 X 30
74	D20400471	2	Washer	
75	1440329X1	2	Locknut	M10
80	339169X1	2	Nut	M8
82	D40400900	1	Setscrew	
83	1441917X1	1	Locknut	M5
84	D41101900	2	Spring Washer	
86	D28981747	2	Seal	

https://truckmanualshub.com/

Item	Part Number	Qty	Description	Comments

FOOTNOTE [A] CUT TO REQUIRED LENGTH

https://truckmanualshub.com/

MF 7274/7278 COMBINE, |-> 61123 for 7274 and |-> 61115 for 7278 - 3906105

D-ACYD-007-B

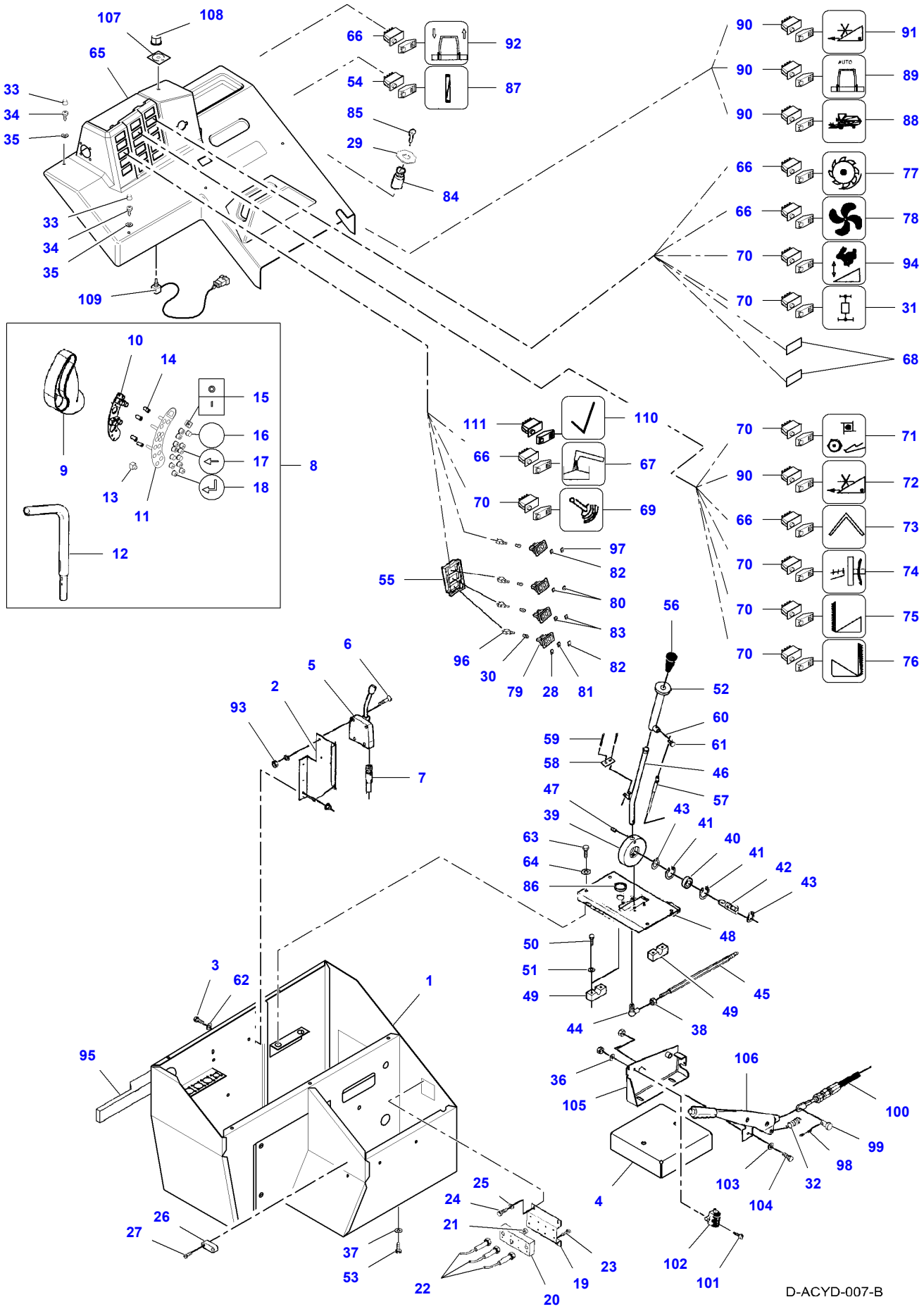

https://truckmanualshub.com/

Item	Part Number	Qty	Description	Comments
1	D28981797	1	Control Box	
	D28981858	1	Control Box	From Serial or Engine Number 61242
2	D28980144	1	Bracket	
3	339560X1	3	Cap Screw	M6 X 16
4	D28981793	1	Bracket	
5	D46415200	1	Lever	
6	392383X1	4	Screw	
7	D46439700	1	Throttle Cable	
8	D28981816	1	Grip	
	D28986719	1	Grip	[C]
9		1	Grip	(8) Not serviced,order REF. 8
10		1	Printed Circuit	(8) Not serviced,order REF. 8
11		1	Printed Circuit	(8) Not serviced,order REF. 8
12		1	Lever	(8) Not serviced,order REF. 8
13	D44900012	1	Button	(8)
14	D45020066	4	Spacer	(8)
15	D44900122	1	Switch	(8)
16	D44900002	3	Button	(8)
17	D44900836	9	Button	(8)
18	D44900840	1	Button	(8)
19	D28781359	1	Sensor	[A]
	D28781357	1	Cover	[A] (19)
20	D28781358	1	Block	[A] (19)
21	D28781578	1	Roll	[A] (19)
22	D28781400	3	Sensor	[A] (19)
23	D40351200	8	Screw	[A] (19)
24	391074X1	4	Cap Screw	[A] M6 X 12
25	D20400405	4	Washer	[A]
26	D45050019	1	Spirit Level	[A]
27	D40743000	2	Screw	[A]
28	D44900212	1	Decal	[B]
29	D28981724	1	Plate	
30	3405185M1	6	Bulb 12v 1.2w	
31	D45050027	1	Switch	
32	D28882045	1	Tension Spring	
33	D45749800	5	Cap	
34	D40741100	5	Screw	
35	D45745100	5	Washer	
36	D20400400	2	Washer	
37	D20400505	3	Spacer	
38	339402X1	1	Nut	M10
39	D28980790	1	Bearing Carrier	
40	339932X1	1	Bear. 6202 2rs	
41	D42512900	1	Circlip	
42	D28980789	1	Shaft	
43	D42501300	2	Circlip	
44	D46436200	1	Toggle	
45	D28980805	1	Rod	
46	D28980793	1	Lever	
47	1440398X1	1	Roll Pin	Diameter 5 X 20
48	D28980809	1	Plate	
49	D28980788	2	Retainer	
50	339337X1	4	Cap Screw	M8 X 30
51	D20400506	4	Washer	
52	D28981083	1	Selector	
53	3009493X1	3	Cap Screw	M10 X 30
54	D45050054	1	Switch	
55	D45060016	1	Frame	
56	D43383800	1	Grip	
57	D46439400	1	Cable	
58	D28730779	1	Locking Plate	

https://truckmanualshub.com/

Item	Part Number	Qty	Description	Comments
59	354057X1	2	Split Pin	1/8" X 3/4
60	D40630900	1	Pin	
61	339230X1	1	Cap Screw	M6 X 10
62	D20400470	1	Washer	
63	3009491X1	4	Cap Screw	M10 X 20
64	D20400419	4	Washer	
65	D28982000	1	Cover	Up to Serial or Engine Number 61489
65	D28273887	1	Cover	From Serial or Engine Number 61490
66	D45050004	5	Switch	N1
67	D45050008	1	Switch	
68	D44900017	2	Cover	
69	D45050009	1	Switch	
70	D45050003	8	Magnet	N2
71	D45050010	1	Switch	
72	D45050015	1	Switch	
73	D45050014	1	Switch	
74	D45050025	1	Switch	
75	D45050029	1	Switch	
76	D45050030	1	Switch	
77	D45050012	1	Switch	
78	D45050013	1	Switch	
79	D45060014	3	Control Light	
80	D45060013	2	Decal	
81	D45060012	1	Decal	
82	D45063800	1	Plate	
83	D45060011	2	Decal	
84	D44900841	1	Switch, Ignition	Repairs and replaces D44900832
85	D44900833	1	Key	
86	D44732300	1	Grommet	
87	D45050039	1	Switch	
88	D45050031	1	Switch	
89	D45050032	1	Switch	
90	D45050006	4	Switch	N4
91	D45050033	1	Switch	
92	D45050028	1	Switch	
93	D41010500	4	Nut	
94	D45050011	1	Switch	
95	D44739400	1	Gasket	
96	D45065800	6	Lamp Socket	
97	D45063800	1	Plate	
98	354043X1	1	Split Pin	1/16" X 1
99	D45906100	1	Bolt	
100	D45924900	1	Handbrake Cable	Length 3245 mm
101	1444168X1	2	Screw	
102	D45070090	1	Switch	
103	D20400506	2	Washer	
104	339337X1	2	Cap Screw	M8 X 30
105	D28981570	1	Bracket	
106	D28981671	1	Grip	
107	D49130091	1	Decal	From Serial or Engine Number 61490
108	D44900892	1	Button	From Serial or Engine Number 61490
109	D28782719	1	Potentiometer	From Serial or Engine Number 61490
110	D45050006	1	Switch	From Serial or Engine Number 61490
111	D44900891	1	Switch	From Serial or Engine Number 61490

FOOTNOTE [A] AUTO LEVEL COMBINE
FOOTNOTE [B] OPTIONAL EXTRA FOR PREHEATER
FOOTNOTE [C] ELECTRIC FORWARD SPEED CONTROL

https://truckmanualshub.com/

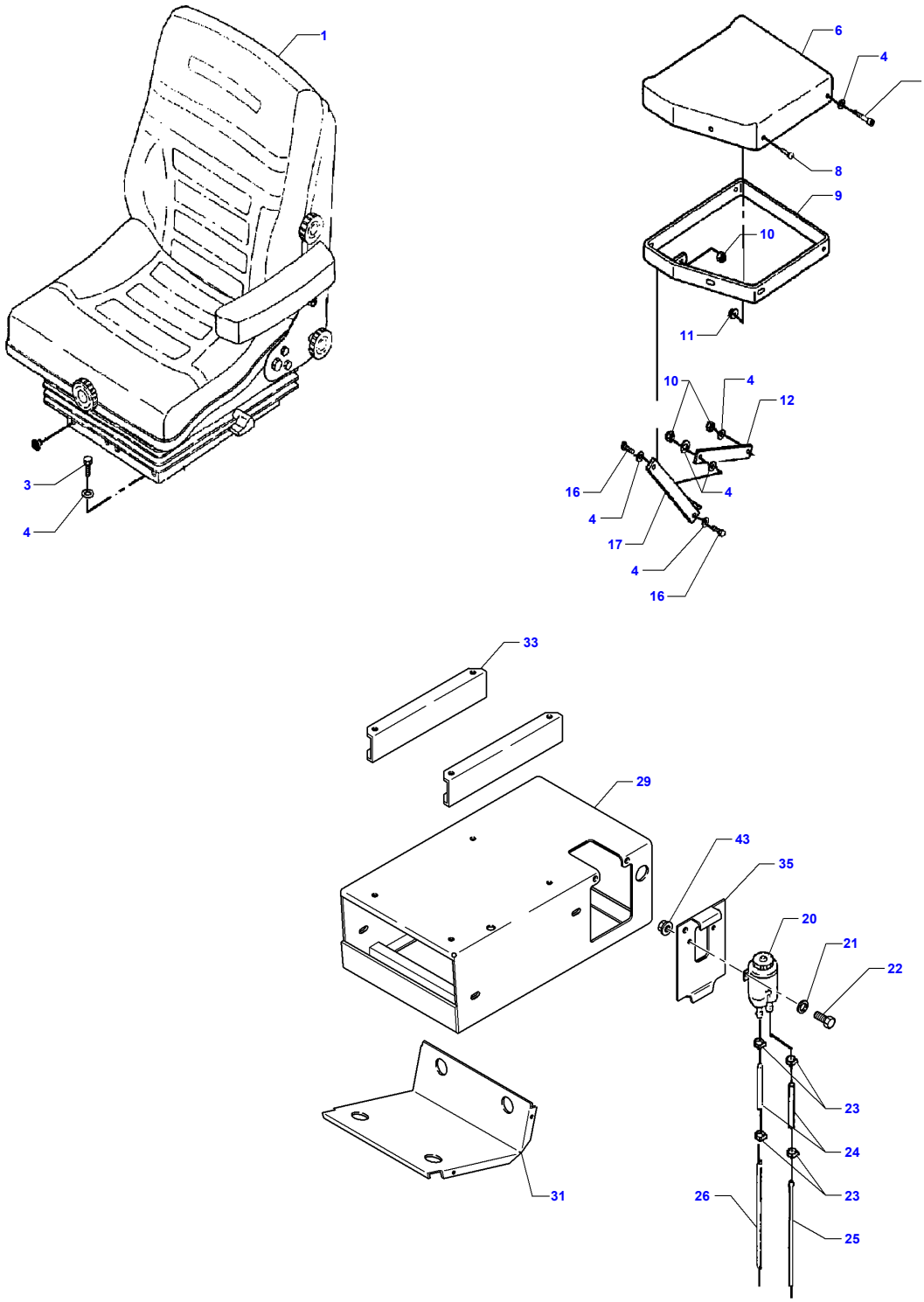

D-ACYK-003-A

https://truckmanualshub.com/

Item	Part Number	Qty	Description	Comments
1	D45941600	1	Seat	[B]
3	339123X1	4	Cap Screw	Repairs and replaces D40404900
4	D20400506	X	Washer	
6	D28985579	1	Seat Cushion	
7	D40405100	2	Cap Screw	
8	D40688200	3	Screw Metric	
9	D28985582	1	Frame	
10	394367X1	5	Locknut	
11	1441462X1	3	Locknut	
12	D28980693	1	Link	
16	D40405000	3	Cap Screw	
17	D28980690	1	Link	
20	D45908200	1	Container	
21	D20400453	2	Washer	
22	D40402400	3	Cap Screw	
23	338612X1	4	Hose Clip	
24	D44717800	2	Hose	
25	D28980948	1	Pipe	See Page - Reference Number 013-0003/29
26	D28980947	1	Pipe	See Page - Reference Number 013-0003/29
29	D28982070	1	Seat Stand	
31	D28981790	1	Shelf	
33	D28982069	2	Adjustment	
35	D28981791	1	Trap	
43	1441462X1	4	Locknut	

FOOTNOTE [B] PNEUMATIC SEAT

https://truckmanualshub.com/

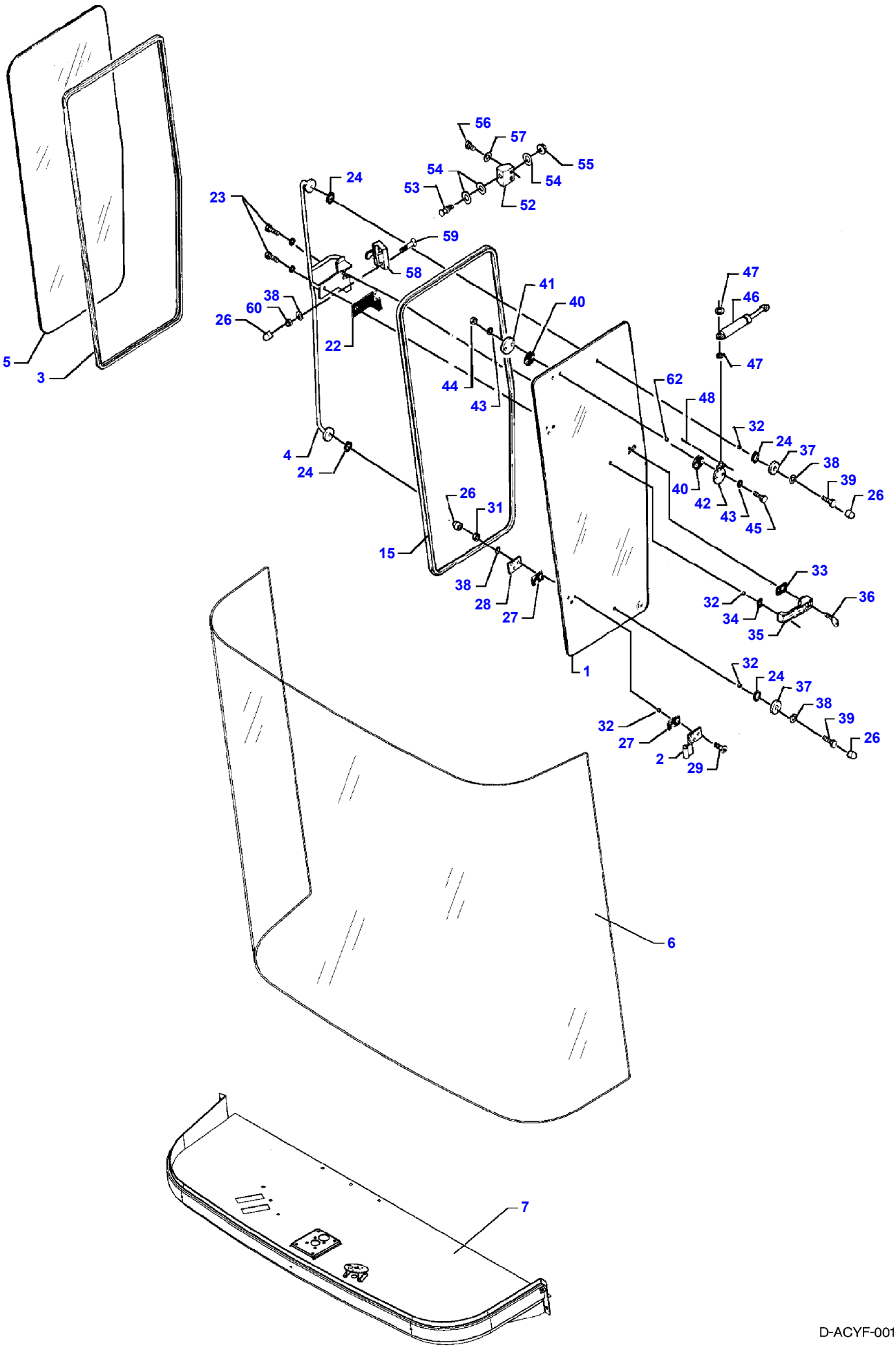

D-ACYF-001-B

https://truckmanualshub.com/

Item	Part Number	Qty	Description	Comments
1	D28980561	1	Glass Pane	
2	D28980477	2	Hinge	
3	D28782151	X	Seal Section	[C] Length 10 M
4	D28981186	1	Union	Length 3,980 M
5	D28980562	1	Window	
6	D28081587	1	Windscreen	[B]
	D28981592	1	Kit, Repair	[A]
7	D28981714	1	Frame	
15	D28782163	X	Gasket	Length 10 M
22	D28980489	1	Shim	
23	339666X1	3	Cap Screw	M6 X 20
24	D28980463	4	Plate	
26	D45744900	X	Protection.	
27	D28980478	4	Plate	
28	D28980485	2	Plate	
29	D40601800	6	Screw	
31	394367X1	6	Locknut	M8
32	D28980322	6	Bush	
33	D28980486	1	Shim	
34	D28980487	1	Shim	
35	D43419100	1	Door Handle	
36	D43418700	1	Spanner	
37	D28980466	2	Washer	
38	D20400506	X	Washer	
39	339337X1	2	Cap Screw	M8 X 30
40	D28980461	2	Washer	
41	D28980464	1	Washer	
42	D28980470	1	Bracket	
43	390971X1	4	Flat Washer	
44	1441462X1	2	Locknut	M6
45	339262X1	2	Cap Screw	M6 X 30
46	D45061800	1	Gas Strut	
47	D20400500	2	Spacer	
48	354057X1	2	Split Pin	1/8" X 3/4
52	D28980916	1	Bracket	
53	D43419400	1	Bolt	
54	D20400426	3	Washer	
55	D46434600	1	Nut	
56	339124X1	2	Cap Screw	M8 X 16
57	D20400506	2	Washer	
58	D43419200	1	Lock	
59	D40601900	2	Screw	
60	394367X1	2	Locknut	M8
62	D28980322	2	Bush	

FOOTNOTE [A] USE MOUNTING KIT NO 28981592
FOOTNOTE [B] NOTE CONTAINS GLUE OF LTD KEEPING QUALITIES
FOOTNOTE [C] CUT TO REQUIRED LENGTH

https://truckmanualshub.com/

MF 7274/7278 COMBINE, |-> 61123 for 7274 and |-> 61115 for 7278 - 3906105
D-ACYG-003-A

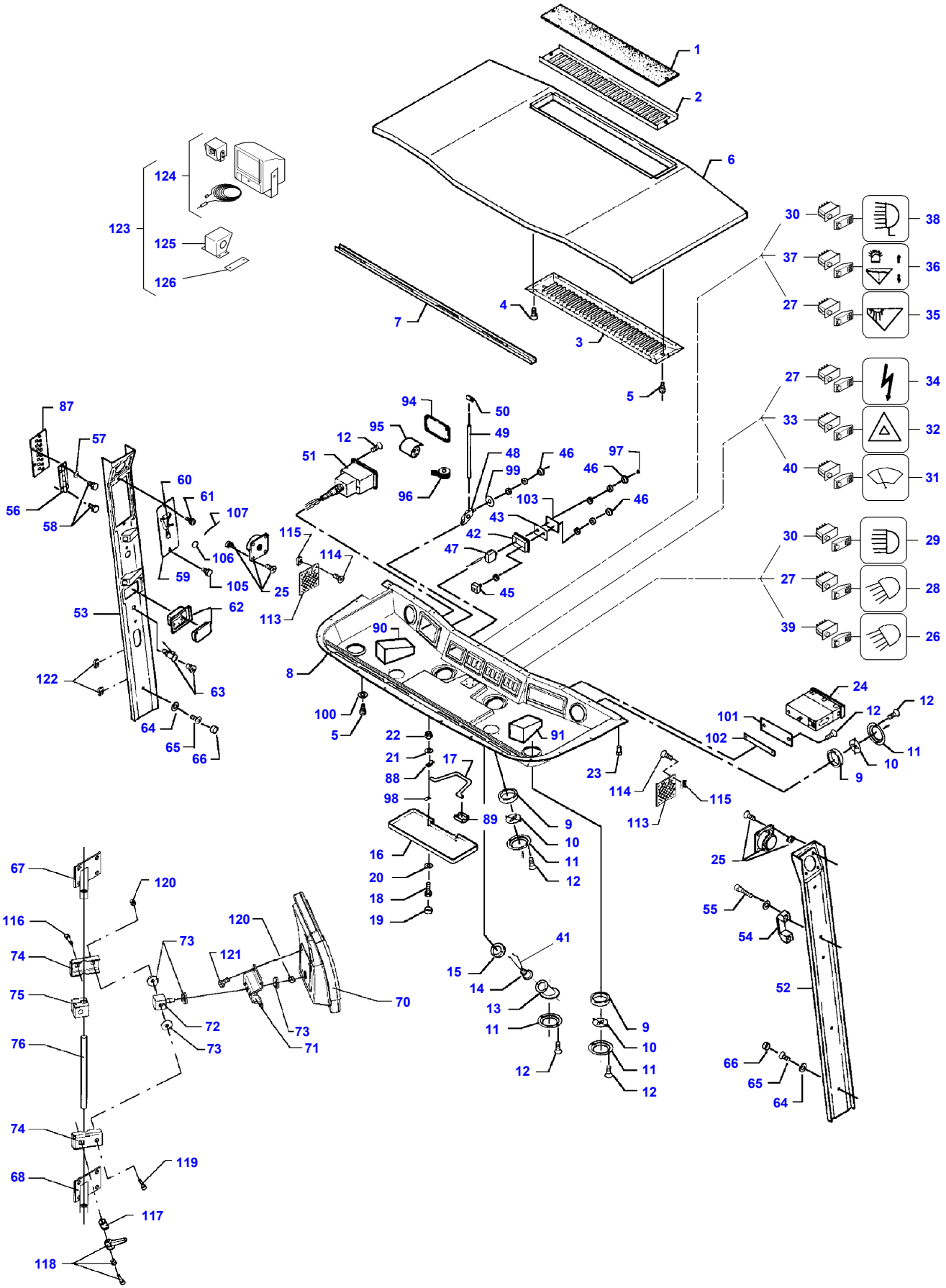

D-ACYG-003-A

https://truckmanualshub.com/

Item	Part Number	Qty	Description	Comments
1	D28980849	1	Filter	
2	D28980923	1	Shutter	
3	D28981508	1	Grate	
4	D40740100	12	Screw	
5	D43385100	4	Screw	
6	D28980855	1	Lining	
7	D28981357	1	Grille	
8	D28981998	1	Panel	
9	D28980554	6	Retainer	
10	D28980553	6	Shutter	
11	D28980555	8	Ring	
12	D40740200	24	Screw	
13	D28980839	2	Holder	
14	D45060001	2	Light	
15	D28980771	2	Cover	
16	D28981507	1	Canopy	
17	D28980664	1	Stirrup	
18	D40400900	2	Setscrew	
19	D45749800	2	Cap	
20	D45745100	2	Washer	
21	D20400466	2	Washer	
22	1441917X1	2	Locknut	M5
23	D45745600	22	Rivet	
24	D28085632	1	Radio	CPL CD
	D28080365	1	Instruction Book	
	D43429500	X	Clip	
	D45000269	1	Radio	CD
	D45086600	1	Aerial Long	
	D45090091	1	Speaker	
	D45086400	1	Radio	TAPE
25	D45090091	1	Speaker	
26	D45050040	1	Light Switch	
27	D45050003	5	Magnet	N2
28	D45050040	1	Light Switch	
29	D45050017	1	Switch	
30	D45050005	2	Switch	N3
31	D45050018	1	Switch	
32	D45050052	1	Switch	
33	D45050051	1	Switch	
34	D45050021	1	Switch	
35	D45050022	1	Switch	
36	D45050023	1	Switch	
37	D45050041	1	Switch	N5
38	D45050024	1	Switch	
39	D45050049	1	Switch	N6
40	D45050050	1	Switch	N7
41	D28782337	1	Insert	
42	D28980928	1	Frame	
43	D28980436	1	Plate	
45	D45070024	1	Switch	
46	D45070026	2	Button	
47	D45093000	1	Thermostat	
48	D45070025	1	Adjuster	
49	D45070027	1	Cable	
50	D45070028	1	Bracket	
51	D28981536	1	Printer	[A]
	D28981575	1	Printer	[A]
52	D28981535	1	Cover	Left Hand
53	D28980483	1	Cover	Right Hand
54	D43386900	1	Grip	
55	391148X1	2	Hex Socket Screw	M8 X 20
56	D28980772	1	Hinge	
57	D20400404	2	Washer	
58	339230X1	2	Cap Screw	M6 X 10
59	D28981528	1	Plate	
60	D45059600	1	Hammer	
61	D43385100	2	Screw	
62	D45060024	1	Ashtray	
63	D45060037	1	Lighter	
64	D45745100	6	Washer	
65	390958X1	6	Screw	M5 X 16

https://truckmanualshub.com/

Item	Part Number	Qty	Description	Comments
66	D45749800	6	Cap	
67	D28981042	1	Suspension	
68	D28980764	1	Suspension	
70	D28981845	1	Monitor	
71	D28981328	1	Union	
72	D28981330	1	Threaded Part	
73	D28981331	4	Washer	
74	D28981332	2	Clamp	
75	D28980501	1	Union	
76	D28981360	1	Rod	
87	D28980775	1	Panel	
88	D28980665	2	Retainer	
89	D45060031	1	Support	
90	D28980977	1	Gasket	
91	D28980976	1	Gasket	
94	D28981509	1	Plate	
95	D45010063	1	Paper	
96	D45010062	1	Ribbon	
97	D45745300	1	Plug	
98	D28981143	2	Support	
99	D49189000	1	Decal	
100	D20400404	2	Washer	
101	D28981510	1	Plate	
102	D28981511	1	Plate	
103	D49187900	1	Decal	
105	D40741200	2	Screw	
106	D43407400	1	Seal	
107	D01906800	X	Wire	Length 150 mm
113	D45090093	2	Plate	
114	D40740000	8	Screw	
115	D43429500	8	Clip	
116	D40072200	1	Screw	
117	D28980748	1	Bush	
118	D43387500	1	Lever	
119	D40438800	1	Screw	
120	D41017500	2	Locknut	
121	D40689500	4	Screw	
122	D44900071	2	Clip	
123	D28085634	1	Reversing Camera	Up to Serial or Engine Number 62138
123	D28087081	1	Reversing Camera	From Serial or Engine Number 62139
124	D45000270	1	Reversing Camera	(123)
124	D45000271	1	Reversing Camera	Up to Serial or Engine Number 62138 EXTRA
124	D45000272	1	Monitor	Up to Serial or Engine Number 62138 (123)
124	D45000273	1	Reversing Camera	From Serial or Engine Number 62139 EXTRA
125	D28985245	1	Support	From Serial or Engine Number 62139 (123)
126	D28985175	1	Plate	(123)
127	D44900761	1	Switch	[B,C]

FOOTNOTE [A] OPTIONAL EQUIPMENT
FOOTNOTE [B] NOT ILLUSTRATED
FOOTNOTE [C] FOR ELECTRIC MIRRORS

https://truckmanualshub.com/

MF 7274/7278 COMBINE, |-> 61123 for 7274 and |-> 61115 for 7278 - 3906105

D-ACYH-004-A

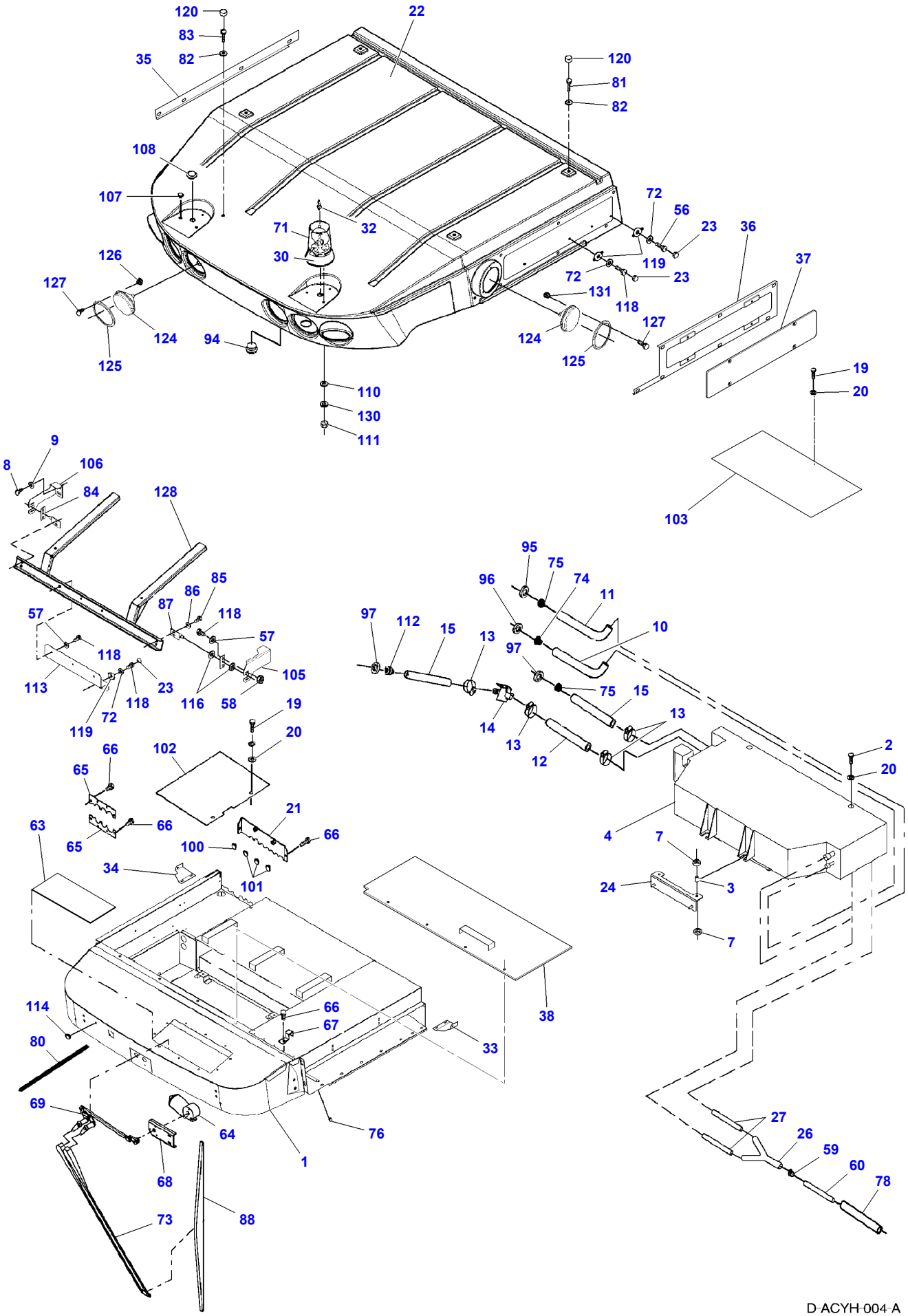

https://truckmanualshub.com/

Item	Part Number	Qty	Description	Comments
1	D28981801	1	Roof	
2	339010X1	4	Cap Screw	M8 X 40
3	D28981587	1	Spacer	
4	D45080055	1	Heater	
7	D45080096	8	Damper	
8	3009492X1	4	Cap Screw	M10 X 25
9	D20400419	1	Washer	
10	D45080051	1	Hose	
11	D45080052	1	Hose	
12	D28782176	X	Hose	[D] Length 6 m
13	3000483X1	4	Hose Clip	Diameter 16-22
14	D45070008	1	Valve	
15	D28782176	X	Hose	[D] Length 6 m
18	D45000167	1	Map	[C] (4)
19	339124X1	X	Cap Screw	M8 X 16
20	D20400506	X	Washer	
21	D28981112	1	Plate	
22	D28981798	1	Roof	
23	D45748500	13	Cap	
24	D28981448	1	Union	
26	D45080094	2	Hose	
27	D28782171	X	Hose	[D] Length 3 m
30	D45060046	1	Rotating Light	[A]
	D44900990	1	Rotating Light	
32	D45081000	1	Bulb	
33	D28981805	1	Bracket	
34	D28981807	1	Bracket	
35	D28981705	1	Plate	
36	D28981808	1	Plate	
37	D28981812	1	Plate	
38	D28981708	1	Plate	
56	339666X1	6	Cap Screw	M6 X 20
57	391038X1	13	Flat Washer	
58	1441462X1	16	Locknut	M6
59	D28980863	2	Bush	
60	D28782171	X	Hose	[D] Length 3 m
63	D44741200	X	Strip	[D] Length 5 m
64	D45080042	1	Wiper Motor	
65	D28981145	2	Locking Plate	
66	D40749100	6	Screw Metric	
67	D28980970	2	Retainer	
68	D28985184	1	Bracket	
69	D45080044	1	Wiper	
71	D45050200	1	Rotating Light	
	D45060047	1	Glass	H. CHRISTENSEN 170492
	D45080012	1	Glass	[B]
72	390971X1	13	Flat Washer	
73	D45080048	1	Wiper Arm	
74	D44733100	1	Bush	
75	D44733100	3	Bush	
76	D44719100	2	Rivet	
78	D28980991	2	Hose	
80	D28980967	6	Gasket	
81	339009X1	4	Cap Screw	M8 X 35
82	D45713900	6	Gasket	
83	339761X1	2	Cap Screw	M8 X 25
84	D28981495	2	Union	
85	339123X1	4	Cap Screw	M8 X 20
86	D20400506	4	Washer	
87	D28981494	2	Bracket	
88	D45080049	2	Wiper Blade	
94	D45745500	2	Plug	
95	D44732600	1	Grommet	
96	D44732800	1	Grommet	

https://truckmanualshub.com/

Item	Part Number	Qty	Description	Comments
97	D44732700	2	Grommet	
100	D45744000	1	Plug	
101	D44731900	3	Grommet	
102	D28981124	1	Trap	
103	D28782156	X	Seal Section	[D] Length 10 m
105	D28981469	1	Hinge	Left Hand
106	D28981468	1	Hinge	Right Hand
107	D45744100	3	Plug	
108	D45744500	1	Plug	
110	D20400466	3	Washer	
111	D41010400	3	Nut	
112	D44732900	1	Grommet	
113	D28981578	1	Bracket	
114	D44731900	1	Grommet	
116	D20400507	4	Spacer	
118	339560X1	8	Cap Screw	M6 X 16
119	D45749200	13	Washer	
120	D45744900	6	Protection.	
124	D45080135	8	Worklight	
124	D45080108	8	Headlamp	(134) From Serial or Engine Number 61869
125	D28981849	8	Plate	
125	D28981482	8	Muff	(134) From Serial or Engine Number 61869
126	D43429800	18	Clip	(134)
127	D40740500	32	Screw	(134)
128	D28981799	1	Frame	
130	D41100300	3	Washer	
131	D43429900	6	Clip	
132	D45080109	8	Cover	[C] (124)
133	D45080110	8	Seal	[C] (124)
134	D28085104	1	Kit, Conversion	[C]

FOOTNOTE [A] ONLY FOR SWITZERLAND
FOOTNOTE [B] ORANGE BASE HELLA
FOOTNOTE [C] NOT ILLUSTRATED
FOOTNOTE [D] CUT TO REQUIRED LENGTH

https://truckmanualshub.com/

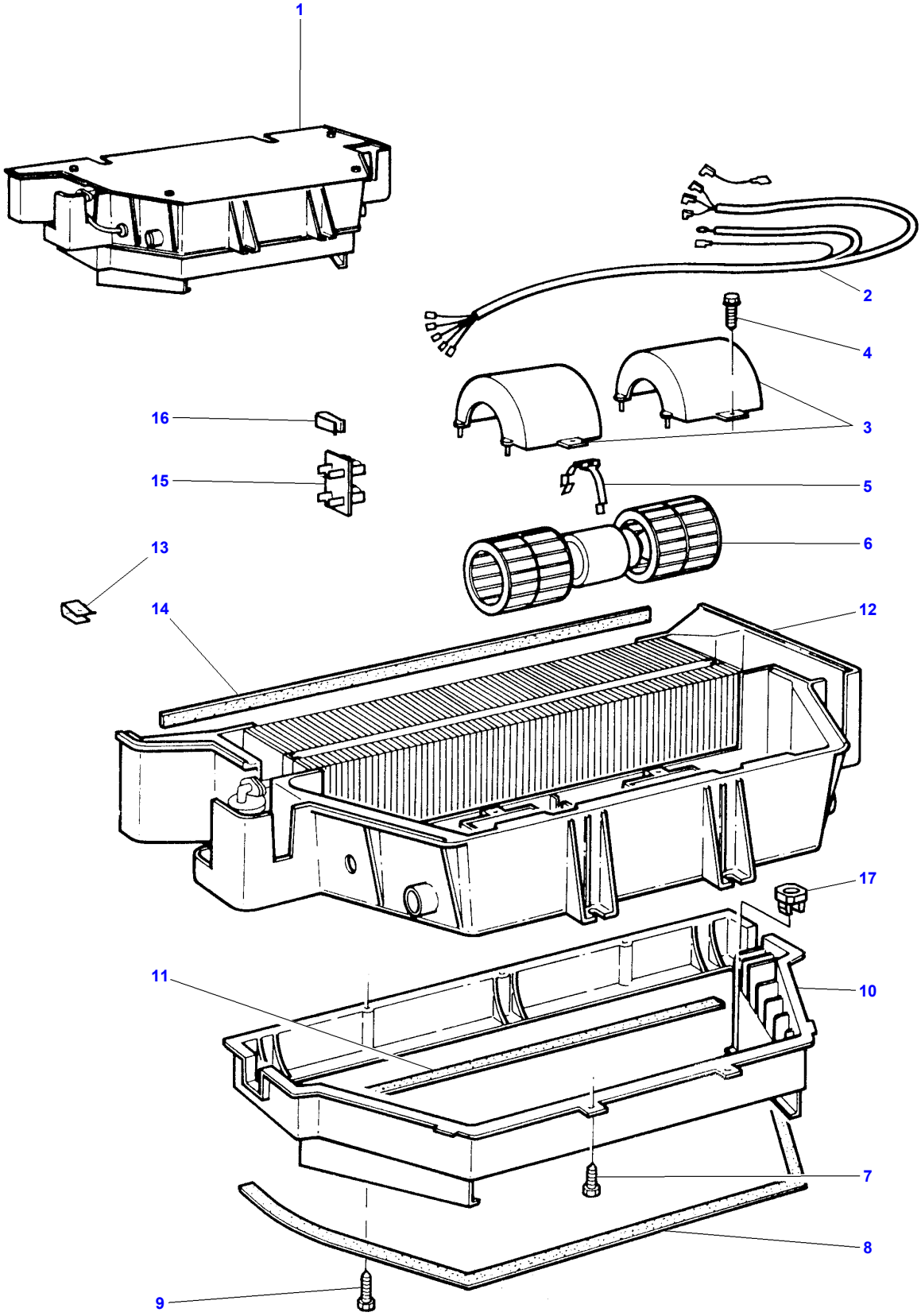

D-ACYL-001-B

https://truckmanualshub.com/

Item	Part Number	Qty	Description	Comments
1	D45080055	1	Heater	
2	3902318M91	1	Harness	(1)
3	3310833M1	2	Cover	(1)
4	3310837M1	4	Screw	(1)
5	3902320M1	1	Strap	(1)
6	3310831M91	1	Motor	(1)
7	3310837M1	6	Screw	(1)
8	3902322M1	1	Foam	(1)
9	3310841M1	3	Screw	(1)
10	3310840M1	1	Housing	(1)
11	3310843M1	1	Foam	(1)
12	3310825M1	1	Housing	(1)
13	3310842M1	9	Strap	(1)
14	3310849M1	1	Foam	(1)
15	3304510M92	1	Resistor	(1)
16	3310834M1	1	Strap	(1)
17	3583649M1	1	Nut Special	(1)

https://truckmanualshub.com/

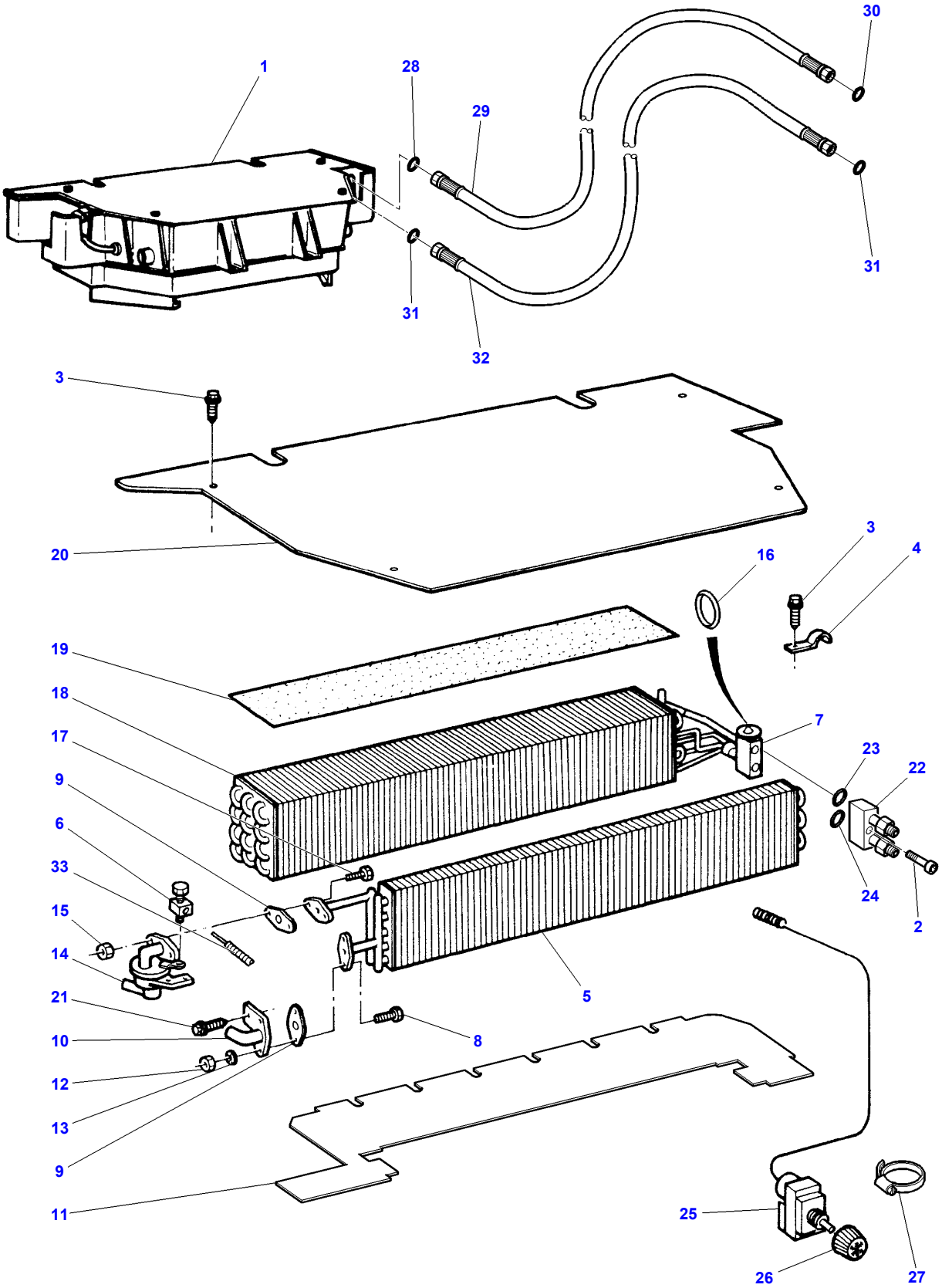

D-ACYL-003-A

https://truckmanualshub.com/

Item	Part Number	Qty	Description	Comments
1	D45080055	1	Heater	
2	3015257X1	2	Screw Metric	(1) M6 X 55
3	3310837M1	6	Screw	(1)
4	3310836M1	1	Strap	(1)
5	3310827M92	1	Radiator	(1)
6	3311579M91	1	Union	(1)
7	3902334M91	1	Regulator	(1)
8	3902089M1	2	Screw	(1)
9	F931.812.140.040	2	Joint.	(1)
10	3310946M1	1	Elbow	(1)
11	3902329M2	1	Plate	(1)
12	3902090M1	2	Nut	(1)
13	3902090M1	2	Nut	(1)
14	3310945M1	1	Cock	(1)
15	3902090M1	2	Nut	(1)
16	3902550M1	1	O Ring	(1) Diameter 6,7 mm Repairs and replaces 3902499M1
	F931.812.140.300	3	Joint.	(1) Diameter 13,4 mm Repairs and replaces 3902500M1
17	3902089M1	2	Screw	(1)
18	3902331M92	1	Evaporator	(1)
19	3902332M1	1	Foam	(1)
20	3310839M1	1	Plate	(1)
21	3902089M1	2	Screw	(1)
22	3902549M91	1	Connection	(1)
23	3902550M1	1	O Ring	(1) Diameter 6,7 X 1,8 mm
24	F931.812.140.300	1	Joint.	(1) Diameter 13,4 X 2,4 mm
25	D45093000	1	Thermostat	
26	D45070026	1	Button	
27	3000483X1	2	Hose Clip	Diameter 16-22
28	**3010471X1**	1	O Ring	Diameter 7,65 mm
29	D45080051	1	Hose	[A]
30	D45450100	1	O Ring	
31	D45450200	2	O Ring	
32	D45080052	1	Hose	[B]
33	3902212M2	1	Cable	

FOOTNOTE [A] COMPRESSOR
FOOTNOTE [B] FROM FILTER

https://truckmanualshub.com/

MF 7274/7278 COMBINE, |-> 61123 for 7274 and |-> 61115 for 7278 - 3906105

D-ACYI-006-B

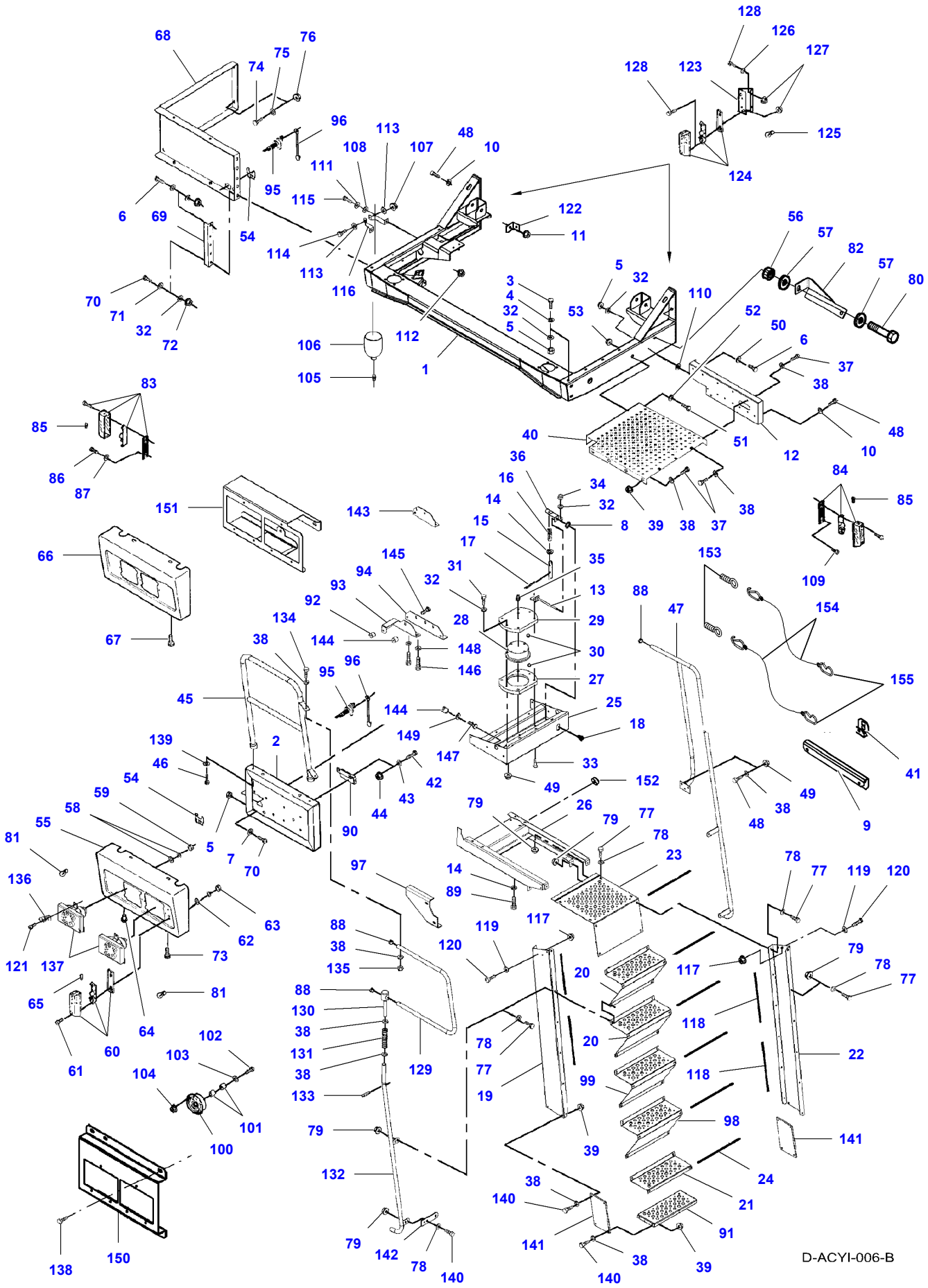

https://truckmanualshub.com/

Item	Part Number	Qty	Description	Comments
1	D28981687	1	Suspension	
2	D28981758	1	Plate	
3	339814X1	1	Cap Screw	M10 X 35
4	D20400420	3	Washer	
5	1440329X1	1	Locknut	M10
6	3009493X1	3	Cap Screw	M10 X 30
7	D20400419	2	Washer	
8	D44731100	1	Grommet	
9	D28982145	1	Support	
10	D20400506	X	Washer	
11	394367X1	4	Locknut	M8
12	D28981299	1	Platform	
13	D28981272	1	Lever	
14	D20400426	3	Washer	
15	D28981263	1	Pin	
16	D28210500	1	Spring	
17	339531X1	1	Split Pin	Diameter 4 X 35
18	D43383900	1	Lever	
19	D18981617	1	Ladder	
20	D18981265	2	Step	
21	D18981616	1	Step	
22	D28981613	1	Ladder	
23	D28981268	1	Step	
24	D44740800	X	Strip	[I] Length 18 M
25	D28981658	1	Console	
	D28981711	1	Bracket	[F]
26	D28981261	1	Support	
27	D28981258	1	Flange	
28	D28981257	1	Flange	
29	D28981259	1	Flange	
30	D41648300	76	Ball	
31	1441370X1	2	Cap Screw	
32	D20400416	6	Washer	
33	D40067600	4	Screw	
34	1440329X1	4	Locknut	M10
35	D43002700	1	Grease Fitting	
36	D28981262	1	Bracket	
37	339123X1	X	Cap Screw	M8 X 20
38	D20400506	X	Washer	
39	394367X1	X	Locknut	M8
40	D28981607	1	Platform	
	D28981289	1	Plate	[F] MF 7274
	D28981729	1	Plate	[H] MF 7278
41	D28982144	1	Support	
42	339123X1	2	Cap Screw	M8 X 20
43	D20400506	2	Washer	
44	394367X1	2	Locknut	M8
45	D28980118	1	Rail	
	D28981412	1	Guideway	[F]
46	3009491X1	2	Cap Screw	M10 X 20
47	D28981625	1	Rail	
	D28981410	1	Rail	[F]
48	339761X1	X	Cap Screw	M8 X 25
49	394367X1	X	Locknut	M8
50	D20400416	3	Washer	
51	339666X1	X	Cap Screw	M6 X 20
52	D20400404	X	Washer	
53	1441462X1	X	Locknut	M6
54	D28980980	2	Cover	
55	D28981398	1	Shield	
56	394367X1	1	Locknut	M8
57	D20400506	2	Washer	
58	D20400400	16	Washer	
59	D41010400	8	Nut	
60	D45080007	2	Light	
61	D40351400	4	Screw	
62	D20400400	4	Washer	
63	D41010400	4	Nut	

https://truckmanualshub.com/

Item	Part Number	Qty	Description	Comments
64	D43385200	3	Screw	
65	**621235M1**	X	Bulb 12v 21w	
66	D28981399	1	Shield	
67	D43385200	4	Screw	
68	D18986152	1	Guard	
69	D28980986	1	Support	
70	3009492X1	4	Cap Screw	M10 X 25
71	D20400419	5	Washer	
72	1440329X1	5	Locknut	M10
73	339124X1	1	Cap Screw	M8 X 16
74	339123X1	2	Cap Screw	M8 X 20
75	D20400414	2	Washer	
76	394367X1	2	Locknut	M8
77	339123X1	X	Cap Screw	M8 X 20
78	D20400506	X	Washer	
79	394367X1	X	Locknut	M8
80	339761X1	1	Cap Screw	M8 X 25
81	965465M1	4	Bulb H/L 45/40w	[B]
81	**3713341M1**	4	Bulb 12v 60/55w	[A]
82	D28285381	1	Bracket	
83	D45077500	1	Flasher	Right Hand
84	D45077600	1	Flasher	Left Hand
85	**621235M1**	2	Bulb 12v 21w	
86	3001162X1	2	Cap Screw	M4 X 16
87	D20400400	2	Washer	
88	D45744200	3	Ferrule	
89	1440716X1	4	Cap Screw	M12 X 30
90	D28981285	1	Stop	
91	D18981621	1	Step	[C]
92	D46482000	1	Damper	
93	D18981743	1	Bracket	
94	D18981730	1	Bracket	
95	D45068200	2	Electric Socket	
96	D45068300	2	Dustcap	
97	D18981619	1	Bracket	
98	D18981615	1	Step	
99	D18981614	1	Step	
100	D45019500	1	Horn	
101	D28480172	2	Spacer	
102	339168X1	1	Cap Screw	M8 X 50
103	D20400506	1	Washer	
104	394367X1	1	Locknut	M8
105	D45250500	2	Union	[G]
106	D28781981	1	Accumulator	[G]
106	D45148500	2	Accumulator	[G]
107	394367X1	2	Locknut	[G]
				M8
108	D41101900	6	Spring Washer	[G]
109	3005686X1	2	Screw	No 10 X 13
110	D20400415	1	Washer	
111	D20400415	6	Washer	[G]
112	339402X1	3	Nut	[G]
				M10
113	D20400413	4	Washer	[G]
114	D40424300	2	Cap Screw	[G]
				M8 X 60
115	339814X1	3	Cap Screw	[G]
				M10 X 35
116	D28752408	4	Support	[G]
117	394367X1	4	Locknut	M8
118	D28782178	X	Seal Section	[I]
				Length 5 M
119	D20400506	4	Washer	
120	339123X1	4	Cap Screw	M8 X 20
121	D45080011	12	Screw	
122	D28780772	1	Retainer	[D]
123	D28781364	2	Bracket	
124	D45080005	2	Head Light	
125	D45081300	2	Bulb	
125		1	Not Used	
126	D20400466	2	Washer	

https://truckmanualshub.com/

Item	Part Number	Qty	Description	Comments
127	1441917X1	4	Locknut	M5
128	339721X1	6	Cap Screw	M5 X 16
129	D28981309	1	Guideway	
129	D28981408	1	Guideway	[F]
130	D28981311	1	Trunnion	
131	D25400086	1	Spring	
132	D28981627	1	Rail	
133	339071X1	1	Roll Pin	Diameter 6 X 30
134	339011X1	2	Cap Screw	M8 X 45
135	394367X1	2	Locknut	M8
136	D45080008	12	Spring	
137	D45080006	4	Head Lamp Ass Rh	
137	D44900999	4	Head Lamp Ass Lh	For UK only or any text in English only
138	D43385200	3	Screw	
139	D20400420	2	Washer	
140	339337X1	8	Cap Screw	M8 X 30
141	D28981622	2	Rubber	[C]
142	D28981318	2	Support	[E]
143		X	Not Used	
144	D46482000	2	Damper	
145	D40603100	1	Screw	
146	D40476100	2	Cap Screw	M8 X 20
147	3009491X1	1	Cap Screw	M10 X 20
148	D20400413	2	Washer	
149	D20400471	1	Washer	
150	D28981437	1	Retainer	
151	D28982430	X	Retainer	Right Hand
152	D44718300	1	Plug	
153	D40784000	2	Bolt	
154	D44777500	2	Rope	
155	D42388100	2	Hook	

FOOTNOTE [A] FOR ASSYMMETRIC LIGHT
FOOTNOTE [B] FOR SYMMETRIC LIGHT
FOOTNOTE [C] AUTO LEVEL COMBINE
FOOTNOTE [D] OPTIONAL EQUIPMENT STANDARD COMBINE, STANDARD EQUIPMENT AUTO LEVEL COMBINE,SLOPES
FOOTNOTE [E] WHEELS 30.5 LR32 FOR TRACTION
FOOTNOTE [F] ONLY USED FOR TRACTION WHEEL (TERRATYRES) 73X44 00-32
FOOTNOTE [G] FOR ALL MACHINE AND STANDARD MAC. WITH AL TABLE 18" PF AND 20-25 FF/PF
FOOTNOTE [H] USED FOR TRACTION WHEEL - TYRES 900/55R32 AND 1050 /50R32
FOOTNOTE [I] CUT TO REQUIRED LENGTH

https://truckmanualshub.com/

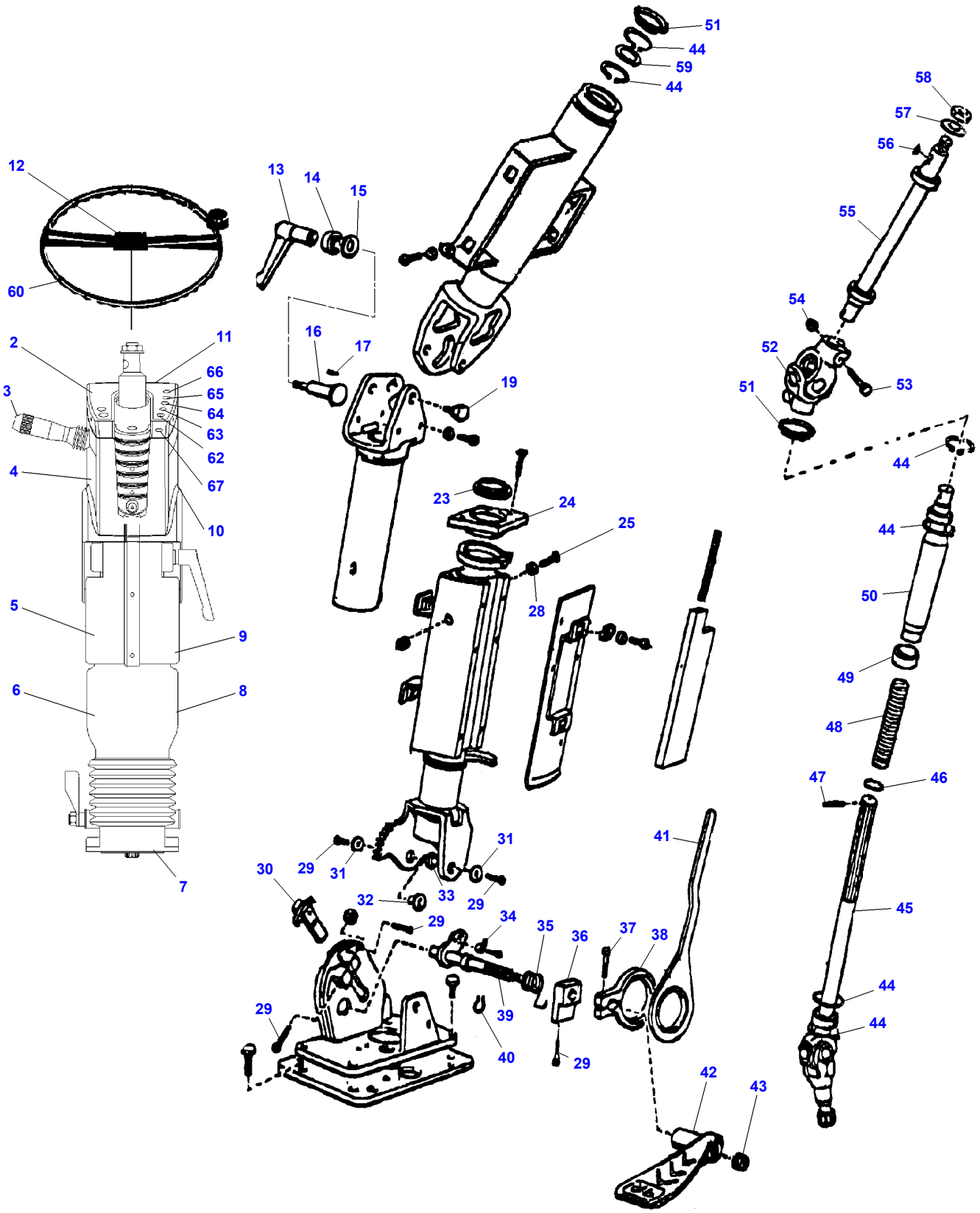

https://truckmanualshub.com/

Item	Part Number	Qty	Description	Comments
1	D45940036	1	Column	[A]
2		1	Not Used	
3	D45932400	1	Commutator	(1)
4	D45931700	1	Cover	(1) Left Hand
5	D45931800	1	Cover	(1) Right Hand
6	D45932100	1	Cover	(1) Left Hand
7	D45932200	1	Bellows	(1)
8	D45932000	1	Cover	(1) Right Hand
9	D45931800	1	Cover	(1) Right Hand
10	D45931600	1	Cover	(1) Right Hand
11	D28985459	1	Board	(1)
12	D45940800	1	Cover	
13	D43387600	1	Grip	
14	D45940003	1	Bush	
15	D45940004	2	Washer	
16	D45940005	1	Screw	
17	390215X1	1	Roll Pin	Diameter 3 X 20
19	D45940006	2	Screw	
23	D45940007	1	Gasket	
24	D45940008	1	Cover	
25	339721X1	1	Cap Screw	M5 X 16
28	D41010500	1	Nut	
29	3009431X1	6	Screw	M6 X 20
30	D45940009	1	Locking Plate	
31	391038X1	2	Flat Washer	
32	D45940010	1	Pivot	Right Hand
33	D45940011	1	Pivot	Left Hand
34	D45940012	1	Spring Carrier	
35	D45940013	1	Spring	
36	D45940015	1	Bearing	
37	D40688800	1	Screw	
38	D45940016	1	Retainer	
39	D45940014	1	Clevis Pin	
40	D42501300	1	Circlip	
41	D45940018	1	Dog	
42	D45940017	1	Pedal	
43	1440329X1	1	Locknut	M10
44	D42512900	6	Circlip	
45	D45940020	1	Drive Shaft	
46	D42547500	1	Ring	
47	D42604600	1	Pin	
48	D45940024	1	Spring	
49	D45940019	1	Bush	
50	D45940023	1	Tube	
51	D45940001	2	Gasket	
52	D45940021	1	Universal Joint	
53	339009X1	2	Cap Screw	M8 X 35
54	394367X1	2	Locknut	M8
55	D45940022	1	Clevis Pin	
56	D43171400	1	Key	
57	D20400438	1	Washer	
58	D41042800	1	Nut	M18
59	D45940002	1	Spacer	
60	D45940300	1	Steering Wheel	
62		X	Not Used	
63		X	Not Used	
64		X	Not Used	
65		X	Not Used	
66		X	Not Used	
67		X	Not Used	

FOOTNOTE [A] NOT ILLUSTRATED

https://truckmanualshub.com/

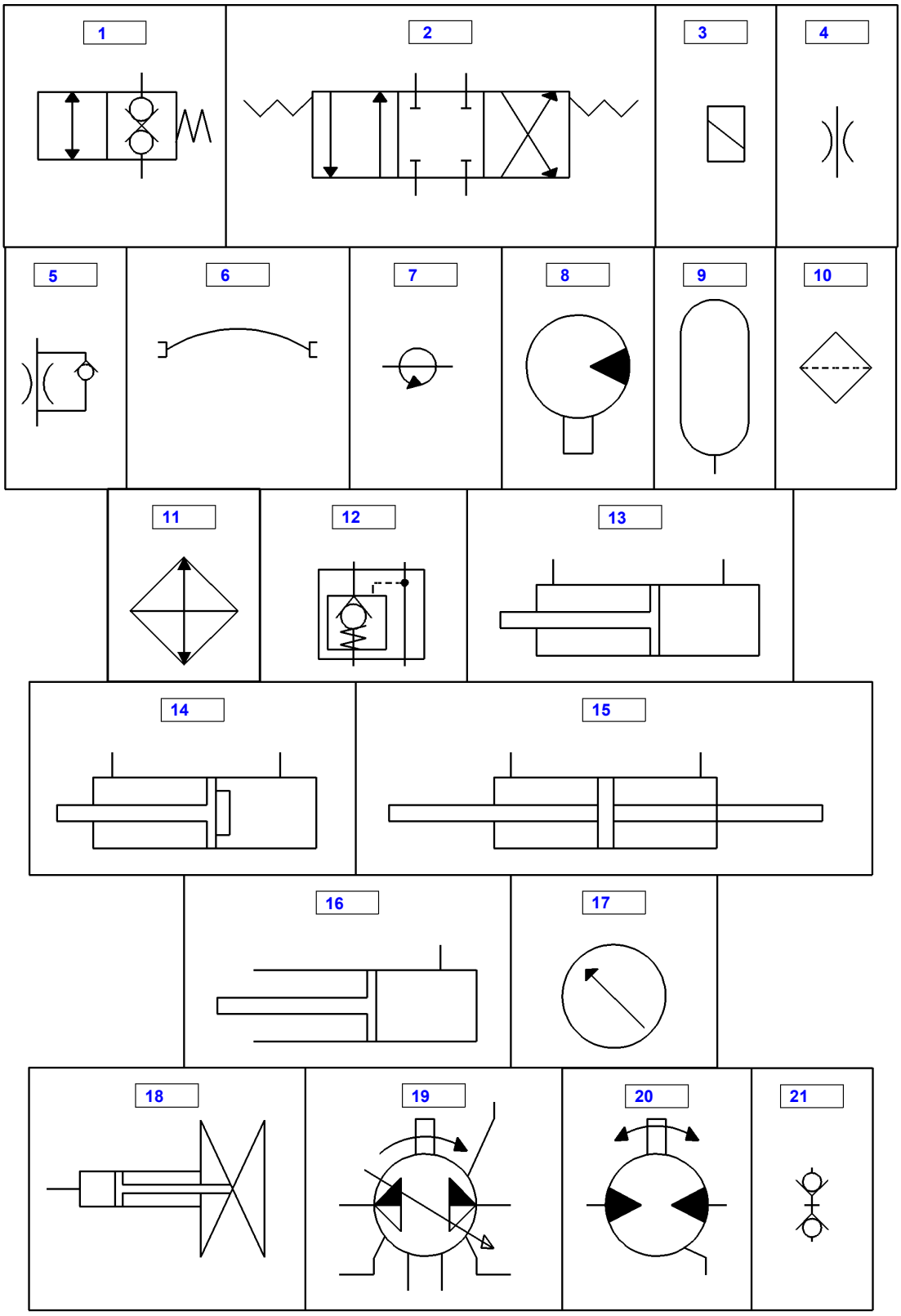

D-ADZA-002-A

https://truckmanualshub.com/

Item	Qty	Description	Comments
1	X	Pressure Valve	2/2 VENTIL
2	X	Pressure Valve	4/3 VENTIL
3	X	Coil	MAGNETSPOLE
4	X	Regulator	DROVLESKIVE
5	X	Regulator	DROLESKIVE.EN VE
6	X	Hydraulic Hose	HYDR. SLANGE
7	X	Clutch	DREJEFORBINDELSE
8	X	Hydraulic Motor	HYDR. MOTOR
9	X	Accumulator	AKKUMLATOR
10	X	Filter	OLIEFILTER
11	X	Radiator	KOLER
12	X	Non Return Valve	KONTRAVENTIL
13	X	Hydraulic, Cylin	DOBBELTV.CYLIND.
14	X	Hydraulic, Cylin	DOBBELTV. YLIND.
15	X	Steering Cyl	STYRE CYLINDER
16	X	Hydraulic, Cylin	ENKELTVIRKENDE
17	X	Manometer	MANOMETER
18	X	Variator	CYLINDERVARIATOR
19	X	Hydraulic Pump	FREMDRIFTSPUMPE
20	X	Hydraulic Motor	FREMDRIFTSMOTOR
21	X	Coupling	LYNKOBLING

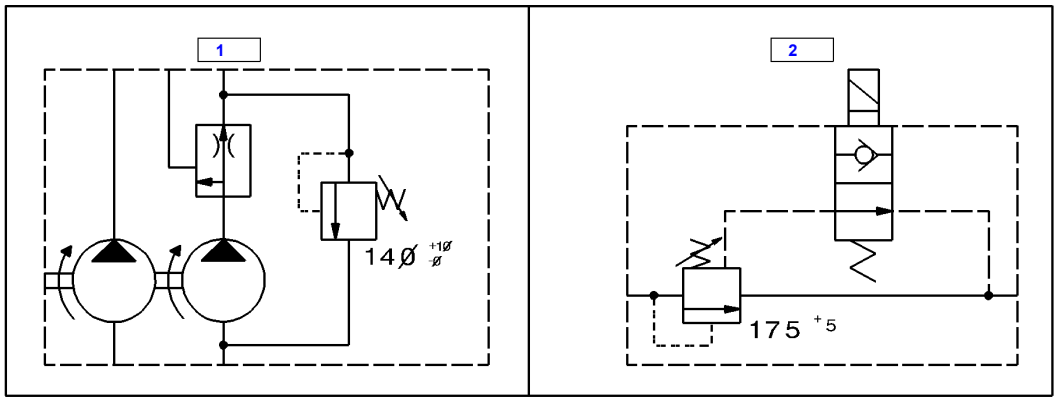

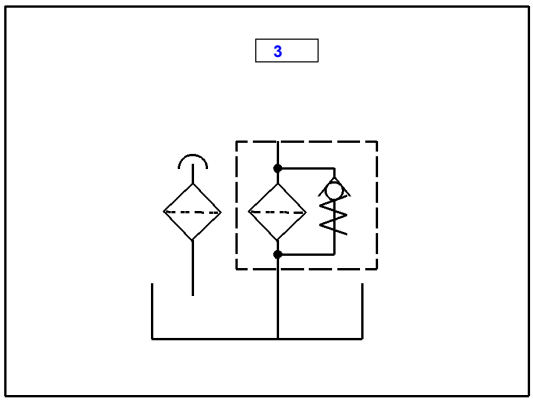

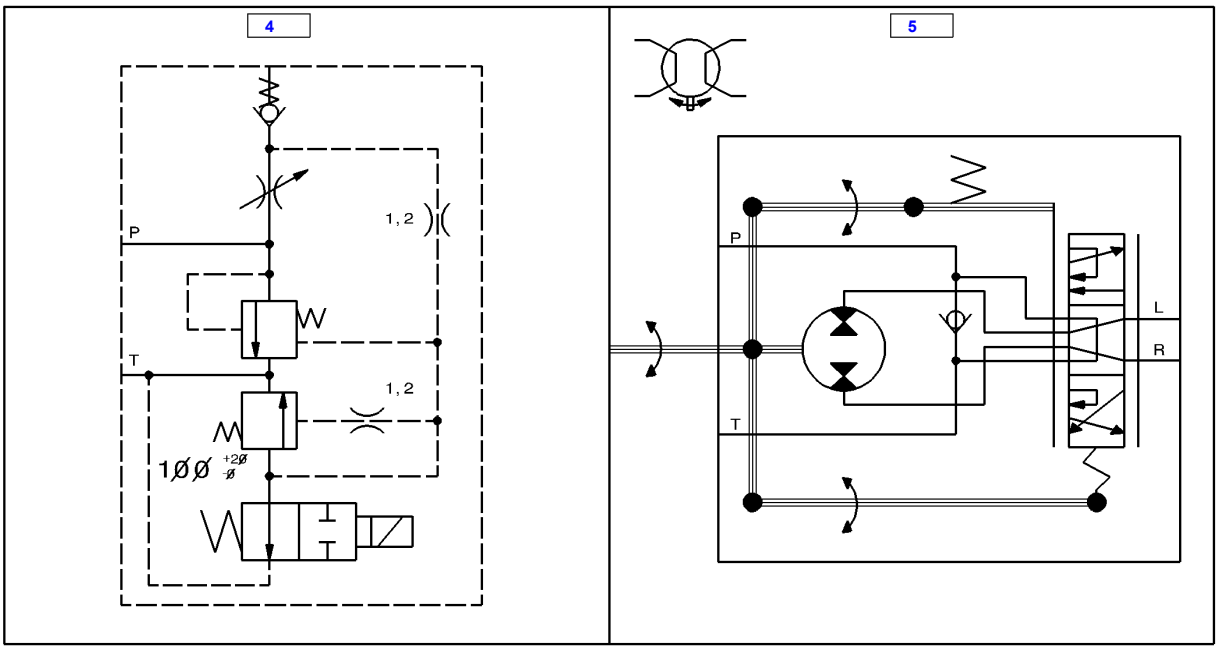

D-ADZA-001-A

https://truckmanualshub.com/

Item	Qty	Description	Comments
1	X	Hydraulic Pump	HJALPEHYDRAULIK PUMPE
2	X	Pressure Valve	OVERTRYK BYPASSVENTIL
3	X	Oil Tank	HYDRAULIKOLIETAN
4	X	Divider	FLOWDIVIDER
5	X	Valve Block	STYREORBITROL

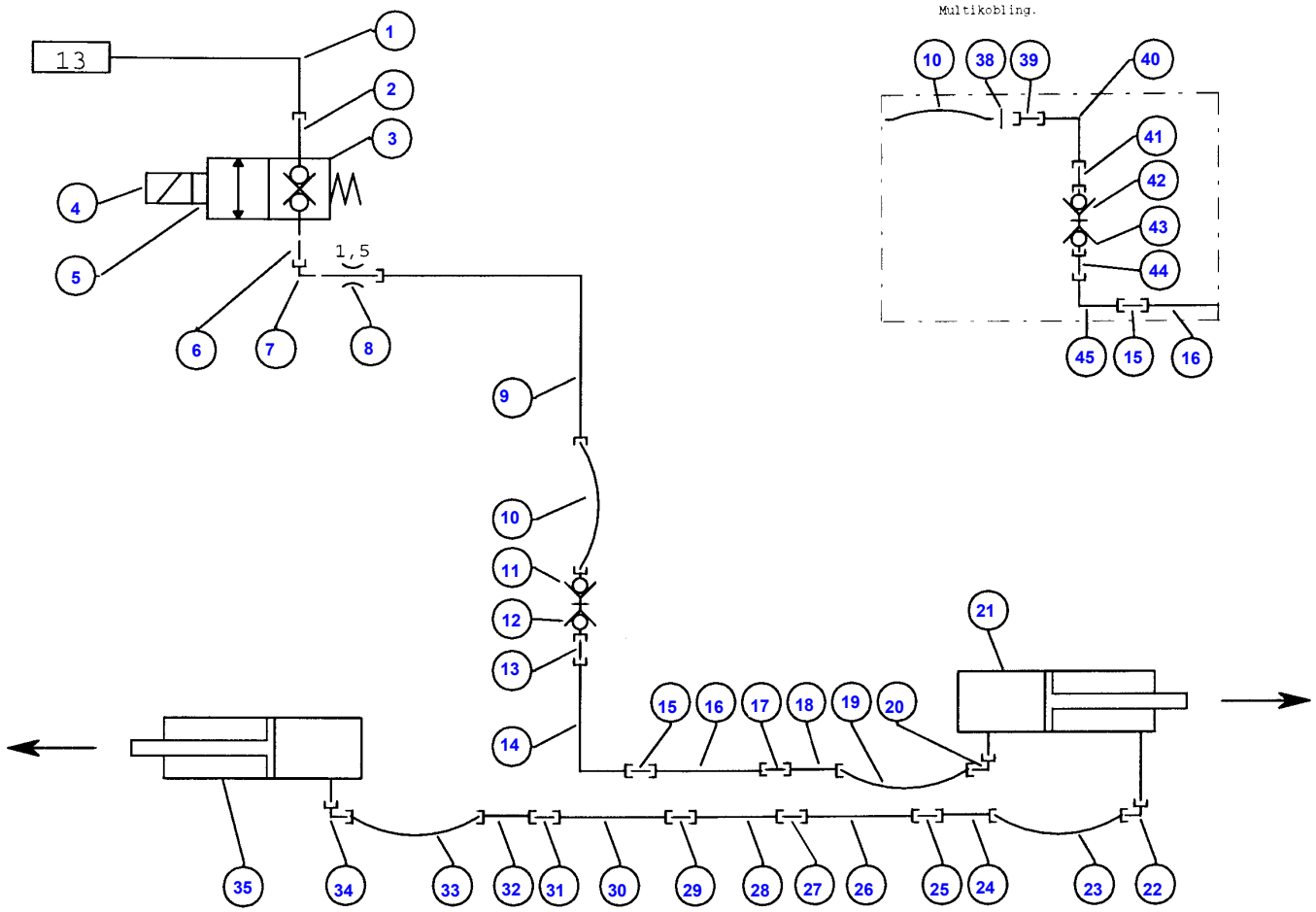
13
1,5
Multikobling.

https://truckmanualshub.com/

Item	Part Number	Qty	Description	Comments
1	D28280653	1	Oil Pipe	
2	D45252600	2	Union	
3	D45110054	1	Valve	
	D45110014	1	Kit, Joint	
4	**D45110064**	1	Coil	
5	**D45110065**	1	Mandrel	
6	D45252600	2	Union	
7	D45263900	4	Union	
8	D28780324	1	Washer	1.8MM
9	D28185566	1	Pipe	
10	D45130020	1	Hydr. Hose	
11	D45138800	1	Union	
	D45110017	1	Kit, Joint	
12	D45138900	1	Union	
13	D45252800	1	Union	
14	D28785585	1	Pipe	
15	D45254000	6	Union	
16	D28785587	1	Pipe	12' - 3,72M
	D28283438	2	Oil Pipe	14' - 4,34M
	D28283437	2	Oil Pipe	16' - 4,95M
	D28283436	2	Oil Pipe	18' - 5,56M
	D28283826	2	Tube	20' - 6,16M
	D28785622	2	Pipe	22' - 6,77M
17	D45254000	6	Union	
18	D28785621	3	Pipe	25' - 7,60M
19	D45130017	3	Hydr. Hose	FREEFLOW
	D45130029	3	Hydr. Hose	POWER FLOW
20	D45263900	4	Union	
21	D45100066	1	Cylinder	
22	D45263900	4	Union	
23	D45130017	3	Hydr. Hose	FREEFLOW
	D45130029	3	Hydr. Hose	POWER FLOW
24	D28785621	3	Pipe	25' - 7,60M
25	D45254000	6	Union	
26	D28283438	2	Oil Pipe	14' - 4,34M
	D28283437	2	Oil Pipe	16' - 4,95M
	D28283436	2	Oil Pipe	18' - 5,56M
	D28283826	2	Tube	20' - 6,16M
	D28785622	2	Pipe	22' - 6,77M
27	D45254000	6	Union	
28	D28785586	1	Pipe	
29	D45254000	6	Union	
30	D28283437	1	Oil Pipe	16' - 4,95M
	D28283436	1	Oil Pipe	18' - 5,56M
	D28283826	1	Tube	20' - 6,16M
	D28785622	1	Pipe	22' - 6,77M
31	D45254000	6	Union	
32	D28785621	3	Pipe	25' - 7,60M
33	D45130017	3	Hydr. Hose	FREEFLOW
	D45130029	3	Hydr. Hose	POWER FLOW
34	D45263900	4	Union	
35	D45100067	1	Cylinder	
38	D45232400	1	Washer	
39	D45278000	1	Connector	
40	D28785593	1	Pipe	
41	D45272100	2	Connector	
42	D45140035	1	Coupling	
	D45149100	1	O Ring	
43	D45140034	1	Coupling	
44	D45272100	2	Connector	
45	D28785877	1	Pipe	
	D28785588	1	Pipe	

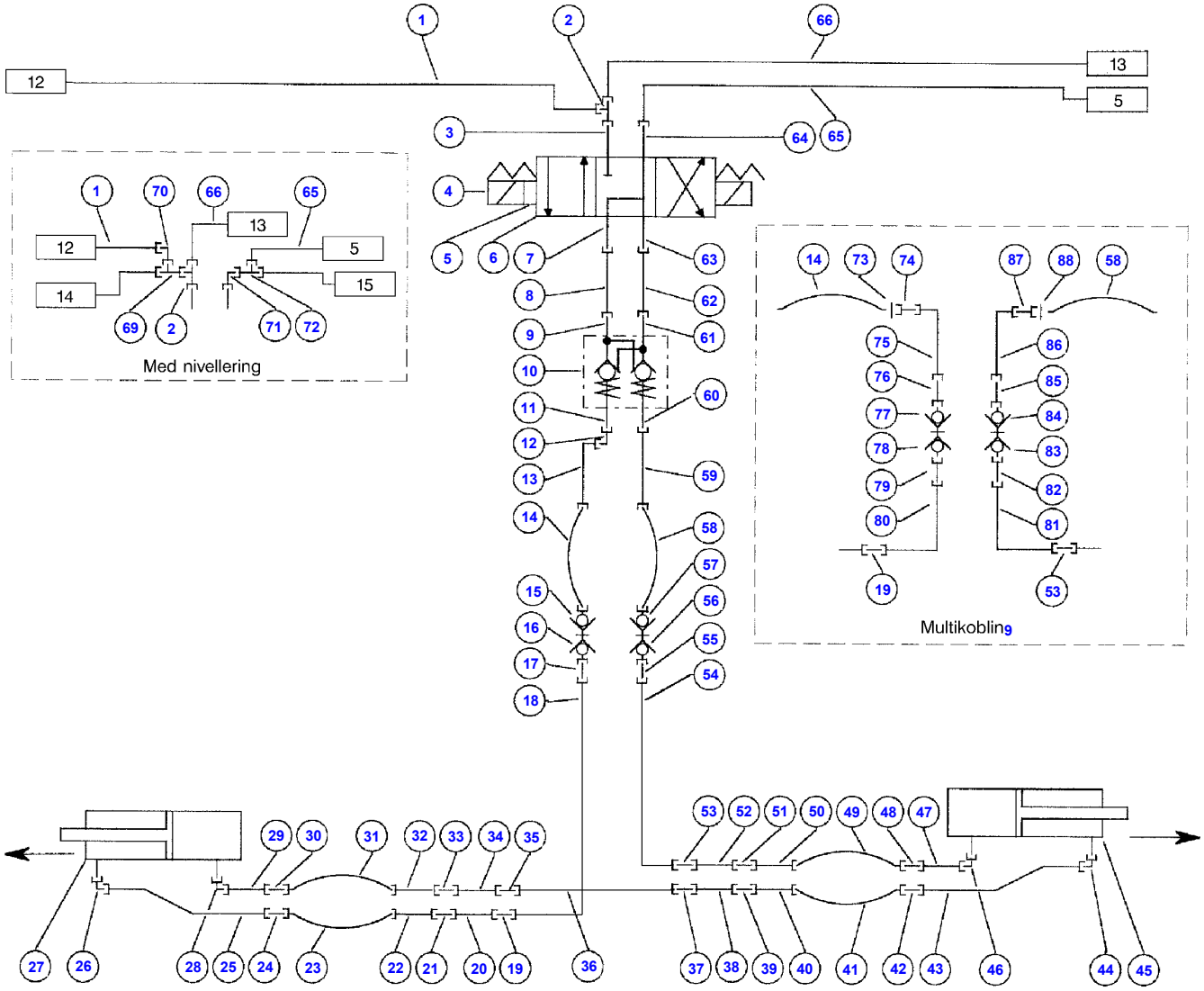

D-ADZC-001-A

https://truckmanualshub.com/

Item	Part Number	Qty	Description	Comments
1	D28780458	1	Pipe	
2	D45266100	3	Union	
3	D45252600	8	Union	
4	**D45110064**	2	Coil	
	D45252600	8	Union	
5	**D45110096**	1	Distributor	
6	D45110095	1	Pressure Valve	
	D45110015	1	Gasket	
7	D45252600	8	Union	
8	D28780988	2	Oil Pipe	
9	D45252600	8	Union	
10	D45110098	1	Pressure Valve	
11	D45252600	8	Union	
12	D45263900	7	Union	
13	D28780991	1	Oil Pipe	
14	D45130054	2	Hydr. Hose	
15	D45138800	2	Union	
	D45110017	2	Kit, Joint	
16	D45138900	2	Union	
17	D45252800	2	Union	
18	D28785583	1	Pipe	
19	D45254000	12	Union	
20	D28283438	4	Oil Pipe	
	D28283437	4	Oil Pipe	
	D28283436	4	Oil Pipe	
	D28283826	4	Tube	
	D28785622	4	Pipe	
21	D45254000	12	Union	
22	D28785621	4	Pipe	
23	D45130017	4	Hydr. Hose	
24	D45254000	12	Union	
25	D28281208	2	Oil Pipe	
	D28283571	2	Oil Pipe	
26	D45263900	7	Union	
27	D45100028	1	Cylinder	
28	D45263900	7	Union	
29	D28281207	2	Oil Pipe	
	D28283572	2	Oil Pipe	
30	D45254000	12	Union	
31	D45130017	4	Hydr. Hose	
32	D28785621	4	Pipe	
33	D45254000	12	Union	
34	D28283438	4	Oil Pipe	
	D28283437	4	Oil Pipe	
	D28283436	4	Oil Pipe	
	D28283826	4	Tube	
	D28785622	4	Pipe	
35	D45254000	12	Union	
36	D28785586	1	Pipe	Up to Serial or Engine Number 942481
	D28286273	1	Pipe	From Serial or Engine Number 942482
	D28286274	1	Pipe	From Serial or Engine Number 942482
37	D45254000	12	Union	
38	D28283438	4	Oil Pipe	
	D28283437	4	Oil Pipe	
	D28283436	4	Oil Pipe	
	D28283826	4	Tube	
	D28785622	4	Pipe	
39	D45254000	12	Union	
40	D28785621	4	Pipe	
41	D45130017	4	Hydr. Hose	
42	D45254000	12	Union	
43	D28281208	2	Oil Pipe	
	D28283571	2	Oil Pipe	
44	D45263900	7	Union	
45	D45100027	1	Cylinder	
46	D45263900	7	Union	
47	D28281207	2	Oil Pipe	
	D28283572	2	Oil Pipe	
48	D45254000	12	Union	
49	D45130017	4	Hydr. Hose	
50	D28785621	4	Pipe	

https://truckmanualshub.com/

Item	Part Number	Qty	Description	Comments
51	D45254000	12	Union	
52	D28283438	4	Oil Pipe	
52	D28283437	4	Oil Pipe	
52	D28283436	4	Oil Pipe	
52	D28283826	4	Tube	
52	D28785622	4	Pipe	
53	D45254000	12	Union	
54	D28785585	1	Pipe	Up to Serial or Engine Number 942481
54	D28286271	1	Pipe	From Serial or Engine Number 942482
54	D28286272	1	Pipe	From Serial or Engine Number 942482
55	D45252800	2	Union	
56	D45138800	2	Union	
56	D45110017	2	Kit, Joint	
57	D45138900	2	Union	
58	D45130054	2	Hydr. Hose	
59	D28185562	1	Hydraulic Hose	
60	D45252600	8	Union	
61	D45252600	8	Union	
62	D28780988	2	Oil Pipe	
63	D45252600	8	Union	
64	D45252600	1	Union	
65	D28185570	1	Hydraulic Hose	
66	D28280653	1	Oil Pipe	
69	D45266100	3	Union	
70	D45263900	7	Union	
71	D45263900	7	Union	
72	D45266100	3	Union	
73	D45232400	2	Washer	
74	D45278000	2	Connector	
75	D28785593	2	Pipe	
76	D45272100	4	Connector	
77	D45140035	2	Coupling	
77	D45149100	2	O Ring	
78	D45140034	2	Coupling	
79	D45272100	4	Connector	
80	D28785876	1	Pipe	
81	D28785878	1	Pipe	
82	D45272100	4	Connector	
83	D45140034	2	Coupling	
84	D45140035	2	Coupling	
84	D45149100	2	O Ring	
85	D45272100	4	Connector	
86	D28785593	2	Pipe	
87	D45278000	2	Connector	
88	D45232400	2	Washer	

https://truckmanualshub.com/

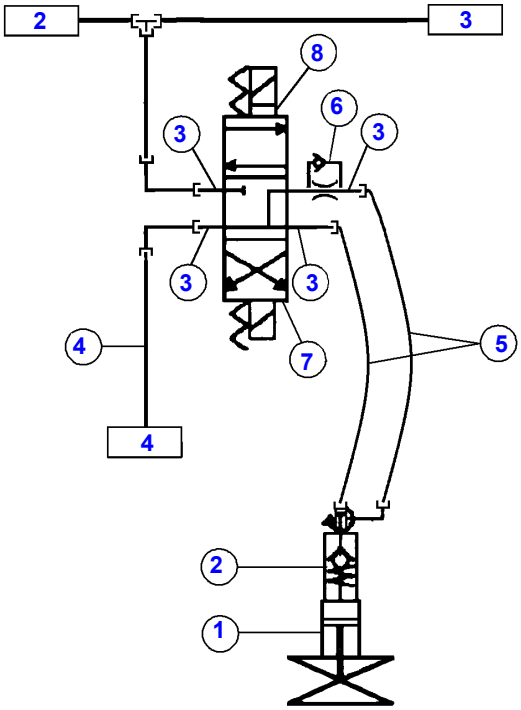

D-ADZD-006-A

https://truckmanualshub.com/

Item	Part Number	Qty	Description	Comments
1	D28382095	1	Variator	
2	D28382051	1	Coupling	
3	D45252600	2	Union	
4	D28780960	1	Oil Pipe	
5	D45130078	1	Hydraulic Hose	
6	D28781308	1	Washer	
7	D45110015	1	Gasket	
8	**D45110096**	1	Distributor	
9	D45258000	1	Union	[A] From Serial or Engine Number 58301
10	D45266900	1	Connector	[A] From Serial or Engine Number 58301
11	D28782553	1	Tube	[A] From Serial or Engine Number 58301

FOOTNOTE [A] NOT ILLUSTRATED

https://truckmanualshub.com/

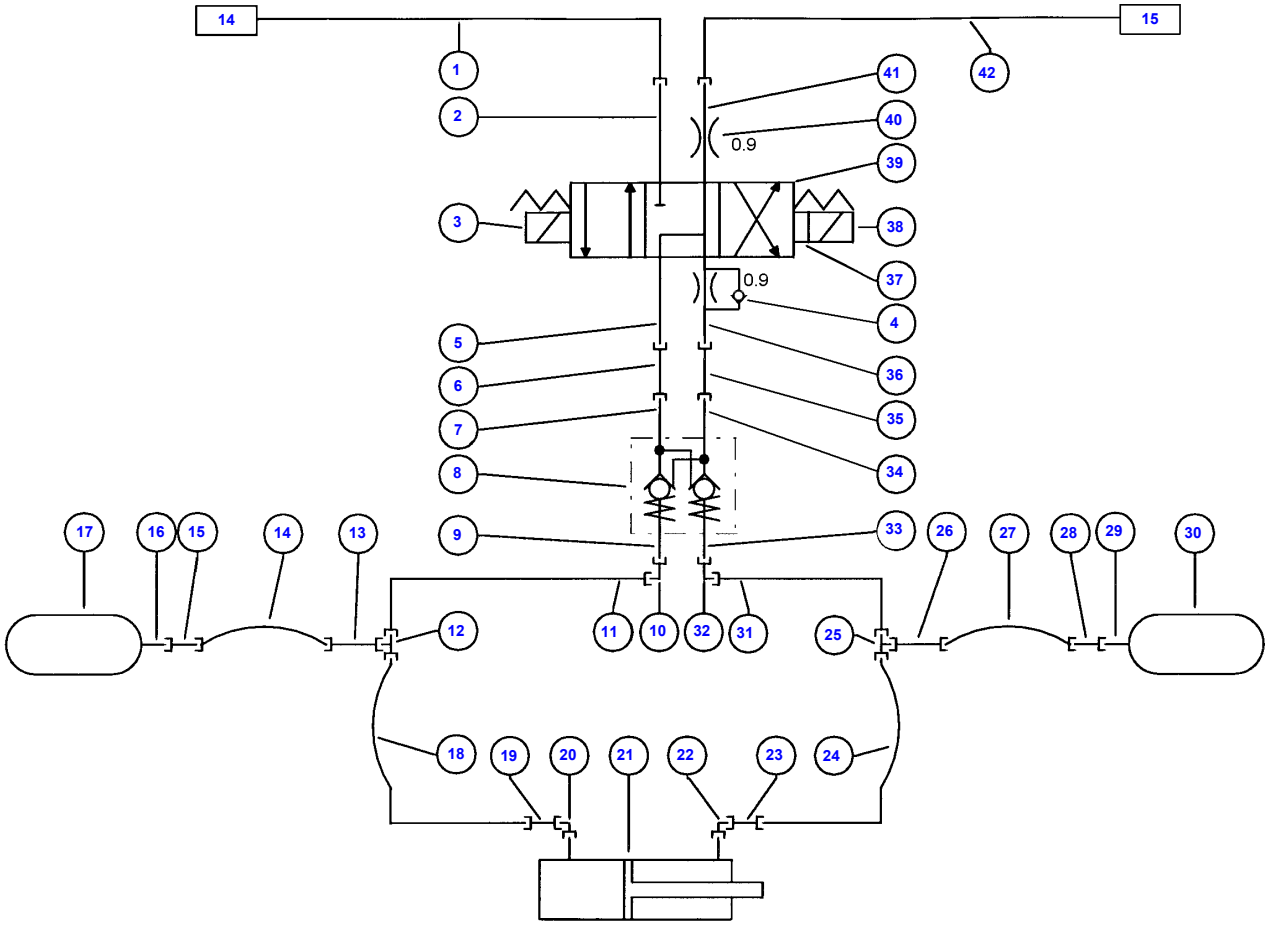

D-ADZE-001-B

https://truckmanualshub.com/

Item	Part Number	Qty	Description
1	D28781220	1	Pipe
2	D45252600	7	Union
3	**D45110064**	2	Coil
4	D28780488	1	Washer
5	D45252600	7	Union
6	D28780988	2	Oil Pipe
7	D45252600	7	Union
8	D45110098	1	Pressure Valve
9	D28181678	1	Union
10	D45263900	4	Union
11	D28185563	1	Pipe
12	D45266100	2	Union
13	D28280653	4	Oil Pipe
14	D45123600	2	Hydr. Hose
15	D45272300	2	Connector
16	D45250500	2	Union
17	D45148500	2	Accumulator
18	D45130024	2	Hydr. Hose
19	D28280653	4	Oil Pipe
20	D45263900	4	Union
21	D45100029	1	Ram
22	D45263900	4	Union
23	D28280653	4	Oil Pipe
24	D45130024	2	Hydr. Hose
25	D45266100	2	Union
26	D28280653	4	Oil Pipe
27	D45123600	2	Hydr. Hose
28	D45272300	2	Connector
29	D45250500	2	Union
30	D45148500	2	Accumulator
31	D28185565	1	Pipe
32	D45263900	4	Union
33	D45252600	7	Union
34	D45252600	7	Union
35	D28780988	2	Oil Pipe
36	D45252600	7	Union
37	**D45110096**	1	Distributor
38	**D45110064**	2	Coil
39	D45110095	1	Pressure Valve
	D45110015	1	Gasket
40	D28780720	1	Washer
41	D45252600	7	Union
42	D28781219	1	Pipe

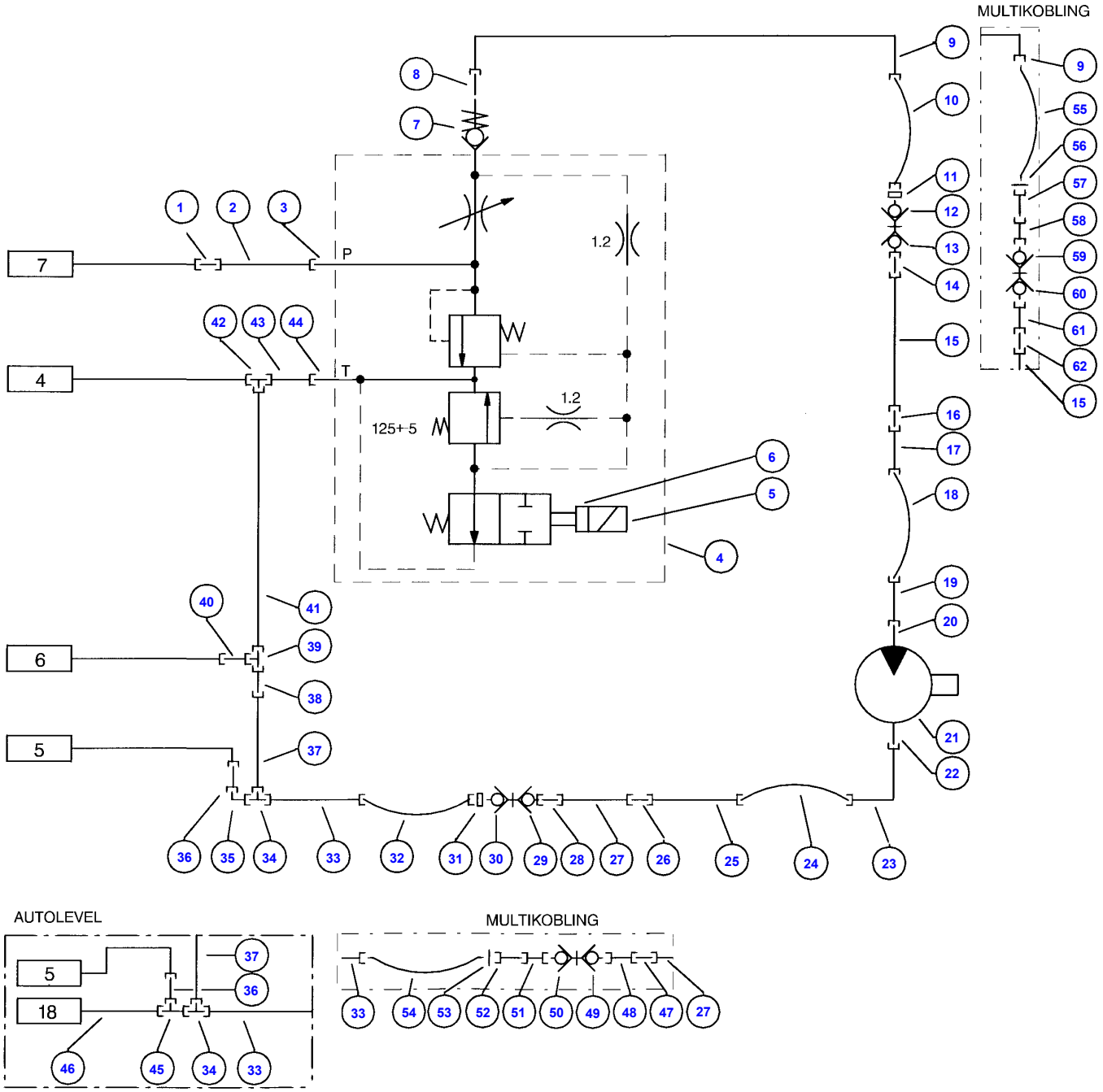

D-ADZF-001-A

https://truckmanualshub.com/

Item	Part Number	Qty	Description	Comments
1	D45254100	1	Union	
2	D28785361	1	Pipe	
3	D45253400	1	Union	
4	D45110069	1	Pressure Valve	
	D45110011	1	Kit, Seal	
5	D45110043	1	Solenoid	BLACK
	D45120077	1	Solenoid	
6	D45110060	1	Pressure Valve	[A] BLACK
	D45120076	1	Electrovalve	BLUE
7	D28251484	1	Non Return Valve	
8	D45250700	5	Union	
9	D28780995	2	Oil Pipe	
	D28780993	1	Oil Pipe	
10	D45130019	2	Hydr. Hose	
11	D45462200	2	O Ring	
12	D45135400	2	Union	
13	D45135300	2	Union	
14	D45250700	5	Union	
15	D28785584	4	Pipe	
	D28286269	1	Pipe	From Serial or Engine Number 61490
	D28286270	1	Pipe	From Serial or Engine Number 61490
16	D45254900	4	Union	
17	D28785895	2	Pipe	12' - 3,72M
	D28785896	2	Pipe	14' - 4,34M
	D28785897	2	Pipe	16' - 4,95M
	D28785898	2	Pipe	18' - 5,56M
	D28785899	2	Pipe	20' - 6,16M
	D28785900	2	Pipe	22' - 6,77M
	D28785599	2	Pipe	25' - 7,60M
18	D45130013	2	Hydr. Hose	FREEFLOW
	D45130015	2	Hydr. Hose	POWERFLOW
19	D28280676	1	Oil Pipe	
20	D45250700	5	Union	
21	D45120700	1	Hydraulic Motor	
22	D45250700	5	Union	
23	D28280677	1	Oil Pipe	
24	D45130013	2	Hydr. Hose	FREEFLOW
25	D28785895	2	Pipe	12' - 3,72M
	D28785896	2	Pipe	14' - 4,34M
	D28785897	2	Pipe	16' - 4,95M
	D28785898	2	Pipe	18' -5,56M
	D28785899	2	Pipe	20' - 6,16M
	D28785900	2	Pipe	22' - 6,77M
	D28785599	2	Pipe	25' - 7,60M
26	D45254900	4	Union	
27	D28785584	4	Pipe	
	D28286269	1	Pipe	From Serial or Engine Number 61490
	D28286270	1	Pipe	From Serial or Engine Number 61490
28	D28785584	4	Pipe	
	D28286269	1	Pipe	From Serial or Engine Number 61490
	D28286270	1	Pipe	From Serial or Engine Number 61490
29	D45250700	5	Union	
30	D45135400	2	Union	
31	D45135300	2	Union	
32	D45462200	2	O Ring	
33	D28780995	2	Oil Pipe	
34	D45256200	1	Union	
35	D45264100	1	Union	
36	D45272100	1	Connector	
37	D28780994	1	Oil Pipe	
38	D45272800	1	Union	
39	D45256400	2	Union	
40	D45272600	1	Union	
41	D28780668	1	Oil Pipe	
42	D45256400	2	Union	
43	D28780669	1	Oil Pipe	
	D28752392	1	Oil Pipe	From Serial or Engine Number 61490
44	D45251500	1	Union	
45	D45266200	1	Union	
46	D28780402	1	Hydr.Hose Assy.	

https://truckmanualshub.com/

Item	Part Number	Qty	Description	Comments
47	D45254900	4	Union	
48	D28785584	4	Pipe	
48	D28286269	1	Pipe	From Serial or Engine Number 61490
48	D28286270	1	Pipe	From Serial or Engine Number 61490
49	D45140034	2	Coupling	
50	D45140035	2	Coupling	
50	D45149100	2	O Ring	
51	D28785594	2	Pipe	
52	D45278100	2	Connector	
53	D45201800	2	Ring	
54	D45130053	2	Hydr. Hose	
55	D45130053	2	Hydr. Hose	
56	D45201800	2	Ring	
57	D45278100	2	Connector	
58	D28785594	2	Pipe	
59	D45140035	2	Coupling	
59	D45149100	2	O Ring	
60	D45140034	2	Coupling	
61	D28785584	4	Pipe	
61	D28286269	1	Pipe	From Serial or Engine Number 61490
61	D28286270	1	Pipe	From Serial or Engine Number 61490
62	D45254900	4	Union	

FOOTNOTE [A] ORDER + D45120076 + D45120077

https://truckmanualshub.com/

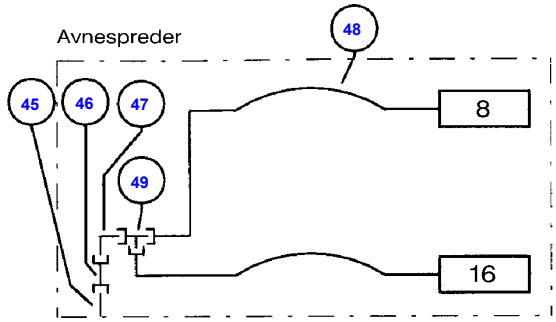

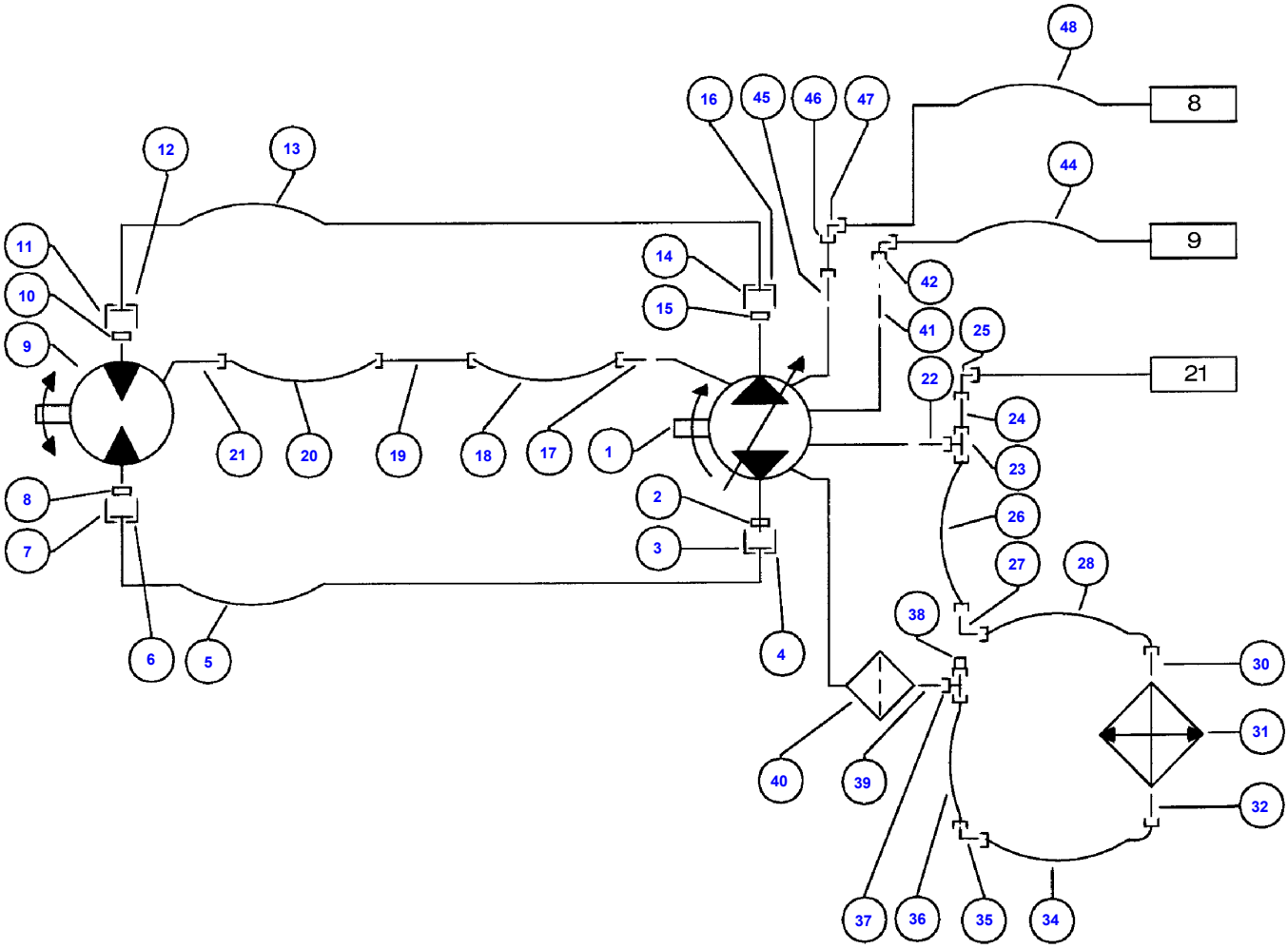

D-ADZG-004-A

https://truckmanualshub.com/

Item	Part Number	Qty	Description	Comments
1	D45168800	1	Hydraulic Pump	
2	D45482700	4	O Ring	
3	D45160800	8	Flange	
4	D45160800	8	Flange	
5	D45130071	1	High Press Hose	
6	D45160800	8	Flange	
7	D45160800	8	Flange	
8	D45463900	4	O Ring	
9	D45165100	1	Hydraulic Motor	
10	D45463900	4	O Ring	
11	D45160800	8	Flange	
12	D45160800	8	Flange	
13	D45130067	1	Hose	
14	D45160800	8	Flange	
15	D45482700	4	O Ring	
16	D45160800	8	Flange	
17	D45251100	6	Union	
18	D45130075	1	Hydraulic Hose	
19	D28783559	1	Oil Pipe	
20	D45130075	1	Hydraulic Hose	
21	D45251100	6	Union	
22	D45251100	6	Union	
23	D45267200	2	Union	
24	D45272400	1	Connector	
25	D45263900	1	Union	
26	D45130022	2	Hydr. Hose	
27	D45269900	2	Connector	
28	D45130049	1	Hydr. Hose	
30	D45251500	2	Union	
31	D28785651	1	Oil Cooler	Up to Serial or Engine Number 61121
	D28782277	1	Oil Cooler	From Serial or Engine Number 61122
32	D45251500	2	Union	
34	D45130039	1	Hydraulic Hose	
35	D45269900	2	Connector	
36	D45130022	2	Hydr. Hose	
37	D45267200	2	Union	
38	D45219900	1	Plug	
	D45204800	1	Union Nut	
	D42501600	1	Circlip	
39	D45251100	6	Union	
40	**D45161300**	1	Oil Filter	
41	D45251100	6	Union	
42	D45264200	2	Union	
44	D45130050	2	Hose	
45	D45251100	1	Union	
46	D28786717	2	Pipe	
47	D45258700	1	Connector	
48	D45130050	2	Hose	
49	D45266500	1	Fork	

https://truckmanualshub.com/

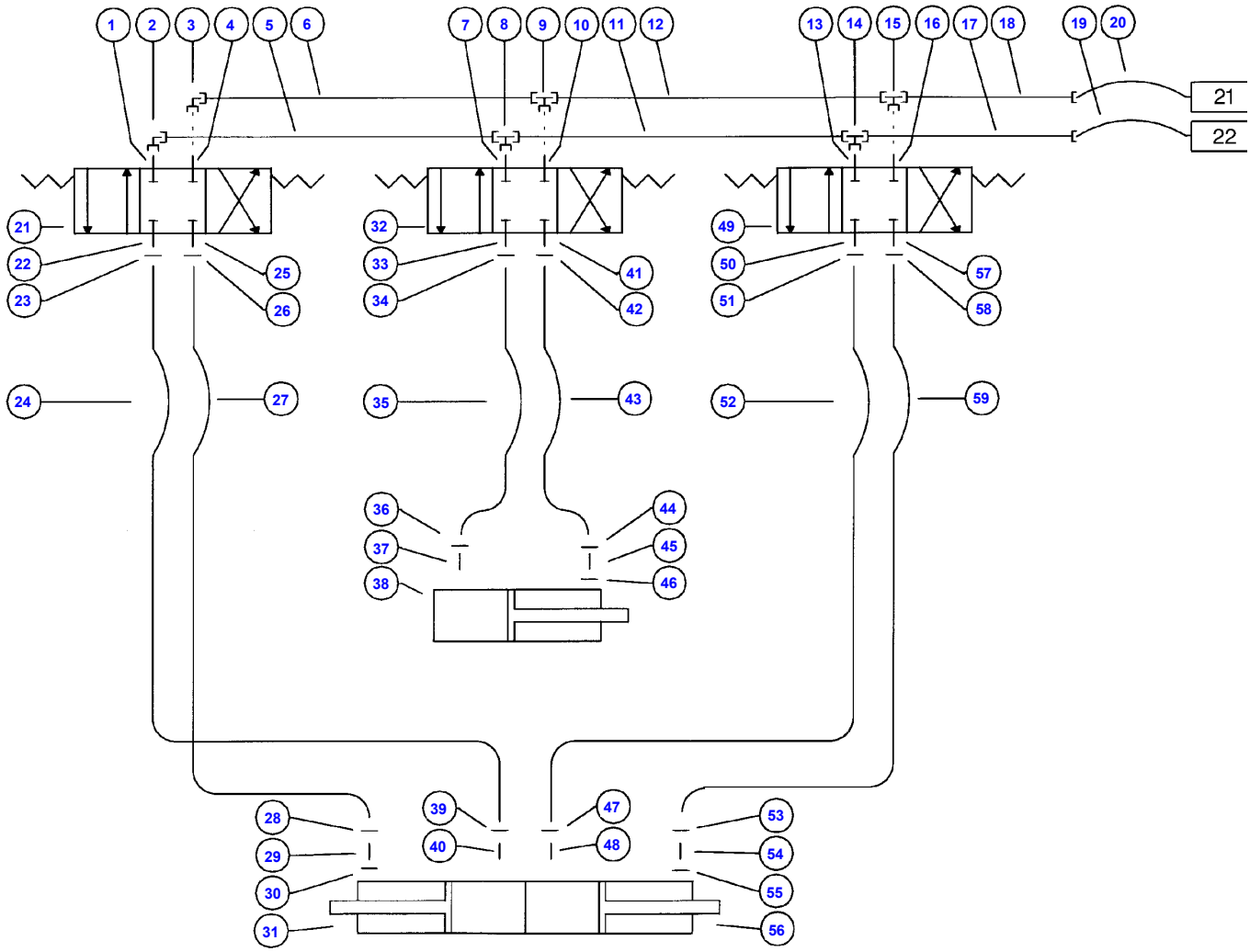

https://truckmanualshub.com/

Item	Part Number	Qty	Description
1	D45252600	12	Union
2	D45263900	2	Union
3	D45263900	2	Union
4	D45252600	12	Union
5	D28280653	6	Oil Pipe
6	D28280653	6	Oil Pipe
7	D45252600	12	Union
8	D45266900	4	Connector
9	D45266900	4	Connector
10	D45252600	12	Union
11	D28280653	6	Oil Pipe
12	D28280653	6	Oil Pipe
13	D45252600	12	Union
14	D45266900	4	Connector
15	D45266900	4	Connector
16	D45252600	12	Union
17	D28280653	6	Oil Pipe
18	D28280653	6	Oil Pipe
19	D45148100	8	Hose
20	D45148100	8	Hose
21	**D45110055**	3	Pressure Valve
22	D45252600	12	Union
23	D45148400	12	Tube
24	D45148100	8	Hose
25	D45252600	12	Union
26	D45148400	12	Tube
27	D45148100	8	Hose
28	D45148400	12	Tube
29	D45148600	6	Clutch
30	D45714200	3	Gasket
31	D45140003	2	Cylinder
32	**D45110055**	3	Pressure Valve
33	D45252600	12	Union
34	D45148400	12	Tube
35	D45148100	8	Hose
36	D45148400	12	Tube
37	D45148600	6	Clutch
38	D45140004	1	Cylinder
39	D45148400	12	Tube
40	D45148600	6	Clutch
41	D45252600	12	Union
42	D45148400	12	Tube
43	D45148100	8	Hose
44	D45148400	12	Tube
45	D45148600	6	Clutch
46	D45714200	3	Gasket
47	D45148400	12	Tube
48	D45148600	6	Clutch
49	**D45110055**	3	Pressure Valve
50	D45252600	12	Union
51	D45148400	12	Tube
52	D45148100	8	Hose
53	D45148400	12	Tube
54	D45148600	6	Clutch
55	D45714200	3	Gasket
56	D45140003	2	Cylinder
57	D45252600	12	Union
58	D45148400	12	Tube
59	D45148100	8	Hose

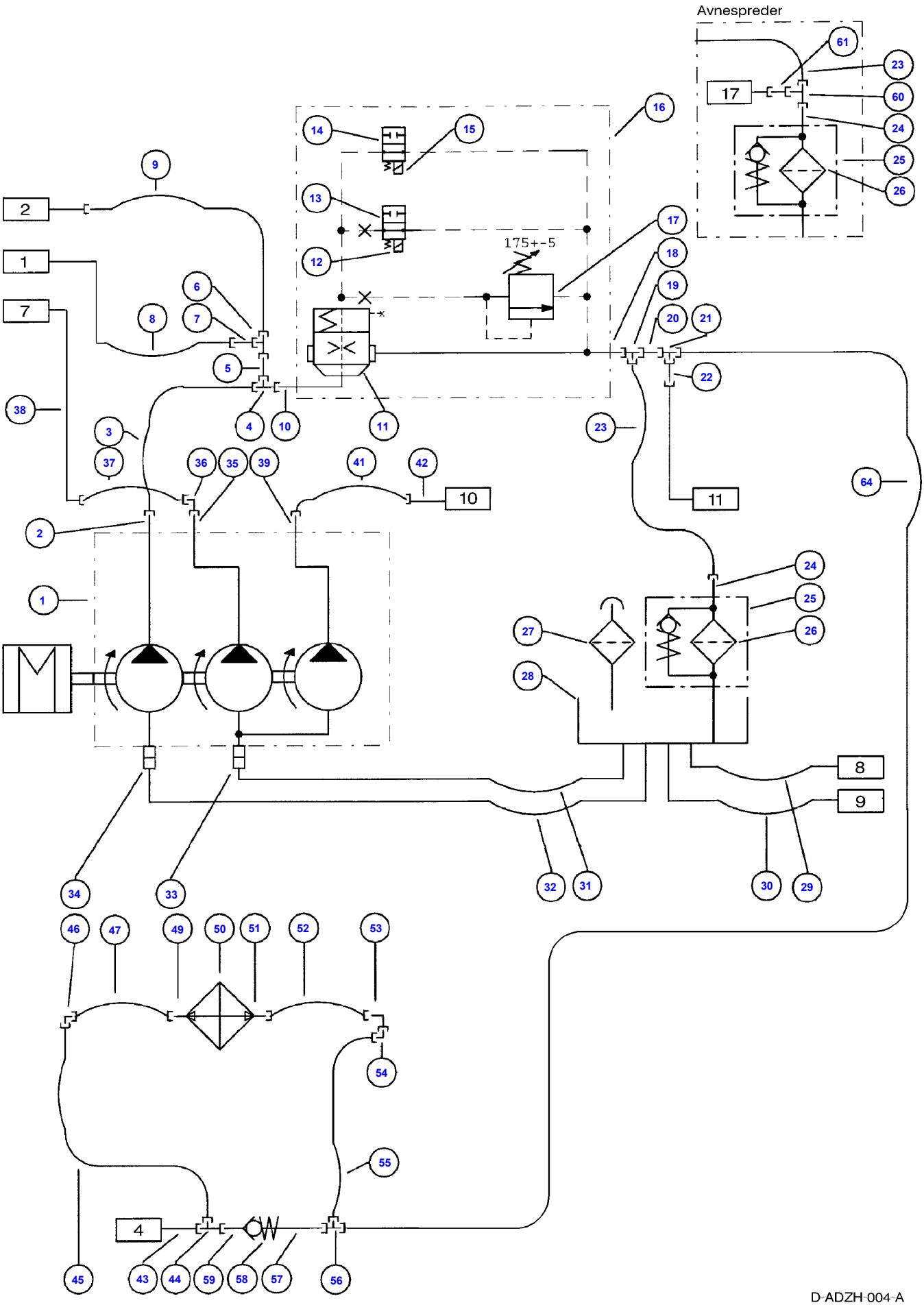
Avnespreder
175+-5
D-ADZH-004-A

https://truckmanualshub.com/

Item	Part Number	Qty	Description	Comments
1	D45166900	1	Pump	
	D45167300	1	Kit, Seal	
2	D45251500	4	Union	
3	D45130042	1	Hydr. Hose	
4	D45266600	4	Union	
5	D45272100	1	Connector	
6	D45266200	1	Union	
7	D45272800	1	Union	
8	D45130143	1	Hydraulic Hose	
9	D45130043	1	Hydr. Hose	
10	D45251500	4	Union	
11	**D45120002**	1	Pressure Valve	
	D45120043	1	O Ring	KIT TO D45120002
12	**D45110064**	2	Coil	
13	D45120004	2	Bypass	
14	D45120004	2	Bypass	
15	**D45110064**	2	Coil	
16	D45110070	1	Block	
	D45120001	1	Kit, Seal	
17	D45120003	1	Pressure Valve	
18	D45255500	1	Union	
19	D45266800	2	Union	
20	D45273100	1	Reducer	
21	D45266600	4	Union	
22	D45272000	1	Connector	
23	D45130051	1	Hydr. Hose	
24	D45255300	1	Union	
25	D45165800	1	Return Fl.Filter	
26	**D45165900**	1	Filter	
27	**D45103000**	1	Filter	
28	D28787072	1	Bottom	
	D28781818	1	Plate	
	D28781819	1	Kit, Seal	
29	D45130050	2	Hose	
30	D45130050	2	Hose	
31	D28782308	2	Hose	
32	D28782308	2	Hose	
33	D28781675	2	Bracket	
34	D28781675	2	Bracket	
35	D45250700	2	Union	
36	D45264100	2	Union	
37	D45130040	2	Hydr. Hose	
38	D28786565	1	Pipe	
39	D45250700	2	Union	
41	D45130040	2	Hydr. Hose	
42	D28786564	1	Pipe	
43	D28780671	1	Oil Pipe	
44	D45266600	4	Union	
45	D45130042	4	Hydr. Hose	Up to Serial or Engine Number 61489
	D45130141	4	Hydr. Hose	From Serial or Engine Number 61490
46	D45269900	2	Connector	
47	D45130037	4	Hydraulic Hose	
49	D45251500	4	Union	
50	D28785651	1	Oil Cooler	
51	D45251500	4	Union	
52	D45010037	2	Connector	
53	D45264300	1	Connectors	
54	D45269900	2	Connector	
55	D45130039	4	Hydraulic Hose	
56	D45267700	4	Connection	
57	D45255600	2	Union	
58	D45110097	1	Bypass	
59	D45255600	2	Union	
60	D45266800	2	Union	
61	D45273200	1	Union	
64	D45130039	4	Hydraulic Hose	

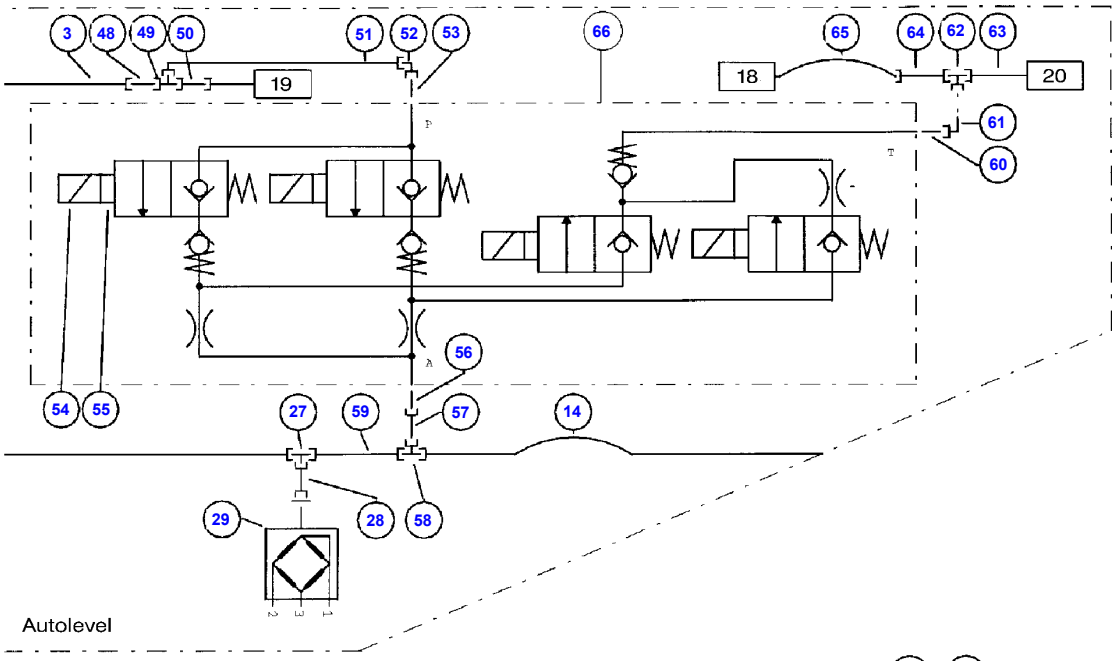
3
48
49
50
51
52
53
66
65
64
62
63
19
18
20
61
60
56
54
55
27
59
57
14
29
28
58
Autolevel

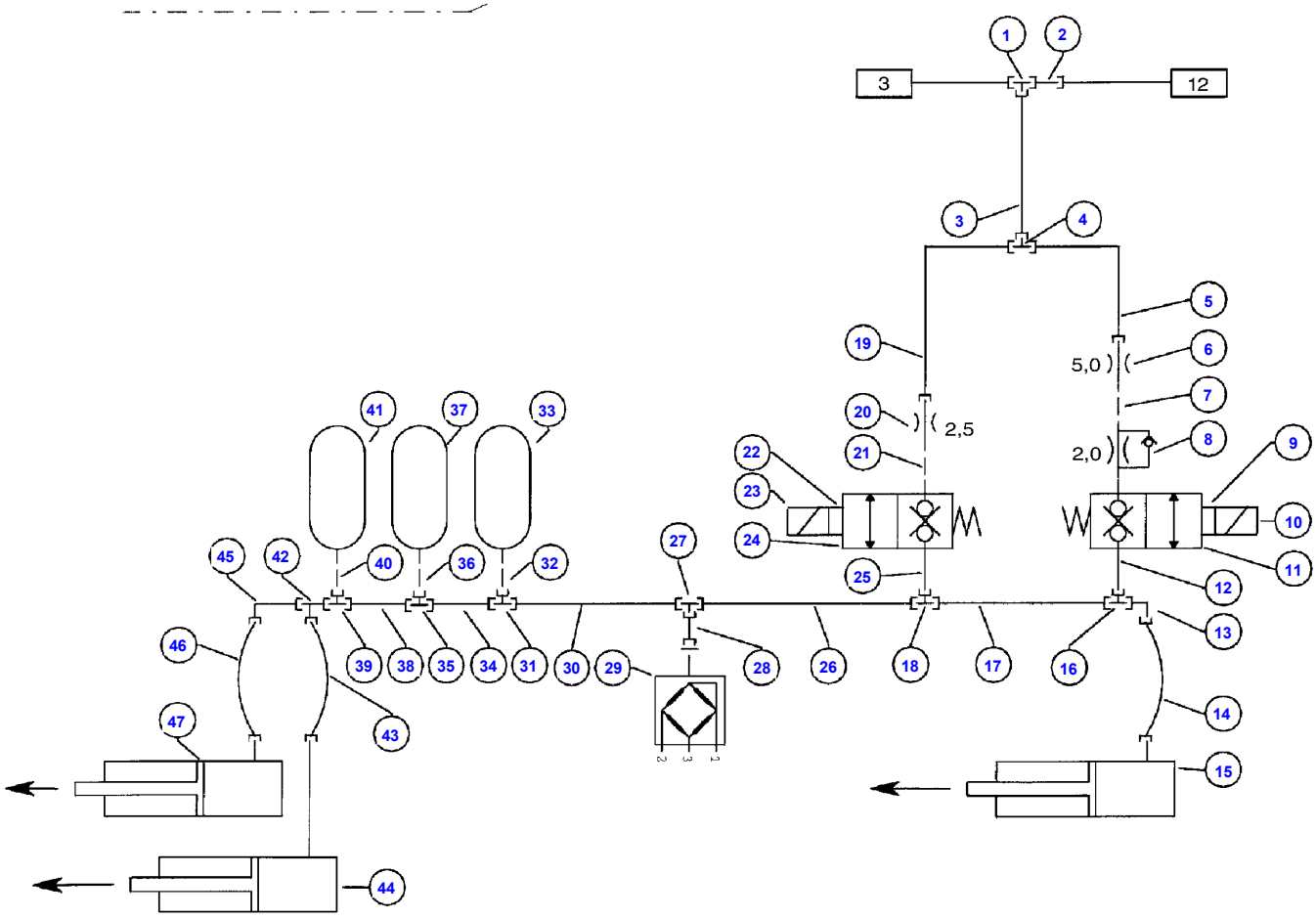
1
2
3
12
3
4
5
6
7
8
9
10
11
12
13
14
15
16
17
18
19
20
21
22
23
24
25
26
27
28
29
30
31
32
33
34
35
36
37
38
39
40
41
42
43
44
45
46
47
5,0
2,5
2,0

D-ADAZ-001-B

https://truckmanualshub.com/

Item	Part Number	Qty	Description	Comments
1	D45256200	2	Union	
2	D45272100	1	Connector	
3	D28780662	1	Oil Pipe	
4	D45256200	2	Union	
5	D28780655	3	Oil Pipe	
6	D28780712	1	Washer	
7	D45255200	2	Connector	
8	D28780319	1	Washer	
9	**D45110065**	4	Mandrel	
10	**D45110064**	3	Coil	
11	D45110014	2	Kit, Joint	
	D45110054	2	Valve	
12	D45250800	2	Union	
13	D45264000	2	Union	
14	D45130028	3	Hydr. Hose	
15	D45140002	3	Ram	
16	D45267100	5	Union	
17	D28785434	2	Pipe	
18	D45267100	5	Union	
19	D28780655	3	Oil Pipe	
20	D28780711	1	Washer	
21	D45255200	2	Connector	
22	**D45110065**	4	Mandrel	
23	**D45110064**	3	Coil	
24	D45110054	2	Valve	
	D45110014	2	Kit, Joint	
25	D45250800	2	Union	
26	D28785434	2	Pipe	
27	D45256100	1	Union	
28	D45277000	1	Connector	
29	D28781255	1	Sensor	
30	D28785073	1	Pipe	
31	D45267100	5	Union	
32	D45250500	3	Union	
33	D45100300	3	Accumulator	
34	D28780695	2	Guard	
35	D45267100	5	Union	
36	D45250500	3	Union	
37	D45100300	3	Accumulator	
38	D28780695	2	Guard	
39	D45267100	5	Union	
40	D45250500	3	Union	
41	D45100300	3	Accumulator	
42	D45266300	1	Union	
43	D45130028	3	Hydr. Hose	
44	D45140002	3	Ram	
45	D45264000	2	Union	
46	D45130028	3	Hydr. Hose	
47	D45140002	3	Ram	
48	**D45110065**	4	Mandrel	
	D45254900	1	Union	
49	D45266200	1	Union	
50	D45272200	2	Union	
51	D28186024	1	Pipe	
52	D45264100	2	Union	
53	D45253400	3	Union	
54	**D45110064**	3	Coil	
55	D45120060	4	Carrier	
56	D45253400	3	Union	
57	D45272200	2	Union	
58	D45267300	2	Union	
59	D28186025	1	Pipe	
60	D45253400	3	Union	
61	D45264100	2	Union	
62	D45267300	2	Union	
63	D28186023	1	Pipe	
64	D28780655	3	Oil Pipe	
65	D45130040	1	Hydr. Hose	
66	D45120023	1	Pressure Valve	CPL.
	D45120024	1	Kit, Gasket	KIT TO D45120023

https://truckmanualshub.com/

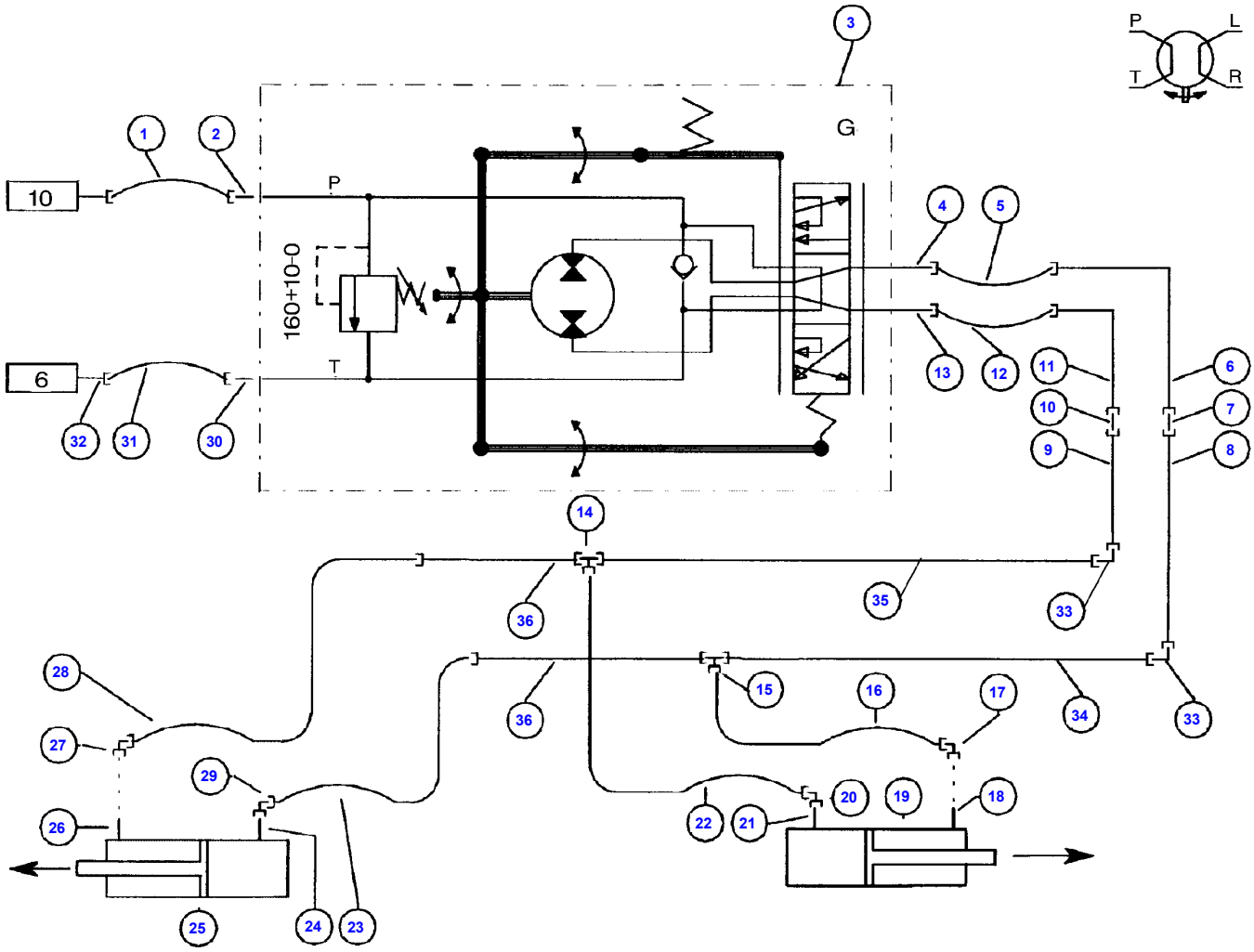

https://truckmanualshub.com/

Item	Part Number	Qty	Description	Comments
1	D45130026	4	Hydr. Hose	
2	D45252700	4	Union	
3	D45169500	1	Pressure Valve	
4	D45252700	4	Union	
5	D45130026	4	Hydr. Hose	
6	D28780653	1	Oil Pipe	
7	D45254100	2	Union	
8	D28785463	1	Pipe	
9	D28785464	1	Pipe	
10	D45254100	2	Union	
11	D28780654	1	Oil Pipe	
12	D45130026	4	Hydr. Hose	
13	D45252700	4	Union	
14	D45267100	2	Union	
15	D45267100	2	Union	
16	D45124400	4	Hydr. Hose	[A]
17	D45264000	4	Union	
18	D45250800	4	Union	
19	D45120068	2	Cylinder	
20	D45264000	4	Union	
21	D45250800	4	Union	
22	D45124400	4	Hydr. Hose	[A]
23	D45124400	4	Hydr. Hose	[A]
24	D45250800	4	Union	
25	D45120068	2	Cylinder	
26	D45250800	4	Union	
27	D45264000	4	Union	
28	D45124400	4	Hydr. Hose	[A]
29	D45264000	4	Union	
30	D45252700	4	Union	
31	D45130026	4	Hydr. Hose	
32	D28780657	1	Oil Pipe	
33	D45258600	1	Union	
34	D28782367	1	Hydr. Hose	
35	D28782436	1	Hydr. Hose	
36	D28782365	1	Pipe	

FOOTNOTE [A] FOR 4WD, ORDER D45130028 HYDRAULIC HOSE

https://truckmanualshub.com/

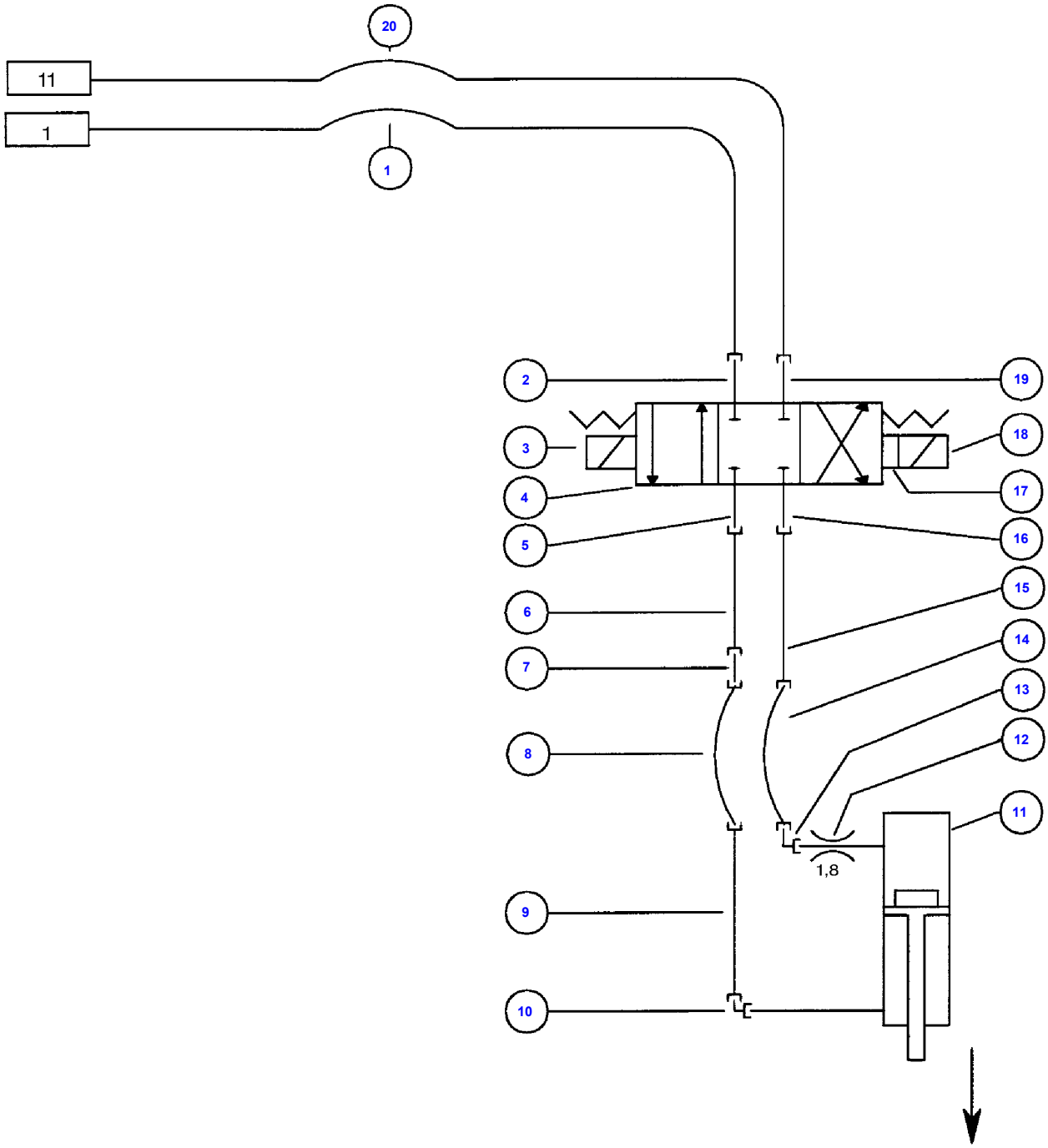

D-ADAB-003-A

https://truckmanualshub.com/

Item	Part Number	Qty	Description
1	D45130046	2	Hose
2	D45252600	4	Union
3	**D45110064**	2	Coil
4	**D45110055**	1	Pressure Valve
	D45110015	1	Gasket
5	D45252600	4	Union
6	D28780679	1	Oil Pipe
7	D45254000	1	Union
8	D45123600	2	Hydr. Hose
9	D28780425	1	Oil Pipe
10	D45263900	2	Union
11	D45100065	1	Ram
12	D28780324	1	Washer
13	D45263900	2	Union
14	D45123600	2	Hydr. Hose
15	D28780680	1	Oil Pipe
16	D45252600	4	Union
17	**D45110066**	1	Parts Pack
18	**D45110064**	2	Coil
19	D45252600	4	Union
20	D45130046	2	Hose

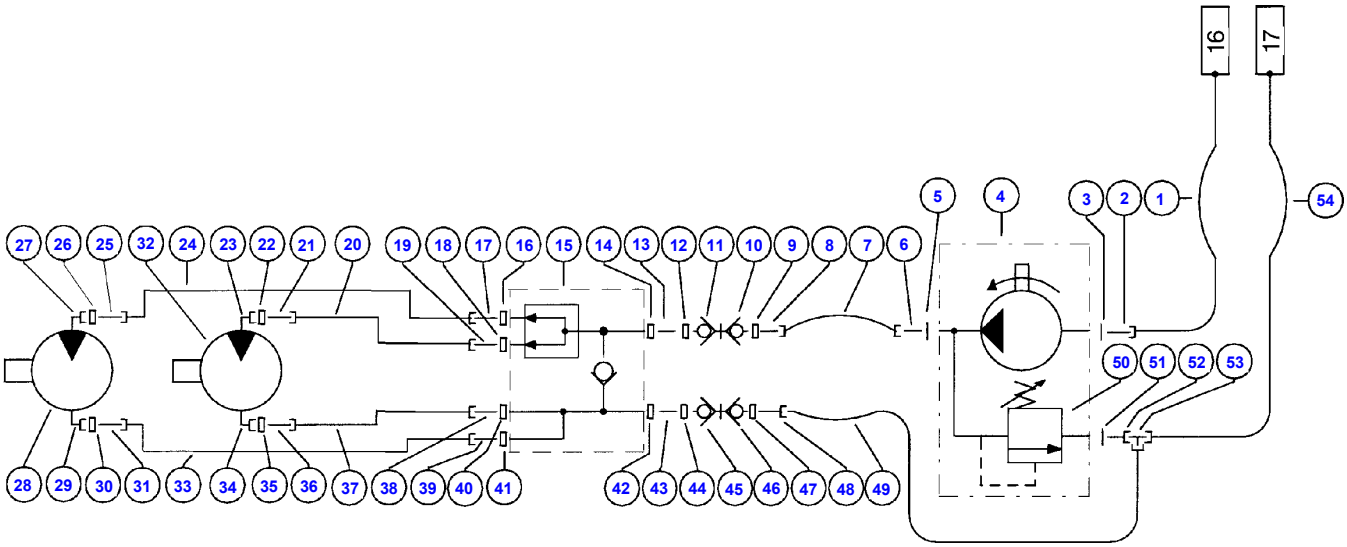
16
17
54
5
4
3
2
1
27
26
25
32
24
23
22
21
20
19
18
17
16
15
14
13
12
11
10
9
8
7
6
50
51
52
53
28
29
30
31
33
34
35
36
37
38
39
40
41
42
43
44
45
46
47
48
49

D-ADAC-001-A

https://truckmanualshub.com/

Item	Part Number	Qty	Description
1	D49070081	1	Hose
2	D49070077	1	Connection
3	D49070075	2	Gasket
4	D49070073	1	Pump
	D49070086	1	Kit, Seal
5	D49070075	2	Gasket
6	D49070076	1	Connection
7	D49070080	1	Hose
8	D49070083	2	Connection
9	D49070022	10	Seal
10	D45135000	1	Union
11	D49070058	1	Coupling
12	D49070022	10	Seal
13	D45070031	1	Hose
14	D49070022	10	Seal
15	D49070020	1	Kit, Gasket
16	D49070022	10	Seal
17	D45252800	4	Union
18	D49070022	10	Seal
19	D45252800	4	Union
20	D49070063	2	Hose
21	D45252600	4	Union
22	D49070027	5	Seal
23	D49070026	4	Flange
24	D49070062	2	Hose
25	D45252600	4	Union
26	D49070027	5	Seal
27	D49070026	4	Flange
28	D49070060	1	Hydraulic Motor
	D49070065	1	Kit, Seal
29	D49070026	4	Flange
30	D49070027	5	Seal
31	D45252600	4	Union
32	D49070059	1	Hydraulic Motor
	D49070065	1	Kit, Seal
33	D49070062	2	Hose
34	D49070026	4	Flange
35	D49070027	5	Seal
36	D45252600	4	Union
37	D49070063	2	Hose
38	D45252800	4	Union
39	D45252800	4	Union
40	D49070022	10	Seal
41	D49070022	10	Seal
42	D49070022	10	Seal
43	D49070031	1	Connector
44	D49070022	10	Seal
45	D49070057	1	Coupling
46	D45134900	1	Union
47	D49070022	10	Seal
48	D49070083	2	Connection
49	D45070080	1	Union
50	D49070052	1	Pressure Valve
51	D49070027	5	Seal
52	D49070078	1	Connection
53	D49070079	1	Connection
54	D49070082	1	Hose

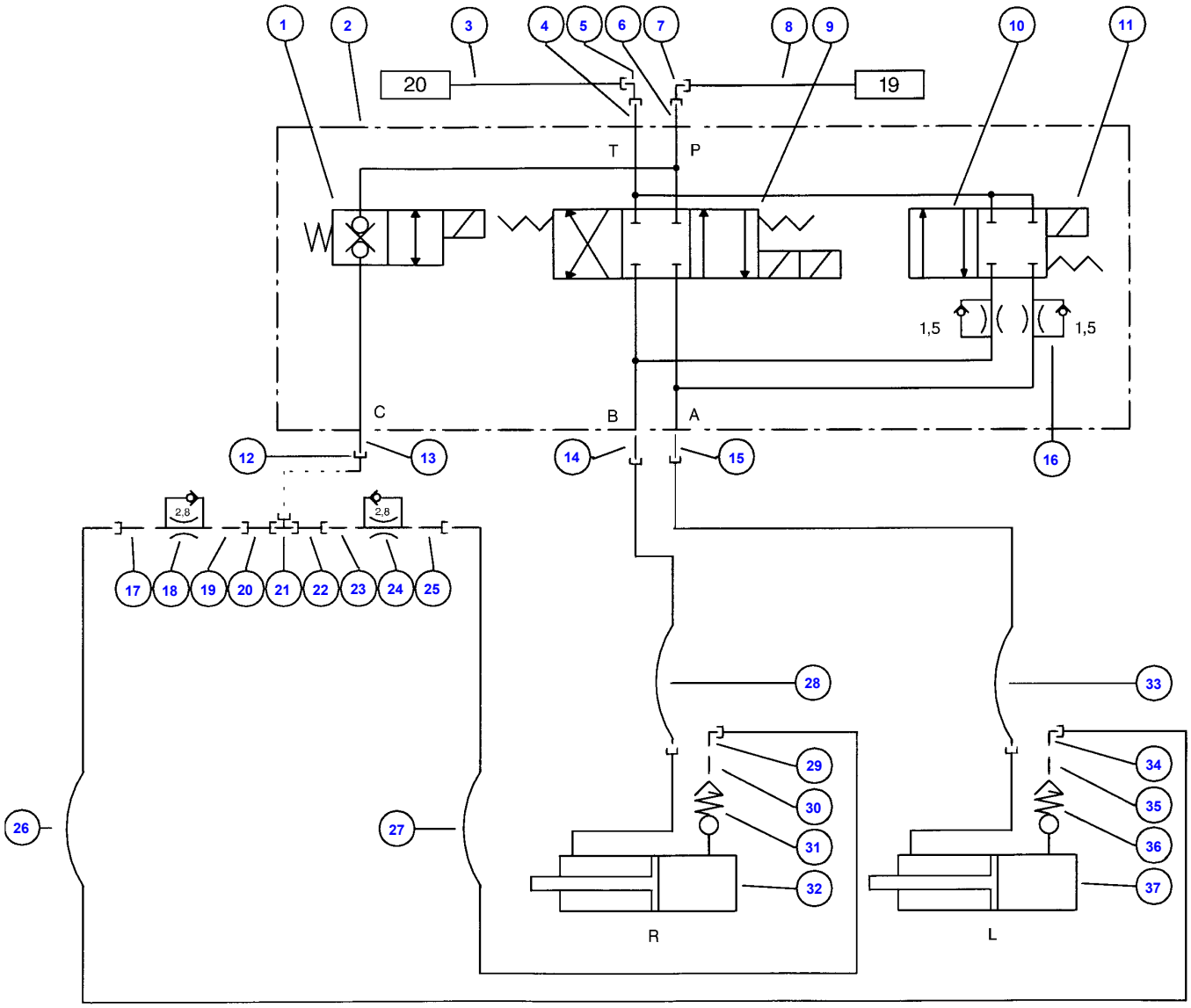
1
2
3
4
5
6
7
8
9
10
11
20
19
T
P
1,5
1,5
C
B
A
12
13
14
15
16
2,8
2,8
17
18
19
20
21
22
23
24
25
26
27
28
29
30
31
32
33
34
35
36
37
R
L

D-ADAD-001-A

https://truckmanualshub.com/

Item	Part Number	Qty	Description	Comments
1	D45120005	1	Distributor	
2	D45110094	1	Pressure Valve	CPL.
	D45120008	1	Seal	
3	D28186023	1	Pipe	
4	D45255200	1	Connector	
5	D45264100	1	Union	
6	D45250800	6	Union	
7	D45264000	2	Union	
8	D28186026	1	Pipe	
9	**D45110066**	1	Parts Pack	
10	D45120006	1	Distributor	
11	**D45110064**	2	Coil	
12	D45264000	2	Union	
13	D45250800	6	Union	
14	D45250800	6	Union	
15	D45250800	6	Union	
16	D45120007	2	Pressure Valve	
17	D28181683	2	Connector	
18	D28780316	2	Washer	
19	D45250800	6	Union	
20	D28711881	2	Oil Pipe	
21	D45267100	1	Union	
22	D28711881	2	Oil Pipe	
23	D45250800	6	Union	
24	D28780316	2	Washer	
25	D28181683	2	Connector	
26	D45132300	3	Hydr. Hose	
27	D45130028	1	Hydr. Hose	
28	D45132300	3	Hydr. Hose	
29	D45265000	2	Connector	
30	D45235200	2	Nipple	
31	D45120020	2	Pressure Valve	
32	D45100026	2	Cylinder	
33	D45132300	3	Hydr. Hose	
34	D45265000	2	Connector	
35	D45235200	2	Nipple	
36	D45120020	2	Pressure Valve	
37	D45100026	2	Cylinder	

https://truckmanualshub.com/

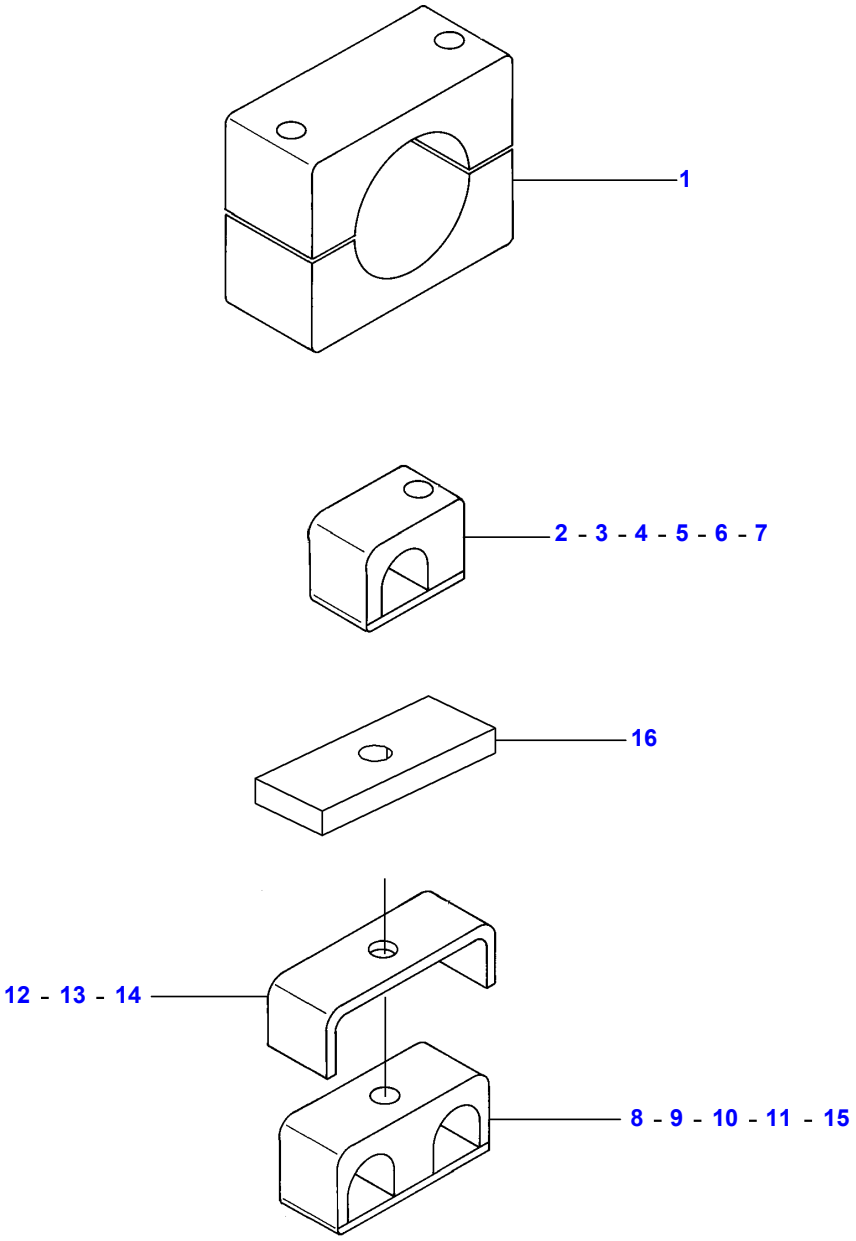

https://truckmanualshub.com/

Item	Part Number	Qty	Description
1	D45737900	X	Support
2	D45738700	X	Support
3	D45739900	X	Bridle
4	D45739800	X	Clip
5	D45739600	X	Support
6	D45739500	X	Support
7	D45739700	X	Support
8	D45739100	X	Support
9	D45739400	X	Support
10	D45739200	X	Support
11	D45736600	X	Support
12	D28750783	X	Reinforcement
13	D28750784	X	Bracket
14	D28250656	X	Arm
15	D45736400	X	Clip
16	D28250653	X	Plate

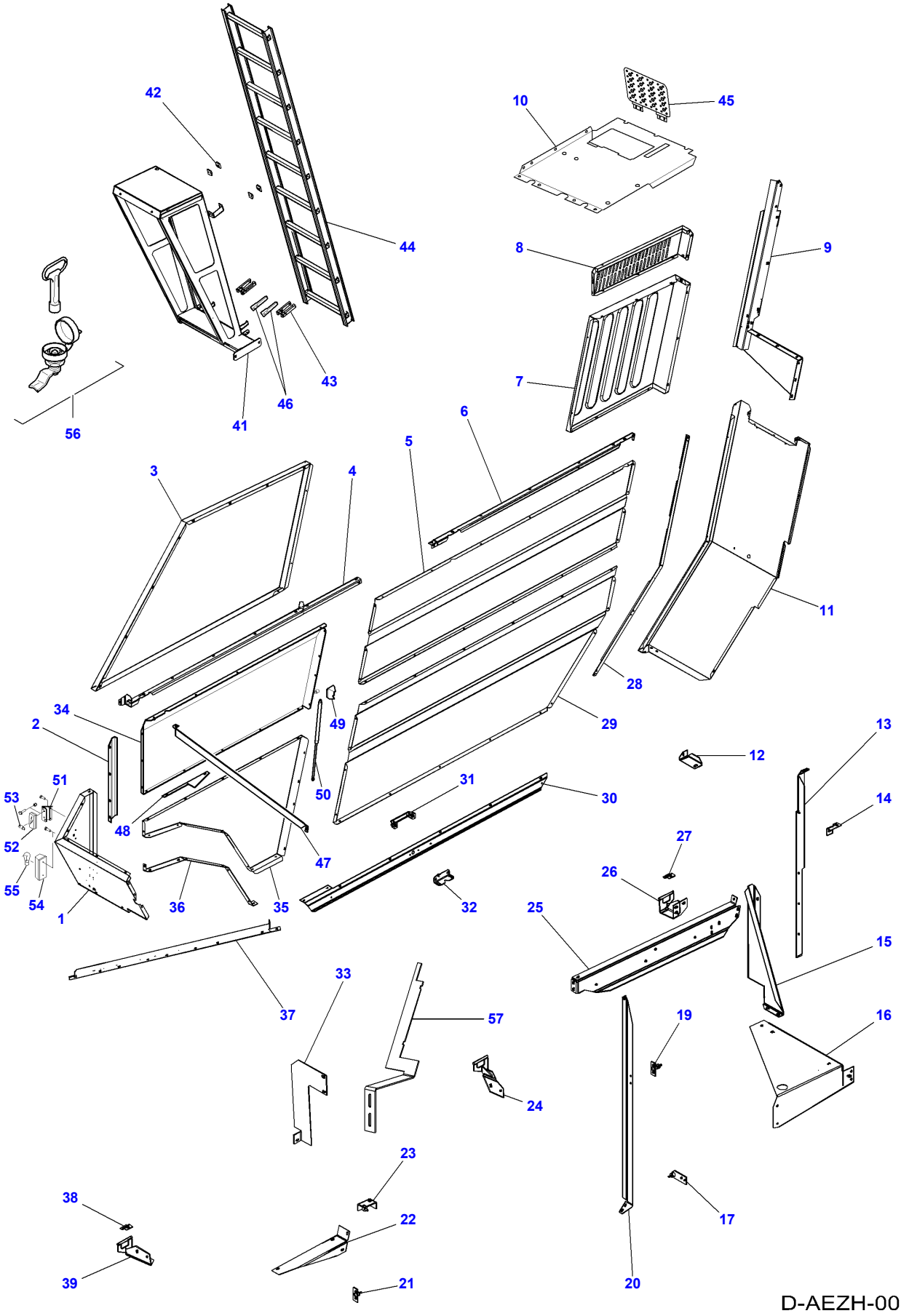
42
10
45
44
8
9
43
46
41
56
7
6
5
3
4
11
28
34
2
49
29
13
12
51
53
50
31
30
14
48
52
47
27
26
55
54
1
36
35
32
25
15
37
33
57
19
16
24
23
38
22
17
39
21
20
D-AEZH-001-E

https://truckmanualshub.com/

Item	Part Number	Qty	Description	Comments
1	D28186563	1	Guard	
	D18187018	1	Guard	From Serial or Engine Number 61490
2	D28188487	1	Reinforcement	
3	D28186748	1	Shield	
	D18187025	1	Shield	From Serial or Engine Number 61490
4	D28188498	1	Reinforcement	
5	D18186543	1	Shield	
6	D28186707	1	Reinforcement	
7	D28186564	1	Shield	Up to Serial or Engine Number 61291
	D18187019	1	Shield	From Serial or Engine Number 61292
8	D18186574	1	Shield	
9	D28186559	1	Shield	
10	D28186764	1	Shield	
11	D18186546	1	Shield	
12	D28186759	1	Strap	
13	D28186755	1	Reinforcement	
14	D28186756	1	Strap	
15	D28186757	1	Reinforcement	
16	D28185993	1	Bracket	
17	D28188489	1	Clevis Pin	
19	D28786522	1	Support	
20	D28186773	1	Reinforcement	
21	D28786522	1	Support	
22		X	Not Used	
23		X	Not Used	
24	D28186744	1	Support	
25	D28186741	1	Reinforcement	
26	D28186714	1	Support	
27	D28186742	1	Support	
28	D28186573	1	Reinforcement	
29	D18186544	1	Shield	
30	D18186547	1	Reinforcement	
31	D43386900	1	Grip	
32	D43419900	1	Lock	
33	D28186750	1	Plate	
34	D18187028	1	Shield	
35	D18187017	1	Shield	
36	D28186570	1	Reinforcement	
37	D28186566	1	Reinforcement	
38	D28186742	1	Support	
39	D28186680	1	Strap	
41	D18186614	1	Bracket Assy.	
42	D28186664	4	Skate	
43	D28186662	1	Slipper	
44	D28186619	1	Ladder	
45	D28184285	1	Cover	
46	D28186710	2	Slipper	
47	D28186801	1	Reinforcement	
48	D28186802	1	Support	
49	D28188496	1	Strap	
50	D45056700	1	Gas Strut	
51	D28781364	1	Bracket	
52	D45080005	1	Head Light	
53	D45081300	1	Bulb	
54	D45077500	1	Flasher	
55	**621235M1**	1	Bulb 12v 21w	
56	D43425200	1	Key	
	D43425300	1	Nut	
	D43425400	1	Packing	
	D43425500	1	O Ring	
	D43425600	1	Cap	
	D43425700	1	Rod	
	D43425800	1	Screw	
	D43425900	1	Lock	
57	D28782946	1	Plate	

https://truckmanualshub.com/

MF 7274/7278 COMBINE, |-> 61123 for 7274 and |-> 61115 for 7278 - 3906105
D-AEZD-005-C

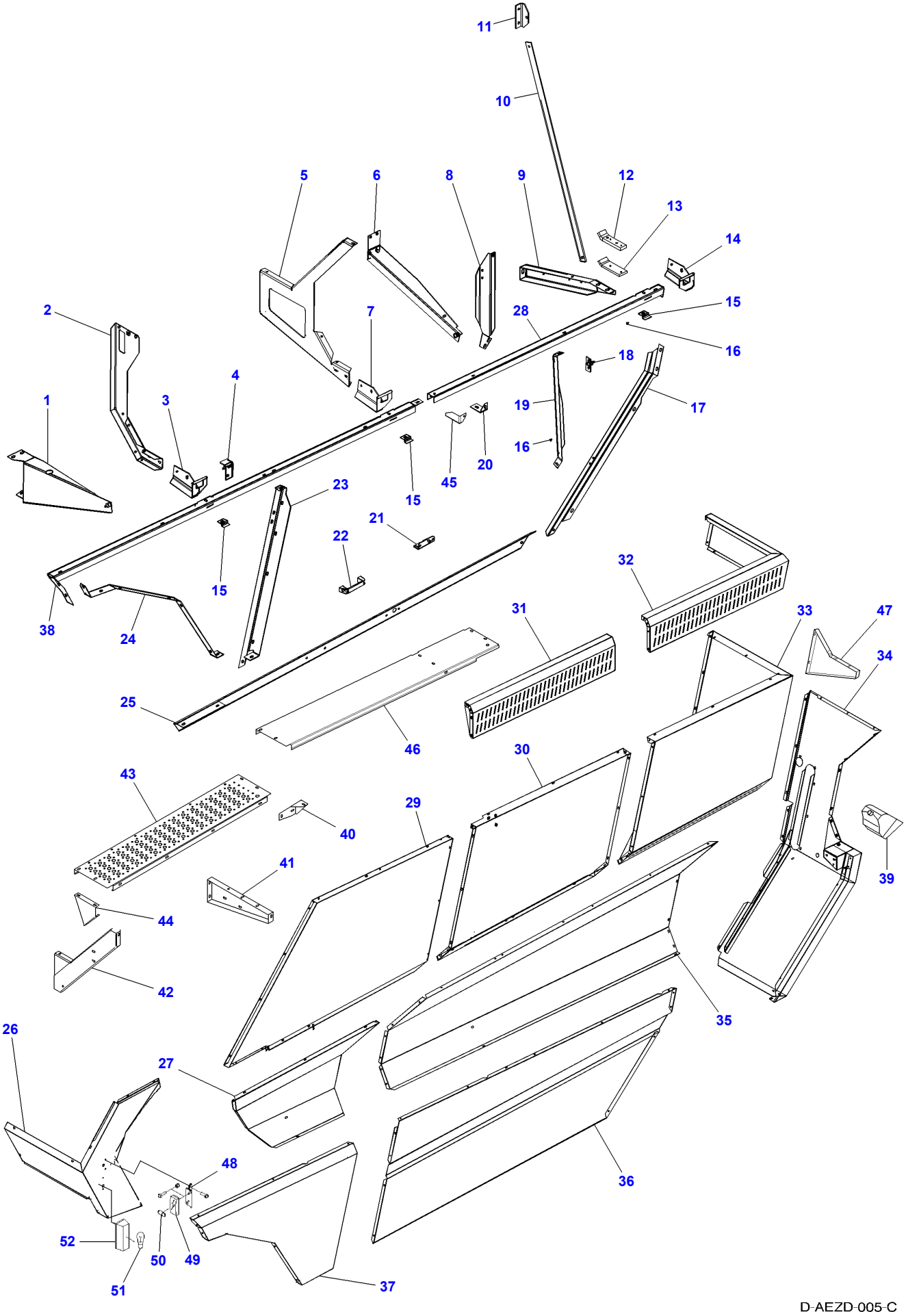

https://truckmanualshub.com/

Item	Part Number	Qty	Description	Comments
1	D28186780	1	Support	
2	D28186676	1	Strap	
3	D28186680	1	Strap	
4	D28186777	1	Strap	
5	D28186649	1	Support	
6	D28186784	1	Bar	
7	D28186680	1	Strap	
8	D28186779	1	Bar	
9	D28180479	1	Bracket	
10	D28186686	1	Rod	
11	D28186687	1	Strap	
12	D28181033	1	Stop	
13	D18181034	1	Stop	
14	D28186684	1	Strap	
15	D28186683	2	Strap	
16	D45742200	2	Plug	
17	D28186677	1	Reinforcement	
18	D28786522	1	Support	
19	D28186782	1	Bar	
20		X	Not Used	
21	D43419900	1	Lock	
22	D43386900	1	Grip	
23	D28186678	1	Bar	
24	D28186679	1	Bar	
25	D18186855	1	Bar	
26	D18187021	1	Support	
27	D18187022	1	Shield	
28	D28186648	1	Bar	
29	D28186584	1	Side	
	D18187020	1	Shield	From Serial or Engine Number 61490
30	D28186870	1	Side	
	D18187026	1	Shield	From Serial or Engine Number 61490
31	D18186869	1	Bar	
32	D18186873	1	Bar	
33	D28186872	1	Side	
	D18187027	1	Side	From Serial or Engine Number 61490
34	D18186531	1	Shield	
35	D18186524	1	Side	
36	D18186530	1	Guard	
37	D18187023	1	Case	
38	D28186647	1	Bar	
39	D28781728	1	Worklight	
40	D28185296	1	Bracket	
41	D28185291	1	Bracket	
42	D28185292	1	Bracket	
43	D28180889	1	Step	
44	D28182403	1	Bracket	
45	D28186889	1	Strap	
46	D18186890	1	Support	[A]
47	D28186893	1	Side	[A]
48	D28781364	1	Bracket	
49	D45080005	1	Head Light	
50	D45081300	1	Bulb	
51	**621235M1**	1	Bulb 12v 21w	
52	D45077600	1	Flasher	

FOOTNOTE [A] ORDER D28186890 + D28186893

https://truckmanualshub.com/

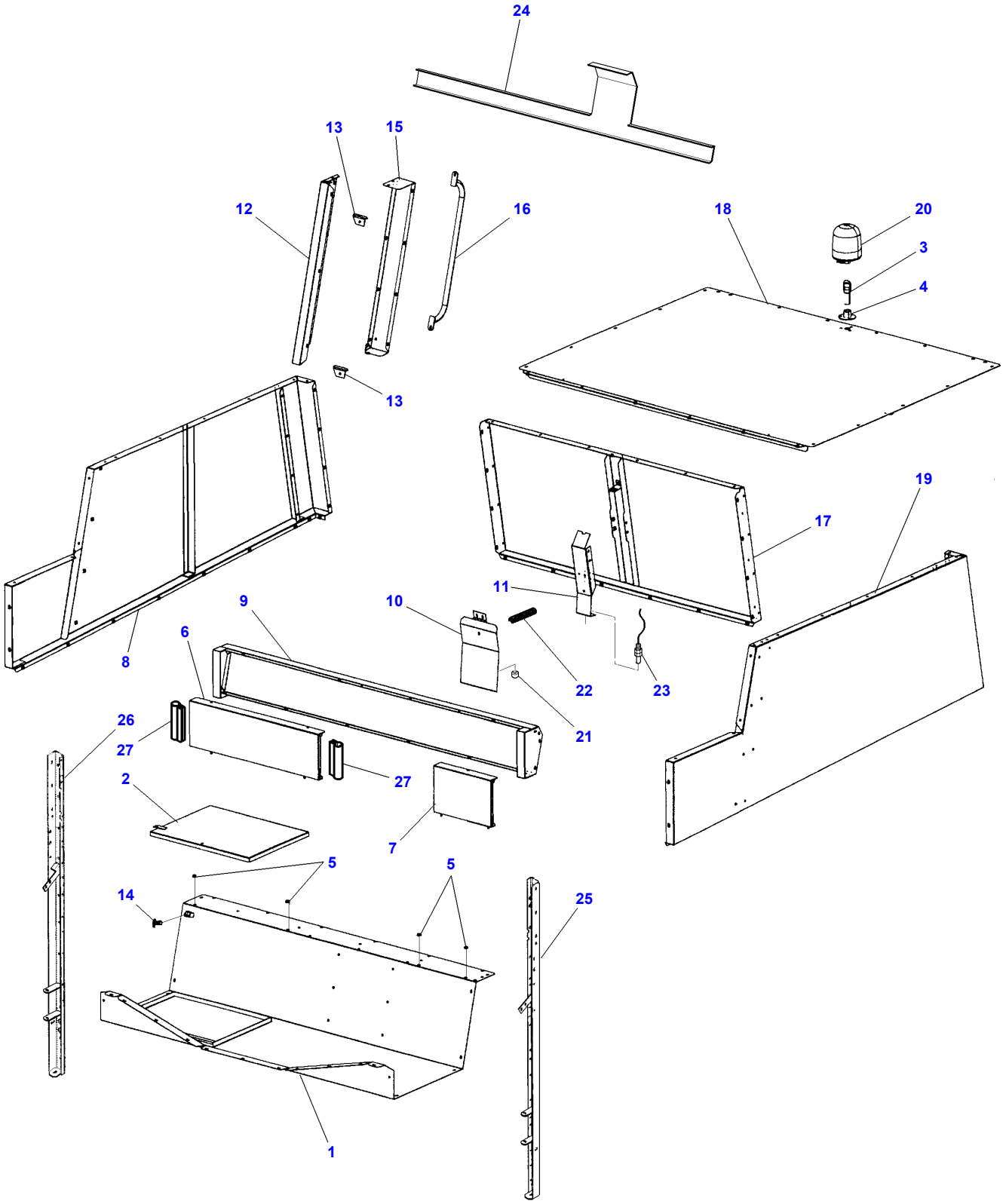

D-AEZI-003-B

https://truckmanualshub.com/

Item	Part Number	Qty	Description	Comments
1	D28185622	1	Plate	
2	D28186460	1	Hatch	
3	D45051300	1	Retainer	
4	D18950553	1	Bracket	
5	D44731200	4	Grommet	
6	D28187004	1	Plate	Right Hand
7	D28186260	1	Plate	Left Hand
8	D28185514	1	Shield	Right Hand
	D18187013	1	Shield	Right Hand
				From Serial or Engine Number 61490
9	D18186995	1	Shield	
10	D28181535	1	Flap	
11	D28181530	1	Support	
12	D18187016	1	Shield	
13	D28186296	2	Bracket	
14	D44737200	1	Rubber Strap	
15	D28186291	1	Shield	
	D18187015	1	Shield	From Serial or Engine Number 61490
16	D28752355	1	Lever	
17	D28186277	1	Backplate	
	D18187014	1	Backplate	From Serial or Engine Number 61490
18	D28186273	1	Plate	
	D18187029	1	Plate	From Serial or Engine Number 61490
19	D28185508	1	Guard	
	D18187012	1	Guard	From Serial or Engine Number 61490
20	D44900990	1	Rotating Light	Repairs and replaces D45051200
21	**D45010092**	1	Magnet	
22	D26600305	1	Spring	
23	D28780365	1	Sensor	
24	D28187006	1	Shield	
25	D28185464	1	Profile	Left Hand
26	D28185465	1	Profile	Right Hand
27	D44743500	2	Seal	

https://truckmanualshub.com/

MF 7274/7278 COMBINE, |-> 61123 for 7274 and |-> 61115 for 7278 - 3906105
D-AEZJ-003-B

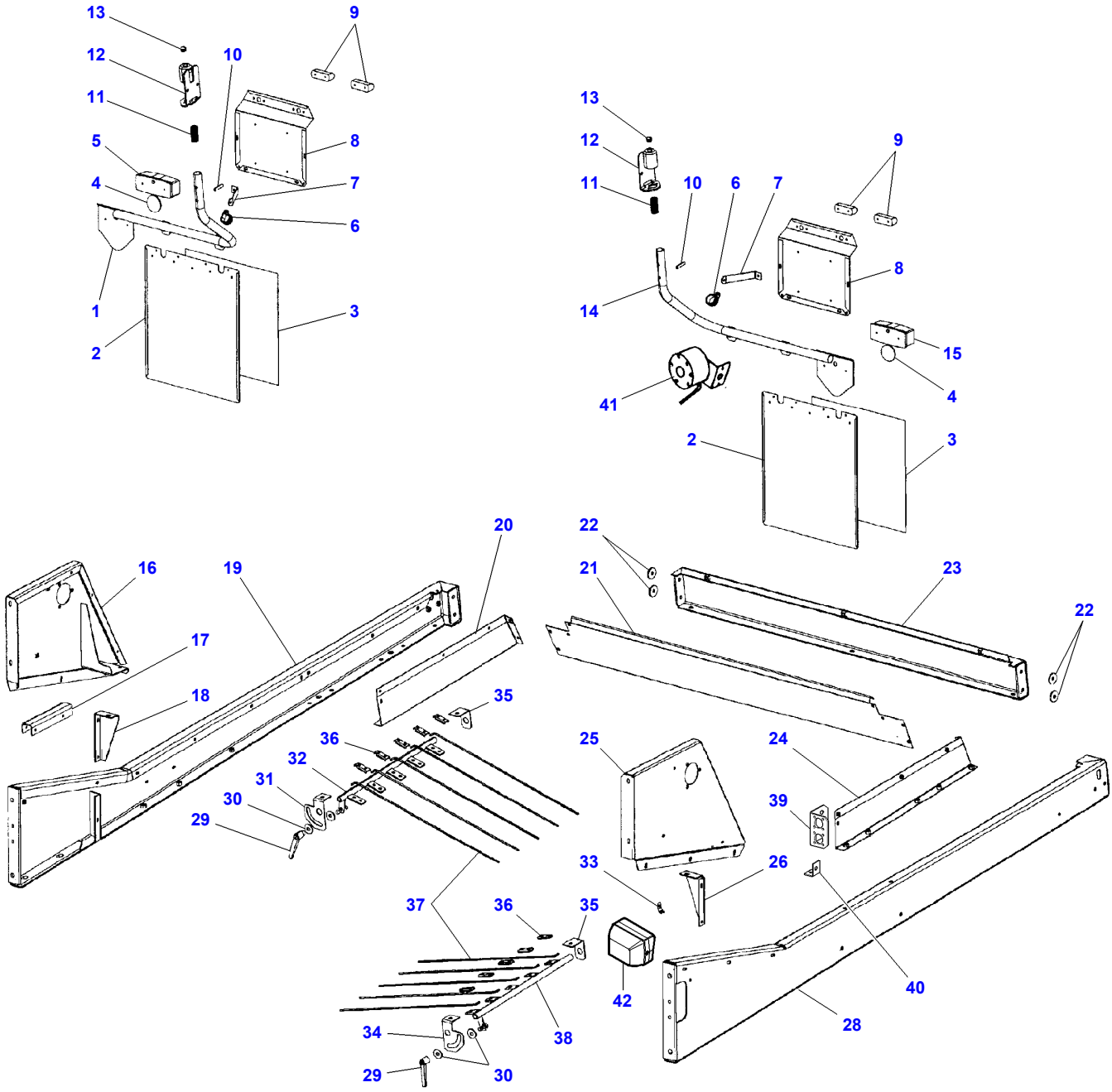

D-AEZJ-003-B

https://truckmanualshub.com/

Item	Part Number	Qty	Description	Comments
1	D28186555	1	Arm	
2	D28761501	2	Plate	[A]
3	D49157500	2	Decal	[A]
4	D45085600	2	Reflector	
5	D45077300	1	Rh Rear Lamp	Right Hand
6	D45730400	2	Clamp	[A]
7	D28186558	2	Strut	[A]
8	D28752224	2	Licence Plate	[A]
9	D45085500	4	Head Light	[A]
10	391220X1	2	Pin	Diameter 10 X 45
11	D28185545	2	Comp.Spring	
12	D28186263	2	Bracket	
13	D45743000	2	Plug	
14	D28186553	1	Arm	
15	3042085M1	1	Rh Rear Lamp	
16	D18186312	1	Bracket	
17	D18186311	1	Bracket	
18	D28186324	1	Bracket	
19	D18186221	1	Support	
20	D28186315	1	Cover	
21	D28186217	1	Plate	
22	D20400425	4	Washer	
23	D18186224	1	Support	
24	D28186226	1	Cover	
25	D18186213	1	Bracket	
26	D28186215	1	Bracket	
28	D18185766	1	Support	
29	D43387500	2	Lever	
30	391212X1	4	Flat Washer	
31	D28186465	1	Locking Plate	
32	D28181860	1	Tube	
33	D28186442	1	Clamp	
34	D28186466	1	Strap	
35	D28186464	2	Strap	
36	D28181537	10	Plate	
37	D28181046	10	Spring Wire	
38	D28181623	1	Tube	
39	D28186641	1	Plate	
40	D28186642	1	Strap	
41	D44900865	1	Buzzer	
42	D28781728	1	Worklight	
	D28781735	1	Fuse	

FOOTNOTE [A] OPTIONAL EQUIPMENT

https://truckmanualshub.com/

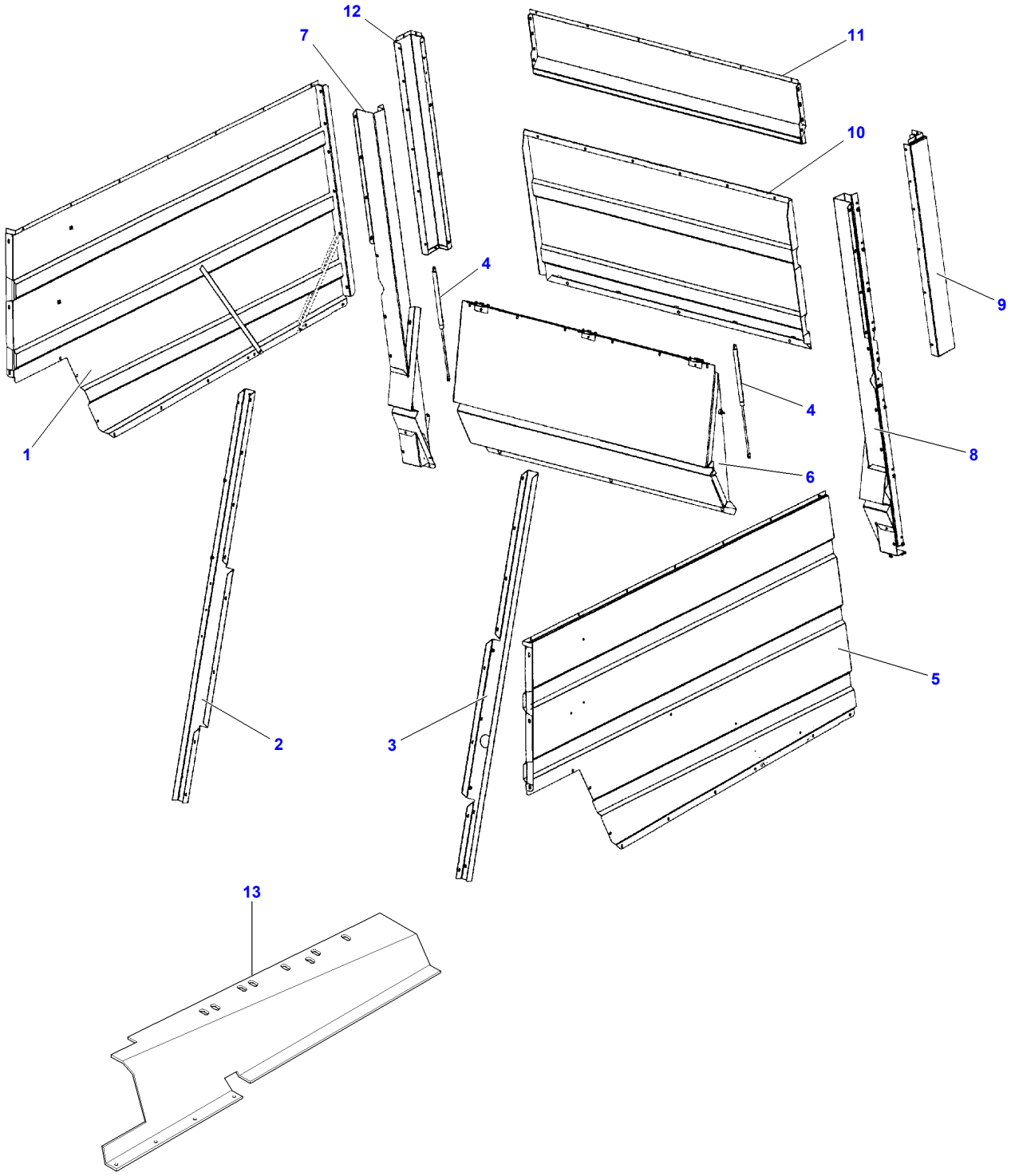

D-AEZK-002-A

https://truckmanualshub.com/

Item	Part Number	Qty	Description
1	D18186630	1	Shield
2	D28186293	1	Reinforcement
3	D28186516	1	Reinforcement
4	D45059500	2	Gas Strut
5	D18186633	1	Shield
6	D28186218	1	Hatch
7	D28186318	1	Plate
8	D28186227	1	Plate
9	D18185948	1	Plate
10	D18186302	1	Hatch
11	D18185770	1	Shield
12	D18185949	1	Plate
13	D28185995	1	Guard

https://truckmanualshub.com/

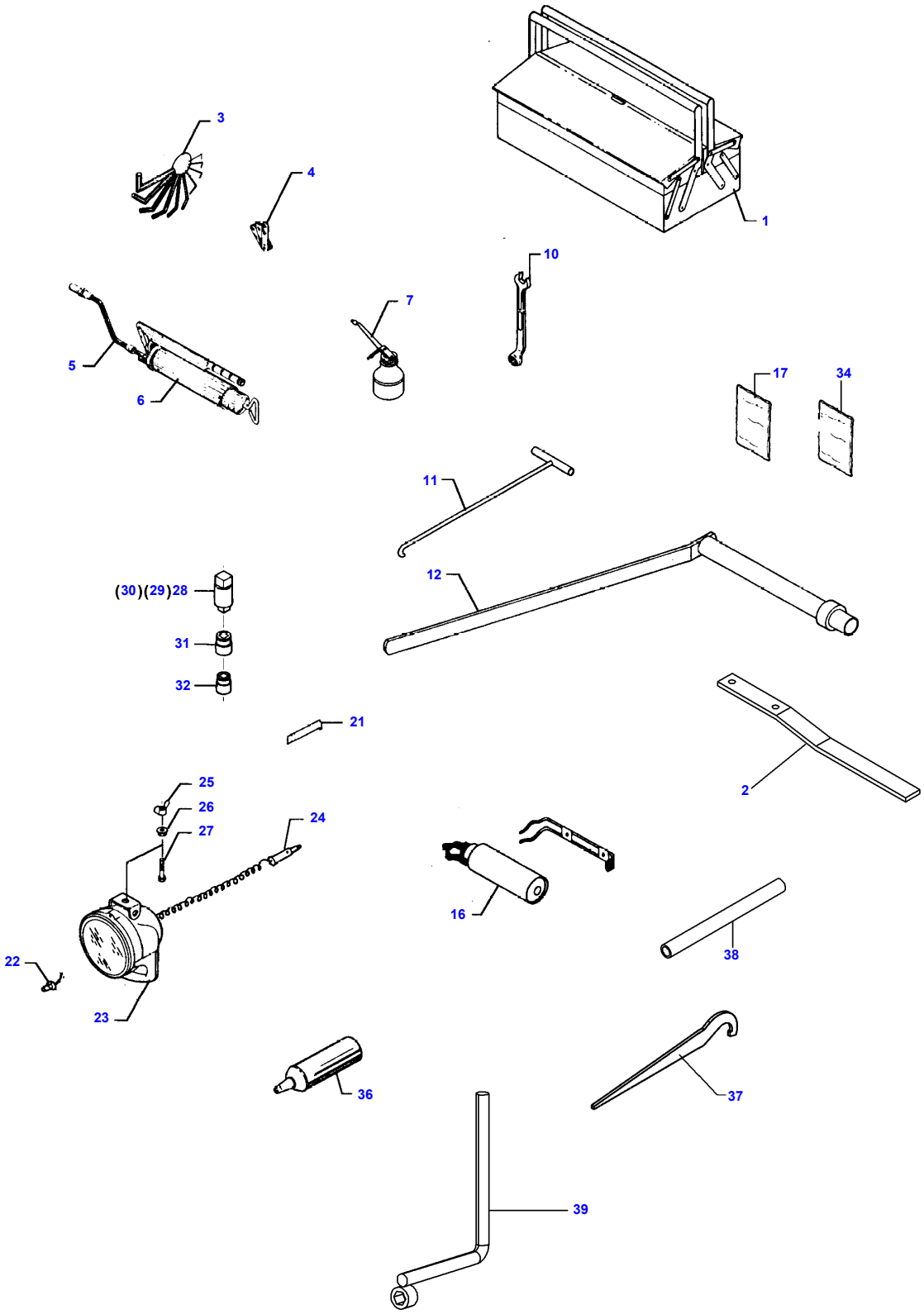

D-AFZA-005-B

https://truckmanualshub.com/

Item	Part Number	Qty	Description	Comments
1	D43713300	1	Tool Box	
2	D28185696	1	Scraper	EQUIPMENT
3	D43705500	1	Allen Key	
4	D27300186	1	Feeler Guage	
5	D43709800	1	Hose	
6	3405930M1	1	Grease Gun	
7	D43710300	1	Oil Can	
10	D43707900	1	Spanner	
11	D28530187	1	Tool	
12	D28380136	1	Wrench	350MM
	D28380616	1	Wrench	1050MM
16	D43713400	1	Extinguisher	6 Kg
	D43714200	1	Extinguisher	2 Kg
17	D28580181	1	Bag	
21	D28780689	1	Spring	
22	D28761343	1	Worklight	
	1628494M1	1	Bulb H3	(22)
23	D45077700	1	Worklight	(22)
24	D45026600	1	Intake	(22)
25	339539X1	1	Wing Nut	(22)
				M10
26	339402X1	1	Nut	(22)
				M10
27	1441370X1	1	Cap Screw	(22)
				M10 X 55
28	D28151359	1	Connector	
	D28151358	1	Connector	(28)
29	D28151357	1	Spring	(28)
30	D41647600	1	Ball	(28)
31	D43715300	1	Tool	
32	D43708900	1	Key	
34	D28781871	1	Electric Equip.	
36	D49208700	1	Grease	
37	D28280440	1	Tool	Up to Serial or Engine Number 62000
38	D28380526	1	Rod	
39	D28284820	1	Handle	

https://truckmanualshub.com/

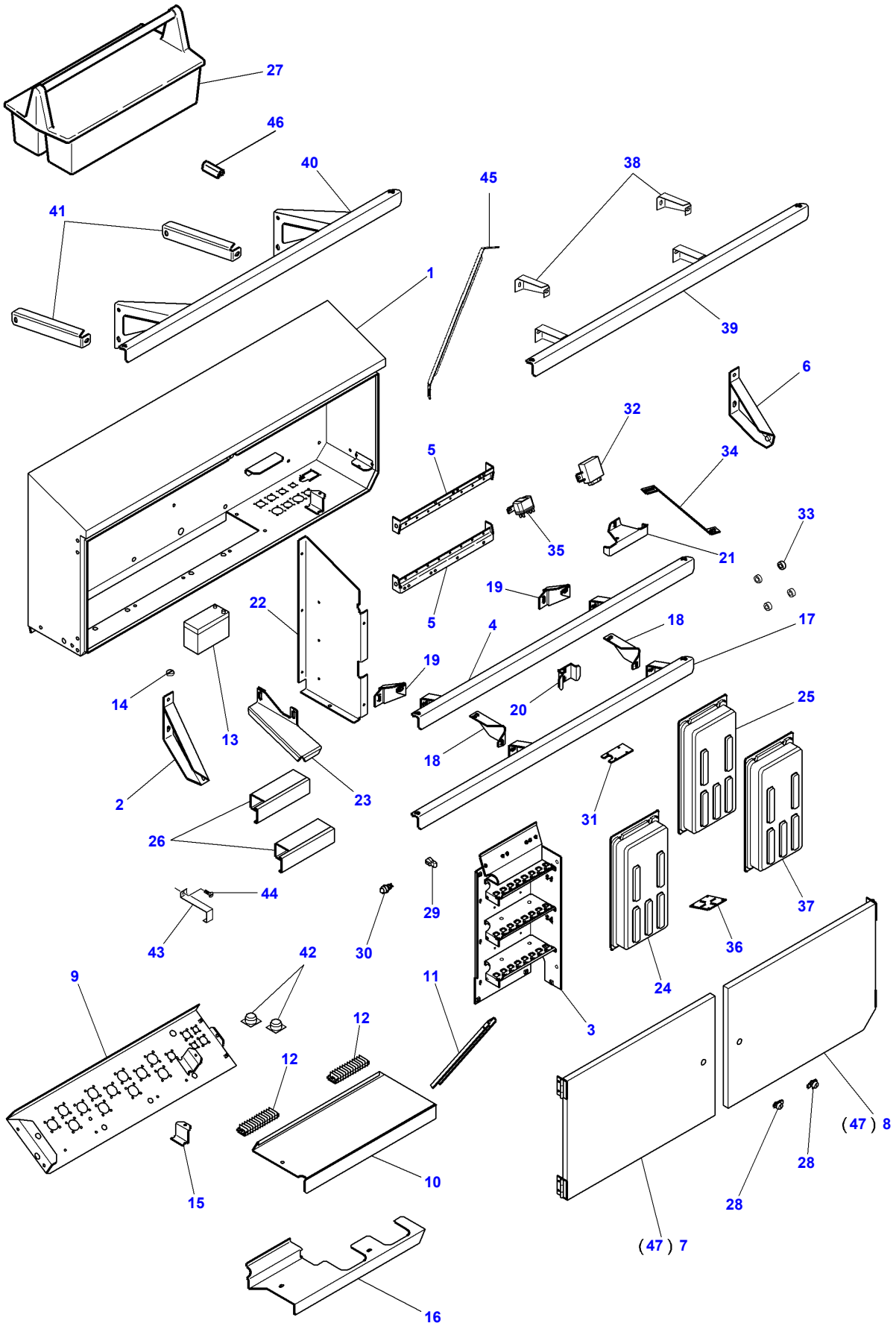

D-BAZE-001-F

https://truckmanualshub.com/

Item	Part Number	Qty	Description	Comments
1	D28787414	1	Fuse Box	[A] Autolevel - CPL.
	D28787415	1	Fuse Box	[A] Standard - CPL.
	D28782567	1	Box	
2	D28184239	1	Bracket	
3	D28782573	1	Plate	
4	D28785901	1	Bracket	
5	D28782570	2	Bracket	
6	D28184474	1	Bracket	
7	D28785883	1	Cover	
8	D28785885	1	Cover	
9	D28782575	1	Plate	
10	D28782572	1	Cover	
11	D28782577	1	Rail	
12	D45010096	2	Rail	
13	D44900050	1	Battery	
14	D28780351	1	Screw	
15	D28785918	1	Bracket	
16	D28782568	1	Cover	
17	D28785910	1	Plate	
18	D28785908	2	Bracket	
19	D28785903	2	Bracket	
20	D28785911	1	Bracket	
21	D28781769	1	Support	
22	D28782574	1	Plate	
23	D28784452	1	Support	
24	D28782893	1	Computer	Repairs and replaces D28782720
25	D28787055	1	Computer	Auto Level
26	D28782595	2	Channel	
27	D43713300	1	Tool Box	
28	D43423000	2	Lock	
29	D45068300	1	Dustcap	
30	D45068200	1	Electric Socket	
31	D28786877	1	Plate	
32	D45088800	1	Relay	
33	D43319200	4	Washer	
34	D28784451	1	Bracket	
35	D45086800	1	Relay	
36	D28785921	1	Cover	
37	D28782721	1	Computer	
38			Not Used	
39			Not Used	
40	D28787451	1	Bracket	
41	D28787452	1	Bracket	
42	D28781298	1	Relay	Soft-Start
	D45010006	2	Plug	Soft-Start
43	D28781347	1	Union	Soft-Start
44	D40740100	1	Screw	Soft-Start
45	D28187011	1	Support	[B]
46	D44744800	X	Profile	Thickness 0,15 m
47	D44735300	X	Gasket	2,2M

FOOTNOTE [A] COMPUTER NOT INCLUDED
FOOTNOTE [B] FROM 59220 - UP TO 6114

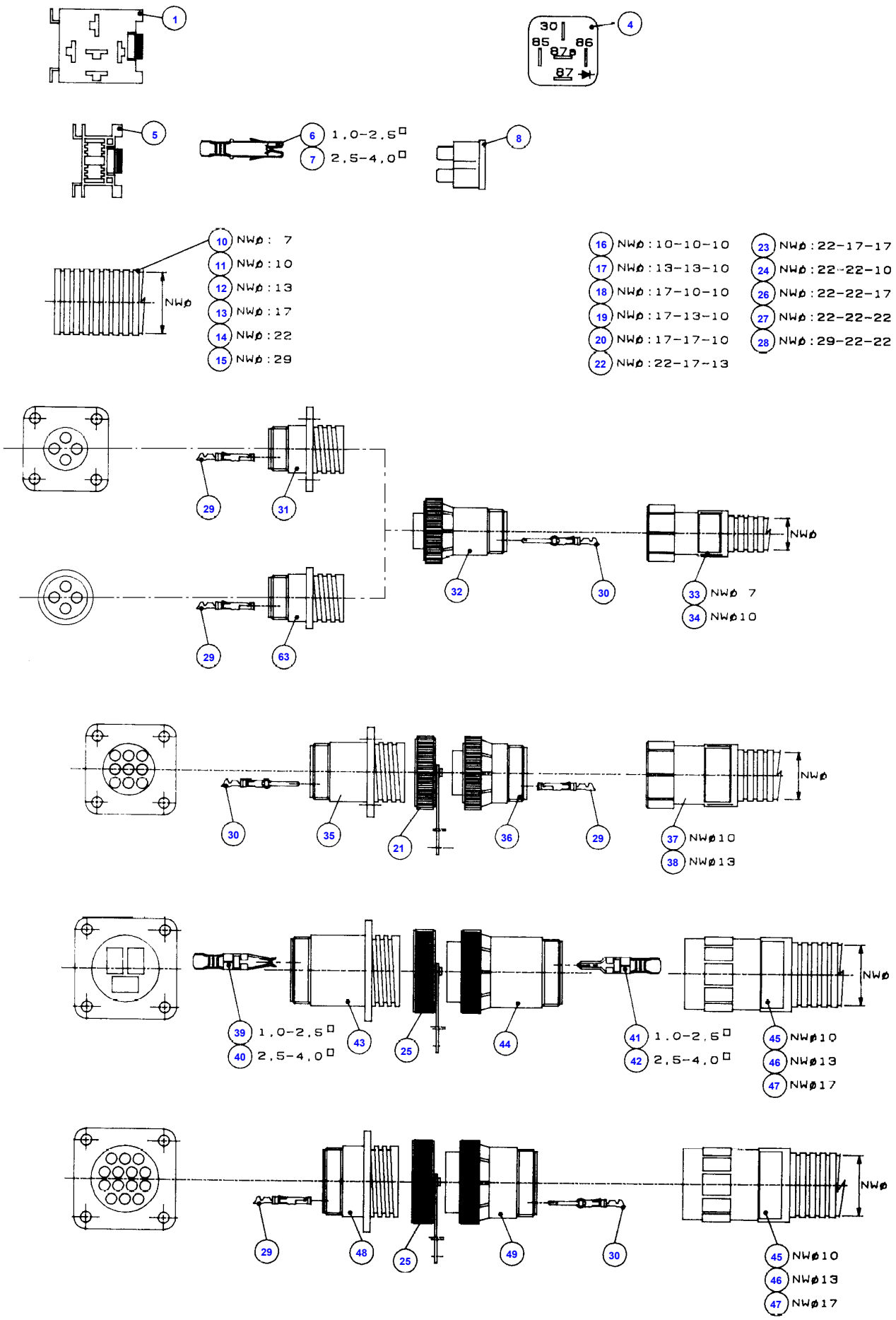
1
4
30
85
86
87a
87
5
6 1,0-2,5□
7 2,5-4,0□
8
10 NWø: 7
11 NWø:10
12 NWø:13
13 NWø:17
14 NWø:22
15 NWø:29
NWø
16 NWø:10-10-10
17 NWø:13-13-10
18 NWø:17-10-10
19 NWø:17-13-10
20 NWø:17-17-10
22 NWø:22-17-13
23 NWø:22-17-17
24 NWø:22-22-10
26 NWø:22-22-17
27 NWø:22-22-22
28 NWø:29-22-22
29
31
32
30
33 NWø 7
34 NWø10
63
35
21
36
37 NWø10
38 NWø13
39 1,0-2,5□
40 2,5-4,0□
43
25
44
41 1,0-2,5□
42 2,5-4,0□
45 NWø10
46 NWø13
47 NWø17
48
49
D-AFZG-001-A

https://truckmanualshub.com/

Item	Part Number	Qty	Description	Comments
1	D45010068	X	Case Assy	
4	D45070089	X	Relay	
5	D45010076	X	Fuse Holder	
6	D45010027	X	Connector	
7	D45010028	X	Connector	
8	3387318M1	X	Fuse	5 Amp
	3387319M1	X	Fuse	7,5 Amp
	1695939M1	X	Fuse	10 Amp
	1695966M1	X	Fuse	15 Amp
	D45010073	X	Fuse	20 Amp
	3387322M1	X	Fuse	25 Amp
	D45010075	X	Fuse	30 Amp
10	D28782170	X	Sheath	Length 5 M
11	D28782165	X	Sheath	Length 15 M
12	D28782169	X	Sheath	Length 15 M
13	D28782166	X	Sheath	Length 15 M
14	D28782167	X	Sheath	Length 10 M
15	D28782168	X	Sheath	Length 10 M
16	D45020010	X	Connector	
17	D45020019	X	Rear Landside	
18	D45020011	X	Connector	
19	D45020022	X	Connector	
20	D45020012	X	Connector	
21	D45010082	X	Cover	
22	D45020023	X	Connector	
23	D45020015	X	Connector	
24	D45020013	X	Connector	
25	D45010083	X	Cover	
26	D45020014	X	Connector	
27	D45020016	X	Connector	
28	D45020017	X	Connector	
29	D45060094	X	Connector	
30	D45060093	X	Connector	
31	D45010006	X	Plug	
32	D45010005	X	Intake	
33	D45010040	X	Connector	
34	D45010041	X	Union	
35	D45010042	X	Plug	
36	D45010043	X	Intake	
37	D45010037	X	Connector	
38	D45010038	X	Union	
39	D45010024	X	Connector	
40	D45010026	X	Connector	
41	D45010023	X	Connector	
42	D45010025	X	Connector	
43	D45010011	X	Plug	
44	D45010012	X	Plug	
45	D28780339	X	Gasket	
	D45020080	X	Union	
	D45020090	X	Gasket	
46	D45010056	X	Connection	
47	D45010047	X	Union	
48	D45010009	X	Intake	
49	D45010010	X	Electric Socket	
63	D45030078	X	Intake	

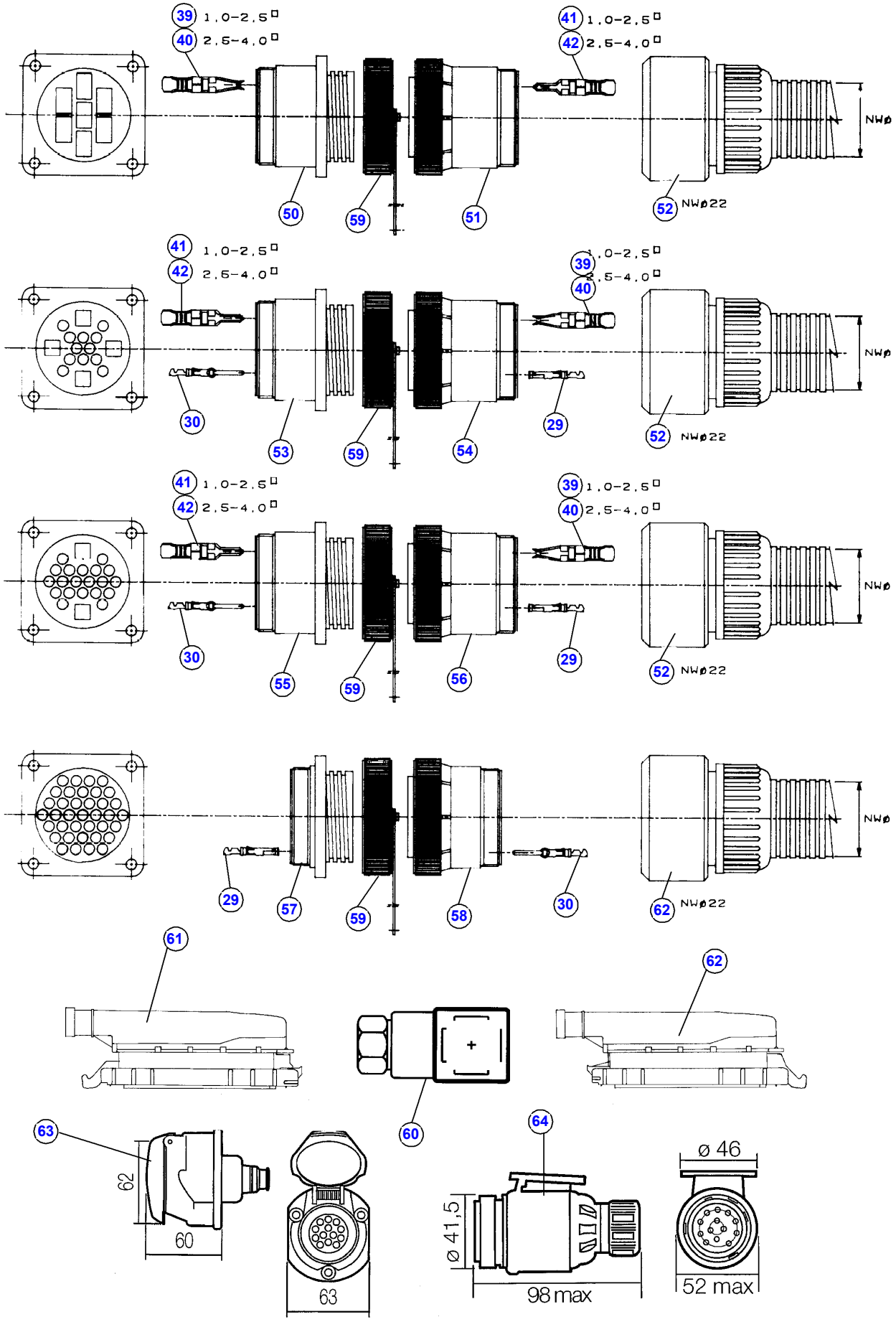
39 1,0-2,5□
40 2,5-4,0□
41 1,0-2,5□
42 2,5-4,0□
NWø
50
59
51
52 NWø22
30
53
54
29
55
56
57
58
62
61
60
63
64
62
60
63
ø 41,5
98 max
ø 46
52 max

D-AFZG-005-C

https://truckmanualshub.com/

Item	Part Number	Qty	Description
29	**D45060094**	X	Connector
30	**D45060093**	X	Connector
39	**D45010024**	X	Connector
40	**D45010026**	X	Connector
41	**D45010023**	X	Connector
42	**D45010025**	X	Connector
50	D45010013	X	Intake
51	D45010014	X	Intake
52	D28780306	X	Union
	D45020082	X	Union
	D45020092	X	Gasket
53	D45010018	X	Intake
54	D45010017	X	Plug
55	D45010020	X	Intake
56	D45010019	X	Plug
57	D45010007	X	Intake
58	D45010008	X	Intake
59	D45010080	X	Cover
60	D45010034	X	Plug
61	D45043800	X	Housing
62	D45043900	X	Housing
63	D44900991	X	Intake
64	D44900993	X	Electric Equip.

https://truckmanualshub.com/

Pos.nr. Pos.No. Pos.nr. No.Pos.	Koder Code Code Code
1	DLR 01
2	DLR 02
3	DLR 03
3	DLR 04
3	DLR 05
3	DLR 06
3	DLR 07
3	DLR 08
3	DVR 01
3	DVR 02
3	DVR 03
3	DVR 04
3	DVR 05
3	DVR 07
3	DVR 09
3	DVR 13
3	DVR 14
3	DVR 19
3	DVR 20
3	DVR 21
3	DVR 22
3	DVR 23
3	DVR 24
3	DVR 37
3	DVR 38
3	HOR 01
3	HOR 04
3	HOR 05
3	HOR 07
3	HOR 08
3	HOR 09
3	HOR 10
3	HOR 11
3	HOR 12
3	HOR 13
3	HOR 14
3	HOR 15
3	HOR 16
3	HOR 17
3	HOR 18
3	HOR 19
3	HOR 20
15	HOR 21
15	HOR 22
3	HOR 23
3	HOR 24
3	HOR 25
3	HOR 26
3	HOR 27
3	HOR 28
3	HOR 29
3	HOR 30
3	HOR 32
3	HOR 32
3	HOR 34
3	HOR 35
3	HOR 36
3	HOR 37
3	HOR 38
4	HOR 39
3	ILR 01
3	ILR 03
3	ILR 04
3	ILR 06
3	ILR 08

Pos.nr. Pos.No. Pos.nr. No.Pos.	Koder Code Code Code
5	DLS 01
6	DLS 02
7	DLS 03
7	DLS 04
7	DLS 05
7	DLS 06
8	DLS 07
8	DLS 08
8	DLS 09
8	DLS 10
8	DLS 11
7	DVS 01
7	DVS 02
6	DVS 03
9	DVS 04
9	DVS 05
7	DVS 06
8	DVS 07
8	DVS 13
8	DVS 16
9	DVS 17
9	DVS 18
8	DVS 20
8	DVS 22
8	DVS 23
8	DVS 24
8	DVS 30
9	HOS 01
10	HOS 02
8	HOS 03
8	HOS 05
8	HOS 06
8	HOS 07
8	HOS 08
8	HOS 09
8	HOS 10
8	HOS 11
8	HOS 12
8	HOS 13
7	HOS 14
6	HOS 15
10	HOS 16
6	HOS 17
11	HOS 18
10	HOS 19
8	HOS 20
8	HOS 21
8	HOS 22
8	HOS 23
12	ILS 03
12	ILS 04
8	ILS 07
8	ILS 08
7	ILS 09

Pos.nr. Pos.No. Pos.nr. No.Pos.	Koder Code Code Code
13	DVD 21
14	HOD 03
14	HOD 05
14	HOD 06
14	HOD 07
14	HOD 08
14	HOD 09
14	HOD 10
14	HOD 11
14	HOD 12
14	HOD 13
14	HOD 14
14	HOD 15
14	HOD 16
14	HOD 18
14	HOD 21
14	HOD 25
14	HOD 26
14	HOD 27
14	HOD 28
14	HOD 29
14	DVD 01
14	DVD 02
14	DVD 03
14	DVD 04
14	DVD 06
14	DVD 07
14	DVD 08
14	DVD 09
14	DVD 18
14	DVD 19

https://truckmanualshub.com/

Item	Part Number	Qty	Description	Comments
1	D45088800	X	Relay	
2	D45086800	X	Relay	
3	**D45070089**	X	Relay	
4	D45080024	X	Relay	
5	**3387318M1**	X	Fuse	5 Amp
6	D45010073	X	Fuse	20 Amp
7	**1695966M1**	X	Fuse	15 Amp
8	**3387318M1**	X	Fuse	5 Amp
9	D45010075	X	Fuse	30 Amp
10	**1695939M1**	X	Fuse	10 Amp
11	**3387322M1**	X	Fuse	25 Amp
12	**3387319M1**	X	Fuse	7,5 Amp
13	D44900589	X	Diode	STPS 12045TV
14	D45010094	X	Diode	
15	D45087700	X	Relay	

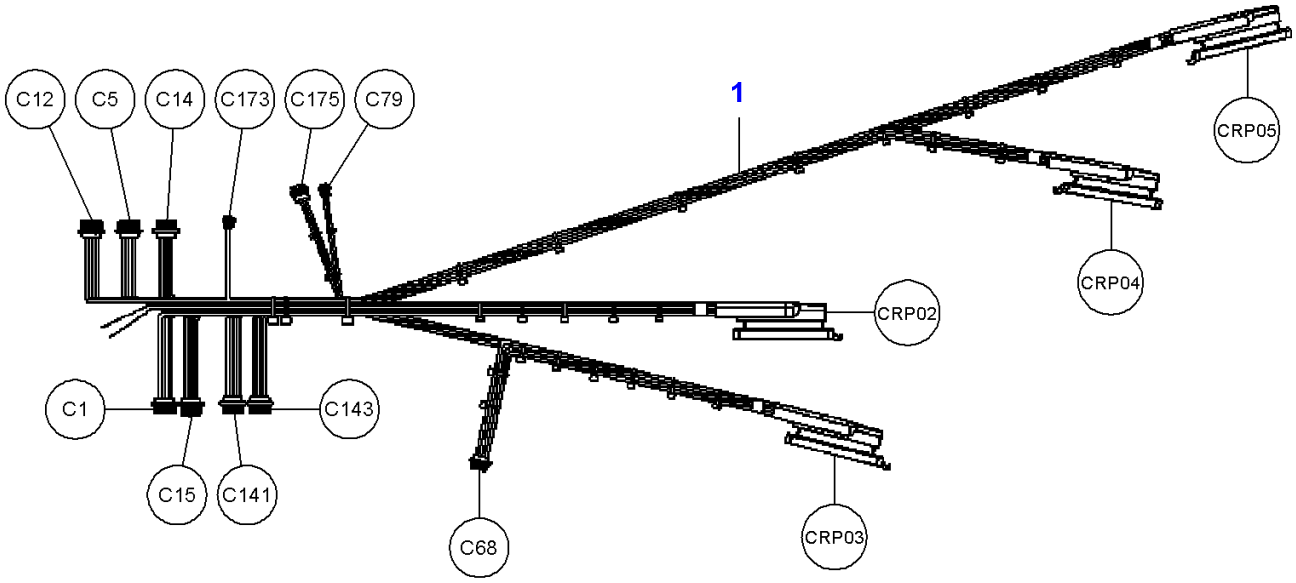
1
C12
C5
C14
C173
C175
C79
CRP05
CRP04
CRP02
C1
C143
C15
C141
C68
CRP03

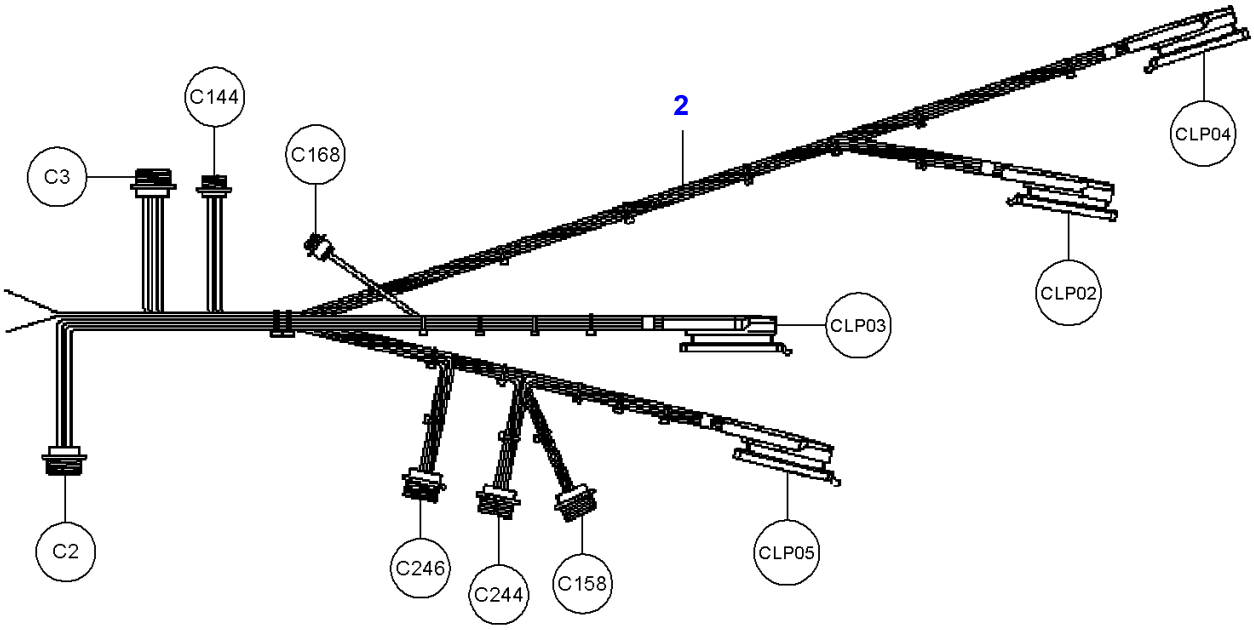
2
C144
C168
C3
CLP04
CLP02
CLP03
C2
C246
C244
C158
CLP05

D-AFYJ-001-A

https://truckmanualshub.com/

Item	Part Number	Qty	Description	Comments
1	D28782541	1	Harness	[A,B]
2	D28782542	1	Harness	[A,C]

FOOTNOTE [A] THE CONNECTOR DESIGNATIONS REFER TO THE ELECTRICAL DOCUMENTATION OF THE MACHINE
FOOTNOTE [B] RIGHT JOB COMPUTER
FOOTNOTE [C] LEFT JOB COMPUTER

https://truckmanualshub.com/

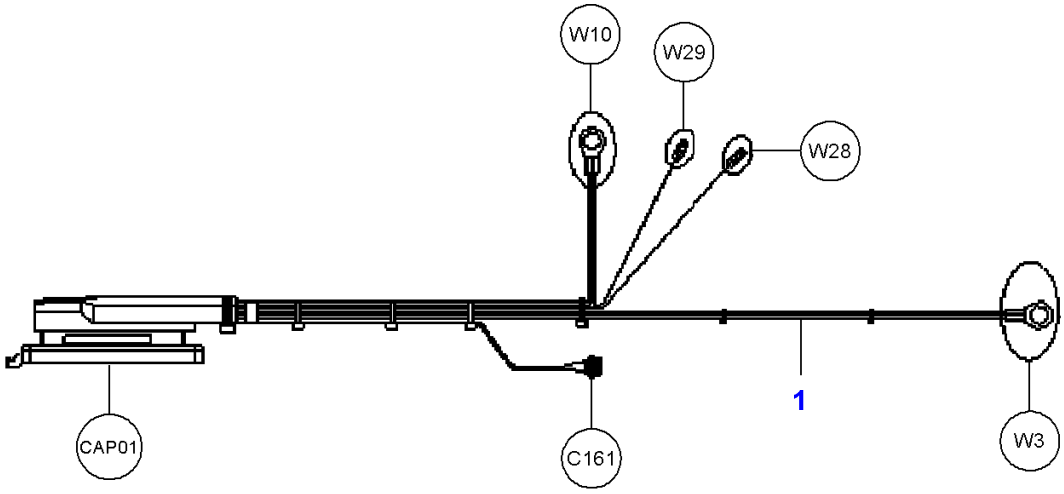

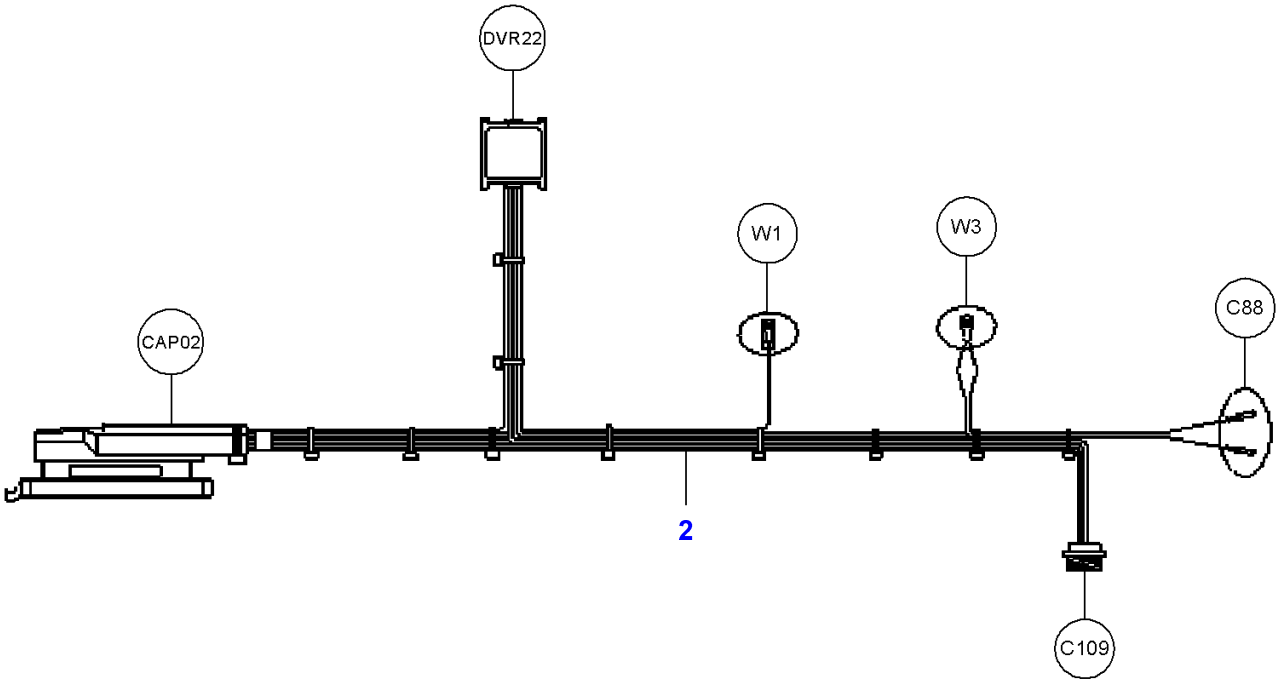

D-AFYJ-002-A

https://truckmanualshub.com/

Item	Part Number	Qty	Description	Comments
1	D28782703	1	Harness	[A,B]
2	D28782704	1	Harness	[A,C]

FOOTNOTE [A] THE CONNECTOR DESIGNATIONS REFER TO THE ELECTRICAL DOCUMENTATION OF THE MACHINE
FOOTNOTE [B] AL COMPUTER - IN
FOOTNOTE [C] AL COMPUTER - OUT

https://truckmanualshub.com/

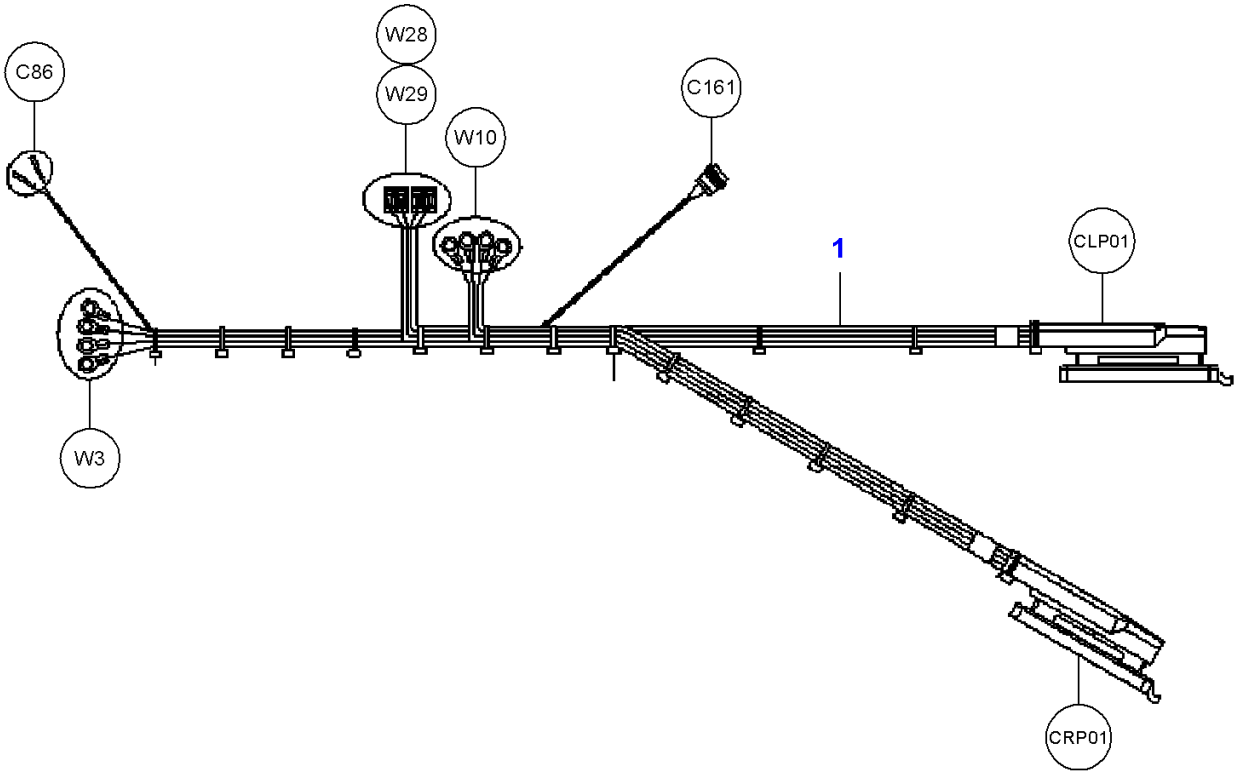

D-AFYJ-003-A

https://truckmanualshub.com/

Item	Part Number	Qty	Description	Comments
1	D28782701	1	Harness	[A,B]

FOOTNOTE [A] THE CONNECTOR DESIGNATIONS REFER TO THE ELECTRICAL DOCUMENTATION OF THE MACHINE
FOOTNOTE [B] FEED SUPPLY

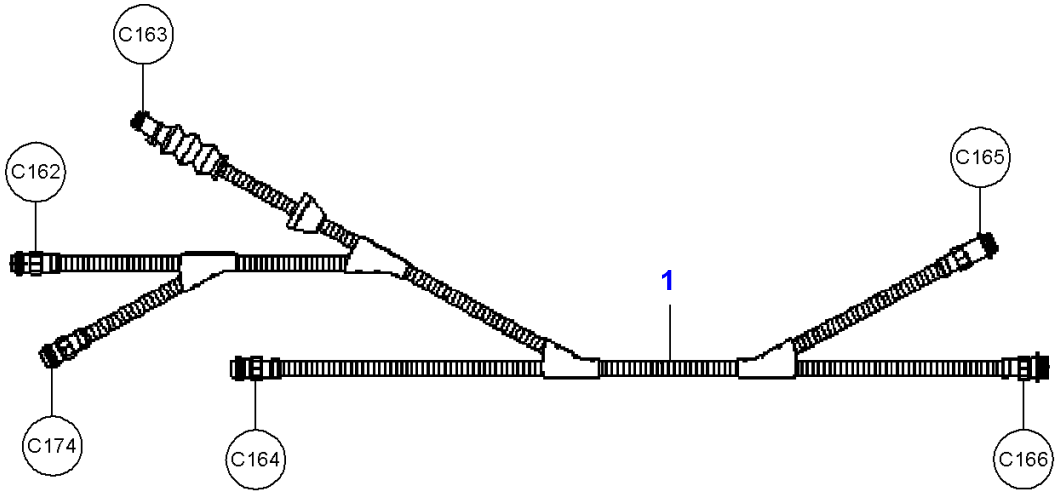

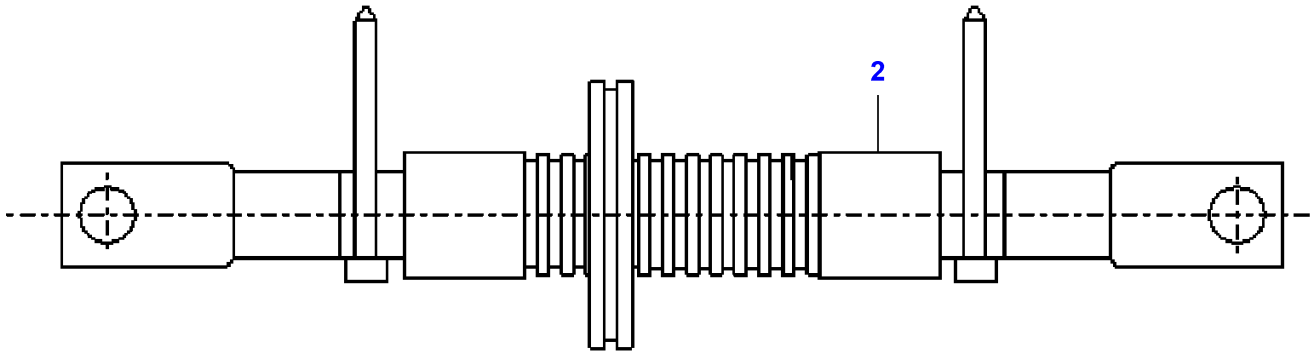

D-AFYK-001-A

https://truckmanualshub.com/

Item	Part Number	Qty	Description	Comments
1	D28781584	1	Harness	[A,B]
2	D28782422	1	Harness	[A,C]

FOOTNOTE [A] THE CONNECTOR DESIGNATIONS REFER TO THE ELECTRICAL DOCUMENTATION OF THE MACHINE
FOOTNOTE [B] INTERIOR CAB
FOOTNOTE [C] CARRIER

https://truckmanualshub.com/

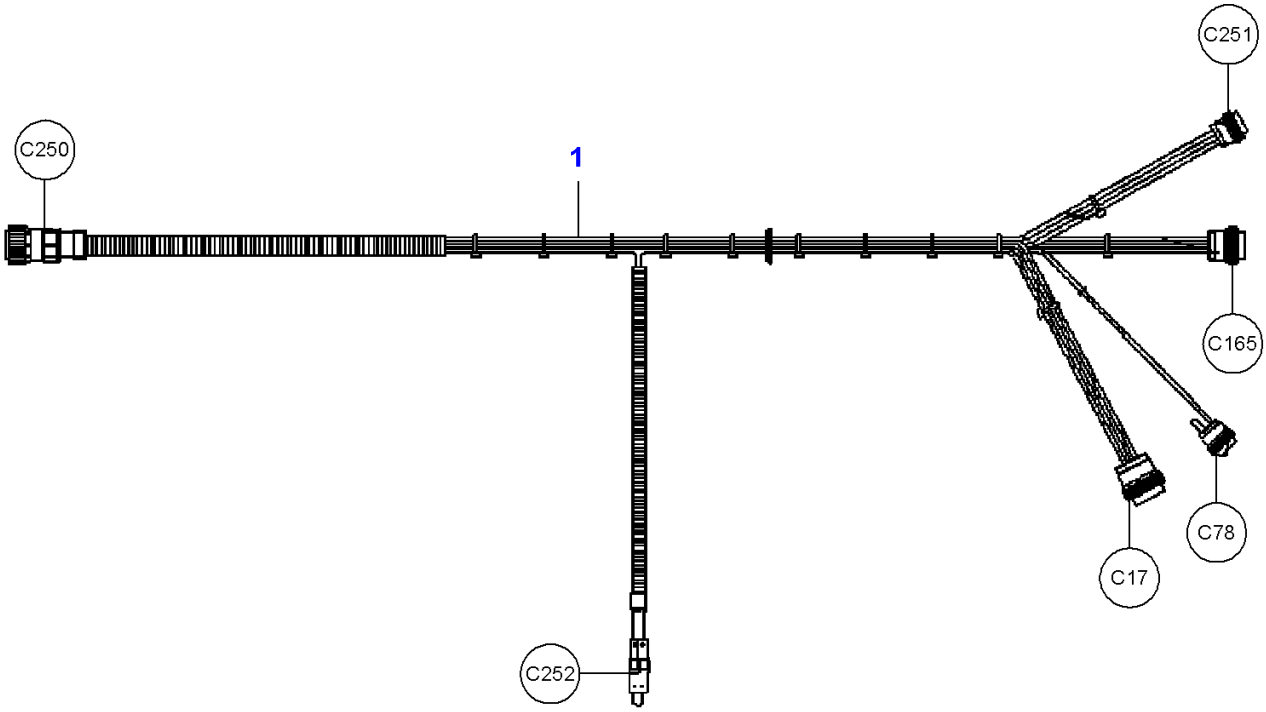

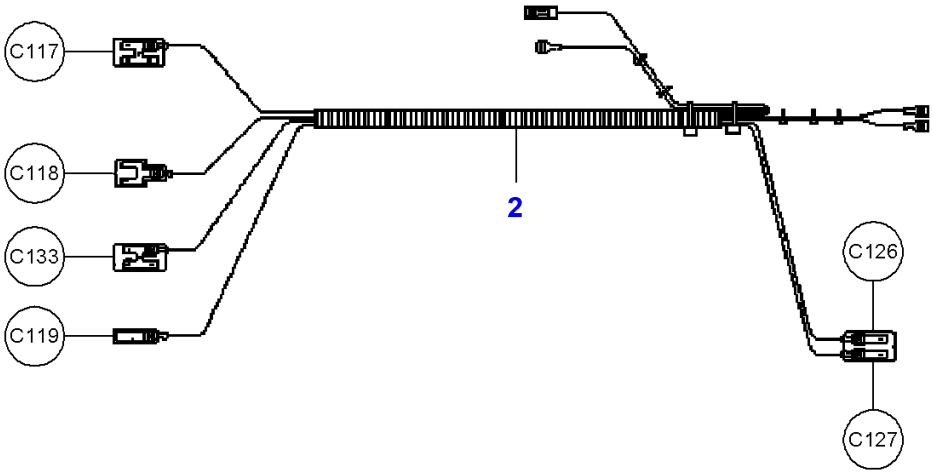

D-AFYK-002-A

https://truckmanualshub.com/

Item	Part Number	Qty	Description	Comments
1	D28782539	1	Harness	[A,B]
2	D28781618	1	Harness	[A,C]

FOOTNOTE [A] THE CONNECTOR DESIGNATIONS REFER TO THE ELECTRICAL DOCUMENTATION OF THE MACHINE
FOOTNOTE [B] ARM REST
FOOTNOTE [C] TILT SENSOR

https://truckmanualshub.com/

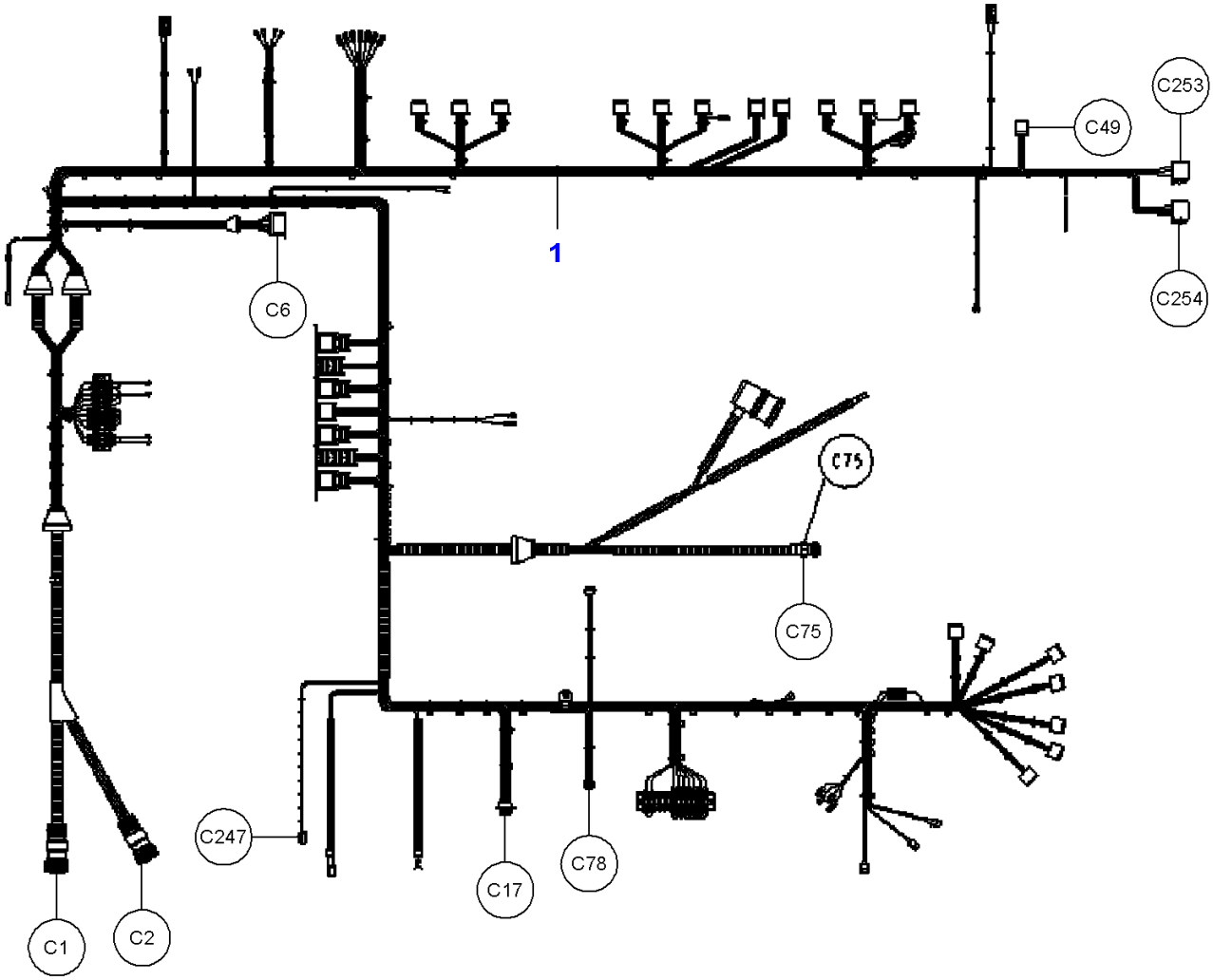

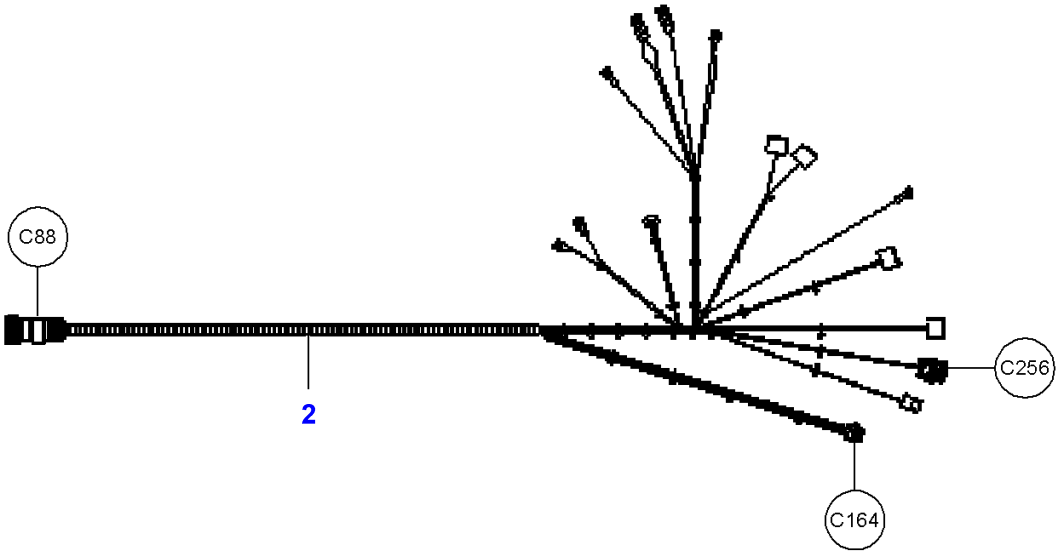

D-AFYK-003-A

https://truckmanualshub.com/

Item	Part Number	Qty	Description	Comments
1	D28782538	1	Harness	[A]
2	D28273911	1	Harness	[A]

FOOTNOTE [A] THE CONNECTOR DESIGNATIONS REFER TO THE ELECTRICAL DOCUMENTATION OF THE MACHINE

https://truckmanualshub.com/

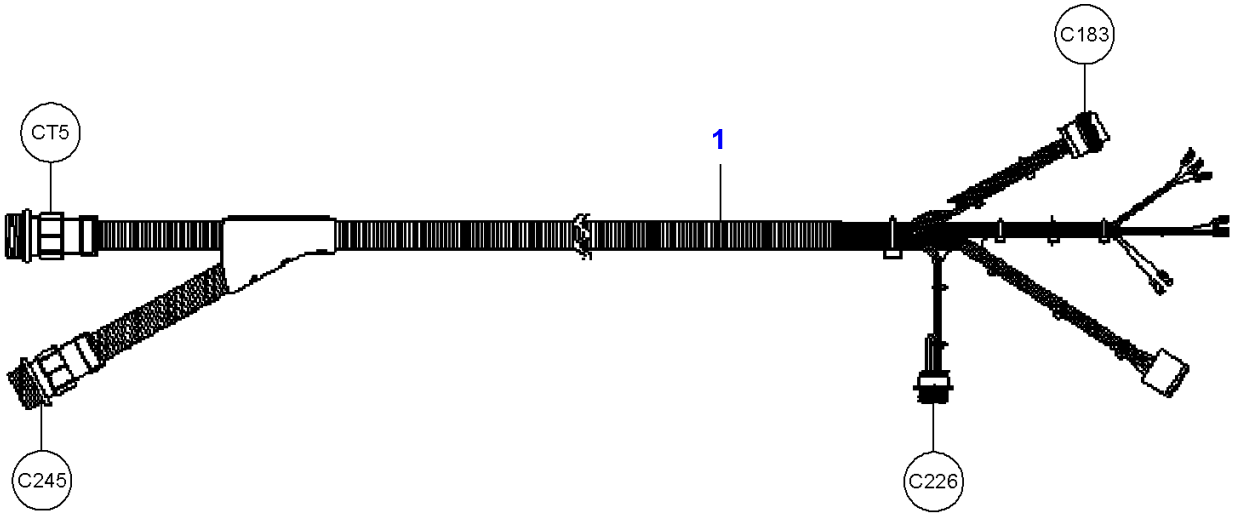

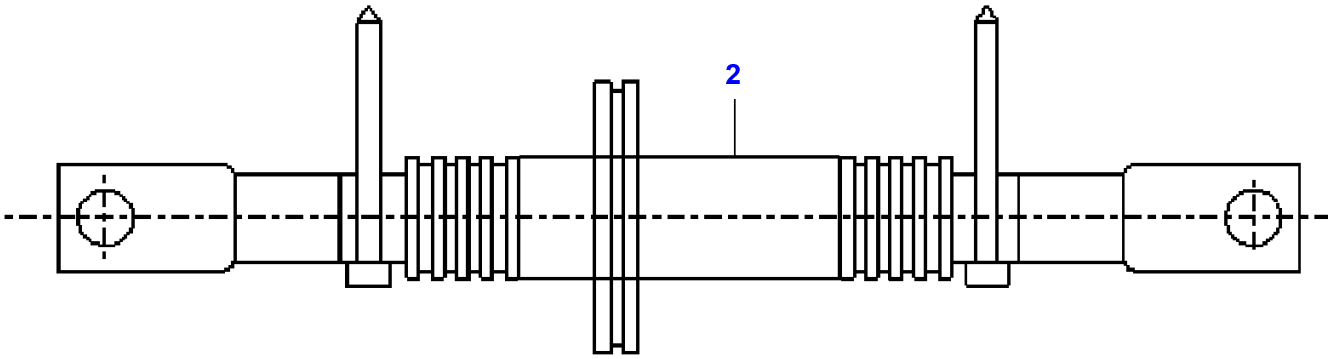

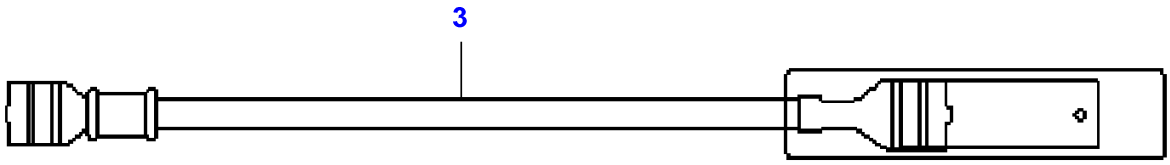

D-AFYK-004-A

https://truckmanualshub.com/

Item	Part Number	Qty	Description	Comments
1	D28785864	1	Harness	[A,B]
2	D28782931	1	Harness	[A,C]
3	D28788331	1	Harness	[A,D]

FOOTNOTE [A] THE CONNECTOR DESIGNATIONS REFER TO THE ELECTRICAL DOCUMENTATION OF THE MACHINE
FOOTNOTE [B] STEERING COLUMN
FOOTNOTE [C] GROUND CABLE
FOOTNOTE [D] ADAPTER

https://truckmanualshub.com/

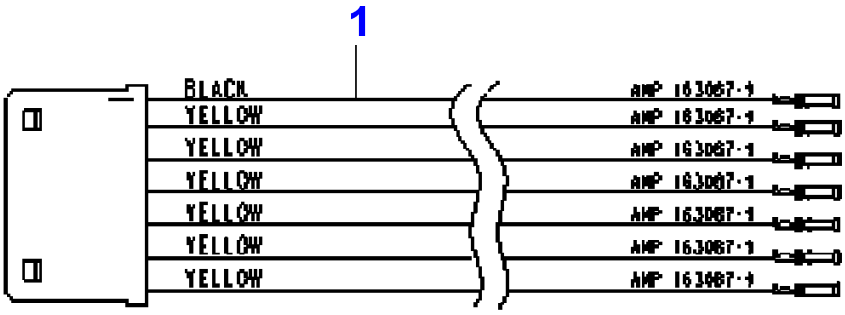

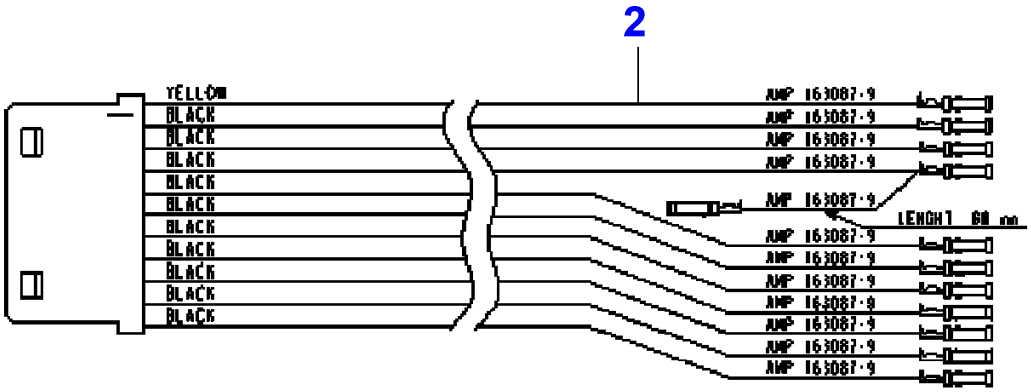

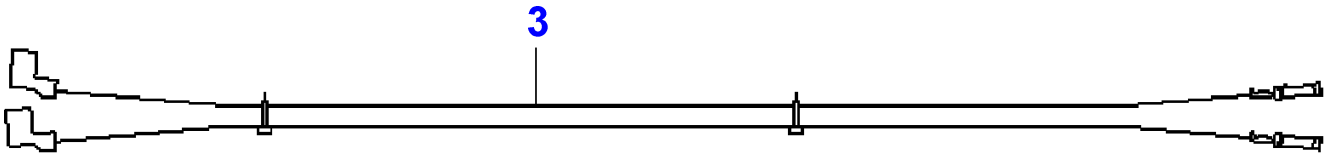

D-AFYK-005-A

https://truckmanualshub.com/

Item	Part Number	Qty	Description	Comments
1	D44900817	1	Harness	[A]
2	D44900818	1	Harness	[A]
3	D44900821	1	Harness	[A]

FOOTNOTE [A] THE CONNECTOR DESIGNATIONS REFER TO THE ELECTRICAL DOCUMENTATION OF THE MACHINE

https://truckmanualshub.com/

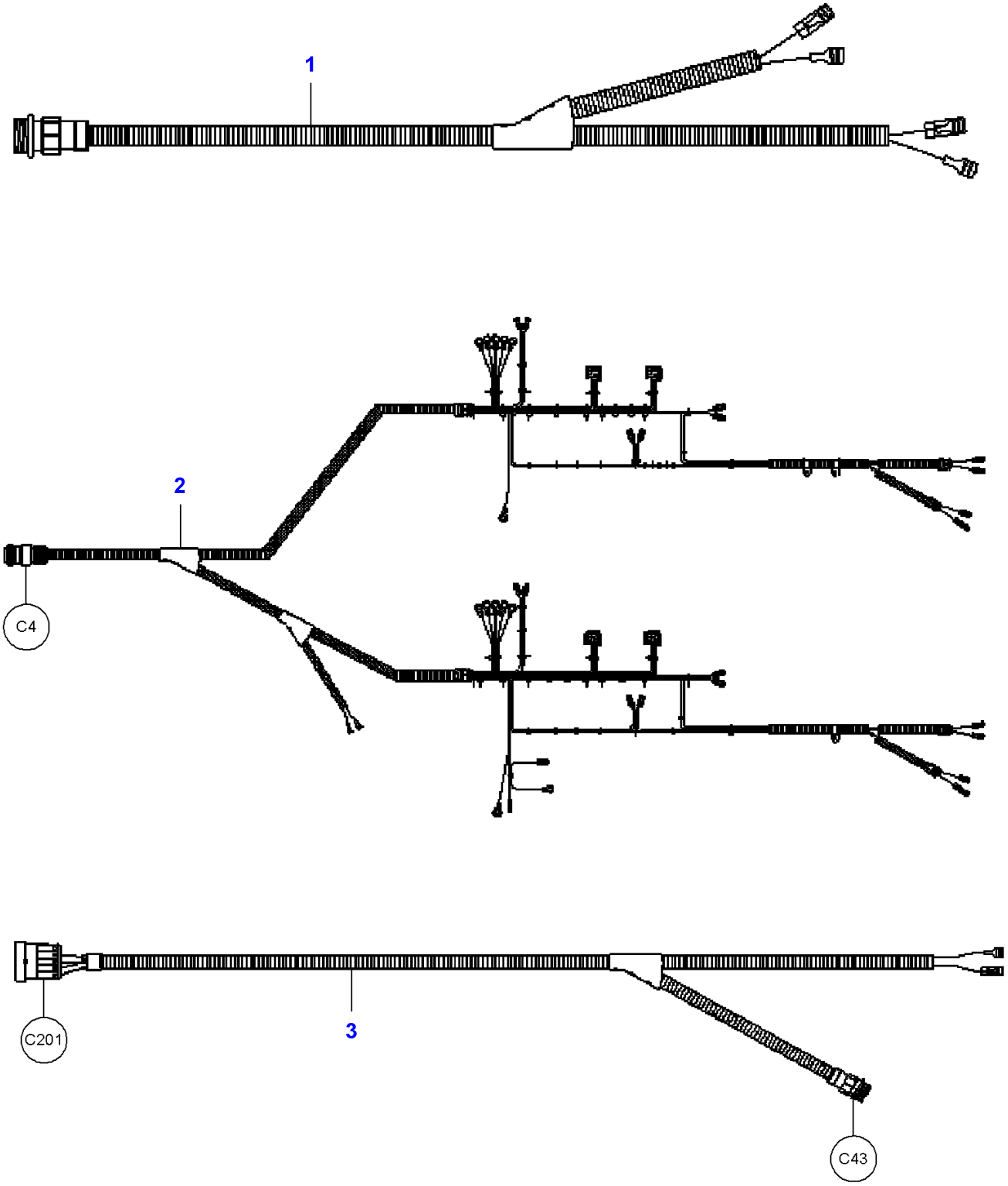

D-AFYL-001-A

https://truckmanualshub.com/

Item	Part Number	Qty	Description	Comments
1	D28785578	1	Harness	[A,B]
2	D28782408	1	Harness	[A,C]
3	D28786063	1	Harness	[A,D]

FOOTNOTE [A] THE CONNECTOR DESIGNATIONS REFER TO THE ELECTRICAL DOCUMENTATION OF THE MACHINE
FOOTNOTE [B] REVERSING LAMP
FOOTNOTE [C] WAY LIGHTS
FOOTNOTE [D] MOISTER METER

https://truckmanualshub.com/

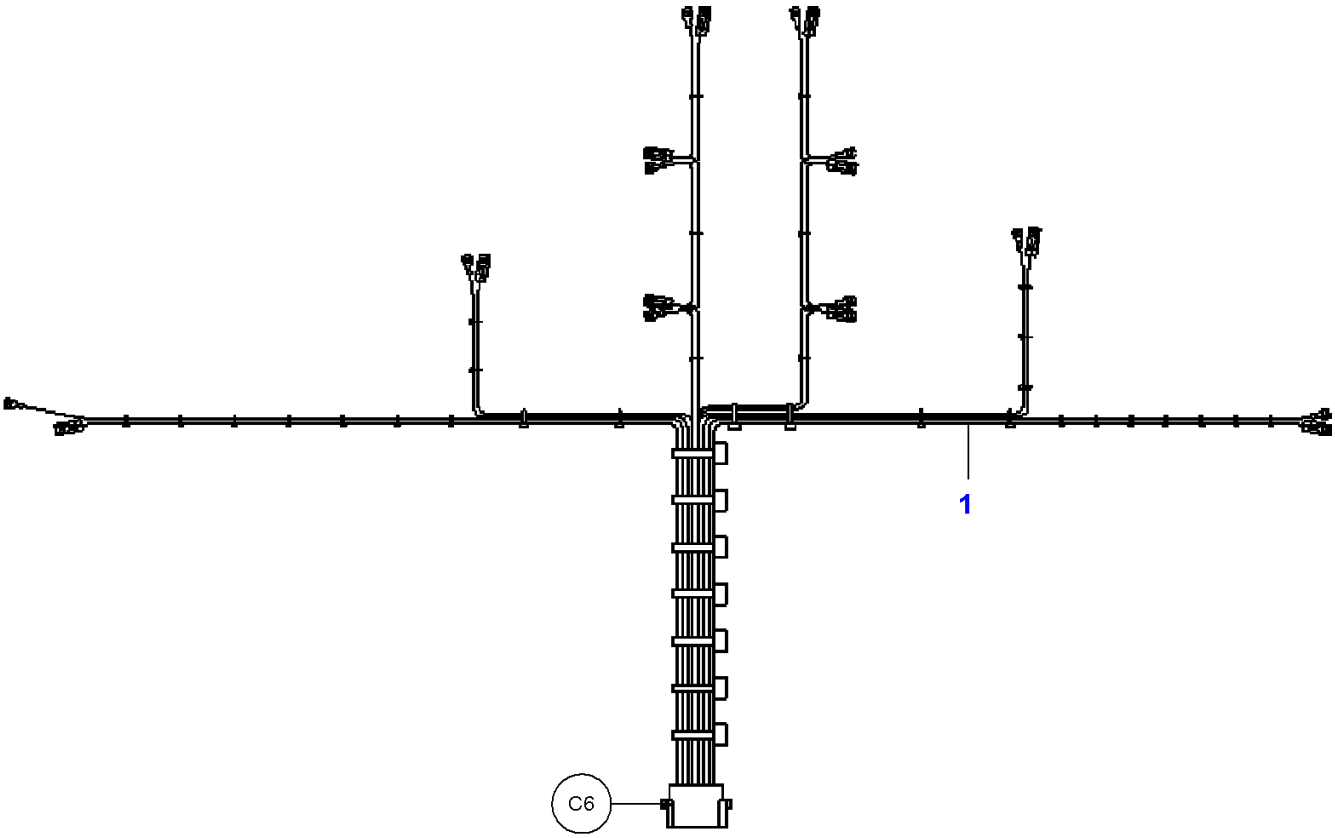

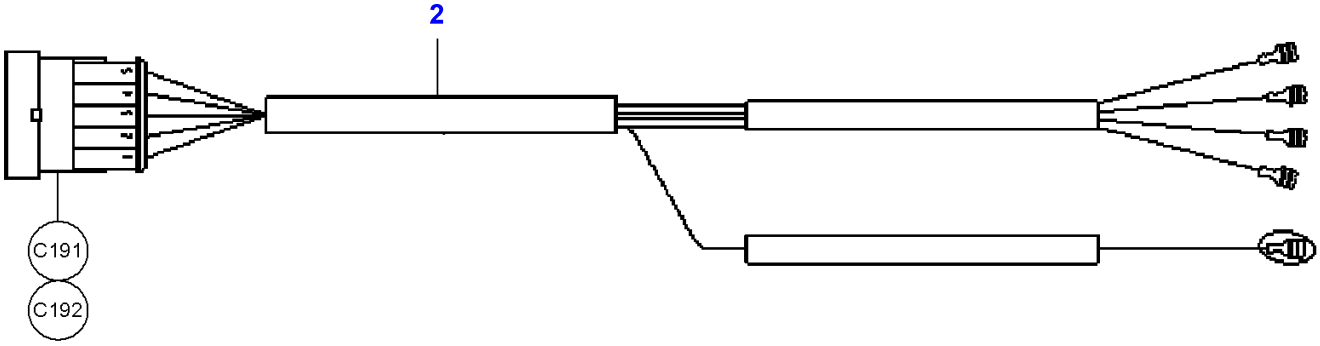

D-AFYL-002-A

https://truckmanualshub.com/

Item	Part Number	Qty	Description	Comments
1	D28787226	1	Harness	[A,B]
2	D28787124	1	Harness	[A,C]

FOOTNOTE [A] THE CONNECTOR DESIGNATIONS REFER TO THE ELECTRICAL DOCUMENTATION OF THE MACHINE
FOOTNOTE [B] WORK LIGHT
FOOTNOTE [C] REAR LIGHT

https://truckmanualshub.com/

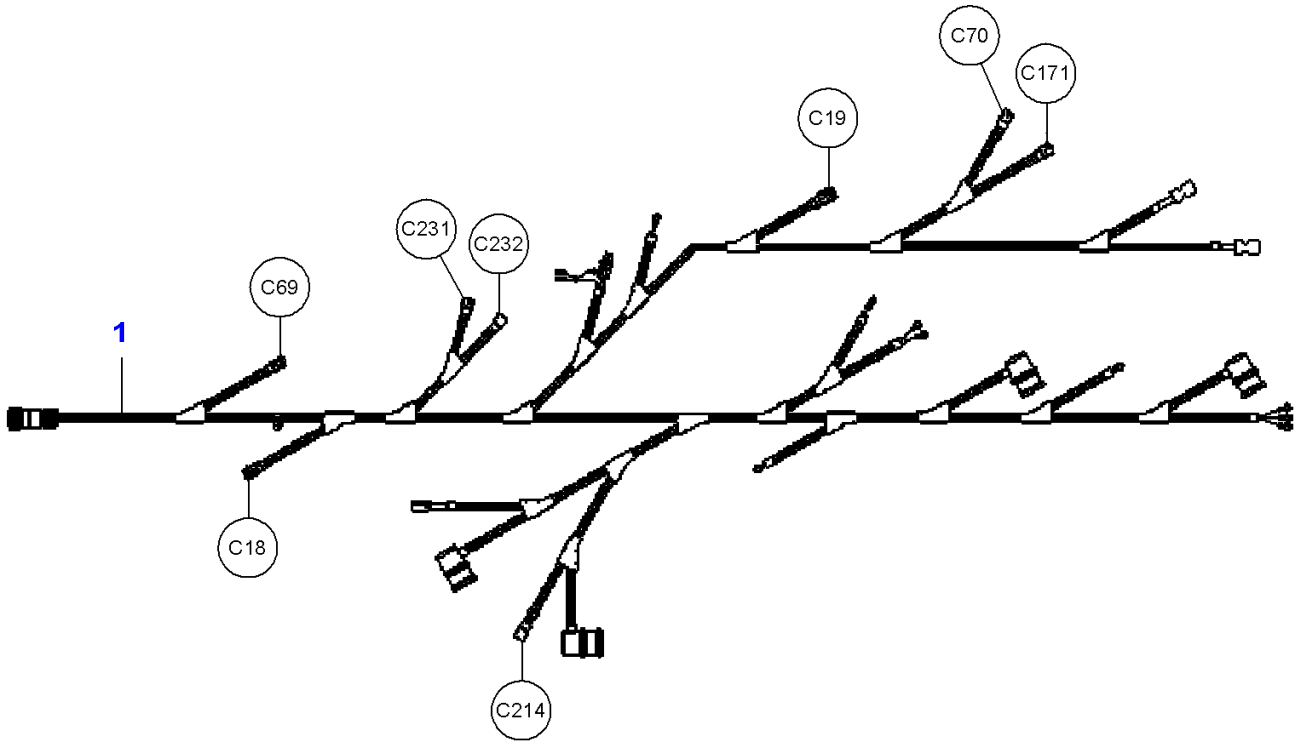

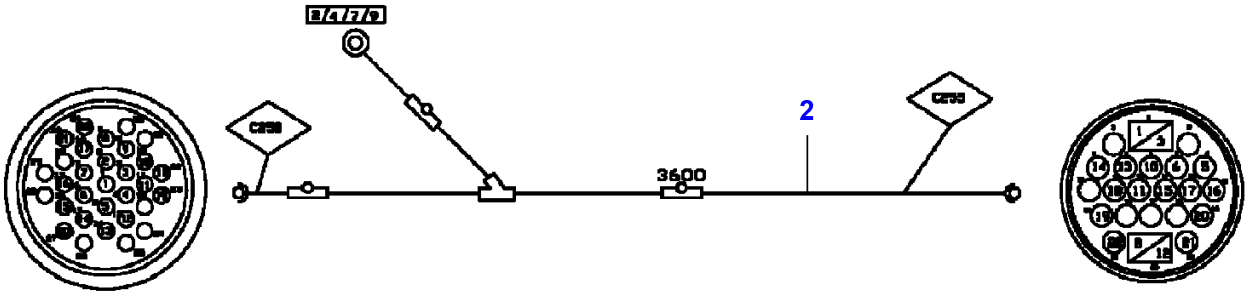

https://truckmanualshub.com/

Item	Part Number	Qty	Description	Comments
1	D28787259	1	Harness	[A]
2	D28273880	1	Harness	[A]

FOOTNOTE [A] THE CONNECTOR DESIGNATIONS REFER TO THE ELECTRICAL DOCUMENTATION OF THE MACHINE

https://truckmanualshub.com/

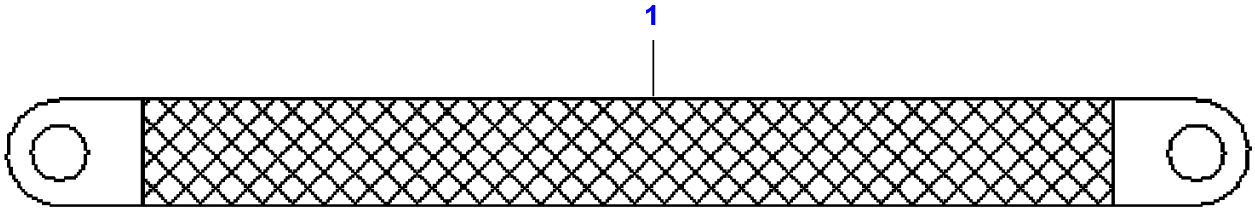

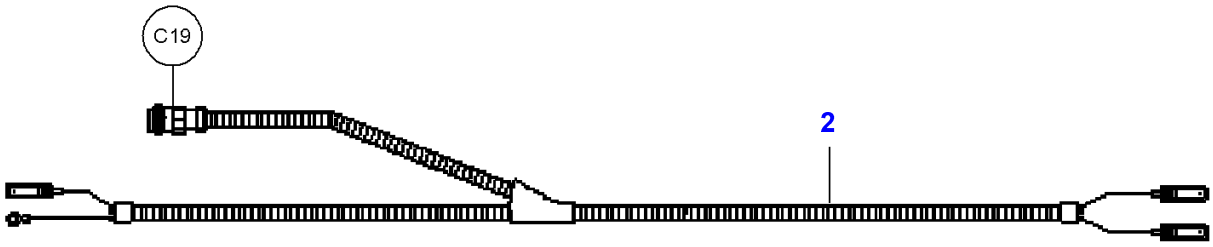

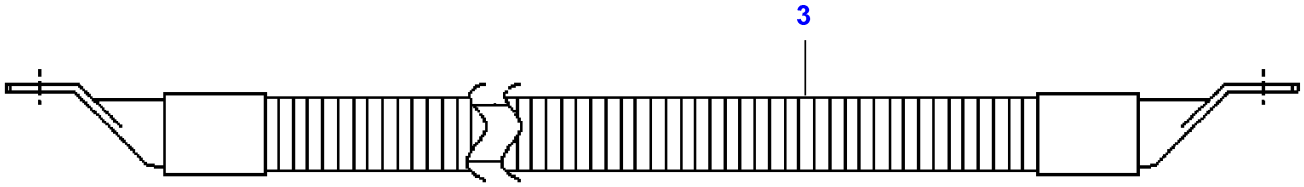

D-AFYM-002-A

https://truckmanualshub.com/

Item	Part Number	Qty	Description	Comments
1	D28760642	1	Earth Strap	[A,B]
2	D28781363	1	Harness	[A,C]
3	D28785949	1	Cable	[A,D]

FOOTNOTE [A] THE CONNECTOR DESIGNATIONS REFER TO THE ELECTRICAL DOCUMENTATION OF THE MACHINE
FOOTNOTE [B] GROUND CABLE
FOOTNOTE [C] AIR CONDITIONED
FOOTNOTE [D] STARTER CABLE

https://truckmanualshub.com/

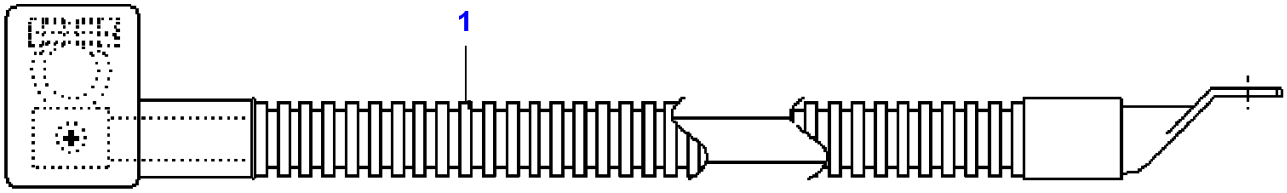

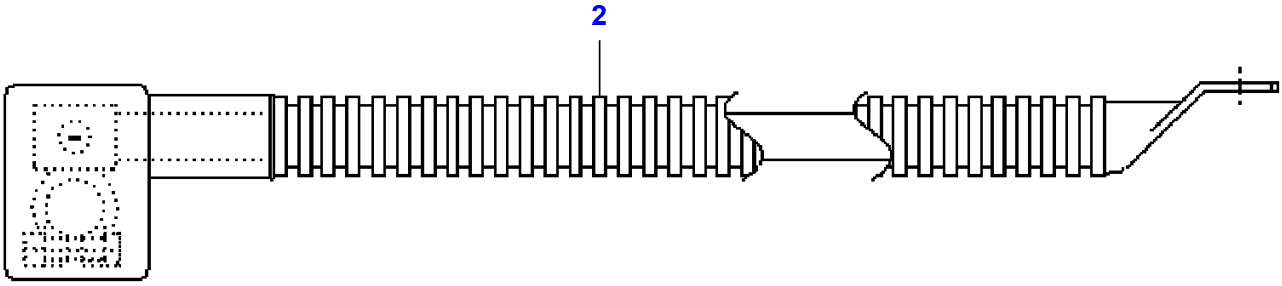

D-AFYN-001-A

https://truckmanualshub.com/

Item	Part Number	Qty	Description	Comments
1	D28781896	1	Cable	[A,B]
2	D28781929	1	Cable	[A,C]

FOOTNOTE [A] THE CONNECTOR DESIGNATIONS REFER TO THE ELECTRICAL DOCUMENTATION OF THE MACHINE
FOOTNOTE [B] MAIN SWITCH CABLE
FOOTNOTE [C] BATTERY CABLE

https://truckmanualshub.com/

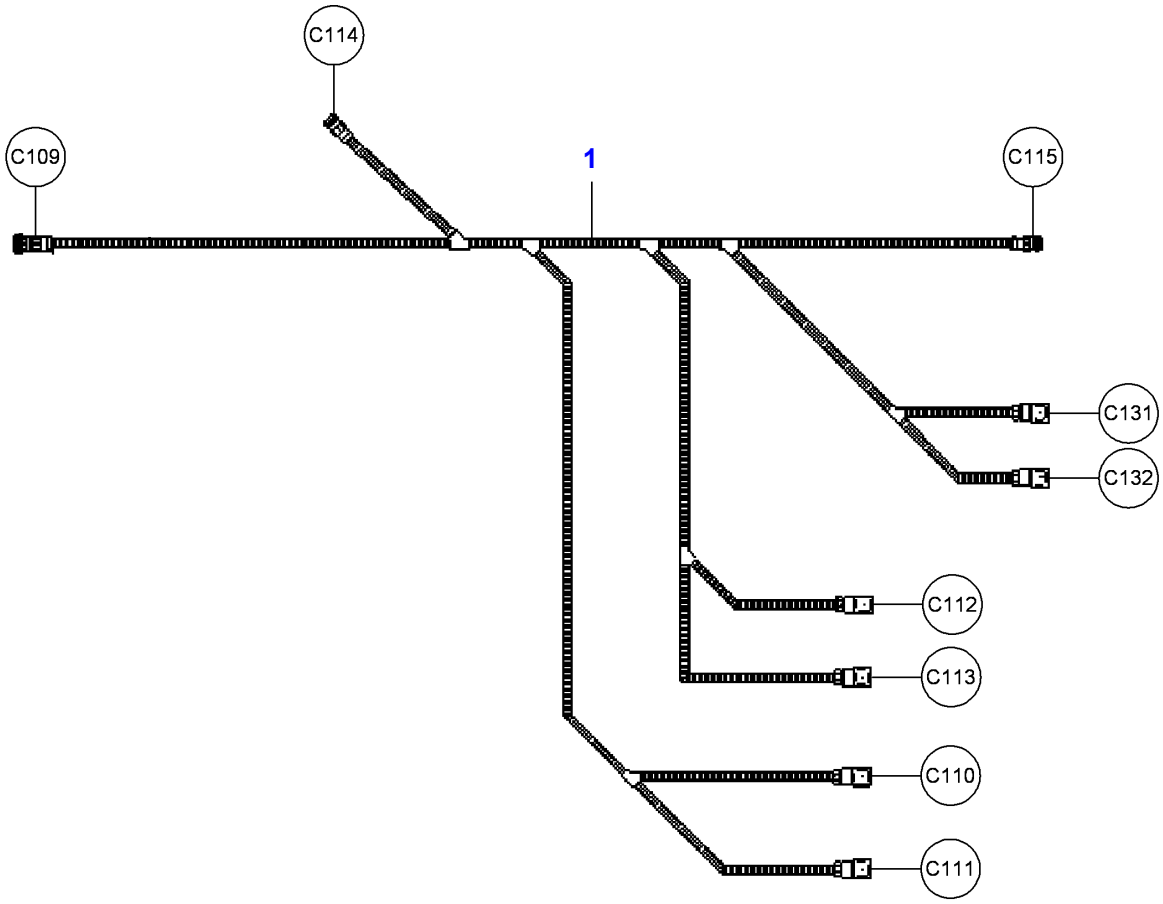

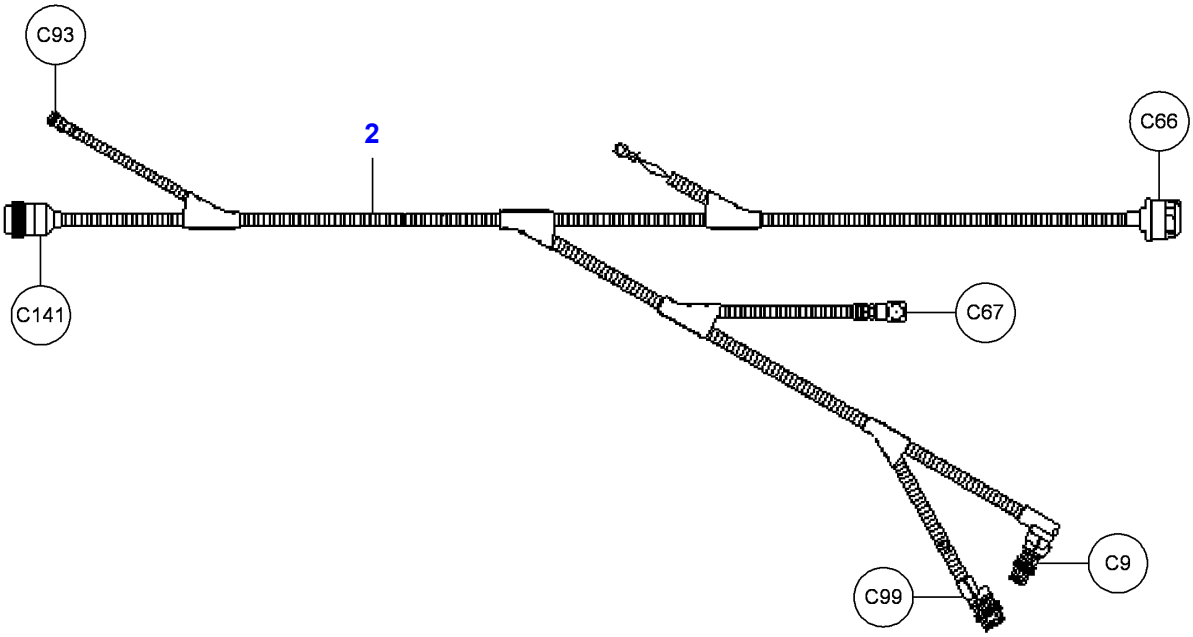

D-AFYN-002-B

https://truckmanualshub.com/

Item	Part Number	Qty	Description	Comments
1	D28782705	1	Harness	[A,B]
2	D28781900	1	Harness	[A,C]
				Up to Serial or Engine Number 62017

FOOTNOTE [A] THE CONNECTOR DESIGNATIONS REFER TO THE ELECTRICAL DOCUMENTATION OF THE MACHINE
FOOTNOTE [B] CONCAVE LEAD-IN PLATE
FOOTNOTE [C] TABLE CHANNEL

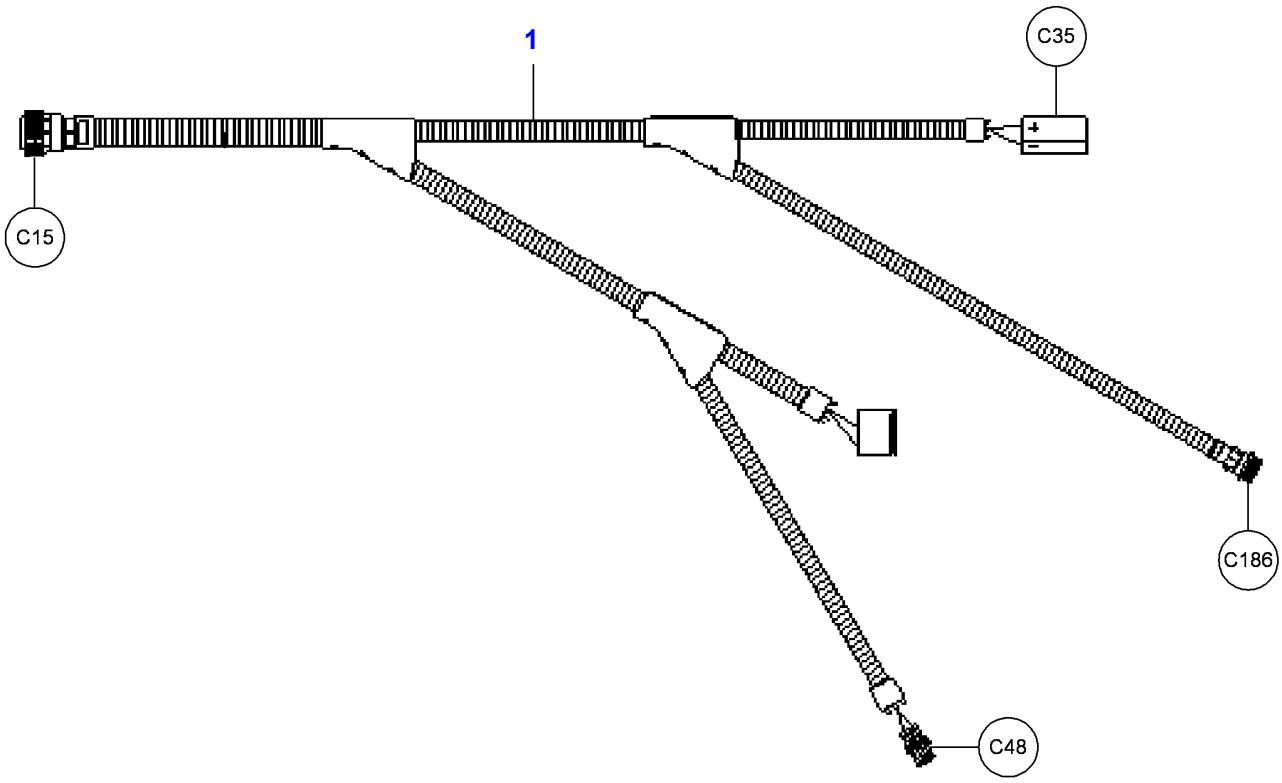

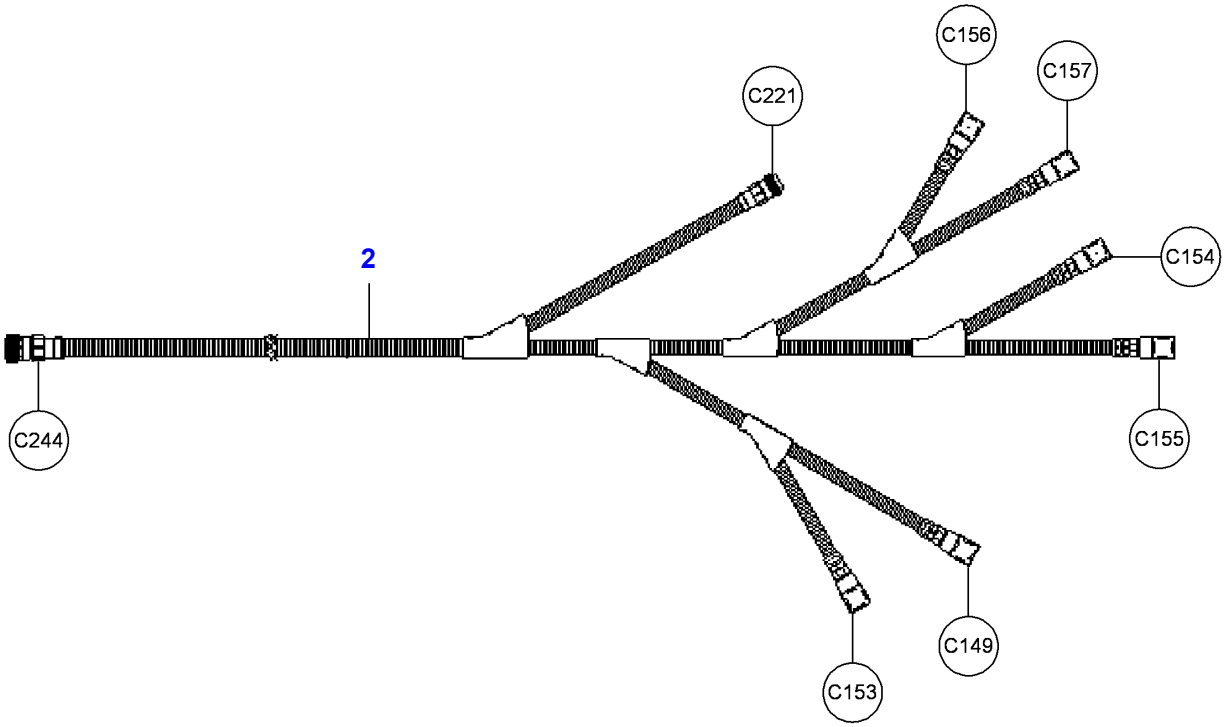

D-AFYN-003-B

https://truckmanualshub.com/

Item	Part Number	Qty	Description	Comments
1	D28782702	1	Harness	[A,B]
2	D28782724	1	Harness	[A,C]

FOOTNOTE [A] THE CONNECTOR DESIGNATIONS REFER TO THE ELECTRICAL DOCUMENTATION OF THE MACHINE
FOOTNOTE [B] GRAIN TANK
FOOTNOTE [C] ELECTRIC GEARSHIFT

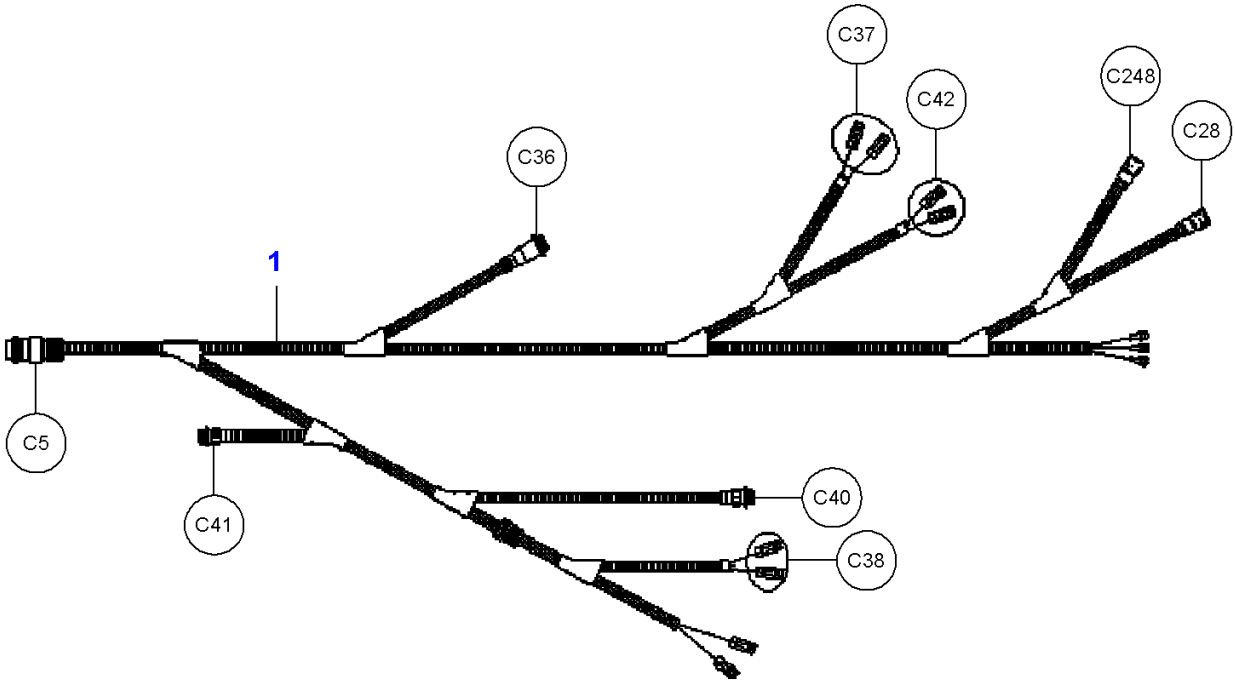
C37
C42
C248
C28
C36
1
C5
C41
C40
C38

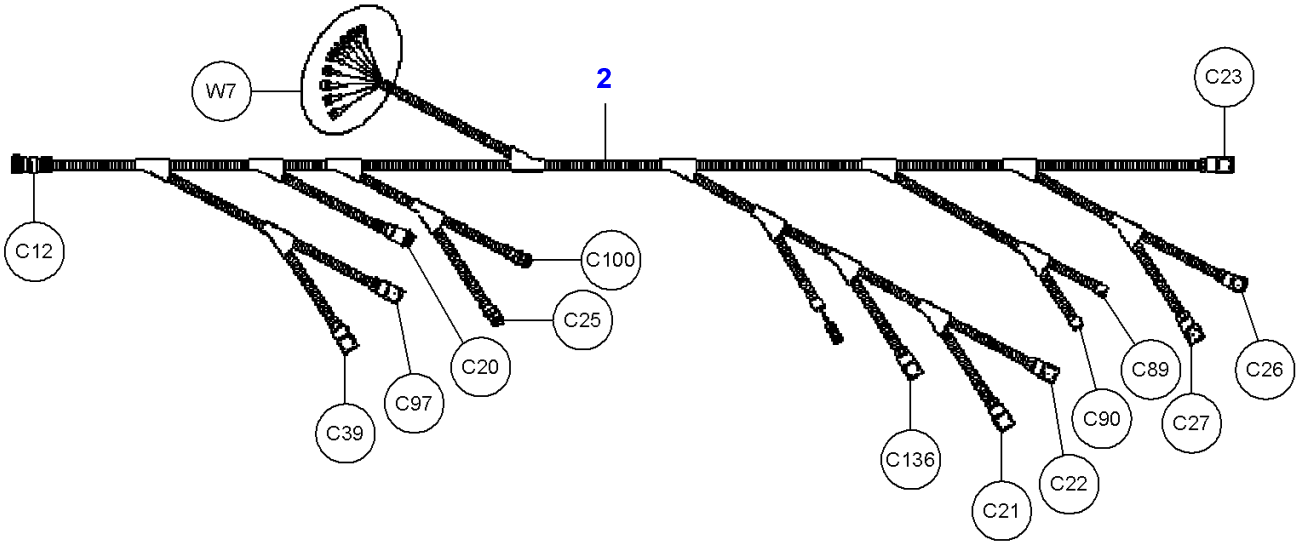
W7
2
C23
C12
C100
C25
C20
C97
C39
C89
C26
C90
C27
C136
C22
C21

D-AFYN-004-A

https://truckmanualshub.com/

Item	Part Number	Qty	Description	Comments
1	D28782563	1	Harness	[A,B]
2	D28780964	1	Harness	[A,C]

FOOTNOTE [A] THE CONNECTOR DESIGNATIONS REFER TO THE ELECTRICAL DOCUMENTATION OF THE MACHINE
FOOTNOTE [B] GRAIN TANK
FOOTNOTE [C] HARVEST FUNCTION

https://truckmanualshub.com/

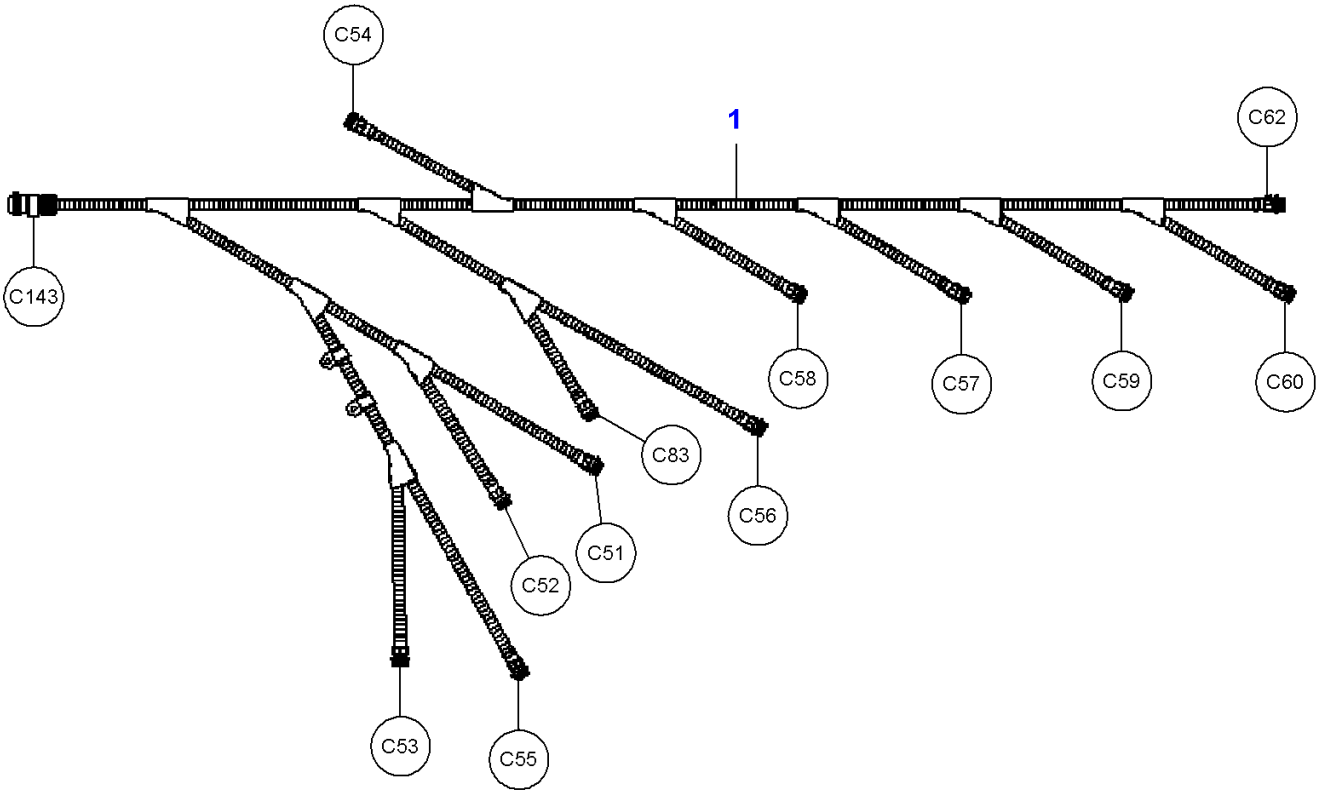

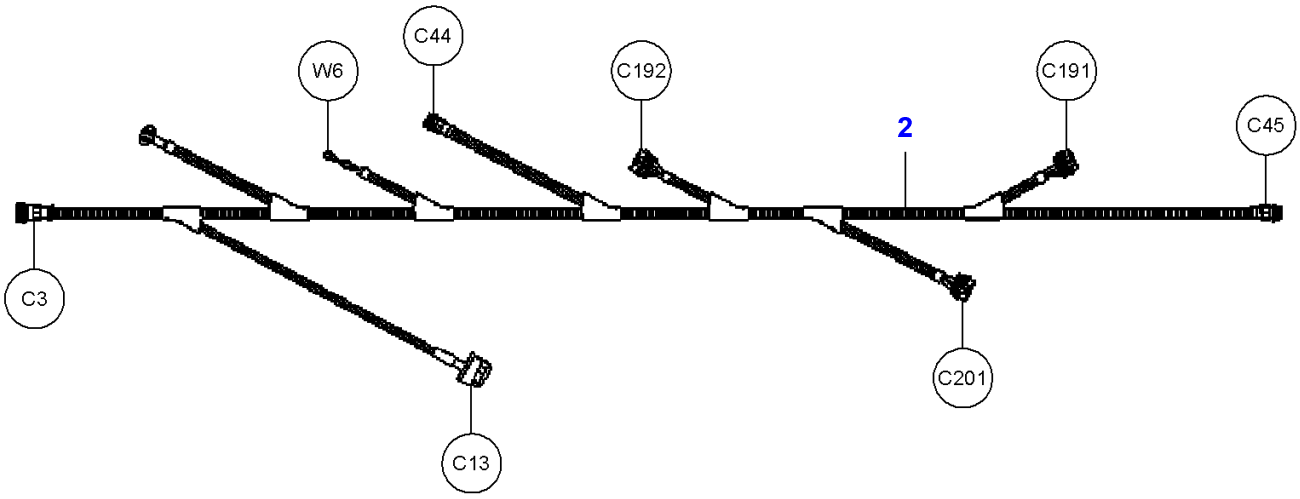

D-AFYN-005-A

https://truckmanualshub.com/

Item	Part Number	Qty	Description	Comments
1	D28781018	1	Harness	[A,B]
2	D28781729	1	Harness	[A,C]

FOOTNOTE [A] THE CONNECTOR DESIGNATIONS REFER TO THE ELECTRICAL DOCUMENTATION OF THE MACHINE
FOOTNOTE [B] MONITORING
FOOTNOTE [C] STRAW HOOD

https://truckmanualshub.com/

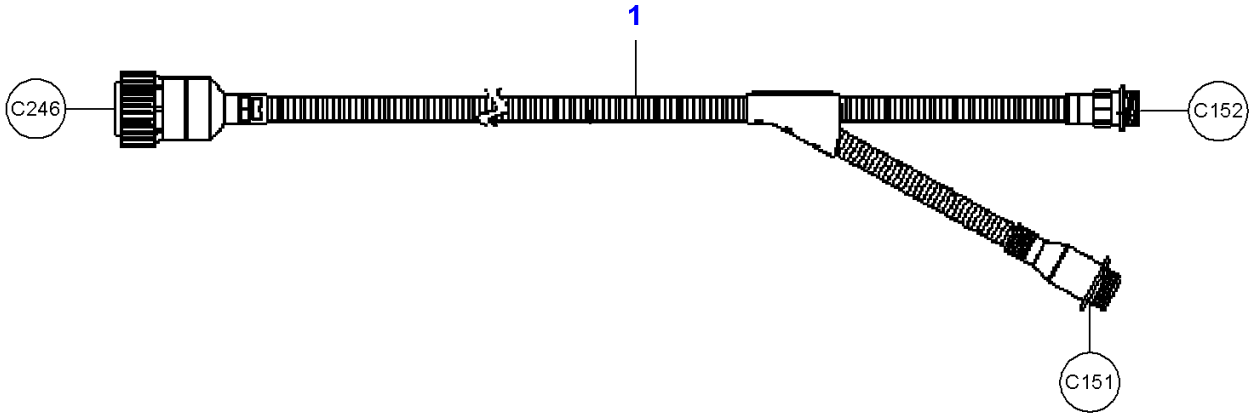

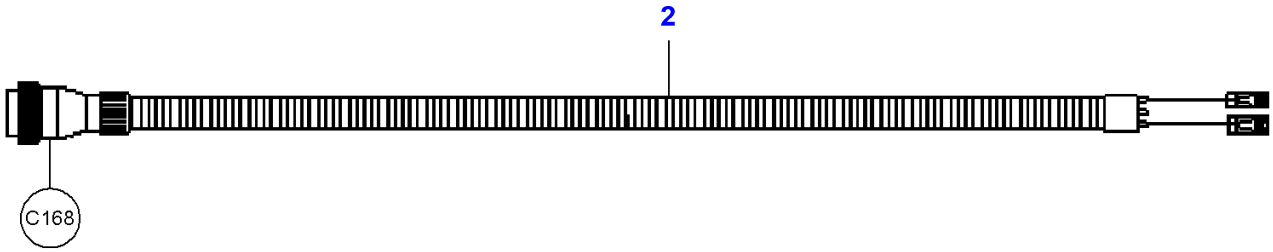

https://truckmanualshub.com/

Item	Part Number	Qty	Description	Comments
1	D28782369	1	Harness	[A,B]
2	D28782472	1	Harness	[A,C]

FOOTNOTE [A] THE CONNECTOR DESIGNATIONS REFER TO THE ELECTRICAL DOCUMENTATION OF THE MACHINE
FOOTNOTE [B] CONCAVE
FOOTNOTE [C] GRAIN TANK COVERS

https://truckmanualshub.com/

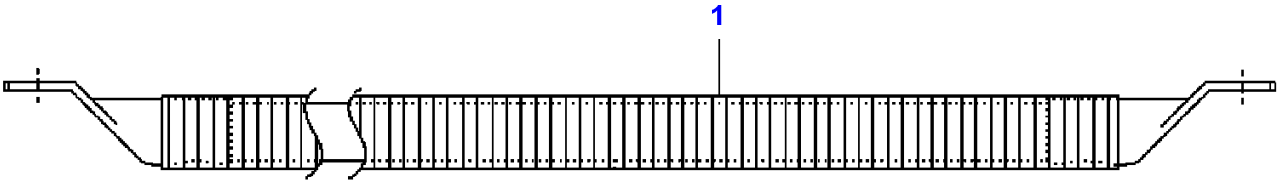

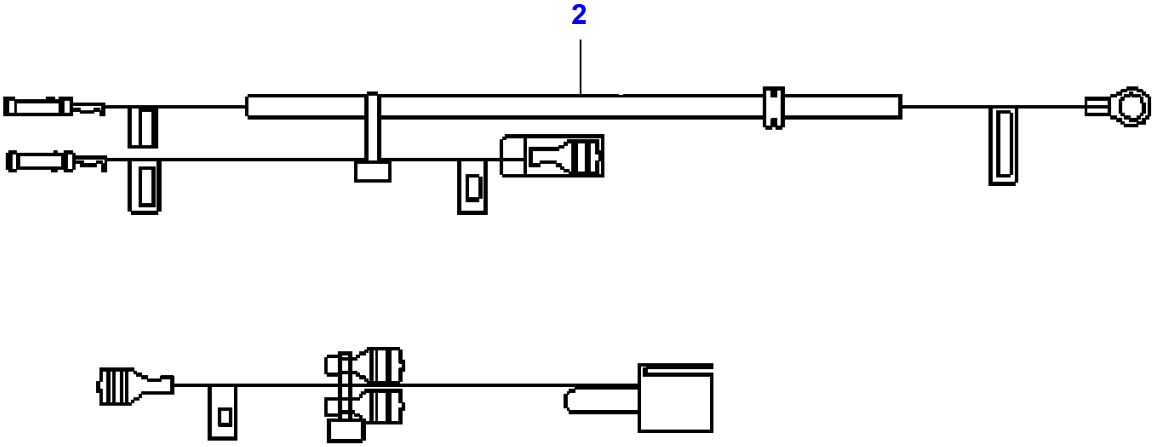

D-AFYN-007-A

https://truckmanualshub.com/

Item	Part Number	Qty	Description	Comments
1	D28789530	1	Harness	[A,B]
2	D28789531	1	Harness	[A,B]

FOOTNOTE [A] THE CONNECTOR DESIGNATIONS REFER TO THE ELECTRICAL DOCUMENTATION OF THE MACHINE
FOOTNOTE [B] MAIN SWITCH

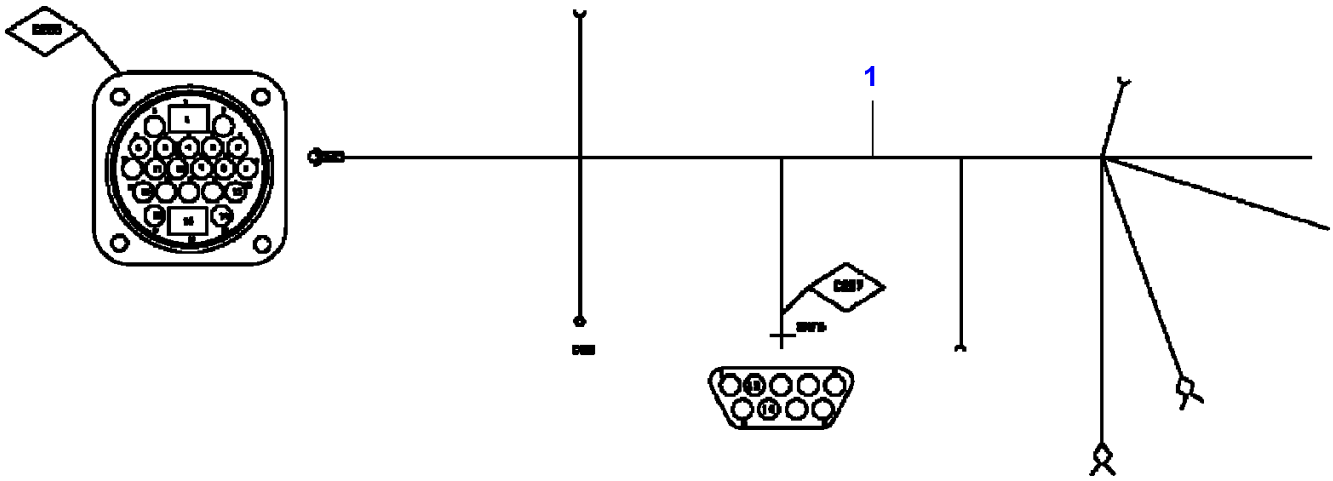

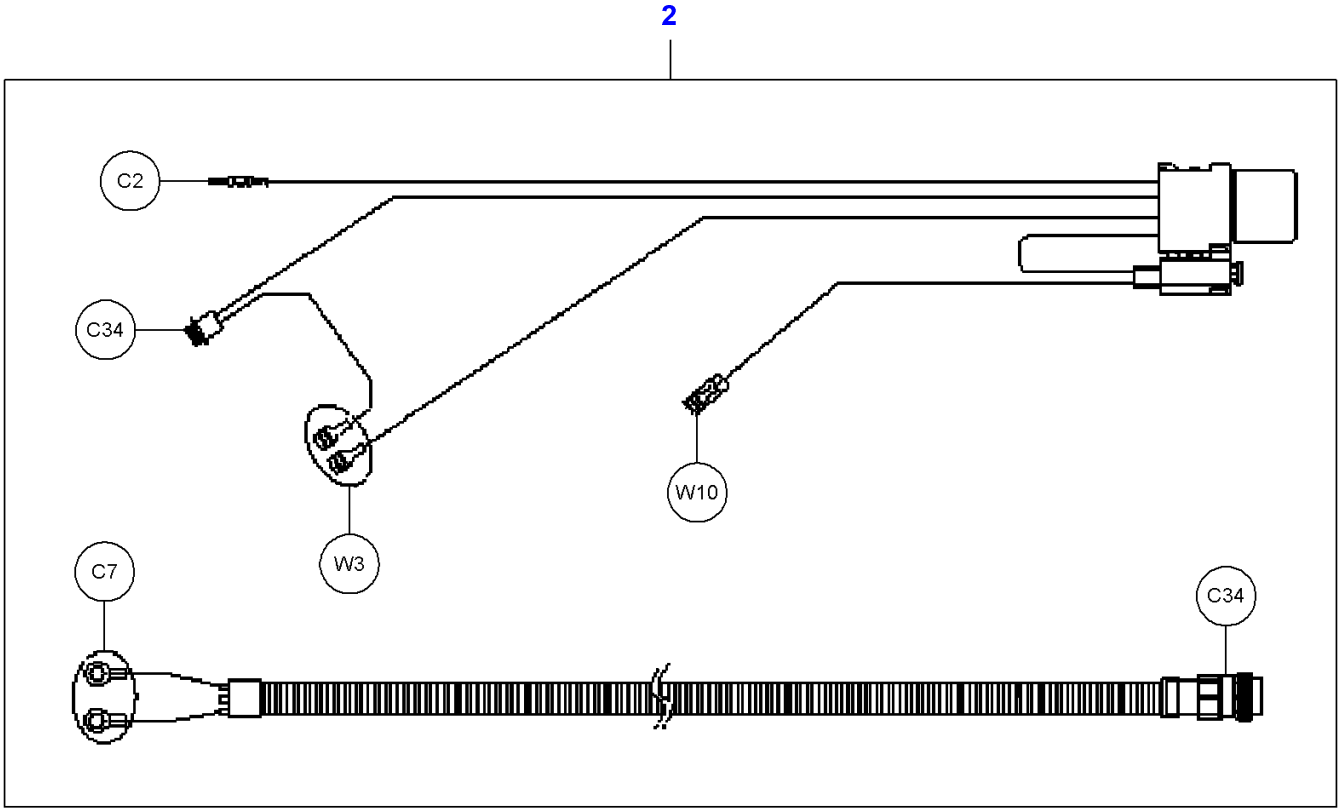

D-AFYO-001-A

https://truckmanualshub.com/

Item	Part Number	Qty	Description	Comments
1	D28273881	1	Harness	[A,B]
2	D28781478	1	Harness	[A,C]

FOOTNOTE [A] THE CONNECTOR DESIGNATIONS REFER TO THE ELECTRICAL DOCUMENTATION OF THE MACHINE
FOOTNOTE [B] ENGINE STAGE III
FOOTNOTE [C] 4 WD

https://truckmanualshub.com/

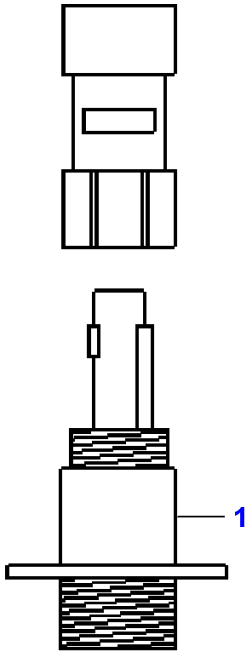

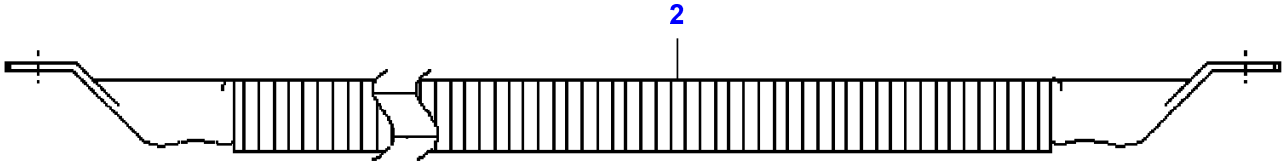

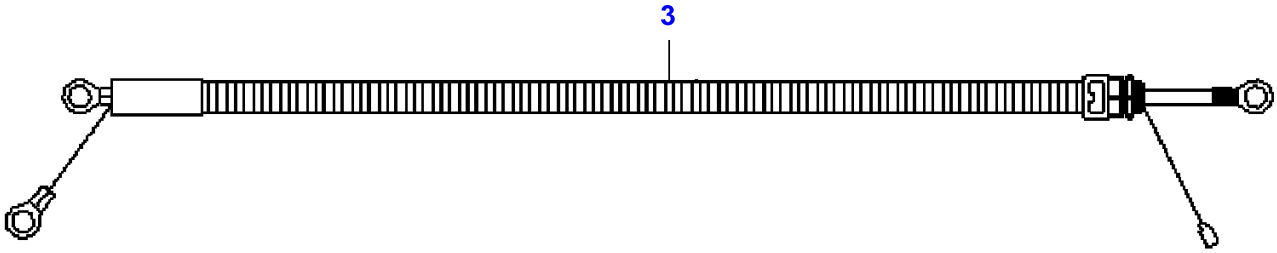

D-AFYO-002-A

https://truckmanualshub.com/

Item	Part Number	Qty	Description	Comments
1	D28781682	1	Terminal	[A,B]
2	D28781930	1	Earth Strap	[A,C]
3	D28782706	1	Harness	[A,D]

FOOTNOTE [A] THE CONNECTOR DESIGNATIONS REFER TO THE ELECTRICAL DOCUMENTATION OF THE MACHINE
FOOTNOTE [B] CAN TERMINATION
FOOTNOTE [C] GROUND CABLE
FOOTNOTE [D] FEEDER HARNESS

https://truckmanualshub.com/

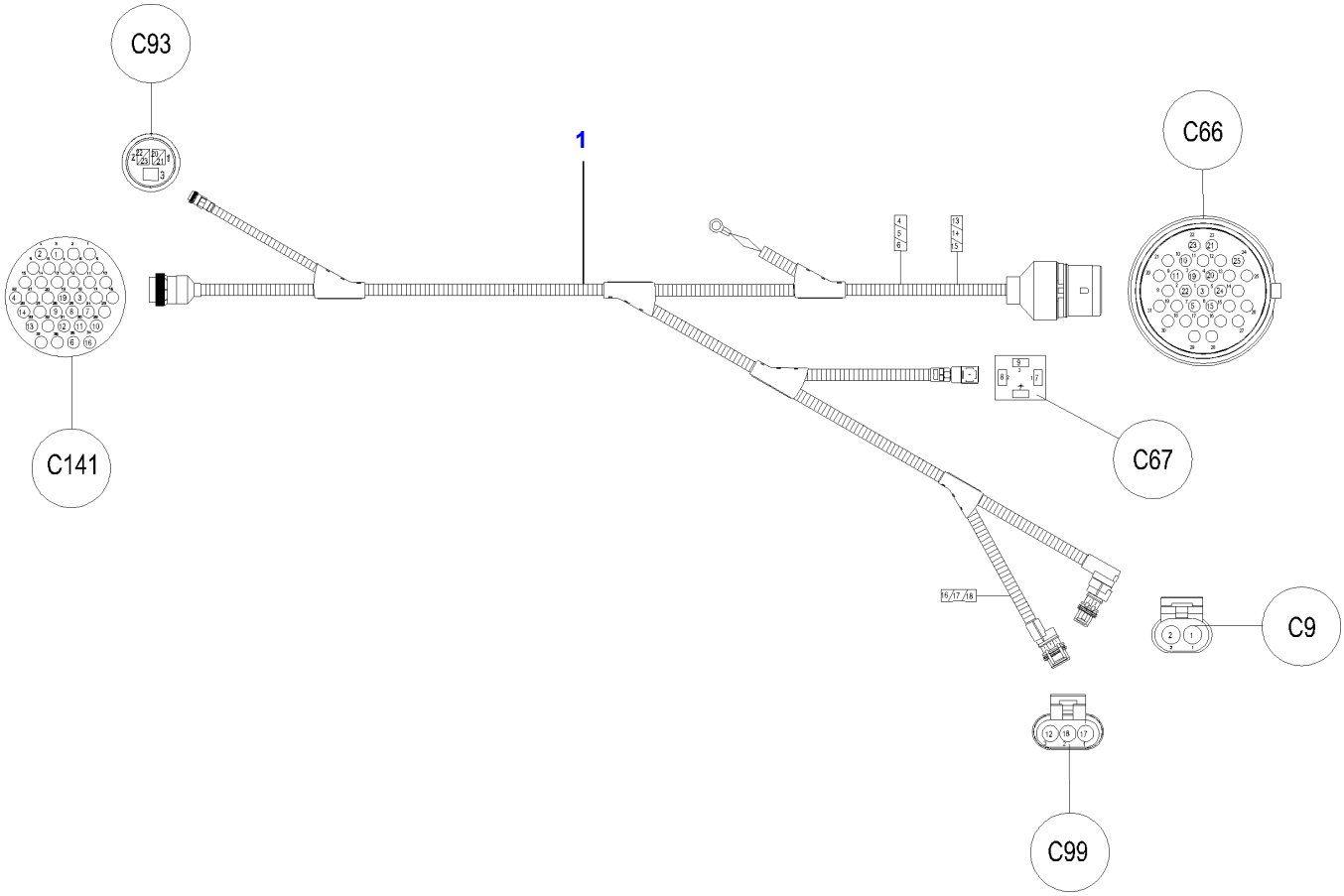

D-AFYR-001-A

https://truckmanualshub.com/

Item	Part Number	Qty	Description	Comments
1	6229273M1	1	Harness	[A,B]

FOOTNOTE [A] THE CONNECTOR DESIGNATIONS REFER TO THE ELECTRICAL DOCUMENTATION OF THE MACHINE
FOOTNOTE [B] FUSE BOX

https://truckmanualshub.com/

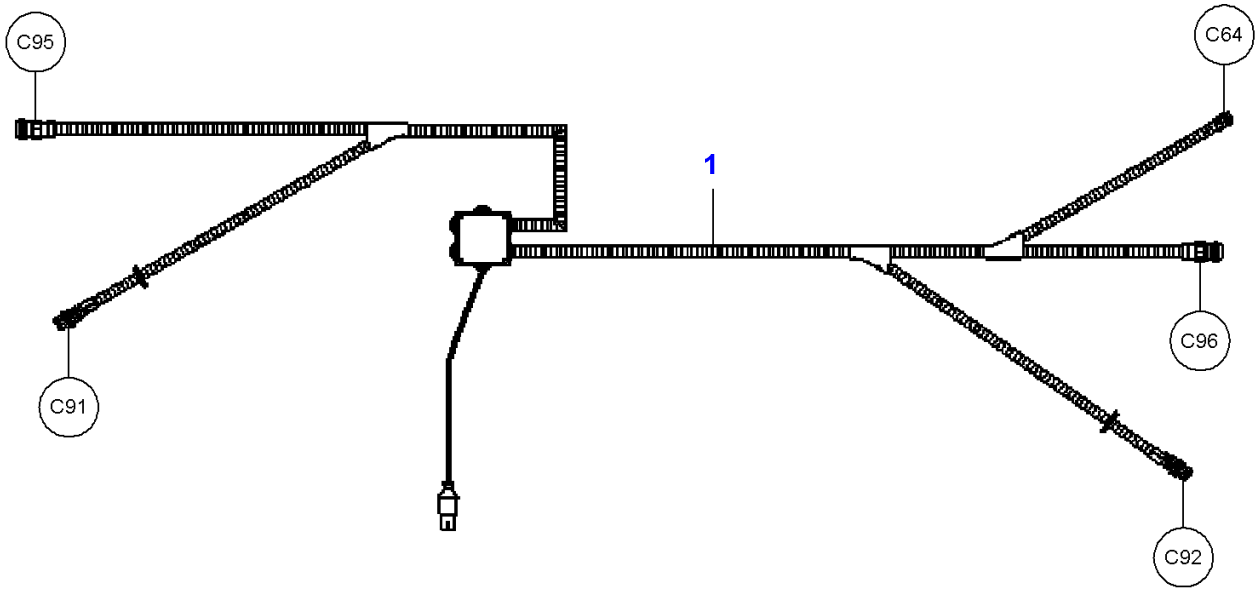

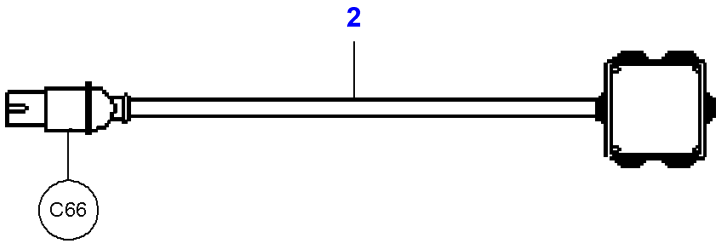

D-AFYP-001-A

https://truckmanualshub.com/

Item	Part Number	Qty	Description	Comments
1	D28787482	1	Harness	[A,B] Up to Serial or Engine Number 943264
2	D28787483	1	Harness	[A,C]

FOOTNOTE [A] THE CONNECTOR DESIGNATIONS REFER TO THE ELECTRICAL DOCUMENTATION OF THE MACHINE
FOOTNOTE [B] CUTTING TABLE
FOOTNOTE [C] CUTTING TABLE ENGAGEMENT

https://truckmanualshub.com/

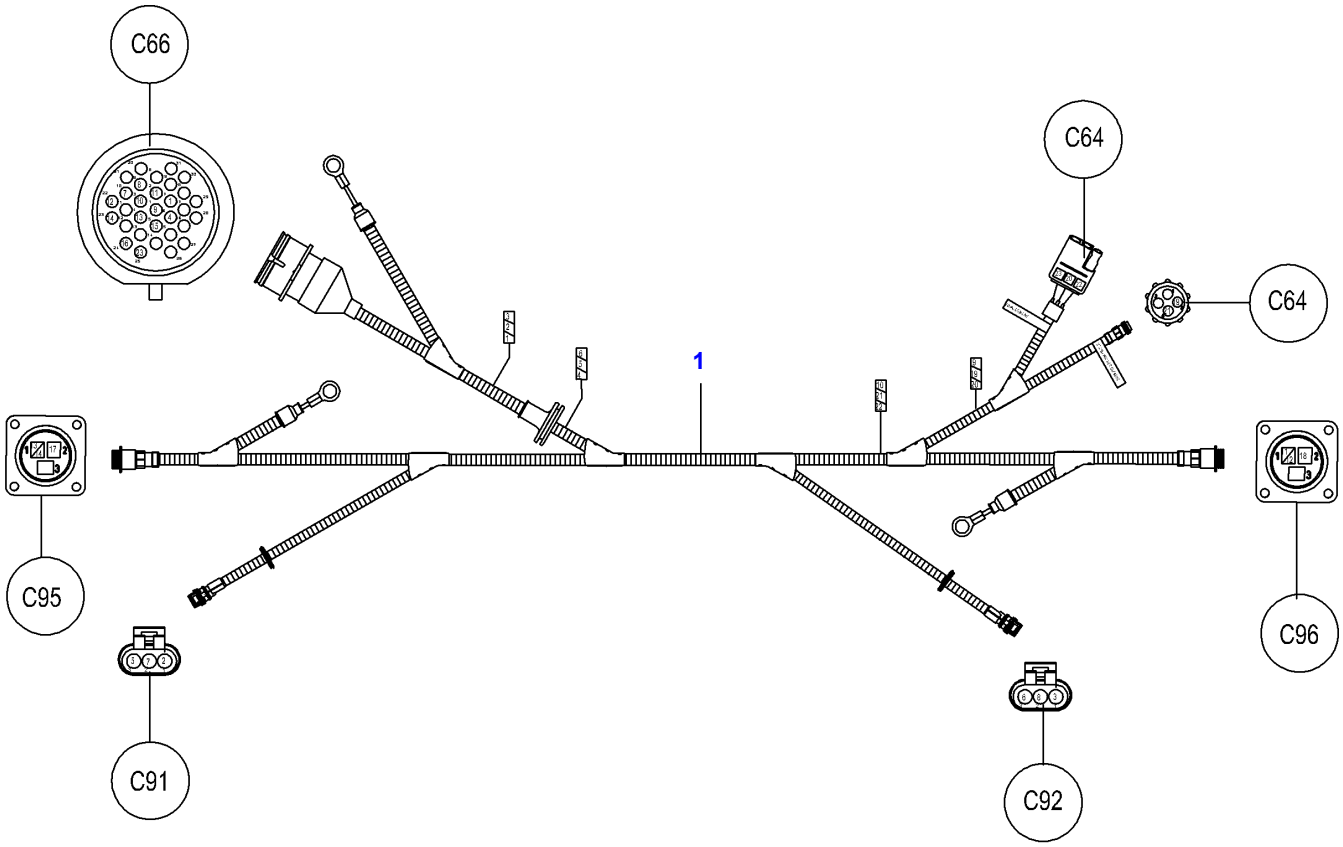

D-AFYS-001-A

https://truckmanualshub.com/

Item	Part Number	Qty	Description	Comments
1	6229265M91	1	Harness	[A,B]

FOOTNOTE [A] THE CONNECTOR DESIGNATIONS REFER TO THE ELECTRICAL DOCUMENTATION OF THE MACHINE
FOOTNOTE [B] CUTTING TABLE

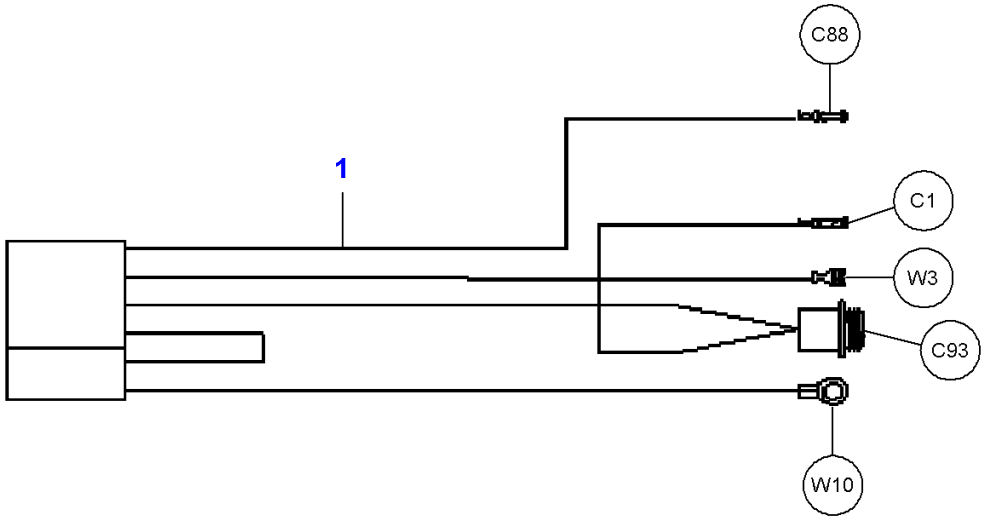

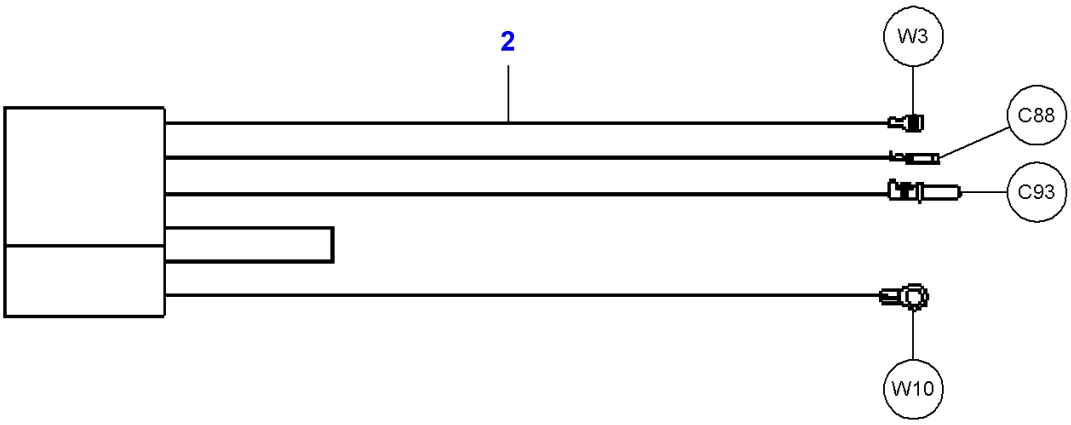

D-AFYQ-001-A

https://truckmanualshub.com/

Item	Part Number	Qty	Description	Comments
1	D28782725	1	Harness	[A,B]
2	D28782726	1	Harness	[A,C]

FOOTNOTE [A] THE CONNECTOR DESIGNATIONS REFER TO THE ELECTRICAL DOCUMENTATION OF THE MACHINE
FOOTNOTE [B] VERTICAL KNIFE RIGHT
FOOTNOTE [C] VERTICAL KNIFE LEFT

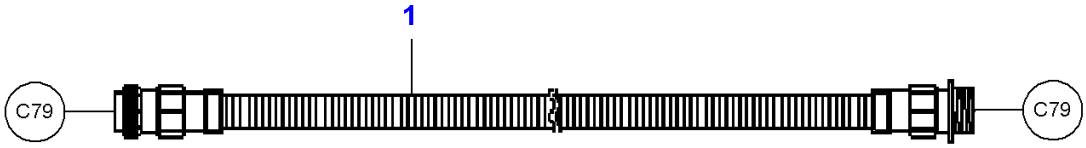

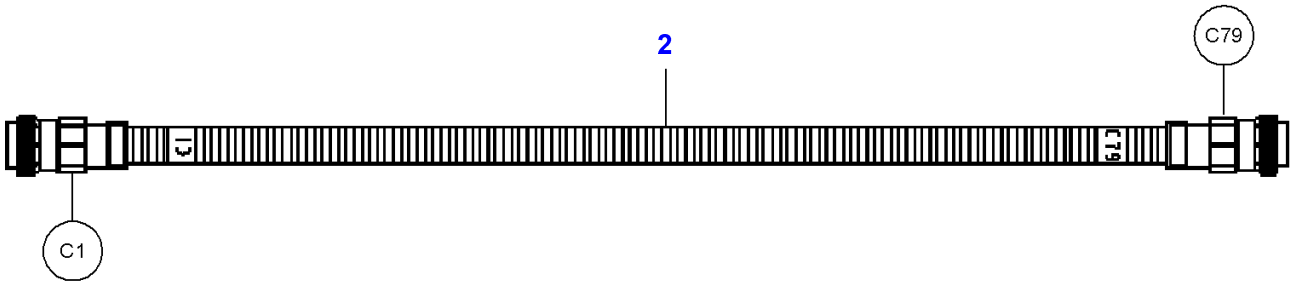

D-AFYQ-002-A

https://truckmanualshub.com/

Item	Part Number	Qty	Description	Comments
1	D28786574	1	Harness	[A]
2	D28781736	1	Harness	[A]

FOOTNOTE [A] THE CONNECTOR DESIGNATIONS REFER TO THE ELECTRICAL DOCUMENTATION OF THE MACHINE

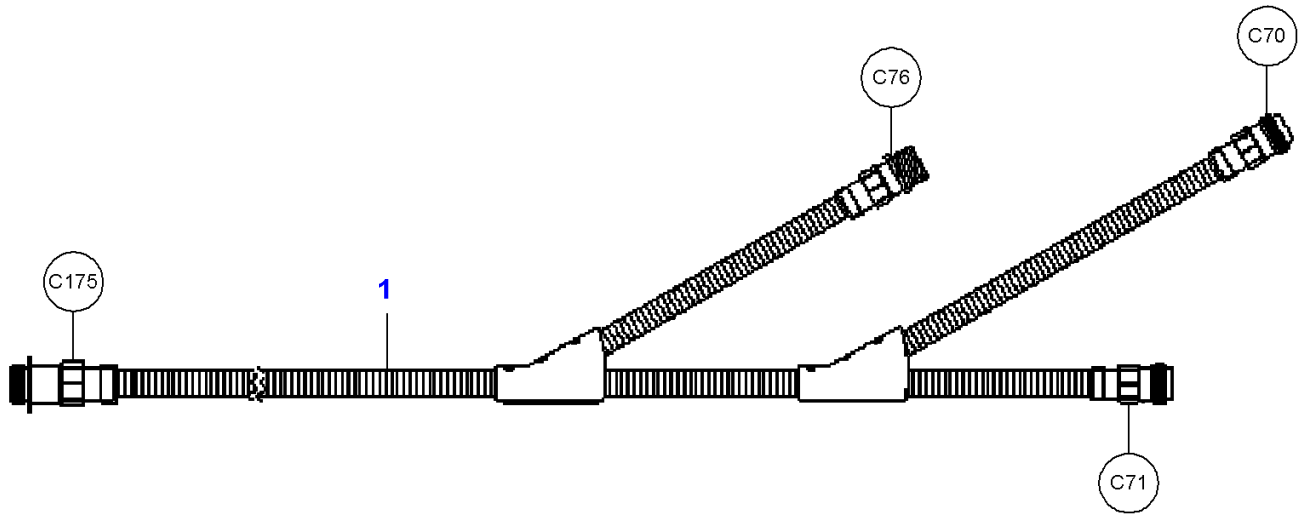

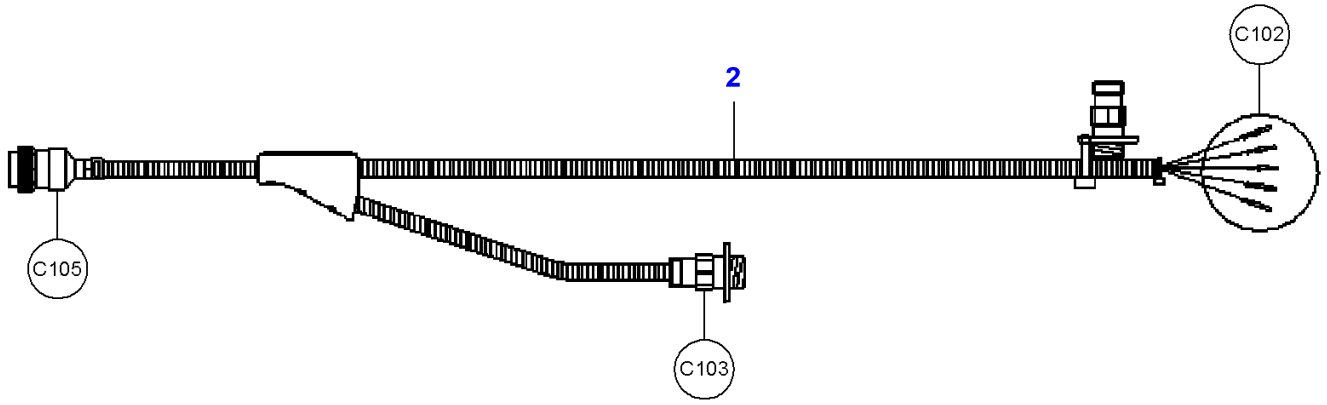

D-AFYQ-003-A

https://truckmanualshub.com/

Item	Part Number	Qty	Description	Comments
1	D28786603	1	Harness	[A,B]
2	D28785912	1	Harness	[A,C]

FOOTNOTE [A] THE CONNECTOR DESIGNATIONS REFER TO THE ELECTRICAL DOCUMENTATION OF THE MACHINE
FOOTNOTE [B] MOISTER METER
FOOTNOTE [C] STRAW DEFLECTORS

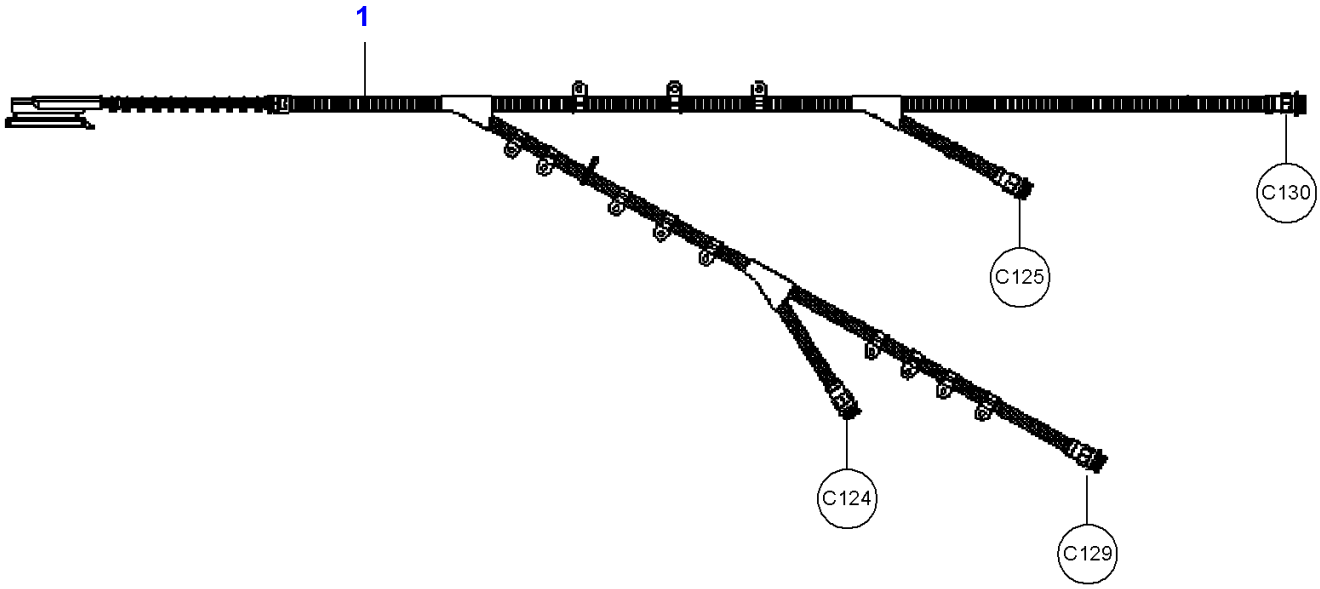

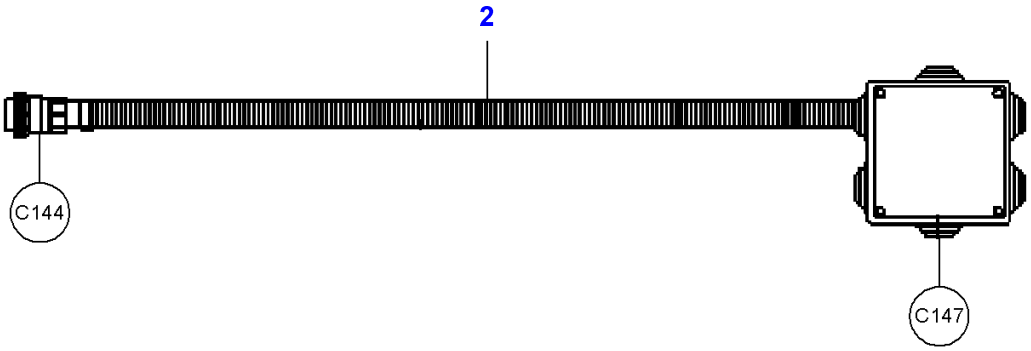

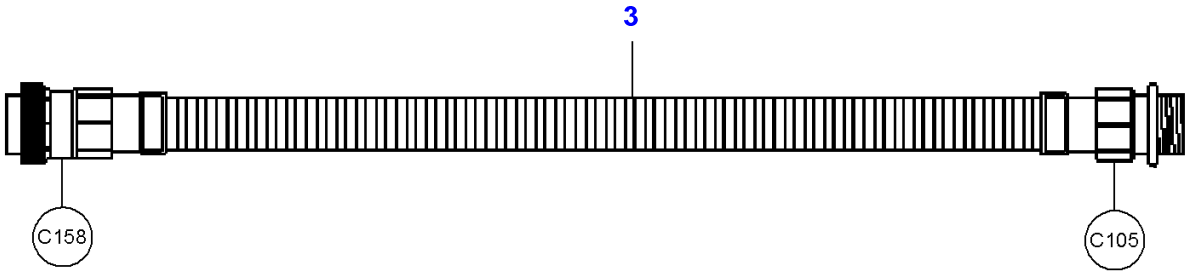

D-AFYQ-004-A

https://truckmanualshub.com/

Item	Part Number	Qty	Description	Comments
1	D28786836	1	Harness	[A,B]
2	D28781591	1	Harness	[A,C]
3	D28782381	1	Harness	[A,D]

FOOTNOTE [A] THE CONNECTOR DESIGNATIONS REFER TO THE ELECTRICAL DOCUMENTATION OF THE MACHINE
FOOTNOTE [B] ELECTRIC.SIEVES
FOOTNOTE [C] GRAIN LOSS MONITOR
FOOTNOTE [D] ELECTRICAL STRAW DEFLECTORS

https://truckmanualshub.com/

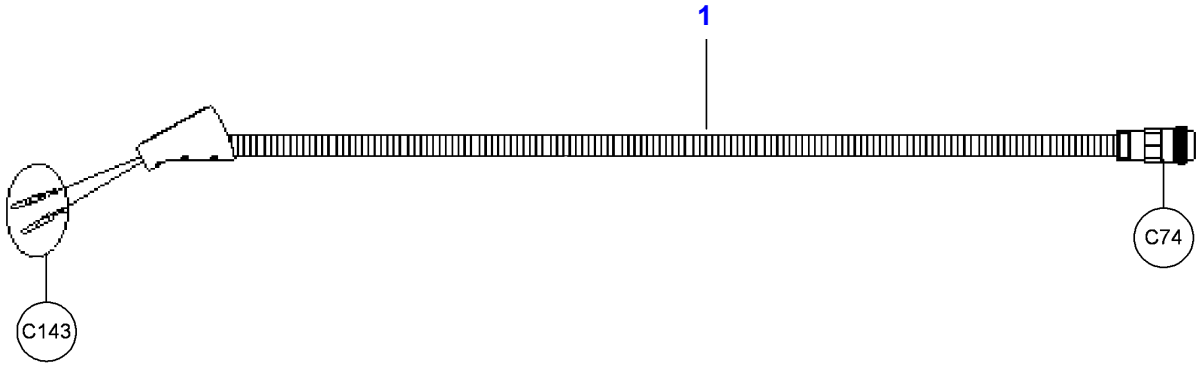

D-AFYQ-005-B

https://truckmanualshub.com/

Item	Part Number	Qty	Description	Comments
1	D28781657	1	Harness	[A,B]
2	D28782928	1	Harness	[A,D]

FOOTNOTE [A] THE CONNECTOR DESIGNATIONS REFER TO THE ELECTRICAL DOCUMENTATION OF THE MACHINE
FOOTNOTE [B] FOR RETURNS VOLUME MONITOR
FOOTNOTE [D] MICRO TRAK YIELDMETER

https://truckmanualshub.com/

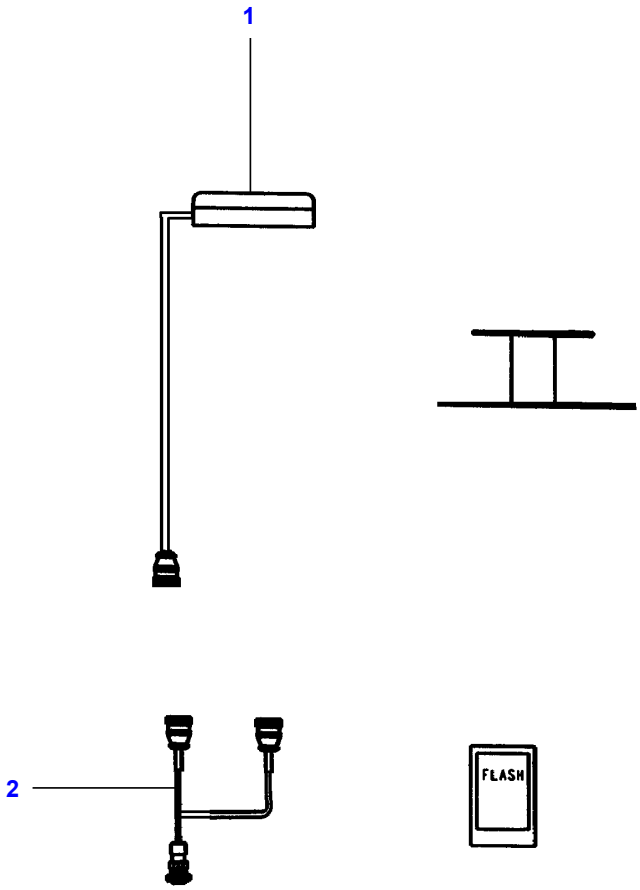

https://truckmanualshub.com/

Item	Part Number	Qty	Description
1	D44900827	1	Antenna
2	D28782545	1	Cable

https://truckmanualshub.com/

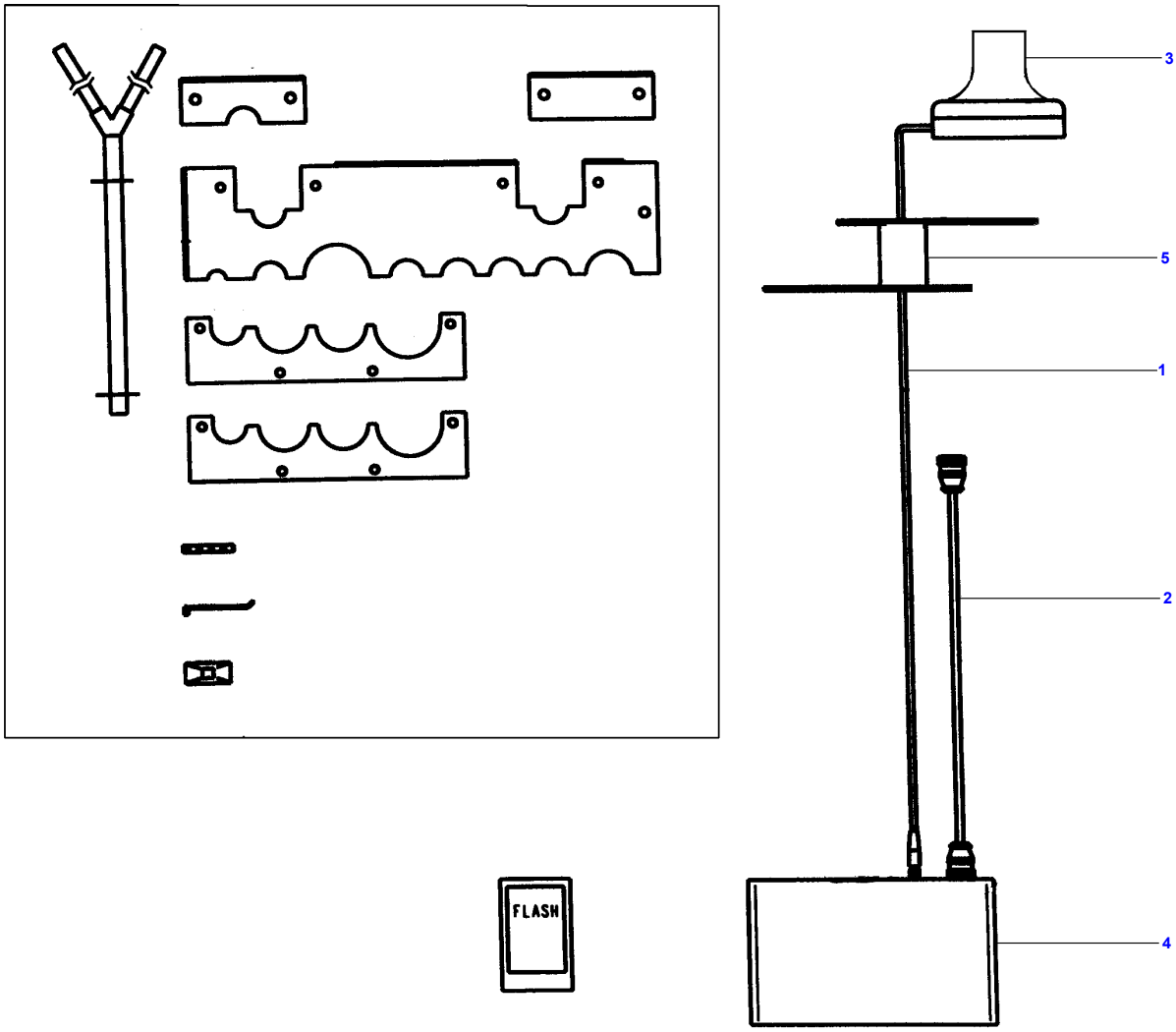

D-AFZI-001-A

https://truckmanualshub.com/

Item	Part Number	Qty	Description	Comments
1	D44900729	1	Cable	AGCO COMMUNIT
	D44900731	2	Adaptor	DVII COMUNIT
	D44900351	1	Cable	DVII COMUNIT
2	D28781727	1	Harness	AGCO COMUNIT
	D28781638	1	Harness	DVII COMUNIT
3	D44900347	1	Antenna	
4	D28981822	1	Com Unit	DVII COMUNIT
	D28789379	1	Com Unit	AGCO COMUNIT
5	D28782215	1	Antenna	

https://truckmanualshub.com/

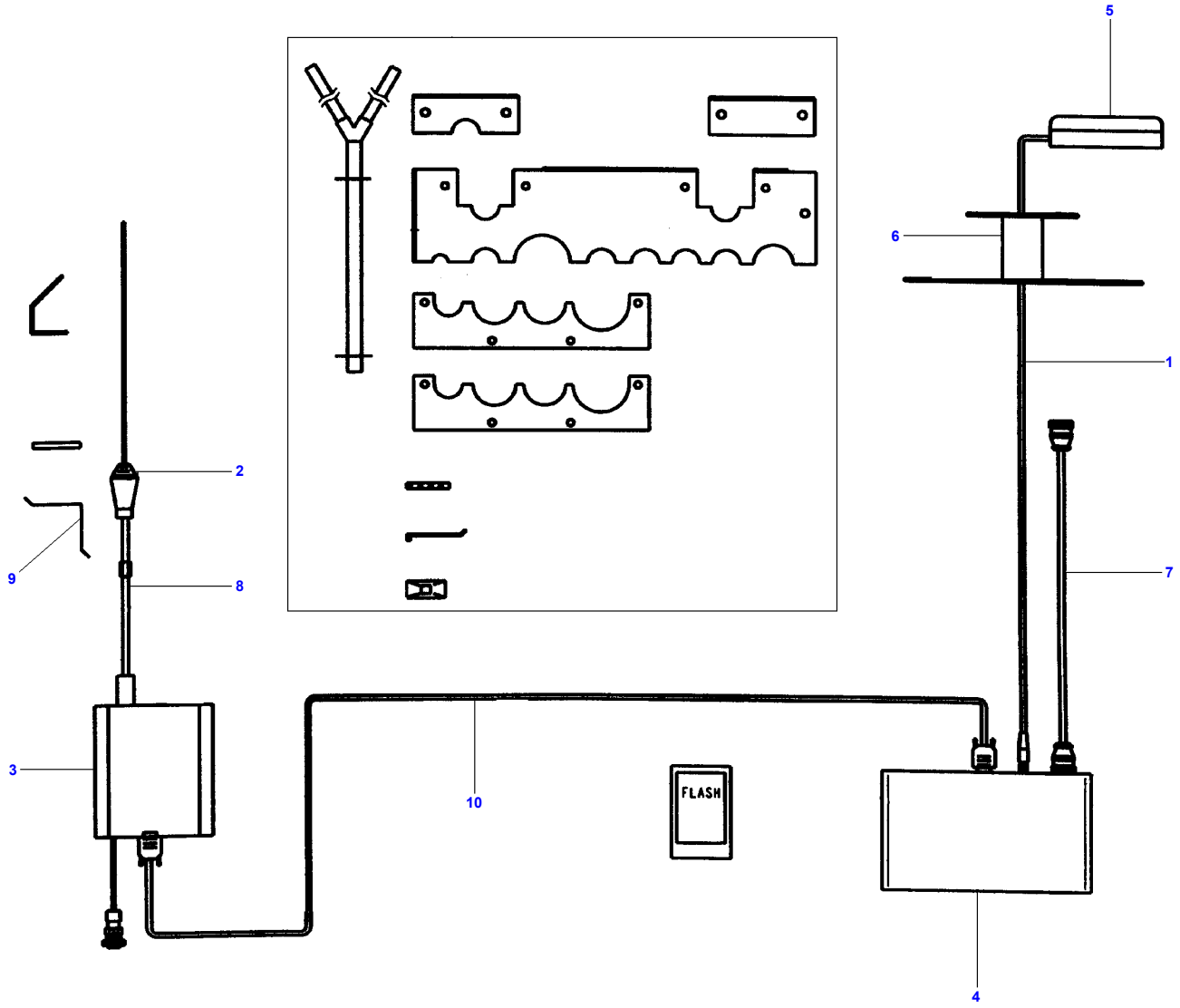

D-AFZJ-001-A

https://truckmanualshub.com/

Item	Part Number	Qty	Description	Comments
1	D44900731	2	Adaptor	AGCO COMUNIT
	D44900729	1	Cable	AGCO CUMUNIT
	D44900351	1	Cable	DVII COMUNIT
2	D45086600	1	Aerial Long	
3	D28781669	1	Kit Gps	
4	D28789379	1	Com Unit	
	D28080050	1	Modem	
5	D44900189	1	Antenna	
6	D28780444	1	Bracket	
	D44730500	2	Grommet	DVII COMUNIT
7	D28781638	1	Harness	
	D28781727	1	Harness	AGCO COMUNIT
8	D45060039	1	Cable	
9	D28780709	1	Bracket	
10	D44900763	1	Cable	

https://truckmanualshub.com/

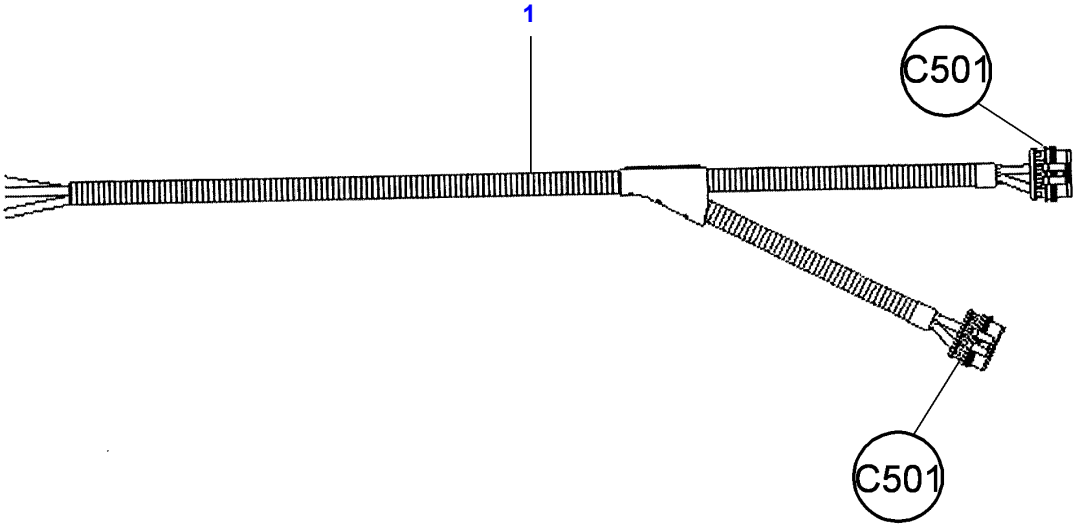

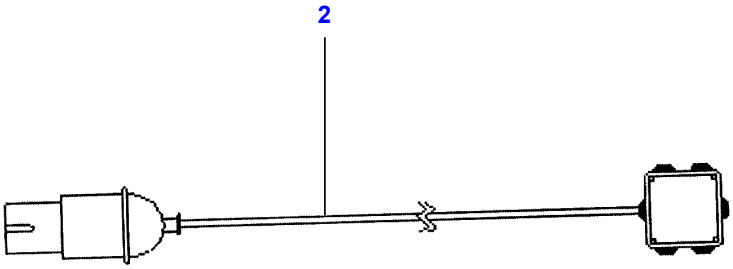

https://truckmanualshub.com/

Item	Part Number	Qty	Description	Comments
1	D28282779	X	Harness	[A,B]
2	D28282911	X	Harness	[A,C]

FOOTNOTE [A] THE CONNECTOR DESIGNATIONS REFER TO THE ELECTRICAL DOCUMENTATION OF THE MACHINE
FOOTNOTE [B] TABLE TRAILER - REAR LIGHT
FOOTNOTE [C] TRAILER - COMBINE

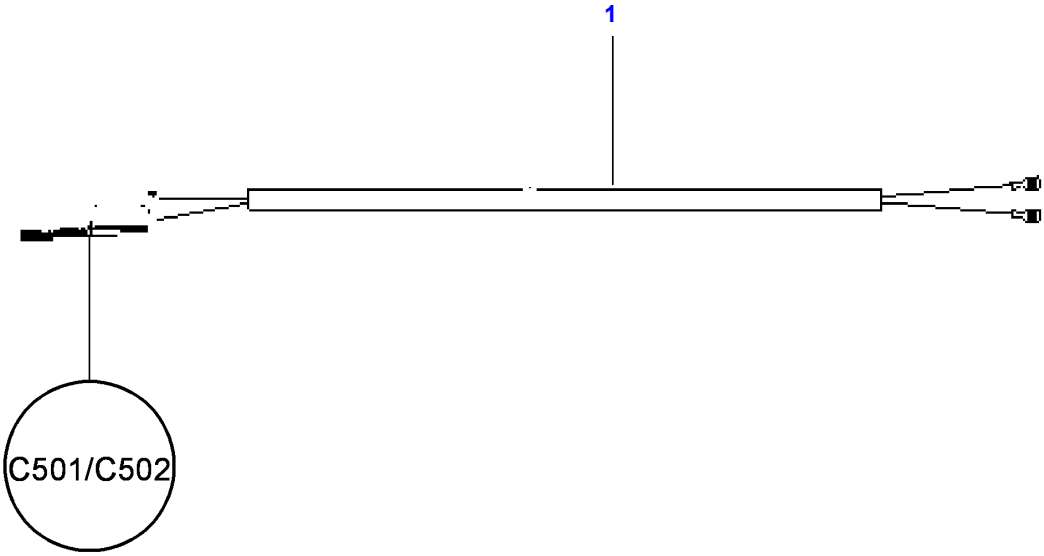

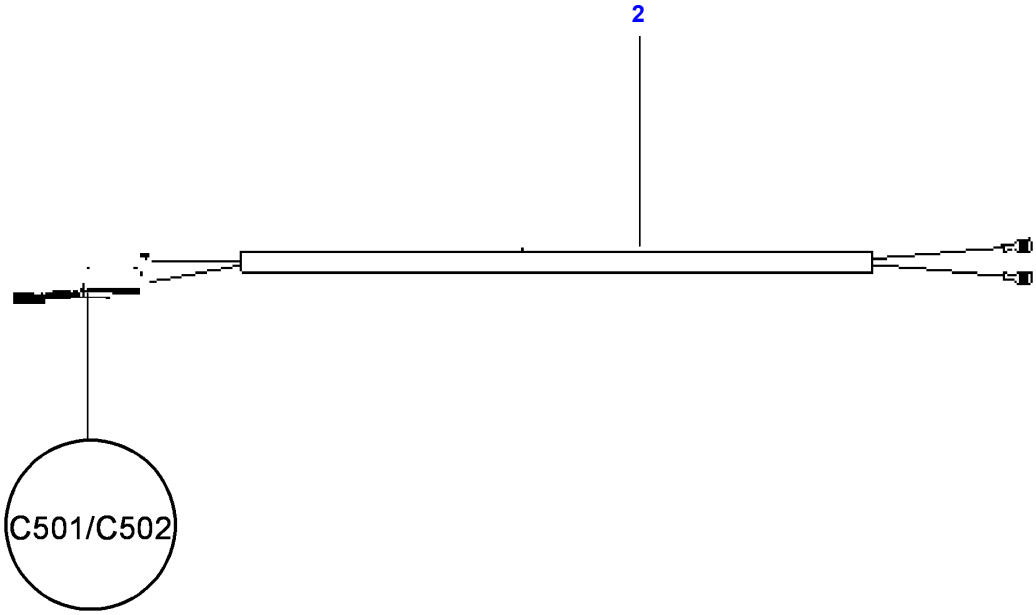

D-AFYT-002-A

https://truckmanualshub.com/

Item	Part Number	Qty	Description	Comments
1	D28284307	X	Wiring Harness	[A,B]
2	D28282834	X	Harness	[A,C]

FOOTNOTE [A] THE CONNECTOR DESIGNATIONS REFER TO THE ELECTRICAL DOCUMENTATION OF THE MACHINE
FOOTNOTE [B] FRONT LIGHT CARRIER
FOOTNOTE [C] REAR LIGHT CARRIER

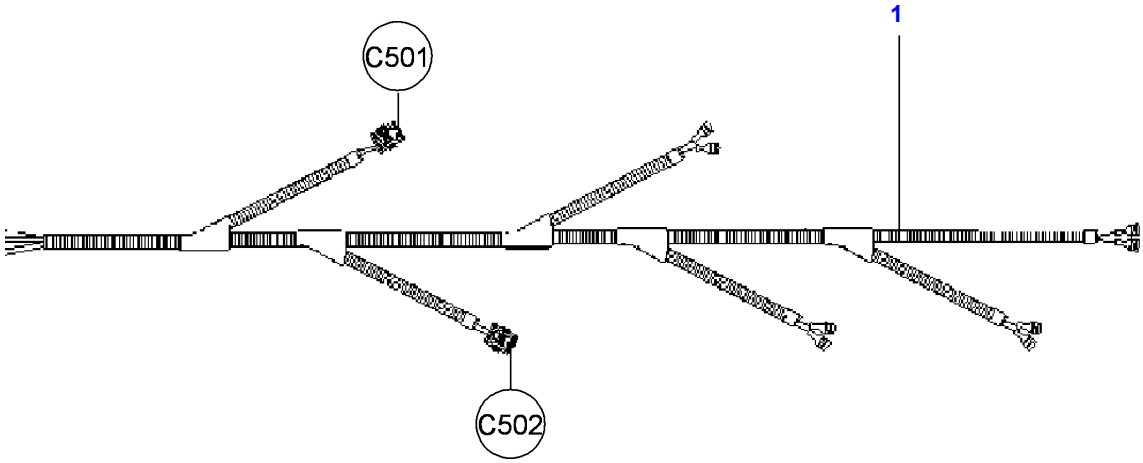

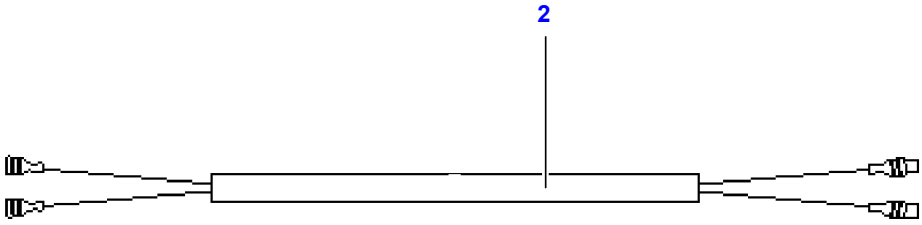

D-AFYT-003-A

https://truckmanualshub.com/

Item	Part Number	Qty	Description	Comments
1	D28284306	X	Wiring Harness	[A,B]
2	D28282912	X	Harness	[A,C]

FOOTNOTE [A] THE CONNECTOR DESIGNATIONS REFER TO THE ELECTRICAL DOCUMENTATION OF THE MACHINE
FOOTNOTE [B] TABLE TRAILER SIDE LIGHT
FOOTNOTE [C] SIDE LIGHT

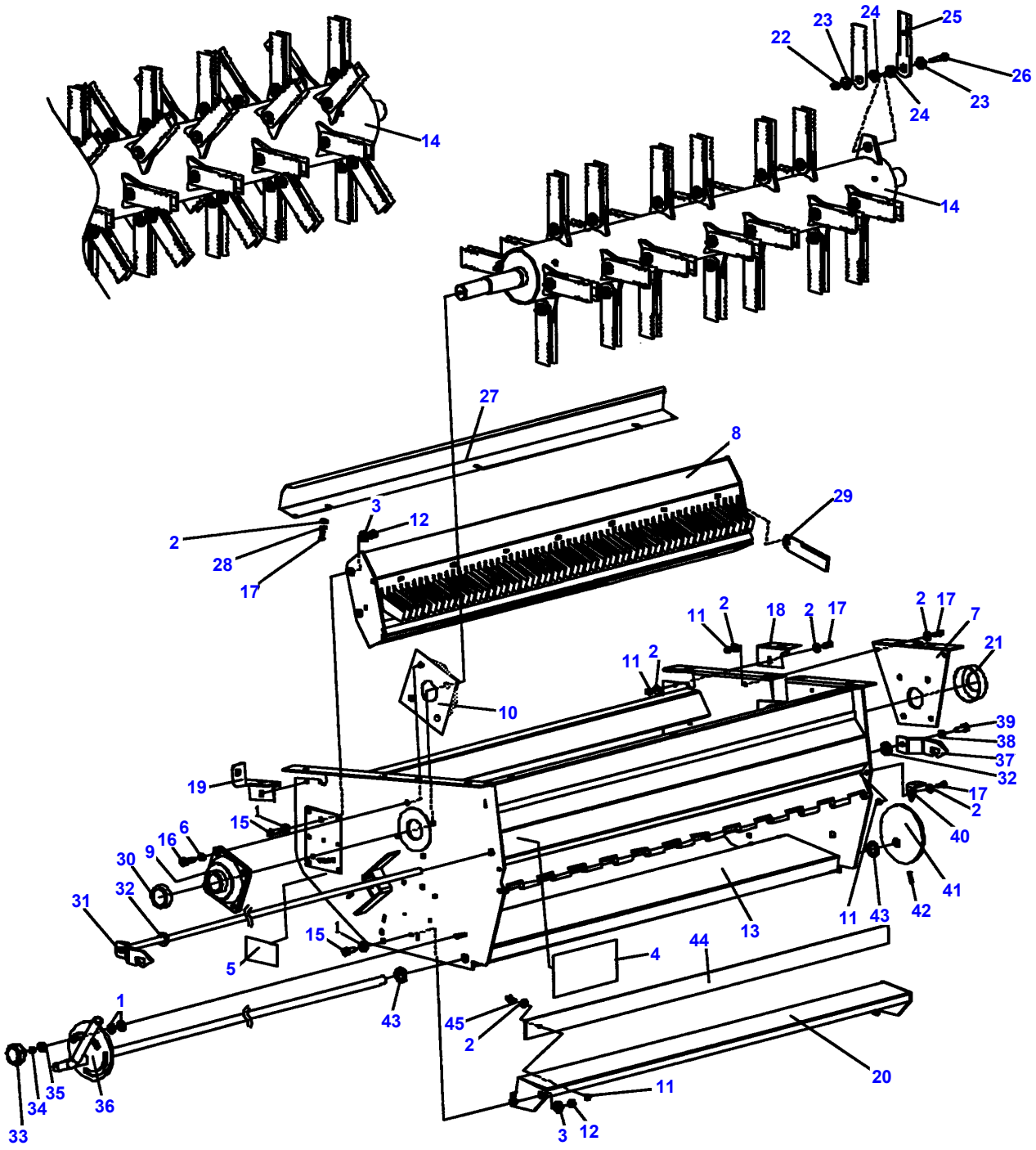
14
22
23
24
25
26
23
24
14
27
8
29
3
12
2
28
17
11
2
18
2
17
2
17
7
21
11
2
10
39
38
37
32
17
2
40
19
15
6
16
9
30
32
31
41
42
11
43
13
15
5
4
44
1
43
45
2
20
11
35
34
36
33
3
12

https://truckmanualshub.com/

Item	Part Number	Qty	Description	Comments
1	D20400416	X	Washer	
2	D20400506	X	Washer	
3	D49073400	4	Bush	
4	D49070143	1	Decal	
5	D49070144	2	Decal	
6	D41100900	8	Spring Washer	M401
	D41101200	8	Cup Spring	M801
7	D49070161	1	Reinforcement	M401
	D49070162	1	Reinforcement	M801
8	D49070146	1	Bar	M401 - 1400mm
	D49070147	1	Bar	M401 - 1680mm
9	D41703000	2	Bearing	M401
				Diameter 45mm
	D41701800	2	Bearing Carrier	M801
				Diameter 55mm
10	D49060009	2	Guard	M401
	D49070148	2	Guard	M801
11	394367X1	X	Locknut	M8
12	1440329X1	4	Locknut	M10
13	D49070163	1	Housing	M401 - 1400mm
	D49070164	1	Housing	M401 - 1680mm
	D49070165	1	Housing	M801
14	D49070154	1	Cylinder	[A]
				M401 - 1400mm
	D49060091	1	Spacer	[A]
				M401 - 1680mm
	D49070150	1	Cylinder	[A]
				M801
	D49070153	1	Cylinder	[B]
				M401 - 1400mm
	D49070155	1	Drum	[B]
				M401 - 1680mm
15	339814X1	4	Cap Screw	M10 X 35
16	390419X1	8	Cap Screw	M16 X 40
				M401
	390419X1	8	Cap Screw	M16 X 40
				M801
17	339123X1	X	Cap Screw	M8 X 20
18	D49070166	1	Stop	
19	D49070167	1	Stop	
20	D49070157	1	Crossbar	M401 - 1400mm
	D49070158	1	Transverse	M401 - 1680mm
	D49070158	1	Transverse	M801
21	D49070168	1	Cover	M401
	D49070169	1	Cover	M801
22	D41092500	28	Nut	M401 - 1400mm
	D41092500	37	Nut	M401 - 1680mm
	D41092500	54	Nut	M801
23	**D49080067**	56	Insert	M401 - 1400mm
	D49080067	68	Insert	M401 - 1680mm
	D49080067	108	Insert	M801
24	**D49017100**	56	Bush	M401 - 1400mm
	D49017100	68	Bush	M401 - 1680mm
	D49017100	108	Bush	M801
25	**D49074600**	56	Knife	M401 - 1400mm
	D49074600	68	Knife	M401 - 1680mm
	D49074600	108	Knife	M801
26	**D40438600**	28	Screw	M401 - 1400mm
	D40438600	34	Screw	M401 - 1680mm
	D40438600	54	Screw	M801
27	D49070400	1	Plate	M401 - 1400mm
	D49070500	1	Plate	M401 - 1680mm
	D49070500	1	Plate	M801
28	D41102100	3	Washer	
29	**D49005700**	56	Knife	M401 - 1400mm
	D49005700	68	Knife	M401 - 1680mm
	D49005700	68	Knife	M801
30	D41701900	2	Ball Bearing	M401
	D41701600	2	Bearing	M401
31	D49070117	1	Shaft	M401 - 1400mm
	D49060012	1	Shaft	M401 - 1680mm

https://truckmanualshub.com/

Item	Part Number	Qty	Description	Comments
31	D49060012	1	Shaft	M801
32	D20400433	2	Washer	
33	D43386000	1	Grip	
34	D41101900	1	Spring Washer	
35	D49060017	1	Cone	
36	D49070118	1	Lever	M401 - 1400mm
36	D49060015	1	Lever	M401 - 1680mm
36	D49060015	1	Lever	M801
37	D49060013	1	Hook	
38	D41100900	1	Spring Washer	
39	1440716X1	1	Cap Screw	M12 X 30
40	D49060014	2	Stop	
41	D49060016	1	Washer	
42	339390X1	1	Pin	
43	D20400468	2	Washer	
44	D49070159	1	Transverse	M401 - 1400mm
44	D49070160	1	Plate	M401 - 1680mm
44	D49070160	1	Plate	M801
45	3009440X1	4	Screw Special	M401 - 1400mm M8 X 20
45	3009440X1	5	Screw Special	M401 - 1680mm M8 X 20
45	3009440X1	5	Screw Special	M801 M8 X 20

FOOTNOTE [A] WITH TOOTHING
FOOTNOTE [B] SMOOTH

https://truckmanualshub.com/

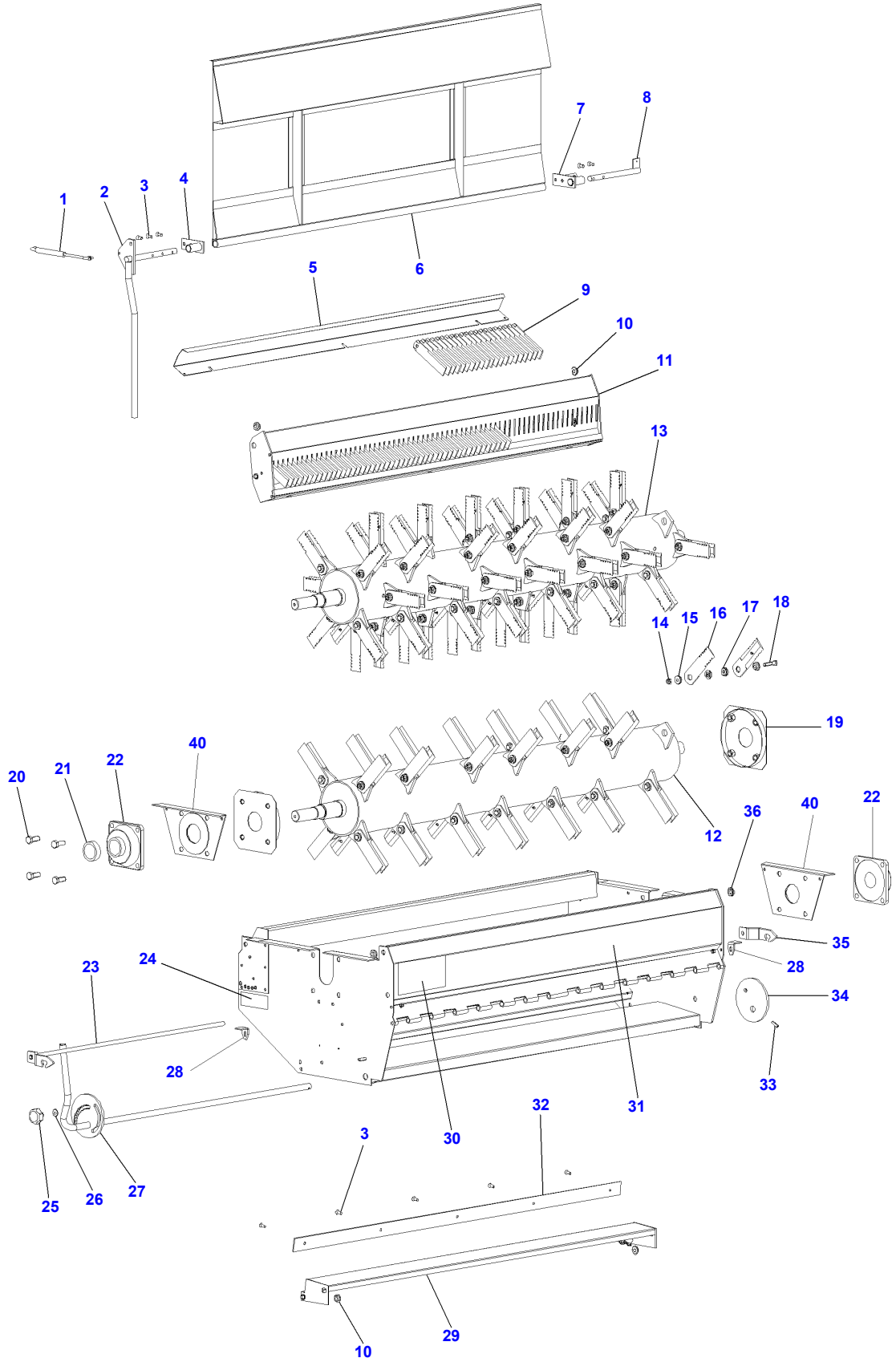

D-AGZA-013-B

https://truckmanualshub.com/

Item	Part Number	Qty	Description	Comments
1	D49070141	1	Ram	
2	D49060022	1	Lever	
3	1441584X1	10	Screw Metric	
4	D49060020	1	Bearing	
5	D49070500	1	Plate	
6	D49070142	1	Deflector	Length 1400 mm
	D49060055	1	Deflector	Length 1680 mm
7	D49060021	1	Bearing	
8	D49060023	1	Deflector	
9	**D49005700**	56	Knife	Length 1400 mm
	D49005700	68	Knife	Length 1680 mm
10	D49073400	4	Bush	
11	D49070147	1	Bar	Length 1680 mm
	D49070146	1	Bar	Length 1400 mm
12	D49070154	1	Cylinder	[A] Length 1400 mm
	D49070153	1	Cylinder	Length 1400 mm
	D49070155	1	Drum	Length 1680 mm
13	D49070150	1	Cylinder	M800
14	D41092500	28	Nut	Length 1400 mm
	D41092500	34	Nut	Length 1680 mm
	D41092500	54	Nut	M800
15	**D49080067**	56	Insert	Length 1400 mm
	D49080067	68	Insert	Length 1680 mm
	D49080067	108	Insert	M800
16	**D49074600**	56	Knife	[A] Length 1400 mm
	D49080066	56	Knife	Length 1400 mm
	D49074600	68	Knife	[A] Length 1680 mm
	D49080066	68	Knife	Length 1680 mm
	D49074600	108	Knife	M800
17	**D49017100**	56	Bush	Length 1400 mm
	D49017100	68	Bush	Length 1680 mm
18	**D40438600**	28	Screw	Length 1400 mm
	D40438600	34	Screw	Length 1680 mm
	D40438600	54	Screw	M800
19	D49060009	2	Guard	
	D49070148	2	Guard	M800
20	3009507X1	8	Cap Screw	M12 X 35
21	D41701900	2	Ball Bearing	M400 Diameter 45/85mm
	D41701600	2	Bearing	M800 Diameter 55/110mm
22	D41703000	2	Bearing	M400 Diameter 45mm
	D41701800	2	Bearing Carrier	M800 Diameter 55mm
23	D49060012	1	Shaft	
24	D49070144	2	Decal	
25	D43386000	1	Grip	
26	D49060017	1	Cone	
27	D49060015	1	Lever	
28	D49060014	2	Stop	
29	D49070158	1	Transverse	Length 1400 mm
30	D49070143	1	Decal	
31	D49070151	1	Straw Chopper	Length 1400 mm
	D49070149	1	Straw Chopper	Length 1680 mm
32	D49070159	1	Transverse	Length 1400 mm
	D49070160	1	Plate	Length 1680 mm
33	339390X1	1	Pin	
34	D49060016	1	Washer	
35	D49060013	1	Hook	
36	D49071600	2	Bush	
40	D49070181	1	Support	

FOOTNOTE [A] WITH TOOTHING

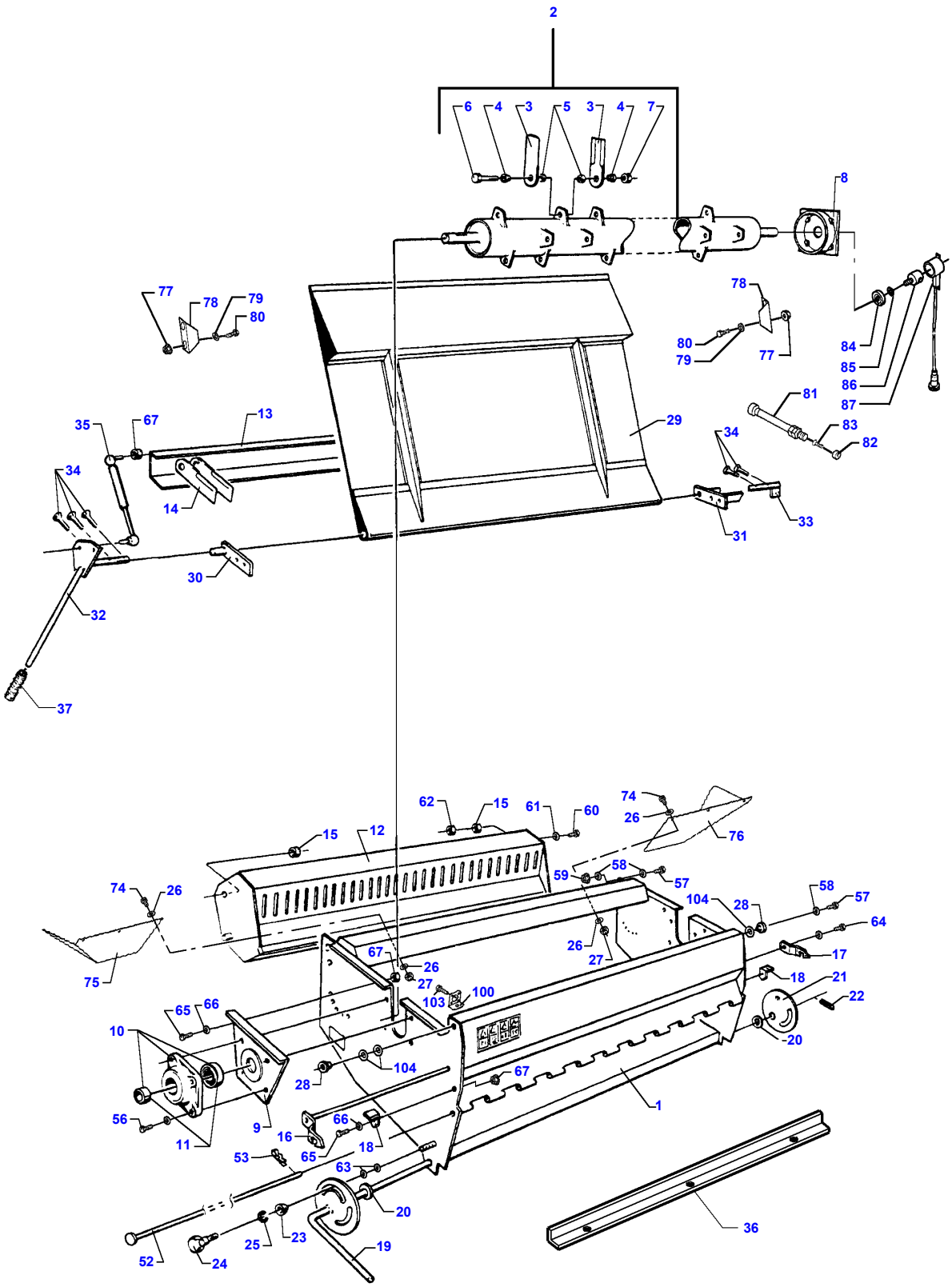
2
6
4
3
5
3
4
7
8
77
78
79
80
78
80
79
77
84
85
86
87
81
83
82
35
67
13
29
34
34
14
33
31
30
32
37
62
15
61
60
74
26
76
15
12
59
58
57
74
26
104
28
58
57
64
26
27
17
75
67
26
27
103
100
18
21
22
65
66
10
104
28
67
20
1
56
9
66
16
18
11
53
65
63
20
36
52
24
25
23
19

D-AGZA-014-A

https://truckmanualshub.com/

Item	Part Number	Qty	Description	Comments
1	D49060041	1	Straw Chopper	
	D49060089	1	Straw Chopper	(1)
2	D49070155	1	Drum	(1)
3	**D49080066**	68	Knife	(2)
4	**D49080067**	68	Insert	(2)
5	**D49017100**	68	Bush	(2)
6	**D40438600**	34	Screw	(2)
7	D41092500	34	Nut	(2)
8	D49060009	2	Guard	(1)
9	D49060010	2	Reinforcement	(1)
10	D41703000	2	Bearing	(1)
				Diameter 45mm
11	D41701900	2	Ball Bearing	(1)
12	D49060011	1	Bar	(1)
				Length 1667 mm
	D49070116	1	Knife	(1)
				Length 1388 mm
13	D49070500	1	Plate	(1)
14	**D49005700**	68	Knife	(1)
15	D49073400	2	Bush	(1)
16	D49060012	1	Shaft	(1)
17	D49060013	1	Hook	(1)
18	D49060014	2	Stop	(1)
19	D49060015	1	Lever	(1)
				Length 1680 mm
	D49070118	1	Lever	(1)
				Length 1400 mm
20	D20400468	2	Washer	(1)
21	D49060016	1	Washer	(1)
22	339390X1	1	Pin	(1)
23	D49060017	1	Cone	(1)
24	D43386000	1	Grip	(1)
25	D41101900	1	Spring Washer	(1)
26	390971X1	X	Flat Washer	
27	1441462X1	X	Locknut	M6
28	D49071600	2	Bush	(1)
29	D49060055	1	Deflector	(1)
30	D49060020	1	Bearing	(1)
				Left Hand
31	D49060021	1	Bearing	(1)
				Right Hand
32	D49060022	1	Lever	(1)
33	D49060023	1	Deflector	(1)
34	3009440X1	5	Screw Special	(1)
				M8 X 20
35	D45070067	1	Gas Strut	
36	D49060018	1	Kit	
37	D43384000	1	Lever	
52	D49073100	1	Rod	
53	D44358000	1	Hair Pin	
56	3009507X1	8	Cap Screw	(1)
				M12 X 35
57	390419X1	4	Cap Screw	(1)
				M16 X 40
58	D20400433	6	Washer	(1)
59	1442739X1	2	Locknut	(1)
				M16
60	3009493X1	2	Cap Screw	(1)
				M10 X 30
61	D20400416	2	Washer	(1)
62	1440329X1	2	Locknut	(1)
				M10
63	D20400416	2	Washer	(1)
64	1440716X1	1	Cap Screw	(1)
				M12 X 30
65	339123X1	1	Cap Screw	(1)
				M8 X 20
66	D20400414	1	Washer	(1)
67	394367X1	1	Locknut	(1)
				M8
74	339666X1	X	Cap Screw	M6 X 20

https://truckmanualshub.com/

Item	Part Number	Qty	Description	Comments
75	D28181760	X	Plate	
76	D28181761	X	Plate	
77	1440329X1	4	Locknut	M10
78	D28880098	2	Bracket	
79	D20400471	4	Washer	
80	3009491X1	4	Cap Screw	M10 X 20
81	D28780365	1	Sensor	
82	**D45010092**	1	Magnet	
83	D40316400	1	Screw Metric	
84	1440487X1	1	Bear. 6203 2rs	
85	D20400419	1	Washer	
86	**D28780516**	1	Inductive Sensor	
87	**D28780514**	X	Sensor	
100	D28780381	1	Retainer	[A]
103	D40741200	4	Screw	
104	D20400516	3	Spacer	

FOOTNOTE [A] OPTIONAL EQUIPMENT

https://truckmanualshub.com/

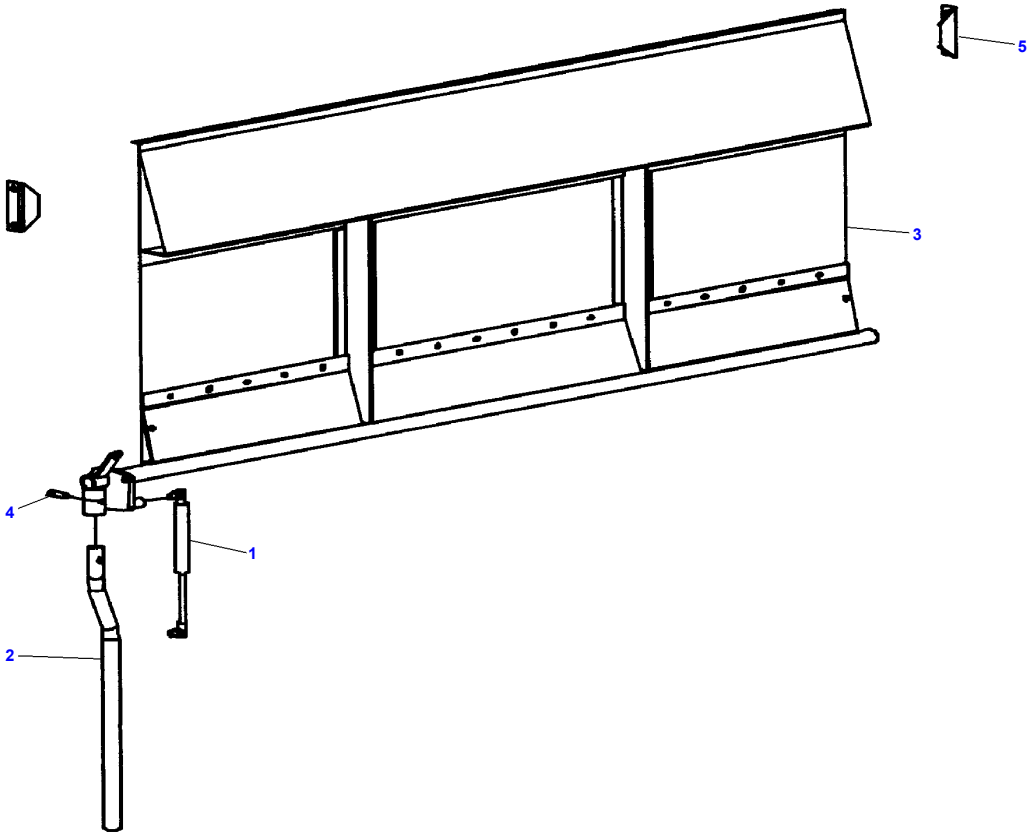

D-AGZG-001-A

https://truckmanualshub.com/

Item	Part Number	Qty	Description	Comments
1	D45070067	1	Gas Strut	
2	D49070170	1	Hand Lever	
3	D49070171	1	Deflector	Length 1400 mm
	D49070172	1	Deflector	Length 1680 mm
4	339390X1	1	Pin	
5	D49070173	2	Stop	

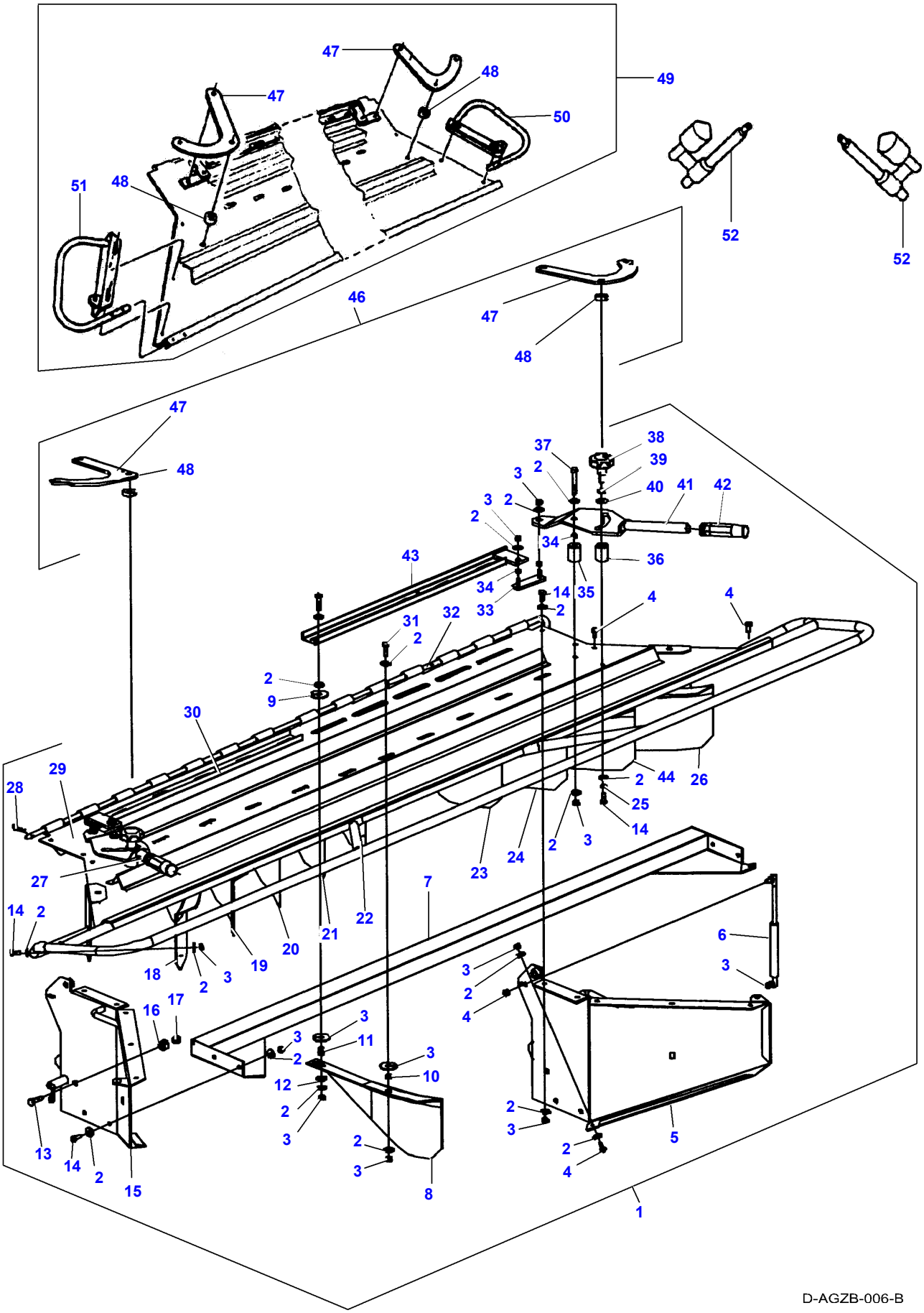
47
48
49
47
50
51
48
52
52
46
47
48
47
48
37
38
39
3
2
40
41
42
3
2
2
34
36
43
34
35
14
33
2
4
4
31
32
2
2
9
30
29
28
2
44
26
25
14
2
3
24
23
27
7
14
2
22
21
20
19
18
2
3
6
3
3
2
4
16
17
3
3
11
2
3
10
12
2
3
2
3
2
3
2
4
5
13
14
2
15
8
1
D-AGZB-006-B

https://truckmanualshub.com/

Item	Part Number	Qty	Description	Comments
1	D49070131	1	Hood	Length 1400 mm
	D49070136	1	Hood	Length 1680 mm
2	D20400506	X	Washer	(1)
3	394367X1	X	Locknut	(1)
				M8
4	339124X1	X	Cap Screw	(1)
				M8 X 16
5	D49070174	3	Plate	(1)
6	D45070067	2	Gas Strut	(1)
7	D49070121	1	Reinforcement	(1)
				Length 1400 mm
	D49060027	1	Reinforcement	(1)
				Length 1680 mm
8	D49060064	1	Deflector	(1)
9	D49060086	24	Washer	(1)
				Length 1400 mm
	D49060086	30	Washer	(1)
				Length 1680 mm
10	D49060079	8	Bush	(1)
				Length 1400 mm
	D49060079	10	Bush	(1)
				Length 1680 mm
11	D49060078	8	Bush	(1)
				Length 1400 mm
	D49060078	10	Bush	(1)
				Length 1680 mm
12	D49060087	8	Washer	(1)
				Length 1400 mm
	D49060087	10	Washer	(1)
				Length 1680 mm
13	339814X1	2	Cap Screw	(1)
				M10 X 35
14	339123X1	X	Cap Screw	(1)
				M8 X 20
15	D49070175	1	Plate	(1)
16	D49060038	2	Bush	(1)
17	1440329X1	2	Locknut	(1)
				M10
18	D49060073	1	Deflector	(1)
				Length 1680 mm
19	D49060071	1	Deflector	(1)
20	D49060069	1	Deflector	(1)
21	D49060067	1	Deflector	(1)
22	D49060065	1	Deflector	(1)
23	D49060066	1	Deflector	(1)
24	D49060068	1	Deflector	(1)
25	D41102100	2	Washer	(1)
26	D49060072	1	Deflector	(1)
				Length 1680 mm
27	D49060083	1	Lever	(1)
28	D44358000	1	Hair Pin	(1)
29	D49070176	1	Deflector	(1)
				Length 1400 mm
	D49070177	1	Deflector	(1)
				Length 1680 mm
30	D49060075	1	Rail	(1)
				Length 1400 mm
	D49060077	1	Rail	(1)
				Length 1680 mm
31	339761X1	8	Cap Screw	(1)
				Length 1400 mm
				M8 X 25
	339761X1	10	Cap Screw	(1)
				Length 1680 mm
				M8 X 25
32	D49070122	1	Rod	(1)
				Length 1400 mm
	D49060039	1	Rod	(1)
				Length 1680 mm
33	D49060080	2	Link	(1)
34	D49060081	6	Bush	(1)
35	D49060084	2	Bush	(1)

https://truckmanualshub.com/

Item	Part Number	Qty	Description	Comments
36	D49060085	2	Threaded Bush	(1)
37	339368X1	2	Cap Screw	(1) M8 X 60
38	D49070800	2	Screw	(1)
39	D41100900	2	Spring Washer	(1)
40	D20400426	2	Washer	(1)
41	D49060082	1	Lever	(1)
42	D49060088	2	Lever	(1)
43	D49060074	1	Rail	(1) Length 1400 mm
43	D49060076	1	Rail	(1) Length 1680 mm
44	D49060070	1	Deflector	(1)
45	339009X1	8	Cap Screw	[A] (1) Length 1400 mm M8 X 35
46	D49070132	1	Kit, Adjuster	
47	D49060056	2	Arm	
48	D49060057	2	Spacer	
49	D49060052	1	Kit	Up to Serial or Engine Number 90618
50	D49060059	1	Clamp	(49) Up to Serial or Engine Number 90618
51	D49060058	1	Clamp	(49)
52	D28782530	2	Ram	

FOOTNOTE [A] NOT ILLUSTRATED

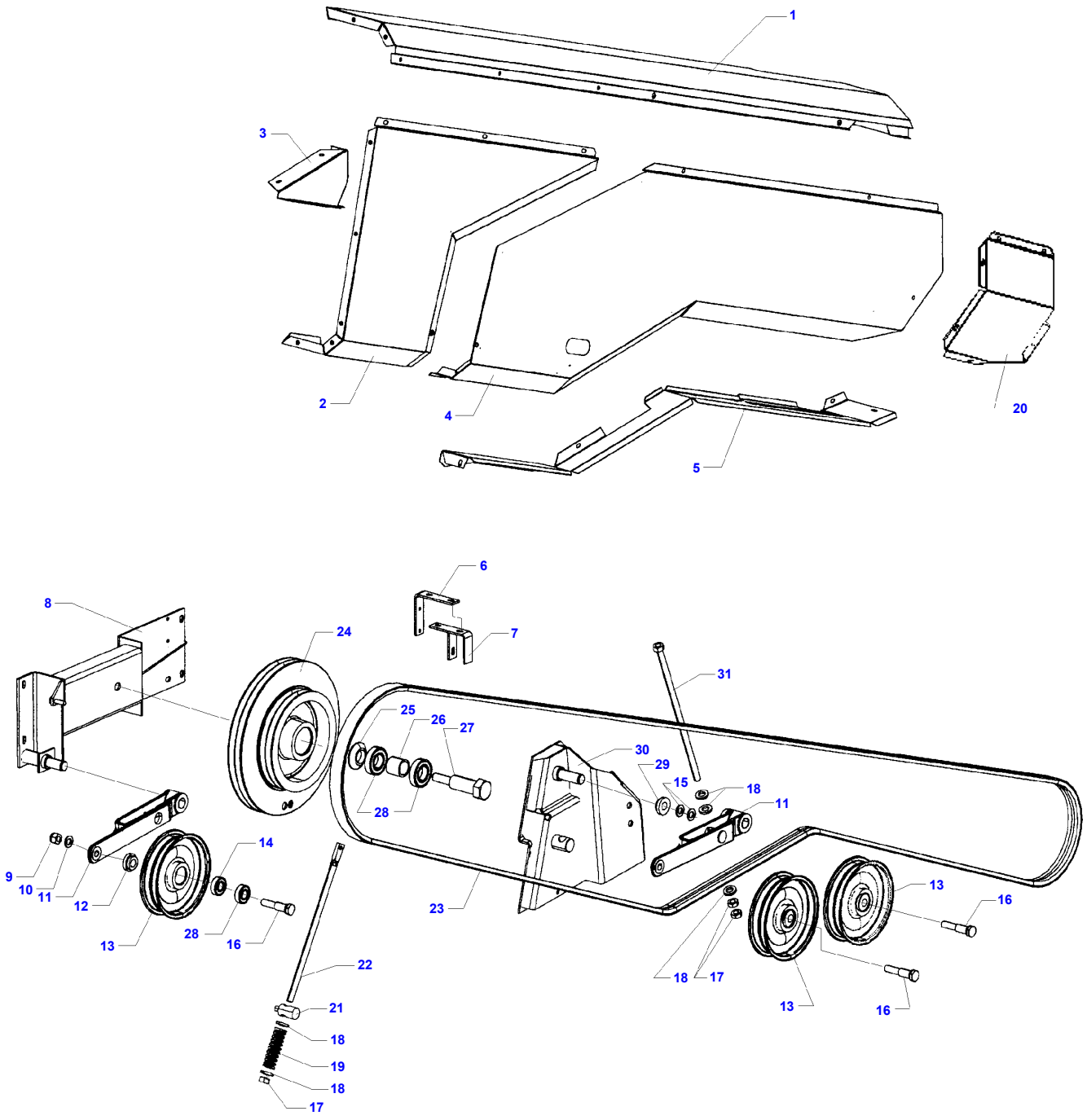
1
2
3
4
5
6
7
8
9
10
11
12
13
14
15
16
17
18
19
20
21
22
23
24
25
26
27
28
29
30
31

https://truckmanualshub.com/

Item	Part Number	Qty	Description	Comments
1	D18185549	1	Guard	
2	D18186417	1	Guard	
3	D28185552	1	Shield	
4	D18185550	1	Guard	
5	D28185551	1	Shield	
6	D28880469	1	Union	
7	D28880471	1	Yoke	
8	D28880249	1	Bracket	
9	1442739X1	1	Locknut	M16
10	D20400459	1	Washer	
11	D28880495	2	Lever	
12	D28480457	3	Spacer	
13	D28250441	3	Pulley	
14	339599X1	2	Bear. 6204 2rs	
15	D20400530	2	Spacer	
16	D28250444	3	Bolt	
17	339034X1	4	Nut	M16
18	D28181284	5	Washer	
19	D28880505	1	Spring	
20	D28186539	1	Lock Support	
21	D28780030	2	Pivot	
22	D28380011	1	Tie Rod	
23	D41977900	1	Belt	
24	D28880263	1	Pulley	
25	D28851036	1	Disc	
26	D28880254	1	Spacer	
27	D28880261	1	Bolt	
28	D41623000	2	Bear. 6207 2rs	
29	D28880489	1	Bush	
30	D28186230	1	Bracket	
31	D28884141	1	Tensioner	

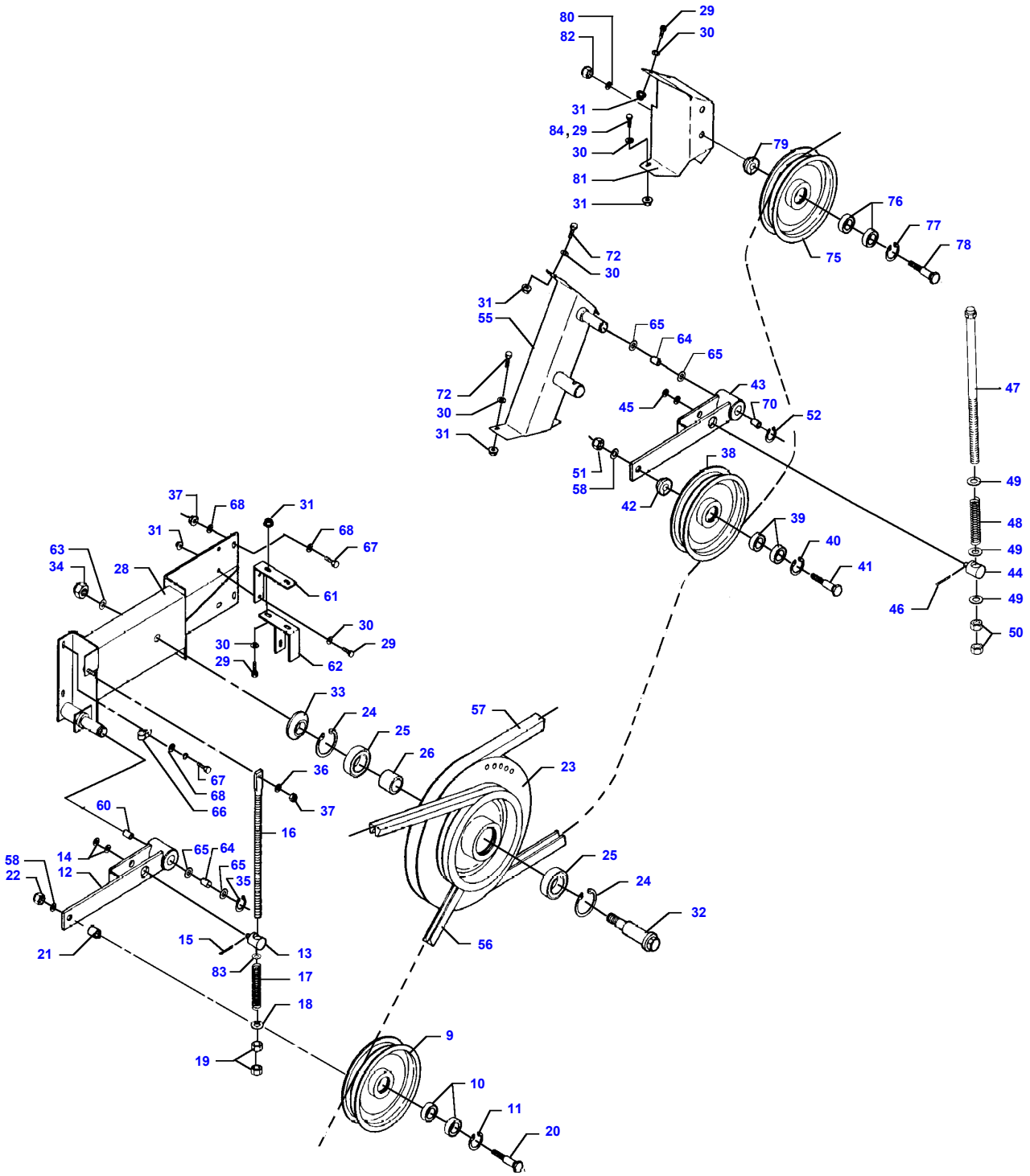
80
82
29
30
31
84, 29
30
81
31
79
76
77
78
75
72
30
31
55
65
64
65
72
30
31
43
70
45
52
47
51
58
38
42
39
40
41
49
48
49
44
49
46
50
37
68
31
31
68
67
63
34
28
61
30
29
30
29
62
33
24
25
26
57
23
36
37
67
68
66
60
16
58
22
14
12
65
64
65
35
25
24
32
21
15
13
83
17
18
56
9
19
10
11
20

D-AGZC-001-A

https://truckmanualshub.com/

Item	Part Number	Qty	Description	Comments
9	D28250441	1	Pulley	
10	SKF62042RS	2	Bear. 6204 2rs	
11	339199X1	1	Circlip	
12	D28880495	1	Lever	Valid from machine/table no,can be used in new as well as in older machines 57068
13	D28780030	1	Pivot	
14	D20400426	2	Washer	
15	339129X1	1	Split Pin	Diameter 3,2 X 25
16	D28380011	1	Tie Rod	
17	D28880505	1	Spring	
18	D28181284	1	Washer	
19	339034X1	2	Nut	M16
20	D28250444	1	Bolt	
21	D28880354	1	Spacer	
22	1442739X1	1	Locknut	M16
23	D28880263	1	Pulley	
24	1440480X1	2	Circlip	
25	SKF62072RS	2	Bear. 6207 2rs	
26	D28880254	1	Spacer	
28	D28880249	1	Bracket	
29	339761X1	X	Cap Screw	M8 X 25
30	D20400506	X	Washer	
31	1440329X1	X	Locknut	M10
32	D28880261	1	Bolt	
33	D28851036	1	Disc	
34	3010067X1	1	Locknut	
35	1440476X1	1	Circlip	
36	D20400471	1	Washer	
37	1440329X1	1	Locknut	M10
38	D28250441	1	Pulley	
39	SKF62042RS	2	Bear. 6204 2rs	
40	339199X1	1	Circlip	
41	D28250444	1	Bolt	
42	D28880354	1	Spacer	
43	D28880495	1	Lever	
44	D28780030	1	Pivot	
45	D20400426	1	Washer	
46	339129X1	1	Split Pin	Diameter 3,2 X 25
47	D28884141	1	Tensioner	
48	D28210881	1	Comp.Spring	
49	D28181284	2	Washer	
50	339034X1	2	Nut	M16
51	1442739X1	1	Locknut	M16
52	1440476X1	1	Circlip	
54	D20400471	1	Washer	[B]
55	D28884125	1	Support	
56	**D41979600**	1	Belt	
	D41990049	1	Belt	[A]
57	**D41977900**	1	Belt	
	D41978400	1	Belt	[A]
58	D20400459	2	Washer	
59	D43364000	1	Bush	[B] (12)
60	D43364300	1	Bush	(12)
61	D28880469	1	Union	
62	D28880471	1	Yoke	
63	D20400522	1	Spacer	
64	D28880489	1	Bush	
65	D20400530	2	Spacer	
66	D45731100	1	Retainer	
67	3009493X1	X	Cap Screw	M10 X 30
68	D20400416	X	Washer	
70	D43364000	1	Bush	(43)
71	D43364300	1	Bush	[B] (43)
72	339761X1	X	Cap Screw	M8 X 25
75	D28250441	1	Pulley	
76	SKF62042RS	2	Bear. 6204 2rs	
77	339199X1	1	Circlip	
78	D28250444	1	Bolt	
79	D28880354	1	Spacer	
80	D20400459	1	Washer	

https://truckmanualshub.com/

Item	Part Number	Qty	Description	Comments
81	D28884133	1	Bracket	
82	1442739X1	1	Locknut	M16
83	D20400459	1	Washer	
84	339337X1	X	Cap Screw	M8 X 30

FOOTNOTE [A] REDUCED CHOP SPEED
FOOTNOTE [B] NOT ILLUSTRATED

https://truckmanualshub.com/

1

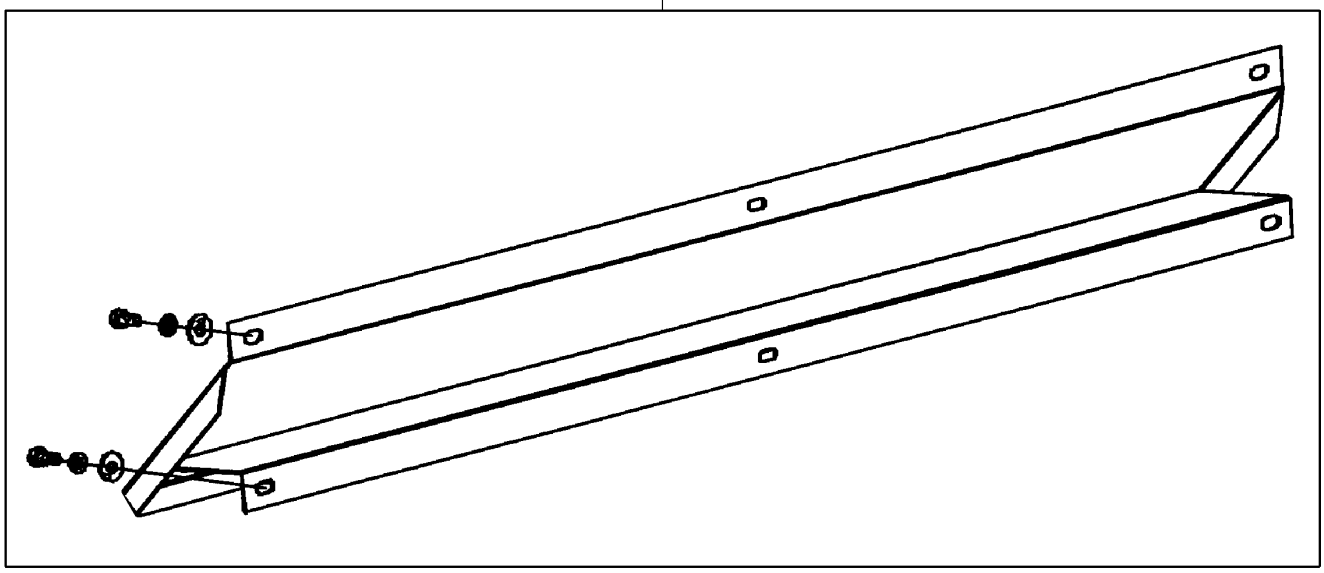

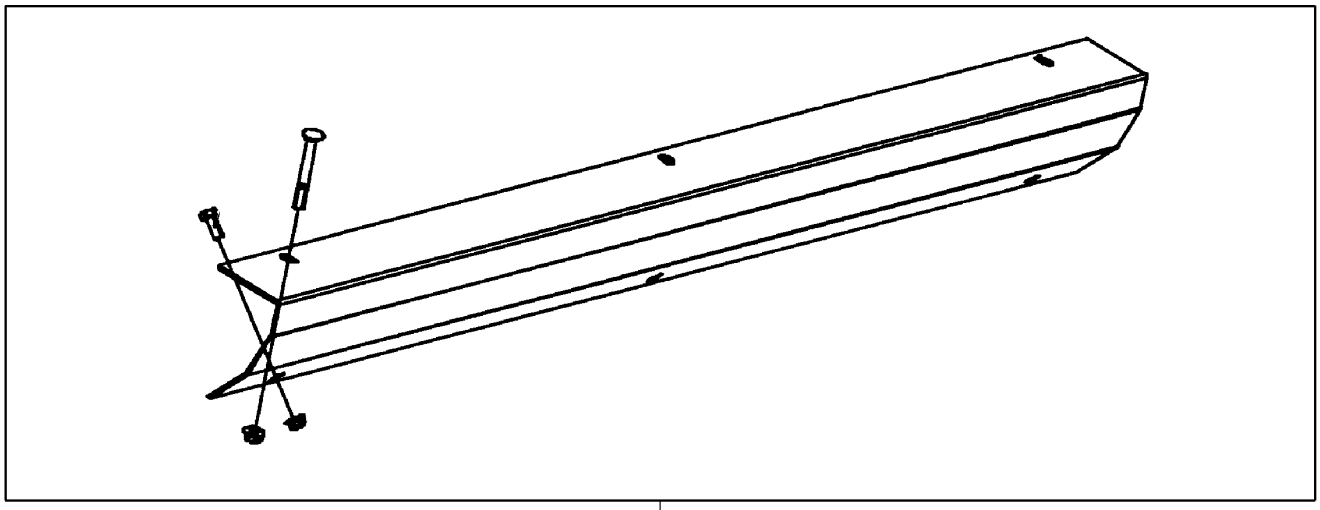

2

D-AGZH-002-A

https://truckmanualshub.com/

Item	Part Number	Qty	Description	Comments
1	D49070134	1	Guard	Length 1400 mm
	D49070138	1	Guard	Length 1680 mm
2	D49070133	1	Guard	Length 1400 mm M400+401+800+801
	D49070137	1	Shield	Length 1680 mm M400+401+800+801

https://truckmanualshub.com/

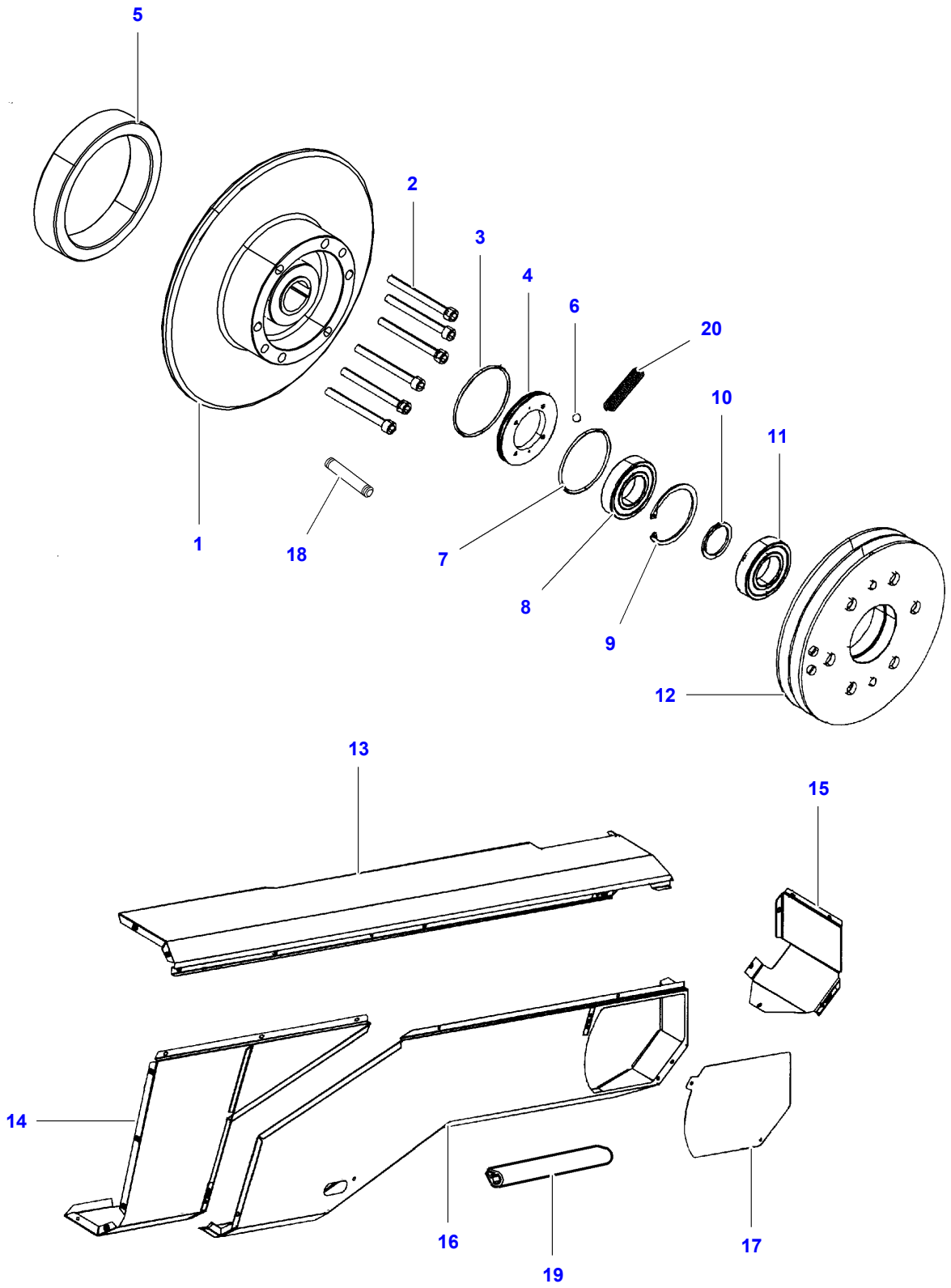

D-AGZD-006-D

https://truckmanualshub.com/

Item	Part Number	Qty	Description	Comments
1	D28884217	1	Pulley	
2	D40693300	6	Screw	
3	D45476400	1	O Ring	
4	D28884216	1	Lock Washer	
5	D28884235	1	Spring Carrier	TYPE M401-M400
6	D41649500	2	Ball	
7	D45467600	1	O Ring	
8	SKF62082RS	1	Bear. 6208 2rs	
9	339437X1	1	Circlip	
10	D42599200	1	Disc	
11	SKF62082RS	1	Bear. 6208 2rs	
12	D28884221	1	Pulley	TYPE M401
	D28884219	1	Brace	TYPE M801
13	D18186637	1	Shield	
14	D28186645	1	Shield	
15	D28884223	1	Shield	
16	D28884225	1	Guard	
17	D28884231	1	Shield	
18	D42694900	1	Pin	
19	D26733226	1	Protective Strip	Length 0,20M
20	D44351600	1	Comp.Spring	

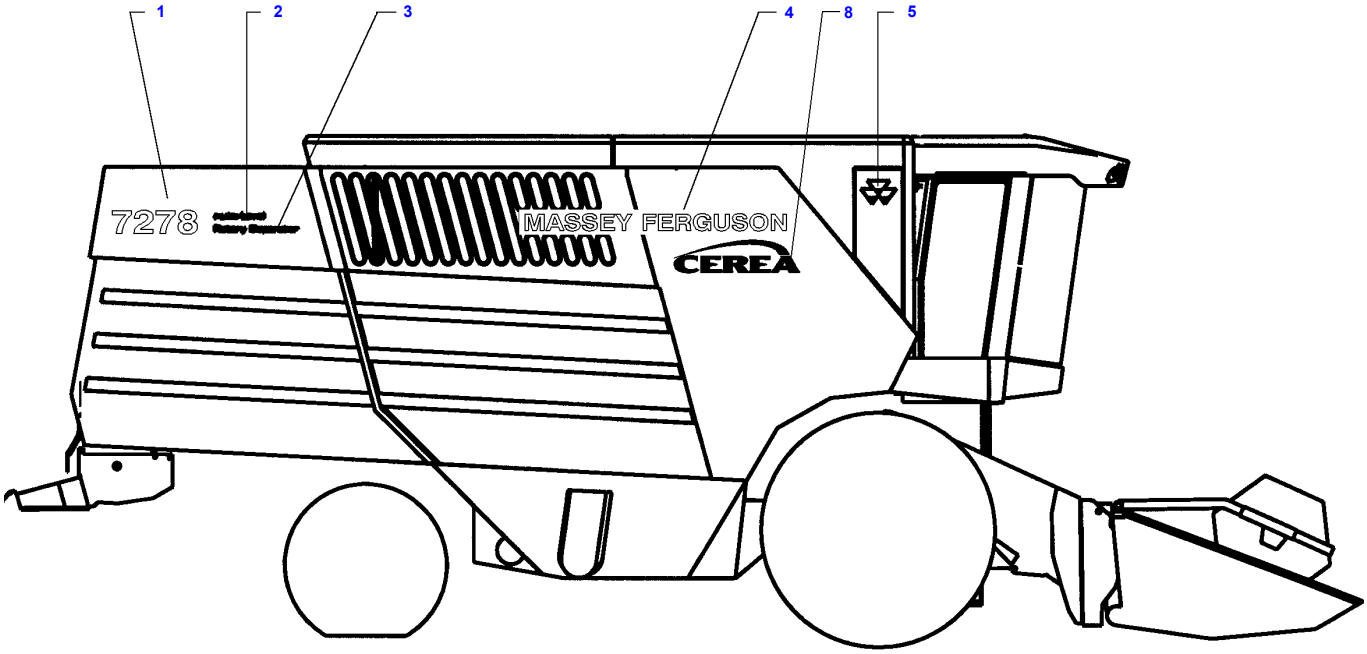
1
2
3
4
8
5
7278
MASSEY FERGUSON
CEREA

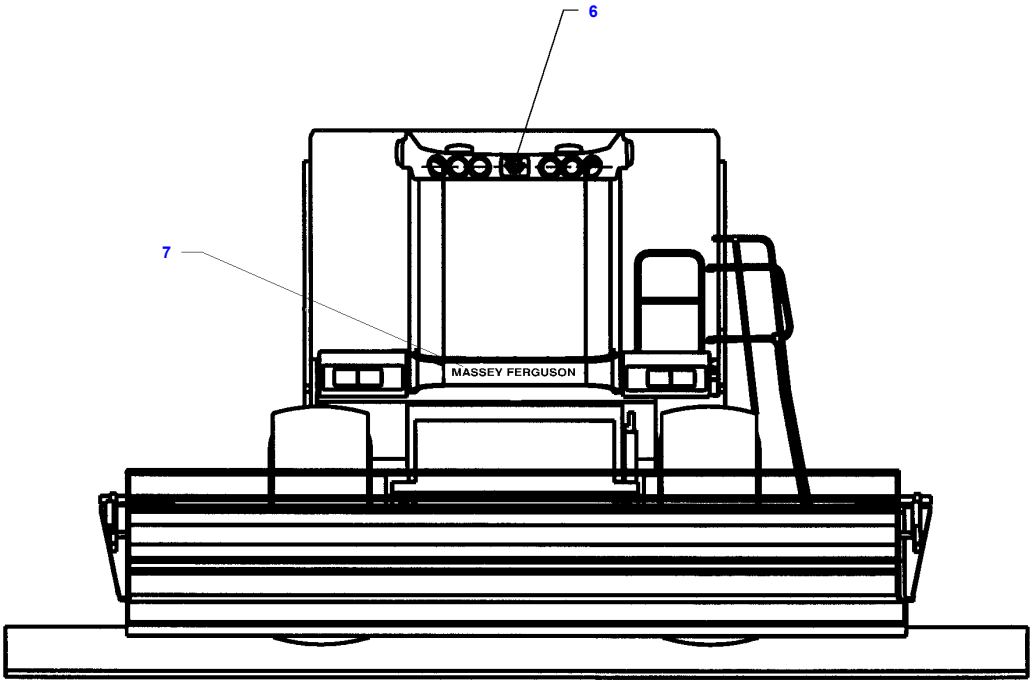
6
7
MASSEY FERGUSON

https://truckmanualshub.com/

Item	Part Number	Qty	Description	Comments
1	D49127800	2	Decal	MF 7278
	D49129100	2	Decal	MF 7274
2	D49130007	2	Decal	
3	D49130008	2	Decal	
4	D49127700	2	Decal	
5	D49130002	1	Decal	
6	D49100121	1	Decal	
7	D49120002	1	Decal	
8	D49130028	1	Decal	CEREA
14	D49160400	1	Decal	[A,I]
17	D49100150	1	Decal	[B,I]
18	D49100160	1	Decal	[C,I]
19	D49100182	1	Decal	[D,I]
22	D49100161	2	Decal	[I]
23	D49100162	2	Decal	[E,I]
				FREEFLOW
24	D49100149	X	Decal	[F,I]
25	D49180900	2	Decal	[I]
26	D49100189	1	Decal	[I]
				E
	D49121800	1	Decal	[I]
				UKR
	D49122900	1	Decal	[I]
				CS-SK
	D49124200	1	Decal	[I]
				H
	D49126200	1	Decal	[I]
				PL
	D49195600	1	Decal	[I]
				DK
	D49195700	1	Decal	[I]
				GB-RO-BUL
	D49195800	1	Decal	[I]
				D-NF
	D49195900	1	Decal	[I]
				F-CH
	D49196000	1	Decal	[I]
				S-FIN
27	D49100188	1	Decal	[I]
				E
	D49151900	1	Decal	[I]
				DK
	D49152000	1	Decal	[I]
				S-FIN
	D49152100	1	Decal	[I]
				GB-RO-BUL
	D49152200	1	Decal	[I]
				D-NL
	D49152300	1	Decal	[I]
				F-CH
28	D49100009	1	Decal	[A,I]
29	D49196100	1	Decal	[I]
				DK-S
	D49196200	1	Decal	[I]
				GB-D-F
	D49196300	1	Decal	[I]
				RO-BUL-CH
30	D49113300	1	Decal	[H,I]
31	D49120900	1	Decal	[G,I]

FOOTNOTE [A] EQUIPMENT REQUIRED AND APPROVED BY THE TOV AUTHORITIES
FOOTNOTE [B] FOR MACHINE CPL
FOOTNOTE [C] FOR TABLE
FOOTNOTE [D] WARNING BEFORE START
FOOTNOTE [E] WARNING SENSORS TABLE
FOOTNOTE [F] WARNING BEFORE REPAIR
FOOTNOTE [G] TO BATTERY
FOOTNOTE [H] "KEEP OFF"
FOOTNOTE [I] NOT ILLUSTRATED

https://truckmanualshub.com/

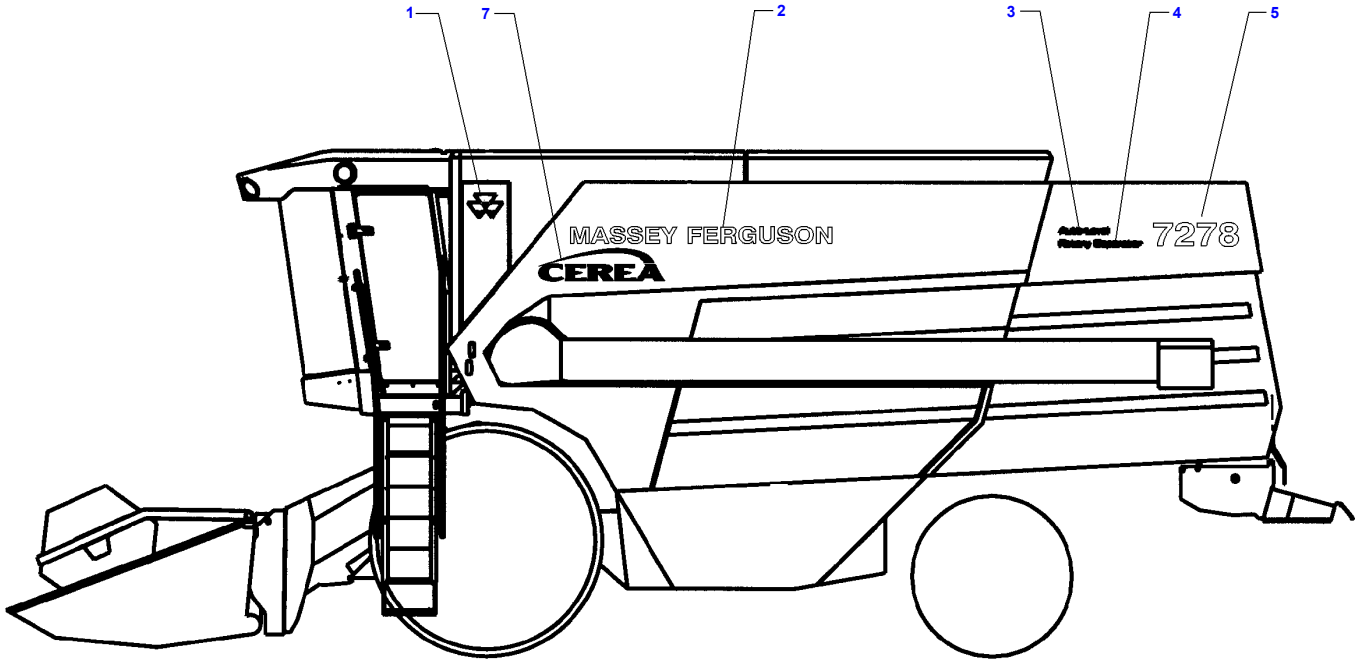

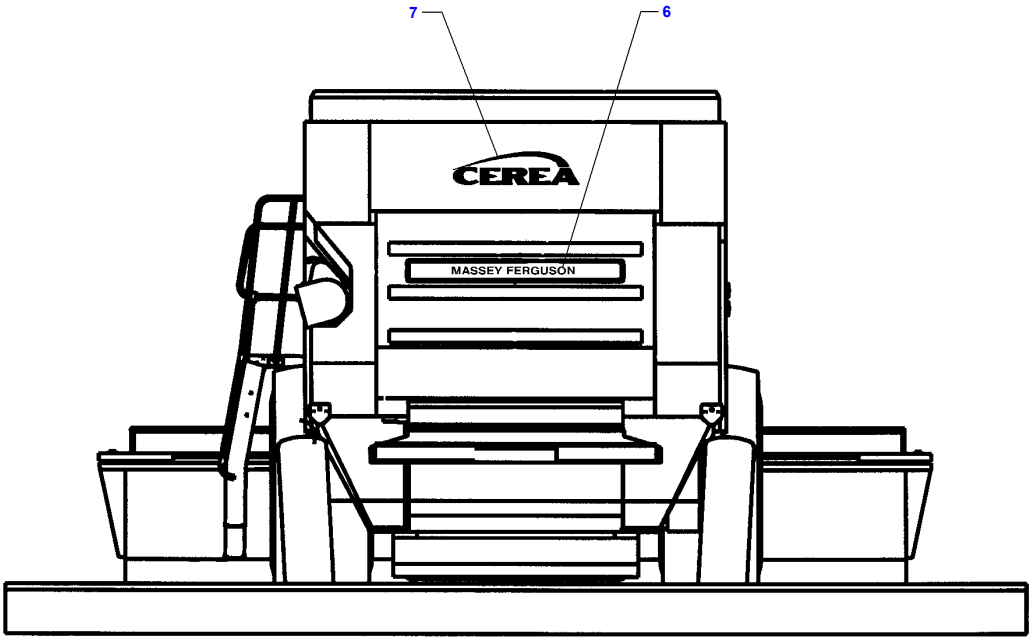

D-AHZB-007-A

https://truckmanualshub.com/

Item	Part Number	Qty	Description	Comments
1	D49127900	1	Decal	
2	D49127700	2	Decal	
3	D49130007	2	Decal	
4	D49130008	2	Decal	
5	D49127800	2	Decal	MF 7278
	D49129100	2	Decal	MF 7274
6	D49130069	1	Decal	
7	D49130028	2	Decal	CEREA
14	D49160400	2	Decal	[A,B]
16	D49150300	1	Decal	[A,B]

FOOTNOTE [A] EQUIPMENT REQUIRED AND APPROVED BY THE TOV AUTHORITIES
FOOTNOTE [B] NOT ILLUSTRATED

https://truckmanualshub.com/

D-AHZD-003-A

https://truckmanualshub.com/

Item	Part Number	Qty	Description
1	D49100160	2	Decal