https://truckmanualshub.com/

Kubota

U.S.A. : **KUBOTA TRACTOR CORPORATION**
3401 Del Amo Blvd., Torrance, CA 90503, U.S.A.
Telephone : (310)370-3370
Western Division : 1175 S. Guild Avc., Lodi, CA 95240
Telephone : (209)334-9910
Central Division : 14855 FAA Blvd., Fort Worth, TX 76155
Telephone : (817)571-0900
Northern Division : 6300 at One Kubota Way, Groveport, OH 43125
Telephone : (614)835-1100
Southeast Division : 1025 Northbrook Parkway, Suwanee, GA 30024
Telephone : (770)995-8855
Canada : **KUBOTA CANADA LTD.**
5900 14th Avenue, Markham, Ontario, L3S 4K4, Canada
Telephone : (905)294-7477
France : **KUBOTA EUROPE S.A.S**
19-25, Rue Jules Vercruysse, Z.I. BP88, 95101 Argenteuil Cedex, France
Telephone : (33)1-3426-3434
Italy : **KUBOTA EUROPE S.A.S Italy Branch**
Via Grandi, 29 20068 Peschiera Borrome (MI) Italy
Telephone : (39)02-51650377
Germany : **KUBOTA (DEUTSCHLAND) GmbH**
Senefelder Str. 3-5 63110 Rodgau /Nieder-Roden, Germany
Telephone : (49)6106-873-0
U.K. : **KUBOTA (U.K.) LTD.**
Dormer Road, Thame, Oxfordshire, OX9 3UN, U.K.
Telephone : (44)1844-214500
Spain : **KUBOTA ESPAÑA S.A.**
Avenida Recomba No.5, Poligno Industrial la Laguna, Leganes, 28914 (Madrid) Spain
Telephone : (34)91-508-6442
Australia : **KUBOTA TRACTOR AUSTRALIA PTY LTD.**
25-29 Permas Way, Truganina, VIC 3029, Australia
Telephone : (61)-3-9394-4400
Malaysia : **SIME KUBOTA SDN. BHD.**
No.3 Jalan Sepadu 25/123 Taman Perindustrian Axis,
Seksyen 25, 40400 Shah Alam, Selangor Darul Ehsan Malaysia
Telephone : (60)3-736-1388
Philippines : **KUBOTA PHILIPPINES, INC.**
232 Quirino Highway, Baesa, Quezon City 1106, Philippines
Telephone : (63)2-422-3500
Taiwan : **SHIN TAIWAN AGRICULTURAL MACHINERY CO., LTD.**
16, Fengping 2nd Rd, Taliao Shiang Kaohsiung 83107, Taiwan R.O.C.
Telephone : (886)7-702-2333
Indonesia : **PT KUBOTA MACHINERY INDONESIA**
Tower A at EightyEight@Kasablanka Lantai 16
Jalan Raya Casablanka Kav. 88, Jakarta 12870 Indonesia
Telephone : (62)-21-29568-720
Thailand : **SIAM KUBOTA CORPORATION CO., LTD.**
101/19-24 Moo 20, Navanakorn Industrial Estate, Tambon Khlongnueng, Amphur Khlongluang,
Pathumthani 12120, THAILAND
Telephone : (66)2-909-0300
Korea : **KUBOTA KOREA CO., LTD.**
41-27, Jayumuyeok-gil, Baeksan-myeon, Gimje-si, Jeollabuk-do, Korea
Telephone : (82)-63-544-5822
India : **KUBOTA AGRICULTURAL MACHINERY INDIA PVT. LTD.**
No.15, Medavakkam Road, Sholinganallur, Chennai-600119, T.N., India
Telephone : (91)44-6104-1500
Vietnam : **KUBOTA VIETNAM CO., LTD.**
Lot B-3A2-CN, My Phuoc 3 Industrial Park, Ben Cat District, Binh Duong Province, Vietnam
Telephone : (84)-650-3577-507

KUBOTA Corporation

English (U.S.A.)
Code No. 3B391-9971-1

M5L-111

OPERATOR'S MANUAL

KUBOTA TRACTOR

MODEL M5L-111

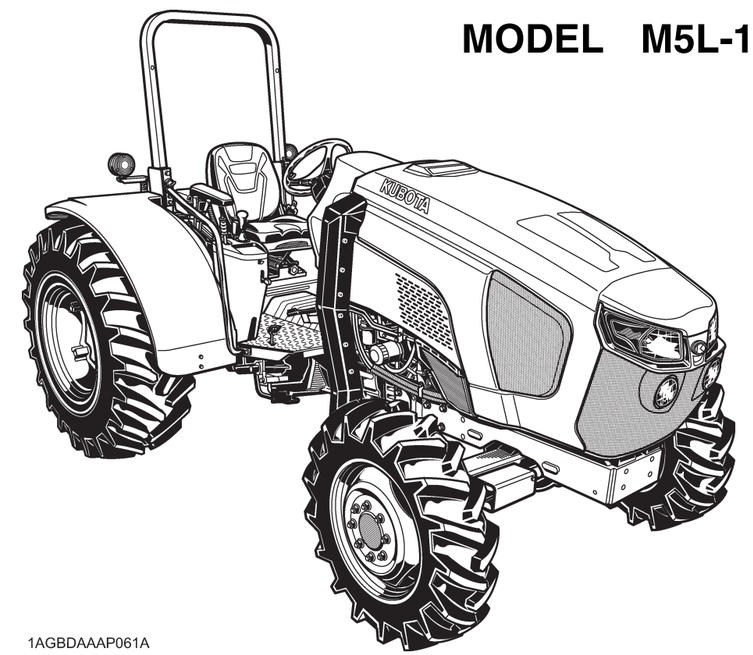

1AGBDAAAP061A

The first part of this manual covers the features of the common M series tractor.
The second part covers the special features of the M5L-111 tractor.
Please read both parts before operation.

READ AND SAVE THIS MANUAL

Kubota

PRINTED IN JAPAN

© KUBOTA Corporation 2016

https://truckmanualshub.com/

ABBREVIATION LIST

Abbreviations	Definitions
2WD	2 Wheel Drive
4WD	4 Wheel Drive
API	American Petroleum Institute
ASABE	American Society of Agricultural and Biological Engineers, USA
ASTM	American Society for Testing and Materials, USA
DIN	Deutsches Institut für Normung, GERMANY
DEF	Diesel Exhaust Fluid
DPF	Diesel Particulate Filter
DT	Dual Traction [4WD]
fpm	Feet Per Minute
GST	Glide Shift Transmission
Hi-Lo	High Speed-Low Speed
HST	Hydrostatic Transmission
m/s	Meters Per Second
PTO	Power Take Off
RH/LH	Right-hand and left-hand sides are determined by facing in the direction of forward travel
ROPS	Roll-Over Protective Structures
rpm	Revolutions Per Minute
r/s	Revolutions Per Second
SAE	Society of Automotive Engineers, USA
SCR	Selective Catalytic Reduction
SMV	Slow Moving Vehicle

California Proposition 65

⚠ WARNING ⚠

Engine exhaust, some of its constituents, certain vehicle components and fluids, contain or emit chemicals known to the State of California to cause cancer and birth defects or other reproductive harm.

KUBOTA Corporation is ···

Since its inception in 1890, KUBOTA Corporation has grown to rank as one of the major firms in Japan.

To achieve this status, the company has through the years diversified the range of its products and services to a remarkable extent. 30 plants and 35,000 employees produce over 1,000 different items, large and small.

All these products and all the services which accompany them, however, are unified by one central commitment. KUBOTA makes products which, taken on a national scale, are basic necessities. Products which are indispensable. Products which are intended to help individuals and nations fulfill the potential inherent in their environment. KUBOTA is the Basic Necessities Giant.

This potential includes water supply, food from the soil and from the sea, industrial development, architecture and construction, and transportation.

Thousands of people depend on KUBOTA's know-how, technology, experience and customer service. You too can depend on KUBOTA.

M5L-111 (U.S.A.)
AU . H . 2 - 2 . 2 . AK

https://truckmanualshub.com/

UNIVERSAL SYMBOLS

As a guide to the operation of your tractor, various universal symbols have been utilized on the instruments and controls. The symbols are shown below with an indication of their meaning.

■ General

- Safety Alert Symbol
- Master System Warning
- Fast
- Slow
- Creep
- Lock
- ON (Engaged)
- OFF (Disengaged)

■ Engine-related

- Diesel Fuel
- Empty
- Full
- Hourmeter/Elapsed Operating Hours
- Engine Coolant-Temperature
- Low Temperature Reguration
- Engine Intake/Combustion Air-Filter
- Engine Oil-Pressure
- Water Separator
- Engine-Warning
- Engine-Rotational Speed
- Engine-Rev Limiter
- Engine-Constant RPM management
- Engine-RPM Increase
- Engine-Run
- Engine-Start
- Engine-Stop
- Electrical Power-accessories
- Diesel Preheat/Glow Plugs (Low Temperature Start Aid)
- Emission Control
- Regeneration
- Regeneration inhibit
- Regeneration (Switch)
- Parked Regeneration
- DEF/AdBlue-Level
- DEF/AdBlue-Low Level
- DEF/AdBlue-Poor Quality
- DEF/AdBlue-Trouble
- DEF/AdBlue-Freeze

■ Vehicle body-related

- 4-Wheel Drive-On
- 4-Wheel Drive-Off
- 4-Wheel Drive-On
- Bi-Speed turn
- Clutch
- Brake
- Parking Brake
- Differential Lock

Steering Wheel-Tilt

PTO-Off (Disengaged)

PTO-On (Engaged)

540 PTO-540 rpm

540E PTO-540E rpm

1000 PTO-1000 rpm

■ Hydraulic-related

Draft Control-Shallow Position

Draft Control-Deep Position

Position Control-Raised Position

Position Control-Lowered Position

3-Point Lowering Speed Control

Remote Cylinder-Retract

Remote Cylinder-Extend

■ Electric-related

Battery Charging Condition

Headlight-Low Beam

Headlight-High Beam

Turn Signal

Hazard Warning Lights

Audible Warning Device

Windshield Wiper

Windshield Wiper-Intermittent

Windshield Washer

Rear Window Defroster

https://truckmanualshub.com/

FOREWORD

You are now the proud owner of a KUBOTA Tractor. This tractor is a product of KUBOTA quality engineering and manufacturing. It is made of fine materials and under a rigid quality control system. It will give you long, satisfactory service. To obtain the best use of your tractor, please read this manual carefully. It will help you become familiar with the operation of the tractor and contains many helpful hints about tractor maintenance. It is KUBOTA's policy to utilize as quickly as possible every advance in our research. The immediate use of new techniques in the manufacture of products may cause some small parts of this manual to be outdated. KUBOTA distributors and dealers will have the most up-to-date information. Please do not hesitate to consult with them.

SAFETY FIRST

This symbol, the industry's "Safety Alert Symbol", is used throughout this manual and on labels on the machine itself to warn of the possibility of personal injury. Read these instructions carefully. It is essential that you read the instructions and safety regulations before you attempt to assemble or use this unit.

DANGER : Indicates an imminently hazardous situation which, if not avoided, will result in death or serious injury.

WARNING : Indicates a potentially hazardous situation which, if not avoided, could result in death or serious injury.

CAUTION : Indicates a potentially hazardous situation which, if not avoided, could result in minor or moderate injury.

IMPORTANT : Indicates that equipment or property damage could result if instructions are not followed.

NOTE : Gives helpful information.

https://truckmanualshub.com/

https://truckmanualshub.com/

CONTENTS

⚠SAFE OPERATION ..... ⚠-1

SERVICING OF TRACTOR 1

SPECIFICATIONS 3
- SPECIFICATION TABLE 3
- TRAVELING SPEEDS 5

IMPLEMENT LIMITATIONS 6

INSTRUMENT PANEL AND CONTROLS 8

PRE-OPERATION CHECK 11
- DAILY CHECK 11

OPERATING THE ENGINE 12
- EXHAUST AFTERTREATMENT DEVICES 12
  - Dual Exhaust Aftertreatment Devices 12
- DIESEL PARTICULATE FILTER (DPF) MUFFLER 13
  - Handling Points 13
  - DPF Regeneration Process 13
  - Operating Procedure for Auto Regeneration Mode 14
  - Operating Procedure for Regeneration Inhibit Mode 16
  - Operating Procedure for Parked Regeneration 18
  - Tips on Diesel Particulate Filter (DPF) Regeneration 20
- SELECTIVE CATALYTIC REDUCTION (SCR) MUFFLER 20
  - Outline of the SCR 20
  - DEF/AdBlue® 21
  - Warning Indication and its Countermeasure 21
  - Storing and Handling DEF/AdBlue® 26
- STARTING THE ENGINE 26
- COLD WEATHER STARTING 29
  - Block Heater (if equipped) 29
- STOPPING THE ENGINE 29
- WARMING UP 30
  - Warm-up and Transmission Oil at Low Temperature Range 30
- JUMP STARTING 30

OPERATING THE TRACTOR 31
- OPERATING NEW TRACTOR 31
  - Do not Operate the Tractor at Full Speed for the First 50 Hours. 31
  - Changing Lubricating Oil for New Tractors 31
- BOARDING AND LEAVING THE TRACTOR 31
- OPERATING FOLDABLE ROPS 31
  - To Fold the ROPS 31
  - To Raise the ROPS to Upright Position 32
  - Adjustment of Foldable ROPS 33
- STARTING 33
  - Operator's Seat 33
  - Glove Box 34

https://truckmanualshub.com/

Seat Belt 34
Tilt Steering Adjustment 34
Light Switch 35
Turn Signal / Hazard Light Switch 35
Front Work Light Switch 36
Brake Pedals (Right and Left) 36
Clutch Pedal 37
Travel Speed Limiter 38
Main Gear Shift Lever 39
Range Gear Shift Lever 39
Hydraulic-Shuttle Shift Lever 39
Creep Speed (if equipped) 39
Front Wheel Drive Lever 40
Hand Throttle Lever 41
Foot Throttle 41
STOPPING 41
Stopping 41
CHECK DURING DRIVING 41
Immediately Stop the Engine if: 41
Easy Checker(TM) 41
Fuel Gauge 43
DEF / AdBlue® Gauge 43
Coolant Temperature Gauge 44
Tachometer 44
LCD MONITOR 45
Various Setting Mode 46
Performance Monitor 50
ELECTRONIC ENGINE CONTROL 51
RPM Dual Memory Setting 51
Constant RPM Management Control 53
PARKING 53
Parking 53
OPERATING TECHNIQUES 54
Differential Lock 54
Operating the Tractor on a Road 54
Operating on Slopes and Rough Terrain 55
Transport the Tractor Safely 55
Directions for Use of Power Steering 55
Trailer Electrical Outlet 55
Electrical Outlet 56

PTO 57
PTO OPERATION 57
PTO Clutch Control Switch 57
PTO Gear Shift Lever 58
PTO Speed Limiter 58
1000 rpm PTO Shaft 59
LCD Monitor Message 60
PTO Shaft Cover and Shaft Cap 60

3-POINT HITCH & DRAWBAR 61
3-POINT HITCH 62
Selecting the holes of Lower Links 62

https://truckmanualshub.com/

Adjusting Lateral Float 62
Selecting the Top Link Mounting Holes 62
Drawbar 62
Lifting Rod (Left) 63
Lifting Rod (Right) 63
Top Link 64
Telescopic Stabilizers 64
Telescopic Lower Links 64
DRAWBAR 65
Adjusting Drawbar Length 65
Swing Drawbar 65

HYDRAULIC UNIT 66
3-POINT HITCH CONTROL SYSTEM 66
Position Control 66
Draft Control 66
Mixed Control 67
Float Control 67
3-point Hitch Lowering Speed 67
REMOTE HYDRAULIC CONTROL SYSTEM 67
Remote Control Valve 67
Remote Control Valve Lever 68
Remote Control Valve Coupler Connecting and Disconnecting 69
Flow Control Valve (option) 69
Adjusting the flow rate 69
Positions and advantages of the flow control valve 70
Hydraulic Control Unit Use Reference Chart 71

TIRES, WHEELS AND BALLAST 72
TIRES 72
Inflation Pressure 72
Dual Tires 72
WHEEL ADJUSTMENT 72
Front Wheels (with 2-wheel drive) 72
Front Wheels (with 4-wheel drive) 74
Rear Wheels 75
BALLAST 76
Front Ballast 76
Rear Ballast 77

MAINTENANCE 78
SERVICE INTERVALS 78
Maintenance Items Chart 80
LUBRICANTS, FUEL AND COOLANT 81

PERIODIC SERVICE 83
HOW TO OPEN THE HOOD 83
Hood 83
Side Cover 83
DAILY CHECK 84
Walk Around Inspection 84
Checking and Refueling 84
Checking the DEF/AdBlue® level and adding the fluid 84

https://truckmanualshub.com/

Checking Water Separator 85
Checking Engine Oil Level 86
Checking Transmission Fluid Level 86
Checking Coolant Level 87
Cleaning Evacuator Valve 87
Checking Dust Indicator 87
Cleaning Grill, Radiator Screen, Oil Cooler and Battery Mount 88
Checking DPF/SCR Muffler 88
Checking Brake Pedal 88
Checking Gauges, Meter and Easy Checker(TM) 88
Checking Head Light, Turn Signal / Hazard Light etc. 89
Checking Seat Belt and ROPS 89
Checking Movable Parts 89
INITIAL 50 HOURS 89
Changing Engine Oil 89
Replacing Engine Filter 89
EVERY 50 HOURS 89
Checking Engine Start System 89
Checking Wheel Bolt Torque 90
Checking Tie-rod Dust Cover 91
EVERY 100 HOURS 91
Lubricating Grease Fittings 91
Cleaning Air Cleaner Primary Element 93
Adjusting Fan Belt Tension 93
Adjusting Brake Pedal 94
Checking Gear Locked Parking Brake 94
Checking Battery Condition 95
EVERY 200 HOURS 96
Adjusting Toe-in 96
Draining Fuel Tank Water 97
EVERY 400 HOURS 98
Cleaning Water Separator 98
Lubricating Grease Fitting [2WD Model] 98
EVERY 500 HOURS 98
Changing Engine Oil 98
Replacing Engine Oil Filter 99
Replacing Fuel Filter 99
Replacing Hydraulic Oil Filter 100
Checking Power Steering Line 101
Checking Radiator Hose and Clamp 101
Checking Fuel Line 102
Checking Intake Air Line 102
EVERY 600 HOURS 103
Adjusting Front Axle Pivot 103
EVERY 1000 HOURS 103
Changing Transmission Fluid 103
Changing Front Differential Case Oil 104
Changing Front Axle Gear Case Oil 104
Adjusting Engine Valve Clearance 104
EVERY 1000 HOURS or 1 YEAR 105
Replacing Air Cleaner Primary Element and Secondary Element 105
Checking Exhaust Manifold 105

https://truckmanualshub.com/

EVERY 1500 HOURS 105
Checking Fuel Injection Nozzle (Injection Pressure) 105
Checking DEF/AdBlue® Injector Tip 105
Checking DEF/AdBlue® Line 105
Replacing Oil Separator Element 105
Checking PCV (Positive Crankcase Ventilation) Valve 105
Checking and Cleaning EGR Cooler 106
EVERY 2000 HOURS or 2 YEARS 106
Flushing Cooling System and Changing Coolant 106
Anti-Freeze 107
EVERY 3000 HOURS 107
Checking Turbocharger 107
Checking Supply Pump 107
Checking Intake Air Heater 107
Checking and Cleaning EGR System 107
Cleaning DPF Muffler 107
Checking DEF/AdBlue® injector 108
Replacing DEF/AdBlue® Pump Filter 108
EVERY 9000 HOURS 108
Replacing DEF/AdBlue® Tank Filter 108
EVERY 1 YEAR 108
Checking Antifrost Heater for Oil Separator 108
Checking DPF Related Pipe 108
Checking EGR Pipe 108
EVERY 2 YEARS 108
Cleaning Master Cylinder Filter 108
Replacing Oil Separator Related Rubber Pipe 108
Replacing DPF Related Rubber Pipe 108
Replacing EGR Cooler Hose 108
Replacing Boost Sensor Hose 108
EVERY 4 YEARS 108
Replacing Radiator Hose (Water pipes) 108
Replacing Fuel Hose 108
Replacing Intake Air Line 108
Replacing Power Steering Hose 109
Replacing Lift Cylinder Hose 109
Replacing Master Cylinder Kit 109
Replacing Brake Seal 1 and 2 109
SERVICE AS REQUIRED 109
Bleeding Fuel System 109
Bleeding Brake System 110
Draining Clutch Housing Water 110
Replacing Fuse 110
Replacing Slow-Blow Fuses 111
Replacing Light Bulb 112
Replacing Head Lamp 112

STORAGE 113
TRACTOR STORAGE 113
REMOVING THE TRACTOR FROM STORAGE 113

TROUBLESHOOTING 114

https://truckmanualshub.com/

ENGINE TROUBLESHOOTING 114
POWER TRAIN TROUBLE SHOOTING..... 116

OPTIONS..... 117

APPENDICES..... 118
INDEX 118

https://truckmanualshub.com/

SAFE OPERATION

Careful operation is your best insurance against an accident.

Read and understand this manual carefully before operating the tractor.

All operators, no matter how much experience they may have, should read this and other related manuals before operating the tractor or any implement attached to it. It is the owner's obligation to instruct all operators in safe operation.

1. BEFORE OPERATING THE TRACTOR

1. Know your equipment and its limitations. Read this entire manual before attempting to start and operate the tractor.
2. Pay special attention to the danger, warning and caution labels on the tractor.
3. Do not operate the tractor or any implement attached to it while under the influence of alcohol, medication, controlled substances or while fatigued.
4. Before allowing other people to use your tractor, explain how to operate and have them read this manual before operation.
5. Never wear loose, torn, or bulky clothing around tractor. It may catch on moving parts or controls, leading to the risk of an accident. Use additional safety items, e.g. hard hat, safety boots or shoes, eye and hearing protection, gloves, etc., as appropriate or required.
6. Do not allow passengers to ride on any part of the tractor at anytime. The operator must remain in the tractor seat during operation.
7. Check brakes, clutch, linkage pins and other mechanical parts for improper adjustment and wear. Replace worn or damaged parts promptly. Check the tightness of all nuts and bolts regularly. (For further details, see "MAINTENANCE" section.)
8. Keep your tractor clean. Dirt, grease, and trash build up may contribute to fires and lead to personal injury.
9. Use only implements meeting the specifications listed under "IMPLEMENT LIMITATIONS" in this manual or implements approved by KUBOTA.
10. Use proper weights on the front or rear of the tractor to reduce the risk of upsets. When using the front loader, put an implement or ballast on the 3-point hitch to improve stability. Follow the safe operating procedures specified in the implement or attachment manual.
11. The narrower the tread, the greater the risk of a tractor upset. For maximum stability, adjust the wheels to the widest practical tread width for your application. (See "TIRES, WHEELS AND BALLAST" section.)

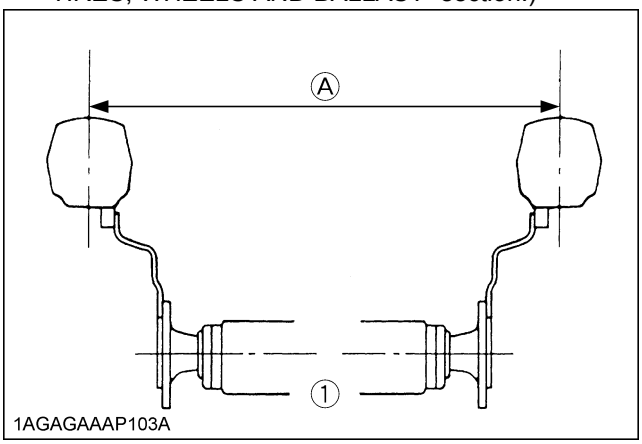

(1) Rear wheels *(A) Tread Width*

12. Do not modify the tractor. Unauthorized modification may affect the function of the tractor, which may result in personal injury.

◆ **CAB, ROPS**

1. KUBOTA recommends the use of a CAB or Roll Over Protective Structures (ROPS) and seat belt in almost all applications. This combination will reduce the risk of serious injury or death, should the tractor be upset. Check for overhead clearance which may interfere with a CAB or ROPS.
2. Set parking brake and stop engine. Remove any obstruction that may prevent raising or folding of the ROPS. Do not allow any bystanders. Always perform function from a stable position at the rear of the tractor. Hold the top of the ROPS securely when raising or folding. Make sure all pins are installed and locked.
3. If the CAB or ROPS is loosened or removed for any reason, make sure that all parts are reinstalled correctly before operating the tractor.
4. Never modify or repair any structural member of a CAB or ROPS because welding, bending, drilling, grinding, or cutting may weaken the structure.
5. A damaged CAB or ROPS structure must be replaced, not repaired or revised.
6. If any structural member of the CAB or ROPS is damaged, replace the entire structure at your local KUBOTA Dealer.

https://truckmanualshub.com/

7. If the tractor is equipped with a foldable ROPS it may be temporarily folded down only when absolutely necessary for areas with height constraints.
   (There is no operator protection provided by the ROPS in the folded position. For operator safety the ROPS should be placed in the upright and locked position and the seat belt fastened for all other operations.)
8. Always use the seat belt if the tractor has a CAB or ROPS.
   Do not use the seat belt if a foldable ROPS is down or there is no ROPS. Check the seat belt regularly and replace if frayed or damaged.

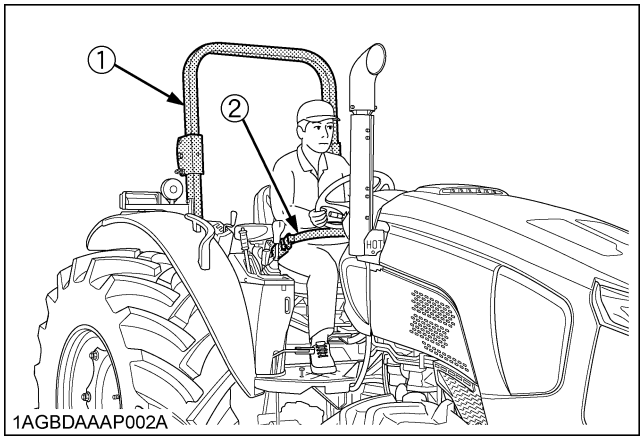

(1) ROPS
(2) Seat belt

2. OPERATING THE TRACTOR

Operator safety is a priority. Safe operation, specifically with respect to overturning hazards, entails understanding the equipment and environmental conditions at the time of use. Some prohibited uses which can affect overturning hazards include traveling and turning with implements and loads carried too high etc. This manual sets forth some of the obvious risks, but the list is not, and cannot be, exhaustive. It is the operator's responsibility to be alert for any equipment or environmental condition that could compromise safe operation.

◆ **Starting**

1. Always sit in the operator's seat when starting engine or operating levers or controls. Adjust seat per instructions in the operating the tractor section. Never start engine while standing on the ground.
2. Before starting the engine, make sure that all levers (including auxiliary control levers) are in their neutral positions, that the parking brake is engaged, and that both the clutch and the Power Take-Off (PTO) are disengaged or "OFF".
   Fasten the seat belt if the tractor has a CAB, a fixed ROPS or a foldable ROPS in the upright and locked position.
3. Do not start engine by shorting across starter terminals or bypassing the safety start switch. Machine may start in gear and move if normal starting circuitry is bypassed.
4. Do not operate or idle engine in a non-ventilated area. Carbon monoxide gas is colorless, odorless, and deadly.
5. Check before each use that operator presence controls are functioning correctly. Test safety systems. (See "Checking Engine Start System" in "EVERY 50 HOURS" in "PERIODIC SERVICE" section.)
   Do not operate unless they are functioning correctly.

◆ **Working**

1. Pull only from the drawbar. Never hitch to axle housing or any other point except drawbar; such arrangements will increase the risk of serious personal injury or death due to a tractor upset.

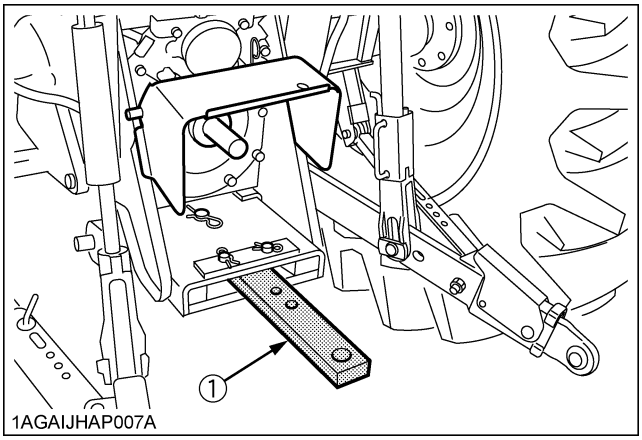

(1) Drawbar

2. For trailing PTO-driven implements, set the drawbar to the towing position.
3. Attach pulled or towed loads to the drawbar only.
4. Keep all shields and guards in place. Replace any that are missing or damaged.
5. Avoid sudden starts. To avoid upsets, slow down when turning, on uneven ground, and before stopping.
6. The tractor cannot turn with the differential locked and attempting to do so could be dangerous.
7. Do not operate near ditches, holes, embankments, or other ground surface features which may collapse under the tractor's weight. The risk of tractor upset is even higher when the ground is loose or wet. Tall grass can hide obstacles, walk the area first to be sure.
8. Watch where you are going at all times. Watch for and avoid obstacles. Be alert at row ends, near trees, and other obstructions.
9. When working in groups, always let the others know what you are going to do before you do it.
10. Never try to get on or off a moving tractor.
11. Always sit in the operator's seat when operating levers or controls.

https://truckmanualshub.com/

12. Do not stand between tractor and implement or trailed vehicle unless parking brake is applied.

◆ Safety for children

Tragedy can occur if the operator is not alert to the presence of children. Children generally are attracted to machines and the work they do.

1. Never assume that children will remain where you last saw them.
2. Keep children out of the work area and under the watchful eye of another responsible adult.
3. Be alert and shut your machine down if children enter the work area.
4. Never carry children on your machine. There is no safe place for them to ride. They may fall off and be run over or interfere with your control of the machine.
5. Never allow children to operate the machine even under adult supervision.
6. Never allow children to play on the machine or on the implement.
7. Use extra caution when backing up. Look behind and down to make sure area is clear before moving.

◆ Operating on slopes

Slopes are a major factor related to loss-of-control and tip-over accidents, which can result in severe injury or death. All slopes require extra caution.

1. To avoid upsets, always back up steep slopes. If you cannot back up the slope or if you feel uneasy on it, do not operate on it. Stay off slopes too steep for safe operation.
2. Driving forward out of a ditch, mired condition or up a steep slope increases the risk of a tractor to be upset backward. Always back out of these situations. Extra caution is required with 4-wheel drive models because their increased traction can give the operator false confidence in the tractor's ability to climb slopes.
3. Keep all movement on slopes slow and gradual. Do not make sudden changes in speed, direction or apply brake and make sudden motions of the steering wheel.
4. Avoid disengaging the clutch or changing gears speed when climbing or going down a slope. If on a slope disengaging the clutch or changing gears to neutral could cause loss of control.
5. Special attention should be made to the weight and location of implements and loads as such will affect the stability of the tractor.
6. To improve stability on slope, set widest wheel tread as shown in "TIRES, WHEELS AND BALLAST" section.
   Follow recommendations for proper ballasting.
7. To avoid free wheeling:
   - Do not shift the shuttle lever while on a slope.
   - Stop completely by using the brake and by depressing the clutch pedal, then shift the shuttle lever.
   - Start off after selecting shuttle direction, by releasing the clutch pedal.

◆ Driving the tractor on the road

1. Lock the 2 brake pedals together to help assure straight-line stops. Uneven braking at road speeds could cause the tractor to tip over.

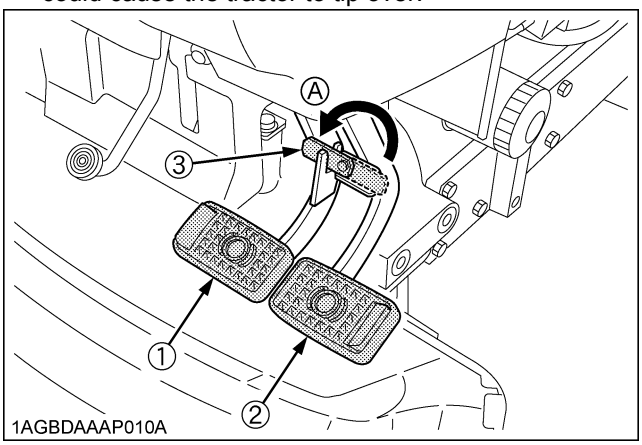

(1) Brake Pedal (LH)
(2) Brake Pedal (RH)
(3) Brake Pedal Lock
(A) Whenever travelling on the road

2. Check the front wheel engagement. The braking characteristics are different between 2 and 4-wheel drive. Be aware of the difference and use carefully.
3. Always slow the tractor down before turning. Turning at high speed may tip the tractor over.
4. Make sure that the Slow Moving Vehicle (SMV) sign is clean and visible. Use hazard lights and turn signals as required.

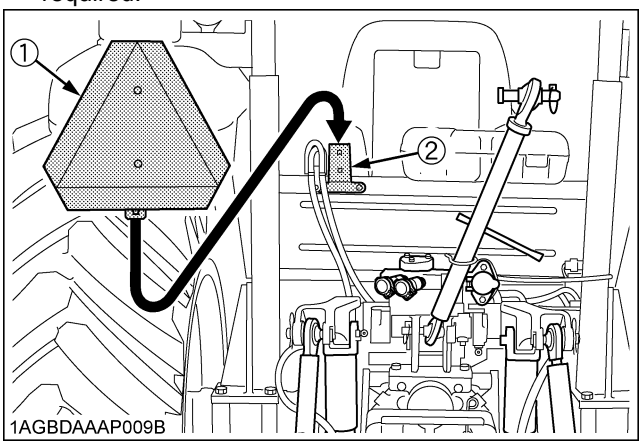

(1) SMV emblem
(2) Bracket

5. On public roads use the SMV emblem and hazard lights, if required by local traffic and safety regulations.
6. Observe all local traffic and safety regulations.
7. Turn the headlights on. Dim them when meeting another vehicle.
8. Drive at speeds that allow you to maintain control at all times.
9. Do not apply the differential lock while traveling at road speeds. The tractor may run out of control.

https://truckmanualshub.com/

10. Avoid sudden motions of the steering wheel as they can lead to a dangerous loss of stability. The risk is especially great when the tractor is traveling at road speeds.
11. Keep the ROPS in the "UP" position and wear the seat belt when driving the tractor on the road.
    Otherwise, you will not be protected in the event of a tractor roll-over.
12. Do not operate an implement while the tractor is on the road. Lock the 3-point hitch in the raised position.
13. Do not ride or stand on the step during operation. Riding or standing there could result in being crushed under the rear tire due to slippage or the step fracturing or displacing due to unintended loading.

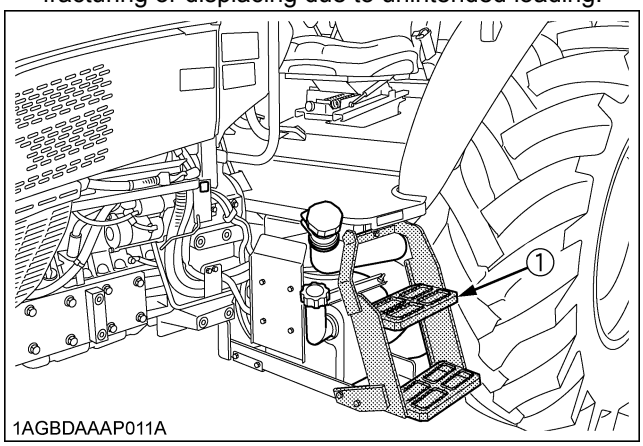

(1) Step

14. When towing other equipment, use a safety chain and place an SMV emblem on it as well.

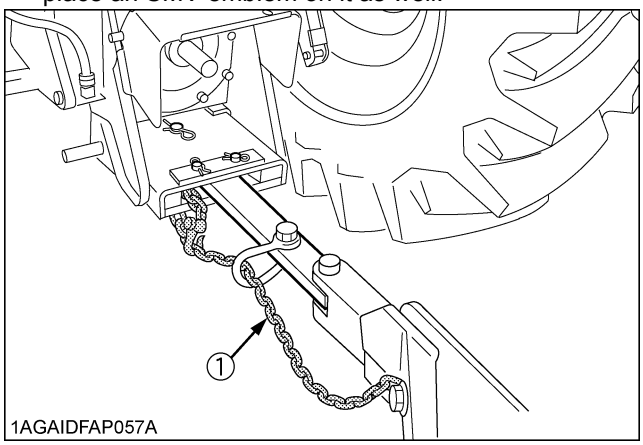

(1) Safety chain

15. Set the implement lowering speed knob in the "LOCK" position to hold the implement in the raised position.

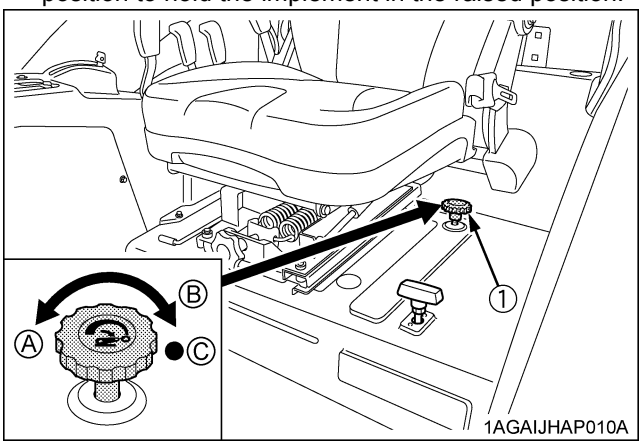

(1) 3-point hitch lowering speed knob
(A) "FAST"
(B) "SLOW"
(C) "LOCK"

3. PARKING THE TRACTOR

1. Disengage the PTO, lower all implements to the ground, place all control levers in their neutral positions, set the parking brake, stop the engine, remove the key from the ignition and lock the cab door (if equipped). Leaving transmission in gear with the engine stopped will not prevent tractor from rolling.
2. Make sure that the tractor has come to a complete stop before dismounting.
3. Avoid parking on steep slopes, if at all possible park on a firm and level surface; if not, park across a slope and chock the wheels.
   Failure to comply with this warning may allow the tractor to move and could cause injury or death.

https://truckmanualshub.com/

4. OPERATING THE PTO

1. Wait until all moving components have completely stopped before getting off the tractor, connecting, disconnecting, adjusting, cleaning, or servicing any PTO driven equipment.
2. Keep the PTO shaft cover in place at all times. Replace the PTO shaft cap when the shaft is not in use.

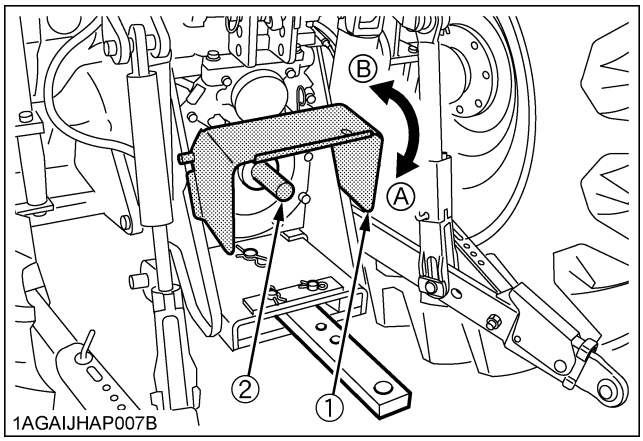

(1) PTO Shaft cover *(A) "NORMAL POSITION"*
(2) PTO Shaft cap *(B) "RAISED POSITION"*

3. Before installing or using PTO driven equipment, read the manufacturer's manual and review the safety labels attached to the equipment.
   To prevent PTO driven equipment from improper or unsafe use, select the lower speed (540rpm) unless the higher one is specifically recommended as safe by the equipment manufacturer.
4. When operating stationary PTO driven equipment, always apply the tractor parking brake and place chocks behind and in front of the rear wheels. Stay clear of all rotating parts. Never step over rotating parts.

5. USING 3-POINT HITCH

1. Use the 3-point hitch only with equipment designed for 3-point hitch usage.
2. When using a 3-point hitch mounted implement, be sure to install the proper counterbalance weight on the front of the tractor.
3. To avoid injury from separation:
   Do not extend lift rod beyond the groove on the threaded rod.

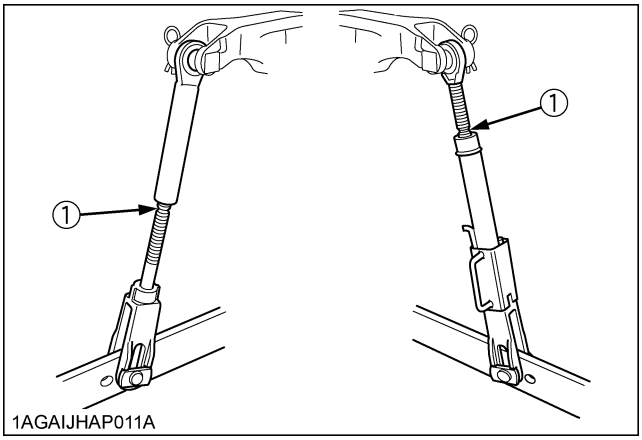

(1) Groove

6. SERVICING THE TRACTOR

Before servicing the tractor, park it on a firm, flat and level surface, set the parking brake, lower all implements to the ground, place the gear shift lever in neutral, stop the engine and remove the key.

1. Allow the tractor time to cool off before working on or near the engine, muffler, radiator, etc.
2. Do not remove radiator cap while coolant is hot. When cool, slowly rotate cap to the first stop and allow sufficient time for excess pressure to escape before removing the cap completely. If the tractor has a coolant recovery tank, add coolant or water to the tank, not the radiator. (See "Checking Coolant Level" in "DAILY CHECK" in "PERIODIC SERVICE" section.)
3. Always stop the engine before refueling. Avoid spills and overfilling.
4. Do not smoke when working around battery or when refueling. Keep all sparks and flames away from battery and fuel tank. The battery presents an explosive hazard, because it gives off hydrogen and oxygen especially when recharging.
5. Before "jump starting" a dead battery, read and follow all of the instructions. (See "JUMP STARTING" in "OPERATING THE ENGINE" section.)
6. Keep first aid kit and fire extinguisher handy at all times.

https://truckmanualshub.com/

7. Disconnect the battery's ground cable before working on or near electric components.
8. To avoid the possibility of battery explosion, do not use or charge the refillable type battery if the fluid level is below the LOWER (lower limit level) mark. Check the fluid level regularly and add distilled water as required so that the fluid level is between the UPPER and LOWER levels.
9. To avoid sparks from an accidental short circuit, always disconnect the battery's ground cable (-) first and reconnect it last.

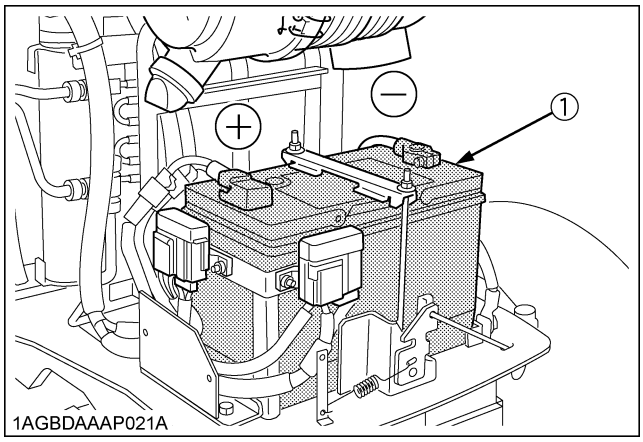

(1) Battery

10. Do not attempt to mount a tire on a rim. This should be done by a qualified person with the proper equipment.
11. Always maintain the correct tire pressure. Do not inflate tires above the recommended pressure shown in the operator's manual.

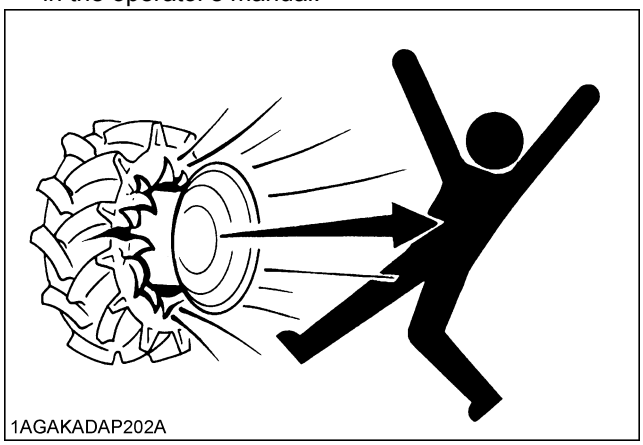

12. Securely support the tractor when either changing wheels or adjusting the wheel tread width.
13. Make sure that wheel bolts have been tightened to the specified torque.
14. Do not work under any hydraulically supported devices. They can settle, suddenly leak down, or be accidentally lowered. If it is necessary to work under tractor or any machine elements for servicing or adjustment, securely support them with stands or suitable blocking beforehand.
15. Escaping hydraulic fluid under pressure has sufficient force to penetrate skin, causing serious personal injury. Before disconnecting hydraulic lines, be sure to release all residual pressure. Before applying pressure to the hydraulic system, make sure that all connections are tight and that all lines, pipes, and hoses are free of damage.

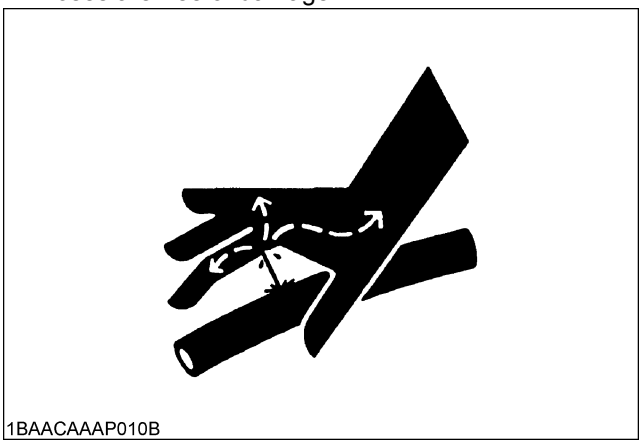

16. Fluid escaping from pinholes may be invisible. Do not use hands to search for suspected leaks; use a piece of cardboard or wood. Use of safety goggles or other eye protection is also highly recommended. If injured by escaping fluid, see a medical doctor at once. This fluid will produce gangrene or severe allergic reaction.

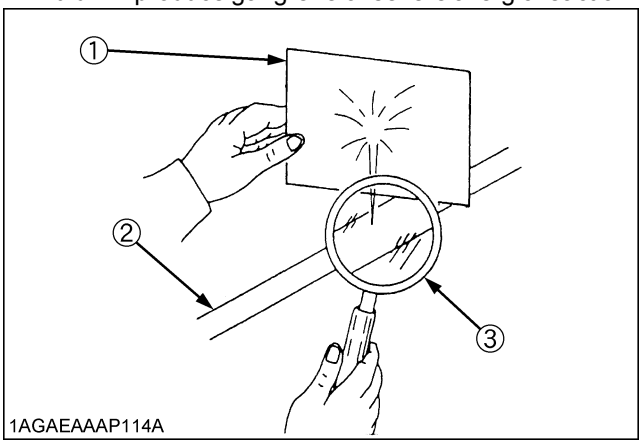

(1) Cardboard
(2) Hydraulic line
(3) Magnifying glass

17. Do not open high-pressure fuel system.
    High-pressure fluid remaining in fuel lines can cause serious injury. Do not disconnect nor attempt to repair fuel lines, sensors, or any other components between the high-pressure fuel pump and injectors on engines with high pressure common rail fuel system.
18. To avoid hazardous high voltage, turn the key switch to the OFF position if it is necessary to check to repair the computer, harness or connectors.

https://truckmanualshub.com/

19. During Diesel Particulate Filter (hereinafter called DPF) regenerating operations, exhaust gases and exhaust filter components reach temperatures hot enough to burn people, or ignite or melt common materials.
20. Keep the tractor away from people, animals or structures which may be susceptible to harm or damage from hot exhaust gases.
21. To prevent fires, keep the DPF/SCR muffler and its surroundings clear of anything flammable and keep clean at all times. [Selective Catalytic Reduction (hereinafter called SCR)]
22. During regeneration, white exhaust gas may be visible. Do not allow regeneration in a non-ventilated space.
23. During regeneration, do not leave the tractor.

https://truckmanualshub.com/

7. DANGER, WARNING AND CAUTION LABELS

(1) Part No. TC660-4997-1

⚠ WARNING

TO AVOID PERSONAL INJURY OR DEATH:

1. Read and understand the operator's manual before operation.
2. Before starting the engine, make sure that everyone is at a safe distance from the tractor and that the PTO is OFF.
3. Do not allow passengers on the tractor at any time.
4. Before allowing other people to use the tractor, have them read the operator's manual.
5. Check the tightness of all nuts and bolts regularly.
6. Keep all shields in place and stay away from all moving parts.
7. Lock the two brake pedals together before driving on the road.
8. Slow down for turns, or rough roads, or when applying individual brakes.
9. On public roads use SMV emblem and hazard lights, if required by local traffic and safety regulations.
10. Pull only from the drawbar.
11. Before dismounting, lower the implement to the ground, set the parking brake, stop the engine and remove the key.
12. Securely support tractor and implements before working underneath.

1AGAHAKAP046A

(3) Part No. 3F240-9857-1

⚠ WARNING

To avoid free wheeling when shifting the shuttle lever while on a slope : Stop completely by using the brake and by depressing the clutch pedal. Start off after selecting shuttle direction by releasing the clutch pedal.

1AGAIBDAP039A

(2) Part No. 3A111-9848-2

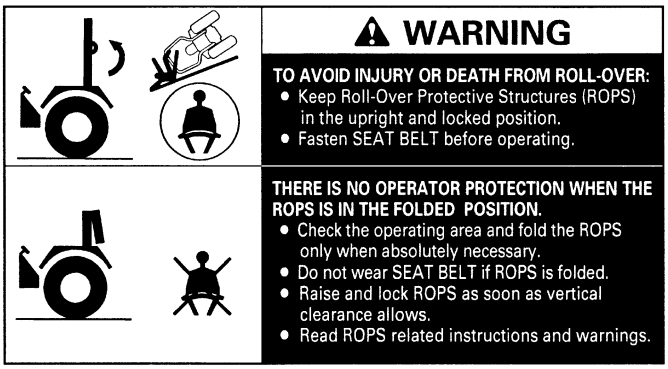

⚠ WARNING

TO AVOID INJURY OR DEATH FROM ROLL-OVER:

- Keep Roll-Over Protective Structures (ROPS) in the upright and locked position.
- Fasten SEAT BELT before operating.

THERE IS NO OPERATOR PROTECTION WHEN THE ROPS IS IN THE FOLDED POSITION.

- Check the operating area and fold the ROPS only when absolutely necessary.
- Do not wear SEAT BELT if ROPS is folded.
- Raise and lock ROPS as soon as vertical clearance allows.
- Read ROPS related instructions and warnings.

1AGAIDCAP066E

(4) Part No. 6C150-4743-1

⚠ WARNING

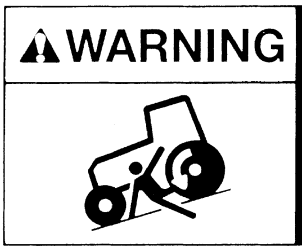

BEFORE DISMOUNTING TRACTOR:

1. ALWAYS SET PARKING BRAKE.
Leaving transmission in gear with the engine stopped will not prevent tractor from rolling.

2. PARK ON LEVEL GROUND WHENEVER POSSIBLE.
If parking on a slope, position tractor across the slope.

3. LOWER ALL IMPLEMENTS TO THE GROUND.

4. STOP THE ENGINE.

1AGAIBDAP040E

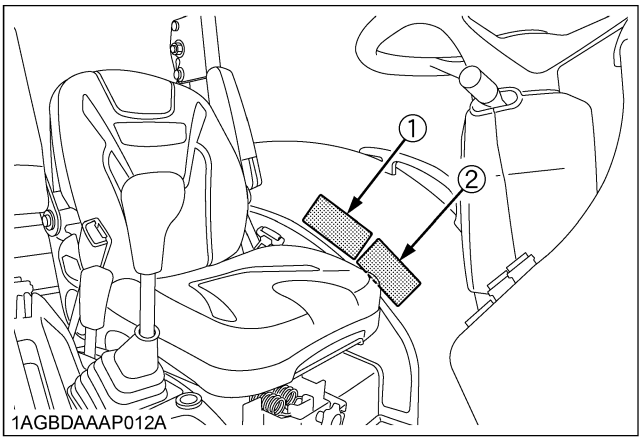

1AGBDAAAP012A

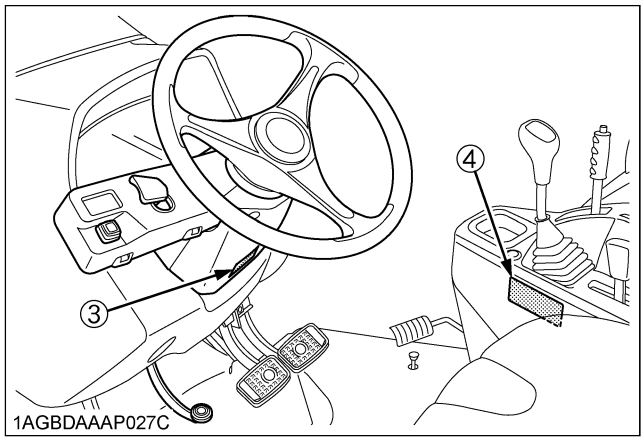

1AGBDAAAP027C

1AGBDAAAP017A

https://truckmanualshub.com/

(1) Part No. TC660-9861-1

⚠ WARNING

TO AVOID PERSONAL INJURY OR DEATH:
When the Diesel Particulate Filter (DPF) is in the regenerating mode, the exhaust gas and the DPF muffler become hot. During regeneration, take into account that the muffler will be very hot and keep the machine away from other people, animals, plants, and flammable material. Also keep the area near the DPF muffler clean and away from flammable material.

1AGAHAKAP051A

(2) Part No. K3512-4719-1

Do not touch hot surface like muffler, etc.

1BDABANAP080A

(3) Part No. TA040-4965-2

⚠ DANGER

TO AVOID POSSIBLE INJURY OR DEATH FROM A MACHINE RUNAWAY.

1. Do not start engine by shorting across starter terminals or bypassing the safety start switch. Machine may start in gear and move if normal starting circuitry is bypassed.
2. Start engine only from operator's seat with transmission and PTO OFF.
   Never start engine while standing on the ground.

1AGAIAZAP009A

(4) Part No. 3A111-9801-1

⚠ WARNING

TO Avoid Serious Crushing Injuries or Death.
Do not ride or stand on the step during operation.
Riding or standing there could result in being crushed under the rear tire due to slippage or the step fracturing or displacing due to unintended loading.

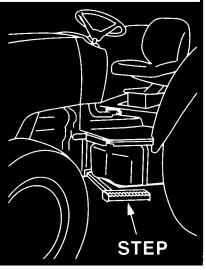

1AGAIDHAP099A

(5) Part No. 3B291-9853-1

Diesel fuel only

No fire

1AGBDAAAP052A

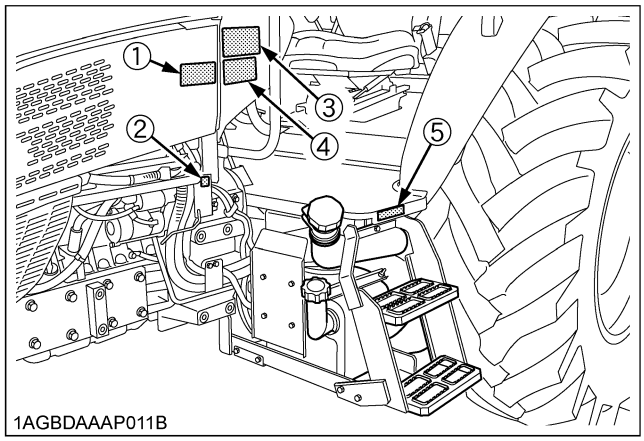

1AGBDAAAP011B

1AGBDAAAP018A

https://truckmanualshub.com/

(1) Part No. 6C540-9554-1

⚠ WARNING

Never modify or repair a ROPS because welding, grinding, drilling or cutting any portion may weaken the structure.

⚠ WARNING

TO AVOID PERSONAL INJURY OR DEATH WHEN RAISING OR FOLDING ROPS :

- Set parking brake and stop engine.
- Remove any obstruction that may prevent raising or folding of the ROPS.
- Do not allow any bystanders.
- Always perform function from a stable position at the rear of the tractor.
- Hold the top of the ROPS securely when raising or folding.
- Make sure all pins are installed and locked.

1AGAHAKAP032A

(2) Part No. 3B291-9856-1

⚠ WARNING

TO AVOID PERSONAL INJURY OR DEATH FROM SEPARATION:

DO NOT EXTEND LIFT ROD BEYOND THE GROOVE ON THE THREADED ROD.

1AGBDAAAP053A

(3) Part No. TA040-4959-3

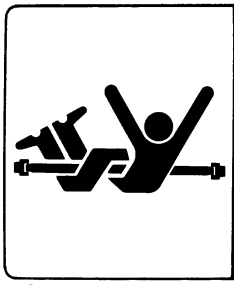

⚠ WARNING

TO AVOID PERSONAL INJURY.

1. Keep PTO shield in place at all times.
2. Do not operate the PTO at speeds faster than the speed recommended by the implement manufacturer.
3. For trailing PTO-driven implements. set drawbar at towing position. (see operator's manual)

1AGAIAZAP116A

(4) Part No. TA040-4935-1

⚠ WARNING

TO AVOID PERSONAL INJURY:

1. Attach pulled or towed loads to the drawbar only.
2. Use the 3-point hitch only with equipment designed for 3-point hitch usage.

1AGAIAZAP056A

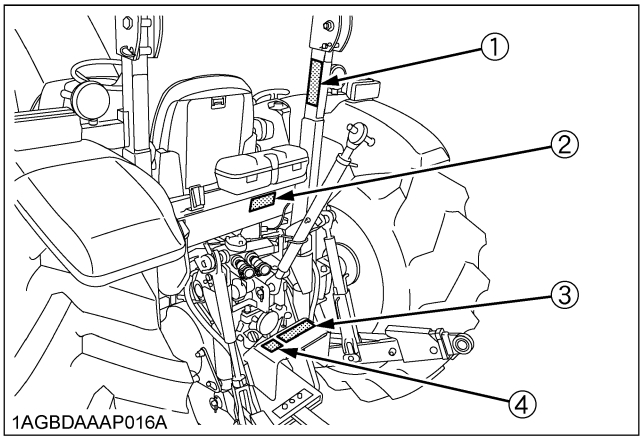

1AGBDAAAP016A

1AGBDAAAP019A

https://truckmanualshub.com/

(1) Part No. 6C090-4958-2

Do not get your hands close to engine fan and fan belt.

1AGAIAZAP110A

(3) Part No. 3Y205-9892-1

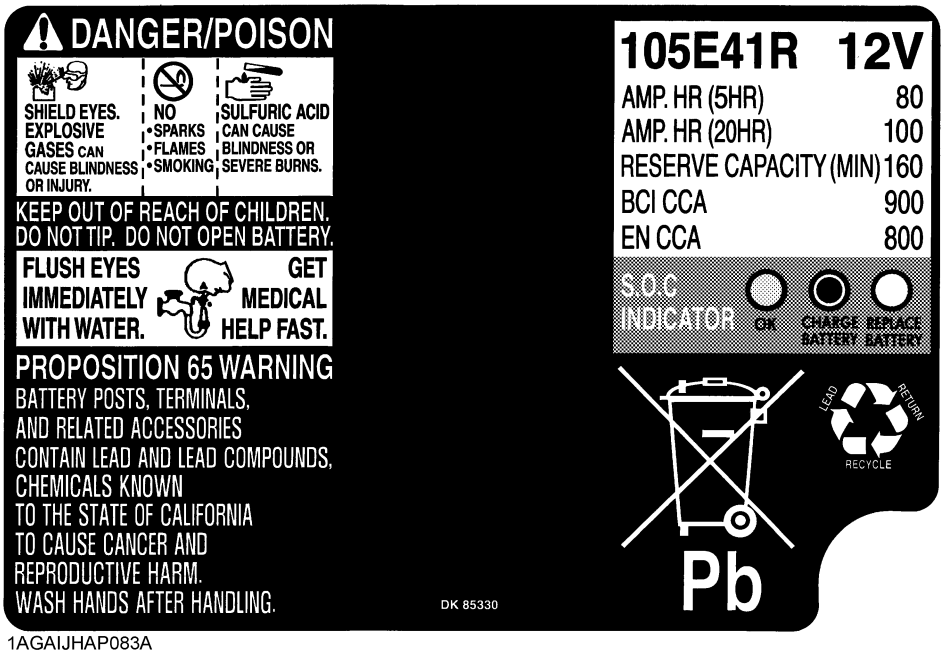

1AGAIJHAP083A

(2) Part No. 32310-4958-1

Do not touch hot surface like muffler, etc.

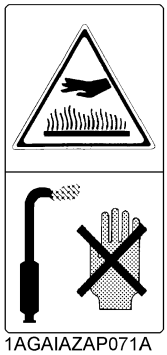

1AGAIAZAP071A

(4) Part No. K3512-4719-1

Do not touch hot surface like muffler, etc.

1BDABANAP080A

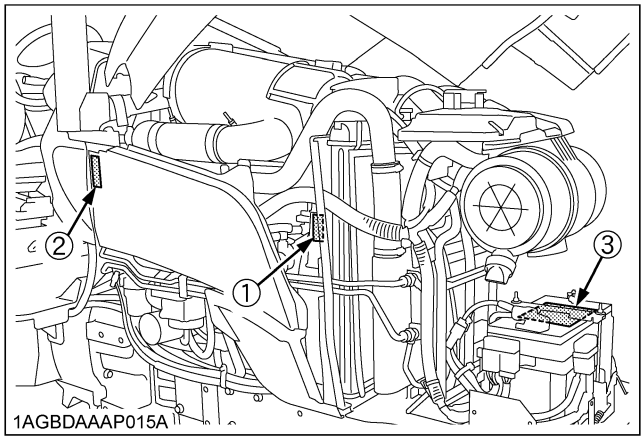

1AGBDAAAP015A

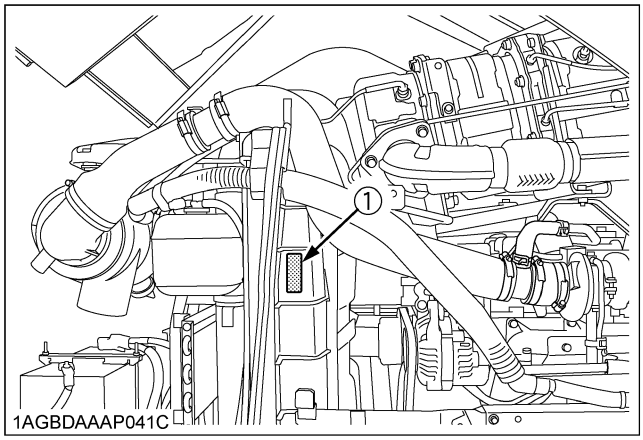

1AGBDAAAP041C

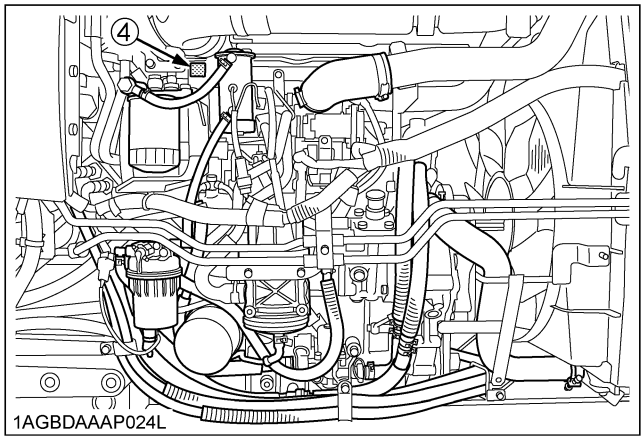

1AGBDAAAP024L

1AGBDAAAP020A

https://truckmanualshub.com/

8. CARE OF DANGER, WARNING AND CAUTION LABELS

1. Keep danger, warning and caution labels clean and free from obstructing material.
2. Clean danger, warning and caution labels with soap and water, dry with a soft cloth.
3. Replace damaged or missing danger, warning and caution labels with new labels from your local KUBOTA Dealer.
4. If a component with danger, warning and caution label(s) affixed is replaced with new part, make sure new label(s) is (are) attached in the same location(s) as the replaced component.
5. Mount new danger, warning and caution labels by applying on a clean dry surface and pressing any bubbles to outside edge.

https://truckmanualshub.com/

SERVICING OF TRACTOR

Your dealer is interested in your new tractor and has the desire to help you get the most value from it. After reading this manual thoroughly, you will find that you can do some of the regular maintenance yourself.
However, when in need of parts or major service, be sure to see your KUBOTA Dealer.
For service, contact the KUBOTA Dealership from which you purchased your tractor or your local KUBOTA Dealer.
When in need of parts, be prepared to give your dealer the tractor, CAB/ROPS and engine serial numbers.
Locate the serial numbers now and record them in the space provided.

	Type	Serial No.
Tractor		
CAB / ROPS		
Engine		
Date of Purchase		
Name of Dealer		
(To be filled in by purchaser)		

◆ **Warranty**
This tractor is warranted under the KUBOTA Limited Express Warranty, a copy of which may be obtained from your selling dealer. No warranty shall, however, apply if the tractor has not been handled according to the instruction given in the Operator's Manual even it is within the warranty period.

◆ **Scrapping the tractor and its procedure**
To put the tractor out of service, correctly follow the local rules and regulations of the country or territory where you scrap it. If you have questions, consult your local KUBOTA Dealer.

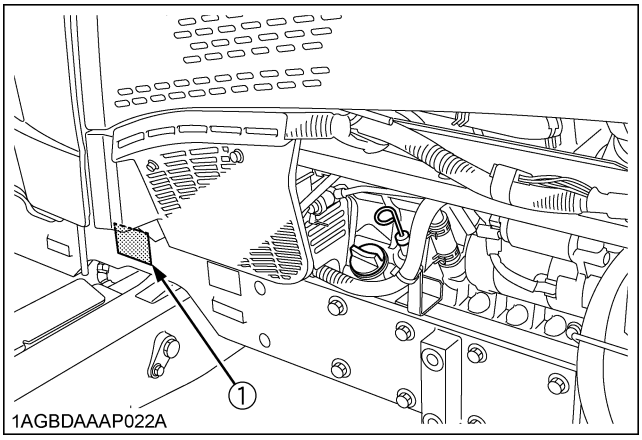

(1) Tractor identification plate

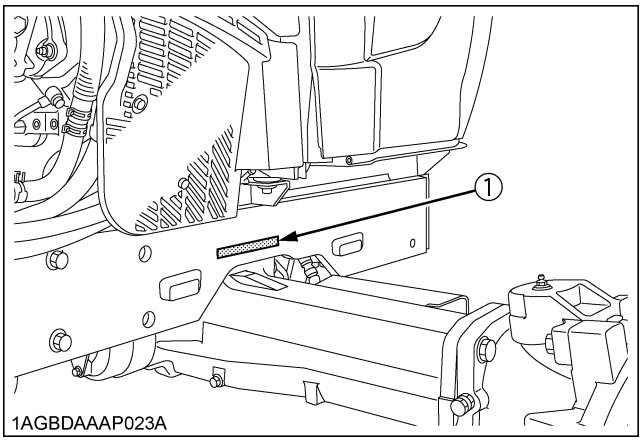

(1) Tractor serial number

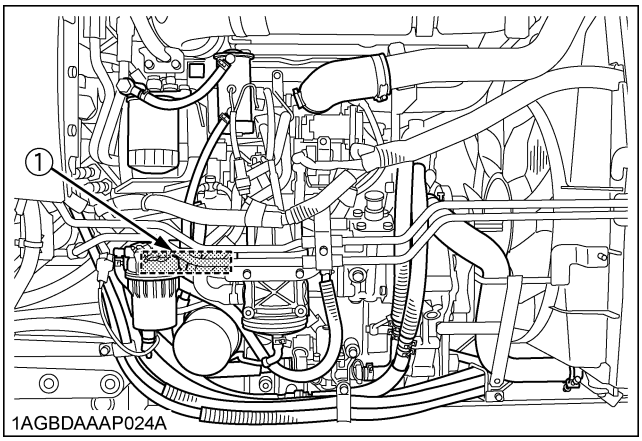

(1) Engine serial number

https://truckmanualshub.com/

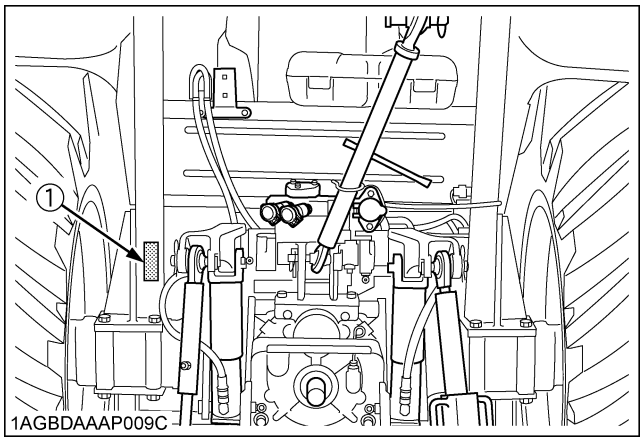

(1) ROPS identification plate (ROPS Serial No.)

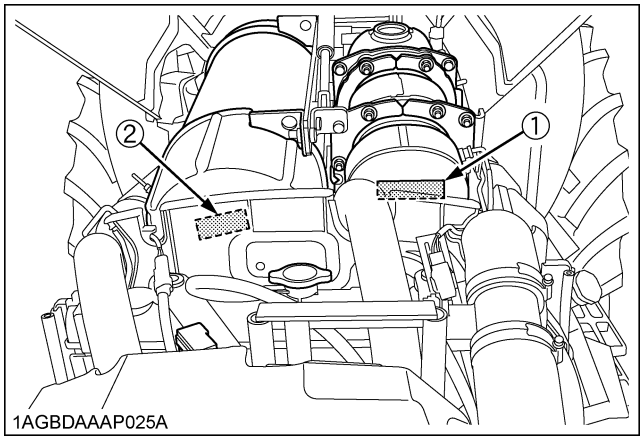

(1) Diesel Particulate Filter (DPF) serial number
(2) Selective Catalytic Reduction (SCR) muffler serial number

https://truckmanualshub.com/

SPECIFICATIONS

SPECIFICATION TABLE

Model				M5-091		M5-111	
				2WD	4WD	2WD	4WD
Engine	Model			V3800-TIEF4			
	Type			Direct Injection, Water-cooled 4 Cycle Diesel, Common Rail System, Turbocharger, Intercooler			
	Number of cylinders			4			
	Total displacement		cm^3 (cu.in.)	3769 (230)			
	Bore and stroke		mm (in.)	100 x 120 (3.9 x 4.7)			
	Rated revolution		rpm	2400			
	Low idling revolution		rpm	800 to 850			
	Rated Engine HP (97/68/EC)		kW (HP)	69.0 (92.5)		78.8 (105.6)	
	Net power *1		kW (HP)	63.8 (85.5)		74.6 (100)	
	PTO power *1 (factory observed)		kW (HP)	56.7 (76)		66.4 (89)	
	Maximum torque		N-m (ft-lbs) / rpm	325 (240) / 1500		357 (263) / 1500	
	Battery capacity			12V, RC: 160 min, CCA 900A			
	Fuel tank capacity		L (U.S.gals.)	105 (27.7)			
	Engine oil capacity		L (U.S.qts.)	10.7 (11.3)			
	Coolant capacity		L (U.S.qts.)	10.0 (11)			
	DEF/AdBlue® capacity		L (U.S.gals.)	12.3 (3.2)			
Dimensions	Overall length		mm (in.)	3975 (156.5)	3960 (156)	3975 (156.5)	3960 (156)
	Overall width (minimum tread)		mm (in.)	1960 (77)	1990 (78)	1990 (78)	2010 (79)
	Overall height		mm (in.)	2510 (99) (ROPS)		2535 (100) (ROPS)	
	Wheel base		mm (in.)	2285 (90)	2250 (88.6)	2285 (90)	2250 (88.6)
	Tread	Front	mm (in.)	1440 to 2040 (56.7 to 80.3)	1580 (62.2)	1440 to 2040 (56.7 to 80.3)	1580 (62.2)
		Rear	mm (in.)	1520 to 1920 (59.8 to 75.6)			
	Minimum ground clearance		mm (in.)	425 (16.7) (Drawbar bracket)		450 (17.7) (Drawbar bracket)	
Weight			kg (lbs.)	2600 (5732)	2790 (6151)	2660 (5865)	2850 (6283)

https://truckmanualshub.com/

Model				M5-091		M5-111	
				2WD	4WD	2WD	4WD
Traveling system	Standard tire size	Front tires		7.5-18	11.2-24	7.5-18	12.4-24
		Rear tires *2		16.9-30	16.9-30	18.4-30	18.4-30
	Clutch			Multiple wet disc			
	Steering			Hydraulic Power Steering			
	Braking system			Hydraulically operated wet disk			
	Differential			Bevel gears with differential lock (Rear)			
Hydraulic unit	Hydraulic control system			Position, draft (top link sensing) & mix control			
	Pump capacity		L (U.S.gals.) / min	59.4 (15.7)			
	3-point hitch			Category 2			
	Max. lifting force	At lifting points *3	kg (lbs.)	3200 (7055), 3900 (8600) with Hydraulic High Capacity Lift Cylinders (F12/R12 model: standard, F8/R8 model: option)			
		24 in. behind lifting point *3	kg (lbs.)	2100 (4630), 3300 (7275) with Hydraulic High Capacity Lift Cylinders (F12/R12 model: standard, F8/R8 model: option)			
	Remote hydraulic control			1 standard (2nd, 3rd & flow control valve optional)			
	System pressure		MPa (kgf/cm^2)	20.2 (206)			
	Traction system			Swinging drawbar, adjustable in direction			
PTO	Live PTO (Independent)	Direction of turning		Clockwise, viewed from tractor rear			
		PTO/ Engine speed	rpm	F8/R8 model: 6 spline: 540 / 2205 F12/R12model: 6 spline: 540 / 2035 540E / 1519			

The company reserves the right to change the specifications without notice.

NOTE: *1 Manufacturer's estimate
*2 Cast iron disks available for wheels.
*3 At lower link end with links horizontal.

https://truckmanualshub.com/

TRAVELING SPEEDS

(At rated engine rpm)

Model			M5-091, M5-111			
			F8 / R8 model		F12 / R12 model	
Tire size (Rear)			18.4-30			
Shuttle shift lever	Range gear shift lever	Main gear shift lever	km/h	mph	km/h	mph
Forward	CREEP (option)	1	0.35	0.22	0.36	0.23
		2	0.54	0.34	0.49	0.31
		3	0.78	0.49	0.64	0.40
		4	1.11	0.69	0.82	0.51
		5	---	---	1.01	0.63
		6	---	---	1.45	0.91
	L	1	2.5	1.5	2.5	1.5
		2	3.7	2.3	3.4	2.1
		3	5.4	3.4	4.3	2.7
		4	7.7	4.8	5.6	3.5
		5	---	---	6.9	4.3
		6	---	---	9.9	6.2
	H	1	9.5	5.9	10.8	6.8
		2	14.4	9.0	14.8	9.3
		3	20.7	13.0	19.1	11.9
		4	29.7	18.6	24.7	15.4
		5	---	---	30.5	19.0
		6	---	---	37.8	23.6
Reverse	CREEP (option)	1	0.35	0.22	0.36	0.22
		2	0.53	0.33	0.49	0.31
		3	0.77	0.48	0.63	0.40
		4	1.10	0.69	0.82	0.51
		5	---	---	1.01	0.63
		6	---	---	1.44	0.90
	L	1	2.4	1.5	2.4	1.5
		2	3.7	2.3	3.3	2.1
		3	5.3	3.3	4.3	2.7
		4	7.7	4.8	5.6	3.5
		5	---	---	6.9	4.3
		6	---	---	9.8	6.1
	H	1	9.4	5.9	10.8	6.7
		2	14.3	8.9	14.7	9.2
		3	20.6	12.9	19.0	11.9
		4	29.5	18.4	24.5	15.3
		5	---	---	30.3	18.9
		6	---	---	37.6	23.5

The company reserves the right to change the specifications without notice

https://truckmanualshub.com/

IMPLEMENT LIMITATIONS

The KUBOTA Tractor has been thoroughly tested for proper performance with implements sold or approved by KUBOTA. Use with implements which are not sold or approved by KUBOTA and which exceed the maximum specifications listed below, or which are otherwise unfit for use with the KUBOTA Tractor may result in malfunctions or failures of the tractor, damage to other property and injury to the operator or others. [Any malfunctions or failures of the tractor resulting from use with improper implements are not covered by the warranty.]

	Tread (max. width)			Lower link end max. lifting capacity: W 0
	Front		Rear	
	2WD	4WD		
M5-091 M5-111	2040 mm (80.3 in.)	1620 mm (63.8 in.)	1920 mm (75.6 in.)	Hydraulic high capacity lift cylinder equipped: 3900 kg (8600 lbs.) non-equipped: 3200 kg (7055 lbs.)

	Implement weight: W 1	Max. drawbar Load: W 2	Trailer loading weight: W 3	
			2WD	4WD
M5-091 M5-111	As in the following list (Shown on the next page)	1500 kg (3300 lbs.)	6000 kg (13200 lbs.)	7000 kg (15400 lbs.)

Lower link end max, hydraulic lifting capacity.....W 0
Implement weight.....The implement's weight which can be put on the lower link: W 1
Max. drawbar load.....W 2
Trailer loading weight.....The max. loading weight for trailer: W 3

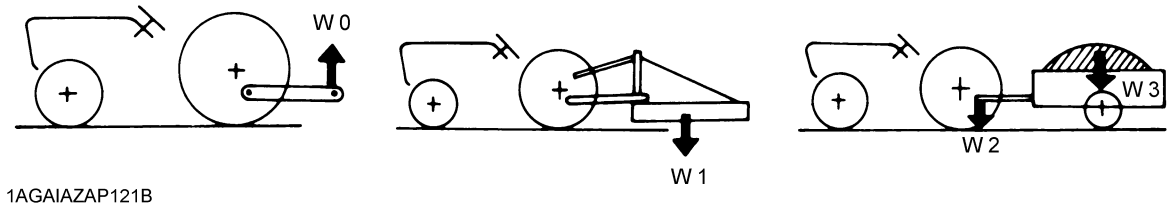

NOTE :

- Implement size may vary depending on soil operating conditions.
- Strictly follow the instructions outlined in the operator's manual of the mounted or trailed machinery or trailer, and do not operate the combination tractor - machine or tractor - trailer unless all instructions have been followed
- Forestry Application
  Following hazards exist;
  (a) toppling trees, primarily in case a rear-mounted tree grab-crane is mounted at the rear of the tractor;
  (b) penetrating objects in the operator's enclosure, primarily in case a winch is mounted at the rear of the tractor.
  Optional equipments such as OPS (Operator Protective Structure), FOPS (Falling Object Protective Structure), etc. to deal with these hazards and other related hazards are not available for this tractor. Without such optional equipment use is limited to tractor specific applications like transport and stationary work.

https://truckmanualshub.com/

No.	Implement		Remarks			M5-091		M5-111	
						2WD	4WD	2WD	4WD
1	Slurry Tank		Max. Tank Capacity		L (gals.)	4000 (1060)			
			Max. Load Capacity		kg (lbs.)	5000 (11000)			
2	Trailer		Max. Load Capacity		kg (lbs.)	5000 (11000)	6000 (13200)	5000 (11000)	6000 (13200)
			Max. Drawbar Load		kg (lbs.)	1500 (3300)			
3	Mower	Rotary-Cutter	Max. Cutting Width		mm (in.)	2800 (110)			
			Max. Weight		kg (lbs.)	600 (1320)			
		Flail Mower (Heavy)	Max. Cutting Width		mm (in.)	3660 (144)			
			Max. Weight		kg (lbs.)	1000 (2200)			
		Sickle Bar	Max. Cutting Width		mm (in.)	2743 (108)			
4	Sprayer		Max.Tank Capacity	Mid	L (gals.)	800 (200)		1000 (260)	
				Rear 3P	L (gals.)	800 (200)		1000 (260)	
				Drawbar	L (gals.)	4000 (1030)	4500 (1200)		5000 (1320)
5	Rotary Tiller		Max. Tilling Width		mm (in.)	2400 (96)			
			Max. Weight		kg (lbs.)	1000 (2200)			
6	Bottom Plow		Max. Size			16 in. x 3 18 in. x 2	16 in. x 4 18 in. x 3 24 in. x 1	16 in. x 4 18 in. x 3	14 in. x 5 16 in. x 4 20 in. x 3 24 in. x 1
			Max. Weight		kg (lbs.) 3P Type	650 (1400)	750 (1650)	900 (2000)	
7	Disk harrow	3P Type	Max. Size			20 in. x 24	24 in. x 24	24 in. x 24	24 in. x 28
			Max. Harrowing Width		mm (in.)	2450 (96)	2850 (112)		3300 (130)
			Max. Weight		kg (lbs.)	650 (1400)	750 (1650)	900 (2000)	
		Drawbar Type	Max. Harrowing Width		mm (in.)	3050 (120)	3660 (144)		4300 (168)
8	Disc Plow		Max. Size			26 in. x 3 28 in. x 8	26 in. x 4 28 in. x 4	26 in. x 4 28 in. x 4	
			Max. Weight		kg (lbs.)	650 (1400)	750 (1650)	900 (2000)	
9	Sub Soiler		Numbers of Cultivating Tines			2			
			Cultivating Depth		mm (in.)	450 (18)	500 (20)		550 (22)
10	Cultivator		Max. Width		mm (in.)	4270 (168)	4880 (192)		5490 (216)
			Number of Rows			6			
			Max. Weight		kg (lbs.)	650 (1400)	750 (1650)	900 (2000)	
11	Front Blade *1, *2		Max. Cutting Width		mm (in.)	2130 (84)	2430 (96)		2600 (102)
			Max. Oil Pressure		MPa (psi.)	19.6 (2842)			
12	Rear Blade		Max. Cutting Width		mm (in.)	2130 (84)	2430 (96)		2600 (102)
			Max. Oil Pressure		MPa (psi.)	19.6 (2842)			
13	Front Loader *1, *2		Max. Lifting Capacity (Bucket Pivot Pin, Max. Height)		kg (lbs.)	1880 (4145) *3			
			Max. Oil Pressure (Extra Hydro Kit)		MPa (psi.)	20.5 (2973)			
14	Box Blade		Max. Cutting Width		mm (in.)	2130 (84)	2430 (96)	2130 (84)	2430 (96)
			Max. Weight		kg (lbs.)	650 (1400)	750 (1650)	800 (1760)	
15	Back Hoe *2		Max. Digging Depth		mm (in.)	3050 (120)			
			Max. Weight		kg (lbs.)	1200 (2650)			
16	Snow Blade		Max. Width		mm (in.)	2130 (84)	2430 (96)		2600 (102)
			Max. Weight		kg (lbs.)	650 (1400)	750 (1650)	800 (1760)	

NOTE :

- Implement size may vary depending on soil operating conditions.

*1 Must remove front weight with this implement.

*2 Need subframe

*3 The value contains the weight of KUBOTA standard bucket.

https://truckmanualshub.com/

INSTRUMENT PANEL AND CONTROLS

■ Instrument Panel, Switches and Hand Controls

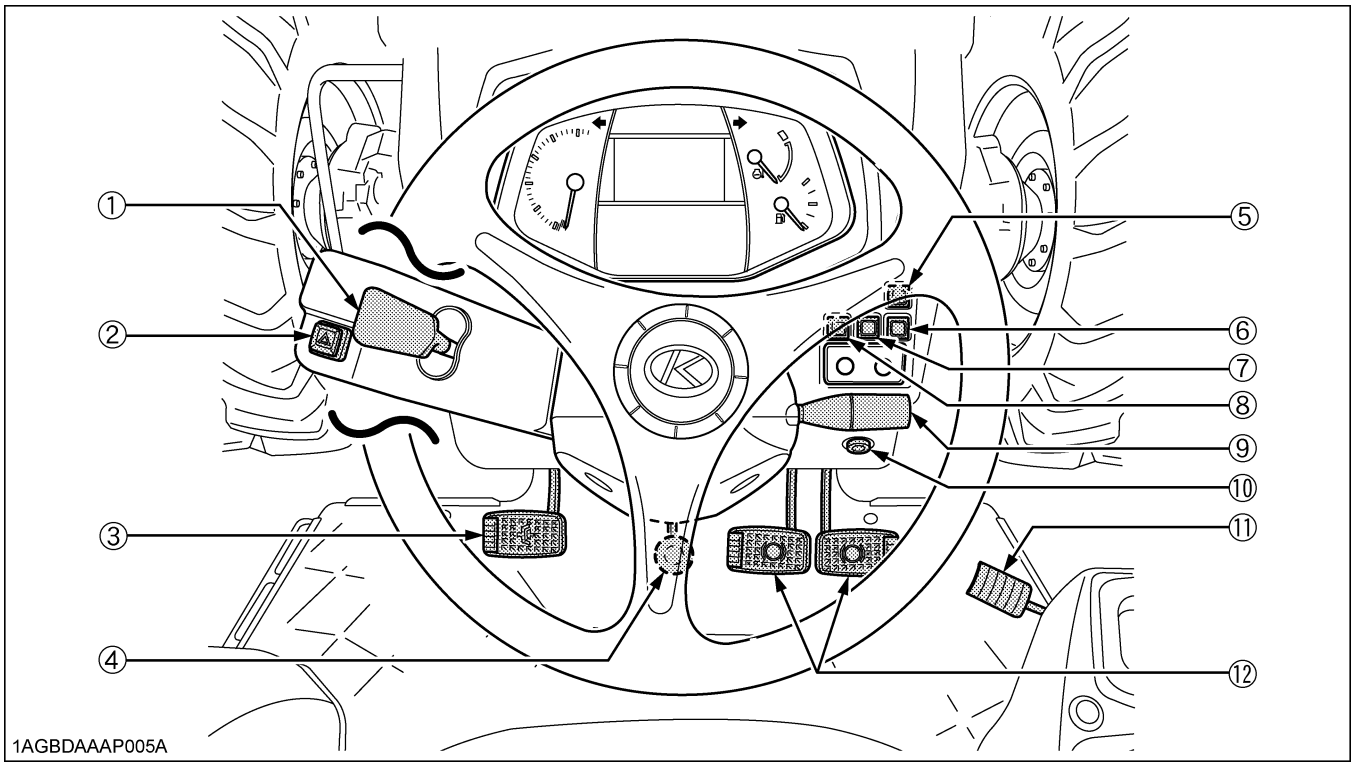

ILLUSTRATED CONTENTS

(1) Hydraulic-shuttle shift lever 39
(2) Hazard light switch 35
(3) Clutch pedal 37
(4) Tilt pedal 34
(5) Front work light switch 36
(6) Constant RPM management switch 53
(7) DPF INHIBIT switch 16
(8) Parked regeneration switch 18
(9) Turn signal/Headlight switch 35
(10) Key switch ..... -
(11) Foot throttle 41
(12) Brake pedal 36

https://truckmanualshub.com/

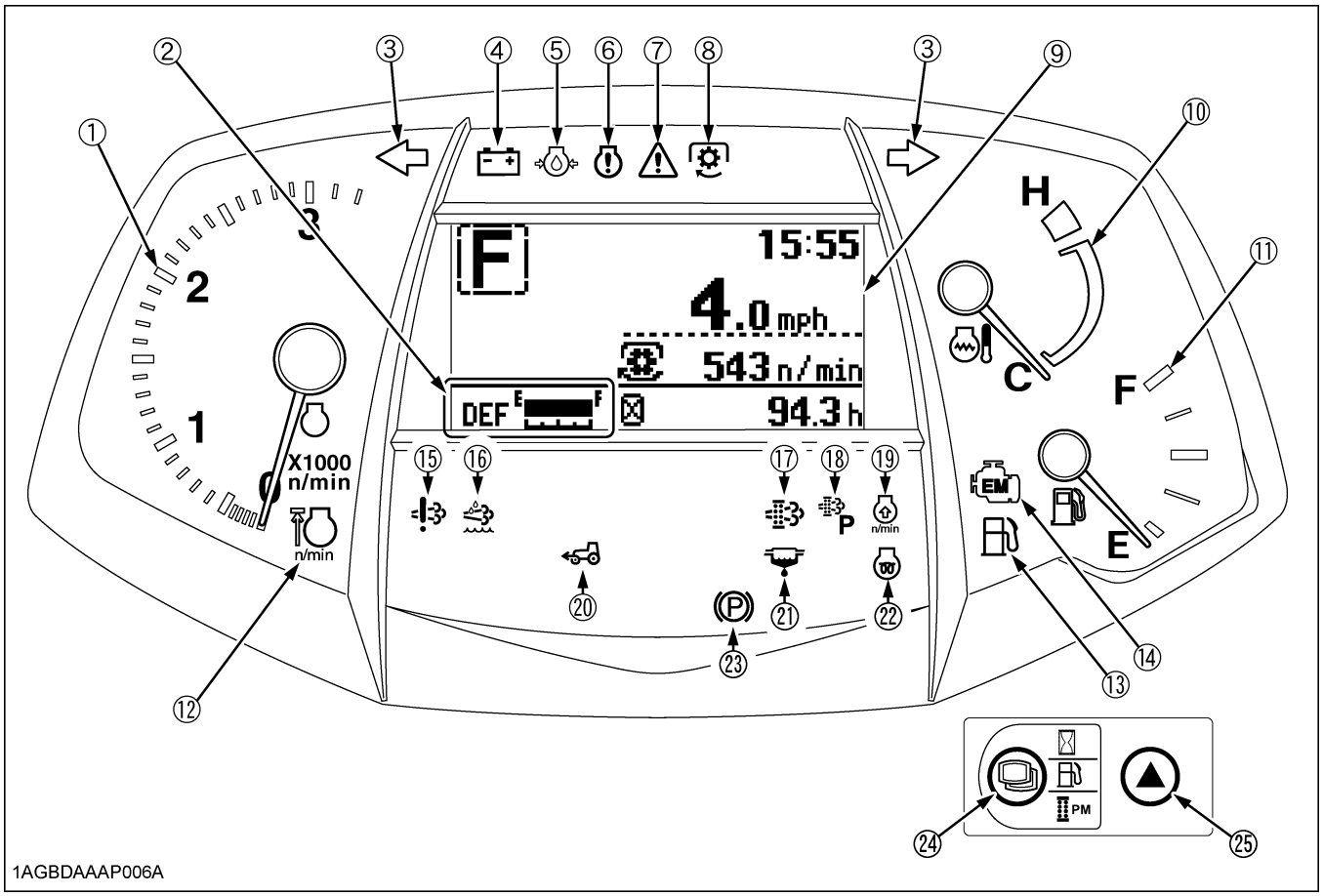

ILLUSTRATED CONTENTS

(1) Tachometer 44
(2) DEF/AdBlue® gauge 43
(3) Hazard/Turn signal indicator 35
(4) Electrical charge warning indicator 41
(5) Engine oil pressure warning indicator 41
(6) Engine warning indicator 41
(7) Master system warning indicator 41
(8) PTO clutch indicator 57
(9) Liquid crystal display..... 45
(10) Coolant temperature gauge 44
(11) Fuel gauge 43
(12) Rev-limiter indicator 38

ILLUSTRATED CONTENTS

(13) Fuel level indicator 41
(14) Emission indicator 41
(15) DEF/AdBlue® system warning indicator 41
(16) DEF/AdBlue® warning indicator 41
(17) Regeneration indicator 14
(18) Parked regeneration indicator 18
(19) Engine RPM increase indicator 14
(20) 4WD indicator 40
(21) Water separator indicator 41
(22) Heater indicator 29
(23) Parking brake warning indicator 26
(24) Mode selector switch 46
(25) Select switch 46

https://truckmanualshub.com/

■ Foot and Hand Controls

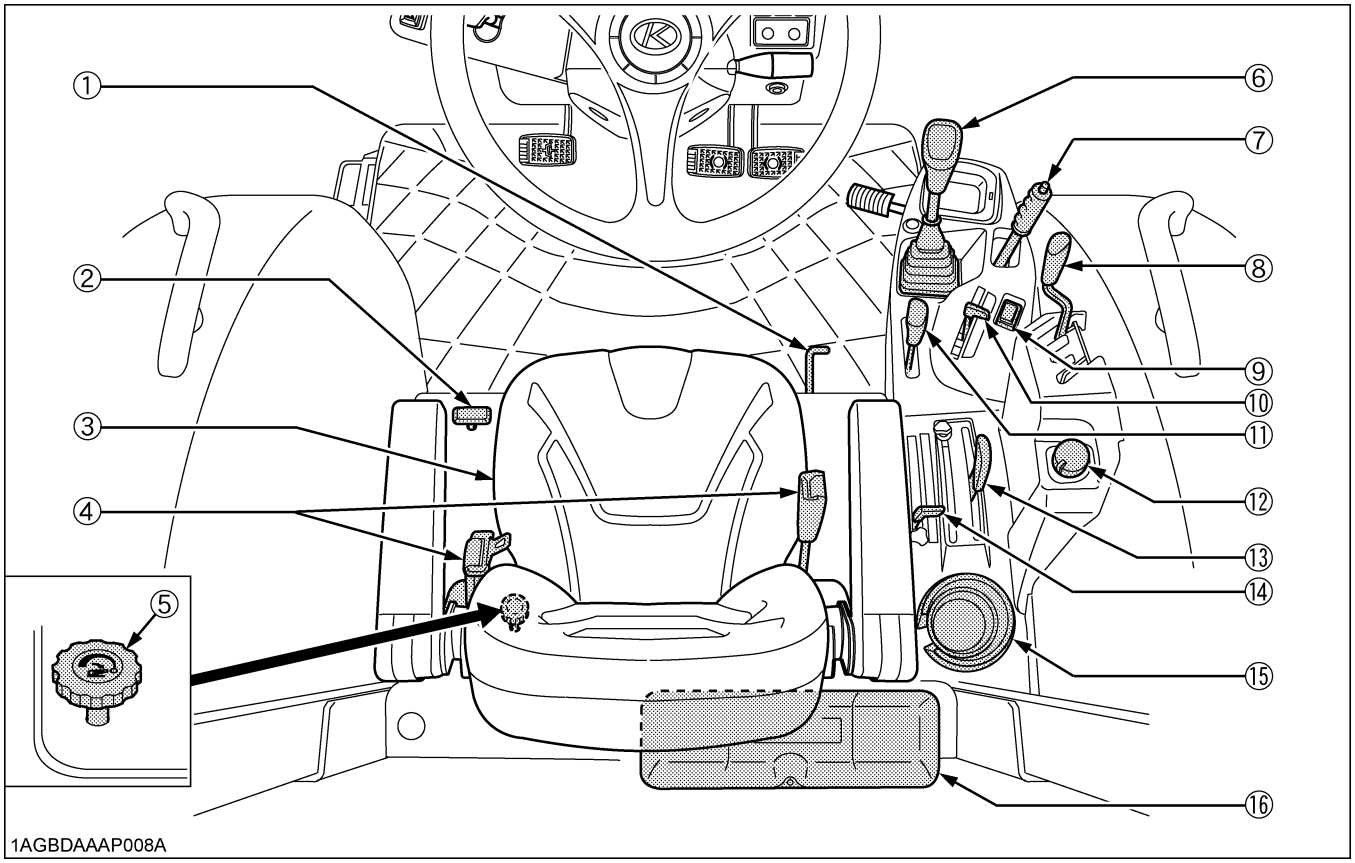

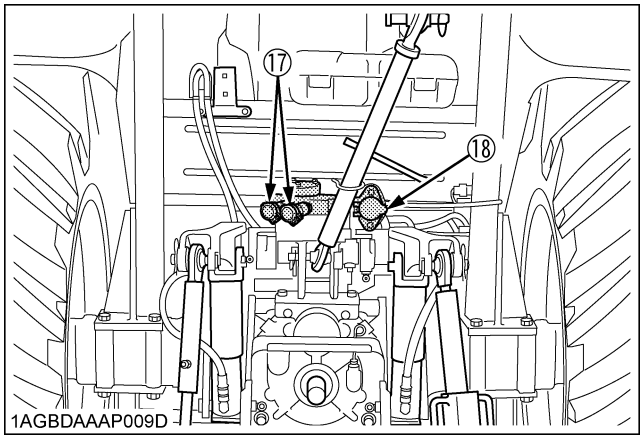

ILLUSTRATED CONTENTS

(1) Differential lock pedal *54*
(2) Front wheel drive lever *40*
(3) Operator's seat *33*
(4) Seat belt *34*
(5) 3-Point hitch lowering speed knob *67*
(6) Main gear shift lever *39*
(7) Parking brake lever *26, 53*
(8) Remote control valve lever *68*
(9) RPM dual memory switch *51*
(10) Hand throttle lever *41*
(11) Range gear shift lever *39*
(12) PTO clutch control switch *57*
(13) Position control lever *66*
(14) Draft control lever *66*
(15) Cup holder ..... *-*
(16) Tool box ..... *-*
(17) Remote control valve coupler *67*
(18) Trailer electrical outlet *55*

https://truckmanualshub.com/

PRE-OPERATION CHECK

DAILY CHECK

To prevent trouble from occurring, it is important to know the condition of the tractor well. Check it before starting.

WARNING

To avoid personal injury or death:

- **Be sure to check and service the tractor on a level surface with the engine shut off and the parking brake "ON" and implement lowered to the ground.**

Check item

- Walk around inspection
- Check engine oil level
- Check transmission oil level
- Check coolant level
- Check water separator
- Clean grill and radiator screen
- Clean intercooler
- Clean oil cooler
- Clean fuel cooler
- Check DPF/SCR muffler
- Check air cleaner evacuator valve
  (When used in a dusty place)
- Check air cleaner dust indicator
  (When used in a dusty place)
- Check brake pedal
- Check indicators, gauges and meter
- Check lights
- Check seat belt and ROPS
- Check movable parts
- Supply DEF/AdBlue®
- Refuel
  (See "DAILY CHECK" in "PERIODIC SERVICE" section.)
- Care of danger, warning and caution labels
  (See "DANGER, WARNING AND CAUTION LABELS" in "SAFE OPERATION" section.)

https://truckmanualshub.com/

OPERATING THE ENGINE

WARNING

To avoid personal injury or death:

- **Read and understand "Safe Operation" in the front of this manual.**
- **Read and understand the danger, warning and caution labels located on the tractor.**
- **To avoid the danger of exhaust fume poisoning, do not operate the engine in a closed building without proper ventilation.**
- **Never start engine while standing on ground. Start engine only from operator's seat.**
- **Make it a rule to set all shift levers to the "NEUTRAL" positions and to place PTO clutch control switch in "OFF" position before starting the engine.**

IMPORTANT :

- Do not use starting fluid or ether.
- To protect the battery and the starter, make sure that the starter is not continuously turned for more than 10 seconds.

EXHAUST AFTERTREATMENT DEVICES

WARNING

To avoid personal injury or death:

- **During Diesel Particulate Filter (DPF) regenerating operations, exhaust gases and exhaust filter components reach temperatures hot enough to burn people, or ignite or melt common materials.**
- **Keep tractor away from people, animals or structures which may be susceptible to harm or damage from hot exhaust gases.**
- **During regeneration, white exhaust gases may be visible. Do not allow regeneration in a non ventilated garage or confined area.**
- **During regeneration, do not leave the tractor.**

■Dual Exhaust Aftertreatment Devices

Particulate matter (PM) and black smoke contained in exhaust gases are trapped and removed by the DPF (Diesel Particulate Filter) muffler.

The SCR system then decomposes residual nitrogen oxides (NOx) into harmless nitrogen (N2) and water (H2O) for purification.

This dual exhaust gas purifying device provides for clean exhaust gas at low fuel consumption.

https://truckmanualshub.com/

DIESEL PARTICULATE FILTER (DPF) MUFFLER

This tractor is equipped with an engine with a DPF (Diesel Particulate Filter) muffler which serves to reduce hydrocarbons, carbon monoxide and other gases, all of which are contained in diesel engine emissions, to harmless carbon dioxide and water. The DPF also traps PM (particulate matter).
Please handle exhaust aftertreatment devices correctly and in an environmentally responsible manner.

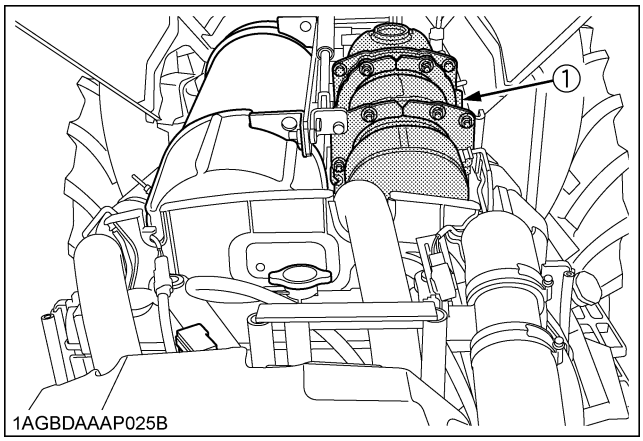

(1) Diesel Particulate Filter (DPF)

■Handling Points

When a specific amount of PM (particulate matter) has accumulated in the DPF muffler, it is necessary to refresh the DPF muffler by burning the PM inside it. This burning off work is called "Regeneration".
To extend operating time to reach this regeneration, and to avoid DPF muffler trouble, make sure to observe the following handling matters.

◆ **Fuel**
Be sure to use Ultra Low Sulfur Fuel (S15).

IMPORTANT :
- Use of diesel fuel other than Ultra Low Sulfur Fuel may adversely affect the engine and DPF performance.
  Use of fuels other than Ultra Low Sulfur Fuel (S15) may not meet regulations for your region.

◆ **Engine oil**
Use DPF-compatible oil (CJ-4) for the engine.

IMPORTANT :
- If any engine oil other than CJ-4 is used, the DPF may become clogged earlier than expected and the fuel economy may drop.

◆ **Prohibition of unnecessary idling operation**
Generally, the lower the engine speed, the lower the exhaust gas temperature is, so the PM contained in exhaust gas will not be burnt, and begins to accumulate. Therefore, don't idle unnecessarily.

◆ **Regeneration**
When there is "Regeneration" instruction sign by lamp or buzzer, immediately perform the required procedure for regeneration.

IMPORTANT :
- Interrupting the regeneration cycle or continued operation by ignoring the warning signs may cause DPF and engine damage.

■DPF Regeneration Process

DPF regeneration process can be performed by choosing from "Auto Regeneration" or "Regeneration inhibit" mode according to your job conditions. For jobs not affected by hot gases emitted during regeneration, the "Auto Regeneration" is advisable.

◆ **Auto Regeneration Mode;**
When starting the engine (switch operation is unnecessary), the "Auto Regeneration" mode is automatically activated.
With the auto regeneration mode on, when a specific amount of PM has accumulated, and the regeneration conditions are satisfied (See the "Tips on Diesel Particulate Filter [DPF] Regeneration"), the DPF will be automatically regenerated whether the tractor is in motion or parked.
By this way, work efficiency is improved. For details of auto regeneration, refer to "Operating Procedure for Auto Regeneration Mode" section.

◆ **Regeneration Inhibit Mode;**
After starting the engine, if the "DPF INHIBIT switch" is pressed to turn on the switch lamp, the "Regeneration inhibit" mode will be activated.
With "Regeneration Inhibit" mode on, the PM which has accumulated inside the DPF will not be burnt, unless the operator performs the regeneration work manually.
The "Regeneration Inhibit" mode is effective for work in poorly ventilated work spaces.
For details of regeneration prohibition, refer to "Operating Procedure for Regeneration Inhibit Mode" section.

NOTE :
- If stop the engine once, the "Auto Regeneration" mode will be activated.

https://truckmanualshub.com/

■Operating Procedure for Auto Regeneration Mode

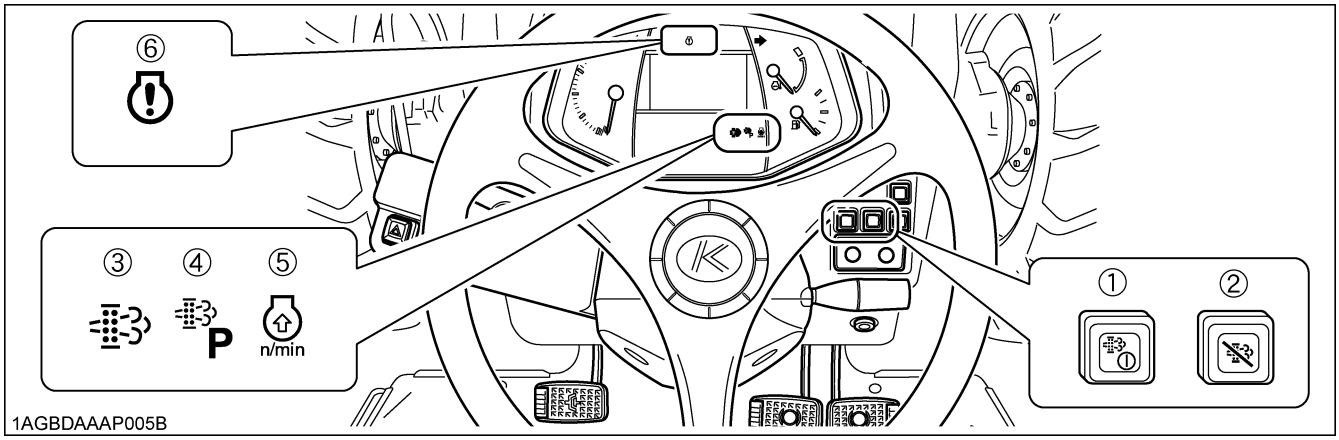

(1) Parked regeneration switch
(2) DPF INHIBIT switch
(3) Regeneration indicator
(4) Parked regeneration indicator
(5) Engine RPM increase indicator
(6) Engine warning indicator

◆ Regeneration Operating Procedure

1. Start the engine.
(Make sure that the DPF INHIBIT switch lamp is "OFF".)

Switch lamp OFF: Auto Regeneration Mode activated.
Switch lamp ON: Regeneration Inhibit Mode activated.

NOTE :
- When the engine is started, the "Auto Regeneration" mode is automatically activated.
- "Regeneration Inhibit" mode is activated, when the DPF INHIBIT switch is pushed after the engine is started.

2. When the regeneration indicator starts flashing:

A specific amount of PM has built up in the DPF.
Continue to operate the tractor, and the regeneration process will begin automatically, make sure the working place is in a safe area as DPF and exhaust temperature will rise.

3. When the engine rpm increase indicator starts flashing:

Keep on working and increase the engine rpm until the indicator turns "OFF".

NOTE :
- Even if the Auto Regeneration Mode is selected, DPF regeneration may not begin because system requirements have not been satisfied.
- The engine rpm increase indicator is used as a guide to satisfy the regeneration conditions. If the engine load is too heavy, the engine rpm increase indicator may continue to flash, even though regeneration system conditions are satisfied and regeneration may begin automatically. (See the "Tips on Diesel Particulate Filter [DPF] Regeneration")

https://truckmanualshub.com/

◆ PM Warning Level and Required Procedures

During Auto Regeneration Mode when the PM level has built up in the DPF, the regeneration cycle will begin automatically. If the regeneration cycle is interrupted or the regeneration conditions are not satisfied, the buzzer starts sounding and the indicator display changes in response to the PM level in order to prompt the operator to perform the required procedure listed below.

IMPORTANT :

- Once the regeneration level has been reached, immediately perform the required procedure for regeneration. Interrupting the regeneration cycle or continued operation by ignoring the warning signs may cause DPF and engine damage.

Auto Mode		
DPF system status		Required procedure
PM warning level: **1** Buzzer: Not sounding	The regeneration indicator starts flashing.	A specific amount of PM has accumulated in the DPF muffler. Continue to work the tractor to raise the DPF temperature.
	The RPM increase indicator starts flashing.	Continue the work and increase the engine rpm until the indicator turns "OFF".
	The regeneration indicator will stop flashing and remain "ON" constantly.	The regeneration cycle begins and continues until cycle is complete then the indicator will turn "OFF".
PM warning level: **2-1** Buzzer: Sounding every 5 seconds	If the regeneration cycle was interrupted or conditions are not satisfied for regeneration then DPF system is now in Level 2.	
	The regeneration indicator starts flashing.	Start the regeneration, referring to PM warning level: 1 above. Now the parked regeneration indicator starts flashing, and the parked regeneration can also be started. If the regeneration conditions are not met, perform the parked regeneration. ● For the procedure, refer to "Operating Procedure for Parked Regeneration".
PM warning level: **2-2** Buzzer: Sounding every 3 seconds	The RPM increase indicator starts flashing.	
	The parked regeneration indicator starts flashing.	
PM warning level: **3** Buzzer: Sounding every 1 second Engine output: 50%	If the regeneration fails in the warning level 2:	
	The engine warning indicator starts flashing.	Immediately discontinue working the tractor and begin the parked regeneration cycle process. ● For the procedure, refer to "Operating Procedure for Parked Regeneration". At this PM warning level, the Auto Regeneration Mode does not function. If the tractor is operated further, the regeneration cycle will be disabled.
	The parked regeneration indicator starts flashing.	
PM warning level: **4** Buzzer: Sounding every 1 second Engine output: 50%	If the parked regeneration is interrupted or the tractor is continuously operated in the warning level 3:	
	The engine warning indicator remains constantly "ON".	Immediately move the tractor to a safe place and park it there and turn the engine "OFF". Contact your local KUBOTA Dealer. ● At this level, never continue to operate the tractor otherwise damage will result to the DPF and engine.

https://truckmanualshub.com/

■Operating Procedure for Regeneration Inhibit Mode

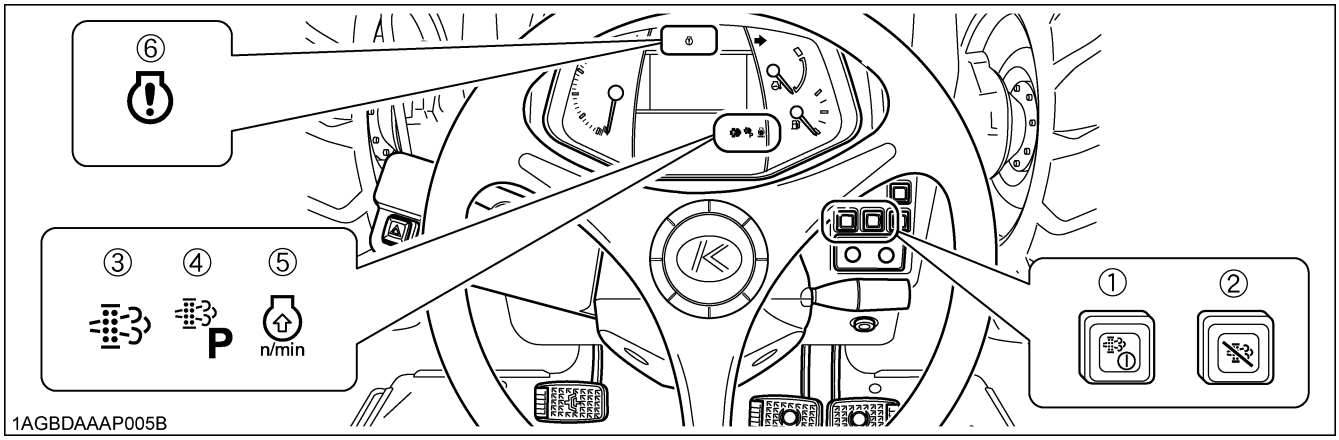

(1) Parked regeneration switch
(2) DPF INHIBIT switch
(3) Regeneration indicator
(4) Parked regeneration indicator
(5) Engine RPM increase indicator
(6) Engine warning indicator

◆ Regeneration Operating Procedure

1. Start the engine.

2. Press the DPF INHIBIT switch , and the switch lamp illuminates.

Switch lamp ON: Regeneration Inhibit Mode selected.
Switch lamp OFF: Auto Regeneration Mode selected.

3. When the parked regeneration indicator P starts flashing:

A specific amount of PM has accumulated in the DPF muffler.
Move the tractor to a safe place and activates the DPF muffler. Follow the "Operating Procedure for Parked Regeneration" procedure.

https://truckmanualshub.com/

◆ PM Warning Level and Required Procedures

In the Regeneration Inhibit Mode, the buzzer starts sounding and the indicator display changes in response to the PM level in order to prompt the operator to perform the required procedure listed below.

IMPORTANT :

- Once the regeneration level has been reached, immediately perform the required procedure for regeneration. Interrupting the regeneration cycle or continued operation by ignoring the warning signs may cause DPF and engine damage.

Regeneration Inhibit Mode		
DPF system status		Required procedure
PM warning level: **1** Buzzer: Not sounding	The regeneration indicator starts flashing.	A specific level of PM has built up in the DPF muffler. Continue with the operation as it is.
	At PM warning levels range from 1 to 2-2, it is also possible to change DPF INHIBIT switch to auto regeneration mode then perform regeneration.	
PM warning level: **2-1** Buzzer: Sounding every 5 seconds	The regeneration indicator starts flashing.	Move the tractor to a safe area, then follow the "Operating Procedure for Parked Regeneration".
PM warning level: **2-2** Buzzer: Sounding every 3 seconds	The Parked regeneration indicator starts flashing.	
PM warning level: **3** Buzzer: Sounding every 1 second Engine output: 50%	If the parked regeneration cycle is interrupted or the tractor is continuously operated in the PM warning level 2:	
	The engine warning indicator starts flashing. The parked regeneration indicator starts flashing	Immediately stop working the tractor, move the tractor to a safe area, then follow the "Operating Procedure for Parked Regeneration". If the tractor is operated further and the operator ignores the warning signs, then regeneration will be disabled.
PM warning level: **4** Buzzer: Sounding every 1 second Engine output: 50%	If the regeneration cycle is interrupted or the tractor is continuously operated ignoring the warning signs, in the PM warning level 3:	
	The engine warning indicator remains constantly "ON".	Immediately move the tractor to a safe place and place in park, turn "OFF" engine. Contact your local KUBOTA Dealer. ● At this level never continue to operate the tractor, otherwise damage may result to the DPF and engine.

https://truckmanualshub.com/

■Operating Procedure for Parked Regeneration

1. Park the tractor in a safe area away from buildings, people, and animals.
2. Apply the parking brake.
3. Set the shuttle shift lever to the neutral position.
4. Turn "OFF" the PTO clutch control switch.
5. Return the engine rpm to the idle speed.
6. Lower the implement to the ground.
7. Press the DPF INHIBIT switch , and the switch lamp turns "OFF".
8. When the regeneration conditions are satisfied (2 to 5 and 7 mentioned above),
   the parked regeneration switch lamp start flashing.
9. Press the parked regeneration switch to start the regeneration cycle.
   (The switch lamp will stop flashing and remain "ON" constantly during the cycle.)
10. The engine rpm will automatically rise, and the regeneration process will begin.
11. Both indicators stay "ON" while regenerating the DPF.
    They turn "OFF" when the cycle is complete.
12. After the lamp turns "OFF", normal tractor work may resume.
    When driving in "Regeneration Inhibit" mode, press the DPF INHIBIT switch to turn on the switch lamp.

https://truckmanualshub.com/

NOTE :

- During the regeneration cycle, do not touch the above levers, and switches (in steps 2, 3, 4), nor change the engine rpm other than an emergency stop. Otherwise, the regeneration will be interrupted.
- Never leave the tractor when parked regeneration process is activated.
- If the parked regeneration cycle is interrupted, the engine rpm is fixed at the idling level for about 30 seconds. For this period, keep the hand throttle lever and foot throttle pedal at the idle position. Do not move them. They will function again in 30 seconds.
- If one of the following conditions applies to the tractor, the Parked Regeneration will not function.
  (See "Warning Indication and its Countermeasure" in "SELECTIVE CATALYTIC REDUCTION (SCR) MUFFLER" in "OPERATING THE ENGINE" section.)

  (1) DEF/AdBlue® warning indicator lights up and "Lv.1" or "Lv.2" is being displayed on the LCD.

  (Limited Engine Output)

  (2) DEF/AdBlue® system warning indicator lights up and the DTC are being displayed on the LCD.

  (3) Freeze icon of DEF/AdBlue® or Limited Engine Output is displayed on the LCD.

- DTC (Diagnostic Trouble Code)
  DTC can be used to diagnose the problem in engine and SCR muffler.
  (e.g. P208B: The code beginning with the letter "P" or "U" is the DTC)

https://truckmanualshub.com/

■Tips on Diesel Particulate Filter (DPF) Regeneration

- **Operation**
  The higher in speed or load the engine operates, the higher the exhaust temperature rises. As a result, particulate matter (PM) inside the DPF is consumed, therefore the regeneration process is required less frequently over time.
  The lower in speed or load the engine operates, the lower the exhaust temperature. Accordingly, less particulate matter (PM) inside the DPF is consumed, therefore more accumulation of PM will occur, which requires frequent regeneration, therefore avoid prolonged idling if possible.

- **Necessary conditions for "Regeneration"**
  When conditions below are all satisfied, regeneration will start. However, if even one condition is deviated during the process, the regeneration will be interrupted.
  (1) The engine coolant temperature.
  (2) The DPF temperature.
  (3) The engine speed is 1200 rpm or higher.

- Usually it takes 15-20 minutes to complete the regeneration cycle.
  Actual regeneration time may depend on ambient temperature, exhaust temperature and engine speed.

- It is recommended to do the regenerating while the engine is warm.

- Do not unnecessarily start and interrupt the regeneration process. Otherwise, a small amount of fuel becomes mixed with the engine oil, which degrades the oil quality.

- While the DPF is being regenerated, the engine air flow rate is automatically limited to keep up the exhaust temperature. Because of this the engine may sound differently, this is normal for this engine.

- Just after the regeneration has ended, the DPF muffler remains hot. It is advisable to keep the engine running for about 5 minutes to allow cooling of the exhaust components.

SELECTIVE CATALYTIC REDUCTION (SCR) MUFFLER

■Outline of the SCR

The injector jets urea aqueous solution (DEF/AdBlue®) into the muffler, and the solution is hydrolyzed with the heat of exhaust gas to generate ammonia (NH3).
The ammonia generated thus is mixed with exhaust gas by the SCR muffler. In this way, nitrogen oxides (NOx) contained in exhaust gases are reduced by ammonia and decomposed into nitrogen and water vapor.

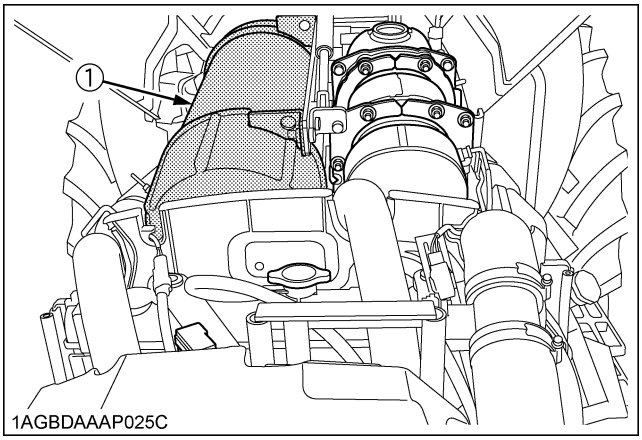

(1) SCR muffler

https://truckmanualshub.com/

■DEF/AdBlue®

CAUTION

To avoid personal injury:

- **The urea aqueous solution (DEF/AdBlue®) is colorless, odorless and harmless.**
  If the solution gets on your skin, immediately wash it away with water.

The DEF/AdBlue®, used as reducing agent of SCR, is a 32.5% urea aqueous solution.
No qualification for handling the urea aqueous solution is needed. As well, the solution is not designated as a hazardous material.
The product is available at gas stations, truck stops and specialty shops. Be sure to use the genuine product only. Do not use any poor-quality products, or the engine may have trouble and be damaged.

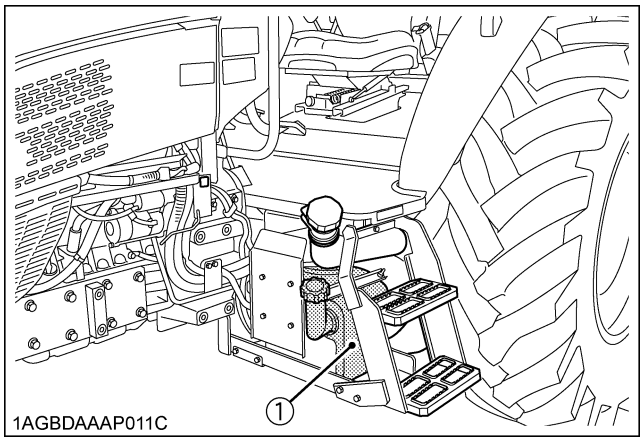

(1) DEF/AdBlue® tank (Blue cap)

NOTE :

- On the North American market, the high-grade NOx reducing agent called urea aqueous solution is sold in the name of DEF (Diesel Exhaust Fluid). On the European and Japanese markets, it is on sale under the trade name of AdBlue®.

■Warning Indication and its Countermeasure

Before starting the day's job, check the fluid level with the DEF/AdBlue® gauge on the instrument panel.
If the fluid runs short during operation, the warning indicator lights up. If you continue running the machine as it is, the engine output will be limited by 50% or so. If running is continued, the engine will be limited to idling.
For details, look at the table below.
These limitations are stipulated in conformity with the emission controls of each country and territory.

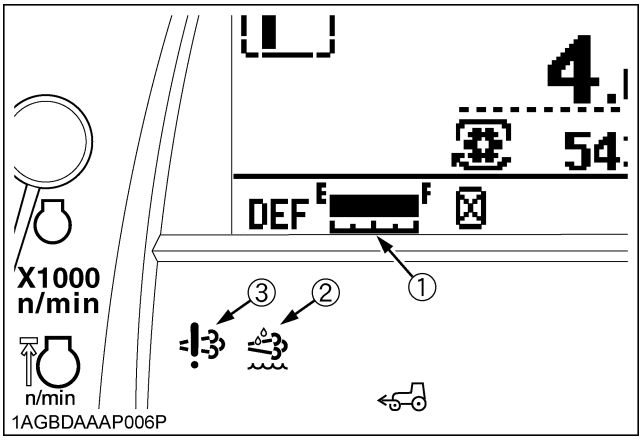

(1) DEF/AdBlue® gauge
(2) DEF/AdBlue® warning indicator
(3) DEF/AdBlue® system warning indicator

https://truckmanualshub.com/

◆ **SCR system inducement display on the LCD**

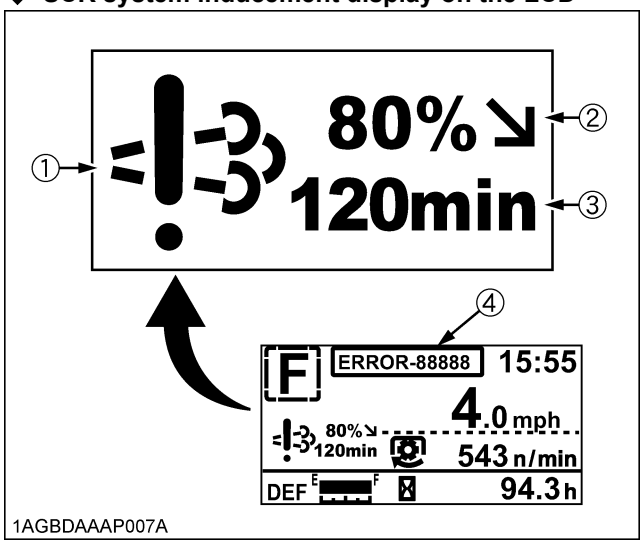

(1) SCR system icon
(2) Engine output level
(3) Time limit to next level or remaining DEF/AdBlue®
(4) Performance monitor (Error code and DTC)

◆ **SCR system icon appearing on inducement display**

	Low-level icon of DEF/ AdBlue®			Trouble icon of SCR system
	Poor-quality icon of DEF/ AdBlue®			Freeze icon of DEF/AdBlue®

◆ DTC (Diagnostic Trouble Code)
DTC can be used to diagnose the problem in engine and SCR muffler.
(e.g P208B: The code beginning with the letter "P" or "U" is the DTC)
If a DTC appears, immediately contact your local KUBOTA Dealer.

NOTE :

- When operating in cold weather, the DEF/AdBlue® is automatically thawed while the engine is running. However, in weather conditions of under -30℃ (-22℉), the DEF/AdBlue® cannot be completely thawed and thus, a DTC(P208B) appears on the instrument panel's LCD screen.
  If the DTC(P208B) appears on the screen, stop the engine and restart it after 10 seconds. After restarting the engine, the DTC(P208B) will disappear and the thawing of the DEF/AdBlue® will resume.
  In case the DTC(P208B) remains on the screen even after restarting the engine several times, contact your local KUBOTA Dealer.

https://truckmanualshub.com/

◆ **For SCR system inducement display appearing on LCD, refer to measures of the table below.**

On the SCR system, the remaining amount and quality of DEF/AdBlue® as well as machine troubles are monitored. If anything goes wrong during operation, the following warnings are issued. Follow the warning contents to take proper measures.

Displays	Warning indicator	Status	Measures	DPF Parked Regeneration
15%		1	The amount of remaining DEF/AdBlue® has decreased up to 15% of the maximum capacity. Refuel the DEF/AdBlue® tank to reset the warning system. If operation is continued without refueling, the engine output will be limited.	permit
Lv.1		2	The amount of remaining DEF/AdBlue® has decreased up to 5% of the maximum capacity. Refuel the DEF / AdBlue® tank. (*1) The engine output is limited to 50% (Lv.1: Level.1). If operation is continued without refueling, the engine output will be limited to Idle Status (Lv.2:Level.2).	inhibit
Lv.1 25min		2	The amount of remaining DEF/AdBlue® has decreased up to 5% of the maximum capacity. Refuel the DEF / AdBlue® tank. (*1) The engine output is limited to 50% (Lv.1: Level.1). If operation is continued without refueling, after 25 minutes, the engine output will be limited to Idle Status (Lv.2:Level.2).	inhibit
Lv.2		3	The amount of remaining DEF/AdBlue® has decreased up to 5% of the maximum capacity. The engine output will remain limited. Refuel the DEF / AdBlue® tank. (*1) The engine output is limited to Idle Status (Lv.2:Level.2).	inhibit
60min		1	Contains poor quality DEF/AdBlue® or other non-regulated solutions. After draining the tank, refuel with DEF/AdBlue® to reset the warning system. If operation is continued without refueling the DEF/AdBlue® tank, after 60 minutes, the engine output will be limited to 50% (Lv.1:Level.1).	permit
Lv.1 25min		2	Contains poor quality DEF/AdBlue® or other non-regulated solutions. After draining the tank, refuel with DEF/AdBlue®. (*1) The engine output is limited to 50% (Lv.1: Level.1). If operation is continued without refueling the DEF/AdBlue® tank, after 25 minutes, the engine output will be limited to Idle Status (Lv.2:Level.2).	inhibit
Lv.2		3	Contains poor quality DEF/AdBlue® or other non-regulated solutions. After draining the tank, refuel with DEF/AdBlue®. (*1) The engine output is limited to Idle Status (Lv.2:Level.2).	inhibit

*1 When DEF/AdBlue® has been added or a poor-quality solution replaced by a genuine product, the low-level warning indicator and icons go off. The engine output limitation will also be cleared.

https://truckmanualshub.com/

Displays	Warning indicator	Status	Measures	DPF Parked Regeneration
120min		1	The SCR system has experienced an abnormality. Verify the DTC displayed on the performance monitor and contact your local KUBOTA dealer. The engine output is unrestricted. After 120 minutes, the engine output will be limited to 50% (Lv.1:Level.1).	inhibit
80%↘ 120min		1	The SCR system has experienced an abnormality. Verify the DTC displayed on the performance monitor and contact your local KUBOTA dealer. The engine output is limited to 80%. After 120 minutes, the engine output will be limited to 50% (Lv.1:Level.1).	inhibit
Lv.1 25min		2	The SCR system has experienced an abnormality. Verify the DTC displayed on the performance monitor and contact your local KUBOTA dealer. The engine output is limited to 50% (Lv.1: Level.1). After 25 minutes, the engine output will be limited to Idle Status (Lv.2:Level.2).	inhibit
Lv.2		3	The SCR system has experienced an abnormality. Verify the DTC displayed on the performance monitor and contact your local KUBOTA dealer. The engine output is limited to Idle Status (Lv.2:Level.2).	inhibit
	---	---	Due to low temperatures, the DEF/AdBlue® has frozen. Continue the warm-up operation and the DEF/AdBlue® will thaw.	inhibit
80%↘	---	---	Due to low temperatures, the DEF/AdBlue® has frozen. The engine output is limited to 80%. Continue the warm-up operation and the DEF/AdBlue® will thaw.	inhibit

https://truckmanualshub.com/

NOTE :

- The limited engine output level:
  Lv.1 (Level 1): Within 50% of max torque and 60% of engine speed.
  Lv.2 (Level 2): Within engine near idling speed.
- After an error has occurred, it may be necessary for the engine output to become limited to Lv.2(Level.2).
  Depending on trouble spots and contents, the indicator-prompted warnings and the engine output limits and timings may vary accordingly.
  The SCR warning status (from 1 to 3) represents the severity order of the engine output limitation. If the SCR system experiences abnormalities, an error code will be displayed, and it may be necessary to limit the engine output to Idle Status (Lv.2:Level.2).
  (e.g. When a P204F error code is displayed, the engine output changes from unrestricted to Lv.2 limited.)
- Points after taking measures.
  After the engine has stopped and the DEF/AdBlue® has drained, if the amount that was refueled is less than the pre-drain amount, the SCR system may experience a malfunction.(P20F5 error code is displayed)
  When the error occurs, turn the key switch to OFF, wait for the SCR system to complete the purge process (this may take several minutes) and then turn the key switch to ON again in order to clear the SCR system malfunction.
- The 40 hours warning record.
  (1) Basically Warning and/or inducement reduction cancel when the fault location is repaired.
  (2) However, if it detects any fault within 40 hours of the restoration, it soon becomes back to the previous failure and the timer restarts counting down.
  (3) The 40 hours warning record will be reset if any fault has not been detected over 40 hours from the repair.
  If a fault would be detected after the 40 hours warning record reset, then the new countdown will be stated.

https://truckmanualshub.com/

■Storing and Handling DEF/AdBlue®

1. Because DEF/AdBlue® is a urea aqueous solution, it begins to freeze at ambient temperatures below –11ºC (12ºF). In winter, handle it with enough care.
2. DEF/AdBlue® may be stored in the tractor's tank for up to 4 months. If the storage area's ambient temperature rises above 30ºC (86ºF), however, its storage life will be markedly reduced.

◆ **Storage method**

1. Store the solution in a well-sealed container.
2. Place the container in a location not exposed to direct sunlight.
3. Place the container in a well-ventilated spot.
4. Keep the container in a spot without violent temperature changes.
5. Keep the container away from any containers of gasoline and diesel fuel.

STARTING THE ENGINE

1. Make sure the parking brake is set.

1. To set the parking brake;
   (1) Depress the brake pedals.
   (2) Place the main gear shift lever in neutral position.
   (3) Pull the parking brake lever to parking position.
2. To release the parking brake;
   (1) Depress the brake pedals.
   (2) Push the release button.
   (3) Shift the lever to transport position.

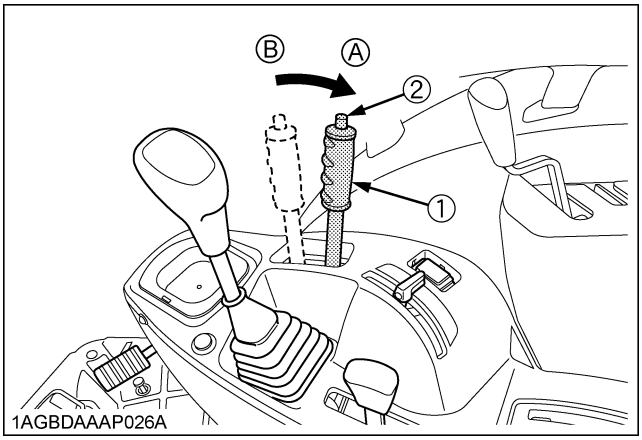

(1) Parking brake lever *(A) "PARKING POSITION"*
(2) Release button *(B) "TRANSPORT POSITION"*

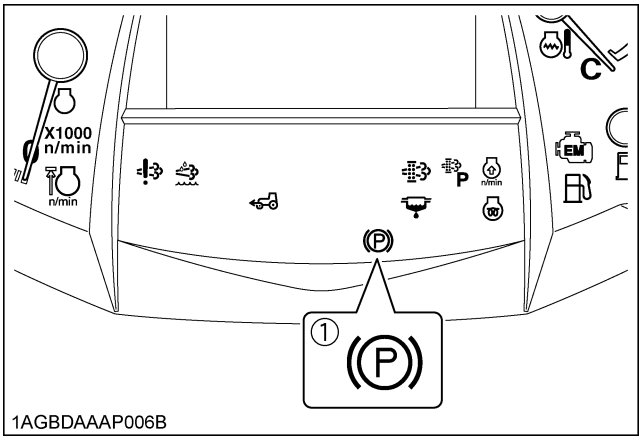

(1) Parking brake warning indicator

IMPORTANT :

- Bring the tractor to a complete stop before applying the parking brake lever.
- The parking brake lever can be turned ON and OFF only when the main gear shift lever is at the neutral position.

NOTE :

- In moving the parking brake lever, you may feel it heavy some time or light other time. This is not a trouble, however.

https://truckmanualshub.com/

2. Make sure the fuel shutoff-valve is in the "OPEN" position.

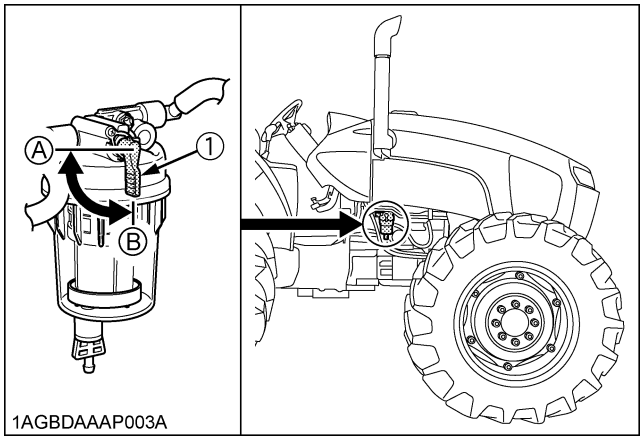

(1) Fuel shutoff-valve
(A) "CLOSE"
(B) "OPEN"

3. Place the shuttle shift lever in "NEUTRAL" position.

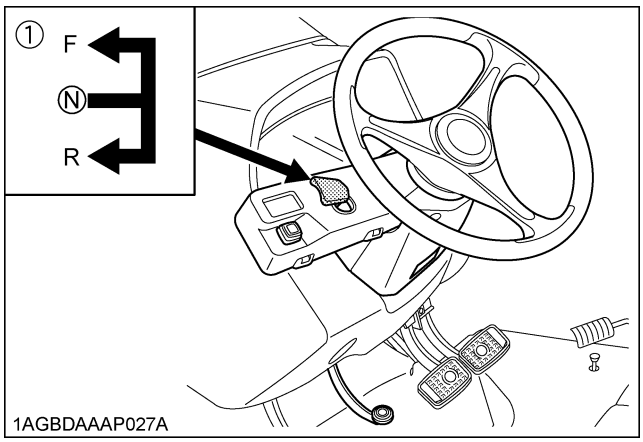

(1) Hydraulic-shuttle shift lever
(F) "FORWARD"
(N) "NEUTRAL POSITION"
(R) "REVERSE"

4. Place the PTO clutch control switch in "OFF" position and hydraulic control levers in "LOWEST" position.

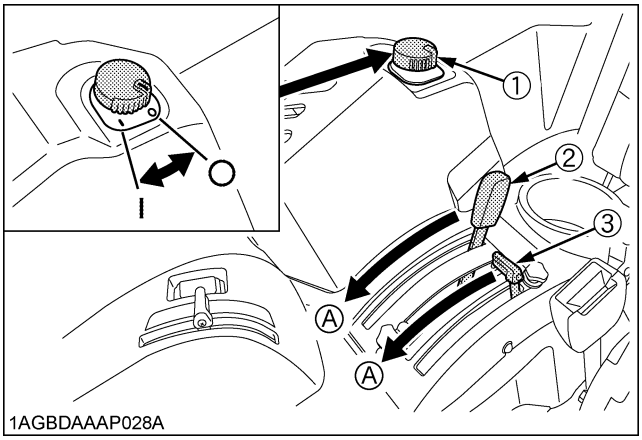

(1) PTO clutch control switch
(2) Position control lever
(3) Draft control lever
| "ON"
○ "OFF"
(A) "DOWN"

5. Set the throttle lever at the minimum speed position.

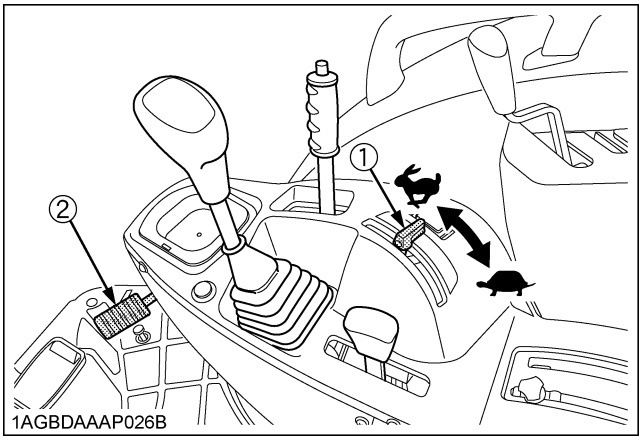

(1) Hand throttle lever
(2) Foot throttle
"INCREASE"
"DECREASE"

https://truckmanualshub.com/

6. Insert the key into the key switch and turn it "ON".

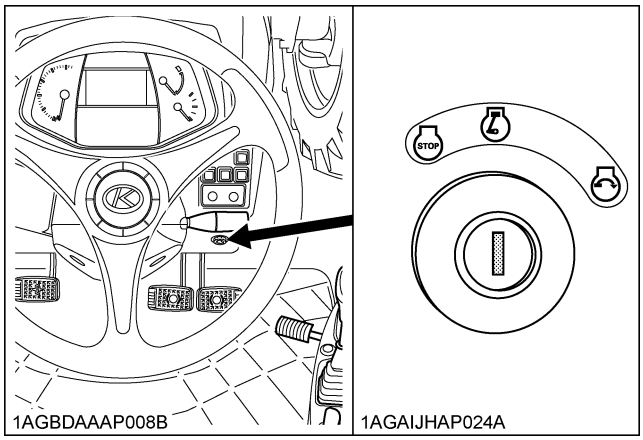

"OFF" *"ON"* *"START"*

◆ **Check Easy Checker(TM) Indicators:**

1. When the key is turned "ON", indicators (1) (2) should come on. If trouble should occur at any location while the engine is running, the indicator corresponding to problem will turn "ON".
2. Suppose that the engine coolant temperature is not high enough yet. The heater indicator (7) also turns "ON" when the key is turned "ON" to preheat the engine and goes off automatically when preheat is completed.
   Illumination time of indicator varies according to the temperature of coolant.
3. The PTO clutch indicator (3) comes on while PTO clutch control switch is engaged "ON" and goes off when disengaged.
4. If the fuel level indicator (8) lights up, when fuel level is very low, therefore add fuel and the indicator will turn "OFF".
5. If the DEF/AdBlue® warning indicator (4) lights up, check to see icon on LCD. (See "Warning Indication and its Countermeasure" in "SELECTIVE CATALYTIC REDUCTION (SCR) MUFFLER" in "OPERATING THE ENGINE" section.)
6. If the Water separator indicator (6) lights up, when water in the Water separator is very high, therefore drain the water and the indicator will turn "OFF".
7. If the parking brake warning indicator (5) does not illuminate, set the parking brake.

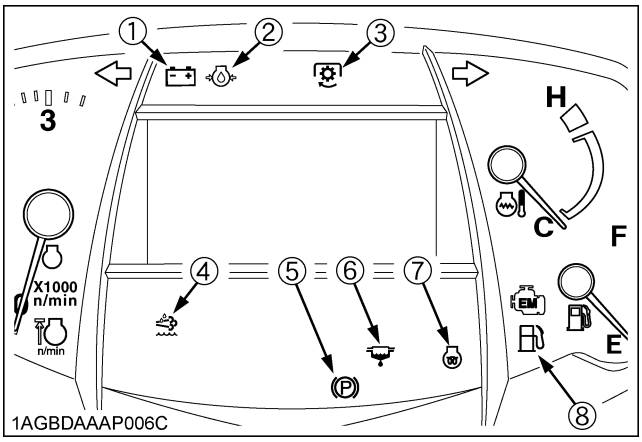

(1) Electrical charge warning indicator
(2) Engine oil pressure warning indicator
(3) PTO clutch indicator
(4) DEF/AdBlue® warning indicator
(5) Parking brake warning indicator
(6) Water separator indicator
(7) Heater indicator
(8) Fuel level indicator

NOTE :

- Some of the Easy Checker(TM) indicators may illuminate or start flashing depending on the positions of the levers and switches.

IMPORTANT :

- Daily checks with the Easy Checker(TM) only, are not sufficient. Never fail to conduct daily checks carefully by referring to Daily Check. (See "DAILY CHECK" in "PERIODIC SERVICE" section.)

7. Fully depress the clutch pedal.

8. Turn the key to "START" position and release when the engine starts.

IMPORTANT :

- Because of the safety devices, the engine will not start except when the PTO clutch control switch is placed in the "OFF" position and shuttle shift lever is placed in the "NEUTRAL" position.

9. Check to see that all the indicators on the Easy Checker(TM) are "OFF".

If an indicator is still on, immediately stop the engine and determine the cause.

10. Release the clutch pedal.

https://truckmanualshub.com/

COLD WEATHER STARTING

If the ambient temperature is below 0℃ (32℉) and the engine is very cold, follow the procedure below after taking the step 1 through 5 in the previous pages.

6. Turn the key to "ON" position and hold it until the heater indicator turns off.

Heater indicator comes on when the key is turned to "ON" position and engine coolant temperature is below 0℃ (32℉), and goes off automatically when preheat is completed.

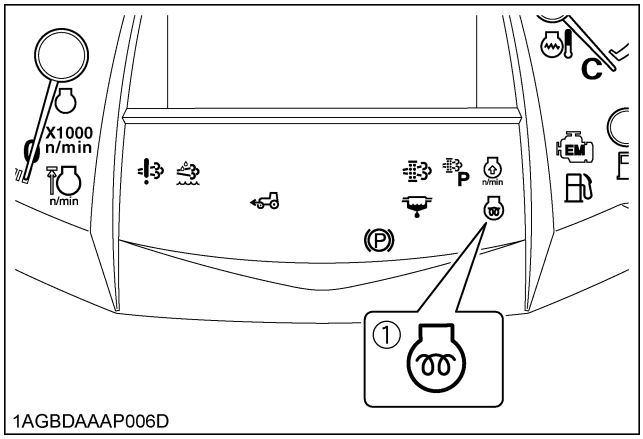

(1) Heater indicator

NOTE :
- During a cold start, the low temperature regulation indicator will appear on the LCD and the buzzer may sound once every 2 seconds. In this case, the engine speed will be limited to about 60%. If the operation is continued, the engine speed limit will gradually and automatically increase until the rotational speed will match the Foot throttle (or Hand throttle) strength.

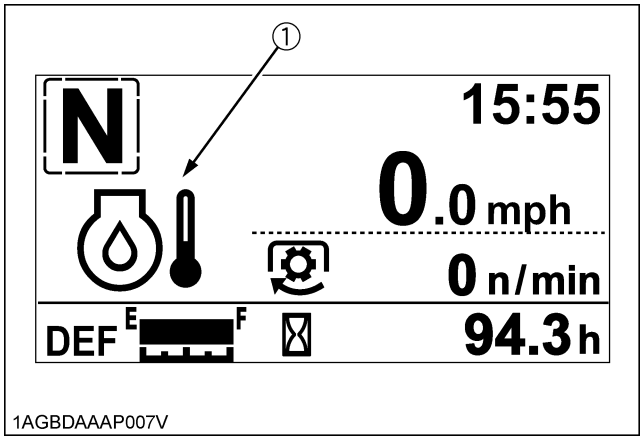

(1) Low temperature regulation indicator

7. Fully depress the clutch pedal.

8. Turn the key to the "START" position and the engine should start.

(If the engine fails to start after 10 seconds, turn off the key for 30 seconds. Then repeat steps 6 through 8. To protect the battery and the starter, make sure that the starter is not continuously turned for more than 10 seconds.)

NOTE :
- DEF/AdBlue® freezes at temperatures below -11℃ (12℉). Even if it is frozen, the engine is not affected at its start-up and running.

■Block Heater (if equipped)

A block heater is available as an option from your dealer. It will assist you in starting your tractor when the ambient temperature is below -20℃ (-4℉).

STOPPING THE ENGINE

1. After slowing the engine to idle, wait 3 to 5 minutes for turbo to slow down and then turn the key to "OFF".

2. Remove the key.

IMPORTANT :
- When the engine is stopped-shutdown, DEF/AdBlue® flow is reversed in the DEF/AdBlue® lines and related piping and returned back into the DEF/AdBlue® tank after cooling the DEF/AdBlue® injector.
  The SCR system continues working several minutes after engine shutdown to complete this purge process.
- Do not turn the machine main battery power off to the engine until the DEF/AdBlue® return cycle purge process is completed. Turning off the main battery power to the engine and aftertreatment system prior to completion may damage the system or cause it to malfunction.

NOTE :
- If key does not stop the engine, consult your local KUBOTA Dealer.

https://truckmanualshub.com/

WARMING UP

WARNING

To avoid personal injury or death:

- **Be sure to set the main gear shift lever to "PARK" position and set the shuttle shift lever to the "NEUTRAL" position and place the PTO switch in the "OFF" position during warm-up.**

For 5 minutes after engine start-up, allow engine to warm up without applying any load, this is to allow oil to reach every engine part. If load should be applied to the engine without this warm-up period, trouble such as seizure, breakage or premature wear may develop.

■Warm-up and Transmission Oil at Low Temperature Range

Hydraulic oil serves as transmission fluid. In cold weather, the oil may be cold with increased viscosity. This can cause delayed oil circulation or abnormally low hydraulic pressure for some time after engine start-up. This in turn can result in trouble in the hydraulic system.
To prevent the above, observe the following instructions:
Warm up the engine at about 50 % of rated rpm according to the table below:

Ambient temperature	Warm-up time requirement
Higher than 0 ℃ (32 ℉)	Approx. 5 minutes
0 to -10 ℃ (32 to 14 ℉)	10 to 20 minutes
-10 to -20 ℃ (14 to -4 ℉)	20 to 30 minutes
Below -20 ℃ (-4 ℉)	More than 30 minutes

IMPORTANT :

- Do not operate the tractor under full load condition until it is sufficiently warmed up.

JUMP STARTING

WARNING

To avoid personal injury or death:

- **Battery gases can explode. Keep cigarettes, sparks, and flames away from battery.**
- **If tractor battery is frozen, do not jump start engine.**
- **Do not connect the other end of the negative (-) jumper cable to the negative (-) terminal of the tractor battery.**

When jump starting the engine, follow the instructions below to safely start the engine.

1. Bring the helper vehicle with a battery of the same voltage as disabled tractor within easy cable reach. "THE VEHICLES MUST NOT TOUCH".
2. Engage the parking brakes of both vehicles and put the shift levers in neutral. Shut both engines off.
3. Wear eye protection and rubber gloves.
4. Attach the red clamp to the positive (red, (+) or pos.) terminal of the dead battery and clamp the other end of the same cable to the positive (red, (+) or pos.) terminal of the helper battery.
5. Clamp the other cable to the negative (black, (-) or neg.) terminal of the helper battery.
6. Clamp the other end to the engine block or frame of the disabled tractor as far from the dead battery as possible.
7. Start the helper vehicle and let its engine run for a few moments. Start the disabled tractor.
8. Disconnect the jumper cables in the exact reverse order of attachment. (Steps 6, 5 and 4)

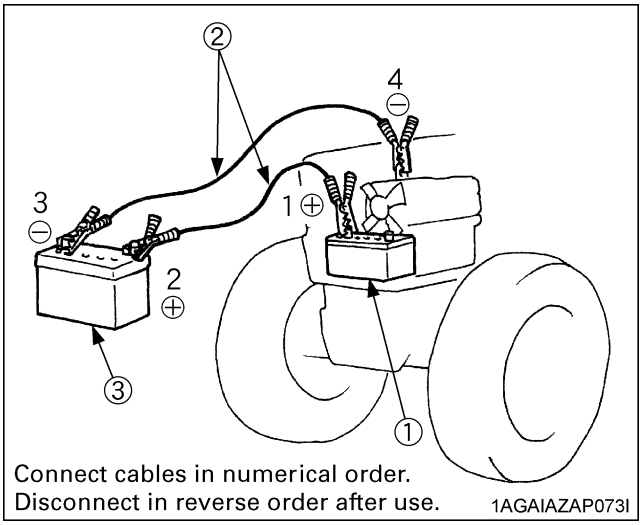

(1) Dead battery
(2) Jumper cables
(3) Helper battery

IMPORTANT :

- This machine has a 12 volt negative (-) ground starting system.
- Use only same voltage for jump starting.
- Use of a higher voltage source on tractor's electrical system could result in severe damage to tractor's electrical system.
  Use only matching voltage source when "Jump starting" a low or dead battery condition.
- Do not operate the tractor with the battery cable disconnected from the battery.
- Do not operate the tractor without the battery mounted.
- Do not operate the tractor with the battery dead. Charge the battery fully enough before operating the tractor.
  Otherwise the tractor might malfunction.

https://truckmanualshub.com/

OPERATING THE TRACTOR

OPERATING NEW TRACTOR

How a new tractor is handled and maintained determines the life of the tractor.

A new tractor just off the factory production line has been, of course, tested, but the various parts are not accustomed to each other, so care should be taken to operate the tractor for the first 50 hours at a slower speed and avoid excessive work or operation until the various parts become "broken-in". The manner in which the tractor is handled during the "breaking-in" period greatly affects the life of your tractor.

Therefore, to obtain the maximum performance and the longest life of the tractor, it is very important to properly break-in your tractor. In handling a new tractor, the following precautions should be observed.

■Do not Operate the Tractor at Full Speed for the First 50 Hours.

- Do not start quickly nor apply the brakes suddenly.
- In winter, operate the tractor after fully warming up the engine.
- Do not run the engine at speeds faster than necessary.
- On rough roads, slow down to suitable speeds. Do not operate the tractor at fast speed.

The above precautions are not limited only to new tractors, but to all tractors. But it should be especially observed in the case of new tractors.

■Changing Lubricating Oil for New Tractors

The lubricating oil is especially important in the case of a new tractor. The various parts are not "broken-in" and are not accustomed to each other; small metal grit may develop during the operation of the tractor; and this may wear out or damage the parts. Therefore, care should be taken to change the lubricating oil a little earlier than would ordinarily be required.

For further details of change interval hours.

(See "MAINTENANCE" section.)

BOARDING AND LEAVING THE TRACTOR

1. Never try to get on or off a moving tractor or jump off the tractor to exit.
2. Face the tractor when getting into or out of the tractor. Do not use the controls as hand holds to prevent inadvertent machine movements.
3. Always keep steps and floor clean to avoid slippery conditions.

OPERATING FOLDABLE ROPS

WARNING

To avoid personal injury or death:

- **When raising or folding the ROPS, apply parking brake, stop the engine and remove the key.**
  Always perform function from a stable position at the rear of tractor.
- **Fold the ROPS down only when absolutely necessary and fold it up and lock it again as soon as possible.**
- **Before proceeding to fold ROPS, check for any possible interference with installed implements and attachments.**
  If interference occurs, contact your KUBOTA Dealer.

■To Fold the ROPS

1. Remove both set bolts.

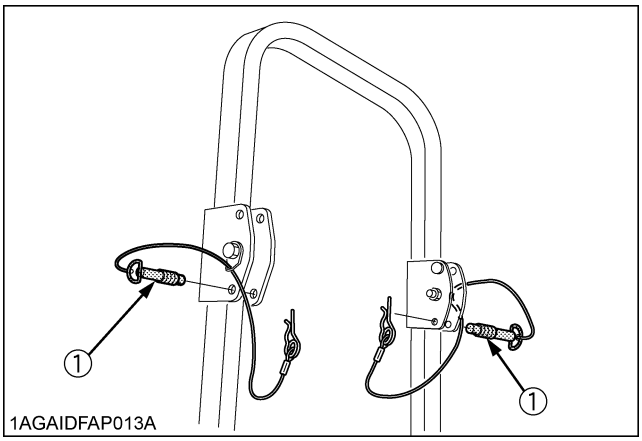

(1) Set bolt

https://truckmanualshub.com/

2. Fold the ROPS.

CAUTION

To avoid personal injury:

- **Hold the top of the ROPS tightly with both hands and fold the ROPS slowly and carefully.**

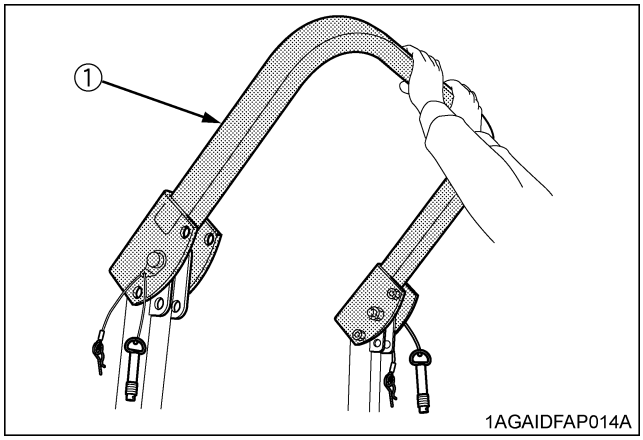

(1) ROPS

3. Align set bolt holes and insert both set bolts. Slightly tighten the set bolts and secure them with the hair pin cotters.

CAUTION

To avoid personal injury:

- **Make sure that both set bolts are properly installed and secured with the hair pin cotters.**

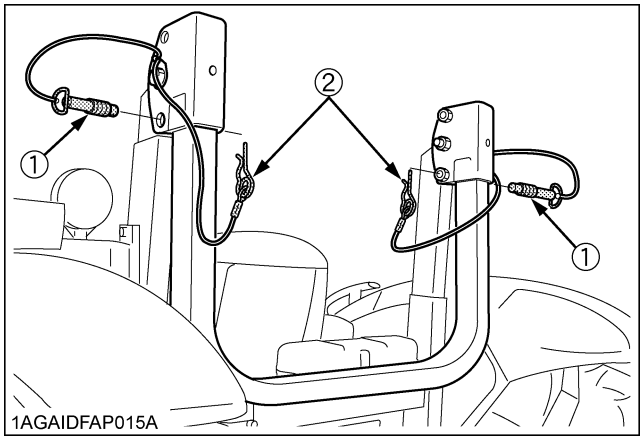

(1) Set bolt
(2) Hair pin cotter

■To Raise the ROPS to Upright Position

1. Remove both hair pin cotters and set bolts.

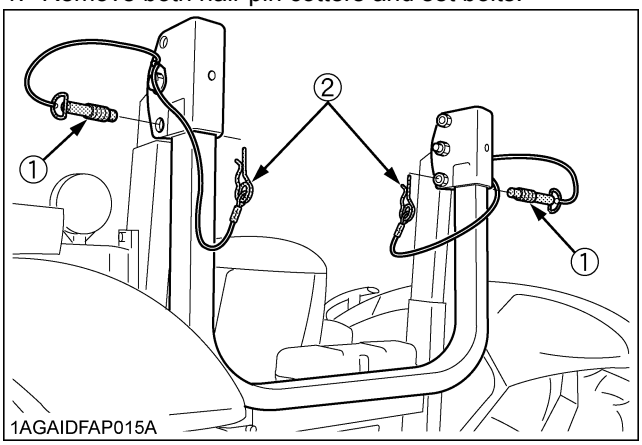

(1) Set bolt
(2) Hair pin cotter

2. Raise ROPS to the upright position.

CAUTION

To avoid personal injury:

- **Raise the ROPS slowly and carefully.**

3. Align set bolt holes and insert both set bolts. Slightly tighten the set bolts and secure them with the hair pin cotters.

CAUTION

To avoid personal injury:

- **Make sure that both set bolts are properly installed as soon as the ROPS is in the upright position and secured with the hair pin cotters.**

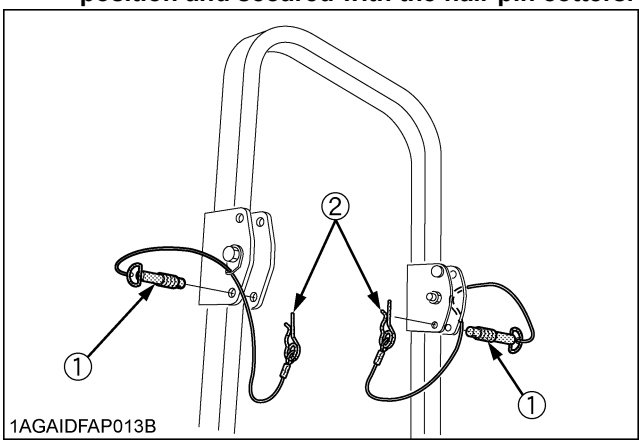

(1) Set bolt
(2) Hair pin cotter

https://truckmanualshub.com/

■Adjustment of Foldable ROPS

- Adjust the free fall of the ROPS upper frame regularly.
- If you feel less friction in folding the ROPS, remove the cotter pin (1), tighten the nut (2) until you feel the right friction in the movement and then replace the cotter pin.

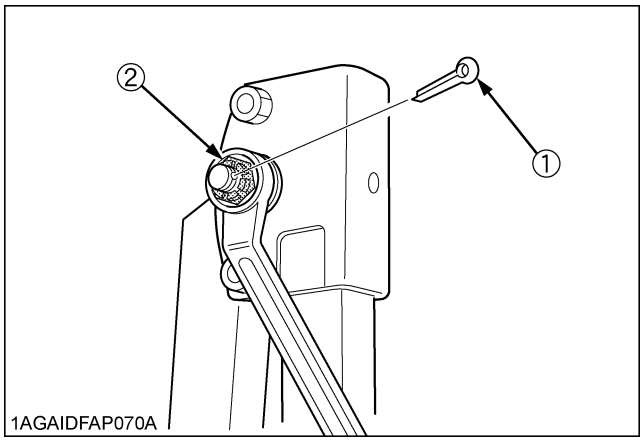

(1) Cotter pin
(2) Nut

STARTING

1. Adjusting the Operator's Position.

NOTE :
- The seat and suspension should be adjusted to ensure that the controls are comfortably at hand for the operator, ensuring that the operator maintains a good posture and minimizes risks from whole body vibration.

■Operator's Seat

WARNING

To avoid personal injury or death:
- **Make adjustments to the seat only while the tractor is stopped.**
- **Make sure that the seat is completely secured after each adjustment.**
- **Do not allow any person other than the operator to ride on the tractor.**

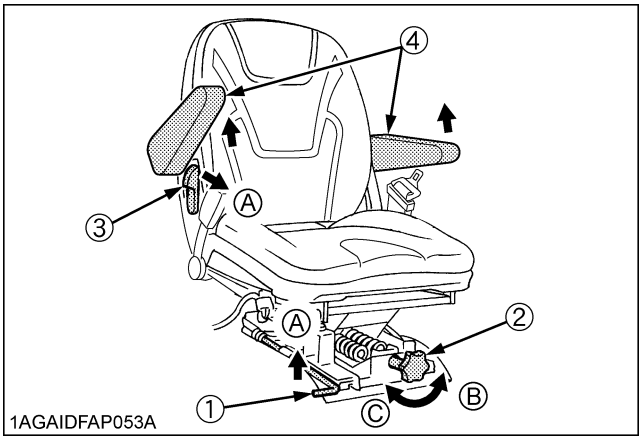

(1) Travel adjust lever
(2) Suspension adjust knob
(3) Backrest tilt adjust lever
(4) Arm rest
(A) "UNLOCK"
(B) "TO DECREASE TENSION"
(C) "TO INCREASE TENSION"

◆ Travel adjustment

Pull the travel adjust lever and slide the seat backward or forward, as required. The seat will lock in position when the lever is released.

NOTE :
- The operator's seat base has a slope. When lifting the lever, be careful not to allow the seat to slide down forward.

◆ Suspension adjustment knob

Turn the suspension adjust knob to achieve the optimum suspension setting.

◆ Tilt adjustment

Pull the backrest tilt adjust lever and move the backrest to the desired angle.

IMPORTANT :
- After adjusting the operator's seat, be sure to check to see that the seat is properly locked,

https://truckmanualshub.com/

■Glove Box

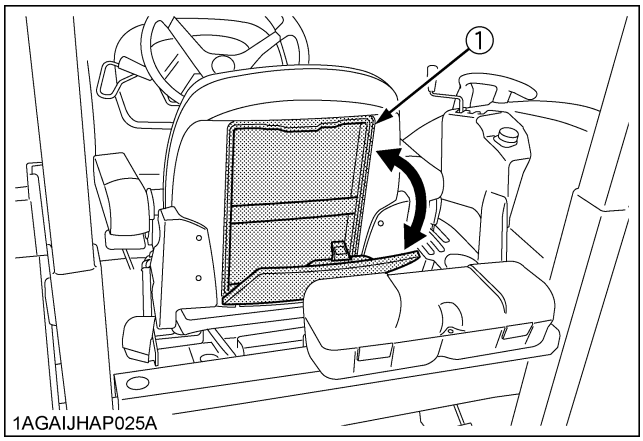

(1) Glove box

■Seat Belt

WARNING

To avoid personal injury or death:

- **Always use the seat belt when any ROPS or CAB are installed.**
- **Do not use the seat belt if a foldable ROPS or a retractable ROPS is down or there is no ROPS.**

Adjust the seat belt for proper fit and connect the buckle. This seat belt is auto-locking retractable type.

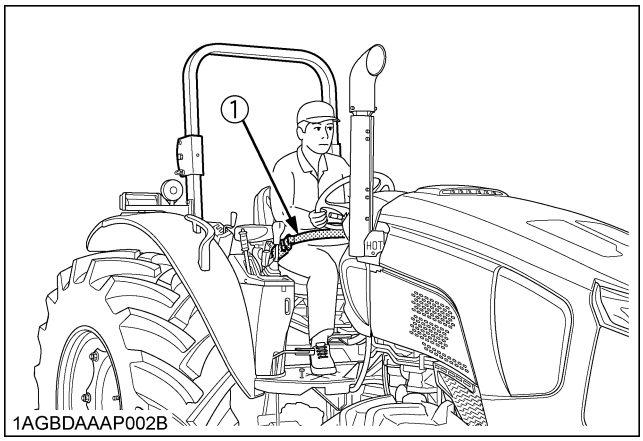

(1) Seat belt

■Tilt Steering Adjustment

CAUTION

To avoid personal injury:

- **Do not adjust the steering wheel while the tractor is in motion.**

Press down the steering wheel tilt pedal, to release the lock so the steering wheel can be adjusted to the best driving positions.

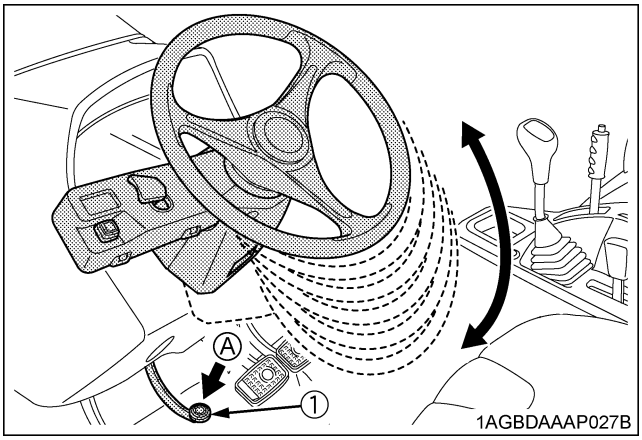

(1) Steering wheel tilt pedal (A) "PRESS DOWN"

https://truckmanualshub.com/

2. Selecting Light Switch Position.

■Light Switch

Turn the light switch clockwise, and the following lights are activated on the switch position.

○..... Head lights OFF.
..... Head lights dimmed, low beam.
..... Head lights ON, high beam.

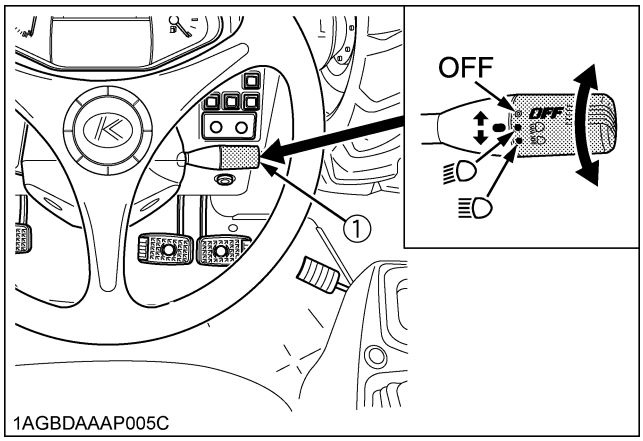

(1) Head light switch

■Turn Signal / Hazard Light Switch

◆ **Hazard Light**

1. When the hazard light switch is pushed, the hazard lights flash, along with the L/H and R/H indicators on the instrument panel.
2. Push the hazard light switch again to turn off the hazard lights.

◆ **Turn Signal with Hazard Light**

1. To indicate a right turn with the hazard lights already flashing, turn the switch clockwise.
2. To indicate a left turn with the hazard lights already flashing, turn the switch counterclockwise.
3. When the left or right turn signal is activated in combination with the hazard lights, the indicated turning light will flash and the other will stay on.

◆ **Turn Signal without Hazard Light**

1. To indicate a right turn without hazard lights, turn the switch clockwise.
2. To indicate a left turn without hazard lights, turn the switch counterclockwise.
3. When the left or right turn signal is activated without the hazard lights, the indicated turning light will flash and the other will stay on.

NOTE :

- The hazard light switch is operative when the key switch is in either the "ON" or "OFF" position.
- The turn signal light switch is only operative when the key switch is in the "ON" position.
- Be sure to return the turn signal switch to center position after turning.

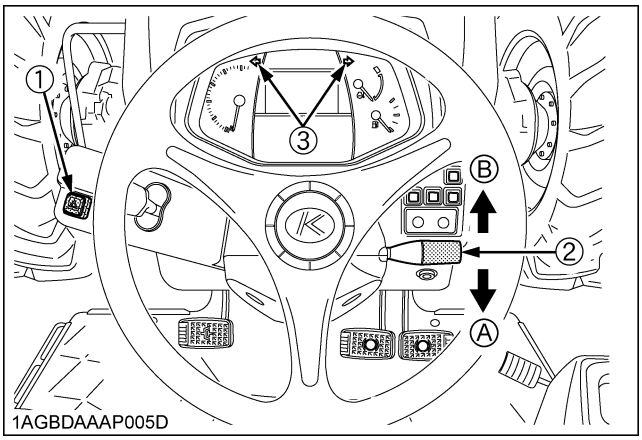

(1)Hazard light switch
(2)Turn signal light switch
(3)Hazard / Turn signal indicator
(A) "RIGHT TURN"
(B) "LEFT TURN"

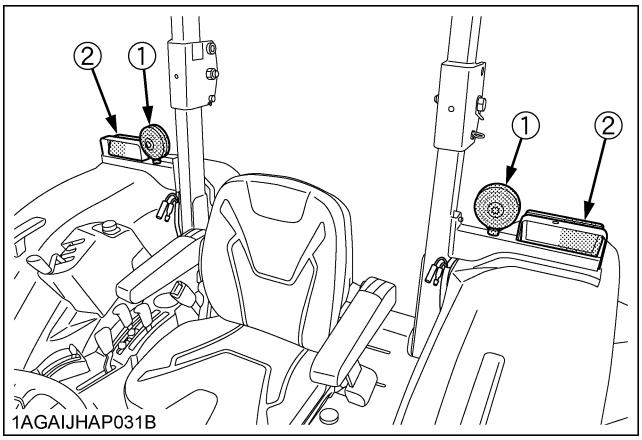

(1)Hazard light
(2)Turn signal light

https://truckmanualshub.com/

■Front Work Light Switch

WARNING

To avoid personal injury or death:

- **Do not operate on roads with work lights on. Work lights may blind or confuse operators of oncoming vehicles.**

Turn on the key switch and press the front work light switch. The work lights and the switch's indicator light up. Press the switch to turn off the light and indicator.

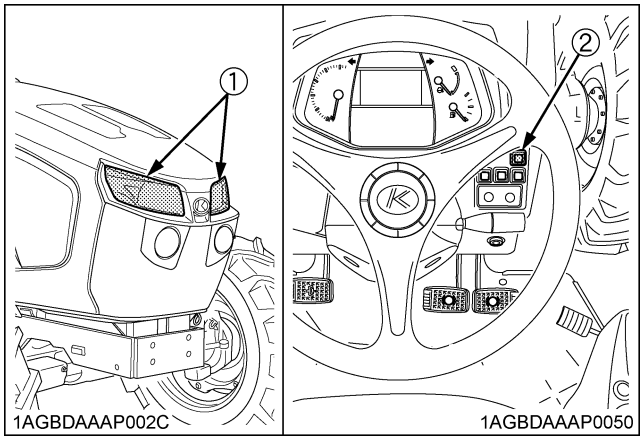

(1) Front work light
(2) Front work light switch with indicator

3. Checking the Brake Pedal.

■Brake Pedals (Right and Left)

WARNING

To avoid personal injury or death:

- **Be sure to interlock the right and left pedals. Applying only one rear wheel brake at high speeds could cause the tractor to swerve or roll-over.**
- **Be sure brake pedals have equal adjustment when using locked together. Incorrect or unequal brake pedal adjustment can cause the tractor to swerve or roll-over.**

WARNING

To avoid personal injury or death:

- **Do not make brake suddenly.**
  An accident may occur as a result of a heavy towed load shifting forward or loss of control
- **To avoid skidding and loss of steering control when driving on icy, wet, or loose surfaces, make sure the tractor is correctly ballasted, operated at reduced speed, operated with front wheel drive engaged (if equipped).**
- **The braking characteristics are different between 2 and 4-wheel drive. Be aware of the difference and use carefully.**

1. Before operating the tractor on the road, be sure to interlock the right and left pedals as illustrated below.
2. Use individual brakes to assist in making sharp turns at slow speeds (Field Operation Only). Disengage the brake pedal lock and depress only one brake pedal.
3. Be sure brake pedals have equal adjustment when being used locked together.

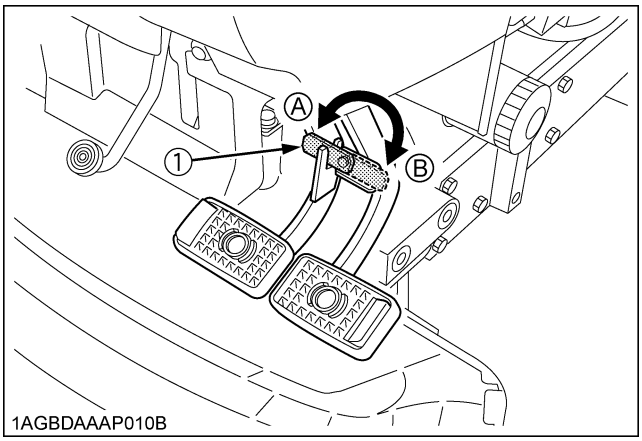

(1) Brake pedal lock
(A) "LOCK"
(B) "RELEASE"

https://truckmanualshub.com/

4. Raise the Implement.
(see "HYDRAULIC UNIT" section.)

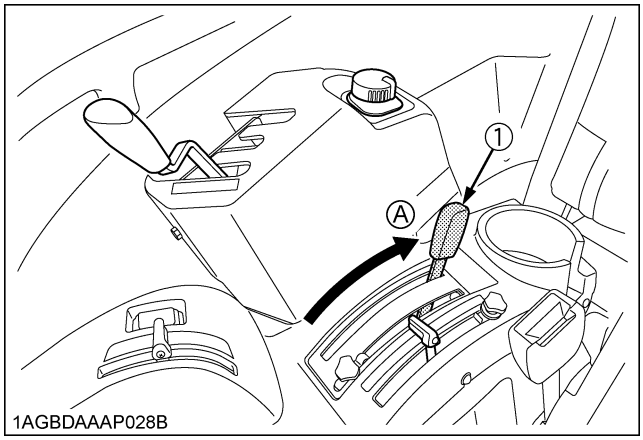

(1) Position control lever (A) "UP"

5. Depress the Clutch Pedal.

■Clutch Pedal

WARNING

To avoid personal injury or death:

- **Sudden release of the clutch may cause the tractor to lunge in an unexpected manner.**

The clutch is disengaged when the clutch pedal is fully pressed down.

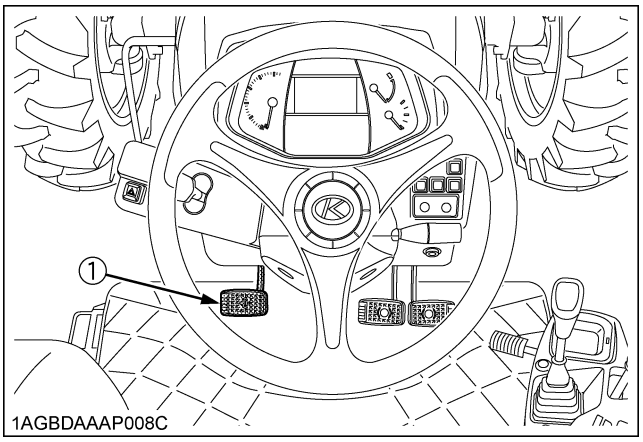

(1) Clutch pedal

IMPORTANT :

To help prevent premature clutch wear:

- The clutch pedal must be quickly disengaged and be slowly engaged.
- Avoid operating the tractor with your foot resting on the clutch pedal.
- Select proper gear and engine speed depending on the type of job.

https://truckmanualshub.com/

6. Selecting the Travel Speed.

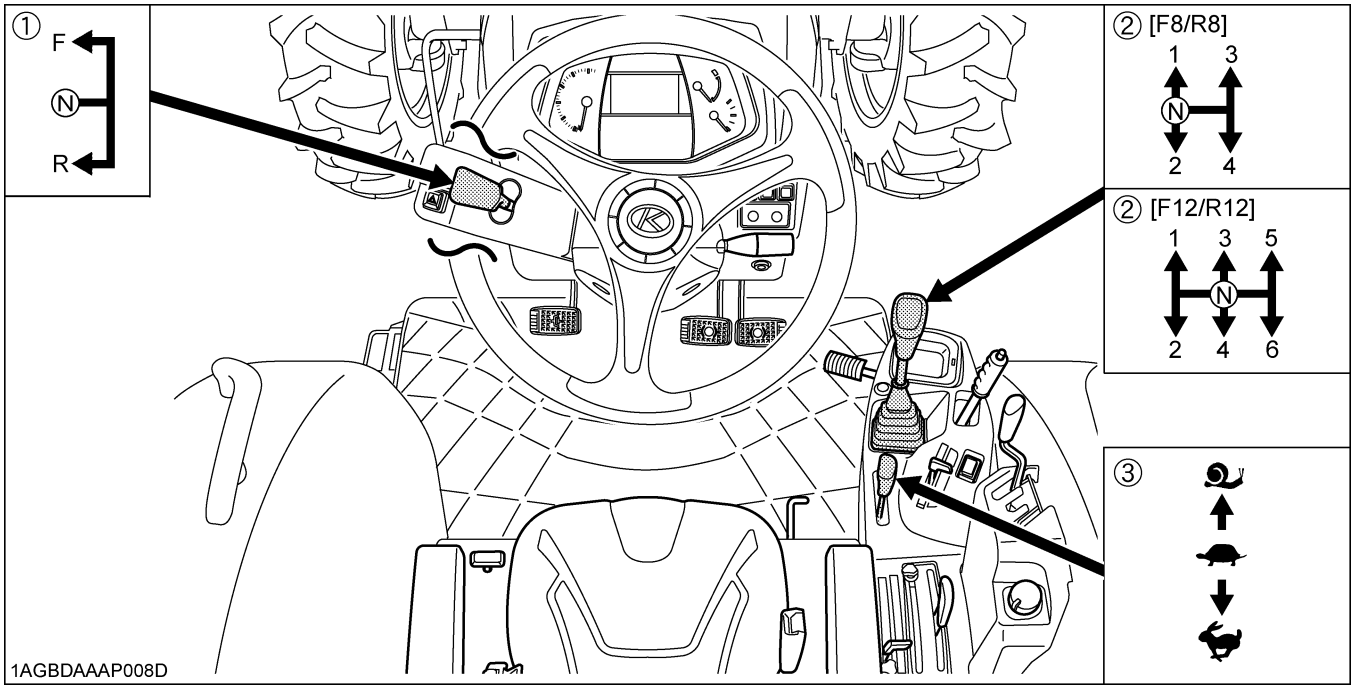

(1) Hydraulic - shuttle shift lever
(2) Main gear shift lever
(3) Range gear shift lever

(F) "FORWARD
(N) "NEUTRAL POSITION"
(R) "REVERSE"

"LOW"
"HIGH"
"CREEP" (if equipped)

By combination of using the main gear shift lever, the range gear shift lever and hydraulic-shuttle shift lever, forward speeds and reverse speeds shown in the table below are obtained.

Standard model (F8 / R8 model)	Without creep	8 forward speeds 8 reverse speeds
	With creep	12 forward speeds 12 reverse speeds
F12 / R12 model	Without creep	12 forward speeds 12 reverse speeds
	With creep	18 forward speeds 18 reverse speeds

■Travel Speed Limiter

With the 6-speed main gear shift type, the highest travel speed is reachable when the engine rpm is at around the middle level with the maximum travel speed range. This provides for a fuel-efficient run while traveling along roads, pulling a trailer, etc. Step on the foot throttle, and the engine rpm rises proportionally and the travel speed goes up accordingly. But the engine speed is limited to 2080 rpm or so, and it does not increase even if the foot throttle is increased.

When the main gear shift lever is set to the H-6 position, the Rev-Limiter indicator illuminates.

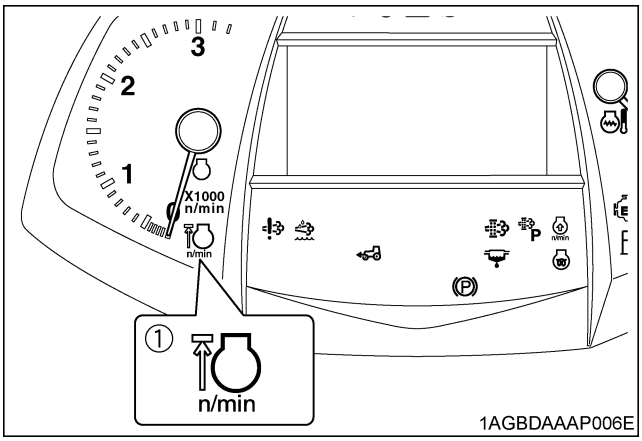

(1) Rev-limiter indicator

https://truckmanualshub.com/

■Main Gear Shift Lever

The main gear shift is fully synchronized to shift without stopping.

IMPORTANT :
- The main gear shift may be shifted between speeds on-the-go, but the clutch must be depressed.

■Range Gear Shift Lever

The range gear shift can only be shifted when the tractor is completely stopped and the clutch is depressed.

IMPORTANT :
- To avoid transmission damage, depress clutch pedal and stop the tractor before shifting between ranges.

■Hydraulic-Shuttle Shift Lever

Raise up and shift the shuttle shift lever forward to obtain forward speeds and shift back to obtain reverse speeds. This shifting does not require clutch operation.

IMPORTANT :
- The hydraulic-shuttle shift lever may be shifted while the tractor is moving slowly.

NOTE :
- While the shuttle shift lever is at the "NEUTRAL" position, the "N" character appears on the LCD monitor.

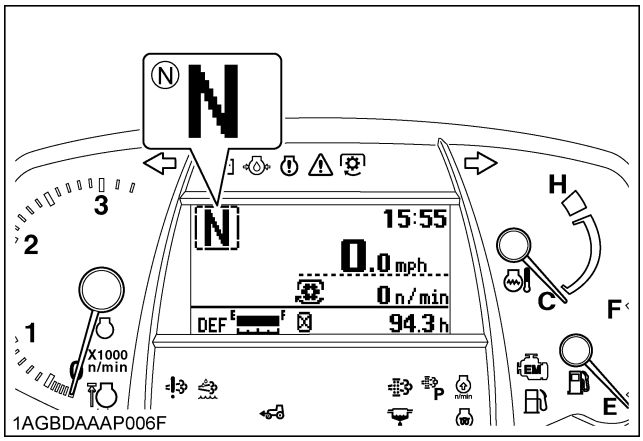

(N) "NEUTRAL"

■Creep Speed (if equipped)

Shift the range gear shift lever to 🐌 to obtain low speeds.
This shifting requires clutch operation.

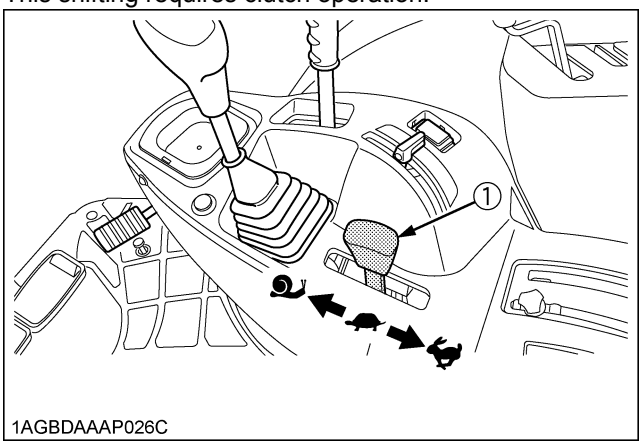

(1) Range gear shift lever 🐌 *...Creep ON*

◆ **Creep speed should be used only when doing one of the following jobs:**
1. Deep rotary-tilling and harrowing
2. Planting
3. Turf application

◆ **Creep speed can not be used for any of the followings:**
1. Pulling a trailer
2. Front-loader operation
3. Front-blade operation
4. Earth-moving
5. Entering and leaving a field
6. Loading onto and unloading from a truck

⚠ WARNING

To avoid personal injury or death:
- **When you leave the tractor, be sure to apply the parking brake and stop the engine.**
- **IN APPLYING THE BRAKES:**
  - **The torque of the wheel axle is extremely high while creep speed is being used. Be sure to step down on the clutch pedal completely before applying the brakes, or they will not work**
  - **When starting to operate the tractor, be sure to release the parking brakes.**
    Misuse of the brakes may cause damage to the transmission and is therefore not acceptable to KUBOTA for coverage under the warranty.

IMPORTANT :
- Press the clutch pedal completely down and stop the tractor's motion before shifting the range gear shift lever.

https://truckmanualshub.com/

■Front Wheel Drive Lever

WARNING

To avoid personal injury or death:

- **Do not engage the front wheel drive when traveling at road speed.**
- **When driving on icy, wet, or loose surfaces, make sure the tractor is correctly ballasted to avoid skidding and loss of steering control. Operate at reduced speed and engage front wheel drive.**
- **An accident may occur if the tractor is suddenly braked, such as by heavy towed loads shifting forward or loss of control.**
- **The braking characteristics are different between 2 and 4-wheel drive. Be aware of the difference and use carefully.**

The front wheel drive lever can be operated with the tractor moving slowly and with the engine decelerating without clutch operation. Shift the lever to "ON" to engage the front wheel drive.

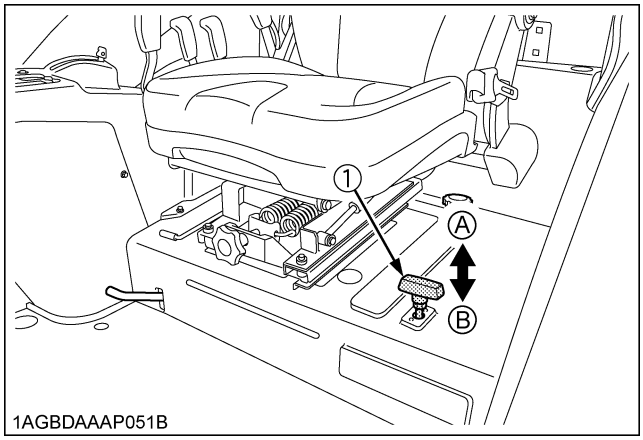

(1) Front wheel drive lever *(A) "ON"* *(B) "OFF"*

◆ **4WD Indicator**

The 4WD indicator turns on while the front wheel drive lever is in "ON" (4WD) position.

The 4WD indicator goes off when the front wheel drive lever is in "OFF" (2WD) position.

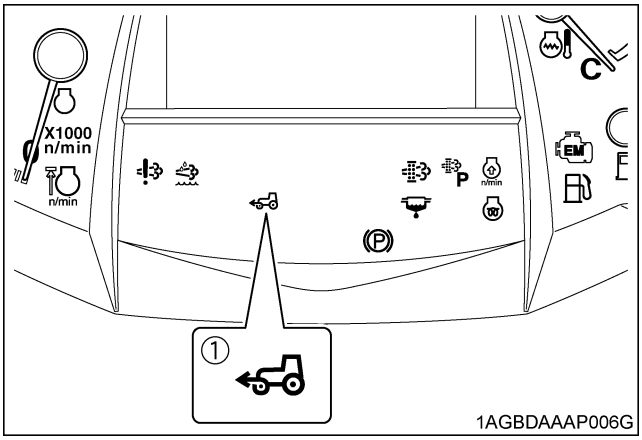

(1) 4WD indicator

NOTE :

- Even when the front wheel drive lever is moved, the 4WD indicator may fail to light up or go out immediately. Just keep on running the tractor, and the indicator will light up or go out accordingly.
  If the indicator fails to come on or off with the tractor at a stop, turn the steering wheel clockwise and counterclockwise, and the indicator will light up or go out accordingly.

IMPORTANT :

- Tires will wear quickly if front wheel drive is engaged on paved roads.
- Reduce the rear wheels traction before engaging the front wheel drive lever.

◆ **Front wheel drive is effective for the following jobs:**

1. When greater pulling force is needed, such as working in a wet field, when pulling a trailer, or when working with a front-end loader.
2. When working in sandy soil.
3. When working on a hard soil where a rotary tiller might push the tractor forward.
4. For increased braking at reduced speed.

https://truckmanualshub.com/

7. **Accelerate the Engine.**

■Hand Throttle Lever

Pulling the throttle lever back decreases engine speed, and pushing it forward increases engine speed.

■Foot Throttle

Use the foot throttle when traveling on the road. Press down on it for higher speed. The foot throttle is interlocked with the hand throttle lever; when using the foot throttle, keep the hand throttle lever in low idling position.

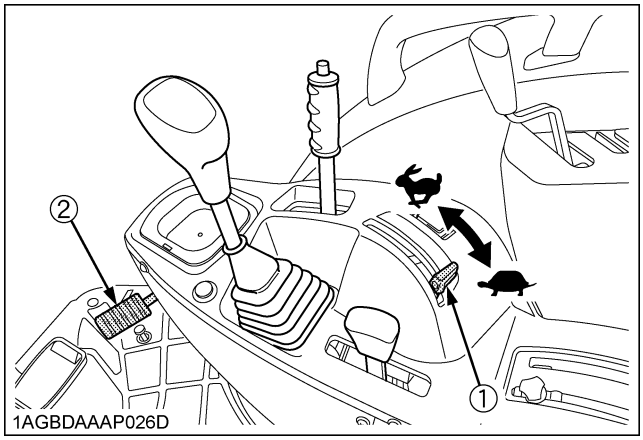

(1) Hand throttle lever *"INCREASE"*
(2) Foot throttle *"DECREASE"*

8. **Unlock the Brake Pedals and Slowly Release the Clutch.**

STOPPING

■Stopping

1. Slow down the engine.
2. Step on the clutch and brake pedal.
3. After the tractor has stopped, disengage the PTO, lower the implement to the ground, shift the transmission to neutral, release the clutch pedal, and set the parking brake.

CHECK DURING DRIVING

■Immediately Stop the Engine if:

- The engine suddenly slows down or accelerates,
- Unusual noises are suddenly heard,
- Exhaust fumes suddenly become very dark,

■Easy Checker(TM)

If the warning lamps in the Easy Checker(TM) come on during operation, immediately stop the engine, and find the cause as shown below.
Never operate the tractor while Easy Checker(TM) lamp is on.

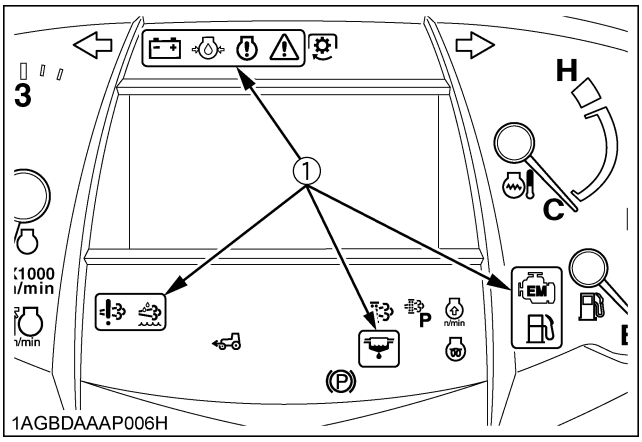

(1) Easy Checker(TM)

Engine warning
This indicator serves the following two functions. If the indicator lights up, pinpoint the cause and take a proper measure.

1. Error with the engine control system
   If during operation the water temperature gauge reads an acceptable level but the warning lamp in the Easy Checker(TM) comes on, stop the engine and get it restarted. If the error happens again, consult your local KUBOTA Dealer.

IMPORTANT :

- If the warning indicator lights up, the following phenomena may appear depending on the engine's trouble spot.
  - The engine stops unexpectedly.
  - The engine fails to start or gets interrupted just after start.
  - The engine output is not enough.
  - The engine output is enough, but the warning indicator stays on.

  If the engine output is not enough, immediately interrupt the operation and move the tractor to a safe place and stop the engine.

https://truckmanualshub.com/

2. Engine overheat
   If the water temperature gauge reads an unusual level and the warning lamp in the Easy Checker(TM) comes on, the engine may have got overheated. Check the tractor by referring to "TROUBLESHOOTING" section.

Engine oil pressure
If the oil pressure in the engine goes below the prescribed level, the warning lamp in the Easy Checker(TM) will come on.
If this should happen during operation, and it does not go off when the engine is accelerated to more than 1000 rpm, check level of engine oil.
(See "Checking Engine Oil Level" in "DAILY CHECK" in "PERIODIC SERVICE" section.)

DEF/AdBlue® system warning
If trouble should occur at the DEF/AdBlue® system, the warning indicator in the Easy Checker(TM) will light up.
If this should happen during operation, check the DEF/AdBlue® system or consult your local KUBOTA Dealer.

Fuel level
If the fuel in the tank goes below the prescribed level, the warning lamp in the Easy Checker(TM) will come on. (less than 20 L (5.3 gals.))
If this should happen during operation, refuel as soon as possible.
(See "Checking and Refueling" in "DAILY CHECK" in "PERIODIC SERVICE" section.)

IMPORTANT :
- When the fuel warning lamp lights up, refuel the tank as soon as possible. If the tractor runs out of fuel and stalls, the engine and its components may be damaged.

Water separator
If water or impurities collect in the water separator, the indicator in the Easy Checker(TM) will light up and a buzzer will sound.
If this should happen during operation, drain the water from the water separator as soon as possible.
(See "Checking Water Separator" in "DAILY CHECK" in "PERIODIC SERVICE" section.)

DEF/AdBlue® level
If the DEF/AdBlue® in the tank goes below the prescribed level, or if a poor-quality product is added, the indicator in the Easy Checker(TM) will right up.
If this should happen during operation, refill or replace with DEF/AdBlue® as soon as possible.
(See "Selective Catalytic Reduction (SCR) MUFFLER" in "OPERATING THE ENGINE" section.)

Emission indicator
If this indicator lights up, take the steps to lower the water temperature. This helps keep the emission clean.

Electrical charge
If the alternator is not charging the battery, the Easy Checker(TM) will come on.
If this should happen during operation, check the electrical charging system or consult your local KUBOTA Dealer.

Master system warning
If trouble should occur at the engine, transmission or other control parts, the indicator flashes as a warning.
If the trouble is not corrected by restarting the tractor, consult your local KUBOTA Dealer.

NOTE :
- For checking and servicing of your tractor, consult your local KUBOTA Dealer for instructions.

https://truckmanualshub.com/

■Fuel Gauge

When the key switch is on, the fuel gauge indicates the fuel level.

Be careful not to empty the fuel tank. Otherwise air may enter the fuel system.

Should this happen, the system should be bled (See "Bleeding Fuel System" in "SERVICE AS REQUIRED" in "PERIODIC SERVICE" section.)

If the engine stall in out of fuel, master system warning indicator lights up. When the indicator appears, turn the key switch to OFF and then to ON again in order to turn off the indicator.

If the indicator does not turn off by restarting the tractor, consult your local KUBOTA Dealer.

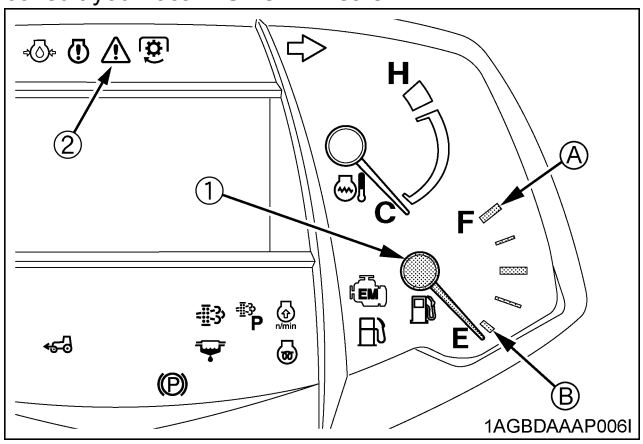

(1) Fuel gauge *(A) "FULL"*
(2) Master system warning indicator *(B) "EMPTY"*

■DEF / AdBlue® Gauge

The DEF/AdBlue® level in the DEF/AdBlue® tank is indicated with LCD blocks.

If DEF/AdBlue® level drops too low, the engine output is restricted. With this in mind, be careful not to empty the tank.

When the fluid level in the tank has dropped below 15%, the DEF/AdBlue® warning indicator on the instrument panel lights up and stays on.

Immediately add DEF/AdBlue® to the specified level.

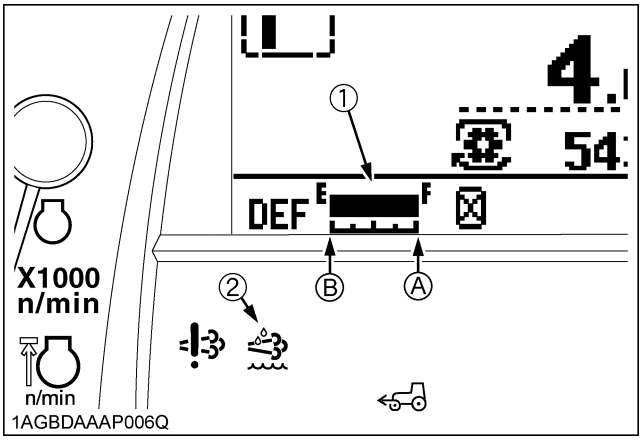

(1) DEF/AdBlue® gauge *(A) "FULL"*
(2) DEF/AdBlue® warning indicator *(B) "EMPTY"*

https://truckmanualshub.com/

■Coolant Temperature Gauge

WARNING

To avoid personal injury or death:

- **Do not remove radiator cap until coolant temperature is well below its boiling point. Then loosen cap slightly to the stop to relieve any pressure before removing cap completely.**

1. With the key switch at "ON", this gauge indicates the temperature of the coolant. "C" for "cold" and "H" for "hot."
2. If the indicator reaches the red zone position, engine coolant is overheated. Check the tractor by referring to "TROUBLESHOOTING" section.

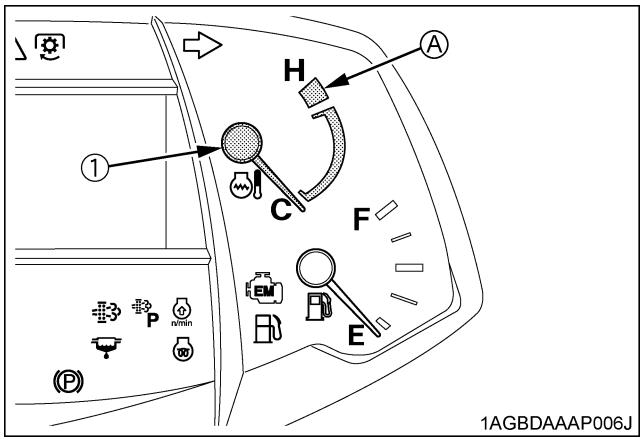

(1) Coolant temperature gauge *(A) "RED ZONE"*

■Tachometer

The tachometer indicates the engine speed on the dial.

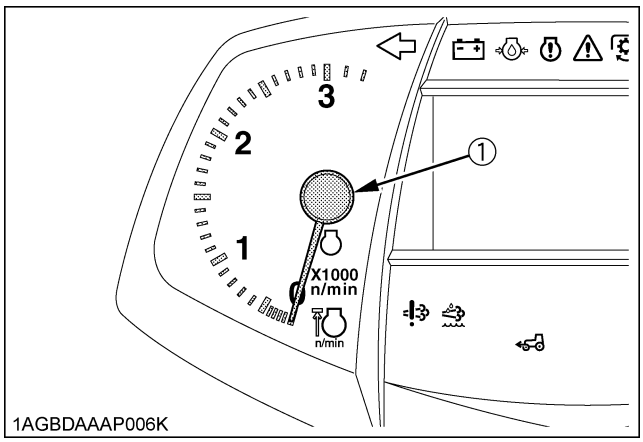

(1) Engine revolution

https://truckmanualshub.com/

LCD MONITOR

This display provides the operator with a variety of information necessary to operate the tractor. Further, part of the display can be modified by the operator as required.

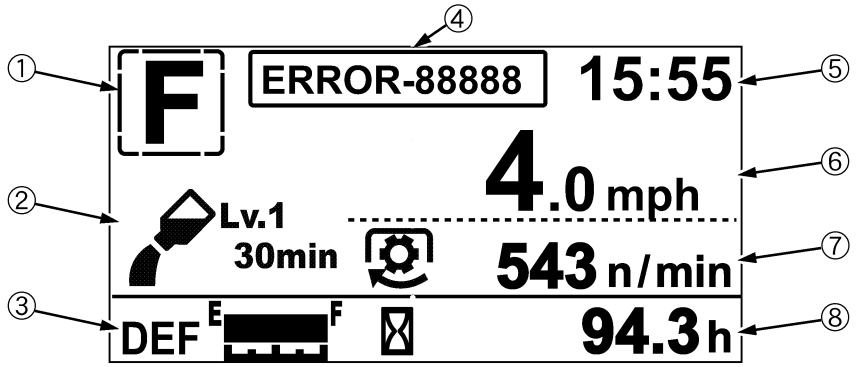

1AGBDAAAP007B

No.	Description		Reference page
(1)	F	Forward operation is selected with the shuttle lever.	---
	R	Reverse operation is selected with the shuttle lever.	---
	N	The shuttle lever is at neutral position.	---
	P	The parking brake lever is at parking position.	---
	P	Travel when the parking brake lever is locked.	---
	No display	Shuttle lever system trouble.	---

No.	Description		Reference page
(2)		DEF/AdBlue® low level icon indicator	21
		DEF/AdBlue® poor quality icon indicator	
		DEF/AdBlue® freeze icon indicator	
		SCR system trouble	
		Low temperature regulation indicator	29
(3)	**AdBlue® (DEF) gauge** Displays the fluid level in the DEF/AdBlue® tank.		21
(4)	**Trouble display** A trouble-spot-pinpointing error code and the related control unit are displayed.		116
(5)	**Clock**		46
(6)	**Travel speed**		46
(7)	**PTO speed**		46
(8)	**Performance monitor** Various information can be selected by the operator.		50

NOTE :

- Errors may occur in the fuel consumption display depending on the conditions of use. Use the displayed data only as an approximate guide. In particular, do not use the total fuel consumption display mode in place of the fuel gauge.
- The travel speed displayed when the wheels slip under traction is different from the actual one.
- In cold weather the LCD monitor response will normally be slower and the visibility be less, than in warmer weather.

https://truckmanualshub.com/

■Various Setting Mode

While pressing the mode selector switch, turn the key switch to ON position.
Various setting mode screen appears in LCD monitor.
The various setting mode can set 5 items.
Turn the key switch to OFF position, setting is finished.

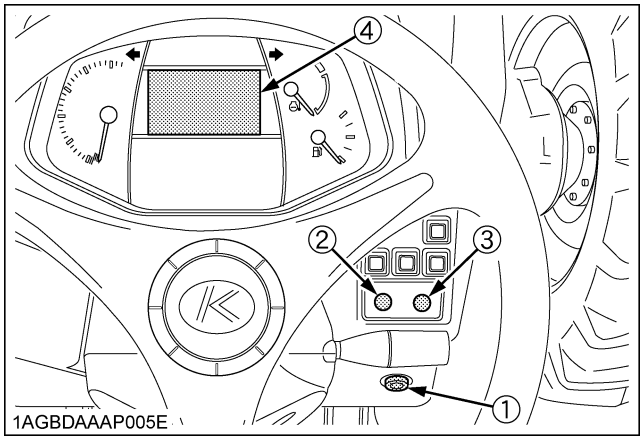

(1) Key switch
(2) Mode selector switch
(3) Select switch
(4) LCD monitor

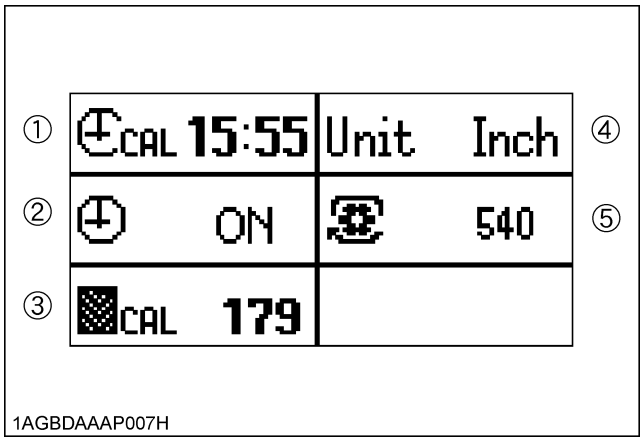

(1) Clock setting
(2) Clock ON/OFF setting
(3) Tire circumference setting
(4) Unit setting
(5) PTO speed display setting

◆ **Clock setting**

1. Press the mode selector switch to choose "Clock setting".
   Then press the "Select" switch, and the clock setting screen appears.

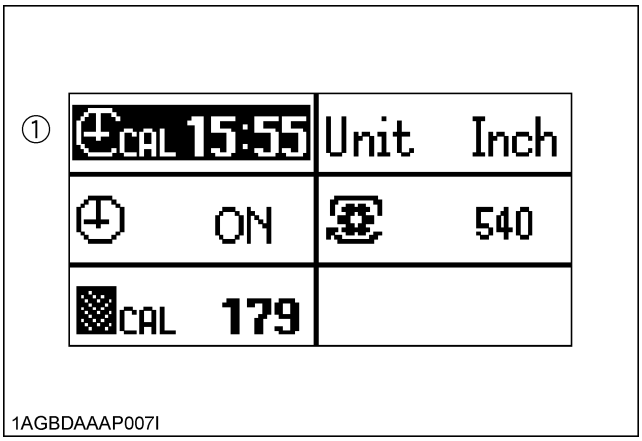

(1) Clock setting

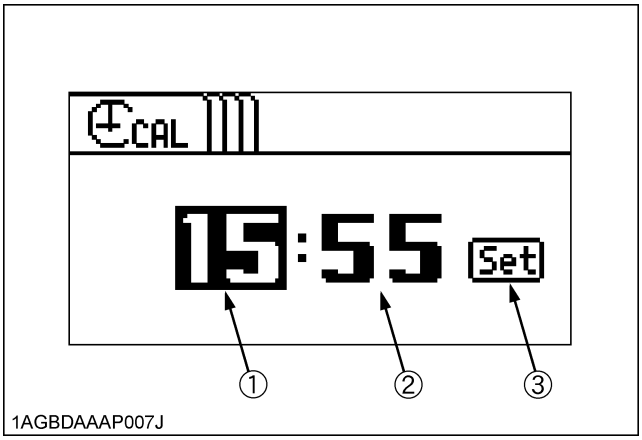

(1) Hour
(2) Minute
(3) Set switch

2. Setting the "Hour" of the clock:
   (1) Press the mode selector switch to choose the "Hour" (highlighted).
   (2) To put the clock forward, press the "Select" switch.
3. Setting the “Minute” of the clock:
   (1) Press the mode selector switch to choose the "Minute" (highlighted).
   (2) Carry out the "Minute" setting in the same way as the "Hour" setting.
4. Press the mode selector switch.
5. To complete the setting, select "Set" with the "Select" switch.
   The various setting mode screen appears again.

https://truckmanualshub.com/

◆ **Setting the clock display ON/OFF**

1. Press the mode selector switch to choose "Clock ON/OFF setting".
   Then press the "Select" switch, and the clock ON/OFF setting screen appears.

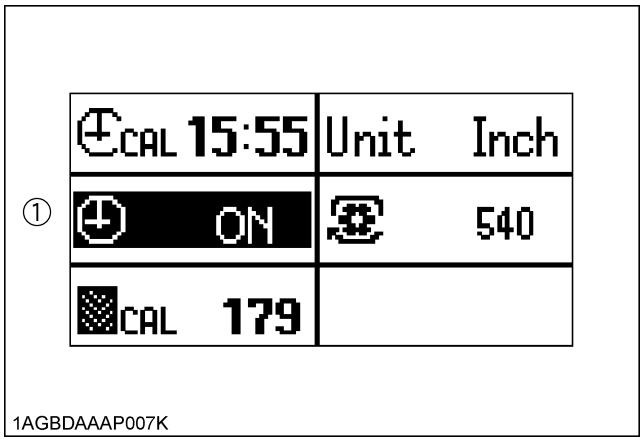

(1) Clock ON/OFF setting

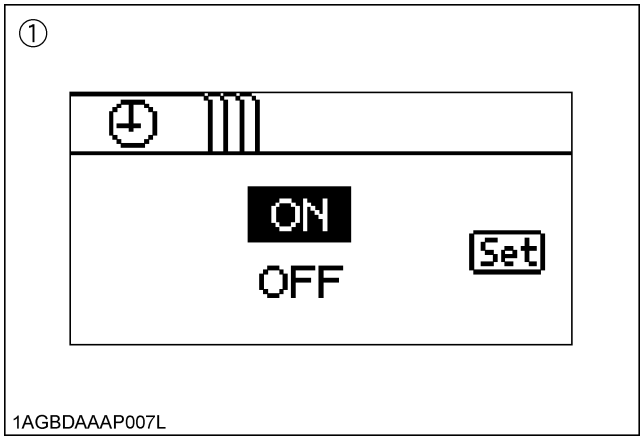

(1) Clock ON/OFF setting screen

2. Press the "Select" switch and select "ON" or "OFF".
3. Press the mode selector switch.
4. To complete the setting, select "Set" with the "Select" switch.
   The various setting mode screen appears again.

◆ **Setting the tire circumference**

When optional different-diameter tires are fitted on the machine, the travel speed display mode must be changed.
Otherwise the travel speed will not get correctly displayed. Such mode switching is also needed when the original tires are back on the machine.

1. Press the mode selector switch to choose "Tire circumference".
   Then press the "Select" switch, and the tire circumference setting screen appears.

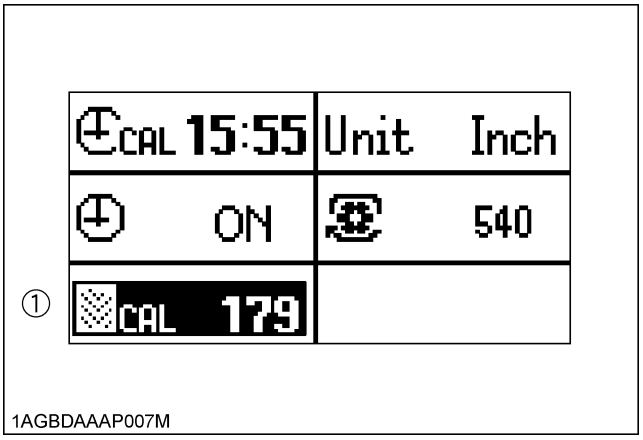

(1) Tire circumference

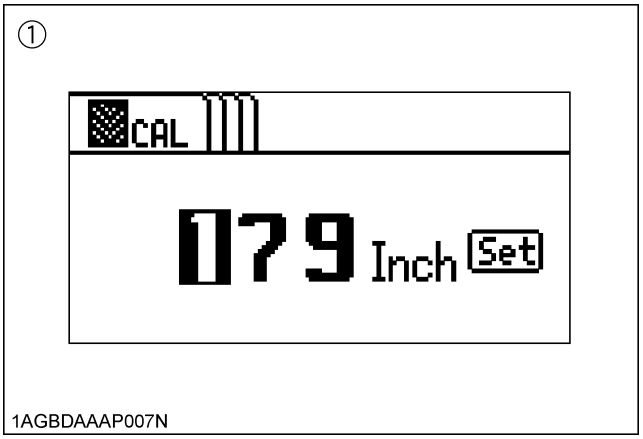

(1) Tire circumference screen

https://truckmanualshub.com/

2. According to the following table, enter the tire circumference value.
   (1) Press the mode selector switch to select a digit.
   (2) To put the number forward, press the "Select" switch. (The numeral changes from 0 to 9 at each push of the switch.)

Tire circumference table (reference)

Rear tire size	Entry (in.)	Entry (cm)
21.5L-16.1R3 LowProfile	134.3	341
16.9-24 LowProfile	152.0	386
19.5L-R4 IND	154.0	391
18.4-26 R3 Turf	167.0	424
16.9-30 R1	171.0	434
18.4-26 R1	173.7	441
18.4-30 R1	179.0	455
18.4R30	183.3	466
16.9-34 R1	184.0	467

3. Press the mode selector switch.
4. To complete the setting, select "Set" with the "Select" switch.
   The various setting mode screen appears again.

◆ **Setting the unit**

1. Press the mode selector switch to choose "Unit setting".
   Then press the "Select" switch, and the unit setting screen appears.

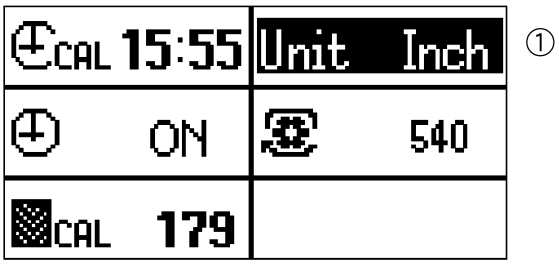

1AGBDAAAP007O

(1) Unit setting

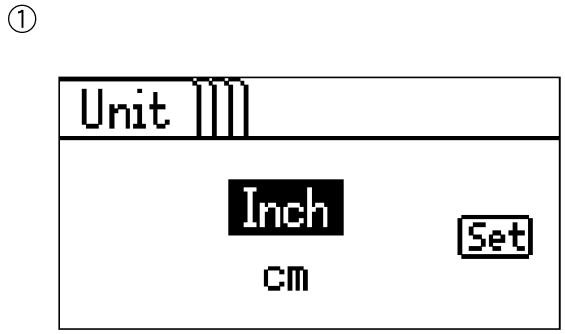

1AGBDAAAP007P

(1) Unit setting screen

2. Press the "Select" switch and select "Inch" or "cm".
3. Press the mode selector switch.
4. To complete the setting, select "Set" with the "Select" switch.
   The various setting mode screen appears again.

https://truckmanualshub.com/

◆ **Setting the PTO speed display**

[with 540 rpm model]

The PTO speed display mode has been factory-set at "540". Do not attempt to change the setting. Otherwise the correct PTO speed will not be displayed in the LCD monitor.

[with 540/540E rpm model]

The PTO speed display mode has been factory-set at "540/540E". Do not attempt to change the setting. Otherwise the correct PTO speed will not be displayed in the LCD monitor.

NOTE :

- The current setting can be checked in the following procedure.

1. Press the mode selector switch to choose "PTO speed display setting".
   Then press the "Select" switch, and the PTO speed display setting screen appears.

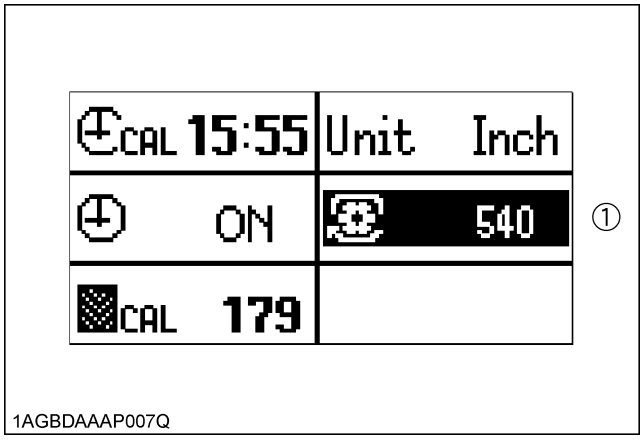

(1) PTO speed display setting

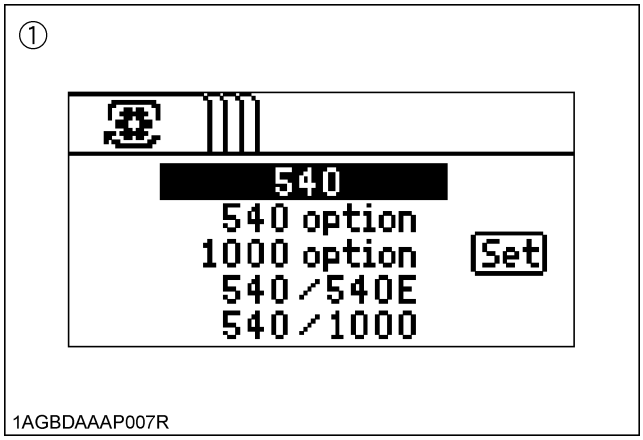

(1) PTO speed display setting screen

2. According to the following table, press the "Select" switch and select the PTO speed.

Model	Select the PTO speed (rpm)
Standard	540
Dual Speed PTO kit	540 option
	1000 option
With PTO gear shift lever	540/540E

3. Press the mode selector switch.
4. To complete the setting, select "Set" with the "Select" switch.
   The various setting mode screen appears again.

https://truckmanualshub.com/

■Performance Monitor

The information required for jobs can be selected and displayed on the LCD screen.
The performance monitor serves to display data picked up from the list below.
Push on the mode selector switch, changes the mode.
Push on the "Select" switch, changes the display in the mode of being selected.

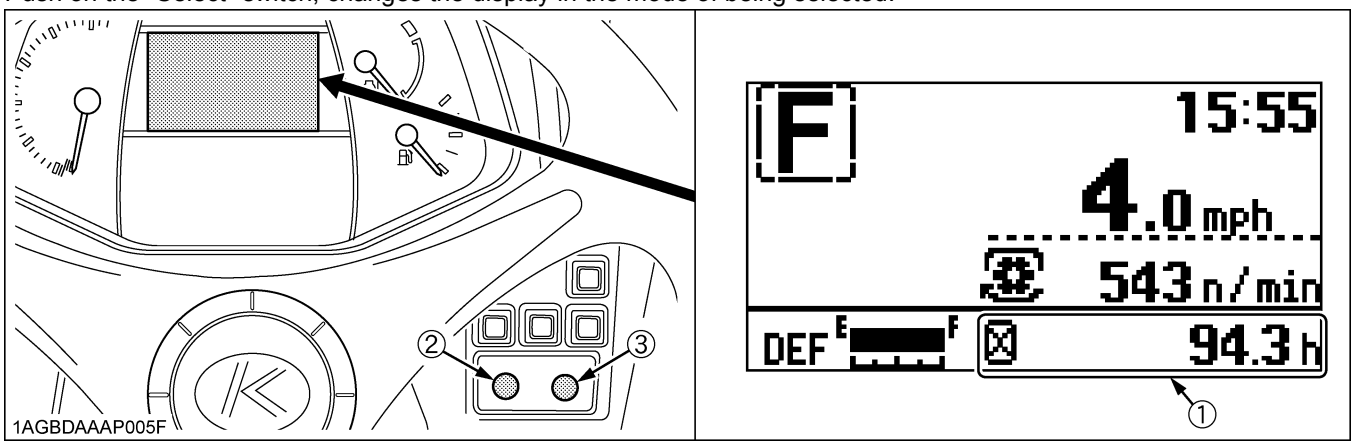

(1) Performance monitor *(2) Mode selector switch* *(3) Select switch*

◆ **List of types of information displayed on the performance monitor**

Selected screen (mode)	Display	Remarks		Reference page
1/4		Elapsed time (Hour meter)	● The hour meter indicates in 6 digits the hours the tractor has been used; the last digit indicates 1/10 of an hour.	---
	TRIP	Trip meter	● The total operating hours, counted from the previous resetting, is displayed.	---
2/4		Instantaneous fuel consumption	● The "Instantaneous fuel consumption" is measured per hour.	---
	Av.	Average fuel consumption	● The "Average fuel consumption" is measured per hour from the previous resetting.	---
		Total fuel consumption	● Displays the total fuel consumption measured from the previous resetting.	---
3/4	PM	PM buildup (percentage) PM buildup (graph)	● Displays the PM buildup inside the DPF muffler. ● Regeneration is needed when the 100% level has been reached. ● The more the bar is extended to the right, the more PM builds up.	---
4/4	A n/min	Memory A rpm	● Engine RPM dual memory A rpm is displayed.	51
	B n/min	Memory B rpm	● Engine RPM dual memory B rpm is displayed.	51

NOTE :
- Hold down the mode selector switch for 2 seconds or longer to reset the "Trip meter", "Average fuel consumption" and "Total fuel consumption" displays to [0.0]

https://truckmanualshub.com/

ELECTRONIC ENGINE CONTROL

The electronically controlled engine which is installed in this tractor performs the following 2 types of control.

1. RPM dual memory setting
2. Constant RPM management control

■RPM Dual Memory Setting

Two different engine speeds can each be set with a single touch by pressing the RPM dual memory switch to the (A) or (B) side. This can be used to eliminate troublesome acceleration operations.

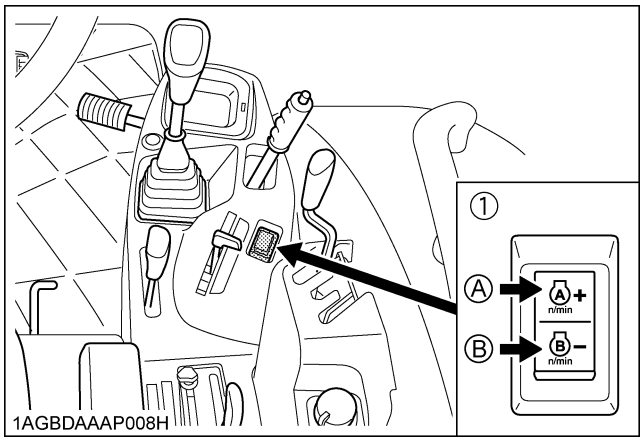

(1) RPM dual memory switch *(A) Switch A* *(B) Switch B*

◆ Example of use

Consider an example in which an engine speed of 2000 rpm is set for the switch (A) side and a speed of 1000 rpm is set for the switch (B) side.

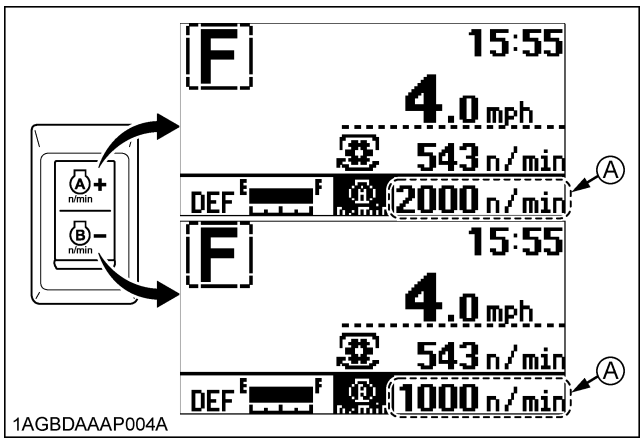

(A) Light up.... *Engine revolution is operating in the rpm memory setting value.*

Flashing.... *Engine revolution is less than the rpm memory setting value.*

Work ⇩	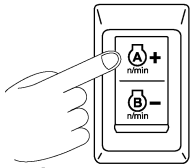 1AGBDAAAP004B	During work, simply press the switch to the (A) side to automatically set an engine speed of 2000 rpm.
Turning ⇩	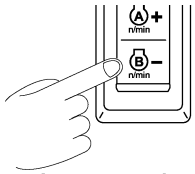 1AGBDAAAP004C	When turning, press the switch to the (B) side to lower the speed to 1000 rpm, allowing turning at low speed.
Work	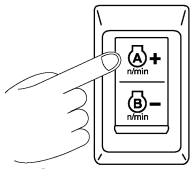 1AGBDAAAP004B	After turning, press the switch again to the (A) side to resume a speed of 2000 rpm.

- Keep the hand throttle lever above the minimum speed. At the minimum speed, a memory setup can not be performed.
- You can also depress the foot throttle to increase the engine speed above the set speed.

◆ Setting the speeds (or changing the speed settings)

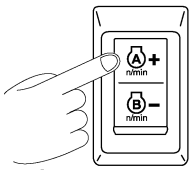

1AGBDAAAP004B

Setting RPM dual memory switch (A)

1. Turn the key switch to "ON". (The speed setting can be made both when the engine is running or stopped.)

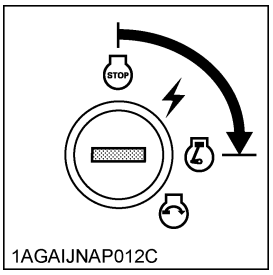

2. Set the hand throttle lever slightly toward the higher-speed side.

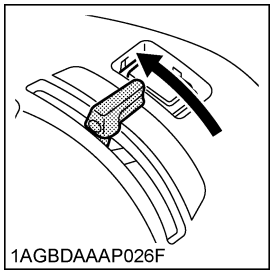

https://truckmanualshub.com/

3. Press the switch (A) side and then release the switch.

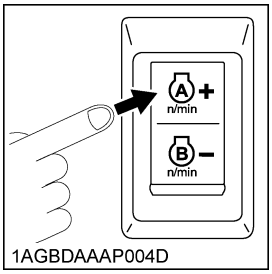

1AGBDAAAP004D

4. Again press and hold down the switch (A) side (2.5 seconds) until the buzzer sounds, then release the switch.

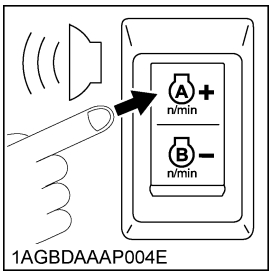

1AGBDAAAP004E

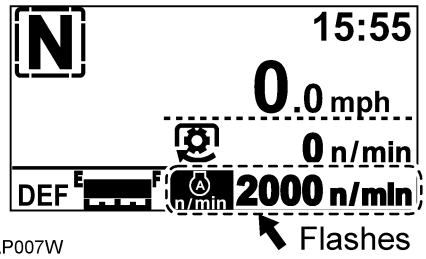

1AGBDAAAP007W

5. Press the switch to the (A) or (B) side and set the speed.
   Pressing and holding down the switch will cause the speed to change continuously. Pressing and releasing the switch changes the speed by 10 rpm each time. Set the desired engine speed while watching the speed display.

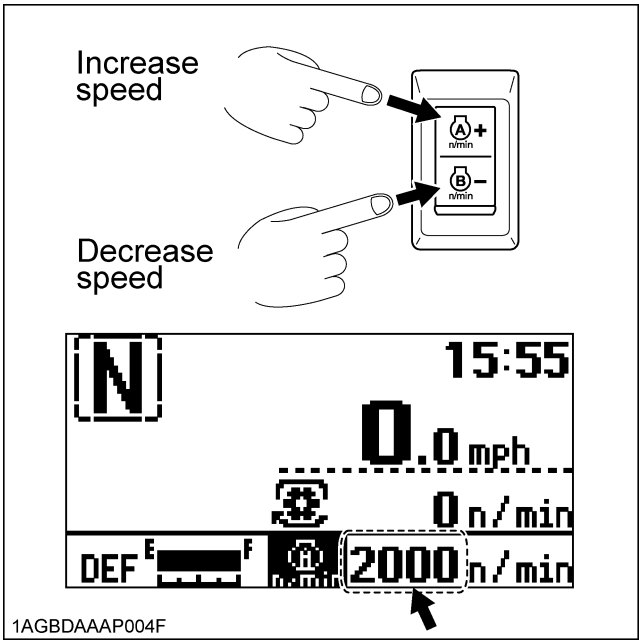

1AGBDAAAP004F

6. If the switch is released and not operated for 4 seconds, a continuous buzzer sound occurs and the setting is completed.
7. Follow the same procedure as for the (A) side to set the speed for the switch (B) side.

NOTE :
- The set speeds will be stored even after the engine is stopped.

◆ **Canceling the setting**

Any of the actions below will cancel the RPM dual memory settings.

1. **[Switch (A) side]**
   When the memory speed is engaged, press the switch (A) again to cancel.
   [Switch (B) side]
   When the memory speed is engaged, press the switch (B) again to cancel.
   When the memory speed is canceled, the speed will return to the speed that is determined by the hand throttle lever (foot throttle).
   (When the switch is pressed, the LCD will display the engine speed that is in effect after memory speed is canceled.)
2. Return the hand throttle lever to the lowest speed position.
3. Turn the key switch to "OFF".

https://truckmanualshub.com/

■Constant RPM Management Control

Constant RPM Management can be turned "ON" or "OFF" by operating the switch. Pressing the switch turns the control "ON" and pressing the switch again turns it "OFF".

◆ **When constant RPM management is "ON"**

Fluctuations in the engine speed due to load fluctuations are reduced and the travel speed and PTO speed are kept nearly constant, allowing stable work. When constant RPM management is "ON", the switch's indicator light up.

◆ **When constant RPM management is "OFF**

As in a conventional engine, the engine speed increases or decreases according to changes in the load. The operator judges the size of the load from the engine speed and engine sound, and can adjust the travel speed or plowing depth to prevent overload on the tractor.

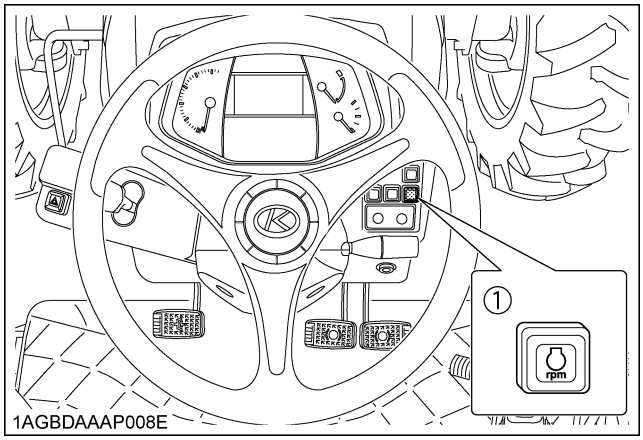

(1) Constant RPM management switch with indicator

NOTE :

- In a mechanically-controlled engine, the engine speed changes according to increases and decreases in the load.
  For example, when working in a hilly area, the load increases and engine speed drops while ascending a slope, and conversely the load drops when descending. These changes in engine speed affect the travel speed and PTO-driven implements. In order to minimize these effects, the operator must make fine adjustments to the travel speed and hand throttle lever.
  When the constant RPM management switch in this tractor with its electronically controlled engine is turned "ON", the engine speed will be kept nearly constant in response to a certain level of load fluctuations. This improves the accuracy of work without the need for troublesome manipulation of the travel speed and hand throttle lever.
- There is a limit to the range within which a constant speed can be maintained. If a load exceeding the engine performance is applied, the engine speed will drop.
- The purpose of constant RPM management is not to increase the engine power.

PARKING

■Parking

WARNING

To avoid personal injury or death:
BEFORE DISMOUNTING TRACTOR

- **ALWAYS SET PARKING BRAKE AND LOWER ALL IMPLEMENTS TO THE GROUND.**
  Leaving transmission in gear with the engine stopped will not prevent the tractor from accidental rolling.
- **STOP THE ENGINE AND REMOVE THE KEY.**

1. Before getting off the tractor, disengage the PTO, lower all implements, place all control levers in their neutral positions, pull the parking brake lever to parking position, stop the engine and remove the key.
2. If it is necessary to park on an incline, be sure to chock the wheels to prevent accidental rolling of the machine.

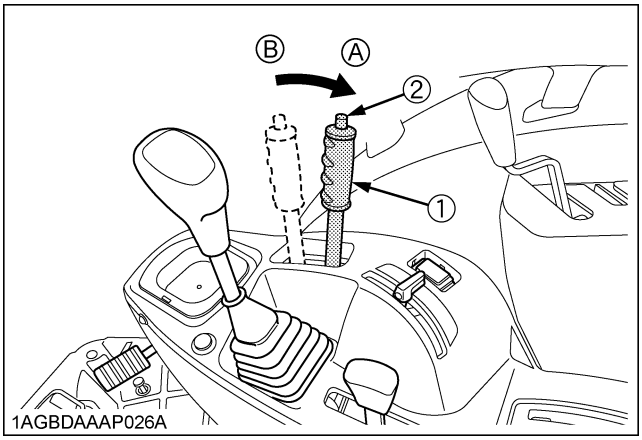

(1) Parking brake lever *(A) "PARKING POSITION"*
(2) Release button *(B) "TRANSPORT POSITION"*

IMPORTANT :

- Do not leave your tractor in the rain. If it cannot be avoided, cover the muffler pipe to prevent water entering.

https://truckmanualshub.com/

OPERATING TECHNIQUES

■Differential Lock

WARNING

To avoid personal injury or death due to loss of steering control:

- **Do not operate the tractor at high speed with differential lock engaged.**
- **Do not attempt to turn with the differential lock engaged.**
- **Be sure to release the differential lock before making a turn in field conditions.**

If one of the rear wheels should slip, step on the differential lock pedal. Both wheels will turn together, then reduce slippage.
Differential lock is maintained only while the pedal is depressed.

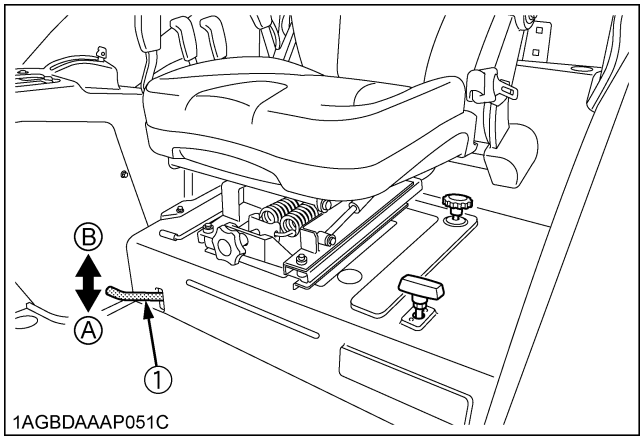

(1) Differential lock pedal *(A) Press to "ENGAGE"*
(B) Release to "DISENGAGE"

IMPORTANT :

- When using the differential lock, always slow the engine down.
- To prevent damage to power train, do not engage differential lock when one wheel is spinning and the other is completely stopped.
- If the differential lock cannot be released, step lightly on the brake pedals alternately.

■Operating the Tractor on a Road

WARNING

To avoid personal injury or death:

- **To help assure straight line stops when driving at transport speeds, lock the brake pedals together. Uneven braking at road speeds could cause the tractor to roll-over.**
- **When traveling on road with 3-point hitch mounted implement attached, be sure to have sufficient front weight on the tractor to maintain steering ability.**
- **When traveling on road with trailer, you must comply with local regulation at all time.**
  The maximum traveling speed with trailer is provided by each country and regulated speed may be different depend on the size of trailer and type of trailer brake system.

Be sure SMV emblem and warning lamps are clean and visible. If towed or rear-mounted equipment obstructs these safety devices, install SMV emblem and warning lamps on equipment.
Consult your local KUBOTA Dealer for further details.

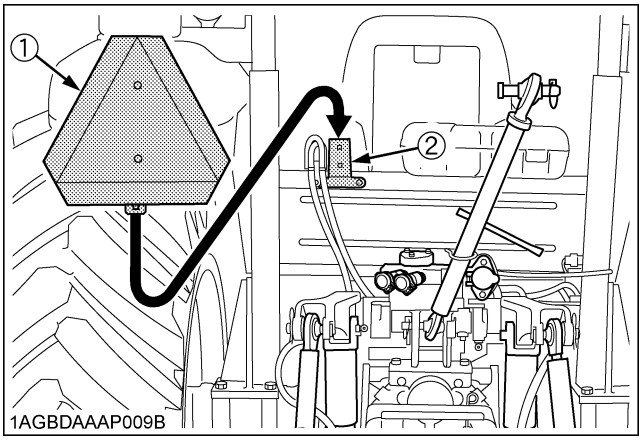

(1) SMV emblem
(2) Bracket

https://truckmanualshub.com/

■Operating on Slopes and Rough Terrain

WARNING

To avoid personal injury or death:

- **Always back up when going up a steep slope. Driving forward could cause the tractor to tip over backward. Stay off hills and slopes too steep for safe operation.**
- **Avoid changing gears when climbing or descending a slope.**
- **If operating on a slope, never disengage the clutch or shift levers to neutral. Doing so could cause loss of control.**
- **Do not drive the tractor close to the edges of ditches or banks which may collapse under the weight of the tractor. Especially when the ground is loose or wet.**

1. Be sure wheel tread is adjusted to provide maximum stability.
   (See "WHEEL ADJUSTMENT" in "TIRES, WHEELS AND BALLAST" section.)
2. Slow down for slopes, rough ground, and sharp turns, especially when transporting heavy, rear mounted equipment.
3. Before descending a slope, shift to a gear low enough to control speed without using brakes.

■Transport the Tractor Safely

1. The tractor, if damaged, must be carried on a truck. Secure the tractor tightly with ropes.
2. Follow the instruction below when towing the tractor: Otherwise, the tractor's powertrain may get damaged.
   - Set the all shift levers to "NEUTRAL" position.
   - If possible, start engine and select 2WD, if creep speed is fitted ensure that it is disengaged.
   - Tow the tractor using its front hitch or drawbar.
   - Never tow faster than "10 km/h (6.2 mph)".

■Directions for Use of Power Steering

1. Power steering is activated only while the engine is running. Slow engine speeds make the steering a little heavier. While the engine is stopped, the tractor functions in the same manner as tractors without power steering.
2. When the steering wheel is turned all the way to the stop, the relief valve is activated. Do not hold the steering wheel in this position for a long period of time.
3. Avoid turning the steering wheel while the tractor is stopped, or tires may wear out sooner.
4. The power steering mechanism makes the steering easier. Be careful when driving on a road at high speeds.

■Trailer Electrical Outlet

A trailer electrical outlet is supplied for use with trailer or implement.

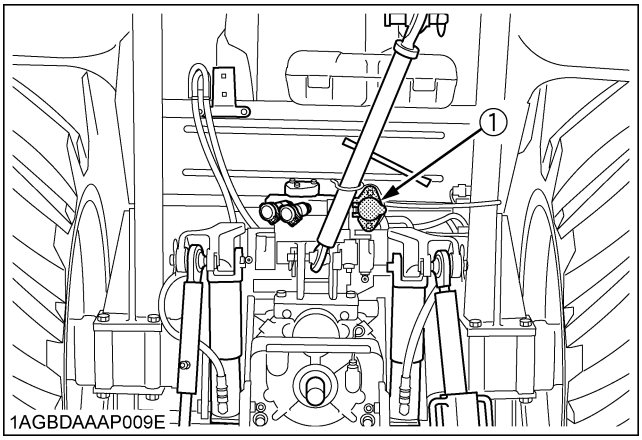

(1) Trailer electrical outlet

◆ **Function of each terminals in trailer electrical outlet**

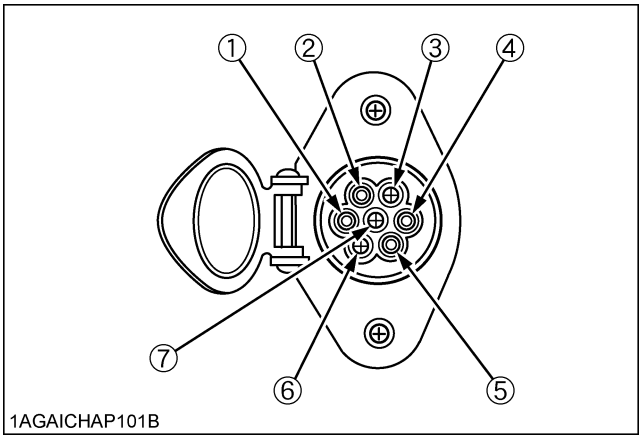

Terminal	Function
(1)	Ground
(2)	Tail light Sidemarker light Parking light
(3)	Turn signal light (LH)
(4)	Brake stop light
(5)	Turn signal light (RH)
(6)	Registration plate light
(7)	---

https://truckmanualshub.com/

■Electrical Outlet

A electrical outlet is supplied for use with implement.

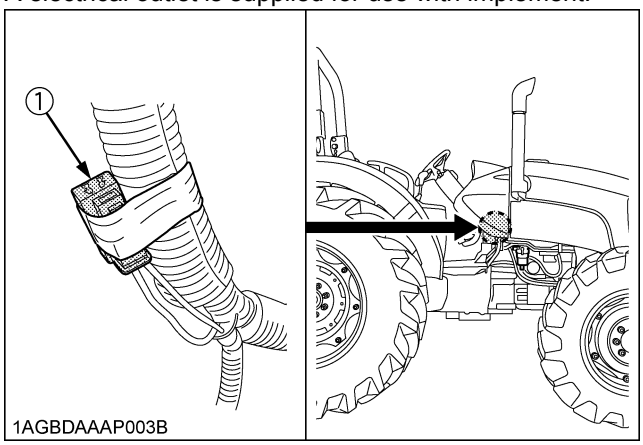

(1) Accessory electrical outlet (15A)

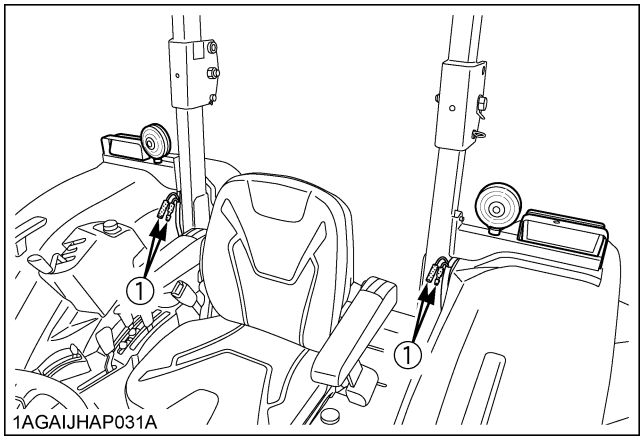

(1) Accessory electrical outlet for rear work light (35W)

https://truckmanualshub.com/

PTO

PTO OPERATION

WARNING

To avoid personal injury or death:

- **Disengage PTO, stop engine, and allow all rotating components to come to a complete stop before connecting, disconnecting, adjusting, or cleaning any PTO driven equipment.**

■PTO Clutch Control Switch

The PTO clutch control switch engages or disengages the PTO clutch which gives the PTO independent control. Turn the switch to "ON" to engage the PTO clutch. Turn the switch to "OFF" to disengage the PTO clutch.

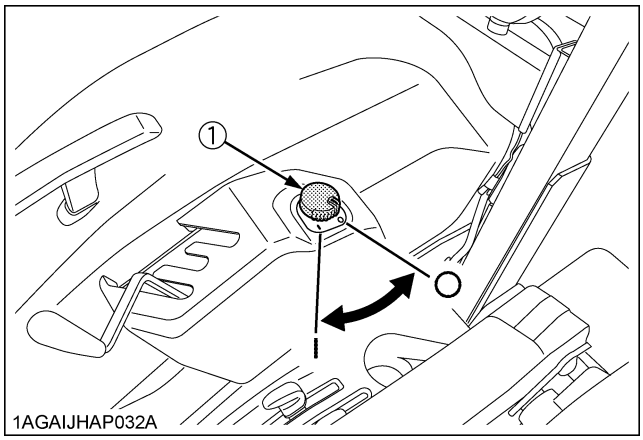

(1) PTO clutch control switch ❙ *"ON"* ○ *"OFF"*

◆ **PTO Clutch Control Switch**

To turn ON

While pushing the switch, turn clockwise to the " ❙ " position and release your hand. (In the ON position, switch slightly rises itself.)

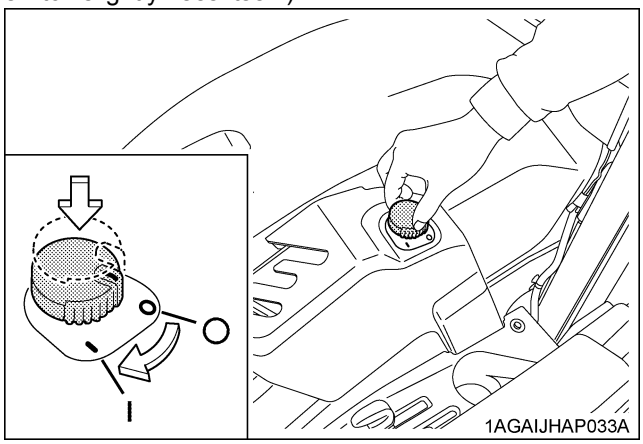

To Turn OFF

Tap on top of the switch, and the switch will return to the OFF position.

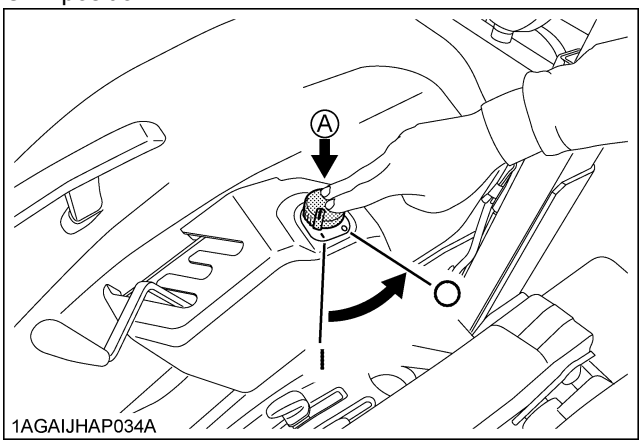

(A) "PUSH"

IMPORTANT :

- To avoid shock loads to the PTO, reduce engine speed when engaging the PTO, then open the throttle to the recommended speed.

NOTE :

- Tractor engine will not start if PTO clutch control switch is in the engaged "ON" position.

◆ **PTO Clutch Indicator**

The PTO clutch indicator turns on while PTO clutch control switch is in "ON" (Engage) position.

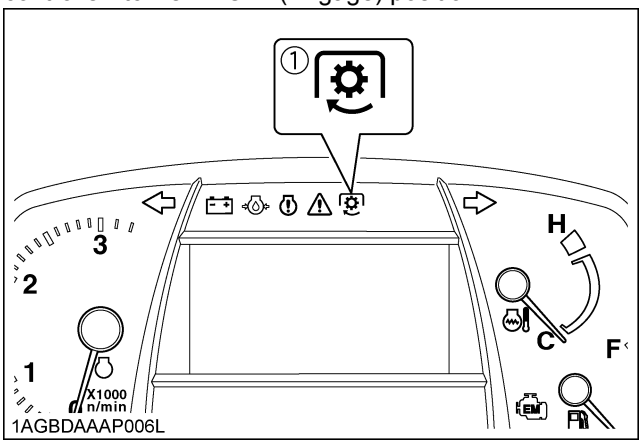

(1) PTO clutch indicator

https://truckmanualshub.com/

■PTO Gear Shift Lever

[if equipped]

WARNING

To avoid personal injury or death:

- **Be sure to observe the PTO shaft speed prescribed for the individual implements. It is extremely dangerous to run an implement at high speed that is meant to be operated at low speed. Use only when this higher rpm is specifically recommended by the implement manufacturer.**

The PTO gear shift lever can be set to either 540 rpm or 540E rpm positions.
Move this lever to either position with the PTO clutch control switch set to "OFF".

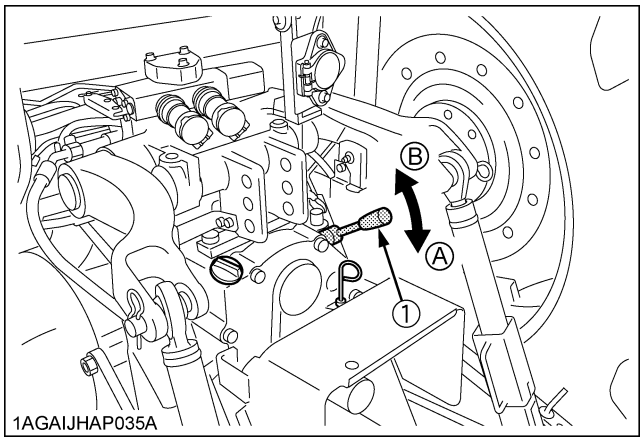

(1) PTO gear shift lever *(A) 540 rpm*
(B) 540E rpm

NOTE :

- When light load, select the "540E" position for economical operation.

PTO gear shift lever	Engine speed rpm	PTO speed rpm
540	2035	540
540E	1519	540

■PTO Speed Limiter

NOTE :

- Move the PTO gear shift lever (if equipped) to "540E" and then turn on the PTO clutch control switch, and the rev-limiter indicator lights up on the meter panel.
- If the PTO clutch control switch is turned on with the engine rpm higher than the PTO 540E limit level, the PTO clutch indicator on the meter panel starts blinking and the PTO is disabled. After a while, the engine rpm automatically drops below the PTO 540E limit level and the PTO starts functioning. At the same time, the flashing PTO clutch indicator stays "ON".
- If the PTO clutch control switch is turned "OFF" but the engine rpm fails to rise with the throttle, return the engine rpm to a lower level. This enables acceleration again.

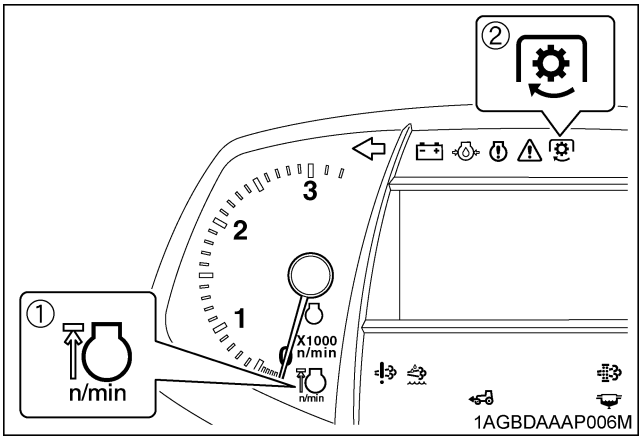

(1) Rev-limiter indicator
(2) PTO clutch indicator

PTO	Limitation PTO / Engine speed (rpm)
540E	630 / 1772

https://truckmanualshub.com/

■1000 rpm PTO Shaft

[if equipped]

WARNING

To avoid personal injury or death:

- **Be sure to observe the PTO shaft speed prescribed for the individual implements. It is extremely dangerous to run an implement at high speed that is meant to be operated at low speed. Use only when this higher rpm is specifically recommended by the implement manufacturer.**

By interchanging the PTO shafts, 2 different PTO shaft speeds can be obtained.

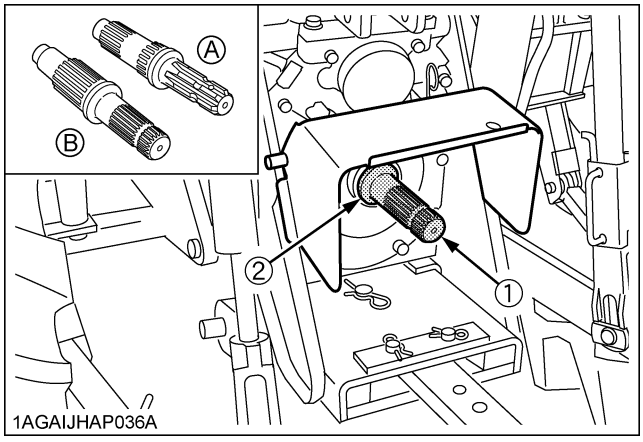

(1) PTO shaft *(A) 540 rpm PTO shaft*
(2) Snap ring *(B) 1000 rpm PTO shaft*

◆ **PTO shaft interchanging procedure**

1. The 6-spline 540 rpm PTO shaft is standard equipment.
2. Place an oil pan under the PTO shaft to catch oil spillage. Remove the snap ring, and then the PTO shaft.
3. Install the 21-spline PTO shaft (1000 rpm). To ensure that it is tight, push it in by turning.
4. Reinsert the snap ring.
5. Set the distance from drawbar pin hole to the rear end of PTO shaft according to the following instructions.

IMPORTANT :

- For maximum PTO shaft speeds of various implements, see the implement Operator's Manual.

	Engine speed rpm	PTO speed rpm
540 rpm PTO shaft	2035	540
1000 rpm PTO shaft	2389	1000

PTO	PTO Shaft Type	Distance	Drawbar
540 rpm	6 - spline	355 mm (14 in.)	B hole
1000 rpm	21 - spline	406 mm (16 in.)	A hole

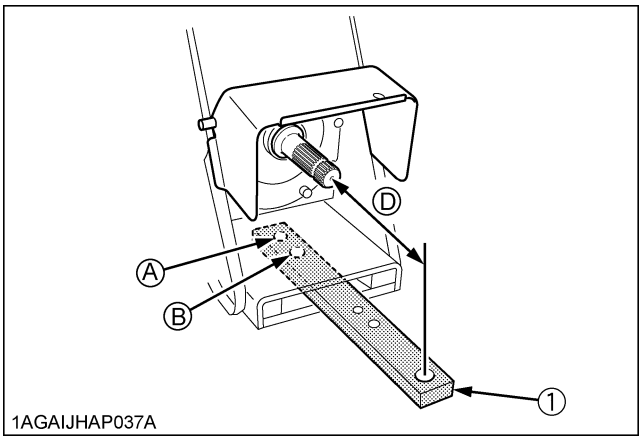

(1) Drawbar *(D) "DISTANCE"*

https://truckmanualshub.com/

■LCD Monitor Message

1. The PTO rpm can be checked in the LCD monitor. (See "LCD MONITOR" in "OPERATING THE TRACTOR" section.)
2. When the PTO system gets engaged (ON), the indicator lights up.

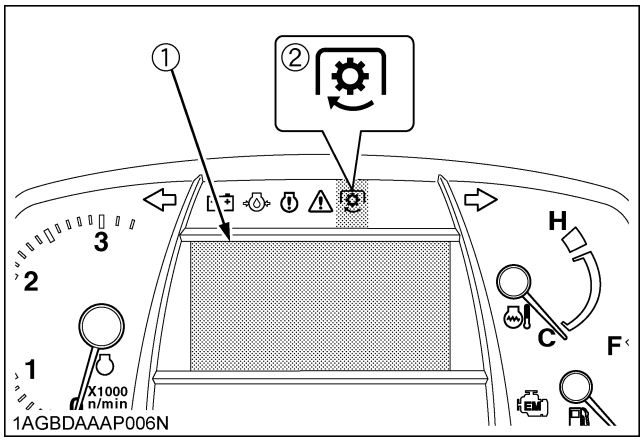

(1) LCD monitor
(2) PTO clutch indicator

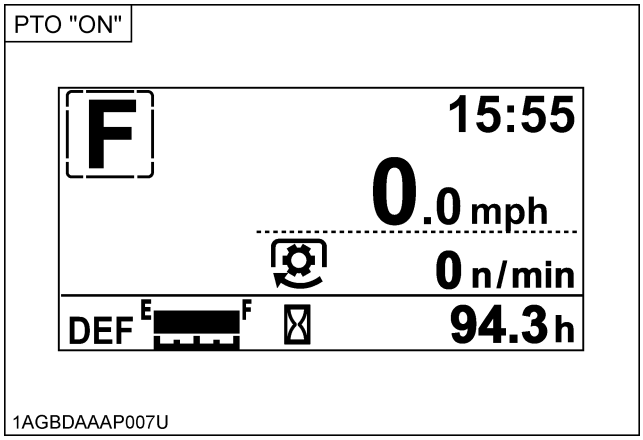

NOTE: [Interchangeable PTO (540/1000 rpm) model]

- When the PTO speed is changed from 540 rpm to 1000 rpm, it is necessary to switch the PTO speed display mode. Otherwise the PTO speed will not get correctly displayed in the LCD monitor. Such mode switching is also needed when returning to the 540 rpm PTO speed.
  (See "LCD MONITOR" in "OPERATING THE TRACTOR" section.)

■PTO Shaft Cover and Shaft Cap

Keep the PTO shaft cover in place at all times. Replace the PTO shaft cap when the PTO is not in use. Before connecting or disconnecting a drive shaft to PTO shaft, be sure engine is "OFF". Raise up the PTO shaft cover. Afterward be sure to return the PTO shaft cover to the "NORMAL POSITION".

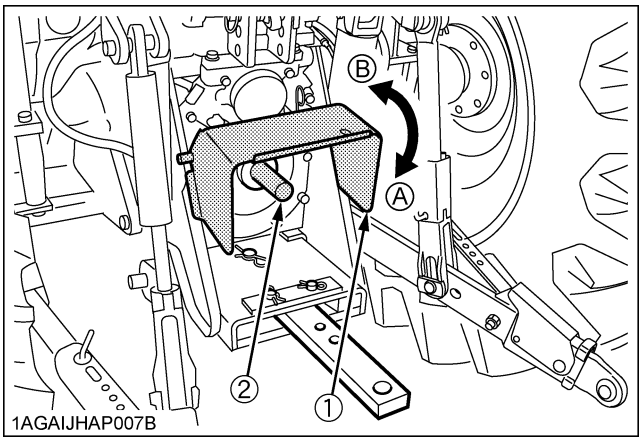

(1) PTO shaft cover
(2) PTO shaft cap
(A) "NORMAL POSITION"
(B) "RAISED POSITION"

IMPORTANT :

- The universal joint of the PTO drive shaft is technically limited in its moving angle. Refer to the PTO Drive Shaft Instructions for proper use.

https://truckmanualshub.com/

3-POINT HITCH & DRAWBAR

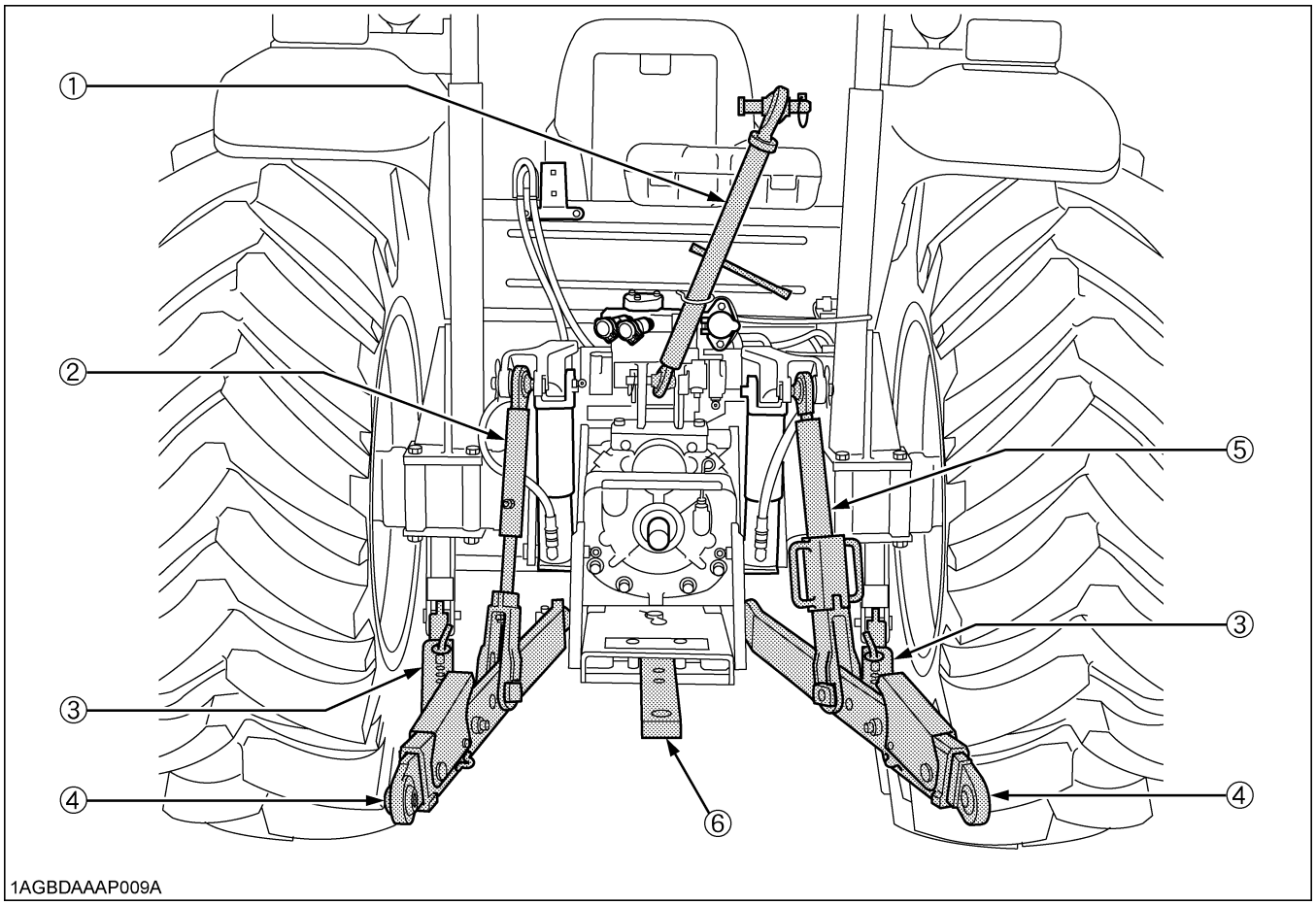

(1) Top link
(2) Lifting rod (Left)
(3) Telescopic stabilizers
(4) Lower link
(5) Lifting rod (Right)
(6) Drawbar

https://truckmanualshub.com/

3-POINT HITCH

1. Make preparations for attaching implement.

■Selecting the holes of Lower Links

There are 2 holes in the lower links. For most operations the lifting rods should be attached to the (B) hole.

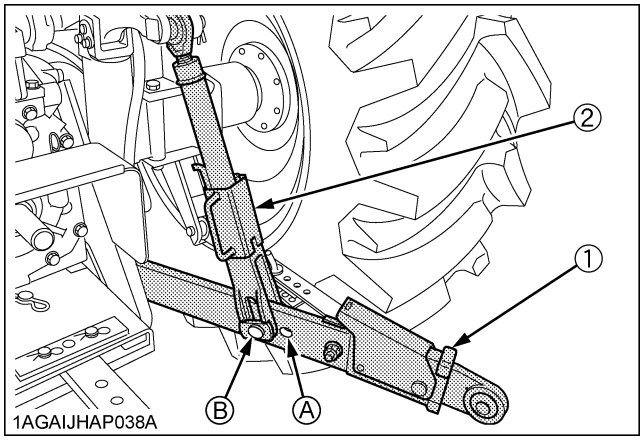

(1) Lower link holes: (A), (B)
(2) Lifting rod

NOTE :
- The lifting rods may be attached to (A) for greater lifting force.

■Adjusting Lateral Float

To allow the implement to follow ground contour, attach the rectangular washers and pin heads in vertical position. To hold the implement, reset the rectangular washers and pin heads in horizontal position.

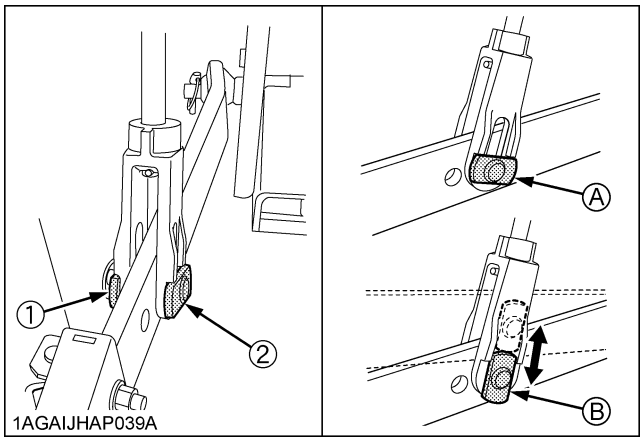

(1) Rectangular washer (A) Horizontal position
(2) Pin head (B) Vertical position

◆ **Floating mechanism**

When the floating mechanism is used, the implement is able to follow the tractor freely in response to the soil and ground conditions. This is suited for operation with implements wider than the tractor.

■Selecting the Top Link Mounting Holes

Select the proper set of holes by referring to the "Hydraulic Control Unit Use Reference Chart" in Hydraulic Unit section.

If the hydraulic unit is set for draft control, draft response is more sensitive when an implement is connected to the lower set of top link mounting holes. If draft control is not required, it is recommended to use the top set (1).

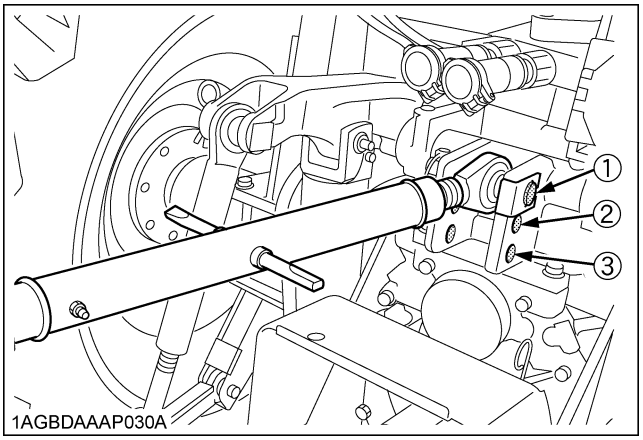

■Drawbar

Remove the drawbar if a close mounted implement is attached.

https://truckmanualshub.com/

2. Attaching and detaching implements

WARNING

To avoid personal injury or death:

- **Be sure to stop the engine.**
- **Do not stand between tractor and implement unless parking brake is applied.**
- **Before attaching or detaching implement, locate the tractor and implement on a firm level surface.**
- **Whenever an implement or other attachment is connected to the tractor 3-point hitch, check full range of operation for interference, binding or PTO separation.**
- **Do not exceed maximum allowable length of either lifting rod, or the lifting rod will come apart and the 3-point equipment may fall.**

■Lifting Rod (Left)

By turning the rod itself, the lifting rod varies its length. When extending the rod, do not exceed the groove on the rod thread.

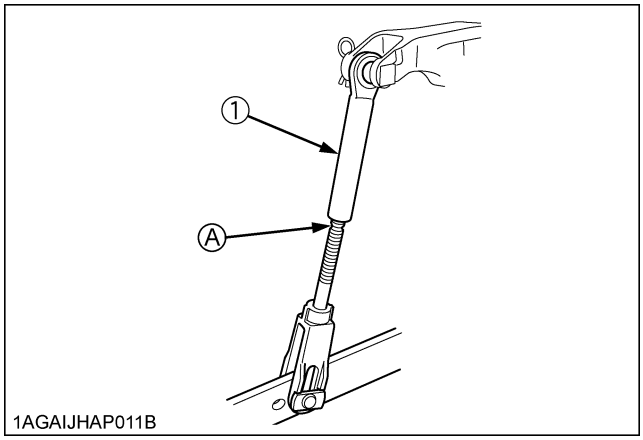

(1) Lifting rod *(A) "GROOVE"*

■Lifting Rod (Right)

WARNING

To avoid personal injury or death:

- **Do not extend lifting rod beyond the groove on the thread rod.**

1. To adjust the length of the lifting rod, lift the adjusting handle and turn to desired length.
2. After adjusting, lower the lifting rod adjusting handle to the lock position.
3. When extending the rod using adjusting handle, do not exceed the groove on the rod thread.

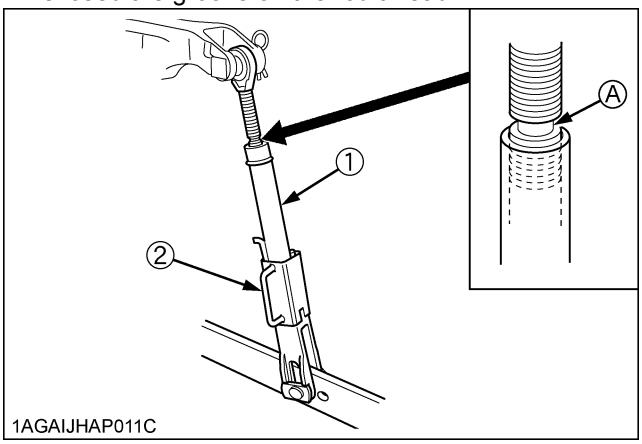

(1) Lifting rod *(A) "GROOVE"*
(2) Adjusting handle

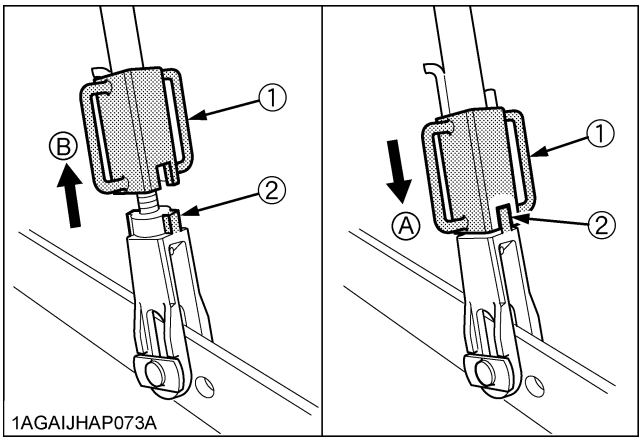

(1) Adjusting handle *(A) "LOCK POSITION"*
(2) Lock pin *(B) "UNLOCK POSITION"*

https://truckmanualshub.com/

■Top Link

WARNING

To avoid personal injury or death:

- **When extending the top link, do not exceed the groove on the top link thread, or the top link will come apart and the 3-point equipment may fall.**

1. Adjust the angle of the implement to the desired position by shortening or lengthening the top link.
2. The proper length of the top link varies according to the type of implement being used.

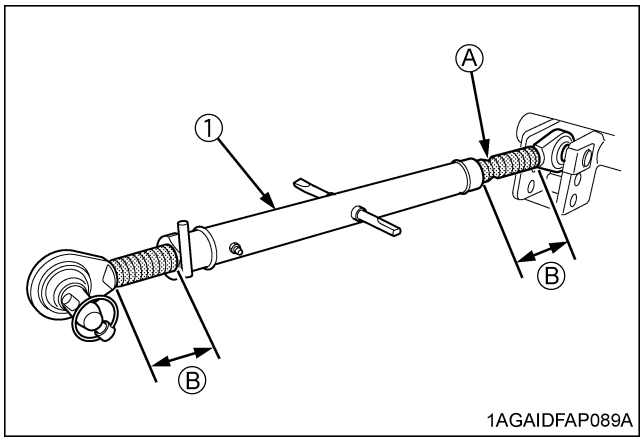

(1) Top link
(A) "GROOVE"
(B) "Length of the screw"

NOTE :

- The length of the screw at both ends of the top link must be the same always.

■Telescopic Stabilizers

Adjust the telescopic stabilizers to control horizontal sway of the implement. Select the proper set of holes by referring to the "Hydraulic Control Unit Use Reference Chart" in "REMOTE HYDRAULIC CONTROL SYSTEM" in "HYDRAULIC UNIT" section.

After aligning satisfactorily, insert the set-pin through any one of the 5 holes on the outer tube that align with one of the holes on the inner bar, both stabilizers will be locked.

If the set-pin is inserted through the slot to engage one of the holes on the inner bar, a limited degree of sway will be permitted.

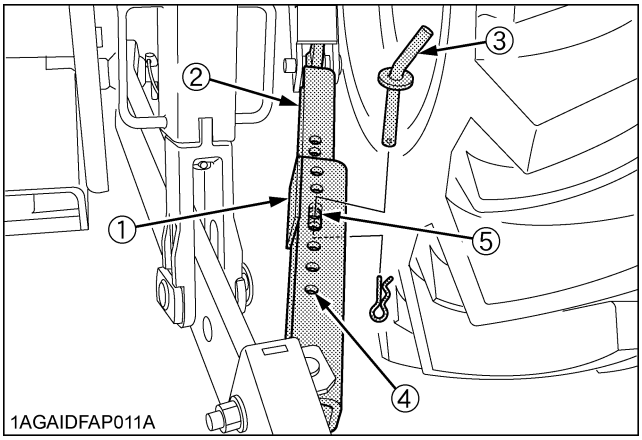

(1) Outer tube
(2) Inner bar
(3) Set-pin
(4) Hole
(5) Slot

■Telescopic Lower Links

To attach an implement, follow the instructions below:

1. Push the levers, pull out the lower link ends, and attach to the implement.
2. Back up the tractor slightly to make sure the lower links are pushed in securely.

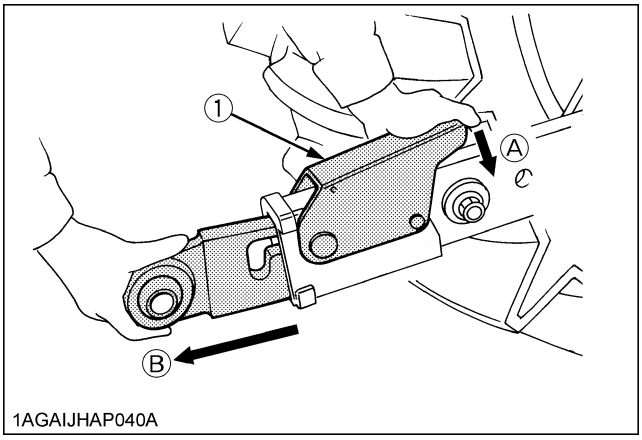

(1) Lever
(A) "PUSH"
(B) "PULL OUT"

https://truckmanualshub.com/

DRAWBAR

WARNING

To avoid personal injury or death:

- **Never pull from the top link, the rear axle or any point above the drawbar. Doing so could cause the tractor to tip over rearward causing personal injury or death.**

■Adjusting Drawbar Length

When towing an implement, it is recommended that the (A) hole in drawbar be utilized.

The drawbar load is specified in the "IMPLEMENT LIMITATIONS" section.

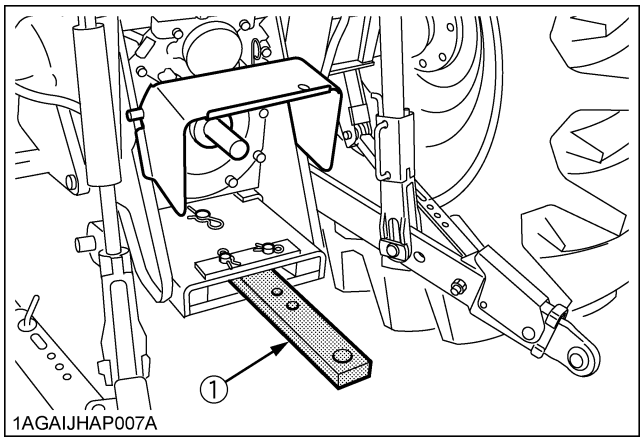

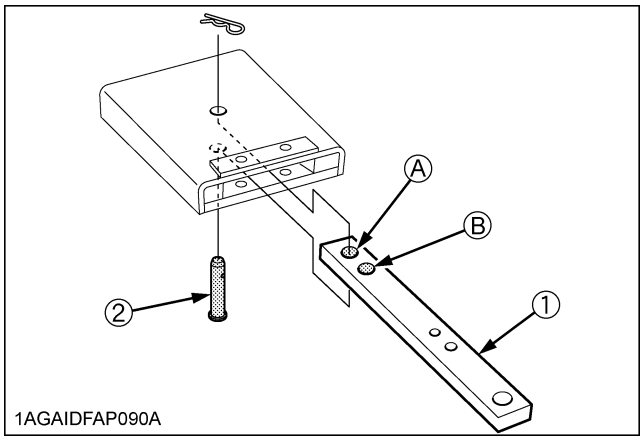

(1) Drawbar *Holes: (A), (B)*
(2) Pivot pin

■Swing Drawbar

The drawbar can be used in 3 different ways as illustrated below. Assemble it correctly with locating pins.

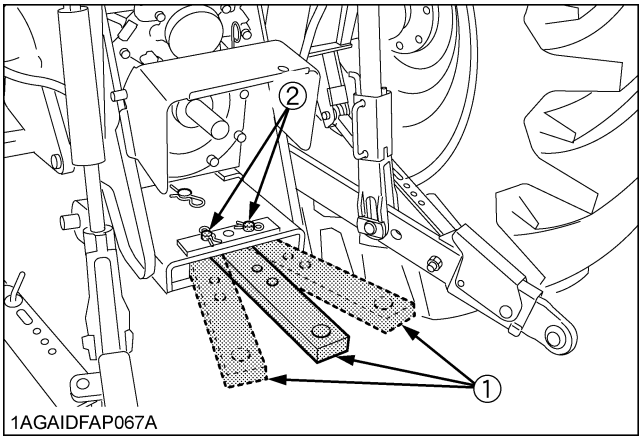

(1) Drawbar
(2) Locating pin

https://truckmanualshub.com/

HYDRAULIC UNIT

The standard tractor has following hydraulic control systems as shown below. Therefore, use the most appropriate system for the implement you are using.

◆ **3-Point Hitch Control System**
1. Position Control
2. Draft Control
3. Mixed Control
4. Float Control

◆ **Remote Hydraulic Control System**

IMPORTANT :
- Do not operate until the engine is warmed up. If operation is attempted when the engine is still cold, the hydraulic system may be damaged.
- If noises are heard when implement is lifting after the hydraulic control lever has been activated, the hydraulic mechanism is not adjusted properly. Unless corrected, the unit will be damaged. Contact your KUBOTA Dealer for adjustment.

3-POINT HITCH CONTROL SYSTEM

WARNING

To avoid personal injury or death:
- **Before using the 3-point hitch controls, ensure that no person or object is in the area of the implement or 3-point hitch. Do not stand on or near the implement or between the implement and tractor when operating the 3-point hitch controls.**

■Position Control

This will control the working depth of 3-point hitch mounted implement regardless of the amount of pull required.

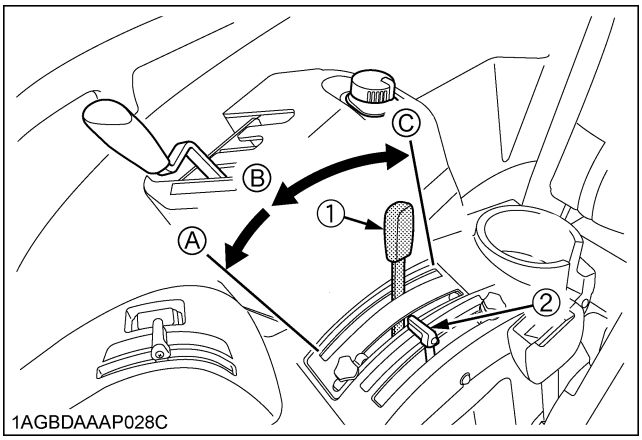

(1) Position control lever
(2) Draft control lever
(A) "FLOAT"
(B) "DOWN"
(C) "UP"

■Draft Control

This will control the pull of the 3-point implement. As the load on the 3-point hitch changes due to various soil conditions, the draft control system automatically responds to these changes by either raising or lowering the implement slightly to maintain a constant pull.
Place the position control lever in the lowest position and set the implement pull with the draft control lever.

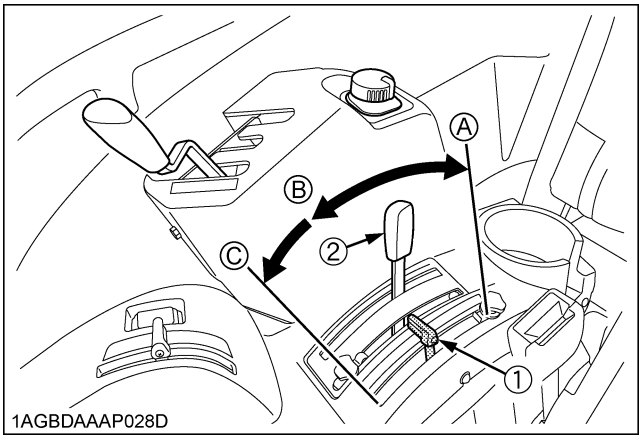

(1) Draft control lever
(2) Position control lever
(A) "SENSITIVE"
(B) "INSENSITIVE"
(C) "FLOAT"

https://truckmanualshub.com/

■Mixed Control

In draft control, when draft decreases, the implement automatically lowers to increase draft. However, the implement sometimes lowers too much. To limit the degree, the implement can be lowered, set the position control lever at the lowest working depth desired for the implement. Lower the draft control lever to the point where the implement is at the desired depth.
This stops the implement from going too deep and causing loss of traction and ground speed.

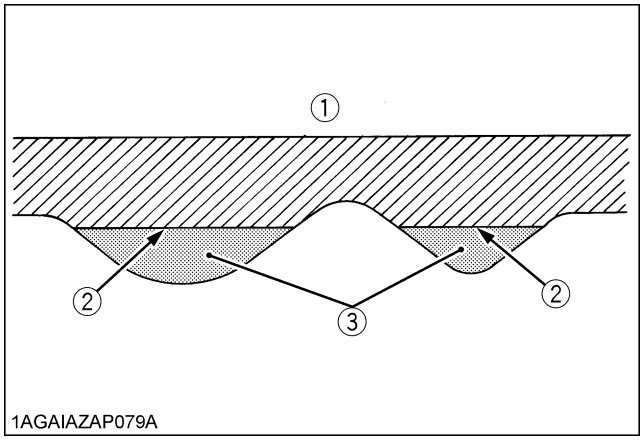

(1) Ground surface
(2) Implement penetration limit
(3) Light soil

■Float Control

Place both the draft control lever and the position control lever in the float position to make the lower links move freely along with the ground conditions.

■3-point Hitch Lowering Speed

WARNING

To avoid personal injury or death:

- **Fast lowering speed may cause damage or injury. Lowering speed of implement should be adjusted to 2 or more seconds.**

The lowering speed of the 3-point hitch can be controlled by adjusting the 3-point hitch lowering speed knob.

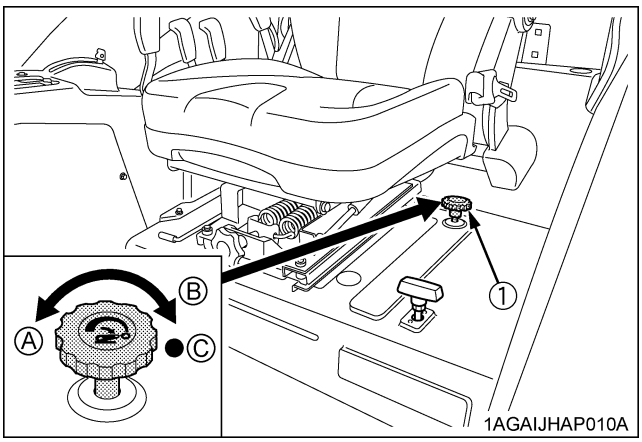

(1) 3-point hitch lowering speed knob
(A) "FAST"
(B) "SLOW"
(C) "LOCK"

REMOTE HYDRAULIC CONTROL SYSTEM

The hydraulic auxiliary control valves can be installed up to triple segments.

■Remote Control Valve

There are 2 types of remote valves available for these models.

- Double acting valve with detents and self cancelling:
  This valve may be placed in the detent mode. The lever will stay in this position until the pressure reaches a predetermined level or a cylinder reaches the end of its stroke. Then it will automatically return to neutral.
- Double acting valve with float position:
  This valve may be placed in the float mode with the control lever all the way forward. The cylinder is free to extend or retract, letting an implement such as a loader bucket follow the ground.

https://truckmanualshub.com/

■Remote Control Valve Lever

The remote control valve lever directs pressurized oil flow to the implement hydraulic system.

[Example: Installing triple segment valves]

1st	Double acting valve with detents and self cancelling (standard)
2nd	Double acting valve with float position (option)
3rd	Double acting valve with detents and self cancelling (option)

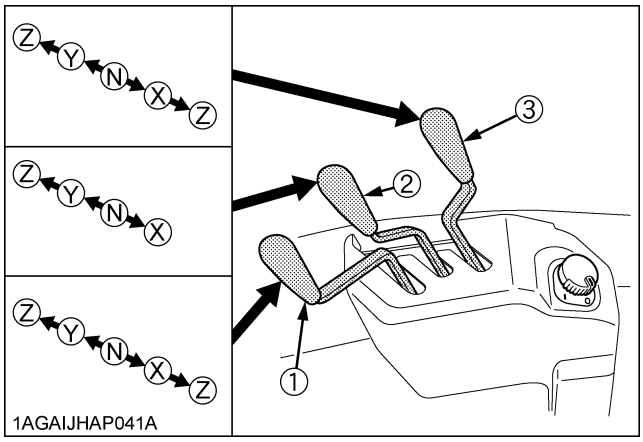

(1) Remote control valve lever 1
(2) Remote control valve lever 2
(3) Remote control valve lever 3

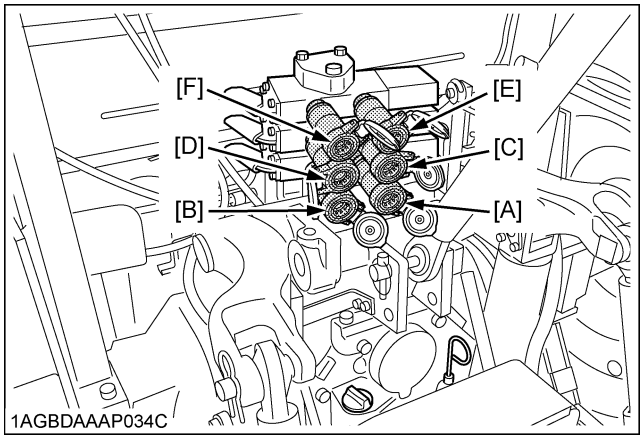

Pressure →
Returning ←

Lever (1)		Lever position			
		Z (detent)	Y	X	Z (detent)
Port	[A]	out →		in ←	
	[B]	in ←		out →	

Lever (2)		Lever position			
		Z (detent)		Y	X
Port	[C]	in	Float	out →	in ←
	[D]	out		in ←	out →

Lever (3)		Lever position			
		Z (detent)	Y	X	Z (detent)
Port	[E]	out →		in ←	
	[F]	in ←		out →	

IMPORTANT :

- Do not hold the lever in the "pull" or "push" position once the remote cylinder has reached the end of the stroke, as this will cause oil to flow through the relief valve. Forcing oil through the relief valve for extended periods will overheat the oil.
- When using the tractor hydraulic system to power front loader, do not operate boom and bucket cylinders simultaneously.

NOTE :

- Connect the pressure of load side of implement cylinders to ports [B], [D] or [F] which have built in load check valve to prevent leak down.
- To use the single-acting cylinder with the float valve, connect this cylinder to the [B], [D] or [F] port.
  To extend a single-acting cylinder, pull the remote control valve lever rearward. To retract a cylinder, push it fully forward to the "FLOAT" position. Do not hold it in the down position, the transmission fluid may be overheat.

https://truckmanualshub.com/

■Remote Control Valve Coupler Connecting and Disconnecting

WARNING

To avoid personal injury or death:
- **Stop the engine and relieve pressure before connecting or disconnecting lines.**
- **Do not use your hand to check for leaks.**

◆ **Connecting**
1. Clean both couplers.
2. Remove dust plugs.
3. Insert the implement coupler to the tractor hydraulic coupler.
4. Pull the implement coupler slightly to make sure couplers are firmly connected.

◆ **Disconnecting**
1. Lower the implement first to the ground to release hydraulic pressure in the hoses.
2. Clean the couplers.
3. Relieve pressure by moving hydraulic control levers with engine shut off. Pull the hose straight from the hydraulic coupler to release it.
4. Clean oil and dust from the coupler, then replace the dust plugs.

NOTE :
- Your local KUBOTA Dealer can supply parts to adapt couplers to hydraulic hoses.

■Flow Control Valve (option)

The optional flow control valve may be added for the following purposes.
1. To operate within limits, the remote control valve (2) above the flow control valve (3) and the 3-point hitch at the same time without one affecting the other.
2. To operate within limits, the remote control valve (2) above the flow control valve (3) and the other remote control valve (1) at the same time without one affecting the other. Activating the remote control valve (1) will interrupt the operation of the 3-point hitch.
3. To maintain within limits, the constant speed of an attachment (hydraulic motor RPM, for example) when connected to the remote control valve (2) above the flow control valve (3).

NOTE :
- At slower engine speeds the total hydraulic flow rate may be inadequate for simultaneous operation of the remote control valve (2) and the 3-point hitch or the remote control valve (1), or operation of an attachment connected to the remote control valves (1)(2). Under these conditions, the engine speed must be increased to provide additional hydraulic flow.

■Adjusting the flow rate

WARNING

To avoid the possibility of personal injury or death be aware of the following when making adjustments:
- **The 3-point hitch operation is influenced by the combination of the adjustment of the flow control valve and the engine speed.**
- **The 3-point hitch may rise slowly or not at all at low engine rpm.**
- **The 3-point hitch may rise suddenly if engine rpm is increased, or, flow control adjustment is changed.**

Refer to the illustration below.
1. The flow rate for the remote control valve (2), located on above the flow control valve (3), can be adjusted.
2. Turn the flow control knob (4) counterclockwise (A), and the flow rate for the remote control valve (2) increases. A clockwise turn (B) of the knob causes the flow to decrease. If the knob is turned all the way (C), there will be no flow.
3. To adjust the flow rate, set the engine speed to the operating RPM, turn the flow control knob once all the way clockwise (C), and then turn it gradually counterclockwise until a required flow rate is reached.

https://truckmanualshub.com/

NOTE :
- Full adjustment of the valve will occur in approximately 1 1/2 revolutions of the flow control knob. Turning the flow control knob beyond this point will have no affect on the flow rate.

IMPORTANT :
- When there is no need to adjust the flow rate, turn the flow control knob all the way counterclockwise and keep it in this position.

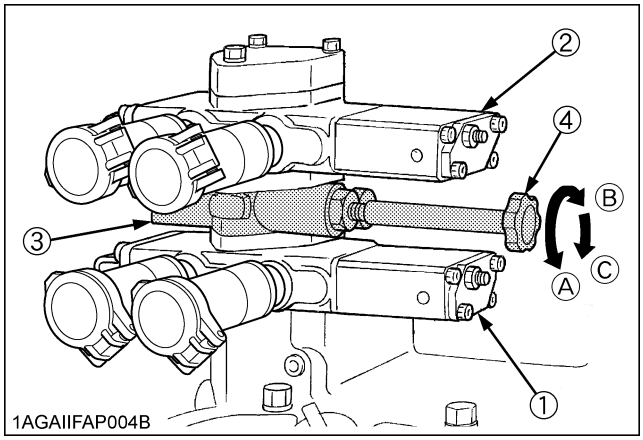

(1) Remote control valve (1)
(2) Remote control valve (2)
(3) Flow control valve
(4) Flow control knob
(A) "INCREASE"
(B) "DECREASE"
(C) "STOP"

■Positions and advantages of the flow control valve

Refer to illustration below.

◆ **Position 1**

1. The attachment control speed (hydraulic motor RPM, for example) of the remote control valve (1) can be maintained at a constant level within limits.
2. The remote control valve (1) and the 3-point hitch can be operated at the same time. The 3-point lift speed will be influenced by the level of flow required at remote control valve (1).

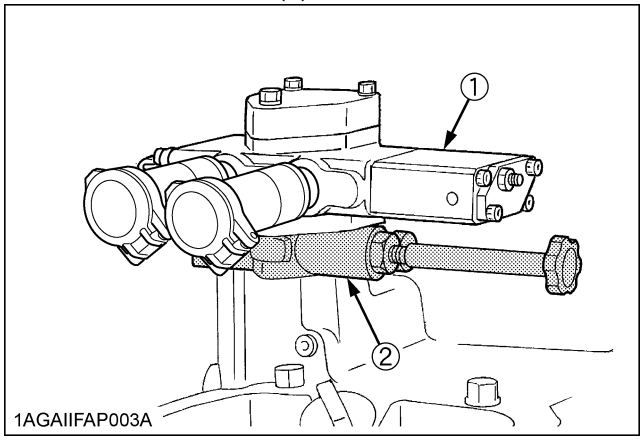

(1) Remote control valve (1)
(2) Flow control valve

◆ **Position 2**

1. The attachment control speed (hydraulic motor RPM, for example) of the remote control valve (2) can be maintained at a constant level.
2. The remote control valve (2) and the 3-point hitch can be operated at the same time with the speed of the 3-point being influenced by the adjustment range of the flow control valve.
3. Remote control valves (1) and (2) can be operated at the same time with operation of the 3-point hitch being interrupted by activation of valve (1).
4. The operation of valve (1) is influenced by the flow adjustment to valve (2).
5. The 3-point hitch lift speed and the flow available for valve (1) are influenced by the flow adjustment of valve (2).

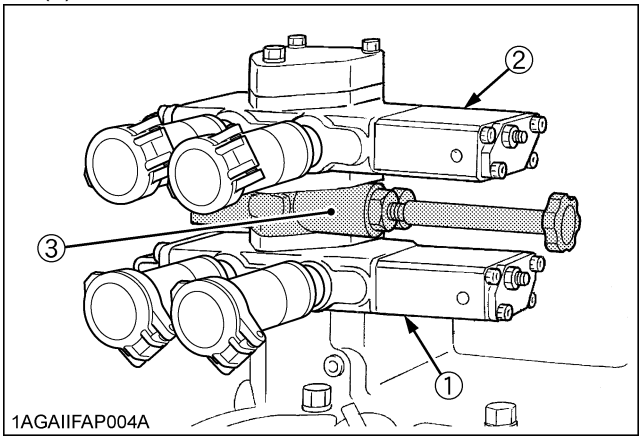

(1) Remote control valve (1)
(2) Remote control valve (2)
(3) Flow control valve

https://truckmanualshub.com/

■Hydraulic Control Unit Use Reference Chart

In order to handle the hydraulics properly, the operator must be familiar with the following.
Though this information may not be applicable to all types of implements and soil conditions, it is useful for general conditions.

Implement	 1AGAIAZAP122A Soil condition	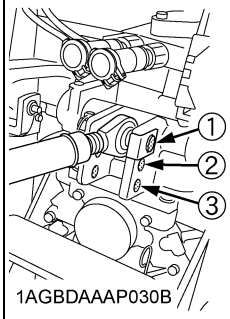 1AGBDAAAP030B Top link mounting holes	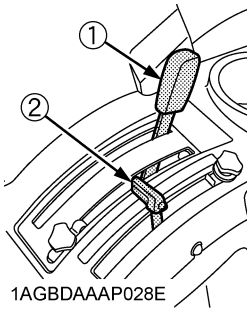 1AGBDAAAP028E (1) Position control lever (2) Draft control lever	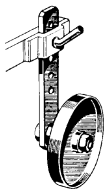 1AGAIAZAP070A Gauge wheel	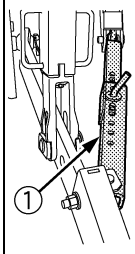 1AGAIDFAP069A (1) Telescopic stabilizers	Remarks
Moldboard plow	Light soil Medium soil Heavy soil	3 2 or 3 2	Draft and Mixed control (Place the draft control lever to the suitable position and set the implement pull with the position control lever.)	YES/NO	Loose	Insert the set-pin through the slot on the outer tube that align with one of the holes on the inner bar. For implements with gauge wheels, lower the position control lever all way.
Disc plow	---	2 or 3				
Harrower (spike, springtooth, disc type)	---	2				
Sub-soiler.....						
Weeder, ridger.....	---	1	Position control (Hold the draft control lever at the front most position during operation.)	YES	Tighten	Telescopic stabilizer should be tight enough to prevent excessive implement movement when implement is in raised position. For implements with gauge wheels, lower the position control lever all way.
Earthmover, digger, scraper, manure fork, rear carrier.....				YES/NO		
Mower (mid- and rear-mount type) Hayrake, tedder.....				NO		

https://truckmanualshub.com/

TIRES, WHEELS AND BALLAST

TIRES

WARNING

To avoid personal injury or death:

- **Do not attempt to mount a tire on a rim. This should be done by a qualified person with the proper equipment.**
- **Always maintain the correct tire pressure. Do not inflate tires above the recommended pressure shown in the operator's manual.**

IMPORTANT :

- Do not use tires other than those approved by KUBOTA.

NOTE :

- When optional different-diameter tires are fitted on the machine, the travel speed display mode must be changed. Otherwise the travel speed will not get correctly displayed. Such mode switching is also needed when the original tires are back on the machine.
  (See "LCD MONITOR" in "OPERATING THE TRACTOR" section.)

■Inflation Pressure

Though the tire pressure is factory-set to the prescribed level, it naturally drops slowly in the course of time. Thus, check it everyday and inflate as necessary.

NOTE :

- Maintain the maximum pressure in front tires, if using a front loader or when equipped with a full load of front weights.

	Tire sizes	Inflation Pressure
Front	7.50-18, 6PR	280 kPa (2.8 kgf/cm^2, 40 psi.)
	9.5L-15, 6PR	220 kPa (2.2 kgf/cm^2, 32 psi.)
	9.5-22, 6PR	200 kPa (2.0 kgf/cm^2, 29 psi.)
	10.00-16, 6PR	200 kPa (2.0 kgf/cm^2, 29 psi.)
	11.2-24, 6PR	160 kPa (1.6 kgf/cm^2, 23 psi.)
	12.4-24, 6PR	140 kPa (1.4 kgf/cm^2, 20 psi.)
Rear	16.9-30, 6PR	110 kPa (1.1 kgf/cm^2, 16 psi.)
	16.9-34, 6PR	120 kPa (1.2 kgf/cm^2, 18 psi.)
	18.4-30, 6PR	110 kPa (1.1 kgf/cm^2, 16 psi.)

■Dual Tires

Dual tires are not approved.

WHEEL ADJUSTMENT

WARNING

To avoid personal injury or death:

- **When working on slopes or when working with trailer, set the wheel tread as wide as practical for maximum stability.**
- **Support tractor securely on stands before removing a wheel.**
- **Do not work under any hydraulically supported devices. They can settle, suddenly leak down, or be accidentally lowered. If necessary to work under tractor or any machine elements for servicing or adjustment, securely support them with stands or suitable blocking beforehand.**
- **Never operate tractor with a loose rim, wheel, or axle.**

■Front Wheels (with 2-wheel drive)

Front tread width can be adjusted as shown with the standard equipped tires.

To change the tread width

1. Remove the front axle mounting bolts and the tie-rod mounting bolts.
2. Move the front axles (right and left) to the desired position, and tighten the bolts.
3. Adjust the toe-in: [1 to 5 mm (0.04 to 0.2 in.)]
   (See "Adjusting Toe-in" in "EVERY 200 HOURS" in "PERIODIC SERVICE" section.)

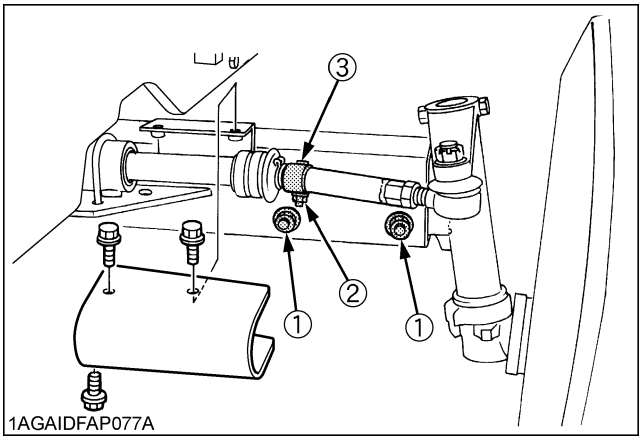

(1) Front axle mounting bolt
124 to 147 N-m (12.6 to 15 kgf-m) [91.5 to 108.9 ft-lbs.]
(2) Tie-rod mounting bolt
61 to 71 N-m (6.2 to 7.2 kgf-m) [44.8 to 52.1 ft-lbs.]
(3) Tie rod clamp

https://truckmanualshub.com/

	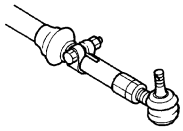	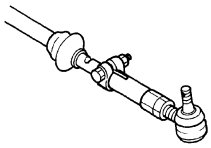	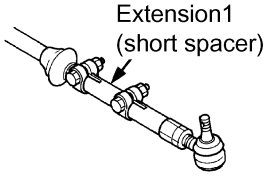	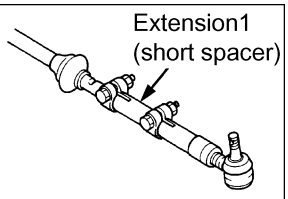
	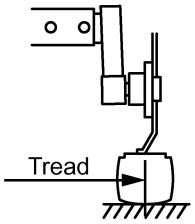	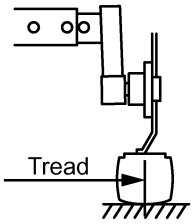	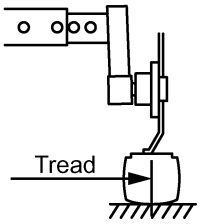	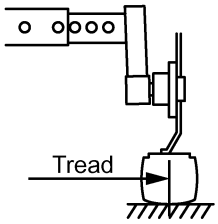
7.5-18	1440 mm (56.7 in.)	1540 mm (60.6 in.)	1640 mm (64.6 in.)	1740 mm (68.5 in.)
10.00-16 9.5L-15	1505 mm (59.3 in.)	1605 mm (63.2 in.)	1705 mm (67.1 in.)	1805 mm (71.1 in.)

	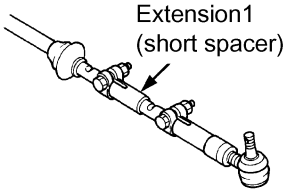	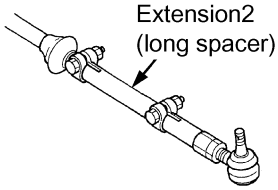	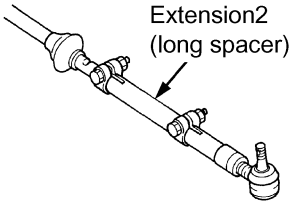
	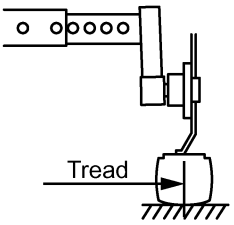	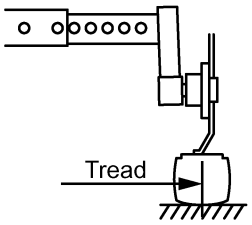	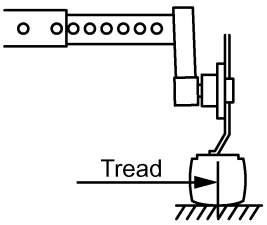
7.5-18	1840 mm (72.4 in.)	1940 mm (76.4 in.)	2040 mm (80.3 in.)
10.00-16 9.5L-15	1905 mm (75.0 in.)	2005 mm (78.9 in.)	2105 mm (82.9 in.)

1AGBDAAAP058A

IMPORTANT :

- The front tread width for the front loader application on 2WD models should not be greater than 1540 mm (60.6 in.).

WARNING

To avoid personal injury or death:

- **Before jacking up the tractor, park it on a firm and level ground and chock the rear wheels.**
- **Fix the front axle to keep it from pivoting.**
- **Select jacks that withstand the machine weight and set them up as shown below.**

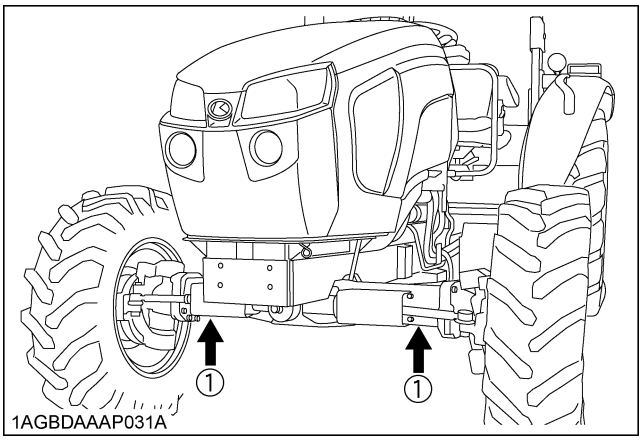

1AGBDAAAP031A

(1) Jack points

https://truckmanualshub.com/

■Front Wheels (with 4-wheel drive)

Front tread width can be adjusted as shown with the standard equipped tires.

To change the tread width

1. Remove the wheel rim and disk mounting bolts.
2. Change the position of the rim and disk (right and left) to the desired position, and tighten the bolts.
3. Adjust the toe-in [2 to 8mm (0.1 to 0.3 in.)]
   See "Adjusting Toe-in" in "EVERY 200 HOURS" in "PERIODIC SERVICE" section.

IMPORTANT :

- Always attach wheels as shown in the drawing.
- If not attached as illustrated, transmission parts may be damaged.
- When re-fitting or adjusting a wheel, tighten the bolts to the following torques then recheck after driving the tractor 200m (200 yards) and 10 times of shuttle movement by 5 m (5 yards), and thereafter according to service interval. (See "MAINTENANCE" section.)

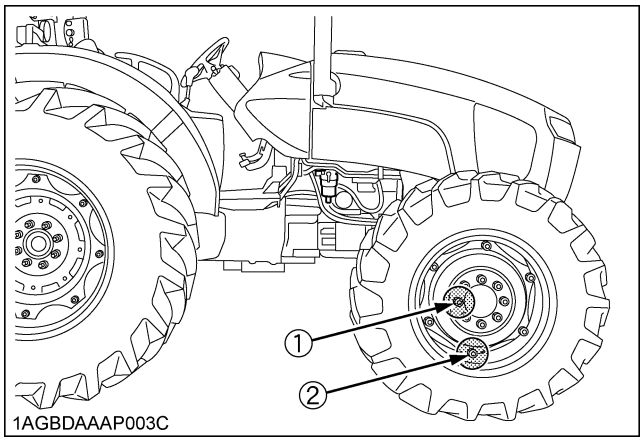

N-m (kgf-m)[ft-lbs]

(1)	(2)		
	TITAN		Non-TITAN
260 to 304 (26.5 to 31.0) [192 to 224]	Waffle 298 to 366 (30.4 to 37.3) [220 to 270]	Non-Waffle 244 (24.9) [180]	260 to 304 (26.5 to 31.0) [192 to 224]

NOTE :

- Wheels with beveled or tapered holes: Use the tapered side of lug nut.

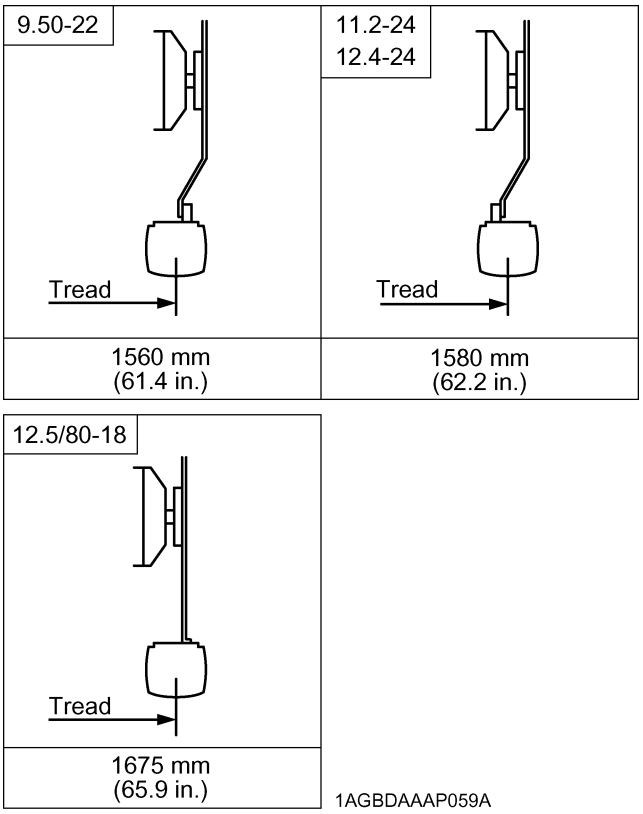

WARNING

To avoid personal injury or death:

- **Before jacking up the tractor, park it on a firm and level ground and chock the rear wheels.**
- **Fix the front axle to keep it from pivoting.**
- **Select jacks that withstand the machine weight and set them up as shown below.**

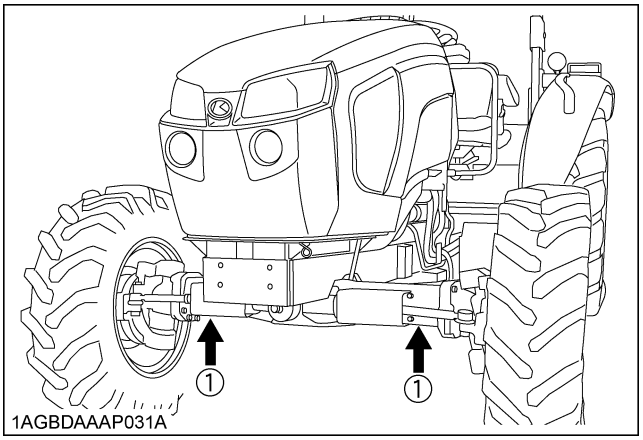

(1) Jack points

https://truckmanualshub.com/

■Rear Wheels

Rear tread width can be adjusted as shown with the standard equipped tires.

To change the tread width

1. Remove the wheel rim and / or disk mounting bolts.
2. Change the position of the rim and / or disk (right and left) to the desired position, and tighten the bolts.

IMPORTANT :

- Always attach wheels as shown in the drawing.
- If not attached as illustrated, transmission parts may be damaged.
- When re-fitting or adjusting a wheel, tighten the bolts to the following torques then recheck after driving the tractor 200m (200 yards) and 10 times of shuttle movement by 5 m (5 yards), and thereafter according to service interval. (See "MAINTENANCE" section.)

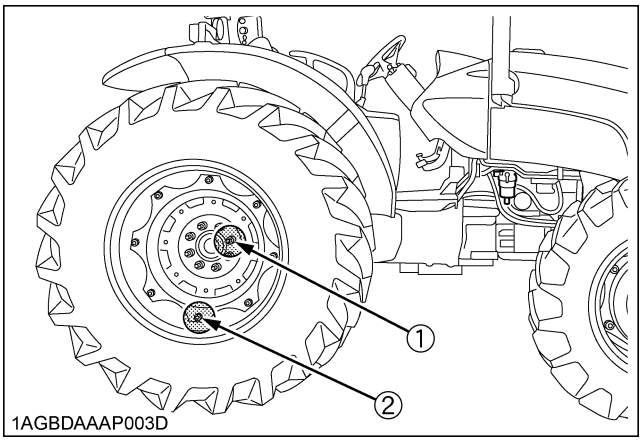

N-m (kgf-m) [ft-lbs]

(1)	(2)		
	TITAN		Non-TITAN
	Steel disk	Cast iron disk	
343 to 401 (35.0 to 41.0) [254 to 297]	244 (24.9) [180]	260 to 304 (26.5 to 31.0) [192 to 224]	

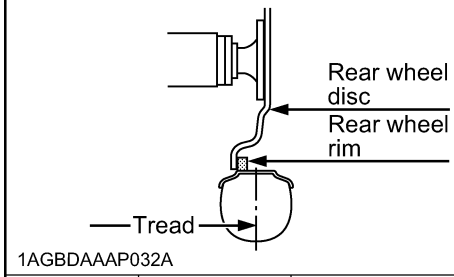			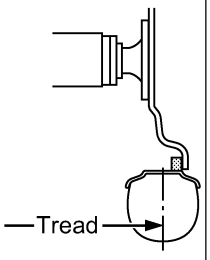	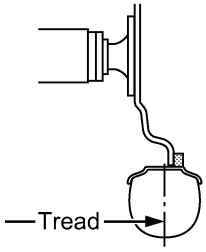	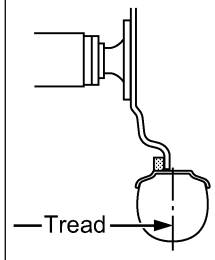	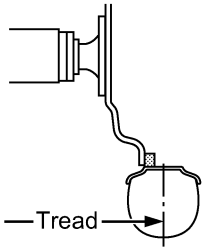
M5-091	16.9–30	1520 mm (59.8 in.)	1620 mm (63.8 in.)	1720 mm (67.7 in.)	1820 mm (71.7 in.)	1920 mm (75.6 in.)
M5-111	18.4–30	1520 mm (59.8 in.)	1620 mm (63.8 in.)	1720 mm (67.7 in.)	1820 mm (71.7 in.)	1920 mm (75.6 in.)

https://truckmanualshub.com/

WARNING

To avoid personal injury or death:

- **Before jacking up the tractor, park it on a firm and level ground and chock the front wheels.**
- **Fix the front axle to keep it from swinging.**
- **Select a jack that withstands the machine weight and set it up as shown below.**

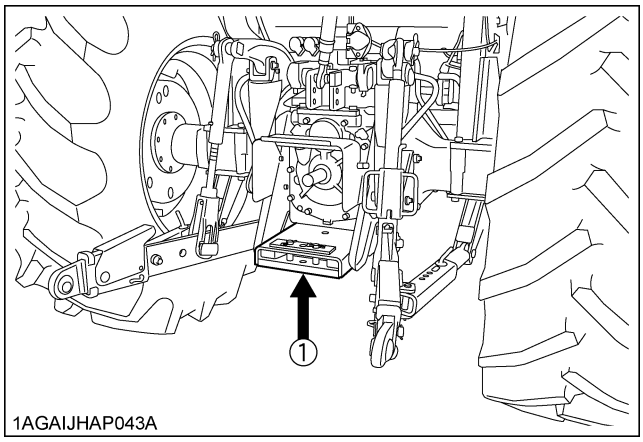

(1) Jack point

BALLAST

WARNING

To avoid personal injury or death:

- **Additional ballast will be needed for transporting heavy implements. When the implement is raised, drive slowly over rough ground, regardless of how much ballast is used.**
- **Do not fill the front wheels with liquid to maintain steering control.**

■Front Ballast

Add weights if needed for stability (2WD. 4WD models) and improve traction (4WD model). Heavy pulling and heavy rear mounted implements tend to lift front wheels.
Add enough ballast to maintain steering control and prevent tip over. Remove weight when no longer needed.

◆ Front End Weights (option)

The front end weights can be attached to the bumper.
See your implement operator's manual for required number of weights or consult your local KUBOTA Dealer to use.

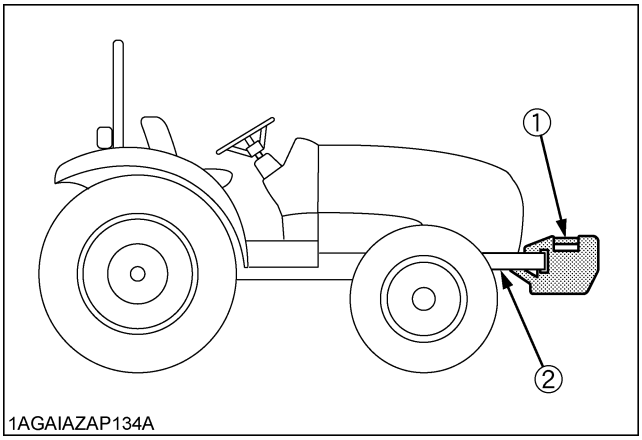

(1) Front end weights
(2) Bumper

IMPORTANT :

- Do not overload tires.
- Add no more weight than indicated in chart.
- Do not attach the front bumper when the front loader is attached.

Maximum weight	47 kg x 10 pieces (1036 lbs.)

https://truckmanualshub.com/

■Rear Ballast

Add weight to rear wheels if needed to improve traction or for stability. The amount of rear ballast should be matched to job and the ballast should be removed when it is not needed.
The weight should be added to the tractor in the form of liquid ballast, rear wheel weights, and/or cast iron disks.

◆ Cast Iron Disk (option)

The cast iron rear wheel disk may be utilized to provide additional rear weight.

Tire size	Cast Iron Disk
18.4-30	158 kg x 2 Pieces (700 lbs.)
16.9-34	270 kg x 2 Pieces (1200 lbs.)

◆ Rear Wheel Weights (option)

The rear wheel weights can be attached to the rear wheel. See your implement operator's manual for required number of weights or consult your local KUBOTA Dealer to use.

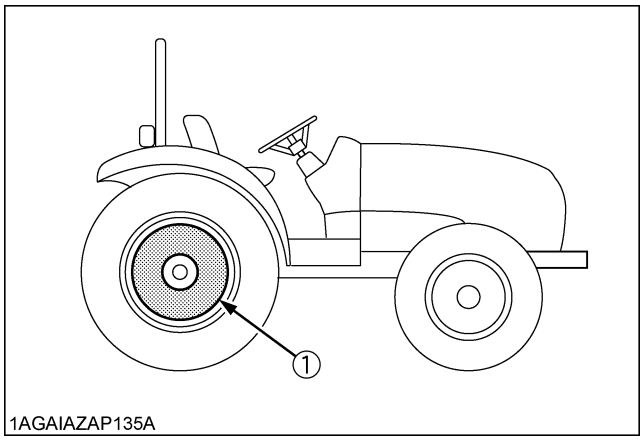

1AGAIAZAP135A

(1) Rear wheel weights

IMPORTANT :
- Do not overload tires.
- Add no more weight than indicated in chart.

Rear wheel weight	73 kg x 2 pieces (320 lbs.)

◆ Liquid Ballast in Rear Tires

Water and calcium chloride solution provides safe economical ballast. Used properly, it will not damage tires, tubes or rims. The addition of calcium chloride is recommended to prevent the water from freezing. Use of this method of weighting the wheels has the full approval of the tire companies. See your tire dealer for this service.

Liquid weight per tire (75 Percent filled)

Tire sizes	16.9-30	16.9-34	18.4-30
Slush free at -10℃ (-14℉) Solid at -30℃ (-22℉) [Approx.1 kg (2 lbs.) $CaCl_2$ per 4 L (1 gal.) of water]	314 kg (693 lbs.)	342 kg (755 lbs.)	385 kg (848 lbs.)
Slush free at -24℃ (-11℉) Solid at -47℃ (-53℉) [Approx.1.5 kg (3.5 lbs.) $CaCl_2$ per 4 L (1 gal.) of water]	338 kg (746 lbs.)	376 kg (829 lbs.)	414 kg (912 lbs.)
Slush free at -47℃ (-53℉) Solid at -52℃ (-62℉) [Approx.2.25 kg (5 lbs.) $CaCl_2$ per 4 L (1 gal.) of water]	357 kg (787 lbs.)	399 kg (880 lbs.)	436 kg (960 lbs.)

IMPORTANT :
- Do not fill tires with water or solution more than 75% of full capacity (to the valve stem level).

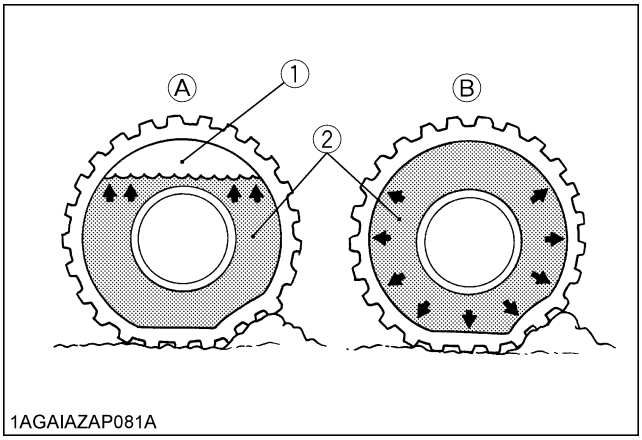

1AGAIAZAP081A

(1) Air (A) Correct-75% Air compresses like a cushion
(2) Water (B) Incorrect-100% Full Water can not be compressed

https://truckmanualshub.com/

MAINTENANCE

SERVICE INTERVALS

	Interval	Items		Ref. page		
A	initial 50 Hr	Engine oil	Change	89		
		Engine oil filter	Replace	89		
B	every 50 Hr	Engine start system	Check	89		
		Wheel bolt torque	Check	90		
		Tie-rod dust cover	Check	91	*2	
C	every 100 Hr	Greasing	---	91		
		Air cleaner Primary element	Clean	93	*1	
		Fan belt	Adjust	93		
		Brake pedal	Adjust	94		
		Parking brake	Check	94	*2	
		Battery condition	Check	95	*7	
D	every 200 Hr	Toe-in	Adjust	96		
		Fuel tank water	Drain	97		
E	every 400 Hr	Water separator	Clean	98		
		Greasing (2WD front wheel hub)	---	98		
F	every 500 Hr	Engine oil	Change	98	*5	
		Engine oil filter	Replace	99	*5	
		Fuel filter	Replace	99		
		Hydraulic oil filter	Replace	100		
		Power steering oil line	Check	101	*6	
		Radiator hose and clamp	Check	101	*6	
		Fuel line	Check	102	*6	
		Intake air line	Check	102	*6	
G	every 600 Hr	Front axle pivot	Adjust	103		
H	every 1000Hr	Transmission fluid	Change	103		
		Front differential case oil	Change	104		
		Front axle gear case oil	Change	104		
		Engine valve clearance	Adjust	104	*2	

	Interval	Items		Ref. page		
I	every 1000Hr or 1 year *3	Air cleaner Primary element	Replace	105		
		Air cleaner Secondary element	Replace	105		
		Exhaust manifold	Check	105	*2	
J	every 1500Hr	Fuel injector nozzle tip	Check	105	*2	@
		DEF/AdBlue® injector tip	Clean	105	*2	@
		DEF/AdBlue® line	Check	105		@
		Oil separator element	Replace	105		@
		PCV (Positive crankcase ventilation) valve (oil separator)	Check	105	*2	@
		EGR cooler	Check Clean	106	*2	@
K	every 2000Hr or 2 years *4	Cooling system	Flush	106		
		Coolant	Change	107		
L	every 3000Hr	Turbo charger	Check	107	*2	@
		Supply pump	Check	107	*2	
		Intake air heater	Check	107	*2	
		EGR system	Check Clean	107	*2	@
		DPF muffler	Clean	107	*2	@
		DEF/AdBlue® injector	Check	108	*2	@
		DEF/AdBlue® pump filter	Replace	108		
M	every 9000Hr	DEF/AdBlue® tank filter	Replace	108	*2	
N	every 1 year	Antifrost Heater for Oil Separator (if equipped)	Check	108	*2	
		DPF related pipe	Check	108	*2	
		EGR pipe	Check	108	*2	

https://truckmanualshub.com/

	Interval	Items		Ref. page		
O	every 2 years	Master cylinder filter	Clean	108	*2	
		Oil separator related rubber pipe	Replace	108	*2	
		DPF related rubber pipe	Replace	108	*2	
		EGR cooler rubber pipe	Replace	108	*2	
		Boost sensor hose	Replace	108	*2	
P	every 4 years	Radiator hose and clamp	Replace	108		
		Fuel line	Replace	108	*2	
		Intake air line	Replace	108	*2	
		Power steering oil line	Replace	109	*2	
		Lift cylinder hose	Replace	109	*2	
		Master cylinder	Replace	109	*2	
		Brake seal 1 and 2	Replace	109	*2	
Q	every fuel refilling interval	Refilling DEF/ AdBlue®	Add	84		@
R	Service as required	Fuel system	Bleed	109		
		Brake system	Bleed	110		
		Clutch housing water	Drain	110		
		Fuse	Replace	110		
		Light bulb	Replace	112		
		Head lamp	Replace	112		

*1 Air cleaner should be cleaned more often in dusty conditions than in normal conditions.

*2 Consult your local KUBOTA Dealer for this service.

*3 Every 1000 hours or every 1 year, whichever comes first.

*4 Every 2000 hours or every 2 years, whichever comes first.

*5 The initial 50 hours should not be a replacement cycle.

*6 Replace if any deterioration (crack, hardening, scar, or deformation) or damage occurred.

*7 When the battery is used for less than 100 hours per year, check the battery condition by reading the indicator annually.

- The items listed above (@ marked) are registered as emission related critical parts by KUBOTA in the U.S.EPA nonroad emission regulation. As the engine owner, you are responsible for the performance of the required maintenance on the engine according to the above instruction.
  Please see the Warranty Statement in detail.

https://truckmanualshub.com/

■Maintenance Items Chart

◆ How to use the chart

1. The circles in this at-a-glance chart indicate the relevant points between the tractor's hour meter readings and the service intervals. Following these circles and the maintenance item group (A through P), keep up your tractor.
2. For details of the maintenance item group, refer back to the "SERVICE INTERVALS" on the previous pages.

◆ Chart at a glance

Maintenance item group	Initial only	Interval											
	50	50	100	200	400	500	600	1000	1500	3000	9000	1000 Hr or 1 year	2000 Hr or 2 years
A	○												
B		○	○	○	○	○	○	○	○	○	○		
C			○	○	○	○	○	○	○	○	○		
D				○	○		○	○		○	○		
E					○								
F						○		○	○	○	○		
G							○			○	○		
H								○		○	○		
I												○	
J									○	○	○		
K													○
L										○	○		
M											○		

Maintenance item group	Interval		
	1 year	2 years	4 years
N	○		
O		○	
P			○

https://truckmanualshub.com/

LUBRICANTS, FUEL AND COOLANT

No.	Locations	Capacities		Lubricants	
		M5-091	**M5-111**		
1	Fuel	105 L (27.7 U.S.gals.)		No.2-D S15 diesel fuel No.1-D S15 diesel fuel if temperature is below -10℃ (14℉)	
2	DEF/AdBlue®	12.3 L (3.2 U.S.gals.)			
3	Coolant	10 L (11 U.S.qts.) (Recovery tank: 1.0 L (1.1 U.S.qts.))		Fresh clean soft water with anti-freeze	
4	Engine crankcase (with filter)	10.7 L (11.3 U.S.qts.)		● Engine oil: API Service Classification	CJ-4 [**DPF** type engine]
				Above 25℃ (77℉)	SAE30, SAE10W-30 or 15W-40
				-10 to 25℃ (14 to 77℉)	SAE10W-30 or 15W-40
				Below -10℃ (14℉)	SAE10W-30
5	Transmission case	60 L (63.4 U.S.qts.)		● KUBOTA SUPER UDT2 fluid*	
6	Front differential case oil [4WD]	6.0 L (6.3 U.S.qts.)		● KUBOTA SUPER UDT2 fluid* or SAE 80 - SAE 90 gear oil	
7	Front axle gear case oil [4WD]	3.5 L (3.7 U.S.qts.)			
8	Greasing	No. of greasing points		Capacity	Type of grease
	Top link	2		Until grease overflows.	Multipurpose Grease NLGI-2 OR NLGI-1(GC-LB)
	Top link bracket	2			
	Lift rod	2			
	Hydraulic lift cylinder pin	4			
	Front axle gear case support	2			
	Front axle support	2			
	Front wheel hub [2WD]	2			
	Knuckle shaft [2WD]	2			
	Battery terminal	2		A small amount	

NOTE :

The product name of KUBOTA genuine UDT fluid may be different from that in the Operator's Manual depending on countries or territories. Consult your local KUBOTA Dealer for further details.

https://truckmanualshub.com/

NOTE :

◆ **Engine Oil:**

- Oil used in the engine should have an American Petroleum Institute (API) service classification and Proper SAE Engine Oil according to the ambient temperatures as shown above:

- Refer to the following table for the suitable API classification engine oil according to the engine type (with DPF (Diesel Particulate Filter) type engines) and the fuel.

Fuel used	Engine oil classification (API classification)
	Oil class for engines with DPF
Ultra Low Sulfur Fuel [<0.0015% (15 ppm)]	**CJ-4**

◆ **Fuel:**

- Use the ultra low sulfur diesel fuel only [below 0.0015% (15 ppm)] for these engines.
- Cetane number of 45 minimum. Cetane number greater than 50 is preferred, especially for temperatures below -20℃ (-4℉) or elevations above 1500 m (5000 ft).
- Diesel fuels specified to EN 590 or ASTM D975 are recommended.
- No.2-D is a distillate fuel of lower volatility for engines in industrial and heavy mobile service. (SAE J313 JUN87)

◆ **DEF/AdBlue®:**

The DEF/AdBlue®, used as reducing agent of SCR, is a 32.5% urea aqueous solution.
The product is available at gas stations, truck stops and specialty shops. Be sure to use the genuine product only.

- Use DEF/AdBlue® meets ISO 22241 requirements ONLY for KUBOTA Engines equipped with SCR systems.

◆ **Transmission Oil:**

*KUBOTA Super UDT-2: For an enhanced ownership experience, we highly recommend Super UDT-2 to be used instead of standard hydraulic/transmission fluid.
Super UDT-2 is a proprietary KUBOTA formulation that delivers superior performance and protection in all operating conditions.
Regular UDT is also permitted for use in this machine.

- Indicated capacities of water and oil are manufacturer's estimate.

https://truckmanualshub.com/

PERIODIC SERVICE

WARNING

To avoid personal injury or death:

- **Do not work under any hydraulically supported devices. They can settle, suddenly leak down, or be accidentally lowered. If necessary to work under tractor or any machine elements for servicing or adjustment, securely support them with stands or suitable blocking beforehand.**

HOW TO OPEN THE HOOD

WARNING

To avoid personal injury or death from contact with moving parts;

- **Never open the hood or engine side cover while the engine is running.**
- **Do not touch muffler or exhaust pipes while they are hot; Severe burns could result.**
- **Hold the hood with other hand while unlocking release lever.**

■Hood

To open the hood, hold the hood and pull the release lever and open the hood.

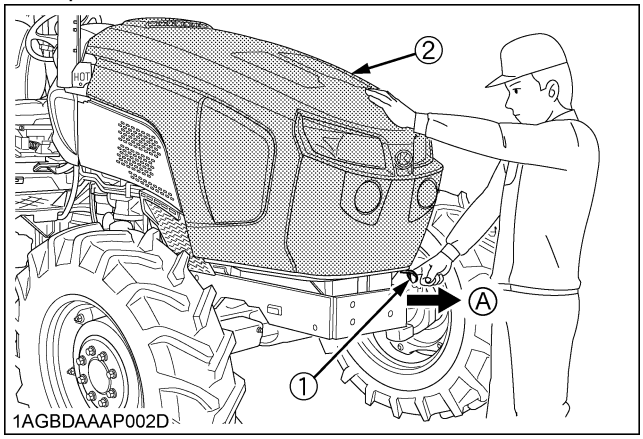

(1) Release lever *(A) "PULL"*
(2) Hood

NOTE :

- To close the hood, push the hood into position using both hands.

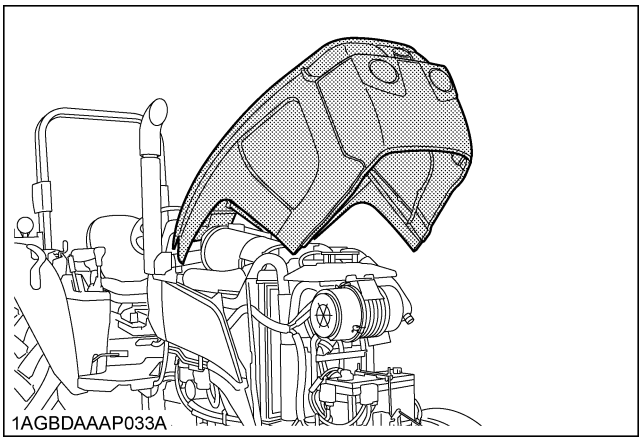

■Side Cover

1. Remove the bolts (2).
   Move the side cover 1 forward, and pull out the cover from pins.
2. Loosen the bolt (5), and remove the side cover 2.

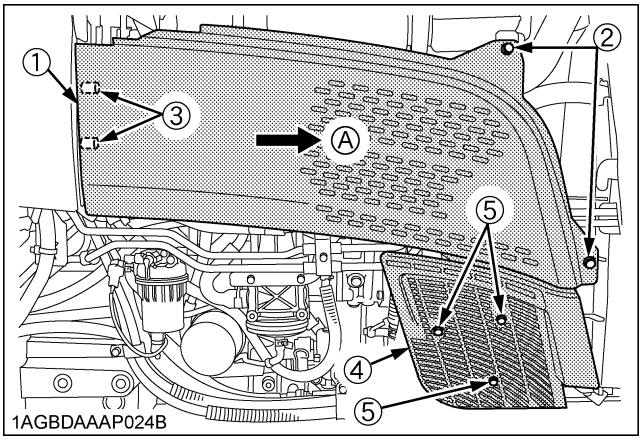

(1) Side cover 1 *(A) "MOVE"*
(2) Bolt
(3) Pin
(4) Side cover 2
(5) Bolt

https://truckmanualshub.com/

DAILY CHECK

For your own safety and maximum service life of the machine, make a thorough daily inspection before operating the machine to start the engine.

WARNING

To avoid personal injury or death:
Take the following precautions when checking the tractor.

- **Park the machine on firm and level ground.**
- **Set the parking brake.**
- **Lower the implement to the ground.**
- **All residual pressure of the hydraulic system released.**
- **Stop the engine and remove the key.**

■Walk Around Inspection

Look around and under the tractor for such items as loose bolts, trash build-up, oil or coolant leaks, broken or worn parts.

■Checking and Refueling

WARNING

To avoid personal injury or death:

- **Do not smoke while refueling.**
- **Be sure to stop the engine before refueling.**

1. Check the amount of fuel by fuel gauge.
2. When the fuel warning indicator lights up, it is time to add fuel.

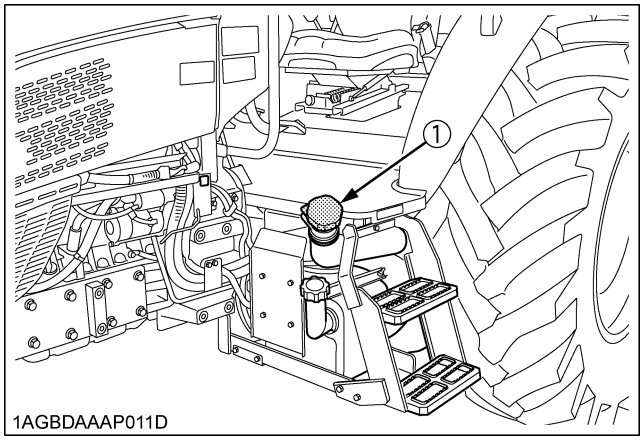

(1) Fuel tank cap

Fuel tank capacity	105 L (27.7 U.S.gals.)

IMPORTANT :

- Be sure to use Ultra Low Sulfur Fuel (S15).
- Do not permit dirt or trash to get into the fuel system.
- Be careful not to let the fuel tank become empty, otherwise air will enter the fuel system, necessitating bleeding before next engine start.
- If the engine runs out of fuel and stalls, the engine components may be damaged.
- Be careful not to spill during refueling. If a spill should occur, wipe it off at once, or it may cause a fire.
- To prevent condensation (water) accumulation in the fuel tank, fill the tank before parking overnight.

■Checking the DEF/AdBlue® level and adding the fluid

WARNING

To avoid personal injury or death:

- **Before adding DEF/AdBlue®, stop the engine. When adding the fluid, preferably wear protective goggles and rubber gloves.**

Look at the DEF/AdBlue® gauge on the instrument panel to see how much fluid remains. If the level is too low, add DEF/AdBlue® as required.

Before removing the DEF/AdBlue® cap, clean dirt away from the caps and the tank openings.

If the fluid runs short or poor-quality fluid is added, a warning sign appears on the instrument panel. If this warning is ignored and the operation continues, the engine output will be limited.

(For details, refer to "Warning Indication and its Countermeasure" in "SELECTIVE CATALYTIC REDUCTION (SCR) MUFFLER" in "OPERATING THE ENGINE" section.)

The DEF/AdBlue® tank cap is blue. Be careful not to confuse it with the fuel tank cap.

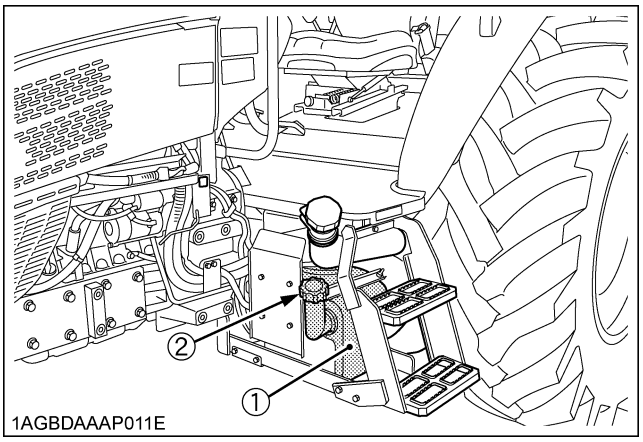

(1) DEF/AdBlue® tank
(2) Tank cap (Blue)

https://truckmanualshub.com/

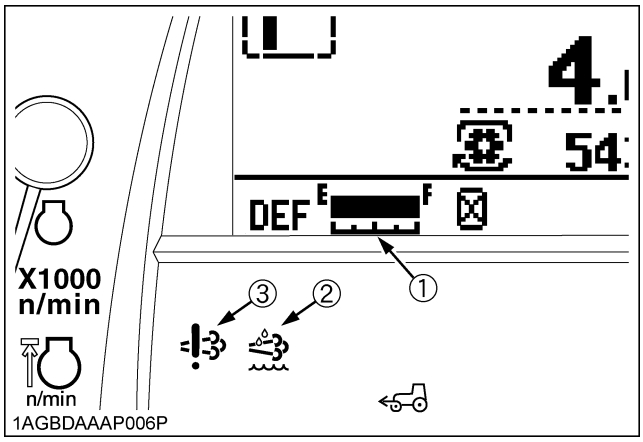

(1) DEF/AdBlue® gauge
(2) DEF/AdBlue® warning indicator
(3) DEF/AdBlue® system warning indicator

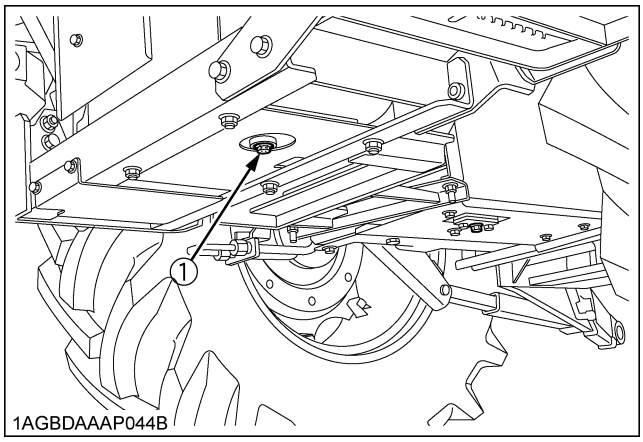

(1) Drain plug

Tank capacity	12.3 L (3.2 U.S.gals.)

IMPORTANT :
- Use exclusively DEF/AdBlue® that complies with the requirements of ISO 22241-1.
- **Do not allow fuel, oil or the like to enter the DEF/AdBlue ® tank.**
  If any other substance (gasoline/diesel/oil) is mistakenly introduced into the DEF/AdBlue® tank, do not attempt to start the engine and contact your local KUBOTA dealer as soon as possible.
- Check the DEF/AdBlue ® gauge regularly to avoid emptying its tank.
- If the DEF/AdBlue ® spills, wipe it with water. If spills are not wiped, metal areas will rust and the aluminum areas will corrode.
- Be careful not to overfill the DEF/AdBlue® tank because otherwise a small amount of DEF/AdBlue® might flow out of the breather. Pour DEF/AdBlue® until its level rises up to the filler port. And the air will be let out of the tank and the liquid level will drop below the filler port. But do not attempt to pour any more.

■Checking Water Separator

1. When the water has collected upper limit in the water separator, the water separator indicator on the instrument panel lights up and warning buzzer sounding.

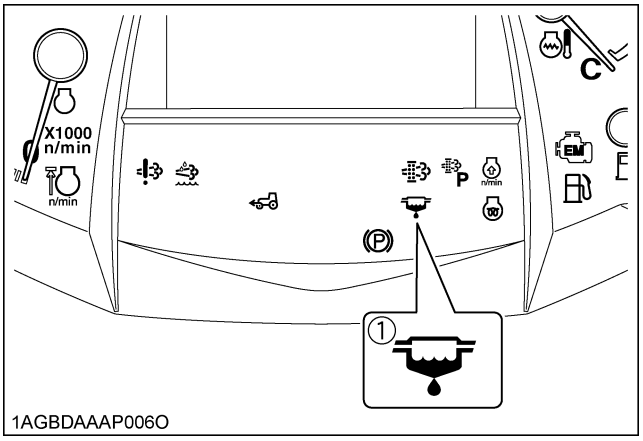

(1) Water separator indicator

2. In such case, close the fuel shutoff-valve and loosen the air plug and drain plug by several turns.
3. Allow water to drain. When no more water comes out and fuel starts to flow out, retighten the air plug and drain plug.
4. Bleed the fuel system.
   (See "SERVICE AS REQUIRED" in "PERIODIC SERVICE" section.)

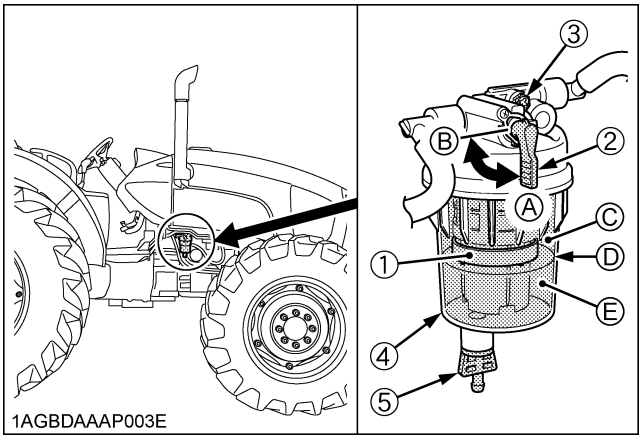

(1) Red float	*(A) "ON"*
(2) Fuel shutoff-valve	*(B) "OFF"*
(3) Air plug	*(C) "FUEL"*
(4) Cup	*(D) "UPPER LIMIT"*
(5) Drain plug	*(E) "WATER"*

NOTE :
- When the red float reaches near the upper limit level, start from step 2 in the above procedure to drain water in the water separator.

IMPORTANT :
- If water is drawn through to the fuel pump, extensive damage will occur.

https://truckmanualshub.com/

■Checking Engine Oil Level

WARNING

To avoid personal injury or death:

- **Be sure to stop the engine before checking the oil level.**

1. Park the machine on a flat surface.
2. Check engine oil before starting the engine or 5 minutes or more after the engine has stopped.
3. To check the oil level, draw out the dipstick, wipe it clean, replace it, and draw it out again. Check to see that the oil level lies between the 2 notches.
   If the level is too low, add new oil to the prescribed level at the oil inlet.
   (See "LUBRICANTS, FUEL AND COOLANT" in "MAINTENANCE" section.)

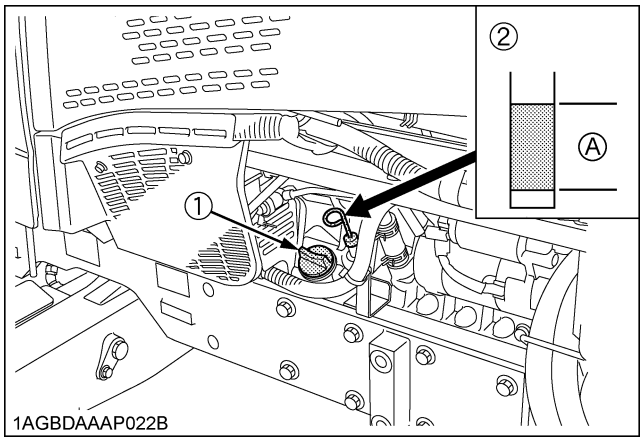

(1) Oil inlet (A) Oil level is acceptable within this range.
(2) Dipstick

IMPORTANT :

- When using an oil of different maker or viscosity from the previous one, remove all of the old oil.
  Never mix two different types of oil.
- If oil level is low, do not run engine.

NOTE :

- At times a small amount of fuel, which is used to regenerate the DPF, may get mixed with the engine oil and the engine oil may increase in volume.

■Checking Transmission Fluid Level

1. Park the machine on a flat surface, lower the implement and shut off engine.
2. To check the oil level, draw out the dipstick, wipe it clean, replace it, and draw it out again. Check to see that the oil level lies between the 2 notches.
   If the level is too low, add new oil to the prescribed level at the oil inlet.
   (See "LUBRICANTS, FUEL AND COOLANT" in "MAINTENANCE" section.)

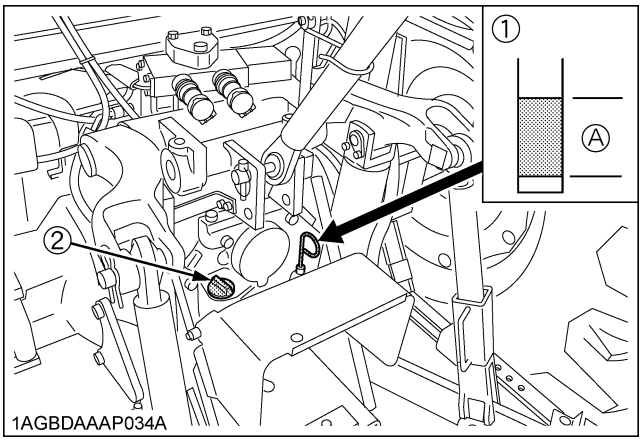

(1) Dipstick (A) Oil level is acceptable within this range.
(2) Oil inlet

IMPORTANT :

- If oil level is low, do not run engine.

https://truckmanualshub.com/

■Checking Coolant Level

WARNING

To avoid personal injury or death:

- **Do not remove radiator cap while coolant is hot. When cool, slowly rotate cap to the first stop and allow sufficient time for excess pressure to escape before removing the cap completely.**

1. Check to see that the coolant level is between the "FULL" and "LOW" marks of recovery tank.
2. When the coolant level drops due to evaporation, add soft water only up to the full level.
   In case of leakage, add anti-freeze and soft water in the specified mixing ratio up to the full level.
   (See "Flushing Cooling System and Changing Coolant" in "EVERY 2000 HOURS or 2 YEARS" in "PERIODIC SERVICE" section.)
3. When the coolant level is lower than "LOW" mark of recovery tank, remove the radiator cap and check to see that the coolant level is just below the port. If level is low, add coolant.

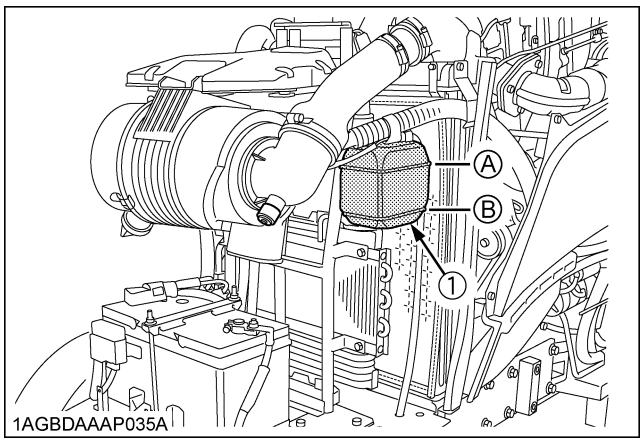

(1) Recovery tank *(A) "FULL"* *(B) "LOW"*

IMPORTANT :

- If the radiator cap has to be removed, follow the caution above and securely retighten the cap.
- Use clean, fresh soft water and anti-freeze to fill the radiator.
- If coolant should leak, consult your local KUBOTA Dealer.

■Cleaning Evacuator Valve

Open the evacuator valve to get rid of large particles of dust and dirt.

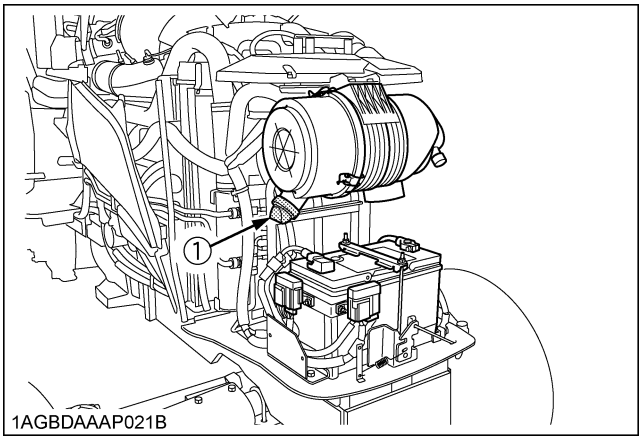

(1) Evacuator valve

■Checking Dust Indicator

There is a dust indicator on the air cleaner body. If the red signal on the dust indicator is visible, clean the element immediately. (See "Cleaning Air Cleaner Primary Element" in "EVERY 100 HOURS" in "PERIODIC SERVICE" section.) Reset the red signal by pushing a "RESET" button after cleaning.

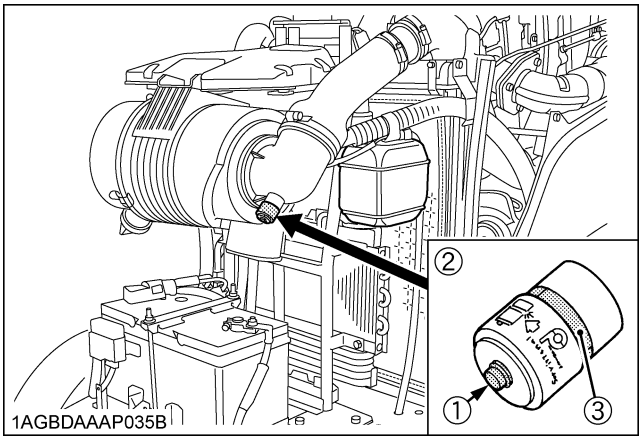

(1) "RESET" button
(2) Dust indicator
(3) Red signal

https://truckmanualshub.com/

■Cleaning Grill, Radiator Screen, Oil Cooler and Battery Mount

WARNING

To avoid personal injury or death:

- **Be sure to stop the engine before removing the screen.**
- **Before checking or cleaning the radiator screen, stop the engine and wait long enough until it is cooled down.**

◆ **Cleaning**

1. Check front grill to be sure it is clean from debris.
2. Detach the radiator screen and remove all foreign materials.
3. Check oil cooler and battery mount to be sure they are clean from debris.

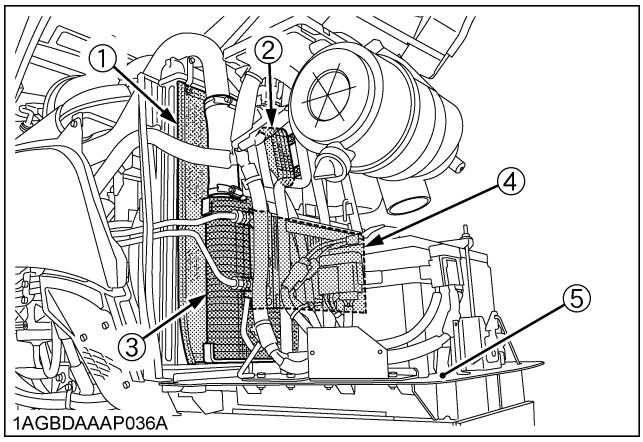

(1) Radiator screen
(2) Fuel cooler
(3) Intercooler
(4) Oil cooler
(5) Battery mount

IMPORTANT :

- Grill and screen must be clean from debris to prevent engine from overheating and to allow good air intake for air cleaner.

■Checking DPF/SCR Muffler

WARNING

To avoid personal injury or death:

- **Before checking or cleaning the DPF/SCR muffler, stop the engine and wait long enough until it is cooled down.**

Check the DPF/SCR muffler and its surroundings for accumulation of anything flammable. Otherwise a fire may result.

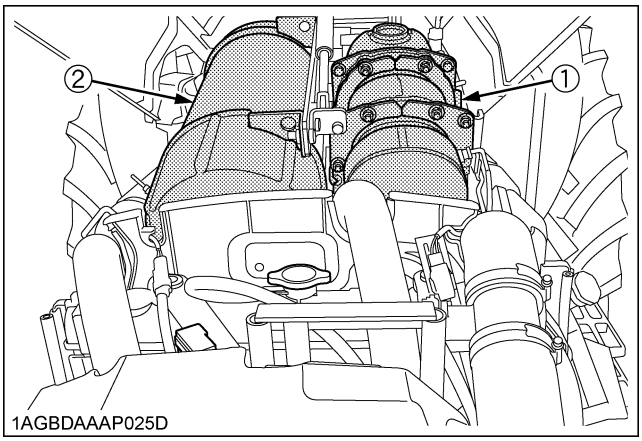

(1) DPF muffler
(2) SCR muffler

■Checking Brake Pedal

WARNING

To avoid personal injury or death:

- **Be sure brake pedals have equal adjustment when using locked together. Incorrect or unequal brake pedal adjustment can cause the tractor to swerve or roll-over.**

1. Inspect the brake pedals for free travel, and smooth operation.
2. Adjust if incorrect measurement is found:
   (See "Adjusting Brake Pedal" in "EVERY 100 HOURS" in "PERIODIC SERVICE" section.)

■Checking Gauges, Meter and Easy Checker(TM)

1. Inspect the instrument panel for broken gauge(s), meter(s) and Easy Checker(TM) lamps.
2. Replace if broken.

https://truckmanualshub.com/

■Checking Head Light, Turn Signal / Hazard Light etc.

1. Inspect the lights for broken bulbs and lenses.
2. Replace if broken.

■Checking Seat Belt and ROPS

1. Always check condition of seat belt and ROPS attaching hardware before operating tractor.
2. Replace if damaged.

■Checking Movable Parts

If any of the movable parts, such as levers and pedals, is not smoothly moved because of rust or sticky material, do not attempt to force it into motion.
In the above case, remove the rust or the sticky material, and apply oil or grease on the relevant spot.
Otherwise, the machine may get damaged.

INITIAL 50 HOURS

With a new machine, be sure to do the servicing, as discussed below, after the first 50 operating hours.

■Changing Engine Oil

(See "Changing Engine Oil" in "EVERY 500 HOURS" in "PERIODIC SERVICE" section for this service.)

■Replacing Engine Filter

(See "Replacing Engine Oil Filter" in "EVERY 500 HOURS" in "PERIODIC SERVICE" section for this service.)

EVERY 50 HOURS

■Checking Engine Start System

WARNING

To avoid personal injury or death:

- **Do not allow anyone near the tractor while testing.**
- **If the tractor does not pass the test, do not operate the tractor.**

◆ **Preparation before testing.**

1. Place all control levers in the "NEUTRAL" position.
2. Set the parking brake and stop the engine.

◆ **Test: Switch for the shuttle shift lever.**

1. Follow the instruction of "PARKING THE TRACTOR". (See "PARKING THE TRACTOR" in "SAFE OPERATION" section.)
2. Sit on the operator's seat.
3. Shift the shuttle shift lever to the forward or reverse position.
4. Depress the clutch pedal fully.
5. Disengage the PTO clutch control switch or lever.
6. Turn the key to "START" position.
7. The engine must not crank.
8. If it cranks, consult your local KUBOTA Dealer for this service.

◆ **Test: Switch for the PTO clutch control switch or lever.**

1. Follow the instruction of "PARKING THE TRACTOR". (See "PARKING THE TRACTOR" in "SAFE OPERATION" section.)
2. Sit on the operator's seat.
3. Engage the PTO clutch control switch or lever.
4. Depress the clutch pedal fully.
5. Shift the shuttle shift lever to the neutral position.
6. Turn the key to "START" position.
7. The engine must not crank.
8. If it cranks, consult your local KUBOTA Dealer for this service.

https://truckmanualshub.com/

◆ **Test: Checking Operator Presence Control (O.P.C.) System.**

1. Follow the instruction of "PARKING THE TRACTOR". (See "PARKING THE TRACTOR" in "SAFE OPERATION" section.)
2. Make sure the PTO drive shaft is disconnected from the tractor.
3. Sit on the operator's seat.
4. Start the engine.
5. Engage the PTO clutch control switch or lever. The PTO should begin to rotate. Disengage the PTO clutch control switch or lever.
6. While lifting yourself from the seat, engage the PTO clutch control switch or lever.
   (1) The PTO should begin to rotate and a buzzer should sound.
   (2) Disengage the PTO clutch control switch or lever.
   (3) If the buzzer does not sound, shut off the engine and consult your local KUBOTA Dealer for immediate servicing of the PTO OPC.
7. If the PTO OPC is operating properly, shut off the engine, and reconnect the implement drive shaft to the PTO. Restart the engine per the available instructions.

WARNING

To avoid personal injury or death:

- **Before checking the PTO OPC, make sure that the PTO drive shaft should be disconnected from the tractor.**
- **If the buzzer does not sound during the PTO OPC check procedure, shut off engine and consult your local KUBOTA Dealer for immediate servicing of the PTO OPC.**
- **The unit should not be operated until servicing is completed.**

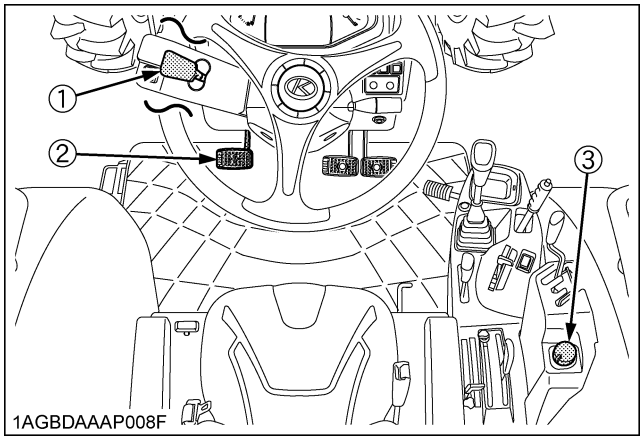

(1) Shuttle shift lever
(2) Clutch pedal
(3) PTO clutch control switch

■Checking Wheel Bolt Torque

WARNING

To avoid personal injury or death:

- **Never operate tractor with a loose rim, wheel, or axle.**
- **Any time bolts and nuts are loosened, retighten to specified torque.**
- **Check all bolts and nuts frequently and keep them tight.**

Check wheel bolts and nuts regularly especially when new. If they are loose, tighten them.

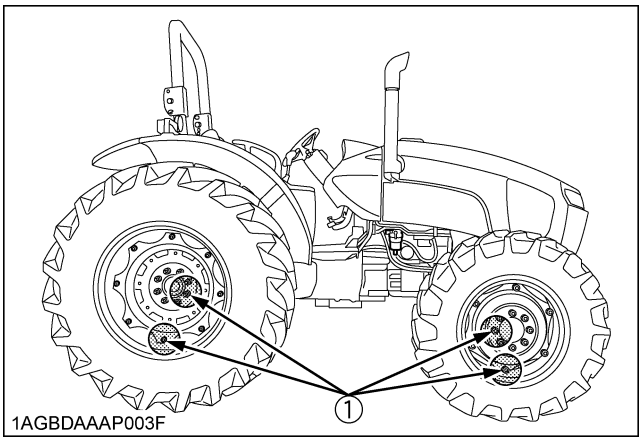

(1) Wheel bolts

(See "WHEEL ADJUSTMENT" in "TIRES, WHEELS AND BALLAST" section.)

https://truckmanualshub.com/

■Checking Tie-rod Dust Cover

1. Check to see that dust covers are not damaged.
2. If dust covers are damaged, consult local KUBOTA Dealer for this service.

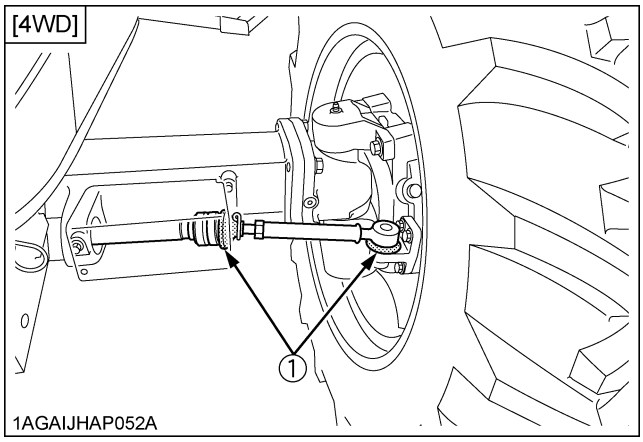

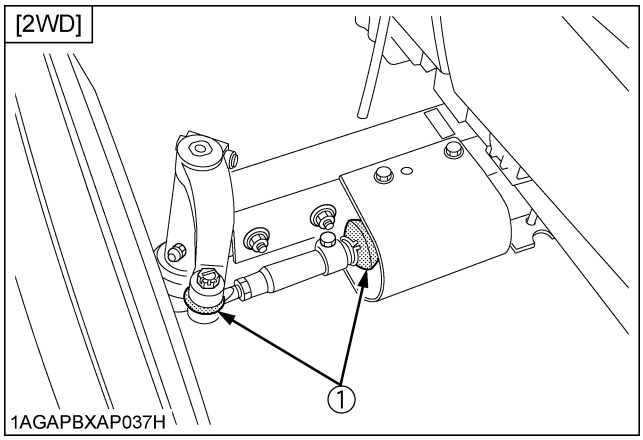

(1) Dust cover

IMPORTANT :

- If dust covers are cracked, water and dust invade into tie-rod and it will be early wear.

EVERY 100 HOURS

■Lubricating Grease Fittings

Apply a small amount of multipurpose grease to the following points every 100 hours:
If you operated the machine in extremely wet and muddy conditions, lubricate grease fittings more often.

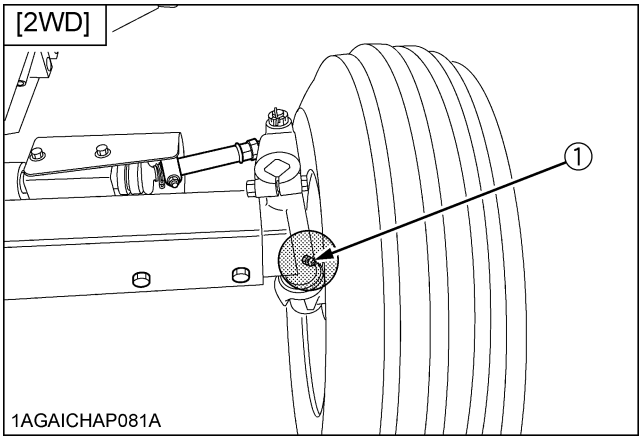

(1) Grease fitting (Knuckle shaft) [RH, LH]

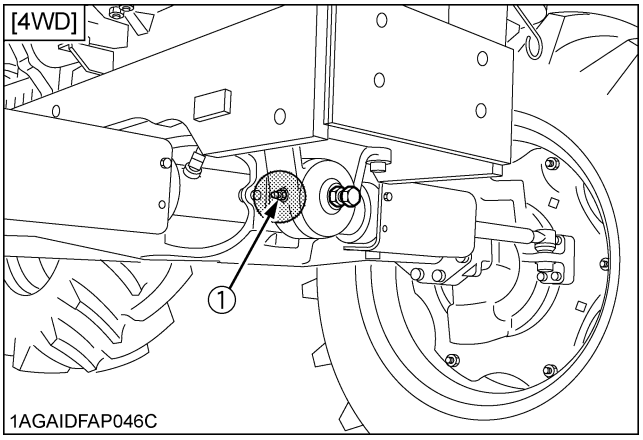

(1) Grease fitting (Front axle support)

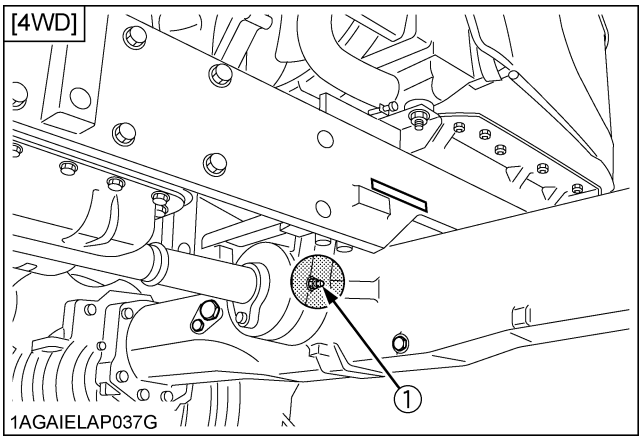

(1) Grease fitting (Front axle support)

https://truckmanualshub.com/

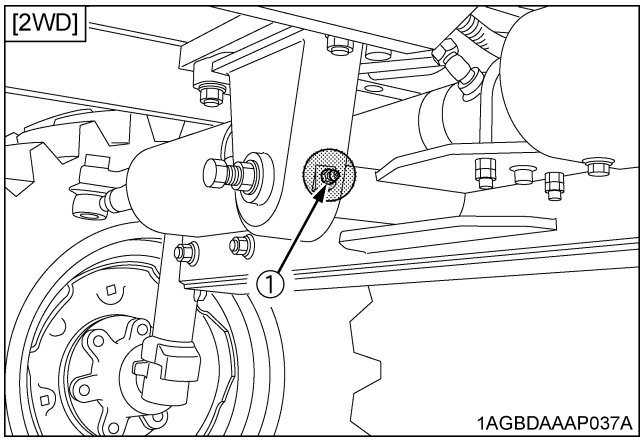

(1) Grease fitting (Front axle support)

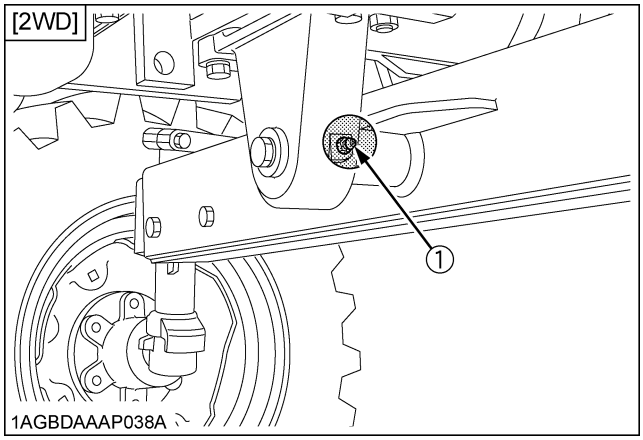

(1) Grease fitting (Front axle support)

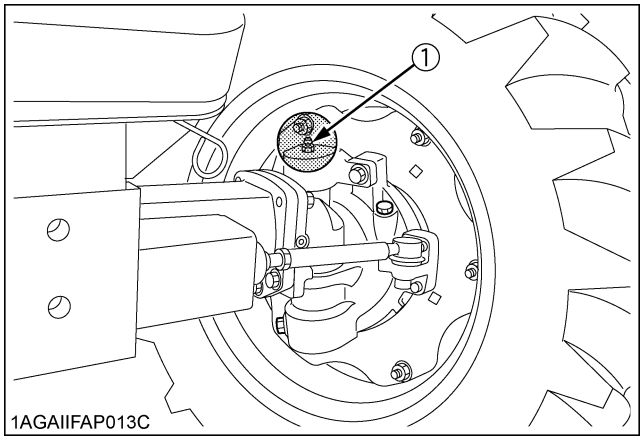

(1) Grease fitting (Front axle gear case support) [RH, LH]

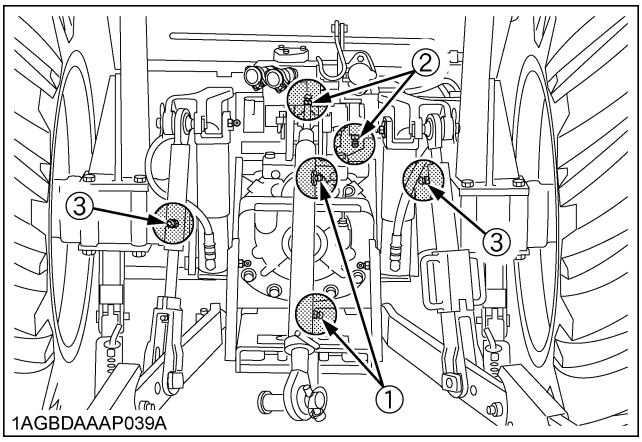

(1) Grease fitting (Top link)
(2) Grease fitting (Top link bracket)
(3) Grease fitting (Lifting rod)

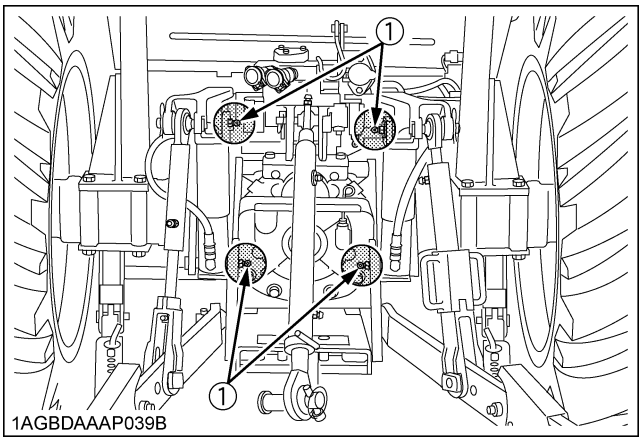

(1) Grease fitting (Hydraulic lift cylinders pin)

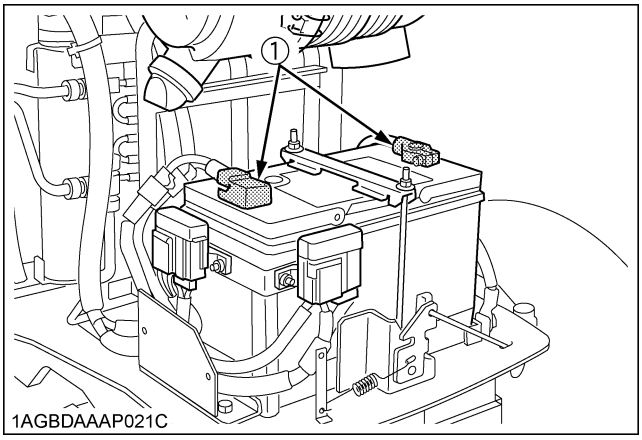

(1) Battery terminals

https://truckmanualshub.com/

■Cleaning Air Cleaner Primary Element

1. Remove the air cleaner cover and primary element.
2. Clean the primary element:
   (1) When dry dust adheres to the element, blow compressed air from the inside, turning the element. Pressure of compressed air must be under 205 kPa (2.1 kgf/cm^2, 30 psi).
   (2) When carbon or oil adheres to the element, soak the element in detergent for 15 minutes then wash it several times in water, rinse with clean water and dry it naturally. After element is fully dried, inspect inside of the element with a light and check if it is damaged or not.
3. Replace air cleaner primary element:
   Once every 1000 hours or yearly, whichever comes first.

NOTE :
- Check to see if the evacuator valve is blocked with dust.

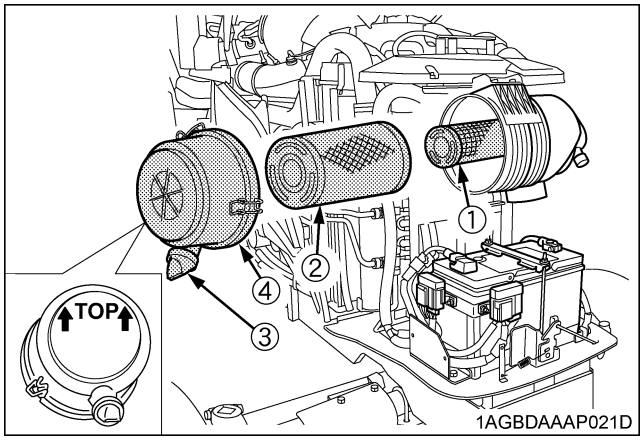

(1) Secondary (safety) element
(2) Primary element
(3) Evacuator valve
(4) Cover

IMPORTANT :
- The air cleaner uses a dry element, never apply oil.
- Do not run the engine with filter element removed.
- Be sure to refit the cover with the arrow ⬆ (on the rear of cover) upright. If the cover is improperly fitted, evacuator valve will not function and dust will adhere to the element.
- Do not touch the secondary element except in cases where replacing is required.
  (See "Replacing Air Cleaner Secondary Element" in "EVERY 1000 HOURS or 1 YEAR" in "PERIODIC SERVICE" section.)

◆ Evacuator Valve

Open the evacuator valve once a week under ordinary conditions - or daily when used in a dusty place - to get rid of large particles of dust and dirt.

■Adjusting Fan Belt Tension

WARNING

To avoid personal injury or death:
- **Be sure to stop the engine before checking belt tension.**

Proper fan belt tension	A deflection of between 10 to 12 mm (0.39 to 0.47 in.) when the belt is pressed in the middle of the span.

1. Stop the engine and remove the key.
2. Apply moderate thumb pressure to belt between pulleys.
3. If tension is incorrect, loosen the alternator mounting bolts and, using a lever placed between the alternator and the engine block, pull the alternator out until the deflection of the belt falls within acceptable limits.
4. Replace fan belt if it is damaged.

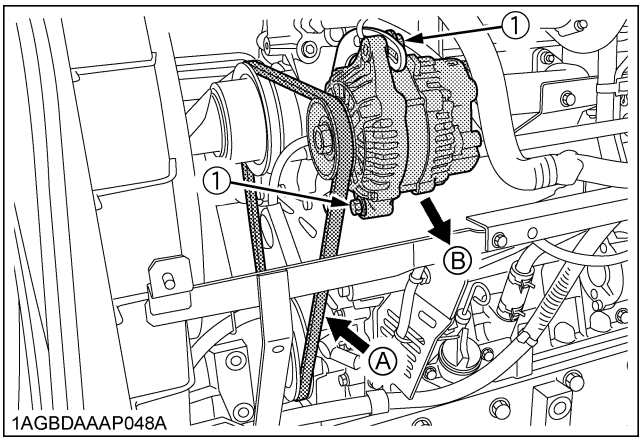

(1) Bolt
(A) Check the belt tension
(B) To tighten

https://truckmanualshub.com/

■Adjusting Brake Pedal

WARNING

To avoid personal injury or death:

- **Stop the engine and chock the wheels before checking brake pedal.**
- **To prevent uneven braking, the specification must be within the recommended limit. If found out of the specifications, contact your local KUBOTA Dealer for adjusting the brakes.**

◆ Checking the brake pedal free travel

Proper brake pedal free travel	7 to 14 mm (0.3 to 0.6 in.) on the pedal
	Keep the free travel in the right and left brake pedals equal.

1. Set the parking brake.
2. Slightly depress the brake pedals and measure free travel at the top of pedal stroke.

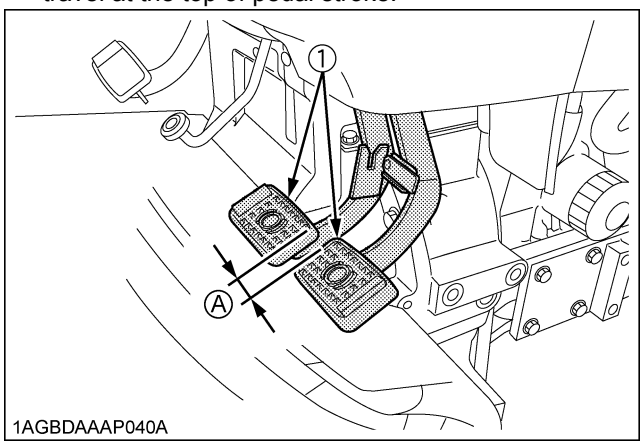

(1) Brake pedals *(A) "FREE TRAVEL"*

NOTE :

- Brake pedals should be equal when depressed.

◆ Checking the brake pedal stroke

Pedal stroke	Less than 100 mm (3.9 in.) at each pedal

1. Disengage the brake pedal lock.
2. Depress the brake pedal several times.
3. Step on the right-hand pedal and measure the level difference (pedal stroke) between this pedal and the left-hand pedal.
4. Do the same for the left-hand pedal.

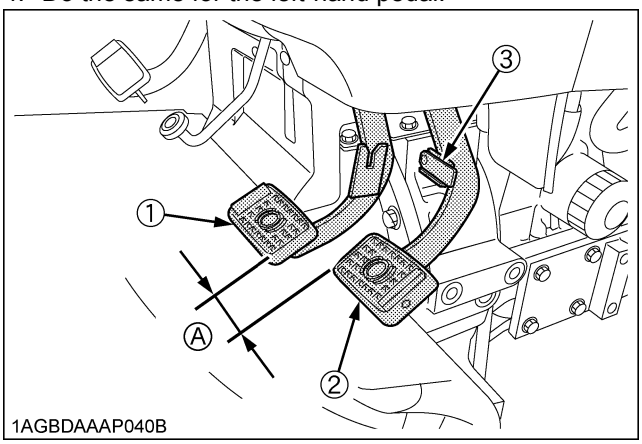

(1) Brake pedal (LH) *(A) "PEDAL STROKE"*
(2) Brake pedal (RH)
(3) Brake pedal lock

◆ Checking the equalizer working level (anti-imbalance device)

1. Gently step on both brake pedals at once.
2. Further step on the right-hand pedal (the left-hand pedal slightly raises itself) and measure the level difference between the pedals.
3. Do the same for the left-hand pedal.

Equalizer working level	Level difference of over 5 mm (0.2 in.) between both pedals

■Checking Gear Locked Parking Brake

WARNING

To avoid personal injury or death:

- **Do not dismount the tractor while checking the parking brake.**

Confirm the tractor (tractor unit only) can surely be parked on the slope of about 15 degrees (Slope that rises by 2.7 meters every 10 meters).
If the tractor moves, consult your local KUBOTA Dealer.
Always engage the parking brake before dismounting the tractor.

https://truckmanualshub.com/

■Checking Battery Condition

DANGER

To avoid the possibility of battery explosion:
For the refillable type battery, follow the instructions below.

- **Do not use or charge the refillable type battery if the fluid level is below the LOWER (lower limit level) mark. Otherwise, the battery component parts may prematurely deteriorate, which may shorten the battery's service life or cause an explosion. Check the fluid level regularly and add distilled water as required so that the fluid level is between the UPPER and LOWER levels.**

WARNING

To avoid personal injury or death:

- **Never remove the battery cap while the engine is running.**
- **Keep electrolyte away from eyes, hands and clothes. If you are spattered with it, wash it away completely with water immediately and get medical attention.**
- **Keep open sparks and flames away from the battery at all times. Hydrogen gas mixed with oxygen becomes very explosive.**
- **Wear eye protection and rubber gloves when working around battery.**

The factory-installed battery is of non-refillable type. If the indicator turns white, do not charge the battery but replace it with new one.

Mishandling the battery shortens the service life and adds to maintenance costs.
The original battery is maintenance free, but needs some servicing.
If the battery is weak, the engine will be difficult to start and the lights will be dim. It is important to check the battery periodically.

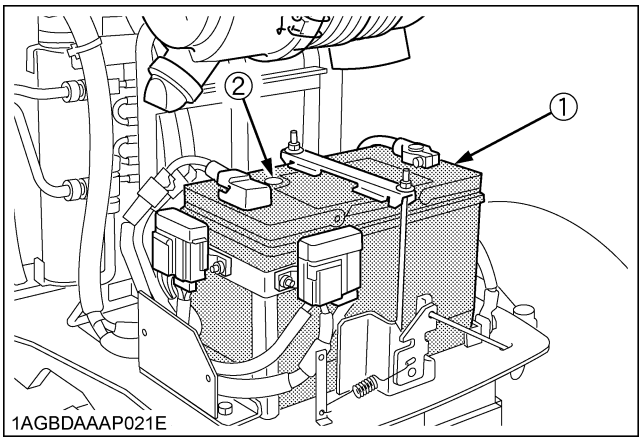

(1) Battery
(2) Indicator

◆ **How to read the indicator**

Check the battery condition by reading the indicator.

State of indicator display	
Green	Specific gravity of electrolyte and quality of electrolyte are both in good condition.
Black	Needs charging battery.
White	Needs replacing battery.

NOTE :

- When see the indicator, check from directly above by removing the air cleaner cover or using a mirror.

◆ **Battery Charging**

WARNING

To avoid personal injury or death:

- **When the battery is being activated, hydrogen and oxygen gases in the battery are extremely explosive. Keep open sparks and flames away from the battery at all times, especially when charging the battery.**
- **When charging the battery, ensure the vent caps are securely in place. (if equipped)**
- **When disconnecting the cable from the battery, start with the negative terminal first.**
  When connecting the cable to the battery, start with the positive terminal first.
- **Never check battery charge by placing a metal object across the posts.**
  Use a voltmeter or hydrometer.

https://truckmanualshub.com/

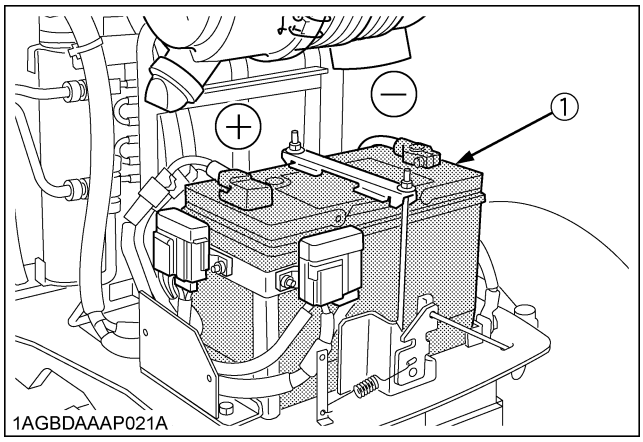

(1) Battery

1. To slow charge the battery, connect the battery positive terminal to the charger positive terminal and the negative to the negative, then recharge in the standard fashion.
2. A boost charge is only for emergencies. It will partially charge the battery at a high rate and in a short time.
   When using a boost-charged battery, it is necessary to recharge the battery as early as possible.
   Failure to do this will shorten the battery's service life.
3. The battery is charged if the indicator display turns green from black.
4. When exchanging an old battery for a new one, use battery of equal specification shown in **table 1**.

Table 1

Battery Type	Volts (V)	Capacity at 5H.R(A.H)
GP31(105E41R)	12	80

Reserve Capacity (min)	Cold Cranking Amps	Normal Charging Rate (A)
160	900	11

◆ **Direction for Storage**

1. When storing the tractor for long periods of time, remove the battery from tractor, adjust the electrolyte to the proper level and store in a dry place out of direct sunlight.
2. The battery self-discharges while it is stored.
   Recharge it once every 3 months in hot seasons and once every 6 months in cold seasons.

EVERY 200 HOURS

■Adjusting Toe-in

	Proper toe-in
4WD	2 to 8 mm (0.08 to 0.31 in.)
2WD	1 to 5 mm (0.04 to 0.2 in.)

1. Park tractor on a flat place.
2. Turn steering wheel so front wheels are in the straight ahead position.
3. Lower the implement, lock the park brake and stop the engine.
4. Measure distance between tire beads at front of tire, at hub height.
5. Measure distance between tire beads at rear of tire, at hub height.
6. Front distance should be shorter than rear distance.
   If not, adjust tie rod length.

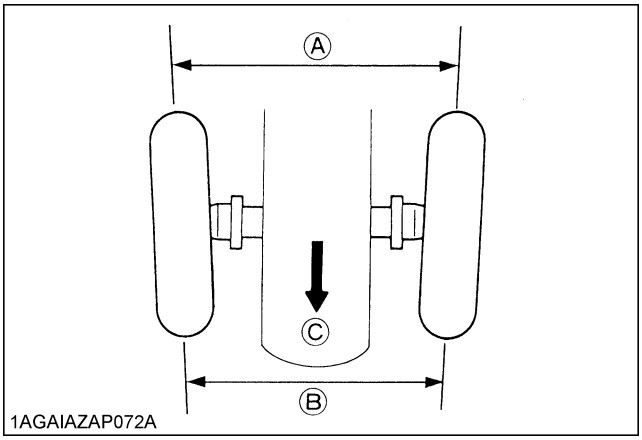

(A) Wheel - to - wheel distance at rear
(B) Wheel - to - wheel distance at front
(C) "FRONT"

https://truckmanualshub.com/

◆ **Adjusting procedures**

1. Detach the snap ring.
2. Loosen the tie-rod nut.
3. Turn the tie-rod joint to adjust the rod length until the proper toe-in measurement is obtained.
4. Retighten the tie-rod nut.
5. Attach the snap ring of the tie-rod joint.

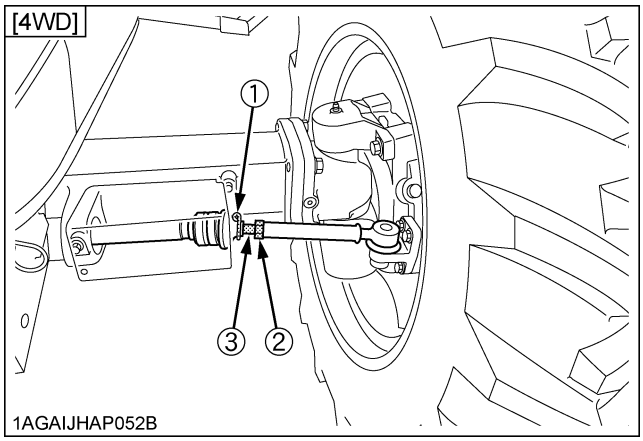

(1) Snap ring
(2) Tie-rod nut
167 to 196 N-m (17 to 20 kgf-m)
(3) Tie-rod joint

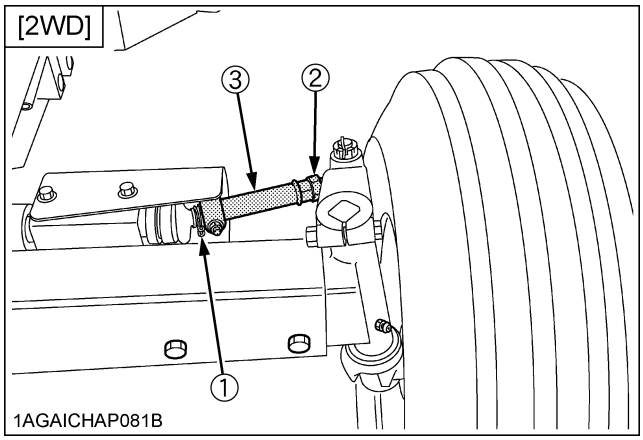

(1) Snap ring
(2) Tie-rod nut
(167 to 196 N-m, 17 to 20 kgf-m)
(3) Tie-rod joint

■Draining Fuel Tank Water

Loosen the drain plug at the bottom of the fuel tank to let sediments, impurities and water out of the tank. Finally tighten up the plug.

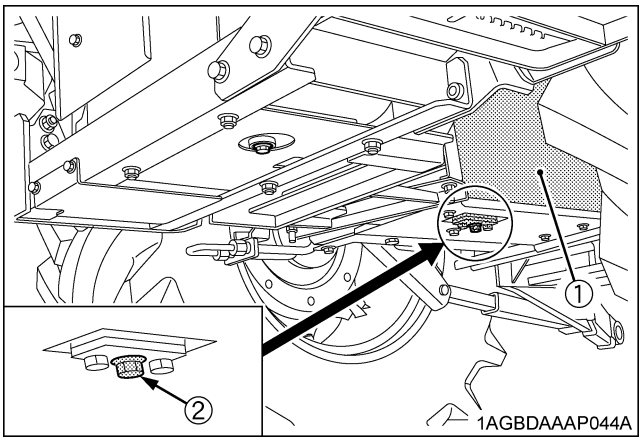

(1) Fuel Tank (Left)
(2) Drain plug

IMPORTANT :

- If the fuel contains impurities, such as water, drain the fuel tank at shorter intervals.
- Drain the fuel tank before operating the tractor after a long period of storage.
- The fuel tank is made of plastic. Be careful not to overtighten the bolts.

https://truckmanualshub.com/

EVERY 400 HOURS

■Cleaning Water Separator

This job should not be done in the field, but in a clean place.

1. Disconnect the connector of water sensor.
2. Close the fuel shutoff-valve.
3. Unscrew the cup and remove it, then rinse the inside with kerosene.
4. Take out the element and dip it in the kerosene to rinse.
5. After cleaning, reassemble the water separator, keeping out dust and dirt.
6. Connect the connector of water sensor.
7. Bleed the fuel system.
   (See "SERVICE AS REQUIRED" in "PERIODIC SERVICE" section.)

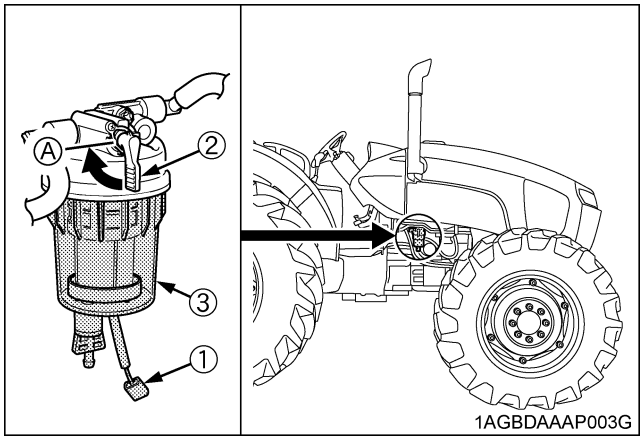

(1) Water sensor connector (A) "CLOSE"
(2) Fuel shutoff-valve
(3) Cup

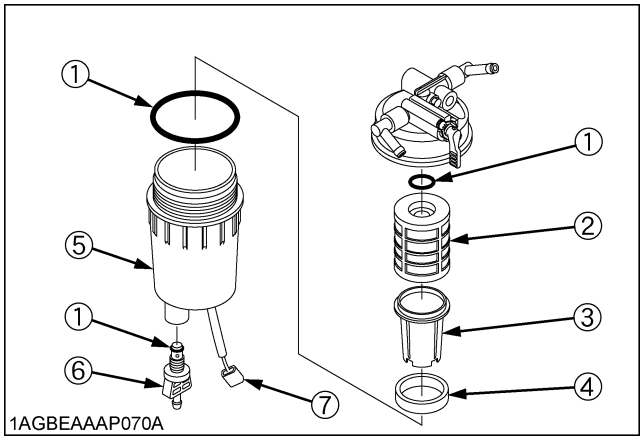

(1) O ring
(2) Element
(3) Element cup
(4) Red float
(5) Cup
(6) Drain plug
(7) Water sensor connector

IMPORTANT :
- If the water separator and/or fuel filter is not well maintained, the supply pump and injector may be damaged earlier than expected.

■Lubricating Grease Fitting [2WD Model]

Detach the cover, and apply bearing grease.

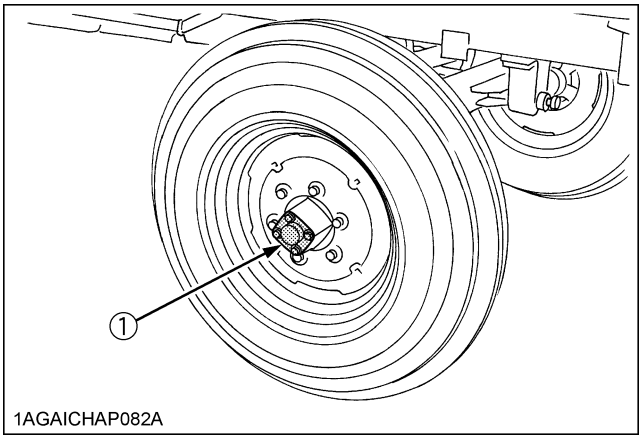

(1) Front wheel hub cover

EVERY 500 HOURS

■Changing Engine Oil

WARNING

To avoid personal injury or death:
- **Be sure to stop the engine before changing the oil.**
- **Allow engine to cool down sufficiently, oil can be hot and can burn.**

1. To drain the used oil, remove the drain plug at the bottom of the engine and drain the oil completely into the oil pan.
2. After draining reinstall the drain plug.
3. Fill with the new oil up to the upper notch on the dipstick.
   (See "LUBRICANTS" in "MAINTENANCE" section.)

Oil capacity with filter	10.7 L (11.3 U.S.qts.)

IMPORTANT :
- Use DPF-compatible oil (CJ-4) for the engine.

https://truckmanualshub.com/

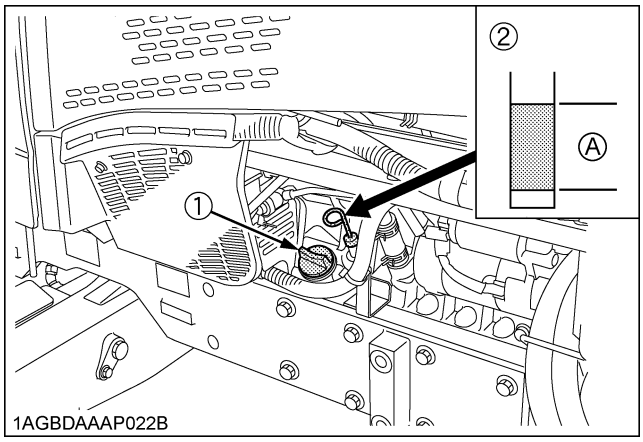

(1) Oil inlet (A) Oil level is acceptable within this range
(2) Dipstick

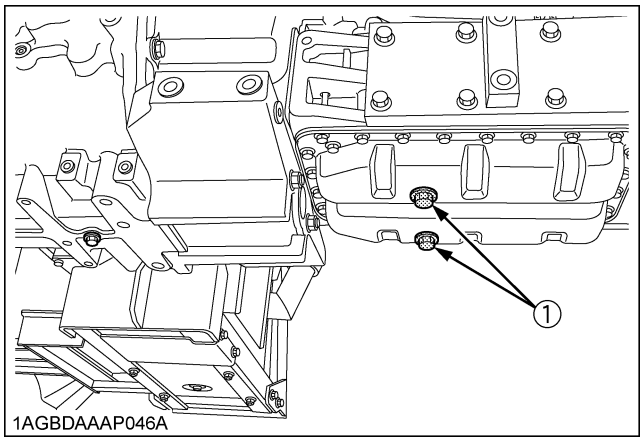

(1) Drain plug

■Replacing Engine Oil Filter

WARNING

To avoid personal injury or death:

- **Be sure to stop the engine before replacing the oil filter cartridge.**
- **Allow engine to cool down sufficiently, oil can be hot and can burn.**

1. Remove the oil filter.
2. Put a film of clean engine oil on the rubber seal of the new filter.
3. Tighten the filter quickly until it contacts the mounting surface.
   Tighten filter by hand an additional 1/2 turn only.
4. After the new filter has been replaced, the engine oil normally decreases a little. Make sure that the engine oil does not leak through the seal and be sure to check the oil level on the dipstick. Then, replenish the engine oil up to the prescribed level.

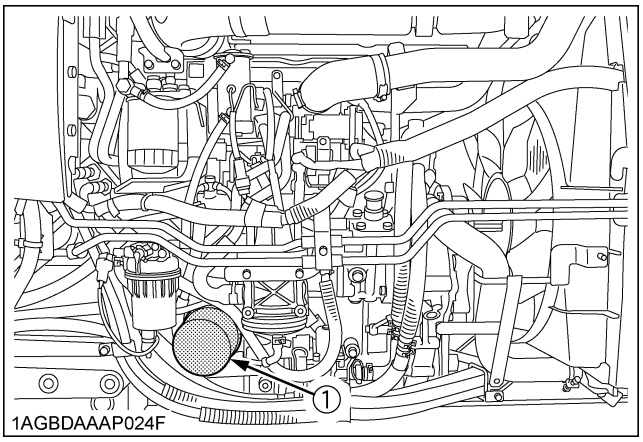

(1) Engine oil filter

IMPORTANT :

- To prevent serious damage to the engine, use only a KUBOTA genuine filter.

■Replacing Fuel Filter

1. Remove the fuel filter.
2. Put a film of clean fuel on rubber seal of new filter.
3. Tighten the filter quickly until it contacts the mounting surface.
   Tighten filter by hand an additional 1/2 turn only.
4. Bleed the fuel system.
   (See "Bleeding Fuel System" in "SERVICE AS REQUIRED" in "PERIODIC SERVICE" section.)

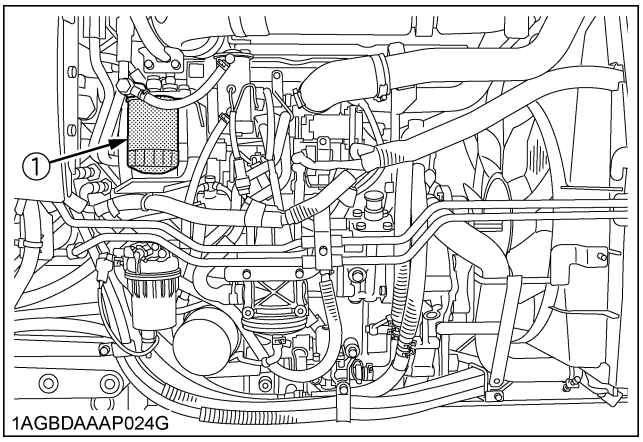

(1) Fuel filter

https://truckmanualshub.com/

■Replacing Hydraulic Oil Filter

◆ Cleaning Magnetic Filter

WARNING

To avoid personal injury or death:

- **Be sure to stop the engine before changing the oil filter cartridge.**
- **Allow engine to cool down sufficiently, oil can be hot and can burn.**

1. Remove the drain plug at the bottom of the transmission case and drain the oil completely into an oil pan.
2. After draining reinstall the drain plug.

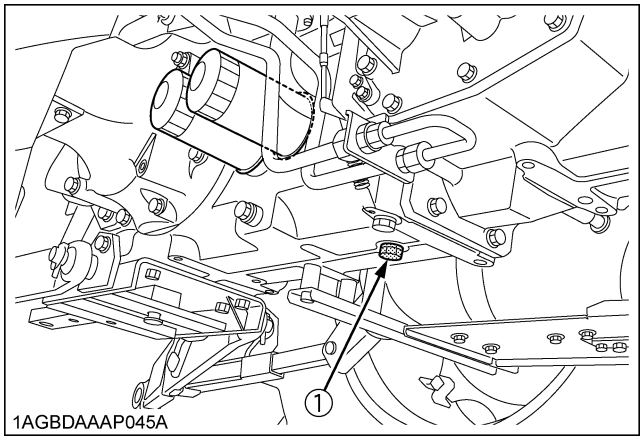

(1) Drain plug

3. Remove the 2 oil filters.
4. Wipe off metal filings from the magnetic filter with a clean rag.

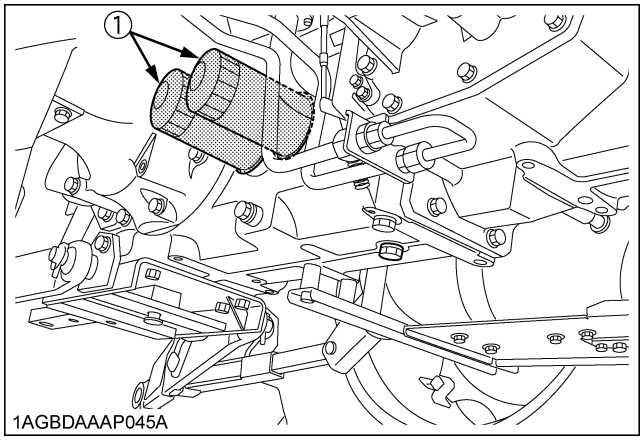

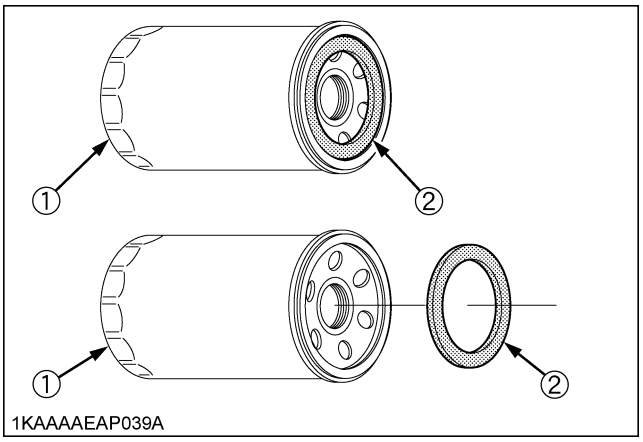

(1) Hydraulic oil filter
(2) Magnetic filter (Wipe off metal filings)

5. Put a film of clean transmission oil on the rubber seal of the new filters.
6. Tighten the filter quickly until it contacts the mounting surface.
   Tighten filter by hand an additional 1/2 turn only.
7. After the new filters have been replaced, fill the transmission oil up to the upper notch on the dipstick.

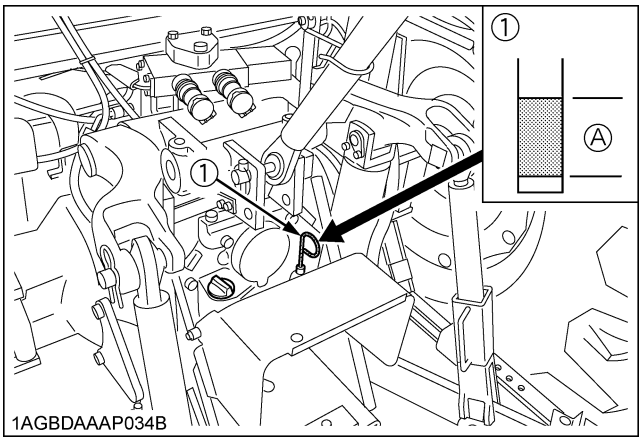

(1) Gauge *(A) Oil level is acceptable within this range.*

8. After running the engine for a few minutes, stop the engine and check the oil level again, add oil to the prescribed level.
9. Make sure that the transmission fluid doesn't leak pass the seal on the filter.

IMPORTANT :

- To prevent serious damage to the hydraulic system, use only a KUBOTA genuine filter.

https://truckmanualshub.com/

■Checking Power Steering Line

1. Check to see that all lines and hose clamps are tight and not damaged.
2. If hoses and clamps are found worn or damaged, replace or repair them at once.

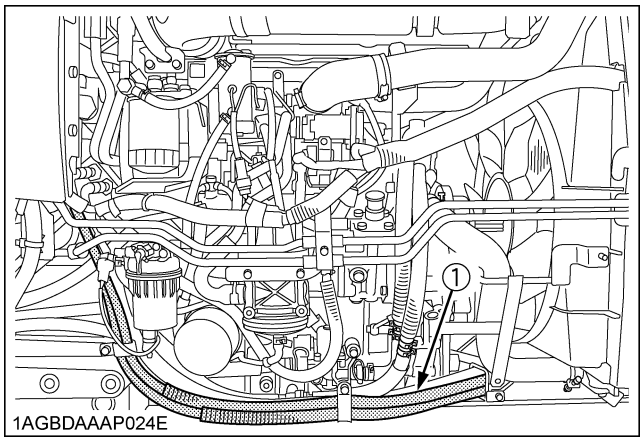

(1) Power steering pressure hoses

■Checking Radiator Hose and Clamp

Check to see if radiator hoses are properly fixed every 500 hours of operation.

1. If hose clamps are loose or water leaks, tighten bands securely.
2. Replace hoses and tighten hose clamps securely, if radiator hoses are swollen, hardened or cracked.

Replace hoses and hose clamps every 4 years or earlier if checked and found that hoses are swollen, hardened or cracked.

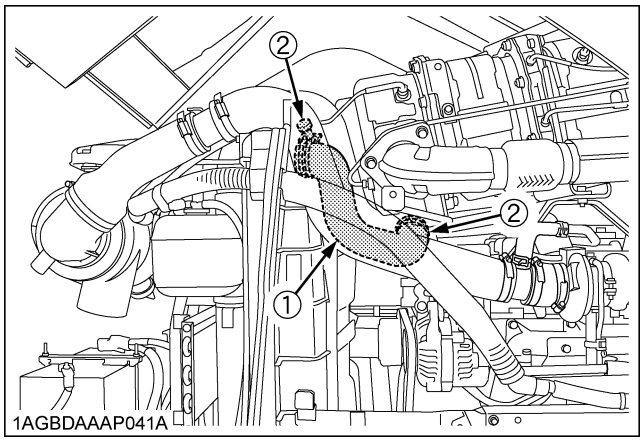

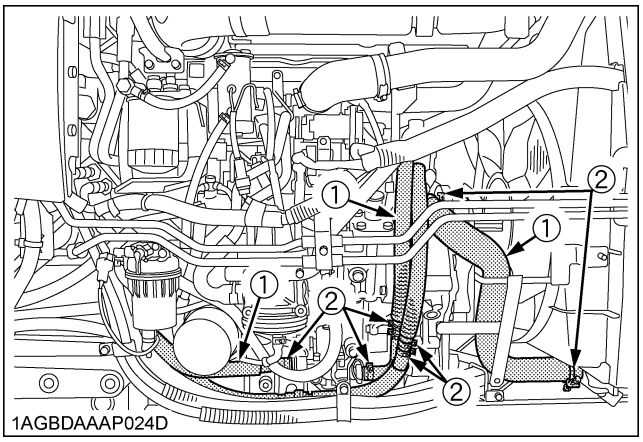

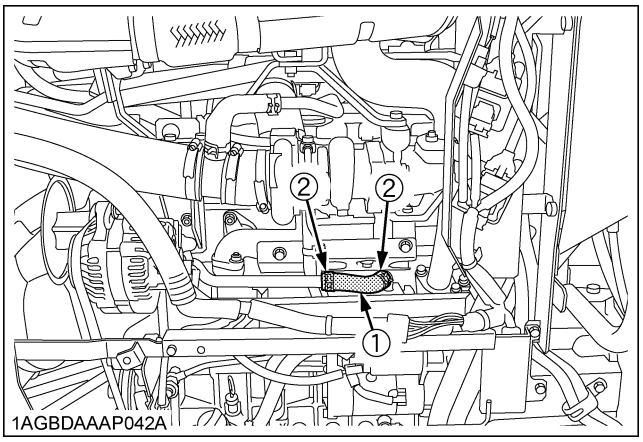

(1) Radiator hoses
(2) Hose clamps

◆ **Precaution at Overheating**

Take the following actions in the event the coolant temperature is nearly or more than the boiling point, what is called "Overheating"

1. Park the tractor in a safe place and keep the engine unloaded idling.
2. Don't stop the engine suddenly, but stop it after about 5 minutes of unloaded idling.
3. Keep yourself well away from the machine for further 10 minutes or while the steam blows out.
4. Check that there are no dangers such as burns. Get rid of the causes of overheating according to the manual, see "TROUBLESHOOTING" section, and then, start again the engine.

https://truckmanualshub.com/

■Checking Fuel Line

1. Check to see that all lines and hose clamps are tight and not damaged.
2. If hoses and clamps are found worn or damaged, replace or repair them at once.

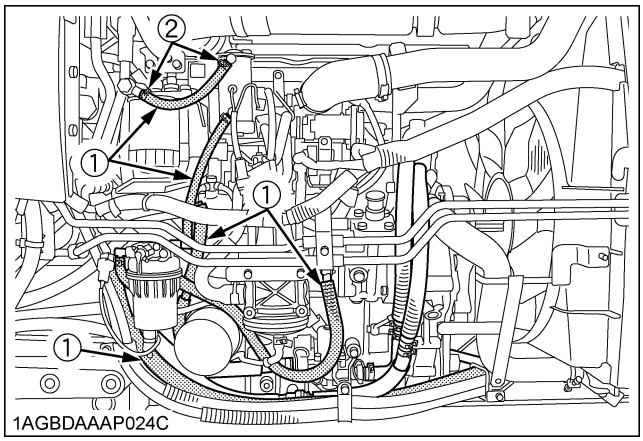

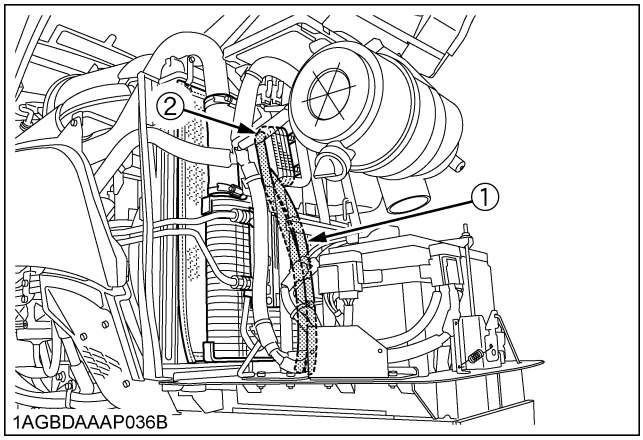

(1) Fuel lines
(2) Clamp bands

NOTE :

- If the fuel line is removed, be sure to properly bleed the fuel system.
  (See "Bleeding Fuel System" in "SERVICE AS REQUIRED" in "PERIODIC SERVICE" section.)

■Checking Intake Air Line

1. Check to see that hoses and hose clamps are tight and not damaged.
2. If hoses and clamps are found worn or damaged, replace or repair them at once.

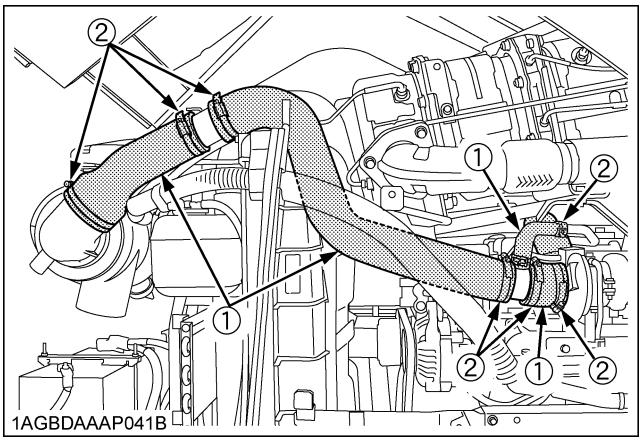

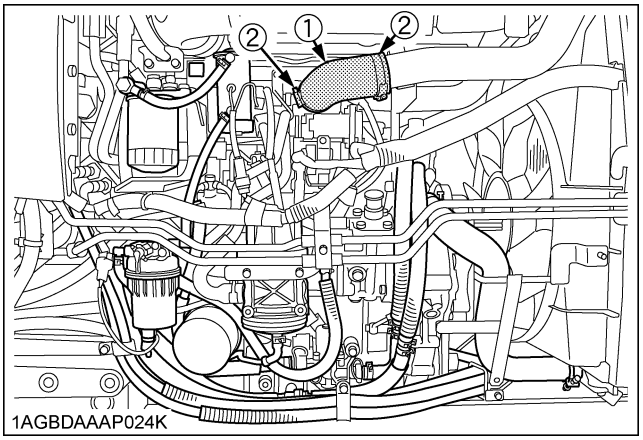

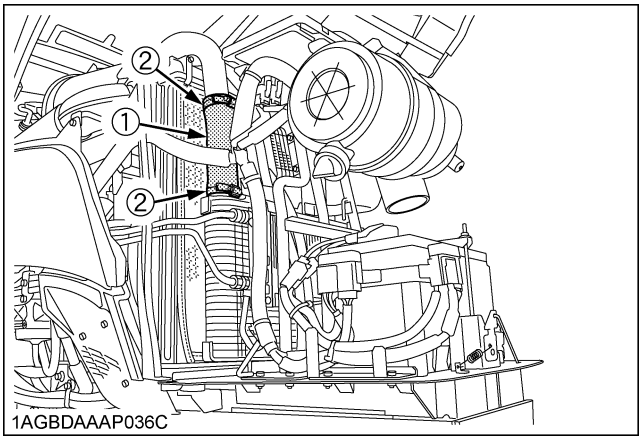

https://truckmanualshub.com/

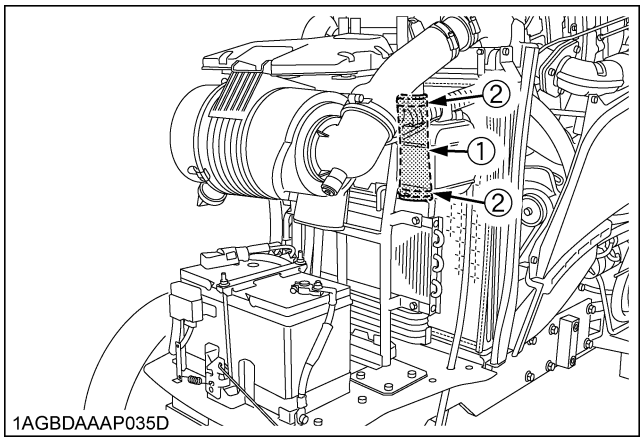

(1) Hose
(2) Hose clamps

EVERY 600 HOURS

■Adjusting Front Axle Pivot

If the front axle pivot pin adjustment is not correct, front wheel vibration can occur causing vibration in the steering wheel.

◆ Adjusting procedure

Loosen the lock nut, screw-in the adjusting screw until seated, then tighten the screw with an additional 1/6 turn. Re-tighten the lock nut.

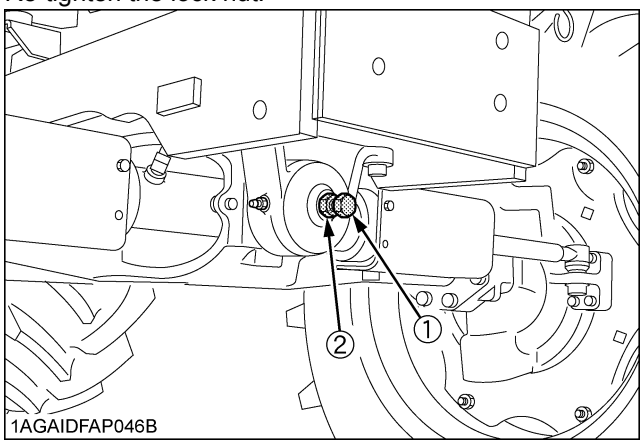

(1) Adjusting screw
(2) Lock nut

EVERY 1000 HOURS

■Changing Transmission Fluid

WARNING

To avoid personal injury or death:

- **Allow engine to cool down sufficiently, oil can be hot and can burn.**

1. To drain the used oil, remove the drain plug at the bottom of the transmission case and drain the oil completely into the oil pan.
2. After draining reinstall the drain plug.
3. Fill with the new KUBOTA SUPER UDT fluid up to the upper notch on the dipstick.
   (See "LUBRICANTS" in "MAINTENANCE" section.)
4. After running the engine for a few minutes, stop it and check the oil level again; add oil to prescribed level.

Oil capacity	60 L (63.4 U.S.qts)

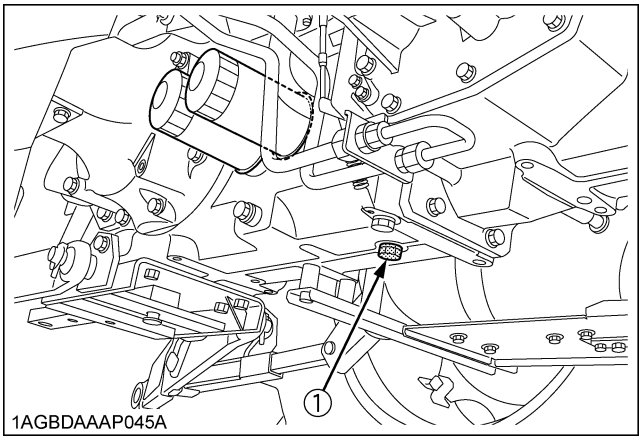

(1) Drain plug

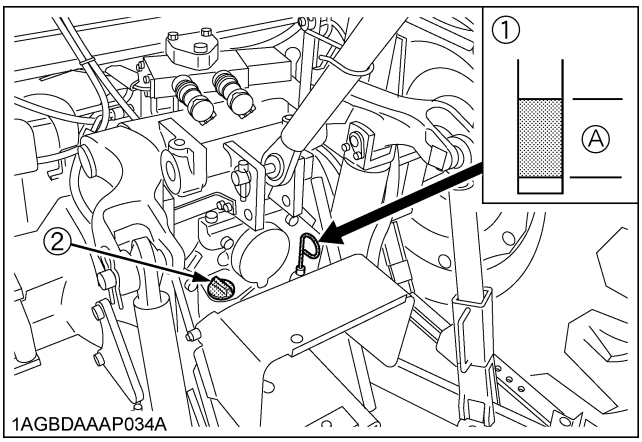

(1) Dipstick
(2) Oil inlet
(A) Oil level is acceptable within this range.

https://truckmanualshub.com/

IMPORTANT :
- Do not operate the tractor immediately after changing the transmission fluid.
  Run the engine at medium speed for a few minutes to prevent damage to the transmission.

■Changing Front Differential Case Oil

1. To drain the used oil, remove the drain and filling plug at the front differential case and drain the oil completely into the oil pan.
2. After draining reinstall the drain plug.
3. Remove the oil level check plug.
4. Fill with the new oil up to the lower rim of check plug port.
   (See "LUBRICANTS" in "MAINTENANCE" section.)
5. After filling reinstall the filling plug and check plug.

Oil capacity	6 L (6.3 U.S.qts.)

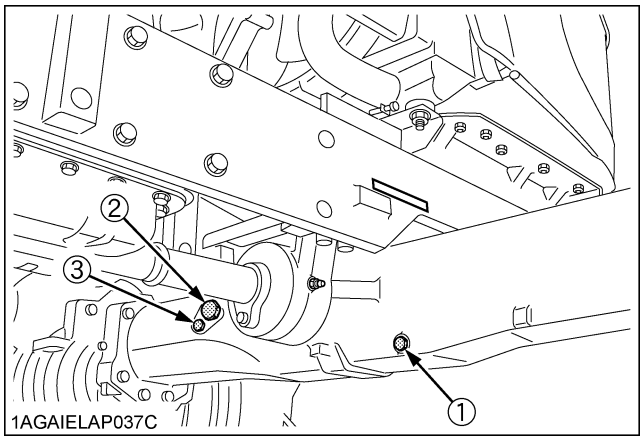

(1) Drain plug
(2) Filling plug
(3) Check plug

■Changing Front Axle Gear Case Oil

1. To drain the used oil, remove the right and left drain plugs and filling plugs at the front axle gear case and drain the oil completely into the oil pan.
2. After draining reinstall the drain plugs.
3. Fill with the new oil up to the filling plug port.
   (See "LUBRICANTS" in "MAINTENANCE" section.)
4. After filling reinstall the filling plugs.

Oil capacity	3.5 L (3.7 U.S.qts.) for each side

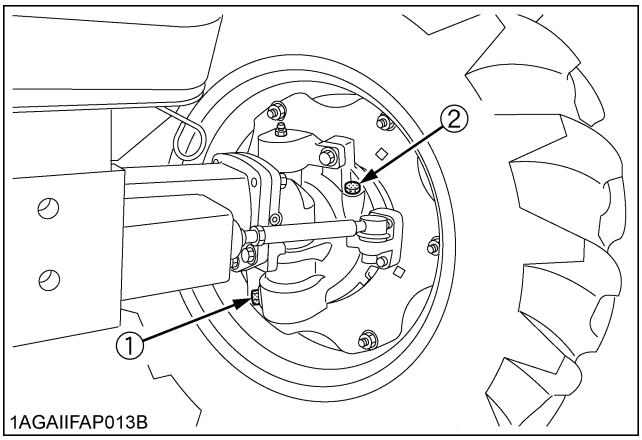

(1) Drain plug
(2) Filling plug

■Adjusting Engine Valve Clearance

Consult your local KUBOTA Dealer for this service.

https://truckmanualshub.com/

EVERY 1000 HOURS or 1 YEAR

Be sure to do the following servicing once every 1000 hours or yearly, whichever comes first.

■Replacing Air Cleaner Primary Element and Secondary Element

(See "Cleaning Air Cleaner Primary Element" in "EVERY 100 HOURS" in "PERIODIC SERVICE" section.)

■Checking Exhaust Manifold

Consult your local KUBOTA Dealer for this service.

EVERY 1500 HOURS

■Checking Fuel Injection Nozzle (Injection Pressure)

Consult your local KUBOTA Dealer for this service.

■Checking DEF/AdBlue® Injector Tip

Consult your local KUBOTA Dealer for this service.

■Checking DEF/AdBlue® Line

1. Check to see that all lines from the DEF/AdBlue® injector to the tank are securely connected and not damaged.
2. If hoses and clamps are found worn or damaged, replace or repair them at once.

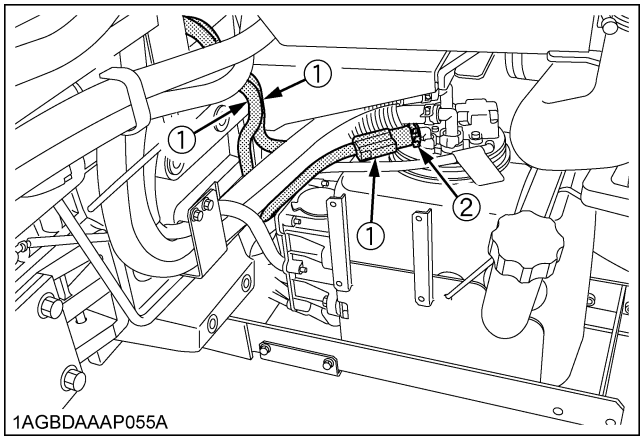

(1) DEF/AdBlue® lines
(2) Clamp bands

■Replacing Oil Separator Element

WARNING

To avoid personal injury or death:

- **Be sure to stop the engine before replacing the oil separator element.**

1. Remove the cover and take out the element. Wipe off oil and the carbon in the case with a clean rag.
2. Fit a new oil separator element.
3. Tighten the cover.

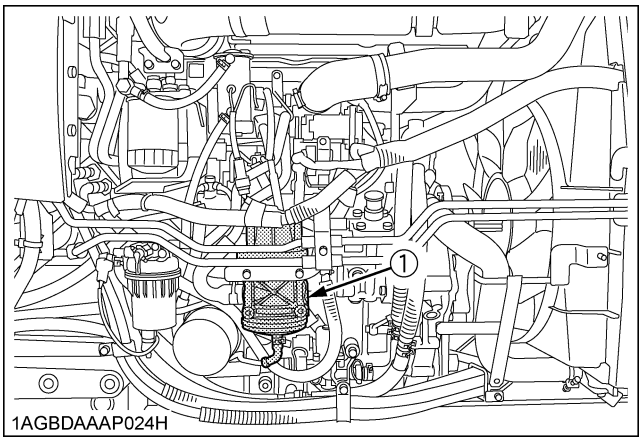

(1) Oil separator

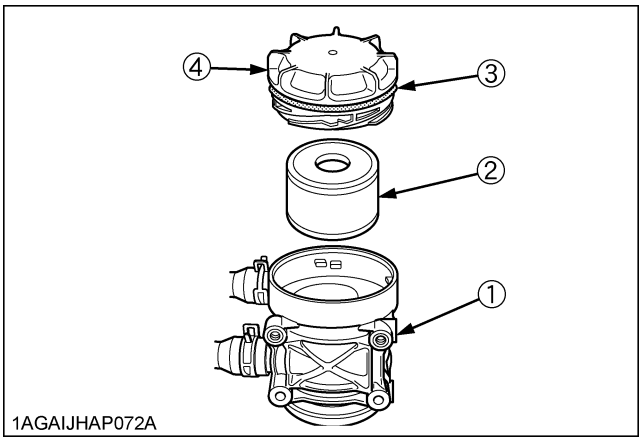

(1) Body
(2) Oil separator element
(3) Gasket
(4) Cover

■Checking PCV (Positive Crankcase Ventilation) Valve

Consult your local KUBOTA Dealer for this service.

https://truckmanualshub.com/

■Checking and Cleaning EGR Cooler

Consult your local KUBOTA Dealer for this service.

EVERY 2000 HOURS or 2 YEARS

Be sure to do the following servicing once every 2000 hours or biennially, whichever comes first.

■Flushing Cooling System and Changing Coolant

WARNING

To avoid personal injury or death:

- **Do not remove radiator cap while coolant is hot. When cool, slowly rotate cap to the first stop and allow sufficient time for excess pressure to escape before removing the cap completely.**

1. Stop the engine, remove the key and let it cool down.
2. To drain the coolant, open the radiator drain plug, remove the drain plug and remove radiator cap. The radiator cap must be removed to completely drain the coolant.
3. After all coolant is drained, reinstall the drain plug.
4. Fill with clean soft water and cooling system cleaner.
5. Follow directions of the cleaner instruction.
6. After flushing, fill with clean soft water and anti-freeze until the coolant level is just below the radiator cap. Install the radiator cap securely.
7. Fill with coolant up to the "FULL" mark of recovery tank.
8. Start and operate the engine for few minutes.
9. Stop the engine, remove the key and let cool.
10. Check coolant level of recovery tank and add coolant if necessary.
11. Properly dispose of used coolant.

Coolant capacity	10 L (11 U.S.qts.)

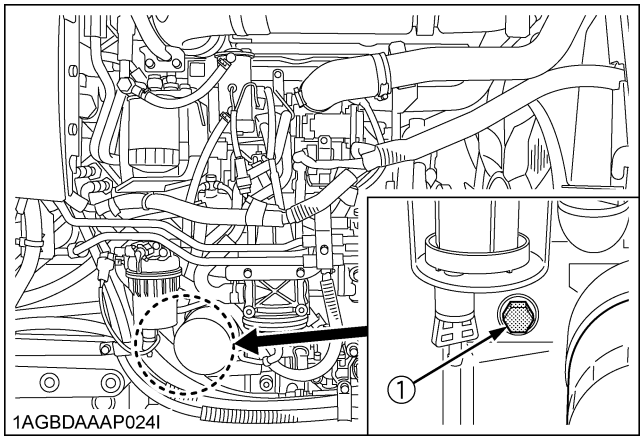

(1) Drain plug

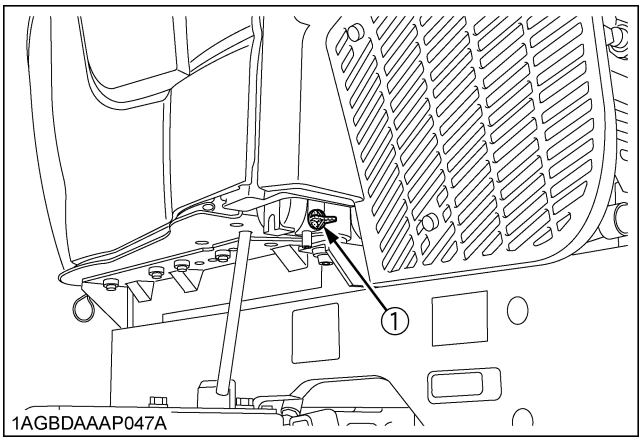

(1) Drain plug

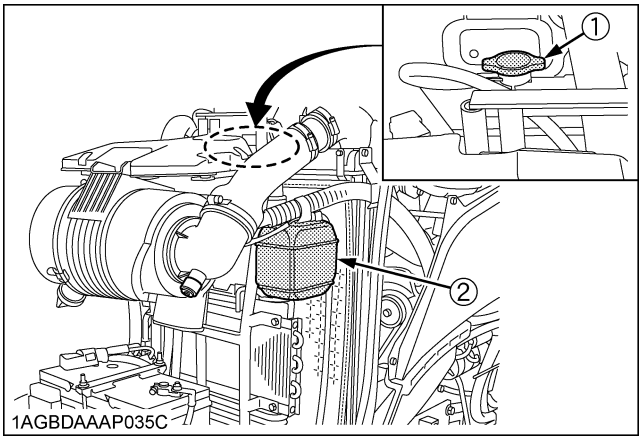

(1) Radiator cap
(2) Recovery tank

IMPORTANT :

- Do not start engine without coolant.
- Use clean, fresh soft water and anti-freeze to fill the radiator and recovery tank.
- When mixing the anti-freeze with water, the anti-freeze mixing ratio is 50%.
- Securely tighten radiator cap. If the cap is loose or improperly fitted, water may leak out and the engine could overheat.

https://truckmanualshub.com/

■Anti-Freeze

WARNING

To avoid personal injury or death:

- **When using antifreeze, put on some protection such as rubber gloves. (Antifreeze contains poison.)**
- **If it is swallowed, seek immediate medical help. Do NOT make a person throw up unless told to do so by poison control or a health care professional. Use standard first aid and CPR for signs of shock or cardiac arrest. Call your local Poison Control Center or your local emergency number for further assistance.**
- **When antifreeze comes in contact with the skin or clothing, wash it off immediately.**
- **Do not mix different types of Antifreeze. The mixture can produce chemical reaction causing harmful substances.**
- **Antifreeze is extremely flammable and explosive under certain conditions. Keep fire and children away from antifreeze.**
- **When draining fluids from the engine, place some container underneath the engine body.**
- **Do not pour waste onto the ground, down a drain, or into any water source.**
- **Also, observe the relevant environmental protection regulations when disposing of antifreeze.**

Always use a 50/50 mix of long-life coolant and clean soft water in KUBOTA engines.
Consult your local KUBOTA Dealer concerning coolant for extreme conditions.

1. Long-life coolant (hereafter LLC) comes in several types. Use ethylene glycol (EG) type for this engine.
2. Before employing LLC-mixed cooling water, fill the radiator with fresh water and empty it again.
   Repeat this procedure 2 or 3 times to clean up the inside.
3. Mixing the LLC
   Premix 50% LLC with 50% clean soft water. When mixing, stir it up well, and then fill into the radiator.
4. The procedure for the mixing of water and antifreeze differs according to the make of the antifreeze and the ambient temperature. Refer to SAE J1034 standard, more specifically also to SAE J814c.

Vol % Anti-freeze	Freezing Point		Boiling Point*	
	℃	℉	℃	℉
50	-37	-34	108	226

∗ At 1.013 x 10^5Pa (760mmHg) pressure (atmospheric). A higher boiling point is obtained by using a radiator pressure cap which permits the development of pressure within the cooling system.

5. Adding the LLC
   (1) Add only water if the mixture reduces in amount by evaporation.
   (2) If there is a mixture leak, add the LLC of the same manufacturer and type in the same mixture percentage.
   ∗ Never add any long-life coolant of different manufacturer. (Different brands may have different additive components, and the engine may fail to perform as specified.)
6. When the LLC is mixed, do not employ any radiator cleaning agent. The LLC contains anticorrosive agent. If mixed with the cleaning agent, sludge may build up, adversely affecting the engine parts.
7. Kubota's genuine long-life coolant has a service life of 2 years. Be sure to change the coolant every 2000 hours or every 2 years whichever comes faster.

NOTE :

- The above data represent industry standards that necessitate a minimum glycol content in the concentrated antifreeze.

EVERY 3000 HOURS

■Checking Turbocharger

Consult your local KUBOTA Dealer for this service.

■Checking Supply Pump

Consult your local KUBOTA Dealer for this service.

■Checking Intake Air Heater

Consult your local KUBOTA Dealer for this service.

■Checking and Cleaning EGR System

Consult your local KUBOTA Dealer for this service.

■Cleaning DPF Muffler

◆ **Removal of ash**

The longer the DPF operates, the more ash (burnt residue) is collected in the filter. Too much ash build-up adversely affects the DPF performance. Consult your local KUBOTA Dealer to clean the filter.

IMPORTANT :

- The DPF needs cleaning with a specific cleaning device. Do not clean the DPF by disassembling, and attempt by yourself, consult your local KUBOTA Dealer.

https://truckmanualshub.com/

■Checking DEF/AdBlue® injector

Consult your local KUBOTA Dealer for this service.

■Replacing DEF/AdBlue® Pump Filter

1. Loosen 4 bolts and remove pump cover.
2. Clean up around the plug and remove the plug.
3. Loosen the top of filter assembly and remove it from pump.
4. Replace the filter assembly with new one.

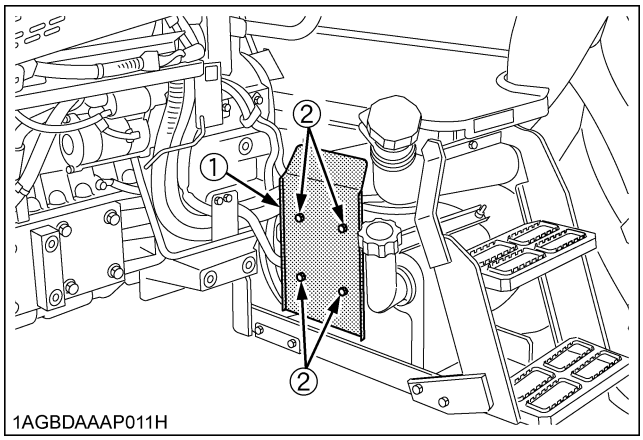

(1) Pump cover
(2) Bolt

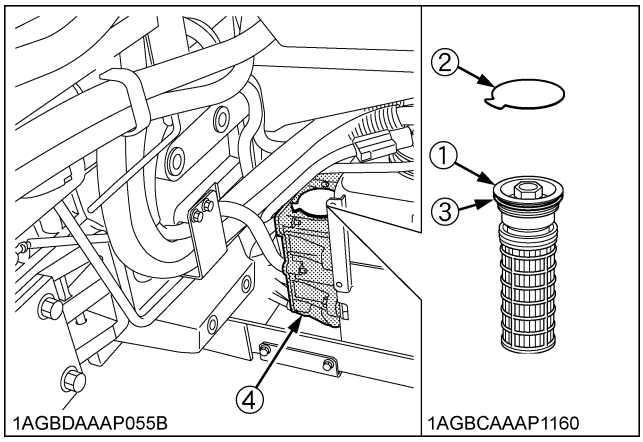

(1) Filter assembly
(2) Plug
(3) O-ring
(4) DEF/AdBlue® pump

NOTE :

- Even after stopping the engine, the injector cooling DEF/AdBlue® fluid continues to circulate through the circuit for a couple of minutes.
  When this circulation has ended, do the replacement job. (During cooling, the fluid's circulating noise is heard.)
- Do not apply oil to the O-ring of the cover.

EVERY 9000 HOURS

■Replacing DEF/AdBlue® Tank Filter

Consult your local KUBOTA Dealer for this service.

EVERY 1 YEAR

■Checking Antifrost Heater for Oil Separator

(if equipped)

Consult your local KUBOTA Dealer for this service.

■Checking DPF Related Pipe

Consult your local KUBOTA Dealer for this service.

■Checking EGR Pipe

Consult your local KUBOTA Dealer for this service.

EVERY 2 YEARS

■Cleaning Master Cylinder Filter

Consult your local KUBOTA Dealer for this service.

■Replacing Oil Separator Related Rubber Pipe

Consult your local KUBOTA Dealer for this service.

■Replacing DPF Related Rubber Pipe

Consult your local KUBOTA Dealer for this service.

■Replacing EGR Cooler Hose

Consult your local KUBOTA Dealer for this service.

■Replacing Boost Sensor Hose

Consult your local KUBOTA Dealer for this service.

EVERY 4 YEARS

■Replacing Radiator Hose (Water pipes)

Replace the hoses and clamps.
(See "Checking Radiator Hose and Clamp" in "EVERY 500 HOURS" in "PERIODIC SERVICE" section.)

■Replacing Fuel Hose

Consult your local KUBOTA Dealer for this service.

■Replacing Intake Air Line

Consult your local KUBOTA Dealer for this service.

https://truckmanualshub.com/

■Replacing Power Steering Hose
Consult your local KUBOTA Dealer for this service.

■Replacing Lift Cylinder Hose
Consult your local KUBOTA Dealer for this service.

■Replacing Master Cylinder Kit
Consult your local KUBOTA Dealer for this service.

■Replacing Brake Seal 1 and 2
Consult your local KUBOTA Dealer for this service.

SERVICE AS REQUIRED

■Bleeding Fuel System
Air must be removed:
1. When the fuel filter or lines are removed.
2. When water is drained from water separator.
3. When tank is completely empty.
4. After the tractor has not been used for a long period of time.

◆ **Bleeding procedure is as follows:**
1. Fill the fuel tank with fuel, and open the fuel shutoff-valve.

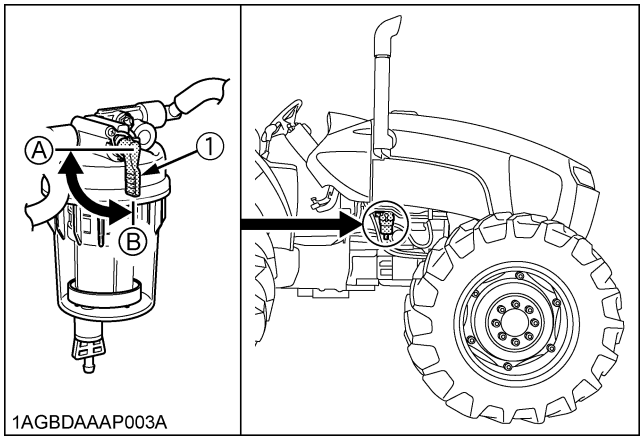

(1) Fuel shutoff-valve *(A) "CLOSE"* *(B) "OPEN"*

2. Disconnect the heater connector.

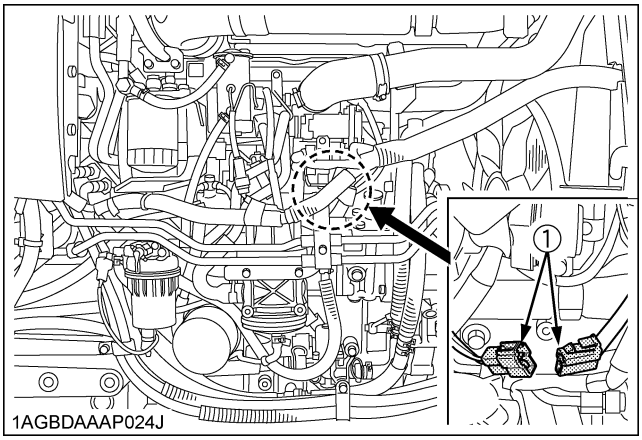

(1) Connector

IMPORTANT :
- Do not try air-bleeding with the heater in operation. Otherwise the battery may get damaged.

3. Turn ON and OFF the key switch repeatedly 10 times or so at the following intervals. This lets the air out of the fuel line.
   (1) Key switch ON time: 30 seconds
   (2) Key switch OFF time: 15 seconds

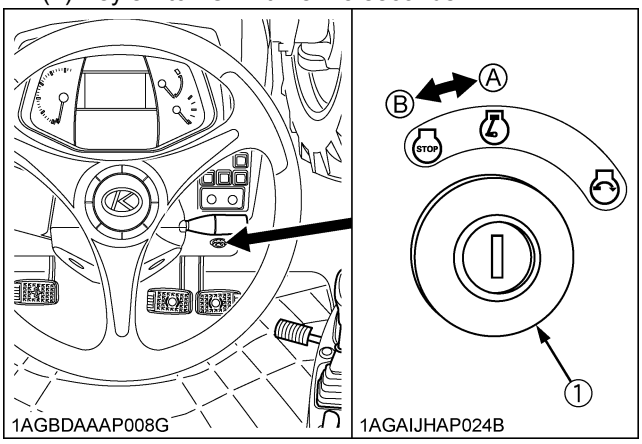

(1) Key switch *(A) "ON"* *(B) "OFF"*

4. Connect the heater connector.
5. Set the hand throttle lever at the maximum speed position, turn the key switch to start the engine and then reset the throttle lever at the mid speed (around 1500 rpm) position.
   If engine doesn't start, try it several times at 30 second intervals.

IMPORTANT :
- Do not hold key switch at engine start position for more than 10 seconds continuously. If more engine cranking is needed, try again after 30 seconds.

https://truckmanualshub.com/

6. Accelerate the engine to remove the small portion of air left in the fuel system.
7. If air still remains and the engine stops, repeat the above steps.

■Bleeding Brake System

Consult your local KUBOTA Dealer for this service.

■Draining Clutch Housing Water

The tractor is equipped with a drain plug under the clutch housing.
After operating in rain, snow or if the tractor has been washed, water may get into the clutch housing.
Remove the drain plug and drain the water, then install the plug again.

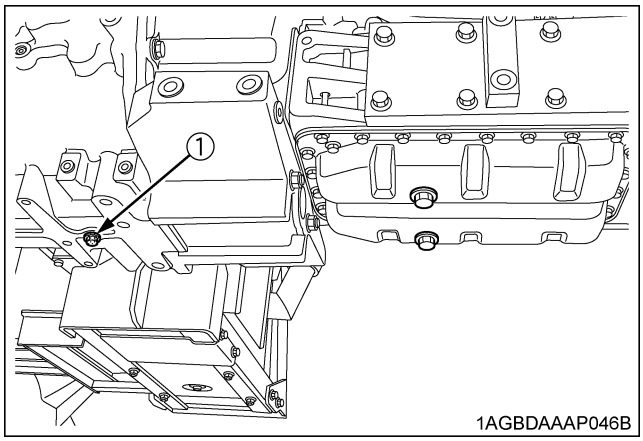

(1) Water drain plug

■Replacing Fuse

The tractor electrical system is protected from potential damage by fuses.
A blown fuse indicates that there is an overload or short somewhere in the electrical system.
If any of the fuses should blow, replace with a new one of the same capacity.

IMPORTANT :

- Before replacing a blown fuse, determine why the fuse blew and make any necessary repairs. Failure to follow this procedure may result in serious damage to the tractor electrical system. Refer to the "TROUBLESHOOTING" section of this manual or your local KUBOTA Dealer for specific information dealing with electrical problems.

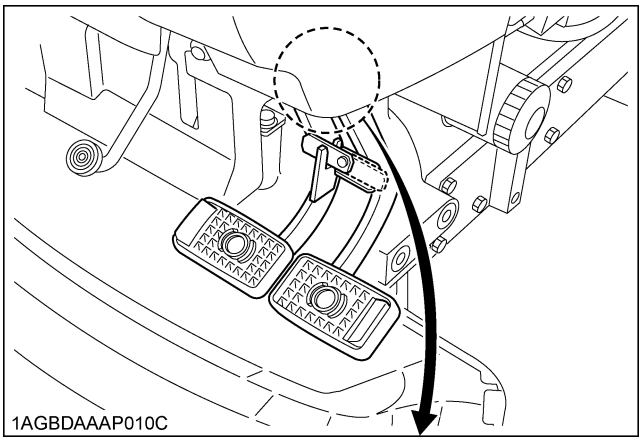

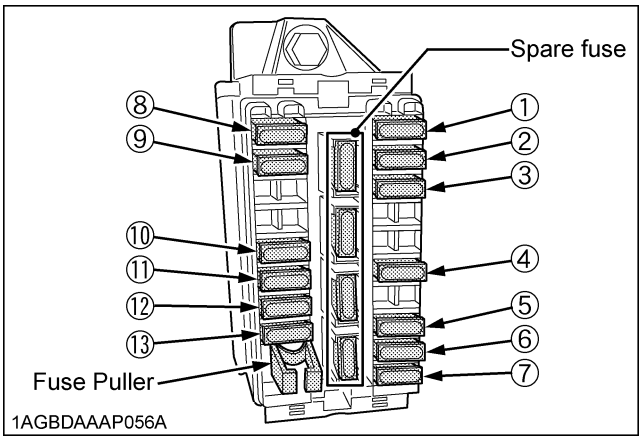

Fuse No.	Capacity (A)	Protected circuit
(1)	10	PTO valve
(2)	5	Meter Panel
(3)	10	Turn Signal
(4)	15	Front work light
(5)	15	Flasher
(6)	10	Meter (Backup)
(7)	20	Head Light
(8)	15	ECU
(9)	5	Transmission control
(10)	5	ECU (Backup)
(11)	5	Starter
(12)	15	Loader Plug
(13)	15	Rear work light

https://truckmanualshub.com/

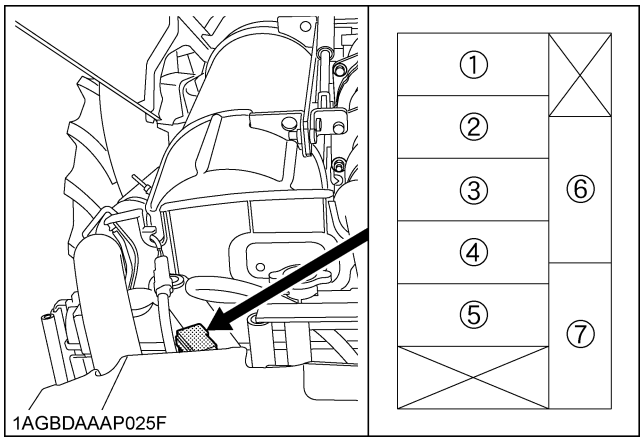

Fuse No.	Capacity (A)	Protected circuit
(1)	30	CRS system fuel pump
(2)	20	SCR system
(3)	30	SCR heater system
(4)	10	Nox sensor, SCR tank sensor
(5)	10	EGR valve air flow sensor
(6)	20	Spare fuse
(7)	30	Spare fuse

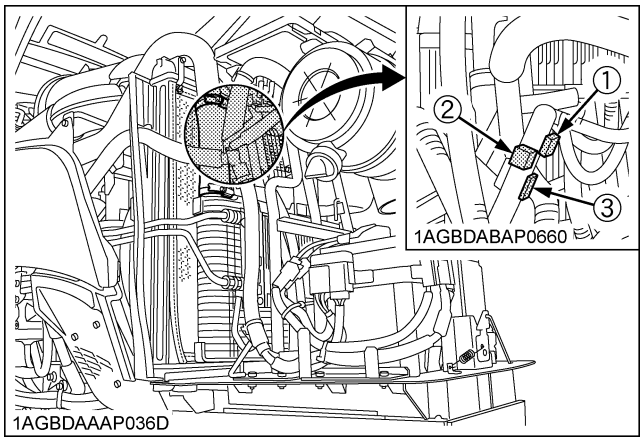

[Oil separator Fuse] (if equipped)

Fuse No.	Capacity (A)	Protected circuit
(1)	15	Heater (Oil separator, OUT 1)
(2)	15	Heater (Oil separator, IN)
(3)	15	Heater (Oil separator, OUT 2)

■Replacing Slow-Blow Fuses

The slow-blow fuses are intended to protect the electrical cabling. If any of them has blown out, be sure to pinpoint the cause. Never use any substitute, use only a KUBOTA genuine part.

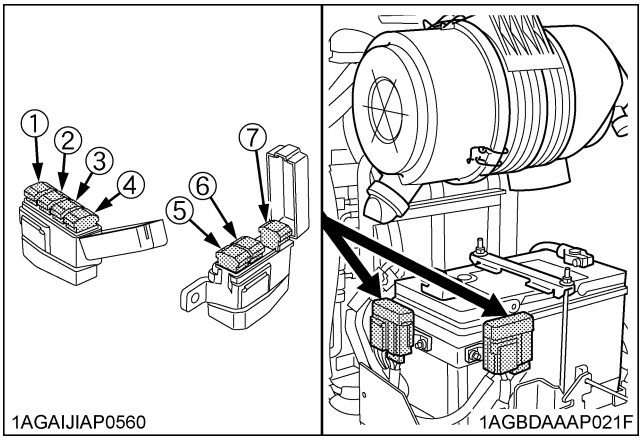

No.	Capacity	Protected circuit	Type
1	100A	Charge	Bolt fixed
2	50A	SCR system	
3	50A	Head lamp	Non Bolt fixed
4	30A	Key switch	
5	120A	Engine preheat	Bolt fixed
6	60A	Front work light	
7	30A	Rear work light	Non Bolt fixed

https://truckmanualshub.com/

◆ **Replacement procedure**

[Non bolt fixed slow-blow fuse:]

1. Disconnect the negative cord of the battery.
2. Pull out the fuse from the fuse box.
3. Replace with a new one of the same capacity.

[Bolt fixed slow-blow fuse:]

Consult your local KUBOTA Dealer for this service.

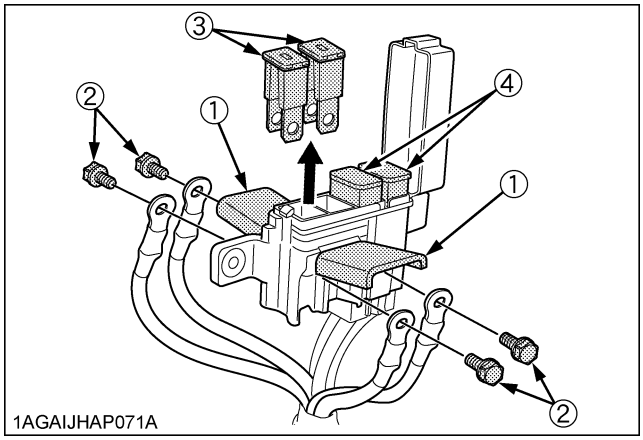

(1) Fuse box
(2) Bolt
(3) Bolt fixed slow-blow fuse
(4) Non bolt fixed slow-blow fuse

■Replacing Light Bulb

Light	Capacity
Head light	12 V, 55 / 60 W (H4)
Hazard light	12 V, 23 W
Turn signal	12 V, 21 W
Tail light	12 V, 5 W
Work light (if equipped)	12 V, 35 W
Front work light	12 V, 35 W

■Replacing Head Lamp

CAUTION

To avoid personal injury:

- **Be careful not to drop the bulb, hit anything against the lamp, apply excess force, and get the lamp scratched. If broken, glass may cause injury. Pay more attention to halogen lamps in particular, which have high pressure inside.**
- **Before replacing the lamp, be sure to turn off the light and wait until the bulb cools down, otherwise, you may get burned.**

1. While pushing the right and left lock buttons, pull and remove the electrical connector.
2. Turn the cover counterclockwise to remove it.
3. Turn the bulb base counterclockwise to take out the bulb.
4. Replace with a new bulb and reinstall the head lamp assembly in the reverse order.

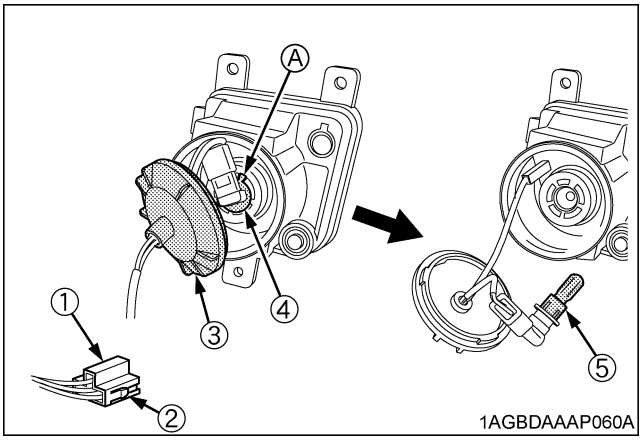

(1) Electrical connector
(2) Lock buttons
(3) Cover
(4) Bulb base
(5) Bulb
(A)"Base's wider projection to face upward"

IMPORTANT :

- Be sure to use a new bulb of the specified wattage.
- Never touch the bulb surface (glass) with bare hands. Fingerprints, for example, may break the bulb.

https://truckmanualshub.com/

STORAGE

WARNING

To avoid personal injury or death:

- **Do not clean the machine while the engine is running.**
- **To avoid the danger of exhaust fume poisoning, do not operate the engine in a closed building without proper ventilation.**
- **When storing, remove the key from the key switch to avoid unauthorized persons from operating the tractor and getting injured.**

TRACTOR STORAGE

If you intend to store your tractor for an extended period of time, follow the procedures outlined below.

These procedures will insure that the tractor is ready to operate with minimum preparation when it is removed from storage.

1. Check the bolts and nuts for looseness, and tighten if necessary.
2. Apply grease to tractor areas where bare metal will rust also to pivot areas.
3. Detach the weights from the tractor body.
4. Inflate the tires to a pressure a little higher than usual.
5. Change the engine oil and run the engine to circulate oil throughout the engine block and internal moving parts for about 5 minutes.
6. Keep the PTO clutch control switch or lever at "DISENGAGE" position while tractor is stored for a long period of time.
7. With all implements lowered to the ground, coat any exposed hydraulic cylinder piston rods with grease.
8. Remove the battery from the tractor. Store the battery following the battery storage procedures.
   (See "Checking Battery Condition" in "EVERY 100 HOURS" in "PERIODIC SERVICE" section.)
9. Preferably let the DEF/AdBlue® out of its tank and store the fluid in another specific tank.
   For a long-term storage of DEF/AdBlue®, refer to "Storing and Handling the DEF/AdBlue®" in "SELECTIVE CATALYTIC REDUCTION (SCR) MUFFLER" in "OPERATING THE ENGINE" section.
10. Keep the tractor in a dry place where the tractor is sheltered from the elements. Cover the tractor.
11. Store the tractor indoors in a dry area that is protected from sunlight and excessive heat. If the tractor must be stored outdoors, cover it with a waterproof tarpaulin.
    Jack the tractor up and place blocks under the front and rear axles so that all 4 tires are off the ground. Keep the tires out of direct sunlight and extreme heat.

IMPORTANT :

- When washing the tractor, be sure to stop the engine. Allow sufficient time for the engine to cool before washing.
- Cover the tractor after the muffler and the engine have cooled down.

REMOVING THE TRACTOR FROM STORAGE

1. Check the tire air pressure and inflate the tires if they are low.
2. Jack the tractor up and remove the support blocks from under the front and rear axles.
3. Install the battery. Before installing the battery, be sure it is fully charged.
4. Check the fan belt tension.
5. Check all fluid levels (engine oil, transmission/ hydraulic oil, engine coolant, DEF/AdBlue® and any attached implements).
6. Start the engine. Observe all gauges. If all gauges are functioning properly and reading normal, move the tractor outside. Once outside, park the tractor and let the engine idle for at least 5 minutes. Shut the engine off and walk around tractor and make a visual inspection looking for evidence of oil or water leaks.
7. With the engine fully warmed up, release the parking brake and test the brakes for proper adjustment as you move forward. Adjust the brakes as necessary.

https://truckmanualshub.com/

TROUBLESHOOTING

ENGINE TROUBLESHOOTING

If something is wrong with the engine, refer to the table below for the cause and its corrective measure.

Trouble		Cause	Countermeasure
Engine is difficult to start or won't start.		● No fuel flow.	● Check the fuel tank and the fuel filter. Replace filter if necessary.
		● Air or water is in the fuel system.	● Check to see if the fuel line coupler bolt and nut are tight. ● Bleed the fuel system (See "Bleeding Fuel System" in "SERVICE AS REQUIRED" in "PERIODIC SERVICE" section.)
		● In winter, oil viscosity increases, and engine revolution is slow.	● Use oils of different viscosities, depending on ambient temperatures. ● Use engine block heater (Optional)
		● Battery becomes weak and the engine does not turn over quick enough.	● Clean battery cables & terminals. ● Charge the battery. ● In cold weather, always remove the battery from the engine, charge and store it indoors. Install it on the tractor only when the tractor is going to be used.
		● Intake air heater system trouble.	● Check to see if the slow blow fuse of the intake air heater blows. ● Check to see if the intake air heater functions in cold weather.
Insufficient engine power.		● Insufficient or dirty fuel. ● The air cleaner is clogged.	● Check the fuel system. ● Clean or replace the element.
		● DEF/AdBlue® runs short	● Add DEF/AdBlue®.
Engine stops suddenly.		● Insufficient fuel.	● Refuel. ● Bleed the fuel system if necessary.
Exhaust fumes are colored.	Black	● Fuel quality is poor. ● Too much oil. ● The air cleaner is clogged.	● Change the fuel and fuel filter. ● Check the proper amount of oil. ● Clean or replace the element.
	Blue white	● The inside of exhaust muffler is damp with fuel. ● Injection nozzle trouble. ● Fuel quality is poor.	● Check to see if the intake air heater functions in cold weather. ● Heat the muffler by applying load to the engine. ● Check the injection nozzle. ● Change the fuel and fuel filter.
Engine overheats		● Engine overloaded	● Shift to lower gear or reduce load.
		● Low coolant level	● Fill cooling system to the correct level; check radiator and hoses for loose connections or leaks.
		● Loose or defective fan belt	● Adjust or replace fan belt.
		● Dirty radiator core or grille screens	● Remove all trash.
		● Coolant flow route corroded	● Flush cooling system.

If you have any questions, contact your local KUBOTA Dealer.

https://truckmanualshub.com/

Trouble	Operator's action
Engine not overheated, but engine warning indicator on.	Stop the engine and get it restarted. If the engine fails to restart or the indicator stays on, immediately contact your local KUBOTA dealer.If the warning indicator lights up, the following phenomena may appear depending on the engine's trouble spot. ● The engine stops unexpected. ● The engine fails to start or gets interrupted just after start. ● The engine output is not enough. ● The engine output is enough, but the warning indicator stays on.

If you have any questions, contact your local KUBOTA Dealer.

https://truckmanualshub.com/

POWER TRAIN TROUBLE SHOOTING

If something is wrong with the power train, the master system warning indicator starts blinking and the error code shown below is displayed on the liquid crystal display, indicating the location of the trouble. If an error code appears, immediately contact your local KUBOTA Dealer for repairs.

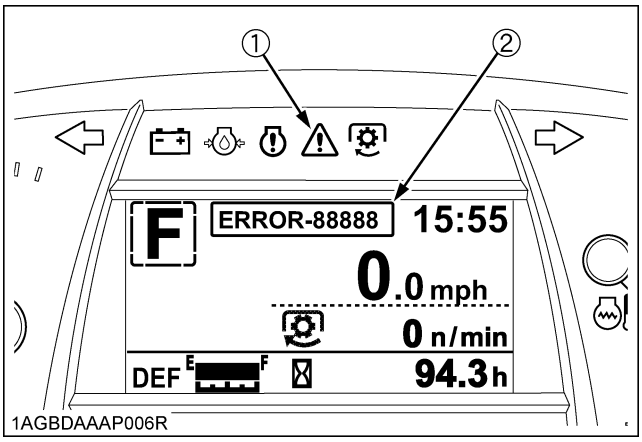

(1) Master system warning indicator
(2) Error code

Displayed error code	Trouble
ERROR-1	Acceleration sensor (main) trouble
ERROR-2	Acceleration sensor (sub) trouble
ERROR-3	Acceleration sensor main/sub phase shifting trouble
ERROR-4	Shuttle sensor (main) trouble
ERROR-5	Shuttle sensor (sub) trouble
ERROR-6	Shuttle sensor main/sub phase shifting trouble
ERROR-7	Shuttle sensor signal trouble
ERROR-8	Gear lock signal trouble
ERROR-11	PTO relay trouble
ERROR-12	4-wheel-drive solenoid trouble
ERROR-13	Bi-speed turn solenoid trouble
ERROR-14	Shuttle forward solenoid trouble
ERROR-15	Shuttle reverse solenoid trouble
ERROR-21	Range gear shift (Hi) switch trouble
ERROR-22	Main gear shift (6th) switch trouble
ERROR-23	Shuttle rotating sensor trouble
ERROR-24	Machine speed sensor trouble
ERROR-ENG (ERROR-41)	Engine communication trouble
ERROR-ACU (ERROR-42)	ACU communication trouble
ERROR-ECU (ERROR-43)	ECU communication trouble or meter communication trouble
ERROR-60	Analog reference supply voltage +5V trouble
ERROR-63	Acceleration & engine adjustment trouble
ERROR-NET	Communication trouble

https://truckmanualshub.com/

OPTIONS

Consult your local KUBOTA Dealer for further details.

- Under Muffler Kit
- Engine Block Heater
  For extremely cold weather starting
- Front end weights
  For front ballast
- Rear Wheel Weights
  For rear ballast
- Rear Cast Iron Disk
- Creep Speed Kit
- 80" Wide Axle
- Canopy
- Grille guard
- Double Acting Remote Hydraulic Control Valve with Detents and Self-Cancelling
- Double Acting Remote Hydraulic Control Valve with Detents and Self-Cancelling for Flow Control Valve
- Double Acting Remote Hydraulic Control Valve with Float Position
- Remote valve lever kit
- Flow Control Valve Kit
- Hydraulic High Capacity Lift Cylinder
  (F12 / R12 model: standard)
- Clevis for Drawbar
- 540 / 540E rpm PTO Speed Kit
  (F12/R12 model: standard)
- 540 / 1000 rpm PTO Speed Kit
- Rear Work Light.
  High visibility for night work.
- 80A Alternator Kit

https://truckmanualshub.com/

APPENDICES

INDEX

1000 rpm PTO Shaft 59
3-point Hitch Lowering Speed 67
Adjustment of Foldable ROPS 33
Air Cleaner Primary Element 93
Air Cleaner Primary Element and Secondary Element 105
Anti-Freeze 107
Antifrost Heater for Oil Separator 108
Battery Condition 95
Block Heater (if equipped) 29
Boost Sensor Hose 108
Brake Pedal 88
Brake Pedal 94
Brake Pedals (Right and Left) 36
Brake Seal 1 and 2 109
Brake System 110
Clutch Housing Water 110
Clutch Pedal 37
Constant RPM Management Control 52
Coolant Level 87
Coolant Temperature Gauge 44
Cooling System and Coolant 106
Creep Speed (if equipped) 39
DEF / AdBlue® Gauge 43
DEF/AdBlue® 21
DEF/AdBlue® injector 108
DEF/AdBlue® Injector Tip 105
DEF/AdBlue® level and the fluid 84
DEF/AdBlue® Line 105
DEF/AdBlue® Pump Filter 108
DEF/AdBlue® Tank Filter 108
Differential Lock 54
Do not Operate the Tractor at Full Speed for the First 50 Hours 31
DPF Muffler 107
DPF Regeneration Process 13
DPF Related Pipe 108
DPF Related Rubber Pipe 108
DPF/SCR Muffler 88
Draft Control 66
Drawbar 62
Drawbar Length 65
Dual Exhaust Aftertreatment Devices 12
Dual Tires 72
Dust Indicator 87
Easy Checker(TM) 41
EGR Cooler 106
EGR Cooler Hose 108
EGR Pipe 108
EGR System 107
Electrical Outlet 56
Engine Filter 89
Engine Oil 89
Engine Oil 98
Engine Oil Filter 99
Engine Oil Level 86
Engine Start System 89
Engine Valve Clearance 104
Evacuator Valve 87
Exhaust Manifold 105
Fan Belt Tension 93
Float Control 67
Flow Control Valve (option) 69
Flow rate 69
Fold the ROPS 31
Foot Throttle 41
Front Axle Gear Case Oil 104
Front Axle Pivot 103
Front Ballast 76
Front Differential Case Oil 104
Front Wheel Drive Lever 40
Front Wheels (2-wheel drive) 72
Front Wheels (4-wheel drive) 74
Front Work Light Switch 36
Fuel Filter 99
Fuel Gauge 43
Fuel Hose 108
Fuel Injection Nozzle (Injection Pressure) ... 105
Fuel Line 102
Fuel System 109
Fuel Tank Water 97
Fuse 110
Gauges, Meter and Easy Checker(TM) 88
Gear Locked Parking Brake 94
Glove Box 34
Grill, Radiator Screen, Oil Cooler and Battery Mount 88
Hand Throttle Lever 41
Handling Points 13
Head Lamp 112
Head Light, Turn Signal / Hazard Light etc. ... 89
Holes of Lower Links 62
Hood 83
Hydraulic Control Unit Use Reference Chart . 71
Hydraulic Oil Filter 100

https://truckmanualshub.com/

Hydraulic-Shuttle Shift Lever.....39
Immediately Stop the Engine if:.....41
Inflation Pressure 72
Intake Air Heater 107
Intake Air Line 102
Intake Air Line 108
Lateral Float 62
LCD Monitor Message.....60
Lift Cylinder Hose.....109
Lifting Rod (Left).....63
Lifting Rod (Right) 63
Light Bulb 112
Light Switch.....35
Lubricating Grease Fitting [2WD Model] 98
Lubricating Grease Fittings 91
Lubricating Oil for New Tractors.....31
Main Gear Shift Lever 39
Maintenance Items Chart 80
Master Cylinder Filter 108
Master Cylinder Kit.....109
Mixed Control 67
Movable Parts 89
Oil Separator Element.....105
Oil Separator Related Rubber Pipe.....108
Operating on Slopes and Rough Terrain.....55
Operating Procedure
for Auto Regeneration Mode 14
Operating Procedure
for Parked Regeneration 18
Operating Procedure
for Regeneration Inhibit Mode.....16
Operating the Tractor on a Road.....54
Operator's Seat 33
Outline of the SCR 20
Parking 53
PCV (Positive Crankcase Ventilation)
Valve 105
Performance Monitor.....50
Position Control.....66
Positions and advantages of the flow control
valve.....70
Power Steering.....55
Power Steering Hose 109
Power Steering Line.....101
PTO Clutch Control Switch.....57
PTO Gear Shift Lever.....58
PTO Shaft Cover and Shaft Cap.....60
PTO Speed Limiter.....58
Radiator Hose (Water pipes).....108
Radiator Hose and Clamp.....101
Raise the ROPS to Upright Position.....32
Range Gear Shift Lever.....39
Rear Ballast 77
Rear Wheels..... 75
Refueling 84
Remote Control Valve 67
Remote Control Valve Coupler
Connecting and Disconnecting..... 69
Remote Control Valve Lever 68
RPM Dual Memory Setting 51
Seat Belt 34
Seat Belt and ROPS..... 89
Side Cover..... 83
Slow-Blow Fuses 111
Stopping 41
Storing and Handling DEF/AdBlue®..... 26
Supply Pump 107
Swing Drawbar 65
Tachometer 44
Telescopic Lower Links 64
Telescopic Stabilizers..... 64
Tie-rod Dust Cover 91
Tilt Steering Adjustment 34
Tips on Diesel Particulate Filter (DPF)
Regeneration 20
Toe-in 96
Top Link..... 64
Top Link Mounting Holes..... 62
Trailer Electrical Outlet 55
Transmission Fluid 103
Transmission Fluid Level..... 86
Transport the Tractor Safely..... 55
Travel Speed Limiter 38
Turbocharger 107
Turn Signal / Hazard Light Switch 35
Various Setting Mode 46
Walk Around Inspection..... 84
Warm-up and Transmission Oil
at Low Temperature Range..... 30
Warning Indication and its Countermeasure . 21
Water Separator 85
Water Separator 98
Wheel Bolt Torque..... 90

https://truckmanualshub.com/

M5L-111
LOW PROFILE TRACTOR

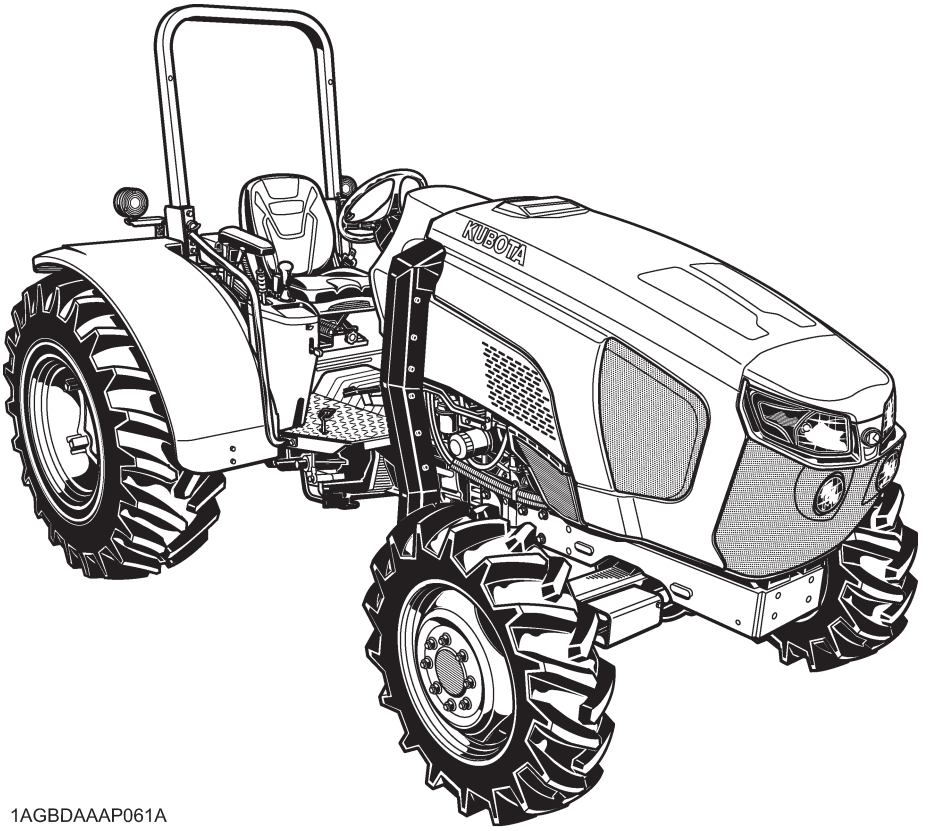

1AGBDAAAP061A

https://truckmanualshub.com/

FOREWORD

Thank you very much for choosing the low profile model of the M series tractor.
This operator's manual covers the operation, inspection and preventive maintenance instructions that are specific to the M series low profile model.
For other information and instructions, refer to the first part of this manual.
Please read this manual carefully to operate the machine properly and safely. Proper daily inspection, servicing and lubrication keeps your machine in good condition.

SAFETY FIRST

This symbol, the industry's "Safety Alert Symbol", is used throughout this manual and on labels on the machine itself to warn of the possibility of personal injury. Read these instructions carefully. It is essential that you read the instructions and safety regulations before you attempt to assemble or use this unit.

DANGER : Indicates an imminently hazardous situation which, if not avoided, will result in death or serious injury.

WARNING : Indicates a potentially hazardous situation which, if not avoided, could result in death or serious injury.

CAUTION : Indicates a potentially hazardous situation which, if not avoided, could result in minor or moderate injury.

IMPORTANT : Indicates that equipment or property damage could result if instructions are not followed.

NOTE : Gives helpful information.

https://truckmanualshub.com/

CONTENTS

⚠SAFE OPERATION ..... ⚠-1

SPECIFICATIONS 1
SPECIFICATION TABLE 1
TRAVELING SPEEDS 3

OPERATING THE TRACTOR 4
OPERATING RETRACTABLE ROPS 4
To Retract the ROPS 4
To Extend the ROPS to Upright Position 5
SEAT 6
Operator's Seat 6
WARNING LAMP 6
Rear Turn Signal / Hazard Light 6
3-POINT HITCH CONTROL SYSTEM 6
3-point Hitch Lowering Speed 6
REMOTE HYDRAULIC CONTROL SYSTEM 7
Remote Control Valve 7
Remote Control Valve Lever Location 7
Remote Control Valve Lever 7
FRONT LOADER 8

TIRES, WHEELS AND BALLAST 9
TIRES 9
Inflation Pressure 9
Dual Tires 9
WHEEL ADJUSTMENT 9
Front Wheels (with 4 wheel drive) 10
Rear Wheels 11
Adjusting Fender Height 12
BALLAST 13

PERIODIC SERVICE 14
DAILY CHECK 14
Checking and Refueling 14
EVERY 3000 HOURS 15
Replacing DEF/AdBlue® Pump Filter 15

OPTIONS 16

APPENDICES 17
INDEX 17

https://truckmanualshub.com/

https://truckmanualshub.com/

SAFE OPERATION

Careful operation is your best insurance against an accident.

Read and understand this manual carefully before operating the tractor.

All operators, no matter how much experience they may have, should read this and other related manuals before operating the tractor or any implement attached to it. It is the owner's obligation to instruct all operators in safe operation.

1. BEFORE OPERATING THE TRACTOR

1. Know your equipment and its limitations. Read this entire manual before attempting to start and operate the tractor.
2. Pay special attention to the danger, warning and caution labels on the tractor.
3. Do not operate the tractor or any implement attached to it while under the influence of alcohol, medication, controlled substances or while fatigued.
4. Before allowing other people to use your tractor, explain how to operate and have them read this manual before operation.
5. Never wear loose, torn, or bulky clothing around tractor. It may catch on moving parts or controls, leading to the risk of an accident. Use additional safety items, e.g. hard hat, safety boots or shoes, eye and hearing protection, gloves, etc., as appropriate or required.
6. Do not allow passengers to ride on any part of the tractor at anytime. The operator must remain in the tractor seat during operation.
7. Check brakes, clutch, linkage pins and other mechanical parts for improper adjustment and wear. Replace worn or damaged parts promptly. Check the tightness of all nuts and bolts regularly. (For further details, see "MAINTENANCE" section.)
8. Keep your tractor clean. Dirt, grease, and trash build up may contribute to fires and lead to personal injury.
9. Use only implements meeting the specifications listed under "IMPLEMENT LIMITATIONS" in this manual or implements approved by KUBOTA.
10. Use proper weights on the front or rear of the tractor to reduce the risk of upsets. When using the front loader, put an implement or ballast on the 3-point hitch to improve stability. Follow the safe operating procedures specified in the implement or attachment manual.
11. The narrower the tread, the greater the risk of a tractor upset. For maximum stability, adjust the wheels to the widest practical tread width for your application. (See "TIRES, WHEELS AND BALLAST" section.)

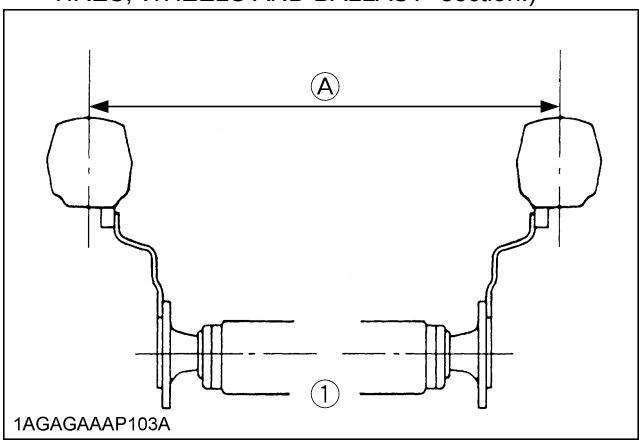

(1) Rear wheels *(A) Tread Width*

12. Do not modify the tractor. Unauthorized modification may affect the function of the tractor, which may result in personal injury.

◆ **CAB, ROPS**

1. KUBOTA recommends the use of a CAB or Roll Over Protective Structures (ROPS) and seat belt in almost all applications. This combination will reduce the risk of serious injury or death, should the tractor be upset. Check for overhead clearance which may interfere with a CAB or ROPS.
2. Set parking brake and stop engine. Remove any obstruction that may prevent raising or retracting of the ROPS. Do not allow any bystanders. Always perform function from a stable position at the rear of the tractor. Hold the top of the ROPS securely when raising or retracting. Make sure all pins are installed and locked.
3. If the CAB or ROPS is loosened or removed for any reason, make sure that all parts are reinstalled correctly before operating the tractor.
4. Never modify or repair any structural member of a CAB or ROPS because welding, bending, drilling, grinding, or cutting may weaken the structure.
5. A damaged CAB or ROPS structure must be replaced, not repaired or revised.
6. If any structural member of the CAB or ROPS is damaged, replace the entire structure at your local KUBOTA Dealer.

https://truckmanualshub.com/

7. If the tractor is equipped with a retractable ROPS it may be temporarily lowered only when absolutely necessary for areas with height constraints.
   (There is no operator protection provided by the ROPS in the lowered position. For operator safety the ROPS should be placed in the upright and locked position and the seat belt fastened for all other operations.)
8. Always use the seat belt if the tractor has a CAB or ROPS.
   Do not use the seat belt if a retractable ROPS is being retracted or there is no ROPS. Check the seat belt regularly and replace if frayed or damaged.

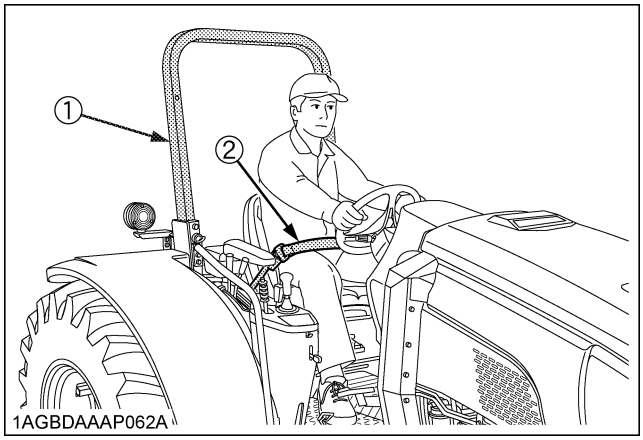

(1) ROPS
(2) Seat belt

2. OPERATING THE TRACTOR

Operator safety is a priority. Safe operation, specifically with respect to overturning hazards, entails understanding the equipment and environmental conditions at the time of use. Some prohibited uses which can affect overturning hazards include traveling and turning with implements and loads carried too high etc. This manual sets forth some of the obvious risks, but the list is not, and cannot be, exhaustive. It is the operator's responsibility to be alert for any equipment or environmental condition that could compromise safe operation.

◆ Starting

1. Always sit in the operator's seat when starting engine or operating levers or controls. Adjust seat per instructions in the operating the tractor section. Never start engine while standing on the ground.
2. Before starting the engine, make sure that all levers (including auxiliary control levers) are in their neutral positions, that the parking brake is engaged, and that both the clutch and the Power Take-Off (PTO) are disengaged or "OFF".
   Fasten the seat belt if the tractor has a CAB, a fixed ROPS or a retractable ROPS in the upright and locked position.
3. Do not start engine by shorting across starter terminals or bypassing the safety start switch. Machine may start in gear and move if normal starting circuitry is bypassed.
4. Do not operate or idle engine in a non-ventilated area. Carbon monoxide gas is colorless, odorless, and deadly.
5. Check before each use that operator presence controls are functioning correctly. Test safety systems. (See "Checking Engine Start System" in "EVERY 50 HOURS" in "PERIODIC SERVICE" section.)
   Do not operate unless they are functioning correctly.

◆ Working

1. Pull only from the drawbar. Never hitch to axle housing or any other point except drawbar; such arrangements will increase the risk of serious personal injury or death due to a tractor upset.

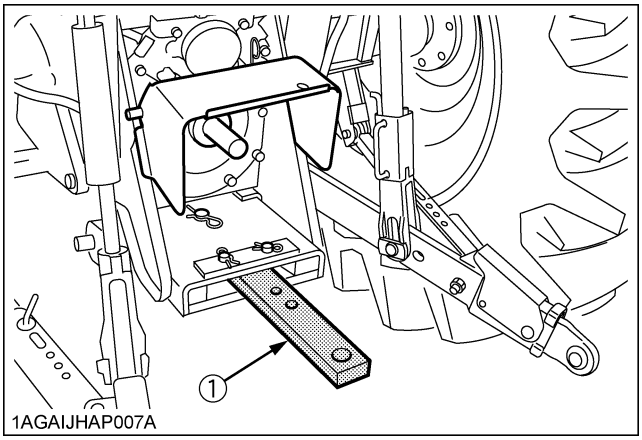

(1) Drawbar

2. For trailing PTO-driven implements, set the drawbar to the towing position.
3. Attach pulled or towed loads to the drawbar only.
4. Keep all shields and guards in place. Replace any that are missing or damaged.
5. Avoid sudden starts. To avoid upsets, slow down when turning, on uneven ground, and before stopping.
6. The tractor cannot turn with the differential locked and attempting to do so could be dangerous.
7. Do not operate near ditches, holes, embankments, or other ground surface features which may collapse under the tractor's weight. The risk of tractor upset is even higher when the ground is loose or wet. Tall grass can hide obstacles, walk the area first to be sure.
8. Watch where you are going at all times. Watch for and avoid obstacles. Be alert at row ends, near trees, and other obstructions.
9. When working in groups, always let the others know what you are going to do before you do it.
10. Never try to get on or off a moving tractor.
11. Always sit in the operator's seat when operating levers or controls.

https://truckmanualshub.com/

12. Do not stand between tractor and implement or trailed vehicle unless parking brake is applied.

◆ Safety for children

Tragedy can occur if the operator is not alert to the presence of children. Children generally are attracted to machines and the work they do.

1. Never assume that children will remain where you last saw them.
2. Keep children out of the work area and under the watchful eye of another responsible adult.
3. Be alert and shut your machine down if children enter the work area.
4. Never carry children on your machine. There is no safe place for them to ride. They may fall off and be run over or interfere with your control of the machine.
5. Never allow children to operate the machine even under adult supervision.
6. Never allow children to play on the machine or on the implement.
7. Use extra caution when backing up. Look behind and down to make sure area is clear before moving.

◆ Operating on slopes

Slopes are a major factor related to loss-of-control and tip-over accidents, which can result in severe injury or death. All slopes require extra caution.

1. To avoid upsets, always back up steep slopes. If you cannot back up the slope or if you feel uneasy on it, do not operate on it. Stay off slopes too steep for safe operation.
2. Driving forward out of a ditch, mired condition or up a steep slope increases the risk of a tractor to be upset backward. Always back out of these situations. Extra caution is required with 4-wheel drive models because their increased traction can give the operator false confidence in the tractor's ability to climb slopes.
3. Keep all movement on slopes slow and gradual. Do not make sudden changes in speed, direction or apply brake and make sudden motions of the steering wheel.
4. Avoid disengaging the clutch or changing gears speed when climbing or going down a slope. If on a slope disengaging the clutch or changing gears to neutral could cause loss of control.
5. Special attention should be made to the weight and location of implements and loads as such will affect the stability of the tractor.
6. To improve stability on slope, set widest wheel tread as shown in "TIRES, WHEELS AND BALLAST" section.
   Follow recommendations for proper ballasting.
7. To avoid free wheeling:
   - Do not shift the shuttle lever while on a slope.
   - Stop completely by using the brake and by depressing the clutch pedal, then shift the shuttle lever.
   - Start off after selecting shuttle direction, by releasing the clutch pedal.

◆ Driving the tractor on the road

1. Lock the 2 brake pedals together to help assure straight-line stops. Uneven braking at road speeds could cause the tractor to tip over.

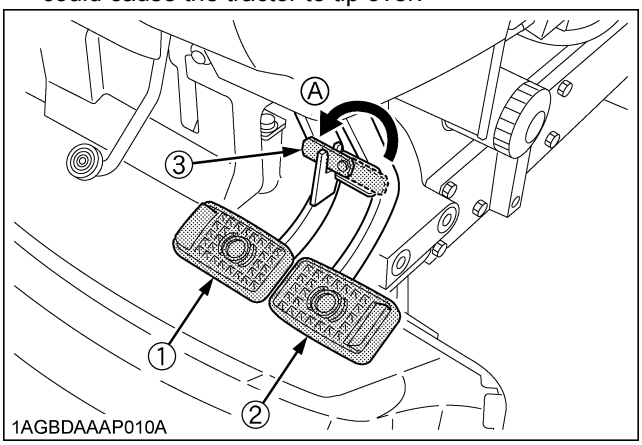

(1) Brake Pedal (LH)
(2) Brake Pedal (RH)
(3) Brake Pedal Lock
(A) Whenever travelling on the road

2. Check the front wheel engagement. The braking characteristics are different between 2 and 4-wheel drive. Be aware of the difference and use carefully.
3. Always slow the tractor down before turning. Turning at high speed may tip the tractor over.
4. Make sure that the Slow Moving Vehicle (SMV) sign is clean and visible. Use hazard lights and turn signals as required.

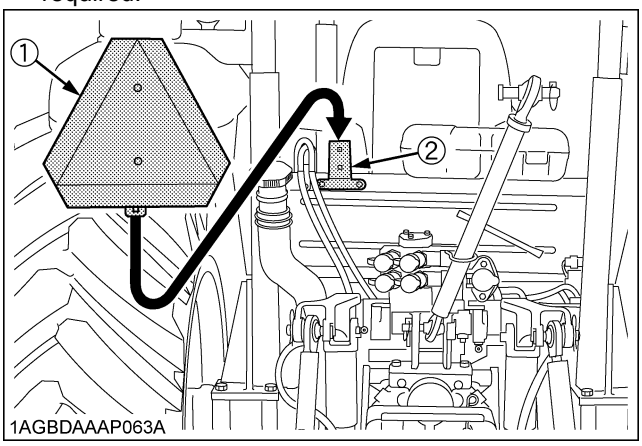

(1) SMV emblem
(2) Bracket

5. On public roads use the SMV emblem and hazard lights, if required by local traffic and safety regulations.
6. Observe all local traffic and safety regulations.
7. Turn the headlights on. Dim them when meeting another vehicle.
8. Drive at speeds that allow you to maintain control at all times.
9. Do not apply the differential lock while traveling at road speeds. The tractor may run out of control.

https://truckmanualshub.com/

10. Avoid sudden motions of the steering wheel as they can lead to a dangerous loss of stability. The risk is especially great when the tractor is traveling at road speeds.
11. Keep the ROPS in the "UP" position and wear the seat belt when driving the tractor on the road.
    Otherwise, you will not be protected in the event of a tractor roll-over.
12. Do not operate an implement while the tractor is on the road. Lock the 3-point hitch in the raised position.
13. Do not ride or stand on the step during operation. Riding or standing there could result in being crushed under the rear tire due to slippage or the step fracturing or displacing due to unintended loading.

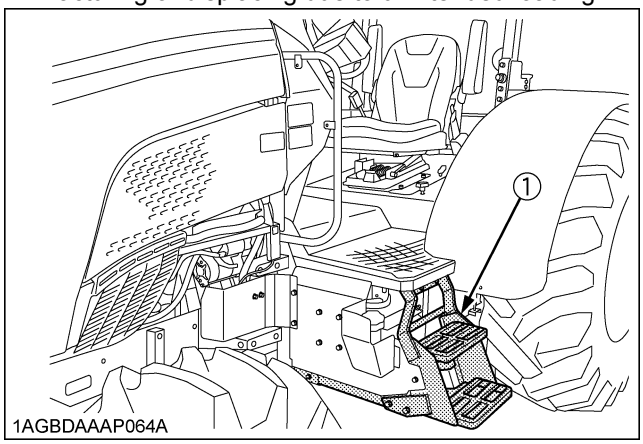

(1) Step

14. When towing other equipment, use a safety chain and place an SMV emblem on it as well.

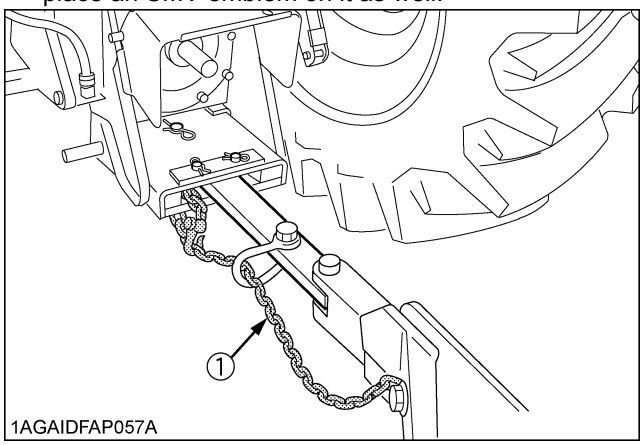

(1) Safety chain

15. Set the implement lowering speed lever in the "LOCK" position to hold the implement in the raised position.

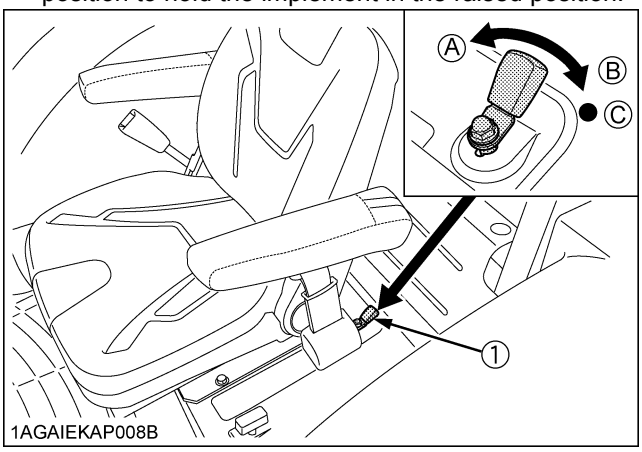

(1) 3-point hitch lowering speed lever
(A) "FAST"
(B) "SLOW"
(C) "LOCK"

3. PARKING THE TRACTOR

1. Disengage the PTO, lower all implements to the ground, place all control levers in their neutral positions, set the parking brake, stop the engine, remove the key from the ignition and lock the cab door (if equipped). Leaving transmission in gear with the engine stopped will not prevent tractor from rolling.
2. Make sure that the tractor has come to a complete stop before dismounting.
3. Avoid parking on steep slopes, if at all possible park on a firm and level surface; if not, park across a slope and chock the wheels.
   Failure to comply with this warning may allow the tractor to move and could cause injury or death.

4. OPERATING THE PTO

1. Wait until all moving components have completely stopped before getting off the tractor, connecting, disconnecting, adjusting, cleaning, or servicing any PTO driven equipment.

https://truckmanualshub.com/

2. Keep the PTO shaft cover in place at all times. Replace the PTO shaft cap when the shaft is not in use.

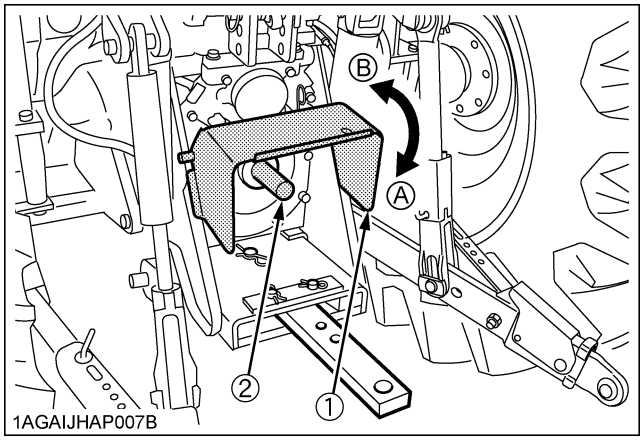

(1) PTO Shaft cover *(A) "NORMAL POSITION"*
(2) PTO Shaft cap *(B) "RAISED POSITION"*

3. Before installing or using PTO driven equipment, read the manufacturer's manual and review the safety labels attached to the equipment.
4. When operating stationary PTO driven equipment, always apply the tractor parking brake and place chocks behind and in front of the rear wheels. Stay clear of all rotating parts. Never step over rotating parts.

5. USING 3-POINT HITCH

1. Use the 3-point hitch only with equipment designed for 3-point hitch usage.
2. When using a 3-point hitch mounted implement, be sure to install the proper counterbalance weight on the front of the tractor.
3. To avoid injury from separation:
   Do not extend lift rod beyond the groove on the threaded rod.

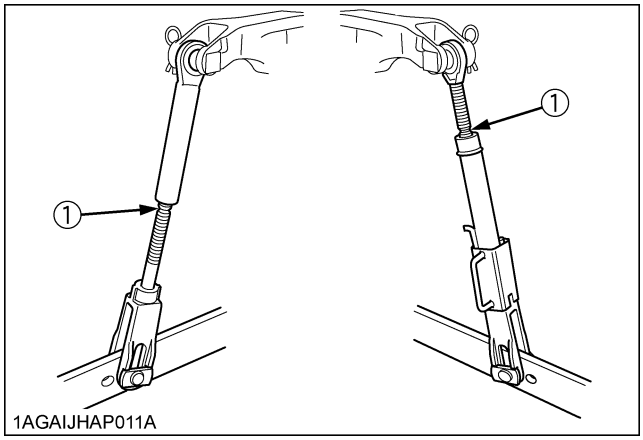

(1) Groove

4. Use [UP-DOWN] switch or lever only on farm fields. For all other application, use hydraulic lever to move attachment.

6. SERVICING THE TRACTOR

Before servicing the tractor, park it on a firm, flat and level surface, set the parking brake, lower all implements to the ground, place the gear shift lever in neutral, stop the engine and remove the key.

1. Allow the tractor time to cool off before working on or near the engine, muffler, radiator, etc.
2. Do not remove radiator cap while coolant is hot. When cool, slowly rotate cap to the first stop and allow sufficient time for excess pressure to escape before removing the cap completely. If the tractor has a coolant recovery tank, add coolant or water to the tank, not the radiator. (See "Checking Coolant Level" in "DAILY CHECK" in "PERIODIC SERVICE" section.)
3. Always stop the engine before refueling. Avoid spills and overfilling.
4. Do not smoke when working around battery or when refueling. Keep all sparks and flames away from battery and fuel tank. The battery presents an explosive hazard, because it gives off hydrogen and oxygen especially when recharging.
5. Before "jump starting" a dead battery, read and follow all of the instructions. (See "JUMP STARTING" in "OPERATING THE ENGINE" section.)
6. Keep first aid kit and fire extinguisher handy at all times.
7. Disconnect the battery's ground cable before working on or near electric components.
8. To avoid the possibility of battery explosion, do not use or charge the refillable type battery if the fluid level is below the LOWER (lower limit level) mark. Check the fluid level regularly and add distilled water as required so that the fluid level is between the UPPER and LOWER levels.

https://truckmanualshub.com/

9. To avoid sparks from an accidental short circuit, always disconnect the battery's ground cable (-) first and reconnect it last.

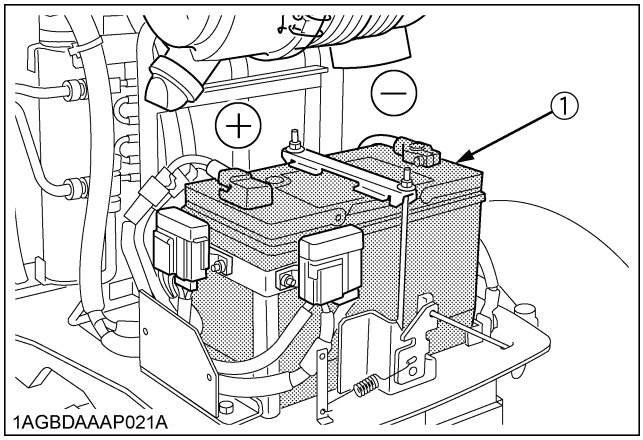

(1) Battery

10. Do not attempt to mount a tire on a rim. This should be done by a qualified person with the proper equipment.
11. Always maintain the correct tire pressure. Do not inflate tires above the recommended pressure shown in the operator's manual.

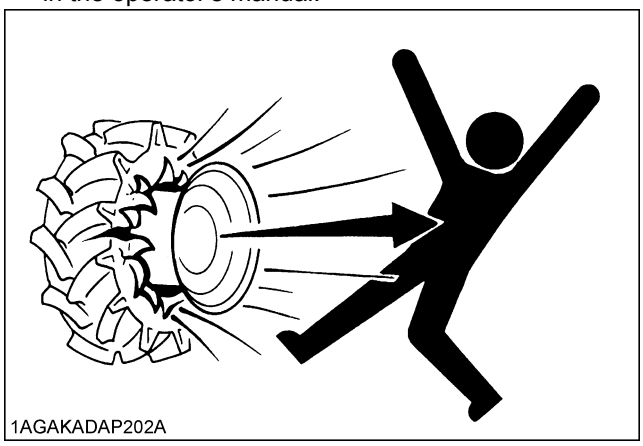

12. Securely support the tractor when either changing wheels or adjusting the wheel tread width.
13. Make sure that wheel bolts have been tightened to the specified torque.
14. Do not work under any hydraulically supported devices. They can settle, suddenly leak down, or be accidentally lowered. If it is necessary to work under tractor or any machine elements for servicing or adjustment, securely support them with stands or suitable blocking beforehand.
15. Escaping hydraulic fluid under pressure has sufficient force to penetrate skin, causing serious personal injury. Before disconnecting hydraulic lines, be sure to release all residual pressure. Before applying pressure to the hydraulic system, make sure that all connections are tight and that all lines, pipes, and hoses are free of damage.

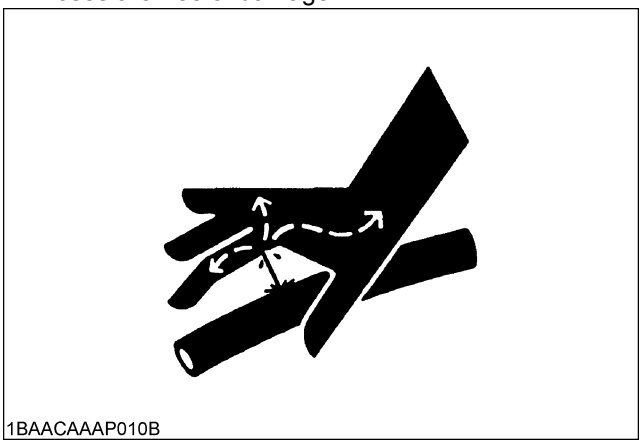

16. Fluid escaping from pinholes may be invisible. Do not use hands to search for suspected leaks; use a piece of cardboard or wood. Use of safety goggles or other eye protection is also highly recommended. If injured by escaping fluid, see a medical doctor at once. This fluid will produce gangrene or severe allergic reaction.

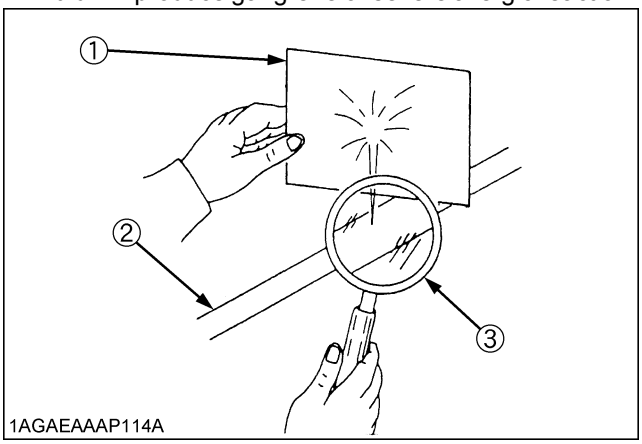

(1) Cardboard
(2) Hydraulic line
(3) Magnifying glass

17. Do not open high-pressure fuel system.
    High-pressure fluid remaining in fuel lines can cause serious injury. Do not disconnect nor attempt to repair fuel lines, sensors, or any other components between the high-pressure fuel pump and injectors on engines with high pressure common rail fuel system.
18. To avoid hazardous high voltage, turn the key switch to the OFF position if it is necessary to check to repair the computer, harness or connectors.

https://truckmanualshub.com/

19. During Diesel Particulate Filter (hereinafter called DPF) regenerating operations, exhaust gases and exhaust filter components reach temperatures hot enough to burn people, or ignite or melt common materials.
20. Keep the tractor away from people, animals or structures which may be susceptible to harm or damage from hot exhaust gases.
21. To prevent fires, keep the DPF/SCR muffler and its surroundings clear of anything flammable and keep clean at all times. [Selective Catalytic Reduction (hereinafter called SCR)]
22. During regeneration, white exhaust gas may be visible. Do not allow regeneration in a non-ventilated space.
23. During regeneration, do not leave the tractor.

https://truckmanualshub.com/

7. DANGER, WARNING AND CAUTION LABELS

(1) Part No. TC660-4997-1

⚠ WARNING

TO AVOID PERSONAL INJURY OR DEATH:

1. Read and understand the operator's manual before operation.
2. Before starting the engine, make sure that everyone is at a safe distance from the tractor and that the PTO is OFF.
3. Do not allow passengers on the tractor at any time.
4. Before allowing other people to use the tractor, have them read the operator's manual.
5. Check the tightness of all nuts and bolts regularly.
6. Keep all shields in place and stay away from all moving parts.
7. Lock the two brake pedals together before driving on the road.
8. Slow down for turns, or rough roads, or when applying individual brakes.
9. On public roads use SMV emblem and hazard lights, if required by local traffic and safety regulations.
10. Pull only from the drawbar.
11. Before dismounting, lower the implement to the ground, set the parking brake, stop the engine and remove the key.
12. Securely support tractor and implements before working underneath.

1AGAHAKAP046A

(3) Part No. 3F240-9857-1

⚠ WARNING

To avoid free wheeling when shifting the shuttle lever while on a slope : Stop completely by using the brake and by depressing the clutch pedal. Start off after selecting shuttle direction by releasing the clutch pedal.

1AGAIBDAP039A

(2) Part No. 3A293-9848-1

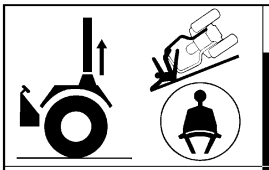

⚠ WARNING

TO AVOID INJURY OR DEATH FROM ROLL-OVER:

- Keep Roll-Over Protective Structures (ROPS) in the extended and locked position.
- Fasten SEAT BELT before operating.

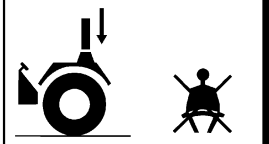

THERE IS NO OPERATOR PROTECTION WHEN THE ROPS IS IN THE RETRACTED POSITION.

- Check the operating area and retract the ROPS only when absolutely necessary.
- Do not wear SEAT BELT if ROPS is retracted.
- Extend and lock ROPS as soon as vertical clearance allows.
- Read ROPS related instructions and warnings.

1AGAIDCAP066E

(4) Part No. 6C150-4743-1

⚠ WARNING

BEFORE DISMOUNTING TRACTOR:

1. ALWAYS SET PARKING BRAKE.
Leaving transmission in gear with the engine stopped will not prevent tractor from rolling.

2. PARK ON LEVEL GROUND WHENEVER POSSIBLE.
If parking on a slope, position tractor across the slope.

3. LOWER ALL IMPLEMENTS TO THE GROUND.

4. STOP THE ENGINE.

1AGAIBDAP040E

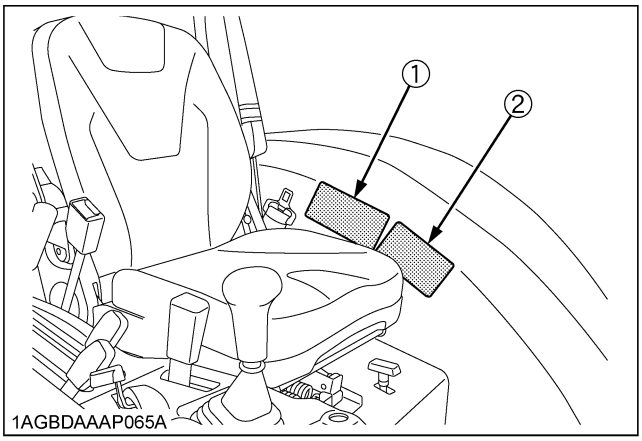

1AGBDAAAP065A

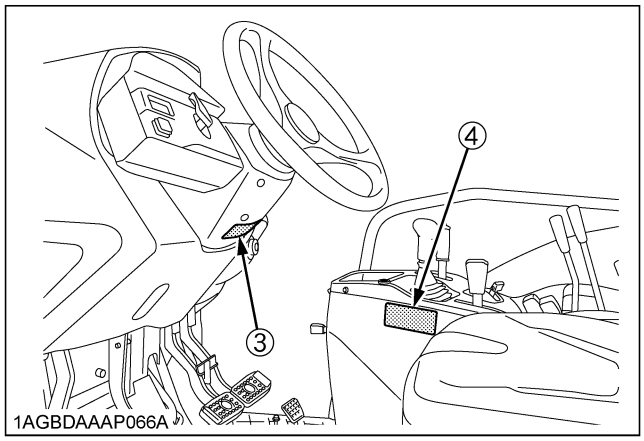

1AGBDAAAP066A

1AGBDAAAP069A

https://truckmanualshub.com/

(1) Part No. TC660-9861-1

⚠ WARNING

TO AVOID PERSONAL INJURY OR DEATH:
When the Diesel Particulate Filter (DPF) is in the regenerating mode, the exhaust gas and the DPF muffler become hot. During regeneration, take into account that the muffler will be very hot and keep the machine away from other people, animals, plants, and flammable material. Also keep the area near the DPF muffler clean and away from flammable material.

1AGAHAKAP051A

(2) Part No. K3512-4719-1

Do not touch hot surface like muffler, etc

1BDABANAP080A

(3) Part No. TA040-4965-2

⚠ DANGER

TO AVOID POSSIBLE INJURY OR DEATH FROM A MACHINE RUNAWAY.

1. Do not start engine by shorting across starter terminals or bypassing the safety start switch. Machine may start in gear and move if normal starting circuitry is bypassed.
2. Start engine only from operator's seat with transmission and PTO OFF.
   Never start engine while standing on the ground.

1AGAIAZAP009A

(4) Part No. 3A111-9801-1

⚠ WARNING

TO Avoid Serious Crushing Injuries or Death.
Do not ride or stand on the step during operation.
Riding or standing there could result in being crushed under the rear tire due to slippage or the step fracturing or displacing due to unintended loading.

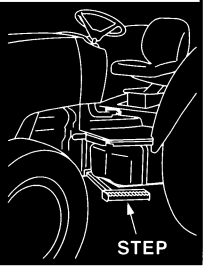

1AGAIDHAP099A

(5) Part No. 3B291-1240-1

⚠ WARNING

TO AVOID PERSONAL INJURY OR DEATH FROM MALFUNCTION OF FRONT LOADER:
Refer to Operator's Manual and install hose guide when front loader is attached.

1AGBDAAAP085A

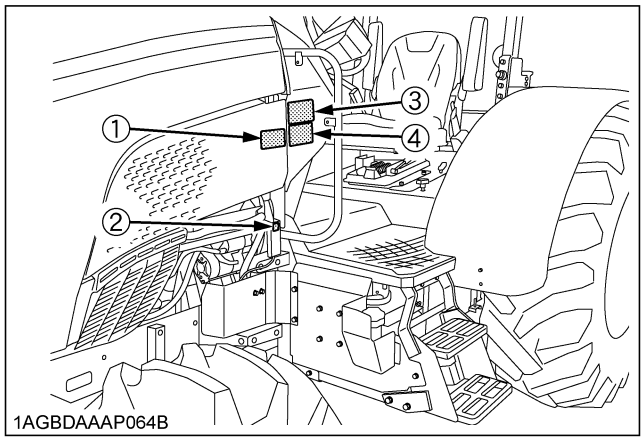

1AGBDAAAP064B

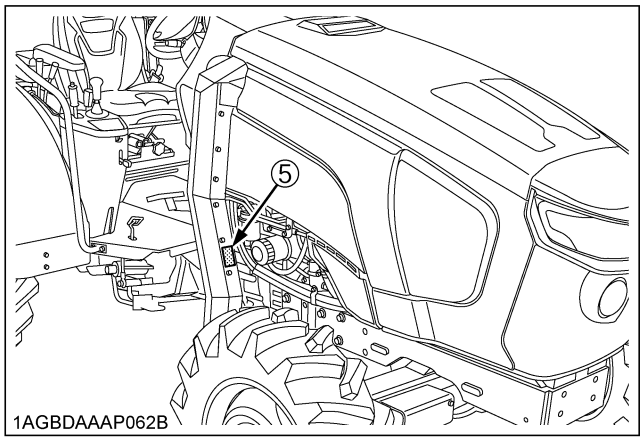

1AGBDAAAP062B

1AGBDAAAP070A

https://truckmanualshub.com/

(1) Part No. 3B391-9554-1

⚠ WARNING

Never modify or repair a ROPS because welding, grinding, drilling or cutting any portion may weaken the structure.

⚠ WARNING

TO AVOID PERSONAL INJURY OR DEATH WHEN EXTENDING OR RETRACTING ROPS:

- Set parking brake and stop engine.
- Remove any obstruction that may prevent extending or retracting of the ROPS.
- Do not allow any bystanders.
- Always perform function from an operator's seat.
- Hold the top of the ROPS securely when extending or retracting.
- Make sure all pins are installed and locked.

1AGBDAAAP068A

(2) Part No. 3B291-9856-1

⚠ WARNING

TO AVOID PERSONAL INJURY OR DEATH FROM SEPARATION:

GROOVE LH

DO NOT EXTEND LIFT ROD BEYOND THE GROOVE ON THE THREADED ROD.

GROOVE RH

1AGBDAAAP053A

(3) Part No. TA040-4959-3

⚠ WARNING

TO AVOID PERSONAL INJURY.

1. Keep PTO shield in place at all times.
2. Do not operate the PTO at speeds faster than the speed recommended by the implement manufacturer.
3. For trailing PTO-driven implements. set drawbar at towing position. (see operator's manual)

1AGAIAZAP116A

(4) Part No. TA040-4935-1

⚠ WARNING

TO AVOID PERSONAL INJURY:

1. Attach pulled or towed loads to the drawbar only.
2. Use the 3-point hitch only with equipment designed for 3-point hitch usage.

1AGAIAZAP056A

(5) Part No. TC420-4956-1

Diesel fuel only | No fire

ULTRA LOW SULFUR DIESEL FUEL ONLY

1AGAIDHAP154E

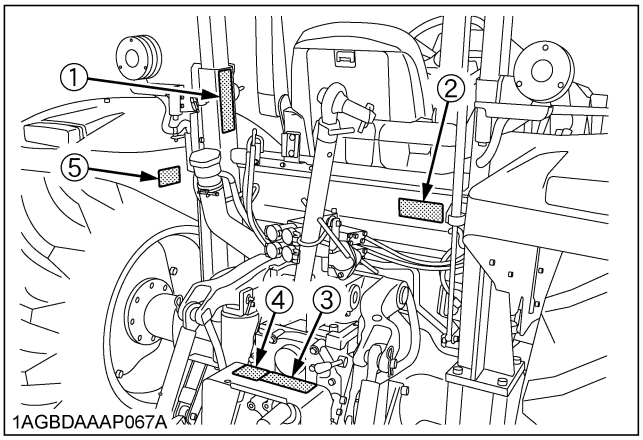

1AGBDAAAP071A

https://truckmanualshub.com/

(1) Part No. 6C090-4958-2
Do not get your hands close to engine fan and fan belt.

1AGAIAZAP110A

(3) Part No. 3Y205-9892-1

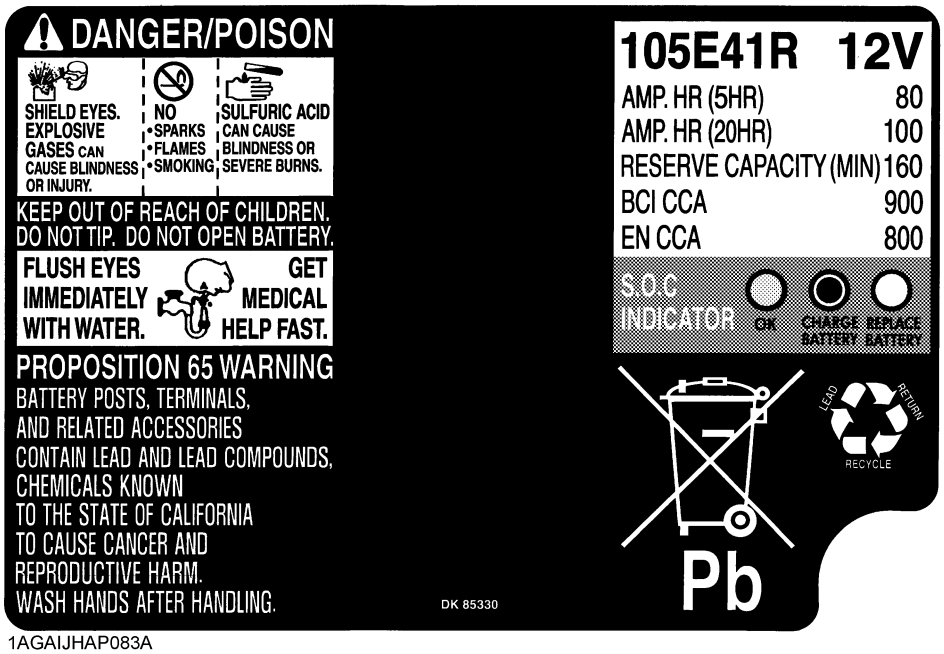

1AGAIJHAP083A

(2) Part No. TA040-4958-1
Do not touch hot surface like muffler, etc.

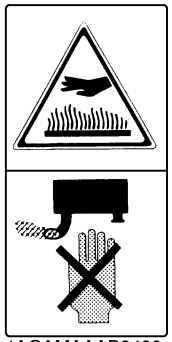

1AGAMAAAP2400

(4) Part No. K3512-4719-1
Do not touch hot surface like muffler, etc.

1BDABANAP080A

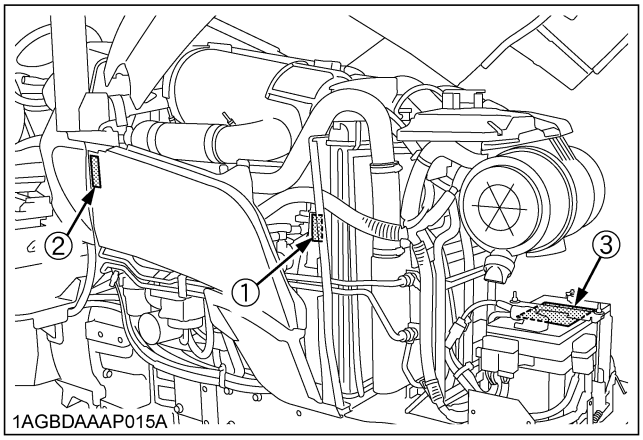

1AGBDAAAP015A

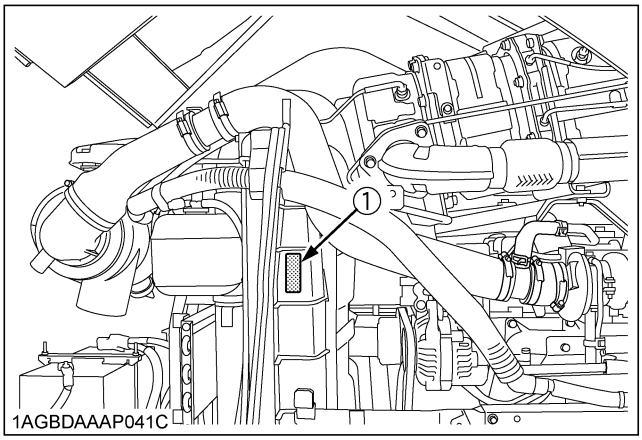

1AGBDAAAP041C

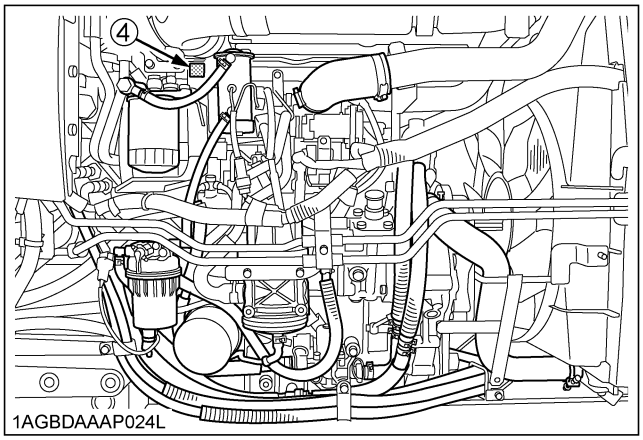

1AGBDAAAP024L

1AGBDAAAP081A

https://truckmanualshub.com/

8. CARE OF DANGER, WARNING AND CAUTION LABELS

1. Keep danger, warning and caution labels clean and free from obstructing material.
2. Clean danger, warning and caution labels with soap and water, dry with a soft cloth.
3. Replace damaged or missing danger, warning and caution labels with new labels from your local KUBOTA Dealer.
4. If a component with danger, warning and caution label(s) affixed is replaced with new part, make sure new label(s) is (are) attached in the same location(s) as the replaced component.
5. Mount new danger, warning and caution labels by applying on a clean dry surface and pressing any bubbles to outside edge.

https://truckmanualshub.com/

SPECIFICATIONS

SPECIFICATION TABLE

Model				M5L-111
				4WD
Engine	Model			V3800-TIEF4
	Type			Direct Injection, Water-cooled 4 Cycle Diesel, Common Rail System, Turbocharger, Intercooler
	Number of cylinders			4
	Total displacement		cm^3 (cu.in.)	3769 (230)
	Bore and stroke		mm (in.)	100 x 120 (3.9 x 4.7)
	Rated revolution		rpm	2400
	Low idling revolution		rpm	800 to 850
	Rated Engine HP (97 / 68 / EC)		kW (HP)	78.8 (105.6)
	Net power *1		kW (HP)	74.6 (100)
	PTO power *1 (factory observed)		kW (HP)	66.4 (89)
	Maximum torque		N-m (ft-lbs) / rpm	357 (263) / 1500
	Battery capacity			12V, RC: 160 min, CCA 900A
	Fuel tank capacity		L (U.S.gals.)	92 (24.3)
	Engine oil capacity		L (U.S.qts.)	10.7 (11.3)
	Coolant capacity		L (U.S.qts.)	10.0 (11)
	DEF/AdBlue® capacity		L (U.S.gals.)	12.3 (3.2)
Dimensions	Overall length		mm (in.)	3960 (156)
	Overall width (minimum tread)		mm (in.)	1970 (77.6)
	Overall height ROPS extended / ROPS retracted		mm (in.)	2300 (90.6) / 1685 (66.3)
	Wheel base		mm (in.)	2250 (88.6)
	Tread	Front	mm (in.)	1510 (59.4)
		Rear	mm (in.)	1500 to 1900 (59.2 to 74.8)
	Minimum ground clearance		mm (in.)	350 (13.8) (Drawbar bracket)
Weight			kg (lbs.)	2680 (5904)

https://truckmanualshub.com/

Model				M5L-111
				4WD
Traveling system	Standard tire size	Front tires		9.5-20
		Rear tires		16.9-24
	Clutch			Multiple wet disks
	Steering			Hydraulic Power Steering
	Braking system			Hydraulic wet disks
	Differential			Bevel gears with differential lock (Rear)
Hydraulic unit	Hydraulic control system			Position, draft (top link sensing) & mix control
	Pump capacity		L (U.S.gals.) / min	59.4 (15.7)
	3-point hitch			Category 2
	Max. lifting force	At lifting points *2	kg (lbs.)	3200 (7050), 3900 (8600) with Hydraulic High Capacity Lift Cylinders (Option)
		24 in. behind lifting point *2	kg (lbs.)	2100 (4630), 3300 (7275) with Hydraulic High Capacity Lift Cylinders (Option)
	Remote hydraulic control			2 standard (3rd & flow control valve optional)
	System pressure		MPa (kgf/cm^2)	20.2 (206)
	Traction system			Swinging drawbar, adjustable in direction
PTO	Live PTO (Independent)	Direction of turning		Clockwise, viewed from tractor rear
		PTO/ Engine speed	rpm	6 spline: 540 / 2035 540E / 1519

The company reserves the right to change the specifications without notice.

NOTE: *1 Manufacturer's estimate
*2 At lower link end with links horizontal.

https://truckmanualshub.com/

TRAVELING SPEEDS

(At rated engine rpm)

Model			M5L-111	
			F12 / R12 model	
Tire size (Rear)			16.9-24	
Shuttle shift lever	Range gear shift lever	Main gear shift lever	km/h	mph
Forward	CREEP (option)	1	0.31	0.19
		2	0.42	0.26
		3	0.54	0.34
		4	0.70	0.44
		5	0.86	0.54
		6	1.23	0.77
	L	1	2.1	1.3
		2	2.8	1.8
		3	3.7	2.3
		4	4.7	3.0
		5	5.9	3.7
		6	8.4	5.2
	H	1	9.2	5.8
		2	12.6	7.9
		3	16.2	10.1
		4	21.0	13.1
		5	25.9	16.2
		6	32.1	20.1
Reverse	CREEP (option)	1	0.30	0.19
		2	0.42	0.26
		3	0.54	0.34
		4	0.69	0.43
		5	0.86	0.54
		6	1.23	0.77
	L	1	2.1	1.3
		2	2.8	1.8
		3	3.7	2.3
		4	4.7	2.9
		5	5.8	3.6
		6	8.3	5.2
	H	1	9.2	5.7
		2	12.5	7.8
		3	16.1	10.1
		4	20.8	13.0
		5	25.7	16.1
		6	31.9	20.0

The company reserves the right to change the specifications without notice

https://truckmanualshub.com/

OPERATING THE TRACTOR

OPERATING RETRACTABLE ROPS

WARNING

To avoid personal injury or death:

- **When extending or retracting the ROPS, apply parking brake, stop the engine and remove the key.**
  Always perform function from an operator's seat.
- **Lower the ROPS down only when absolutely necessary and raise it up and lock it again as soon as possible.**
- **Before proceeding to lower ROPS, check for any possible interference with installed implements and attachments.**
  If interference occurs, contact your KUBOTA Dealer.

■To Retract the ROPS

1. Remove both set bolts.

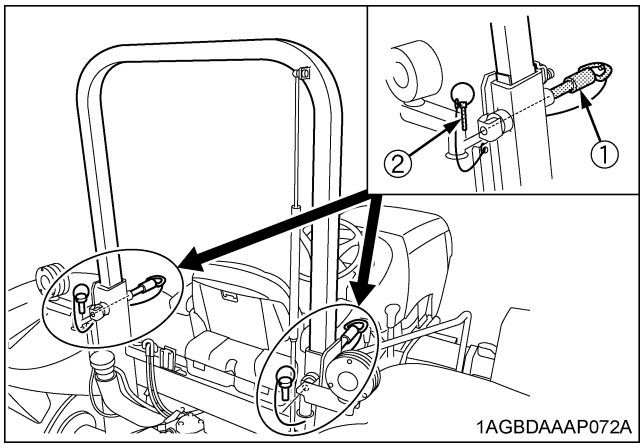

(1) Set bolt
(2) Lynch pin

2. Retract the ROPS.

CAUTION

To avoid personal injury:

- **Hold the ROPS tightly with both hands and retract the ROPS slowly and carefully.**

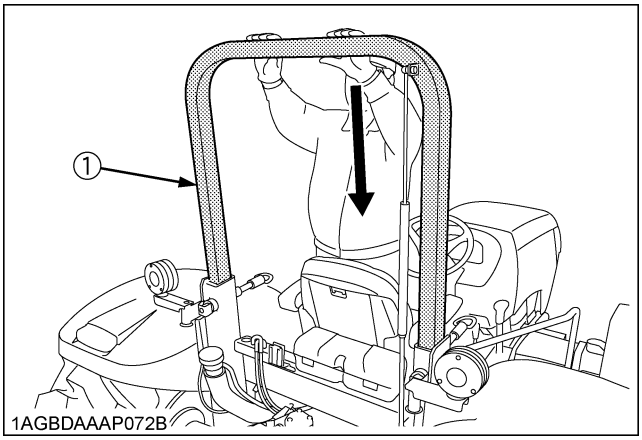

(1) ROPS

3. Align set bolt holes and insert both set bolts. Slightly tighten the set bolts and secure them with the lynch pins.

CAUTION

To avoid personal injury:

- **Make sure that both set bolts are properly installed and secured with the lynch pins.**

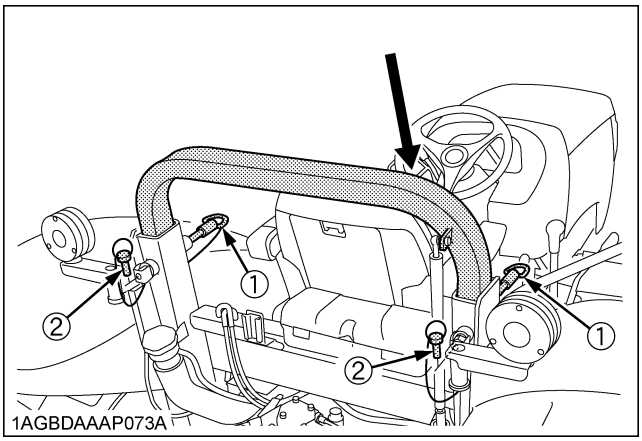

(1) Set bolt
(2) Lynch pin

https://truckmanualshub.com/

■To Extend the ROPS to Upright Position

1. Remove both lynch pins and set bolts supporting an upper frame.

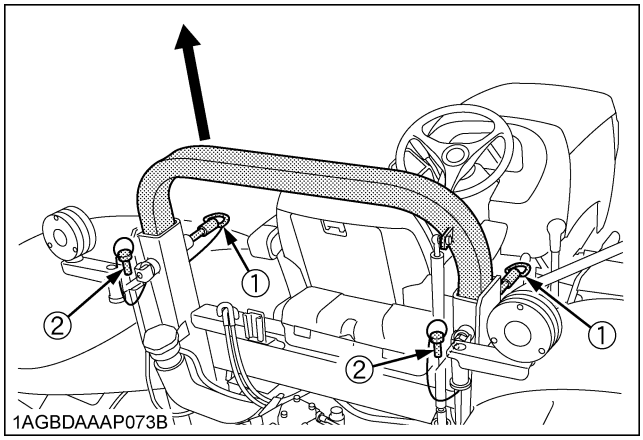

(1) Set bolt
(2) Lynch pin

2. Extend ROPS to the upright position.

CAUTION

To avoid personal injury:

- **Extend the ROPS slowly and carefully.**

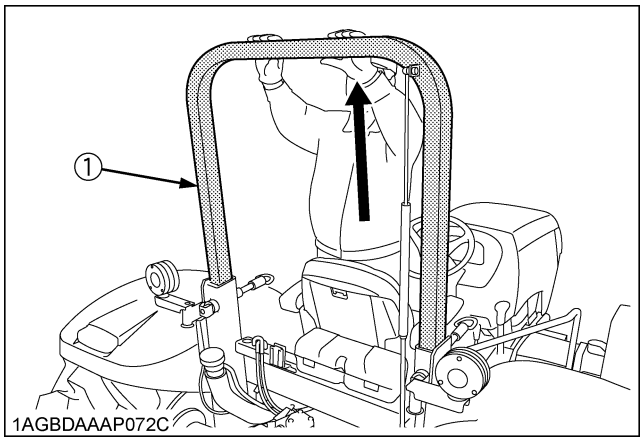

(1) ROPS

3. Align set bolt holes and insert both set bolts. Slightly tighten the set bolts and secure them with the lynch pins.

CAUTION

To avoid personal injury:

- **Make sure that both set bolts are properly installed as soon as the ROPS is in the upright position and secured with the lynch pins.**

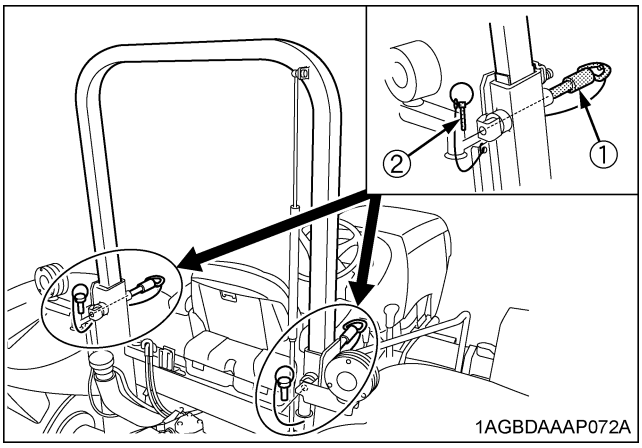

(1) Set bolt
(2) Lynch pin

https://truckmanualshub.com/

SEAT

■Operator's Seat

WARNING

To avoid personal injury or death:

- **Make adjustments to the seat only while the tractor is stopped.**
- **Make sure that the seat is completely secured after each adjustment.**
- **Do not allow any person other than the operator to ride on the tractor.**

The position of seat can be adjusted as follows:
Front-back adjustment: 2 positions
Up-down adjustment: 3 positions
To adjust, remove the nuts and seat assy, reposition the seat and screw the nuts and back into place.

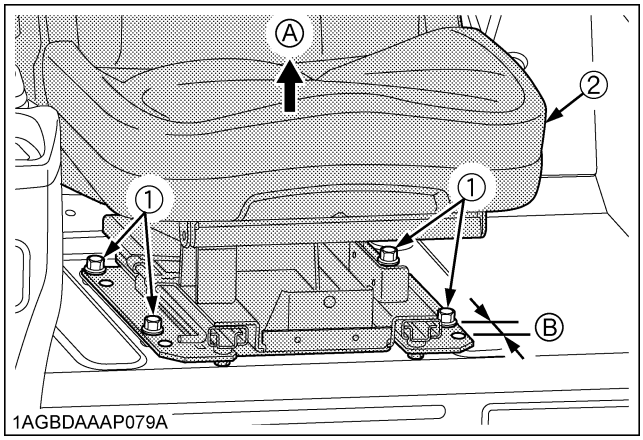

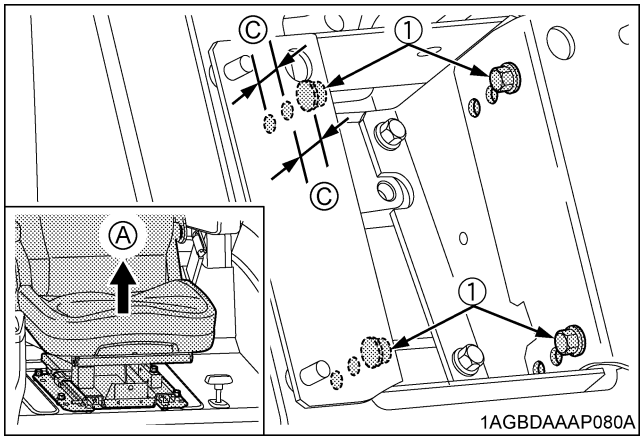

(1) Nut
(2) Seat assy

(A) "REMOVE"
(B) 40 mm
(C) 20 mm

WARNING LAMP

■Rear Turn Signal / Hazard Light

If necessary, raise and turn the light stay to the inward for the work.
Return the light stay to the original position when traveling on a road.

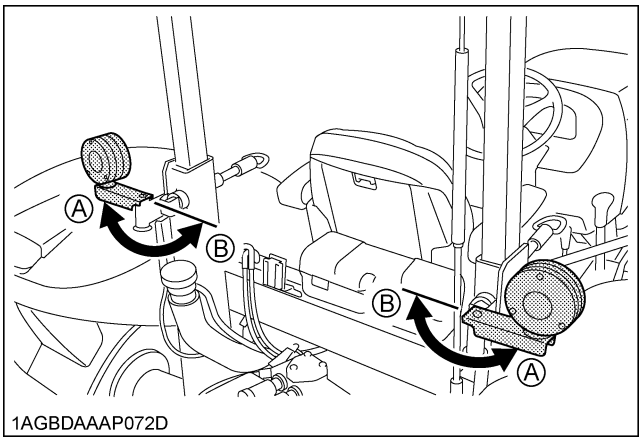

(A) "ORIGINAL POSITION"
(B) "WORK POSITION"

3-POINT HITCH CONTROL SYSTEM

■3-point Hitch Lowering Speed

WARNING

To avoid personal injury or death:

- **Fast lowering speed may cause damage or injury. Lowering speed of implement should be adjusted to 2 or more seconds.**

The lowering speed of the 3-point hitch can be controlled by adjusting the 3-point hitch lowering speed lever.

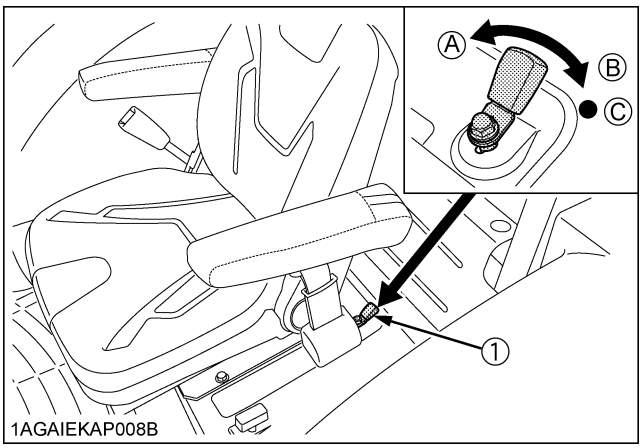

(1) 3-point hitch lowering speed lever

(A) "FAST"
(B) "SLOW"
(C) "LOCK"

https://truckmanualshub.com/

REMOTE HYDRAULIC CONTROL SYSTEM

The hydraulic auxiliary control valves can be installed up to triple segments.

■Remote Control Valve

There are 2 types of remote valves available for these models.

- Double acting valve with detents and self cancelling:
  This valve may be placed in the detent mode. The lever will stay in this position until the pressure reaches a predetermined level or a cylinder reaches the end of its stroke. Then it will automatically return to neutral.
- Double acting valve with float position:
  This valve may be placed in the float mode with the control lever all the way forward. The cylinder is free to extend or retract, letting an implement such as a loader bucket follow the ground.

NOTE :

- This float valve can not be attached as the first segment.

■Remote Control Valve Lever Location

	Remote Control Valve Lever		
	A	B	C
When 2 valves have been installed	---	1st	2nd
When 3 valves have been installed	1st	2nd	3rd

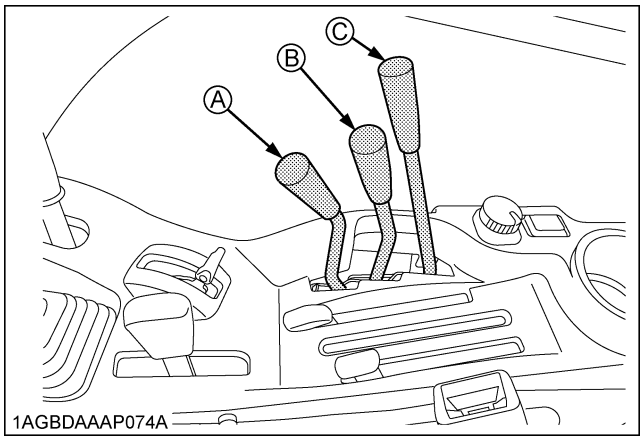

■Remote Control Valve Lever

The remote control valve lever directs pressurized oil flow to the implement hydraulic system.

[Example: Installing triple segment valves]

1st	Double acting valve with detents and self cancelling (standard)
2nd	Double acting valve with detents and self cancelling (standard)
3rd	Double acting valve with float position (option)

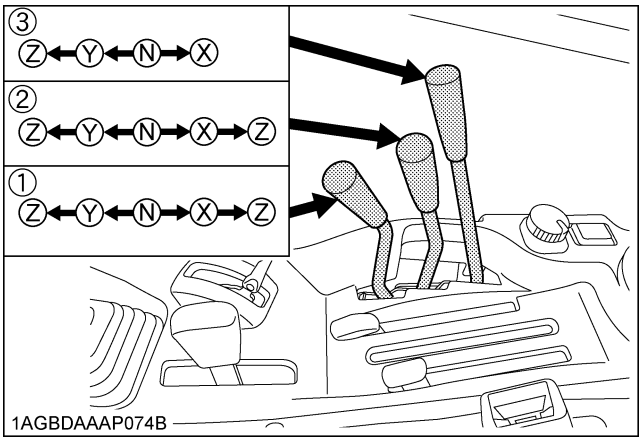

(1) Remote control valve lever 1
(2) Remote control valve lever 2
(3) Remote control valve lever 3

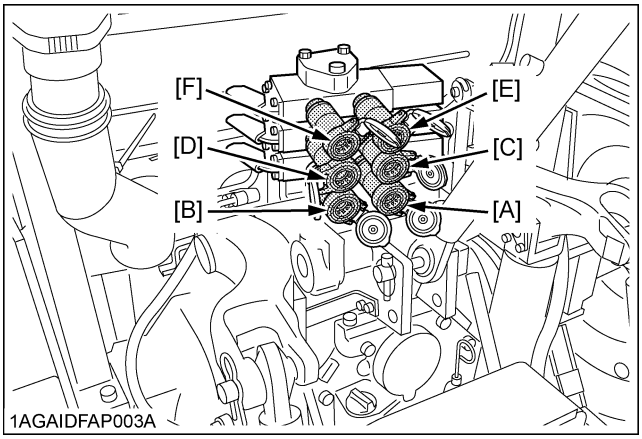

https://truckmanualshub.com/

Pressure →
Returning ←

Lever (1)		Lever position			
		Z (detent)	Y	X	Z (detent)
Port	[A]	out →		in ←	
	[B]	in ←		out →	

Lever (2)		Lever position			
		Z (detent)	Y	X	Z (detent)
Port	[C]	out →		in ←	
	[D]	in ←		out →	

Lever (3)		Lever position			
		Z (detent)		Y	X
Port	[E]	in/out	Float	out →	in ←
	[F]			in ←	out →

IMPORTANT :
- Do not hold the lever in the "pull" or "push" position once the remote cylinder has reached the end of the stroke, as this will cause oil to flow through the relief valve. Forcing oil through the relief valve for extended periods will overheat the oil.
- When using the tractor hydraulic system to power front loader, do not operate boom and bucket cylinders simultaneously.

NOTE :
- Connect the pressure of load side of implement cylinders to ports [B], [D] or [F] which have built in load check valve to prevent leak down.
- To use the single-acting cylinder with the float valve, connect this cylinder to the [B], [D] or [F] port.
  To extend a single-acting cylinder, pull the remote control valve lever rearward. To retract a cylinder, push it fully forward to the "FLOAT" position. Do not hold it in the down position, the transmission fluid may be overheat.

FRONT LOADER

WARNING

To avoid personal injury or death from malfunction of the front loader:
- **Refer to this manual and install the hose guide when the front loader is attached.**

■ WITH THE FRONT LOADER IN USE:

1. To use the front loader, attach the loader hose guide (A) to the main frame with the mounting bolts (1), plain washers, spring lock washers and nuts (3). Make sure the hydraulic hose runs behind this guide.

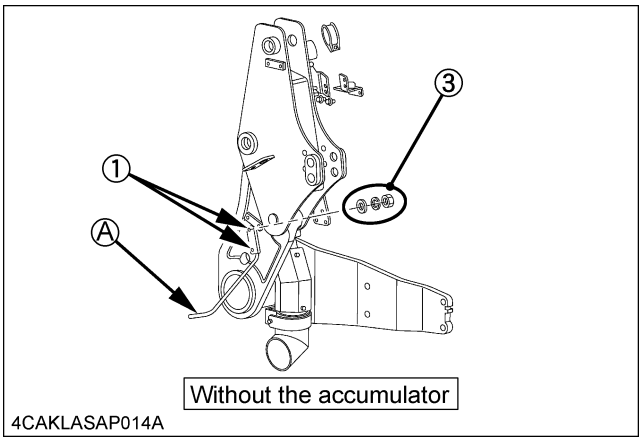

(1) Bolt (Length : 50 mm) *(A) Loader hose guide*
(3) Plain washer
Spring lock washer
Nut

NOTE :
- For attaching the accumulator-equipped front loader, use the longer mounting bolts (2).

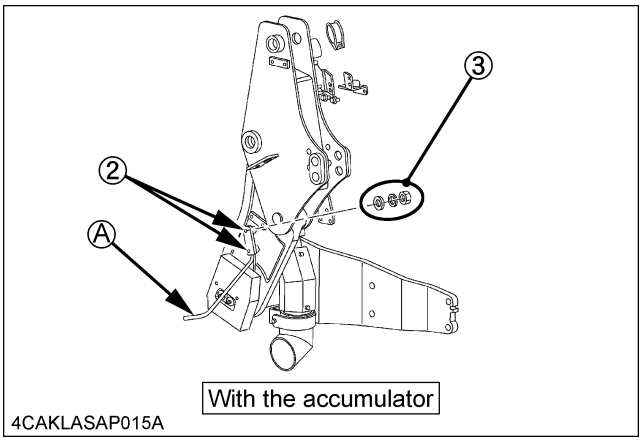

(2) Bolt (Length : 90 mm) *(A) Loader hose guide*
(3) Plain washer
Spring lock washer
Nut

https://truckmanualshub.com/

TIRES, WHEELS AND BALLAST

TIRES

WARNING

To avoid personal injury or death:

- **Do not attempt to mount a tire on a rim. This should be done by a qualified person with the proper equipment.**
- **Always maintain the correct tire pressure. Do not inflate tires above the recommended pressure shown in the operator's manual.**

IMPORTANT :

- Do not use tires other than those approved by KUBOTA.

NOTE :

- When optional different-diameter tires are fitted on the machine, the travel speed display mode must be changed. Otherwise the travel speed will not get correctly displayed. Such mode switching is also needed when the original tires are back on the machine.
  (See "LCD MONITOR" in "OPERATING THE TRACTOR" section.)

■Inflation Pressure

Though the tire pressure is factory-set to the prescribed level, it naturally drops slowly in the course of time. Thus, check it everyday and inflate as necessary.

	Tire sizes	Inflation pressure
Front	9.5-20, 6PR	200 kPa (2.0 kgf/cm^2, 29 psi)
	9.5-24, 6PR	180 kPa (1.8 kgf/cm^2, 26 psi)
	12.5/80-18, 10PR	165 kPa (1.7 kgf/cm^2, 24 psi)
	12.5/80-18R4, 10PR	172 kPa (1.8 kgf/cm^2, 25 psi)
	31x13.50-15R3, 8PR	207 kPa (2.1 kgf/cm^2, 30 psi)
Rear	16.9-24, 6PR	120 kPa (1.2 kgf/cm^2, 18 psi)
	18.4-26, 6PR	110 kPa (1.1 kgf/cm^2, 16 psi)
	19.5L-24R4, 10PR	193 kPa (2.0 kgf/cm^2, 28 psi)
	21.5L-16.1R3, 6PR	83 kPa (0.8 kgf/cm^2, 12 psi)

NOTE :

- Maintain the maximum pressure in front tires, if using a front loader or when equipped with a full load of front weights.

■Dual Tires

Dual tires are not approved.

WHEEL ADJUSTMENT

WARNING

To avoid personal injury or death:

- **When working on slopes or when working with trailer, set the wheel tread as wide as practical for maximum stability.**
- **Support tractor securely on stands before removing a wheel.**
- **Do not work under any hydraulically supported devices. They can settle, suddenly leak down, or be accidentally lowered. If necessary to work under tractor or any machine elements for servicing or adjustment, securely support them with stands or suitable blocking beforehand.**
- **Never operate tractor with a loose rim, wheel, or axle.**

https://truckmanualshub.com/

■Front Wheels (with 4 wheel drive)

Front tread width can be adjusted as shown with the standard equipped tires.

To change the tread width

1. Remove the wheel rim and disk mounting bolts.
2. Change the position of the rim and disk (right and left) to the desired position, and tighten the bolts.
3. Adjust the toe-in [2 to 8 mm (0.1 to 0.3 in.)]
   See "Adjusting Toe-in" in "EVERY 200 HOURS" in "PERIODIC SERVICE" section.

IMPORTANT :

- Always attach wheels as shown in the drawing.
- If not attached as illustrated, transmission parts may be damaged.
- When re-fitting or adjusting a wheel, tighten the bolts to the following torques then recheck after driving the tractor 200 m (200 yards) and thereafter according to service interval.
  (See "MAINTENANCE" section.)

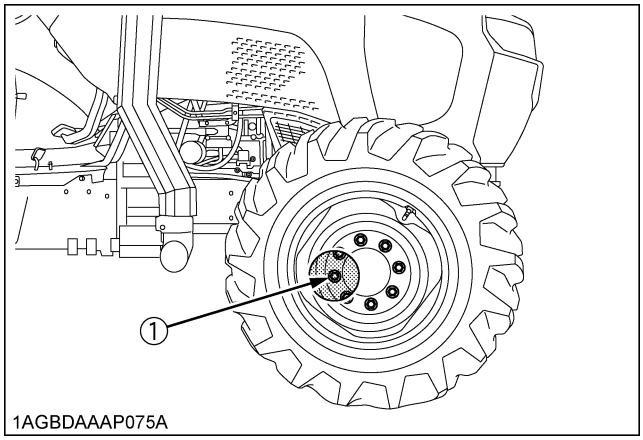

1AGBDAAAP075A

(1) 260 to 304 N-m (26.5 to 31 kgf-m) (192 to 224 ft-lbs)

WARNING

To avoid personal injury or death:

- **Before jacking up the tractor, park it on a firm and level ground and chock the rear wheels.**
- **Fix the front axle to keep it from swinging.**
- **Select jacks that withstand the machine weight and set them up as shown below.**

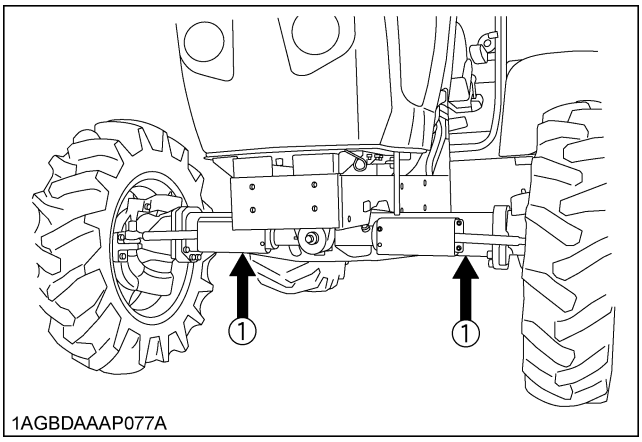

1AGBDAAAP077A

(1) Jack point

NOTE :

- Wheels with beveled or tapered holes: Use the tapered side of lug nut.

9.5-20	1510 mm (59.4 in.)
9.5-24	1520 mm (59.8 in.) / 1620 mm (63.8 in.)
12.5/80-18	1680 mm (66.1 in.)
31x13.50-15	1800 mm (70.9 in.)

1AGBDAAAP082A

https://truckmanualshub.com/

■Rear Wheels

Rear tread width can be adjusted as shown with the standard equipped tires.

To change the tread width

1. Remove the wheel rim and / or disk mounting bolts.
2. Change the position of the rim and / or disk (right and left) to the desired position, and tighten the bolts.

IMPORTANT :

- Always attach tires as shown in the drawings.
- If not attached as illustrated, transmission parts may be damaged.
- When re-fitting or adjusting a wheel, tighten the bolts to the following torques then recheck after driving the tractor 200m (200yards) and thereafter according to service interval.
  (See "MAINTENANCE" section.)

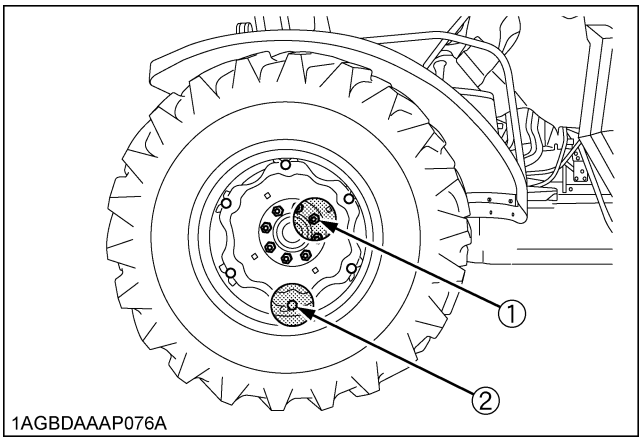

(1) 343 to 401 N-m (35.0 to 41.0 kgf-m) (254 to 297 ft-lbs.)
(2) [TITAN] 244 N-m (24.9 kgf-m) (180 ft-lbs.)
[Non-TITAN]
260 to 304 N-m (26.5 to 31.0 kgf-m) (192 to 224 ft-lbs.)

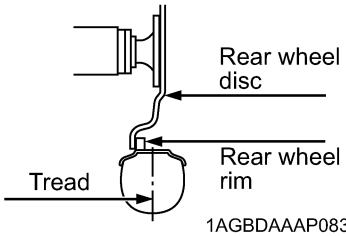		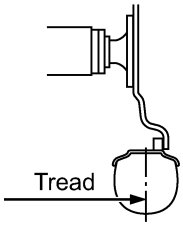	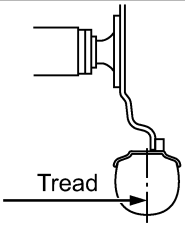	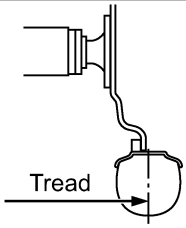	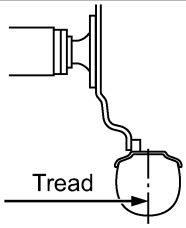
16.9-24	1500 mm (59.2 in.)	1590 mm (62.7 in.)	1700 mm (67.0 in.)	1790 mm (70.5 in.)	1900 mm (74.8 in.)
18.4-26	1520 mm (59.7 in.)	1600 mm (62.9 in.)	1700 mm (67.0 in.)	1800 mm (70.9 in.)	1900 mm (74.8 in.)
19.5L-24	1470 mm (57.8 in.)	1620 mm (63.7 in.)	1735 mm (68.3 in.)	1760 mm (69.3 in.)	1870 mm (73.6 in.)

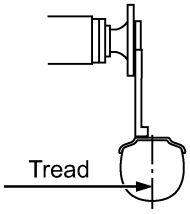	
21.5L-16.1SL	1680 mm (66.1 in.)

WARNING

To avoid personal injury or death:

- **Before jacking up the tractor, park it on a firm and level ground and chock the front wheels.**
- **Fix the front axle to keep it from pivoting.**
- **Select a jack that withstands the machine weight and set it up as shown below.**

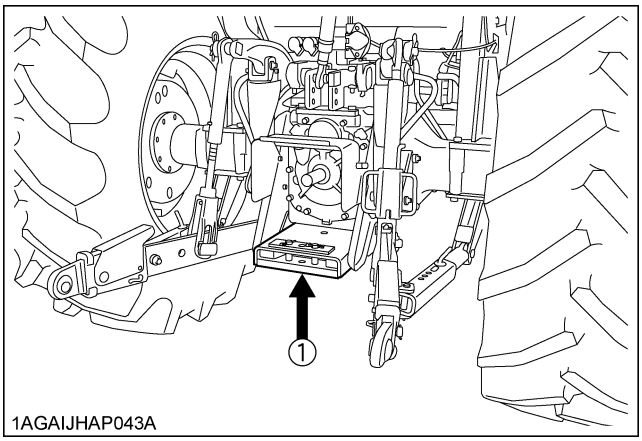

(1) Jack point

https://truckmanualshub.com/

■Adjusting Fender Height

Adjust the height of the fender according to the size of the tire.

◆ Adjusting procedure

1. Remove the rear wheels.
2. Remove the cover and disconnect the rear combination lamp connector.

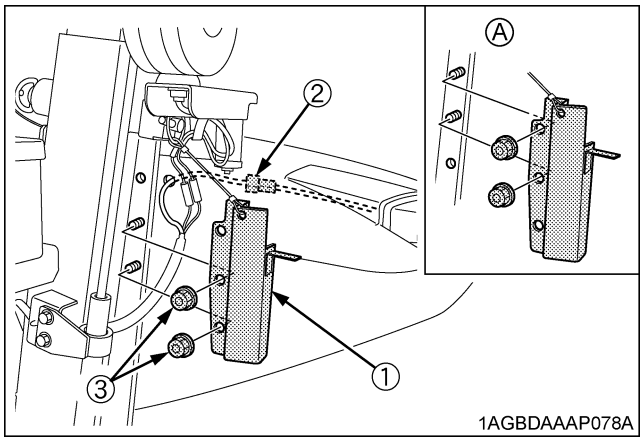

(1) Cover
(2) Connector
(3) Nut, Lock washer
(A) "UPPER POSITION"

3. Remove the right-hand fender mounting bolts (A), (B), (D) and nuts (C), (E) and detach the right-hand fender.
4. Remove the left-hand fender mounting bolts (A), (B) and nuts (C) and detach the left-hand fender.
5. When adjusting the fender height from "Lower position" to "Upper position", remove Cover 1 and interchange Cover 2 and Cover 3.
   When adjusting the fender height from "Upper position" to "Lower position", interchange Cover 3 and Cover 2 and reinstall Cover 1.

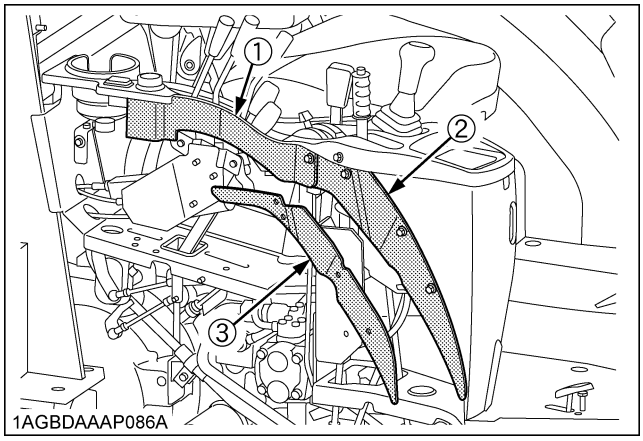

(1) Cover 1
(2) Cover 2
(3) Cover 3

6. Change the position of the fender (right and left) to the desired position, and tighten the bolts (A), (B), (D) and nuts (C), (E).

   [Tightening torque]

   M10 bolt: 48.1 to 55.9 N-m, 4.9 to 5.7 kgf-m, 35.5 to 41.2 ft-lbs

   M8 bolt: 23.5 to 27.5 N-m, 2.4 to 2.8 kgf-m, 17.3 to 20.3 ft-lbs

   M6 bolt: 9.8 to 11.8 N-m, 1.0 to 1.2 kgf-m, 7.2 to 8.7 ft-lbs

   M8 nut: 23.5 to 27.5 N-m, 2.4 to 2.8 kgf-m, 17.3 to 20.3 ft-lbs

7. Reinstall the rear wheel.
   (See "WHEEL ADJUSTMENT" in "TIRES, WHEELS AND BALLAST" section.)

https://truckmanualshub.com/

Tire size	Fender position
16.9-24	Lower position
18.4-26	Upper position

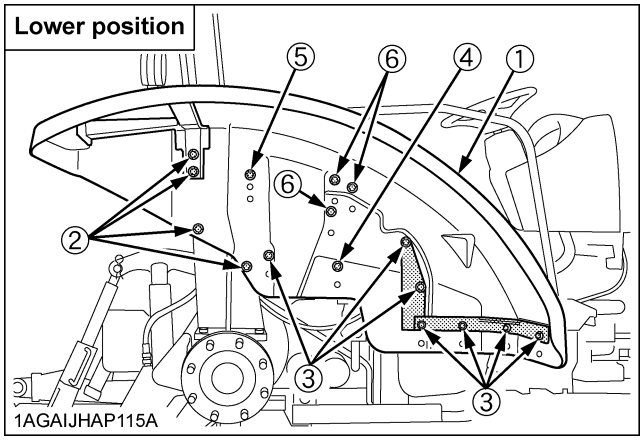

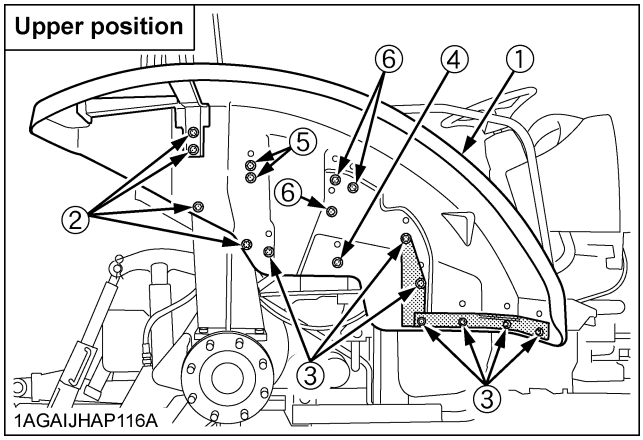

(1) Fender
(2) Bolt (A) (M10), Plain washer
(3) Bolt (B) (M8), Plain washer
(4) Nut (C) (M8), Plain washer
(5) Bolt (D) (M6) [Right-hand fender only]
(6) Nut (E) (M8), Plain washer [Right-hand fender only]

BALLAST

WARNING

To avoid personal injury or death:

- **Additional ballast will be needed for transporting heavy implements. When the implement is raised, drive slowly over rough ground, regardless of how much ballast is used.**
- **Do not fill the front wheels with liquid to maintain steering control.**

◆ Liquid Ballast in Rear Tires

Water and calcium chloride solution provides safe economical ballast. Used properly, it will not damage tires, tubes or rims. The addition of calcium chloride is recommended to prevent the water from freezing. Use of this method of weighting the wheels has the full approval of the tire companies. See your tire dealer for this service.

Liquid weight per tire (75 Percent filled)

Tire sizes	16.9-24	18.4-26
Slush free at -10℃ (14℉) Solid at -30℃ (-22℉) [Approx. 1 kg (2 lbs.) $CaCl_2$ per 4 L (1 gal.) of water]	231 kg (509 lbs.)	299 kg (659 lbs.)
Slush free at -24℃ (-11℉) Solid at -47℃ (-53℉) [Approx. 1.5 kg (3.5 lbs.) $CaCl_2$ per 4 L (1 gal.) of water]	279 kg (616 lbs.)	365 kg (805 lbs.)
Slush free at -47℃ (-53℉) Solid at -52℃ (-62℉) [Approx. 2.25 kg (5 lbs.) $CaCl_2$ per 4 L (1 gal.) of water]	297 kg (654 lbs.)	387 kg (854 lbs.)

IMPORTANT :

- Do not fill tires with water or solution more than 75% of full capacity (to the valve stem level).

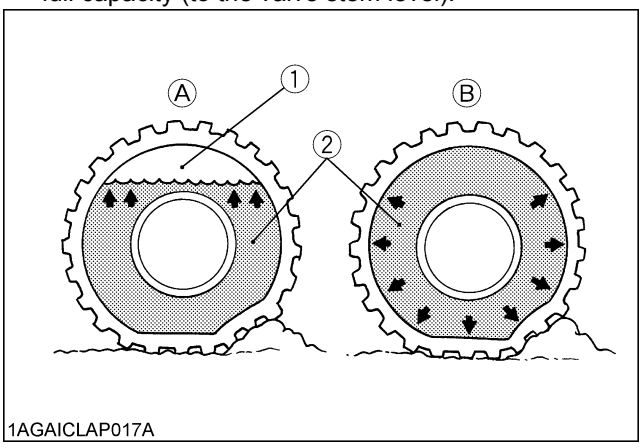

(1) Air
(2) Water
(A) Correct-75% Air compresses like a cushion
(B) Incorrect-100% Full Water can not be compressed

https://truckmanualshub.com/

PERIODIC SERVICE

DAILY CHECK

For your own safety and maximum service life of the machine, make a thorough daily inspection before operating the machine to start the engine.

WARNING

To avoid personal injury or death:
Take the following precautions when checking the tractor.

- **Park the machine on firm and level ground.**
- **Set the parking brake.**
- **Lower the implement to the ground.**
- **All residual pressure of the hydraulic system released.**
- **Stop the engine and remove the key.**

■Checking and Refueling

WARNING

To avoid personal injury or death:

- **Do not smoke while refueling.**
- **Be sure to stop the engine before refueling.**

1. Check the amount of fuel by fuel gauge.
2. When the fuel warning indicator lights up, it is time to add fuel.

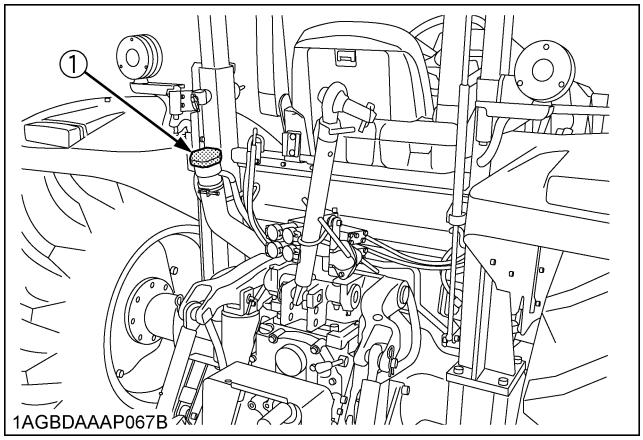

(1) Fuel tank cap

Fuel tank capacity	92 L (24.3 U.S.gals.)

IMPORTANT :

- Be sure to use Ultra Low Sulfur Fuel (S15).
- Do not permit dirt or trash to get into the fuel system.
- Be careful not to let the fuel tank become empty, otherwise air will enter the fuel system, necessitating bleeding before next engine start.
- If the engine runs out of fuel and stalls, the engine components may be damaged.
- Be careful not to spill during refueling. If a spill should occur, wipe it off at once, or it may cause a fire.
- To prevent condensation (water) accumulation in the fuel tank, fill the tank before parking overnight.

https://truckmanualshub.com/

EVERY 3000 HOURS

■Replacing DEF/AdBlue® Pump Filter

1. Loosen 10 bolts and remove pump cover.
2. Clean up around the plug and remove the plug.
3. Loosen the top of filter assembly and remove it from pump.
4. Replace the filter assembly with new one.

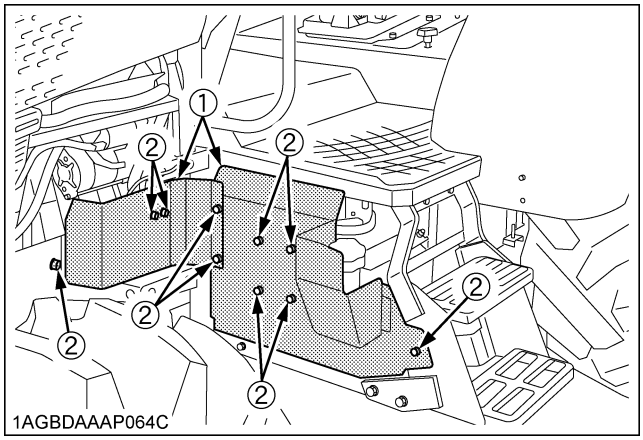

(1) Pump cover
(2) Bolt

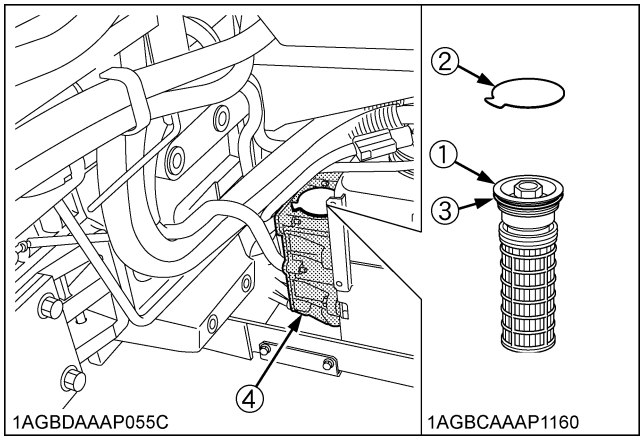

(1) Filter assembly
(2) Plug
(3) O-ring
(4) DEF/AdBlue® pump

NOTE :

- Even after stopping the engine, the injector cooling DEF/AdBlue® fluid continues to circulate through the circuit for a couple of minutes.
  When this circulation has ended, do the replacement job. (During cooling, the fluid's circulating noise is heard.)
- Do not apply oil to the O-ring of the cover.

https://truckmanualshub.com/

OPTIONS

Consult your local KUBOTA Dealer for further details.

- Engine Block Heater
  For extremely cold weather starting
- Front end weights
  For front ballast
- Rear Wheel Weights
  For rear ballast
- Creep Speed Kit
- Grille guard
- Double Acting Remote Hydraulic Control Valve with Detents and Self-Cancelling
- Double Acting Remote Hydraulic Control Valve with Float Position
- Double Acting Remote Hydraulic Control Valve with Detents and Self-Cancelling for Flow Control Valve
- Flow Control Valve Kit
- Hydraulic High Capacity Lift Cylinder
- Clevis for Drawbar
- 540 / 540E rpm PTO Speed Kit
- 540 / 1000 rpm PTO Speed Kit
- Rear Work Light.
  High visibility for night work.
- 100A Alternator Kit

https://truckmanualshub.com/

APPENDICES

INDEX

3-point Hitch Lowering Speed 6
DEF/AdBlue® Pump Filter 15
Dual Tires 9
Extend the ROPS to Upright Position.....5
Fender Height.....12
Front Wheels (4 wheel drive) 10
Inflation Pressure 9
Operator's Seat 6
Rear Turn Signal / Hazard Light.....6
Rear Wheels.....11
Refueling 14
Remote Control Valve 7
Remote Control Valve Lever 7
Remote Control Valve Lever Location.....7
Retract the ROPS.....4