https://truckmanualshub.com/

NOBLELIFT

Scan it,

For more information

Service Hotline: 4008-836115

Service & Maintenance Manual

Electric Reach Truck

RT16P/RT20P

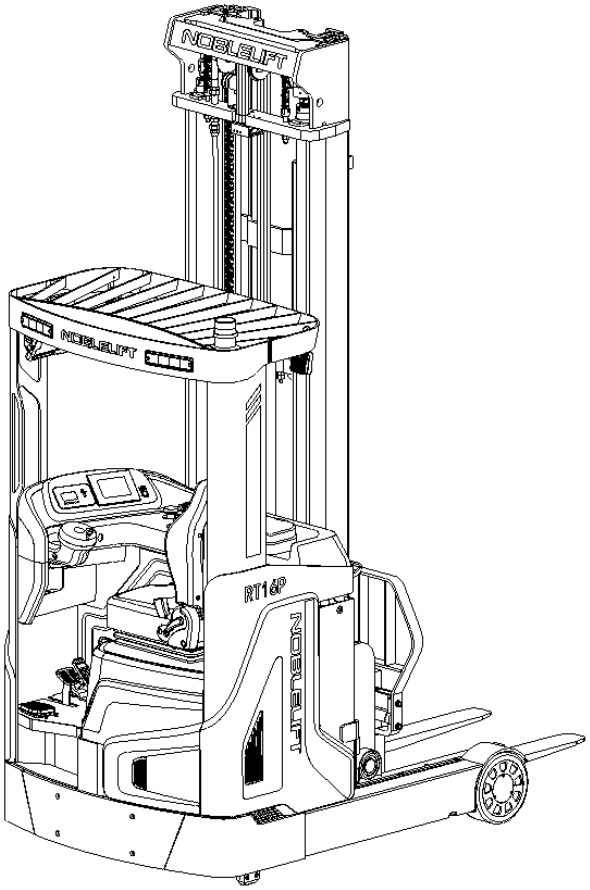

WARNING

Do not use the reach truck before reading and understanding these operating instructions.

NOTE:

- **Please check the designation of your present type at the last page of this document as well as on the ID-plate.**
- **Keep it for future reference.**

Version 12/2019

RTXXP-SMS-001-EN

https://truckmanualshub.com/

FOREWORD

Before operating the truck, read this ORIGINAL INSTRUCTION HANDBOOK carefully and understand the usage of the truck completely. Improper operation could create danger.
This handbook describes the usage of different electric pallet trucks. When operating and servicing the truck, make sure, that it applies to your type.

Keep this handbook for future reference. If this or the warning/ caution labels are damaged or got lost, please contact your local dealer for replacement.
This truck complies with the requirements according to EN 3691-1 (Industrial trucks- safety requirements and verification, part 1), EN 12895 (Industrial trucks- electromagnetic compatibility), EN 12053 (Safety of industrial trucks- test methods for measuring noise emissions), EN 1175-1 (Industrial truck safety – electrical requirements), assumed the truck is used according to the described purpose.
The noise level for this machine is 70 dB(A) according to EN 12053.

ATTENTION:

- Environmentally hazardous waste, such as batteries, oil and electronics, will have a negative effect on the environment, or health, if handled incorrectly.

- The waste packages should be sorted and put into solid dustbins according to the materials and be collected disposal by local special environment protection bureau. To avoid pollution, it's forbidden to throw away the wastes randomly.

- To avoid leaking during the use of the products, the user should prepare some absorbable materials (scraps of wooden or dry duster cloth) to absorb the leaking oil in time. To avoid second pollution to the environment, the used absorbable materials should be handed in to special departments in terms of local authorities.

- Our products are subject to ongoing developments. Because this handbook is only for the purpose of operating /servicing the pallet truck, therefore please have understanding, that there is no guarantee out of particular features out of this handbook.

NOTE: On this manual, the left sign means warning and danger, which can lead to death or serious injury if not followed.

Copyright

The copyright remains with the company, mentioned on the CE- certificate at the end of this document or, if sold within the USA, with the company, mentioned on the company sticker.

https://truckmanualshub.com/

TABLE OF CONTENTS

1. CORRECT APPLICATION 4
2. DESCRIPTION OF THE REACH TRUCK 5
   a. Overview of the main components 5
   b. Main technical data 7
   c. Description of the safety devices and warning labels (Europe and other, excepting USA) 11
   d. Identification plate (ID-plate) 11
3. WARNINGS, RESIDUAL RISK AND SAFETY INSTRUCTIONS 11
4. COMMISSIONING, TRANSPORTING, DECOMMISSIONING 12
   a. Commissioning 12
   b. Loading and unloading/ transporting 13
   C. Decommisioning 15
5. REGULAR INSPECTION 15
6. OPERATIONAL INSTRUCTIONS 16
   a. Operational control devices position 16
   b. Power-on operation 17
   c. Travelling 17
   d. Steering 17
   e. Braking 18
   f. Load curve diagram 18
   g. Lifting 18
   h. Lowering 19
   i. Mast front shift and back shift 19
   j. Fork left shift and right shift 19
   k. Fork tilts 19
   l. Malfunctions 19
   m. Emergency 20
7. BATTERY CHANGES AND REPLACEMENT 20
   a. Battery replacement 21
   b. Battery indicator and alarm 21
   c. Charging 22
8. REGULAR MAINTENANCE 22
   a. Maintenance checklist 23
   b. Lubricating points 24
   c. Check and refill hydraulic oil 25
   d. Checking electrical fuses 26
9. TROUBLE SHOOTING 26
10. WIRING/CIRCUIT DIAGRAM 28

https://truckmanualshub.com/

a. Hydraulic circuit 30

11. DIAGNOSTICS AND TROUBLESHOOTING 31

12. SPECIALIZED STIPULATION FOR THE US - AMERICAN MARKET 47

[GB] CE Declaration of Conformity 47

https://truckmanualshub.com/

1. CORRECT APPLICATION

To ensure the safety of personal and equipment, drivers shall observe the following precautions:

1. Only drivers who have been trained and hold a forklift driving license can drive;
2. The forklift is suitable for hard and flat indoors floor;
3. Check the control and alarm devices before driving the forklift. If any damage or defect is found, it shall be operated after repair;
4. During handling, the load shall not exceed the specified value. Both forks shall be inserted under the goods and evenly placed on the forks. Off-load is prohibited and single fork is not allowed to pick up objects;
5. Start, veer, drive, brake and stop slowly and smoothly. Slow down when turning on wet or smooth floors;
6. When drive the forklift with goods, lower the goods as low as possible and the fork should be tilted backward;
7. Be careful when drive on the ramp: go forward on the uphill, go backward on the downhill, avoid veer on the uphill or downhill;
8. When drive the forklift, pay attention to pedestrians, obstacles and potholes, and pay attention to the clearance above the forklift;
9. No one is allowed to stand on forks or forklift;
10. No one is allowed to stand under or walk under the elevated part of the forklift;
11. Only operate the forklift from the driver's position;
12. Do not handle unsecured or loosely packed goods, and handle large goods with care;
13. When drive in the goods shelf area, drive slowly, move straight in and straight out, when the fork is not completely removed from the shelf, no veer operation to avoid collision.
14. For the high lift forklift, try to make the mast stand lean back, and the loading and unloading operation should be done in the minimum range;
15. Immediately stop to using when the forklift failure occurs, and the label shall be clearly indicated;
16. Lower the fork to the ground when leave the forklift, park the forklift on the horizontal ground, turn off the power and pull out the key.

It is only allowed to use this electric reach truck according to this instruction handbook.

The capacity is marked on capacity sticker as well on the Identification plate. The operator has to consider the warnings and safety instructions.
Operating lighting must be minimum 50 Lux.

<u>Modification</u>

No modifications or alterations to this pallet truck which may affect, for example, capacity, stability or safety requirements of the truck, shall be made without the prior written approval of the original truck manufacturer, its authorized representative, or a successor thereof. This includes changes affecting, for example braking, steering, visibility and the addition of removable attachments. When the manufacturer or its successor approve a modification or alteration, they shall also make and approve appropriate changes to capacity plate, decals, tags and operation and maintenance handbooks.

Only in the event that the truck manufacturer is no longer in business and there is no successor in the interest to the business, may the user arrange for a modification or alteration to a powered industrial truck, provided, however, that the user:
a) arranges for the modification or alteration to be designed, tested and implemented by an engineer(s) expert in industrial trucks and their safety,
b) maintains a permanent record of the design, test(s) and implementation of the modification or alteration,
c) approves and makes appropriate changes to the capacity plate(s), decals, tags and instruction handbook, and
d) affixes a permanent and readily visible label to the truck stating the manner in which the truck has been modified or altered, together with the date of the modification or alteration and the name and address of the organization that accomplished those tasks.

By not observing these instructions, the warranty becomes void.

https://truckmanualshub.com/

2. DESCRIPTION OF THE REACH TRUCK

a. Overview of the main components

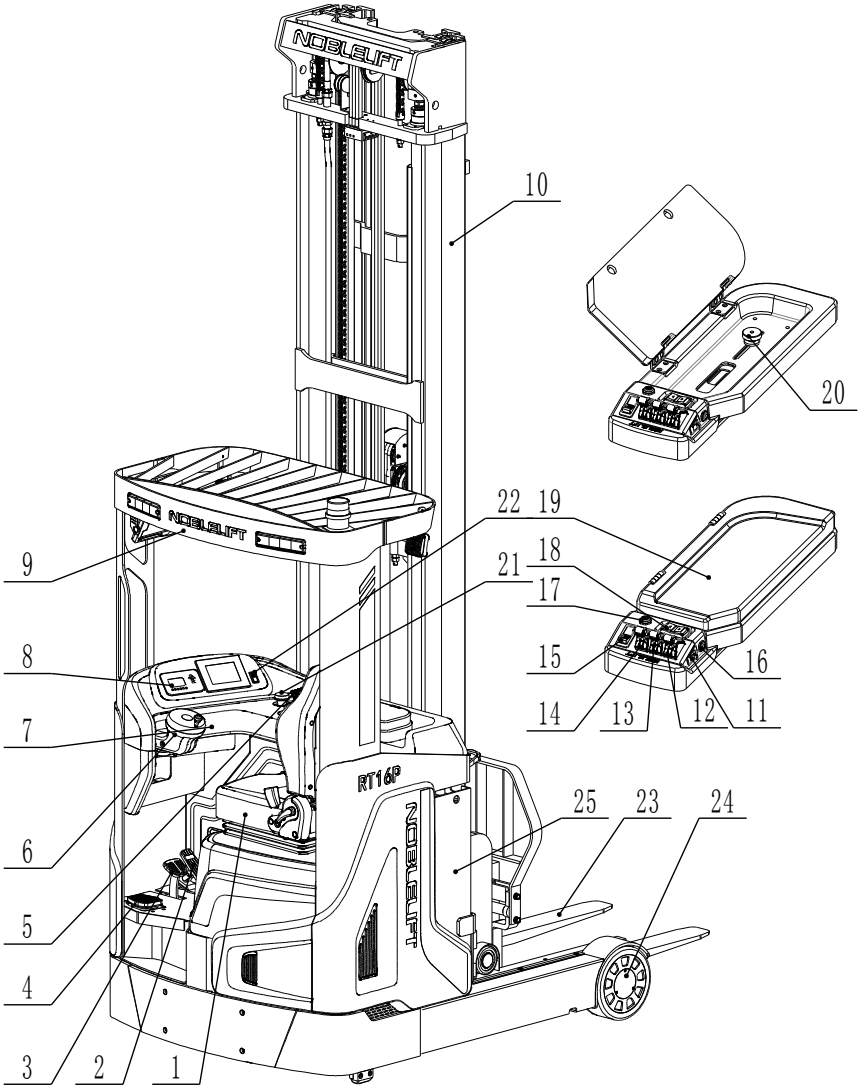

Fig. 1: Overview main components

1. Seat assembly
2. Accelerator pedal
3. Brake pedal
4. Safety pedal switch
5. Control unit
6. Steering control
7. Key switch
8. Display
9. Overhead guard
10. Mast
11. Left and right moving control stick
12. Lifting and lowering control stick
13. Mast moving control stick
14. Mast tilting control stick
15. Signal lamp switch
16. Horn button
17. Brake switch
18. Direction control button
19. Elbow pad
20. Adjusting handle
21. Emergency button
22. Lamp switch
23. Fork arm
24. Load roller

https://truckmanualshub.com/

b. Main technical data

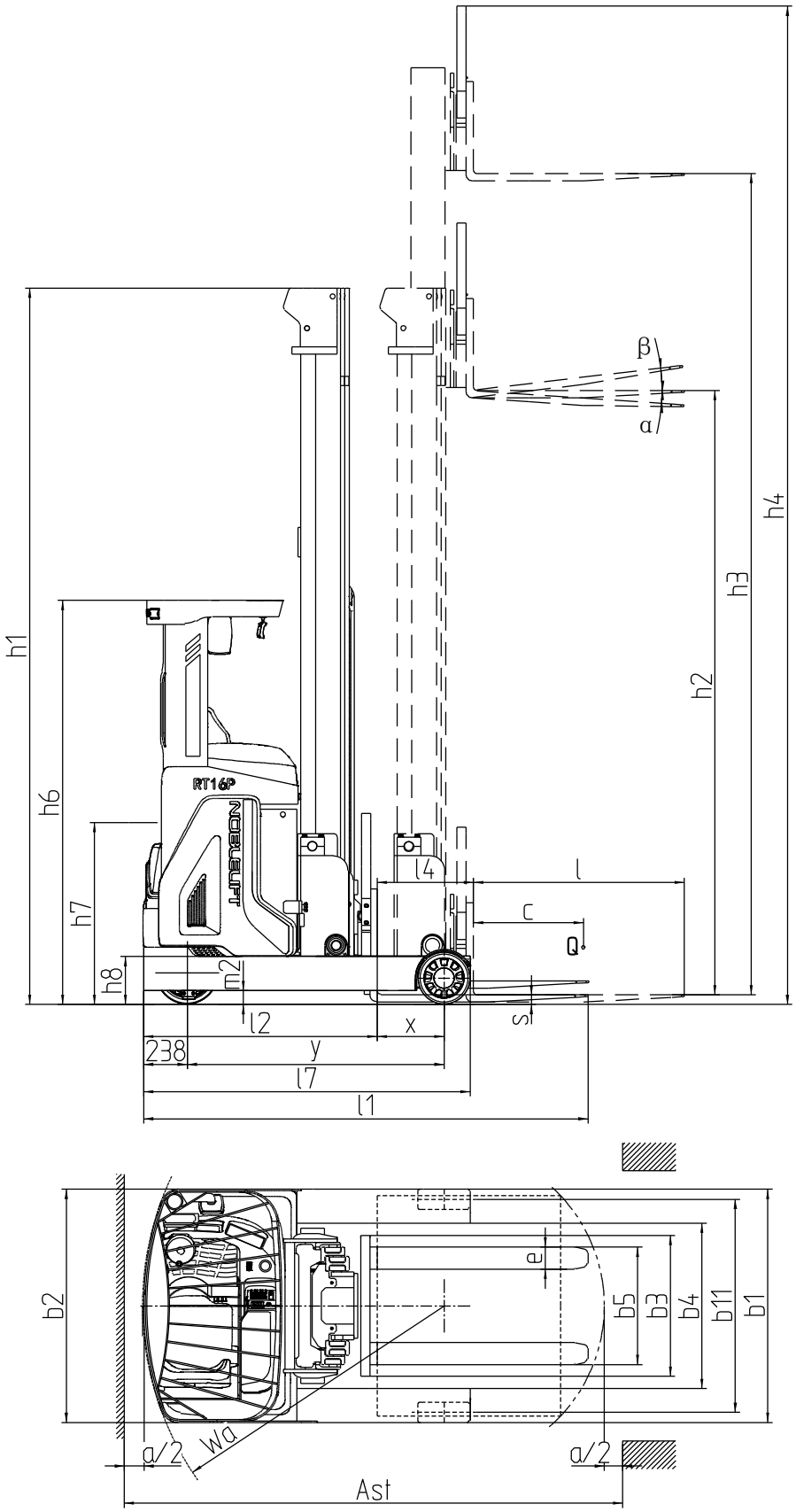

Fig 2: Structure schematic drawing

https://truckmanualshub.com/

Table 1: Main technical data for standard version

Type sheet for industrial truck acc. to (VDI2198)						
Distinguishing mark	1.2	Manufacturer`s type designation		RT16P	RT20P	
	1.3	Power(battery,diesel, petrol gas,manual)		Battery		
	1.4	Operator type		Sit-on		
	1.5	Load Capacity / rated load	Q (t)	1.6	2.0	2.0
	1.6	Load centre distance	c (mm)	600	600	600
	1.8	Load distance, centre of drive axle to fork	x (mm)	365	395	405*
	1.9	Wheelbase	y (mm)	1400	1500	1600*
Weight	2.1	Service weight (with battery)	kg	3960	4200	4800*
Tires	3.1	Tires		Polyurethane (PU)		
	3.2	Tire size, front	∅xW (mm)	343×140	343×140	400×160*
	3.3	Tire size, rear	∅xW (mm)	280×110	330×110	330×140*
	3.5	Wheels, number front/ rear(x=driven wheels)		2/1x	2/1x	2/1x
	3.7	Tread, front/rear	b_{11} (mm)	1160	1160	1290*
Dimensions	4.1	Tilt of fork carriage forward/backward	α/β (°)	4°/-2°	4°/-2°	4°/-2°
	4.2	Lowered mast height	h_1（mm）	3900	3900	4900*
	4.3	Free lift height	h_2（mm）	3290	3290	4290*
	4.4	Maximum lift height	h_3（mm）	9500	9500	12500*
	4.5	Extended mast height	h_4（mm）	10410	10410	13410*
	4.7	Overhead guard height	h_6（mm）	2200	2200	2200
	4.19	Overall length	l_1(mm)	2410	2490	2580*
	4.20	Length to face of forks	l_2 (mm)	1260	1340	1430*
	4.21	Overall width	b_1 (mm)	1270	1270	1430*
	4.22	Fork dimensions	s/e/l (mm)	40/120/1150	40/120/1150	40/120/1150
	4.25	Distance between fork arms(min./max.)	b_5 (mm)	240/760	240/760	240/760
	4.28	Reach distance	l_4（mm）	525	595	640*
	4.31	Minimum ground clearance	m_1（mm）	75	75	75
	4.33	Aisle width for fork carriage 1000X1200 cross ways	Ast (mm)	2720	2840	2880*
	4.34	Aisle width for fork carriage 800X1200 lengthways	Ast (mm)	2780	2900	2980*
	4.35	Turning radius	Wa (mm)	1650	1750	1840*
	4.37	Distance to the rotor arm front end	l_7（mm）	1780	1900	2000*

https://truckmanualshub.com/

Performance	5.1	Travel speed, laden/ unladen	km/h	10.5/10.5	10.5/10.5	10.5/10.5
	5.2	Lift speed, laden/ unladen	m/s	0.35/0.50	0.35/0.50	0.35/0.50
	5.3	Lower speed, laden / unladen	m/s	0.45/0.45	0.45/0.45	0.45/0.45
	5.4	Reach speed, laden / unladen	m/s	0.10/0.10	0.10/0.10	0.10/0.10
	5.8	Maximum grade ability, laden/ unladen	%	10/15	10/15	10/15
	5.10	Service brake		Hydraulic brake		
Motors	6.1	Drive motor rating S2 60min	kW	6.4	6.4	7
	6.2	Lift motor rating at S3 15%	kW	12.5	12.5	12.5
	6.3	Battery acc. to DIN 43531/ 35/ 36 A, B, C		A,3Pzs	A,4Pzs	A,5Pzs
	6.4	Battery voltage, nominal capacity K5	V/ Ah	48/420	48/560	48/700*
	6.5	Battery weight	kg	750	950	1150*
Additional data	8.1	Type of drive control		Three-phase AC		
	8.2	System pressure	(bar)	150	150	150
	8.3	System flow	(l/min)	40	40	42
	8.4	Sound level at driver's ear acc. to EN 12053	dB(A)	＜70	＜70	＜70
Attention: Data with "*" mark is for 6 trucks with max lifting height of 10, 10.5, 11, 11.5, 12, 12.5 m.						

https://truckmanualshub.com/

Mast Table RT 16P				
Designation	Lift height h_3 mm	Free lift height h_2 mm	Lowered mast height h_1 mm	Extended mast height h_4 mm
Two stage mast standard lift	3000	140	2100	3910
	3500	140	2350	4410
	4000	140	2600	4910
	4500	140	2850	5410
Three stage mast FFL (Full Free Lift)	4500	1563	2235	5410
	5000	1730	2400	5910
	5500	1897	2568	6410
	6000	2063	2735	6910
	6500	2230	2900	7410
	7000	2397	3068	7910
	7500	2563	3234	8410
	8000	2730	3400	8910
	8500	2897	3567	9410
	9000	3063	3734	9910
	9500	3230	3900	10410
Mast Table RT 20P				
Two stage mast standard lift	3000	140	2100	3910
	3500	140	2350	4410
	4000	140	2600	4910
	4500	140	2850	5410
Three stage mast FFL (Full Free Lift)	4500	1563	2235	5410
	5000	1730	2400	5910
	5500	1897	2568	6410
	6000	2063	2735	6910
	6500	2230	2900	7410
	7000	2397	3068	7910
	7500	2563	3234	8410
	8000	2730	3400	8910
	8500	2897	3567	9410
	9000	3063	3734	9910
	9500	3230	3900	10410
	10000	3397	4067	10910
	10500	3563	4234	11410
	11000	3730	4400	11910
	11500	3897	4567	12410
	12000	4063	4733	12910
	12500	4230	4900	13410

https://truckmanualshub.com/

C. Description of the safety devices and warning labels (Europe and other, excepting USA)

Warning labels:

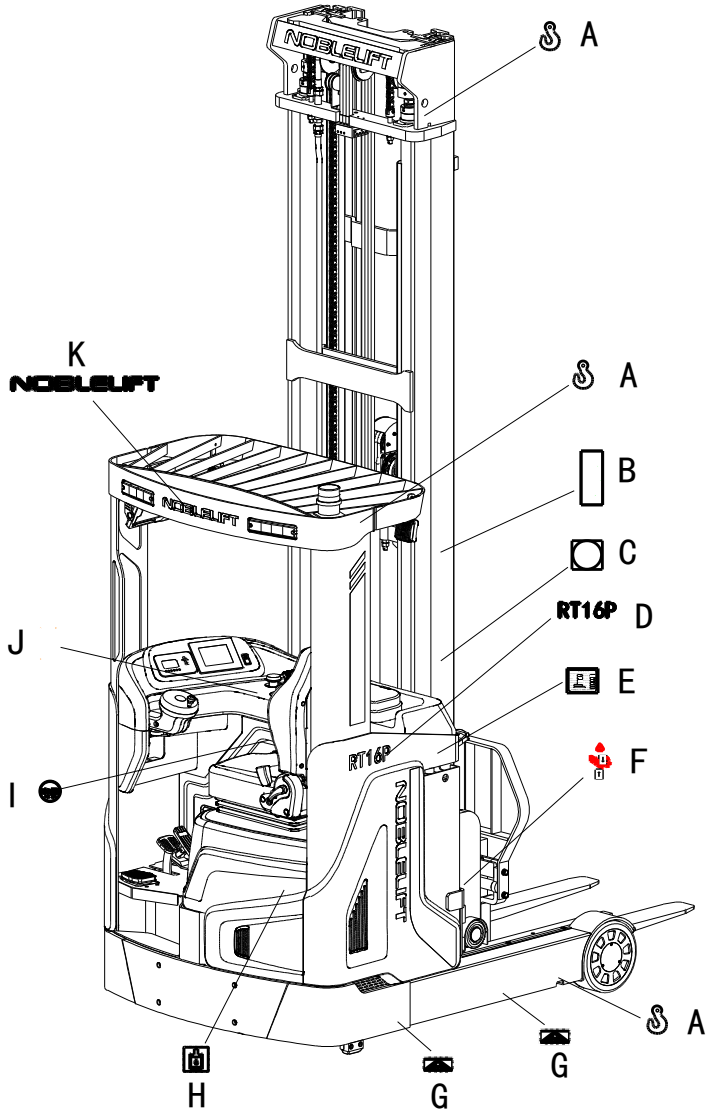

Fig 3: Warning labels

A. Crane hook label: The place for allowed crane.
B. Warning label: Do not stand under or on the fork, otherwise it may cause injury.
C. Warning label: Do not stand inside mast or reach your hand inside, otherwise it may cause injury.
D. Model sticker: Indicate the type of the truck.
E. Identification plate (ID-plate): Indicate the basic information of truck, such as specification, production date, product number, etc.
F. Nipping Hand warning label: There is a risk of hand injury at this position.
G. Fork loading label: The fork insertion position during loading.
H. Filling sticker: Hydraulic oil should be added at this position.

https://truckmanualshub.com/

I. Seat belt sticker: Seat belt should be fastened when driving.
J. Reading warning label: Read and follow service manual.
K. Logo sticker

Safety devices

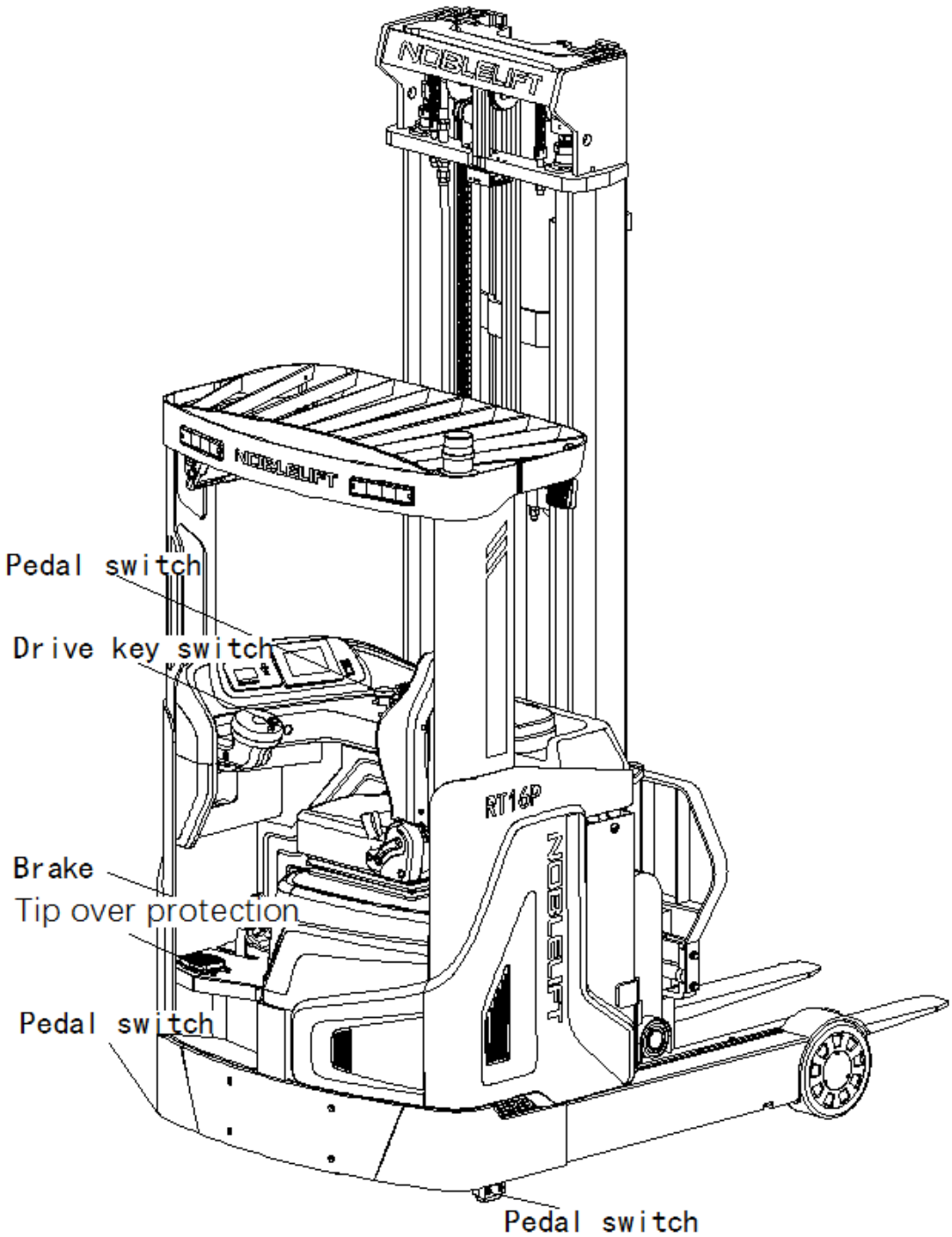

Fig 4: Safety devices

Emergency button: Please press this button immediately to cut of the power supply when the truck is out of control, all lifting-, lowering-functions will be stopped.

Drive key switch: To prevent against unauthorized access, turn the key counterclockwise and pull it out.

https://truckmanualshub.com/

Brake: To stop the truck when it is driving.
Tip over protection: To reduce the risk of side tip over of the truck. It's forbidden to remove the protection.
Pedal switch: Operate the truck with left foot on the foot pedal switch, otherwise it will be failed.
Attention: Emergency button, drive key switch, brake, rollover protection, pedal switch and hydraulic circuit explosion-proof valve are safety devices of the truck. Safety devices and labels above must be kept in good condition, please replace in time in case of damage or absence.

d. Identification plate (ID-plate)

Reach Truck				
Special Equipment Manufacturing License No. TS2510350-2021 Tel: 4008-836115				
Type	xxxx		Rated Capacity	xxxx kg
Nominal Voltage	xx	V	Self Weight	xxxx kg
Max Battery Weight	xxx	kg	Min Battery Weight	xxx kg
Own Mass without Battery	xxx	kg	Max Lifting Height	xxxx mm
Serial Number			Manufacturing Date	
Device Code			Manufacturer Art.No	
This truck is only used in factories, tourist attractions and tourist sites. Noblelift Intelligent equipment co. LTD No.528 Changzhou Road, Taihu Sub-district, Changxing County, Zhejiang Province，China				

Fig 5: Identification plate

3. WARNINGS, RESIDUAL RISK AND SAFETY INSTRUCTIONS

- Do not use truck in environments with explosive gas, explosive dust or acid and alkali corrosion;
- Do not use truck in the environment with poor outdoor or ground conditions;
- Do not put feet or hands under or inside the lifting mechanism;
- Do not stand in front or behind the truck while driving or lifting/lowering;
- Do not overload, the load weight and lifting height must meet load curve requirements;
- Do not put foot outside the truck when driving which may cause injuries;
- Do not lift people may which may cause people falling down and severe injury suffering;
- Do not push or pull goods;
- Do not drive the truck on slopes;
- Do not use truck with unstable, loose or unbalanced load, gravity center must be between two forks;
- To prevent against unauthorized access, park the truck, turn off the power and pull out the key;
- Do not make any truck modification without written consent from manufacturer;
- Do not lift the cargo in the case of wind. Lifting will be unstable under the wind influence.

Watch difference in floor levels when driving. Load could fall down or the truck could get uncontrollable.
Keep watching the condition of load. Stop operating the truck if load becomes unstable.
Brake the truck and activate the emergency button by pushing when sliding load on or off the truck. If the truck has any malfunctions, follow chapter 8.

https://truckmanualshub.com/

- The truck is intended to be used on hard and flat ground indoors whose roughness should be within 1cm/m^2;
- The operator should hold driving license and have been trained;
- When operating the truck, the operator has to wear safety shoes.
- The truck is intended to be used with ambient temperatures between +5°C~+40°C;
- The operating lighting must be minimum 50 Lux.

4. COMMISSIONING, TRANSPORTING, DECOMMISSIONING

a. Commissioning

After receiving our new reach truck or for re-commissioning you have to do following before (firstly) operating the truck:

- Check if all parts are included and not damaged
- Mast installation (please follow the instructions to install mast);
- Do the work according to the daily inspections as well as functional checks.
- Check battery installation and charge instructions (follow chapter 7).

Mast assembling:

Mast assembling required equipment:

Lifting equipment:

Driving (5 tons maximum load) or fork lifting (3 tons load capacity and 4.5 m lifting height)

Assistant tools: S24 wrench, crowbar.

Safety precautions:

Assembling operators must take appropriate training or be trained by professional personnel on-site to guide the assembling operation.

Operators for lifting equipment must get appropriate operating qualifications.

If the truck is directly forked on the crossbeam of the gantry, the gantry must be tied together with the protection rope to avoid the danger of slipping.

https://truckmanualshub.com/

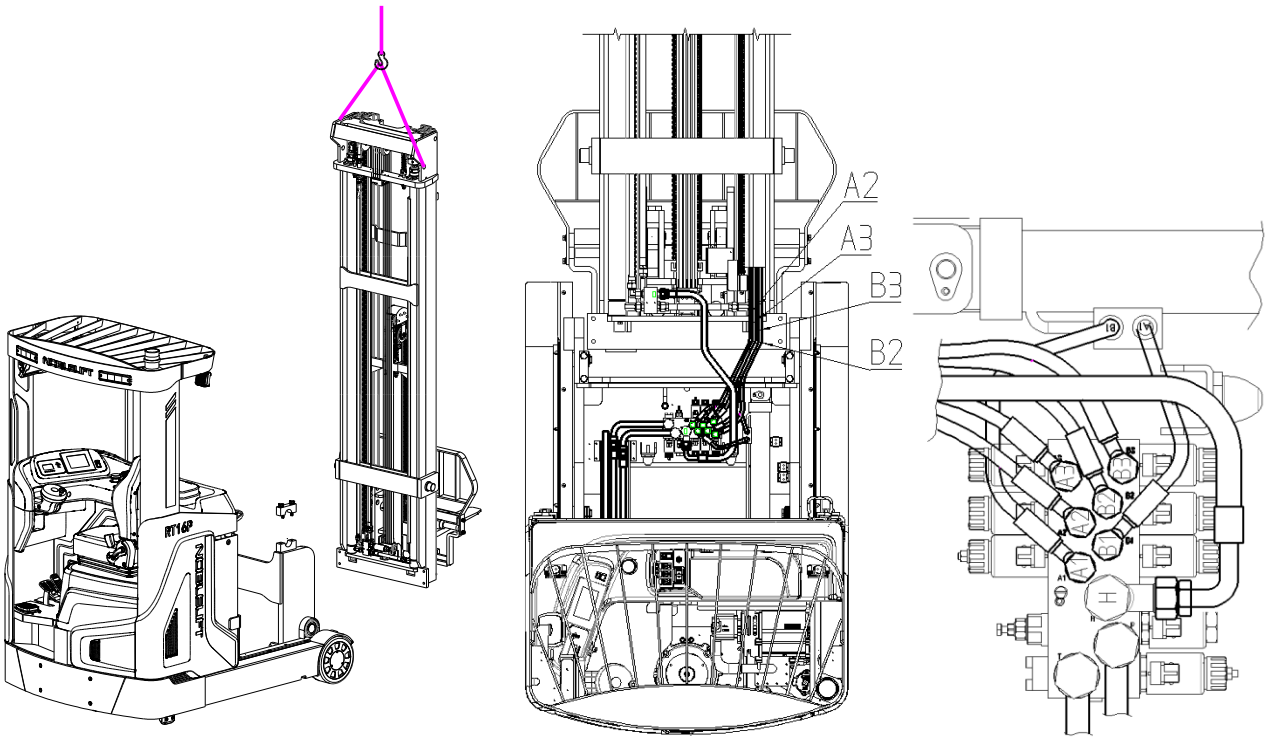

Fig 6: Mast assembling diagram

Table 2: Truck carriage weight and mast weight

Type	RT16P			RT20P		
Truck carriage pack weight [kg]	2300			3000		
Truck carriage pack size [mm]	1800x1300X2200			2000x1300X2200		
Lift height H3 [mm]	5500	7500	9500	10500	11500	12500
Mast pack weight [kg]	1240	1420	1600	1690	1790	1890
Mast pack size [mm]	3900x1000 X700	3900x1000 X700	3900x1000 X700	2400x1400 x 2700	3900x1000 X700	4900x1000 X700

b. Loading and unloading/ transporting

When load and unload the truck, refer to the guide diagram below. The weight for chasis and mast is shown in table 2, for the whole truck weight, please the ID plate.

https://truckmanualshub.com/

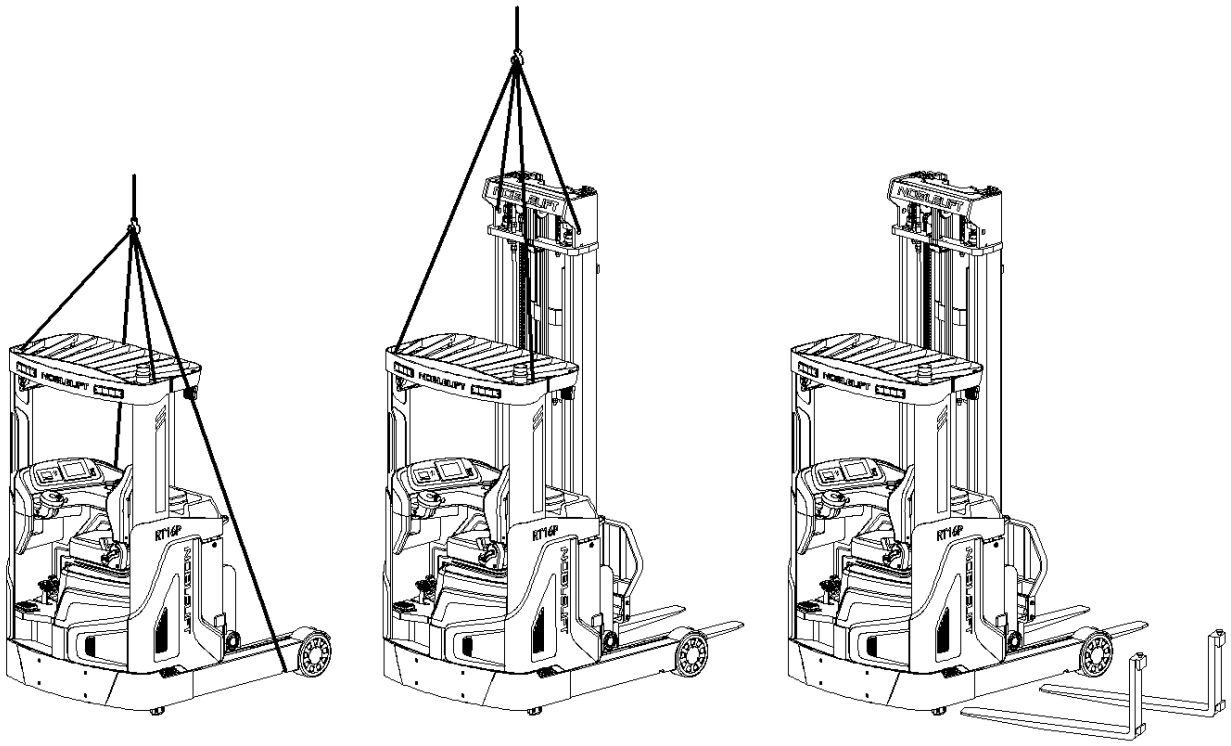

Truck carriage lift | Whole truck lift | Whole truck lift fork position

Fig 7: Loading and unloading guide diagram

Loading and unloading

USE DEDICATED CRANE AND LIFTING EQUIPMENT.
DO NOT STAND UNDER THE SWAYING LOAD.
DO NOT WALK INTO THE HAZARDOUS AREA DURING LIFTING.
PLACE THE TRUCK ON A LEVEL GROUND.

Transporting

DURING TRANSPORTATION ON A LORRY OR TRUCK, ALWAYS FASTEN THE TRUCK SECURELY.

Lower the forks and park the truck securely.
Fasten the truck according to Fig. 8, put the wood blocks under the driving cab to prevent damage to the driving wheel in transporting.

https://truckmanualshub.com/

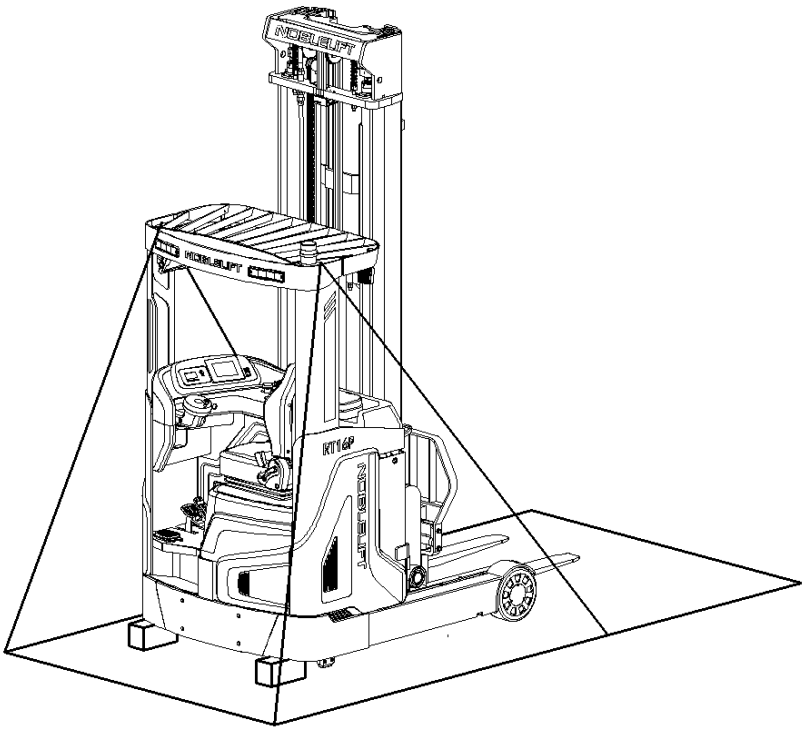

Fig 8: Fixing points

C. Decommisioning

Lower the fork to the lowest position, put the wood blocks under the driving cab to prevent damage to the driving wheel as it shown in Fig.8 for long time storage.

Grease all greasing points mentioned in this handbook (regular inspection), and eventually protect the truck against corrosion and dust.

Charge the truck of long storage every month to prevent damage on battery.

For final decommissioning hand the truck to a designated recycling company. Oil, batteries and electric components must be recycled due to legal regulations.

5. REGULAR INSPECTION

This chapter describes pre-shift checks before putting the truck into operation.

Regular inspection is effective to find the malfunction or fault on this truck. Check the truck on the following points before operation.

Remove load from truck and lower the forks.

DO NOT USE THE TRUCK IF ANY MALFUNCTION IS FOUND.

- Check for scratches, deformation or cracks.
- Check if there is any oil leakage from the cylinder.
- Check the function of driving in both directions
- Check the chain and rollers are without damage or corrosion.
- Check the smooth movement of the wheels.
- Check the function of the emergency brake by activating the emergency button.
- Check the functions of foot brake.
- Check the lifting and lowering functions.
- Check the seat is assembled tightly.

https://truckmanualshub.com/

- Check the function of horn.
- Check if all bolts and nuts are tightened firmly.
- Check the function of key switch.
- Check the function of speed limitation.
- Visual check if there are any broken electric wires.
- If supplied with a backrest extension, check it for damages and correct assembling.

6. OPERATIONAL INSTRUCTIONS

a. Operational control devices position

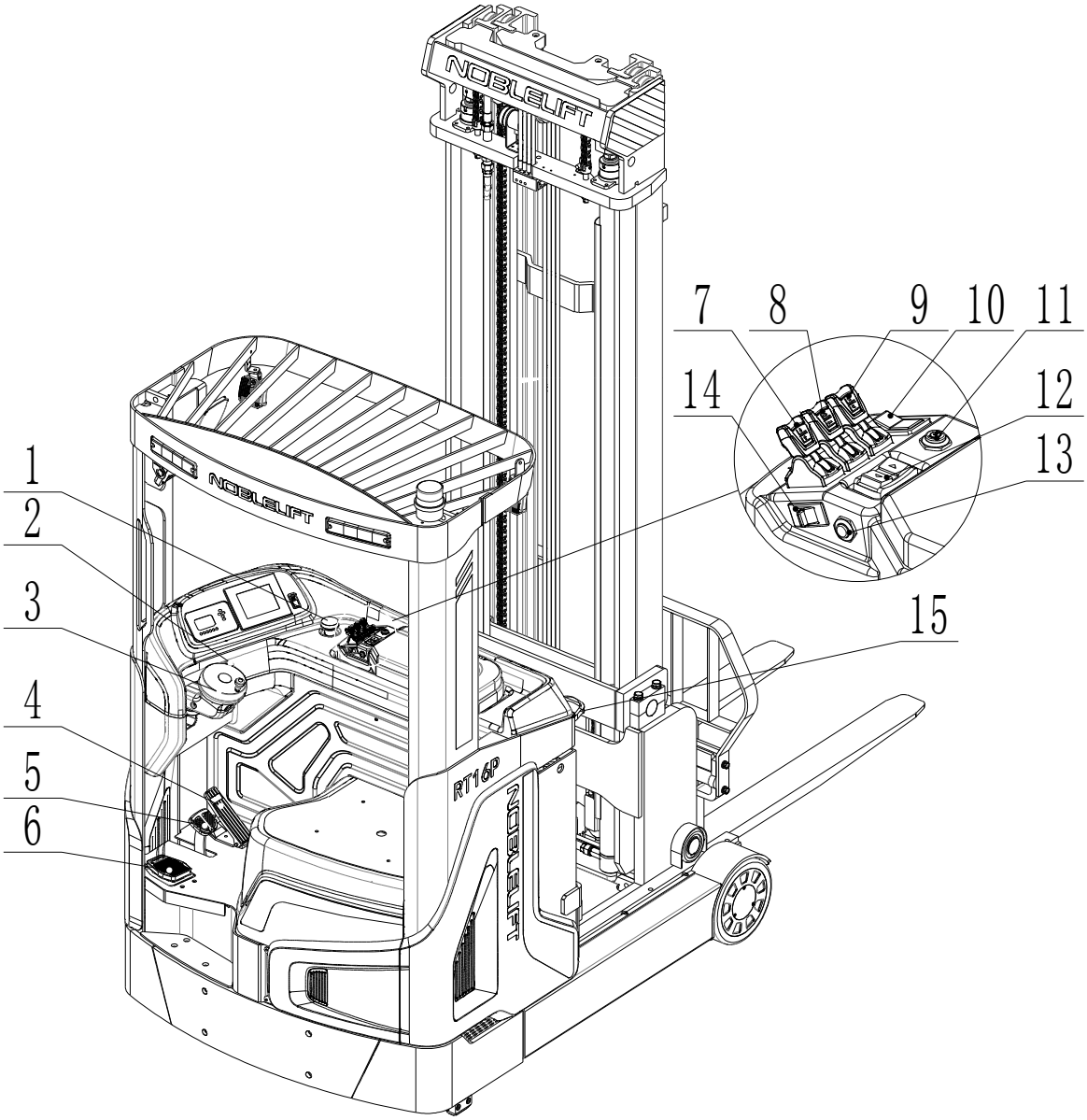

Fig. 9: Operational control devices position

https://truckmanualshub.com/

b. Power-on operation

Before operating the truck, make sure that the load is stable and will not cause poor visibility.

Pull the emergency button (1), insert the key switch (2), and turn it clockwise to the "ON" position, then step on the safety switch (6). Before start the truck, please press the horn button (11) to start the horn to warn others if necessary. The truck is power on. Note: please set the direction switch in the middle before power-on operation, otherwise the operation sequence fault will be reported.

c. Travelling

After starting the truck by turning the inserted key to the “ON” position, firstly step the safety pedal switch (6), then put your hand on the operating area. Put the switch on the forward or backward direction, and there is arrow which means forward or backward on the indicator, just touch it. Control the travelling speed by moving the accelerator pedal (4) carefully until you reached the desired speed. The speed will be slower if you release the accelerator pedal, control the speed to ensure safety. If you need sharp slowdown, please stamp the brake pedal(5).

Drive carefully the truck to the destination. Watch the route conditions and adjust the travelling speed with the accelerator button.

This truck is equipped with enough safety equipment to avoid accidents. When the height of the fork is higher than the free lifting height, the speed of the truck will be reduced to achieve smooth walking and safe work. When the fork lower below the free lifting height, the lower the fork height, slower the truck.

Please keep the lifting height of the fork below 0.5 m when you need to travel over a longer distance.

Please drive the truck to the safe storage area and lower the fork to the lowest position after every use. Turn the key counterclockwise to the "close" position and pull out the key.

Attention: Turn on the power supply, the system will start self inspection. If there is something wrong with the electrical system, such as open circuit, short circuit, or button on the active state, and you stamp the pedal switch, speed controller will not in the neutral position, and the truck will not drive and report default, only when the electrical system is OK, the truck will start normal work.

d. Steering

THE TRUCK IS EQUIPPED WITH AN ELECTRIC STEERING SYSTEM. TAKE CARE BY

https://truckmanualshub.com/

OPERATING A TRUCK WITH THIS KIND OF SYSTEM

You steer the truck by turning the aiming circle clock wise and anti-clock wise. Turn the aiming circle to make the drive wheel move straight, and reach full speed. Turn the aiming circle a certain angle to turn the drive wheel. When turning, the angle is larger than ±10°, comparing with straight driving, the speed will be different when turning, the speed will is more smaller if the turning angle is much larger.

e. Braking

THE BRAKING PERFORMANCE DEPENDS ON THE TRACK CONDITONS AND THE LOAD CONDITONS OF THE TRUCK

- When drive the truck, if the right foot release the accelerator pedal, the truck begins to slow down. If you need a shorter braking distance, please directly step on the brake pedal until it stops;
- Release the safety pedal switch (6), the truck can stop.
- Press the emergency switch (1), the truck can stop.

Attention: when the fork is loaded with goods, the brake should be operated slowly. Do not use emergency button please in case of the goods falling.

f. Load curve diagram

The Load curve diagram indicates the maximum capacity Q [kg] for a given load centre c [mm] and the corresponding lift height H [mm] for the truck with horizontal load.

The white mark on the mast indicates if the specific lifting limits reached.

For instance with a load centre of gravity distance c of 600 mm and a maximum lift height of 10500 mm, the maximum capacity Q for RT20P is 800 kg.

类型	RT16P
门架	9500 mm

h3 (mm)	Q (kg)		
9500	600	400	200
9000	800	500	300
8500	900	600	400
8000	1000	750	500
7500	1200	950	700
7000	1400	1150	900
6300	1600	1350	1100
c(mm)	600	700	800

类型	RT20P
门架	9500 mm

h3 (mm)	Q (kg)		
9500	800	600	400
9000	1000	700	600
8500	1200	900	800
8000	1400	1100	1000
7500	1600	1300	1200
7000	1800	1500	1400
6300	2000	1700	1600
c(mm)	600	700	800

类型	RT20P
门架	12500 mm

h3 (mm)	Q (kg)		
12500	400	300	200
12000	500	400	300
11500	600	500	400
10500	800	700	600
9500	1000	900	800
8500	1500	1300	1200
7500	2000	1700	1600
c(mm)	600	700	800

Fig. 10: Load curve diagram

g. Lifting

DO NOT OVERLOAD THE TRUCK! THE MAXIMUM CAPACITY IS 2000 KG AND 1600 KG REFERRING TO THE ID PLATE.

https://truckmanualshub.com/

LIFT LOADS ALLOWED IN LOAD CURVE DIAGRAM ONLY OR DAMAGE THE TRUCK.

Push backwards the lifting control stick (7) until reach the desired lifting height.

When the lifting height without load is more than 3m or the lifting height with load is more than 1m, please reduce the speed of truck. Be careful of operation when steer the truck, do not sharply start, stop or steer the truck.
Be cautious in lifting work in the shelf area, pay attention to the gap between the goods and the shelf.

h. Lowering

If the forks are in the racking, firstly travel out of the racking carefully with or without the pallet. By travelling out of the racking, take care that the forks are not touching the racking.
Push the control stick (7) forwards. The lowering speed can be adjusted by the movement of the lever.
Lower the load until the forks are clear of the pallet, then drive the truck carefully out of the load unit.

i. Mast front shift and back shift

Push the control stick (8) forwards, the mast shifts to the front.
Push the control stick (8) backwards, the mast shifts to the back.

j. Fork left shift and right shift

Push the control stick (14) forwards, the forks shifts to the left.
Push the control stick (14) backwards, the forks shifts to the right.

k. Fork tilts

Push the control stick (9) forwards, the forks tilts downside.
Push the control stick (9) backwards, the forks tilts upwards.

l. Malfunctions

If there are any malfunctions or the truck is inoperative, please stop using the truck and activate the emergency button (1) by pushing it. If possible, park the truck on a safe area, turn the key switch (2) counterclockwise and remove the key.

Inform immediately the manager and, or call your service. If necessary, tow the truck out of the operating area by using dedicated towing/ lifting equipment.

When the truck has default, the wrench indicator light on the bottom of the indicator will be on. Then we can use CURTIS hand-held unit to find out the fault reason.

https://truckmanualshub.com/

m. Emergency

In emergencies, keep safe distance immediately. If possible push the emergency button (1). All electrical functions will stop.

If the truck fails to lower the fork after the fork is lifted to the high altitude, please use a 6mm Allen-wrench to unscrew the screw (emergency descent) shown in the figure below to lower the fork.

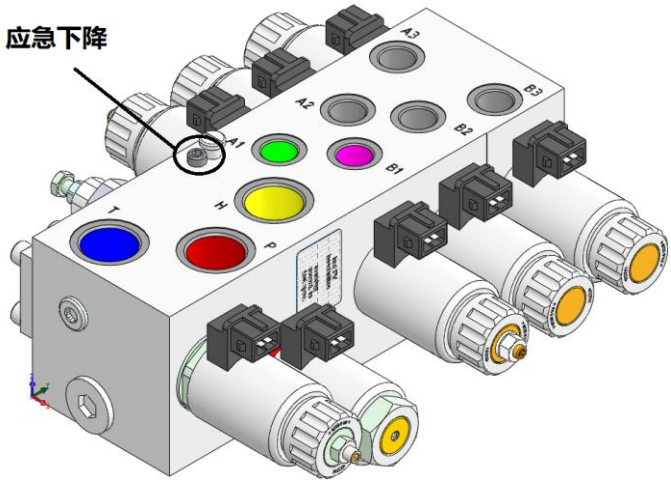

7. BATTERY CHANGES AND REPLACEMENT

- Only qualified personnel are allowed to service or charge the batteries. The instructions of this handbook and from the battery- manufacturer must be observed.
- The batteries are liquid acid traction batteries. Optional maintenance free batteries might be available; for these batteries re- filling is prohibited.
- Recycling of batteries undergoes national regulations. Please follow these regulations.
- By handling batteries, open fire is prohibited, gases could cause explosion!
- In the area of battery charging neither burning materials nor burning liquids are allowed. Smoking is prohibited and the area must be ventilated.
- Park the truck securely before starting charging or installing/changing the batteries
- Before finishing the maintenance work, make sure, that all cables are connected correctly and that there are no disturbing towards other components of the truck.
- In the process of charging or operating, due to water evaporation, check the electrolyte weekly, the battery should be added distilled water regularly, the electrolyte level must be maintained between the highest and the lowest level, charging after filling distilled water.

Distilled water supplement and filling quantity shown as below:

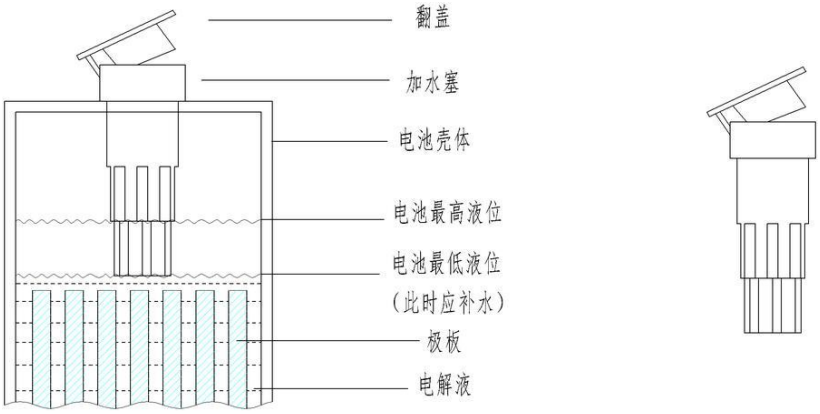

Fig. 11: Electrolyte level

https://truckmanualshub.com/

Attention: If the electrolyte level is not enough, must fill distilled water other than other liquid. After charging, the standard electrolyte proportion is 1.28g/ml.

The truck is equipped with following acid traction battery-type:

RT20P 1 pc 48V 4PzS 560AH (standard) [1216x355x754 mm (LxWxH)]
1 pc 48V 5PzS 700AH (standard) [1216x428x754 mm (LxWxH)] (For lifting height above 10m)

RT16P 1 pc 48V 3PzS 420L (standard) [1216x283x754 mm (LxWxH)]

IT IS ONLY ALLOWED TO USE ACID TRACTION BATTERIES.

THE WEIGHT OF THE BATTERIES HAS AN INFLUENCE TO THE TRUCKS OPERATING BEHAVIOR.
PLEASE CONSIDER THE MAXIMUM OPERATING TEMPERATURE OF THE BATTERIES.

a. Battery replacement

Park the truck securely, release the battery hook, move the mast and battery components forward, turn off the truck with key (2), and press emergency button(1), move the battery plug (15) and remove the battery with a crane.

Attention. If the equipment is not safe, the tuck may tip over.

The installation is in the reverse order of the removal.

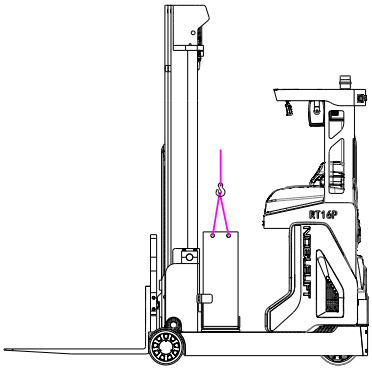

Fig. 12: Battery replacement

b. Battery indicator and alarm

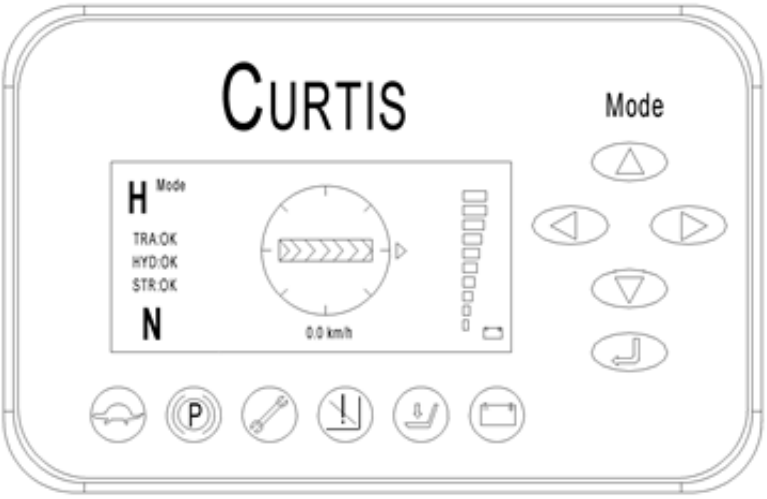

Fig. 13: Display

https://truckmanualshub.com/

Battery power is displayed in the right side, if fully charged, the indicator shows 100% (10 segments), when the battery power only has 20%, the battery symbol will light on (the sixth one from left), indicating it needs charging. When the battery power only has 10%, the prohibition symbol will light on (the fourth one from left), and the truck can’t lift, but can drive slowly.

When the battery is removed, the indicator will show TRA: 5.7, then the truck can’t drive, but you can move the mast. and the Max. lifting height is about 600mm.

There is key Mode on the right side of the indicator, you can switch driving mode by this key Mode. Shown as upper left corner in Fig. 13

H	Mode	high speed mode	top speed drive 10Km/h
S	Mode	normal mode	top speed drive 8.4Km/h
E	Mode	economic mode	top speed drive 6.3Km/h

When switch to the economic mode, the slow speed indicator is on (the first one from left).

c. Charging

- Before charging ensure that you are using an appropriate charger for charging the installed battery!
- Before using the charger, please fully understand the instructions of the charger instructions.
- Please follow these instructions!
- The room, where you are charging must be ventilated.

Park the truck at a dedicated secured area with a dedicated power supply. Lower the forks and remove the load.

Switch the truck off and connect the battery plug to the charging plug of the charger. The charger starts charging the battery.

Disconnect the battery plug after the charger finished charging. Connect the plug (18) with the plug at the truck.

8. REGULAR MAINTENANCE

- Only qualified and trained personnel are allowed to do maintenance on this truck.
- Before maintaining, remove the load from the forks and lower the forks to the lowest position.
- If you need to lift the truck, follow chapter 4b by using designated lashing or jacking equipment. Before working, put safety devices (for instance designated lift jacks, wedges or wooden blocks) under the truck to protect against accidental lowering, movement or slipping.
- Please pay attention by maintain the tiller arm. The gas pressure spring is pre-loaded by compression, carelessness can cause injury.
- Use approved and from your dealer released original spare parts.
- Please consider that oil leakage of hydraulic fluid can cause failures and accidents.
- It is allowed to adjust the pressure valve only from trained service technicians.

Check the items emphasized in maintenance checklist.

https://truckmanualshub.com/

a. Maintenance checklist

		Interval (Month)			
		1	3	6	12
	Hydraulic system				
1	Check the hydraulic cylinder(s), piston for damage noise and leakage		•		
2	Check the hydraulic joints for damage and leakage		•		
3	Inspect the hydraulic oil level, refill if necessary		•		
4	Refill the hydraulic oil (12 month or 1500 working hours)				•
	Mechanical system				
5	Inspect the forks for deformation and cracks		•		
6	Check the chassis for deformation and cracks		•		
7	Check if all screws are fixed		•		
8	Check mast and chain for deformation and damages, replace if necessary	•			
9	Check the gearbox for abnormal sound, noise and leakage		•		
10	Check the wheels for deformation and damages, replace if necessary		•		
11	Check and lubricate the mast and chain	•			
12	Check and fill the brake fluid if necessary	•			
13	Lubricate the grease nipples		•		
14	Check the function of brake	•			
	Electrical system				
15	Inspect the electric wiring for damage		•		
16	Check the electric connections and terminals		•		
17	Test the Emergency switch function		•		
18	Check the electric drive motor for noise and damages		•		
19	Test the display		•		
20	Check, if correct fuses are used		•		
21	Test the warning signal		•		
22	Check the contactor (s)		•		
23	Check the frame leakage (insulation test)		•		
24	Check function and mechanical wear of the accelerator		•		
25	Check the electrical system of the drive motor		•		
	Braking system				
26	Check brake performance, if necessary replace disc or adjust air gap		•		
	Battery				
27	Check the battery electrolytic liquid proportion		•		
28	Clean and grease the terminals and check for corrosion and damage		•		
29	Check the battery housing for damages		•		
	Charger				
30	Check the main power cable for damages			•	
31	Check the start-up protection during charging			•	

https://truckmanualshub.com/

	Function				
32	Check the horn function	•			
33	Check the air gap of the electromagnetic brake	•			
34	Test the emergency braking	•			
35	Test the reverse and regenerative braking	•			
36	Check the steering function	•			
37	Check the lifting and lowering function	•			
38	Check the tiller arm switch function	•			
39	Check the key switch for damage or normal work	•			
40	Check the speed limitation switch function	•			
	General				
41	Check if all decals are legible and complete	•			
42	Check if the protective screen and or guarding is not damaged	•			
43	Inspect the castors, adjust the height or replace these if worn out.		•		
44	Carry out a test run	•			

b. Lubricating points

Lubricate the marked points according to the maintenance checklist. The required grease specification is: DIN 51825, standard grease.

https://truckmanualshub.com/

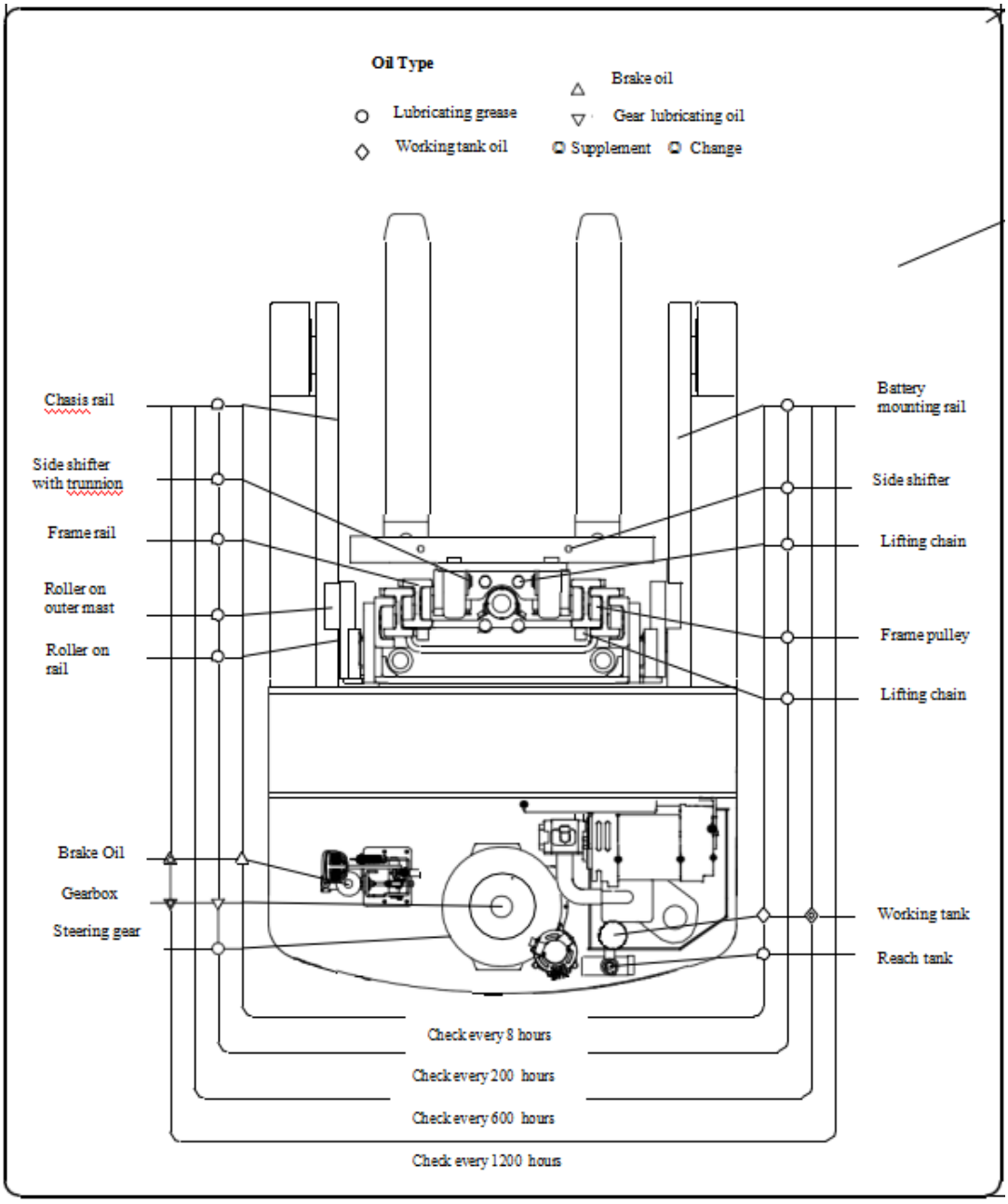

Fig 14: Lubricating points

c. Check and refill hydraulic oil

It is recommended to use hydraulic oil:

- Type: H-LP 46, DIN 51524
- Viscosity: 41.4 – 47

Waste material like oil, used batteries or other must be probably disposed and recycled according to the national regulations and if necessary brought to a recycling company.

The oil level in the oil tank should not be under the min marks for lifting goods.

If necessary add oil at the filling point.

https://truckmanualshub.com/

d. Checking electrical fuses

Remove the plastic cover, the location of fuses is shown in Fig 15 below. Size of the fuses is shown in Table 4 below.

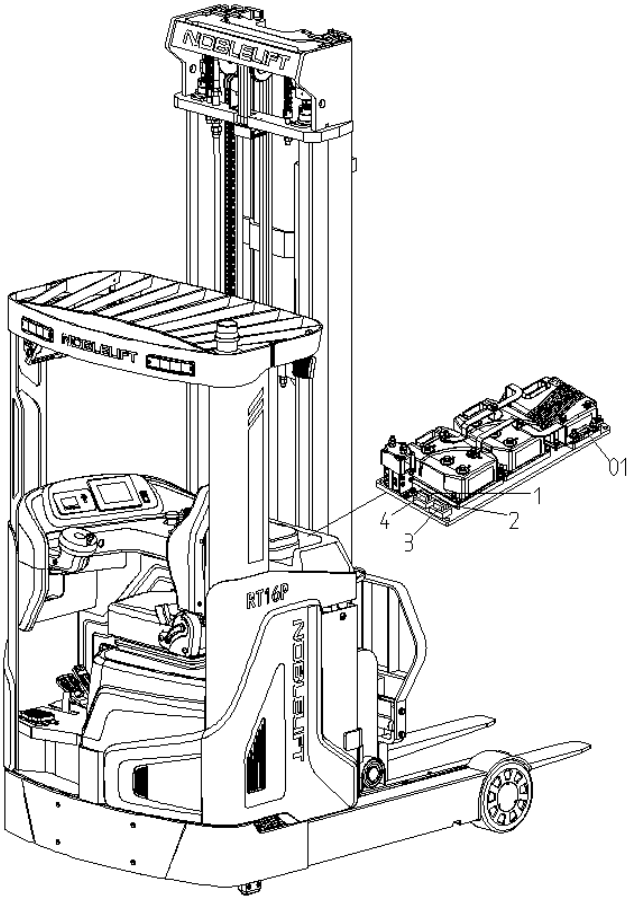

Fig 15: Location of fuses diagram

Table 4: Size of the fuses

	Rate
FU 1	10A
FU 2	10A
FU 3	10A
FU 01	500A

9. TROUBLE SHOOTING

If the truck has malfunctions follow the instructions, mentioned in chapter 6.

Table 5: Trouble shooting

TROUBLE	CAUSE	MAINTENANCE
Load lifting failure	Load weight too high	Lift only the max. capacity, mentioned on the ID-plate
	Battery discharged	Charge the battery
	Lifting fuse failure	Check and eventually replace the lifting fuse
	Hydraulic oil level too low	Check and eventually refill hydraulic oil
	Oil leakage	Repair the hoses and/or the sealing of the cylinder
Oil leakage from air suction	Excessive quantity of oil	Reduce oil quantity.
Truck operating failure	Battery is charging	Charge the battery completely and then remove the main power plug form the electrical socket.

https://truckmanualshub.com/

	Battery not connected	Connect the battery correctly
	The fuse is faulty	Check and eventually replace fuses
	Battery discharged	Charge the battery
	Emergency button is activated	De-activate the button by inserting and pulling the knob.
Only travelling in one direction	The accelerator and the connections are damaged.	Check the accelerator and the connections.
The truck only travels very slowly	The battery is discharged.	Check the battery status at the discharge indicator
	The electromagnetic brake is engaged.	Check the electromagnetic brake
	The relating tiller cables are disconnected or damaged	Check the tiller cables and connections.
	Electric system overheated	Stop using and cool down the truck
	Heat sensor failure	Check and if necessary replace the heat sensor
The truck starts up suddenly	The controller is damaged.	Replace the controller.
	The accelerator not moves back to its neutral position.	Repair or replace the accelerator.

If the truck has malfunctions and can’t be operated out of the working zone, jack the truck up and go with a load handler under the truck and safe the truck securely. Then move the truck out of the aisle.

https://truckmanualshub.com/

10. WIRING/CIRCUIT DIAGRAM

Electrical circuit diagram

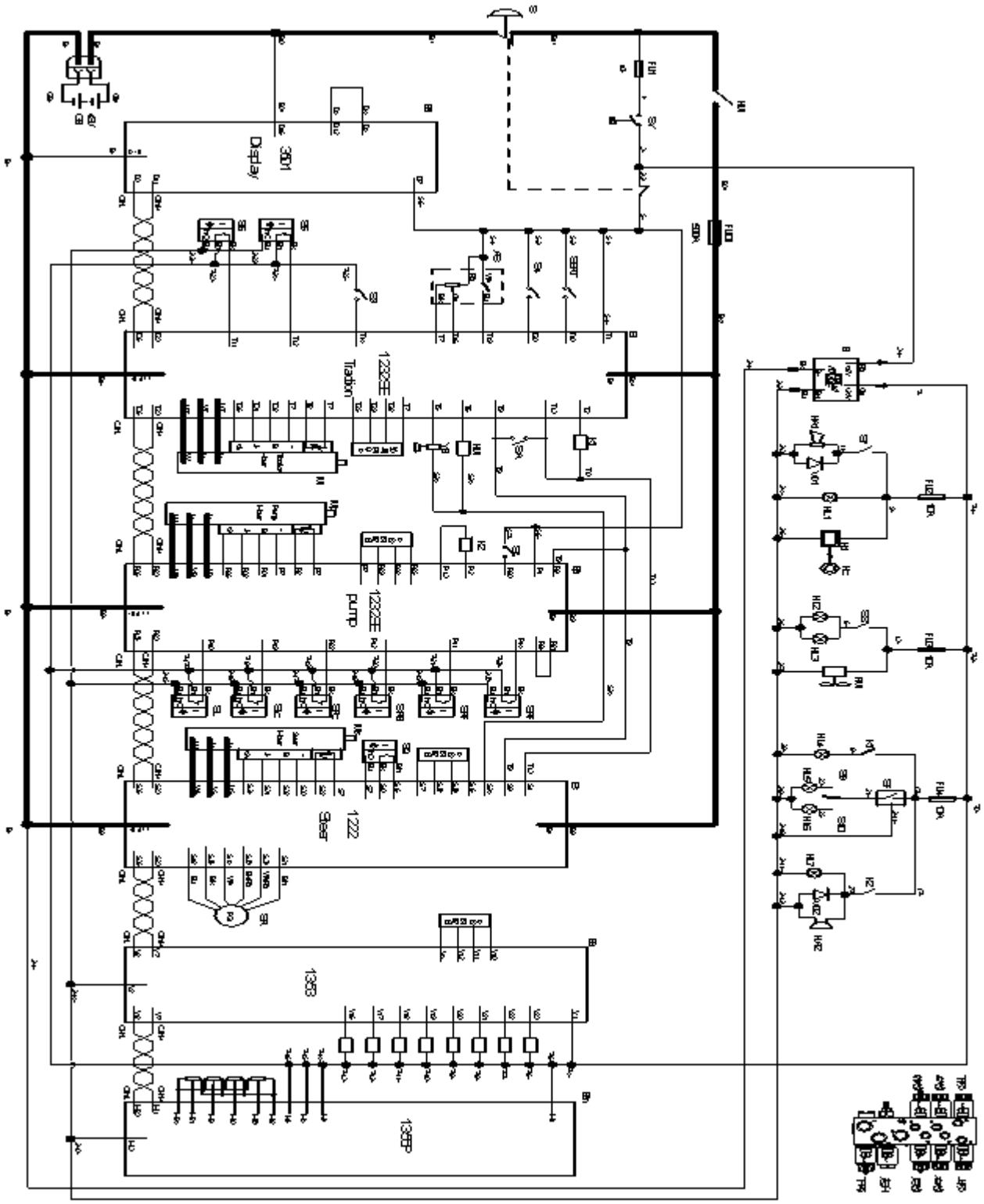

Fig. 16: Electrical circuit diagram

https://truckmanualshub.com/

Table 6: Symbol description

Symbol	Designation	Symbol	Designation
GB	Battery 48V	S6	Battery sliding monitor switch
S	Emergency button	SL	Mast moving limit switch
Mt	Towering motor	SLC	Mast speed limit switch
Mp	Pump motor	SRF	Forward shifting limit switch
Ms	Steering motor	SRB	Backward shifting limit switch
Et	Towering controller	SRC	Forward and backward shifting speed limit switch
Ep	Pump controller	S7	Lithium battery switch
Es	Steering controller	D	Diode
Ed	Display	HA1	Horn
SQ	0° proximity switch	HL1	Warning signal light
SR	Steering control	HL2/HL3	Front lamp
SEAT	Seat switch	HL4	Brake lamp
FU01	Fuse 500A	FM	Fan
AS	Accelerator	HD	Display
SY	Key	HC	Camera
Kmt	Main contactor	SF	Flasher
YV	Lowering electromagnetic valve loop	HL5	Indicator left
YB	Electromagnetic brake	HL6	Indicator right
B	AC transfer	HL7	Backing-up lamp
SA	Platform switch	HA2	Buzzer
FU1~FU4	Fuse10A	K1	Brake relay
S1	Horn button	K2	Astern relay
S2	Lamp button	EM	CAN communication
S3	180° / 360° Transfer switch	EV	Valve controller
S4	Brake switch		
S5	Travel speed limit switch		

https://truckmanualshub.com/

a. Hydraulic circuit

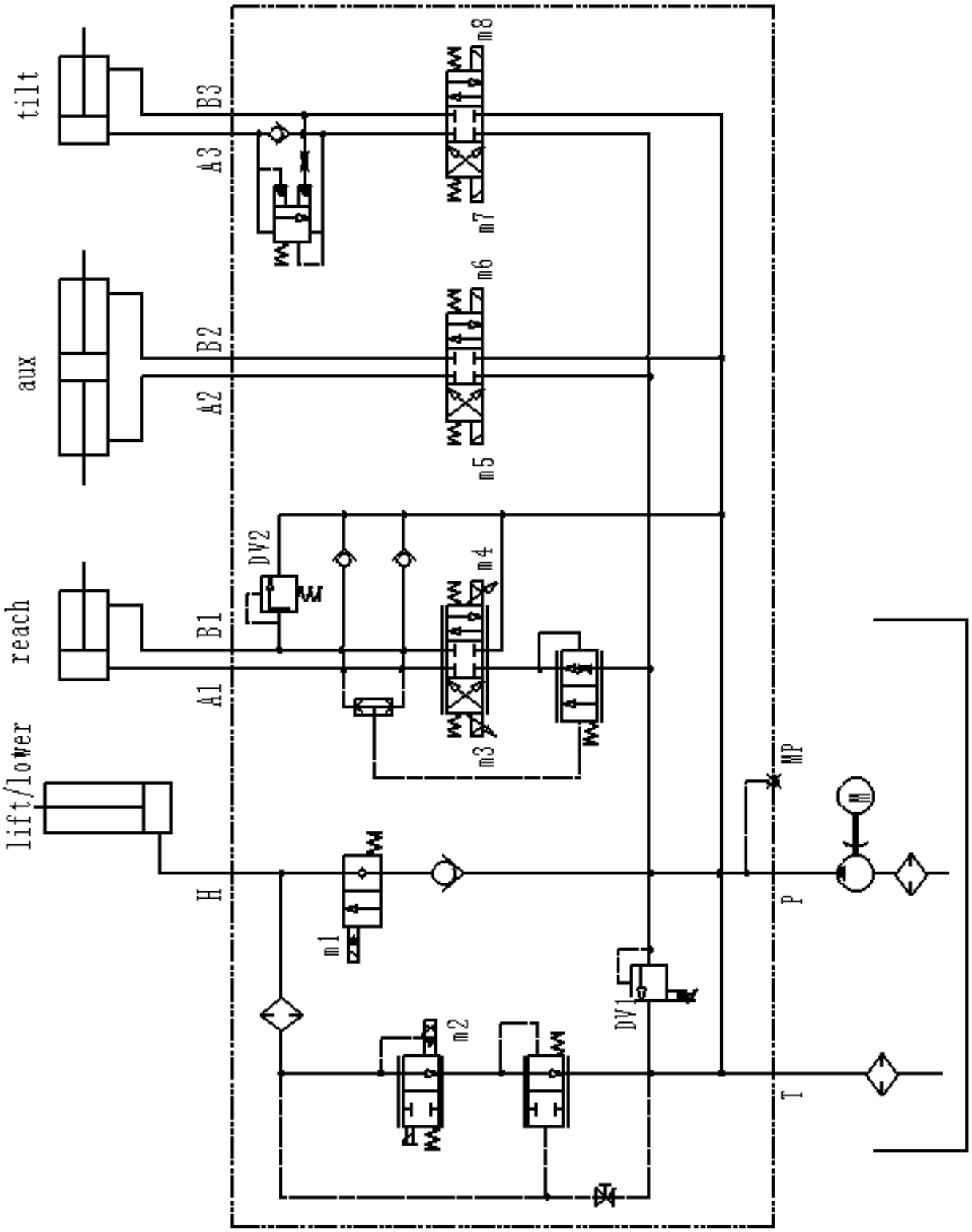

Fig. 17: Hydraulic circuit

https://truckmanualshub.com/

11. DIAGNOSTICS AND TROUBLESHOOTING

These controllers detect a wide variety of faults or error conditions. Faults can be detected by the operating system or by the VCL code. This section describes the faults detected by the operating system. Diagnostics information can be obtained in either of two ways:
(1) by reading the display on a hand-held or PC programmer or
(2) by observing the fault codes issued by the Status LEDs. See Table 4 for a summary of LED display formats.

The pair of LEDs built into the controller (one red, one yellow) produce flash codes displaying all the currently set faults in a repeating cycle. Each code consists of two digits. The red light flashes once, indicating that the number of times the yellow light flashes below is the first digit of the fault code, and the red light flashes twice, indicating that the number of times the yellow light flashes below is the second digit of the fault code.
Example: red light flashes once, followed by yellow light flashes four times.Then the red light blinks twice, then the yellow light blinks twice, so the fault code is 42. Please refer to the list of fault information in this manual for relevant fault codes and causes.
The Throttle Wiper Low indicates that the accelerator output is low on the hand-held programmer fault code table.

The controller's two LEDs will display this repeating pattern

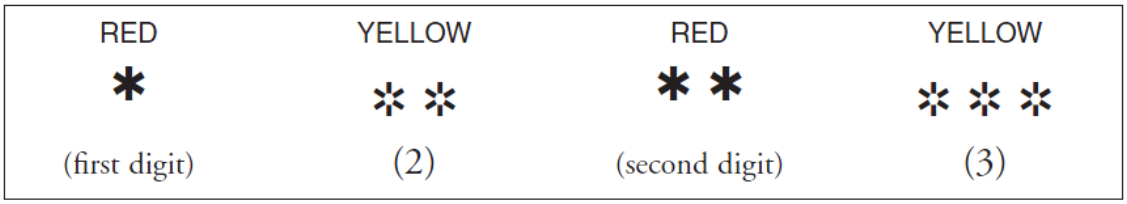

The numerical codes used by the yellow LED are listed in the troubleshooting table, which also lists possible fault causes and describes the conditions that set and clear each fault.

Summary of LED display formats
The two LEDs have four different display modes, indicating the type of information they are providing:

DISPLAY	STATUS
Neither LED illuminated	Controller is not powered on/ vehicle has dead battery/ or severe damage.
Yellow LED flashing	Controller is operating normally.
Yellow and red LEDs both on solid	Controller is in Flash program mode.
Red LED light on solid	No software loaded, or an internal hardware fault detected by the Supervisor or Primary microprocessor. Cycle KSI to clear. Reload software or replace controller if necessary.
Red LED and yellow LED flash alternately	Controller has detected a fault. 2-digit code flashed by yellow LED identifies the specific fault; one or two flashes by red LED indicate whether first or second code digit will follow.

Troubleshooting

The troubleshooting chart provides the following information on all the controller faults:
- fault code
- fault name as displayed on the programmer's LCD
- the effect of the fault
- possible causes of the fault
- fault set conditions
- fault clear conditions.

Whenever a fault is encountered and no wiring or vehicle fault can be found,shut off KSI and turn it back on to see if the fault clears. If it does not, shutoff KSI and remove the 35-pin connector. Check the connector for corrosion or damage, clean it if necessary, and re-insert it.

1232SE drive controller and pump motor controller fault code table

https://truckmanualshub.com/

Code	Programmer Display (Effect or Fault)	Possible Cause	Set/Clear Conditions
12	Controller Overcurrent	1) External short of phase U, V, or W motor connections 2) Motor parameters are mis-tuned 3) Controller defective	**Set:** Phase current exceeded the current measurement limit **Clear:** Cycle KSI
13	Current Sensor Fault	1) Leakage to vehicle frame from phase U, V, or W (short in motor stator) 2) Controller defective	**Set**: Controller current sensors have invalid reading **Clear**: Cycle KSI
14	Precharge Failed	1) External load on capacitor bank (B+ connection terminal) that prevents the capacitor bank from charging 2) See Monitor menu >> Battery: Capacitor Voltage	**Set**: Precharge failed to charge the capacitor bank to KSI voltage **Clear**: Cycle Interlock input or use VCL function *Precharge()*
15	Controller Severe Undertemp	1) See Monitor menu >> Controller: Temperature 2) Controller is operating in an extreme environment	**Set**: Heatsink temperature below -40° C **Clear**: Bring heatsink temperature above -40°C, and cycle interlock or KSI
16	Controller Severe Overtemp	1) See Monitor menu >> Controller: Temperature 2) Controller is operating in an extreme environment 3)Excessive load on vehicle 4) Improper mounting of controller	**Set**: Heatsink temperature above +95°C **Clear**: Bring heatsink temperature below +95°C, and cycle interlock or KSI
17	Severe Undervoltage	1) Battery Menu parameters are misadjusted 2) Non-controller system drain on battery 3) Battery resistance 4) Battery disconnected while driving 5) See Monitor Menu >> Battery: Capacitor voltage 6) Blown B+ fuse or main contactor did not close	**Set:** Capacitor bank voltage dropped below the Severe Undervoltage limit with FET bridge enabled **Clear**: Bring capacitor voltage above Severe Undervoltage limit

https://truckmanualshub.com/

Code	Programmer Display (Effect or Fault)	Possible Cause	Set/Clear Conditions
18	Severe Overvoltage	1) See Monitor menu >> Battery: Capacitor Voltage 2) Battery menu parameters are misadjusted 3) Battery resistance too high for given regen current 4) Battery disconnected while regen braking	**Set:** Capacitor bank voltage exceeded the Severe Overvoltage limit with FET bridge enabled **Clear**: Bring capacitor voltage below Severe Overvoltage limit and then cycle KSI
22	Controller Overtemp Cutback	1) See Monitor menu >> Controller: Temperature 2) Controller is performance-limited at this temperature 3) Controller is operating in an extreme environment 4) Excessive load on vehicle 5) Improper mounting of controller	**Set**: Heatsink temperature exceeded by 85°C **Clear**: Bring heatsink temperature below 85°C
23	Undervoltage Cutback	1) Normal operation. Fault shows that the batteries need recharging. Controller performance is limited at this voltage. 2) Battery parameters are misadjusted 3) Non-controller system drain on battery 4) Battery resistance too high 5) Battery disconnected while driving 6) See Monitor Menu >> Battery: Capacitor voltage 7) Blown B+ fuse or main contactor did not close	**Set**: Capacitor bank voltage dropped below the Undervoltage limit with the FET bridge enabled **Clear**: Bring capacitor voltage below the undervoltage limit

https://truckmanualshub.com/

Code	Programmer Display (Effect or Fault)	Possible Cause	Set/Clear Conditions
24	Overvoltage cutback	1) Normal operation. Fault shows that regen braking currents elevated the battery voltage during regen braking. Controller is performance limited at this voltage. 2) Battery parameters are misadjusted 3) Battery resistance too high for given regen current 4) Battery disconnected while regen braking 5) See Monitor Menu >> Battery: Capacitor voltage	**Set:** Capacitor bank voltage exceeded the Overvoltage limit with the FET bridge enabled **Clear:** Bring capacitor voltage below the Overvoltage limit
25	(+) 5V Supply Failure	1) External load impedance on the +5V supply (pin 26) is too low 2) See Monitor menu >> outputs: 5 Volts and Ext Supply Current	**Set**: +5V supply (pin 26) outside the +5V +/- 10% range **Clear**: Bring voltage within range
26	Digital Out 6 Overcurrent	1) External load impedance on Digital Output 6 driver (pin 19) is too low	**Set**: Digital Output 6 (pin 19) current exceeded 15 mA **Clear**: Remedy the overcurrent cause and use the VCL function *Set_DigOut()* to turn the driver on again
27	Digital Out 7 Overcurrent	1) External load impedance on Digital Output 7 (pin 20) is too low	**Set:** Digital Output 7 (pin 20) current exceeded 15 mA **Clear:** Remedy the overcurrent cause and use the VCL function *Set_DigOut()* to turn the driver on again

https://truckmanualshub.com/

Code	Programmer Display (Effect or Fault)	Possible Cause	Set/Clear Conditions
28	Motor Temp Hot Cutback	1) Motor temperature is at or above the programmed Temperature Hot setting, and the requested current is being cut back 2) Motor Temperature Control Menu parameters are mis-tuned 3) See Monitor Menu >> Motor: Temperature and >> Inputs: Analog2 4) If the application doesn't use a motor thermistor, Temp Compensation and Temp Cutback should be programmed Off.	**Set**: Motor temperature is at or above the Temperature Hot parameter setting. **Clear**: Bring the motor temperature within range
29	Motor Temp Sensor Fault	1) Motor thermistor is not connected properly 2) If the application doesn't use a motor thermistor. Motor Temp Sensor Enable should be programmed OFF 3) See Monitor Menu >> Motor: Temperature and >> Inputs: Analog2	**Set**: Motor thermistor input (pin 8) is at the voltage rail (0 or 10V) **Clear**: Bring the motor thermistor input voltage within range
31	Coil1 Driver Open/Short	1) Open or short on driver load 2) Dirty connector pins 3) Bad crimps or faulty wiring	**Set:** Driver 1 (pin 6) is either open or shorted. This fault can be set only when Main Enable = OFF **Clear**: Correct open or short and cycle driver
31	Main Open/Short	1) Open or short on driver load 2) Dirty connector pins 3) Bad crimps or faulty wiring	**Set:** Main contactor driver (pin 6) is either open or shorted. This fault can be set only when Main Enable = ON **Clear:** Correct open or short, and cycle driver

https://truckmanualshub.com/

Code	Programmer Display (Effect or Fault)	Possible Cause	Set/Clear Conditions
32	Coil2 Driver Open/Short	1) Open or short on driver load 2) Dirty connector pins 3) Bad crimps or faulty wiring	**Set**: Driver 2 (pin 5) is either open or shorted. This fault can be set only when EM Brake Type = 0. **Clear**: Correct open or short and cycle driver
32	EMBrake Open/Short	1) Open or short on driver load 2) Dirty connector pins 3) Bad crimps or faulty wiring	**Set:** Electromagnetic brake driver (pin 5) is either open or shorted. This fault can be set only when EM Brake Type > 0 **Clear:** Correct open or short and cycle driver
33	Coil3 Driver Open/Short	1) Open or short on driver load 2) Dirty connector pins 3) Bad crimps or faulty wiring	**Set**: Driver 3 (pin 4) is either open or shorted **Clear**: Correct open or short and cycle driver
34	Coil4 Driver Open/Short	1) Open or short on driver load 2) Dirty connector pins 3) Bad crimps or faulty wiring	**Set**: Driver 4 (pin 3) is either open or shorted **Clear**: Correct open or short and cycle driver
35	PD Open/Short	1) Open or short on driver load 2) Dirty connector pins 3) Bad crimps or faulty wiring	**Set**: Proportional driver (pin 2) is either open or shorted. **Clear**: Correct open or short and cycle driver
36	Encoder Fault	1) Motor encoder failure 2) Bad crimps or faulty wiring 3) See Monitor menu >> Motor: Motor RPM	**Set**: Motor encoder phase failure detected. **Clear**: Cycle KSI
37	Motor Open	1) Motor phase is open 2) Bad crimps or faulty wiring	**Set**: Motor phase U, V or W detected open **Clear**: Cycle KSI
38	Main Contactor Welded	1) Main contactor tips are welded closed 2) Motor phase U or V is disconnected or open 3) An alternative voltage path (such as an external precharge resistor) is providing a current to the capacitor bank (B+ connection terminal)	**Set**: Just prior to the main contactor closing, the capacitor bank voltage (B+ connection terminal) was loaded for a short time and the voltage did not discharge **Clear**: Cycle KSI

https://truckmanualshub.com/

Code	Programmer Display (Effect or Fault)	Possible Cause	Set/Clear Conditions
39	Main Contactor Did Not Close	1) Main contactor did not close 2) Main contactor tips are oxidized, burned, or not making good contact 3) External load on capacitor bank (B+ connection terminal) that prevents capacitor bank from charging 4) Blown B+ fuse	**Set:** With the main contactor commanded closed, the capacitor bank voltage (B+ connection terminal) did not charge to B+ **Clear**: Cycle KSI
41	Throttle Wiper High	1) See Monitor Menu >> Inputs: Throttle Pot 2) Throttle pot wiper voltage too high	**Set:** Throttle pot wiper (pin 16) voltage is higher than the high fault threshold (can be changed with the VCL function *Setup_Pot_Faults()*) **Clear**: Bring throttle pot wiper charge below the fault threshold
42	Throttle Wiper Low	1) See Monitor Menu >> Inputs: Throttle Pot 2) Throttle pot wiper voltage too low	**Set:** Throttle pot wiper (pin 16) voltage is lower than the low fault threshold (can be changed with the VCL function Setup_Pot_Faults()) **Clear:** Bring throttle pot wiper charge above the fault threshold
43	Pot2 Wiper High	1) See Monitor Menu >> Inputs: Pot2 Raw 2) Pot2 wiper voltage too high	**Set**: Pot2 wiper (pin 17) voltage is higher than the high fault threshold (can be changed with the VCL function *Setup_Pot_Faults()*) **Clear:** Bring Pot2 wiper voltage below the fault threshold
44	Pot2 Wiper Low	1) See Monitor Menu >> Inputs: Pot2 Raw 2) Pot2 wiper voltage too low	**Set:** Pot2 wiper (pin 17) voltage is lower than the low fault threshold (can be changed with the VCL function Setup_Pot_Faults()) **Clear**: Bring Pot2 wiper voltage above the fault threshold

https://truckmanualshub.com/

Code	Programmer Display (Effect or Fault)	Possible Cause	Set/Clear Conditions
45	Pot Low Overcurrent	1) See Monitor Menu >> Outputs: Pot Low 2) Combined pot resistance connected to pot low is too low	**Set**: Pot low (pin 18) current exceeds 10mA **Clear**: Clear pot low overcurrent condition and cycle KSI
46	EEPROM Failure	1) Failure to write to EEPROM memory. This can be caused by EEPROM memory writes initiated by VCL, by the CAN bus, by adjusting parameters with the programmer, or by loading new software into the controller	**Set**: Controller operating system tried to write to EEPROM memory and failed. **Clear**: Download the correct software (OS) and matching parameter default settings into the controller and cycle KSI
47	HPD/Sequencing Fault	1) KSI, interlock, direction, and throttle inputs applied in incorrect sequence 2) Faulty wiring, crimps, or switches at KSI, interlock, direction, or throttle inputs 3) See Monitor Menu >> Inputs	**Set**: HPD (High Pedal Disable) sequencing fault caused by incorrect sequence of KSI, interlock, direction, or throttle inputs **Clear**: Reapply inputs in correct sequence
49	Parameter Change Fault	1) This is a safety fault caused by a change in certain parameter settings so that the vehicle will not operate until KSI is cycled. For example, if a user changes the Throttle Type this fault will appear and require cycling KSI before the vehicle can operate.	**Set:** Adjustment of a parameter setting that requires cycling of KSI **Clear:** Cycle KSI
51-67	OEM Faults	1) These faults can be defined by the OEM and are implemented in the application-specific VCL code. See OEM documentation	**Set**: See OEM documentation **Clear**: Refer to specific vehicle type documentation for assistance

https://truckmanualshub.com/

Code	Programmer Display (Effect or Fault)	Possible Cause	Set/Clear Conditions
68	VCL Run Time Error	1) VCL code encountered a runtime VCL error 2) See Monitor Menu >> Controller: VCL Error Module and VCL Error. This error can then be compared to the runtime VCL module ID and error code definitions found in the specific OS system information file.	**Set:** Runtime VCL code error condition **Clear:** Edit VCL application software to fix this error condition; flash the new complied software and matching parameter defaults; cycle KSI
69	External Supply Out of Range	1) External load on the 5V and 12V supplies draws either too much or too little current 2) Fault Checking Menu parameters Ext Supply Max and Ext Supply Min are mis-tuned 3) See Monitor Menu >> Options: Ext Supply Current	**Set:** The external supply current (combined current used by the 5V supply [pin 26] and the 12V supply [pin 25]) is either greater than the upper current threshold or lower than the lower current threshold. The two thresholds are defined by the External Supply Max and External Supply Min parameter settings. **Clear:** Bring the external supply current within range
71	OS General	1) Internal controller fault	**Set**: Internal controller fault detected **Clear**: Cycle KSI
72	PDO Timeout	1) Time between CAN PDO messages received exceeded the PDO Timeout Period.	**Set:** Time between CAN PDO messages received exceeded the PDO Timeout Period **Clear:** Cycle KSI or receive CAN NMT message
73	Stall Detected	1) Stalled Motor 2) Motor encoder failure 3) Bad crimps or faulty wiring 4) Problems with power supply for the motor encoder 5) See Monitor Menu >> Motor: Motor RPM	**Set:** No motor encoder movement detected **Clear**: Either cycle KSI or detect valid motor encoder signals while operating in LOS mode and return Throttle Command = 0 and Motor RPM = 0

https://truckmanualshub.com/

Code	Programmer Display (Effect or Fault)	Possible Cause	Set/Clear Conditions
87	Motor Characterization Fault	1) Motor characterization failed during characterization process. See Monitor Menu >> Controller: Motor Characterization Error for cause: 0 = none 1 = encoder signal seen, but step size not determined; set Encoder Step Size manually 2 = motor temp sensor fault 3 = motor temp hot cutback fault 4 = controller overtemp cutback fault 5 = controller undertemp cutback fault 6 = undervoltage cutback fault 7 = severe overvoltage 8 = encoder signal not seen, or one or both channels missing 9 = motor parameters out of characterization range	**Set**: Motor characterization failed during the motor characterization process **Clear**: Correct fault; cycle KSI
89	Motor Type Fault	1) The Motor_Type parameter value is out of range	**Set:** Motor_Type parameter is set to an illegal value **Clear:** Set Motor_Type to correct value and cycle KSI
91	VCL/OS Mismatch	1) The VCL software in the controller does not match the OS software in the controller	**Set:** VCL and OS software do not match; when KSI cycles, a check is made to verify that they match and a fault is issued then they do not. **Clear**: Download the correct VCL and OS software to the controller.

https://truckmanualshub.com/

Code	Programmer Display (Effect or Fault)	Possible Cause	Set/Clear Conditions
92	EM Brake Failed to Set	1) Vehicle movement sensed after the EM Brake has been commanded to set. 2) EM Brake will not hold the motor from rotating.	**Set**: After the EM Brake was commanded to set and time has elapsed to allow the brake to fully engage, vehicle movement has been sensed **Clear:** Activate the throttle
93	Encoder LOS (Limited Operating Strategy)	1) Limited Operating Strategy (LOS) control mode has been activated, as a result of either an Encoder Fault (Code 36) or Stall Detect Fault (Code 73) 2) Motor encoder failure 3) Bad crimps or faulty wiring 4) Vehicle is stalled	**Set**: Encoder Fault (Code 36) or Stall Detect Fault (Code 73) was activated, and Brake or Interlock has been applied to activate LOS control mode, allowing limited motor control **Clear:** Cycle KSI, or if LOS mode was activated by the Stall Fault, clear by ensuring encoder senses proper operation, Motor RPM = 0 and Throttle Command = 0
94	Emer Rev Timeout	1) Emergency Reverse was activated and concluded because the EMR Timeout timer has expired 2) The emergency reverse input is stuck ON	**Set**: Emergency Reverse was activated and ran until the EMR Timeout timer expired. **Clear**: Turn the emergency reverse input OFF
98	Illegal Model Number	1) Model_Number variable contains illegal value (not 1234, 1236, 1238 or 1298) 2) Software and hardware do not match 3) Controller defective	**Set:** Illegal Model_Number variable; when KSI cycles, a check is made to confirm a legal Model_Number, and a fault is issued if one is not found. **Clear:** Download appropriate software for your controller model.

附加自定义故障代码			
CODE	POSSIBLE CAUSE	EFFECT OR FULT	NOTE
51	**Steering CAN Comm failure**	电转向总线通讯超时	
52	**Severe Steering Fault**	严重转向故障	
53	**Steering Fault**	转向故障	
54	**Pedal Switch Short**	上电前加速踏板开关=on（正常应该为 Off）	
55	**VCL HPD Fault**	上电器加速信号超过死区	
56	**VCL SRO Fault**	互锁开关没有按下，加速器有输出	
57	**Battery unlock**	电池没有上锁	
58	**Display Config Fault**	3501 仪表界面配置不成功	
59	**Steer angle changed**	电转向 180°/360°模式切换中	
61	**Tillerhead Pdo timeout**	1356P/CAN 手柄通讯超时	

https://truckmanualshub.com/

1222 Steering motor controller and pump motor controller fault code table

FLASH CODE	SUB CODE	NAME	POSSIBLE CAUSE	SET CONDITION	CLEAR CONDITION	STEER FAULT ACTION	TRACTION FAULT ACTION
11	1	Hardware Fault	An internal hardware error has been detected; controller defective.	Hardware error detected.	Cycle KSI.	Shutdown.	1 = Stop.
12	1	Controller Overcurrent 1	1. External short of phase U, V, or W motor connection. 2. Controller defective.	Controller hardware detected overcurrent condition.	Cycle KSI.	Shutdown.	1 = Stop.
12	2	Controller Overcurrent 2	1. External short of phase U, V, or W motor connection. 2. Motor parameters are mis-tuned. 3. Controller defective.	1. Phase current > 120% of base current limit. 2. Phase current exceeded the current measurement limit.	Cycle KSI.	Shutdown.	1 = Stop.
13	1	Current Sensor Fault	1. Leakage to vehicle frame from phase U, V, or W (short in motor stator). 2. Controller defective.	Controller current sensors have invalid offset reading.	Cycle KSI.	Shutdown.	1 = Stop.
14	1	Precharge	1. External load on capacitor bank (B+ connection terminal) that prevents the capacitor bank from charging. 2. Controller defective.	Capacitor bank voltage does not complete the charge to minimum of 75% of the keyswitch voltage.	Cycle KSI.	Shutdown.	1 = Stop.
15	1	Controller Severe Undertemp	Controller is operating in an extreme environment.	Controller heatsink temperature is equal to or below -40°C.	Bring heatsink temp above -35°C.	Warning Only.	3 = No action.
16	1	Controller Severe Overtemp	1. Improper mounting of controller. 2. Excessive load on vehicle. 3. Controller is operating in an extreme environment.	Controller heatsink temperature is equal to or above 95°C.	Cycle KSI.	Warning then Shutdown.	1 = Stop.
17	1	Severe Undervoltage	1. Battery or battery cables or battery connections defective. 2. Excessive non-controller system drain on battery. 3. Battery disconnected while driving. 4. Blown B+ fuse or steer contactor did not close.	1. Capacitor bank voltage (B+ terminal) less than 12 V when Interlock = On. 2. Keyswitch voltage less than 12 V.	Cycle KSI.	Shutdown.	1 = Stop.
18	1	Severe Overvoltage	1. Battery or battery cable resistance too high for a given regen current. 2. Battery disconnected while regen braking.	Keyswitch or capacitor voltage (B+ terminal) greater than 65 V.	Cycle KSI.	Shutdown.	1 = Stop.
22	1	Controller Overtemp	1. Improper mounting or cooling of controller. 2. Excessive load on vehicle. 3. Controller operating in an extreme environment.	Controller heatsink temperature is equal to or above 85°C.	Heatsink temp < 85°C.	Warning Only.	2 = Reduce speed. (Max speed reduced linearly from 100% at 85°C to 0% at 95°C.)
25	1	5V Supply Failure	External load impedance on the +5V supply is too low.	5V supply is outside the 5V +/- 10% range.	Cycle KSI.	Hold then Shutdown.	1 = Stop.
26	1	10V Supply Failure	External load impedance on the +10V supply is too low.	10V supply is outside the 10V +/- 10% range.	Cycle KSI.	Warning then Shutdown.	1 = Stop.
27	1	Severe Motor Over Temp	1. Motor is operating in an extreme environment. 2. Motor Temperature Control parameters are mis-tuned.	Sensor Enable = On and steer motor temperature > programmed Temperature Max.	Cycle KSI.	Warning then Shutdown.	1 = Stop.
28	1	Motor Temp Hot Cutback	1. Motor is operating in an extreme environment. 2. Motor Temperature Control parameters are mis-tuned.	Sensor Enable = On and steer motor temperature > programmed Temperature Hot.	Steer motor temperature < programmed Temperature Hot.	Warning Only.	2 = Reduce speed. (Max speed reduced linearly from 100% at Temperature Hot to 0% at Temperature Max.)
29	1	Motor Temp Sensor Fault	1. Motor thermistor is not connected properly. 2. If the application does not use a motor thermistor, the Motor Temperature Sensor Enable parameter should be programmed Off.	Motor temperature input is at the voltage rail (0 or 5V).	Motor temp input within the normal operating range.	Warning Only.	2 = Reduce speed. (Max speed reduced to Sensor Fault Traction Cutback.)

https://truckmanualshub.com/

FLASH CODE	SUB CODE	NAME	POSSIBLE CAUSE	SET CONDITION	CLEAR CONDITION	STEER FAULT ACTION	TRACTION FAULT ACTION
31	1	Contactor Open/Short	1. Open or short on driver load. 2. Dirty connector pins. 3. Bad crimps or faulty wiring.	Steer contactor driver is either open or shorted. This fault is set only when Contactor Control Type = 1 and Checks Enable = On.	Cycle KSI.	Warning then Shutdown.	1 = Stop.
35	1	Fault Output Open/Short	1. External load impedance on the fault output is too low. 2. Controller defective.	The controller is unable to assert the fault output line: 1. The Fault Output = On and the fault output voltage is not within 5 V of the KSI voltage. 2. The Fault Output = Off and the fault output voltage is greater than 80% of KSI voltage. 3. The Fault Output = On and the fault output voltage is less than 4 V.	Cycle KSI.	Warning then Shutdown.	1 = Stop.
36	1	Motor Stalled	1. Stalled steer motor. 2. Steer motor encoder failure. 3. Bad crimps or faulty wiring. 4. Problems with power supply of the steer motor encoder.	The motor has been commanded to move at more than 25% of the Max Motor Speed or at more than 95% of the available motor current when the motor speed is less than the programmed Stall Speed for the programmed Stall Time.	Cycle KSI.	Warning then Shutdown.	1 = Stop.
37	1	Motor Open	1. Motor phase is open. 2. Bad crimps or faulty motor cable wiring. 3. Controller defective.	1. After the steer contactor closes but before operation starts, the motor is checked for an open phase by running a DC current out of phase U and ensuring the current is measured back on both phase V and phase W. The fault is set if the check fails. 2. When the motor is running, one phase averages less than 1 A while the other phases average more than 4 A for 256 ms when the electrical frequency is greater than 1 Hz and has not changed sign.	Cycle KSI.	Warning then Shutdown.	1 = Stop.
38	1	Contactor Welded	1. Steer contactor tips are welded closed. 2. An alternative voltage path (such as an external precharge resistor) is providing a current to the capacitor bank (B+ terminal).	The steer contactor tips are shorted when the contactor is supposed to be open. This fault is set only when Contactor Control Type = 1 and Checks Enable = On. The weld check is done in Steer Contactor State = 3 (Opening) when DC current is applied to the motor. The fault will be set if the difference between the capacitor bank and keyswitch voltages does not exceed 2 V.	Cycle KSI.	Shutdown.	1 = Stop.
39	1	Contactor Opened	1. Steer contactor was closed temporarily, but then opened. 2. Steer contactor tips are oxidized. 3. An external load on the capacitor bank (B+ terminal) that prevents the bank from charging.	The steer contactor was closed, but detected open. This fault is set only when Contactor Control Type = 1 and Checks Enable = On. In Contactor State = 2 (Closed), the fault will be set if the capacitor bank and keyswitch voltages differ by more than 5 V.	Cycle KSI.	Warning then Shutdown.	1 = Stop.
39	2	Contactor Did Not Close	1. Steer contactor did not close. 2. Steer contactor tips are oxidized. 3. An external load on the capacitor bank (B+ terminal) that prevents the bank from charging.	The steer contactor did not close when commanded. This fault is set only when Contactor Control Type = 1 and Checks Enable = On. In Contactor State = 1 (Closing), the fault will be set if the capacitor bank and keyswitch voltages differ by more than 2 V.	Cycle KSI.	Shutdown.	1 = Stop.
41	1	Command Analog1 Out of Range	Command input device's Analog 3 input (pin 8) is out of range.	Analog1 voltage > Analog1 Fault Max or Analog1 voltage < Analog1 Fault Min. The fault is checked only if Command Input Device = 0, 2, or 3.	Cycle KSI.	Hold then Shutdown.	1 = Stop.
42	1	Command Analog3 Out of Range	Command input device's Analog 3 input (pin 19) is out of range.	Analog3 voltage > Analog3 Fault Max or Analog3 voltage < Analog3 Fault Min. The fault is checked only if Command Input Device = 0, 2, or 3.	Cycle KSI.	Hold then Shutdown.	1 = Stop.
43	1	Feedback Analog5 Out of Range	Position feedback device's Analog 5 input (pin 16) is out of range.	Analog5 voltage > Analog5 Fault Max or Analog5 voltage < Analog5 Fault Min. The fault is checked only if Position Feedback Device = 0, 2, or 3.	Cycle KSI.	Hold then Shutdown.	1 = Stop.

https://truckmanualshub.com/

FLASH CODE	SUB CODE	NAME	POSSIBLE CAUSE	SET CONDITION	CLEAR CONDITION	STEER FAULT ACTION	TRACTION FAULT ACTION
44	1	Feedback Analog6 Out of Range	Position feedback device's Analog 6 input (pin 17) is out of range.	Analog6 voltage > Analog6 Fault Max or Analog6 voltage < Analog6 Fault Min. The fault is checked only if Position Feedback Device = 0, 2, or 3.	Cycle KSI.	Hold then Shutdown.	1 = Stop.
45	1	CAN Not Operational	1222 CAN NMT State did not go operational within 80 ms of interlock being applied.	This check is made only when the parameter CAN Required = On. With Interlock = On for 80 ms, the CAN NMT State is <> Operational.	Cycle KSI.	Warning and drop fault output.	1 = Stop.
46	1	EEPROM CRC Fault	1. New software loaded into EEPROM memory. 2. Try using function "Restore to Factory Defaults" to clear fault. 3. Controller defective.	Error in EEPROM CRC calculation.	Cycle KSI.	Shutdown.	1 = Stop.
47	1	Sin/Cos Command Sensor	1. Sin/Cos Sensor defective. 2. Sin/Cos Sensor parameters are mis-tuned.	The Analog 1 and Analog 3 inputs do not match the expected sine and cosine signals. They must be within the parameter Fault Volts of the ideal waveform as defined by the Gain and Offset parameters.	Cycle KSI.	Hold then Shutdown.	1 = Stop.
47	2	Sawtooth Command Sensor	1. Sawtooth Sensor defective. 2. Sawtooth Sensor parameters are mis-tuned.	The Analog 1 and Analog 3 inputs do not match the expected sawtooth waveform. They must be within the parameter Command Device = 3-Sawtooth Sensor * Tolerance of the ideal 180° offset. ABS(ABS(Analog1-Analog3)-0.5*(MaxVolts +MinVolts))>Sawtooth Tolerance for 60 ms.	Cycle KSI.	Hold then Shutdown.	1 = Stop.
48	1	Sin/Cos Feedback Sensor	1. Sin/Cos Sensor defective. 2. Sin/Cos Sensor parameters are mis-tuned.	The Analog 5 and Analog 6 inputs do not match the expected sine and cosine signals. They must be within the parameter Fault Volts of the ideal waveform as defined by the Gain and Offset parameters.	Cycle KSI.	Hold then Shutdown.	1 = Stop.
48	2	Sawtooth Feedback Sensor	1. Sawtooth Sensor defective. 2. Sawtooth Sensor parameters are mis-tuned.	The Analog 5 and Analog 6 inputs do not match the expected sawtooth waveform. They must be within the parameter Feedback Device = 3-Sawtooth Sensor * Tolerance of the ideal 180° offset. ABS(ABS(Analog5-Analog6)-0.5*(MaxVolts +MinVolts))>Sawtooth Tolerance for 60 ms.	Cycle KSI.	Hold then Shutdown.	1 = Stop.
49	1	Parameter Change Fault	A parameter value or the software was changed that required a power cycle. This fault is set automatically to force the vehicle operator to cycle power, for safety purposes.	1. A parameter was changed that requires a power cycle. See PCF column in Sec. 3 (Programmable Parameter Menus) to identify the parameters that will cause a parameter change fault. 2. A new software application was loaded that caused the parameter values to be overwritten, requiring a power cycle. 3. A device using the serial interface (such as the 1313) is requesting an out-of-range parameter change.	Cycle KSI.	Shutdown.	1 = Stop.
51	1	Interlock Switch Supervision	1. When the interlock switch inputs are a crossed configuration (N.O. and N.C.), the two inputs are checked. A fault is set if Switch 1 (pin 9) = Switch 3 (pin 11). 2. Interlock switch defective.	Interlock Input 1 = Interlock Input 3. The fault is checked only when Interlock Type = 2 (crossed polarity).	Interlock Input 1 <> Interlock Input 3.	Interlock = Off.	1 = Stop.
52	1	Home Switch Supervision	1. When the wheel position is not close to home, the redundant home switch inputs are checked and a fault is set if they disagree. 2. Home switch defective. 3. For 360° steering, parameter Homing Cam Angle (deg) not set correctly.	1. Homing Input Type = 1 (crossed polarity) and Switch2 = Switch4 and the position from home is >Home Reference Tolerance. 2. Homing Input Type = 2 (same polarity) and Switch2 <> Switch4 and the position from home is >Home Reference Tolerance.	Cycle KSI.	Warning then Shutdown.	1 = Stop.
53	1	Home Position Not Found	Home switch defective.	During homing (Steer Command State = 2), the home position was not found after traveling 180° (360° in the case of 360° steering) or within the programmed Homing Timeout time.	Cycle KSI.	Shutdown.	1 = Stop.

https://truckmanualshub.com/

FLASH CODE	SUB CODE	NAME	POSSIBLE CAUSE	SET CONDITION	CLEAR CONDITION	STEER FAULT ACTION	TRACTION FAULT ACTION
54	1	Home Reference Tolerance Fault	1. Home switch defective. 2. For 360° steering, parameter Homing Cam Angle (deg) not set correctly.	During steering (Steer Command State = 4), the wheel position at which the Home variable changes is further than the parameter Supervision × Home Reference Tolerance from the original position found during homing.	Cycle KSI.	Warning then Shutdown.	1 = Stop.
55	1	Steer Command Supervision	Command input device defective.	Steer Command differs from Steer Command2 by more than the programmed Steer Command Tolerance. These command signals are checked by both the main and supervisor processors if the Device State = 5 (Operation Enabled). Note: This check is not performed if Supervision Input Device = 5.	Cycle KSI.	Hold then Shutdown.	1 = Stop.
56	1	Wheel Position Supervision	Position feedback device defective.	1. Wheel Position differs from Wheel Position2 by more than the Wheel Position Tolerance for 80 ms. These feedback signals are checked by both the main and supervisor processors if the Device State = 5 (Operation Enabled). 2. Wheel Position differs from Encoder3 Position by more than the Encoder Position Tolerance. These feedback signals are checked by only the main processor if the Device State = 5 (Operation Enabled). Note: This check is not performed if Supervision Feedback Device = 4.	Cycle KSI.	Hold then Shutdown.	1 = Stop.
69	1	5V Current Out of Range	The external load on the 5V supply is drawing either too much or too little current.	The measured current of the +5V supply (pins 21 and 34) is less than the parameter 5V Current Min or greater than the parameter 5V Current Max.	Cycle KSI.	Hold then Shutdown.	1 = Stop.
71	1	Software Fault 1	Reserved for future use.	—	—	—	—
71	2	Software Fault 2	1. Software defective. 2. Controller defective.	1. Unexpected software value. 2. Failure to send a CAN SDO message response.	Cycle KSI.	Shutdown.	1 = Stop.
71	3	Software Fault 3	Reserved for future use.	—	—	—	—
71	4	Software Fault 4	1. Software defective. 2. Controller defective.	Task overrun.	Cycle KSI.	Shutdown.	1 = Stop.
71	5	Software Fault 5	1. Software defective. 2. Controller defective.	An internal micro-to-micro communication error.	Cycle KSI.	Shutdown.	1 = Stop.
72	1	PDO1 Timeout	Communication between the traction controller and the 1222 has halted.	Time between PDO1 messages received exceeds the PDO1 TimeoutTime.	Cycle KSI.	Warning then Shutdown.	1 = Stop.
72	2	PDO2 Timeout	Communication from the CAN device sending the PDO2 message to the 1222 has halted.	Time between PDO2 messages received exceeds the PDO2 TimeoutTime.	Cycle KSI.	Warning then Shutdown.	1 = Stop.
72	3	PDO3 Timeout	Communication from the CAN device sending the PDO3 message to the 1222 has halted.	Time between PDO3 messages received exceeds the PDO3 TimeoutTime.	Cycle KSI.	Warning then Shutdown.	1 = Stop.
72	4	PDO4 Timeout	Communication from the CAN device sending the PDO4 message to the 1222 has halted.	Time between PDO4 messages received exceeds the PDO4 TimeoutTime.	Cycle KSI.	Warning then Shutdown.	1 = Stop.
73	1	Following Error	1. Position feedback device defective. 2. Steer motor stalled. 3. Steer motor encoder failed.	This fault is checked by the main micro only when the Steering Command State = 4 (Steering). A fault is set if the Error Tolerance (deg) is exceeded and the steered wheel is not moving in the right direction with a Wheel Speed (deg/s) equal to or greater than the Speed Tolerance (deg/s) for longer than the Following Error Time.	Cycle KSI.	Warning then Shutdown.	1 = Stop.
74	1	Hardware Software Mismatch	1. New software loaded. 2. Controller hardware cannot use the loaded software.	1. The software is not compatible with the controller hardware. 2. The software loaded into either or both microprocessors in incorrect.	Cycle KSI.	Shutdown.	1 = Stop.

https://truckmanualshub.com/

FLASH CODE	SUB CODE	NAME	POSSIBLE CAUSE	SET CONDITION	CLEAR CONDITION	STEER FAULT ACTION	TRACTION FAULT ACTION
75	1	Parameter Conflict	1. Parameter settings are in conflict with each other. 2. Parameter setting out of range.	1. Command Input Device = 1 and Vehicle Configuration » Traction Speed Input » Input Type = 1. 2. Vehicle Configuration » Nominal Voltage is out of range (24–48 V). 3. Motor Control Tuning » Motor Type is out of range (0–22). 4. Motor » Temperature Control » Sensor Type is out of range (0–5). 5. Command Input Device » 0-Analog1 and 3 » Analog1 Left, Center, and Right must be in ascending or descending order. 6. Command Input Device » 0-Analog1 and 3 » Analog3 Left, Center, and Right must be in ascending or descending order. 7. Feedback Device » 0-Analog5 and 6 » Analog5 Left Stop, Center, and Right Stop must be in ascending or descending order. 8. Feedback Device » 0-Analog5 and 6 » Analog6 Left Stop, Center, and Right Stop must be in ascending or descending order. 9. Command Device » Command Map » Left Stop (deg) or Right Stop (deg) = 0.	Cycle KSI.	Shutdown.	1 = Stop.

https://truckmanualshub.com/

12. SPECIALIZED STIPULATION FOR THE US - AMERICAN MARKET

[GB] CE Declaration of Conformity

The signatory hereby declares that the specified machine conforms to the EU Directive 2006/42/EC (Machine Directive) and 2014/30/EU (Electro-Magnetic Compatibility, EMC) including their amendments as translated into national legislation of the member countries. The signatory is individually authorized to compile the technical documents.

[D] EG-KONFORMITÄTSERKLÄRUNG

Der Unterzeichner bescheinigt hiermit, dass die im Einzelnen bezeichnete Maschine den Europäischen Richtlinien 2006/42/EG (Maschinenrichtlinie) und 2014/30/EU (Elektromagnetische Verträglichkeit - EMV) einschließlich deren Änderungen sowie dem entsprechenden Rechtserlaß zur Umsetzung der Richtlinien in nationales Recht entspricht. Der Unterzeichner ist bevollmächtigt, die technischen Unterlagen zusammenzustellen.

[E] DECLARACIóN DE CONFORMIDAD CE

El signatario certifico por medio de la presente que la máquina especificada cumple con las Normas Europeas 2006/42/CE (Normativa para maquinarias) y 2014/30/EU (Compatibilidad electromagnética), incluyendo sus respectivas odificaciones, así como con el decreto-ley para la adaptación de las normas al derecho nacional. El signatario dispone de una autorización individual que le permite compilar la documentación técnica.

[F] DECLARATION DE CONFORMITE CE

Par la présente déclaration, les soussignés certifient que le machines spécifié ci-dessus est conforme à la loi et aux directives européennes 2006/42/CE (directive sur les machines) et 2014/30/EU (compatibilité électromagnétique - CEM), y compris aux modifications qui y sont apportées et à l'arrêté autorisant sa transposition en droit national. Chaque signataire est habilité à établir individuellement la documentation technique.

[NL] EG-CONFORMITEITSVERKLARING

Ondergetekenden verklaren hierbij dat - volgens de nationale wetgeving van de Lidstaten - de hierboven vermelde opgegeven machina beantwoordt aan de bepalingen qua veiligheid bij machines (EG richtlijn 2006/42/EC) en electro-magnetische compatibilteit (EG richtlijn 2014/30/EU). Ondergetekenden zijn ieder individueel gemachtigd het technisch dossier samen te stellen.

[P] DECLARAÇÃO DE CONFORMIDADE CE

Pela presente, os signatários certificam que o máquina especificado está conforme às Directivas Europeias 2006/42/CE („Máquinas") e 2014/30/EU („Inocuidade Electromagnética - IEM"), incluindo as alterações das mesmas e o respectivo decreto-lei para a transposição em lei nacional. Cada um dos signatários está autorizado a proceder à elaboração da documentação técnica.

[I] DICHIARAZIONE DI CONFORMITÀ CE

I sottoscritti dichiarano che il veicolo per trasporti interni a macchina specificato soddisfa le Direttive Europee 2006/42/EC (Direttiva Macchine) e 2014/30/EU (Compatibilità elettromagnetica - EMV) comprese le relative modifiche, come pure il rispettivo decreto legislativo per la conversione delle direttive in diritto nazionale. I sottoscritti sono singolarmente autorizzati alla creazione della documentazione tecnica.

[BG] ЕВРОПЕЙСКА ОБЩНОСТ - ДЕКЛАРАЦИЯ ЗА СЪОТВЕТСТВИЕ

Подписаните удостоверяват с настоящето, че подробно описаното машина средство отговаря на европейския норматив 2006/42/EG (норматив за машини) и на2014/30/EU (електро-магнетична съвместимост), включително с техните промени, както и на съответния указ за прилагане на нормативите в националното право. Подписаните при това са упълномощении поотделно да съставят техническата документация.

[CZ] EG - PROHLÁŠENÍ O SHODĚ

Níže podepsaný tímto potvrzuje, že podrobný popis uvedené stroje odpovídá Evropským směrnicím 2006/42/EC (směrnice pro stroje) a 2014/30/EU (elektromagnetická interference - EMV) včetně jejich pozdějších úprav, jakož i příslušným právním výnosům pro uplatnění příslušné směrnice v rámci národního práva. Každý z podepsaných jsou jednotlivě zplnomocněni k vytvoření technických podkladů.

[DK] EF-OVERENSSTEMMELSESERKLÆRING

Undertegnede attesterer hermed, at det specificerede maskine stemmer overens med de Europæiske Direktiver 2006/42/EU (maskindirektiv) og 2014/30/EU (elektromagnetisk kompatibilitet - EMC) samt med den modsvarende lovvedtagelse til implementering af direktiver i den nationale lovgivning. De undertegnede er hver for sig beføjet til at sammenstille de tekniske dokumenter.

[EST] EL vastavusavaldus

Allakirjutanud tõendavad käesolevaga, et üksikasjaliselt kirjeldatud täpsustatud masin vastab Euroopa direktiividele 2006/42/EÜ (Direktiiv masinate kohta) ja 2014/30/EU (Elektromagnetiline sobivus - EMS) kaasa arvatud nende muudatused ja nendele vastavatele õigusmäärustele direktiivide muutmiseks siseriiklikuks õiguseks. Iga allakirjutanu üksikult on volitatud koostama tehnilist dokumentatsiooni.

[FIN] EU-YHDENMUKAISUUSSELOSTUS

Allekirjoittaneet todistavat täten, että kukin erikseen mainittu omalla voimanlähteellä varustettu tehdaskone vastaa EU-direktiivien 2006/42/EC (koneenrakennusdirektiivi) ja 2014/30/EU (sähkömagneettinen yhteensopivuus – EMC) määräyksiä sekä niiden muutoksia ja niiden kansalliseen lainsäädäntöön soveltamista koskevaa oikeussääntöä. Jokaisella allekirjoittaneista on oikeus itsenäisesti laatia asiaankuuluvia teknisiä asiakirjoja.

[GR] ΔΗΛΩΣΗ ΣΥΜΜΟΡΦΩΣΗΣ ΕΟΚ

Οι υπογράφοντες βεβαιώνουν διά της παρούσης ότι το συγκεκριμένο μηχάνημα συμμορφώνεται προς την Κοινοτική Οδηγία 2006/42/ΕΚ («Μηχανήματα») και 2014/30/ΕU (Ηλεκτρομαγνητικής Συμβατότητας, ΗΜΣ), καθώς και οι τροποποιήσεις τους, όπως μεταφράστηκε στην εθνική νομοθεσία των χωρών μελών. Οι υπογράφοντες είναι σε κάθε περίπτωση εξουσιοδοτημένοι ατομικά να καταρτίσουν τα τεχνικά έγγραφα.

[H] EU KONFORMITÁSI NYILATKOZAT

Alulírottak ezennel igazolják, hogy a részletesen leírt a megadott gép megfelel a 2006/42/EC (Gép-Irányelv) és a 2014/30/EU (Elektromágneses összeférhetőség - EMV) Európai Irányelveknek, beleértve azok módosításait, valamint az irányelvek nemzeti jogba történő átültetésére irányuló megfelelő jogi rendelkezést. Továbbá az alulírottak mindegyike rendelkezik meghatalmazással arra nézve, hogy összeállíthatja a műszaki dokumentációt.

[LT] ES atitikimo deklaracija

Žemiau pasirašę asmenys patvirtina, kad atskirai aprašytas nurodyta mašina atitinka Europos Sąjungos direktyvas 2006/42/EB (Mašinų direktyva) ir 2014/30/EU (Elektromagnetinis suderinamumas – EMS) įskaitant jų pakeitimus, o taip pat ir atitinkamą teisės aktą dėl direktyvų įgyvendinimo nacionalinėje teisėje. Kiekvienas iš pasirašiusių asmenų turi teisę ruošti techninę dokumentaciją.

[LV] ES atbilstības deklarācija

Ar zemāk redzamajiem parakstiem tiek apliecināts, ka norādīts mašīna atbilst Eiropas Savienības normatīvām 2006/42/EG (Mašīnu normatīvas) un 2014/30/EU (Elektromagnētiskā atbilstība – EMV), ieskaitot to izmaiņas, kā arī atbilstošos tiesiskos rīkojumus normatīvu pielāgošanai nacionālajai likumdošanai. Parakstu īpašnieki ir atsevišķi pilnvaroti sastādīt tehniskās dokumentācijas.

https://truckmanualshub.com/

[N] EU-KONFORMITETSERKLÆRING

Undertegnede bekrefter hermed at de enkelte betegnede maskin med kraftdrift tilsvarer de europeiske retningslinjene 2006/42/EC (maskinretningslinje) og 2014/30/EU (elektromagnetisk fordraglighet - EMV) inklusiv disses endringer og den tilsvarende rettsforordning til omsetning av nasjonal rett. Hver undertegnede er fullmektig til å sette sammen de tekniske dokumentene.

[PL] DEKLARACJA ZGODNOŚCI WE

Niżej podpisani deklarują, że poniżej opisana maszyna spełnia wymagania określone w dyrektywach Europejskich 2006/42/EC (Dyrektywa Maszynowa) i 2014/30/EU (Kompatybilności elektromagnetycznej - EMC) wraz z ich późniejszymi zmianami oraz odpowiednimi rozporządzeniami mającymi na celu przeniesienie tych dyrektyw do prawa krajów członkowskich. Sygnatariusz jest indywidualnie upoważniony do zestawiania dokumentacji technicznej.

[RO] DECLARAŢIE DE CONFORMITATE CE

Subsemnaţii adeveresc prin prezenta că vehiculul de specificat maşină descris individual corespunde directivelor europene 2006/42/CE (Directiva privind maşinile) şi 2014/30/EU (Compatibilitatea electromagnetică - CEM) inclusiv modificărilor lor precum şi actului legislativ corespunzător prentru transpunerea directivelor în drept naţional. Subsemnaţii sunt fiecare în parte împuterniciţi să întocmească documentaţia tehnică.

[RUS] Декларация соответствия стандартам ЕС

Настоящим лица, подписавшие документ, удостоверяют, что машина с указанной спецификацией соответствует европейским стандартам 2006/42/EG (Транспортная директива) и 2014/30/EU (Электромагнитная совместимость - EMC), включая изменения в них, а также соответствующим национальным стандартам и нормам. Каждое по отдельности лицо, подписавшее документ, имеет полномочия для составления технической документации.

[S] EG-KONFORMITETSFÖRKLARING

Undertecknarna intygar härmed att det i detalj betecknade maskin uppfyller de Europeiska direktiven 2006/42/EG (Maskindirektiv) och 2014/30/EU (Elektromagnetisk tålighet - EMV), inklusive ändringarna i detta och den motsvarande rättsförordningen för att omsätta direktiven i nationell rätt. Undertecknarna har var för sig fullmakt att sammanställa den tekniska dokumentationen.

[SK] vyhlásenie o zhode

Dolu podpísaní týmto potvrdzujeme, že podrobný popis uvedené stroje Zodpovedá Európskym smerniciam 2006/42/EC (ernica pre stroje) a 2014/30/EU (elektromagnetická tolerancia – EMV) vrátane jeho neskorších úprav, rovnako zodpovedá aj príslušným právnym nariadeniam na uplatnenie smerníc v rámci národného práva. Každý z podpísaných je jednotlivo splnomocnený na vytvorenie technických podkladov.

[SLO] EU IZJAVA O SKLADNOSTI

Podpisani s tem potrjujemo, da posamično označeno določeno stroj vozilo odgovarja Evropski direktivi 2006/42/EC (Direktiva o strojih) in 2014/30/EU (Elektromagnetna skladnost - EMV) vključno z njihovimi spremembami ter ustrezno pravno uredbo o prevzemu smernic v nacionalno pravo. Podpisniki so vsakokrat posamezno pooblaščeni za izdajanje tehnične dokumentacije.

[TR] AB Uygunluk Açıklaması

İmza sahibi şahıslar, ayrıntıları belirtilen makine aracının, 2006/42/EC (Makine Yönergesi) ve 2014/30/EU (Elektromanyetik Uyumluluk – EMC) no'lu Avrupa Yönergelerine ve bunların değişiklik sonucu oluşan metinlerine ve yönergelerin milli hukuk hükümlerine dönüştürülmesine dair ilgili hukuk kararnamesine uygun olduğunu tasdik ederler. İmza sahibi şahıslar teknik dosyaları bir araya getirmek için münferiden vekil tayin edildi.

(1) Type/ Typ/ Tipo/ Modello/ Tyyppi/ Tipo / ΤΥΠΟΣ/ Típus/ Tip/ Тип/ Tips/ Tipas/ Tüüp:
(2) Serial No./ Serien-Nr./ N°. de série/ Serienummer/ Nº de serie/ Numero di serie/ Serienr./ Sarjanro/ αυξάνων αριθμός/ Seriové číslo/ Szériaszám/ Nr.Seryjny/ Serijska številka/ Výrobné číslo/ Серийный номер/ Seri No./ Seerianr./ Sērijas Nr./ Serijos numeris:
(3) Year of constr./ Baujahr/ Année de constr./ Bouwjaar/ Año de constr./ Anno di costruzione/ Produktionsår/ Byggeår/ Tillverkningsår/ Valmistusvuosi / Ano de fabrico / έτος κατασκευής/ Rok výroby/ Gyártási év/ Rokprodukcji / Letnik / Год изготовления / Üretim yılı / Väljalaskeaasta / Izgatavošanas gads / Gamybosmetai
(4) Manufacturer or his authorized representative in Community/ Hersteller oder in der Gemeinschaft ansässiger Vertreter/ Fabricant ou son mandataire établi dans la Communauté/ Fabrikant of zijn in de Gemeenschap gevestigde gemachtigde/ Fabricante o representante establecido en la Comunidad/ Construtor ou Representante estabelecido na Comunidade/ Costruttore oppure il suo rappresentante nella Comunità/ Fabrikant eller dennesi Fællesskabet etablerede befuldmægtigede/ Produsent eller agent innen felleskapet/ Tillverkare eller representant inom EU/ Valmistaja tai yhteisömaassa oleva edustaja / V˘robce nebo jeho zastoupení/ Gyártó / producent albo jego przedstawiciel w EG (Wspólnota Europejska)/ Καηαζθεπαζηήο ή όκηηνο ηνπηηθώλ αληηπξνζώπσλ/ Üretici ya da Bölgedeki Yetkili Temsilci/ Proizvajalec ali pooblaščeni zastopnik s sedežem v EU/ Výrobca alebo zástupca so stálym bydliskom v EÚ / Изготовитель или его представитель, зарегистрированный в стране Содружества/ Tootja või organisatsioonis paiknev esindaja/ Ražotājs vai vietējais uzņēmuma pārstāvis / Gamintojas arba šalyje reziduojantis atstovas:
(5) Date/ Datum/ Data/ Fecha/ datum/ Dato/ päiväys/ Kuupäev/ Datums/дата / Dátum/ dátum/ tarih/ ημερομηνία
(6) Authorised signatory/ Im Auftrag/ pour ordre/ Incaricato/ Por orden de/ por procuração/ op last van/ på vegne af/ på uppdrag/ Etter oppdrag/ psta./ Ülesandel / pavedus / v.i. / По поручению / megbízásából /длъжностно лице / z pověření / z poverenia / po nalogu / na polecenie / din sarcina / adına / θαη' ελληνή

(1) Type: **XX XX – Self-propelled industrial truck**
(2) Serial No: **XXXXXXXX**
(3) Year of constr.: **YYYY**
(4) Manufacturer or his authorized representative in Community:
Company name/ Street / Postal code Town/ Country
(5) Date: **YYYY.MM.DD**
(6) Authorized signatory: **Mr. Sample**

sample
If you can read this text,
your declaration is not complete.
In this case please ask for a copy