https://truckmanualshub.com/

SAMPO ROSENLEW

Verrato V4

Combine Harvester
Instruction Book

Sampo Rosenlew Ltd
P. O. Box 50
FIN-28101 PORI FINLAND

0815179 11/2017
Englanti

https://truckmanualshub.com/

https://truckmanualshub.com/

THIS BOOK

The purpose of this book is to enable the Operator to handle and maintain the combine efficiently. It is of utmost importance that the Operator becomes familiar with the structures, adjustments and maintenance of his machine. Compliance with the advice and instructions given in this manual guarantees the best results at the lowest costs.

Have this manual always in the cab, in the special pocket reserved for it, for convenient reference.

This manual provides descriptions of as well as operating and maintenance instructions for several models in the series. One combine does not have all the described features. The actual structure and number of accessories and optional equipment depend on what was agreed in the delivery contract. This is to be kept in mind when reading the manual.

Item "Technical Specifications" has a description of all the features of the combine.
It does, however, not include retro-fitted accessories.

The Manufacturer reserves the right to modify the structure, adjustments or accessories of the combine as well as the service and maintenance instructions without further notice.

SAMPO ROSENLEW LTD

https://truckmanualshub.com/

CONTENTS

This book	1
Safety Precautions	3
Marking the danger points	8
Type Marking	10
Technical Specifications	11
Conformity to EU Regulations	14
Acceptance Inspection and Getting Started	15
Opening the Guards	16
Structure and Functions of the Combine	20 and 22
Cut-away Picture of the Combine	21 and 23
Operator Controls and Instruments	24
Key to the Symbols	27
Operation and Adjustment	28
Threshing Equipment	47
CAPACITY MONITOR Sentry 6510	75
Driving and Threshing Instructions	79
Approximate Settings	85
Service and Maintenance	87
Gears	117
Hydraulics	120
Electrical System	123
Lubrication	131
Summary of Periodical Maintenance Procedures	134
Storage when Not in Use	135
Recommended Tools and Accessories	137
Screw Joints	137
Discarding of the Combine	138

https://truckmanualshub.com/

SAFETY PRECAUTIONS

Read carefully these instructions on safety and use before starting to operate the combine. Time spent in becoming familiar with the instructions now, will save you money or may even spare you from injury.
Before accepting the delivery of the combine, make sure it conforms to the delivery contract.
Do not fit the combine with any accessories not approved of by the Manufacturer. The Manufacturer of the Combine is not responsible for any damage or injury caused by such accessories either to people or property.

1. TRANSPORTATION ON A VEHICLE OR BY RAIL

Make sure you know the measurements and weights of the combine and the transporter. When driving the combine on the road, comply with the relevant statutory traffic regulations. Use increased tyre pressure (2-2.5 Bar) to improve stability.
Fix the combine securely in the transporter. For road transport, lower the cutting table fully or remove it.

2. DRIVING IN TRAFFIC

When driving on public roads, comply with the relevant statutory traffic regulations. Remember that the combine has rear-wheel steering.
Brake pedals must be latched together. Test brake functions before driving on the road. Brake smoothly as the rear wheels of the combine easily rise from the ground when applying the brakes violently. The threshing equipment must be disengaged, the straw dividers removed and the unloading pipe locked for road transport.
On combines with the De Luxe cab, the safety switch on the instrument panel shall be depressed. (The switch is released to its top-most position by turning the knob clockwise.)
The knife guard and the front warning signs shall be fitted onto the table. (Fitting of the front warning signs in accordance with the enclosed illustrations.)
The front and rear lights and the rear-view mirrors shall be correctly aligned.
Never drive downhill with the gear in neutral. Never carry passengers on the machine.
Never use the combine for transporting goods.
Always have the grain tank empty when driving on the road.

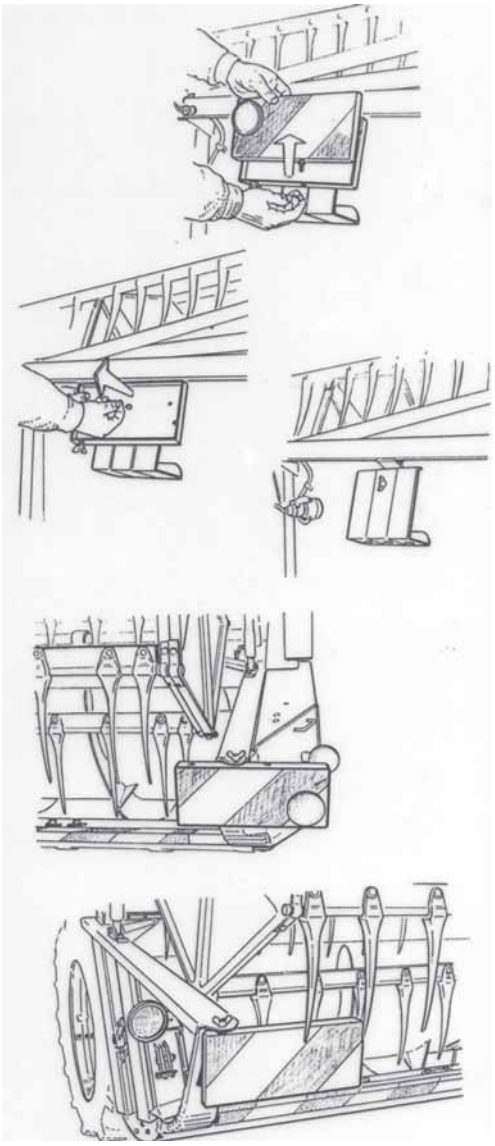

3. THRESHING

Get familiar with the structure of the combine by studying the manual before starting threshing.
Wear appropriate clothing. Avoid loose clothing that may get entangled in moving parts. Use of hearing protectors is recommended.
Make sure the protective guards are properly attached and in good condition.
Sound the signal to warn people around the combine before starting the engine.
Adjust the rear-view mirrors before starting to ensure good visibility of the road or the working area behind.

https://truckmanualshub.com/

Never use the combine for anything but threshing.
Manual feeding of crops onto the cutting table is prohibited.
Before starting, particularly reversing, make sure that everybody nearby is aware of your intentions.
Test the brakes as soon as you start, and stop immediately if the brakes or steering operate defectively.
Never adjust the seat or steering wheel while driving.
Never leave the cab while the combine is moving.
Never leave the engine running unattended.
Do not open any guards with the engine running.
Do not open the safety grate on the grain tank cover with the engine running.
Do not climb on top of the grain tank or the straw walkers with the engine running, and do not let anybody else do it either.
Beware of the cutting mechanism and the rotating chopper knife.
Keep in mind that with the chopper rotating, there is a 20 m no-access danger zone behind the chopper.
Drive carefully on hillsides; the combine may overturn, particularly with the grain tank full.
The combine cab is no safety cab.
THE RIGHT-HAND SIDE DOOR OR WINDOW MAY BE USED AS AN EMERGENCY EXIT. TO OPEN THE SIDE WINDOW FIRST REMOVE THE WINDOW GASKET BY PULLING FROM THE **LOOP MARKED WITH ”EXIT”.**
Note the recommended safety distances when threshing under power lines.
Stop the engine before cleaning or servicing the combine.
Stop the combine and the engine immediately if there is an alarm or any abnormal sounds or smells. Find out the reason for them, and solve the problem before carrying on with threshing.
Support or lock the cutting table and the reel before going beneath them.
Never clean the combine without proper equipment.
When leaving the combine, lower the cutting table, lock the parking brake, stop the engine and remove the ignition key.

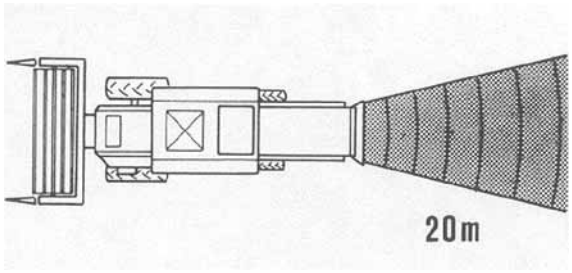

A2

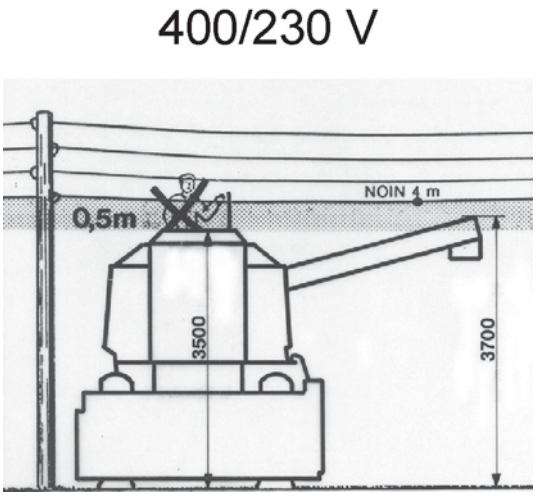

A3

SAFETY DISTANCES WHEN THRESHING UNDER OPEN-WIRE POWER LINES

The minimum clearance between the combine and power lines with voltage must be in accordance with the enclosed illustration, in which the danger zone is darkened.
Low-voltage power lines, fig. B3 (240/400V) can be distinguished from high-voltage line, fig. B4...B5 (over 1 kV) by the smaller insulators and the fact that there are usually 4 low-voltage lines.
In case the height or voltage of the power line is difficult to estimate, the Electric Company shall be consulted.

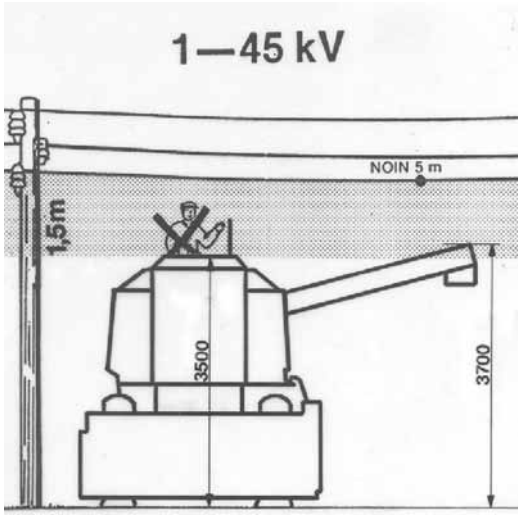

A4

https://truckmanualshub.com/

In Case of an Accident

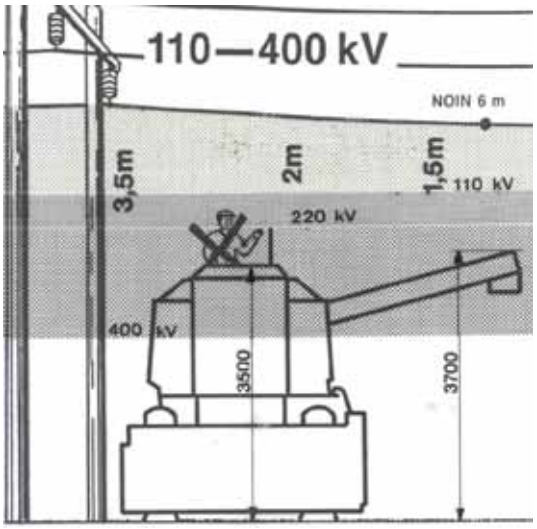

A5

If there is an accident despite all precautions, keep calm and consider carefully what to do. First try to reverse the combine away from the power line. If there are other people near, ask them to check that the combine is not stuck in the line.
If the combine is just leaning against the lines, try to drive it away from them. Follow the advice from the people nearby. Due to their own safety, they shall stay a minimum of 20 metres away from the combine touching the power line.
If the combine cannot be driven off, and you have to leave the combine, jump down with your feet together in order not to touch the combine and the ground simultaneously. Do not make yourself a conductor through which electricity can pass; the real danger lies in touching the combine and the ground simultaneously. Get away from the combine jumping either with your feet together, or with only one foot on the ground at a time.
Otherwise the electric field on the ground may create a fatal electric current between your legs. You will be safe at a distance of 20 metres from the combine.
Beware of broken power lines lying on the ground.
A combine touching a power line may catch fire. Leave the combine immediately if smoke starts coming from the tyres.
Make sure the combine will be guarded at a safe distance. Do not try to get on the combine even if the power in the power lines may seem to have gone off.
Remember that open-wire lines never have a ”blown fuse”, but they are always dangerous unless made dead by an electrician. Even if the power went off, it might come back on in a while due to technical reasons. This may be repeated several times.
Contact the Electric Company and inform them about the exact site of the accident. By doing this, any risk can be eliminated and the fault repaired.
Ask the Electric Company for advice and follow it. Inform them about any contact with power lines even if there was no actual damage.

Source: Koneviesti Magazine 15/87

4. REPAIR AND SERVICE

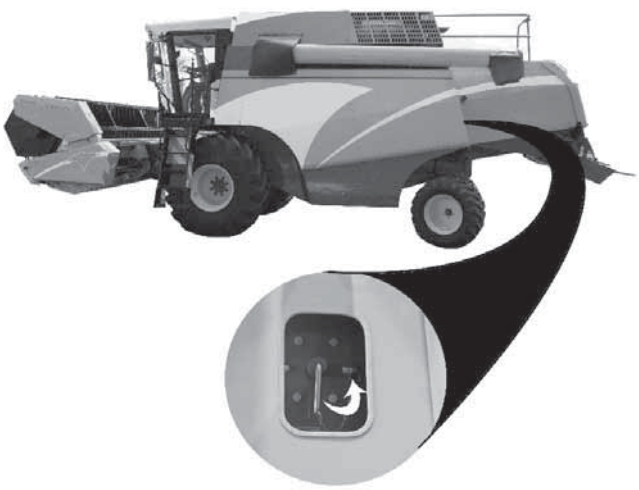
A6

Always keep the combine in good condition.
Check the condition of fast moving parts daily. Pay special attention to the transmission mechanism and the rotating chopper knives. Replace defective parts before they become dangerous.
Clean, repair and service the combine with the transmission and engine off, the ignition key off the ignition switch and the master switch in its on position.
Disconnect the negative battery cable before repairing the engine or any electrical instruments.
Do not use inappropriate tools to connect and disconnect the battery.
Do not make an open fire or smoke near the battery.
Handle the battery acids with care.
Do not add air in the tyres without a pressure gauge due to risk of explosion.
Do not add coolant with the engine running.
Do not remove the radiator cap from an overheated engine.
Do not refuel with the engine running.
Do not smoke while fuelling.
Do not adjust the hydraulic working pressure without a pressure gauge due to possible damage to the hoses.

https://truckmanualshub.com/

When servicing the hydraulics, be aware of the high pressure in the system. Make sure there is no pressure in the system or in the pressure accumulator before disconnecting the connectors.
Never use over-sized fuses; they involve risk of accident.
Never start the combine with anything but the ignition key.
When refitting a wheel, tighten the fixing screws to the correct torque.
Attach accessories such as the trailer using the appropriate equipment.
Tow the combine only from designated points.

5. THE LAWS AND REGULATIONS

Combine harvester is a complex device, and dangerous if misused. User manual must always be preserved with the machine at the place reserved for it and if needed, new drivers should be instructed to operate the machine Different countries have different safety at work and traffic regulations. Get to know the existing regulations of your area.

This symbol in the manual refers to a special risk involved in taking a certain measure, due to which extra caution shall be practised.

6. FIRE SAFETY

Two factors are needed to start a fire: flammable material and ignition; oxygen is always available.
Threshing generates a lot of light and highly flammable dust. Therefore it is important to clean the combine on a regular basis, and the engine compartment daily.
Oil and fuel leaks increase the risk of fire. Repair any defects immediately.
High temperature near the exhaust pipe makes the area fire-prone. A fire may also be caused by a short circuit in the electric system, slipping of an overloaded belt, a damaged bearing or overheating of the brakes.
Make sure there is at least one 6-kilo class AB fire extinguisher located in its marked place on the combine at all times.

In particularly dry and dusty circumstances another similar extinguisher is to be placed near the engine compartment.

https://truckmanualshub.com/

https://truckmanualshub.com/

MARKING THE DANGER POINTS

Although an effort has been made to build the combine as safe to use as possible, there are certain risks involved in its use. These are to be kept in mind when operating the combine.
The danger points have been marked on the combine using hazard pictorials. On the following page you will find the locations of and the key to these symbols. Ensure that undamaged danger markings are displayed on the combine. The hazard pictorials are based on the international ISO 11 684 standard.

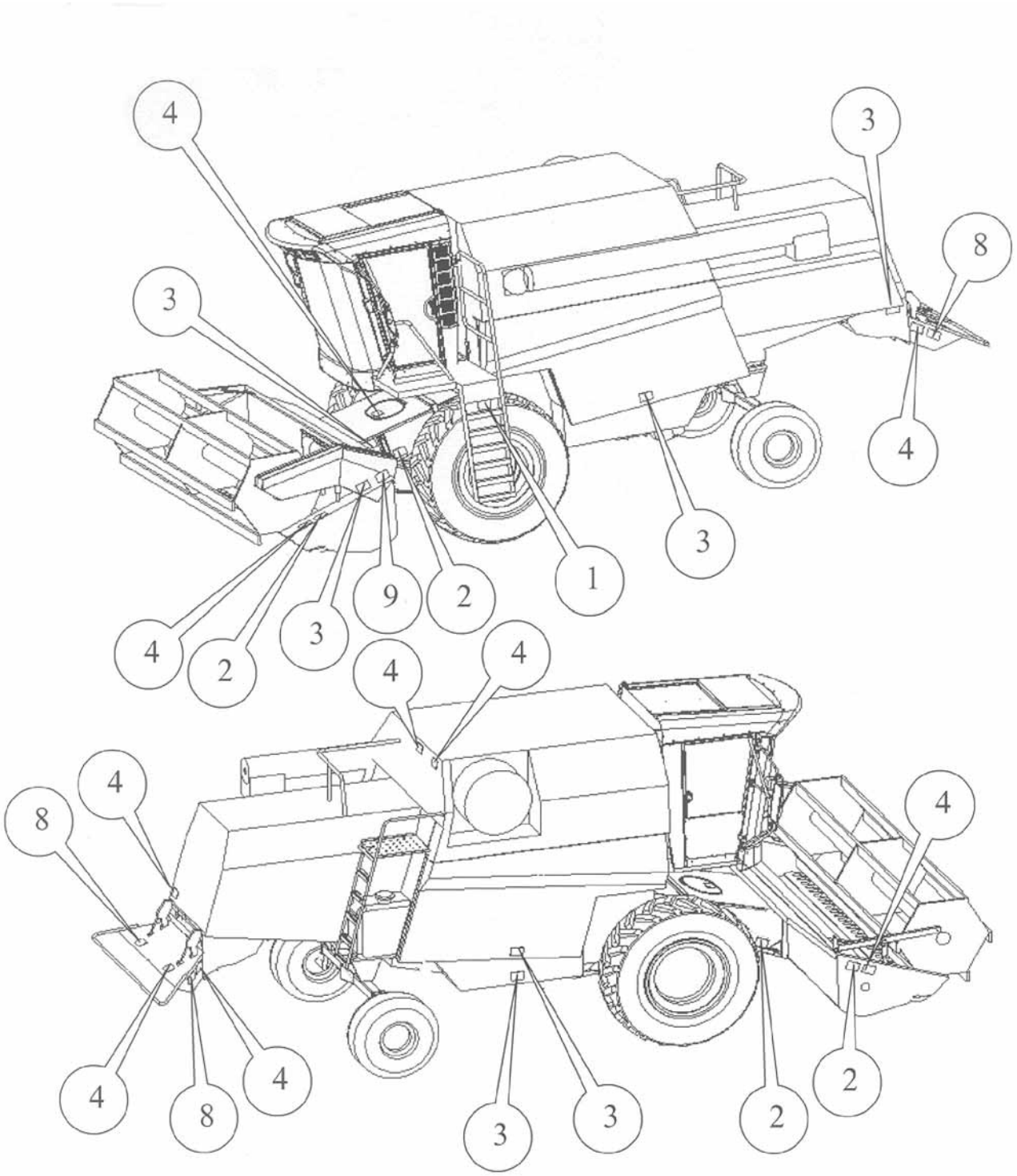

https://truckmanualshub.com/

HAZARD PICTORIALS

Danger	How to avoid it	Nr.	Symbol
Subject to danger due to insufficient information	Read the manual before starting the combine	1	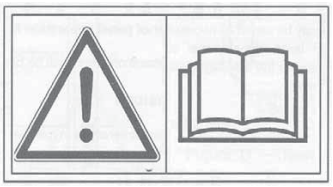
A raised part may fall down	Support raised parts before going under them	2	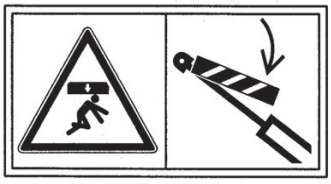
Gap in belt drive	Stop the engine and remove the ignition key before removing any guards	3	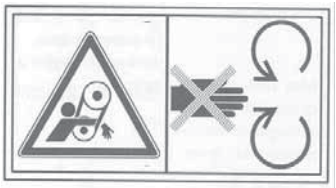
Getting entangled in moving parts	Stop the engine and remove the ignition key before removing any guards and/or reaching into a danger zone	4	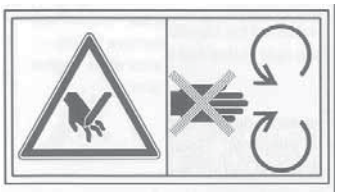
Getting entangled in rotating auge	Stop the engine and remove the ignition key before removing any guards	5	
Getting entangled in rotating auger	Do not reach into an opening with the engine running	6	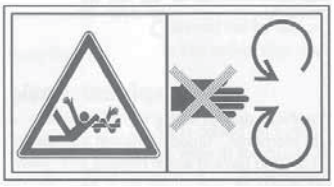
Falling into moving machinery	Stop the engine and remove the ignition key before removing any guards	7	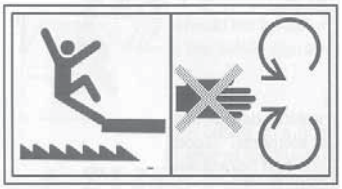
Danger caused by flying objects	Keep at a safe distance from the combine	8	
Kickback or upward motion of arm handle	Stop the engine and remove the ignition key before inserting the handle	9	

https://truckmanualshub.com/

TYPE MARKING

When ordering spare parts or service, always quote the type marking and number shown on he machine plate of the combine. When ordering parts for the cutting table, also quote the type marking and number shown on the cutting table.
When ordering engine parts, also quote the engine number.
Write down the numbers of the combine and engine on this page (and in the spare part list).

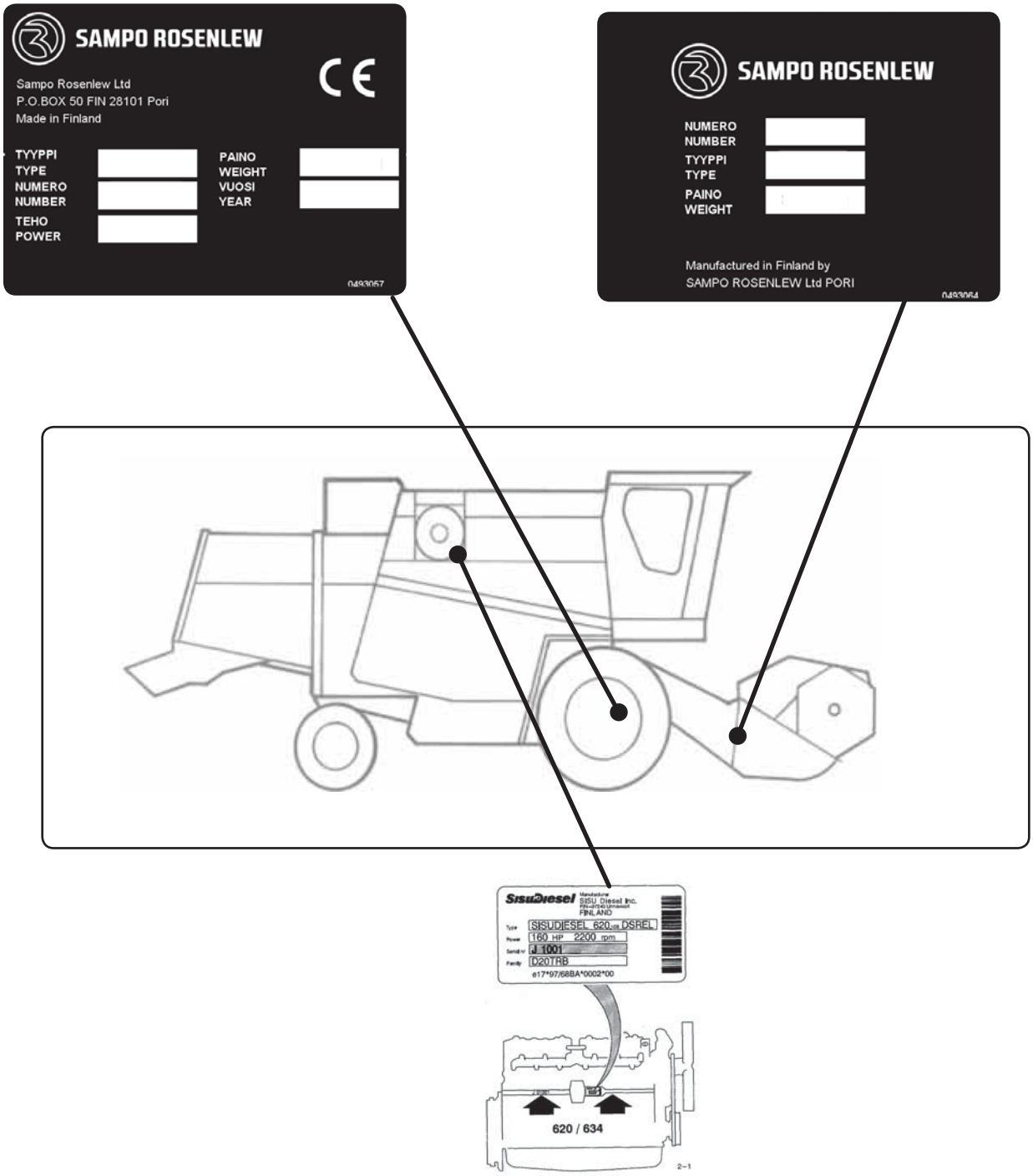

Engine Number

Note! Left side of the combine = The side of the cab with the stairs
Right side of the combine = The side with the fuel tank

TECHNICAL SPECIFICATION

(ISO 6689 standard has been used in measuring)

Cutting table

Cutting width (m)	3,45	3,9	4,2	4,5	4,8	5,1
Cutting height (m)	-0,20…+1,20					
Knife, Number of Strokes	1020 cycles/min					

Reel

Diameter (m)	1,05
Speed range (rpm)	16...51 WobbleBox (WB)
	15...49 Crank-driven knife (CK)

Threshing Cylinder

Width (m)	1,11	Prethreshing Cylinder	1,11
Diameter (m)	0,5		0,4
Number of rasp bars	7 or 8		
Speed range (rpm)	600...1300 MD		
	400...1150 HD (corn)		

Concave

Area (m²)	0,51	Pre Concave	0,34
Angle of wrap	105°		
Number of bars	12		
Clearance in front (mm)	6...42		

Straw Walkers

Number	4 or 5
Separating area (m²)	4,80

Shaker Shoe (m²)

Area 3.40 m²	Chaffer 1,74 + 0,33	Sieve 1,33

Grain Tank

Volume (m³)	3,70	4,20	5,20
Unloading height (m)	3,4		
	4,0 (heighten unloading)		

Engine Agco Power

Power kW / hp / num. of cyl.	110/150/4
RPM	2000

Traction Drive

Hydrostatic

Driving speed (km/h)*

Final drive	Hydrostatic Traction Drive			
DANA	I	0... 4,7	4WD	0... 4,1
	II	0... 7,0	4WD	0... 3,7
	III	0... 18,4		
CIT	I	0… 6,4	4WD	0... 5,6
	II	0… 9,5	4WD	0... 7,6
	III	0… 25		

* Speeds may vary depending on the size of the tyres

Turning radius (m) 5,9 (6,2 TS)

Tyres / Air pressure (bar)

Front

Tyres	Weight Limit kg										
	5700	6000	6200	6600	6800	7100	7500	7800	8500	8600	10500
18.4- 34 157A8	1,5	1,5	1,5	1,6	1,6	1,6	1,9	1,9			
18.4R34 144A8	1,5	1,5	1,5	1,6	1,6	1,6	1,9	1,9			
520/70R34 148A8	1,5	1,5	1,5	1,6	1,6	1,6	1,9	1,9			
600/65R34 158A8	1,2	1,2	1,2	1,3	1,3	1,4	1,5	1,8	1,9	1,9	2,0
750/65R26 166A8	1,0	1,0	1,0	1,0	1,0	1,0	1,0	1,1	1,2	1,2	1,3
800/55-30.5 172A8	0,8	0,8	0,8	0,8	0,8	0,8	1,0	1,2	1,4	1,4	1,6

Rear

Tyres	Weight Limit kg										
	3450	5700	6000	6200	6600	6800	7100	7500	7700	8600	10500
11.5-15.3 10 PLY	1,2	1,7	1,8	1,8	1,9	1,9	2,0	2,0	2,0		
360/70R20 120A8		1,6	1,7	1,7	1,8	1,8	1,8	1,9	1,9	2,0	2,0
420/65R20 125A8		1,6	1,7	1,7	1,7	1,8	1,8	1,8	1,9	1,9	1,9
550/45-22,5 153A8/149B	1,5	1,9	1,9	2,0	2,0	2,0	2,1	2,1	2,1	2,1	2,1

Wheel track (m)

Front

Final drive	Tyres			
	18.4R34	520/70R34	600/65R34	750/65R26
DANA	2,35 / 2,52	2,35 / 2,52	2,35 / 2,52	2,55
CIT	2,35 / 2,52	2,35 / 2,52	2,35 / 2,52	2,55

Rear

Rear axle	Tyres		
	11.5-15.3	360/70R20	420/65R20
Normal	2,2	2,42 (2,43 4WD)	2,42 (2,43 4WD)
Narrow	1,85	2,07 (2,08 4WD)	2,07 (2,08 4WD)

Volumes (See manual, LUBRICATION)

Fuel tank (litres)	200
Cooling system (litres)	(4 cyl.= 29)
Urea	30

Weight (kg)

Without cutting table and chopper	7700

Cutting table (m)	**3,45**	**3,9**	**4,2**	**4,5**	**4,8**	**5,1**
Weight (kg)	790 CK 890 WB	1005	1055	1110	1160	1200

Chopper weight (kg)	190
Corn table. 4 row. (kg)	1300

Length (m)		**TS**
On the road	8,7	9,1
Without cutting table	7,15	7,55
In the field	9,95	10,35

Width (m)

On the road w/o table

Final drive	Tyres 18.4R34	520/70R34	600/65R34	750/65R26
DANA	2,82 / 2,99	2,87 / 3,04	2,95 / 3,12	3,30
CIT	2,82 / 2,99	2,87 / 3,04	2,95 / 3,12	3,30

With table (m)	3,4	3,9	4,2	4,5	4,8	5,1
	3,75	4,25	4,55	4,85	5,25	5,45

Height with cabin (m)	3,7
Noise level in cabin dB(A)	78

The weighted acceleration subjected to operator's arms does not exceed 2,5 m/s² (ISO-5349)
The weighted acceleration subjected to operator's body does not exceed 0,5 m/s² (ISO-2361)

https://truckmanualshub.com/

CERTIFICATE ON CONFORMITY TO THE EU DIRECTIVES

Manufacturer
Sampo-Rosenlew Ltd
Konepajanranta 2A, P.O.Box 50
28101 Pori Finland

Collector of technical specification
Kalle Pärkö
Sampo-Rosenlew Ltd
Konepajanranta 2A, P.O.Box 50
28101 Pori Finland

Declares that the machinery placed on the market:

Combine Harvester

Type: _____

Serial Number: _____

complies with the technical requirements specified in the:

2006/42/EC machinery directive
97/68/EEC engine emission directive
89/336/EEC electromagnetic compatibility

The machinery has been designed in conformity with the following international standards:

EN-ISO 4254-7 Combine harvesters and forage harvesters, Safety
EN-ISO 14121-1 Safety of machinery. Risk assessment
EN-ISO 14982-1998 EMC acceptance criteria

16.12.2013 Pori

SAMPO-ROSENLEW OY
SAMPO ROSENLEW Ltd

Jali Prihti
Managing Director
Sampo Rosenlew Ltd

https://truckmanualshub.com/

ACCEPTANCE INSPECTION AND GETTING STARTED

The combine leaves the factory packaged in an appropriate way to ensure undamaged delivery.
Before start-up the following steps shall be taken:

- Read the Operating Manual carefully before start-up.
- Remove all loose parts stored in the grain tank during transportation.
- Make sure the combine was not damaged in transit and that no parts are missing. (When necessary, contact the dealer or the transport company.)
- Make sure the combine complies with the purchase agreement. (When necessary, contact the dealer.)
- Refit the parts removed before transportation, such as the rotating inlet screen in the engine, lights, mirrors, etc.
- Put the fire extinguisher in its place.
- Check the oil and coolant levels.
- In case the combine has been stored for a longer period of time, change all the oils before starting harvesting.
- Check and lower the tyre pressures in compliance with the recommendations given in the Operating Manual.
- Make sure the threshing mechanism can rotate freely and that there are no foreign objects inside the combine before starting the engine.
- Engage the cutting table.
- Assemble, fit and adjust the straw dividers as shown in the drawings in the Spare Parts Catalogue.
- Fit the crop lifters as instructed in the Operating Manual.
- Have a trial run as instructed in the item ”Storage when Not in Use”.

IMPORTANT NUMBERS

Check and write down the following numbers:

The combine serial number _____

The cutting table serial number _____

The engine serial number _____

The cab key number _____

The fuel tank key number _____

https://truckmanualshub.com/

OPENING THE GUARDS

To ensure safety, the movable guards in the combine have been equipped with a locking device. They cannot be opened without the appropriate tool supplied with every combine, hanging on a hook on the back wall of the cab. The guards are locked automatically when closed. Some guards also have additional clamps.

- Unlock the guard at the left end of the cutting table by turning the locking device counter-clockwise. To open the guard, pull the handle outwards and lift the guard slightly upwards at the same time. Fig. B1.

- Unlock the belt drive guard on the reel by turning the locking device counter-clockwise. The rubber clamps need to be opened first. The guard is kept open by means of a gas spring. Fig. B1.

- Open the side guards by placing the tool in the hole at the lower part of the guard and turning the lock open with the tool. The guard opens when the lower edge is pulled outwards. The guard gets locked in the upper position. It is released from the upper position by lifting the guard and turning the locking device open near the gas spring. Fig. B2.

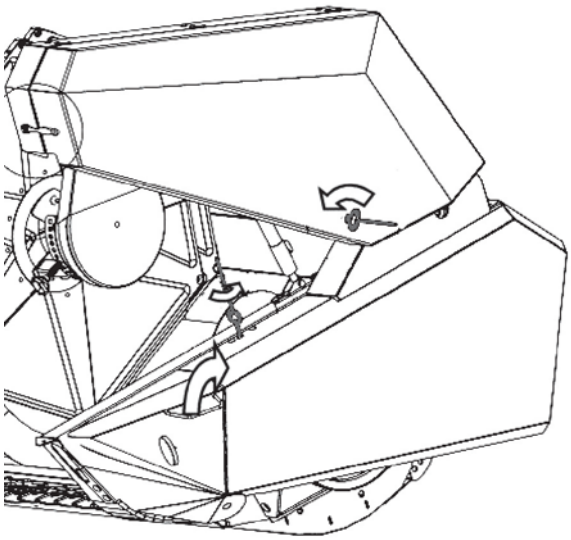

B1

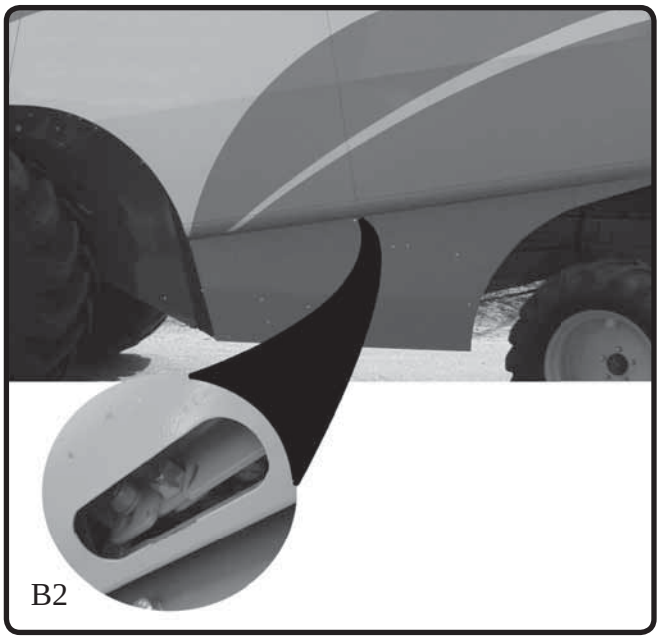

B2

https://truckmanualshub.com/

- The rear guard of the chopper (straw spreader) is released by levering the locking pivot to the right with the tool. The guard also gets locked in the upper position and is released correspondingly.

- Choppers belt guard is opened by loosening the bolt on the guard and turning the cover open. The guard is secured in the upper position with a rubber strip.

- Straw hoods cover is opened by loosing the bolts of the guard and removing guard.

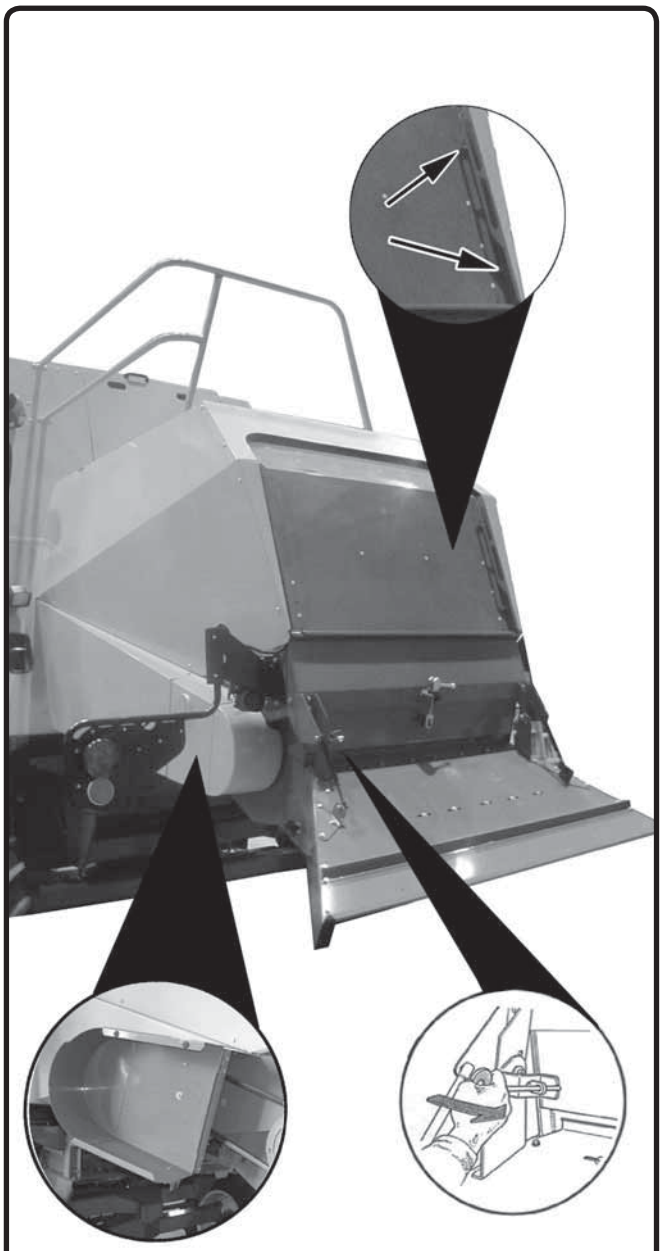

B3

https://truckmanualshub.com/

Engine Compartment

To open the cover on the engine compartment

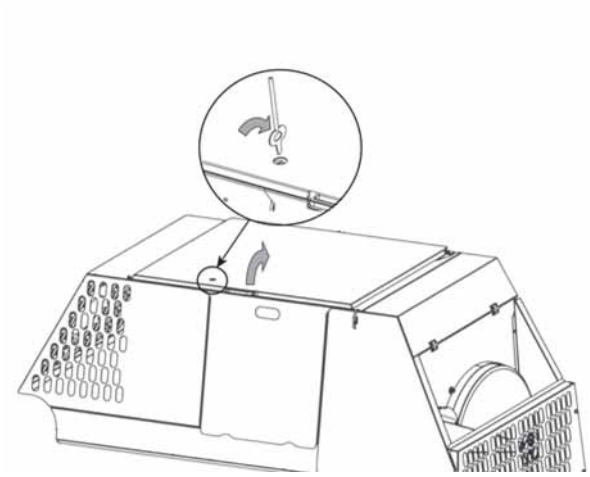

B6

To unlock the grain tank cover, turn the lock shaft with the key.
The cover can also be opened from the inside.

Clean, repair and service the combine with the transmission and engine off, the ignition key off the ignition switch and the master switch disconnected.

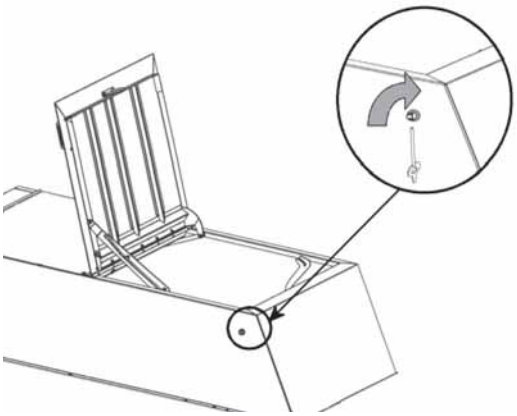

B7

To unlock the top door to the straw walker compartment remove the bolt with 13mm wrench and lift the cover.

B8

https://truckmanualshub.com/

https://truckmanualshub.com/

STRUCTURE AND FUNCTIONS OF THE COMBINE

Standard Threshing Mechanism

The cutting and feeding equipment takes the crops in for threshing.

The straw dividers limit the crop to be cut and bring it within reach of the reel.
The reel, together with the crop lifters, lift the laid-down crop up and take it from the cutting knife onto the table auger.
The table auger gathers the cut crop and feeds it onto the crop elevator, which takes the crop forward to be threshed. Stones and other heavy objects are pushed to the stone trap thus preventing damage to the threshing mechanism.

The threshing mechanism separates the grains from the straw.

The threshing cylinder beats the grain off on the concave. Most of the threshed grain and chaff go through the concave into the grain pan.
The rear beater and the concave extension take the threshed straw onto the straw walkers.

The separating and cleaning equipment sieves the grains.

The straw walkers separate the grains from the straw and eject the straw out to the field from the rear of the combine. The CSP ruffling drum placed above the straw walkers intensifies the separation of loose grains from the straw by opening a fluffier area into the straw flow (accessory). The grains run along the bottom grooves to the grain pan.
The grain pan takes the threshed material to the shaker shoe. The chaff and any light remains are sorted topmost in the grain pan with the grain at the bottom.
The air stream from the fan lifts the light chaff in the air and transports it over the shaker shoe and out of the machine. Heavier grains and any partly threshed material fall through the chaff sieve. Any larger remains move out along the sieve. Clean grain falls onto the grain auger through the grain sieve and is transported from there by the grain elevator and filling auger to the grain tank.
The grains and occasional straw bits, which lie on the shaker shoe extension, fall to the returns course to be re-threshed.

The chopper cuts and spreads the straw.

After the straw walkers, the straw is either discharged uncut onto the field or taken to the chopper, which cuts and spreads it out.

CUT - AWAY PICTURE OF THE COMBINE, Standard Threshing Mechanism

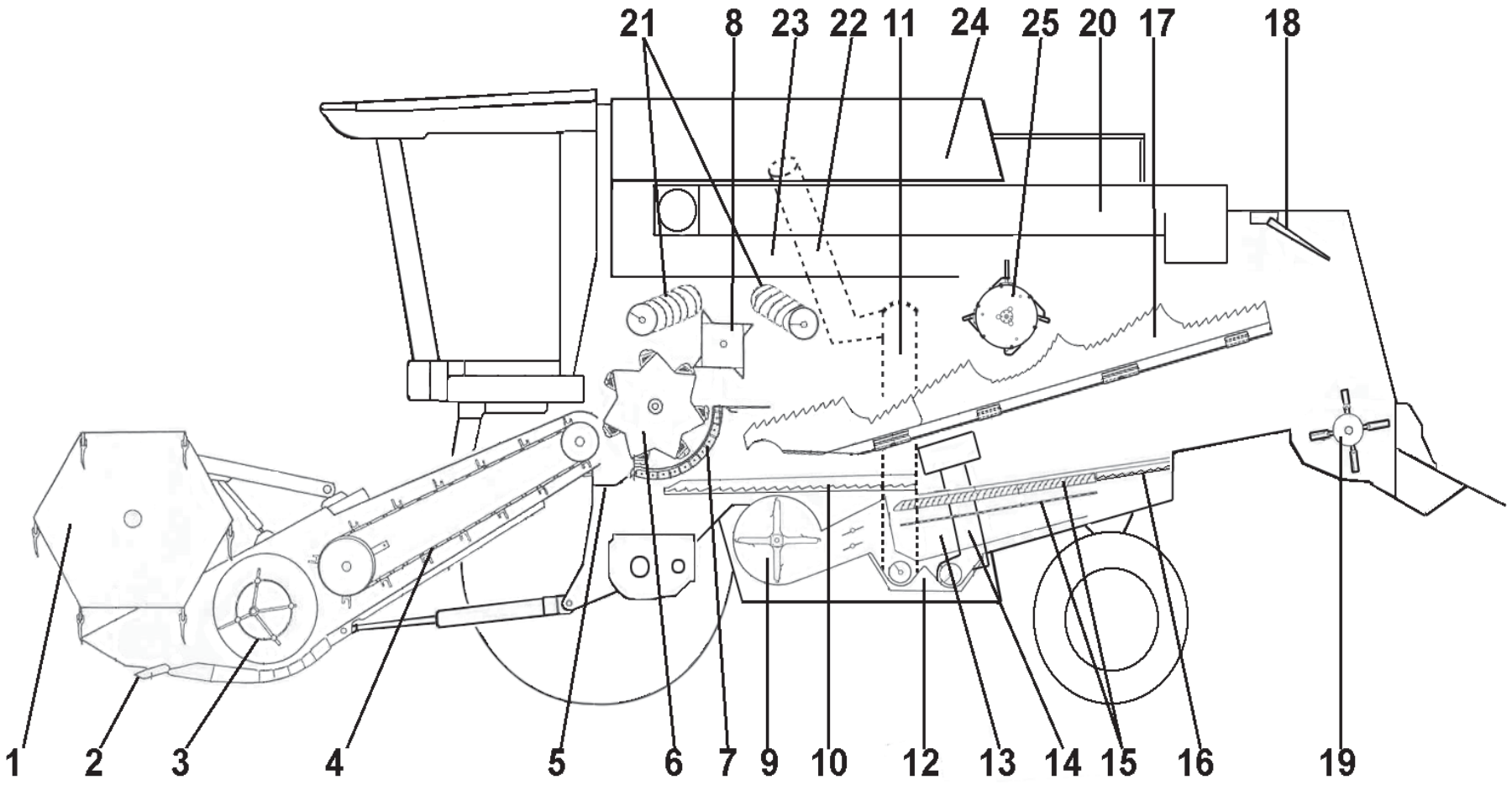

1. Pick-up reel
2. Cutter bar
3. Table auger
4. Crop elevator
5. Stone trap
6. Threshing cylinder
7. Concave
8. Rear beater
9. Fan
10. Grain pan
11. Grain elevator
12. Auger housing
13. Shaker shoe
14. Return auger
15. Sieves
16. Sieve extension
17. Straw walker
18. Straw alarm
19. Straw chopper
20. Unloading pipe
21. Bottom augers
22. Filling auger
23. Grain tank
24. Engine
25. CSP

https://truckmanualshub.com/

https://truckmanualshub.com/

STRUCTURE AND FUNCTIONS OF THE COMBINE

The TS Threshing Mechanism

The cutting and feeding equipment takes the crops in for threshing.

The straw dividers limit the crop to be cut and bring it within reach of the reel.
The reel, together with the crop lifters, lift the laid-down crop up and take it from the cutting knife onto the table auger.
The table auger gathers the cut crop and feeds it onto the crop elevator, which takes the crop forward to be threshed. Stones and other heavy objects are pushed to the stone trap thus preventing damage to the threshing mechanism.

The threshing mechanism separates the grains from the straw.

The cut crop first comes onto the pre-cylinder, which gently separates the most easily threshable grains and ejects them through the pre-concave to the front of the grain pan. The pre-cylinder also evens out the feed onto the main cylinder.
The rest of the grains are threshed off by the main cylinder and concave. Most of the threshed grain and chaff go through the concave into the grain pan.
The rear beater and the concave extension take the threshed straw onto the straw walkers.

The separating and cleaning equipment sieves the grains.

The straw walkers separate the grains from the straw and eject the straw out to the field from the rear of the combine. The CSP ruffling drum placed above the straw walkers intensifies the separation of loose grains from the straw by opening a fluffier area into the straw flow (accessory). The grains run along the bottom grooves to the grain pan.
The grain pan takes the threshed material to the shaker shoe. The chaff and any light remains are sorted topmost in the grain pan with the grain at the bottom.
The air stream from the fan lifts the light chaff in the air and transports it over the shaker shoe and out of the machine. Heavier grains and any partly threshed material fall through the chaff sieve. Any larger remains move out along the sieve. Clean grain falls onto the grain auger through the grain sieve and is transported from there by the grain elevator and filling auger to the grain tank.
The grains and occasional straw bits, which lie on the shaker shoe extension, fall to the returns course to be re-threshed.

The chopper cuts and spreads the straw.

After the straw walkers, the straw is either discharged uncut onto the field or taken to the chopper, which cuts and spreads it out.

CUT - AWAY PICTURE OF THE COMBINE; the TS Threshing Mechanism

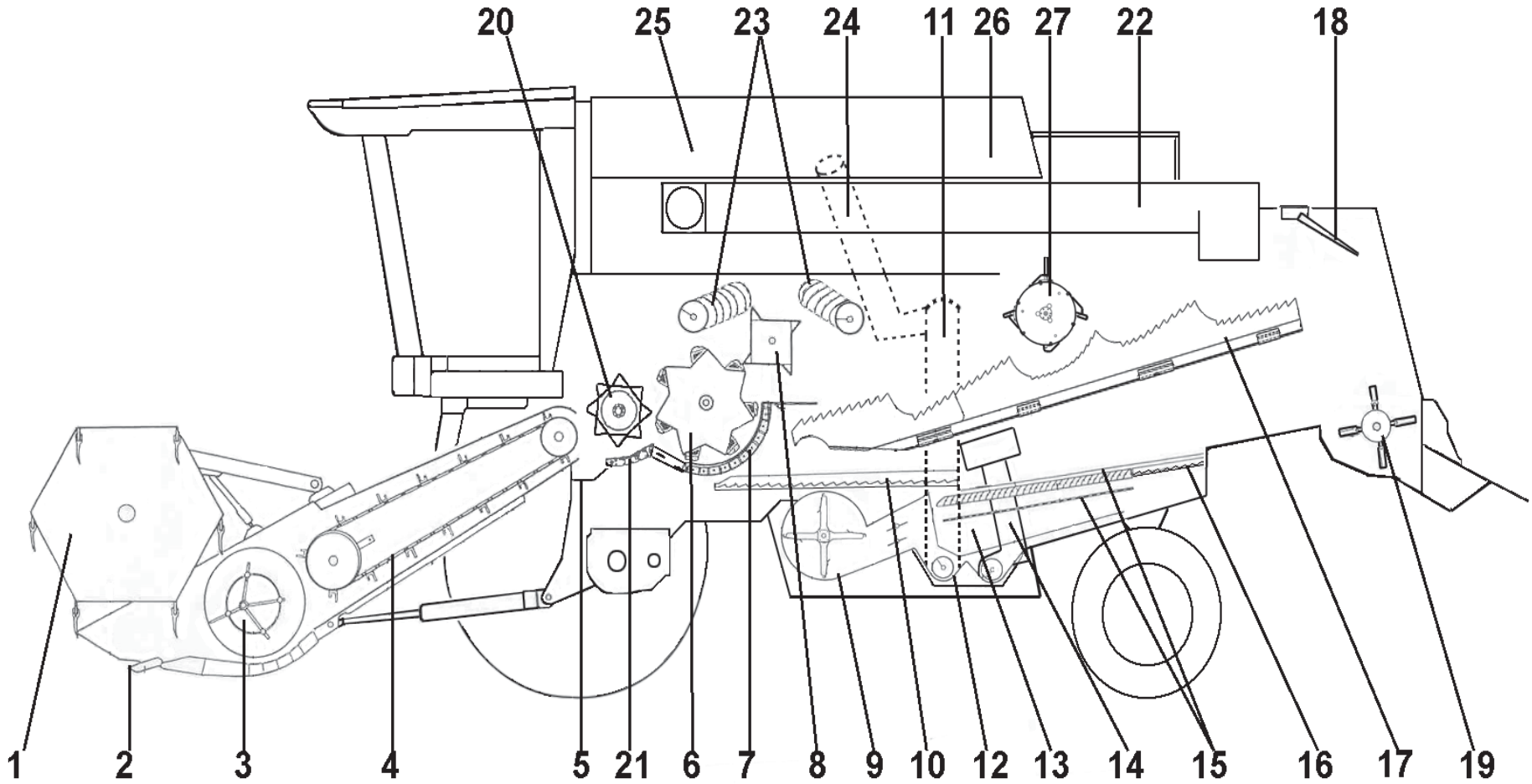

1. Pick-up reel
2. Cutter bar
3. Table auger
4. Crop elevator
5. Stone trap
6. Threshing cylinder
7. Concave
8. Rear beater
9. Fan
10. Grain pan
11. Grain elevator
12. Auger housing
13. Shaker shoe
14. Return auger
15. Sieves
16. Sieve extension
17. Straw walkers
18. Straw alarm
19. Straw chopper
20. Pre-cylinder
21. Pre-concave
22. Unloading auger
23. Bottom augers
24. Filling auger
25. Grain tank
26. Engine
27. CSP

https://truckmanualshub.com/

STANDARD CAB

MECHANICAL TRACTION TRANSMISSION

CAB (FIG. B1A)

A Table Height Indicator
B Hand Brake (models equipped with it)
C Flasher switch, lights and sound signal
D Steering Wheel
E Brake Pedals
F Table Throw-out Clutch
G Instrument Panel
H Gear Lever
J Fan Speed Adjustment Wheel
K Threshing Clutch Control
L Concave Adjustment Wheel
M Grain Tank Unloading
N Seat
O Clutch Pedal
P Parking Brake Lock Lever (if no hand brake)
R Cylinder Speed Adjustment Wheel
S Hydraulic Control Levers

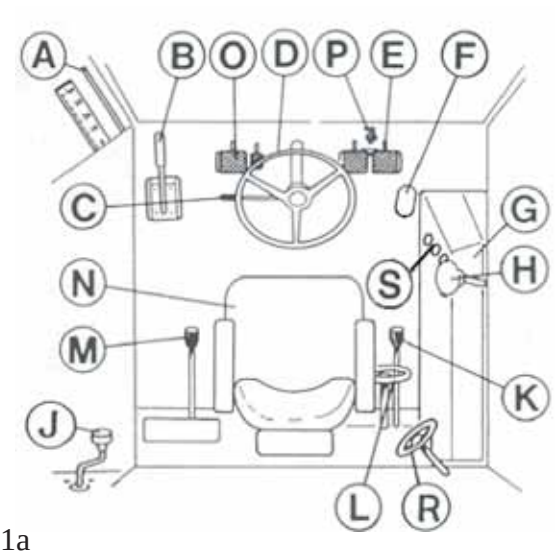

B1a

INSTRUMENT PANEL (FIG. B2A)

A Speedometer for Cylinder and Fan Rotation
B Control Lights
C Table Pressure Indicator
D Warning Lights
E Alarm Light (Red)
Ea Grain Tank Control Light (Orange)
F Air Filter Blockage Indicator
G Speedometer and Hour Meter
H Thermometer
K Throttle Lever
L Fuse Boxes
M Ignition Switch, Starter (and Electric Stop)
N Concave Clearance Indicator
O Ashtray
P Electric Outlet
R Ignition Signal and Engine Malfunction Light

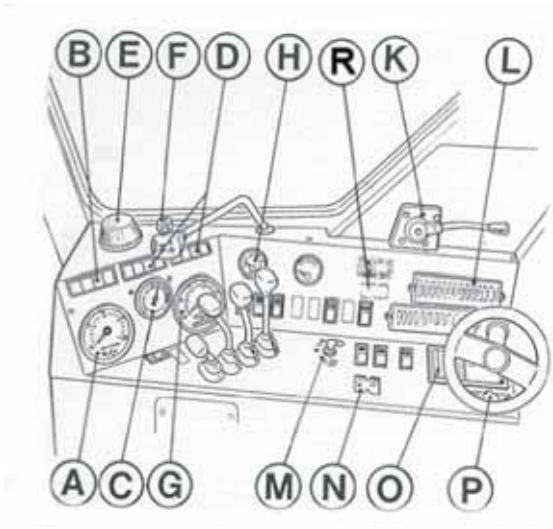

B2a

SWITCHES (FIG. B3A)

A Rotating Flasher (in countries where statutory)
B Emergency Flasher
C Differential Lock (optional)
D Vertical Knife (optional)
E Working Lights
G Head Lights
L Speedometer Display for Cylinder / Fan
M Reel Speed Adjustment
N Swinging of Unloading Pipe
O Cutting Table Height
P Reel Height
R Ground Speed Control
S Horn / Tank Full Alarm Reset
T Reel Fore and Aft Control (optional)
U Cutting Table Reverse (optional)
V Electric Accelerator (dep. on the engine type)

B3a

https://truckmanualshub.com/

OPERATOR CONTROLS AND INSTRUMENTS

STANDARD CAB

HYDROSTATIC TRANSMISSION

CAB (FIG. B1B)

A Table Height Indicator
B Hand Brake (models equipped with it)
C Flasher switch, lights and sound signal
D Steering Wheel
E Brake Pedals
F Table Throw-out Clutch
G Instrument Panel
H Gear Lever
J Traction Speed Control Lever
K Threshing Clutch Control
L Concave Adjustment Wheel
M Grain Tank Unloading
N Seat
O Clutch Pedal (models with mech. transmission)
P Parking Brake Lock Lever (if no hand brake)

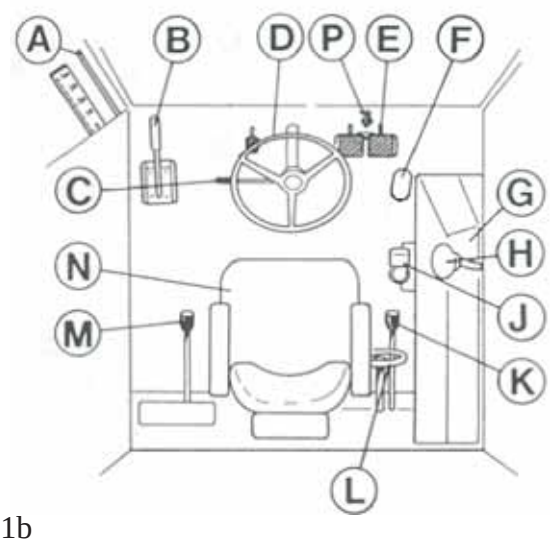

B1b

INSTRUMENT PANEL (FIG. B2B)

A Speedometer for Cylinder and Fan Rotation
B Control Lights
C Table Pressure Indicator
D Warning Lights
E Alarm Light (Red)
Ea Grain Tank Control Light (Orange)
F Air Filter Blockage Indicator
G Speedometer and Hour Meter
H Thermometer
I Fuel Gauge
J Stop Lever (if no Electric Stop)
K Throttle Lever (depending on the engine type)
L Fuse Boxes
M Ignition Switch, Starter/Stopper (dep. on eng.)
N Concave Clearance Indicator
O Ashtray
P Electric Outlet
R Ignition Signal and Engine Malfunction Light

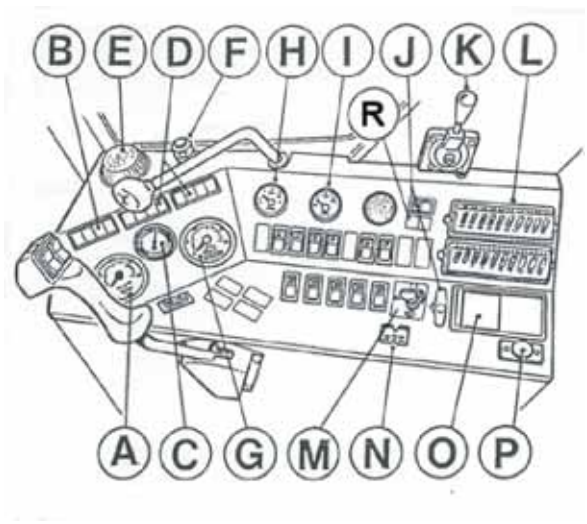

B2b

SWITCHES (FIG. B3B)

A Rotating Flasher (optional)
B Emergency Flasher
C 4WD Switch (optional)
D Cylinder Speed
E Fan Speed
F Front Working Lights
G Rear Working Lights
I Head Lights
J Cutting Table Height
K Reel Height
L Speedometer Display for Cylinder / Fan
M Reel Speed
N Reel Fore and Aft Control
P Swinging of Unloading Pipe
R Horn / Tank Full Reset
S Vertical Knife left (optional)
T Vertical Knife right (optional)
U Reverse of Table and Feed Mechanism
V Electric Accelerator (dep. on the engine)

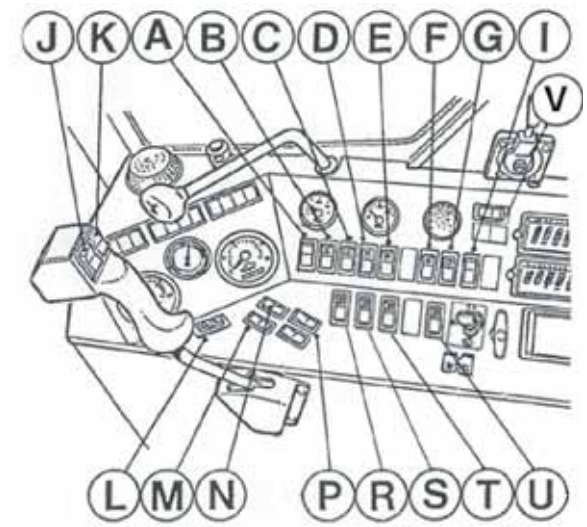

B3b

https://truckmanualshub.com/

DE LUXE CAB

CAB (FIG. B1C)

A Table Height Indicator
B Hand Brake (models equipped with it)
C Flasher Switch, Lights and Horn
D Steering Wheel
E Brake Pedals
F Table Throw-out Clutch
G Instrument Panel
H Gear Lever
J Traction Speed Control Lever
K Threshing Clutch Control
L Concave Adjustment Wheel
M Grain Tank Unloading
N Seat
P Parking Brake Lock Lever (if no hand brake)

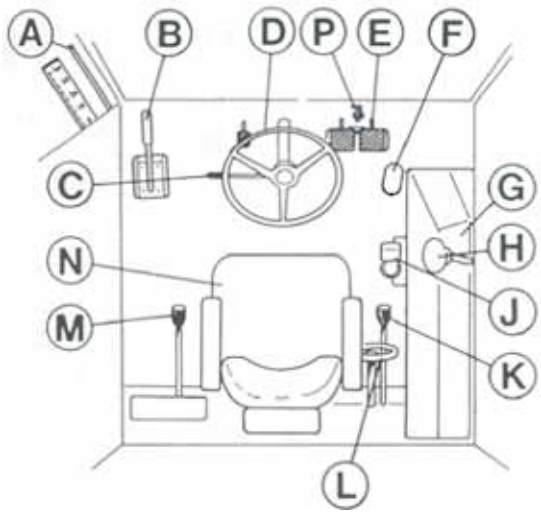

B1c

INSTRUMENT PANEL (FIG. B2C)

A Control Lights
B Air Filter Blockage Indicator
C Alarm Light (Red)
Ca Grain Tank Control Light (Orange)
D Warning Lights
E Thermometer
F Fuel Gauge
G Throttle Lever / Switch (dep. on the engine)
H Fuse Boxes
J Speedometer for Cylinder and Fan Rotation
K Table Pressure Indicator
L Speedometer and Hour Meter
M Concave Clearance Indicator
N Ignition Switch, Starter (and Electric Stop)
O Stop Lever (if no Electric Stop)
P Electric Outlet
R Ashtray
S Ignition Signal / Engine Malfunction Light

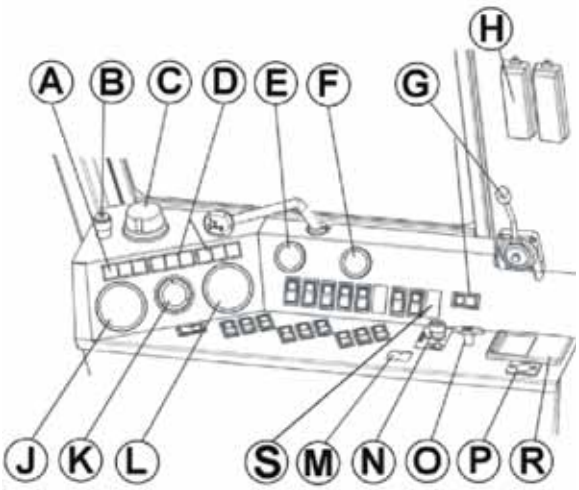

B2c

SWITCHES (FIG. B3C)

A Flasher, Head Lights, Parking Lights Dip Switch, Full Beam Flasher and Horn
C Swinging of Unloading Pipe
D Reel Fore and Aft Control
E Rotating Flasher (optional)
F Emergency Flasher
G 4WD Switch (optional)
H Cylinder Speed
I Fan Speed
J Front Working Lights
K Rear Working Lights
L Electric Accelerator (E engines)
M Engine Fault Code Inquiry (E engines)
N Reel Speed
O Cutting Table Height
P Reel Height
R Speedometer Display for Cylinder / Fan
S Differential Lock (optional)
T Spare
V Spare
W Spare
X Spare
Z Vertical Knife right (optional)
Y Vertical Knife left (optional)
Q U Reverse of Table and Feed Mechanism
Ä Safety Switch (Prevents working hydraulics functions in traffic)

B3c

https://truckmanualshub.com/

SIGNALS AND SYMBOLS

Ignition Switch

Master Switch (electric)

Ignition Signal

Stop Control Lever

STOP

Oil Warning Light

Alternator Warning Light

Engine Revolutions, lever control

Engine Revolutions, electric control

Gear Change Decal

Horn

Flasher

Dip Switch

Headlights

Working Light

Windscreen Wiper

Temperature Control

Air Conditioning

Hand Brake

Table Height Control

Reel Height Control

Threshing Mechanism Lever

Speed Control Lever

Cutting Table Clutch

Grain Tank Unloading Lever

Cylinder Speed

Concave Clearance

Reel Fore & Aft Control

Reel Speed Control

Air Volume Control

Air Direction Control Lever

UmkehReversing Switch of Cutting Table

Four-wheel Drive

Rotating Flasher

Emergency Flasher

Swinging of Unloading Pipe

Grain Tank Full

Grain Elevator Alarm

Bottom Auger Alarm

Return Auger Alarm

Straw Alarm

Coolant Temperature Alarm

Differential Lock

Emergency Exit

EXIT

Engine Malfunction Light

Safety Switch, driving in traffic

https://truckmanualshub.com/

OPERATION AND ADJUSTMENT

STEERING WHEEL (Fig. K1a)

Position Can Be Adjusted

Single Adjustment Steering Column (K1a)

To release the steering column locking, depress pedal A and move the steering wheel to the required position.

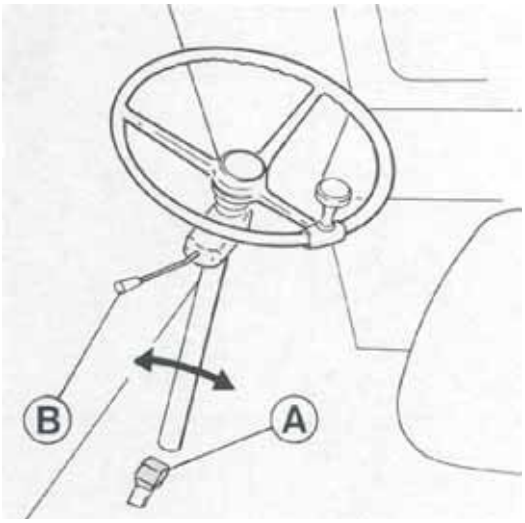

K1a

Double Adjustment Steering Column (K1b)

To adjust the steering column angle, depress pedal A and tilt the whole column forward or backward.
To adjust the height of the steering wheel, loosen locking B. After the adjustment tighten locking screw B.
To change the lever position, pull the whole lever outwards and turn to the right position.

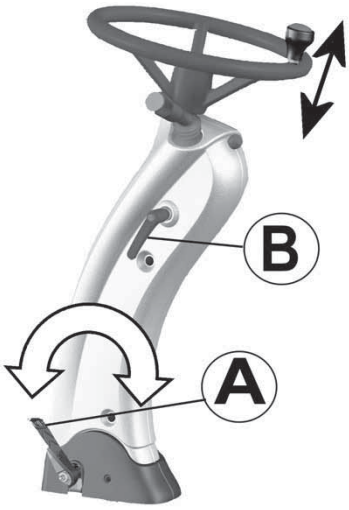

K1b

Drive Lever (K1c)

On combines with hydrostatic transmission traction speed and direction is controlled with a drive lever. Lever handle height and position can be adjusted to suit the driver.
To adjust the height, loosen screws A and move the lever up or down. When adjusting the height, ensure that the electric cables slide inside the pipe and through the bottom joint. If necessary, open the protective case at the bottom end of the lever.
To adjust the lever position, slacken nut B and turn the lever in the ball-and-socket joint.
Tighten the screws and the nut after adjustment to ensure the lever will not move while driving.

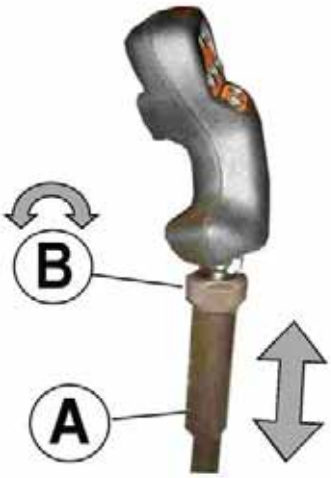

K1c

The SEAT Seat STD (K2e)

To adjust the fore and aft position, release lever A and move the seat along the guide rails.
To adjust seat suspension, turn lever B in the required direction.
Hand wheel C adjusts seat height.

K2e

The Mechanical SEAT De Luxe Seat (K2f)

To adjust the fore and aft position, release lever A and move the seat along the guide rails.
To adjust seat suspension, turn lever B in the required direction.
To adjust the backrest tilt, release the locking with lever C.
To adjust the armrest angle, turn roller D under the armrest.
Hand wheel E adjusts seat height.

K2f

The De Luxe seat is air suspended (K2g)

To adjust the fore and aft position of the seat, release lever A and move the seat along the rail bars.
Adjust seat suspension in the required direction on switch B.
To adjust the backrest tilt, release lever C.
To adjust the armrest angle, turn roller D beneath the armrest.
Hand wheel E adjusts seat height.
The seat has horizontal suspension. It can be locked with lever F.

K2g

https://truckmanualshub.com/

BRAKES (Fig. K3a) While Driving and Turning

The mechanical outer shoe brakes operate on the front wheels through the drive shafts. They may be used separately as steering brakes by releasing locking pin A. When driving on the road, the brake pedals must be latched together.

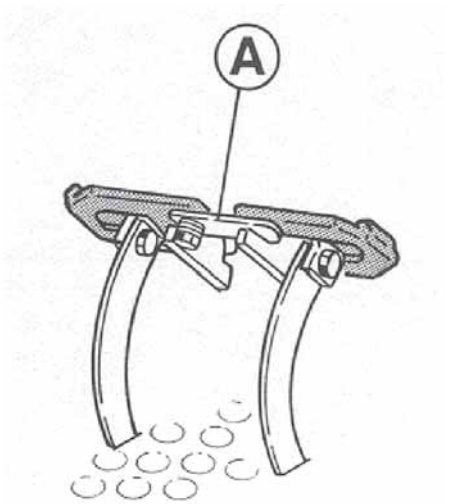

K3a

PARKING BRAKE (Fig. K3b) (models with no hand brake)

The parking brake is on when the brake pedals are latched together and locked with lever B in their bottom position. The parking brake is used only when parking the combine and it must be released before driving on.

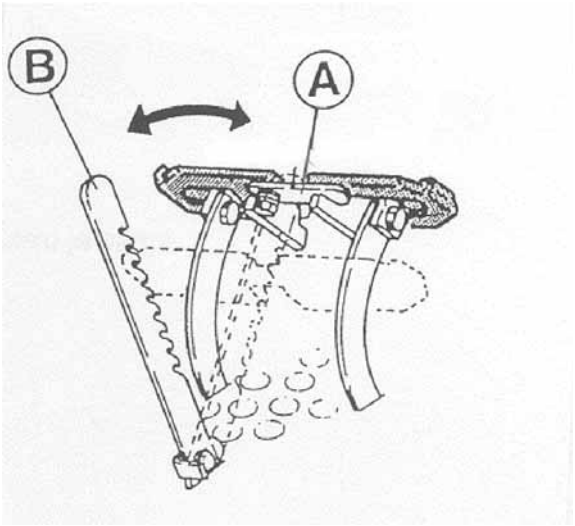

K3b

HAND BRAKE (Fig. K4) (models equipped with it)

The hand brake affects the intermediate shaft in the gearbox. Use the brake only when parking, and fully release it before starting. A flashing light on the instrument panel and a steady symbol light warn of an unreleased parking brake. Those lights are on only when ignition is switched on.

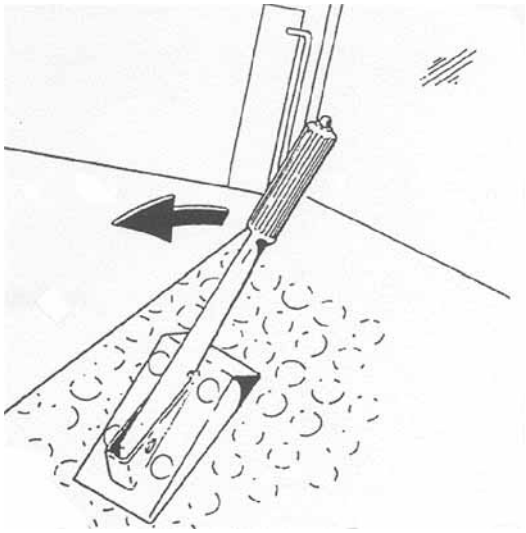

K4

https://truckmanualshub.com/

Starting the ENGINE (Fig. K5) with Ignition Key

The combine has a safety starting system, which prevents the combine from moving when the engine is starting up. It allows starting on the following conditions only depending on the type of traction transmission:
Mechanical:
With the clutch depressed
Hydrostatic:
With the drive lever in its mid position depressed to the slot on the right
It is advisable to start the engine only with the gear lever in its neutral position.

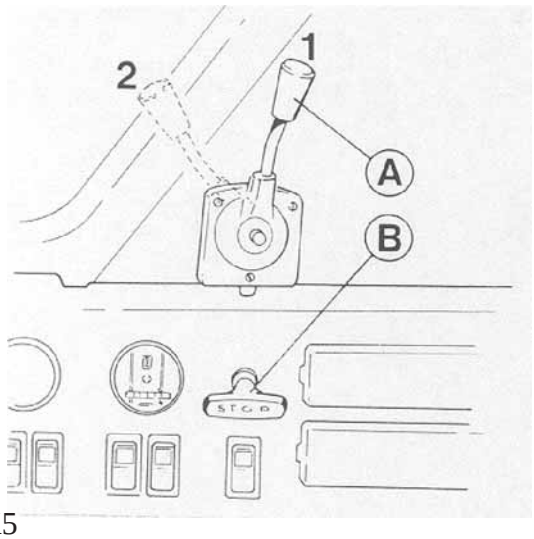

K5

Engines equipped with mechanical regulators, Fig. K5
Have throttle lever A on idle 1, fig. K5; and stopper B fully depressed (models equipped with it).
The power is switched on by turning the ignition key to the right. The alternator and oil pressure warning lights will come on, and when turning the key farther to the right to position HS, the engine will start.

Cold weather starting at below +5°C
Turn the ignition key to ignition position H for some 20 seconds. (Ignition signal C, fig. K6, is on when the device is working.) Then start in position HS. If the engine has not started within 10 seconds, ignite again for some 15 seconds.

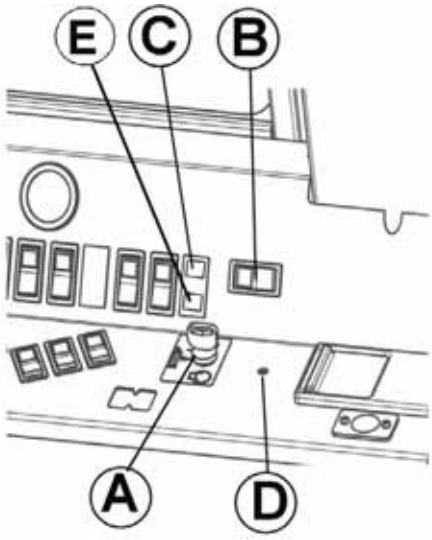

K6

Electrically controlled engines, Fig. K6
Electrically controlled engines have no throttle lever but a throttle control switch with three positions. On idle the switch rear is depressed. Fig. K6.
The power is switched on by turning the ignition key to the right. The alternator and oil pressure warning lights will come on.
To start turn the key to position HS. Do not start until the lights have come on. It takes some time to activate the control unit.

Cold weather starting in freezing temperatures is done in the following manner depending on the type of engine. Four-cylinder engines with a distributor pump are equipped with a Thermostart device. Turn the ignition key to ignition position H for some 20 seconds and then immediately start the engine. If the engine has not started within 10 seconds, ignite again for some 15 seconds. Control light C, fig. K6, indicates ignition.
Six-cylinder engines and all Common Rail engines are equipped with a pre-heating resistance controlled by the engine control unit. In cold weather it functions automatically. When pre-heating switches itself on, control light C, fig. K6, comes on. Start the engine as soon as the control light goes off. After the engine has started, the heater switches itself on again for some time.

The 44DT engines
Engine alert light E, fig. K6, warns of too low fuel transfer pressure. The most likely reason is a blocked pre-filter.

https://truckmanualshub.com/

Fault codes on electrically controlled engines
Engine malfunction light E, fig. K6, functions as a fault code indicator for the engine control unit. For more information, see the engine manual. To activate code inquiry, press button D with a pin as soon as the power has been switched on, fig. K6.
The ignition lock allows only one start-up function. Turn the key to the “STOP” position before restarting. Combines with hydrostatic transmission must not be started in temperatures below –30o as the oil is too stiff and the machinery may get damaged. (If there is stiffer, VG46 type of oil in traction hydraulics, the lowest starting temperature is –15o.)

Turning the ENGINE (Figs. K5 and K6) off / Listening to the Radio

Before turning the engine off, move the throttle to the idling position and disengage the threshing mechanism. To stop electrically controlled engines, turn the ignition key to the STOP position.

Engines equipped with mechanical regulators are turned off by pulling STOP B up.
The engine must not be turned off immediately after threshing, but let it cool down on idle for some minutes to equalize the temperatures.

The ignition key can only be turned left from the STOP position while pressing the key down. This will turn on the current to the radio only.

https://truckmanualshub.com/

TRANSMISSION, mechanical

1. Mechanical Transmission has Four Speed Ranges

Lever Adjustments (Fig. K10a)

Engine power is transmitted to the gearbox by means of two belts through the drive variator and clutch.
There are three gear speed ranges forward and a reverse. Speed ranges 1 and 2 are for threshing and speed range 3 for driving on the road. Never use speed range 3 on the field.
In each range speed can be changed steplessly by means of the hydraulically operated drive variator.
For higher speed, push lever B forward and for lower speed, pull it backward.

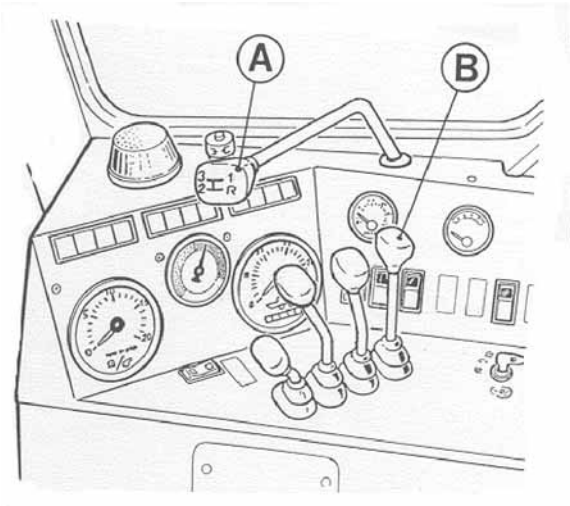

K10a

https://truckmanualshub.com/

TRANSMISSION, hydrostatic

Hydrostatic Transmission has Three Speed Ranges (Fig. K10b)

Engine power is transmitted to the hydraulic pump by means of a multi-groove belt. Transmission from the pump to the hydraulic motor of the gearbox takes place by means of liquid. Pump output is adjusted steplessly moving the drive lever between position 0 and the +/- maximum.
There are three gear speed ranges, which are selected using lever A, fig. K10b. Ranges 1 and 2 are for threshing and range 3 for driving on the road. Never use range 3 on the field. Gears should be changed on level ground with drive lever B, fig. K10b, in its mid position.
The speed and direction of the combine are controlled using drive lever B, fig. K10b. With the lever in its mid position, the combine is stationary if the gear is on and the engine running.
The combine will move forward when the drive lever is pushed forward from its mid position. The further the lever is pushed, the higher the speed.
To reverse the combine, pull the lever backward from the mid position.

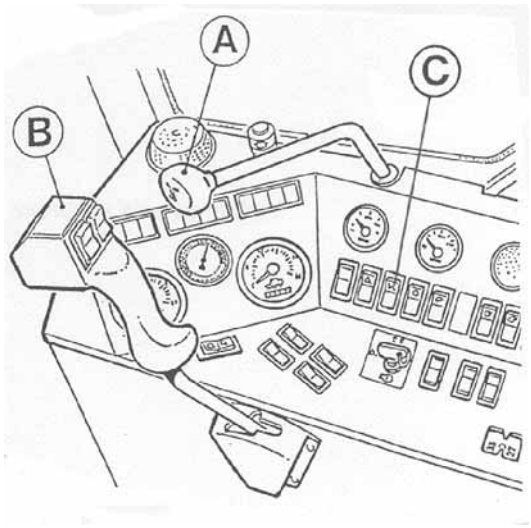

K10b

A combine equipped with hydrostatic transmission must never be parked using only the gear, but the parking brake must always be engaged. A hydraulic engine cannot keep the combine stationary for a long period.

3. Optional FOUR-WHEEL DRIVE

Combines with hydrostatic transmission can be equipped with four-wheel drive. Back-wheel drive is switched on electrically using switch C on the instrument panel, fig. K10b. The coupling can be done with the combine moving.
Four-wheel drive may be used in speed ranges 1 and 2 only.

When towing the combine, the four-wheel drive switch must be off and the engine running to allow the wheel motors to be disengaged. Short-distance towing at a low speed is permitted if the engine and the driving pump cannot be kept running.

Switch four-wheel drive off when driving down a steep hill. The combine may rush forward unless the rear wheels grip the ground.

4. Optional DIFFERENTIAL LOCK, (Fig. K11)

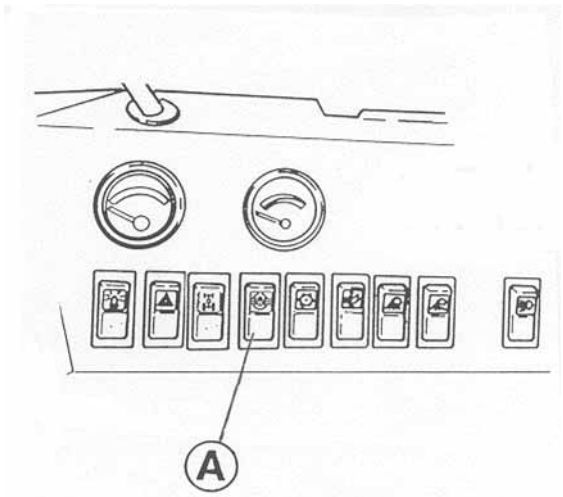

K11

The differential lock may be installed on the left-hand side of the gearbox. The lock is engaged electro-hydraulically using a switch on the instrument panel.
The differential lock is engaged and disengaged using switch A on the instrument panel. The orange symbol light on the switch is on when the lock is fully engaged.

https://truckmanualshub.com/

The differential lock may only be used on the field. **It must not be used in speed range III.**
The differential lock considerably improves combine manoeuvrability in soft soil or on slippery ground and steep slopes. It must, however, never be used when not necessary.

With the differential lock engaged, the combine is more difficult to steer. The lock makes the front wheels rotate at the same speed, which means that the steering rear wheels cannot change the direction of the combine very efficiently. **The steering brakes do not work, either**.
Sharp turns of the steering wheel put unnecessary strain on the transmission. To lessen this strain, disengage the differential lock before turning.

Avoid the use of the differential lock when driving near deep ditches. The tyre further from the ditch grips more efficiently and may lever the combine into the ditch.

To disengage the lock, step on both the steering brakes in turn or turn the steering wheel back and forth. This may be necessary when the tractive wheels grip unevenly, or when the driver has attempted to turn the combine, which has strained the lock.
After having disengaged the lock, make sure it really is off. (The control light is off and steering and steering brakes are working.)

Before driving on the road, make sure the lock is disengaged.

The lock is operated by hydraulic pressure obtained from the lifting cylinder on the cutting table. A valve guides the pressure either to push the lock on or keep if disengaged. Therefore there shall always be pressure in the cutting table lifting line.

Note! **When driving with the cutting table disengaged, the crop elevator shall be in its top position so that the pressure gauge on the instrument panel indicates green.**

Note! **If the combine is driven with the crop elevator and the lifting cylinders disengaged, the cylinder pressure hoses shall be plugged and ”by raising the table” pressure shall be created in the table lifting line and the pressure accumulator so that the pressure gauge on the instrument panel indicates green.**

These measures are necessary to prevent the minor over-pressure in the hydraulic return line from engaging the lock. These measures guarantee safe operations in every circumstance.

https://truckmanualshub.com/

STAIRS CAN BE TURNED UNDER (FIGS. K12A AND K12B)

Standard Cab

Stairs turning horizontally can be turned away from their normal position between the front wheel and the cutting table, as follows:
Turn handle A to upright position. Twist and lift the handle to disengage the locking. Turn the stairs against the stop and lock them.
The stairs shall always be turned when the combine is driven on the road without the cutting table. Fig. K12a.

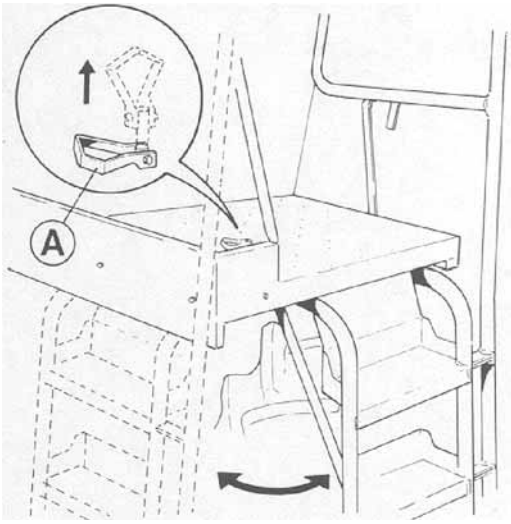

K12a

Stairs turning vertically can be raised for transport and service. They shall be supported in their top position. Fig. K12b.

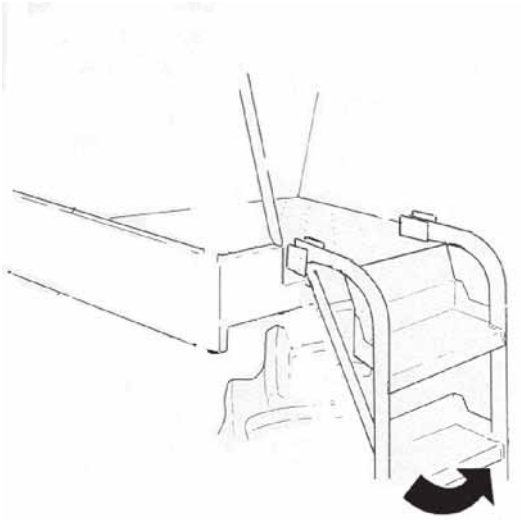

K12b

https://truckmanualshub.com/

De Luxe Cab (Fig. K12c)

The stairs to the cab can be turned from their normal position forward to the front of the wheel to reduce the width of the combine. When standing on the ground, release the locking by lifting lever A. When standing on the cab platform, release the locking by lifting knob B.
The stairs shall always be turned when the combine is driven on the road without the cutting table.

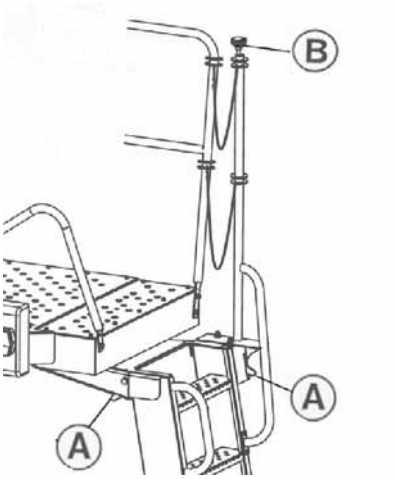

K12c

https://truckmanualshub.com/

MASTER SWITCH (Fig. K13) Controls Electricity for the Whole Combine

There is a master switch to control the electrical equipment of the combine.
It is located on the side of electric box, left side of the combine. Cabin is equipped with a backlight feature, which keeps the light on when the ignition switch is set to zero positon, but the main power is switched on.

The current is connected in position 2, and switched off in position 1, in which position the key may be removed.

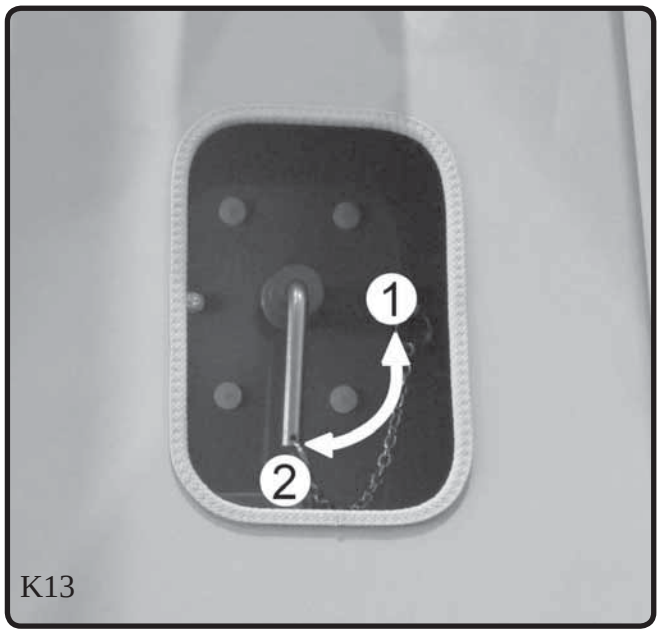

K13

Electrically Controlled Master Switch

Depending on the specification, there is an option of an electrically controlled master switch.
The operating switches are placed on the side of electric box and in cabin, see controls p.24.
The switch turns off current in all other electrical devices, but not the radio's memory and not current of engines equipped with the SCR system.

https://truckmanualshub.com/

CAB (fig. K14) Fresh-air Fan Provides Good Ventilation

The 4-speed fan is started using switch A. To change the airflow direction, turn nozzles 1 at the front top of the cab. Air coming into the fan is taken through detachable coarse mesh and fine filters.

To keep up the fan capacity and to secure the purity of the air, the filters have to be cleaned daily and replaced often enough to prevent harmful impurities and fungi from clogging the filters. In dusty conditions it is necessary to clean the coarse mesh filter several times a day.

By opening nozzles 2, cab indoor air can be circulated through the fan, which reduces the need for outdoor air and thus reduces the risk of blocked filters.

The windscreen wiper is controlled by switch B.
Cover D can be removed and a radio set installed in the space.

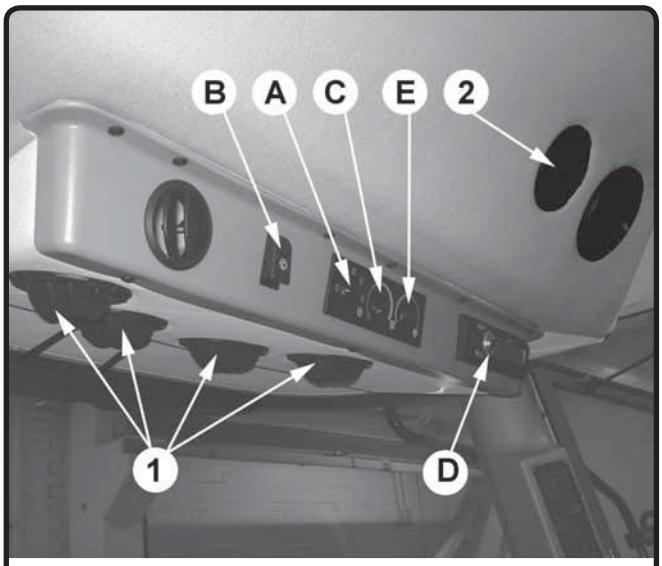

K14

HEATER Provides Additional Heat from the Engine

The air in the cab is heated by a heating element in which the engine coolant circulates. Turn switch E to the right to increase the amount of coolant circulating in the element. This will increase the temperature in the cab. Open nozzles 2, fig. K14, to re-circulate the heated cab air. This will further increase the temperature in the cab.

AIR CONDITIONER Cools the Air in the Cab

The cab can be equipped with an air conditioner system.
Turn switch C to the right to switch on and regulate the cooler. Open nozzles 2 to re-circulate the cooled cab air, which will further cool down
the cab.
Note! A difference of over 8°C between indoor and outdoor temperatures is harmful to your health.

Keep the cab door closed when the air-conditioning is on.

https://truckmanualshub.com/

TOWING (Figs. K16 and K17) Allowed from Towing Points Only

The combine may be towed from designated points only. When towing forward, the towline is hooked to the link on the front axle, fig. K16.
When towing backward, wind the towline round the rear carrier, fig. K17. The towline must not be wound round the rear axle.
With the combine on tow, the operator shall be in the cab and the engine running to enable steering. The brakes must be latched together and the gear in neutral. Four-wheel drive must be off.

Unless the engine can be started, the combine must be towed with great care; without power steering engaged, the combine is slow and heavy to handle.

When towing on the road, statutory traffic regulations shall be followed.

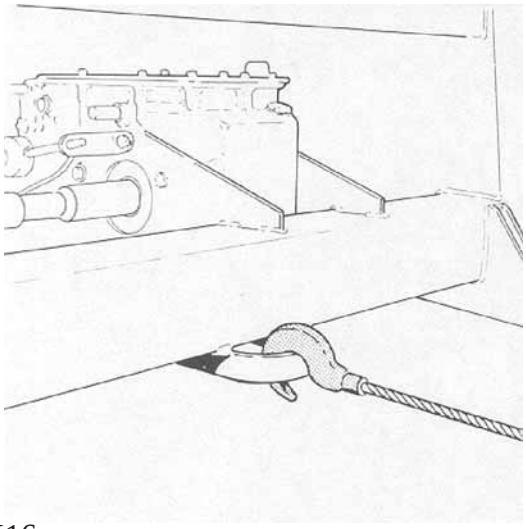

K16

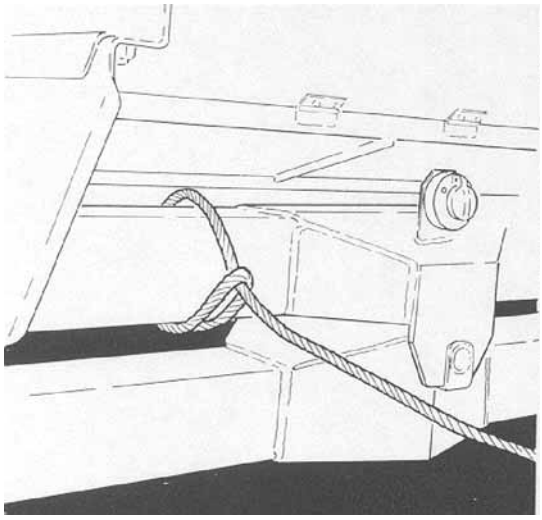

K17

https://truckmanualshub.com/

TABLE TRAILER (Figs. K20, K21 and K22) for Road Transport of Wide Cutting Tables

The need for a table trailer depends on farm conditions. The trailer may be necessary for a 3.9m cutting table if transportation is necessary on busy, narrow roads. Tables 4.2 m and 4.5 m wide should always be transported on a trailer in order not to inconvenience traffic and risk the safety of road users.
The trailer has no traction unit, but shall be towed attached to the combine. No other cargo except a cutting table must be transported on the trailer, nor must any other attachment except a trailer be hooked to the combine towing hook. In case the trailer is attached to another traction unit, a tractor, for example, the attachment shall be made in accordance with instructions, and statutory traffic regulations shall be followed.

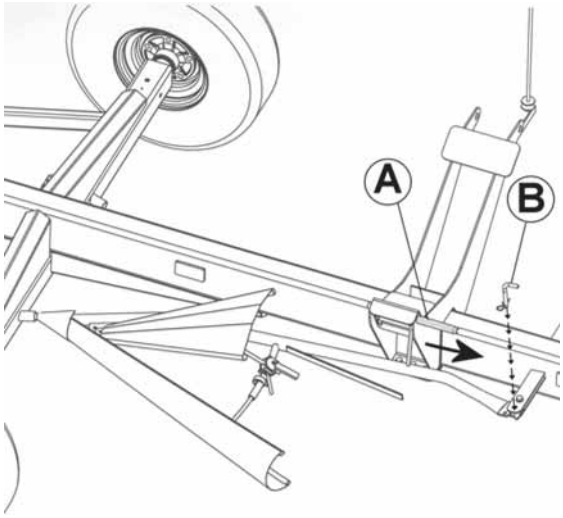

K20a

Placing the Table on the Trailer

Remove the table from the combine as instructed in paragraph ”Removing the Table”.
Place the trailer on level ground and align its frame with the ground by adjusting the cam wheel.
Pull locking pins A into their open position, fig. K20.
Remove the straw dividers from the table and place them on the brackets on the trailer. Depending on the type of dividers, the brackets are either at the front or the back of the axle. Lock the dividers with ring cotter and/or locking pivot B, fig. K20. When needed, adjust the guides of the adjustable divider in a narrower position so that the table bottom does not touch the divider. Straw dividers with foldable frames do not need to be removed. They can be turned to their transport position.

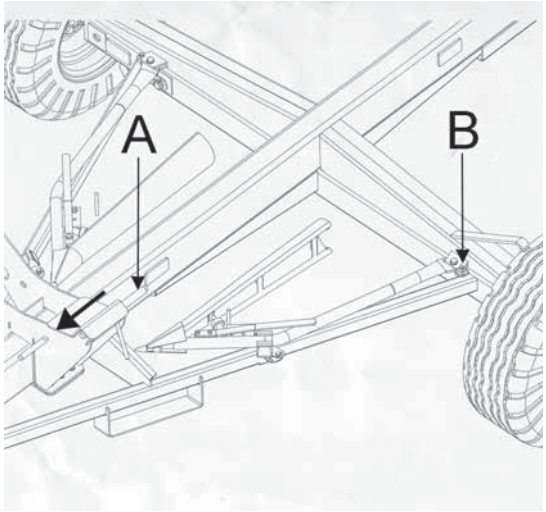

K20b

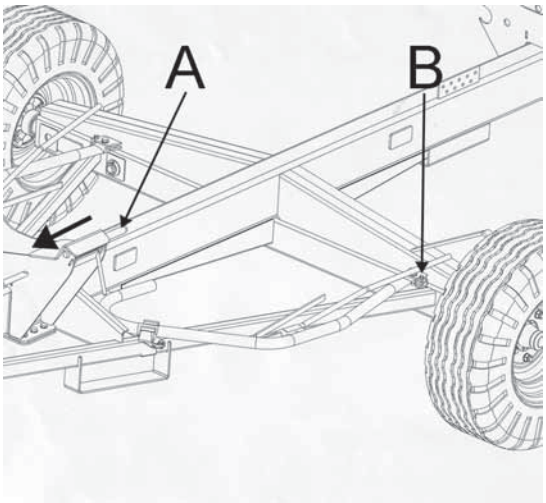

K20c

Drive the table above the trailer from the left-hand side so that the knife is level with the trailer marking sticks and brackets A, fig K21, are between carriers B. Lower the table slowly.
Make sure the table is positioned correctly:
Reverse slowly so that the rear end of the table is against both the carrier limiters.
Lower the crop elevator further so that it becomes disengaged from the cutting table and back up the combine with caution. Raise the crop elevator as soon as possible.
Push the rear locking pins into their locking position.
Turn front lockings C on top of the knife and tighten. Fig. K21.
Fit the guard plate over the feeder inlet, fig. K22.
Hook the trailer to the combine and plug in the electric cable.

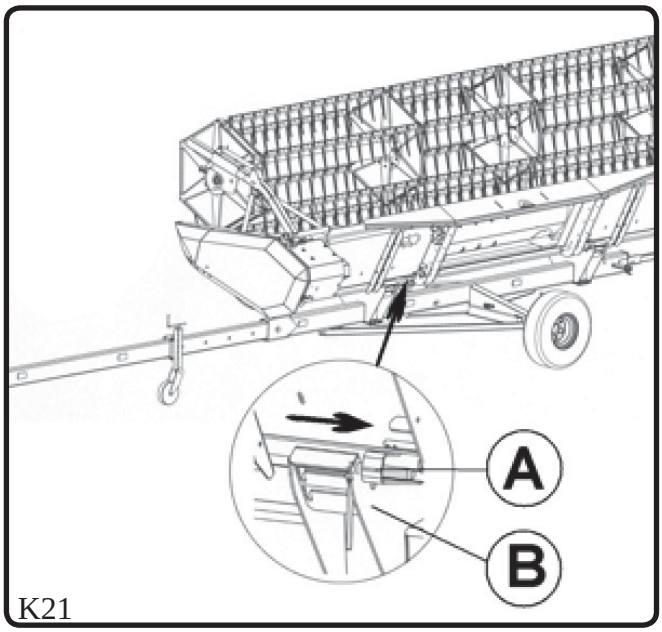

K21

Attaching of the Cutting Table to the Combine

is done in reverse order. In case the trailer must be left on the road temporarily, place appropriate warning signs.

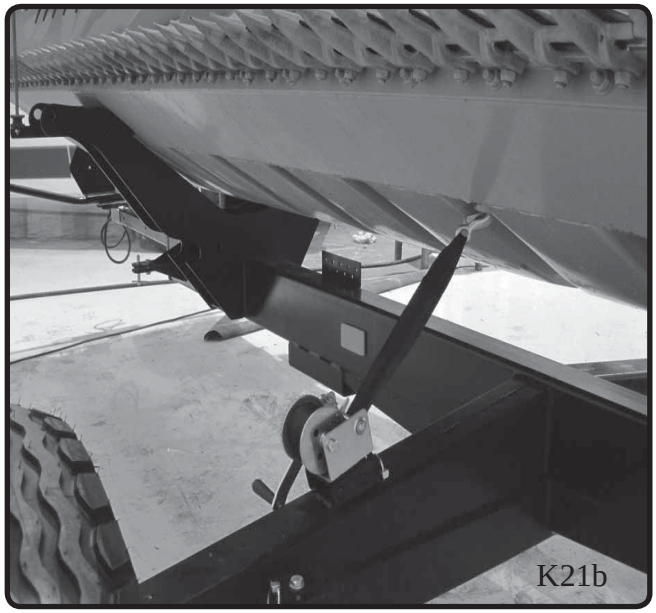
K21b

Trailer on Tow

Extreme caution shall be exercised when towing the trailer.
The total length of the vehicle is approx. 15 m, so turning the vehicle requires space.
Do not turn the rear wheels to their extreme position as the trailer arm may touch the rear wheel and the vehicle will get stuck.
However, if this is the case, the situation can be helped by backing up the combine and using the steering brake at the same time.

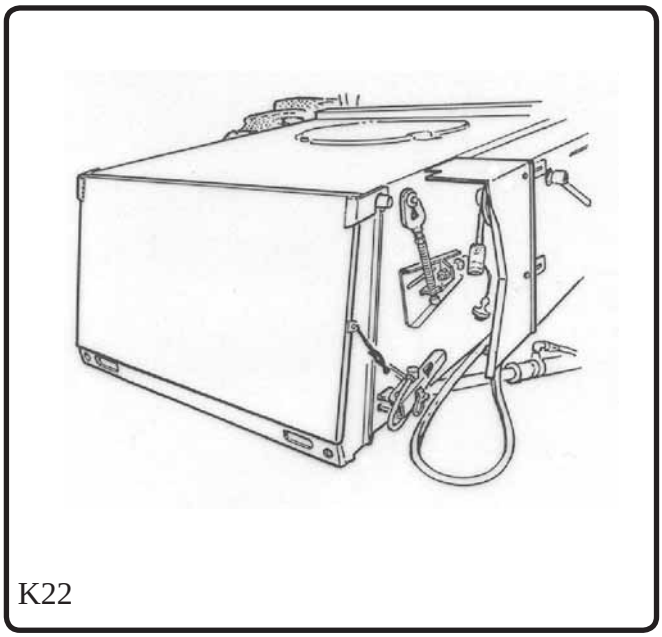
K22

https://truckmanualshub.com/

The engine display

You receive a variety of display modes from which to choose from.

Mode 1, threshing display:
Rounds per minute
Fuel consumption (L / H)
Coolant temperature
The load percentage

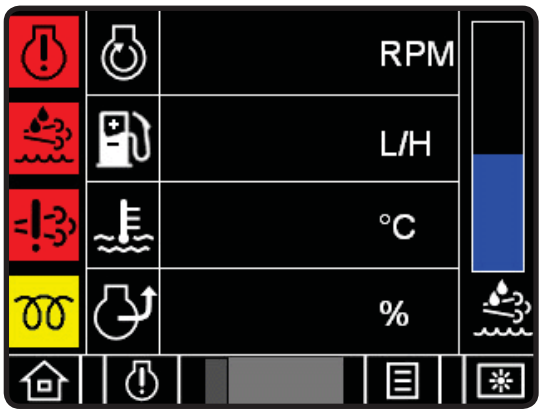

Mode 2:
The load percentage
The battery voltage
Oil pressure
Ad-Blue consumption (L / H)

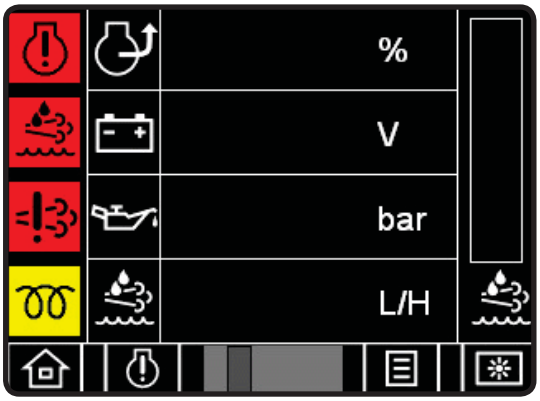

Mode 3, temperatures 1:
The fuel temperature
Coolant temperature
Ad-temperature blue

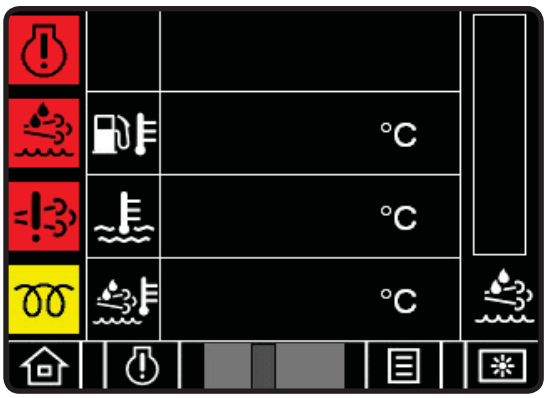

Mode 4, temperatures 2:
The charge air temperature
The outdoor temperature
Exhaust temperature (scr)

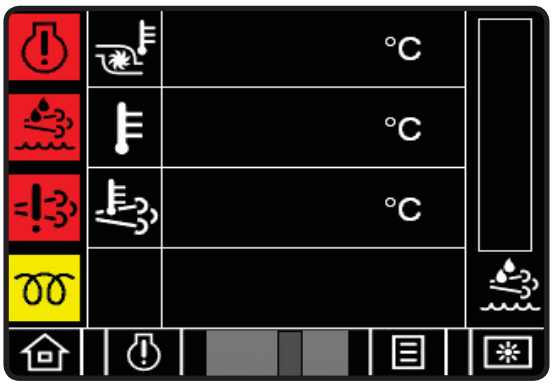

https://truckmanualshub.com/

Mode 5:
Operating Hours
Total fuel consumption (L)
Fuel Tripmeter 1 and 2

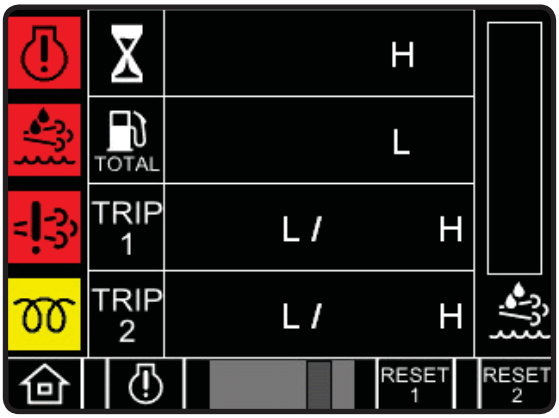

Mode 6, pressure display:
Oil pressure
Charge pressure
The fuel feed pressure

Mode 7, Service display:
Passive faults list (fault history: operating hours, and number of faults)

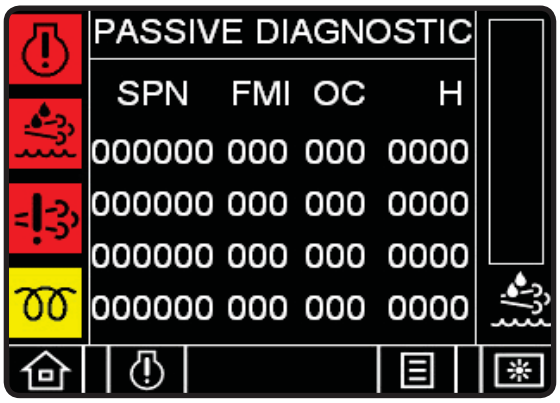

Mode 8, Service display
Active faults list

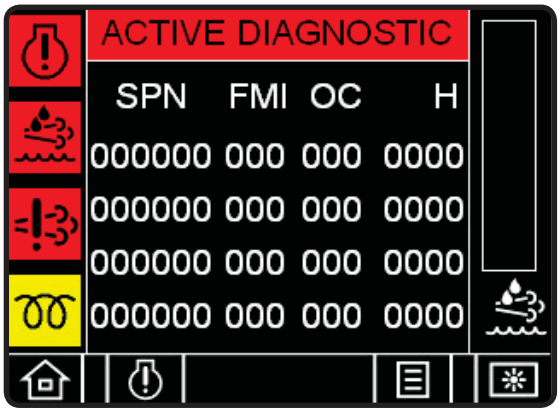

The self-diagnostics monitors different functions in the engine giving a fault report in case of possible disturbance. Additionally in certain cases, it limits the engine power, performing a so called delayed stopping or a so called forced stopping. The code in the display tells the cause as described on the last pages of the engine manual.

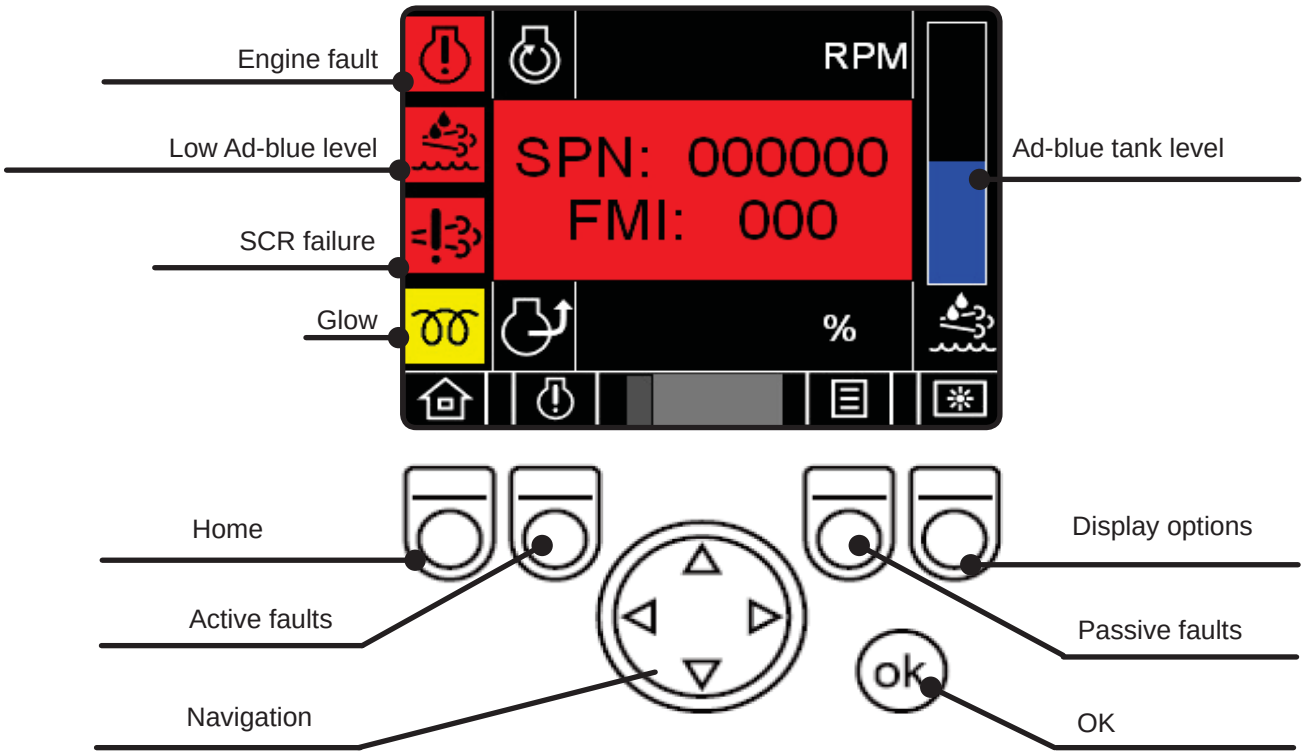

https://truckmanualshub.com/

THRESHING EQUIPMENT

WARNING LIGHTS (Fig. L1)

The alarm system of the combine indicates if:

Blockage in the grain elevator	A
Blockage in the bottom return auger	B
Blockage in the vertical return auger	C
Blockage in the chaff hood	D
Blockage in the air filter	F
Grain tank full	G
Unloading pipe unlocked	H
Engine overheated	I
Hand brake engaged	J

In case of alarm, red light E above the instrument panel blinks and the light on control panel K or L indicates the source of alarm.
Orange light M indicates a full grain tank.

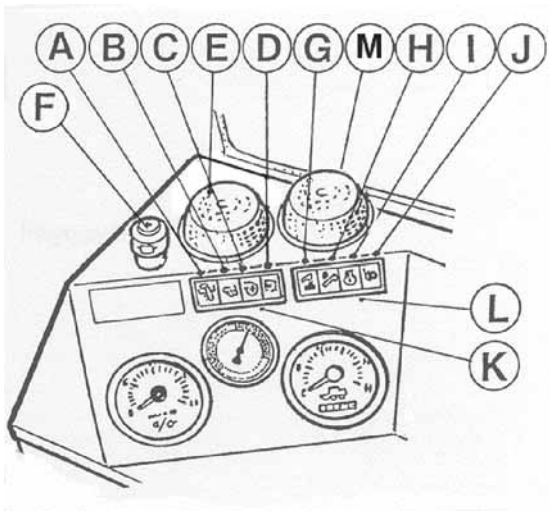

L1

STRAW DIVIDERS (Fig. L3) Can be Adjusted

The straw dividers are fitted on both sides of the cutting table. Their height is adjusted using slide pieces D with holes.
Depending on the specification the dividers can be of the following types:
Long torpedo dividers with fixed frames
Short torpedo dividers with fixed frames
Medium-long torpedo dividers with foldable frames
Arc-type dividers
Adjust guide plates A and B to suit the threshing conditions. The outside guide tube is attached to the divider at the front and to the tableside at the rear. The adjuster for the tube is at the rear. Always attach the tube to the side of the uncut crop.
Long dividers are used to thresh long-strawed crops such as rye and oats.
Short dividers are used to thresh short-strawed crops such as barley and wheat.
Dividers with foldable frames are suited for different crops. They do not need to be removed but can be turned to their transport position.
Arc-type dividers are suited for short-strawed crops and for crops that do not need dividing but are pressed down in a narrow section, such as turnip rape and flax.

The straw divider can be replaced with an electric vertical knife. It is particularly efficient when threshing oil plants.

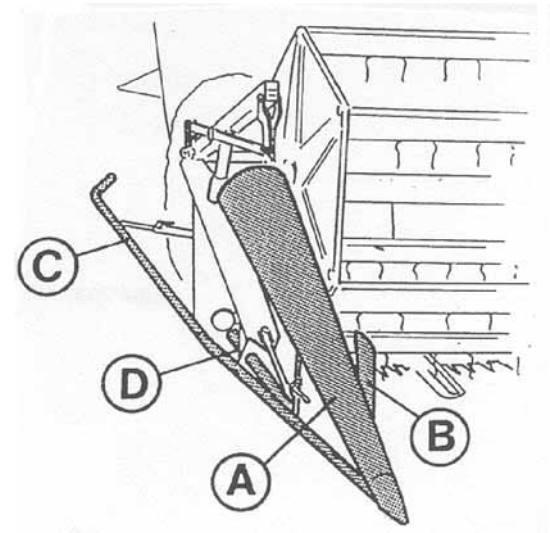

L3

CROP LIFTERS (Fig. L4) Spaced Correctly

The appropriate number of crop lifters for a 3.1 m table is 9, a 3.4 m table 11, 3.9 m table 12, a 4.2 m table 13, and a 4.5 m table 14 crop lifters.
Attach the crop lifters with the knife finger fixing screw as shown in the figure. The numbers indicate the number of finger spaces.
The crop lifters operate well if clearance to the ground is 8…10 cm, which clearance also prevents stone pick. In some cases, when threshing peas for example, it may be advisable to install more lifters, maybe even in every other knife finger.

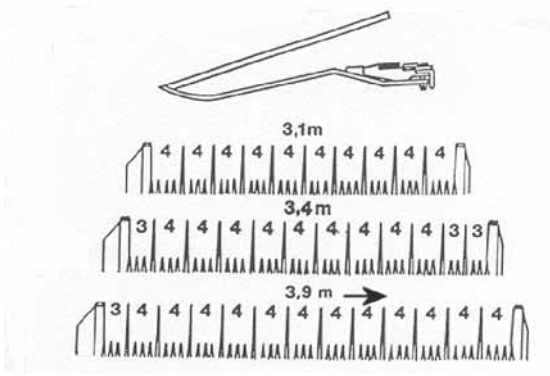

L4

https://truckmanualshub.com/

The REEL Has Four Adjustable Settings

STANDARD CAB

Lever Adjustments (Figs. L5a and L6a)

1. Reel height is controlled by lever A, fig. L5a.
2. Reel speed is controlled by switch B, fig. L5a. Speed can only be adjusted with the reel rotating.
3. The fore and aft adjustment is made with screws G at both ends of the table. Note! Make sure clearance L is the same on both sides. Tighten the locknut after adjustment. (If the fore and aft adjustment is made electrically, use switch C, fig. L5b.)
4. The adjustment of reel angles is made with screw D slackened, fig. L6a, or using the quick adjustment lever depending on the type of table, fig. L7a. When harvesting laid-down crops, the tines are adjusted to gather the crops efficiently. The reel is fitted with overload clutch E, the function of which should be checked at the beginning of each harvest season. See instructions under Maintenance.

Place locking F on the reel in support position, fig. L6a, if working beneath a raised reel.

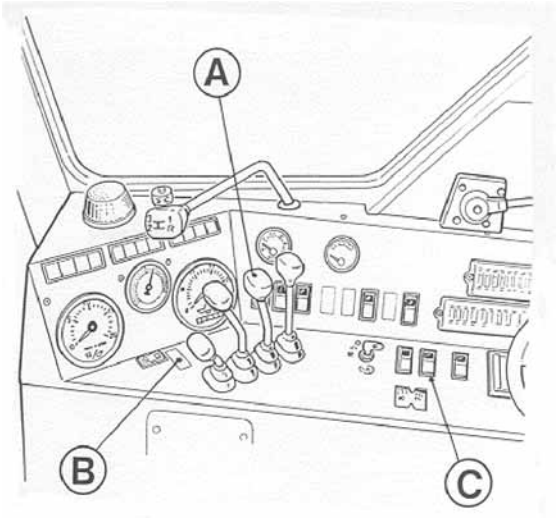

L5a

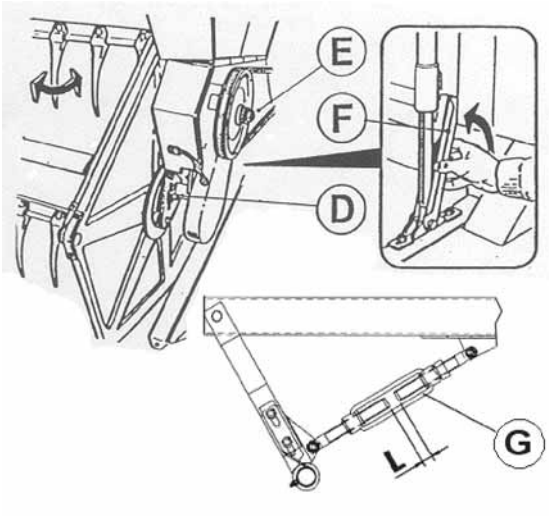

L6a

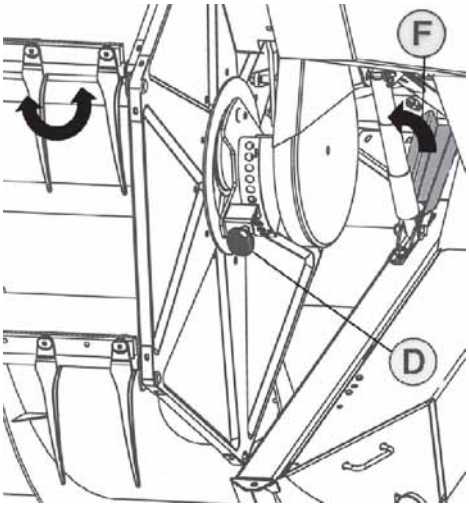

L7a

https://truckmanualshub.com/

Electrically Controlled Adjustments (Figs. L5b, L6b and L7b)

1. Reel height is controlled by switch A, fig. L5b.
2. Reel speed is controlled by switch B, fig. L5b. Speed can only be adjusted with the reel rotating.
3. The fore and aft adjustment is made by switch C, fig. L5b.
4. The adjustment of reel angles is made with screw D slackened, fig. L6b, or using the quick adjustment lever depending on the type of table, fig. L7b.

   When harvesting laid-down crops, the tines are adjusted to gather the crops efficiently. The reel is fitted with overload clutch E, the function of which should be checked at the beginning of each harvest season. See instructions under Maintenance.

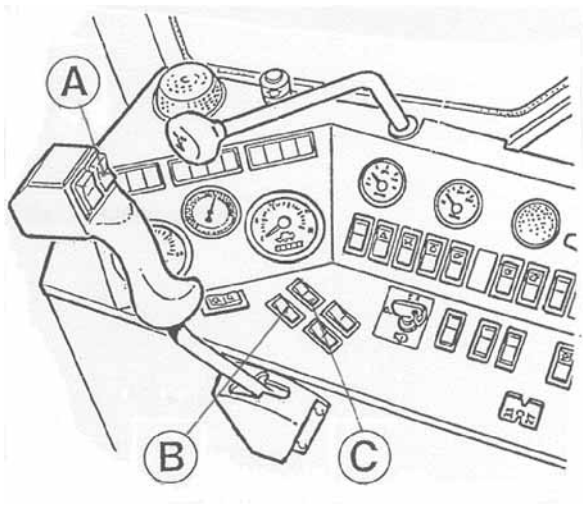

L5b

Place locking F, figs. L6b and L7b, on the reel in support position if working beneath a raised reel.

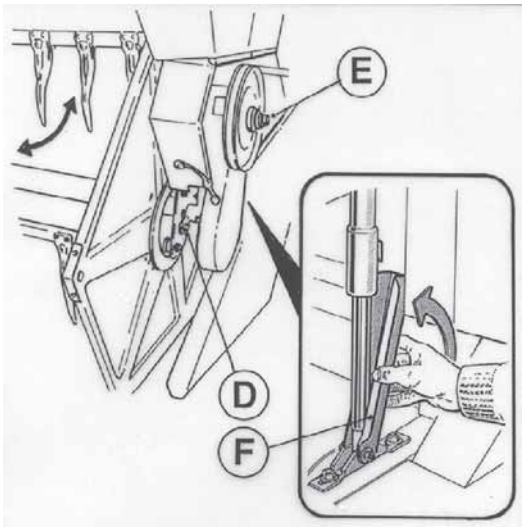

L6b

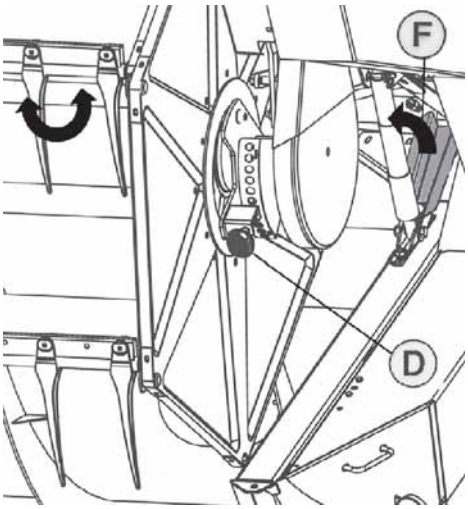

L7b

https://truckmanualshub.com/

The REEL Has Four Adjustable Settings

DE LUXE CAB

Electrically Controlled Adjustments (Figs. 5c 6c and 7c)

1. Reel height is controlled by switches A, fig. L5c.
2. Reel speed is controlled by switches B, fig. L5c. The switches are positioned on the front of the lever. Speed can only be adjusted with the reel rotating.
3. The fore and aft adjustment is made by switches C, fig. L5c
4. The adjustment of reel angles is made with screw D slackened, fig. L6c, or using the quick adjustment lever depending on the type of table, fig. L7c.

   When harvesting laid-down crops, the tines are adjusted to gather the crops efficiently. The reel is fitted with overload clutch E, the function of which should be checked at the beginning of each harvest season. See instructions under Maintenance.

Place locking F, figs. L6c and L7c, on the reel in support position if working beneath a raised reel.

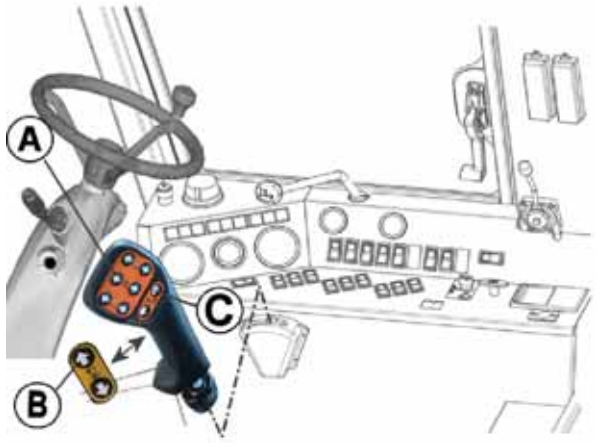

L5c

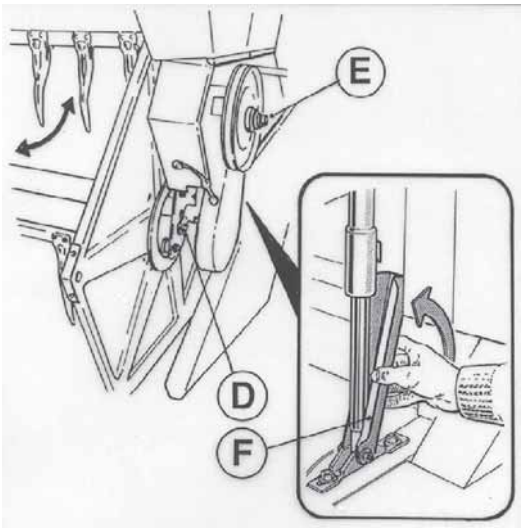

L6c

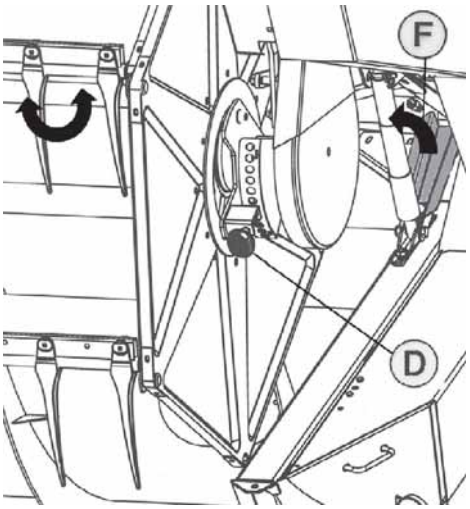

L7c

https://truckmanualshub.com/

CUTTING KNIFE Must Be Kept in Good Condition!

Actual knife adjustments cannot be made during threshing. The knife must be in perfect condition to produce good threshing results. For more precise service and adjustment instructions, see under Maintenance. A spare knife is stored in the case at the top of the table.

TABLE AUGER Height and Finger Positions Are Adjustable

Adjust the height of the table auger and the feed finger angle to suit the amount of straw in the crop being threshed. When threshing e.g. heavy rye or turnip rape, adjust clearance X between the auger and cutting table wider, approx. 30…40 mm. The adjustment is made in the following way:

Table width up to 3.45 m, fig. L8a

Loosen screws A at both ends of the cutting table. Now the table auger can be lifted or lowered as required. Clearance X between the table auger and the bottom must be equal at both ends of the table. Average clearance is approx. 15 mm. After moving the table auger, check the feed finger adjustment and drive belt tension. Loosen screw E to adjust the feed finger position using lever B at the right hand end of the cutting table. A minimum clearance of 10 mm is required between the feed fingers and the table bottom. The fingers must recede into the auger sufficiently early to allow the crop to be transported forward.

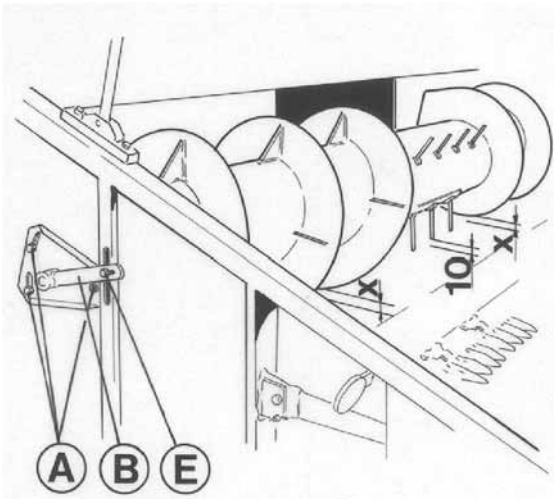

L8a

Table widths 3.9 m and wider, fig. L8b

Loosen screws A at both ends of the cutting table. Now the table auger can be lifted or lowered as required. Clearance X between the table auger and the bottom must be equal at both ends of the table. Average clearance is approx. 15 mm. After moving the table auger, check the feed finger adjustment and drive belt tension. Loosen screw D to adjust the feed finger position using lever C at the right hand end of the cutting table. A minimum clearance of 10 mm is required between the feed fingers and the table bottom. The fingers must recede into the auger sufficiently early to allow the crop to be transported forward.

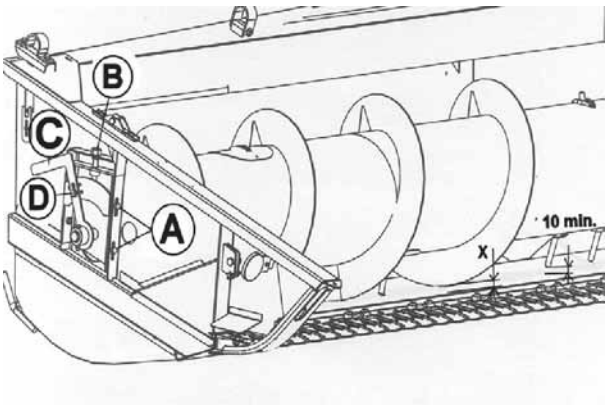

L8b

Correct Height and Tension of the CROP ELEVATOR CHAIN (Fig. L9)

The elevator has a fixed top roller and a floating bottom roller to enable the elevator to fluctuate according to the flow of crop on it. Adjust the clearance between the bottom roller and the bottom of the elevator housing using screws C. Correctly adjusted, there should be a clearance of 20 mm between the lowest slats and the housing at middle of bottom roller.

The tension of the crop elevator chain is adjusted with screws D. To check the tension, open the inspection door at the top of the elevator housing. The tension is correct when the deflection midway between the top and bottom rollers is approx. 65-70 mm. If the chain is assembled too tight, it wears out quickly and in some cases it may even break.

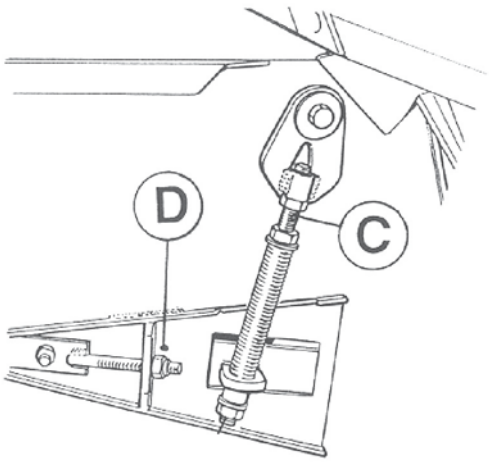

L9

https://truckmanualshub.com/

CUTTING AND FEEDING MECHANISM REVERSE DRIVE

Electrically Controlled Reverse Drive (Fig. L10a) Eliminates Blockage on the Table

Blockage in crop feed may stop the table auger and crop elevator. This is cleared by running the feed mechanism backwards. To do this, disengage the drive to the table and press reverse switch A. The table auger and elevator will rotate in reverse direction and clear the blockage.

NOTE! Reverse drive will only operate with the engine running and switch A depressed.

L10a

Mechanical Reverse Drive (Fig. L10b)

Reverse the drive using crank A. Insert the crank in square hole B through the opening in the guard. The mechanism can be rotated in both directions.

Never insert the crank with the engine running. Never leave the crank inserted.

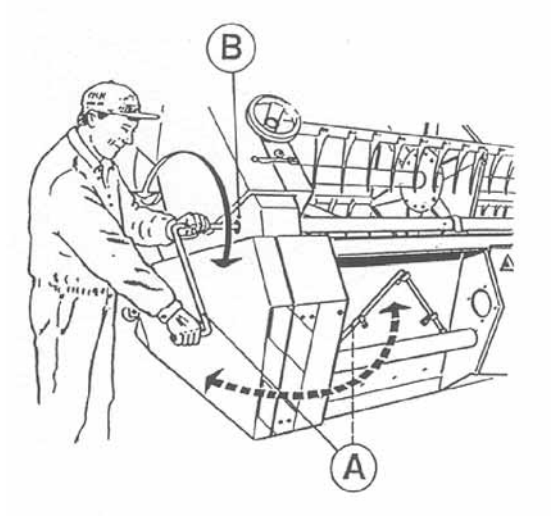

L10b

Throw-out Clutch of the CUTTING TABLE

The cutting mechanism is controlled either with a hand lever or a foot pedal on the right-hand side of the cab. Depress the front of the clutch pedal or push the lever forward to stop the mechanism. Depress the rear of the clutch pedal or pull the lever to start the mechanism. **Caution! The cutting and feeding mechanism disengaged using the clutch pedal can start running when, for instance, feeding disorders are being eliminated from the table. Therefore, always stop the engine before any work is carried out on the table.**

Supporting of the CUTTING TABLE (Fig. L11)

Before doing repairs and maintenance beneath the table, raise it to its full height and lock the support over the ram using lever A, on the right-hand side of the table auger.

Do not use the cutting table support while driving on the road!

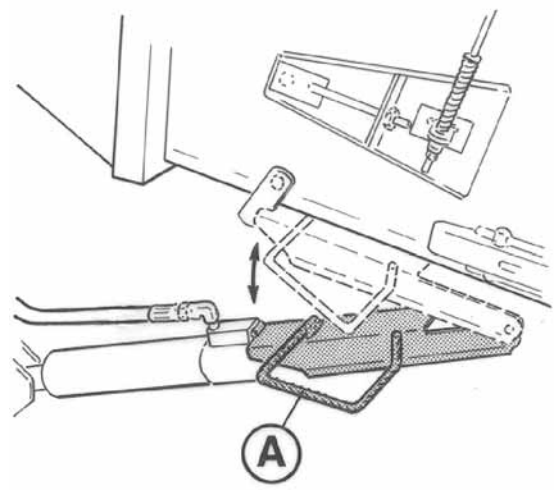

L11

https://truckmanualshub.com/

Height of the CUTTING TABLE (Figs. L12a, L13a and L14a)

STANDARD CAB
Lever Adjustments

Lever A, fig. L12a, adjusts the height.

Cutting height is shown on the scale, fig. L14a.
The cutting table is eased using a gas accumulator, and the easing pressure is shown on gauge A, fig. L13a. With the needle in the green field of the gauge, the table fully rests on the gas accumulator. When lowering the table onto the ground, the easing effect of the gas accumulator decreases and the needle goes to the red field. The farther red the needle goes, the more heavily the table lies against the ground, in which case soil or stones get easily onto the table and damage it.
When threshing laid-down crops, adjust the table height so that the needle is in the green field or on the border between the green and red where the easing effect of the gas accumulator is still sufficient.

Both the lengthwise and transverse positions of the table in relation to the ground can be adjusted. See the settings for adjustments under Maintenance.

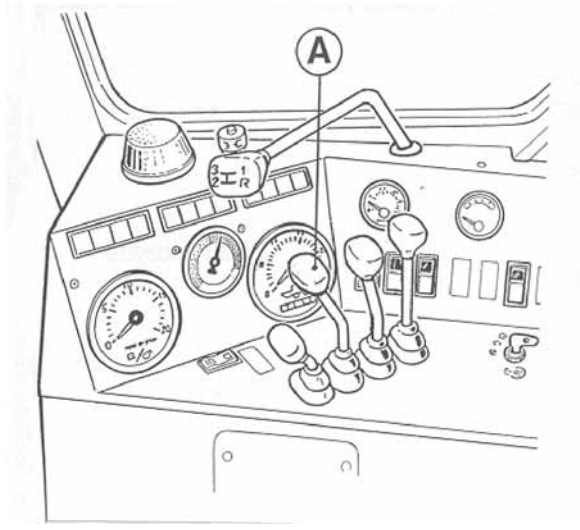

L12a

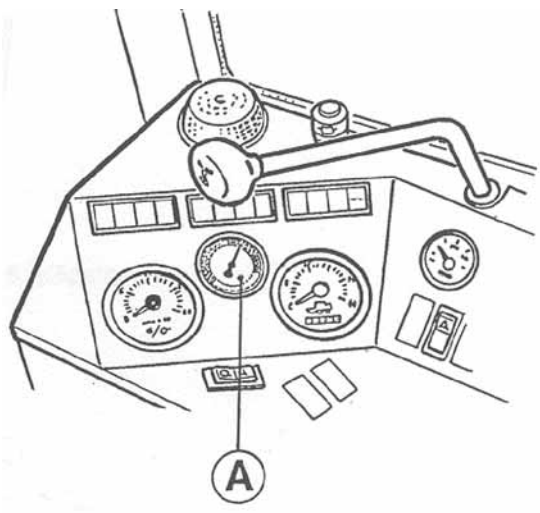

L13a

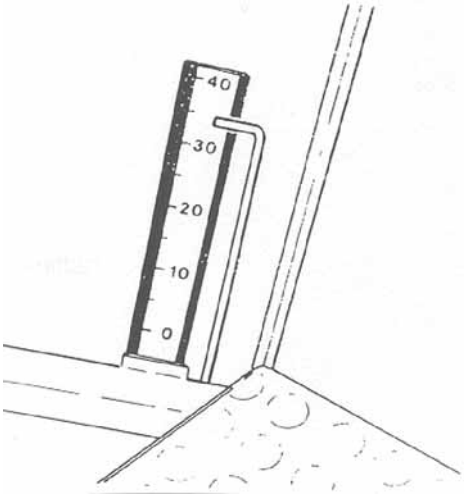

L14a

https://truckmanualshub.com/

Height of the CUTTING TABLE (Figs. L12b, L13b and L14b)

STANDARD CAB
Electrically Controlled Adjustments

Switch A, fig. L12b, adjusts the height.
Table lowering speed can be adjusted steplessly by turning the knob in the control valve above the right-side front fender. Speed increases clockwise and decreases counter-clockwise.

Cutting height is shown on the scale, fig. L14b.
The cutting table is eased using a gas accumulator, and the easing pressure is shown on gauge A, fig. L13b. With the needle in the green field of the gauge, the table fully rests on the gas accumulator. When lowering the table onto the ground, the easing effect of the gas accumulator decreases and the needle goes to the red field. The farther red the needle goes, the more heavily the table lies against the ground, in which case soil or stones get easily onto the table and damage it.
When threshing laid-down crops, adjust the table height so that the needle is in the green field or on the border between the green and red where the easing effect of the gas accumulator is still sufficient.

Both the lengthwise and transverse positions of the table in relation to the ground can be adjusted. See the settings for adjustments under Maintenance.

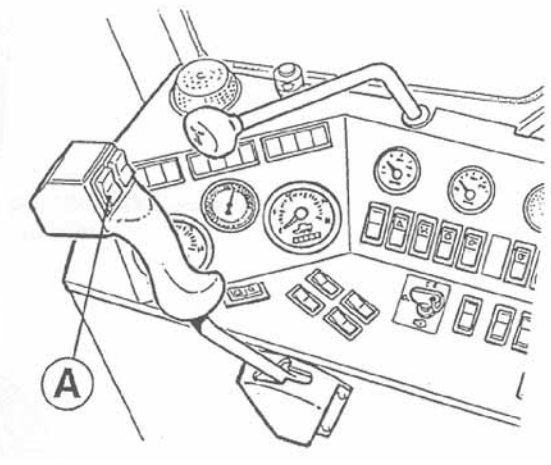

L12b

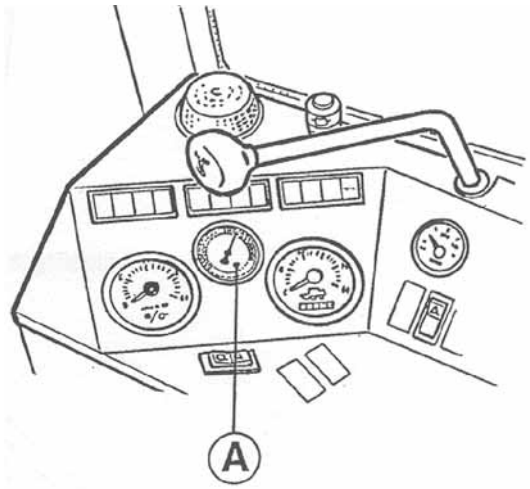

L13b

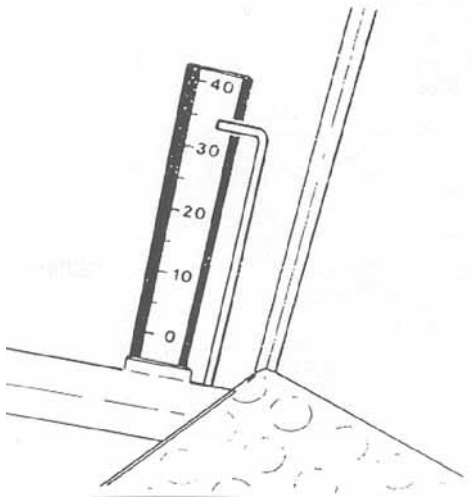

L14b

Height of the CUTTING TABLE (Figs. L12c, L13c and L14c)

DE LUXE CAB
Electrically Controlled Adjustments

Switches A, fig. L12c, adjust the height.
Table lowering speed can be adjusted steplessly by turning the knob in the control valve above the right-side front fender. Speed increases clockwise and decreases counter-clockwise.

Cutting height is shown on the scale, fig. L14c.
The cutting table is eased using a gas accumulator, and the easing pressure is shown on gauge A, fig. L13c.
With the needle in the green field of the gauge, the table fully rests on the gas accumulator. When lowering the table onto the ground, the easing effect of the gas accumulator decreases and the needle goes to the red field. The farther red the needle goes, the more heavily the table lies against the ground, in which case soil or stones get easily onto the table and damage it.
When threshing laid-down crops, adjust the table height so that the needle is in the green field or on the border between the green and red where the easing effect of the gas accumulator is still sufficient.

ble in relation to the ground can be adjusted. See the settings for adjustments under Maintenance.

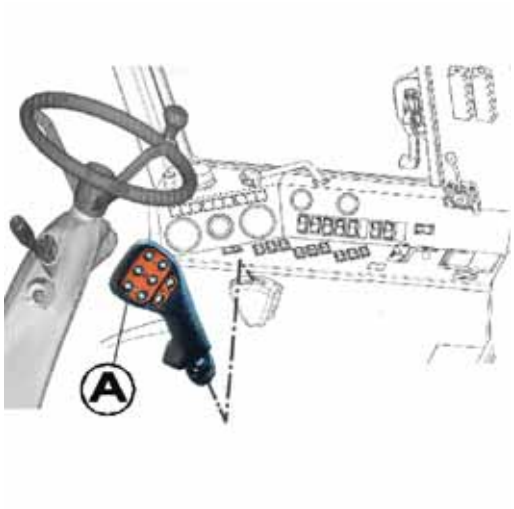

L12c

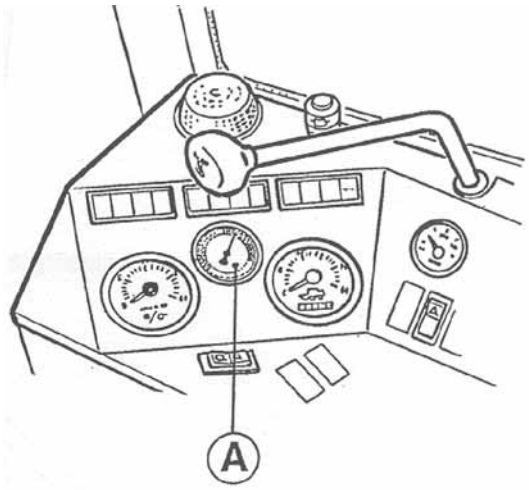

L13c

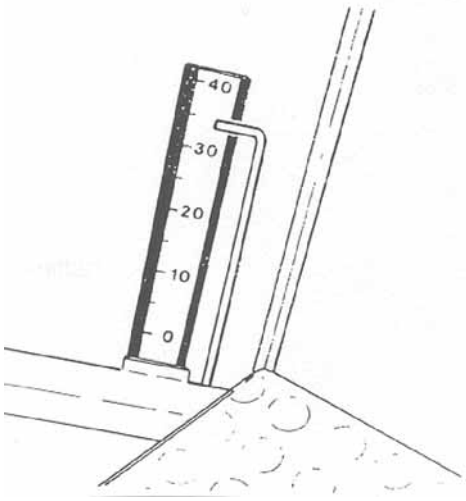

L14c

https://truckmanualshub.com/

STONE TRAP (Fig. L15) Must Be Emptied Regularly

The stone trap prevents stones from getting into the concave. It is located between the crop elevator and concave. The hinged bottom can be opened and locked using lever A.
The stone trap must be emptied daily; the contents of it must be of soft nature. When harvesting short stubble on stony fields, empty the stone trap more often.

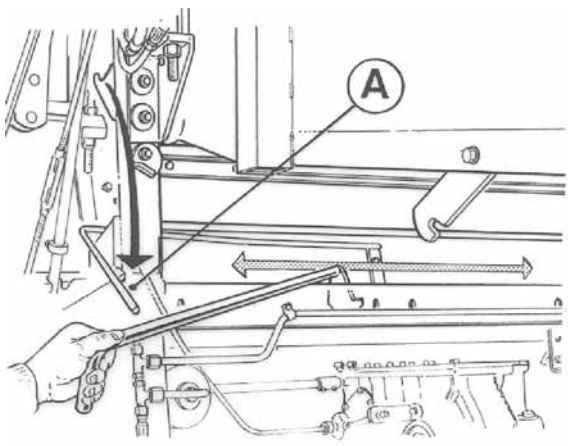

L15

Engaging of THRESHING MECHANISM (Fig. L16)

Engage the threshing mechanism using lever A, which will start the threshing cylinder, straw walkers, grain pan, shaker shoe, grain and return augers and the straw chopper

Note! Engage and disengage the threshing mechanism at engine idling speed only.
In case of electrically controlled engines “medium revolutions” can also be used.

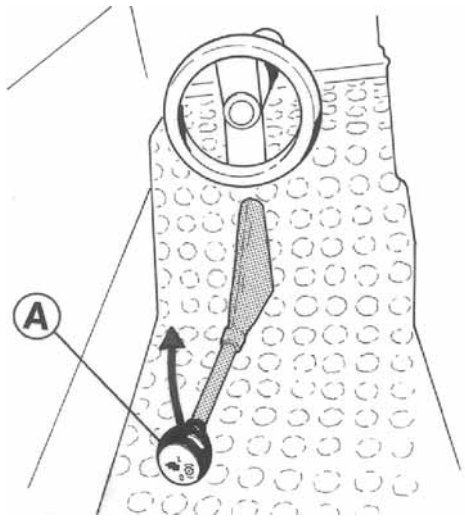

L16

STONE BLOCK Behind the Knife

Optional stone block A can be fitted on the cutting table behind the knife. Fig. L17. It has proved extremely useful on fields with a lot of small stones. They are stopped by the stone block and can be removed from there by hand. Always stop the combine and the engine and fit the supports for the table and the pick-up reel before carrying out any work on the cutting table.

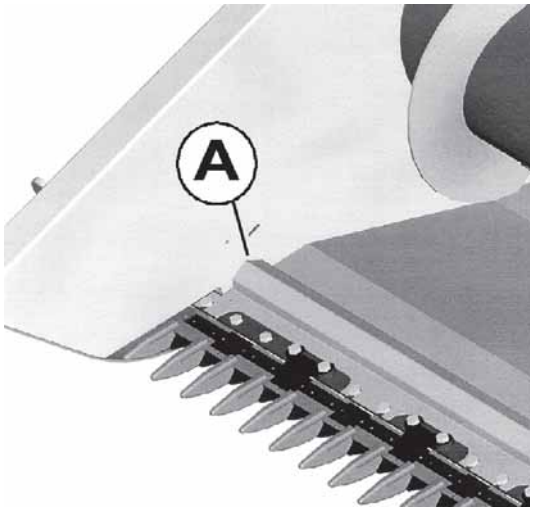

L17

https://truckmanualshub.com/

Stepless Control of THRESHING CYLINDER Speed (Crank Adjustment) (Fig. L18a)

The speed of the threshing cylinder is adjusted steplessly using wheel C. The speed may be adjusted only with the threshing mechanism running. Cylinder speed is displayed in gauge A on the instrument panel with display switch B in its cylinder position, or it is shown by mechanical indicator D outside the cab on the right side.
Settings for various crops are given in the “Approximate Settings“ table on the cab window.

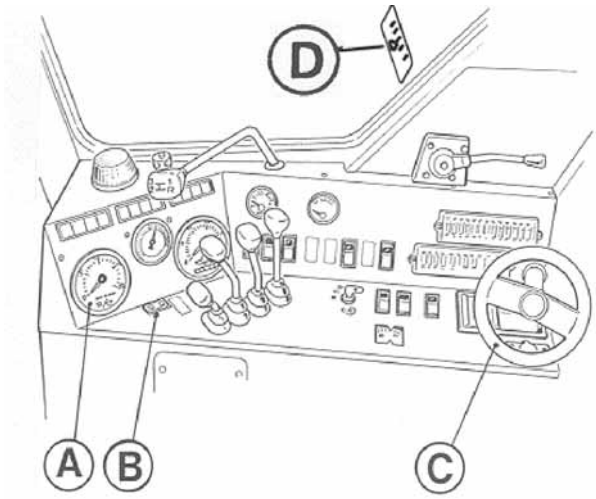

L18a

https://truckmanualshub.com/

Stepless Control of THRESHING CYLINDER Speed (Electrically Controlled) (Fig. L18b)

The speed of the threshing cylinder is adjusted steplessly using switch A. The speed may be adjusted only with the threshing mechanism running. Cylinder speed is displayed in gauge A on the instrument panel with display switch B in its cylinder position.
Settings for various crops are given in the “Approximate Settings“ table on the cab window.

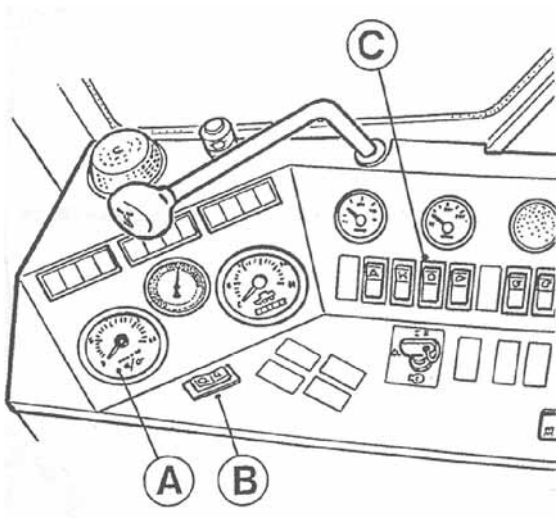

L18b

https://truckmanualshub.com/

Standard Threshing Cylinder Adjusting of CONCAVE Clearance (Figs. L20a and L22a)

Clearance between the threshing cylinder and concave is adjusted steplessly using regulating wheel A on the right of the operator's seat. Turn the wheel counter-clockwise for wider clearance and clockwise for smaller clearance.
(In the De Luxe cab the wheel has been replaced with a ratchet lever. The adjustment direction depends on the position of the ratchet arrester.)
The needle on scale B gives clearance C, i.e. the distance in mm between the first concave beater and cylinder beater.
The adjusting mechanism has been designed to maintain the ratio between the front and rear clearances. The normal ratio is 2:1; front clearance C is double rear clearance D, fig. L22a. Concave clearance should be checked at the beginning of each harvest season.
See the settings for various crops in the "Approximate Settings" table.

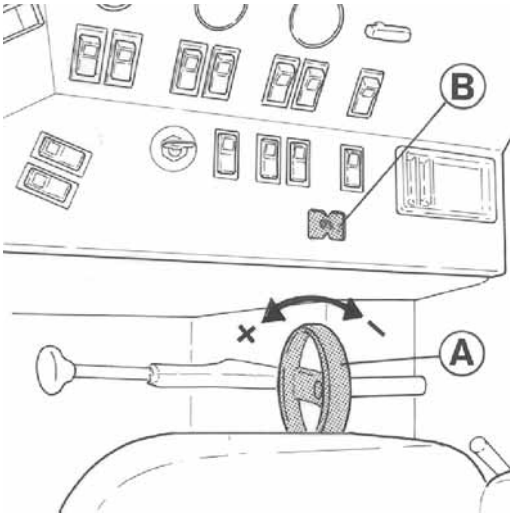

L20a

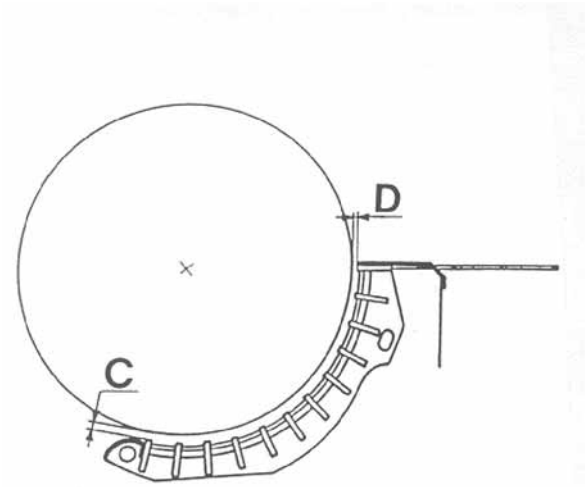

L22a

REVERSING THE CYLINDER (Fig. L23a)

In order to remove a blockage from the threshing cylinder, a tool is supplied by means of which the reel may be turned manually (fig. L23a).
The engine must be stopped and the threshing mechanism coupling off. The concave should be adjusted in its bottom position. If necessary, the blockage may also be cleared through the service openings.

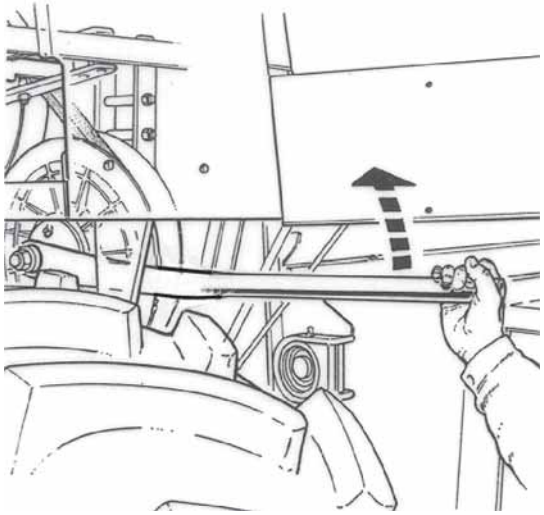
L23a

https://truckmanualshub.com/

The TS Threshing Cylinder

Adjusting of CONCAVE Clearance (Figs. L20b and L22b)

Clearance between the threshing cylinder and concave is adjusted steplessly using regulating wheel A to the right of the operator's seat. Turn the wheel counter-clockwise for wider clearance and clockwise for smaller clearance. The needle on scale B gives clearance C, i.e. the distance in mm between the first concave beater and cylinder beater.
The adjusting mechanism has been designed to maintain the ratio between the front and rear clearances. The normal ratio is 2:1; front clearance C is double rear clearance D, fig. L22b. Concave clearance should be checked at the beginning of each harvest season.
See the settings for various crops in the "Approximate Settings" table.

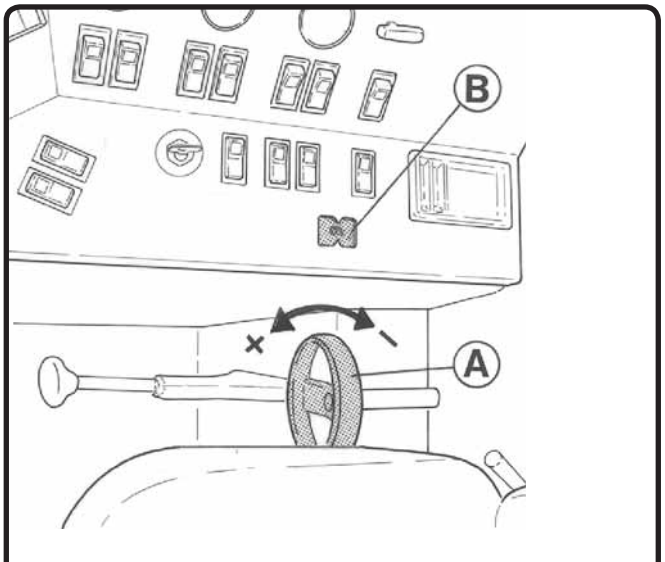

L20b

Adjusting of PRE-CONCAVE (Fig. L21b)

Clearance between the pre-concave and pre-cylinder is adjusted steplessly using regulating wheel A. fig. L21b, on the right hand side of the combine. Turn the wheel counter-clockwise for wider clearance E, fig. L22b, and clockwise for smaller clearance. The width of threshing clearance can be seen on indicator B, fig. L21b.

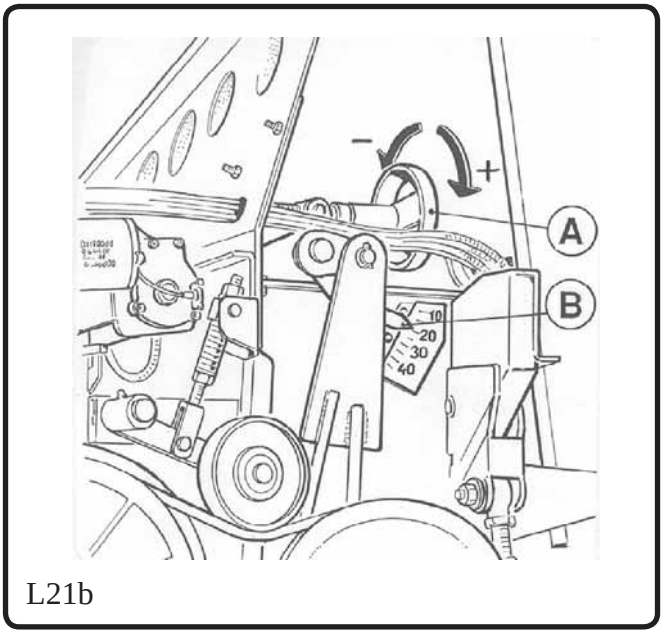

L21b

REVERSING THE CYLINDER (Fig. L23b)

In order to remove a blockage from the threshing cylinder, a tool is supplied by means of which the reel may be turned manually (fig. L23b). One end of the tool is used to turn the pre-cylinder, the other to turn the threshing cylinder. Open the plastic guards on the fender to gain access to the shaft ends on the cylinders. The guard can be opened with the guard opening tool.
The engine must be stopped and the threshing mechanism coupling off. The concave should be adjusted in its bottom position. If necessary, the blockage may also be cleared through the service openings.

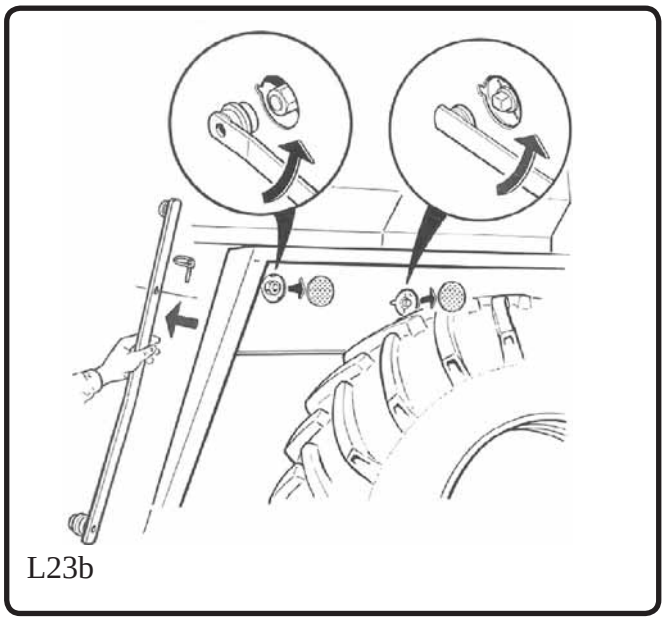
L23b

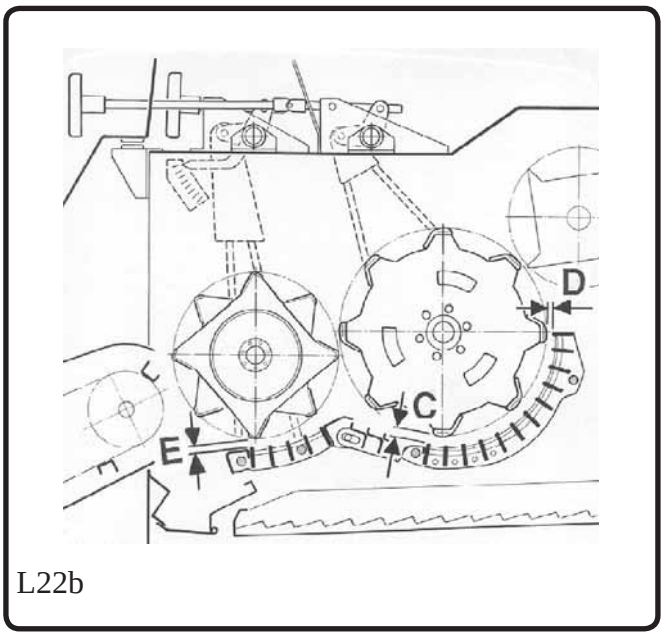

L22b

https://truckmanualshub.com/

CONCAVE FILLER PLATES (Fig. L24)
Remove the Barbs

The threshing effect of the concave can be improved by fitting filler plates A under the first concave beaters. Pass the filler plates through the holes at both ends of the concave where the springs keep them fixed. A maximum of four filler plates can be fitted.
The best way to fit them is through the bottom when the grain pan cassettes have been first removed.
The same filler plates fit the main concave and the pre-concave on the TS model.

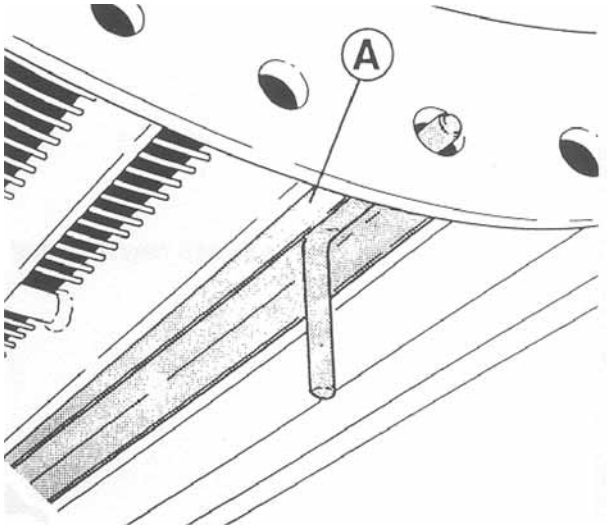

L24

STRAW WALKER Bottoms Can Be Adjusted
Cassette Bottom Straw Walkers (Fig. L25a)

The bottom cassettes of the straw walkers can be removed for cleaning by releasing clamps A and pulling the cassettes out through the rear door to the chaff hood.

Closed Bottom Straw Walkers (Fig. L25b)

At the back of the straw walkers there are separately adjustable extensions A. They can be used to adjust the separating efficiency depending on the conditions. The extensions can be removed for cleaning.

Chaff Alarm

The switch on top of the chaff hood lights an alarm lamp on the instrument panel if an excessive accumulation of straw causes a blockage.
Immediately disengage the threshing mechanism, clear the blockage and find the cause for the trouble before going on working.

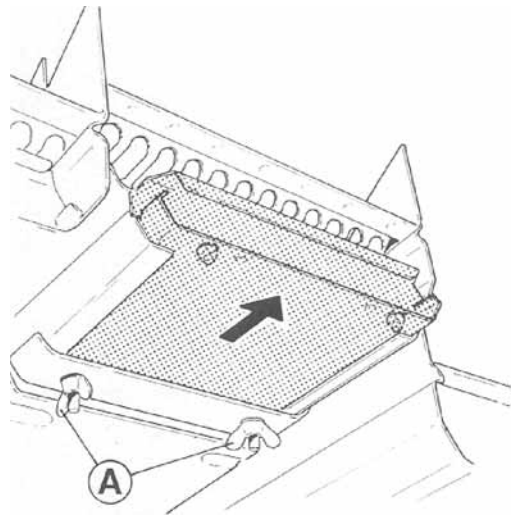

L25a

NOTE! Always check the operation of the alarm before starting harvest.

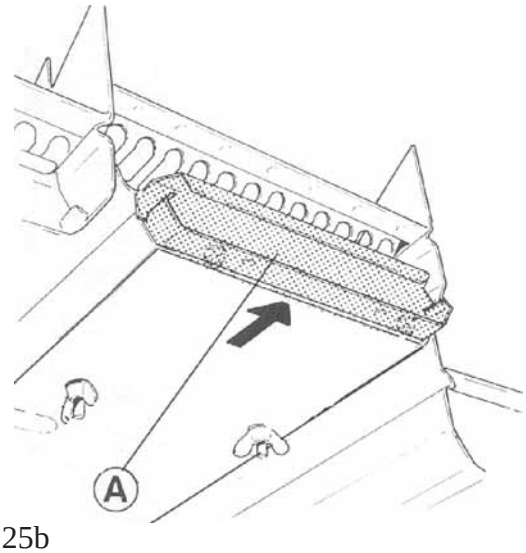

L25b

https://truckmanualshub.com/

CSP Straw Ruffler (fig. L25c)

Depending on the specification, there may be a chain-driven ruffling drum above the straw walkers to fluff up the mass of straw to improve grain separation. The ruffler finger angle can be adjusted by changing the position of the adjustment lever on the left side of the combine. The normal position is in the upper part of the adjustment range (1).
When the lever is moved downwards, the fingers will retract earlier in the direction of rotation. This should be done when threshing turnip rape of flax.
A speed monitor monitors the ruffler rotation. Its operation is connected to the straw alarm. Thus an activated straw alarm may indicate either a blockage caused by straw accumulation or a speed drop in the CSP drum.

Check the drive chain tension regularly.

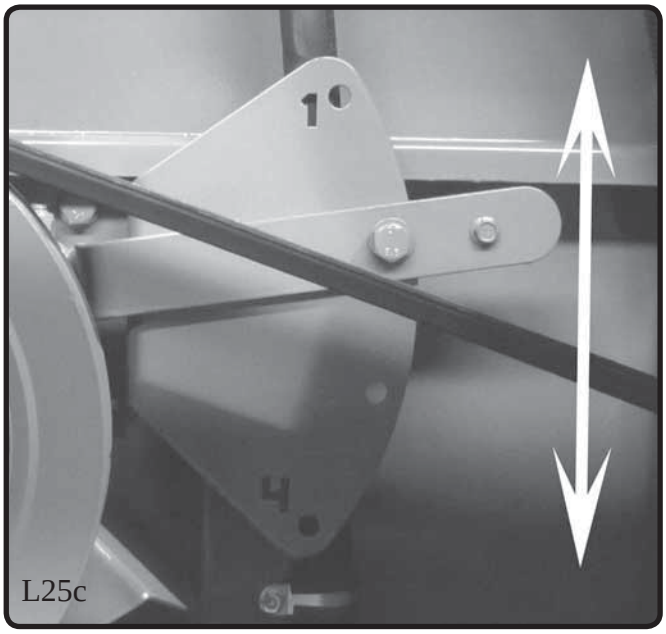

L25c

Adjustment of the sliding coupling of CSP (fig.L25d)

Measure X of the spring pack is 16mm.

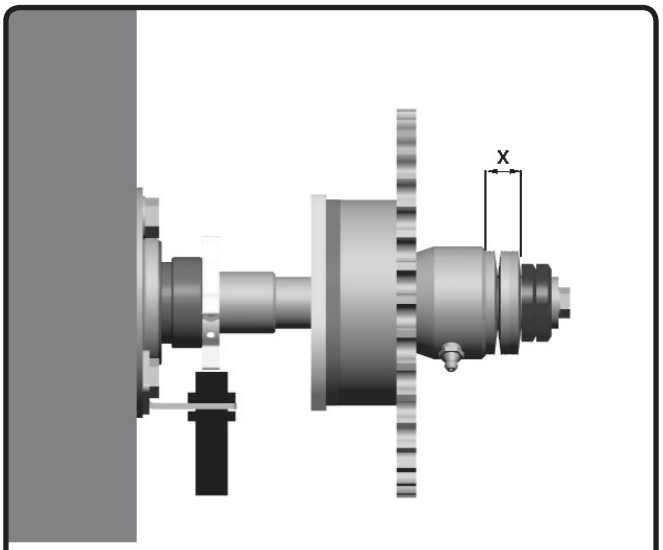

L25d

Clean the GRAIN PAN Segments (Figs. L26 and L27)

Each segment in the grain pan can be separately removed for cleaning. A removal tool is supplied in the left lower guard, fig. L26. Pass the flat end of the tool into the hole at the rear of the segment and, by turning the tool, release the segment from the spring and pull back out of the machine, fig. L27.
When harvesting in damp conditions, check daily that the segment surfaces are clean, and remove any sticking dirt. A dirty surface will reduce the transporting ability and cause uneven burden on sieves and increase threshing losses. Moreover, the dirt will cause extra weight, burden the grain pan and may even lead to damage.

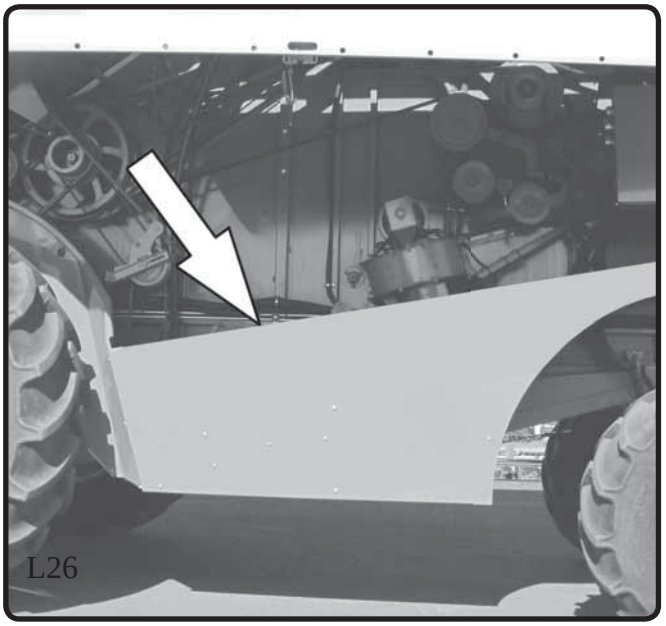
L26

SHAKER SHOE Adjustments (Fig. L28)

The shaker shoe houses two sieves; the top one is an adjustable chaffer sieve and the bottom one either an exchangeable grain sieve or an adjustable lamella sieve. Settings for various crops are given in the “Approximate Settings“ table.
The space between the lamellas is adjusted by screw A at the rear of the sieve.
Fig. L28 illustrates how the space between the lamellas is measured.

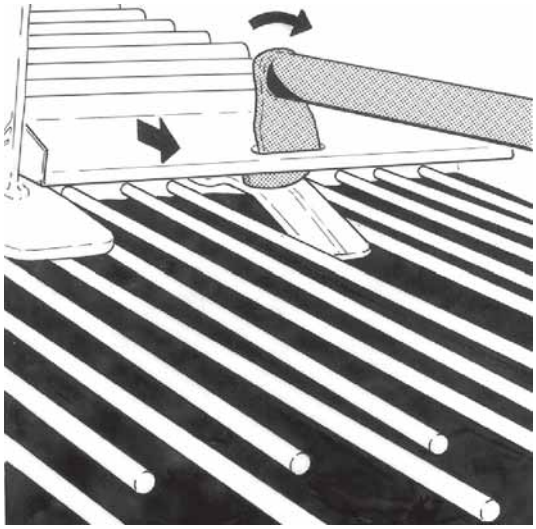

L27

The adjustment of the top limiter in the bottom sieve depends on the type of sieve used: with a fixed sieve turn limiter A to its vertical position; with an adjustable sieve to its horizontal position.

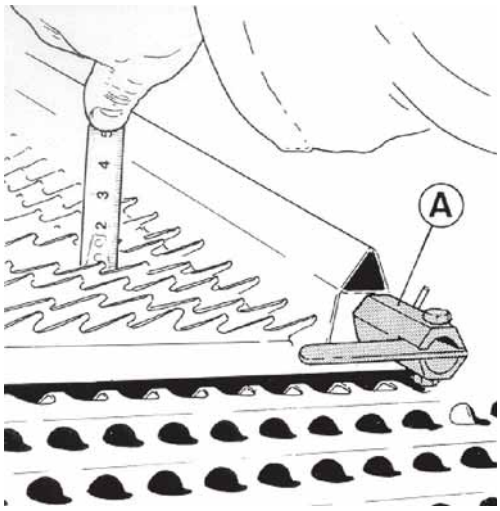

L28

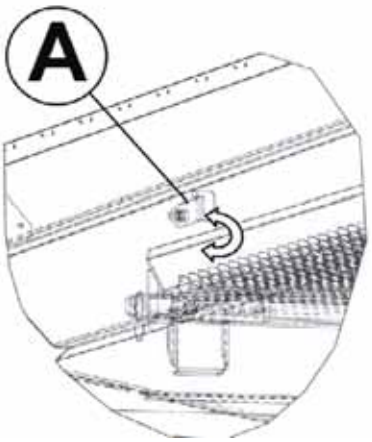

L28a

https://truckmanualshub.com/

Changing and Locking of SIEVES (Figs. L29 and L30)

To change the grain sieve, release pawls A on the extension bottom (fig. L29) and fully lower the bottom. Unscrew screws B of locking arm A (fig. L30) and pull locking pieces C out of the holes on the shaker shoe wall, to draw locking arm A and the grain sieve off the frame.
To clean the chaffer sieve, unscrew screws A, fig. L31, and remove the plate locking pieces from the fixing holes on the shaker shoe walls. First remove the sieve plate in the extension and then the chaffer sieve.

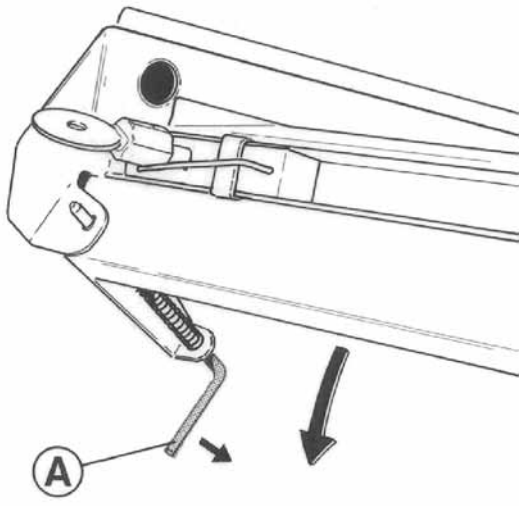

L29

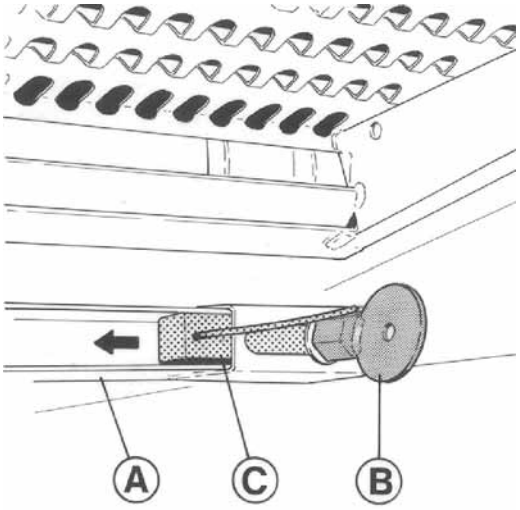

L30

Raise the SIEVE EXTENSION on Sloping Ground (Fig. L31)

The sieve extension can be angled in two positions.
To adjust, move the locking pieces either to the upper or lower fixing holes. The lower position is used when threshing on level ground and the upper position on sloping ground.

For sloping ground a special slope extension is available with open toothed edges.

An extension with smaller holes is available to be used when threshing rape and turnip rape. This ensures a cleaner threshing result.

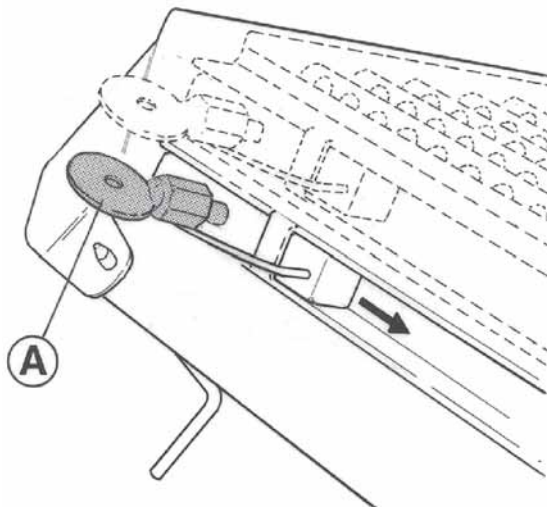

L31

CLEANING FAN (Figs. L32, L33 and L34) Provides Sufficient Air Flow

The airflow is adjusted steplessly by changing the variator speed.
On electrically adjustable combines the speed regulating switch is located on the instrument panel.
On lever adjustable combines the speed is regulated using the crank on the left-hand side of the cab (fig. L32).
The tachometer or mechanical indicator B shows the change in the number of revolutions.

Fan speed must be between 600…1000 RPM not to damage the drive belts.
NOTE! Adjustments can only be made with the threshing mechanism engaged.

With smaller seeds requiring a weaker airflow, open door A beneath the fan using lever B, fig. L33, and find the correct airflow by adjusting the variator with the door open.

Adjust the airflow direction using regulating rod C, fig. L34. With the rod in its front position, the air is directed forward and up. By moving the rod backwards, the air direction turns down and rearwards.

Suggested air speed and direction settings for various crops are given in the “Approximate Settings“ table.

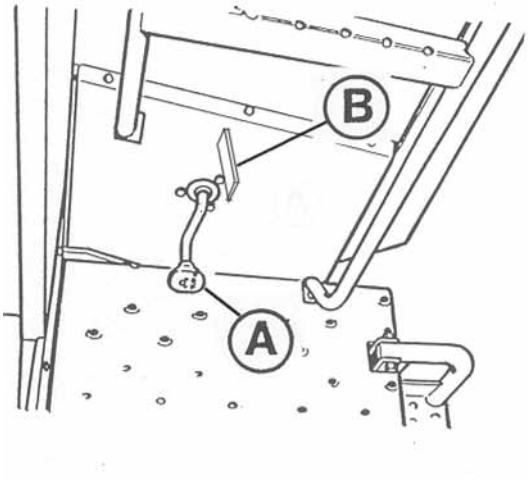

L32

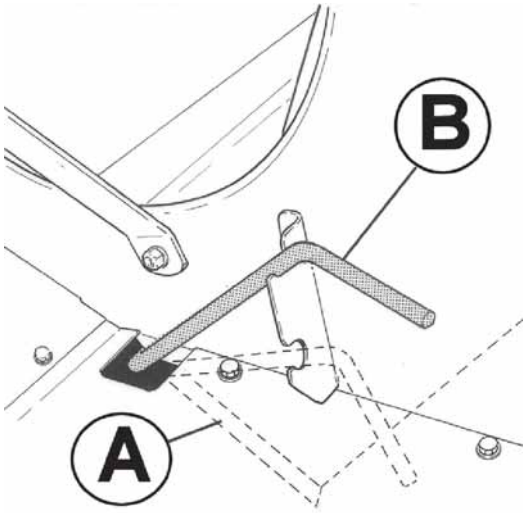

L33

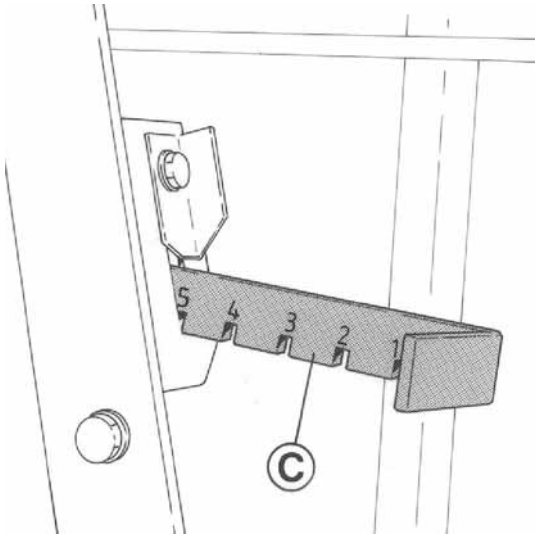

L34

https://truckmanualshub.com/

AUGER HOUSING (Fig. L35) Bottoms Can Be Opened from the Side

From the shaker shoe, the grains fall onto the front transport auger and the returns to the rear transport auger. The bottom troughs can be opened by lifting wire A from groove B and letting locking levers C go down, which will open the doors. To close the doors, lift the wire back to groove B and turn up the locking levers.
An alarm indicates if the return bottom auger is blocked. Immediately stop the machine, clear the blockage and find the cause for the trouble.

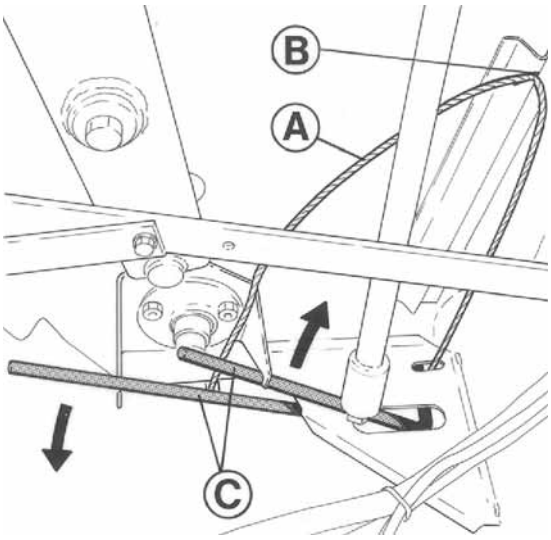

L35

GRAIN ELEVATOR AND GRAIN AUGER (Fig. L36) Must Be Kept Clean and the Alarms in Working Order

The grain elevator and the auger attached to it are on the right-hand side of the combine.
The elevator doors enable the Operator to check the tension of the chains and clean the elevator. An alarm will indicate a drop in the elevator speed and / or slipping of the overload clutch. Any blockage can be cleared through the elevator service doors. After having cleared a blockage, operate the threshing mechanism at low speed for some time before continuing threshing.
The auger next to the elevator fills the grain tank. Doors both in the lower end of the auger and in the auger housing inside the grain tank can be opened to clean the auger. Especially when harvesting in damp conditions, the grain transport system must be cleaned often to maintain its transporting capacity.

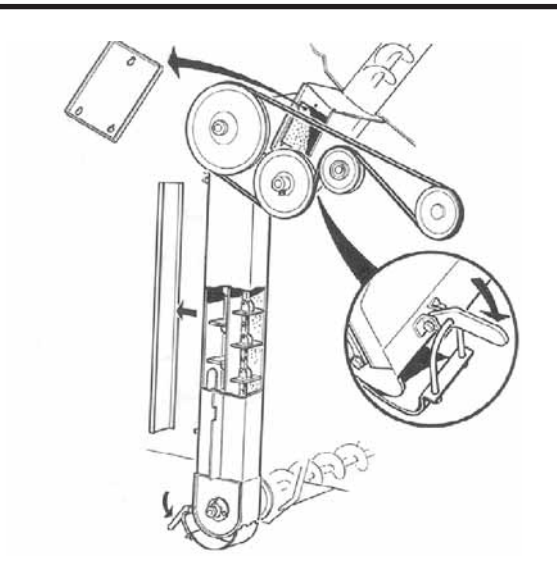
L36

A Warning Light Controls the RETURN AUGER (Fig. L37) Operation

The return auger is located on the left-hand side of the combine. A warning light will flash when there is a blockage in the auger. There are doors in the auger housing and the lower end for cleaning and clearing any blockage. The rearmost cleaning door can be opened with a guard-opening tool.

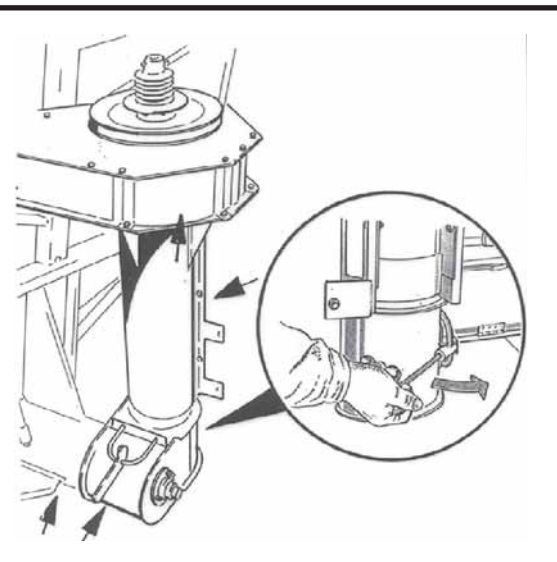
L37

https://truckmanualshub.com/

Safe Working in the GRAIN TANK (Figs L38b and L39b)

The grain tank is filled by the grain auger, and an alarm sounds when it is full. The height of the alarm sensor can be adjusted by moving the sensor from one hole to another. This will either advance or postpone the alarm.

When cleaning or servicing inside the grain tank, the engine must be off and the ignition key
removed to make sure the combine cannot be started.

While threshing, the grain tank cover may be locked ajar using locking device A inside the tank cover to allow more light into the tank. While servicing, locking device B secures the cover will stay open.

For safety reasons, the grain tank cover can only be opened with guard key C, fig. L39b. Opening the cover will switch off transmission from unloading.

To facilitate cleaning, the bottom augers can be removed by detaching latch A. The unloading bottom auger with its bearings can be pulled out of the tank, fig. L38b. The right end of the grain tank has doors for cleaning and the back wall has doors for servicing the engine.
A tool is supplied with the combine for taking grain samples and releasing potential arching. The tool is stored on top of the guard between the grain tank and the cab.

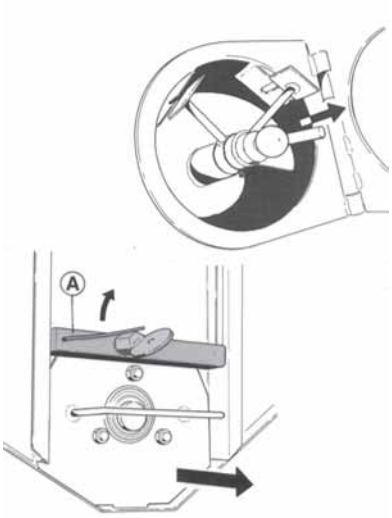

L38b

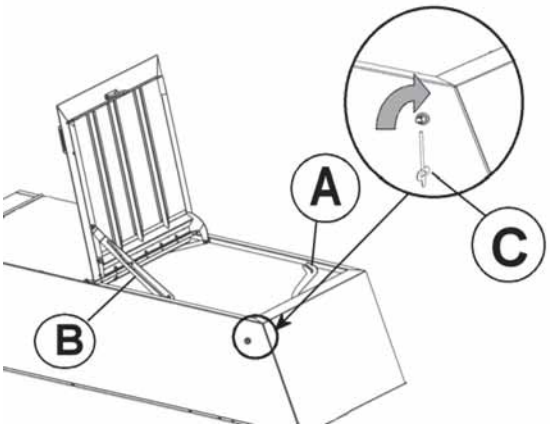

L39b

https://truckmanualshub.com/

Turning of UNLOADING PIPE

Lever Adjustments (Fig. L41a)

The unloading pipe is turned hydraulically into unloading position by pushing control lever A. Keep the lever in its front position until the pipe is all the way up. A warning light flashes on the instrument panel during turning.
The unloading pipe is returned to its transport position by pulling the control lever backwards until the pipe is in its transport position.

Note! The warning light flashes and the control light is on during turning. Unloading must not be switched on until the pipe is all the way up and the control light has come off.

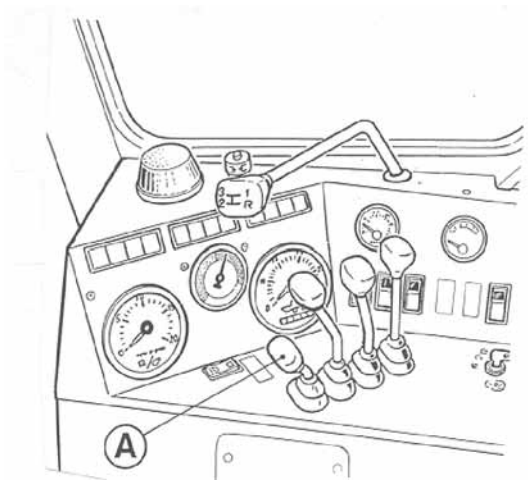

L41a

Engaging of Unloading (Fig. L42a)

To engage the unloading mechanism, pull up lever A, fig. L42a.

While unloading, it must be monitored that there is always enough space for the unloading grain beneath the top end of the pipe. The auger and transmission may get damaged unless the grain can unload unhampered.

All the functions mentioned above are possible with the engine running. The threshing mechanism does not need to be engaged.

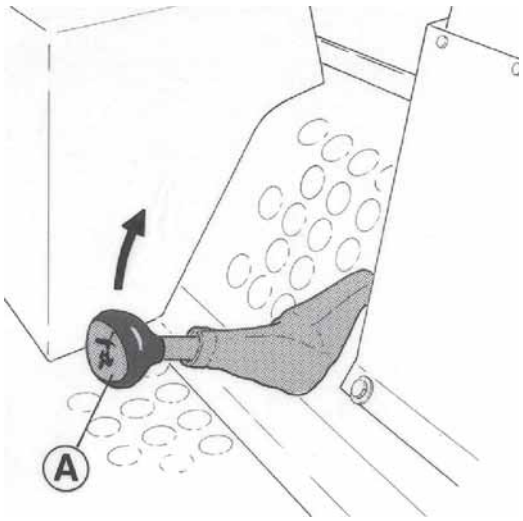

L42a

https://truckmanualshub.com/

Turning of the UNLOADING PIPE

Electrically Controlled Combines (Fig. L41b)

STANDARD CAB

The unloading pipe is turned into unloading position by pressing the front of switch A.

The unloading pipe is returned to transport position by pressing the rear of switch A.

Note! The warning light flashes and the control light is on during turning. Unloading must not be started until the pipe is all the way up and the control light has come off.

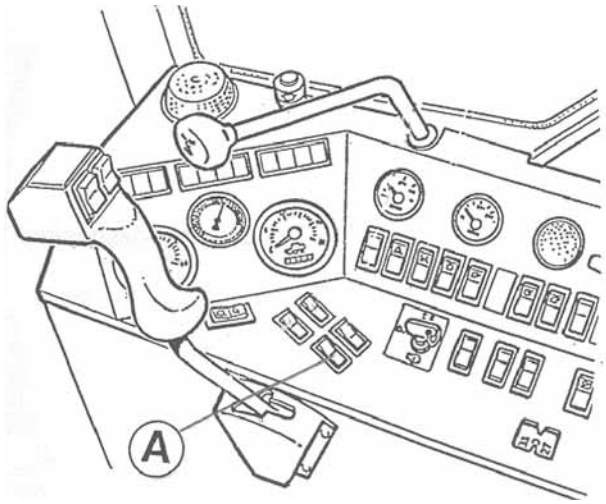

L41b

Engaging of Unloading (Fig. L42b)

To engage the unloading mechanism, pull up lever A.

While unloading, it must be monitored that there is always enough space for the unloading grain beneath the top end of the pipe. The auger and transmission may get damaged unless the grain can unload unhampered.

All the functions mentioned above are possible with the engine running. The threshing mechanism does not need to be engaged.

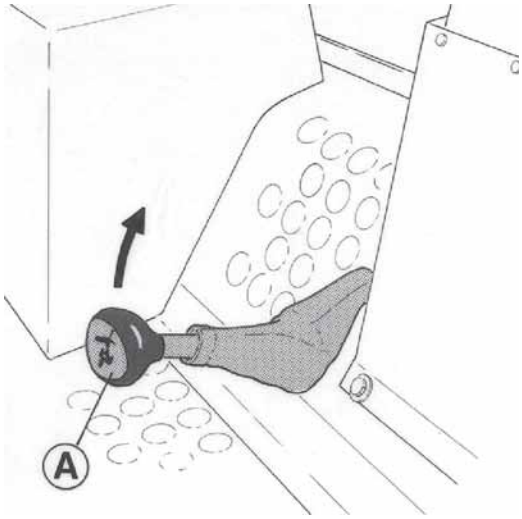

L42b

https://truckmanualshub.com/

Turning of the UNLOADING PIPE

De Luxe Cab (Fig. L41c)

The unloading pipe is turned by switches A. Press the upper button to raise the pipe and the lower button to lower it in direction of transport position.

Depending on the specification there may be a quick operation to turn the pipe. In this case pressing one button will turn the pipe to its extreme position. The movement will stop if either button is pressed during turning. Another press will turn the pipe in the required direction. The movement can also be stopped by depressing SAFETY SWITCH B on the instrument panel. **The switch shall always be depressed when driving in traffic.** To release the safety switch, turn the knob clockwise.

Note! The warning light flashes and the control light is on during turning. Unloading must not be started until the pipe is all the way up and the control light has come off.

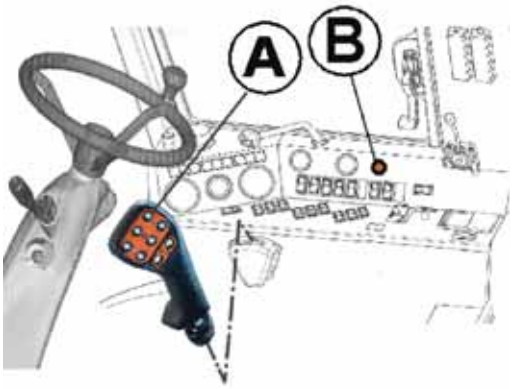

L41c

Engaging of Unloading (Fig. 42c)

To engage the unloading mechanism, pull up lever A, fig. L42c.

While unloading, it must be monitored that there is always enough space for the unloading grain beneath the top end of the pipe. The auger and transmission may get damaged unless the grain can unload unhampered.

All the functions mentioned above are possible with the engine running. The threshing mechanism does not need to be engaged.

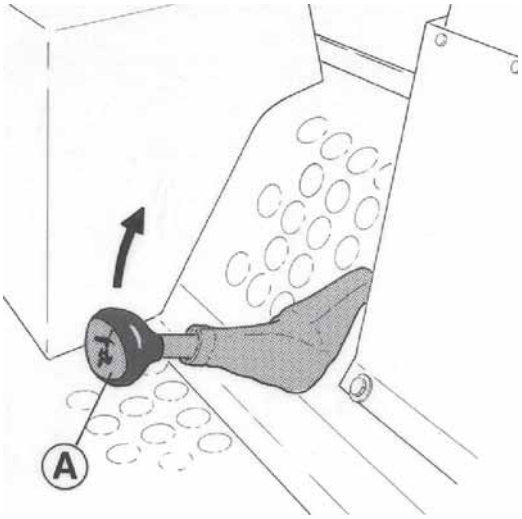

L42c

Danger Zone behind the STRAW CHOPPER (Figs. L45, L46 and L47)

Beware of the rotating straw chopper knife!
Never make adjustments or clean the chopper while the engine is running!
Never stand in the no-access danger zone behind the rotating chopper!

The degree of chopping can be varied by turning counter knife beam A, fig. L45. To do this, slacken screws B on both sides of the chopper, and turn the counter knife beam into the required position using the lever in the left-hand end of the beam turn.
The top-most position of the counter knives can be used when chopping dry straw to produce short chaff. **When chopping damp straw, it is advisable to use the mid position.** For turnip rape and flax use the lowest position.
The height of chaff spray is adjusted by changing the position of spray hood D after slackening screws E in the holes on both sides of the chopper. In the upper position the chaff is distributed over a wider area, while it is distributed in a narrower area with the spray hood in its lower position. The width and sideways direction of the spray is adjusted by changing the position of vanes F. This is done either with screws or quick-catch depending on the model.

NOTE! Avoid adjusting the spray hood in such positions that the chaff is spread onto uncut crop, as this can block the knife, overload the sieves and result in poor grain in the tank.
To obtain long straw, turn the chopper down, fig. L46 and do the following:

Release quick-catch H, fig. L45.
Release the spray hood locking with tool J (or the quick-catch) and turn the spray hood against the straw hood where it will get locked.
Open the belt guard with the tool and turn the guard to its top position.
Turn the chopper down. The gas springs dampen the lowering and hold the chopper down.
Remove the drive belt from the pulley and place it on the hooks behind, making sure that there is no friction, fig. L46.

NOTE! For safety reasons, always remove the belt and hang it on the hooks when the spray hood is turned against the straw hood.

When driving on the road with the chopper lowered, the chopper knives must be protected by the spray hood, fig. L47. This position is for transport only. Before starting threshing, the spray hood must be lifted against the straw hood.

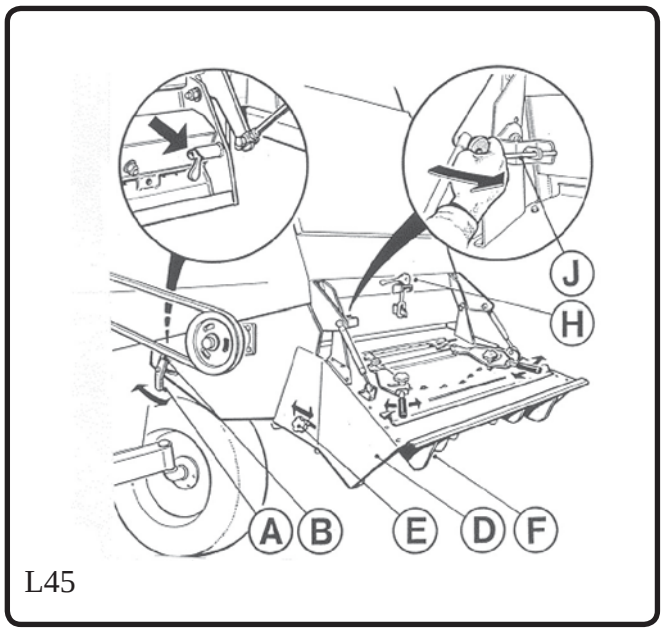

L45

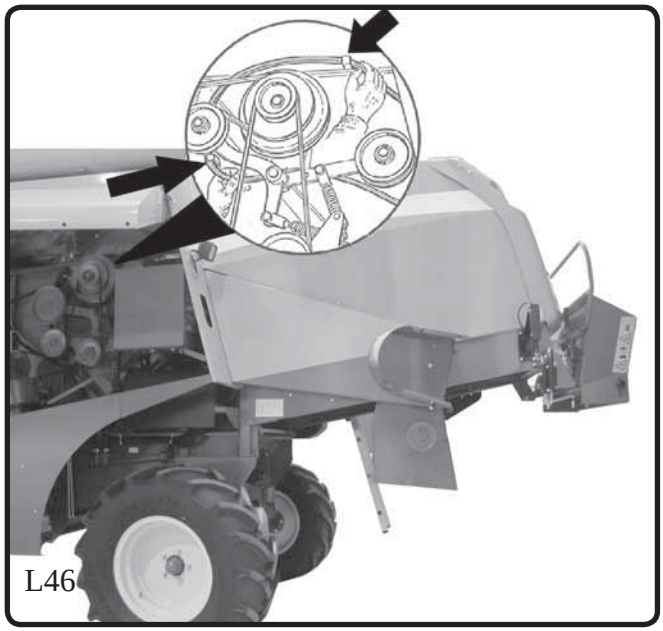
L46

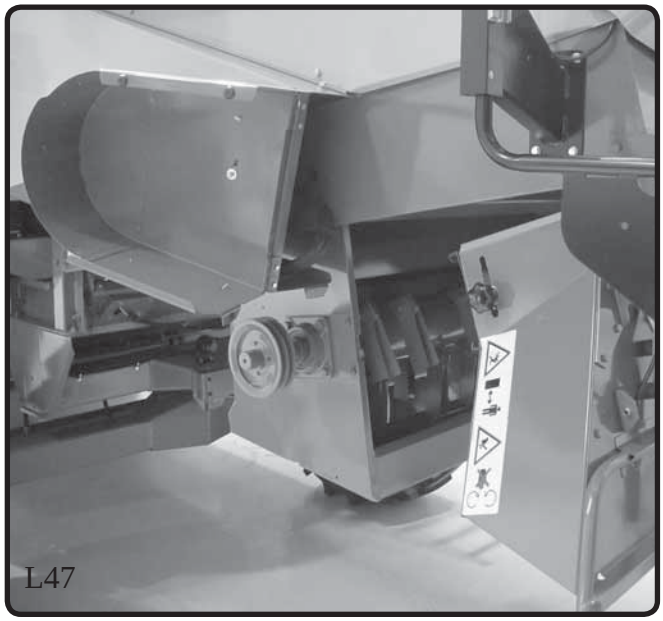
L47

https://truckmanualshub.com/

ENGINE, Source of Power

The engine is a water-cooled four-stroke direct-injection diesel. For a more detailed description of the engine, see the engine manual.
The power is transmitted from the rear of the engine to the traction, threshing mechanism, grain tank unloading and hydraulic pump. At the front of the engine, one belt drives the fan and alternator and another the compressor of the optional cab cooling system.

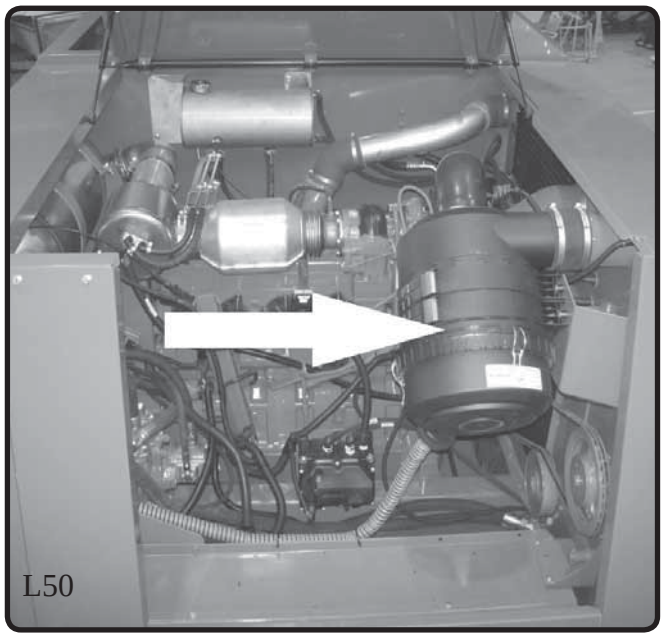
L50

Suction Air Filters (Fig. L50)

The engine suction air is cleaned by coarse filter A and two-part paper filter B. On the instrument panel there is a blockage indicator, the glass of which will turn red, if the under pressure in the engine suction channel becomes too high. See cleaning instructions under “Maintenance”. Remove any debris from the coarse filter.
The filter may also be equipped with an exhaust fume ejector, which continuously removes any debris collected in the filter housing.

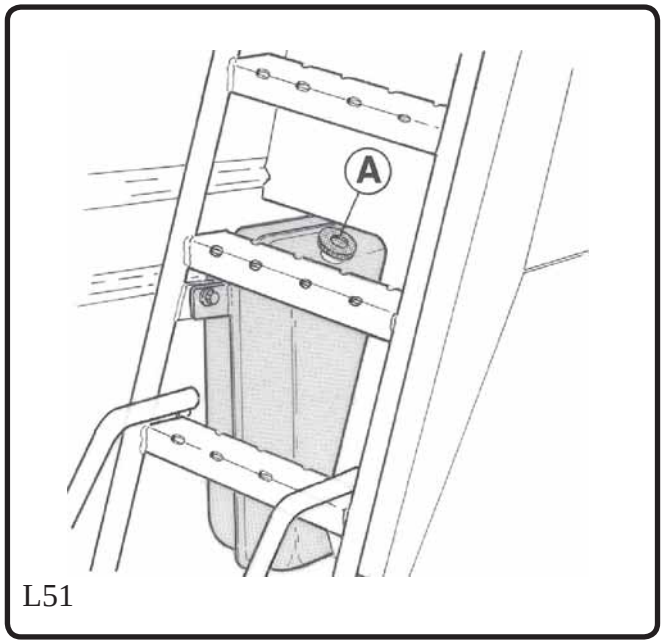

L51

The Fuel Tank (Fig. L51) Shall Be Filled with Pure Fuel Only

The fuel tank is on the right side of the combine. Use high-quality gas oil as fuel. See the grade recommendations in the Engine Manual. The fuel shall be pure and water-free.
Before refuelling, remove all impurities from around filler A. Never drain a spare tank into the fuel tank, as impurities and water tend to settle on the bottom. Never fill fuel from a storage tank into which fuel has been added on the same day. Impurities have not settled on the bottom yet.
If fuel is added from a spare tank, a funnel with a sieve should be used.
On the outer rim of the fuel tank filler plug there are air channels through which air goes into the tank. Make sure these channels do not get blocked. Never use a filler plug that does not have air channels.

https://truckmanualshub.com/

4th generation AGCO SISU POWER motors has adopted exhaust gas treatment with SCR technology (Selective Catalytic Reduction). In SCR technology a liquid called DEF (Diesel Exhaust Fluid) is injected into exhaust gases. Most commonly known trademarks of DEF are AdBlue, Air1 and Greenox.

For the DEF requirements, see engine manual.

DEF tank (30 liters) is located under the right guard, and the filler neck shown in Figure L51B.

L51B

Be careful when handling DEF. DEF is aggressive to some materials and corrosive to some metals. DEF becomes crystalline when in contact with air. In case of a spillage rinse with plenty of water and dry with a clean cloth.

Even small amounts of diesel fuel in DEF tank may damage the gaskets of the SCR system!

Combine is not equipped with a heating system for DEF, so use of combine below -10 ° C temperatures is prohibited. Start up and short-term transfers are possible.

AGCO SISU POWER SCR system is durable and almost maintenance free. Only main filter change for supply module is required in normal use. AGCO SISU POWER SCR is equipped with on-board diagnostic, which will warn the operator or limit the usage of the machine if any problems (e.g. leakages or blocking of lines) occur in the system.

For the maintenance and adjustment of SCR, see engine manual.

https://truckmanualshub.com/

Lubrication System

It is of utmost importance to use correct lubricating oil, in accordance with the load placed on the engine. See Lubrication Table under ”Maintenance”.
Check the oil level daily before starting; it shall be between the minimum and maximum marks on dipstick A, preferably near the maximum, fig. L52. Oil is refilled through filler B. A warning light indicates low oil pressure. Should the oil pressure warning light come on with the engine running, stop the engine immediately and find the cause for the trouble.

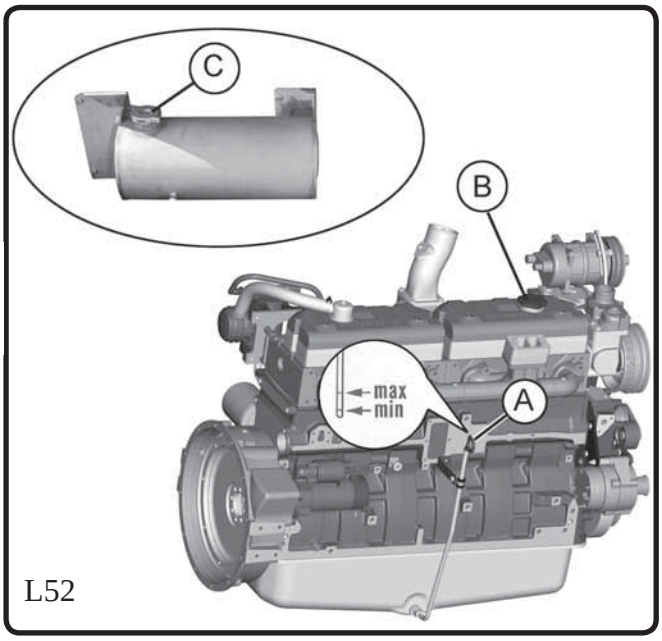

L52

Cooling System

When the combine leaves the factory, the engine cooling system has antifreeze added. Do not use ordinary water as coolant because of the risk of corrosion.
Check the radiator coolant level daily before starting. It must be 20 - 30 mm below the filler neck.
The coolant temperature gauge on the instrument panel indicates the temperature of the engine coolant. In normal working conditions the needle must be between 80 -100°C. A control light on the front pillar and a buzzer indicates engine overheating. The alarm temperature is approx. 106°C. If the temperature starts to rise, check that the outside of the radiator is not clogged. Direct compressed air from the side of the fan through the radiator, or use a brush for cleaning. Always be careful not to damage the lamellas. To clean the equipment, open protective cover E above the radiator, fig. L53. Any impurities are removed through the emptying door below.

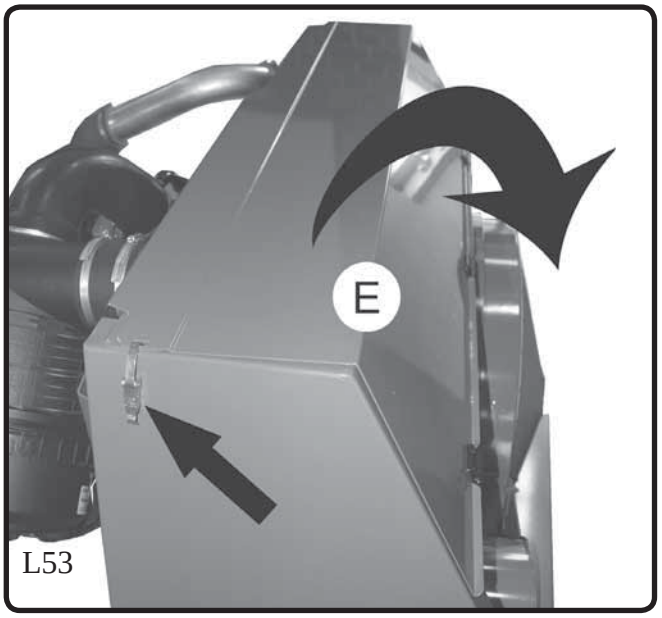

L53

https://truckmanualshub.com/

CAPACITY MONITOR Sentry 6510

OPERATION

User interface

Figure : User interface buttons

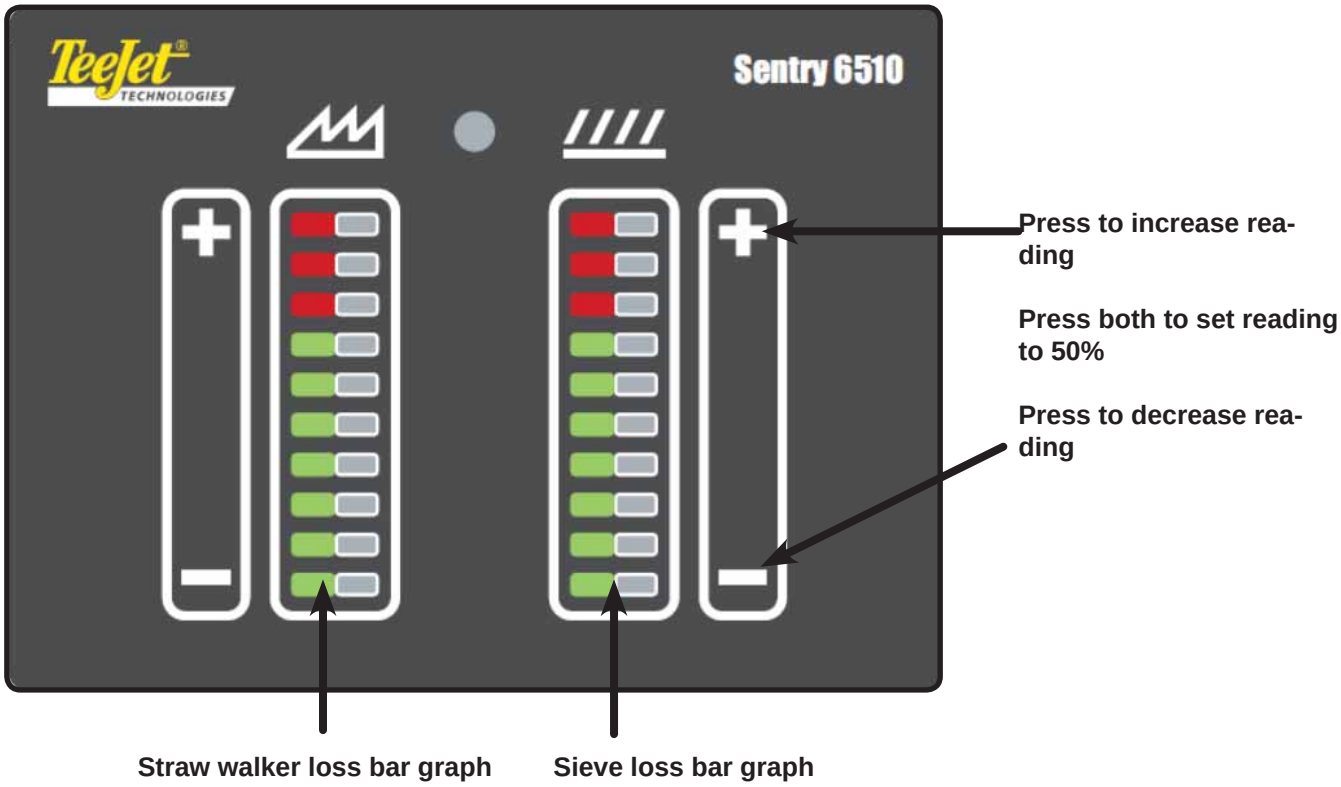

The LEDs on each bar graph indicate the current relative loss value as measured by the straw walker sensor and the sieve sensor.
When the monitor is turned on, the bottom LED in each graph will be on, indicating the power is on and the system is running as expected. Press the + and - buttons to change the sensor gain, which in turn alters the reading on one of the graphs up or down by one light. Hold the
button to continue raising or lowering the gain.

Press + and - simultaneously to set the reading to the middle (50%). These cases will prevent changing gains:

- If no loss is detected at all, the reading cannot be changed at all
- If the reading is above ten, the reading cannot be increased
- If the reading is below one, the reading cannot be decreased
- If the loss is very low, it may not be increased to the maximum, but will be adjustable to the highest possible value

NOTE: To ensure that the grain loss readings are as accurate as possible, it is recommended to check the reading of the monitor against actual grain loss frequently, as described in **Estimation of Threshing Losses**.

https://truckmanualshub.com/

Setting up the capacity monitor

Not even the best capacity indicator can prevent grain from being lost. The purpose of the monitor is to inform the operator of the approximate
amount of grain being lost.

It is also important to understand that the loss readings from the monitor are not absolute measurements, but are instead meant to indicate how the loss is perceived when harvesting variables change.
For example, if the grain lost doubles but speed does not change, the reading on the monitor doubles. If, however, the grain lost doubles and the speed doubles, the reading on the monitor is unchanged. If the grain lost is unchanged and the speed doubles, the reading on the monitor is halved.
To obtain the most accurate relative readings, set up the monitor as follows:

1. Adjust the combine harvester to an acceptable loss without using the capacity monitor, following the guidelines in Estimation of Threshing Losses.
2. Set the combine harvester to a consistent speed.
3. While driving, simultaneously press the + and - buttons on the straw walker loss bar graph, then release them to set the bar graph to the middle of the scale (50%).
4. While driving, simultaneously press the + and - buttons on the sieve loss bar graph, then release them to set the bar graph to the middle of the scale (50%).

Figure : Sieve loss buttons

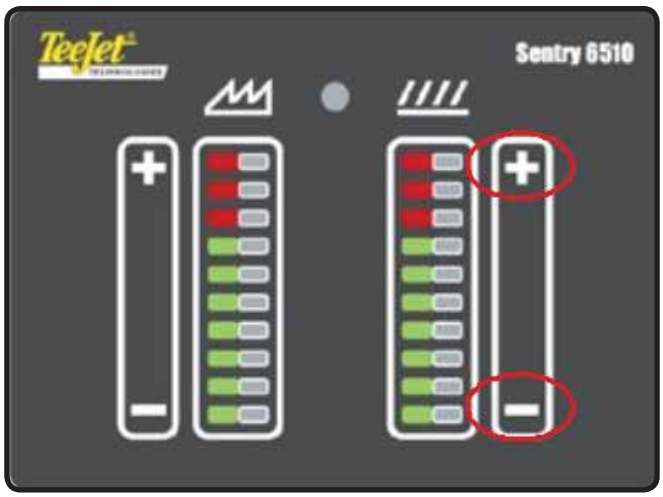

Figure : Straw walker loss buttons

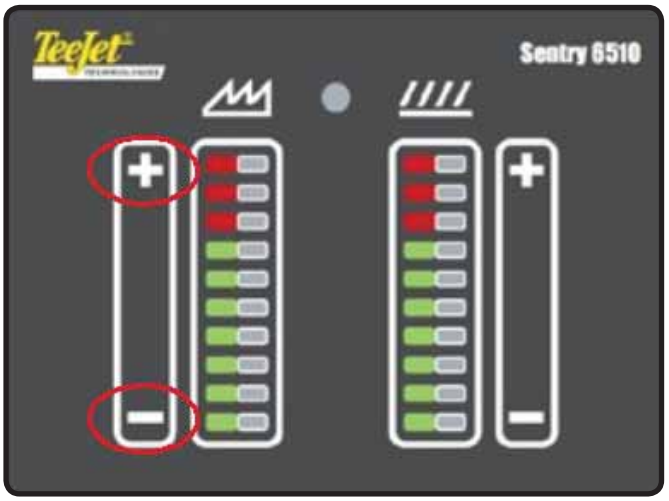

https://truckmanualshub.com/

Display indications

A correctly adjusted monitor will indicate with the LEDs both the relative grain loss and when the combine harvester capacity is being fully utilized. Figures describes the conditions that different readings indicate.

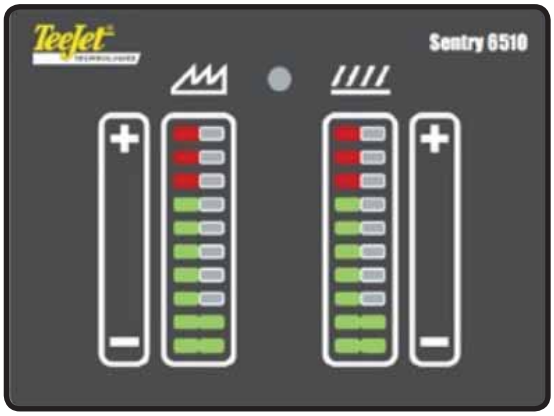

- Both displays at bottom of scale
- No loss
- You can speed up (higher capacity)

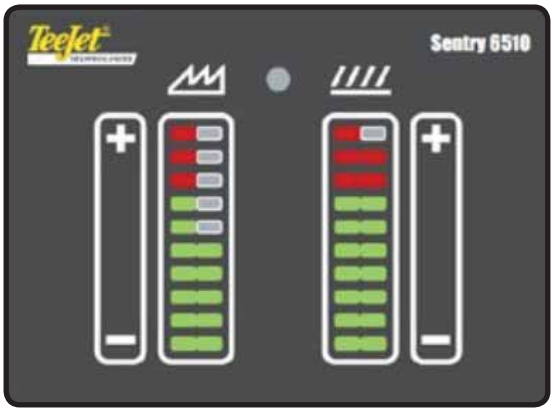

- Loss over the sieves
- Too much air or blocked sieves

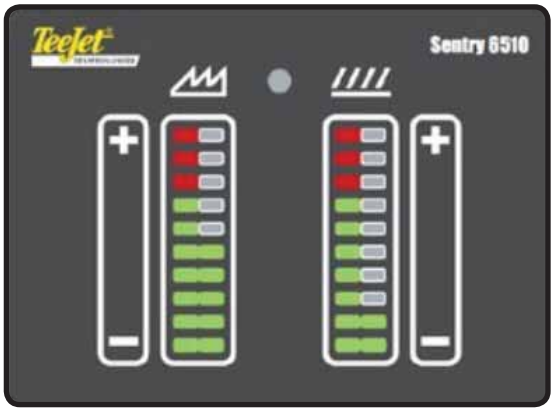

- No or intermittent loss over the sieves
- Too little air under the sieves

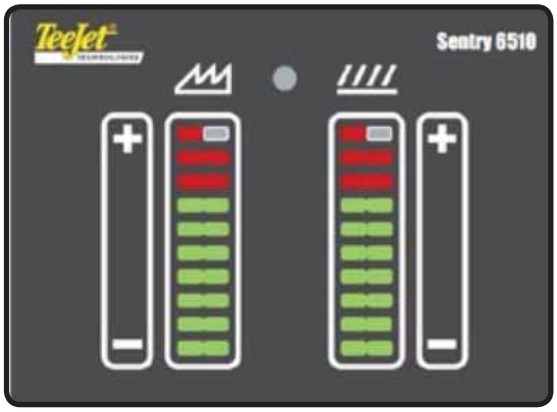

- Both displays at top of scale
- Too much loss
- Slow down

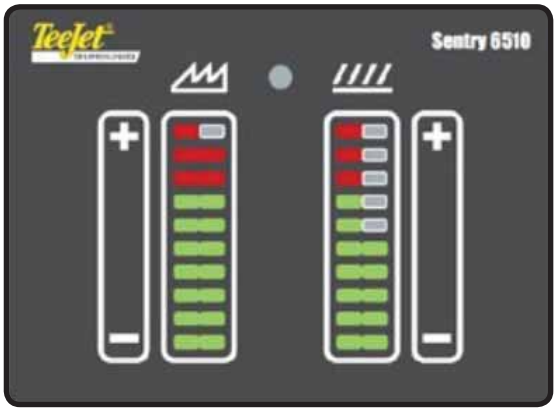

- Loss over the straw walkers
- Straw walkers overloaded
- Slow down

https://truckmanualshub.com/

Storage of values

When + or - is pressed, the gain for both graphs are saved to the monitor. When the monitor is turned off, these gain values are preserved.
When the monitor is restarted, it begins working at the gain settings applied before power off.

Supply voltage monitoring

The monitor constantly checks to ensure that the power supply voltage is between 8-16 Volts.

A supply voltage outside of this range could cause inaccurate readings. If the voltage is outside of this range, the bottom LED on each graph will flash, the top LED on each graph will be continuously lit and the monitor will cease reporting grain loss readings.

When the supply voltage returns to the acceptable range, the monitor will return to normal operating and grain loss reading resumes.

Speed compensation

When the monitor is connected to a speed sensor, the monitor automatically compensates for the measured forward speed, so that the indicated loss remains constant for the area covered.
In this case, the grain loss reported is a “loss per area” value, and this mode of operation is know as a “Capacity Indicator”

The monitor automatically detects the type of speed sensor connected. No speed sensor calibration is needed.

NOTE: If no speed impulses are received for eight seconds, the monitor will switch to “loss per time” mode and will assume a speed of 5 km/h.

Sensor sensitivity, position and cleaning

In most cases, the straw walker sensor sensitivity should not be changed from the NORM position. If a crop has exceptionally large seeds, sensitivity may be adjusted to MIN, or if the crop has exceptionally small seeds, sensitivity can be adjusted to MAX, but in general it is preferable to control the readings with the gain on the monitor.

Sensors often become covered in a layer of dirt during use, particularly when harvesting green or moist crops. Clean this dirt from the sensor with hand cleaner as often as required.

https://truckmanualshub.com/

DRIVING AND THRESHING INSTRUCTIONS

Before Starting the Combine Check that:

There are no foreign objects inside the combine.
The oil levels are correct (engine, hydraulic tanks).
There is coolant in the cooling system.
There is fuel in the tank.
The threshing mechanism and unloading pipe clutches are in neutral.
There are no people or animals near the combine.
Always before starting, sound the signal to warn those nearby.

Starting the Engine:

Mechanical Traction Transmission

Always first pull the traction speed control lever back for a moment, for slow speed.
Fully depress the clutch pedal and select the required speed range.
Remove your foot from the clutch calmly but quickly.
Adjust ground speed with the traction speed control level.

Hydrostatic Traction Transmission

Select the required gear with the traction speed control lever in its mid position.
Push the lever slowly forward or backward to drive the combine in the respective direction.
Adjust ground speed with the traction speed control level.
If the temperature is below 0oC, idle the engine for some 15 minutes before starting off to allow the oil in traction hydraulics to warm up.

Test the brakes.

Note! Speed range 3 is only meant to be used when driving on the road with the grain tank empty. Using it on the field is prohibited.

Changing Gears:

Mechanical Traction Transmission

As the gears are not synchronized, they must be changed calmly.
Do not change gears while moving.

1. When the combine is stationary and you want to start off:
   Depress the clutch and wait for a few seconds before engaging the gear.

2. When the combine is moving and you want to change gears
   Depress the clutch and wait until the combine has stopped (brake if necessary). First change the gear to neutral and then to the required gear.
   This is the most efficient way to change gears, and it strains the transmission the least.

Hydrostatic Traction Transmission

On hydrostatic combines gears must always be changed with the combine stationary on level ground. First change the gear to neural and then select the required gear. If necessary, “drive” on hydraulics for a while to engage the gear. This brings the gears to the right positions in relation to each other.

https://truckmanualshub.com/

When Driving on the Road:

The brake pedals must be latched together.
Brake smoothly as the rear wheels easily rise from the ground when applying the brakes violently.
Never drive downhill with the gear in neutral.
In accordance with the statutory traffic regulations when driving on the road, the cutting table guards shall be mounted, the front and rear lights correctly aligned, only the headlights on and the grain tank empty.

When Driving on the Field:

The brakes may be used independently to reduce the turning radius.

In Soft Field Conditions:

To improve the carrying capacity, the front tyre air pressure may be reduced by approx. 20 kPa (0.2 bar) below the normal pressure.
Do not reduce the air pressure in the rear tyres.
With reduced tyre pressure, only half-fill the grain tank.
When returning to normal harvesting conditions or the road, return to recommended pressures.

On Steep Slopes:

To improve the stability of the combine, increase the tyre pressure by approx. 30 kPa (0.3 bar) above the normal pressure.
To eliminate the risk of overturning, only half-fill the grain tank.

https://truckmanualshub.com/

Threshing Instructions

Choose the Correct Time and Conditions

Before starting the harvest, make sure that the crop to be threshed is ripe and dry enough. The germinating power of most crops is easily reduced if the threshing moisture exceeds 25%.
Moreover, moist crops complicate harvesting and overload the threshing mechanism. They also easily stick onto the surfaces of the separating equipment and elevators, which will increase the need for cleaning.
Particularly in dry conditions with moisture below 12%, straw becomes chopped extremely easily. This will hinder the straw walker operation and burden the shaker shoe excessively.

Good Threshing Results with Even Feed

Always run the engine at maximum revolutions when threshing. When threshing, it is important to adjust the forward speed, the cutting height and the reel according to crop conditions to achieve as even feed as possible. Do not cut too low. Leafy matter moistens the straw leading to a poor threshing result.
Empty the stone trap daily. Before emptying, stop the engine, lock the parking brake and fit the cutting table support.

Start with the Recommended Settings

In the table at the end of this chapter you will find settings and adjustments for different crops. After adjusting your combine according to these recommended settings, test run the combine at the speed you will use in harvesting. Monitor the quality of the grain in the tank and the losses in the field.
Note! When stopping threshing heavy-strawed crops without the chopper, it is important to make sure that all the straw comes out of the straw walkers without clogging the chaff hood.

Reel Position in Accordance With Crop

For normal standing crops, set the reel in its rear position at such a height that the reel tines lightly strike the crop. Reel speed slightly higher than the combine ground speed to ensure the crop is feeding head first, fig. M1.

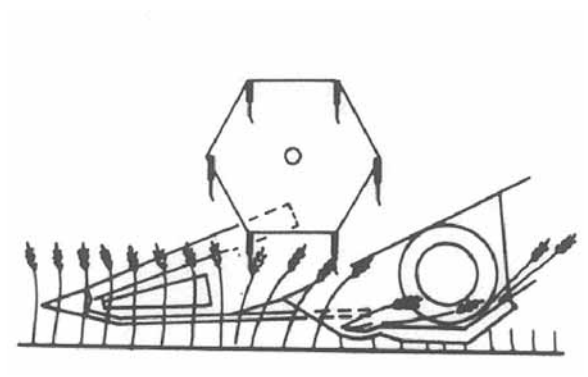

M1

For short-strawed crops, lower the reel so that the tines strike just above the knife. The reel speed increases the faster you drive and the shorter the straw is cut with the heads. The reel must pull in the heads toward the table auger.

For long-strawed standing crops, set the reel in its forward position, the speed lower than the combine ground speed so that the heads are pushed forward and the crop is laid butt first onto the table, fig. M2.

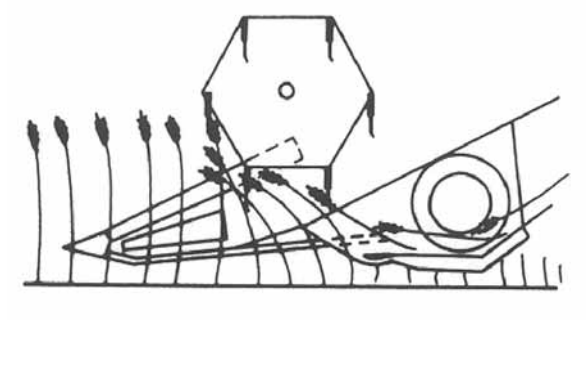

M2

For laid-down crops, set the reel forward, reel speed higher than the combine ground speed and the reel angled to facilitate the gathering of the crop, the knife cutting below the heads, fig. M3. When using crop lifters, the reel should feed the cut crop onto the table auger with the reel tines in the normal position.

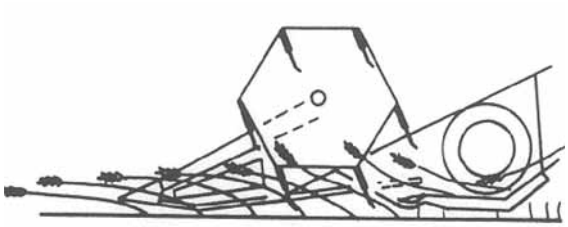

M3

Adjust the straw dividers to reduce table losses and improve feeding.

To avoid threshing losses caused by the straw dividers, pay special attention to adjusting them according to the conditions and crops.

Adjust the height of the dividers with slide piece D, fig. M4, so that in laid-down crops the dividers follow the contours of the field beneath the crop. In standing crops the head of the divider should be set 10…cm above the knife.

Adjust side guide plate B so that it prevents the cut crop from getting between the table end and the reel end. Long-strawed reclining or laid-down crops are limited and lifted by upper guide plate A so that the reel can gather the crop for cutting and convey it to the table auger.

Side guide tube C is used in long-strawed crops to move the uncut crop aside.

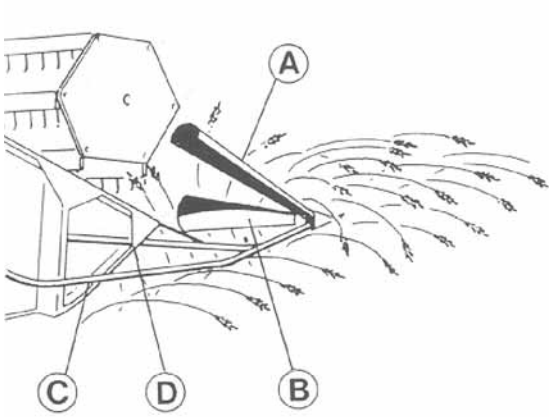

M4

Estimation of Threshing Losses

2 % is generally considered the maximum acceptable threshing mechanism loss. The losses can be calculated as follows: Estimated yield 5000 kg/ha, the weight of 1000 grains 35 g. Within the cutting width of the combine, max. 3 grains may be found in a palm-sized area of 1 sq.dm.

Sources of grain loss:

Shedding in the field before harvesting
The table
Unthreshed grain
The shaker shoe
The straw walkers

Before making any readjustments, make a methodical check in the above order to determine the cause for the loss. Make one adjustment at a time and check the result with a test run.
Check the crop in front of the combine well to ensure that shedding has not occurred before the machine has touched the crops.
To test for the table loss, stop the combine and reverse it one combine length; any grain loss can easily be seen in the field.

Causes for table loss:

The reel has threshed the grain onto the field due to too high or low revolutions and too wide a clearance.
Local blockage in the knife causes a depressed and uncut section in the field. This may be due to a damaged knife plate or finger.
Remember that uneven feed onto the cylinder causes disturbances in the whole threshing mechanism and leads to extensive grain losses.

Always aim at even feed when threshing!

Unthreshed Grain

Check that the grain gets threshed off the heads. Check the long straw on the straw walkers as the chopper also removes the unthreshed grains efficiently.
Cylinder speed should be moderate and concave clearance as wide as possible to obtain unbroken grain and straw as well as minimal grain losses. It is not necessary to aim at complete threshing. Particularly when threshing seed grain, the minimal recommended speed setting for the cylinder should be used, as high cylinder speed damages germinability more easily than minimal concave clearance.

Unthreshed grain loss can be caused by:

Cylinder speed too low
Cylinder-concave clearance too wide
Uneven feed
Crop too green in parts
Damaged cylinder or concave.

Shaker Shoe Losses

If the sample coming from the sieves (taken on a shovel, for example) shows grain being lost, check for the following:

Uneven feed
Blocked concave and/or straw walkers
Excessive forward speed
Cylinder-concave clearance too small
Too much weed
Crop too damp

Straw Walker Losses

If the sample coming from the straw walkers shows grain being lost, check for the following:

Uneven feed
Blocked concave and/or straw walkers
Excessive forward speed
Cylinder-concave clearance too small
Too much weed
Crop too damp

Quality of Grain in the Tank

If there is crushed or cracked grain in the sample, the reason could be

Cylinder speed too high
Cylinder-concave clearance too small
Blocked concave
Crop too green in parts

https://truckmanualshub.com/

If the sample is not clean, the reason could be:

Insufficient fan speed
Incorrect direction of fans
Grain sieve holes too large for crop
Chaffer sieve set too wide open
Forward speed too low (insufficient load on the threshing mechanism)
Crop sparse in places and weedy
Cylinder-concave clearance too small
Too many breaks in threshing (turning, etc.)

Malfunction Problems

The cylinder winds up and gets clogged:
Crop damp or green
Forward speed too high
Cylinder-concave clearance too wide
Cylinder speed too low
Cylinder bars damaged or worn
Rear beater damaged

The grain auger gets clogged:
Chaffer sieve set too wide open
Insufficient fan speed

The return auger gets clogged:
Grain sieve holes too small
Grain sieve blocked
Insufficient fan speed
Chaffer sieve set too wide open

Cleaning Instructions When Going From One Crop To Another

Drive the combine on level ground. Change the gear into neutral and lock the parking brake. Remove the ignition key whenever the engine is switched off to ascertain that no outsiders can start the combine. Do not implement any cleaning operations with the engine running!
Cleaning with compressed air is recommended. An appropriate brush may also be used.
Support the reel and the cutting table in their top positions.
Open the stone trap and empty it with a cassette key, for instance.
Open all cleaning doors (not those to the grain tank).
Remove and clean all sieves.
Clean the supporting grooves of the sieves in the shaker shoe.
Lock the back door in the shaker shoe.
Remove and clean the bottom grooves in the straw walkers.
Run the threshing mechanism for 2-3 min. with the cleaning fan at maximum speed and push the direction lever to and fro.
Lift and lower the cutting table, but do not start it. Leave the table in its bottom position.
Stop the threshing mechanism.
Check that the grain pan is empty. If necessary, remove and clean the cassettes.
Check the spaces between the return and grain augers and remove any remaining grain.
Shake the chain of the feeding elevator to make the grains run down. Clean the elevator inside and out.
Clean the cutting table.
Remove the bottom augers of the grain tank and the part of the unloading pipe in the grain tank.
Brush the bottom furrows, discharging the grains through the bottom door.
Clean the unloading pipe by turning the auger manually counter-clockwise with the pipe being raised half way up to make the grains run out through the bottom door.
After cleaning, refit the parts and close the doors.

APPROXIMATE SETTINGS

https://truckmanualshub.com/

Standard Threshing Mechanism

This table only gives recommended settings. While threshing, adjust the settings according to the harvesting conditions.

Crop	Threshing Cylinder	Concave Settings	Shaker shoe		Fan	
	RPM	Concave front mm	Chaffer sieve open mm	Grain sieve hole Adjustment sieve mm	RPM	Direction notch
Rye	950... 1250	8...15	10...15	10...12 4...10	650... 750	2...3
Barley	950... 1300	6...12	12...16	12...16 4...12	650... 750	2..3
Wheat	900... 1300	8...12	10...14	10...12 3...8	650... 750	2..3
Oats	800... 1200	9...16	12...16	12...16 4...10	600... 700	2...3
Rape	750... 1000	20...30	6...10	5 0...3	600... 650*	2...3
Turnip rape	750... 1000	15...25	5...7	5 0...3	600... 650*	2...3
Timothy	700... 1000	9...12	0...3	3...5 0...3	600.. 650*	5 (closed)
Clover	1100... 1300	6...9	14...17	5 0...5	600... 650*	2..3
Pea	600... 800	24...27	12...18	16 8...14	650... 700	2..3
Meadow fescue	800... 1050	6...12	8...10	5 2...5	600... 650*	2..3
Sun flower	400... 600	30...35	11...13	12...16 8...14	650... 750	2..3
Buckwheat	700... 1000	6...9	12...16	8...12 3...8	600... 700	2..3
Cumin	600... 850	15...20	5...8	5 0...5	600... 650*	2...3
Honey flower	600... 950	10...16	2...5	5...12 0...5	600... 700*	5
Flax	1000... 1300	6...8	5...8	5 2...5	600... 700	2...3
Maize	400... 900	20...36	12...16	12...16 removed	800...900	2..3
Soybean	400... 600	15...18	14...17	12...16 10...14	650...800	2...3
Sorghum	600... 1000	6...12	6...12	5...8 3...7	700...850	2...3
Rice	600... 1100	16...28	10...14	10...16 8...14	550...800	2...3

*) with the bottom door open

The normal front:rear clearance ratio is 2:1 in the main concave. In dry conditions when straw is extremely brittle, it is advisable to use concave ratio 1.5:1...1:1, see fig. L22. I.e. clearance at the rear of the concave is bigger than in the normal setting. This will reduce straw damage and walker losses.
The setting is changed by adjusting the rear supports of the concave longer as explained in chapter ”Maintenance”, fig. P22. A non-standard ratio shall be checked every time clearance is adjusted from the cab. The adjustment mechanism automatically maintains the 2:1 clearance ratio.

Return to the standard setting when working in normal conditions again.

https://truckmanualshub.com/

APPROXIMATE SETTINGS

The TS Threshing Mechanism

This table only gives recommended settings. While threshing, adjust the settings according to the harvesting conditions.

Crop	Threshing Cylinder	Concave Settings		Shaker shoe		Fan	
	RPM	Pre Concave mm	Main Concave front mm	Chaffer sieve open mm	Grain sieve hole Adjustment sieve mm	RPM	Direction notch
Rye	950... 1250	14...20	8...15	10...15	10...12 4...10	700... 800	2
Barley	950... 1300	12...20	6...12	12...16	12...16 4...12	700... 800	2
Wheat	900... 1300	14...20	8...12	10...14	10...12 3...8	700... 800	2
Oats	800... 1200	14...20	9...16	12...16	12...16 4...10	600... 750	2
Rape	750... 1000	18...25	20...30	6...10	5 0...3	600... 650*	2
Turnip rape	750... 1000	18...25	15...25	5...7	5 0...3	600... 650*	2
Timothy	700... 1000	12...20	9...12	0...3	3...5 0...3	600.. 650*	5 (closed)
Clover	1100... 1300	10...13	6...9	14...17	5 0...5	600... 650*	2
Pea	600... 800	25...35	24...27	12...18	16 8...14	650... 750	2
Meadow fescue	950... 1050	14...16	6...12	8...10	5 2...5	600... 650*	2
Sun flower	400... 600	35...40	30...35	11...13	12...16	650... 750	2...3
Buckwheat	700... 1000	14...20	6...9	12...16	8...12	600... 700	2
Cumin	700... 850	16...22	15...20	5...8	5	600... 650*	2...3
Honey flower	700... 950	15...22	10...16	2...5	5...12	600... 700*	5
Flax	900... 1300	8...12	6...8	5...8	5	600... 700	2...3
Maize	400... 900	25...20	20...36	12...16	16	800... 900	2..3
Soybean	400... 600	20...30	15...18	14...17	12...16 10...14	650...800	2...3
Sorghum	600... 1000	10...15	6...12	8...12	5...8 3...7	700... 850	2...3
Rice	600... 1100	16...28	16...28	10...14	10...16 8...14	550... 800	2...3

*) with the bottom door open

The normal front:rear clearance ratio is 2:1 in the main concave. In dry conditions when straw is extremely brittle, it is advisable to use concave ratio 1.5:1...1:1, see fig. L22. I.e. clearance at the rear of the concave is bigger than in the normal setting. This will reduce straw damage and walker losses. The setting is changed by adjusting the rear supports of the concave longer as explained in chapter ”Maintenance”, fig. P22. A non-standard ratio shall be checked every time clearance is adjusted from the cab. The adjustment mechanism automatically maintains the 2:1 clearance ratio. Return to the standard setting when working in normal conditions again.

https://truckmanualshub.com/

SERVICE AND MAINTENANCE

Safety

Installations and adjustments can only be made by a person with the required skills and qualifications and the necessary knowledge of the machine in question.

Installations, adjustments and repairs must be undertaken with the engine stopped and the ignition key off.
All the moving parts must be in balance and stopped and, when necessary, locked. Support the cutting table and the reel in their top positions. Ensure that there is no pressurized energy in the fluid systems before opening mechanical or hydraulic couplings. (The gas accumulator for the table, the air conditioning equipment, the radiator, etc.)
Double-check that there is no risk of injury when starting the engine either during or after service measures.

Ensure that all periodic checks and cleaning are carried out on time in compliance with the instructions so that no such malfunctions may occur which can cause any risk or hazard.

General Instructions

- Make sure you are skilled enough to service the combine before undertaking any maintenance work. If not sure, contact a qualified service man.
- Get acquainted with the combine structure and the following service instructions before undertaking any work.
- Wear appropriate protective clothing.
- Use appropriate tools and other equipment.
- Handle the combine and any work materials in such a manner that there is no risk of injuring yourself or anybody else, or harming the environment.

WELDING

The regular service measures required do not involve welding, but it may sometimes be necessary when doing repairs. Only qualified hot work operators are allowed to weld.
Welding causes a considerable fire risk. Clean the combine carefully before undertaking any welding work and make sure you have a fire extinguisher handy. Appropriate fire watch shall be seen to.

The electrical system of the combine houses several components with semiconductors. They get easily damaged when there are voltage peaks caused by arc welding. The main principle is to detach any structures that require welding. If any fixed combine structures need to be welded, take the following precautions:

- Switch off the master switch or disconnect one of the battery cables.
- Disconnect connector A to the Comvision- display unit inside the instrument panel. Fig. LH
- Disconnect the feeder cable to the control unit of the Common-Rail motor. First remove the protective cover off the unit attached to the motor. Turn the locking clip on the connector and pull the connector open. Fig. CTA
- Disconnect the connector of SCR supply module.

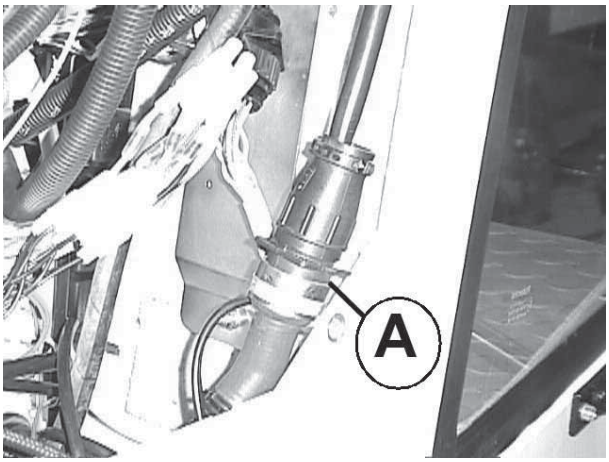

LH

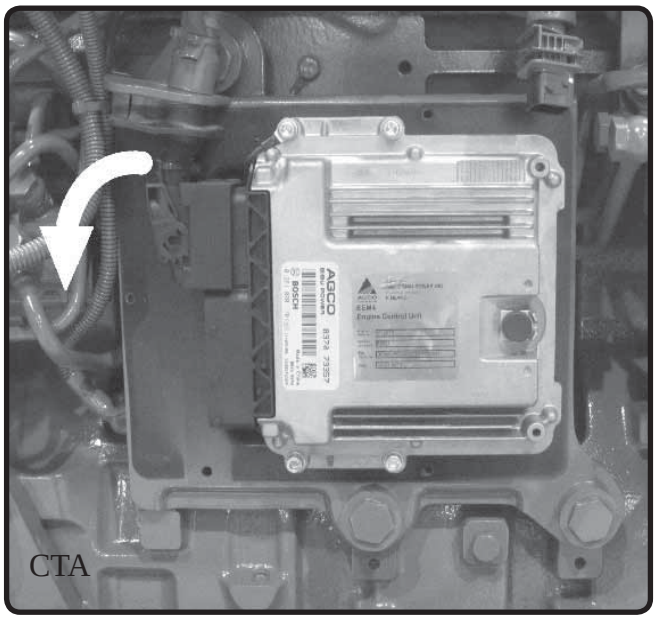

CTA

https://truckmanualshub.com/

The Functioning of the Combine Is Based on the Condition of the KNIFE

Check that each knife holder touches the knife section lightly. Adjust by striking the holder down, fig. P1.
Check that each knife section touches the corresponding finger. If a knife section is bent, resulting in too wide a gap between the finger and knife section, replace the section.

Check the reversing points of the knife, fig. P2. The knife sections should centre in the knife fingers at the inner and outer extremity of its stroke.

On combines with a crank-driven knife the adjustment is made in the following way:

If there is need for adjustment, first ensure that the knife drive joint has been turned into the right depth at the end of the knife (fig. P4). The final adjustment is made by undoing both locking nuts B on knife drive shaft A, fig. P3, and turning the shaft in the required direction. When turned clockwise the reversing point is shifted to the left, when turned counter-clockwise it is shifted to the right. One turn of the shaft shifts the reversing point by some 7.5 mm.

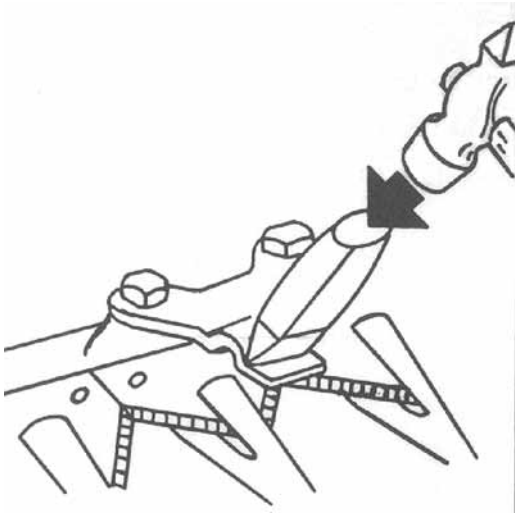

P1

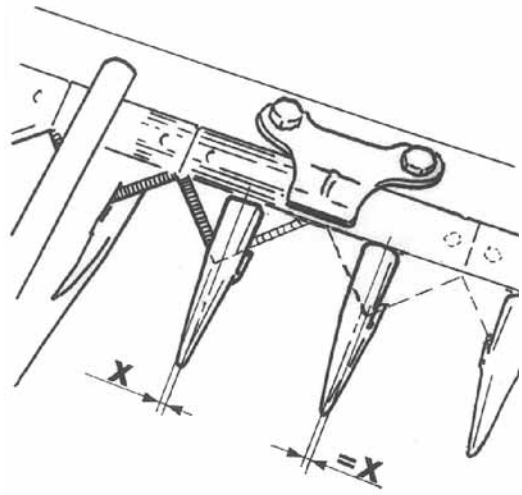

P2

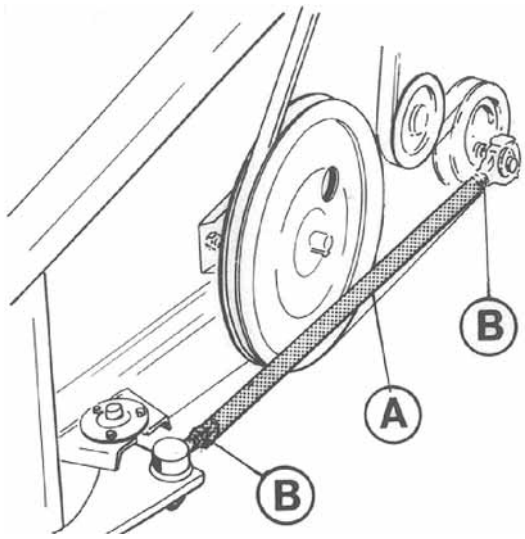

P3

https://truckmanualshub.com/

CHANGING OF THE KNIFE

1 Crank-driven Knife

Remove fixing screws A, fig. P4, on the connecting lever and remove the knife.
When changing the knife, loosen lock nut B on the ball joint and count the number of turns required to unscrew the ball joint from the knife.
Screw the ball joint into the end of the new knife using the same number of turns and check if the reversing point of the knife needs adjusting. Theoretically correct measurement C (fig. P4) is 50 mm.

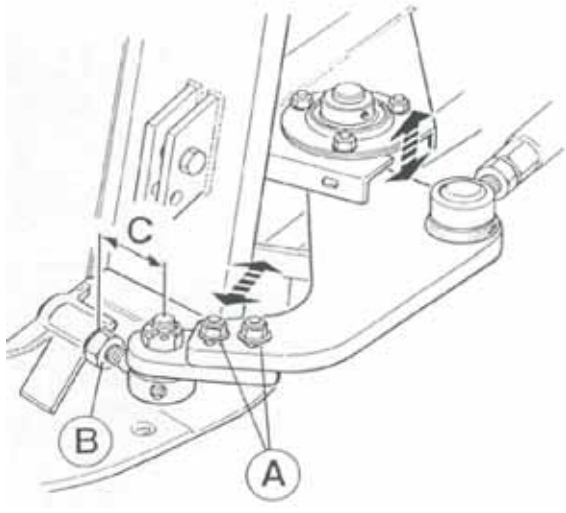

P4

Check the Knife Fore/Aft and Up/Down Positions

Adjust the height by moving the drive lever in its bearings. The fore/aft direction is adjusted using screw joint A, fig. P4.
The up/down position is correct when the bottom surface of the first knife section brushes the cutting surface of the knife finger.
The fore/aft position is correct when the knife tang and the joint fixing piece can move freely for the whole length of the stroke without brushing the edges of the groove or the heads of the locking screws on the knife finger.
Make sure the knife moves lightly when turning the table auger drive pulley by hand with the table disengaged.

2 Belt-driven Knife

First remove the lower guard of the knife drive. Remove fixing screws A, fig. P5, on the connecting lever and remove the knife.

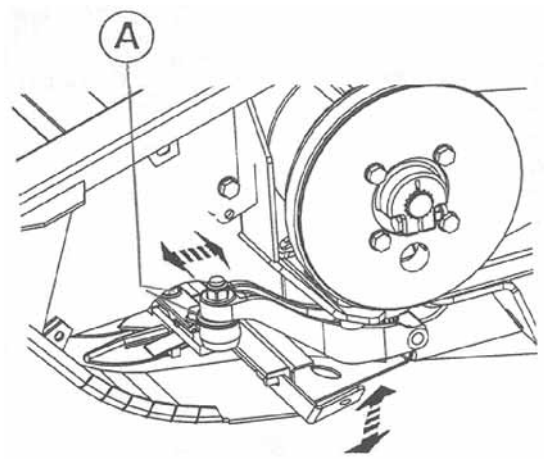

P5

Check the Knife Fore/Aft and Up/Down Positions

The fore/aft direction is adjusted using screw joint A, fig. P5.
The fore/aft position is correct when the knife tang and the joint fixing piece can move freely for the whole length of the stroke without brushing the edges of the groove or the heads of the locking screws on the knife finger.
The up/down position is correct when the bottom surface of the first knife section brushes the cutting surface of the knife finger. Usually this does not need adjusting.
The up/down position is adjusted by shifting the drive lever in its groove joint.
Make sure the knife moves lightly when turning the drive pulley of the knife drive unit by hand with the belt disengaged.

https://truckmanualshub.com/

Replacing of a KNIFE SECTION

Screw-on knife sections

Screw-on knife sections can be replaced without removing the knife from the cutting table. Ensure that adjacent knife sections are aligned with each other. If necessary, remove the knife and align as shown in figures P13 and P14 or replace bent knife sections.

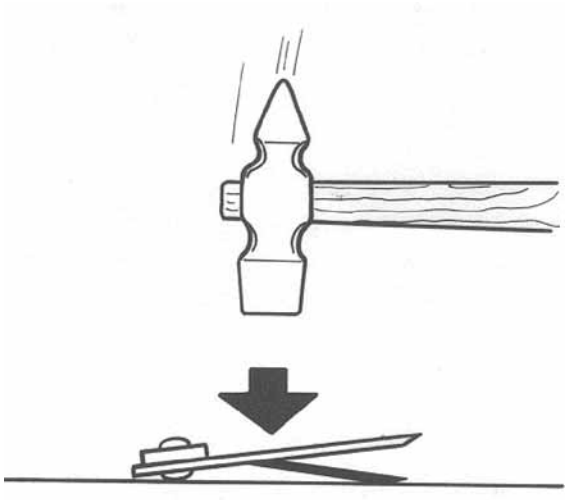

P13

Alignment of the KNIFE FINGERS

Check the heightwise position of the knife fingers. The heightwise difference between the cutting surfaces of adjacent fingers must not exceed 1 mm. Visual inspection can be made by checking the alignment of the fingers from the side of the table.
Straighten or replace bent knife fingers.

It is important to remember that the two pairs of knife fingers on the left differ from the other fingers.

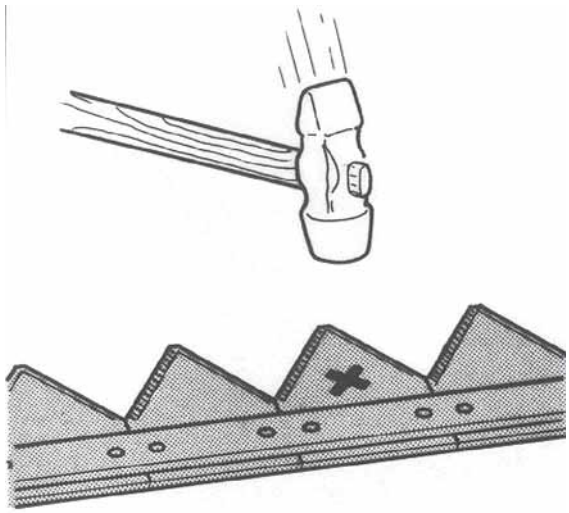

P14

https://truckmanualshub.com/

TABLE AUGER FINGERS Must Be Straight

Straighten or replace a bent finger. To remove the finger, which is necessary in both cases, open the door in the table auger housing and turn the auger until locking screw A can be unscrewed, fig. P15.
Place reel supports before undertaking any work!

A bent finger will wear the guiding bearing and crankshaft bearing quickly. When replacing a finger,
check the bearing condition and replace the bearings, if necessary.
The feed finger has a groove at which the finger will break when it comes into contact with a hard obstacle. The broken finger will fall inside the feeder auger. Replace the finger and remove the broken part from inside the auger.

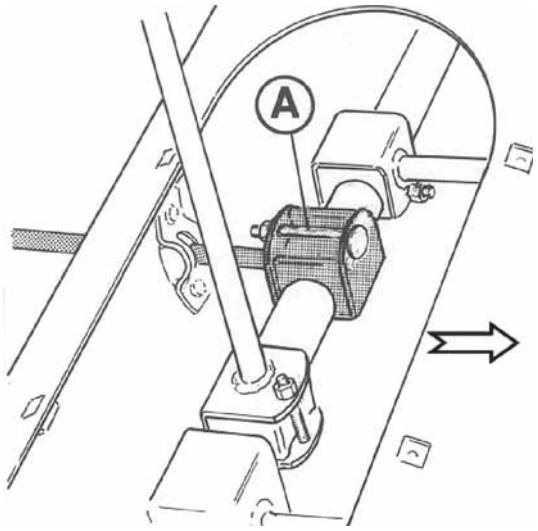

P15

Check the OVERLOAD CLUTCHES of the CUTTING TABLE Before Starting Threshing

The function of the overload clutches protecting the knife, table auger and reel must be checked annually before starting threshing. The best way to do this is to slacken nut A, fig. P16, which tightens the cup spring pack, so that spring pack B will slacken. After this, turn belt pulley C (and the reel) to ensure that friction plate D is not stuck. Open the clutch, if necessary, and remove any rust from the friction surfaces. After checking, tighten the spring pack to its original measure E.

Table width	Measure E
3.1 m	11 mm
3.4 m	11 mm
3.9 m	10 mm
4.2 m	10 mm
4.5 m	9 mm
4.8 m	9 mm
5.1 m	9 mm

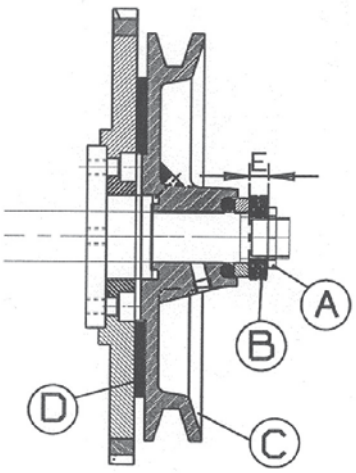

P16

Removing of the TABLE in the Correct Order

- Lower the reel into its lowest position.
- Stop the engine.
- Disconnect the quick release coupling to the hydraulic piping of the reel and the electric connection on the right side of the crop elevator.
- Unlock the locking between the lower corner of the crop elevator and the rear of the table, fig. P17.

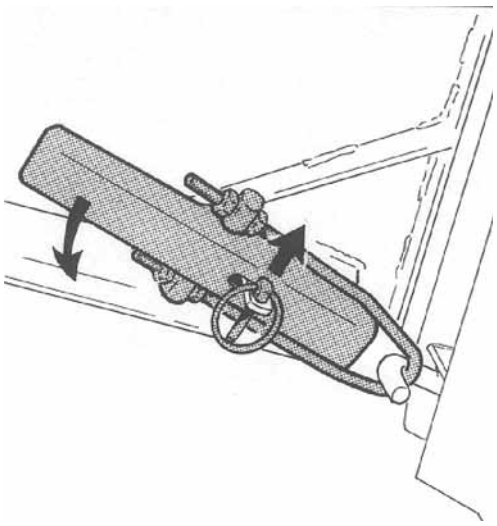
P17

https://truckmanualshub.com/

- Slacken the table drive belt by turning lever A, fig. P18, and remove the belt off the drive pulley of the sliding coupling shaft.
- Disconnect the feed cable for the table reverse from the quick release.
- Place the table support in between the knife fingers, in the approximate centre of the knife, as shown in fig. P19.
- Lower the table ensuring that the support remains in position and that the table comes away from the crop elevator.
- When the crop elevator is entirely off the table, reverse the combine, checking that the table does not move.

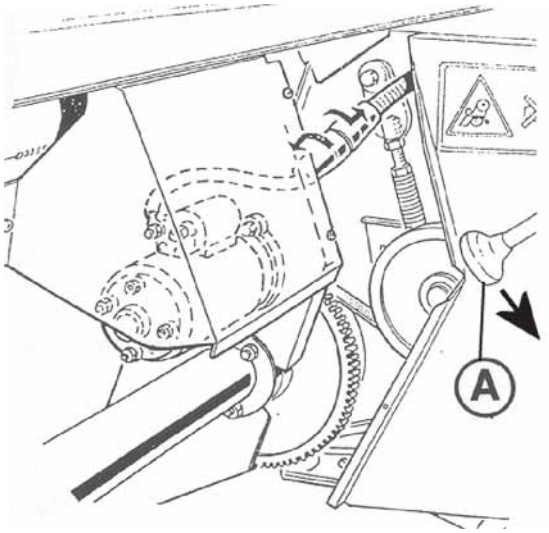

P18

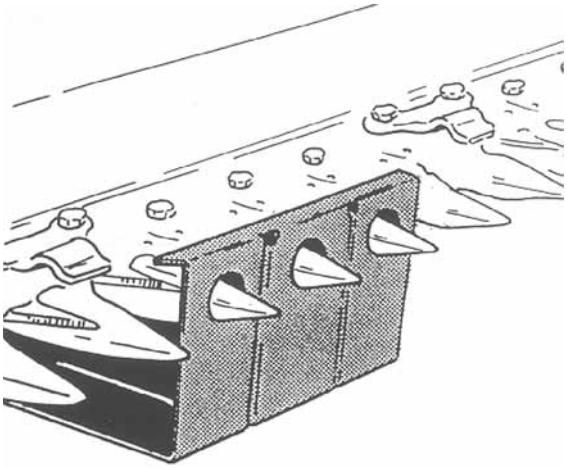

P19

CUTTING TABLE Parallel to the Ground

The widthwise position of the cutting table can be adjusted by changing the height of the fork brackets of the crop elevator on both sides of the table, as follows:

- Lower the cutting table onto the ground.
- Slacken screws A and B, fig. P20.
- Turn eccentric plate C in the required direction.
- After adjusting, tighten the screws.
- The adjustment is made on both sides of the crop elevator.

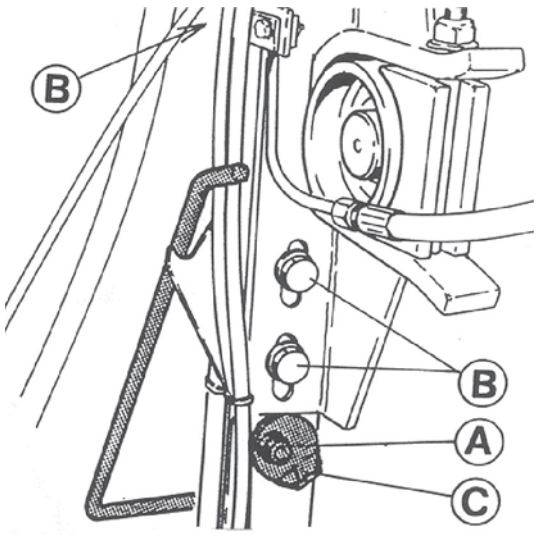

P20

https://truckmanualshub.com/

Adjusting of the CUTTING TABLE ANGLE in Soft Conditions:

Remove the cutting table.
Remove the filler beam from the joint between the feed elevator and the lower end of the table, fig. P21.

This adjustment may be necessary in such soft harvesting conditions in which the front tyres of the combine sink so deep into the soil that the position of the knife in relation to the ground changes. By adjusting the position of the table, the original position can be restored.

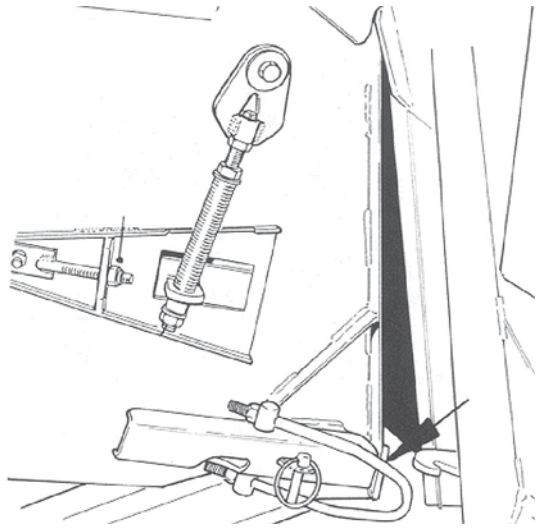

P21

Cylinder/Concave CLEARANCE

Periodically, preferably at the beginning of each harvesting season, check the position of the concave in relation to the threshing cylinder, i.e. the cylinder/concave clearance. Use tool R152308.

- First turn the concave adjustment lever to position 20 and then further up to 12.
- Now the clearance, i.e. the feed distance between the first concave rasp bar and a cylinder rasp bar, should be 12 mm.
- Correspondingly, the clearance between the last concave rasp bar and a cylinder rasp bar shall be 6 mm.
- If there is deviation, adjust the clearance using nuts B at the lower end of the concave adjusting arm A, fig. P22.
- Check the measurements from all four corners of the concave.

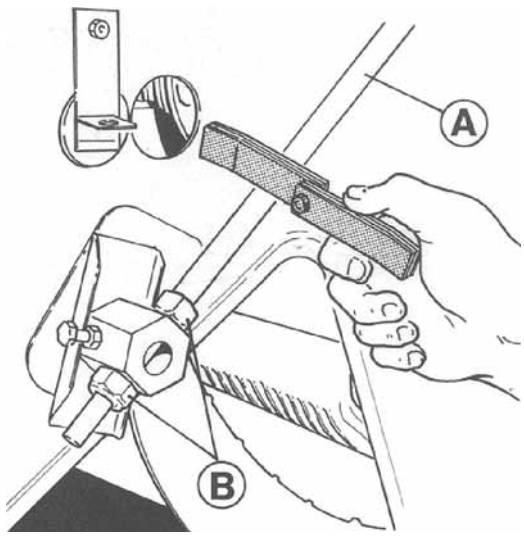

P22

https://truckmanualshub.com/

Checking of PRE-CYLINDER Clearance, Fig. P23

Check the clearance using R152308.

- First turn the pre-concave to position 20.
- Turn down to position 12 mm.
- Make sure the clearance between the pre-cylinder and the concave is 12 mm.
- If necessary, adjust the length of supporters A with nuts B, fig. P23.
- Check the clearance on both sides of the combine.

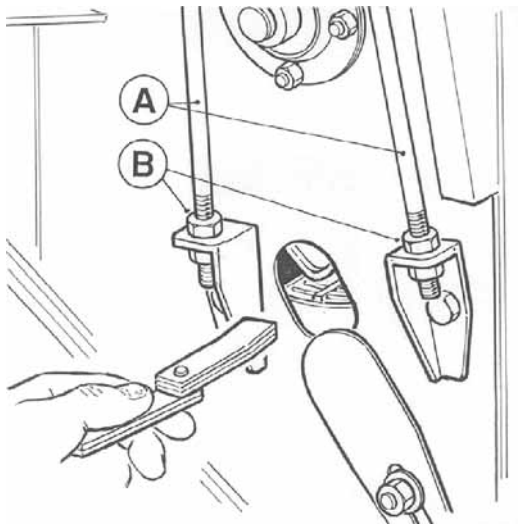

P23

https://truckmanualshub.com/

BELT TENSIONING

Check the tension of all the transmission belts on a regular bases in accordance with the instructions.
NOTE: Check the tension of all the belts after the first day of harvesting and always after a belt change.

THRESHING MECHANISM DRIVE BELT

Engage the threshing mechanism with the engine switched off. Belt tension is correct when drawbar end A goes beyond loop B, as shown in fig. P25. If the measurement is larger, adjust the bar by unscrewing the nut in the upper end and turn the bar until a measurement of 12 mm is achieved with the threshing mechanism engaged.

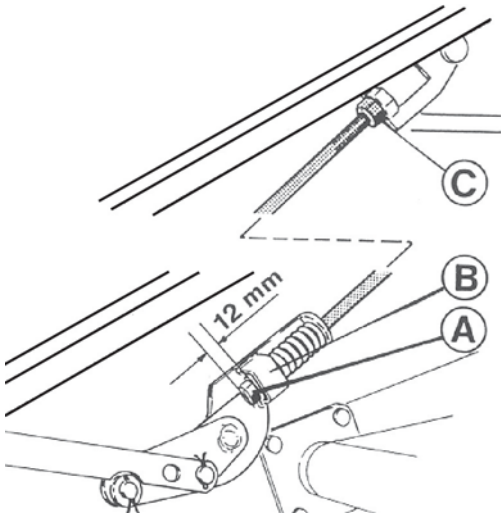

P25

GRAIN TANK UNLOADING BELT

To tension the belt, slacken locknut A, fig. P26, and turn nut B to achieve the required belt tension with the belt engaged. Check that the clutch disengages the belt reliably after the adjustment.

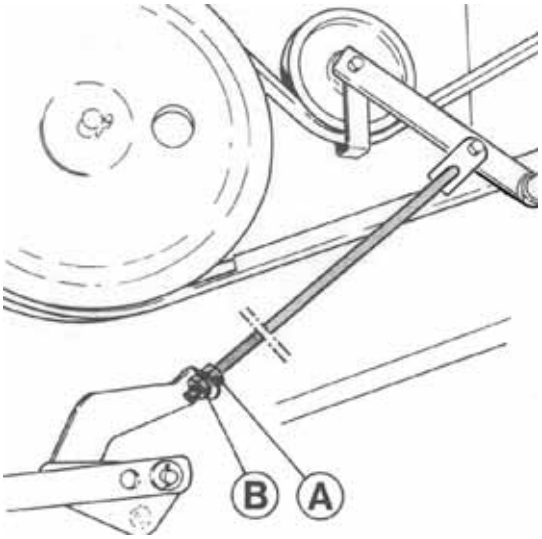

P26

STRAW CHOPPER BELTS

Spring-loaded jockey pulleys tension the belts automatically. In any case, check that pre-tension measurement X of the spring is 5…10 mm, fig. P27. If necessary, slacken lock nut A and turn bushing B down to achieve the afore-mentioned pre-tension measurement. Then lock nut A.

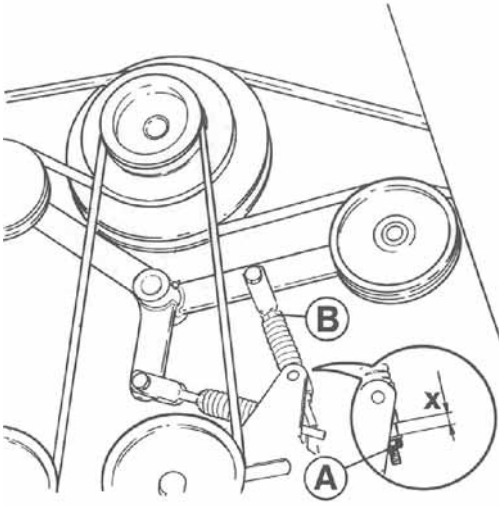

P27

https://truckmanualshub.com/

FAN VARIATOR BELTS

To tension the belts, slacken nut A on the middle shaft of the variator pulleys and regulator nut B, fig. P32. Nut C is slackened to move the variator pulleys in the direction indicated by the arrow, which will tension the belts. After the adjustment, tighten the slackened nuts.
After the adjustment, check the adjustment range of the variator. If necessary, adjust limiter nuts D so that the belts on the variator pulleys do not rise above the outer rims of the pulleys in their extreme positions.

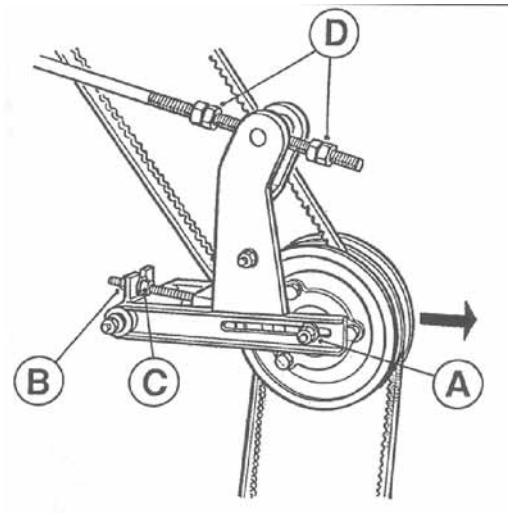

P32

https://truckmanualshub.com/

COOLER UNIT DRIVE
(Rotating Inlet Screen)

Belt tension is correct when length A of the spring is same as length of the tube covering it.(105±2 mm.)
If necessary, turn nut B to tension the belt. Fig. P30.

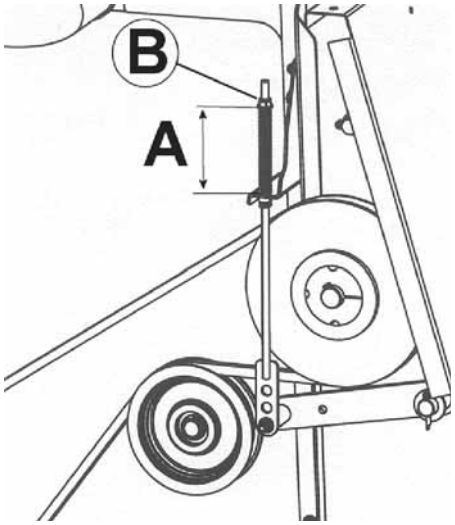

P30

FAN DRIVE BELT
(Rotating Inlet Screen)

Belt tension is correct when length A of the spring is same as length of the tube covering it.(105±2 mm.)
If necessary, turn nut B to tension the belt. Fig. P31.

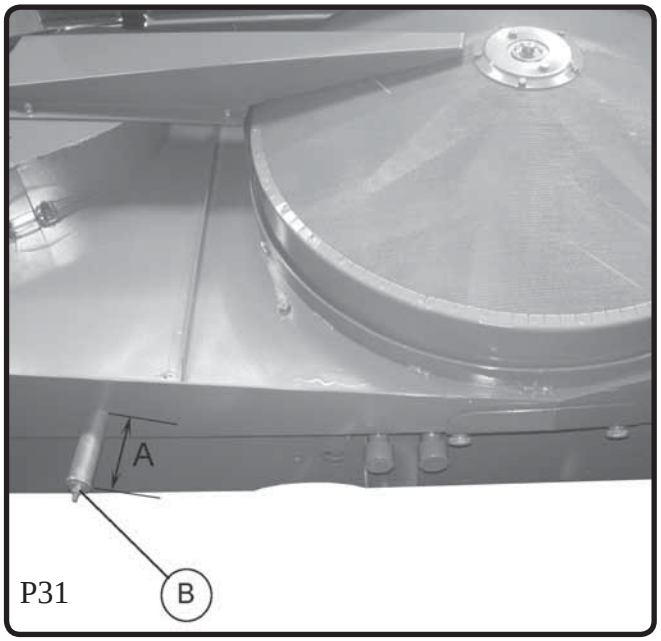

P31

COMPRESSOR BELT IN THE AIR CONDITIONER
(Rotating Inlet Screen)

Tension is correct when the belt deflects some 5 mm (50N = 5 kg) when pressed with the thumb.
Slacken locking nuts A and regulating nut B, fig. P32.
Turn the compressor to tension the belt. Tighten screws B and A.

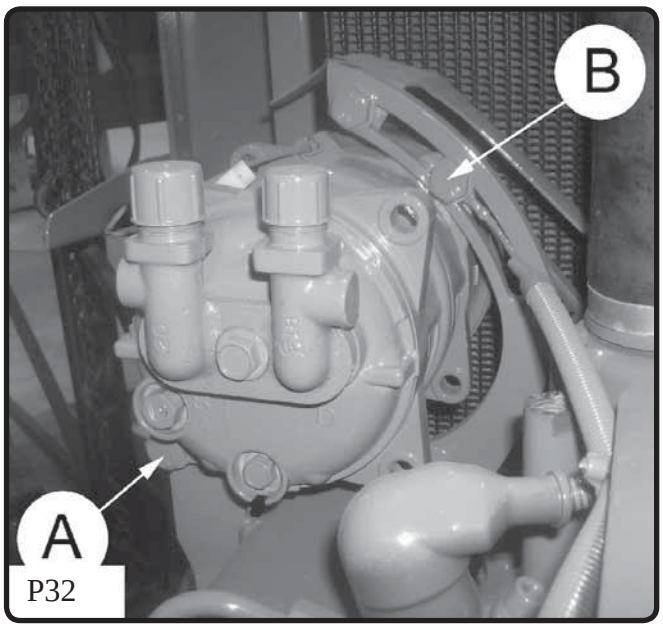

P32

https://truckmanualshub.com/

THRESHING CYLINDER VARIATOR BELT

Standard Threshing Mechanism

To tension the belt, tighten anchor bolts A and B (on the housing) and connecting bolt C (between the variator arms), fig. P33a. The connecting bolt must be turned two turns per each turn of the anchor bolts, to retain the transmission ratio of the variator.
When tensioning the belt, operate the pulleys by hand to allow the belt to move evenly on the pulleys. Belt tension is checked with the variator midway within the adjustment range. The tension is correct when bushing (A) can be rotated by hand, but it must not roll loosely.
Check the tension of the bushing daily.

After the adjustment, check that the variator arms do not touch the outer shell of the variator pulley in their minimum or maximum positions. There must be a clearance of at least 1 mm. If necessary, adjust the arms using screws A-C or B-C.

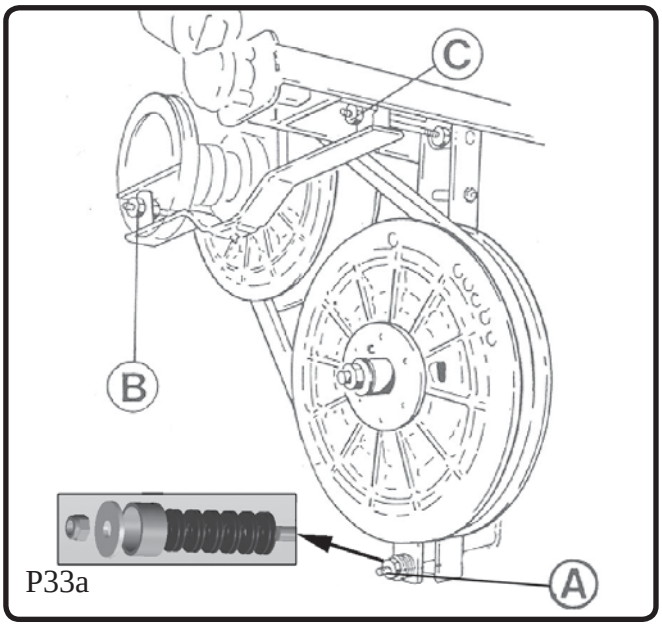

P33a

https://truckmanualshub.com/

THRESHING CYLINDER VARIATOR BELT

The TS Threshing Mechanism

To tension the belt, tighten anchor bolts A and B (on the housing) and connecting bolt C (between the variator arms), fig. P33b. The connecting bolt must be turned two turns per each turn of the anchor bolts, to retain the transmission ratio of the variator.
When tensioning the belt, operate the pulleys by hand to allow the belt to move evenly on the pulleys. Belt tension is checked with the variator midway within the adjustment range. The tension is correct when bushing (A) can be rotated by hand, but it must not roll loosely.
Check the tension of the bushing daily.

After the adjustment, check that the variator arms do not touch the outer shell of the variator pulley in their minimum or maximum positions. There must be a clearance of at least 1 mm. If necessary, adjust the arms using screws A-C or B-C.

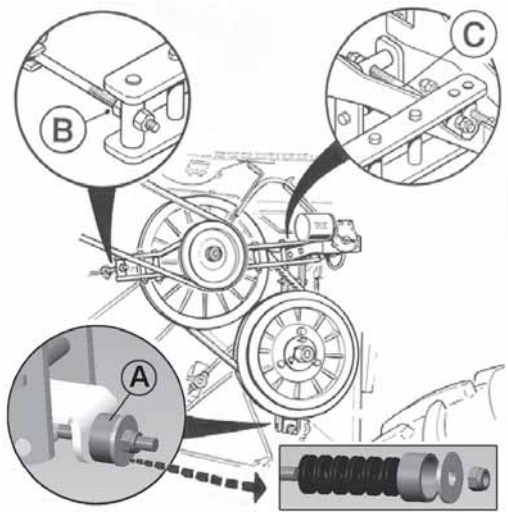

P33b

PRE-CYLINDER BELT

The belt is tensioned by a spring-loaded jockey pulley. The tension is correct, when spring length A, fig. P34, is 76+2 mm.

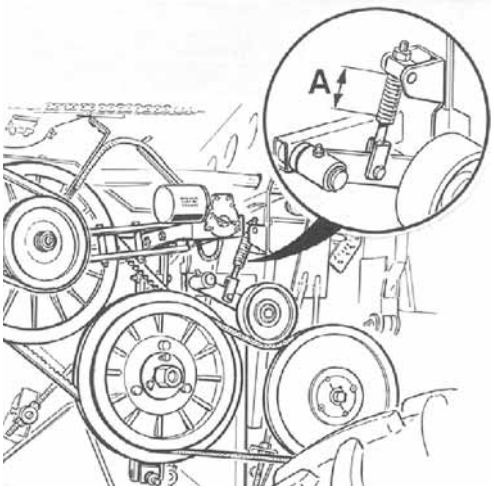

P34

https://truckmanualshub.com/

GRAIN ELEVATOR BELT

Crossed Belt Driven Top Auger

To tension the belt, slacken middle shaft A on the pulley, fig. P35a, and turn nut B. When replacing the belt, ensure the belt position on the pulleys is as illustrated in fig. P35a.

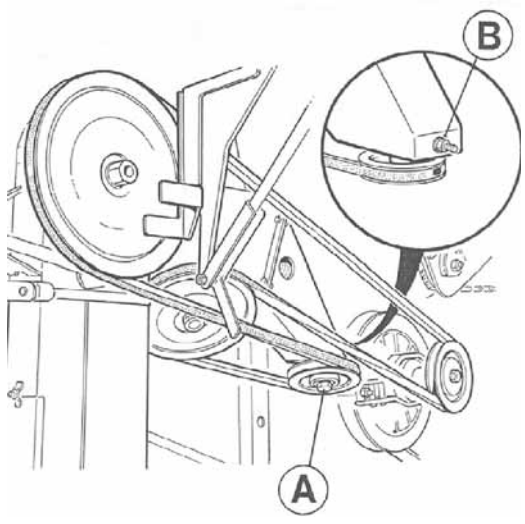

P35a

Gear Driven Top Auger

Belt tension is maintained by a spring-loaded jockey pulley. The tension is correct when length X of the spring, fig. 35b, is 76...78 mm. When necessary, turn bushing A, fig. P35b, to tighten the belt.

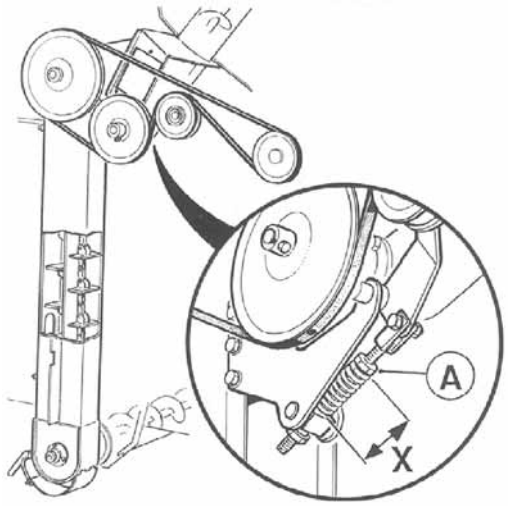

P35b

GRAIN ELEVATOR OVERLOAD CLUTCH

The overload clutch is of friction plate type and located on the rear beater shaft by the drive pulley.
Open the clutch before the harvesting season and remove any rust from the friction surfaces.

There are two types of clutches.

Combines with crossed belt drive (Fig. 35a) have a twin-disc safety clutch. There are five belleville springs fitted alternately facing each other.
Clutch spring tension is correct when thickness C of the spring pack is 12 mm, fig. P36

Combines with a filling auger equipped with a gearbox (Fig. 35b) have a large-diameter single-disc safety clutch. There are ten belleville springs fitted with two plates always facing in the same direction and the pairs alternately facing each other.
Clutch spring tension is correct when thickness C of the spring pack is 22 mm, fig. P36.

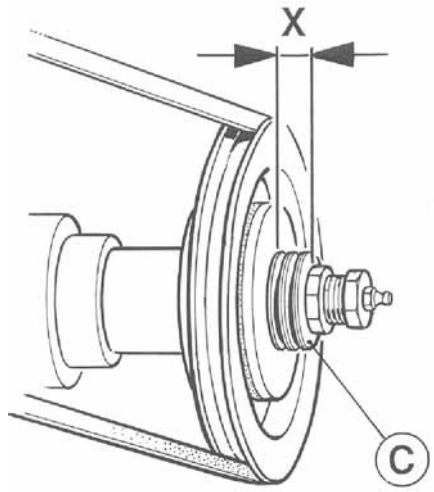

P36

https://truckmanualshub.com/

GRAIN ELEVATOR CHAIN

The Standard Threshing Mechanism

Check the tension of the chain through the cleaning door at the bottom of the elevator. Check the tension with one tooth on the bottom sprocket pointing downwards. The tension is correct when the chain can be moved sideways by hand on the lowest sprocket, but there is no radial play. Before any adjustment, slacken the elevator drive belt.
To tighten the chain, slacken locking nut A, fig. P37a and turn regulator nut B.
Keep tensioning the chain until tight spots can be felt when turning the drive pulley with the belt slack as the chain goes ”over a tooth”. Now slacken the chain a little so that there is no jerking.
Tighten nut A after adjustments. Finally, adjust the grain elevator drive belt to its correct tension.

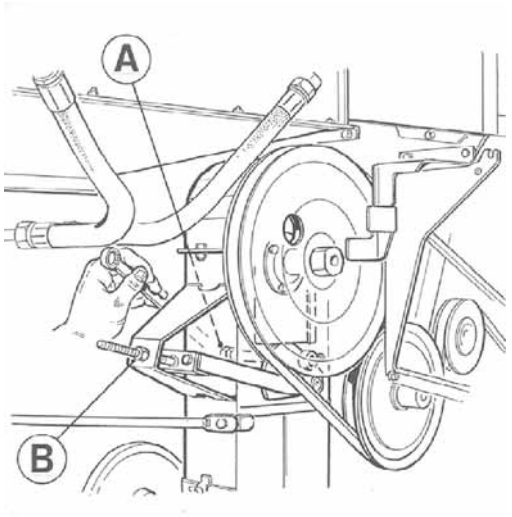

P37a

The TS Threshing Mechanism

Check the tension of the chain through the cleaning door at the bottom of the elevator. Check the tension with one tooth on the bottom sprocket pointing downwards. The tension is correct when the chain can be moved sideways by hand on the lowest sprocket, but there is no radial play. Before any adjustment, slacken the elevator drive belt.
To tighten the chain, slacken locking nut A, fig. P37b and turn regulator nut B.
Keep tensioning the chain until tight spots can be felt when turning the drive pulley with the belt slack as the chain goes ”over a tooth”. Now slacken the chain a little so that there is no jerking.
Tighten nut A after adjustments. Finally, adjust the grain elevator drive belt to its correct tension.

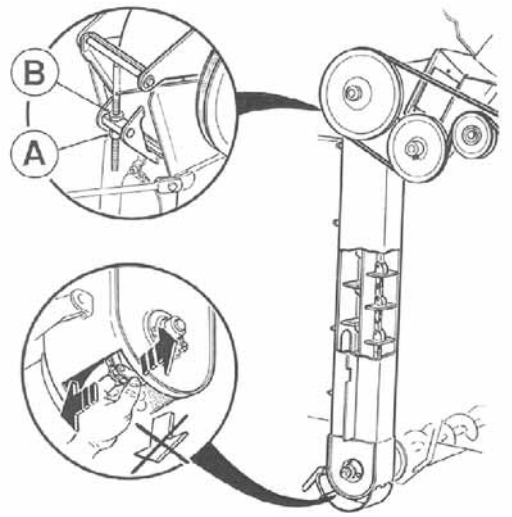

P37b

RETURN AUGER BELT and Overload Clutch

Crossed Belt Driven Return Auger

Belt tension is maintained by a spring-loaded jockey pulley. The tension is correct when the length of the threaded section of the spring is 70...80 mm. Adjustments are made by moving the spring hook to another hole. When necessary, the position of idler B (fig. P38b) can be changed to align the belt between the jockey pulley and the return auger.
The overload clutch is located at the top of the auger. It is a spring-loaded gear clutch. The factory setting of the spring is 60 mm long. It must not be tensioned to be shorter than 48 mm, as this would prevent its function. The same type of clutch is also at the right-hand end of the bottom return auger.

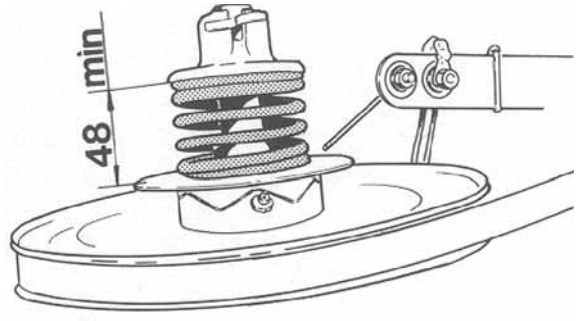

P38a

Gear Driven Return Auger

Belt tension is maintained by a spring-loaded jockey pulley. The tension is correct when the length of the threaded section of the spring is 105...110 mm. When necessary, the position of idler B can be changed.
The overload clutch is located by the drive pulley of the gear. It is a friction plate clutch. The function of the clutch shall be checked before every harvesting season. Slacken the spring to ensure that the plate is not stuck. After checking, tension the spring to the required tension.
The tension of the clutch is correct when spring pack C is 14 mm thick.

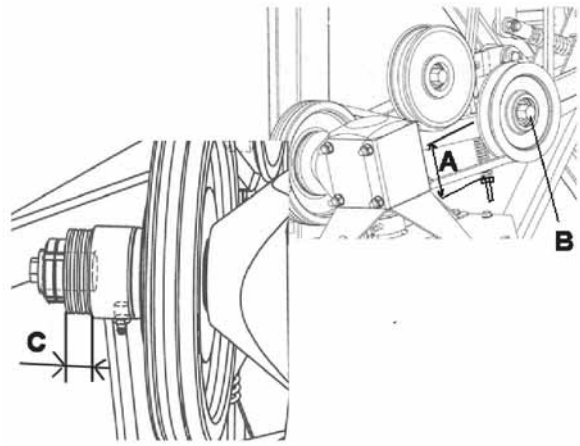

P38b

STRAW WALKER BELT

Belt tension is maintained by a spring-loaded jockey pulley. The tension is correct when the length of the spring A is 75...79mm.

P39

https://truckmanualshub.com/

DRIVE VARIATOR BELTS

(Combines with mechanical transmission)

When the engine stops, the upper variator belt is usually looser. Because of this, the need for belt adjustment shall be estimated based on joint belt deflection. The tension is correct with joint deflection of approx. 60 mm (fig. P40).

The belt is tensioned by running the variator to its mid position with the belts at the same depth on the variator pulley. The engine is stopped. Central shaft A on the variator pulley is slackened, fig. P41. Nuts B at the end of the brackets of the adjustment fork are tightened, which moves the pulley in the direction indicated by the arrow, and tensions the belts. After the adjustment the slackened shaft is tightened.

In the extreme variator positions the belts must rise to the same height when measured from the outer shell of the variator pulley. To achieve this, the following adjustment is made:
Slacken locking nut C on the hydraulic cylinder piston and turn the piston in the required direction.
Run the variator to both extreme positions and check the measurements.
The right measurement from the outer shell to the belt surface ranges between 0-2 mm.

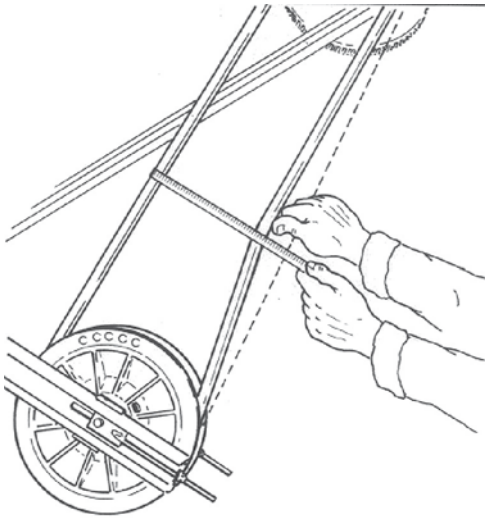

P40

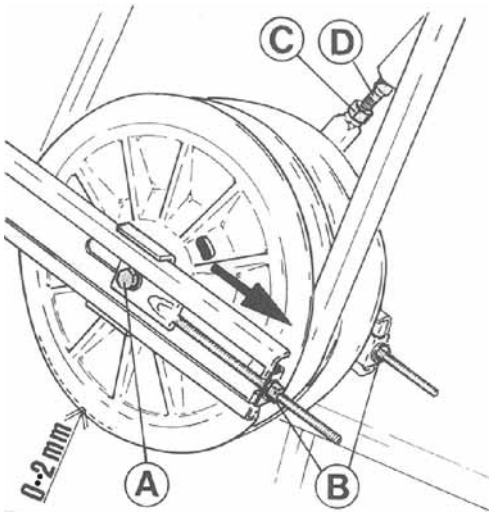

P41

CLUTCH

Free travel of the clutch shall be some 20 mm measured from the pedal. To adjust, change the length of the cross-bar to the clutch housing. To do this, undo the coupling of fork A and remove the fork off the lever. Fig. P42. Loosen locking nut B and turn the fork in the required direction. If tree travel needs to be increased, turn the fork open. Always check the function of the clutch lock after clutch adjustments. The lock shall close entirely before the clutch becomes engaged. If necessary, slacken nut D and turn screw C.

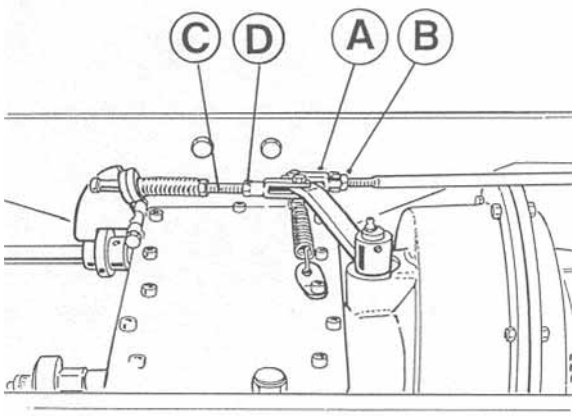

P42

https://truckmanualshub.com/

DRIVE BELT IN THE HYDRAULIC TRANSMISSION

The appropriate tension in maintained automatically by a spring-loaded jockey pulley. The tension is correct when spring length corresponds with the length of the external gauge A. When necessary, the adjustment is made with the engine stopped and the ignition key removed.
To adjust the belt, loosen locking nut B and turn adjuster sleeve C in the required direction as far as needed.
Lock locking nut B.

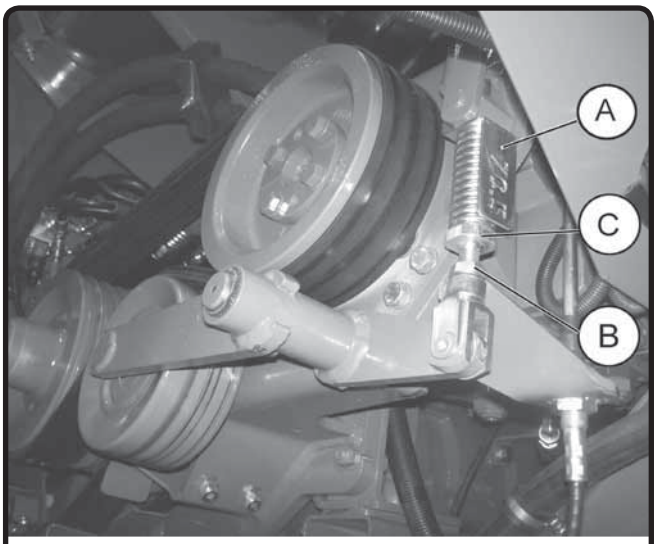

P45

https://truckmanualshub.com/

CUTTING TABLE CLUTCH BELT

Check the tension with the belt drive engaged as follows:
Slacken lock nuts A, fig. P47.
Tighten screw B while gripping nuts A until measurement of springpack C is 6,5mm. The tension is easier to adjust with the belt drive disengaged, but it must be checked while engaged. Lock nut A after adjustment.

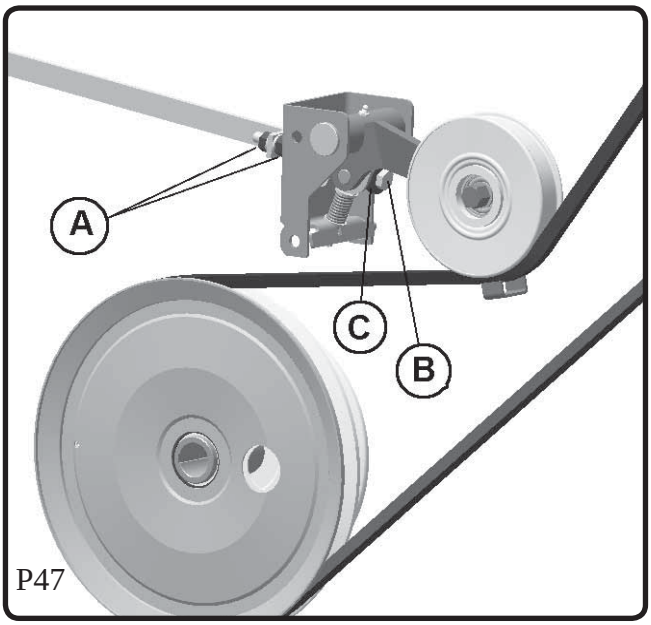

P47

CUTTING TABLE DRIVE BELT

To tension the belts, slacken locking nut A, fig. P48, on the drawbar and turn nut B until measurement X is 78 mm with the belt engaged.

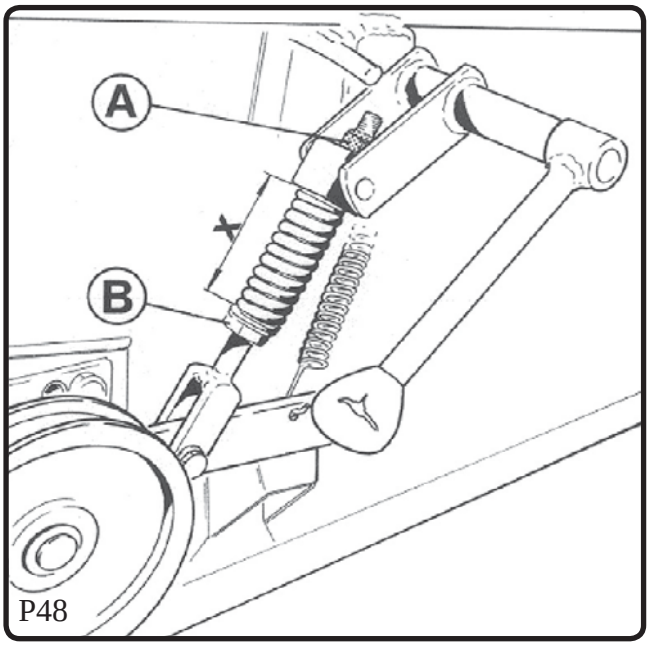

P48

https://truckmanualshub.com/

REEL VARIATOR BELTS

To tension the belts, slacken nut A, fig. P49a, at the end of the middle shaft and turn screw B so that the pulleys move upward tensioning both belts evenly.

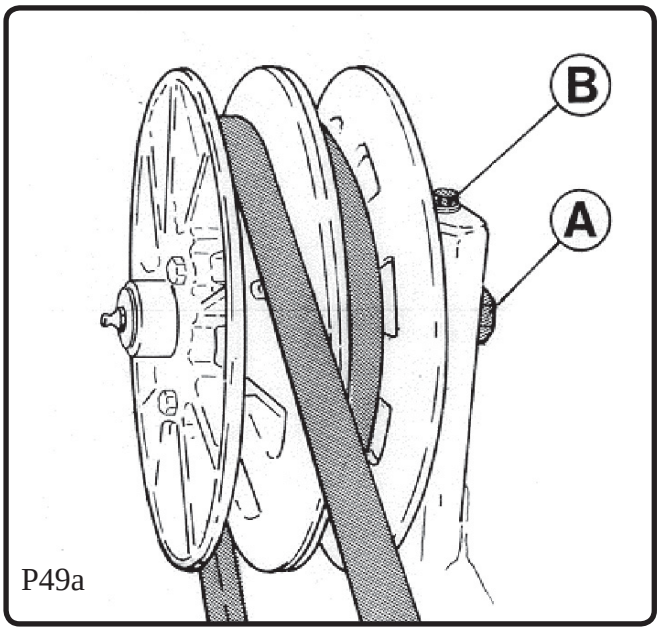

P49a

THE ADJUSTMENT RANGE OF THE REEL VARIATOR

After replacing or tensioning of belts, check the variator adjustment range. To make the adjustment, first slacken locking screw B, then adjust with nuts C. Finally tighten screw B. The variator shall be adjusted so the belt does not rise above the outer rim of the pulley in its extreme positions, but stays 1-3 mm below the rim. A, Fig. P49b.

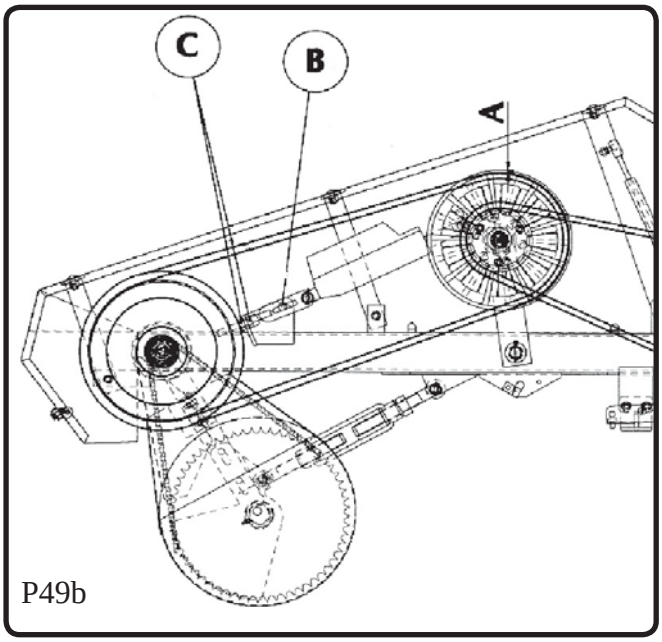

P49b

https://truckmanualshub.com/

KNIFE DRIVE BELT

The WB Knife Drive

Spring-loaded jockey pulleys tension the belt automatically. In any case, check that pre-tension measurement X, fig. P50, of the spring is 7…8 mm. If necessary, slacken lock nut A and turn bushing B up to achieve the afore-mentioned pre-tension measurement. Then lock nut A.

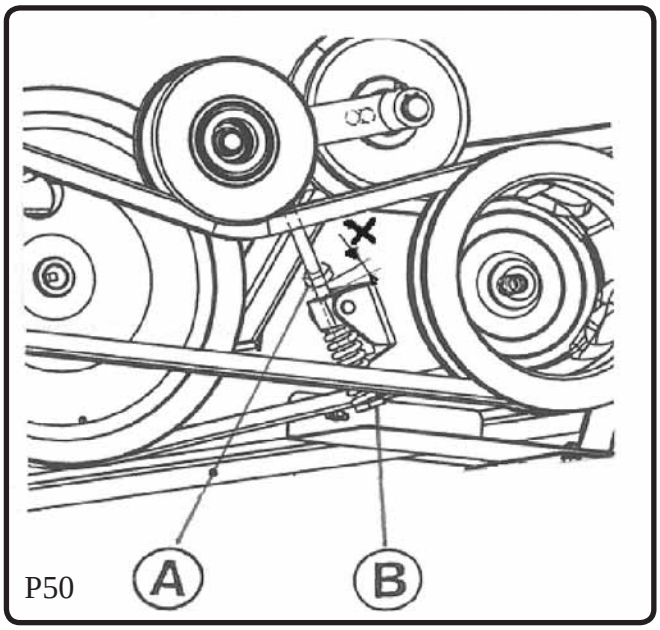

P50

https://truckmanualshub.com/

BELTS WITH FIXED TENSION

To tension the drive belts in the shaker shoe and table auger, slacken middle shaft A, fig. P51, of the jockey pulley and either by screwing nut B (table auger) or moving the jockey pulley using a suitable lever tension the belt as required.

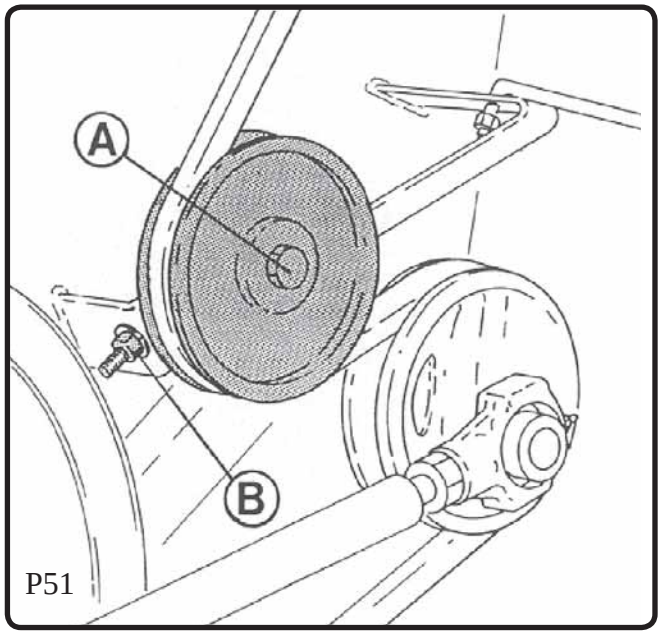

P51

General V-BELT Tensions (Fig. P52)

Check the tension by pressing with your thumb midway between the shafts.

Shaft distance a/mm	Deflection f/mm
less than 500	20
500 - 1000	30
1000 -1500	50
1500 - 2000	70

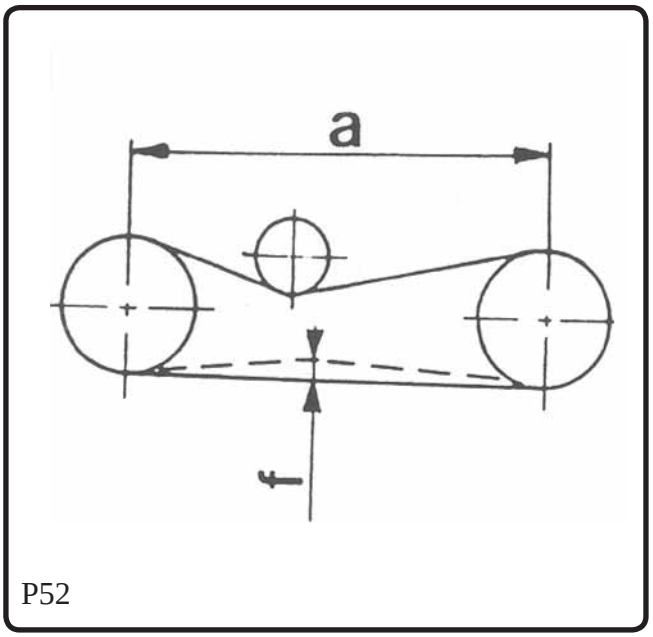

P52

After replacing the BELTS, return the bows and belt supports to their original positions.

When changing the drive belts in the threshing mechanism, grain tank unloading and cutting table, check that the belt supports and the bows round the pulleys are refitted correctly. Mark the positions before removing the parts to ensure re-assembly in the same positions. A new belt must be tensioned after a few operating hours.

Always use original belts. They have been tested by the Manufacturer to meet the quality requirements.

GRAIN TANK CHAIN

To tension the chain, loosen screw A and nut B, fig. P53, and turn eccentric plate C in the direction indicated by the arrow. Tighten nut B and lock screw A in their original positions. There must not be slackness in the chain, but it must rotate lightly without any jerks.

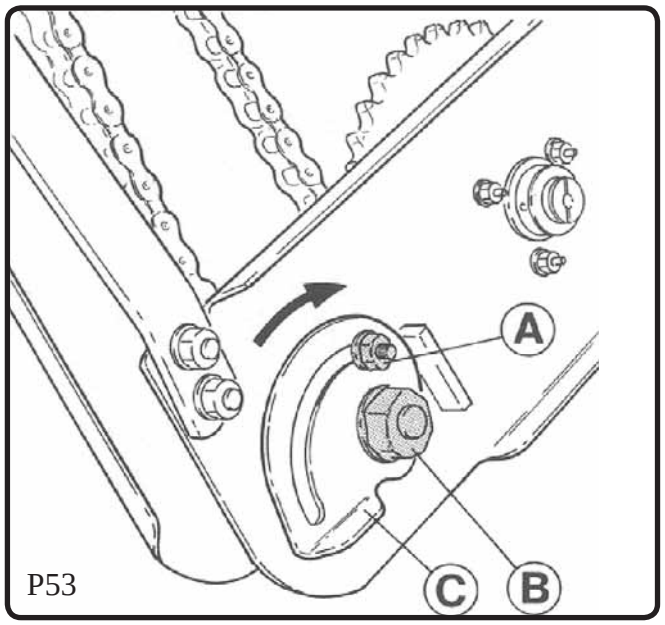

P53

https://truckmanualshub.com/

Changing of CHOPPER KNIVES

If the rotor knives (or knife) are worn, they can be inverted. Broken or damaged knives must be replaced. To maintain the rotor balance, it is important always to change the two opposite knives as well.

To remove a knife, unscrew locknut A, fig. P56. Now remove the fixing screw from the joint, which will disassemble the joint.
Counter knives are fastened with a locking rod, which is pulled out before changing the knives.

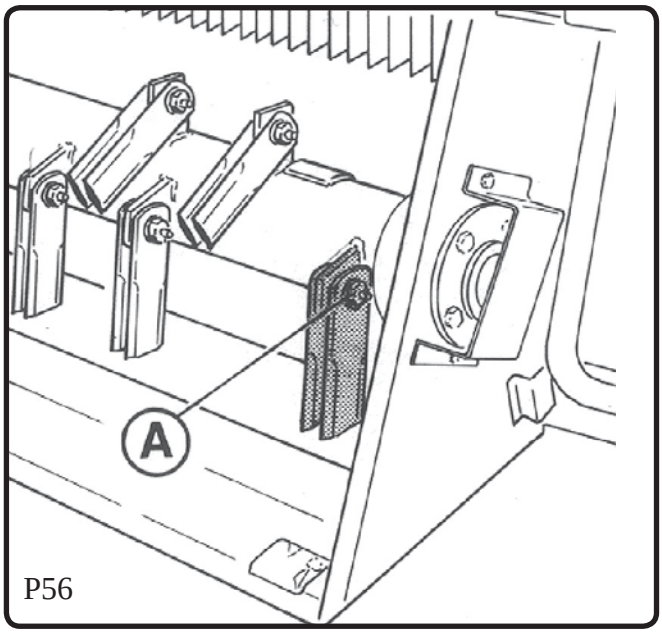

P56

Removing a GIB KEY with a Tool

To keep a gib key in good condition for re-use, use tool set R116007 to remove it, fig. P58.

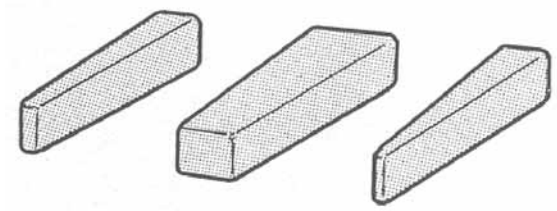

P58

Removing and Refitting of a Bearing Locked with an ECCENTRIC RING

A Removing:
Slacken the grub screw in the locking ring and open the eccentric ring by hitting the ring in the opposite direction of shaft rotation with a mandrel.
Unscrew the flange locking screws, remove the outer flange and pull the bearing off the shaft.

B Refitting:
Fit the inner bearing flange.
Fit the bearing, locking ring and outer bearing flange. Fit the fastening screws of the flanges and tighten by hand.
Check the shaft position and tighten the flange screws.
Lock the locking ring in the direction of shaft rotation by hitting it with a mandrel.
Lock the grub screw on the locking ring.

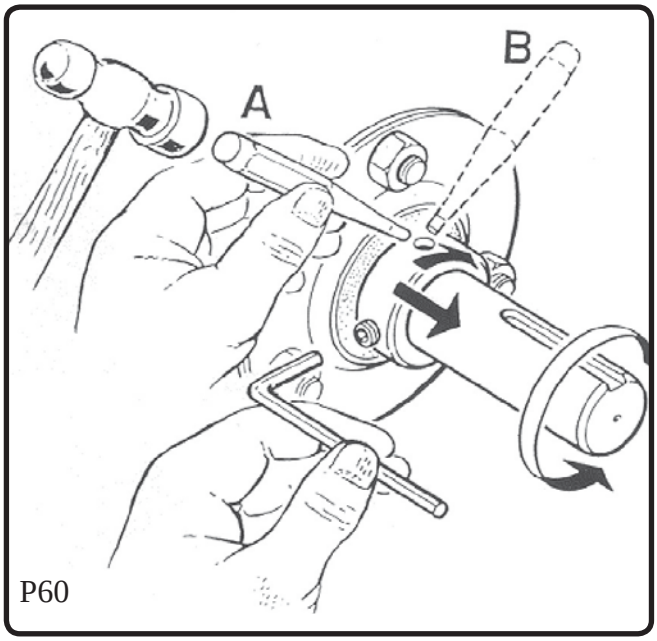

P60

Correct Direction of the SPRING COTTER NOTCH

Note the position of the cotter notch in regard to the load direction, fig. P61.
Some joints have two cotters within each other in which case the notches face each other.

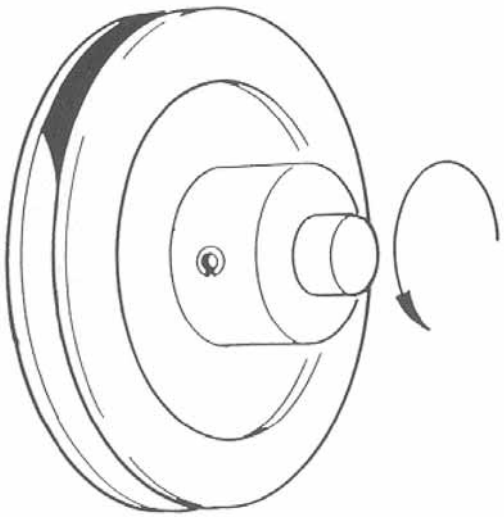

P61

https://truckmanualshub.com/

Adjustment of DRIVING BRAKES

The brakes shall be adjusted regularly due to wear of the brake bands.
Free travel of the brake pedals shall be 20-40 mm. To adjust the brakes, adjust screw turnbuckle A, fig. P62, on both sides of the combine. To make sure that the latched brakes do not veer, it is important to have the same free travel in both pedals. Test-drive the brake co-operation after any adjustment.

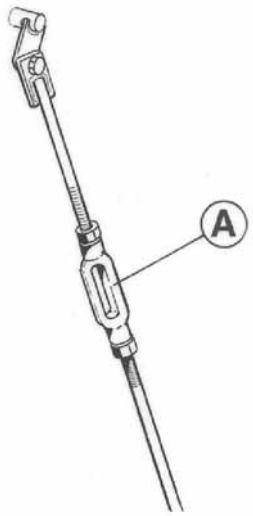

P62

The basic adjustment of the brakes is made by screw A, fig. P63. Centre the brake shoes relative to the brake drums by eccentric screws B, for instance after the replacement of brake bands.

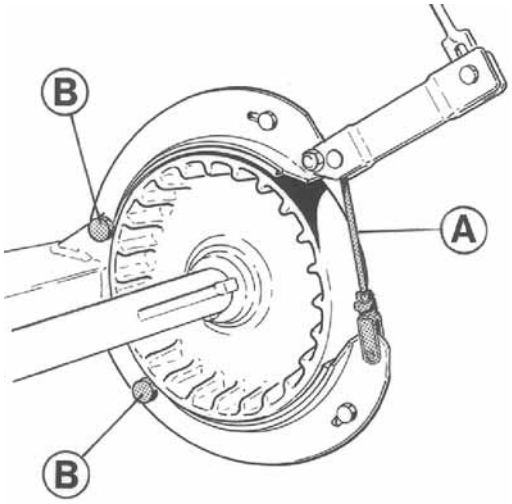

P63

HAND BRAKE Adjustment

(On combines equipped with it)

The brakes shall be adjusted regularly due to wear of the brake bands. Free travel of the hand lever on the toothed arc must not exceed 5-6 teeth. The adjustment can be made either at the upper or lower end of the brake wire. The easiest way is to adjust the brake lever at the bottom end of the wire. Locknut A is slackened, fig. P64, pin B of the fork is removed and the fork is turned to shorten the wire as required. After the adjustment, lock the slackened joints.

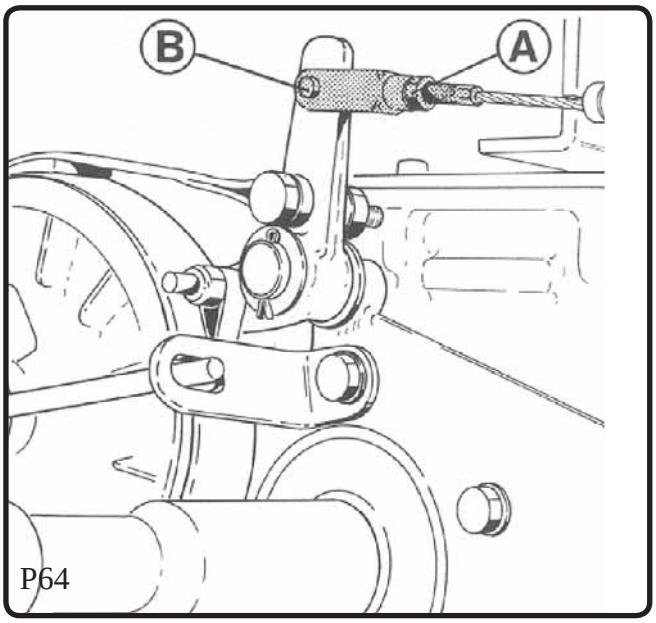

P64

https://truckmanualshub.com/

CAB Ventilation, Heating and Air Conditioning

Regular daily cleaning of the suction air filters is the most important maintenance measure. The filter is of two-stage type. At the front there is a course mesh filter in a frame. Behind it there is a fine filter, a replaceable paper element. Depending on the type of cab, the filter is located either at the back of the ceiling or on the left side of the cab. Fig. P65.
To remove the side filter, unscrew screw A and slacken screw B. To remove the back filter, turn the holder plate. The best way to clean the filters is with compressed air. The course mesh filter may be washed in washing-up liquid, if necessary. The paper filter must be replaced minimum once a year.
The condenser in the air conditioning equipment on the back wall of the engine compartment must be cleaned daily, if necessary, by blowing air into the cell from the engine side. Any debris may be removed from the sieve chamber by opening the chamber cover and bottom. Take care not to damage the heating cell.
The evaporator and the heating cell as well as the air channels and the fan shall be cleaned minimum once a year, and in dusty conditions more often. This can be best done using compressed air and/or a vacuum cleaner through the cab sunroof.

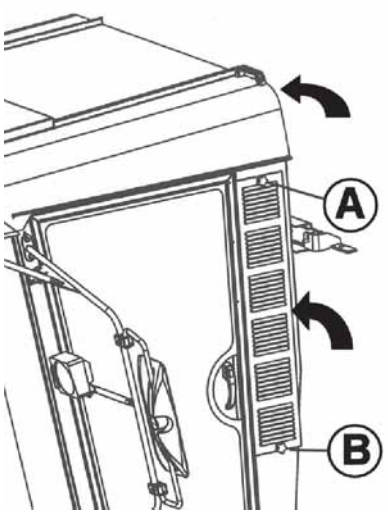

P65

Checking of the Liquid Level in the COOLING SYSTEM

The check shall be conducted at the beginning of every harvesting season. Coolant may seep gradually through the shaft gaskets out of the system. This may occur particularly if the cooling system is unused for long periods. Slight seeping is always normal.
The check is made by running the cooling system at full capacity. Look through the small inspection window on top of the drying cartridge, fig. P66, to make sure there are no gas bubbles, but liquid behind the window. The incidence of gas bubbles is allowed only for a short period after the compressor switches on. The dryer is located in the engine compartment in the coolant hose between the condenser and the cab.
Be very careful when making the check, as the engine compartment guard must be opened and the engine started. Beware of the running belt drives and fan blade in particular.
If necessary, the refill shall be done by an authorised service outlet.

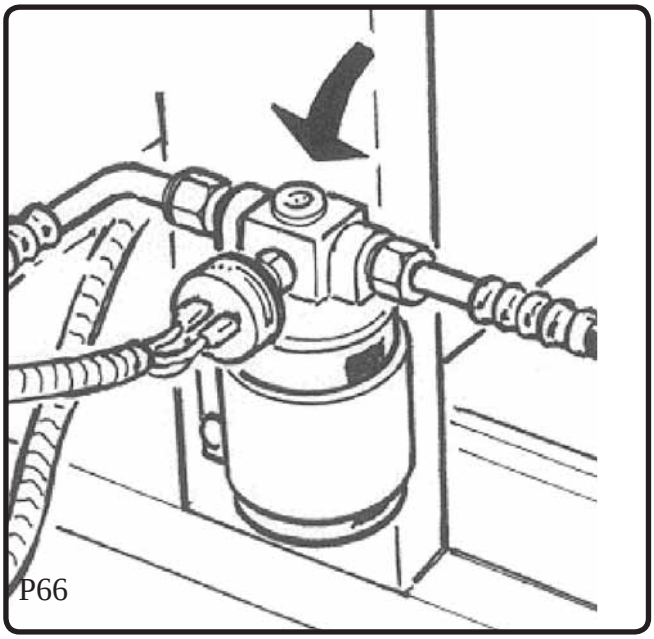
P66

ENGINE

(Complete service and maintenance instructions for the engine are provided in a separate engine manual)

Oil Change Always after the Harvesting Season

The oil is changed every 300 h and in connection with the winter service.
The old oil is drained from the warm engine by removing plug A off the oil drain pipe, fig. P70 on the left side of the combine.
Used oil is problem waste, which shall be disposed of in an appropriate manner.

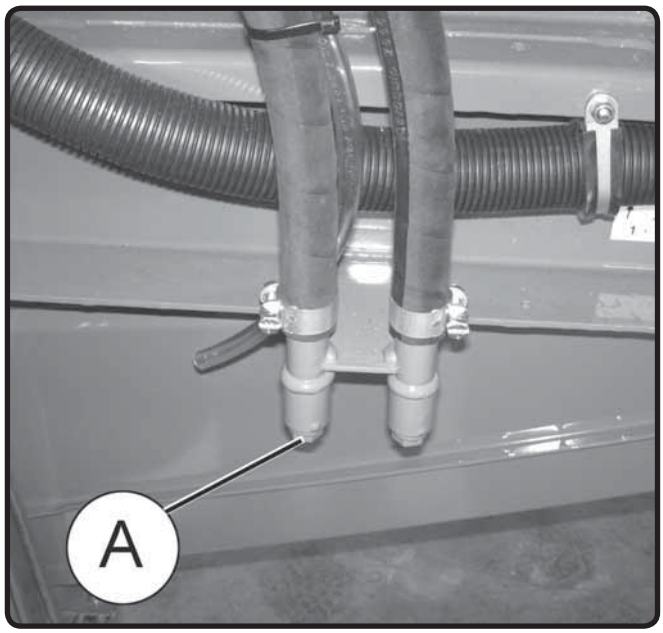

Fig. P71

A	Oil Measuring Dipstick
B	Oil Filler
C	Adding coolant

Types and quantities of oil to be used are given in the oil table and the engine manual.

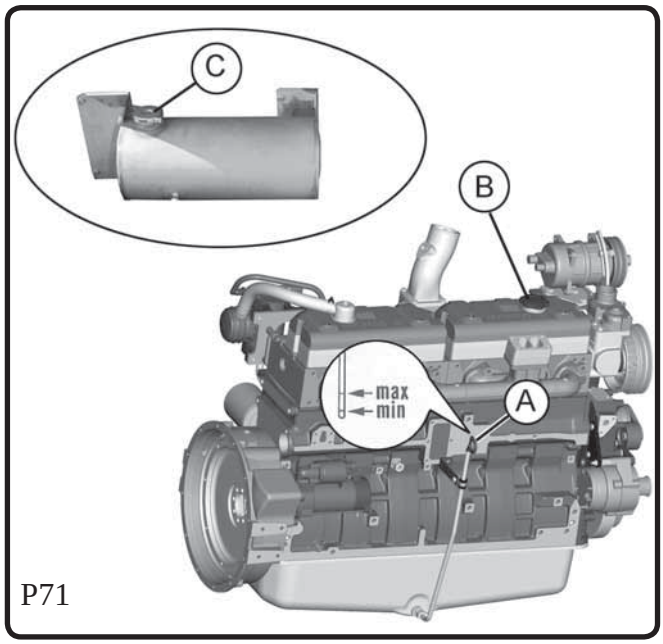

P71

Replacement of the Oil Filter

The oil filter is replaced every time the oil is changed. The filter is replaced through the service door on the back wall of the grain tank. Remove the ignition key before the operation to ascertain no outsiders can start the engine.
Used filters are problem waste, which shall be disposed of in an appropriate manner.
Check the instructions for filter change in the engine manual.

Fuel Filters

Filters are located in the side of the engine.

Fuel pre-filter (B Figure P72).
In connection with the pre-filter is also a water separator. Weekly drain water from the water separator.
Primary filter (A Figure P72).

The filter is replaced through the service door on the back wall of the grain tank.

Replace the filters as instructed in the service table or more often in case of clogged filters. Fault code “LOW FUEL PRESSURE” refers to a clogged pre-filter or air leak in the pipes.
Used filters are problem waste, which shall be disposed of in an appropriate manner.
See instructions for filter replacement in the engine manual.

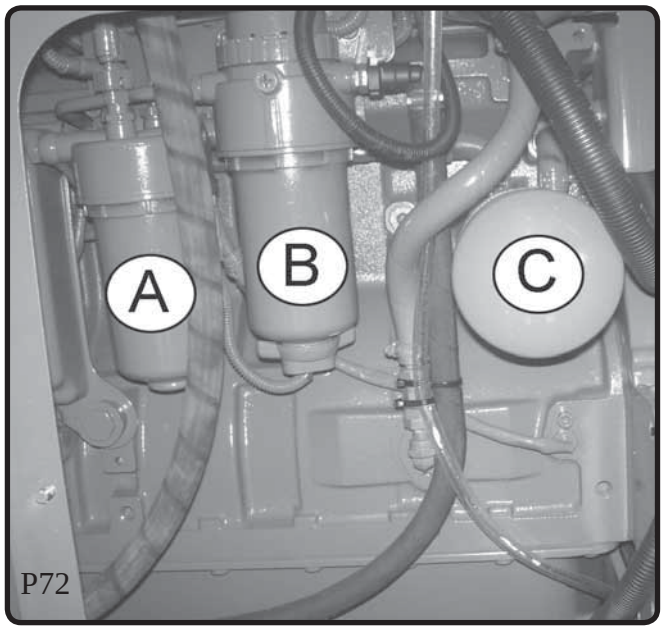

P72

https://truckmanualshub.com/

Air Filter

The engine suction air is purified by a pre-filter and a double-element, dry paper filter. Perfect functioning of the filter is an essential prerequisite for long engine life. The filter housing is located in the engine compartment attached on the rear wall of the grain tank or beneath the left-side guard.
On the instrument panel there is a blockage indicator for the air filter. The indicator measures the under pressure in the suction channel. The indicator will show red when the filter needs cleaning. The indicator will stay in the alarm position although the engine is switched off. The indicator is reset by pressing the button at its top after the filter has been cleaned.
The cover of the filter housing is attached with locking brackets and the filter cartridges are under the cover, fig. P73. Both the filters shall always be replaced at the beginning of the harvesting season.
The outer filter cartridge shall be replaced when the blockage indicator shows the filter needs servicing or at least once a year. **The outer cartridge may also be cleaned**. The outer cartridge can be cleaned a maximum of five times.
Open the catches on the filter back cover and twist the cartridge out of the housing. Be careful not to damage the paper. Do not remove the inner cartridge unless it needs replacing. The filter protects the suction channel against impurities during service.
Blow dry compressed air (not exceeding 5 bar) inside the filter. Take care not to damage the filter cartridge nor allow dust inside the cartridge.
After cleaning, the condition of the filter is checked. Direct a strong light to the inside of the filter. In case the outer filter cartridge is broken, it shall be replaced. The inner filter shall also be replaced as it has become dirty. Otherwise the inner cartridge is replaced after five services or at least every other year.
Clean the inside of the filter housing carefully before removing the inner cartridge. When refitting the filters, ensure that the gaskets are intact, mating surfaces clean and that the filter fits properly.

When servicing the filter, check the condition and attachment of the air hoses and the purity of the hose in the exhaust fume ejector.

Note! Do not run the engine without filters.

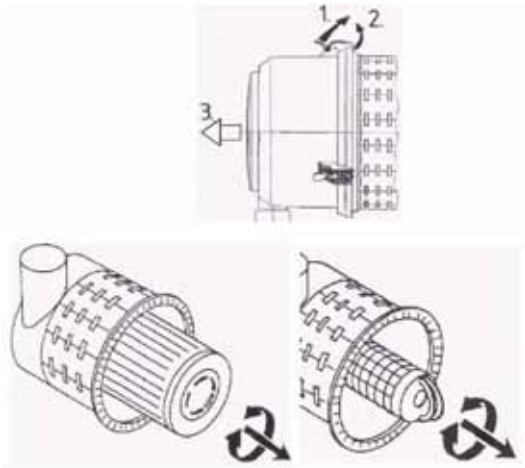

P73

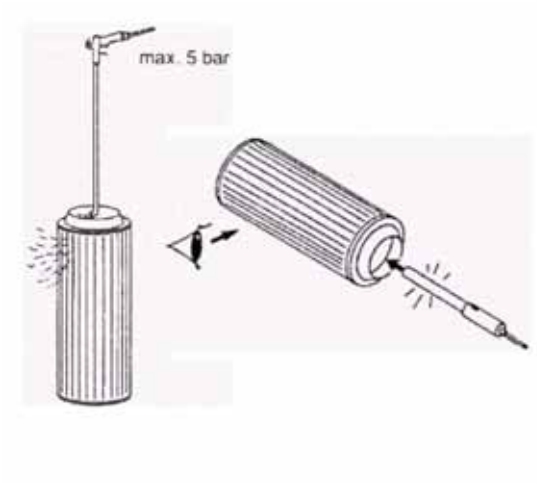

P74

https://truckmanualshub.com/

Cleaning of the ENGINE RADIATOR (Fig. P76)

Depending on the combine specification, in addition to water-cooling, the combine may be equipped with oil cooling, intermediate cooling for intake air and AC cooling.
Depending on the type of engine, the cooling fan is fitted either to the engine water pump or in front of the cooling cells.
The cooling system has cleaning doors both on the top and bottom to facilitate cleaning. Models with a rotating air intake screen have a top door fixed with latches A, fig. P76.
The easiest way to clean the radiator is to blow compressed air from the side of the engine. Loose debris may be removed with a soft brush. Always be careful not to damage the lamellas.
In connection with every service, make sure that the dust gaskets are undamaged and properly fitted and that all the doors close tightly. Even the slightest air leaks at the front of the radiator allow debris into it.

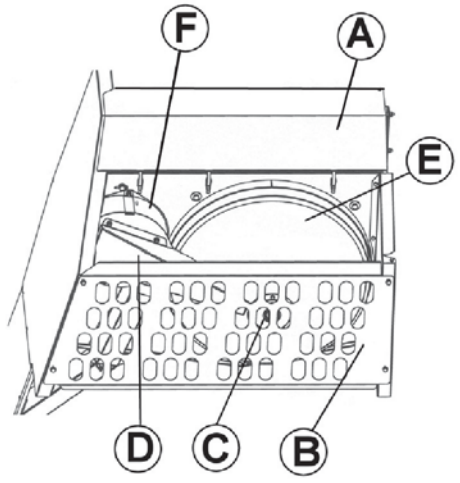

P76

Removing and Refitting of the ROTATING SCREEN

The cooling air intake screen may have to be removed for cleaning or other maintenance measures such as changing of belts. It shall be done in the following manner:

- Remove protective screen B
- Remove cam D of the air extractor
- Undo fixing nut C on the inlet screen and pull screen E off
- If the belt needs changing, the rotor wheel in air extractor housing F and the plate behind it need to be removed

When refitting, keep the following in mind:

- Centre the plate behind the rotor wheel in relation to the drive shaft
- Make sure that the air extractor and screen E can rotate freely.

https://truckmanualshub.com/

COOLING SYSTEM

Draining of the Cooling System

The coolant shall be changed every other year in order to maintain its anti-corrosion properties.
The cooling system is drained by opening the drain taps on the left side of the engine at the rear and in the lower part of the radiator as well as the cap on the radiators expansion tank, figs. P77 and P78. Depending on the type of combine, the drain tap is in the engine compartment or below the cell, beneath the side guard.
In order to drain the heater cell as well, turn the temperature controller to maximum heating.
Used coolant is problem waste and shall be disposed of in an appropriate manner.

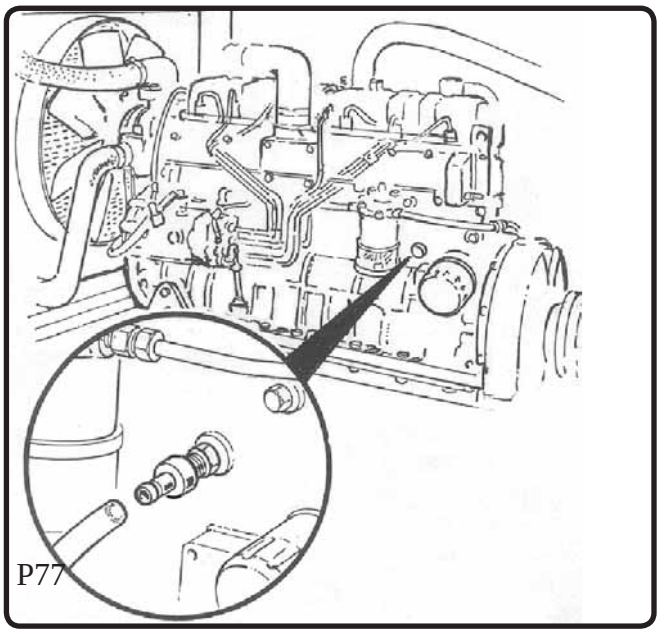

P77

Filling of the Cooling System

The cooling system is filled with coolant with 40-50 % of ethylene glycol added. Never use plain water as coolant. Before filling the system, the engine must have cooled off entirely. When refilling the cooling system, remember that the coolant expands considerably when getting warm, so the system must not be filled all the way up, but the upper tank shall be left 20-30 mm below the rim. (Depending on the type of combine, the filler is either on top of the radiator or the expansion tank.) See instructions in the engine manual. After filling, run the engine with the heater in its maximum position for approx. 5 min. to bleed the air from the heater. Check the liquid level after this.

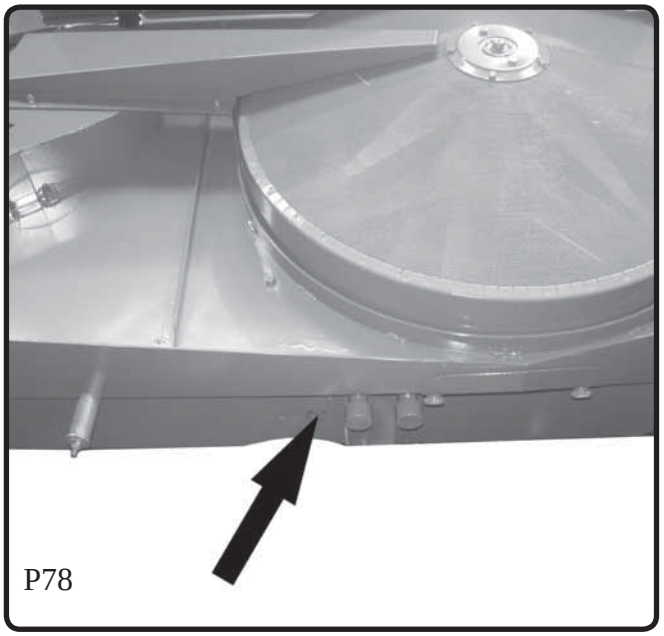

P78

https://truckmanualshub.com/

GEARS

GEARBOX (Fig. R1)

Change the oil every 600 h or once a year.
The oil is drained by unplugging oil drain A.
New oil is poured into filler B. The oil level shall be between the lower end of the filler dipstick and the marker with the cap screwed on.
Used oil is problem waste, which shall be disposed of in an appropriate manner.
Use an oil type in accordance with the oil table. Check and clean, if necessary, the breather on the cover.

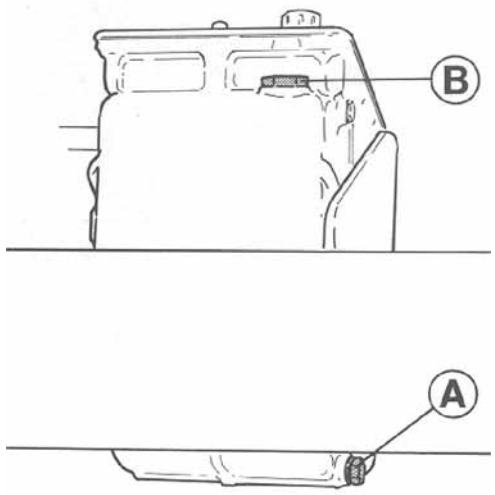

R1

CLOSED FINAL DRIVES (Figs. R2a and R2b) on Models Equipped with Them

Change the oil every 1200 h or at least every other year. The oil is drained by unplugging oil drain A.
Clean the bottom plug magnet.
New oil is poured in through a funnel into filler B at level with rim C.
Used oil is problem waste, which shall be disposed of in an appropriate manner.
Use an oil type in accordance with the oil table.
Check and clean, if necessary, breather C in the upper section of the final drive.
Depending on the type of final drives, the plugs are positioned as shown in figures R2a and R2b.

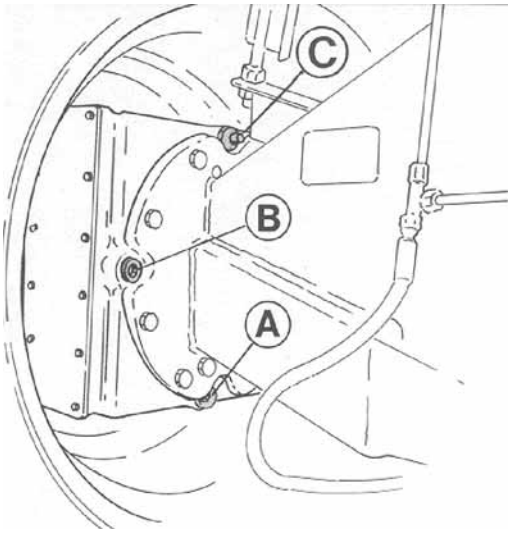

R2a

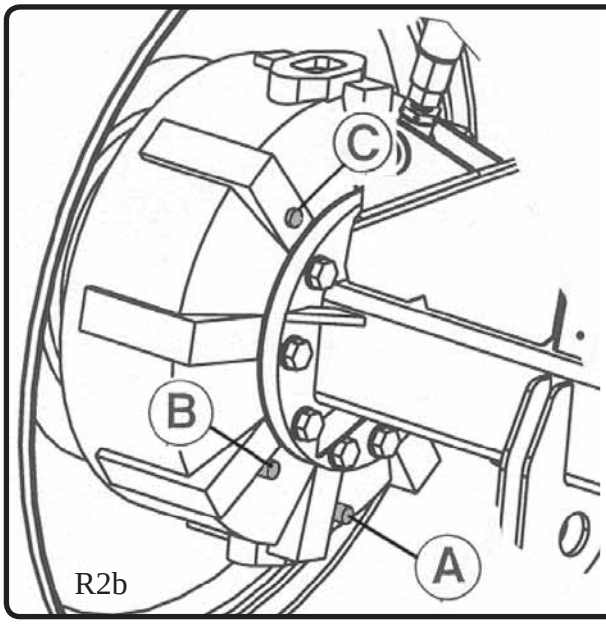

R2b

https://truckmanualshub.com/

KNIFE DRIVE UNIT (Fig. R3)

Check in opening C on the drive pulley that oil is level with the rim of the opening.
Change the oil every 600 h or once a year. The oil is drained by unplugging oil drain A. Turn the pulley to an appropriate position.
New oil is poured in through a funnel into filler B at level with rim C.
Used oil is problem waste, which shall be disposed of in an appropriate manner.

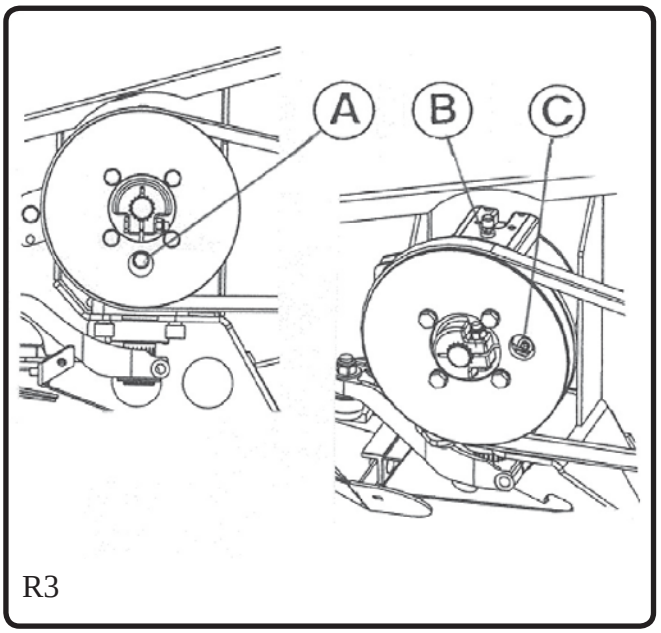

R3

GEAR BOX IN THE RETURN AUGER (Fig. R4)

The oil in the wobble box shall be changed at least once a year as instructed in the service table.
Old oil can be drained using a suction pump through drain A. If necessary, first remove support plate B if there is no hole in it.
Fill the wobble box with new oil level with the rim.

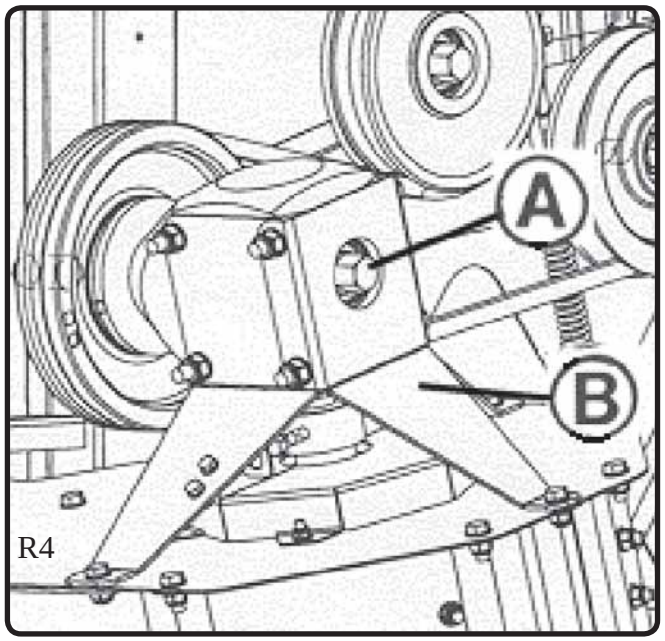

R4

https://truckmanualshub.com/

DIFFERENTIAL LOCK (Fig. R5)

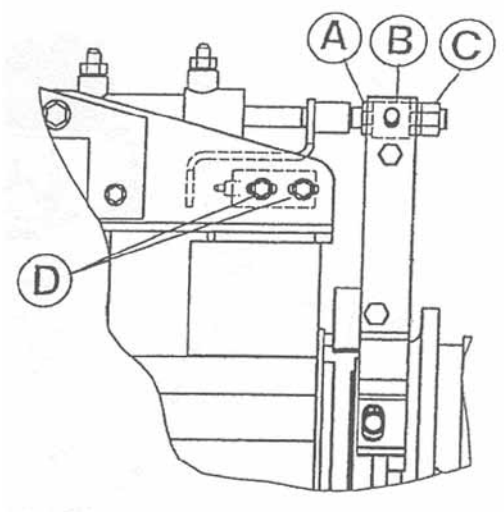

R5

The lock needs to be adjusted if it does not function perfectly, or if, for some reason, it has been necessary to disassemble it.
With the adjustment make sure the cylinder does not push the engagement fork too far and that the disengaged position of the lock is sufficiently far from the engaged position. Also make sure that the control light turns on correctly in regard to the lock operation.

- Raise the table (or just the crop elevator) to its top position and make sure it will stay up. (Service support and trestle beneath the table.) Make sure that the table pressure gauge indicator will stay in the green field.
- Raise one of the front wheels off the ground and support it with a trestle. Set blocks on both sides of the other wheel.
- Engage the lock and gear. (The ignition key shall be in position I with the engine not running.)
- Rotate the raised front wheel by hand until the lock gets engaged and the wheel stops.
- Slacken nuts A and C. Turn nut A until it touches part B. Then turn it two rounds to slacken.
- Tighten nuts A against part B.
- Slacken screws D and move the light switch fastened with them as far left as it easily moves. (The light switch goes to the bottom.) Tighten screws D.
- Disengage the lock and gear and lower the wheel.
- Test-drive the combine to make sure the lock and control light function correctly.

Warning!

Never disconnect any hydraulic hoses in the differential lock before all the pressure has been removed from the table lifting mechanism and the table has been supported safely. **Disconnecting the hoses makes the table lower suddenly!**

https://truckmanualshub.com/

HYDRAULICS

(Hydrostatic Traction Transmission)

General Description

Traction hydraulics and working hydraulics use a joint oil tank and filter. Both systems have their own pumps. Hydrostatic steering gets its oil from working hydraulics by means of a priority valve. The valve always supplies the amount of oil needed in steering and the rest can be used in other hydraulics.
There is also an oil cooler in the system located in the traction hydraulics return line before the filter.
The control valves in working hydraulics are electrically controlled and located at the front beneath the right side guard.
There are two valves: the lower valve houses the control valves of table height and free circulation; the higher valve houses the control valves of the reel and unloading pipe. Movement speeds are regulated by restrictors at the control valve gates except for the table lowering speed, which can be adjusted.
Pump output in working hydraulics is 25 l/min.
Working pressure is restricted to 180 Bar.
Pump output in traction hydraulics is 170 l/min.
Working pressure is 400 Bar

Adjustment of Table Lowering Speed

The table lowering speed can be adjusted steplessly by regulating knob A, fig. R12, on the valve.

Daily Service

The oil tank is in the engine compartment. Periodic service measures include checking of the oil level and changing of the oil and filters. To check the oil level, there is transparent measuring glass A, fig, R11b, on the oil tank. The oil level must be visible in the glass, near the maximum, with the cutting table and the reel lowered. New pure oil is added through filler B, when necessary. Before unplugging the filler, clean the whole area carefully to prevent any impurities from getting into the tank. Keep the area around the oil tank always clean. Daily service measures also include checking and, if necessary, cleaning of the oil cooler. The cooler is positioned at the front of the engine radiator.

Oil Change

The oil and filters are changed every 600 h or at least once a year before the beginning of the harvesting season to remove any condensed water from the system after the winter. The oil is drained by opening drain A, fig. R10a. After draining of the oil, replace filter cartridge C. Clean the area round the filter carefully before removing the filter. Check and, if necessary, change the filter cover gasket before refitting. Use original filters only to ensure perfect functioning of transmission. Fill the filter housing with pure oil before closing the cover.

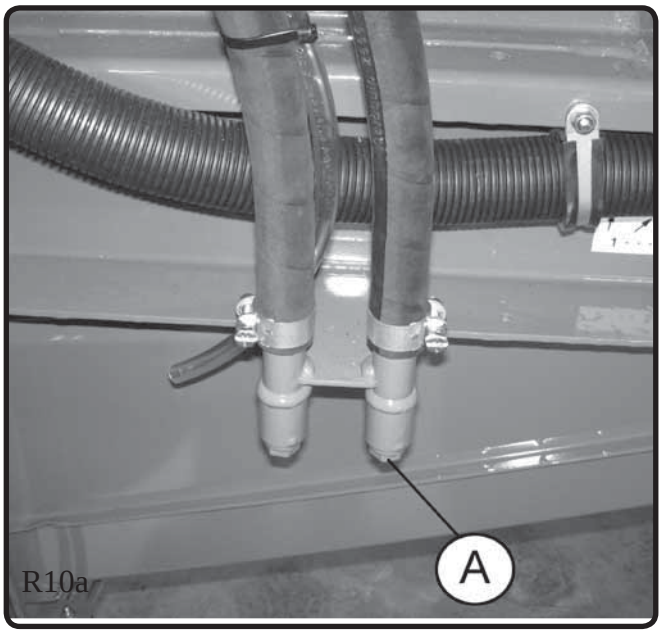

R10a

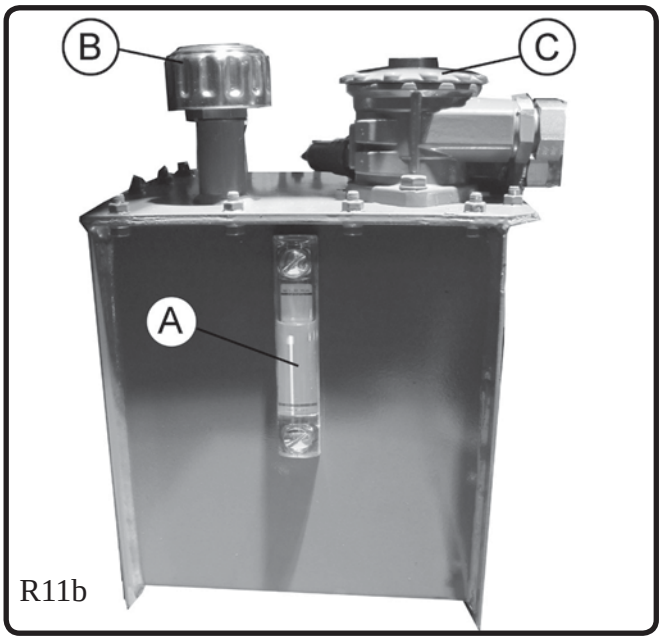

R11b

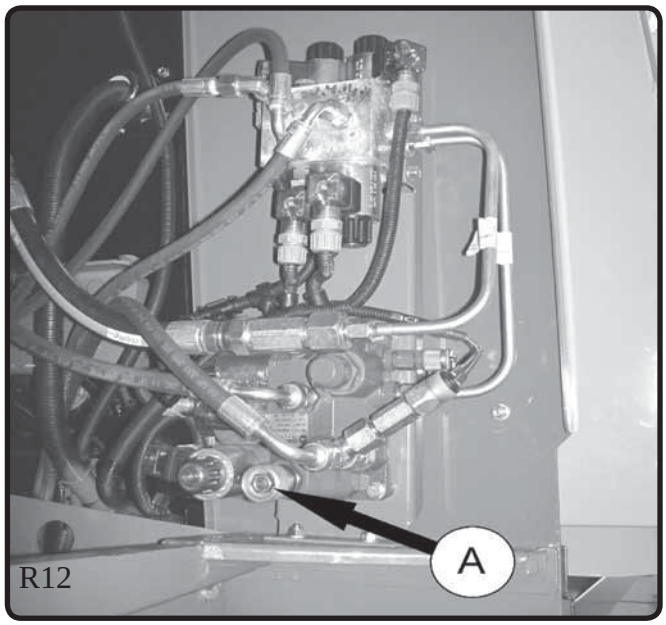

R12

https://truckmanualshub.com/

Used oil and filter are problem waste, which shall be disposed of in an appropriate manner.
Use an oil type in accordance with the oil table. Make sure the oil is free from any impurities. Always use a clean funnel.
After oil change let the engine idle for some 15 minutes during which time no hydraulics must be used. During this time the oil circulates through the filters several times and the impurities in the oil are filtered off. Monitor the oil level and check for leaks in the filter.
Also the breather, which functions as a filler, shall be changed every 1200 h or every two years.
Check the condition of the hydraulic hoses periodically. Replace damaged hoses immediately with new original ones.
Air is bled from the system by turning the steering wheel several times from one extreme to the other with the engine running. Monitor the oil level in the measuring hose and add oil if necessary.

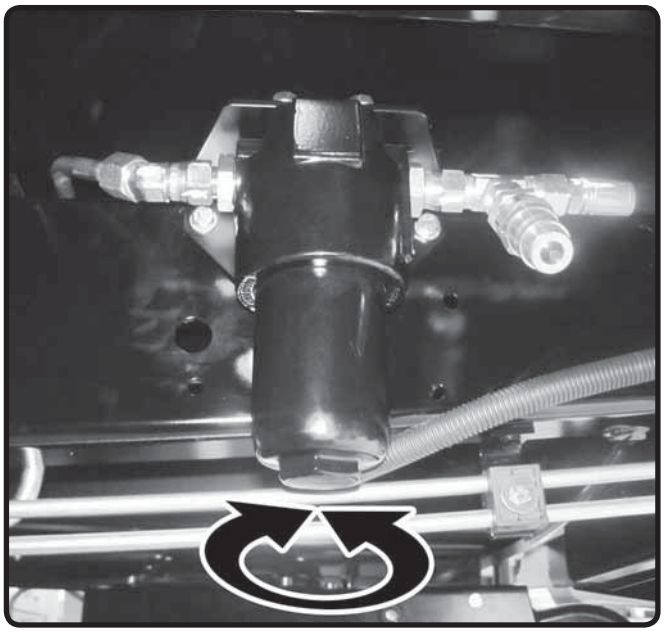

R13

Pressure filter
The pressure filter is located underneath the cabin. The pressure filter is replaced by turning the bottom of the filter off, after which the filter can be replaced by hand, fig. R13. The filter is replaced after the first 50 hours, after which the changeover interval in every two years.

4 WD on Models Equipped with it

4WD uses the pump and oil in traction hydraulics.
The only service feature required is the greasing of the gasket housing on the shaft of the rear wheel hub motor. The nipple is on the outer rim of the hub motor. Greasing is done in the autumn after the harvesting season. Apply only one or two squeezes of grease. Too much grease may damage the seals.

Chaff Spreader

The optional chaff spreader is located behind the shaker shoe. The spreader has three different quick settings. The two front-most ones are working settings. The rear-most setting is used when the shaker shoe is serviced or when the chaff is not spread.
If necessary the spreader is easy to remove. If removed, the hoses in the working circuit are to be connected. There are no features that would require periodic service measures.

https://truckmanualshub.com/

https://truckmanualshub.com/

ELECTRICAL SYSTEM

The engine is equipped with an alternator. The master switch or the battery cables must not be disconnected with the engine running.

FUSES

Fuses F100-F117 are located in fusebox of the rear switchboard (fig. S1b) under left side guard.

Mainfuses are also located in rear switchboard under left side guard. The control relays for different functions are located inside the instrument panel in the cabin and electricity box in the rear left side of the combine. The functions and locations of the relays are illustrated on the instruction sticker stuck on the inside of the service door to the instrument panel.

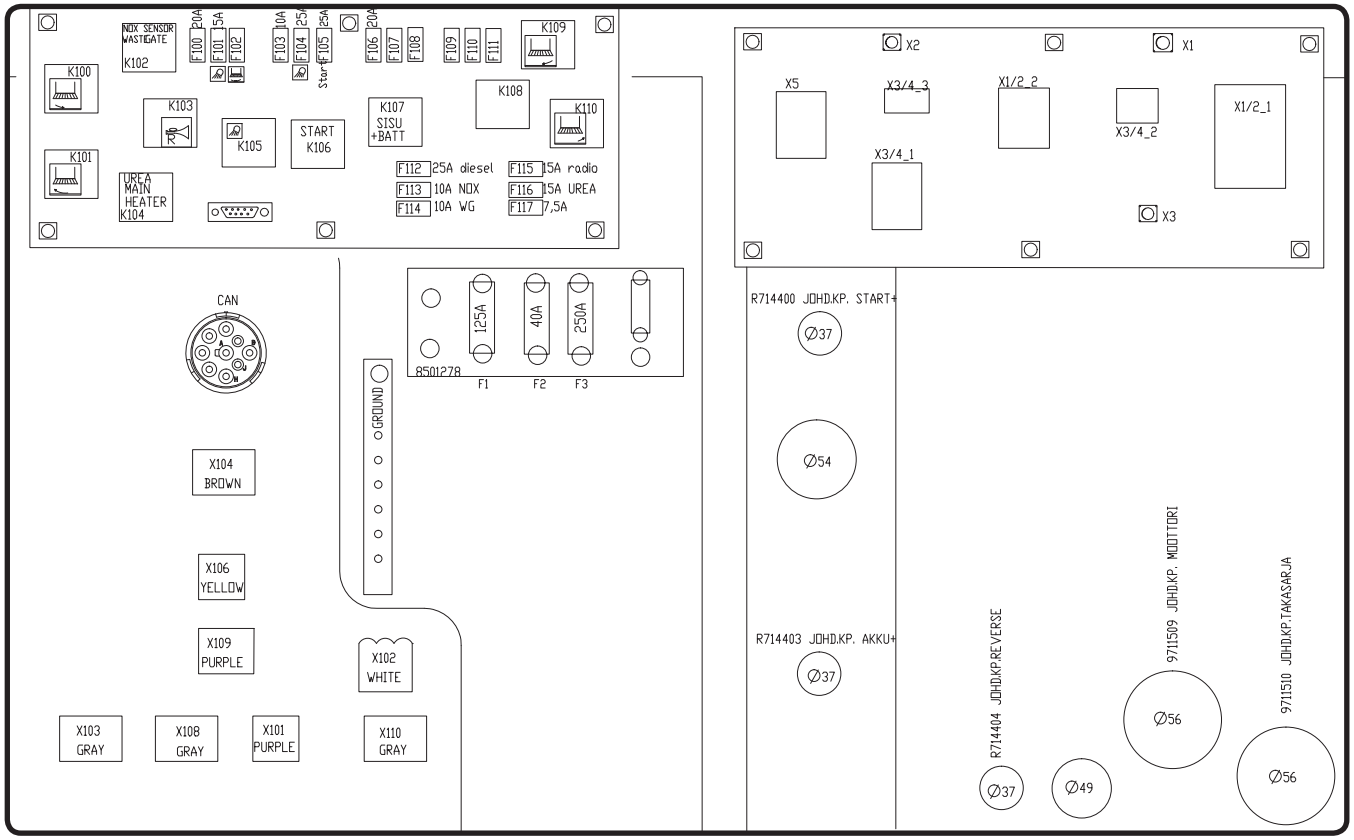

S1B

Fuses, Rear switchboard

F100	20A	Nox sensors, waste gate
F101	10A	Reversing alarm
F102		
F103	10A	Workinglight, sieve area
F104	25A	Worklights
F105	25A	Start
F106	20A	+12V machine back part, workinglight sidecovers
F107	5A	Diesel
F108		
F109	10A	Electrical Main switch light
F110		
F112	25A	Diesel
F113	10A	Nox sensors engine
F114	10A	Waste gate
F115	10A	Electrical Main switch
F116	15A	heater urea module

Rear switchboard

K102	Relay, nox sensors, waste gate
K103	Relay, Reversing alarm
K104	Relay, urea main heater
K105	Relay, workinglight rear
K106	Relay, start
K107	Relay, Diesel supply

https://truckmanualshub.com/

FUSES

Fuses on the Instrument Panel, Fig. S1

Most of the fuses are located in boxes F1 and F2 in the instrument panel or on the right side of the cab.
To gain access to the fuses, remove the box cover from inside the cab.

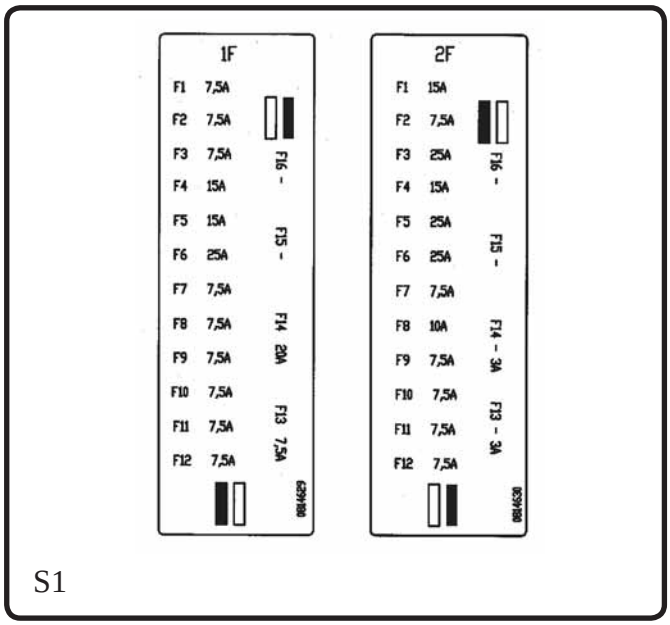

S1

1F1	Flasher left	7.5A
1F2	Rear light left, Parking light left, Switch control light instrument panel.	7.5A
1F3	Rear light right, Grain tank light Parking light rightSwitch control light, top panel i.	10A
1F4	Emergency flasher	15A
1F5	Rotating flasher	15A
1F6	4WD control, differential lock, Engine display	7.5A
1F7	Electric outlet-Radio	7.5A
1F8	Head light left dipped	7.5A
1F9	Head light right dipped	7.5A
1F10	Head light left full	7.5A
1F11	Head light right full	7.5A
1F12	Flasher right	7.5A
1F13	Radio	7.5A
1F14	Light switch	20A
1F15	Electric Master Switch	7.5A
1F16	Gear lock	25A

2F1	Working light	15A
2F2	Working light,	7.5A
2F3	Working light, cab	25A
2F4	Flasher feeder Alarm light	15A
2F5	Variable speed motors, Working hydr. relay	25A
2F6	Cab ventilation Switch for AC compressor	25A
2F7	Gauges	7.5A
2F8	HornReversing alarm	10A
2F9	Brake lights	7.5A
2F10	Cabin light	7.5A
2F11	Reversing camera	3A
2F14	Teejet	3A
2F16	ECU, CAN display, DEF level alarm	5A

https://truckmanualshub.com/

Relays inside the Instrument Panel

Connecting Relays

K1	Flasher relay
K2	Alarm relay
K3	Working light relay
K4	Working light relay
K5	Cutting mech. reverse relay
K6	Starting stop relay
K8	Working hydr. safety relay
K12	Grain tank alarm reset relay (with sound)
K13	Grain tank full alarm relay
K14	Grain elevator low speed alarm relay
K29	Radio relay
K31	Return auger low speed alarm relay
K42	Grain Tank 1/1 signal
K96	Grain tank 1/1 control light relay -> rotating flasher
K107	Gear lock
K116	CSP low speed alarm relay

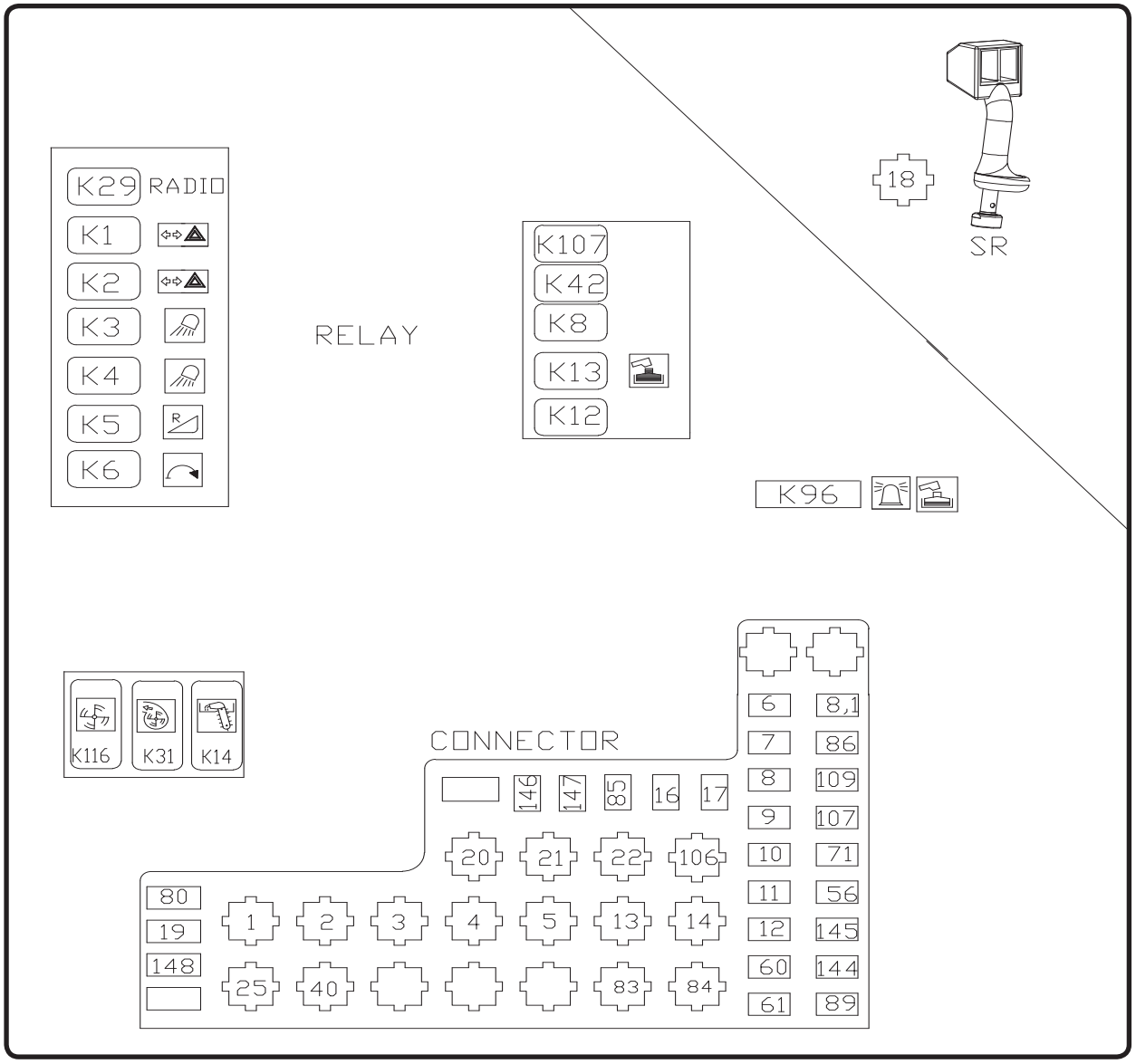

S3

https://truckmanualshub.com/

ELEVATOR, RETURN AUGER and CSP

Speed Monitor

The rotation of the elevator bottom auger and the return auger is controlled by an electronic monitor the alarm sensitivity of which can be regulated by adjusting the sensor inside the instrument panel.

Fig. S5
Alarm limit is set on knob S2. The numbers on the scale refer to a hundred revolutions per minute.
Alarm delay is set on knob S1.
Green led light L1 is on when the relay is supplied with electricity. Red led light L2 is on when the relay is alarming.

Recommended settings are the following:

	Elevator	Return auger	CSP
S1	1s	1s	1s
S2	3 = 300RPM	7 = 700RPM	4=100RPM

There is pulse disc behind the chain wheel of CSP-drum, which is sensored.
Distance **a** from the sensor at the left-hand end of the bottom shaft and at the top of the return auger to the screw-head on the sensor ring attached on the shaft shall be 1…1.5 mm. Fig. S4.

The alarm shall function when the threshing mechanism clutch is engaged with the engine off and the ignition on.
The alarm shall also go off with the threshing mechanism rotating when the throttle is adjusted below half the speed.
When engaging the threshing mechanism, the alarm will be on for a time delay of 10 s although the speed has reached the normal level.

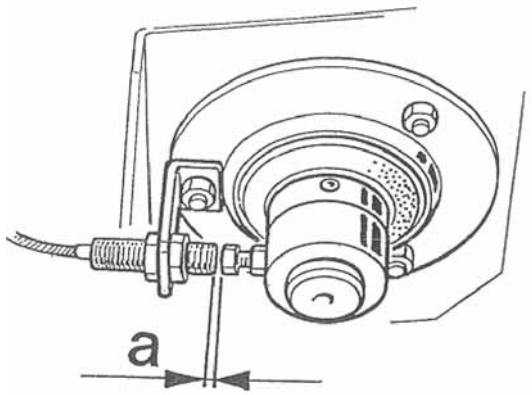

S4

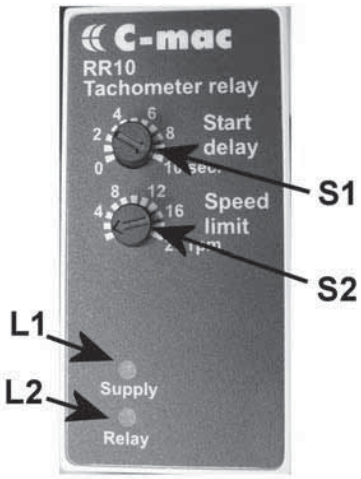

S5

https://truckmanualshub.com/

Sensors of ELECTRICAL SPEEDOMETERS

The sensors of electrical speedometers (driving speed as well as fan and cylinder speeds) are located in the gearbox and at the ends of the respective shafts. To guarantee the correct functioning of the sensor, make sure that distance a between the sensor and the pulse disc (or the gear) is 1+/- 0.5 mm. (Fig.) Make any necessary adjustments by turning the sensor fixing nuts. The sensor must not touch the rotating pulse disc. **Maximum tightening torque 5 Nm.**

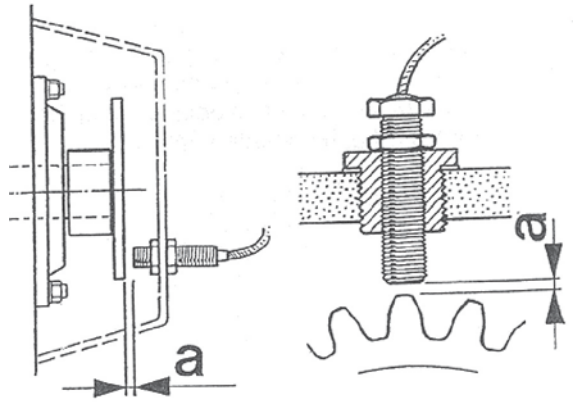

S6

https://truckmanualshub.com/

BATTERY

The gas generated by the battery is very explosive. Avoid open fire and sparks in the vicinity of the battery. When servicing any electrical equipment, disconnect the negative cable of the battery.

Checking the Charge State of the Battery

During the harvesting period the engine recharging equipment keeps the battery charged. At other times, check the state of the battery at regular intervals and recharge if necessary. An acid gauge may be used for checking. In the table below you can see the charge state of the battery compared with the acid specific weight.

Specific weight reading	Charged state
1 280	Fully charged
1 240	75 % ”
1 200	50 % ”
1 160	25 % ”
1 120	No charge

Do not leave a flat battery unused for a long time. A low-charged battery freezes easily and exposure to frost will cause extensive damage. If a recharging device is available, recharging can also be done at home.

Before starting to recharge:
Disconnect the battery cables.
Unplug the cells.
Check the fluid level.
Use 5-10 % of the Ah of the battery for charging current. For example: A 100 Ah battery may be recharged using 5-10 ampere current. Recommended recharging interval is 6 -10 weeks.

Cleaning of the Battery and Other Maintenance

Clean the battery cover regularly.
Remove any oxidisation off the poles and cable lugs.
Make sure the cable lugs are properly tightened.
Coat the outer faces of the poles and lugs with Vaseline.
Check the fluid level before the harvesting season and before winter storage. Add distilled water if necessary up to the upper fluid level.

Note! Wrong connection of either the battery or the generator will damage the generator. Before electrical welding, disconnect the battery and generator cables.

https://truckmanualshub.com/

Using Auxiliary Battery

If an auxiliary battery is needed for starting, proceed as follows:

Check that the voltage of the auxiliary battery is 12 V.
Make sure the combine battery has not frozen; a flat battery freezes in -10oC.

Follow carefully the connecting sequence given below:

With the auxiliary starting cables connect the positive poles of the batteries (marked with red paint, a P or a + symbol).

Connect the end of one auxiliary starting cable to the negative pole of the auxiliary battery (marked with blue paint, an N or a - symbol) and the last free end to the negative pole of the discharged battery.

Do not lean over the batteries while making the connections.
Start the engine.
Disconnect the cables in exactly the opposite order.

Fitting of Additional Electrical Equipment

When fitting additional electrical equipment to the combine, the capacity of the charging generator must be taken into account, 120A. The total consumption of a standard combine is over 60 A in the dark comprising:

Head lights	12 A
Working lights	35 A
Gauge lights	3 A
Fan in the cab	14 A
Air conditioning	10 A
Electronic engine regulator	10 A

https://truckmanualshub.com/

LUBRICATION

Do not lubricate while the engine is running. Remove the key and lock the parking brake before starting lubricating. The cutting table and reel supports must be locked or lowered when lubricating.
The table below gives recommended lubricants to be used in different temperatures. The table also gives different types of air conditioning liquids, although they do not normally have to be changed.

Recommended lubricant	Oil grade API	SAE Grade		Filling quantity litres	Change intervals
		-10...+30C	+10...+45C		
Engine AgcoSisuDiesel - Common Rail	CJ-4	10W30	15W40	Depending on cyl. number 4 cyl. 13 l (49 AWF 11,5 l) 6 cyl. 25 l	300h or 1 year
Gearbox	GL-5	80W90	85W140	3.5 l	600h or 1 year
Final drive DANA	GL-5	80W90	85W140	left 6.0 l right 5.5 l	1200h or 2 year
Final drive CIT	GL-5	80W90	85W140	left 3.0 l right 3.0 l	1200h or 2 year
Working hydraulics	Shell Esso	Tellus T46 Univis N46	Tellus T46 Univis N46	22 l (Change)	600h or 1 year
Grain elevator gear box	Shell	Gadus S3 V120G	Gadus S3 V120G	0.25kg	
Return auger gear box	GL-5	80W90	85W140	0.35 l	600h or 1 year
Knife drive unit	GL-5	80W90	85W140	0.5 l	600h or 1 year
Lubrication with oil	CB/CC	10W30	10W30	15W40	
Lubrication with grease	Lithium grease	NLGI 2	NLGI 2		
Oil in the AC	PAG	500SUS	500SUS	0.18 l first filling	
Agent in the AC	HFC R134a			1.2kg	

The combine leaves the factory filled with oil intended to be used in temperatures -10...+30°C except with Shell Tellus S4 VX 32 in the traction hydraulic system. With refills it is advisable to start using oil types intended for local temperatures.
If the combine is used in areas where only biologically decomposable hydraulic oils should be used, the Manufacturer should be consulted about the choice of oil.

Correct lubrication is of major importance to the perfect functioning and long working life of the combine, due to which the lubrication recommendations shall be followed carefully while simultaneously monitoring if any place demands more lubrication.

All the lubricants shall be pure. Even slightest impurities may cause damage. Oil fillers and nipples shall be wiped clean. The nipples are lubricated with grease in accordance with the lubrication table. Apply machine or engine oil to places to be oiled.

The overload clutches and the variator pulleys must be lubricated carefully. Excessive lubrication will cause unnecessary slipping of the clutches and damage to the belts, if lubricants come into contact with the belts or friction plates.

After lubrication the variator pulleys are adjusted with the threshing mechanism running between different speed ranges, which will spread the lubricants evenly on the surfaces

Mechanical, Closed Final Drives

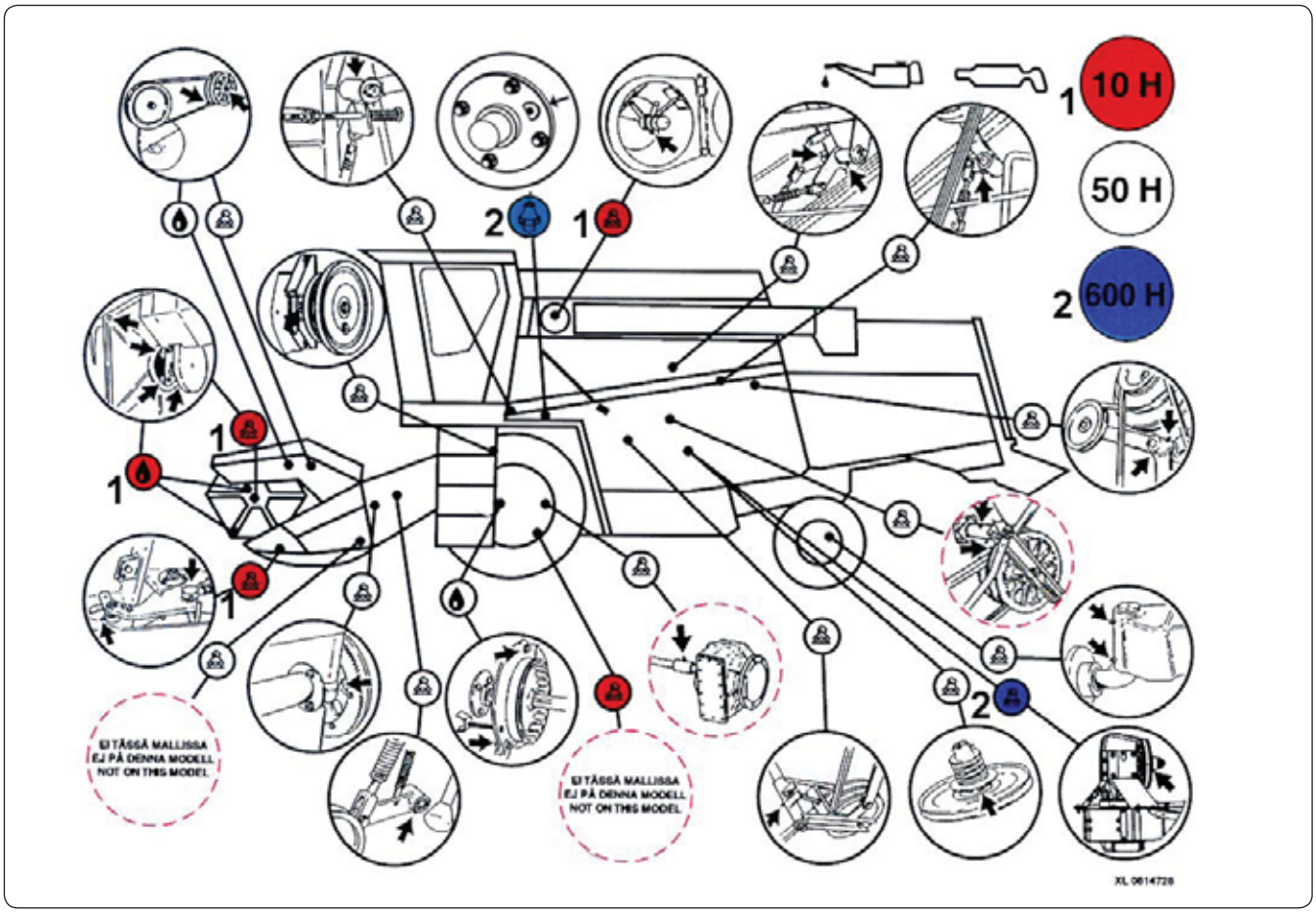

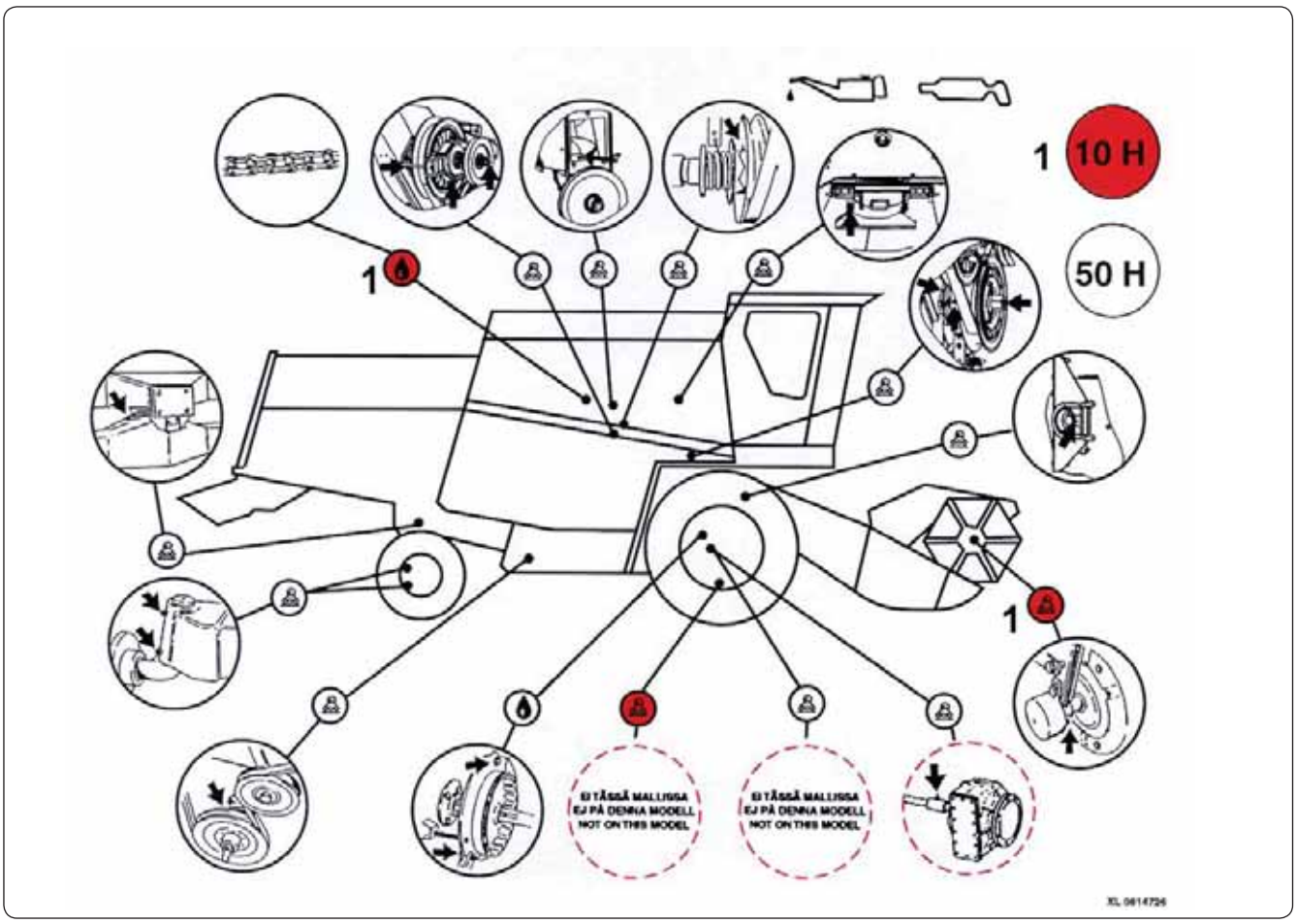

Hydrostatic, Closed Final Drives

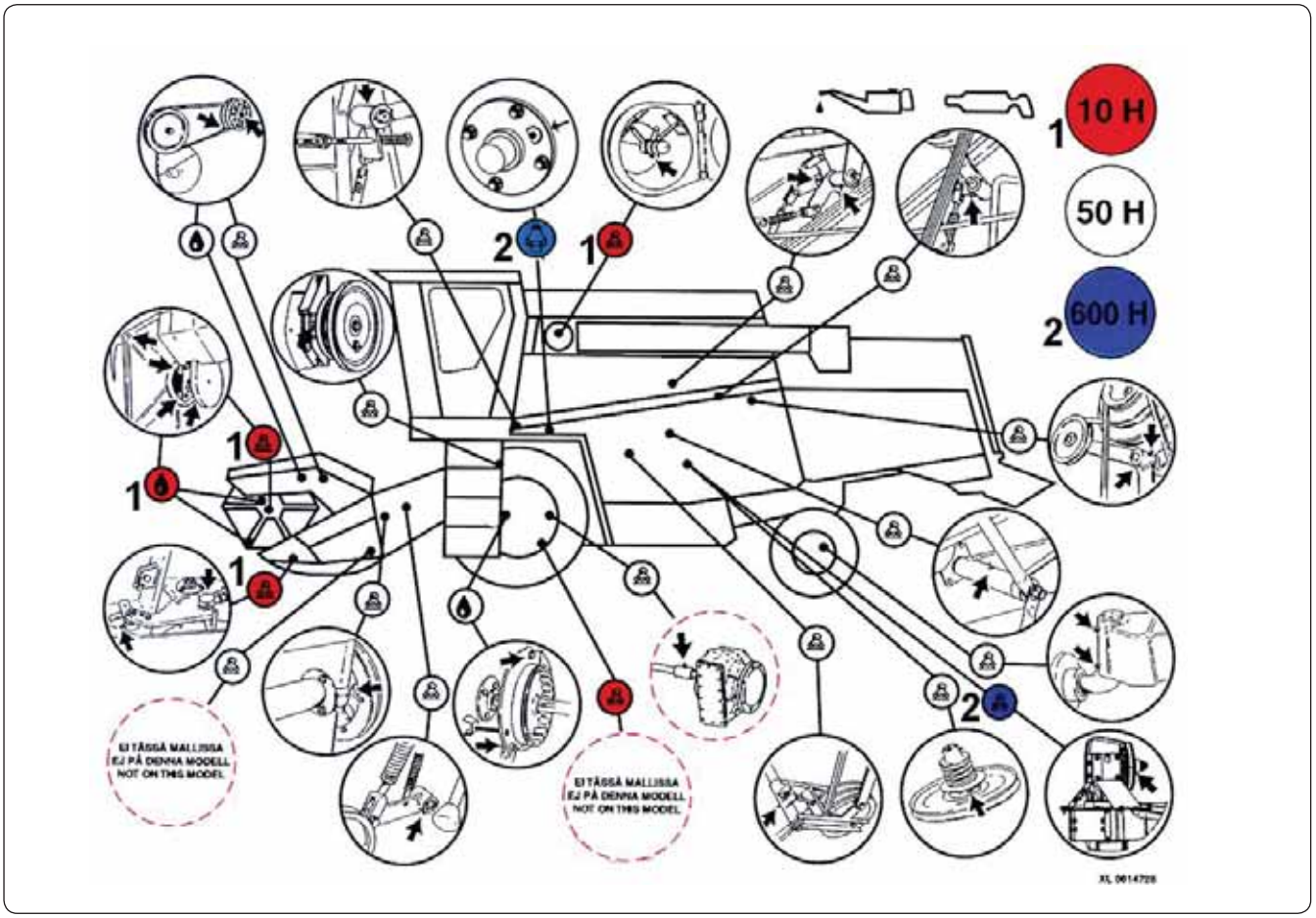

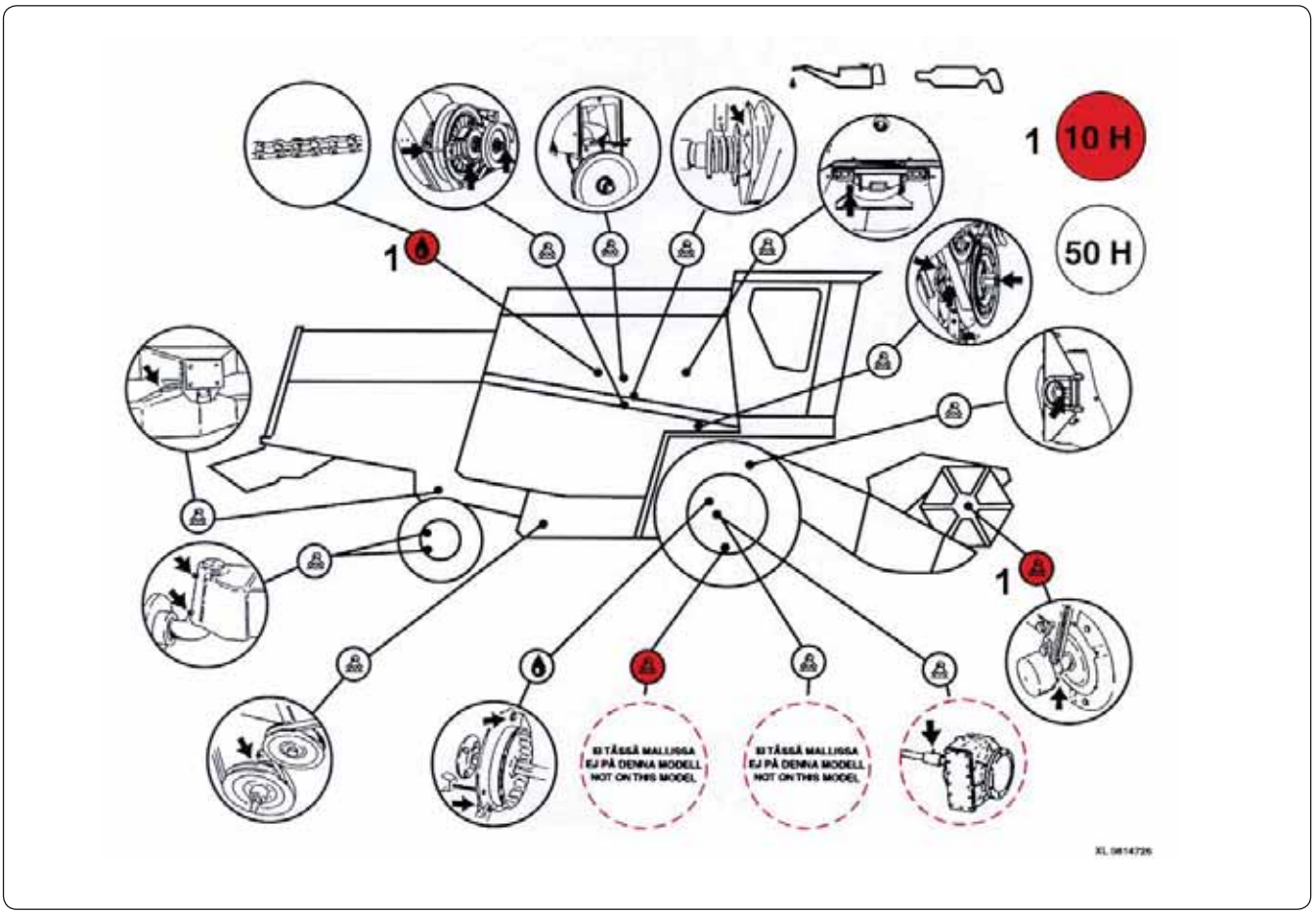

TS-Model

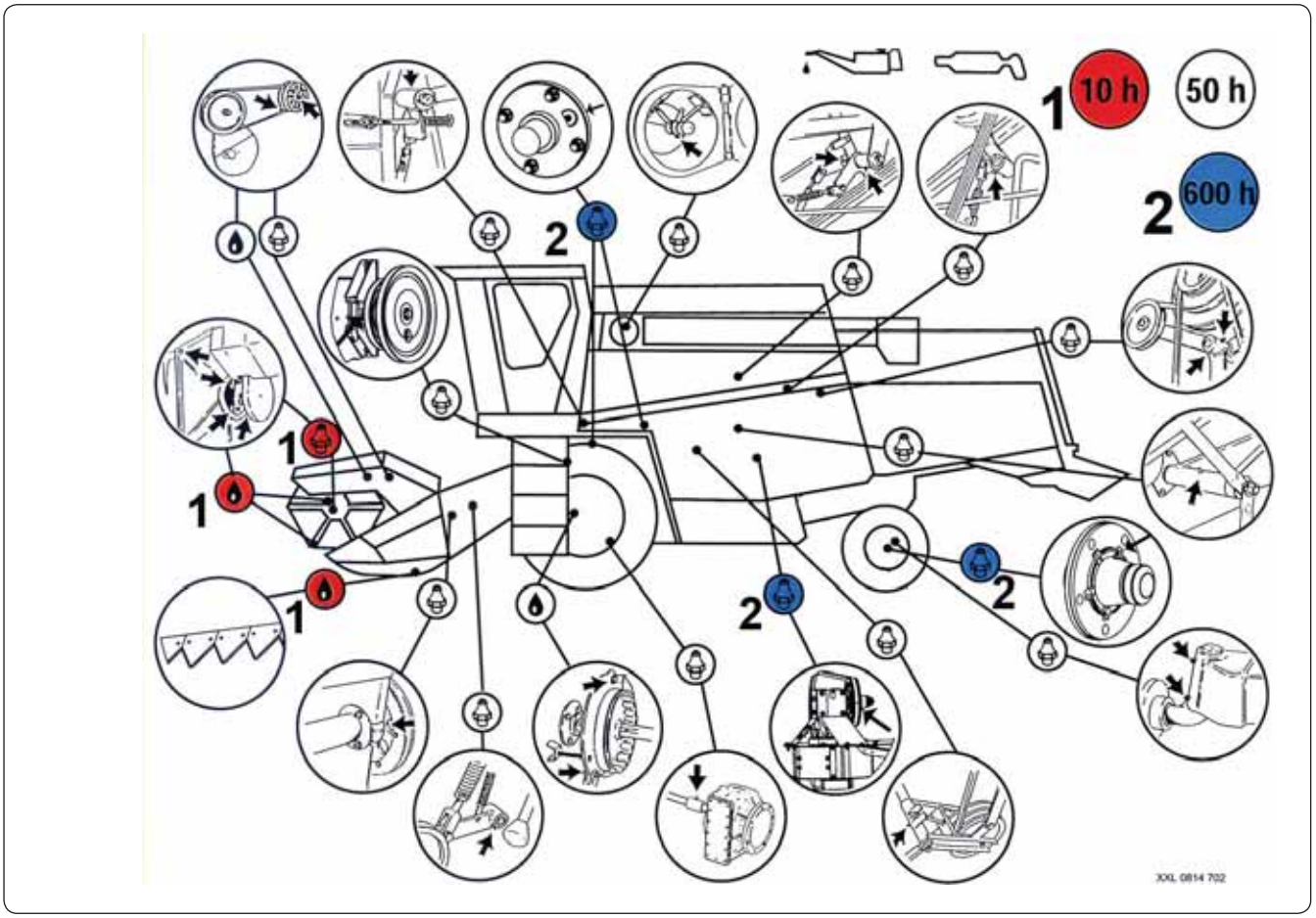

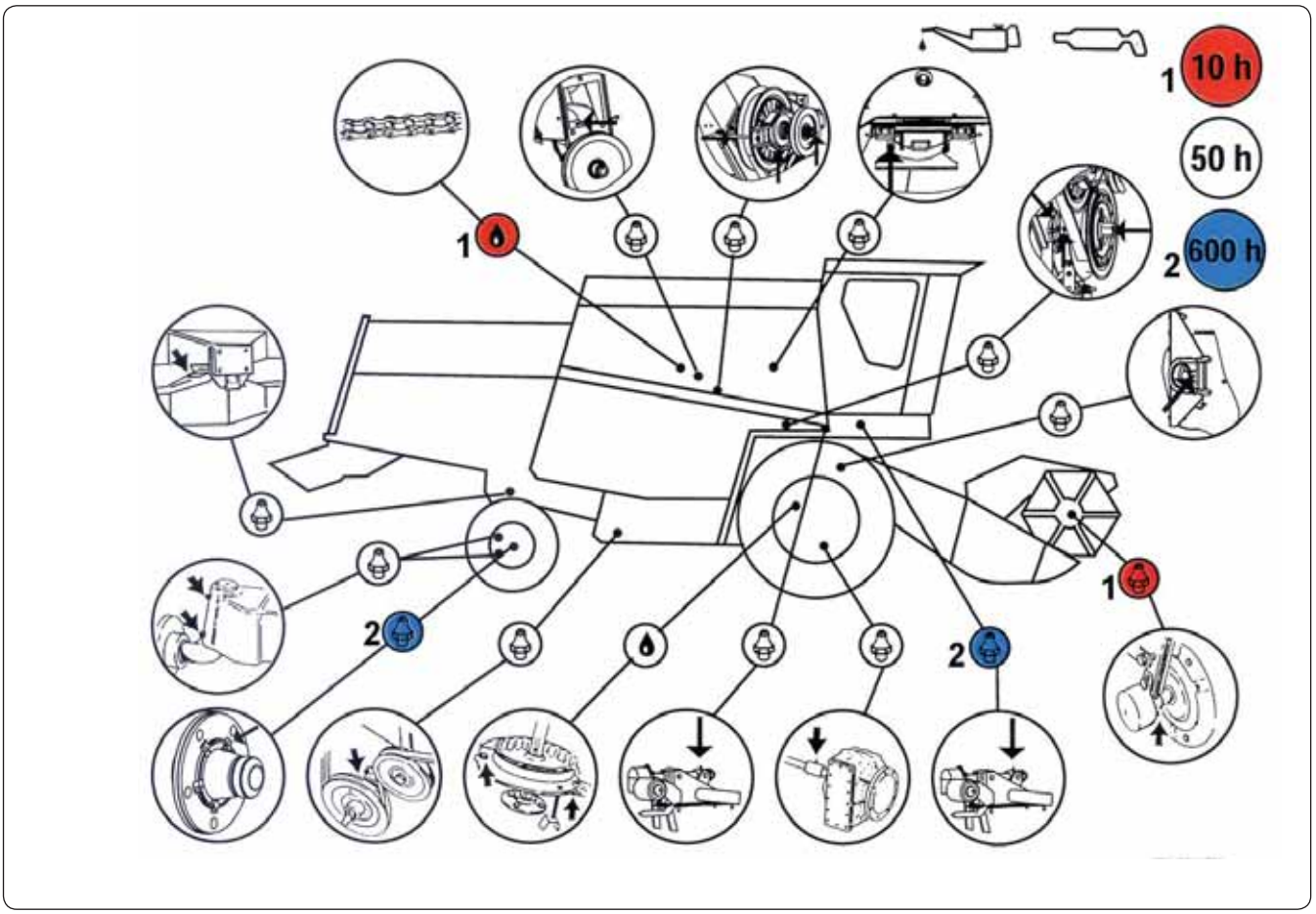

https://truckmanualshub.com/

SUMMARY OF PERIODICAL MAINTENANCE PROCEDURES

For more detailed instructions on engine adjustments and maintenance, see the engine manual.

Daily:

- Check the engine oil level.
- Clean the engine compartment
- Check the radiator and inlet sieve for dirt
- Check the radiator coolant level.
- Check the intercooler for dirt
- Check the fluid and oil connections for leaks.
- Lubricate the points to be lubricated daily.
- Check the function of the alarm system.
- Check the condition of the cab air filter.
- Check the condition and tension of belts visually.
- Check the chopper knives.
- Service the engine air filter if the service indicator alarms.
- Check the tightening of the wheel nuts/bolts first hour and then each 10 hours till 50 total hours.
- Check tension of variator drive belt.

Every 50 working hours:

- Lubricate all the points specified in the table.
- Check the battery fluid level.
- Clean round the breather on the hydraulic tank.
- Check the gearbox oil level.
- Check the oil level in the final drives
- Check the oil level in the return auger gear box (on combines equipped with it).
- Check the knife condition.
- Check the oil level in knife drive (combines with oil bath drive).
- Check the concave basic setting.
- Check the condition of the threshing equipment.
- Check the condition of the power transmission equipment.
- Check the tension of belts and chains.
- Check the operations of safety clutches.
- Check and clean the cab air filter.
- Check the tension of the grain elevator belt.
- Check the tension of the grain pan chain.
- Check the brake functions.
- Check the clutch free travel (Mechanical transmission).
- Check the light functions.
- Check the tyre pressures. (Recommended tyre pressures are given in Technical Specifications)
- Replace the pressure filter after the first 50 operating hours. (After this, every two years)

Every 300 working hours or yearly:

- Change the engine oil and filter.
- Change the engine air filters.
- Lubricate the clutch fork (Mechanical transmission).
- Lubricate the fan variator hub. (Oil)
- Lubricate the fan variator regulator. (Oil)
- Lubricate the cylinder variator regulator. (Oil)
- Lubricate the pedal shafts. (Oil)
- Lubricate the gear lever joints and bearings. (Oil)
- Lubricate the clutch lever joints. (Oil)
- Lubricate the auger and joints in concave adjustment. (Oil and grease)
- Lubricate the reel variator and clearance adjustment equipment. (Oil)
- Lubricate the joints in the differential lock. (Oil)
- Change the cab air filter.
- Check the battery fluid level.
- Check the inlet hoses in the radiator and engine visually, replace if needed. Replace at least every 5 years.

Every 600 working hours or yearly:

- Change the oil in the gearbox.
- Change the fuel filters.
- Change the oil in the return auger wobble box.
- Lubricate the bearings on the left-hand side of the threshing cylinder and rear beater. (TS)
- Change the hydraulic oil and filter.
- Lubricate the middle shaft of the stairs.
- Lubricate the wheel bearings.
- Grease the shaft gasket in the rear wheel hydraulic motor (on 4WD models, once a year)
- Sensitize and adjust the friction plate type safety clutches
- Lubricate the hinges and lock on the cab door.
- Change the oil in knife drive (combines with oil bath drive).
- Check the condition of the hydraulic hoses. Replace at least every 10 years.
- Replace the main filter of SCR supply module

Every 1200 working hours or every other year:

- Change the oil in the final drives (models with closed final drives).
- Change the breather in the traction hydraulics.
- Change the radiator fluid in the engine.
- Replace the pressure filter.

https://truckmanualshub.com/

STORAGE WHEN NOT IN USE

To guarantee the operating reliability of the combine, proper service and storage are of great importance. The service before winter storage can be divided into three parts, in order of performance: cleaning, checking and protection. A dry store or shed is ideal storage for the combine.

Cleaning:

Open the stone trap and all doors. Remove and wash all detachable guards, sieves, the bottom cassettes of the grain pan and straw walkers as well as the grain tank bottom augers. Dirt is efficiently removed from a dry combine by compressed air. A high-pressure washer may be used with caution. To reduce drying time use warm water and idle the threshing machinery.
Do not direct water jets at the bearings as the packing does not hold against a strong spray of water.
In normal seasons, it is not necessary to wash the inner parts of the combine in water; the inside of the combine can be raked clean with a suitable tool. Apply suitable solvent on heavily greasy spots before washing.
Start cleaning from the top. Clean the radiator cells by blowing air from the direction of the engine.

Checking:

Take a pen and paper and write down all the shortcomings and required service measures in the following order:

- Condition of knives.
- Draw-in fingers and bearings.
- Slip damages and breaks in belts and the remaining tensioning margin.
- Condition of and basic settings for the cylinder and concave.
- Condition of the grain pan and shaker shoe packing.
- Bearing clearances and fastenings.
- Wear, corrosion and dents.
- Rotor knives and counter-knives of the chopper as well as rotor bearings.

It is important to have the recorded defects repaired before storage to ensure the efficient functioning of the combine at the beginning of the following harvesting season.

Protection:

Use pure engine oil or special protective oil in a sprayer.

- Places to be protected:
- Knife (protective oil)
- Draw-in fingers (protective oil)
- Worn paint (paint)
- Electrical connections (special protective spray)
- Chains (oil); rotate the mechanism by hand to ensure even lubrication.
- Transmission chains (unloading and the reel) shall be disengaged, cleaned with a solvent and lubricated with molybdenic oil.
- Lubrication of the rotor knife joints of the chopper.

After protection all the cleaning doors, the grain pan and straw walker bottoms and sieves are left open to produce a draught inside the combine. This will prevent rodents from nesting in the inner parts of the combine.

Pre-storage Service of the Air Conditioner:

Use compressed air to clean the cooler condenser and evaporator cells. In case the combine engine is run during storage, the cooler should also be switched on for a few minutes. To operate the cooling system in cold weather, have the heater on at full capacity and the ventilator fan stopped for approx. 15 min. during which time the air conditioning sensor will warm up and enable the switching on of the compressor. After this the ventilator fan is run at its lowest speed and the cooling at full capacity.

Pre-storage Service of Engine:

- Clean the engine on the outside.
- Change the fuel filters.
- Change the engine oil.
- Change the engine oil filter.
- Drain and clean the fuel tank.
- Check the anti-freezing quality of the coolant. It must be a minimum of - 25oC.
- Run the engine min. 10 minutes.
- Seal the exhaust pipe, inlet opening of the air filter and the breather with e.g. masking tape or plastic film.

Other Pre-storage Measures:

- Change the oil in the gearbox. Clean the magnet in the bottom plug and the breather filter.
- Clean the air filter.
- Disconnect the battery, the negative pole first, clean the top of the battery with warm water and store it in a dry cool place.
- Clean the cable lugs and apply grease to them.
- It is not necessary to remove or loosen the V belts for storage. Engage the driving belts of the threshing mechanism, unloading and the cutting table, but remember to disengage the threshing mechanism when starting the engine the next time.
- Check the tyre air pressure.
- Lubricate all points to be lubricated and run the threshing mechanism after that.
- Lower the cutting table and the pick-up reel to allow the cylinder pistons to go in.
- Turn the steering to its extreme left position to allow the cylinder piston to go in all the way.

After-storage Attention

- Remove the engine opening covers.
- Fit new air filters (engine and cab).
- Fasten the fully charged battery, the positive pole first.
- Check the coolant level.
- Change the oil and filters in the working hydraulics and in the traction hydraulics.
- Check the hydraulic and gear box oil levels.
- Check the belt and chain tensions.
- Make sure the rotor knives of the chopper turn.
- Turn the coolant pump by the fan to loosen a possibly stuck sealing.
- Open slightly the bottom plug of the fuel tank and drain any condensed water from the tank bottom.
- Disengage the belt clutches.
- Run the engine on the starter a few revolutions with the stopper in the stop position or with the running solenoid cable disconnected to allow oil pressure into the bearings prior to the actual starting.
- Check that there are no foreign objects inside the combine.
- Start the engine and let it run on fast idle for about 3 minutes.
- Watch the oil pressure and alternator warning lights.
- Check for any coolant, oil or fuel leaks.
- Carefully engage the threshing mechanism.
- Gradually raise the RPM to the normal level, simultaneously monitoring the function of the threshing mechanism.
- Stop the threshing mechanism and the engine and close all doors.
- Set the threshing settings for the first threshing.

https://truckmanualshub.com/

RECOMMENDED TOOLS AND ACCESSORIES

For do-it-yourself maintenance it is necessary to replenish the tools supplied with the combine with the special tools mentioned under Maintenance as well as with the fork, ring and socket wrench kits, observing the wrench gap table below and the wrench gaps of 16, 17.5 and 27 mm for the hose and pipe couplings.

Recommended Accessories

For the Cutter Bar

- Knife sections 25 pcs
- Knife section screws 50
- Fingers 2 ”
- Knife holders 2 ”

For the Table Auger:

- Fingers 4 pcs
- Finger bearings 4 ”
- Bearing holders 2 ”
-

For the Reel:

- Plastic tines 5 pcs

General Parts

- Hexagonal screws M6-M12, the most common lengths of 16-40 mm, strength class minimum 8.8.
- Hexagonal nuts M6-M12, strength class 8.
- A few lock nuts.
- Washers and spring washers, 6.5-13 mm.
- Plate screws 4.8, lengths 9.5-19 mm.
- Split cotters 3x20 and 5x30 mm.
- Wire cotters 2.5x50 mm.
- Spring cotters, 3-8 mm, lengths 20-50 mm.
- Circlip cotters 10 mm.
- Grease nipples 6 mm and 1/8”, straight and angled.
- Additional loops for chains.
- Fuses 7.5, 15 and 25 A.

SCREW JOINTS

It is important to tighten the screw joints into the correct tightening torque. Wrench gaps and torque for the screws:

Screw size	Wrench gap mm	Torque for screws of 8.8 strength class
M 6	10	11 Nm
M 8	13	25
M 10	17	47
M 12	19	78
M 14	22	120
M 16	24	180
M 20	30	335

Note! Torque for fixing screws in the wheels:

Front wheels	M18 screws	350 Nm	(Grease lubricated hubs)
	M22	600	(Oil-bathed hubs)
Rear wheels	M16	180 ”	
	M22	500	(4WD)

https://truckmanualshub.com/

DISCARDING OF THE COMBINE

Even the best of products will come to the end of its useful lifetime and it is time to discard it. It is important to make sure the discarded combine will not be harmful to the environment. Below you will find a list of things to consider before discarding the combine:

Do not let the discarded combine spoil the scenery. Store it indoors.

- Lower all the hydraulically raised parts of the combine. (Cutting table, reel, unloading pipe)
- Remove the battery and take it to an appropriate problem waste collection centre.
- Drain all the fuel into a spare tank.
- Drain all the oil from the engine, gearbox, final drives and hydraulic systems into an appropriate collection dish. Drain the oil from all the pipes, cylinders and hydraulic components.
- Drain the coolant into a collection dish.
- If the combine is equipped with air conditioning, let an authorised service outlet drain the cold gas and oil.

If the combine is to be scrapped, follow the below given procedure:

- Disassemble the combine starting from the top.
- In case flame cutting or other spark generating measures are used, pay careful attention to fire precautions. There may be highly flammable dust and grease in the combine structure.
- Beware of any moving machine parts.
- Most of the combine material is steel.
- There is copper in the radiator and electric conductors, start-up motor and alternator.
- There is rubber in the tyres, belts and hoses.
- There is plastic in the crop elevator tines, cab interior, lamps and lights. Pay attention to the recyclability of the components.
- There is glass in the cab, mirrors, lamps and lights.
- There is no asbestos in the combine structure.
- There are minor quantities of heavy metals, such as lead in the slide bearings.
- Take all the recyclable parts to a recycling centre.