https://truckmanualshub.com/

CS15Ⅲ-BPT-003_EN

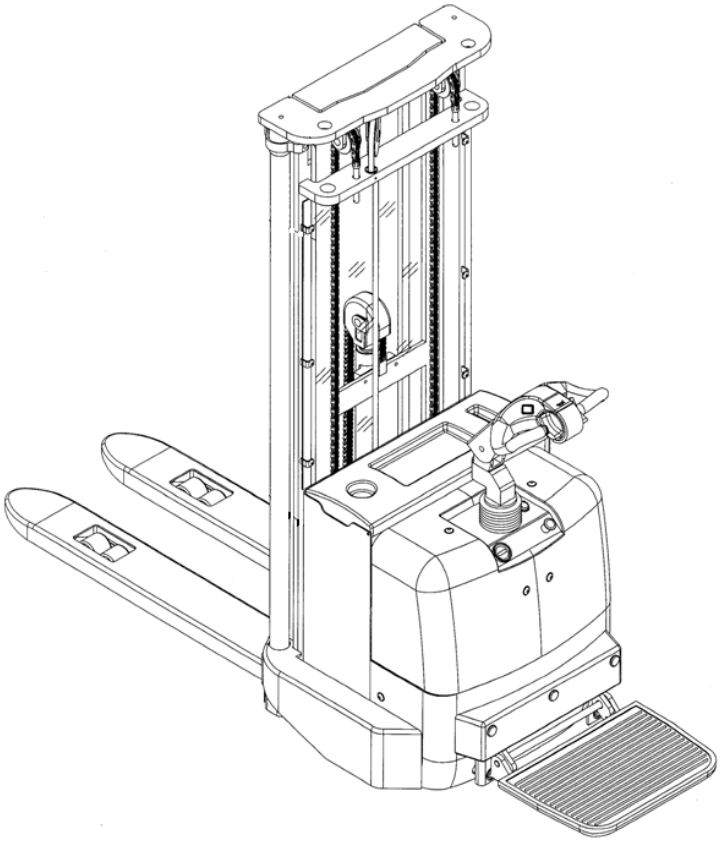

# Parts & Components Manual

## CS15Ⅲ

Publication: 2013.05

https://truckmanualshub.com/

# Table of Content

Figure 1 Label ..... 1
Figure 2 Appearance ..... 2
Figure 3 Battery Case ..... 3
Figure 4 Chassis System ..... 4
Figure 5 Switchboard ..... 5
Figure 6 Driving Wheel Carrier ..... 6
Figure 7 Driving Wheel（6ELDC-D） ..... 8
Figure 8 Driving wheel（6ELDC- E） ..... 11
Figure 9 Steering Wheel ..... 13
Figure 10 Double load wheel ..... 14
Figure 11 Single load wheel ..... 15
Figure 12 Noblelift Handle ..... 16
Figure 13 CANBUS Handle ..... 18
Figure 14 Handle spindle ..... 20
Figure 15 Swinging Handle Spindle (Optional) ..... 21
Figure 16 Exploded view of Master Line ..... 22
Figure 17 Exploded view of Master Line（with pump function） ..... 23
Figure 18 Domestic Handle Control Harness ..... 24
Figure 19 CANBUS Handle Control Harness ..... 25
Figure 20 CANBUS Handle Control Harness（with pump function） ..... 26
Figure 21 Universal Parts for Entire Unit ..... 27
Figure 22 CANBUS Handle Controller Assembly ..... 29
Figure 23 General Controller Assembly ..... 31
Figure 24 CANBUS handle Controller Assembly（with pump function） ..... 33
Figure 25 Pipeline System ..... 35
Figure 26 outer Cylinder Sealing Parts ..... 37
Figure 27 Inner cylinder sealing parts ..... 38
Figure 28 Pump System ..... 39
Figure 29 Main Frame system ..... 41
Figure 30 chain system ..... 42
Figure 31 Other Accessories of Main Frame ..... 44
Figure 32 Pallet Bracket ..... 45
Figure 33 Foot Pedal ..... 46
Figure 34 Protective Arm ..... 47
Figure 35 Load Back-rest ..... 48

## Figure 1 Label

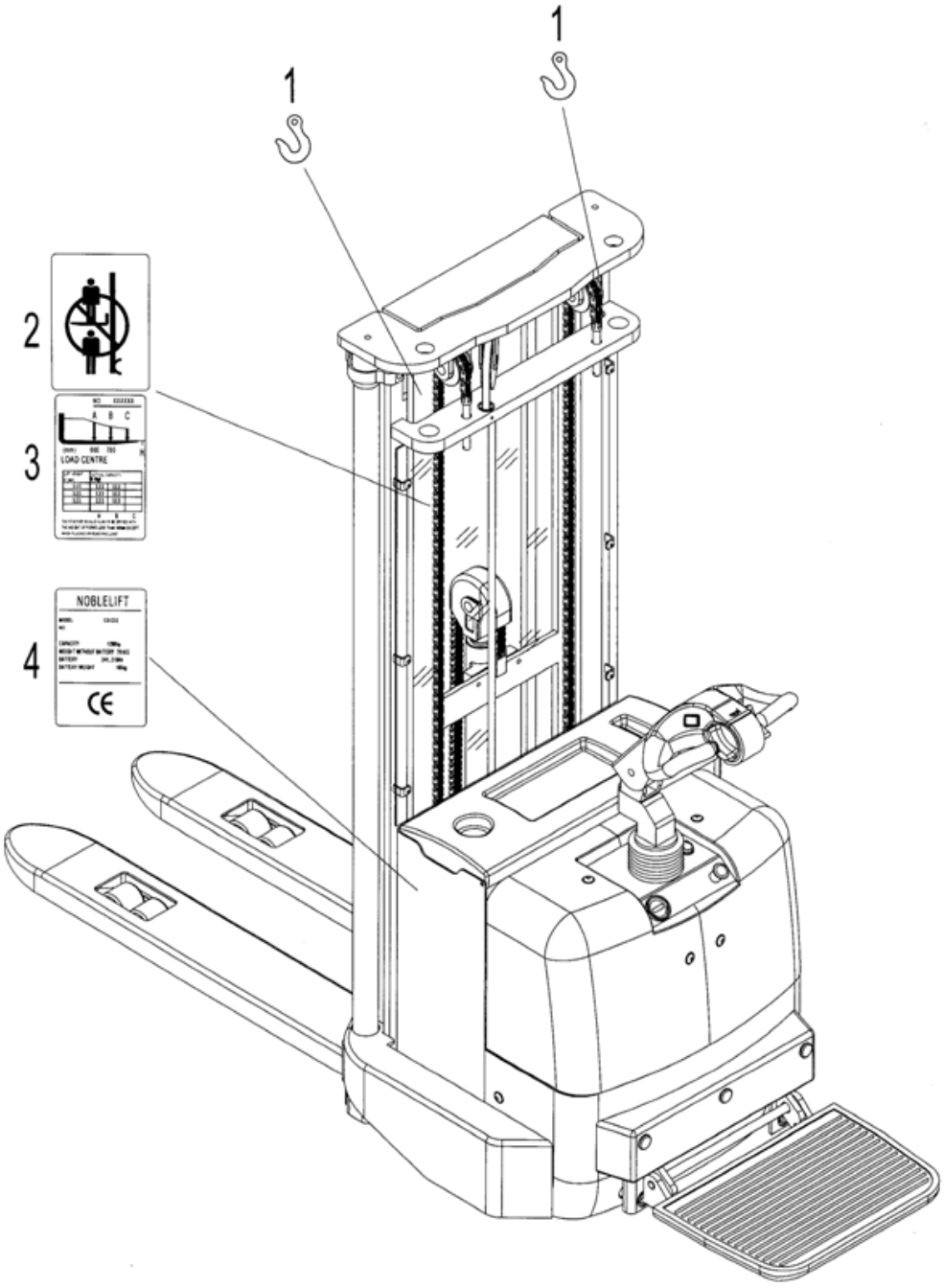


| No. | Description | Quantity | Remarks |
|---|---|---|---|
| 1 | Hook label | 2 | |
| 2 | Warning label | 2 | |
| 3 | Curve graph label | 2 | |
| 4 | Nameplate label | 2 | |

## Figure 2 Appearance

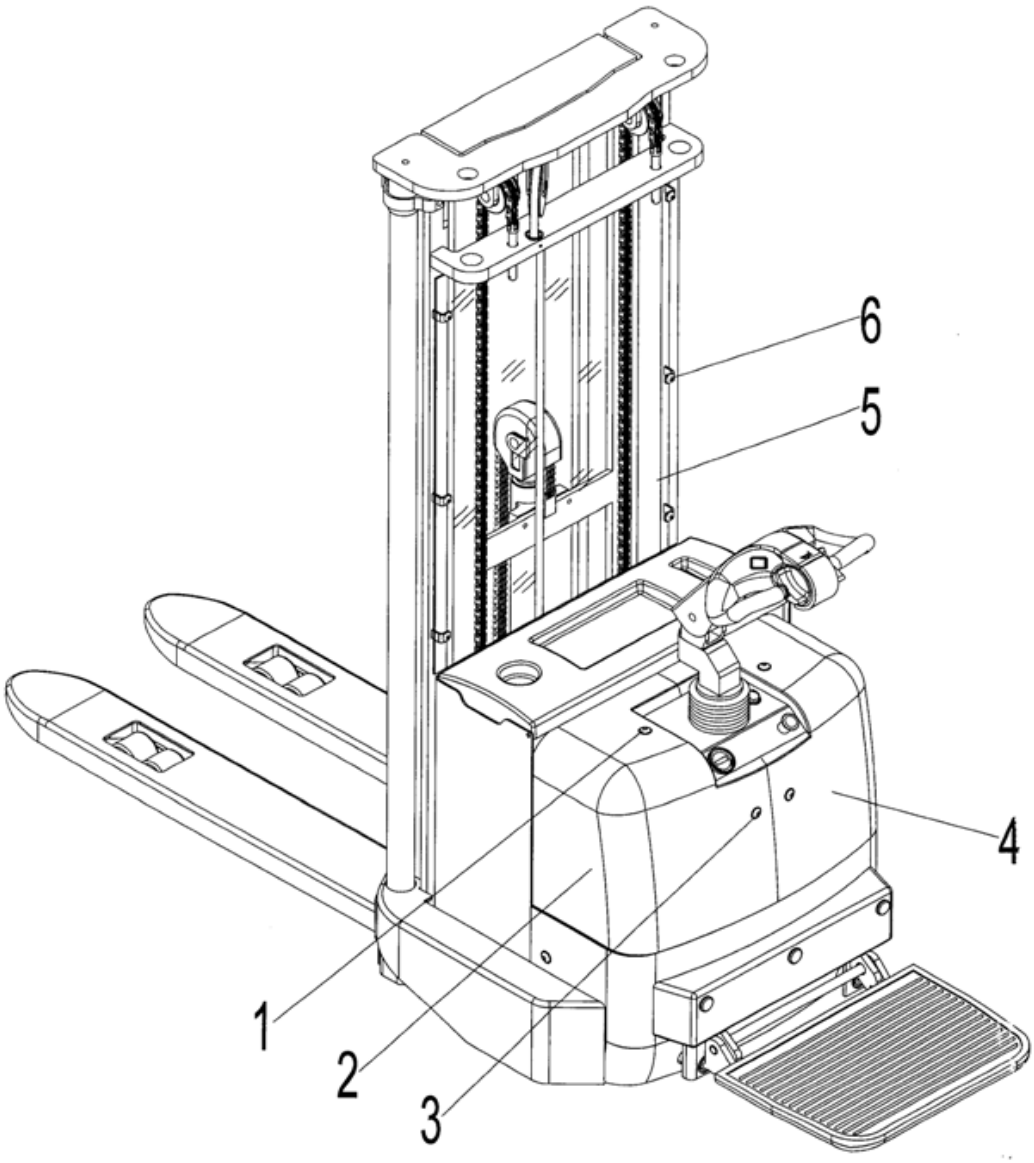


| No. | Part Number | Item | Quantity | Remarks |
|---|---|---|---|---|
| 1 | 1000423001 | Screw | 2 | |
| 2 | 2000403002 | Left electric box cover | 1 | |
| 3 | 1000423003 | Screw | 2 | |
| 4 | 2000403003 | Right electric box cover | 1 | |
| 5 | 2040603001 | Protective shield | 1 | 680X905 |
| | 2040603003 | Protective shield | 1 | 680X1020 |
| | 2040603004 | Protective shield | 1 | 680X1120 |
| | 2040603005 | Protective shield | 1 | 680X1245 |
| 6 | 2040623001 | Nylon Rivet | 6 | 18X12X8 |

## Figure 3 Battery Case

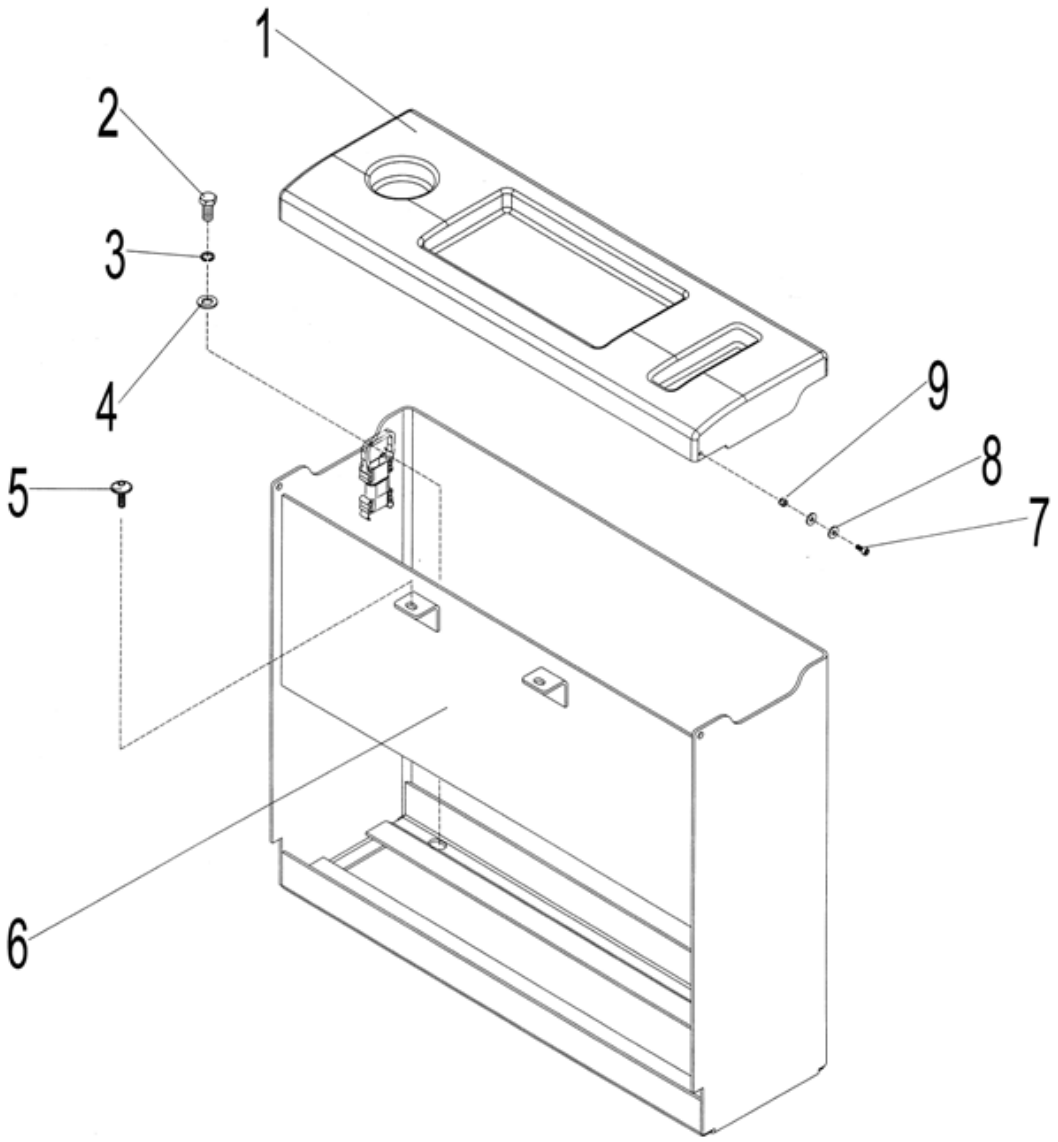


| No. | Part Number | Item | Quantity | Remarks |
|---|---|---|---|---|
| 1 | 2040403001 | Battery case cover | 1 | |
| 2 | 0000023101 | Bolt | 4 | |
| 3 | 0000025024 | Spring washer | 4 | |
| 4 | 0000025032 | Flat washer | 4 | |
| 5 | 1000423001 | Screw | 2 | |
| 6 | 2040401006 | Battery case | 1 | |
| 7 | 0000023107 | Screw | 2 | |
| 8 | 0000025014 | Flat washer | 4 | |
| 9 | 0000024007 | Nut | 2 | |

## Figure 4 Chassis System

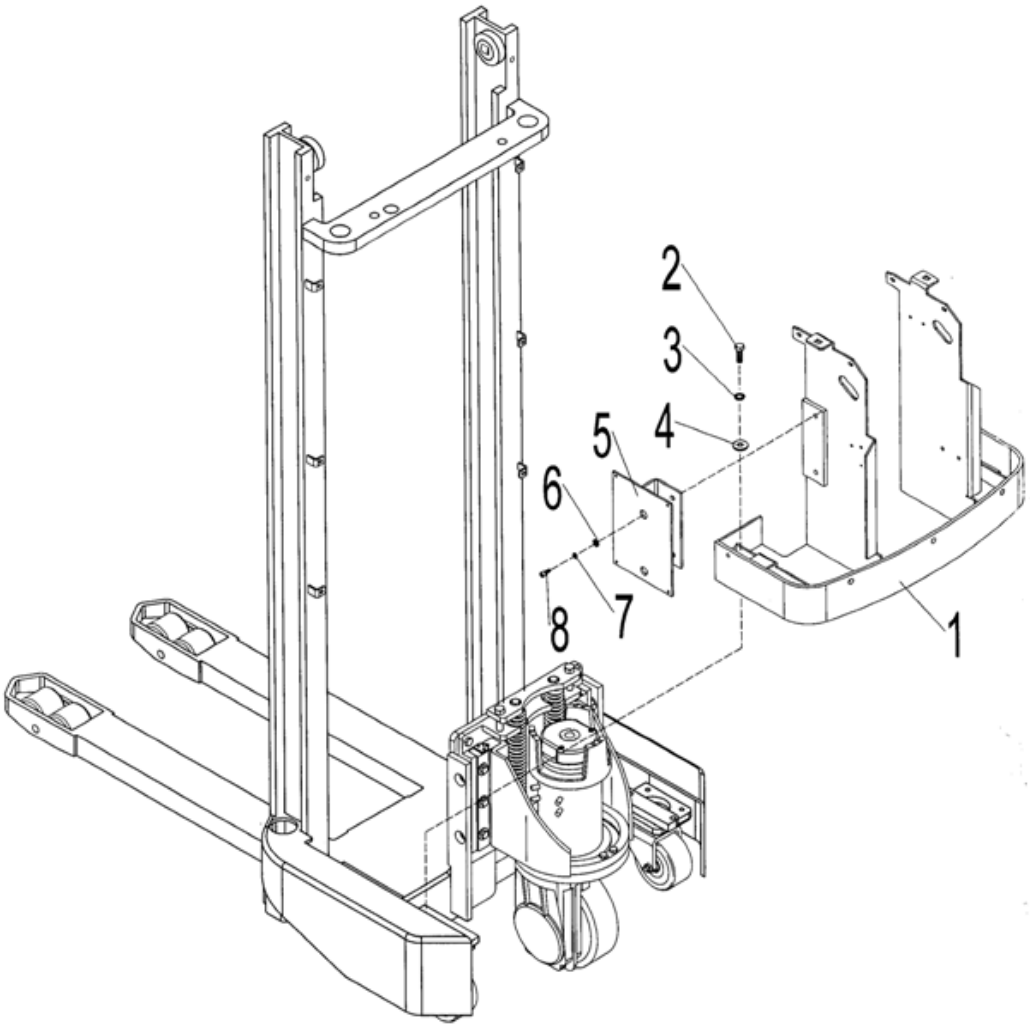


| No. | Part Number | Item | Quantity | Remarks |
|---|---|---|---|---|
| 1 | 2040401002 | Battery case | 1 | |
| 2 | 0000023082 | Screw | 4 | |
| 3 | 0000025024 | Spring washer | 4 | |
| 4 | 0000025025 | Big washer | 4 | |
| 5 | 2040401003 | Control board | 1 | |
| 6 | 0000025002 | Flat washer | 2 | |
| 7 | 0000023006 | Spring washer | 2 | |
| 8 | 0000023080 | Screw | 2 | |

## Figure 5 Switchboard

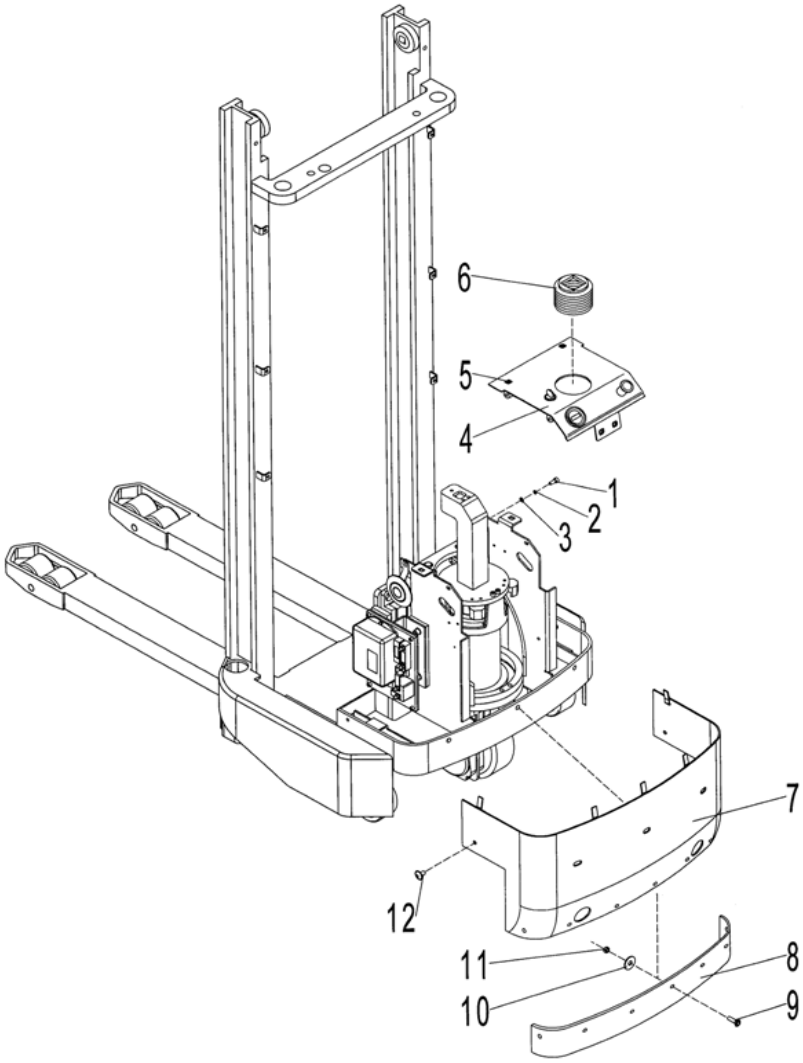


| No. | Part Number | Item | Quantity | Remarks |
|---|---|---|---|---|
| 1 | 0000023044 | Screw | 4 | |
| 2 | 0000025001 | Spring washer | 4 | |
| 3 | 0000025011 | Flat washer | 4 | |
| 4 | 2000401012 | Control panel | 1 | |
| 5 | 1000424001 | Nut | 4 | |
| 6 | 1020118001 | Protective cover | 1 | |
| 7 | 2040401001 | External cover | 1 | |
| 8 | 2040418001 | Rubber for external cover | 1 | |
| 9 | 0000023084 | Screw | 7 | |
| 10 | 0000025036 | Big washer | 7 | |
| 11 | 0000024003 | Nut | 7 | |
| 12 | 2000423001 | Screw | 2 | |

## Figure 6 Driving Wheel Carrier

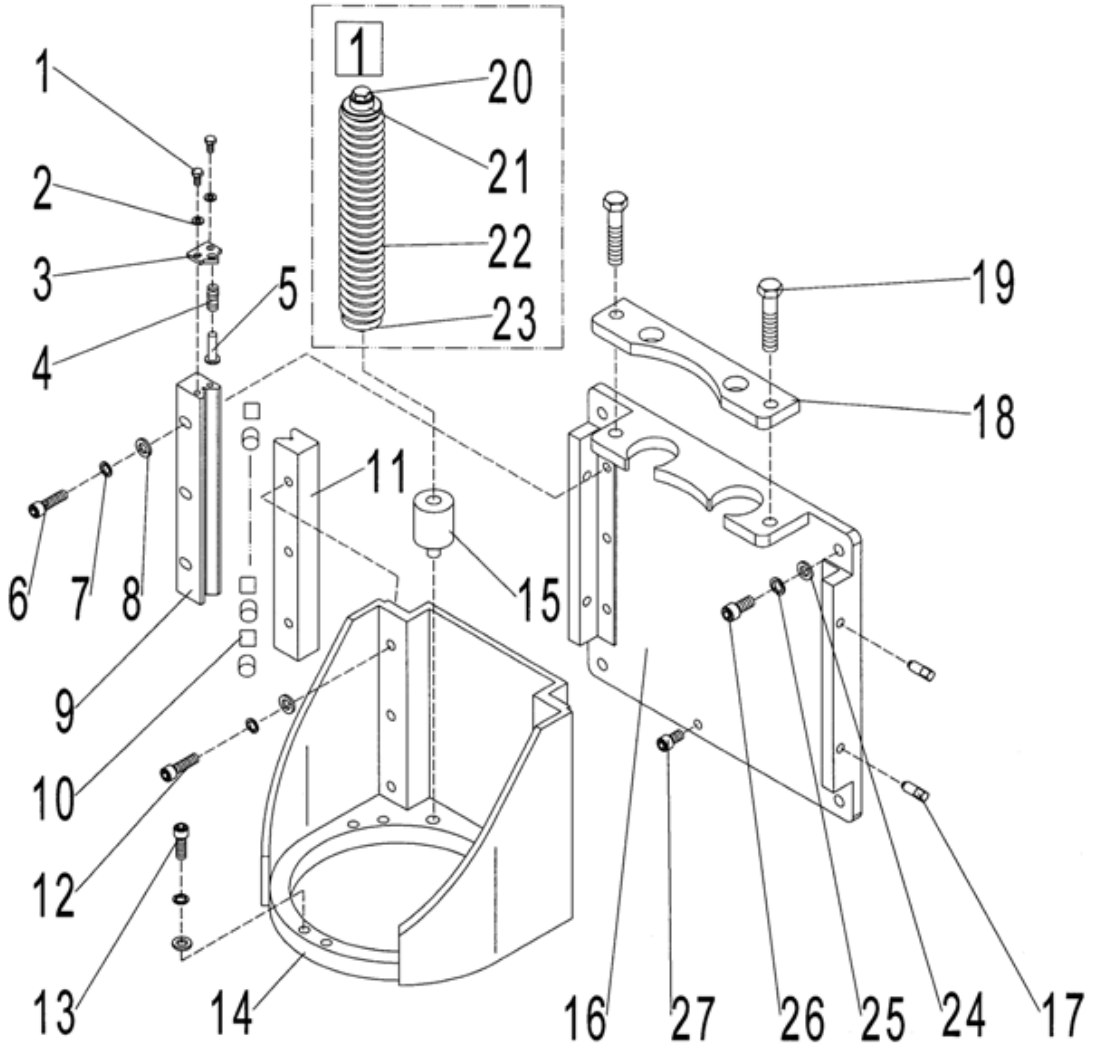

| No. | Part Number | Item | Quantity | Remarks |
|---|---|---|---|---|
| 1 | 0000023042 | Screw | 8 | |
| 2 | 0000025010 | Spring washer | 8 | |
| 3 | 2000202006 | End cover | 4 | |
| 4 | 2000231001 | Spring | 4 | |
| 5 | 2000207001 | Spring spindle | 4 | |
| 6 | 0000023099 | Screw | 6 | |
| 7 | 0000023006 | Spring washer | 18 | |
| 8 | 0000025002 | Flat washer | 18 | |
| 9 | 2000202004 | External V-block | 2 | |
| 10 | 2000202008 | Roller | 24 | |
| 11 | 2000202005 | Internal V-block | 2 | |
| 12 | 0000023025 | Screw | 6 | |
| 13 | 0000023029 | Screw | 6 | |
| 14 | 2000201005 | Wheel carrier | 1 | |
| 15 | 2000202003 | Cushion block | 2 | |
| 16 | 2000201004 | Supporting carrier | 1 | |
| 17 | 0090000408 | Screw | 4 | |
| 18 | 2000202002 | Top plate | 1 | |
| 19 | 0000023095 | Bolt | 2 | |
| 20 | 2000223001 | Bolt | 2 | |
| 21 | 2000208001 | Spring guide sleeve | 2 | |
| 22 | 2000231002 | Spring | 2 | |
| 23 | 2000212001 | Spring guide rod | 2 | |
| 24 | 0000025032 | Flat washer | 4 | |
| 25 | 0000025024 | Spring washer | 4 | |
| 26 | 0000023096 | Bolt | 4 | |
| 27 | 0000023098 | Screw | 1 | |
| 1 | 2000200003 | Spring assembly | 2 | |

## Figure 7 Driving Wheel（6ELDC-D）

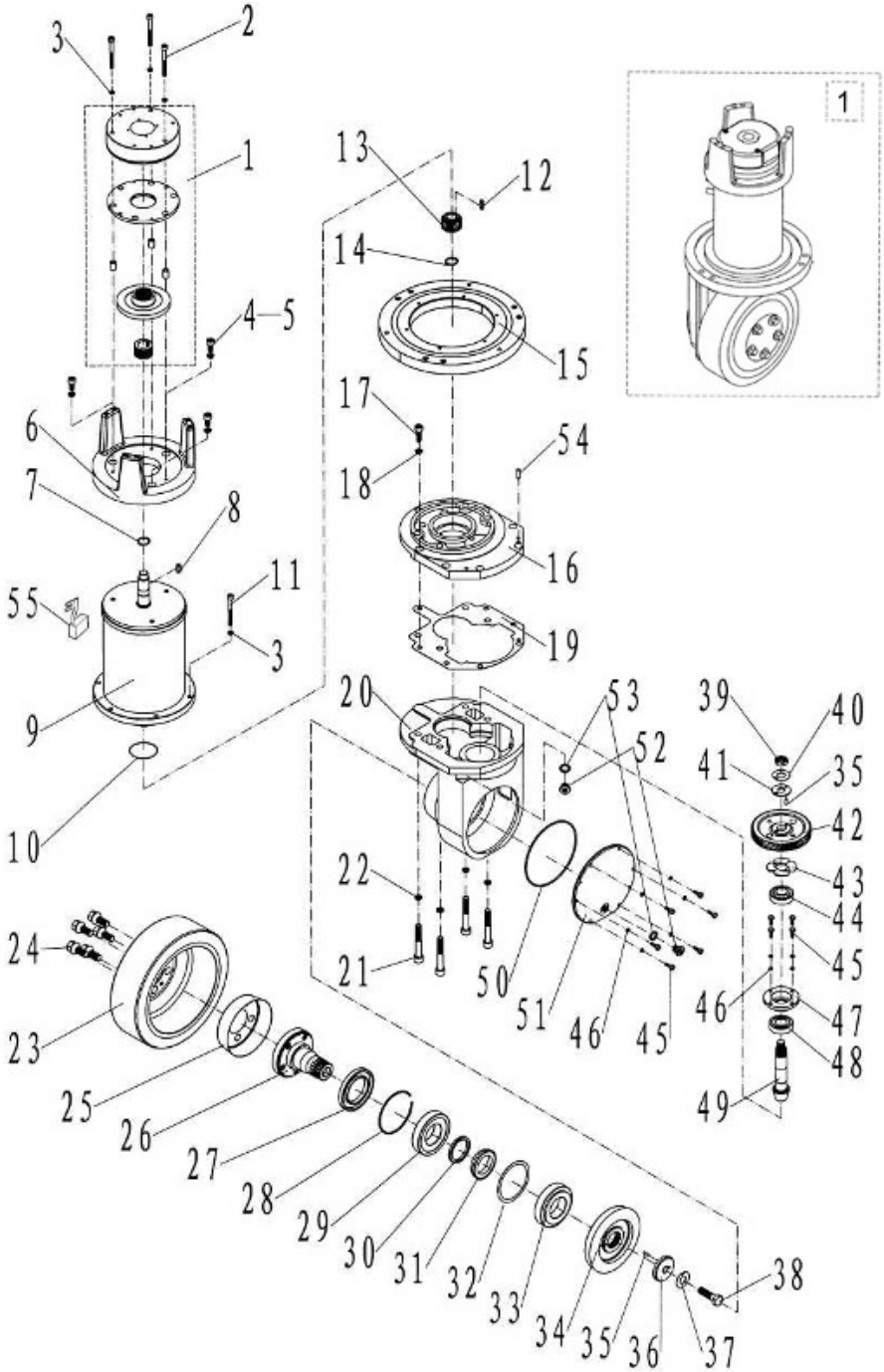


| No. | Part Number | Item | Quantity | Remarks |
|---|---|---|---|---|
| 1 | 9000000247 | Brake | 1 | |
| 2 | 0000023196 | Bolt | 3 | |
| 3 | 0000025006 | Washer | 9 | |
| 4 | 0000023202 | Screw | 4 | |

| | | | | |
|---|---|---|---|---|
| 5 | 0000025004 | Washer | 4 | |
| 6 | 1020237002 | Bracket | 1 | |
| 7 | 0000026003 | Retaining ring | 1 | |
| 8 | 0000036003 | Flat pin | 1 | |
| 9 | 9000000246 | Motor | 1 | |
| 10 | 0000022038 | O-ring | 1 | |
| 11 | 0000023193 | Screw | 6 | |
| 12 | 0000023195 | Flat pin | 1 | |
| 13 | 1020237004 | Small gear | 1 | |
| 14 | 0000026019 | Retaining ring | 1 | |
| 15 | 1020237005 | Rotation support | 1 | |
| 16 | 1020237006 | Upper cover | 1 | ▲▲▲ |
| 17 | 0000023061 | Screw | 7 | |
| 18 | 0000025004 | Washer | 7 | |
| 19 | 1020237007 | Paper washer | 1 | ▲▲▲ |
| 20 | 1020237008 | Box body | 1 | ▲▲▲ |
| 21 | 0000023203 | Screw | 4 | |
| 22 | 0000025065 | Washer | 4 | |
| 23 | 1020237009 | Driving wheel | 1 | |
| 24 | 1020237010 | Screw | 5 | |
| 25 | 1020237011 | Dust bushing | 1 | |
| 26 | 1020237012 | Driving shaft | 1 | ▲▲▲ |
| 27 | 1020237026 | Framework oil seal | 1 | FP-G-50X80X8 |
| 28 | 1020237013 | Retaining ring | 1 | ▲▲▲ |
| 29 | 0000027032 | Bearing | 1 | |
| 30 | 1020237014 | Spacer bush | 1 | ▲▲▲ |
| 31 | 1020237015 | Washer | 1 | ▲▲▲ |
| 32 | 1020237016 | Adjusting washer | 2 | ▲▲▲ |
| 33 | 0000027031 | Bearing | 1 | |
| 34 | 1020237017 | Gear | 1 | ▲▲▲ |
| 35 | 0000028028 | Cylindrical pin | 2 | |
| 36 | 1020237018 | Retaining ring | 1 | ▲▲▲ |
| 37 | 0000025063 | Washer | 1 | ▲▲▲ |
| 38 | 0000023190 | Bolt | 1 | |
| 39 | 0000024034 | Nut | 1 | |
| 40 | 0000025066 | Washer | 1 | ▲▲▲ |
| 41 | 1020237019 | Washer | 1 | |
| 42 | 1020237024 | Big gear | 1 | ▲▲▲ |
| 43 | 1020237020 | Lubricative ring | 1 | ▲▲▲ |

| | | | | |
|---|---|---|---|---|
| 44 | 0000027030 | Bearing | 1 | |
| 45 | 0000023204 | Screw | 10 | |
| 46 | 0000025012 | Washer | 10 | |
| 47 | 1020237021 | Seat of bearing | 1 | ▲▲▲ |
| 48 | 0000027029 | Bearing | 1 | |
| 49 | 1020237022 | Gear | 1 | ▲▲▲ |
| 50 | 0000022037 | O-ring | 1 | |
| 51 | 1020237023 | Side cover | 1 | ▲▲▲ |
| 52 | 0000023189 | Plug | 3 | |
| 53 | 0000022036 | Washer | 3 | |
| 54 | 0000028027 | Cylindrical pin | 1 | |
| 55 | 9000000248 | Motor carbon brush | 1 | |
| 1 | 9000000231 | Driving wheel | 1 | Homebred 1.85 KW |

## Figure 8 Driving wheel（6ELDC- E）

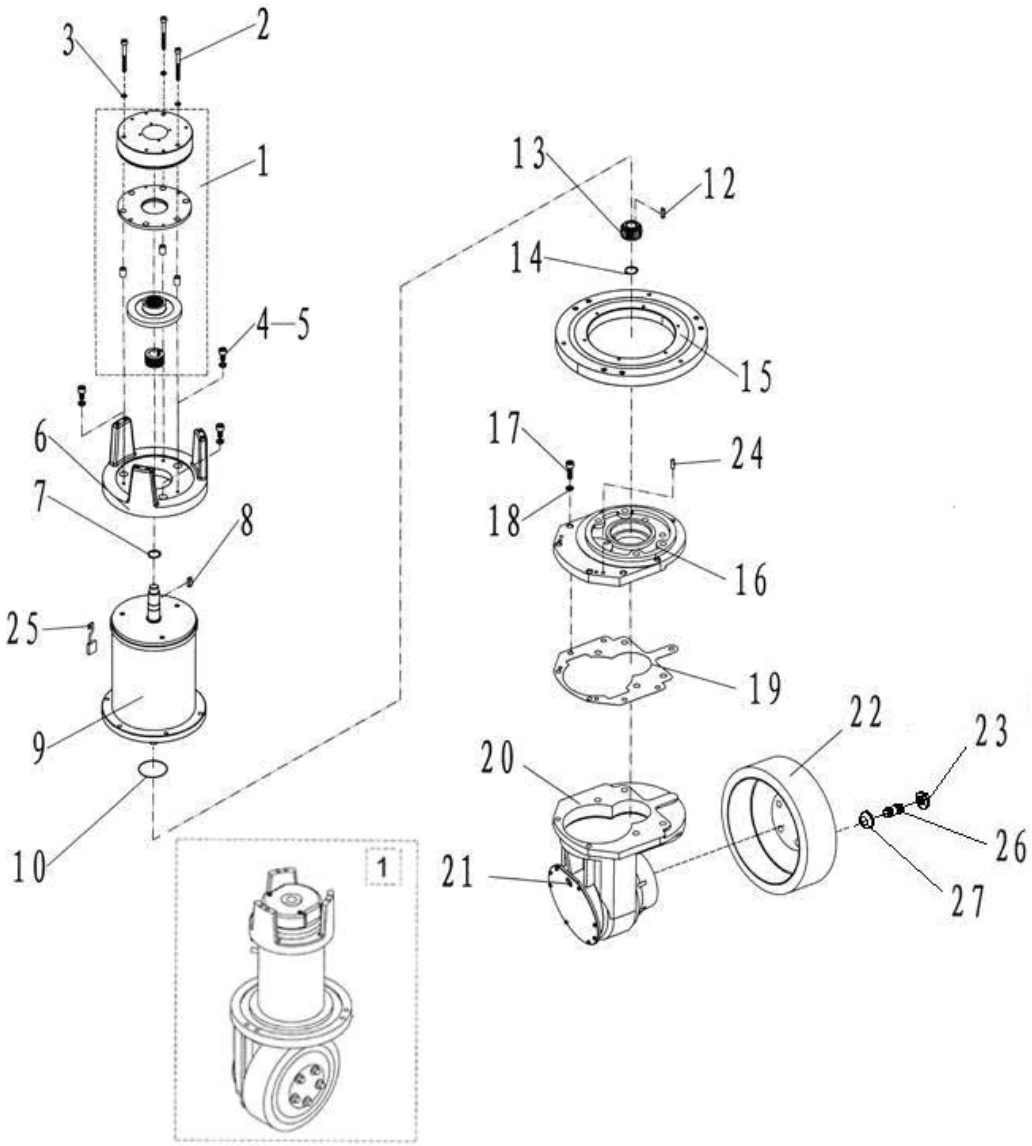

| No. | Part Number | Item | Quantity | Remarks |
|---|---|---|---|---|
| 1 | 9000000247 | Brake | 1 | |
| 2 | 0000023196 | Bolt | 3 | |
| 3 | 0000025006 | Washer | 3 | |
| 4 | 0000023202 | Screw | 4 | |
| 5 | 0000025004 | Washer | 4 | |
| 6 | 1020237002 | Bracket | 1 | |
| 7 | 0000026003 | Retaining ring | 1 | |
| 8 | 0000036003 | Flat pin | 1 | |
| 9 | 9000000249 | Motor | 1 | |
| 10 | 0000022038 | O-ring | 1 | |
| | | | | |
| 12 | 0000036004 | Flat pin | 1 | |
| 13 | 1020237028 | Small gear | 1 | |
| 14 | 0000026019 | Retaining ring | 1 | |
| 15 | 1020237029 | Rotation support | 1 | |
| 16 | 1020237030 | Upper cover | 1 | ▲▲▲ |
| 17 | 0000023061 | Screw | 8 | ▲▲▲ |
| 18 | 0000025004 | Washer | 8 | ▲▲▲ |
| 19 | 1020237031 | Paper washer | 1 | ▲▲▲ |
| 20 | 1020237032 | Box body | 1 | ▲▲▲ |
| 21 | 0000023206 | Plug | 2 | ▲▲▲ |
| 22 | 1020237009 | Driving wheel | 1 | |
| 23 | 9000000241 | Wheel nut | 5 | |
| 24 | 0000028027 | Cylindrical pin | 1 | |
| 25 | 9000000248 | Motor carbon brush | 1 | |
| 26 | 9000000242 | Wheel bolts | 5 | |
| 27 | 9000000243 | Spring clip | 5 | |
| 1 | 9000000232 | Driving wheel | 1 | Import 1.85kw |

## Figure 9 Steering Wheel

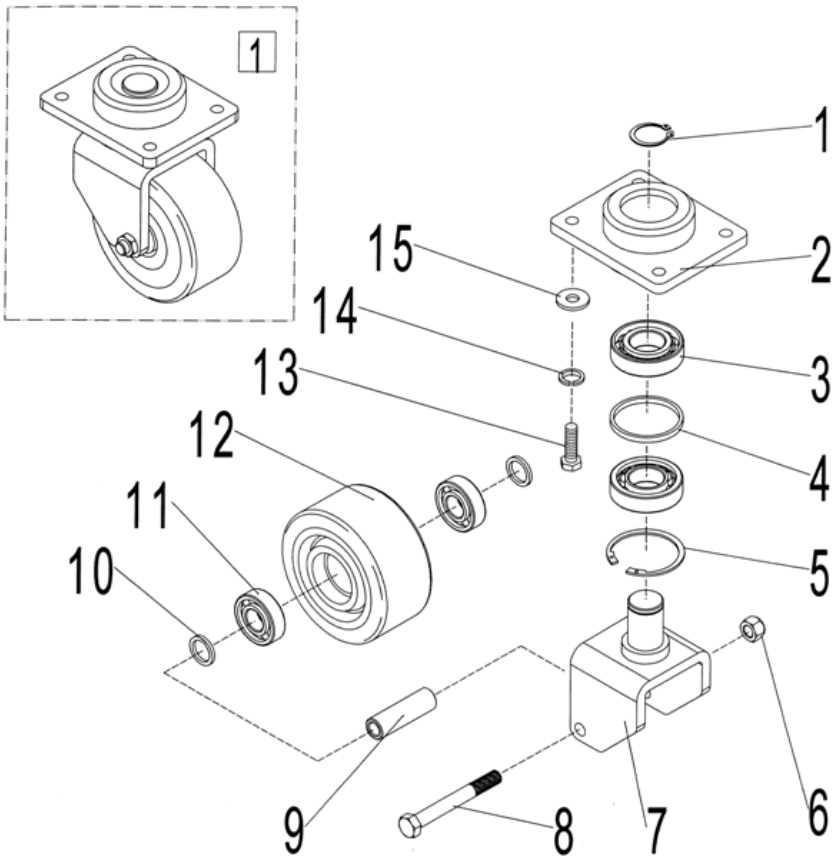


| No. | Part Number | Item | Quantity | Remarks |
|---|---|---|---|---|
| 1 | 0000026008 | Spring washer for shaft | 1 | |
| 2 | 2000405001 | Bearing block | 1 | |
| 3 | 0000027013 | Bearing | 2 | |
| 4 | 2000413001 | Spacer washer | 1 | |
| 5 | 0000026010 | Spring washer for hole | 1 | |
| 6 | 0000024015 | Nut | 1 | |
| 7 | 2000401007 | Wheel carrier | 1 | |
| 8 | 0000023111 | Bolt | 1 | |
| 9 | 2000413002 | Shaft sleeve | 1 | |
| 10 | 1000525001 | Washer | 2 | |
| 11 | 0000027001 | Bearing | 2 | |
| 12 | 2020416001 | Wheel | 1 | |
| 13 | 0000023029 | Screw | 4 | |
| 14 | 0000023006 | Spring washer | 4 | |
| 15 | 0000025002 | Flat washer | 4 | |
| 1 | 2040400001 | Steering wheel assembly | 2 | |

## Figure 10 Double load wheel

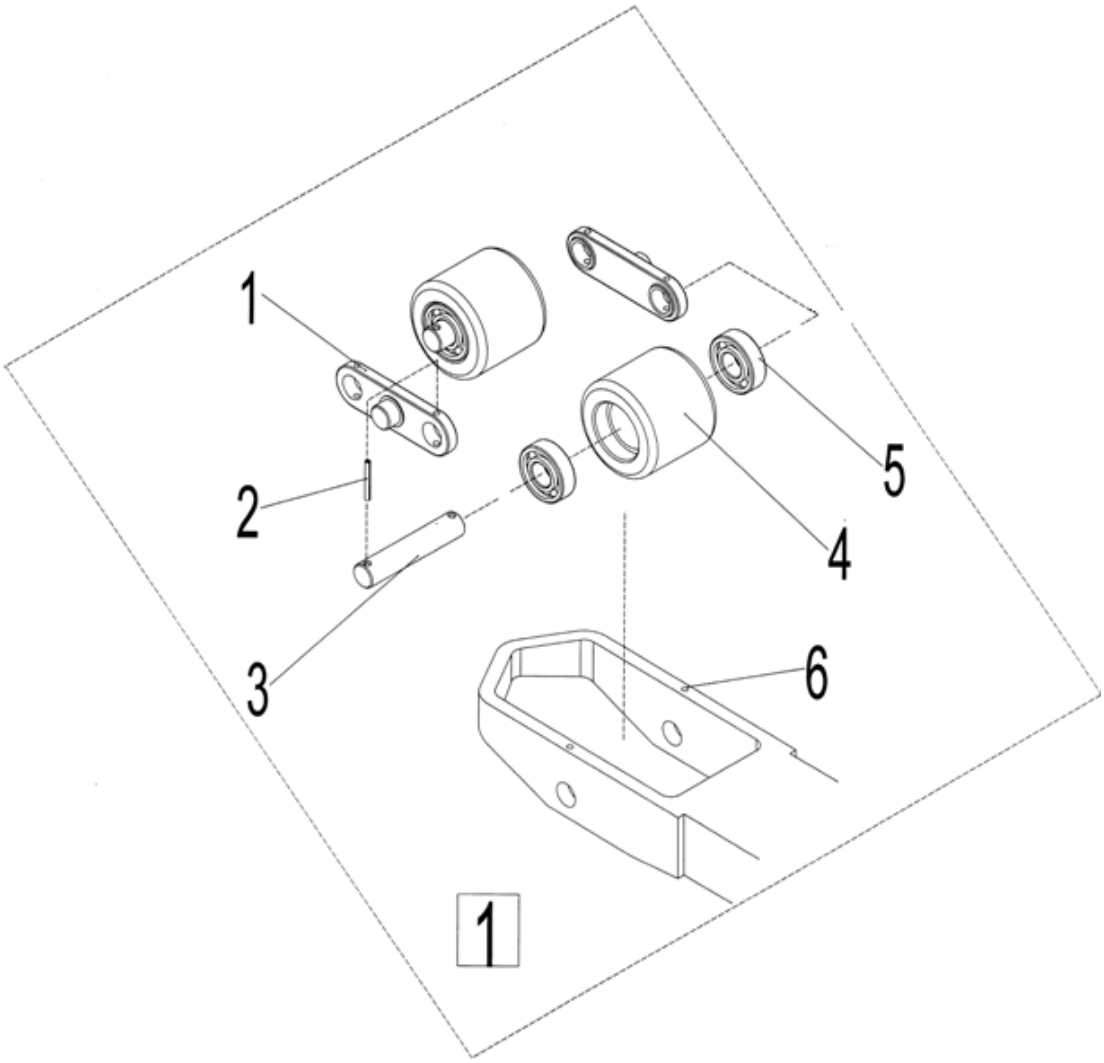


| No. | Part Number | Item | Quantity | Remarks |
|---|---|---|---|---|
| 1 | 2000405002 | Connecting plate | 2 | |
| 2 | 0000028009 | Spring shaft | 4 | |
| 3 | 2000407001 | Pinion shaft | 2 | |
| 4 | 2000416002 | Rollers | 2 | |
| 5 | 0000027001 | Bearing | 4 | |
| 6 | 0000030001 | Oil cup | 2 | |
| 1 | 2000600001 | Double wheel assembly | 2 | |

## Figure 11 Single load wheel

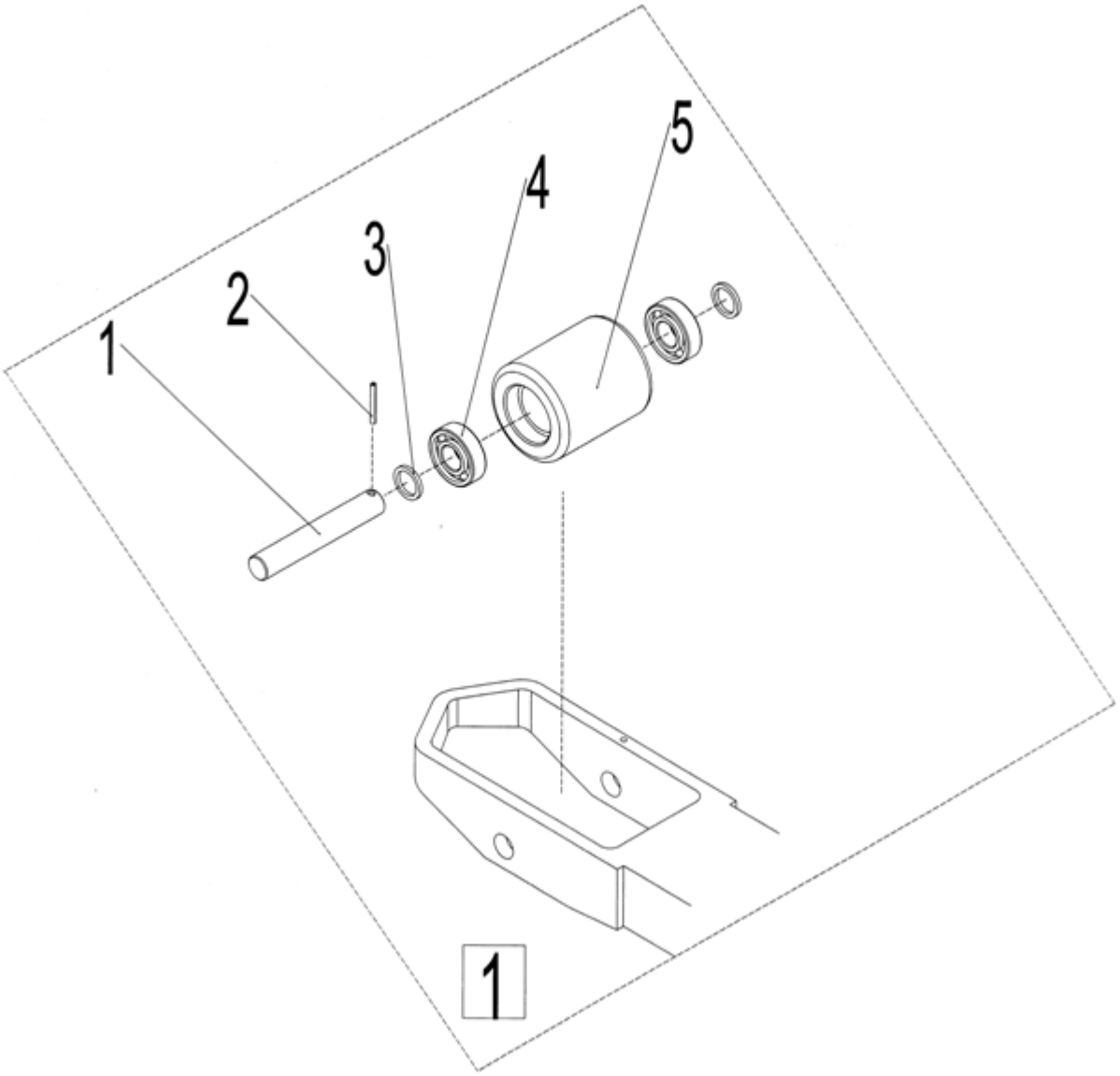


| No. | Part Number | Item | Quantity | Remarks |
|---|---|---|---|---|
| 1 | 2000407004 | Front wheel axle | 1 | |
| 2 | 0000028013 | Spring shaft | 1 | |
| 3 | 1000525001 | Washer | 2 | |
| 4 | 0000027001 | Bearing | 2 | |
| 5 | 2000416003 | Rollers | 1 | |
| 1 | 2000600002 | Single wheel assembly | 2 | |

## Figure 12 Noblelift Handle

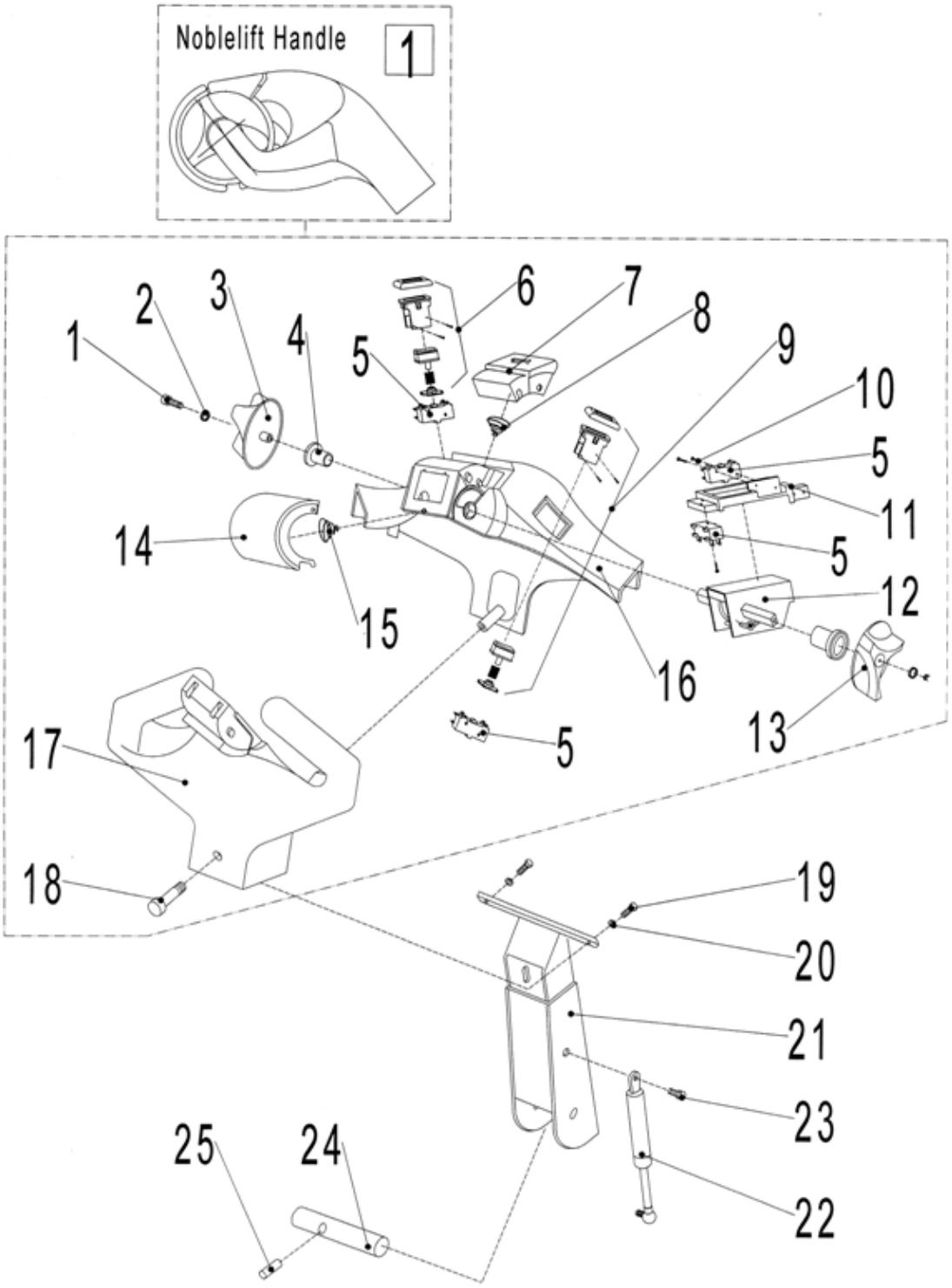

| No. | Part Number | Item | Quantity | Remarks |
|---|---|---|---|---|
| 1 | 0000023008 | Screw | 2 | |
| 2 | 0000025003 | Spring washer | 2 | |
| 3 | 1000114004 | Left driving knob | 1 | |
| 4 | 1000113002 | Shaft sleeve | 2 | |
| 5 | 1000134002 | Micro-switch | 4 | |
| 6 | 1000100015 | Lowering button installation rack | 1 | |
| 7 | 1000114001 | Horn button | 1 | |
| 8 | 1000131001 | Horn button spring | 1 | |
| 9 | 1000100016 | Lifting button installation rack | 1 | |
| 10 | 0000023009 | Screw | 8 | |
| 11 | 1000103004 | Circuit board | 1 | |
| 12 | 1000134003 | accelerator | 1 | |
| 13 | 1000114003 | Right driving knob | 1 | |
| 14 | 1000114002 | Emergency changeover button | 1 | |
| 15 | 1000131002 | Emergency changeover button spring | 1 | |
| 16 | 1000103001 | Upper part of handle | 1 | |
| 17 | 1000103003 | Lower part of handle | 1 | |
| 18 | 0000023053 | Screw | 3 | |
| 19 | 0000023046 | Bolt | 2 | |
| 20 | 0000025001 | Spring washer | 2 | |
| 21 | 2240101001 | Handle Bar | 1 | Short handle |
| | 2240101006 | Handle Bar | 1 | Long handle |
| 22 | 2240121001 | Gas spring (250N) | 1 | Short handle |
| | 1000121001 | Gas spring (450N) | 1 | Long handle |
| 23 | 1000123001 | Screw | 1 | |
| 24 | 1000107001 | Handle spindle | 1 | |
| 25 | 0000028003 | Elastic cylindrical pin | 1 | |
| 1 | 1000100008 | Handle head assembly | 1 | made in China |

## Figure 13 CANBUS Handle

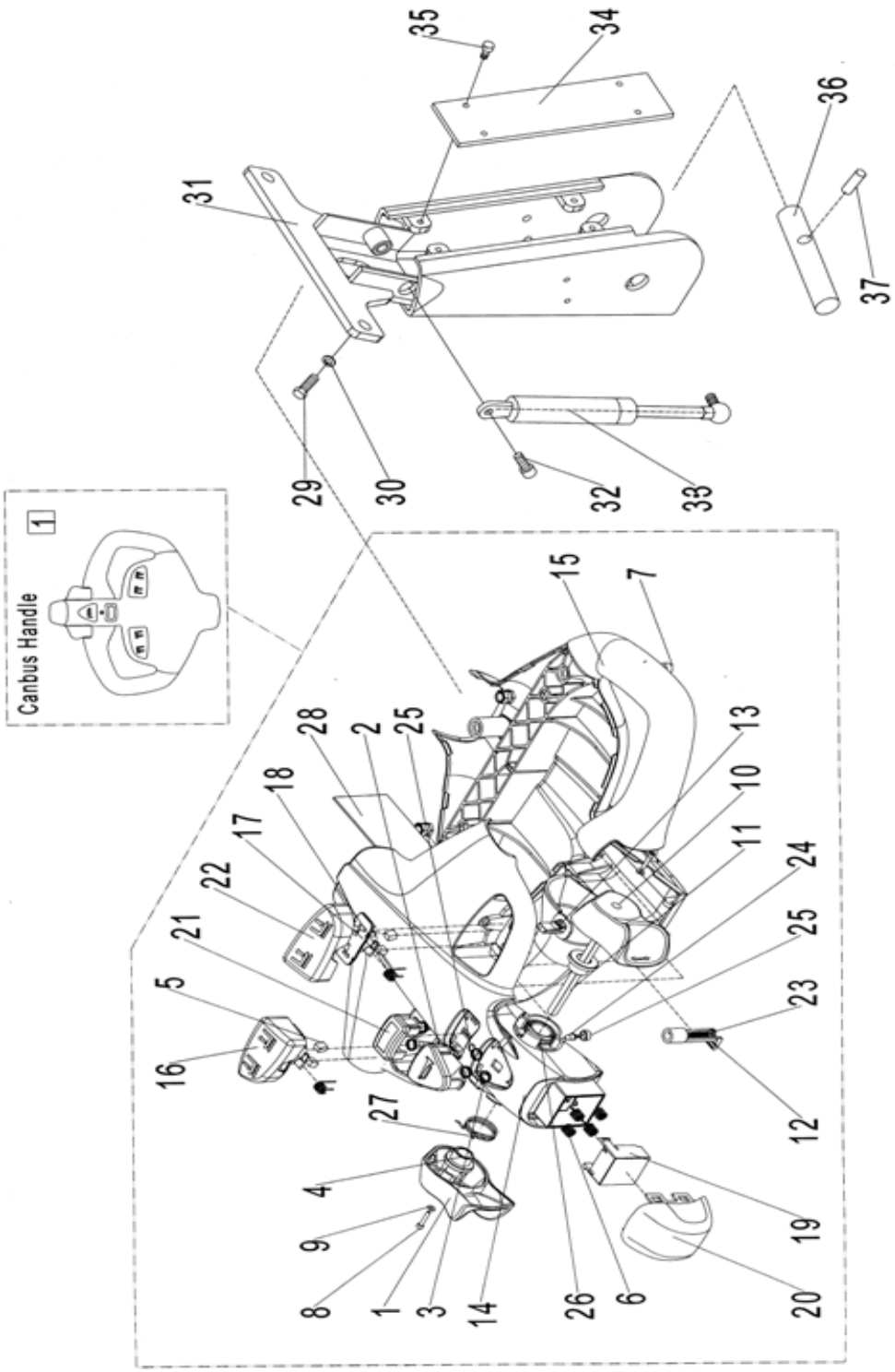


| No. | Part Number | Item | Quantity | Remarks |
|---|---|---|---|---|
| 1 | 1000114014 | Left driving knob | 1 | |
| 2 | 1000114015 | Horn button | 1 | |
| 3 | 1000131009 | Horn button spring | 5 | |

| | | | | |
|---|---|---|---|---|
| 4 | 1000113004 | Camshaft bush | 2 | |
| 5 | 1000137001 | Magnetic body | 4 | |
| 6 | 1000131010 | Emergency changeover button spring | 4 | |
| 7 | 0000023058 | Screw | 3 | |
| 8 | 0000023057 | Screw | 2 | |
| 9 | 0000025017 | Flat washer 3 | 2 | |
| 10 | 1000114016 | Right driving knob | 1 | |
| 11 | 1000107002 | Driving knob axle | 1 | |
| 12 | 1000137002 | PCB board clip | 1 | |
| 13 | 1000134005 | Sensor | 2 | |
| 14 | 1000103012 | Upper part of handle | 1 | |
| 15 | 1000103013 | Lower part of handle | 1 | |
| 16 | 1000114017 | Left button | 1 | |
| 17 | 1000137003 | Magnetic body retaining seat | 2 | |
| 18 | 1000131011 | Torsion spring | 2 | |
| 19 | 1000114018 | Emergency changeover button base | 1 | |
| 20 | 1000114020 | External cover for emergency changeover button | 1 | |
| 21 | 1000114021 | External cover for elector switch | 1 | |
| 22 | 1000114022 | Right button | 1 | |
| 23 | 0000023060 | Screw | 1 | |
| 24 | 1000134006 | LED bi-colour light | 1 | |
| 25 | 1000103014 | LED bi-colour light socket | 1 | |
| 26 | 1000131012 | Right driving knob torsion spring | 1 | |
| 27 | 1000131013 | Left driving knob torsion spring | 1 | |
| 28 | 1000134007 | PCB | 1 | |
| 29 | 0000023047 | Screw | 2 | |
| 30 | 0000025001 | Spring washer 8 | 2 | |
| 31 | 2240101002 | Handle Bar | 1 | Short handle |
| | 2240101003 | Handle Bar | 1 | Long handle |
| 32 | 1000123001 | Screw | 1 | |
| 33 | 1000121002 | Gas spring | 1 | Short handle |
| | 1000121001 | Gas spring | 1 | Long handle |
| 34 | 2240102001 | Cover plate | 1 | Short handle |
| | 1000104013 | Cover plate | 1 | Long handle |
| 35 | 1000123003 | Screw | 4 | |
| 36 | 1000107001 | Handle spindle | 1 | |
| 37 | 0000028003 | Elastic cylindrical pin | 1 | |
| 1 | 1000100009 | Canbus handle | **1** | |
| | 2040100001 | Canbus handle B | **1** | With pump function |

## Figure 14 Handle spindle

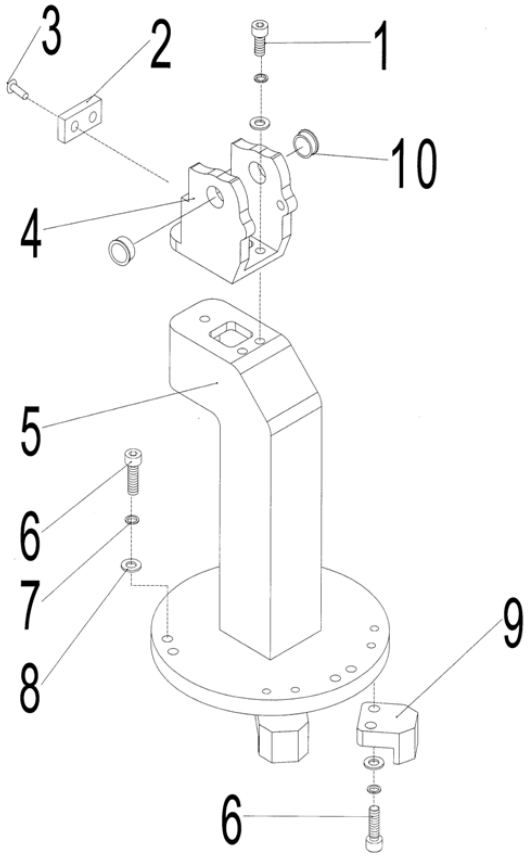


| No. | Part Number | Item | Quantity | Remarks |
|---|---|---|---|---|
| 1 | 0000023044 | Screw | 3 | |
| 2 | 1020119001 | Shake proof pad | 1 | |
| 3 | 0000023042 | Screw | 2 | |
| 4 | 1020137001 | Handle coupling head | 1 | |
| 5 | 2000201003 | Handle spindle | 1 | |
| 6 | 0000023172 | Screw | 10 | |
| 7 | 0000025001 | Spring washer | 13 | |
| 8 | 0000025011 | Flat washer | 13 | |
| 9 | 2000202001 | Stop block | 2 | |
| 10 | 1000113001 | Shoulder harness | 2 | |

## Figure 15 Swinging Handle Spindle (Optional)

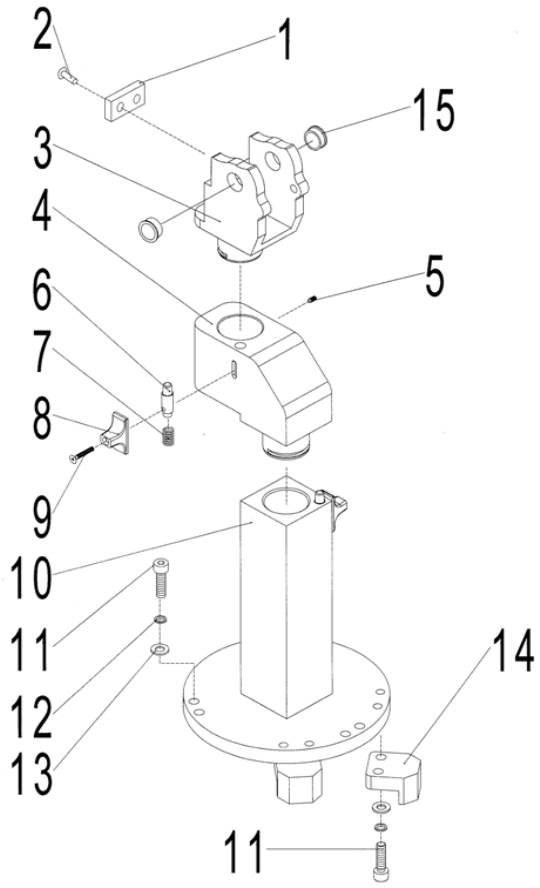


| No. | Part Number | Item | Quantity | Remarks |
|---|---|---|---|---|
| 1 | 1020119001 | Shake proof pad | 1 | |
| 2 | 0000023042 | Screw | 2 | |
| 3 | 1020137003 | Handle connector | 1 | |
| 4 | 1020137002 | Handle spindle head | 1 | |
| 5 | 0000023173 | Screw | 1 | |
| 6 | 1020102001 | Sliding shaft | 2 | |
| 7 | 1020131001 | Spring | 2 | |
| 8 | 1020114001 | Button | 2 | |
| 9 | 0000023174 | Screw | 2 | |
| 10 | 2000201001 | Handle spindle | 1 | |
| 11 | 0000023172 | Screw | 10 | |
| 12 | 0000025001 | Spring washer | 6 | |
| 13 | 0000025011 | Flat washer | 6 | |
| 14 | 2000202001 | Stop block | 2 | |
| 15 | 1000113001 | Shoulder harness | 2 | |

## Figure 16 Exploded view of Master Line

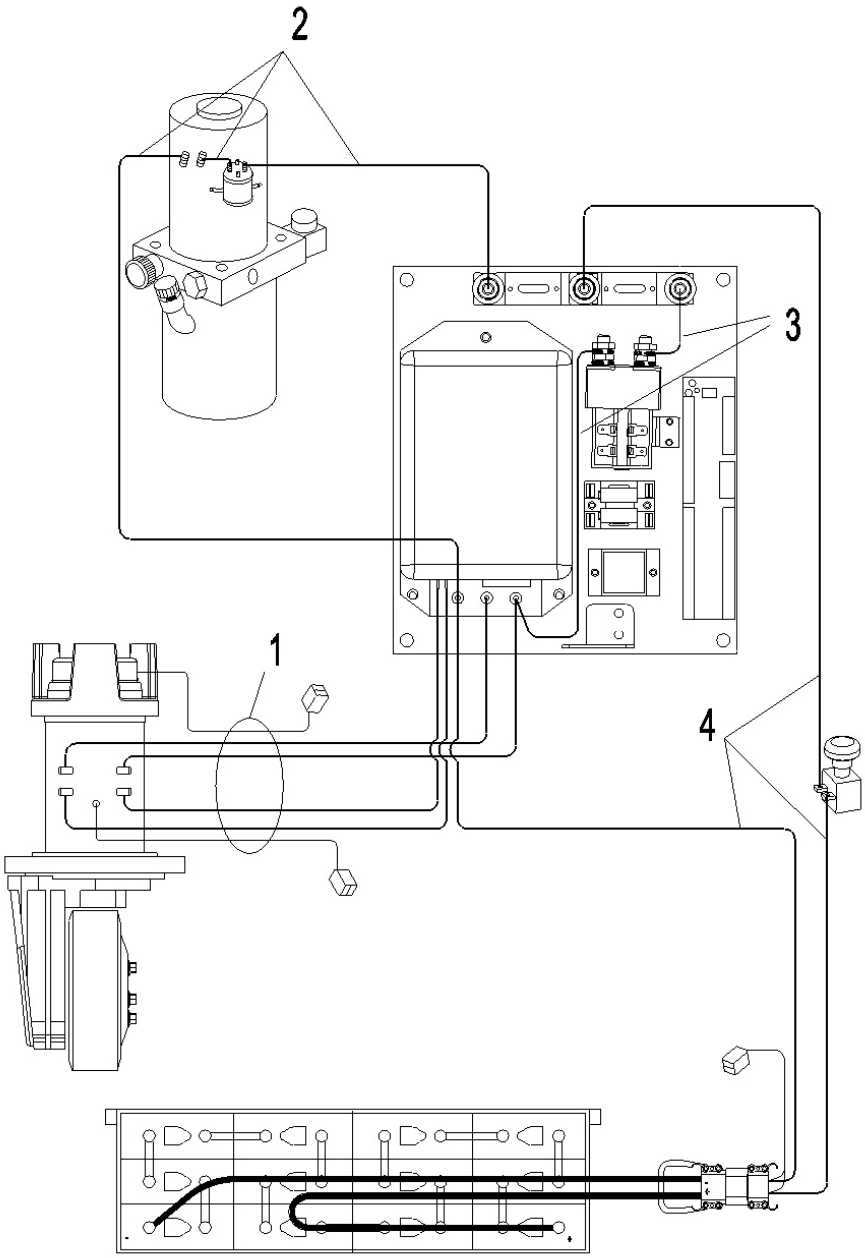


| No. | Part Number | Item | Quantity | Remarks |
|---|---|---|---|---|
| 1 | 2000433001 | Pulling motor harness | 1 | |
| 2 | 2000433002 | Fuel pump motor harness | 1 | |
| 3 | 2000433003 | Main contactor harness | 1 | |
| 4 | 2000433004 | Controller power harness | 1 | |

## Figure 17 Exploded view of Master Line（with pump function）

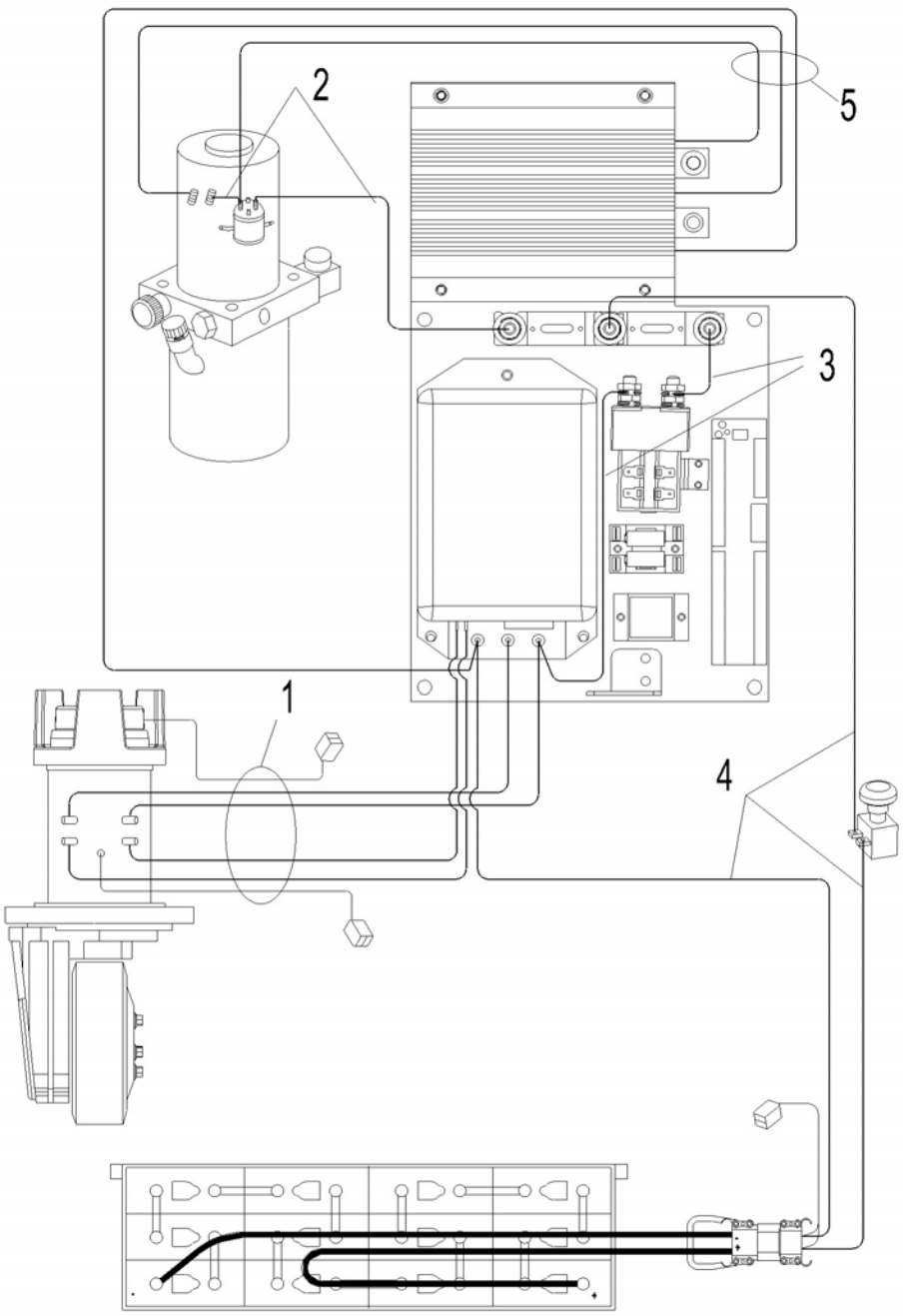


| No. | Part Number | Item | Quantity | Remarks |
|---|---|---|---|---|
| 1 | 2000433001 | Pulling motor harness | 1 | |
| 2 | 2000433002 | Fuel pump motor harness | 1 | |
| 3 | 2000433003 | Main contactor harness | 1 | |
| 4 | 2000433004 | Controller power harness | 1 | |
| 5 | 2040333001 | Controller power harness | 1 | with pump function |

## Figure 18 Domestic Handle Control Harness

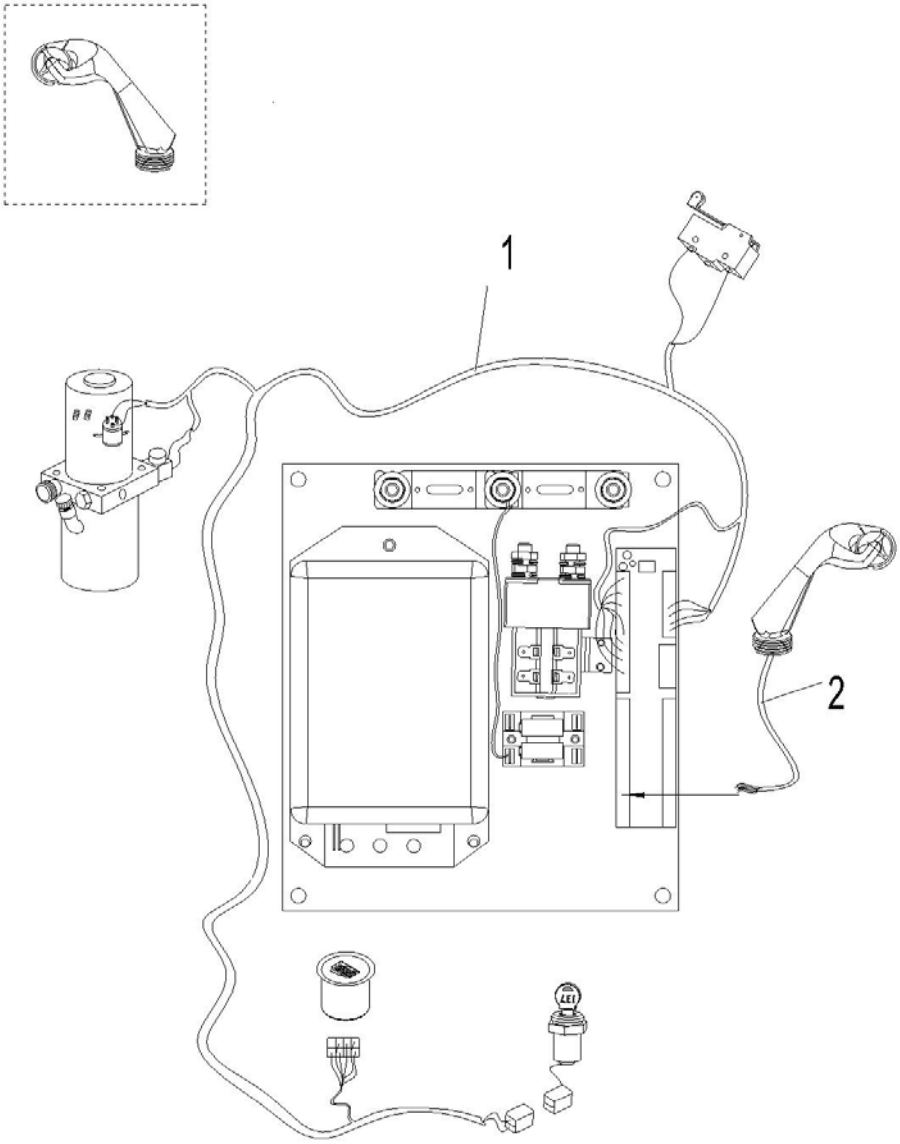


| No. | Part Number | Item | Quantity | Remarks |
|---|---|---|---|---|
| 1 | 2000433005 | Control harness | 1 | |
| 2 | 2000433006 | Handle harness | 1 | |

## Figure 19 CANBUS Handle Control Harness

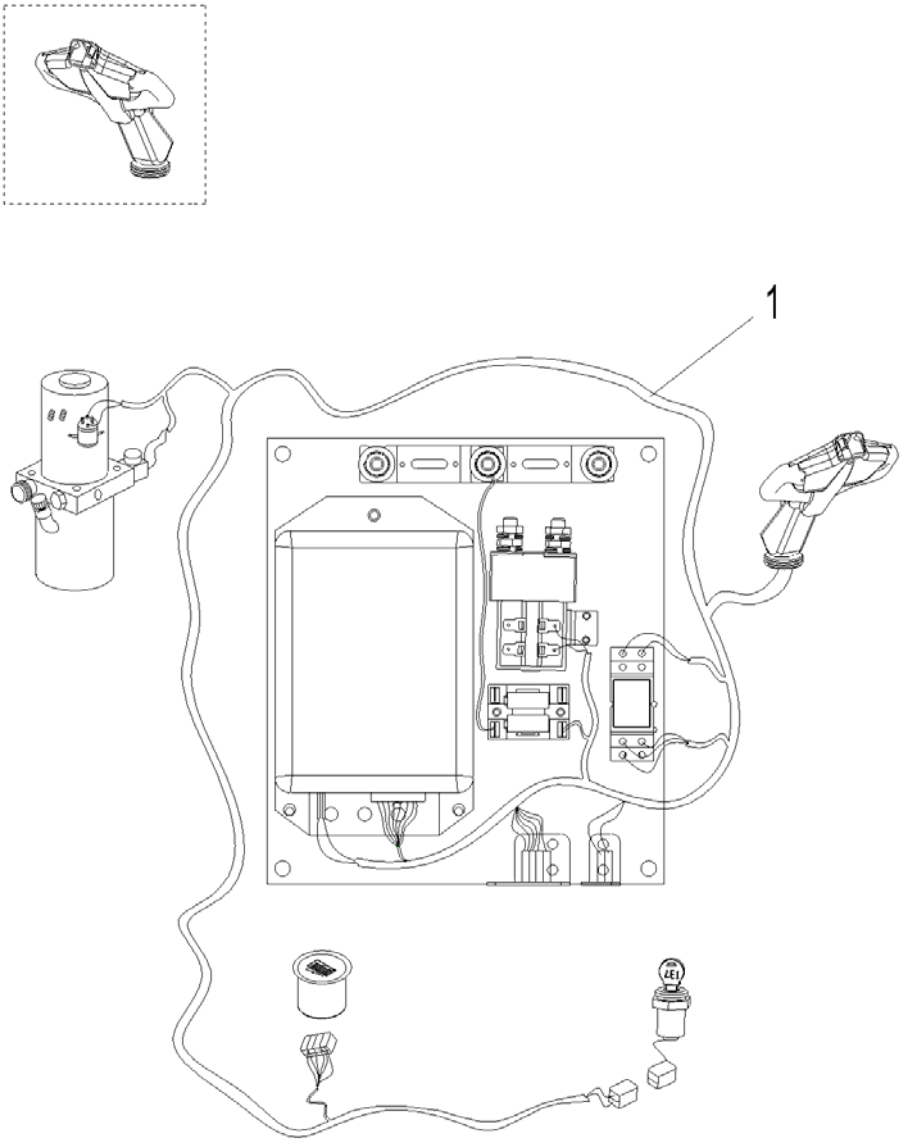


| No. | Part Number | Item | Quantity | Remarks |
|---|---|---|---|---|
| 1 | 2000433007 | Control harness | 1 | |

## Figure 20 CANBUS Handle Control Harness（with pump function）

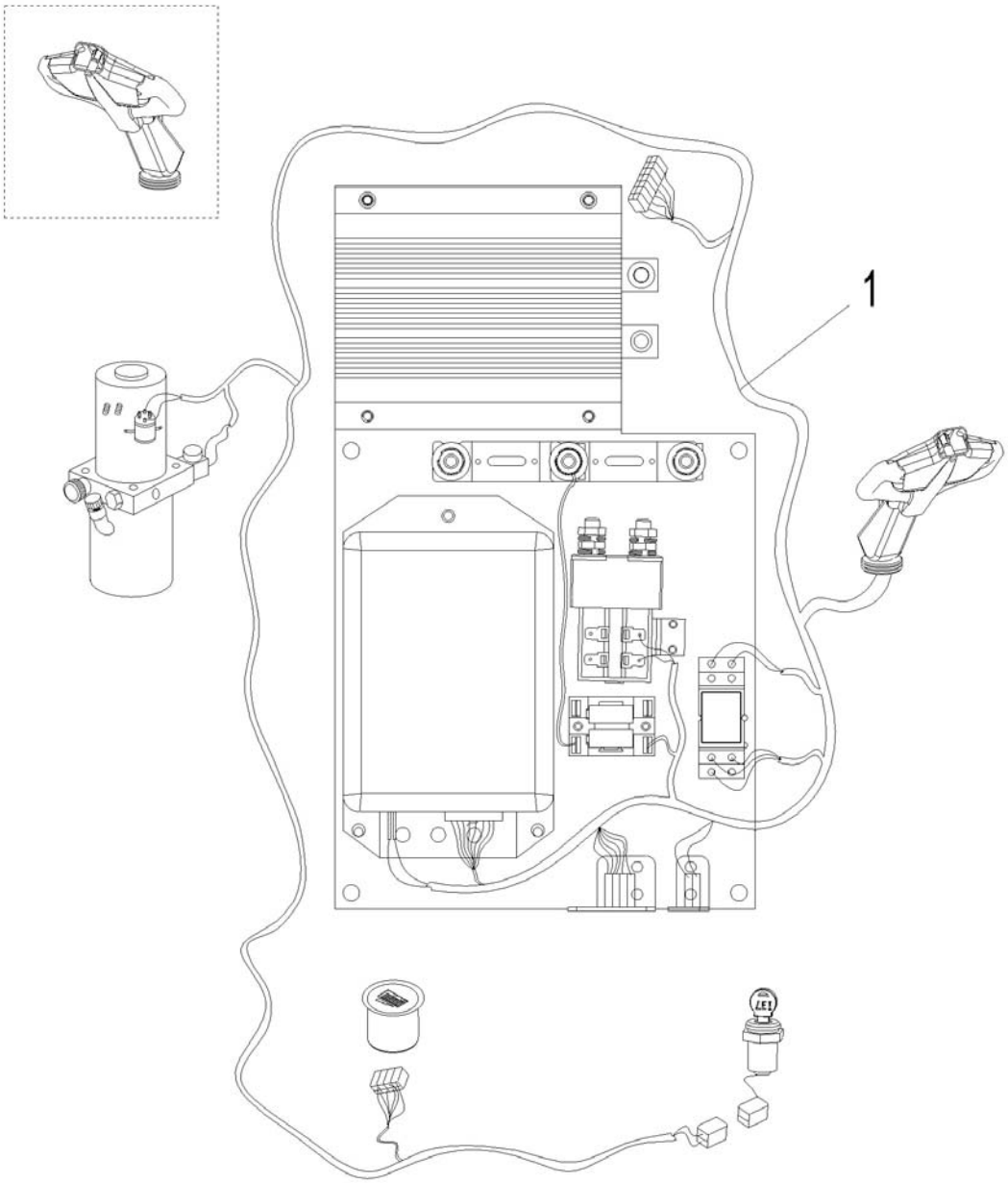


| No. | Part Number | Item | Quantity | Remarks |
|---|---|---|---|---|
| 1 | 2000433008 | Control harness | 1 | With pump function |

## Figure 21 Universal Parts for Entire Unit

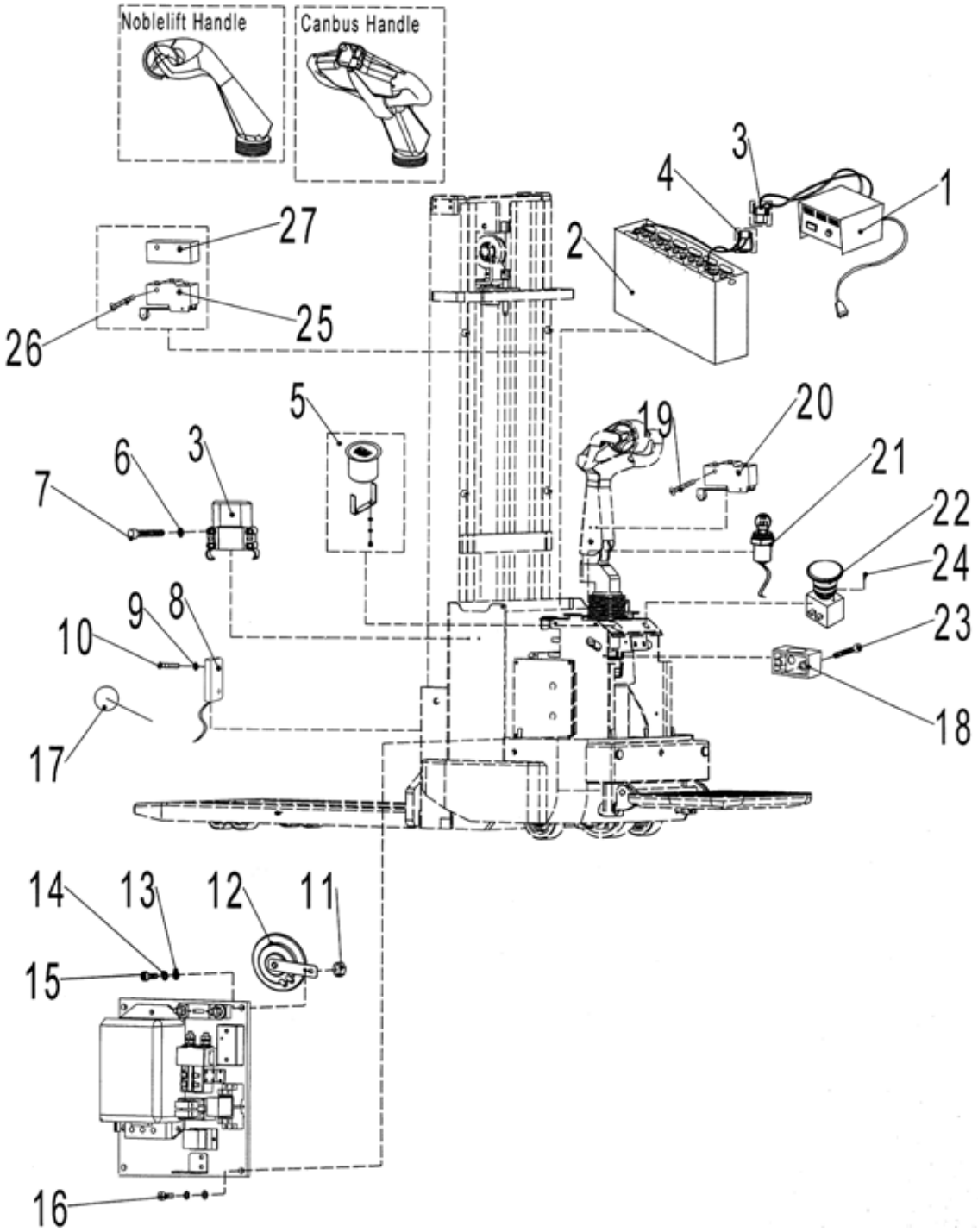

| No. | Part Number | Item | Quantity | Remarks |
|---|---|---|---|---|
| 1 | 2040420001 | Charger 24V/40A | 1 | Asian in Chinese |
| | 2040420002 | Charger 24V/40A | 1 | Asian in English |
| | 2040420003 | Charger 24V/40A | 1 | European |
| | 2040420004 | Charger 24V/40A | 1 | American |
| | 2040420005 | Charger 24V/40A | 1 | Australian |
| | 2040420006 | Charger 24V/40A | 1 | British |
| 2 | 2040432002 | Battery | 1 | |
| 3 | 2000434001 | Socket connector | 2 | |
| 4 | 2000434002 | Socket connector | 1 | |
| 5 | 1000434025 | Battery instrument | 1 | |
| 6 | 0000023055 | Flat washer | 8 | |
| 7 | 0000023106 | Screw | 2 | |
| 8 | 2000435001 | Magnetic switch | 1 | |
| | 2000435003 | Magnetic switch | 1 | |
| 9 | 0000025026 | Flat washer | 2 | |
| 10 | 0000023083 | Screw | 2 | |
| 11 | 0000023081 | Nut | 1 | |
| 12 | 1000434015 | Horn | 1 | |
| 13 | 0000025005 | Flat washer | 4 | |
| 14 | 0000025004 | Spring washer | 4 | |
| 15 | 0000023061 | Screw | 1 | |
| 16 | 0000023013 | Screw | 3 | |
| 17 | 2000435002 | Magnet steel | 1 | |
| 18 | 2000403001 | Cable holder | 1 | |
| 19 | 0000023050 | Screw | 2 | |
| 20 | 1000134001 | Micro-switch | 1 | |
| 21 | 1010434002 | Key switch(with key) | 1 | |
| 22 | 2240434001 | DC power switch | 1 | |
| 23 | 0000023106 | Screw | 2 | |
| 24 | 0000023126 | Screw | 2 | |
| 25 | 2040634001 | Micro-switch | 1 | |
| 26 | 0000023086 | Screw | 2 | |
| 27 | 2040603002 | Protective cover for Micro-switch | 1 | |

## Figure 22 CANBUS Handle Controller Assembly

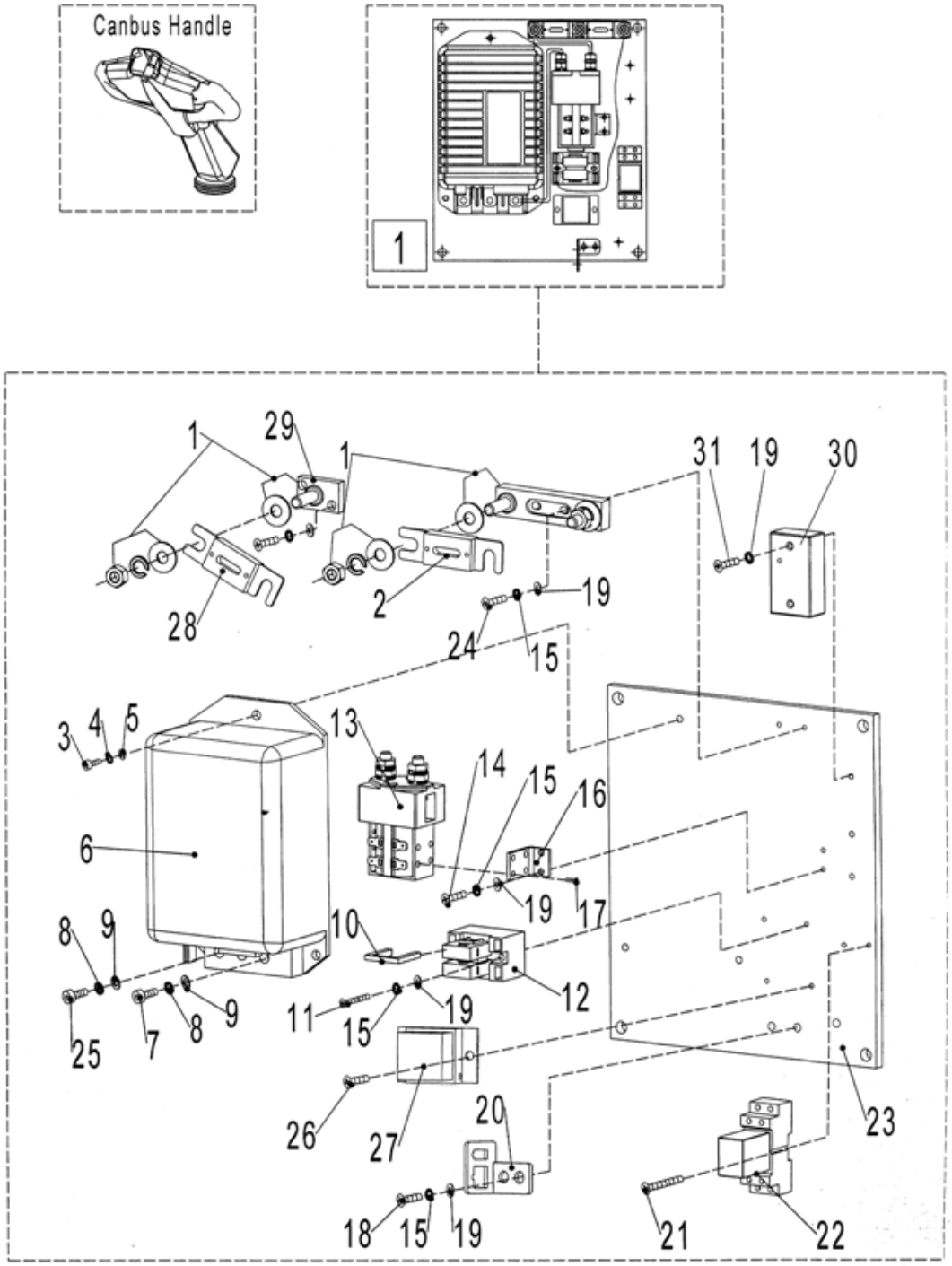

| No. | Part Number | Item | Quantity | Remarks |
|---|---|---|---|---|
| 1 | 1000434007 | Fuse holder | 1 | |
| 2 | 2210434004 | Bolted fuse | 1 | |
| 3 | 0000023063 | Screw | 3 | |
| 4 | 0000025006 | Spring washer | 3 | |
| 5 | 0000025007 | Flat washer | 3 | |
| 6 | 1000434010 | Controller | 1 | |
| 7 | 0000023012 | Screw | 2 | |
| 8 | 0000025004 | Spring washer | 3 | |
| 9 | 0000025005 | Flat washer | 3 | |
| 10 | 1000434040 | Fuse | 1 | |
| 11 | 0000023019 | Screw | 2 | |
| 12 | 1000434009 | Two fuses holder for vehicle | 1 | |
| 13 | 1000434006 | Pulling motor contactor | 1 | |
| 14 | 0000023016 | Screw | 4 | |
| 15 | 0000025009 | Spring washer | 10 | |
| 16 | 1000404022 | Main contactor mounting bracket | 1 | |
| 17 | 0000023017 | Screw | 2 | |
| 18 | 0000023023 | Screw | 2 | |
| 19 | 0000025008 | Flat washer | 11 | |
| 20 | 1000404005 | Connector mounting bracket | 1 | |
| 21 | 0000023054 | Screw | 2 | |
| 22 | 1000434014 | Relay | 1 | |
| 23 | 1020404001 | Aluminium plate | 1 | |
| 24 | 0000023018 | Screw | 2 | |
| 25 | 0000023013 | Screw | 1 | |
| 26 | 0000023052 | Screw | 2 | |
| 27 | 1000434003 | Protective module | 1 | |
| 28 | 1020434001 | Fuse | 1 | |
| 29 | 1020434002 | Binding Post | 1 | |
| 30 | 2000404004 | Lifting logic board | 1 | |
| 31 | 0000023019 | Screw | 2 | |
| 1 | 2000200001 | Electric controller assembly | 1 | |

## Figure 23 General Controller Assembly

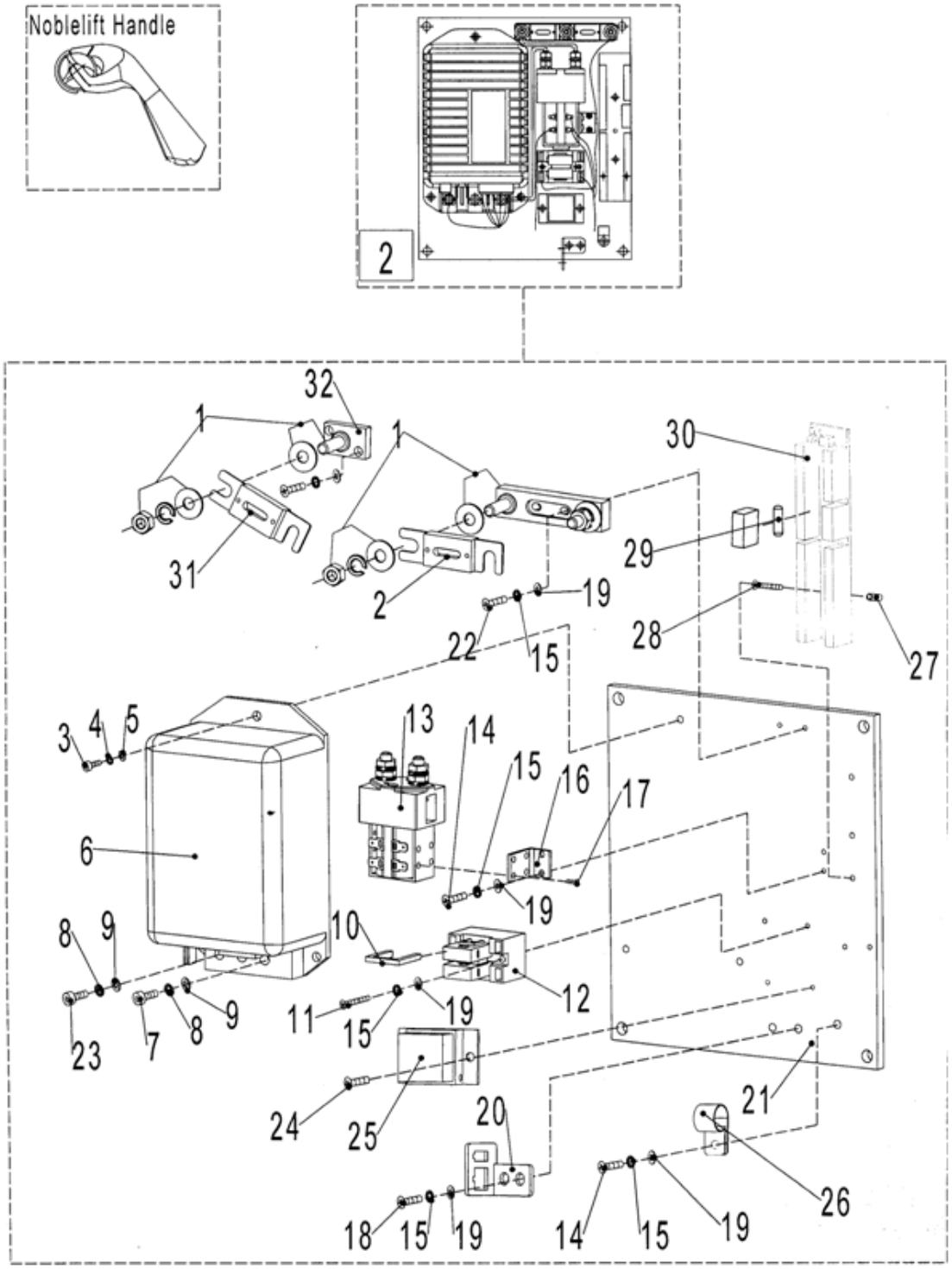

| No. | Part Number | Item | Quantity | Remarks |
|---|---|---|---|---|
| 1 | 1000434007 | Fuse holder | 1 | |
| 2 | 2210434004 | Fuse | 1 | |
| 3 | 0000023063 | Screw | 3 | |
| 4 | 0000025006 | Spring washer | 3 | |
| 5 | 0000025007 | Flat washer | 3 | |
| 6 | 1000434002 | Controller | 1 | |
| 7 | 0000023012 | Screw | 2 | |
| 8 | 0000025004 | Spring washer | 3 | |
| 9 | 0000025005 | Flat washer | 3 | |
| 10 | 1000434040 | Fuse | 1 | |
| 11 | 0000023019 | Screw | 2 | |
| 12 | 1000434009 | Two position fuse seat for automobile | 1 | |
| 13 | 1000434006 | Pulling motor contactor | 1 | |
| 14 | 0000023016 | Screw | 5 | |
| 15 | 0000025009 | Spring washer | 11 | |
| 16 | 1000404022 | Main contactor fixing bracket | 1 | |
| 17 | 0000023017 | Screw | 2 | |
| 18 | 0000023023 | Screw | 2 | |
| 19 | 0000025008 | Flat washer | 11 | |
| 20 | 1000404005 | Connector fixing bracket | 1 | |
| 21 | 1020404001 | Aluminium plate | 1 | |
| 22 | 0000023018 | Screw | 2 | |
| 23 | 0000023013 | Screw | 1 | |
| 24 | 0000023052 | Screw | 2 | |
| 25 | 1000434003 | Protective module | 1 | |
| 26 | 1000403004 | Wire clip | 1 | |
| 27 | 1000403002 | White column | 2 | |
| 28 | 0000023051 | Screw | 2 | |
| 29 | 1000434005 | Fuse tube | 1 | |
| 30 | 2210435001 | Control panel | 1 | |
| 31 | 1020434001 | Fuse | 1 | |
| 32 | 1020434002 | Binding post | 1 | |
| 5 | 2040434001 | Electric controller assembly | 1 | |

**Figure 24 CANBUS handle Controller Assembly（with pump function）**

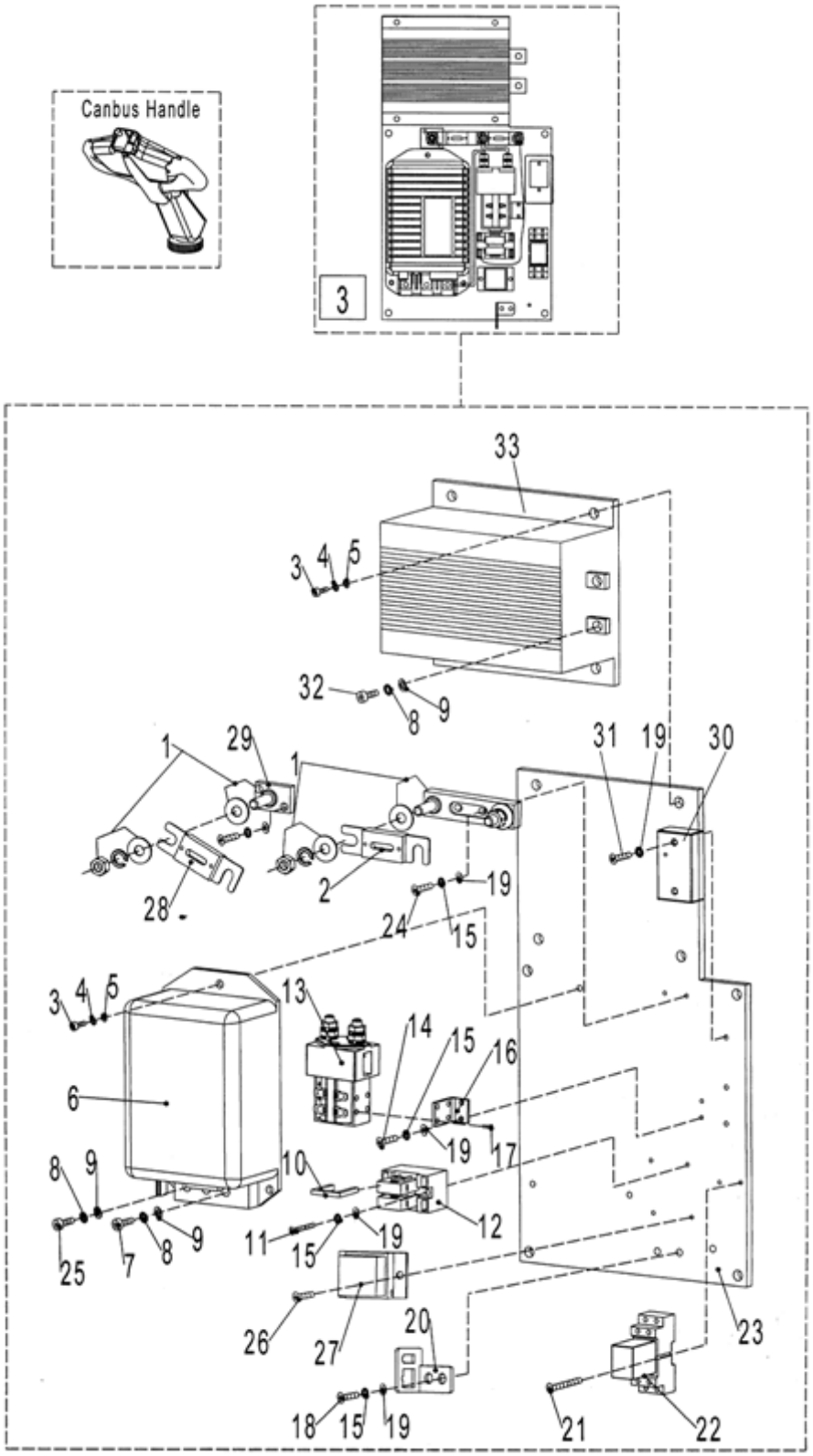

| No. | Part Number | Item | Quantity | Remarks |
|---|---|---|---|---|
| 1 | 1000434007 | Fuse holder | 1 | |
| 2 | 2210434004 | Fuse | 1 | |
| 3 | 0000023063 | Screw | 7 | |
| 4 | 0000025006 | Spring washer | 7 | |
| 5 | 0000025007 | Flat washer | 7 | |
| 6 | 1000434010 | Controller | 1 | |
| 7 | 0000023012 | Screw | 2 | |
| 8 | 0000025004 | Spring washer | 6 | |
| 9 | 0000025005 | Flat washer | 6 | |
| 10 | 1000434040 | Fuse | 1 | |
| 11 | 0000023019 | Screw | 2 | |
| 12 | 1000434009 | Two position fuse seat for automobile | 1 | |
| 13 | 1000434006 | Pulling motor contactor | 1 | |
| 14 | 0000023016 | Screw | 4 | |
| 15 | 0000025009 | Spring washer | 10 | |
| 16 | 1000404022 | Main contactor fixing bracket | 1 | |
| 17 | 0000023017 | Screw | 2 | |
| 18 | 0000023023 | Screw | 2 | |
| 19 | 0000025008 | Flat washer | 11 | |
| 20 | 1000404005 | Connector fixing bracket | 1 | |
| 21 | 0000023054 | Screw | 2 | |
| 22 | 1000434014 | Relay | 1 | |
| 23 | 1020404001 | Aluminium plate | 1 | |
| 24 | 0000023018 | Screw | 2 | |
| 25 | 0000023013 | Screw | 1 | |
| 26 | 0000023052 | Screw | 2 | |
| 27 | 1000434003 | Protective module | 1 | |
| 28 | 1020434001 | Fuse | 1 | |
| 29 | 1020434002 | Binding post | 1 | |
| 30 | 2000404004 | Lifting logic board | 1 | |
| 31 | 0000023019 | Screw | 2 | |
| 32 | 0000023166 | Screw | 3 | |
| 33 | 2010435001 | Pump controller | 1 | |
| 3 | 2000200002 | controller assembly | 1 | |

**Figure 25 Pipeline System**

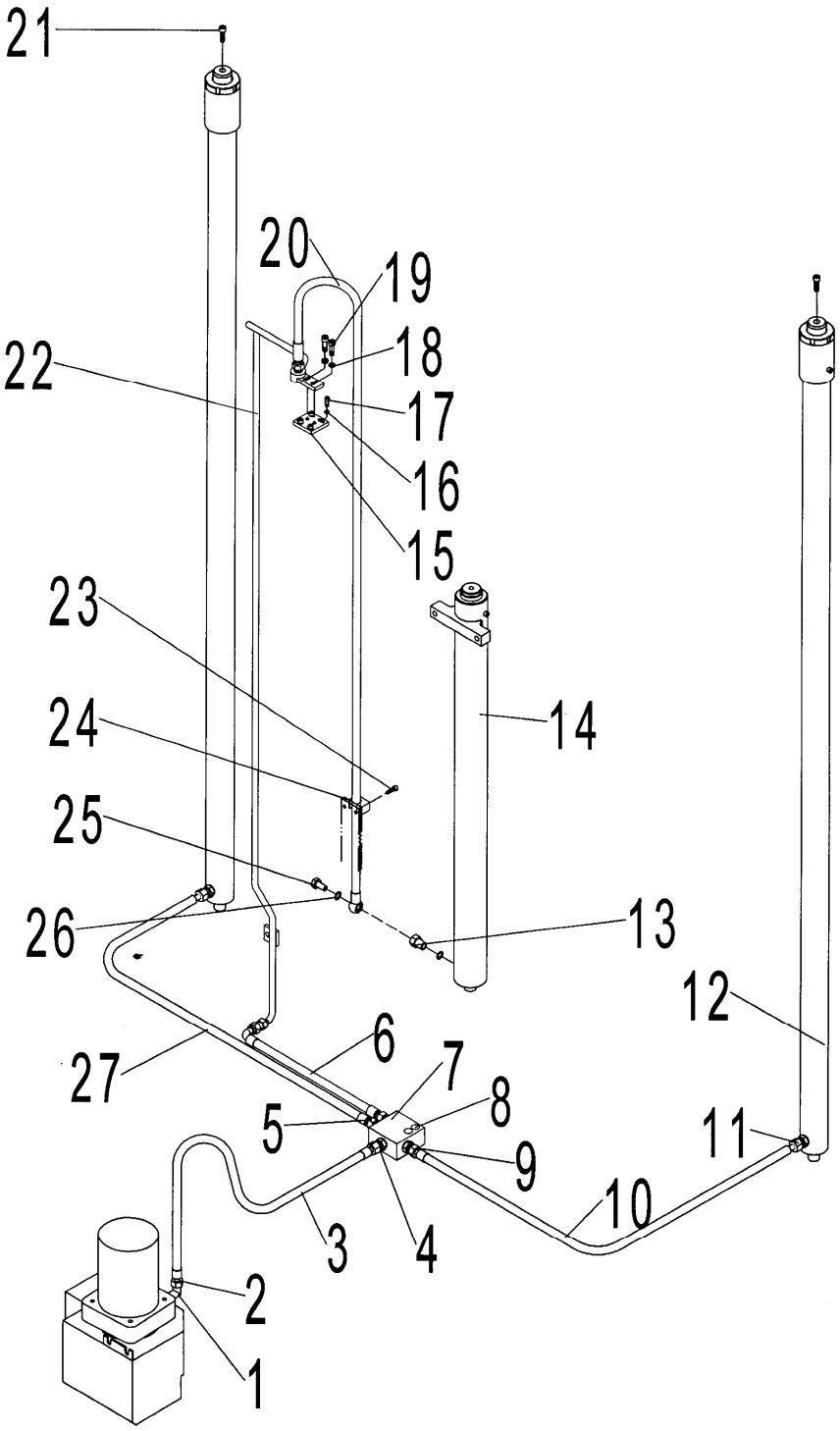

| No. | Part Number | Item | Quantity | Remarks |
|---|---|---|---|---|
| 1 | 0000017004 | Joint | 1 | |
| 2 | 0000018002 | O-ring | 3 | |
| 3 | 2050317004 | High pressure fuel tube | 1 | |
| 4 | 2000317003 | Straight joint A | 1 | |
| 5 | 0000022011 | O-ring | 7 | |
| 6 | 2040317014 | High pressure rubber tube | 1 | |
| 7 | 2040315001 | Connecting part of the oil pipe | 1 | |
| 8 | 0000023025 | Screw | 2 | |
| 9 | 0000022051 | Seal kit assembly | 7 | |
| 10 | 2040317002 | High pressure rubber tube | 1 | |
| 11 | 2000317002 | Straight joint | 5 | |
| 12 | 2040300001 | Outer cylinder | 2 | CS1543 |
| | 2040300003 | Outer cylinder | 2 | CS1546 |
| | 2040300004 | Outer cylinder | 2 | CS1550 |
| | 2040300005 | Outer cylinder | 2 | CS1555 |
| 13 | 2040302002 | Transition joint | 1 | |
| 14 | 2040300002 | Inner cylinder | 1 | CS1543 |
| | 2040300008 | Inner cylinder | 1 | CS1546 |
| | 2040300006 | Inner cylinder | 1 | CS1550 |
| | 2040300007 | Inner cylinder | 1 | CS1555 |
| 15 | 2040304001 | Pressure pad | 1 | |
| 16 | 0000025010 | Spring washer | 4 | |
| 17 | 0000023040 | Screw | 4 | |
| 18 | 0000025001 | Spring washer | 2 | |
| 19 | 0000023044 | Screw | 3 | |
| 20 | 2040317004 | High pressure rubber tube | 1 | CS1543 |
| | 2040317005 | High pressure rubber tube | 1 | CS1546 |
| | 2040317006 | High pressure rubber tube | 1 | CS1550 |
| | 2040317007 | High pressure rubber tube | 1 | CS1555 |
| 21 | 0000023094 | Screw | 2 | |
| 22 | 2040317010 | High pressure steel tube | 1 | CS1543 |
| | 2040317011 | High pressure steel tube | 1 | CS1546 |
| | 2040317012 | High pressure steel tube | 1 | CS1550 |
| | 2040317013 | High pressure steel tube | 1 | CS1555 |
| 23 | 0000023030 | Screw | 1 | |
| 24 | 2040302001 | Oil pipe clip | 1 | |
| 25 | 0000022005 | Seal kit assembly | 2 | |
| 26 | 0000023112 | Bolt | 1 | |
| 27 | 2040317001 | High pressure rubber tube | 1 | |

## Figure 26 outer Cylinder Sealing Parts

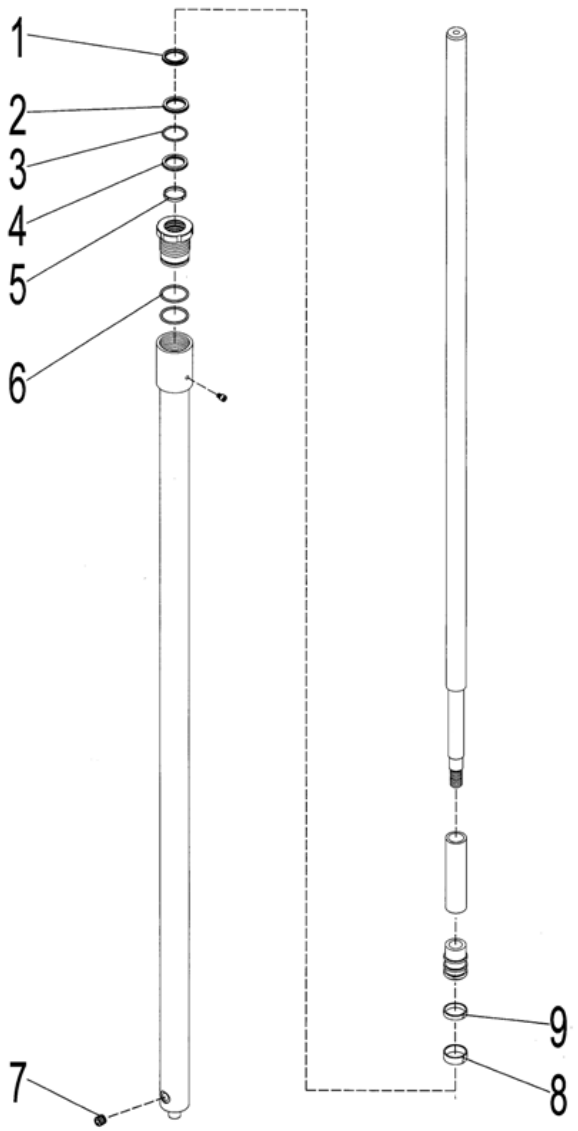


| No. | Part Number | Item | Quantity | Remarks |
|---|---|---|---|---|
| 1 | 2040322001 | Dust-ring | 1 | |
| 2 | 2040322004 | Supporting ring for hole | 1 | |
| 3 | 0000022017 | O-ring | 1 | |
| 4 | 2040322002 | Seal ring | 1 | |
| 5 | 2040322003 | Seal ring | 1 | |
| 6 | 0000022018 | O-ring | 2 | |
| 7 | 2000337001 | Safety explosion proof valve assembly | 1 | |
| 8 | 2270322001 | Supporting ring for hole | 1 | |
| 9 | 2040322006 | Supporting ring for hole | 1 | |

## Figure 27 Inner cylinder sealing parts

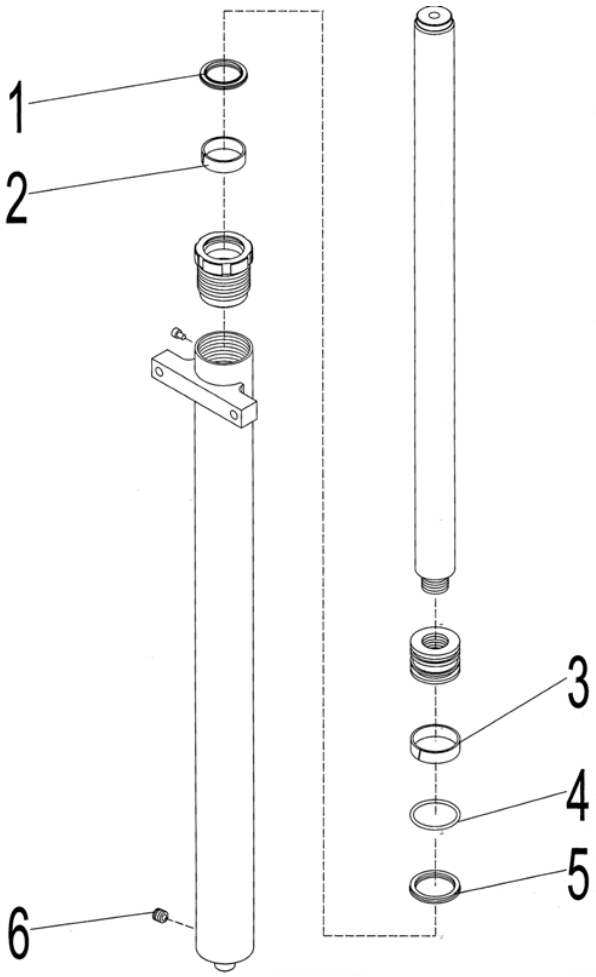


| No. | Part Number | Item | Quantity | Remarks |
|---|---|---|---|---|
| 1 | 2040322007 | Dust ring | 1 | |
| 2 | 2040322005 | Supporting ring for axle | 1 | |
| 3 | 2040322008 | Supporting ring for hole | 1 | |
| 4 | 0000022039 | O-ring | 1 | |
| 5 | 2040322009 | Seal ring | 1 | |
| 6 | 2000337001 | Safety explosion proof valve assembly | 1 | |

## Figure 28 Pump System

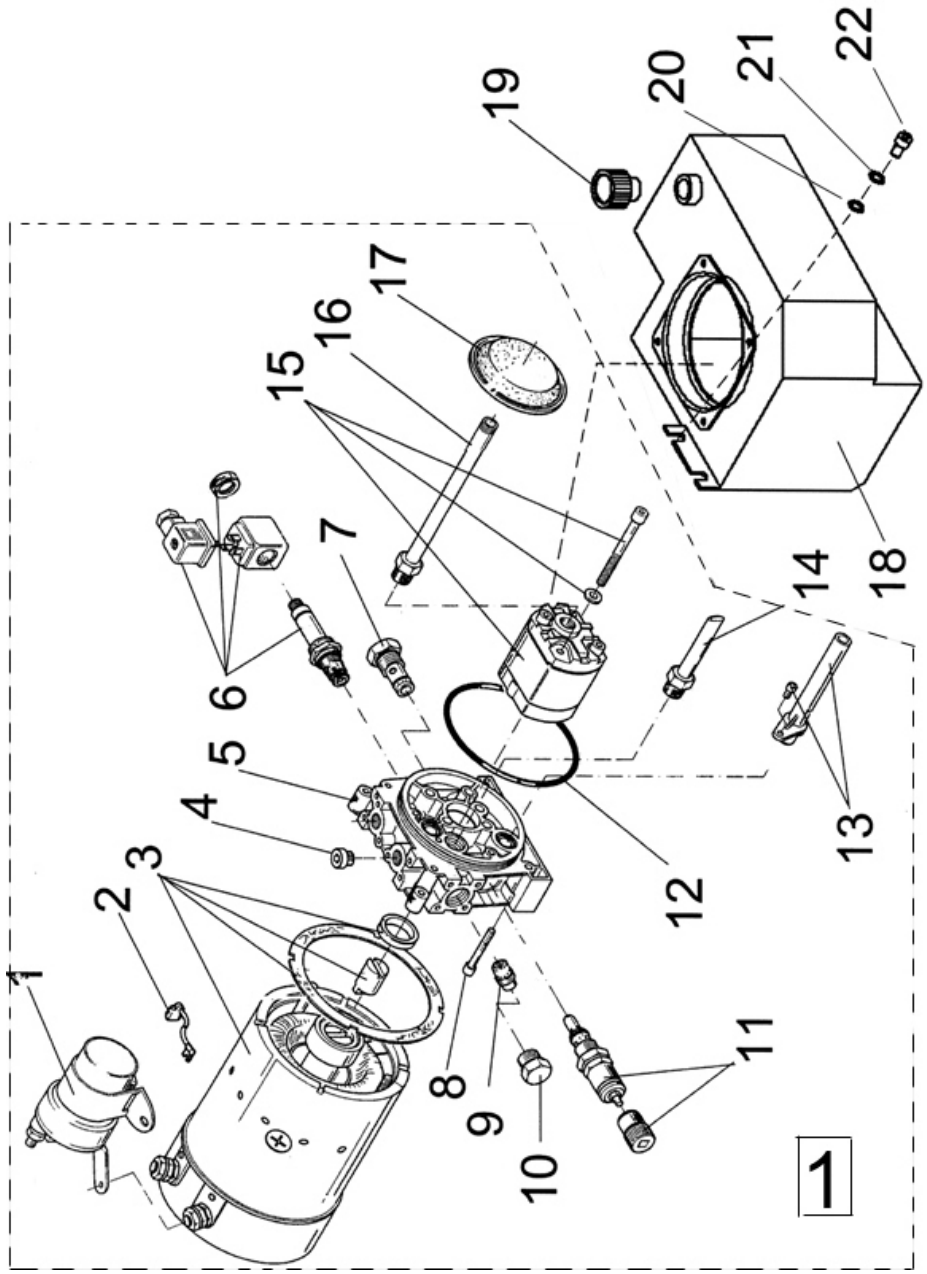

| No. | Part Number | Item | Quantity | Remarks |
|---|---|---|---|---|
| 1 | 2040334001 | Starter relay | 1 | |
| 2 | 2040335001 | Carbon brush (assembly) | 1 | Iskar |
| | 9000003582 | Carbon brush (assembly) | 1 | Hydr |
| 3 | 2040337001 | Motor | 1 | Iskar |
| | 9000003583 | Motor | 1 | Hydr |
| 4 | 2000323001 | Screw plug | 1 | |
| 5 | 2000300002 | Valve body | 1 | |
| 6 | 2000335003 | Solenoid valve | 1 | |
| 7 | 2000335004 | Check valve | 1 | |
| 8 | 2000323002 | Screw | 4 | |
| 9 | 2040315002 | Flow control valve | 1 | |
| 10 | 2000323003 | Bolt | 1 | |
| 11 | 2040315003 | Overflow valve | 1 | |
| 12 | 2000322004 | O-ring | 1 | |
| 13 | 2000317008 | Fuel return tube | 1 | |
| 14 | 2040317008 | Fuel return tube | 1 | |
| 15 | 2040337002 | Gear pump | 1 | |
| 16 | 2040317009 | Fuel suction tube | 1 | |
| 17 | 2000300004 | Filter screen | 1 | |
| 18 | 2040301001 | Fuel tank | 1 | |
| 19 | 2000303001 | Ventilation screw plug | 1 | |
| 20 | 0000025011 | Flat washer | 2 | |
| 21 | 0000025001 | Spring washer | 2 | |
| 22 | 0000023089 | Screw | 2 | |
| 1 | 2230300001 | Pump | 1 | 3.0KW（Iskar motor） |
| | 9000002314 | Pump | 1 | 3.0KW（Hydr motor） |

## Figure 29 Main Frame system

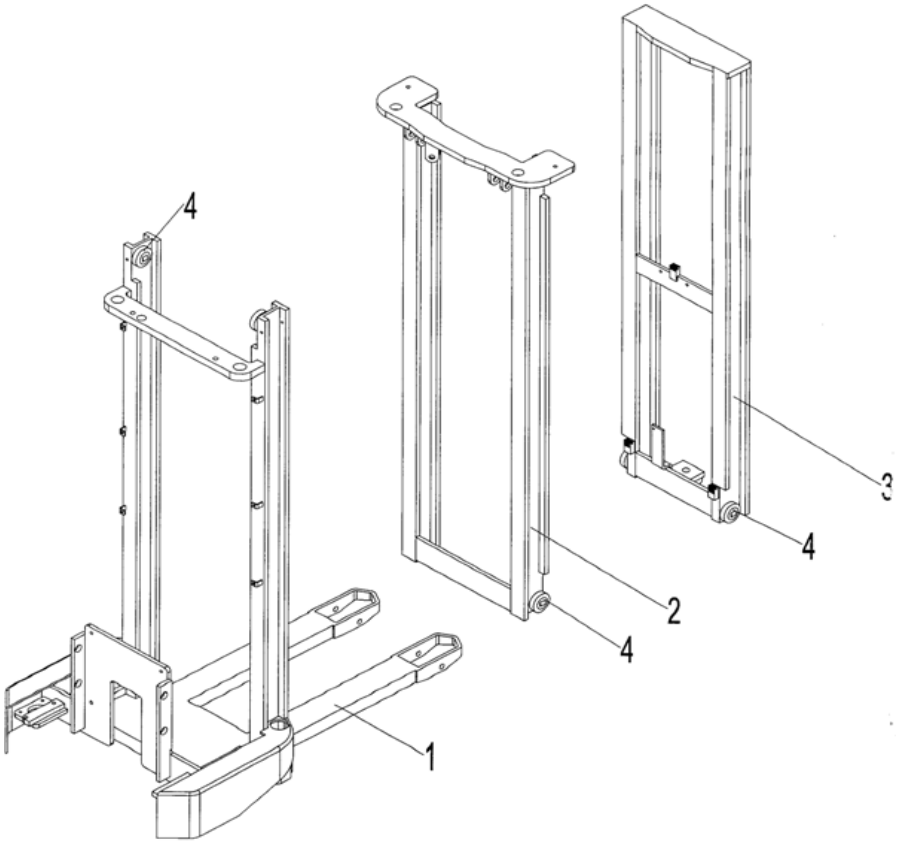


| No. | Part Number | Item | Quantity | Remarks |
|---|---|---|---|---|
| 1 | 2040601001 | Standard external lifting main frame | 1 | CS1543(W575) |
| | 2040601002 | Standard external lifting main frame | 1 | CS1546(W575) |
| | 2040601003 | Standard external lifting main frame | 1 | CS1550(W575) |
| | 2040601004 | Standard external lifting main frame | 1 | CS1543(W685) |
| | 2040601005 | Standard external lifting main frame | 1 | CS1546(W685) |
| | 2040601006 | Standard external lifting main frame | 1 | CS1550(W685) |
| | 2040601007 | Standard external lifting main frame | 1 | CS1555(W685) |
| 2 | 2040601008 | Standard internal lifting main frame | 1 | CS1543 |
| | 2040601009 | Standard internal lifting main frame | 1 | CS1546 |
| | 2040601010 | Standard internal lifting main frame | 1 | CS1550 |
| | 2040601011 | Standard internal lifting main frame | 1 | CS1555 |
| 3 | 2040601012 | Standard middle lifting main frame | 1 | CS1543 |
| | 2040601013 | Standard middle lifting main frame | 1 | CS1546 |
| | 2040601014 | Standard middle lifting main frame | 1 | CS1550 |
| | 2040601015 | Standard middle lifting main frame | 1 | CS1555 |
| 4 | 2040511001 | Integral roller (assembly) | 8 | |

## Figure 30 chain system

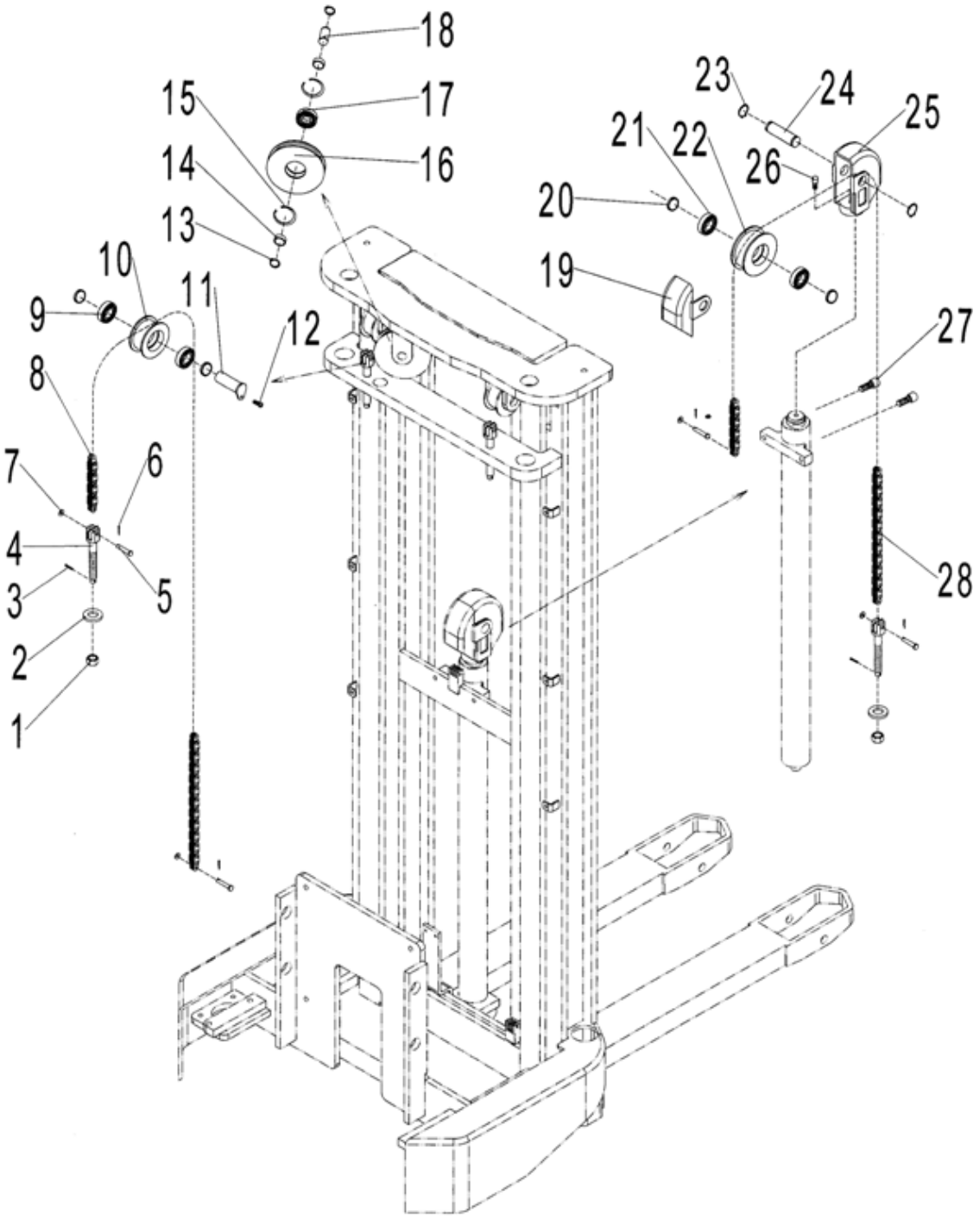

| No. | Part Number | Item | Quantity | Remarks |
|---|---|---|---|---|
| 1 | 0000024011 | Nut | 3 | |
| 2 | 0000025029 | Flat washer | 3 | |
| 3 | 0000028011 | Cotter pin | 3 | |
| 4 | 2220312001 | Chain tie rod | 3 | |
| 5 | 0000028012 | shaft | 6 | |
| 6 | 0000028010 | Cotter pin | 6 | |
| 7 | 0000025014 | Flat washer | 6 | |
| 8 | 0000029002 | Chain | 2 | CS1543 |
| | 0000029009 | Chain | 2 | CS1546 |
| | 0000029010 | Chain | 2 | CS1550 |
| | 0000029011 | Chain | 2 | CS1555 |
| 9 | 0000027012 | Bearing | 4 | |
| 10 | 2040610001 | Chain wheel B | 2 | |
| 11 | 2040601017 | Chain wheel assembly | 2 | |
| 12 | 0000023091 | Screw | 2 | |
| 13 | 0000026003 | Elastic retaining ring for shaft | 2 | |
| 14 | 2040625001 | Adjusting washer | 2 | |
| 15 | 0000026009 | Elastic retaining ring for hole | 2 | |
| 16 | 2040610003 | Sliding wheel | 1 | |
| 17 | 0000027001 | Bearing | 1 | |
| 18 | 2040607002 | Sliding wheel shaft | 1 | |
| 19 | 2230305002 | Side cover | 1 | |
| 20 | 2000302002 | Adjusting washer | 6 | |
| 21 | 0000027012 | Bearing | 2 | |
| 22 | 2040610004 | Chain wheel | 1 | |
| 23 | 0000026008 | Elastic retaining ring for shaft | 2 | |
| 24 | 2230307001 | Chain wheel shaft | 1 | |
| 25 | 2230305001 | Chain wheel seat | 1 | |
| 26 | 0000023094 | Screw | 1 | |
| 27 | 0000023088 | Screw | 2 | |
| 28 | 0000029003 | Chain | 1 | CS1543 |
| | 0000029006 | Chain | 1 | CS1546 |
| | 0000029007 | Chain | 1 | CS1550 |
| | 0000029008 | Chain | 1 | CS1555 |

## Figure 31 Other Accessories of Main Frame

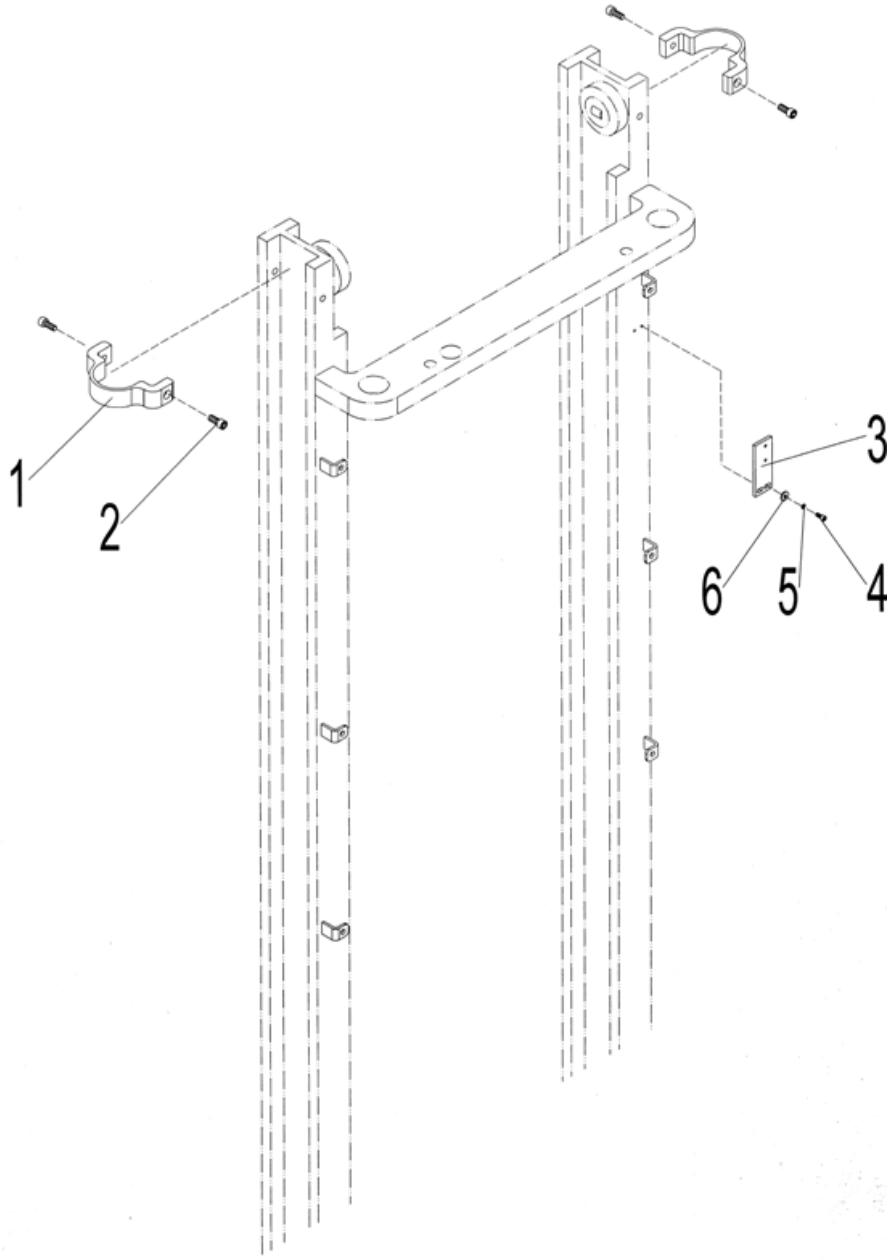


| No. | Part Number | Item | Quantity | Remarks |
|---|---|---|---|---|
| 1 | 2040605003 | Cylinder support | 2 | |
| 2 | 0000023067 | Screw | 4 | |
| 3 | 2040602001 | limit switch installation plate | 1 | |
| 4 | 0000023040 | Screw | 2 | |
| 5 | 0000025010 | Spring washer | 2 | |
| 6 | 0000023055 | Flat washer | 2 | |

## Figure 32 Pallet Bracket

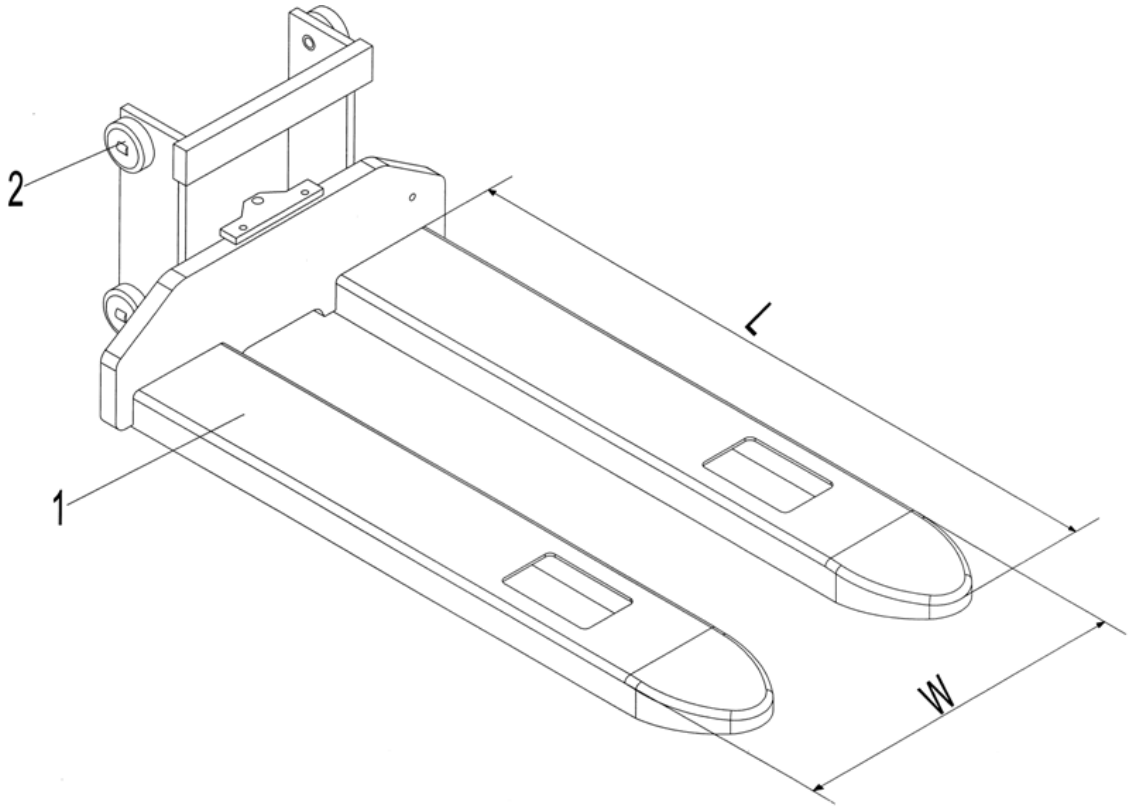


| No. | Part Number | Item | Quantity | Remarks |
|---|---|---|---|---|
| 1 | 2040501001 | Fork W=575 L=1150 | 1 | |
| | 2040501002 | Fork W=685 L=1150 | 1 | |
| 2 | 2220511001 | Integral roller (assembly) | 4 | |

## Figure 33 Foot Pedal

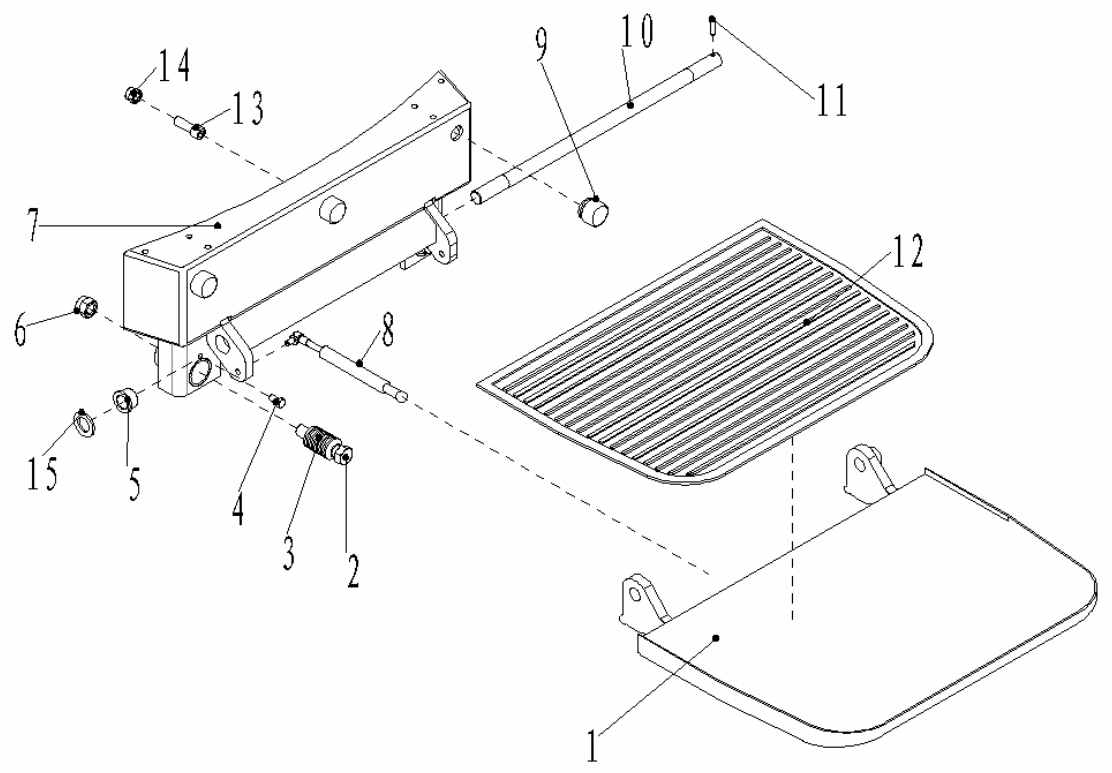


| No. | Part Number | Item | Quantity | Remarks |
|---|---|---|---|---|
| 1 | 2000401013 | Pedal | 1 | |
| 2 | 0000023117 | Bolt | 2 | |
| 3 | 0000031001 | Disc spring | 46 | |
| 4 | 0000023425 | Bolt | 1 | |
| 5 | 2000413003 | Bush | 2 | |
| 6 | 0000024011 | Nut | 2 | |
| 7 | 2000401014 | Connecting plate | 1 | |
| 8 | 2000421001 | Gas spring | 1 | |
| 9 | 2000418003 | Shake proof jacket | 3 | |
| 10 | 2000407003 | Rotating shaft | 1 | |
| 11 | 0000028016 | Elastic cylindrical pin | 1 | |
| 12 | 2000418002 | Rubber pad | 1 | |
| 13 | 0000023082 | Screw | 3 | |
| 14 | 0000024006 | Nut | 3 | |
| 15 | 0000025031 | Flat washer | N | |

## Figure 34 Protective Arm

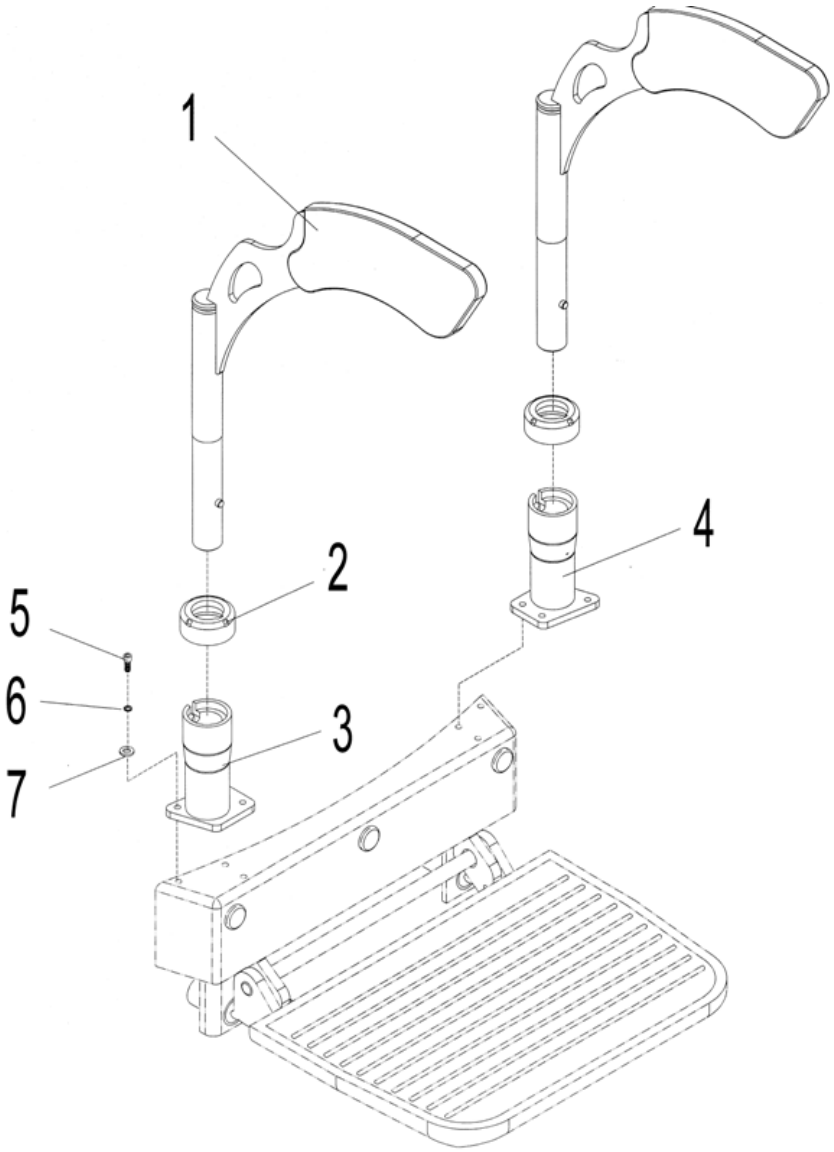


| No. | Part Number | Item | Quantity | Remarks |
|---|---|---|---|---|
| 1 | 1020400001 | Protective arm | 2 | |
| 2 | 1020402002 | Cap nut | 2 | |
| 3 | 1020401001 | Left protective arm bracket | 1 | |
| 4 | 1020401002 | Right protective arm bracket | 1 | |
| 5 | 0000023172 | Screw | 6 | |
| 6 | 0000025001 | Spring washer | 6 | |
| 7 | 0000025011 | Flat washer | 6 | |

https://truckmanualshub.com/

## Figure 35 Load Back-rest

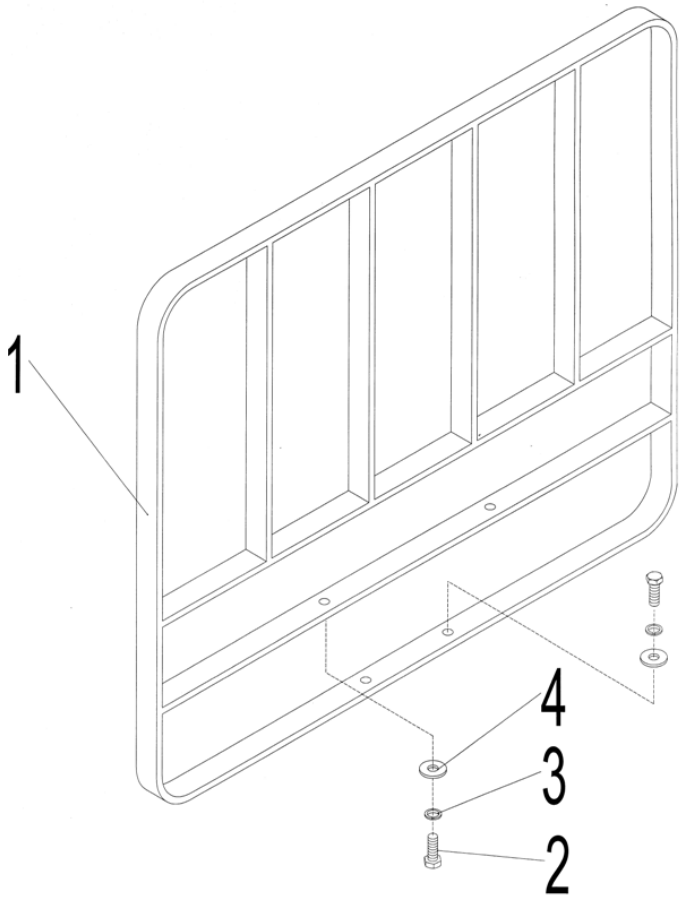


| No. | Part Number | Item | Quantity | Remarks |
|---|---|---|---|---|
| 1 | 2000501006 | Load back-rest | 1 | |
| 2 | 0000023088 | Bolt | 4 | |
| 3 | 0000023006 | Spring washer | 4 | |
| 4 | 0000025002 | Flat washer | 4 | |

Manufacturer maintains the rights of modifying this manual without notice!

https://truckmanualshub.com/