https://truckmanualshub.com/

https://truckmanualshub.com/

USER MANUAL

SS0407E / SS0507E / SS0607E / AS0607 / AS0607W / AS0607WE / AS0607E / AS0608 / AS0608E / AS0808 / AS0808E / AS0812 / AS0812E / AS1012 / AS1012E / AS1212 / AS1212E / AS1413

Warning

Operator and maintenance personnel must read and understand this manual for operation and maintenance. Otherwise, it could result in injury and death. Keep this manual in a suitable place for reference to the personnel concerned.

https://truckmanualshub.com/

TABLE OF CONTENTS

Foreword		**4**
Safety precaution		**5**
Chapter 1	*Security*	**6**
Chapter 2	*Legend*	**12**
Chapter 3	*Label*	**13**
Chapter 4	*Operation*	**18**
Chapter 5	*Emergency control*	**27**
Chapter 6	*Inspection for operation*	**29**
Chapter 7	*Inspection of the workstation*	**31**
Chapter 8	*Function test*	**32**
Chapter 9	*Operating instructions*	**35**
Chapter 10	*Transport and lifting instructions*	**38**
Chapter 11	*Maintenance*	**40**
Chapter 12	*Electrical diagram*	**58**
Chapter 13	*Hydraulic diagram*	**61**
Notes		**69**

https://truckmanualshub.com/

FOREWORD

Thank you for buying and using the aerial platform from Lingong Group Jinan Heavy Machinery Co., Ltd. The mechanism, the drive, the operation, adjustment, technical parameters and repair application data of the LGMG scissor lifts are specified in this manual as safety instructions and for proper use and maintenance of this machine.

Getting the most out of this machine is our overall goal, which strongly depends on your knowledge and the maintenance of your machine. We hope that you read the manual before you use, operate, repair and maintain the machine for the first time. We hope you are familiar with the specified operation and maintenance.
The correct images and instructions are contained in this manual at the time of publication. However, the structure and performance of our products is constantly being improved and supplemented. Changes to related design, operating and maintenance instructions are provided without prior notice.
Thank you for your understanding. If you have any doubts about the latest machine information and the manual, please contact us.

This manual applies to the LGMG electric scissor lift. The user performs maintenance on the machine strictly according to the specified interval in the maintenance schedule.
Keep the manual at the specified location for convenience or reference at any time.
This manual is part of the machine. If the ownership or right to use this machine is transferred, this manual must be transferred with this machine. Replace the manual in promptly in case of loss, damage or identification problems.

Lingong Group Jinan Heavy Machinery Co., Ltd. refers to the copyright of this manual. The reproduction or copying this manual is not permitted without the written permission of the company.

WARNING

- Only personnel who have followed the vocational training with the corresponding qualifications may operate, repair and maintain this machine.
- Improper operation, maintenance and repair is very dangerous and can lead to personal injury and death.
- Before operation or maintenance, the operator must read this manual carefully. Do not operate, maintain and repair this machine until you have read and understood this manual.
- The user must load the aerial platform strictly according to the regulations and is responsible for the consequences caused by overloading or any modification without permission.
- The rules of use and precautions in this manual apply only to the specified use of this machine. When using outside the regulations, make sure that this use does not cause personal injury.

https://truckmanualshub.com/

SAFETY PRECAUTION

The operator understands and follows the existing state and local authority safety regulations.

If these are not available, the safety instructions in this manual must be followed.

Most accidents are caused by violating the operating and maintenance instructions of the machine. To prevent accidents, you must go through, understand and follow all warnings and precautions for operation and maintenance. The safety measures are specified in Chapter 1 Safety.

Since it is impossible to predict every risk, the safety instructions in this manual may may not contain all the security measures. Ensure that you can guarantee the safety of yourself and others and protect the machine from damage if you follow the steps and use of this manual. If you cannot confirm the safety of some activities, you can consult us or the distributor without obligation.

The operating and precautionary measures in this manual apply only to the specified use of this machine. Our company is not responsible if this machine is used outside of this manual. The user and operator are responsible for the safety of such activities.

Do not, under any circumstances, engage in any activities prohibited in this manual.

The following signal words apply to identify the safety information in this manual.

DANGER If this is not avoided, the risk can lead to serious injury or death.

This also applies to the situation which may lead to serious damage to the machine, if the risk is not avoided.

WARNING If this is not avoided, the potential risks can be serious injury or death. risk This also applies to the situation which may lead to serious damage to the machine, if the risk is not avoided.

NOTICE If not avoided, this may result in slight or moderate injury. This also applies to the situation that may result in damage to the machine or the life span being reduced, if the risk is not avoided.

https://truckmanualshub.com/

1.1 Illustrations for rules and regulations

As this machine is not permitted to drive on the road and the speed of movement is very low, corresponding national traffic laws are not necessary. The safety instructions in this manual must be followed.

1.2 Danger

Death or serious injury may be caused if the instructions and safety precautions in this manual are not followed.

1.3 Prohibited from operating unless

The safety rules of the machine are understood and implemented.

1) Dangerous circumstances are avoided. The safety regulations are recognised and understood for the next step.
2) The inspection before operation is always carried out.
3) A function test is always carried out before use.
4) The workstation has been checked.
5) The machine is used for its designed purpose.
6) The manufacturer's instructions and safety instructions, the manufacturer's label of safe operation and the machine is read, understood and monitored.
7) The safety instructions for the user and local regulations are read, understood and followed.
8) All applicable governmental laws and regulations are read, understood and followed.
9) The correct training for safe operation of the machine is followed.

1.4 Classification of risk

The meaning of symbols, colour codes and signs of the Lingong product are as follows:

1) Safety warning and signs: for warning of potential personal injury etc. Attention all safety instructions below, to prevent possible personal injury or death.
2) Red: reminder of dangerous situations. Failure to avoid may result in serious injury or death.
3) Orange: reminder of dangerous situations. If not avoided, this may lead to serious injury or death.
4) Yellow: Remember the dangerous situations. If this is not avoided, this may result in minor or moderate personal injury.
5) Blue: Remember the dangerous situations. If this is not avoided, a loss of property may arise.

1.5 Design use

The machine is a self-propelled and electric lifting device with a working platform on a scissor mechanism. The vibration through the machine does not cause risk to operators on the work platform. The machine can be used to transport employees and their tools to the height above the ground and also to reach the workstation above the machine or equipment.

1.6 Maintenance of safety signs

1) Replace missing or damaged safety signs and keep safety in mind at all times.
2) Clean the safety sign with natural soap and clean water.
3) Do not use a detergent that may damage the material of the safety sign.

https://truckmanualshub.com/

1.7 Electrocution Risk

1) The machine is not insulated so that there is no electrical shock protection when touching or coming close to an electricity cable. Keep distance from the electricity cable and the power supply according to the laws and regulations and description in the table below.

Tension	Required space
0-300V	Do not touch
300V-50KV	3,05m
50KV-200KV	4,6m
200KV-350KV	6,10m
350KV-500KV	7,62m
500KV-750KV	10,67m
750KV-1000KV	13,72m

2) Consider the influence of moving on the platform and turning and relaxing the electricity cable in strong winds or gusts of wind.
3) Stay away from the machine if it comes into contact with a live electricity cable.
Do not touch the machine or the operated machine on the ground or on the platform, to disconnect the power supply.
4) Do not use the machine during thunderstorms or rainstorms.
5) Do not use the machine as a ground wire during welding.
6) Do not touch the charger while charging.

1.8 Tilt Risk

The personnel, equipment and material on the platform must not exceed the maximum bearing capacity of the platform and the extended platform.

type	indoor use	outdoor use	max workload	max platform workload
SS0407E	2 Persons	1 person	240 Kg	113 Kg
SS0507E	2 Persons	1 person	230 Kg	113 Kg
SS0607E/AS0808/AS0808E	2 Persons		230 Kg	113 Kg
AS0607/AS0607E	2 Persons		230 Kg	120 Kg
AS0607W/AS0607WE	2 Persons	1 person	380 Kg	120 Kg
AS0608/AS0608E	2 Persons	1 person	380 Kg	113 Kg
AS0812/AS0812E	2 Persons	1 person	450 Kg	113 Kg
AS1012/AS1012E	2 Persons	1 person	320 Kg	113 Kg
AS1212/AS1212E	2 Persons		320 Kg	113 Kg
AS1413	2 Persons		200 Kg	113 Kg

https://truckmanualshub.com/

1.9 Safety of the workstation

1) The platform can only be raised on a firm and level surface.
2) Keep the lifting speed of the platform below 0.5 km/h.
3) Do not use the tilt alarm as a level indicator. The tilt alarm of the chassis and the platform only gives an alarm when the machine is seriously tilted.
4) If the tilting alarm sounds, lower the platform and move it to a horizontal surface.
   When the tilting alarm is triggered while lifting the platform, pay extra attention to lowering the platform.
5) If the machine is used outdoors, do not lift the platform when the wind speed is higher than 12.5 m/strong.
   If the wind speed exceeds the limit after lifting the platform, you must immediately lower the platform and stop working with the machine.
6) The ambient temperature for operating the machine is -20° C to 40°C.
7) The relative humidity for the use of this machine must be greater than 90% (at 20 ° C).
8) The permissible voltage fluctuation of the machine ±10%.
9) Do not use the machine in strong winds or gusts of wind. Do not increase the surface area of the platform or the load. Increasing the exposure area in the wind reduces the stability of the machine.
10) If the platform is caught, stuck or blocked by a nearby object and cannot move normally, do not release the platform via the platform controller. All personnel must leave the platform before the platform is released via ground control.
11) Be very careful and reduce the speed when the machine is in folding status on an uneven road, a gravel road, an unstable or slippery surface, close to a hole and driving on a slope.
12) Do not drive the machine on an uneven or unstable road or in other dangerous conditions when the platform has been raised.
13) Do not push any objects with the platform.
14) Do not use the machine as a crane.
15) Do not place, anchor or hang a load on any part of the machine.
16) Do not push the machine or other items through the platform.
17) Do not use the machine if the chassis drawer is extended.
18) Do not lean the platform against a nearby building.
19) Do not modify or restrict the use of the key switch.
20) Do not tie the platform to a nearby object.
21) Do not place the load outside the protective rail of the platform.
22) Do not change or change the working platform of the aerial platform without the written permission of the manufacturer. Installing an additional device, used for transporting tools or other materials, on the platform, pedal or protective rail increases the platform weight, platform surface or load.
23) Do not modify or damage safety or stability related parts of the machine.
24) Do not replace the main stability-safety related components with other components weights or specifications.

https://truckmanualshub.com/

25) Do not use a battery with a weight lower than the original battery. The battery is not only used as a weight balance in the chassis, but also plays an important role in stabilising the machine.
Each battery should reach 37 kg respectively. The minimum weight of each battery drawer (including the battery) should reach 110 kg, respectively.
26) Do not place stairs or scaffolding in the platform or lean them against part of the machine.
27) The tools and materials, should be evenly distributed and safely placed by the person on the platform.
28) Do not use the machine on a movable surface or vehicle.
29) Keep all tyres in good condition and tighten the nuts properly.

1.10 Entrapment Risk

1) Do not extend your arms and hands so that there is a risk of abrasions or entrapment.
2) If the machine is lifted via a control on the ground, you must make the correct and planned assessment. Maintain the safe distance between the operator, machine and the attachment part.

1.11 Risk while working on an incline

Do not drive the machine on a slope or a side slope that is too steep. The nominal value of a slope applies to the lifting machine.

Type	Forwards	Backwards	Sideways
SS0407E / SS0507E / AS0607 / AS0607W	3 degrees	3 degrees	1,5 degrees
AS0607WE / AS0607E / AS0808 / AS0808E	3 degrees	3 degrees	1,5 degrees
AS0608 / AS0608E / AS0812 / AS0812E	3 degrees	3 degrees	1,5 degrees
AS1212 / AS1212E / AS1413	3 degrees	3 degrees	1,5 degrees
AS1012 / AS1012E	3 degrees	3 degrees	2 degrees

1.12 Risk of falling

1) The employees on the platform must carry out all safety measures in the operating process and attach a safety harness with the safety-belt hook. One fork fits at each anchorage point.
2) Do not climb or sit on the protective rail of the platform. Always stand stable on the base plate.
3) Do not climb off the platform when it is raised.
4) Keep the platform floor free of dirt.
5) Close the entrance door for the operation of the aerial platform.
6) Do not use the machine if the protective rail is not installed correctly and safe operation cannot be ensured through the access door.
7) Do not climb on and off the platform unless the machine has not fully descended.

1.13 Danger

1) Pay attention to the items within the field of vision and the danger zone when driving/lifting the machine.
2) Pay attention to the position of the extended platform when moving the machine.
3) Check the workstation to avoid overhead obstructions or other potential risks.
4) Pay attention to the risk of crushing when holding the protective rail of the platform.

https://truckmanualshub.com/

5) The user must follow the maintenance rules for the personal protection equipment prepared by the owner, the maintenance rules for the workstation and the laws added by the government.
6) Pay attention and follow the movement arrow and the direction of rotation on the platform control and the platform label and nameplate.
7) Do not use the machine behind a crane or machine with upward movement, unless the crane control is locked and/or the potential collision prevention measure has been taken.
8) Avoid dangerous driving or careless operation when the machine is running.
9) The platform can only be lowered when there are no people and obstacles underneath the platform.
10) Limit the driving speed based on the ground status, traffic, road situation, personal position and other possible collision factors.

1.14 Risk of component damage

1) Do not charge the battery pack with a battery charger higher than 24V.
2) Do not use the machine as a ground wire during welding.

1.15 Explosion and fire risk

Do not charge or operate the machine in a place with potentially flammable or explosive gas or gas particles.

1.16 Risk of machine damage

1) Do not use a damaged or defective machine.
2) Do an operation test and test all functions for each work period. Immediately place a mark on the damaged or defective machine and stop operation.
3) Make sure that all maintenance and operating work is carried out in accordance with the provisions of this manual.
4) Make sure you have all the labels in the right places and keep them legible.
5) Keep this manual in the document box of the platform.

1.17 Risk of personal injury

1) Do not use the machine in the event of a hydraulic oil leak. The leaked hydraulic oil can penetrate or burn through the skin.
2) Serious injury can be caused if parts under the cover are accidentally touched.
   Only trained service personnel can maintain the compartment. It is proposed that the operator performs maintenance for the preinspection of the controls. Make sure that all compartments are closed and locked during operation.

1.18 Battery safety

Risk of burns

1) The battery contains acid material. Wear protective clothing and goggles when using the battery.
2) Take measures against overflowing or touching the acid material. Neutralise the overflow acid material from the battery with soda and water.

Explosion risk

1) Keep the battery pack away from sparks, flames or lit cigarettes.
   The battery may release explosive gas.
2) Do not touch the battery terminal or cable clamp with tools that may cause sparks.

https://truckmanualshub.com/

Risk of component damage

Do not charge the battery pack with a charger higher than 24VDc.

Risk of electrocution/burning

1) The charger can be connected to the earthed three-core AC outlet.
2) Check every day if the wire, electrical cable and wiring are damaged. Replace the damaged operating parts.
3) Take measures to prevent electric shock caused by touching the battery terminal.
   Remove rings, watch and other personal jewellery.

Tilt Risk

Do not use a battery with a weight lower than the original battery. The battery is not only used as a weight balance in the chassis, but also plays an important role in stabilising the machine. Each battery should reach 37 kg respectively. The minimum weight of each battery drawer (including the battery) must reach 110 kg respectively.

Risk in the lifting process

When lifting the battery you must select the correct number of persons and lifting method.

1.19 Lock after each use

1) Choose a safe, secure and horizontal parking position without obstructions and heavy traffic.
2) Lower the platform.
3) Turn the ignition key to the “OFF” position and remove the key from the ignition to prevent unauthorised use.
4) Place wheel blocks with a wedge shape.
5) Charge the battery.

https://truckmanualshub.com/

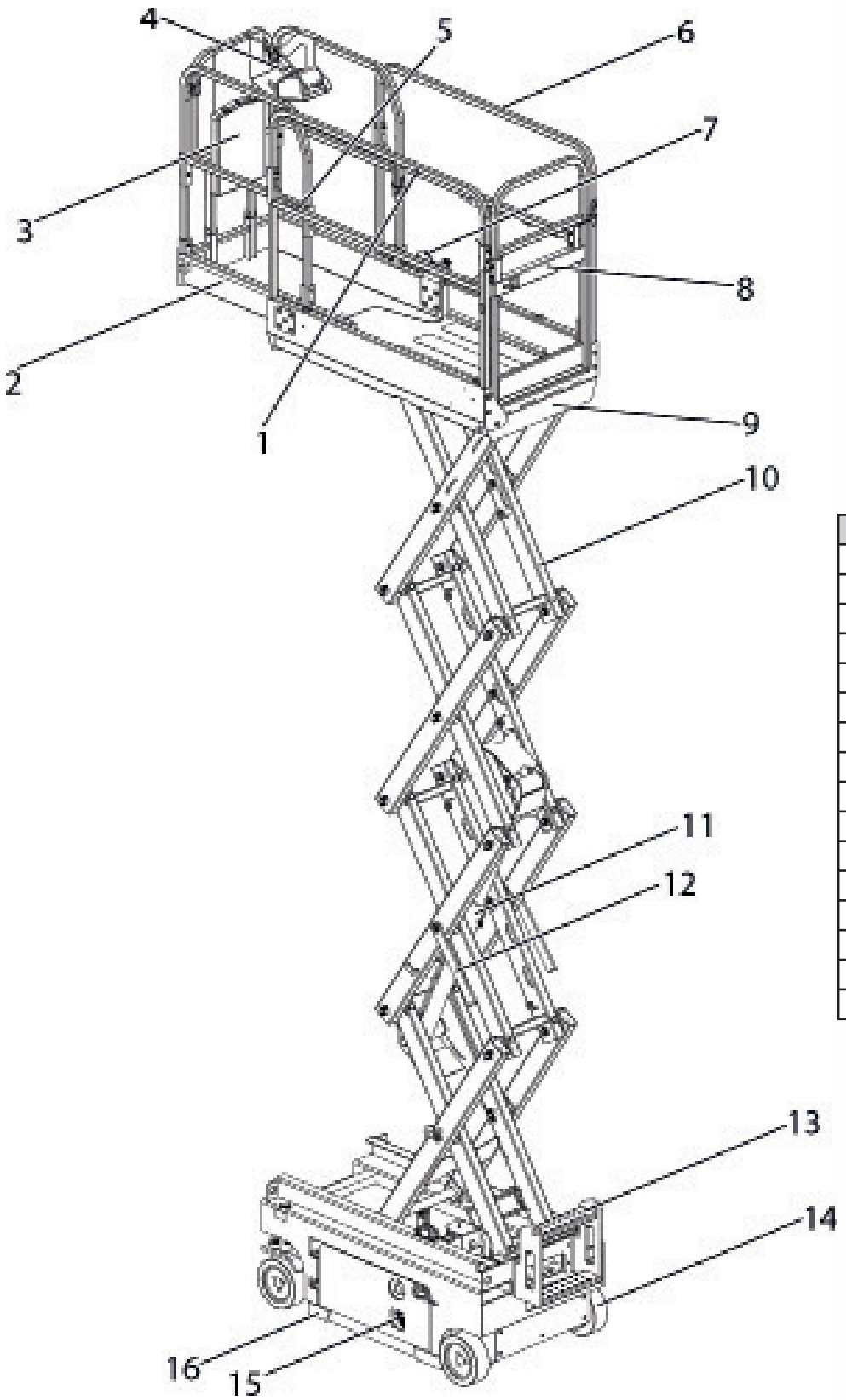

No.	Part
1	Left protective rail
2	VeExtended platform
3	Documents Bin
4	Platform control
5	Fall protection anchor point
6	Right protective rail
7	Pedal
8	Door
9	Main platform
10	Yoke
11	Lifting cylinder
12	Safety support
13	Cover part accessory
14	Band
15	Loader
16	Exit protector

https://truckmanualshub.com/

Chapter 3 - **Labels**

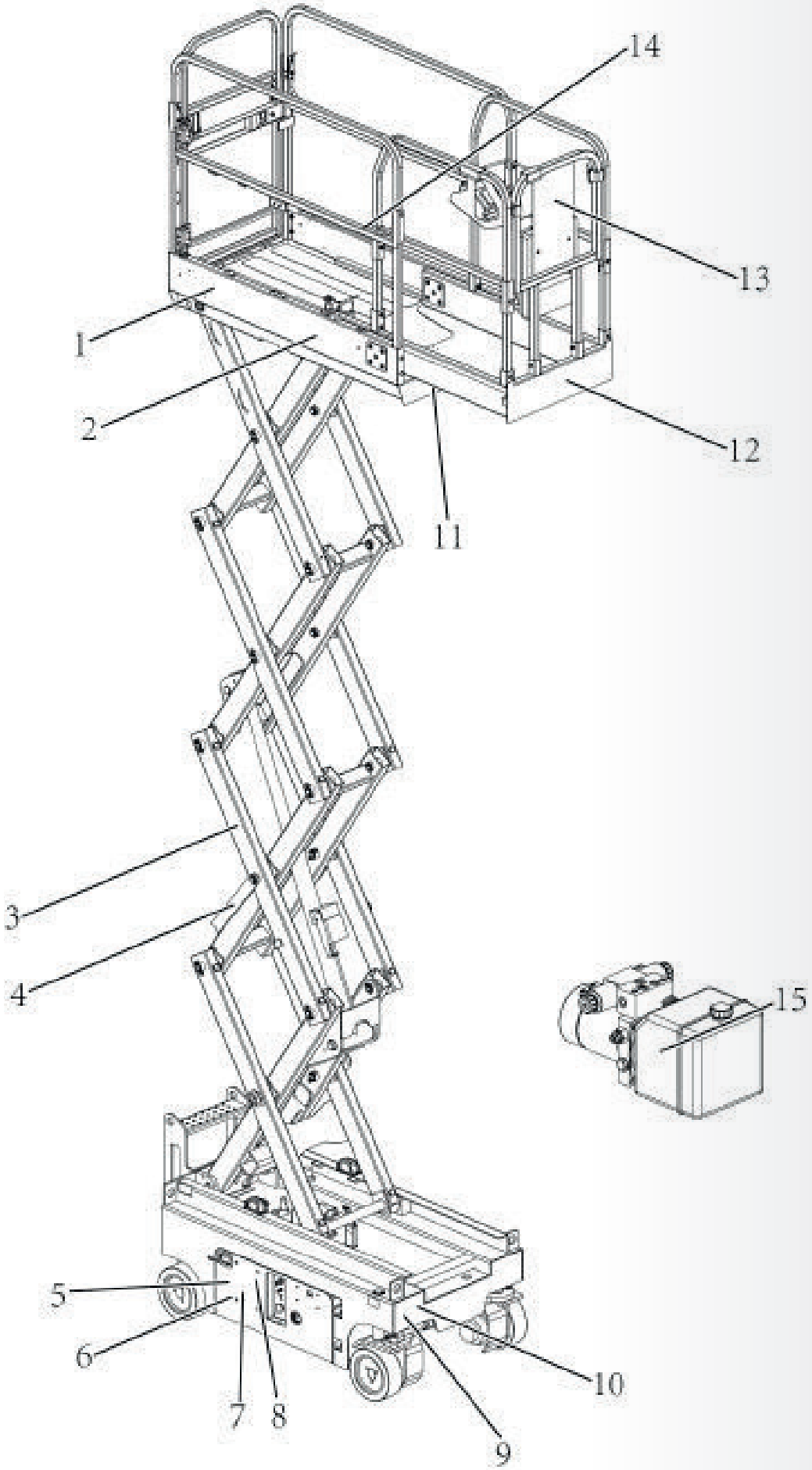

https://truckmanualshub.com/

1. 2534000335	*2.* 2534000504	*3.* 2534000142	*4.* 2534000355	*5.* 2534000010	*6.* 2534000145
		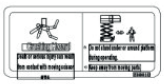	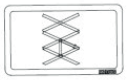		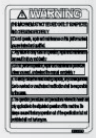
7. 2534000011	*8.* 2534000029	*9.* 2534000027	*10.* 2831990027	*11.* 2534000272	*12.* 2534000025
13. 2534000220	*14.* 2534000017	*15.* 2534000100			
	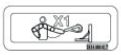				

Nr.	Code	Product
1	2534000335	Company logo
2	2534000504	Product model
3	2534000142	Keep a safe distance from the machine
4	2534000355	Sticker
5	2534000010	Close chassis drawer
6	2534000145	Warning
7	2534000011	Warning sign for maintenance in the box
8	2534000029	Skin injection note
9	2534000027	Lifting position
10	2831990027	Lifting position
11	2534000272	IPAF
12	2534000024	Warning line
13	2534000220	Company logo
14	2534000017	Anchor point
15	2534000100	Oil level

https://truckmanualshub.com/

Chapter 3 - **Labels**

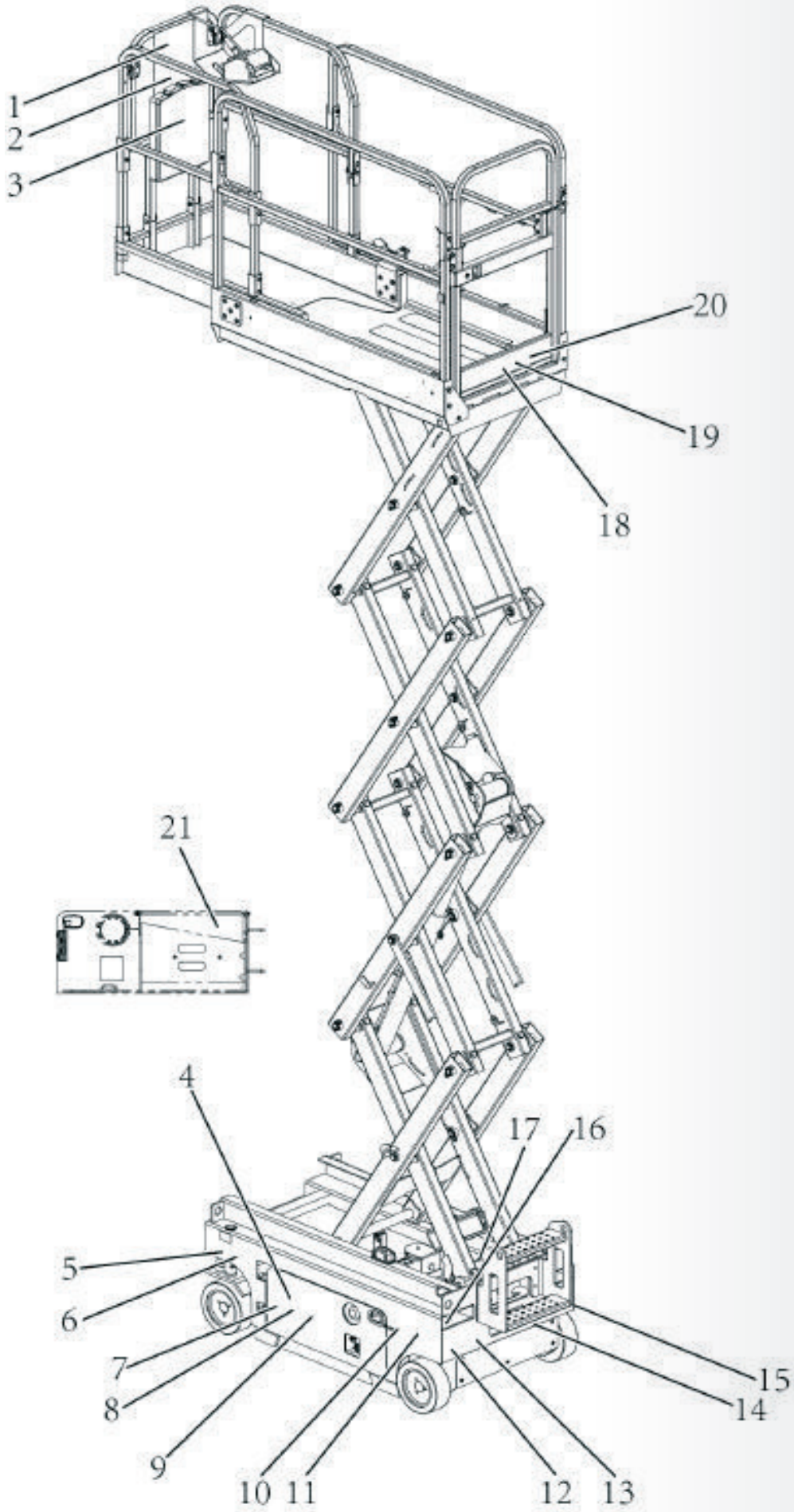

https://truckmanualshub.com/

1. 2534000229	*2.* 2534000033	*3.* 2534000119	*4.* 2534000008	*5.* 2534000539	*6.* 2534000102
	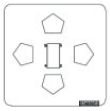				
7. 2534000146	*8.* 2534000144	*9.* 2534000334	*10.* 2534000143	*11.* 2534000009	*12.* 2534000016
13. 2534000139	*14.* 2534000018	*15.* 2534000236	*16.* 2534000101	*17.* 2534000015	*18.* 2534000535
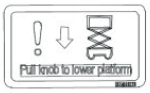			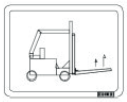		
19. 2534000148	*20.* 2534000147	*21.* 2534000247			
		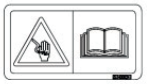			

https://truckmanualshub.com/

Chapter 3 - **Labels**

Nr.	Code	Product
1	2534000229	Prohibited
2	2534000033	Directional Arrow
3	2534000119	Read the manual
4	2534000008	Battery as balance weight
5	2534000539	Load capacity wheels
6	2534000102	Forward
7	2534000146	Danger
8	2534000144	Explosion wounds
9	2534000334	Disable
10	2831990143	Risk of crushing
11	2534000009	Electrocution Risk
12	2534000016	Brake coupling
13	2534000139	Emergency descent
14	2534000018	Battery charging
15	2534000236	Name plate
16	2534000101	Forklift fork position
17	2534000015	Tilt danger sign
18	2534000535	Nominal working capacity
19	2534000148	Manual Load
20	2534000147	Manual Load
21	2534000247	Electrocution Risk

https://truckmanualshub.com/

4.1 Basic operation

The following items are discussed below:

For platform control (PCU), see Fig. 2 and Fig. 3. For chassis operation (ECU), see fig. 4.

Main power supply and safety

1) The ignition key provides power to the machine, for which three operating modes are available. When the key switch is set to the left position, the platform operating mode is switched on; when the key switch is in the right position, the chassis operating mode is activated; when the key switch is in the middle position, the switch-off mode is activated.

Note: the key can only be inserted or removed when it is in the middle position.

(some products are optionally equipped with keys that can be inserted in the three positions, or removed).

2) An emergency stop switch is installed on the chassis and platform controls. The two switches are connected in series. The work can be done when the two switches are removed. The power supply is interrupted as soon as an emergency stop switch on the chassis or platform is pressed. The safety function is based on a complete loop that can be interrupted when an emergency stop switch is activated.
3) The functions of driving, steering, lifting or lowering can only be started when the dead man switch on the handle is pressed.

Lifting and lifting safety

1) The slope sensor on the chassis is used to indicate whether the chassis is horizontal.
2) If the exit protector has been installed, the platform can only be raised above the set height if the exit protector has been initialised.
3) The load shall not exceed the nominal working load of the machine model.
4) The platform can be raised or lowered from two positions, the chassis or the platform. The operating position can be selected via the key switch.

The platform can only be raised or lowered via the toggle switch on the chassis.

The platform operator can choose the drive/lift mode on the platform. The up and down direction and speed can be controlled by moving the lever. The platform can be raised by moving the lever forwards and lowered by moving it backwards.

5) If the overload protection is available on the machine and the platform is overloaded, the main control (ECU) of the platform sounds an alarm and the controls are deactivated.
6) Failure of the lift/lower valve can be indicated by an error code in the LED of PCU and ECU.

Moving and relocation safety

1) The driving can only be controlled by the PCU lever. In this case, the key switch must be in the position from the platform.
2) If it is intended to move the machine, make sure that you select the drive mode and the dead man switch on the lever.

https://truckmanualshub.com/

- The direction of travel and speed can be controlled by moving the lever.
- The "high speed" (high speed) or "low speed" (low speed) mode can only be selected when the platform is in transport position. However, if the platform is raised and the exit protector is activated, the machine only operates in "acceleration after lifting" mode.
- If the platform is overloaded, the lifting function is not permitted.
- If the internal part of the motor control is overheated, the platform is delayed.
- The brake shall be applied in a non-moving mode.

Turning and turning protection

1) The key switch must be put in platform mode.
2) Steering can only be controlled via the left and right buttons on the top of the lever on the PCU.
3) If you want to steer the machine, make sure you select the drive mode and you select the dead man switch on the lever.

Other controls

1) When the platform raises or runs, the timer is started on the chassis.
2) Two LEDs on the PCU are used to indicate the battery status, error code and settings data.

Low battery operation

1) The charge status of the battery depends on the battery level set by the operator. The battery charge bar is displayed on the PCU.
2) Normal movement can be enabled if there are two or more battery charging bars.
3) The travel speed is reduced if there is only one battery charger bar.
4) The brake shall be applied in a non-moving mode.

https://truckmanualshub.com/

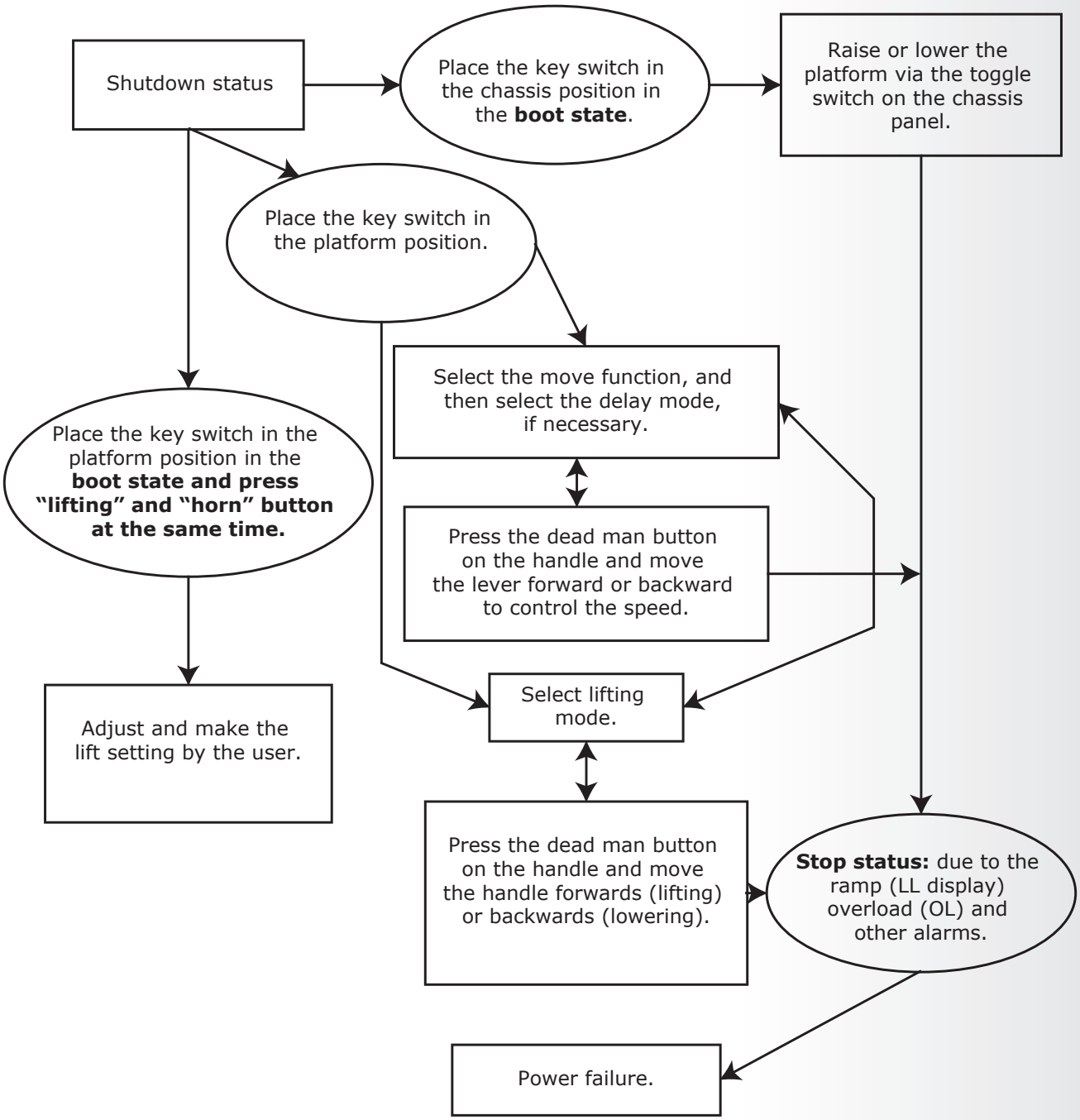

Figure 1 - Operating flowchart

https://truckmanualshub.com/

4.2 Platform control (PCU) and main control (ECU)

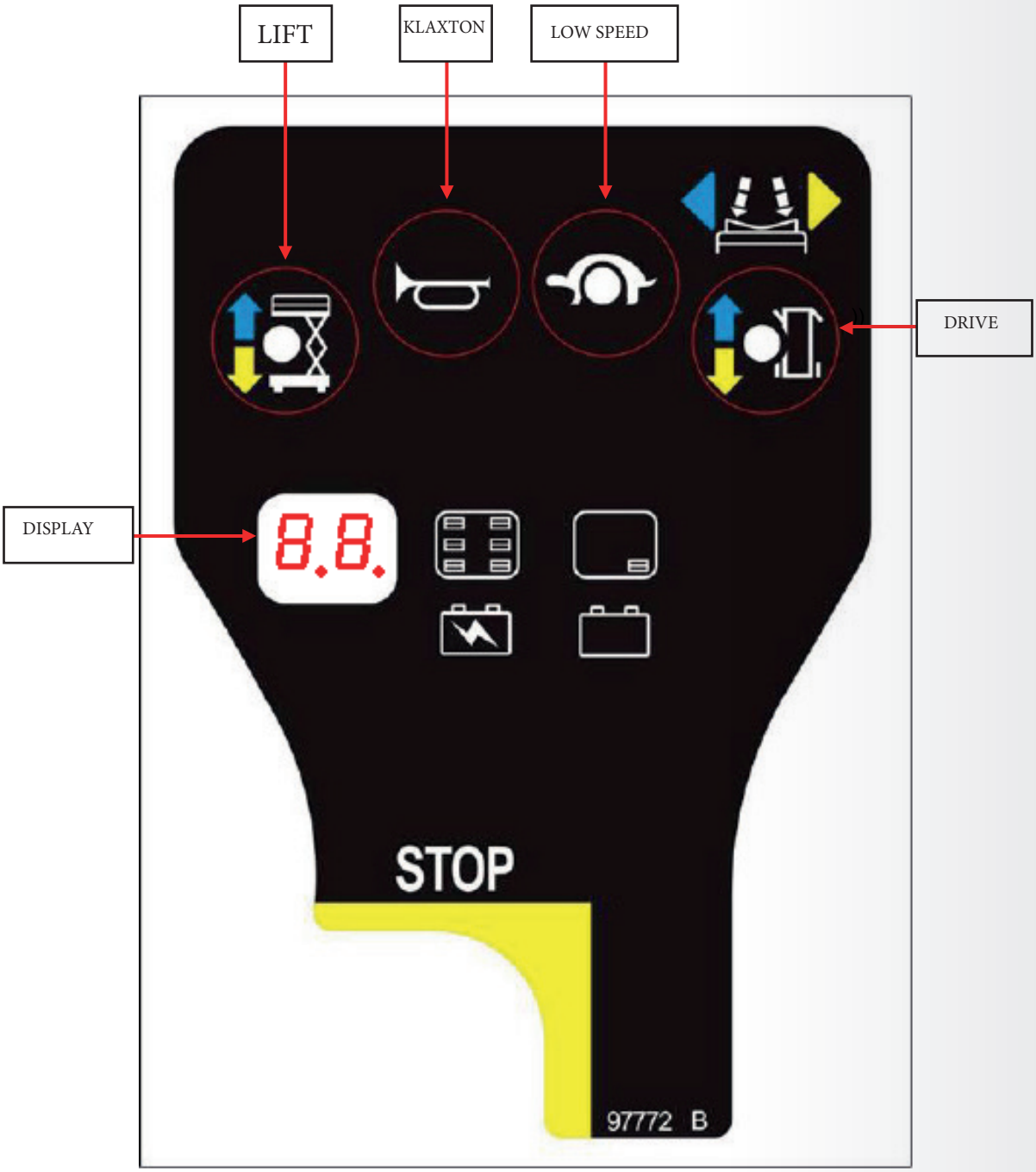

Figure 2 - Platform control (PCU)

https://truckmanualshub.com/

Figure 3 - Lever control button

Figure 4 - Main control (ECU)

https://truckmanualshub.com/

4.3 Fault status (alarm code)

In error alarm status, the alarm code flashes once every second on the displays ECU and PCU.

Table: alarm code

Display	Description	Machine response
01	System initialisation error	Stop all actions
02	System communication error	Stop all actions
03	Invalid set up error option	Stop all actions
12	Open error of lifting or lowering button on chassis in the start process	Stop all chassis controllers
18	Error from hollow protector	Stop lifting and moving
31	Pressure sensor error	Stop all actions
32	Angle sensor error	Stop all actions
42	Press error of left turn button on the platform in the start process	Show alarm only
43	Press error of right turn button on the platform in the start process	Show alarm only
46	Press error of power button on the platform in the start process	Stop platform control
47	Platform handle error not positioned in the center of the starting process	The speed is reduced to the lifting speed
52	Forward coil error	Stop lifting and moving
53	Reverse coil error	Stop lifting and moving
54	Raising and lifting coil error	Stop lifting and moving
55	Increase and descend coil error	Stop lifting and moving
56	Right steering coil error	Stop lifting and moving
57	Left steering coil error	Stop lifting and moving
58	Brake coil error (because the brake coil is optional, this function is temporarily tested)	Stop lifting and moving
60	Motor Controller Comprehensive Fault	Warning, unable to walk and lift
61	Controller Current Sensor Fault	Warning
62	Controller Hardware or Software Failsafe Fault	Warning
63	Motor Controller Motor Output Fault	
64	Motor Controller SRO Fault	Warning
65	Motor Controller Throttle Fault	
66	Motor Controller Emergency Reverse Fault	
67	Motor Controller HPD Fault	Warning
68	Low voltage alarm	Stop all actions
70	Steering Input Out of Range (Only ZAPI)	Warning, unable to walk and lift
71	Motor Controller Main contactor Fault	Warning, unable to walk and lift
72	Motor Controller Over Voltage Fault	
73	Motor Controller Analog Control Fault	Warning
74	Motor Controller Motor Fault	
75	Pump Motor Fault	Warning
76	Left Drive Motor Fault	Warning, unable to walk and lift
77	Warning, unable to walk and lift	Warning, unable to walk and lift
78	Pump Motor Short or Pumping Speed Input Fault	Warning
79	Left drive Motor Short Fault	Warning, unable to walk and lift
80	Alarm when exceeding 80% load	Alarm only
81	Right drive Motor Short Fault	Warning, unable to walk and lift
82	Left Brake Coil Fault	Warning, unable to walk and lift
83	Right Brake Coil Fault	Warning, unable to walk and lift
89	Drive Motor Excitation Open Fault	Warning, unable to walk and lift
90	Alarm when exceeding 90% load	Alarm only
91	Left drive Motor Excitation Open Fault	Warning, unable to walk and lift
92	Right drive Motor Excitation Open Fault	Warning, unable to walk and lift
99	Alarm when exceeding 99% load	Alarm only
0L	Platform overload alarm	Stop all actions
LL	Machine ramp error exceeding safety limit	Stop lifting and moving

https://truckmanualshub.com/

Table: troubleshooting and guidance

Display	Description
01	ECU may fail and replace the defective ECU.
02	Check the communication line and other cable connection. If the malfunction is not resolved, replace PCU or ECU.
03	Set the correct options for the machine.
12	Check the wiring of the toggle switch or check whether the toggle switch is stuck.
18	Make sure the hollow protector has started. Check the limit switch, lower limit switch and wiring of the hollow protector.
31	Check the sensor wiring and the sensor. Or, check and confirm that this is the correct overload. Detection option is selected for the machine.
32	Check the sensor wiring and the sensor. Or, check and confirm that the correct overload detection option is selected for the machine.
42	Make sure that the buttons on the handle are not pressed. If not, consider replacing the lever or PCU.
43	Make sure that the buttons on the handle are not pressed. If not, consider replacing the lever or PCU.
46	Make sure that the power switch on the lever is not pressed. If not consider replacing the?
47	Confirm that handle is in center. Check center position parameter setting. If this is correct, consider replacing the lever or PCU.
52	Check the coil connection and confirm that this is normal. If yes, check whether the scissor coil is short-circuited or not connected.
53	Check the coil connection and confirm that this is normal. If yes, check whether the scissor coil is short-circuited or not connected.
54	Check the coil connection and confirm that this is normal. If yes, check whether the scissor coil is short-circuited or not connected.
55	Check the coil connection and confirm that this is normal. If yes, check whether the scissor coil is short-circuited or not connected.
56	Check the coil connection and confirm that this is normal. If yes, check whether the scissor coil is short-circuited or not connected.
57	Check the coil connection and confirm that this is normal. If yes, check whether the scissor coil is short-circuited or not connected.
58	Check the coil connection and confirm that this is normal. If yes, check whether the scissor coil is short-circuited or not connected.
60	Turn off the motor to reset the motor control. If that does not solve problem, replace the motor control.
61	If that does not solve problem, replace the motor control. Drive or lift motor has overheated. Allow the lift to cool. If that does not help, turn the motor off to reset the motor controls. If the problem persists, check the wiring and try to replace the motor control.
62	Turn off the motor. If this does not solve the problem, look for noise sources. When necessary, try replacing the motor regulator.
63	First, check the wiring, and then turn off the power. Replace the control if necessary.
64	Look at motor deceleration with "Scissor Programmer", it can be too small. Make sure that other parameters of motor operation are correct.
65	Check the wiring. Make sure the correct type of throttle valve is selected in motor control.
66	Make sure that the "Emergency Reverse Check" parameter is turned off in the motor controls.
67	Look at the motor deceleration with the "Scissor Programmer", it can be too small. Make sure that other parameters of motor operation are correct.
68	Check the battery voltage. Charge the battery if necessary. Check the battery and switch connection, amplify connection or clean the connection. Check that the voltage of the PCU and ECU is normal.
70	Incorrect voltage at the control input of the ZAPI motor control. The ZAPO may have to be "inspected" for the three steering voltages (on machines with differential controlled motors). Or the control voltage of the ECU was out of range during the "operating session". Train the ZAPI and/or check for fluctuating voltages due to loose wires etc.
71	Check the connections to the main switch. Replace the switch if necessary. Replace the motor controller if necessary.
72	Check the battery voltage and make sure the battery charger is not switched on. Then switch the power to the lift. If that does not solve the problem, try replacing the moto controls.
73	Drive or lift motor has overheated. Allow the lift to cool. If that does not help, turn the motor off to reset the motor controls. If the problem persists, check the wiring and replace the motor controls.
74	Check the connections on the motors. Turn off the power to the lift, and if that does not solve the problem, replace the motor controls.
75	Check the connections on the pump motor. Turn off the power to the lift, and if that does not solve the problem, replace the motor controls.
76	Check the connections on the motors. Turn off the power to the lift, and if that does not solve the problem, replace the motor controls.
77	Check the connections on the motors. Turn off the power to the lift, and if that does not solve the problem, replace the motor controls.
78	Check the connections on the pump motor. Turn off the power to the lift, and if that does not solve the problem, replace the motor controls.
79	Check the motor connections and make sure they are securely fixed. Check the motor briefly.
80	The load on the platform is approaching the limit and do not increase the load.
81	Check the motor connections and make sure they are securely fixed. Check the motor briefly.
82	Check connections to terminals of coil and make sure that they are securely fixed. Check the coil itself whether it is open or short-circuited.
83	Check connections to terminals of coil and make sure that they are securely fixed. Check the coil itself whether it is open or short-circuited.
89	Check the excitation for the drive motor to see if it is open, including the terminals and the coil.
90	The load on the platform is approaching the limit and do not increase the load.
91	Check the left excitation for the drive motor to see if it is open.
92	Check the right excitation for the drive motor to see if it is open.
0L	Immediately remove the excessive load.
LL	If the machine is inclined, you need to take measures to restore its level. If the machine is level, you need to check the level sensor wiring or the sensor.

https://truckmanualshub.com/

4.4 Historical fault status

1) The controller can display the last 10 fault alarm codes. Press the right handlebar button on top of the lever and press and hold for 10 seconds (do not press the dead man switch on the lever) to log in to the historical fault status. See fig. 3.
2) Press the left push button to see the previous fault code until the first fault code is reached.
   Press the right-hand steering wheel to display the historical fault code in reverse order until the last fault code is reached. For the fault codes, see the top table.
3) Press the EMERGENCY button on the lever to restore normal operation status.

4.5 Normal operation status

Once every expected parameter setting has been made, the machine can operate normally according to the setting values.

Forward and backward movement of the platform in transport position

Place the key switch in the platform control position, pull out the emergency stop switches on the chassis and the platform controls and press the “driving” button on the PCU. Press the dead man switch on the lever and move the machine forwards or backwards by moving the lever forwards or backwards. The further the lever is pushed (forwards or backwards), the faster the machine moves. Turn the machine to the left or right by pressing the left or right steering knob at the top of the lever.

Raising or lowering the platform

When the machine is stationary and in platform mode, press the "lifting" (raise) button on the PCU. The platform can be controlled by moving the lever: Press the dead man switch on and push the lever forward to lift the machine. Press the dead man switch and push the lever backwards to lower the machine.

Operation of the chassis control panel on the ground: place the key switch on the chassis control position. As soon as the chassis control mode has started, the display on the platform flashes the letters "CH". In this case, the platform can be raised or lowered by pressing the toggle switch on the chassis control panel.

Fig. 22 Chassis control position

Fig. 23 Toggle switch

Machine operation after lifting machine

When the platform is out of transport position, the operating method is the same as in transport position. For safety reasons, the machine cannot be moved as fast, either forward or backward. Press the "driving" drive button and operate the lever as above.

https://truckmanualshub.com/

Display on PCU and ECU in normal operation

The following contents are displayed on the PCU and ECU in normal operation.

Table: PCU and ECU display

Operating mode	PCU display	ECU display
Startup and no displacement	Battery status	
Move forward and backward	Battery status	
Platform lifting	Battery status	Machine Mode Code
Platform lowering	Battery status	Software version
Generate Error	Error code	Error code
Chassis control mode	C H	C H

Battery charging status

Once the battery is initialised to normal working status, the battery level is displayed on the PCU screen in the form of a percentage: 10, 20, 30, 50, 70 and 90. When there is only 10% battery level left, the display flashes once every second.

Table 2: Battery display

Platform display	Battery percentage	Description	Platform display	Accupercentage	Description
	90-100	Full battery		30	Percentage of battery residual energy
	70	Percentage of battery residual energy		20	The battery must be charged
	50	Percentage of battery residual energy		10	Extremely low battery level*

* The machine automatically switches to low speed mode.

https://truckmanualshub.com/

Chapter 5 - **Emergency operation**

5.1 Overview

The steps for the emergency control, applicable systems and emergency controls during machine-operation are specified in this chapter. The position, function and method of application of the emergency descent button or emergency stop equipment are also introduced.

Notice: *All personnel responsible for operation or who come into contact with the equipment must read this complete manual (including this chapter) before using the machine this complete manual (including this chapter) before using the machine at regular intervals.*

Emergency stop switch

There are two red emergency stop switches on the machine, these are the big buttons. One button is located on the control lever of the work panel, while the other is located on the ground control panel. As soon as the emergency stop switches are pressed, the equipment stops immediately.

Warning

Check the equipment every day. Make sure that the emergency stop switches are correctly positioned and the instructions and marking of the ground controls are affixed and clear.

Ground control position

The ground control panel is located on the side of the machine. With this panel, the platform control lever can be operated and the working platform can be raised and lowered to the ground. Set the power selector switch to the "ground" (ground) position and operate the lift/lower switch to perform the lift/lower operation.

Emergency lowering

The manual lowering valve can be used when power is completely lost. The work panel can be lowered under gravity. The manual lowering lever is located on the right side of the machine, above the right front wheel. The lever is connected to the manual lowering valve of the lifting hydraulic cylinder via a cable. The valve core can be opened by pulling the lever for manual lowering of the work platform.

5.2 Emergency operation Application of ground control

Communication: *understand how the ground control is used, in case of emergency.*

The ground operator must be very familiar with the control features and functions of the ground control. The training includes equipment operation. Read and understand the contents of this chapter and operate the control in case of emergency.

Failure of machine operation by the operator

1) The equipment can only be controlled via a ground control with the help of other personnel and equipment (crane, lifting equipment, etc.) where this control is necessary to eliminate risk or in case of emergency.
2) Other qualified operators on the control panel may use the control panel.
   If the operation fails, do not proceed with this operation.
3) If the equipment operation fails or breaks during normal operation, the personnel must be taken to a safe place and the equipment must be stabilised with a crane, fork-lift truck or other equipment.

https://truckmanualshub.com/

Fixed top work panel

If the work panel is jammed or obstructed by a high structure or equipment, stop operating the equipment from the workstation or ground control equipment and bring the operator and all personnel to a safe position. In this case, the work panel can be released with the help of necessary equipment and staff. Do not operate the controls in a way that will cause one or more wheels to come off the ground.

Lifting of tilted equipment

Place the lift truck with sufficient lifting capacity and the equipment with the same capacity on the lifting side under the chassis. When the forklift truck or equipment is used to lower the work platform chassis, lightly lift the work platform with a crane or other suitable equipment to prevent it from tipping over.

Post-accident inspection

Check the machine after an accident. First test all functions of the ground control and then the platform control. Keep the lifting height below 3 m to repair all damage (if necessary) and all controls.

https://truckmanualshub.com/

Chapter 6 - **Inspection before operation**

6.1 Prohibited from operating unless

The safety principles of the machine are understood and implemented.

1) Dangerous circumstances are avoided.
2) An inspection is always carried out before operation.
3) The workstation has been checked.
4) A function test is always carried out before use.
5) The machine is used for its designed purpose.

6.2 Basic principles

1) Inspection for operation and routine maintenance are the responsibility of the operator.
2) Inspection for operation is a visual process, which must be carried out for each work period by the operator. The purpose of the inspection is to check whether the machine has problems performing the function test.
3) The inspection for operation can also be used to confirm whether routine maintenance is necessary. The operator only performs the routine maintenance items specified in this manual.
4) Check the list on the next page and check each item.
5) If damage is discovered or an unauthorised change other than the delivery status is found, then make a note of this and stop operating the machine.
6) Only qualified service technicians may repair the machine according to the regulations of the manufacturer. After maintenance, the operator must perform the inspection for operation again for the function test.

6.3 Inspection for operation

1) Make sure the manual is complete and legible. Keep this manual in the document box of the platform.
2) Keep all labels clear and legible and place them correctly. Go through the contents of the label.
3) Check for leakage of hydraulic oil and that the oil level is correct. Go through the contents of the label.
4) Check if there is any leakage of electrolyte and if the fluid level is correct. If necessary, add the distilled water.
5) Check if the following components or areas are damaged, if the installation is correct, if any parts are lost, and if there is an unauthorised change.

- *Electrical element, wiring and cable*
- *Hydraulic hose, control, hydraulic cylinder and hydraulic valve*
- *Batteries and their connection*
- *Propulsion engine/engine*
- *Abrasion-resistant sliding block and liner*
- *Tyre and wheel*
- *Static conductive belt*
- *Limit switch, alarm and horn*
- *Nut, bolt and other fasteners*
- *Platform overload component*
- *Platform entrance door*
- *Indicator light and alarm*
- *Safety support*
- *Extended platform*
- *Arm scissors and fastener*

https://truckmanualshub.com/

- *Platform control lever*
- *Brake release component*
- *Exit protector*

6) Check the complete machine for:

- *weld connection or crack of the structural element*
- *Corrosion or damage to machine*
- *Keep all construction elements and other important parts complete, keep the corresponding fasteners and pins in the correct position and attach them.*
- *Install the protective rail, place the protective rail pen in the correct position and tighten the bolts.*
- *Keep the chassis battery drawer and oil pump drawer closed and locked, and connect the battery correctly.*

Notice: *If the machine is to be checked when lifting the platform, keep the safety support in the correct position. See "Operation Notice".*

https://truckmanualshub.com/

Chapter 7 - **Workstation inspection**

7.1 Prohibited from operating unless

The safety principles of the machine are understood and implemented.

1) Dangerous conditions are avoided.
2) The inspection before operation is always carried out.

The workstation inspection is understood and followed up for the next step.

3) The workstation has been checked.
4) A function test is always carried out before use.
5) The machine is used for its designed purpose.

7.2 Basic principles

1) The workstation inspection allows the operator to determine whether it is safe enough to operate the machine. The operator performs this process before the machine is moved to the workstation.
2) Understanding and taking responsibility for the dangers of the workstation is the responsibility of the operator. Be careful and avoid problems in the process of transfer, installation and operating the machine.

7.3 Workstation Inspection

Be careful and pay attention to the following risks:

1) Abrupt incline or holes
2) Unevenness, ground obstruction or debris
3) Inclined surface
4) Defective or slippery surface
5) Overhanging obstacle and high-voltage cable
6) Dangerous location
7) Surface support cannot support all machine loads
8) Wind and Weather
9) Non-authorised personnel
10) Other possible unsafe conditions

https://truckmanualshub.com/

8.1 Prohibited from operating unless

The safety principles of the machine are understood and implemented.

1) Dangerous conditions are avoided.
2) The inspection before operation is always carried out.

The function test is understood and followed up for the next step.

3) The workstation has been checked.
4) A function test is always carried out before use.
5) The machine is used for its designed purpose.

8.2 Basic principles

1) The function test is aimed at finding a defect before the machine is used.
2) The operator must test all machine functions according to the step-by-step instruction.
3) Do not use the defective machine. Indicate that the machine is defective and do not use this machine.
4) Only qualified service technicians may repair the machine according to the regulations of the manufacturer.
5) After maintenance, the operator must perform the inspection for operation and the function test again before the using the machine.

8.3 Function test

1) Carry out the function test on a firm and horizontal ground without any obstacle.
2) Make sure the battery is connected.

8.4 On the ground control

1) Set the red emergency stop buttons on the platform control and the ground control to the "OFF" position.
2) Engage the ignition switch on the ground control.
3) Pay attention to the LED reading device on the platform controls.

8.5 Emergency stop test

1) Push the red Ground Emergency Stop button to the "OFF" position. Result: all functions are disabled.
2) Set the red emergency stop button to the "ON" position.

8.6 Test of lift/lower function and initiate function

The central alarm system controls the buzzer to control alarms at different frequencies.

The lowering alarm sounds 60 times per minute. If the exit protector does not reach the location, the buzzer sounds 180 times a minute. The buzzer sounds 180 times per minute for overload.

1) Switch the key switch to the platform control or OFF position.
2) Push the lever in the upward direction and keep the dead man switch pressed. Result: platform does not rise.
3) Activate the ignition switch to the ground control position.
4) Push the lever in the upward direction and keep the dead man switch pressed. Result: the platform rises.
5) Push the lever to the direction down and keep the dead man switch pressed. Result: the platform goes down. When the platform goes down, the lowering alarm goes off. The platform drops to a height of 2 m and then stops lowering.
6) Push the lever downwards and hold down the dead man switch again. Result: the platform drops to the lowest position. If the platform goes down, the lowering alarm goes off.

https://truckmanualshub.com/

8.7 Test of auxiliary lower function

1) Push the platform lift and lower switch up to raise the platform approximately 60 cm.
2) Pull out the emergency lowering control button on the left front side of the machine. Result: the platform goes down. The lowering alarm doesn't go off.
3) Engage the ignition switch on the platform controls.

8.8 Platform control test

1) Push the red Ground Emergency Stop button to the "OFF" position. Result: all functions are not enabled.
2) Set the red emergency stop button to the "ON" position. Result: The LED indicator light of the data diagnosis device lights up.

8.9 Klaxon test

1) Press the klaxon button.
2) Result: the klaxon sounds.

8.10 Test of lift/lower function and initiate function

1) Do not press the dead man switch on the control lever.
2) Slowly move the control lever according to the blue arrows, then move the yellow arrows. Result: all functions are not enabled.
3) Press the lift function selection button.
4) Press the dead man switch on the control lever.
5) Slowly move the control lever according to the blue arrows. Result: the platform goes up. The exit protector is unfolded.
6) Release the platform control lever Result: the platform stops rising.
7) Press the dead man's button. Slowly move the control lever according to the yellow arrows. Result: the platform goes down. When the platform goes down, the lowering alarm goes off.

8.11 Turning test

Notice: stand *on the platform and look at the steering wheels of the machine when testing the steering and the driving function.*

1) Press the drive function select button, the indicator light will illuminate.
2) Press the dead man switch on the control lever.
3) Press the toggle switch on the top of the lever in the direction indicated by the arrows on the control panel. Result: the steering wheel moves in the direction indicated by the arrows on the driving chassis.

8.12 Test of driving and braking function

1) Press the dead man switch on the control lever.
2) Slowly move the control lever in the direction of the up arrows on the control panel until machine moves and return the lever to the centre. Result: the machine moves in the direction of the arrows on the control panel and stops.

Notice: *the brake must be able to stop the machine at any level.*

https://truckmanualshub.com/

8.13 Test of driving and braking function

1) Press the lift/stop/lower switch and the indicator light will illuminate. Press the dead man switch on the lever to lift the platform until it reaches a height of about 2 m above the ground.
   Result: the exit protector is extended.
2) Press the drive function select button, the indicator light will illuminate.
3) Press the dead man switch on the control lever and slowly move the control lever to complete the driving position. Result: the driving speed of the platform will not exceed 0.5 km / h when the platform is in transport status. Result: the driving speed of the platform is higher than 0.5 km / h when the platform is raised. Mark the machine immediately and stop the operation.

8.14 Test for the operation of the inclination sensor

Note: This test must be performed with a platform control on the ground. Don't stand on the platform.

1) Lower the platform completely.
2) Drive the two wheels on the same side to a 3.5 x 20 cm buffer.
3) Raise the platform at least 2 m. Result: the platform stops moving and the slope alarm sounds 120 times a minute.
4) Move the control lever upwards according to the arrows and then move the arrows downwards.
   Result: the driving function is switched off in every direction.
5) Lower the platform and drive the machine away from the obstruction.

8.15 Test of Exit protector

Notice: *if the platform is raised, the exit protector is automatically folded out. The exit protector can start another limit switch to enable the machine to be operated.*
If it is not possible to fold out the exit protector, the alarm will sound and the machine will stop driving at the same time.

1) Raise the platform. Result: when the platform is raised 2 m from the ground, the exit protector unfolds.
2) Press first on one side of the exit protector and then on the other side. Result: the exit protector doesn't move.
3) Lower the platform. Result: the exit protector returns to the folding position.
4) Apply a 3.5x20 cm buffer block under the exit protector made of wood, or a similar material.
   Raise the platform. Result: when the platform is raised 2 m from the ground, the alarm sounds. In that case, the driving function is deactivated.
5) Lower the platform and remove the 3.5x20 wooden block.

https://truckmanualshub.com/

Chapter 9 - **Operating instructions**

9.1 Prohibited operation unless

The safety principles of the machine are understood and implemented.

1) Dangerous conditions are avoided.
2) The inspection before operation is always carried out.
3) The workstation has been checked.
4) A function test is always carried out before use.
5) The machine is used for its designed purpose.

9.2 Basic principles

1) The machine is a self-propelled and electrically boosting device, which has a working platform on a scissor mechanism. The vibration caused by the machine running does not lead to risks for the operators on the work platform. The machine can be used to transport the employees and their tools to the specified height above the ground and also for reaching the workstation above the machine or equipment.
2) The details of each operating aspect are specified in the operating manual.
   The operator's responsibilities are to follow all safety measures and descriptions in the operation and maintenance manual.
3) It is unsafe and even dangerous to use the machine for purposes other than transporting personnel, equipment, tools and material to the workstation above.
4) Only trained and authorised personnel can operate the machine. If the machine is used by more than one operator at different times in the same work period, the operators must have the qualification and follow all safety instructions and the description in the operation and maintenance manual. This means that each new operator must perform the inspection for operation, the function test and the workstation inspection must be carried out before the machine is used.

9.3 Emergency stop

1) Push red emergency stop button on the ground or platform control to "OFF" to disable all functions.
2) To reactivate a control function, the red emergency stop button must be pulled out.

9.4 Emergency lowering

Push out the emergency lowering control button.

9.5 Operation on the ground

1) Engage the ignition switch on the ground control.
2) Place the red emergency stop buttons on the platform control and the ground control in the "ON" position.
3) Keep the battery pack properly connected before the machine runs.

9.6 Adjusting platform position

Move the lever according to the sign on the control panel. The driving and steering functions are not available through ground control.

9.7 Operation on the platform

1) Engage the ignition switch on the platform controls.
2) Place the red emergency stop buttons on the platform control and the ground control in the "ON" position.
3) Keep the battery pack properly connected before the machine runs.

9.8 Adjusting platform position

https://truckmanualshub.com/

1) Press the lift function selection button.
2) Press the dead man switch on the control lever.
3) Move the lever according to the sign on the control panel.

9.9 Turning

1) Press the drive function select button.
2) Press the dead man switch on the control lever.
3) Turn the steering wheel via the toggle switch at the top of the steering lever.

9.10 Driving

1) Press the drive function select button.
2) Press and hold the on/off button on the control lever.
3) Accelerate: move the control lever slowly from the centre.
   Slow down: Slowly move the control lever to the centre.
   Stop: Move the control lever back to the centre or release the on/off button.
4) Determine the direction of travel with the directional arrows on the platform steering and chassis.
5) When the platform is raised from the transport status, the speed of movement is limited.
6) The status of the battery affects machine performance.
7) When the battery level indicator light flashes, the machine's travel and function speed are reduced.

9.11 Driving speed option

The driving control can be performed at two different speeds. When the light on the driving speed selector lever illuminates, the low speed mode is engaged. When the light on the driving speed selector switch goes out, the high speed mode is engaged. Press the driving speed selector to select the desired driving speed.

9.12 Operation with ground control

1) Maintain the safe distance between the operator, machine and the attachment part.
2) Pay attention to the progress direction of the machine when using the controls.
3) Identify the battery level with the LED diagnostic device.

9.13 Use of a safety support

1) Lift the platform to a height of 2,4 m above the ground.
2) Lift the safety support, move it to the centre of the scissors housing and turn it up until it's vertical.
3) Lower the platform height until the safety support is completely against the shaft housing. Keep the platform away from moving parts in the lowering process.

Danger: *do not transport a load on the platform when using the safety support. It won't take long (8 hours) to use safe arm support in the empty state.*

https://truckmanualshub.com/

9.14 Extending and retracting the platform

The protective rail system of the platform consists of a collapsible protective rail part of the extended platform and a collapsible protective rail of the main platform. All parts are fitted via eight steel locking pins.

1) The platform is completely reduced in size, extendable platform has been retracted and platform controls have been removed.
2) From the inside of the platform, two wire locking pins on the upper part of the front safety rail of the expansion platform have been removed.
3) Tilt the front protective rail of the expansion platform, do not place your hands in a place that could possibly cause injury.
4) Install two disassembled steel wire locks back on each side of the guardrail support.
5) Remove two wire locks in the middle of the left guardrail and turn the left guardrail of the extended platform inwards. Do not place your hand where it could be injured.
6) Place two disassembled wire locking pins on the safety bar.
7) Remove two wire locks in the centre of the right protective rail and turn the right protective rail of the extended platform inwards. Do not place your hand where it could be injured.
8) Place two disassembled wire locking pins on the safety bar.
9) Remove the wire lock from the top guardrail of the door and turn the top guardrail in. Do not place your hand where it could be damaged.
10) Place two disassembled wire locking pins on the safety bar.
11) Remove the wire lock from the upper left guardrail of the platform and turn the left guardrail inwards. Do not place your hand where it could be damaged.
12) Place two disassembled wire locking pins on the safety bar.
13) Remove the wire lock from the upper right guardrail of the platform and turn the right guardrail inwards. Do not place your hand where it could be damaged.
14) Place two disassembled wire locking pins on the safety bar.

9.15 Folding the protective rail

Follow the folding instructions for the protective rail and perform the installation in reverse order.

9.16 Extending and retracting the platform

1) Step on the locking pedal on the extended platform.
2) Push the protective rail of the extended platform to bring it to the desired position.

Notice: *do not stand on the extended platform when the platform is extended.*

https://truckmanualshub.com/

Chapter 10 - **Transport and lifting instructions**

10.1 Compliance and follow-up

1) If you lift the machine with a crane, make the correct assessment and draw up a plan for moving the machine.
2) Only personnel qualified for above-ground lifting may load and unload the machine.
3) The transport vehicle must be parked on a level surface.
4) When loading the machine, secure the vehicle to prevent movement.
5) Make sure that the vehicle volume, load surfaces, chain or belt are sufficient for carrying the machine weight. Refer to the type plate for the machine weight.
6) Make sure the machine is on a horizontal surface or secure the machine before the brake is released.
7) Take measures to prevent the protective rail from falling when removing the bolt. Hold the protective rail securely when folding the protective rail.
8) Do not drive the machine up and down an incline. Do not operate the machine on an incline that is too steep. For "driving on a incline", see the "Operation notice!".
9) If the incline exceeds the maximum incline percentage, you must load and unload the machine with a winch according to the brake operation instruction.

10.2 Transport safety

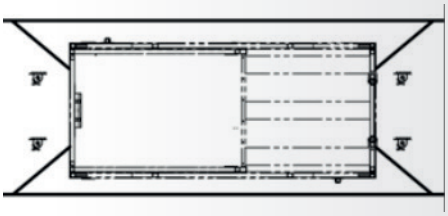

1) Lock the machine wheels during preparation for transportation.
2) Pull in the extended platform and secure it.
3) Turn the ignition key to the "OFF" position and pull the key out of the ignition for transport.
4) Fully inspect the machine for loose or unsecured parts.
5) Secure the machine to the transport surface via the anchoring part on the chassis.
6) Use at least four chains or belts.
7) Make sure you have used chains or belts with sufficient load density.
8) For transport, fasten the folded protective rail (if present) with a belt.

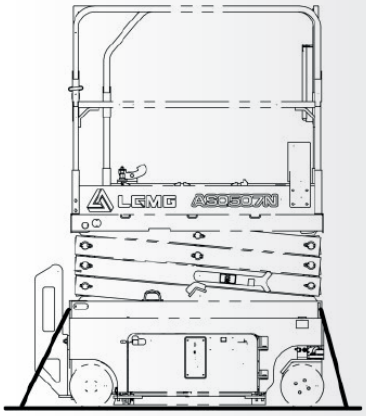

Compliance and follow-up

1) Only a qualified operator may use the lock mount and lift the machine.
2) Only personnel with the qualification for forklift operation may load and unload the machine with a fork-lift truck.
3) Make sure that the lifting capacity, the loading surface, the belt or rope of the crane is sufficient for the carrying the machine weight. The serial number can be found on the type plate.

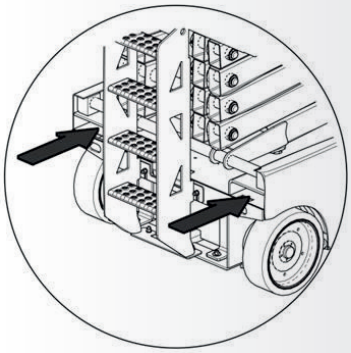

https://truckmanualshub.com/

10.3 Forklift

1) Make sure you securely and reliably secure the extended platform, controls and chassis drawer. Remove all movable parts from the machine.
2) Lower the platform completely. Keep the platform folded in each transport process.
3) Use the forklift openings on both sides of the ladder.
4) Place the fork of the forklift into the forklift openings.
5) Drive the forklift forwards to fully insert the fork into the openings.
6) Raise the machine 15 cm and tilt the fork slightly backwards to keep the machine stable.
7) Keep the machine horizontal while lowering the fork.

Notice: *Damage to parts may occur when lifting the machine from the side.*

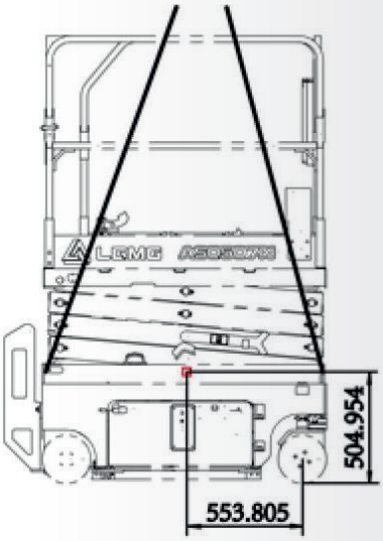

10.4 Lifting guidelines

1) Lower the platform completely. Make sure that you secure and correctly secure the extended platform, controls, and chassis drawer. Remove all movable parts of the machine.
2) Connect the latch only to the specified lifting point on the machine. Two lifting points must be available at each end of the machine. They can be used for lifting.
3) Adjust the locking tool so that the machine does not get damaged and remains horizontal.

10.5 Parking and storage

Follow the parking and storage instructions below:

1) Drive the machine to a well-protected and well-ventilated ventilation area.
2) Make sure that the work panel is completely lowered.
3) Set the red emergency stop switch to the "OFF" position.
4) If necessary, cover the control panel and warning signals to protect them from serious environmental conditions.
5) If the machine has been parked for a longer period of time, cover the wheels on both sides with a baffle plate.
6) Switch the power switch to the “OFF” position and remove the key from the ignition to prevent starting and unauthorised use of the equipment.
7) If the optional anti-breakage equipment is provided, the work panel and ground control box can be covered and locked to prevent access.

https://truckmanualshub.com/

11.1 Compliance and follow-up

1) The operator only performs the routine maintenance items specified in this manual.
2) Regular maintenance and inspection must be carried out by a trained maintenance technician according to the manufacturer's requirements.

Maintenance symbol legend

The symbols in this manual are intended to indicate the corresponding meaning of the instruction. The meanings of the symbols preceding the maintenance procedure are as follows:

Indicates that the tools are needed for this procedure.

Indicates that new parts are needed for this procedure.

Indicates that the procedure is carried out with the help of the distributor.

11.2 Battery inspection

The good condition of a battery is essential for performance and safe operation. Incorrect electrolyte fluid levels or a damaged cable and wiring can damage the component and even cause risks.

Notice: *This inspection is not required for the machine with a sealed battery or maintenance-free battery.*

Electrocution Risk

Live operation may result in serious injury or death. Remove all rings, watches and other personal jewellery during the operating process.

Risk of personal injury

The battery electrolyte is corrosive. To avoid injury, do not expose your hands or other body parts to electrolyte leakage. Neutralise the discharged electrolyte with a sodium bicarbonate solution.

Notice: *The following inspections must be carried out when the battery level is sufficient.*

1) Wear protective clothing and safety glasses.
2) Make sure that the battery cable wiring is secure and free of erosion.
3) Make sure that the battery's locking bar is stable and secure.
4) Remove the valve from the battery ventilation.
5) Check the battery's electrolyte fluid level. If desired, add distilled water from the bottom of the battery fluid supply line. Do not add too much distilled water.
6) Install the ventilation valve.

Notice: *the protection of the wiring end and the anti-corrosion, seal protect the end of the battery wiring and the cable against corrosion.*

https://truckmanualshub.com/

11.3 Hydraulic oil level inspection

The appropriate hydraulic oil level is essential for machine operation. If the hydraulic oil level is incorrect, the hydraulic component may be damaged. The hydraulic oil level can be determined by the inspector through the daily inspection. This change may indicate the problem of the hydraulic system.

Notice: *This process must be performed when the platform is collapsed.*

1) Visually inspect the fluid level of the hydraulic oil tank.
   Result: the hydraulic oil must be on the mark of the oil tank.
2) Add the hydraulic oil according to demand and do not add excessive hydraulic oil.
   Specification of hydraulic oil: LHV32

11.4 Preparation report for delivery

1) The delivery of the preparatory report must contain the inspection items of each type.
2) The preparation report must be prepared for each inspection.
   This report should be retained as required after completion.

11.5 Maintenance schedule

The daily, quarterly, six-monthly and bi-yearly maintenance must be carried out according to the schedule. The product maintenance program and the delivery of the preparatory report can be divided into A, B, C, D and E subitems. The steps of each inspection are shown in the table below.

Inspection cycle	Inspection item
Every day or every 8 hours	A
Every quarter or every 250 hours	A + B
Every six months or every 500 hours	A + B + C
Every year or every 1000 hours	A + B + C + D
Every two years or every 2000 hours	A + B +C + D + E

11.6 Maintenance and inspection report

1) The maintenance and inspection report must contain the inspection items of each type.
2) The maintenance and inspection report must be prepared before each inspection. Save the report for at least until 4 years after the inspection or keep it as specified by the owner and laws and of the workstation and government.

11.7 Preparation report for delivery

Basic principles

1) The distributor is responsible for the preparation for the delivery.
2) Priority should be given to preparation for each product delivery. This inspection is aimed at finding important problems of the equipment for use.
3) It is forbidden to use damaged or modified equipment. As soon as there is damage to or an irregularity is found in the equipment, mark the machine immediately and stop working
4) The equipment must be repaired by the authorised mechanic according to the specification of the manufacturer and the requirements of this manual.

https://truckmanualshub.com/

Description

1) Follow the operating manual of the device.
2) The preparation for delivery consists of the operation check, item maintenance and functional test.
3) Register the results in the table. Fill in each completed item according to the table in the operating manual.
4) If the inspection result "N" is made, stop operating the unit, repair it, and check the device again. Place a check mark on the position "G" after the inspection.

Evaluation	**(V) Completed**	**(N) not completed**	**(G) repaired**
Preparation for delivery			
Operator Inspection Completed			
Maintenance Item Completed			
Function test completed			
Model			
Serial number			
Date			
Owner			
Inspector (printed)			
Signature of inspector			
Title of inspector			
Inspection company			

11.8 Maintenance and inspection report

Model
Serial number
Date
Total time
Owner
Inspector (printed)
Signature of inspector
Title of inspector
Inspection company

https://truckmanualshub.com/

Description

1) A report must be completed for each inspection.
2) Select the appropriate checklist according to the items checked.

Every day or every 8 hours	A
Every quarter or every 250 hours	A + B
Every six months or every 500 hours	A + B + C
Every year or every 1000 hours	A + B + C + D
Every two years or every 2000 hours	A + B +C + D + E

3) Check the corresponding position after each inspection.
4) Learn how to perform the inspection step by step.
5) When the inspection result "N" is made, record it and stop operating the device until this is repaired and rechecked. Place a check mark on the position "G" after the inspection.

Checklist A	**(V) Completed**	**(N) not completed**	**(G) repaired**
A-1 Inspection manual and label			
A-2 Inspection for operation			
A-3 Functional Test			
40 hours later			
A-4 maintenance of 30 days			
Checklist B	**(V) Completed**	**(N) not completed**	**(G) repaired**
B-1 Battery			
B-2 Cable			
B-3 Tyre and rim			
B-4 Emergency stop			
B-5 Key switch			
B-6 Klaxon			
B-7 Disc brake			
B-8 Driving speed in retracted status			
B-9 Driving speed in lifting status			
B-10 Driving at low speed			
B-11 Hydraulic oil analysis			
B-12 Exhaust system			
B-13 Tray component chassis			
B-14 Test of lower limit and hollow protective switch			
B-15 Test of upper limit switch			
Checklist C	**(V) Completed**	**(N) not completed**	**(G) repaired**
C-1 Platform overload system			
C-2 Replacing the outlet valve of the hydraulic oil tank			

https://truckmanualshub.com/

Checklist D	(V) Completed	(N) not completed	(G) repaired
D-1 Inspection for wear-resistant disc block of scissors			
D-2 Replacement of hydraulic oil filter core			
Checklist E	**(V) Completed**	**(N) not completed**	**(G) repaired**
E-1 Hydraulic Oil			

11.9 Steps from checklist A

A-1Inspection Manual and label

The completeness of the operation and maintenance manual is the basis for safe operation. Every device comes with a manual that is stored in a box on the platform. An unreadable or incomplete manual does not provide sufficient information for safe operation.

Also make sure that all safety labels remain in good condition. The label can indicate the possible operating risks of the machine for the operator. It also displays operating and maintenance information for the user. The illegible labels no longer display the warnings and therefore a dangerous working environment can arise.

1) Check and make sure that the operation and maintenance manual is kept in the maintenance box.
2) Check the manual for clear notes and completeness.
   Result: The manual corresponds to the model and all the notes in the manual are clear and complete.
   Result: The manual does not correspond to the model and the notes in the manual is illegible and incomplete.
   Stop working with the machine before replacing the manual.
3) Check the label control schedule and carefully check whether the label is illegible or complete.
   Result: All labels are complete, legible and intact. Result: The labels are missing, illegible or incomplete.
   Stop working with the machine before replacing the label.
4) After use, return the manual to its original position.

Reminder: Contact LGMG if necessary to replace manual or label.

A-2Inspection for operation

The inspection for operation is essential for the safe operation of the machine. The inspection for operation is made in the form of a visual inspection before operating the machine. The inspection is used to detect significant problems of the machine for the functional test and to determine whether routine maintenance procedures are necessary.

For all inspection procedures, see "Inspection for Operation" in this manual.

A-3Function test

The function test is essential for the safe operation of the machine. The functional test is aimed at detecting the functional defects of the machine before operation. The defective machine cannot be put into operation. Once any functional defects have been found, mark the machine immediately and do not continue to use it.

For all inspection procedures, see "Function test" in this manual.

https://truckmanualshub.com/

A-4 Maintenance of 30 days

The 30 day maintenance is made 30 days after or the first 40 hours after machine operation. After this step, continue to check the maintenance items on the checklist.

Maintenance must be carried out in accordance with the steps below:

1) B-3 Tyre and rim
2) D-2 Replacement of hydraulic oil filter core

11.10 Steps of checklist B

B-1 Battery inspection

1) This control item must be carried out every 250 hours or every quarter, whichever comes first.
2) A good battery status is essential for machine performance and operating safety. An incorrect electrolyte liquid level and a damaged cable or control can damage a machine component and pose a risk.

Electrocution Risk

Live operation may result in serious injury or death. Remove rings, watch and other personal jewellery for the operating process.

Risk of personal injury

The battery electrolyte is corrosive. Do not expose hands or other parts of the body to leaking electrolyte, in order to avoid

injury. Neutralise the discharged electrolyte with a sodium bicarbonate solution.

1) Wear protective clothing and safety glasses.
2) Release the lock on the chassis side of the battery drawer and turn the chassis battery outwards.
3) Protect the battery control cable from erosion.

Reminder: Add a wiring end and apply anti-corrosion adhesive to protect the battery control cable from erosion.

4) Attach the battery and cable securely.
5) Fully charge the battery and leave it for at least 24 hours. Use the non-maintenance free battery and the sealed battery:
6) Open the battery cover, check the specific weight with a special gravity hydrometer and record the registration.
7) Check the ambient temperature and adjust the specific fluid gravity of each battery according to the instructions below:

- Increase specific liquid gravity by 0.004 per 5°C, if temperature exceeds 27°C.
- Lower specific fluid gravity by 0.004 per 5 ° C, if the temperature is lower than 27 ° C.
  Result: the specific liquid gravity of each battery is higher than 1,277 after adjustment.
  Fully charge the battery and go to step 12. Result: If the specific liquid gravity of each battery is lower than 1,250 go to step 9.

8) Charge the battery pack in a balanced way and leave it for at least 6 hours (preferably 24 hours). undisturbed.

https://truckmanualshub.com/

9) Open the battery cover, check the specific weight with a special gravity hydrometer and record the registration.

10) Check the ambient temperature and adjust the specific fluid gravity of each battery according to the instructions below:

- Increase specific liquid gravity by 0.004 per 5°C, if temperature exceeds 27°C.
- Lower specific fluid gravity by 0.004 per 5 ° C, if the temperature is lower than 27 ° C.

Result: the specific liquid gravity of each battery is higher than 1,277 after adjustment.

Fully charge the battery and go to step 12. Result: The difference of the specific liquid gravity between battery cells is greater than 0.1 or the specific liquid gravity of more than one battery cell is less than 1,217. In such a case, replace the battery.

11) Check the height of the battery electrolyte. If necessary, add distilled water to the highest liquid level indicator and do not add too much water.

12) Close the battery door and neutralise the spilled electrolyte with a sodium bicarbonate solvent.

The following checks are suitable for all types of batteries:

13) Check that the battery cells in each battery are correctly connected.

14) Check for excessive wear and damage to the battery charging plug and wiring insulation.

If present, replace the worn and damaged plug.

15) Connect the battery charge correctly to the 100-260V, 50/60HZ AC power supply. Result: the charger works and charges

the battery. Result: the alarm of the charger sounds and the indicator flashes. Check and correct the connection of the fuse and the charger. Ensure normal operation of the charger and charge the battery.

Notice: *For a good effect, use a cable of the correct length. Keep the total length below 15 m.*

For more information on charging, please contact Lingong's Heavy Machinery after-sales service department.

B-2 Cable inspection

1) This control item must be carried out every 250 hours or every quarter, whichever comes first.

2) Keeping the cable in good condition is essential for safe operation and a good machine performance.

If burnt, eroded or bent cables are not detected, and replaced and if these are used in an unsafe operating environment, they may damage the machine element.

Electrocution/explosion risk

Thermal contact or conductor can cause serious injury or death. Do not wear a ring, watch or other jewellery.

1) Check whether the earthed cable under the chassis is loose or damaged.

2) Check whether there is a burnt, damaged, eroded or bent cable in the following areas:

- internal part of the ground control box
- cable or hydraulic block
- cable in battery area or the battery drawer
- internal part of the platform control box

3) Turn the key switch to the platform controls and pull out the red emergency stop buttons of the ground and platform controls.

4) Lift the platform to a height of 2,4 m above the ground.

https://truckmanualshub.com/

5) Lift the safety support, move it to the centre of the scissors housing and turn it upwards until it's vertical.

6) Lower the platform height until the safety support is completely against the shaft housing.

Risk of crushing

Place your hand on the correct position of the safety support when lowering the platform.

7) Check whether there is a burnt, damaged, eroded, bent and loose cable in the chassis and scissor area.

8) Check whether there is a burnt, damaged, eroded, bent and loose cable in the following areas:

- cable or scissor arm
- ECU at the platform
- case connector connected to the platform

9) Check the open coating of the insulating sheath at the positions below:

- case connector connected between the ECU and the platform controller
- all case connectors connected to the level sensor

10) Raise the platform and restore the safety support to the installation position.

11) Lower the platform to the retracted position and then turn off the machine.

B-3 Inspection of tyres and rims

This check must be carried out every 250 hours or every quarter, whichever comes first.

Keeping the tyre and rim in good condition is essential for safe handling and good performance.

The failure of a tyre or rim can lead to machine tilting. The machine elements can also be damaged if the defective tyres and rims are not detected and repaired.

1) Check that the tyre tread and sides are not damaged, cracked or punctured, have holes and other abnormal wear and tear.

2) Check if the rim is damaged, bent and torn. Model suitable for hydraulic control

3) Remove the locknut and check the nut torque.

Notice: *A new locknut must be used when reassembling the tyre and rim.*

4) Install and lock a new locknut.
Model suitable for electric control

5) Check the torque of each bolt

	Couple
Lubrication-free nut	410-540N
Lubrication-free bolt	90N

B-4 Emergency stop inspection

1) This check must be carried out every 250 hours or every quarter, whichever comes first.

2) The normal emergency stop function is essential for the safe operation of the machine. It is not possible to switch off the power supply and stop all functions of the machine with the special red Emergency stop button. A Dangerous situation can be caused in such a case.

3) As a safety function, in addition to the red emergency stop button on the platform, the selection and operation of the ground controls must be superior to those of the platform controls.

https://truckmanualshub.com/

- Turn the key switch to the ground controls and pull the red emergency stop buttons on the ground and platform operation controls.
- Press the red emergency stop button on the ground control to the "OFF" position. Result: No action has been enabled by the machine.

4) Press the red emergency stop button on the platform control to the "OFF" position. Result: There is no action enabled by the machine.

Notice: *The red emergency stop button on the ground control can stop all machine operations, even if the key switch is turned on on the platform control.*

B-5 Test of key switch

1) This check must be carried out every 250 hours or every quarter, whichever comes first.
2) The correct action of the key switch is essential for safe operation of the device. The machine can be operated via the ground or platform controls. The key switch controls the control circuit and a failed circuit can lead to dangerous operation.
3) When operating on the ground with a platform control, no one may stand on the platform.

- Pull out the red emergency stop buttons from the ground and platform controls.
- Engage the ignition switch on the platform controls.
- Check the lifting and lowering functions of the ground control. Result: No action has been enabled by the machine.
- Engage the ignition switch on the ground control.
- Check the lifting and lowering functions of the platform control. Result: No action has been enabled by the machine.
- Turn the key switch to the "OFF" position. Result: No action has been enabled by the machine.

B-6 Klaxon test

1) This check must be carried out every 250 hours or every quarter, whichever comes first.
2) The klaxton is used by the control personnel on the platform to warn the ground personnel.
   It is not possible to communicate the risk and the unsafe situation to ground personnel with the abnormal horn.

- Turn the key switch to the platform control and pull the red emergency stop buttons of the ground and platform operation controls.
- Press the klaxton button on the klaxton control. Result: the klaxon sounds.

B-7 Test of driving and braking function

1) This check must be carried out every 250 hours or every quarter, whichever comes first.
2) The normal braking function is essential for safe operation. The brake must be stable and free of deceleration, vibration and strange noises and the hydraulic brake system decoupling must be normal.
3) Make sure that the inspection of the brake function takes place on a solid, level, obstacle-free surface and that the machine is collapsed and the extended platform is fully retracted.

- Create a reference test line on the ground.

https://truckmanualshub.com/

- Turn the key switch to the platform control and pull the red emergency stop buttons of the ground and platform operation controls.
- Lower the platform to the collapsed position...
- Press the drive function select button.
- Select a point (such as the touchdown point on the wheel) of the machine as the visual inspection reference from the test line.
- Drive the machine at maximum speed and release the lever at the moment when the reference point passes the ground test line.
- Measure the distance between the reference point and the test line. Result: the machine stops within the specified stopping distance. No action is required. Result: the machine does not stop within the specified stopping distance.

Notice: *the brake must be valid within the permissible traceability range of the machine. Replace the brake and repeat the above process from step 1.*

B-8 Driving speed test in transport status

1) This check must be carried out every 250 hours or every quarter, whichever comes first.
2) The normal driving function is essential for safe operation. With the driving function, a fast and stable response must be given to the operator. No delay, vibration and abnormal noise may be emitted during normal operation and the driving process.
3) Do the driving test on a solid and level surface without any obstruction.

- Draw two lines with a distance of 10 m on the ground, i.e. the start and finish line.
- Turn the key switch to the platform control and pull the red emergency stop buttons of the ground and platform operation controls.
- Lower the platform to the collapsed position...
- Press the drive function select button.
- Choose a point on the machine as the visual inspection reference for the start and finish line.
- Drive the machine at the maximum speed and start counting when the reference point passes the starting line.
- Keep driving at maximum speed and note the time when the reference point crosses the finish line. See the specification.

B-9 Driving speed test from transport status

1) This check must be carried out every 250 hours or every quarter, whichever comes first.
2) The normal driving function is essential for safe operation. With the driving function, a fast and stable response must be given to the operator. No delay, vibration and abnormal noise may be emitted during normal operation and the driving process.
3) Make sure that the driving speed test is carried out on a solid and level surface without any obstruction.

- Draw two lines on the ground with a distance of 10 m, i.e. the start and finish line.
- Turn the key switch to the platform control and pull the red emergency stop buttons of the ground and platform operation controls.
- Press the lift function selection button.
- Press the on / off button.

https://truckmanualshub.com/

- Raise the platform to a height of about 2.3 m above the ground.
- Press the drive function select button.
- Select a point (such as the touchdown point on the wheel) of the machine as the visual inspection reference for the start and finish line.
- Drive the machine at the maximum speed per hour and start counting when the reference point is the starting line passes the starting line.
- Keep driving at maximum speed and note the time when the reference point crosses the finish line. See the specification.

B-10 Test of driving speed-low speed

1) This check must be carried out every 250 hours or every quarter, whichever comes first.

2) The normal driving function is essential for safe operation. With the driving function, a fast and stable response must be given to the operator. No delay, vibration and abnormal noise may be emitted during normal operation and the driving process.

3) Make sure that the driving test is carried out on a solid and level surface without any obstruction.

- Draw two lines on the ground with a distance of 10 m, i.e. the start and finish line.
- Turn the key switch to the platform control and pull the red emergency stop buttons of the ground and platform operation controls.
- Lower the platform to the collapsed position...
- Press the driving speed selection button.
- Select a point (such as the touchdown point on the wheel) of the machine as the visual inspection reference for the start and finish line.
- Drive the machine at maximum speed and start counting when the reference point passes the starting line.
- Keep driving at maximum speed and note the time when the reference point crosses the finish line. The driving time shall not be less than 22.5 s.

B-11 Hydraulic oil analysis

1) This check must be carried out every 250 hours or every quarter, whichever comes first.

2) Replacing or testing hydraulic oil is essential for equipment performance and service life. The contaminated hydraulic oil can affect the unit performance and this can lead to damage to the device, if the oil is still being used. Frequent inspection is necessary for checking the poor work environment.

3) Test whether it is necessary to replace the hydraulic oil with an oil separator.

4) If the hydraulic oil has not been changed for two years, you should test once every quarter. If the test fails, Replace the hydraulic oil.

5) For testing and changing the hydraulic oil, see E-1.

B-12 Inspection of ventilation system of hydraulic oil tank cover

1) This check must be carried out every 250 hours or every quarter, whichever comes first.

2) The well-ventilated hydraulic oil-tank valve is essential for good mechanical properties and the lifespan. The dirty or blocked outlet valve can reduce machine performance. A frequent inspection is required to check the working environment.

- Remove the outlet from the hydraulic oil tank valve.

https://truckmanualshub.com/

- Check the ventilation Result: the air can flow through the outlet valve. Result: if the air cannot pass through the outlet valve, clean or replace the outlet valve. Continue with step 3.

Notice: *when the ventilation of the oil tank valve is checked, the air must flow freely through the valve.*

3) Wash the outlet of the oil tank carefully with a mild solvent and dry it with low pressure compressed air. Repeat step 2.
4) Install the hydraulic oil tank outlet valve.

B-13 Inspection of chassis drawer locking component

1) This check must be carried out every 250 hours or every quarter, whichever comes first.
2) The good conditions of the chassis drawer component are essential for device performance and service life. The drawer may open unexpectedly and there may be a safety risk due to the damaged chassis drawer locking component. Check the wear and damage of each chassis drawer-locking component.

B-14 Inspection of lower bound and exit protector switch

1) This check must be carried out every 250 hours or every quarter, whichever comes first.
2) The good condition of the limit switch is essential for performance and safe operation. Operating the machine with a defective limit switch will reduce machine performance and lead to a possible unsafe working environment.
3) Carry out the inspection on a solid and level surface without any obstruction.

Lower limit switch

1) Remove the platform control.
2) Raise the platform to a height of 3.2 m above the ground.
3) Put on the safety support, move it to the centre of the scissors body and turn it upwards until it's vertical.
4) Lower the platform height until the safety support is completely against the shaft housing.

Risk of crushing

Place your hand on the correct position of the safety support when lowering the platform.

1) Turn the key switch to the "OFF" position.
2) Mark and disconnect the platform control connector.
3) Connect the platform control connector to the cable connector of the main casing.
4) Open the basic valve of the lower limit switch and disconnect the control from the lower limit switch.
5) Engage the ignition switch on the platform controls.
6) Raise the platform slightly and restore the safety support to the installation position.
7) Press the lift function select button on the platform controls on the ground and lower the platform until it is retracted. Result: the diagnostic screen displays code 18, the alarm goes off and the lifting function - reaction is normal. The machine operation is normal. The diagnostic screen does not display code 18, there is no alarm and the lift function does not respond. In this case, the limit switch must be replaced.
8) Press the drive function select button and try to drive the machine. Result: the diagnosis screen shows code 18, the alarm goes off, but the steering and driving functions are deactivated. The machine operation is normal.
   Result: the diagnostics screen does not show code 18, the alarm goes off and the steering and driving functions are enabled. In this case, the limit switch must be replaced.

https://truckmanualshub.com/

9) Press the lift function select button to raise the platform by about 0.3 m. Result: the diagnostic screen displays code 18, the alarm goes off and the lift function is enabled. The machine operation is normal. Result: the diagnostic screen does not display code 18 and the alarm goes off. In that case, the limit switch to be replaced.
10) Raise the platform until the exit protector is extended. Result: the diagnostic screen does not display code 18 and the alarm goes off. The machine operation is normal. Result: the diagnostic screen does not display code 18 and the alarm goes off. In this case, the limit switch must be replaced.
11) Raise the platform to a height of about 3.2m above the ground.
12) Lift the safety support, move it to the centre of the scissors housing and turn it up until it's vertical.
13) Lower the platform height until the safety support is completely against the shaft housing.

Warning: *risk of crushing*

14) Turn the key switch to the "OFF" position.
15) Remove the platform control line connected to the main chassis case.
16) Restart connection between the platform control connector and the main chassis case.
17) Connect the platform control unit.
18) Connect the controls safely and correctly to the lower limit switch.
19) Install the lower limit switch box properly.
20) Engage the ignition switch on the platform controls.
21) Raise the platform slightly and restore the safety support to the installation position.
22) Lower the platform to the retracted position.

Incline switch

1) Move the machine to the maximum permitted inclination angle of the level sensor. For the maximum permitted inclination angle the type plate.
2) Press the lift function selection button and raise the machine to a height of about 2.1 m above the ground. inclining ground. Result: diagnostic screen shows code LL, no alarm goes off and machine function is normal. Result: the diagnostic screen does not display code LL, but the alarm goes off. Check or replace the incline switch in such a case.
3) Press the drive mode selection button and try to drive the machine on an incline. Result: the diagnosis-display shows code LL, the alarm goes off and the turn and drive function is deactivated. The machine operation is normal. Result: the diagnostic screen does not display code LL, no alarm is triggered and the drive and turn functions are normal. Check or replace the inclination switch.
4) Lower the platform to retracted position and bring the machine to the firm and level surface.

Exit protector switch

1) Place a wood block about 5 cm under the right exit protector.
2) Press the lift function and try to lift the machine approx. 2.1 m. Result: the exit protector hits against the log and fails to fully extend. the diagnostic screen does not display code 18, no alarm is triggered and the machine can still be raised. In that case, the hollow protector limit switch must be adjusted or replaced.
3) Press the drive mode selection button and try to run and rotate the machine. Result: the diagnostic screen shows code 18, the alarm goes off and the turning and driving function is normal.

https://truckmanualshub.com/

The machine operation is normal. Result: the diagnostics screen does not show code 18, no alarm goes off and the driving and steering functions are normal. In this case, the exit protector limit switch must be adjusted, or replaced.

4) Lower platform until it is folded down and remove wood block under right exit protector.

5) Repeat steps 31-34 under the left exit protector.

6) Lower the platform until it is retracted, then remove the log under the left exit guard.

7) Turn the machine off.

B-15 Inspection of upper limit switch

1) This check must be carried out every 250 hours or every quarter, whichever comes first.

2) Good limit switch conditions are essential for performance and safe operation. The operation of the machine with a defective limit switch will reduce the machine performance and lead to an possible unsafe working environment.

3) Ensure that the functional inspection is carried out on a firm and level surface without any obstruction.

- Turn on the ignition switch on the ground control. Raise the platform to a height of about 3.2 m above the ground.
- Lift the safety support, move it to the centre of the scissors housing and turn it up until it is vertical.

• Lower the platform height until the safety support is completely against the shaft housing. Warning: risk of crushing

Place your hand on the correct position of the safety support when lowering the platform.

• Open the limit switch base valve on the chassis.

• Raise the platform slightly and restore the safety support to the installation position.

• Raise the platform via the ground controls while pressing the upper limit switch arm to start the upper limit switch. Result: the platform stops rising and the function of the machine is normal.
The result: the platform continues to rise. Replace or adjust the upper limit switch.

12.11 Steps of checklist C

C-1 Test of platform overload system

1) This step must be performed every 500 hours or every 5 months, whichever comes first. Or the check must be performed immediately when the overload error appears.

Calibration method No charge:

1:Turn the ignition switch to Platform mode; (note that the platform is at the very beginning)

2: Move the LIFT button as described below to activate the no-load automatic weighing procedure:

"DOWN" "DOWN" "DOWN" "DOWN" "DOWN" (5x) "UP" , "DOWN" "DOWN" "DOWN" "DOWN" "DOWN" (5x) "UP" , "DOWN," "UP" "DOWN" "DOWN" "DOWN"

Pay attention:

a. Each operation of the button takes 0.15s - 2.5s;

b. The calibration is terminated when the control limit is reached. In this case, the calibration performed again from the beginning.

c. After the klaxton sounds 5 times, this indicates that the calibration procedure has gone correctly.

https://truckmanualshub.com/

d. When the platform lowers and stops at the ground and the klaxton stops, this suggests that the calibration has been successfully completed.

With charge:

1. Load the platform: Place the counterweight (1.1 times the rated load) in the centre of the platform.
2. Turn the ignition switch to Platform mode; (note that the platform is at the very beginning)
3. Move the LIFT button as described below to activate the no-load automatic weighing procedure:

"DOWN" "DOWN" "DOWN" "DOWN" "DOWN" (5x) "UP", "DOWN" "DOWN" "DOWN" "DOWN" "DOWN" (5x) "UP", "DOWN" "DOWN" "DOWN" "DOWN" "DOWN" (5x)

Pay attention:

a. Each operation of the button takes 0.15s - 2.5s;

b. The calibration is terminated when the control limit is reached. In this case, the calibration performed again from the beginning.

c. After the klaxton sounds 5 times, this indicates that the calibration procedure has gone correctly.

d. When the platform lowers and stops at the ground and the klaxton stops, this suggests that the calibration has been successfully completed.

2) Frequent testing of the platform overload mechanism is essential for safe operation of the machine. The continuous incorrect operation of the platform can lead to a reaction failure on overload information of the system. The stability of the machine is affected and the machine can even tilt.

3) The platform overload system is used to prevent the operation of the machine in case of of overload. This system consists of two electrical elements, an overload pressure switch and an angle sensor.

4) The pressure sensor is adjustable, it determines the cylinder pressure and provides feedback on the platform overload - system. When the pressure is extremely high, the pressure switch sends the signal through the ECU and all machine functions are stopped until the excessive load is removed from the platform.

5) The angle sensor in scissor arm 1 is used to measure the angle of inclination of the scissors and the further determination of the platform height.

- Engage the ignition switch on the ground control. Raise the platform to a height of about 3.2 m above the ground.
- Lift the safety support, move it to the centre of the scissors housing and turn it up until it's vertical.
- Lower the platform height until the safety support is completely against the shaft housing.

Warning: *risk of crushing*

Place your hand on the correct position of the safety support when lowering the platform.

- Open the limit switch base valve on the chassis.
- Remove the limit switch valve.
- Mark and remove two lines from the upper limit switch.
- Make a short connection between the two removed lines.
- Turn the key switch to the ground controls and pull the red emergency stop buttons on the ground and platform operation controls.
- Raise the platform slightly and restore the safety support to the installation position.

https://truckmanualshub.com/

- Lift platform to the highest location and press the lift function selection button. Result: the alarm goes off. Result: No alarm goes off. Calibrate the platform overload system.

6) Lower the platform using the manual lowering function until the platform is retracted.
7) Carefully remove the short circuit wires from the upper limit switch.
8) Raise the platform to the highest location and press the lift function selection button. Result: No alarm goes off. The system function is normal. Result: the alarm goes off and the platform overload system is abnormal. Eliminate the malfunctions of the limit switch, the cable, the installation bracket and the like or calibrate the overload system.
9) Lower the platform to a height of approximately 3.2 m above the ground.
10) Lift the safety support, move it to the centre of the scissors housing and turn it up until it's vertical.
11) Lower the platform height until the safety support is completely against the shaft housing.

Warning: *risk of crushing*

Place your hand on the correct position of the safety support when lowering the platform.

12) Connect the limit switch cable to the original status and install the limit switch cover.
13) Install the limit switch base valve.
14) Install the platform limit switch base valve.
15) Raise the platform slightly and restore the safety support to the installation position.
16) Lower the platform to the retracted position.

C-2 Replacing the outlet valve of the hydraulic oil tank

1) This step must be performed every 500 hours or every 6 months, whichever comes first.
2) The hydraulic oil tank is a ventilated oil tank. There is an air filter in the outlet valve, which can be blocked. If the outlet valve has a malfunction or is installed incorrectly, the component may be damaged if impurities enter the hydraulic system. Frequent inspection is required for control of the poor working environment.

- Remove the outlet valve from the hydraulic oil tank.
- Install a new outlet valve of the hydraulic oil tank.

12.12 Steps of checklist D

D-1 Inspection for wear-resistant sliding block of scissor arm

1) This step must be performed every 1000 hours or per year, whichever comes first.
2) The condition of the wear-resistant sliding block of the scissor arm is essential for the safe operation of the machine. The wear-resistant sliding block can cause component damage and possible risk.
3) Check the wear-resistant cushion when the platform is retracted.

- Measure the distance from the outside section of the steel tube of the battery chamber to the non-rotating end of the surface of the base panel. Result: the measured value is greater than or equal to 24 mm. Perform step 2. Result: the measured value is less than 24 mm. Replace the wear-resistant sliding block.

https://truckmanualshub.com/

- Measure the distance from the outer section of the steel pipe on the side of the oil tank to the plane of the oil tank base panel. Result: the measured value is greater than or equal to 24 mm. Perform step 3. Result: if the measured value is less than 24 mm, replace the wear-resistant sliding block.
- Apply lubricant between the chassis sliding rail and the wear-resistant sliding block.

12.13 Steps of checklist E

E-1 Test and change of hydraulic oil

1) This procedure must be carried out every 2000 hours or every two years, whichever comes first.
2) Replacing or testing hydraulic oil is essential for good equipment performance and service life. The contaminated hydraulic oil and the filter can affect the performance of the machine, which can damage the parts with continuous use. The frequency control is especially necessary in case of poor operating conditions.
3) Check whether it is necessary to replace the hydraulic oil with an oil separator beforehand.
4) If the hydraulic oil has not been changed for two years, check once every quarter. If the inspection fails, change the hydraulic oil.

Notice: *This operation must be carried out when the machine is retracted.*

- Disconnect the battery from the machine.

Warning: *electric shock/risk of burns*

- Operating a live electrical circuit may result in serious injury or even death. Remove all rings, watches and other personal jewellery during the operating process.
- Open the installation drawer of the hydraulic power supply.
- Mark and disconnect the oil return line from the hydraulic filter to the hydraulic oil tank. Remove the oil line from the oil tank. Cover the pipe coupling to keep the dust away.

- Remove and disconnect the hydraulic pump and the oil suction line from the oil tank. Cover the pipe coupling to keep the dust away.
- Unlock the fastener of the hydraulic oil tank and remove the hydraulic oil tank.
- Unscrew the cap from the hydraulic oil tank and pour the oil into a suitable container.

Warning: *risk of personal injury*

The ejected hydraulic oil can be injected into the skin. Loosen the hydraulic coupling slowly to gradually reduce the oil pressure. Do not eject the oil.

- Clean the overflowed hydraulic oil and use the drained hydraulic oil correctly.
- Clean the hydraulic oil tank with a mild solvent and dry it with air.

5) Install the hydraulic oil tank and tighten the fastener on the hydraulic oil tank. The torque shall meet the requirements below:

	Couple
Fastener lubrication-free hydraulic oil tank	25±2N

https://truckmanualshub.com/

6) Connect the oil inlet of the hydraulic pump to the oil tank.
7) Connect the oil return line of the hydraulic pump to the oil return filter.
8) Fill the tank with hydraulic oil. Do not allow the oil to overflow and screw on the tank cap.
9) Start the oil pump to fill the entire hydraulic system with hydraulic oil and eliminate air.

Warning: *risk of component damage*
Operation without fuel can damage the hydraulic pump. Carefully pump the oil tank when filling the hydraulic system. Take precautions to protect the hydraulic pump against erosion.

https://truckmanualshub.com/

- *AS series Hydraulic drive*

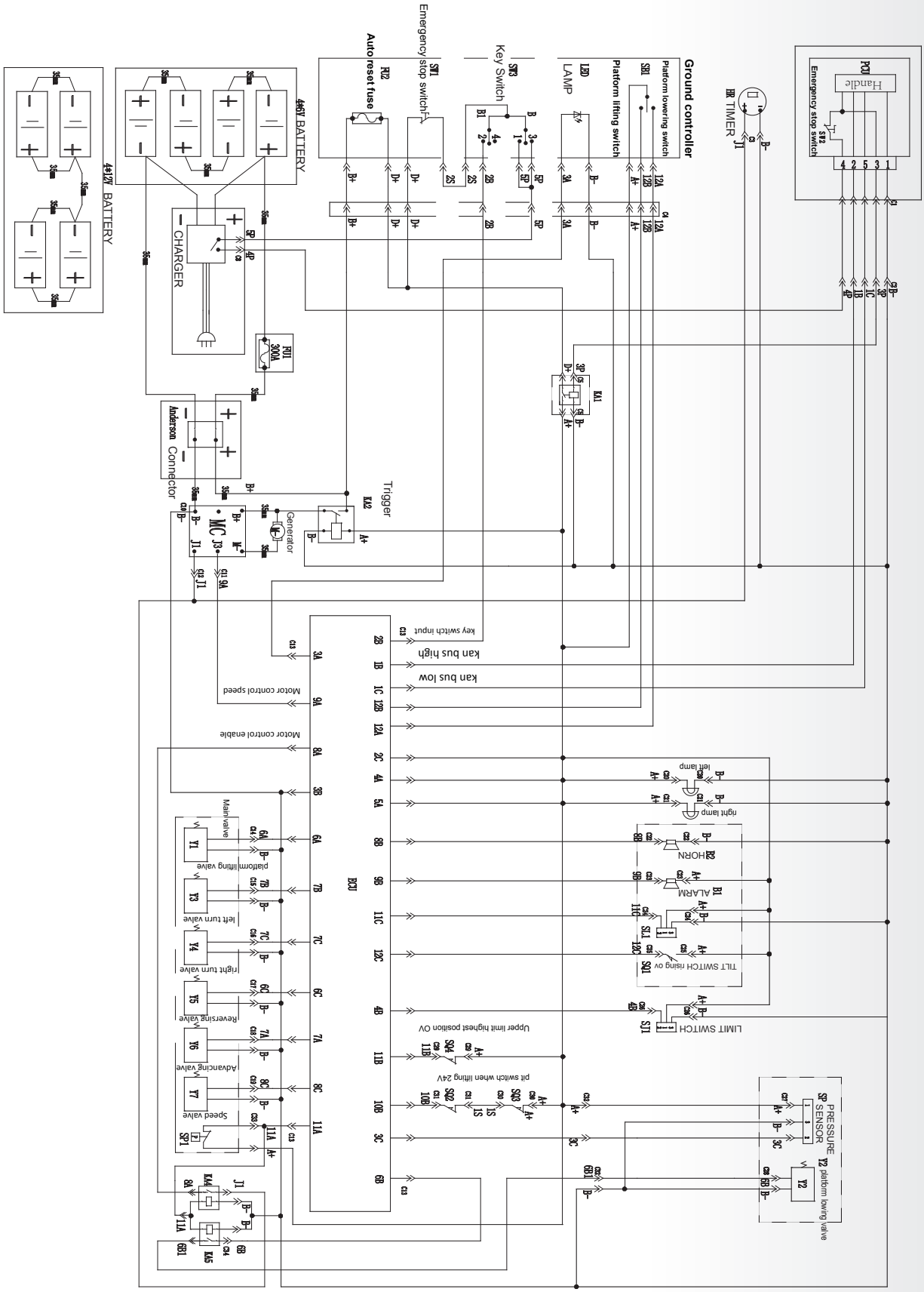

https://truckmanualshub.com/

Chapter 12 - **Electrical diagram**

• *AS series Electric drive*

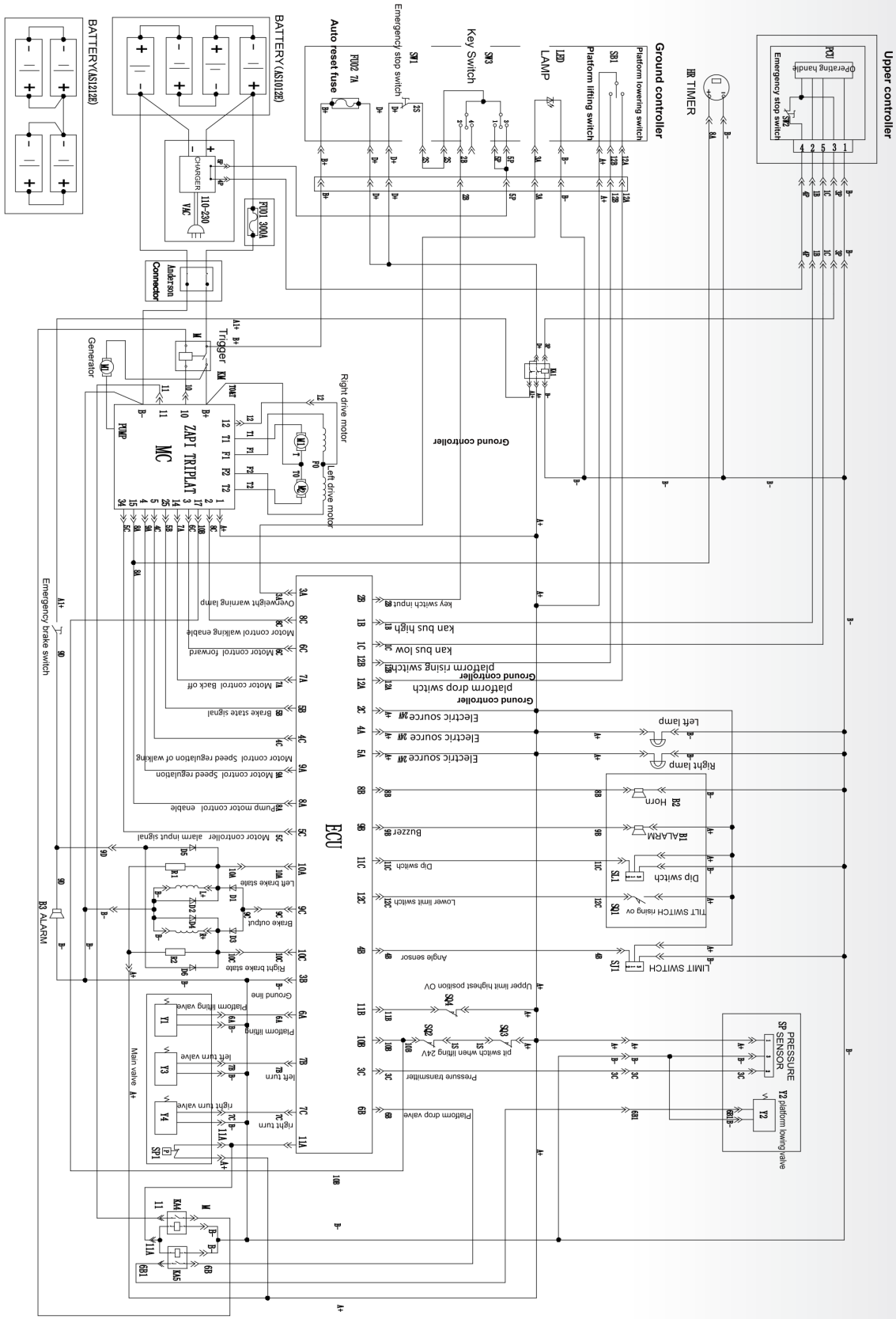

- *SS series Electric drive*

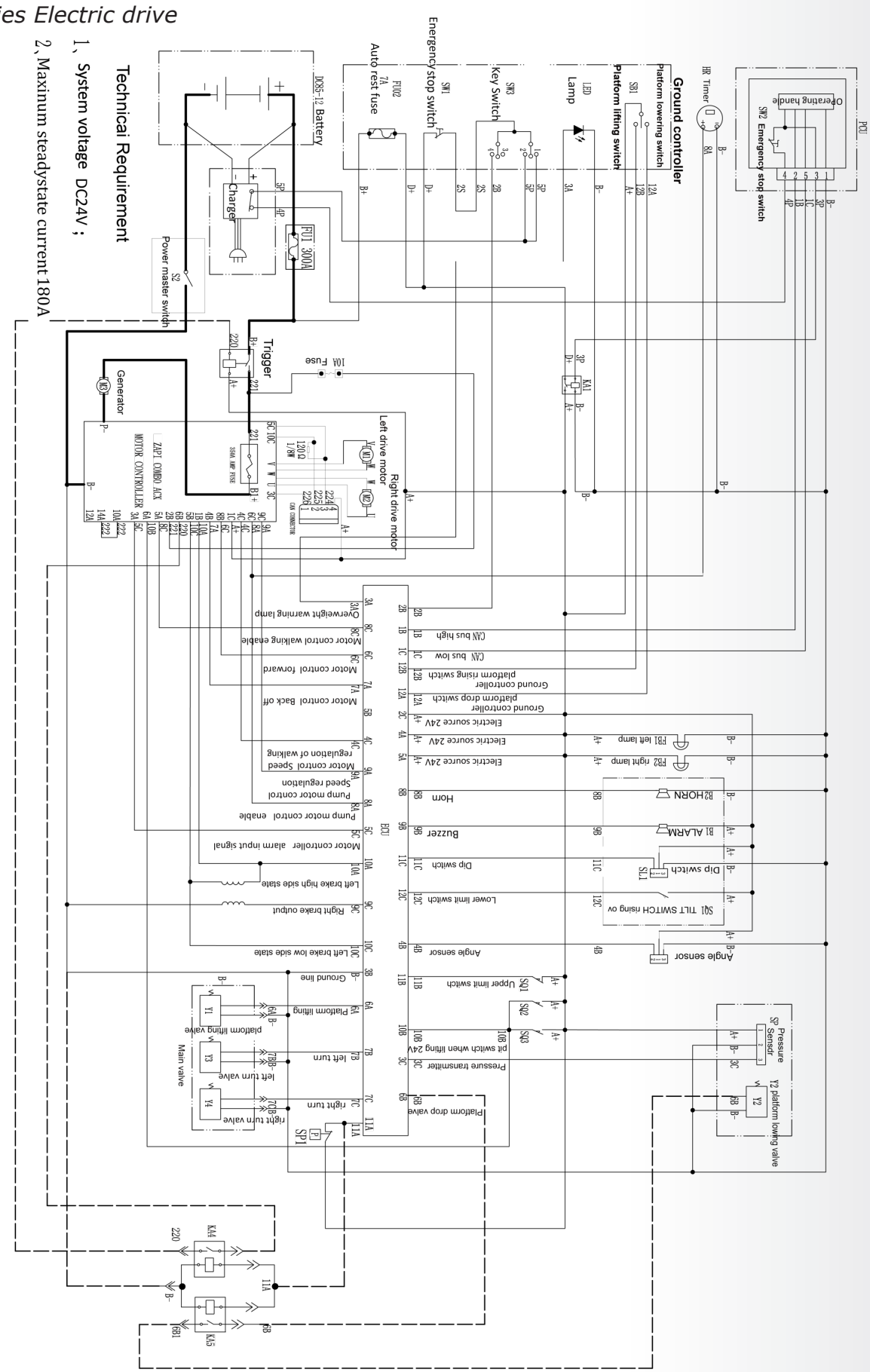

https://truckmanualshub.com/

Chapter 13 - **Hydraulic diagram**

AS0607 Hydraulic Schematic

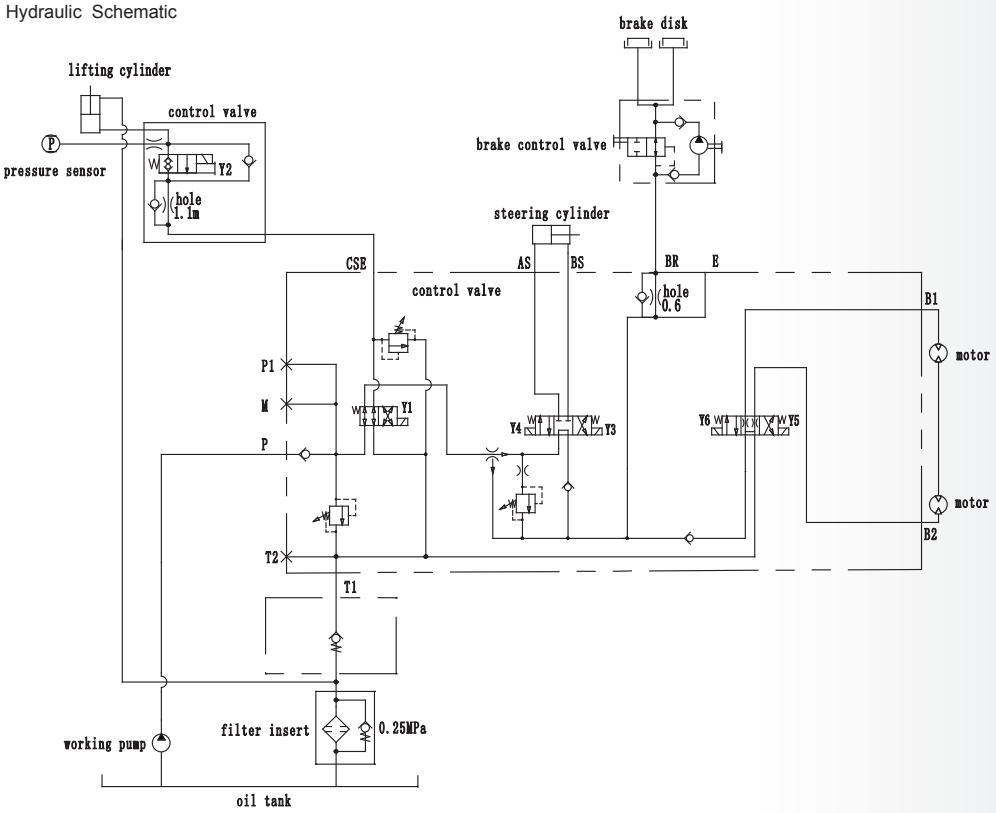

AS0607E Hydraulic schematic

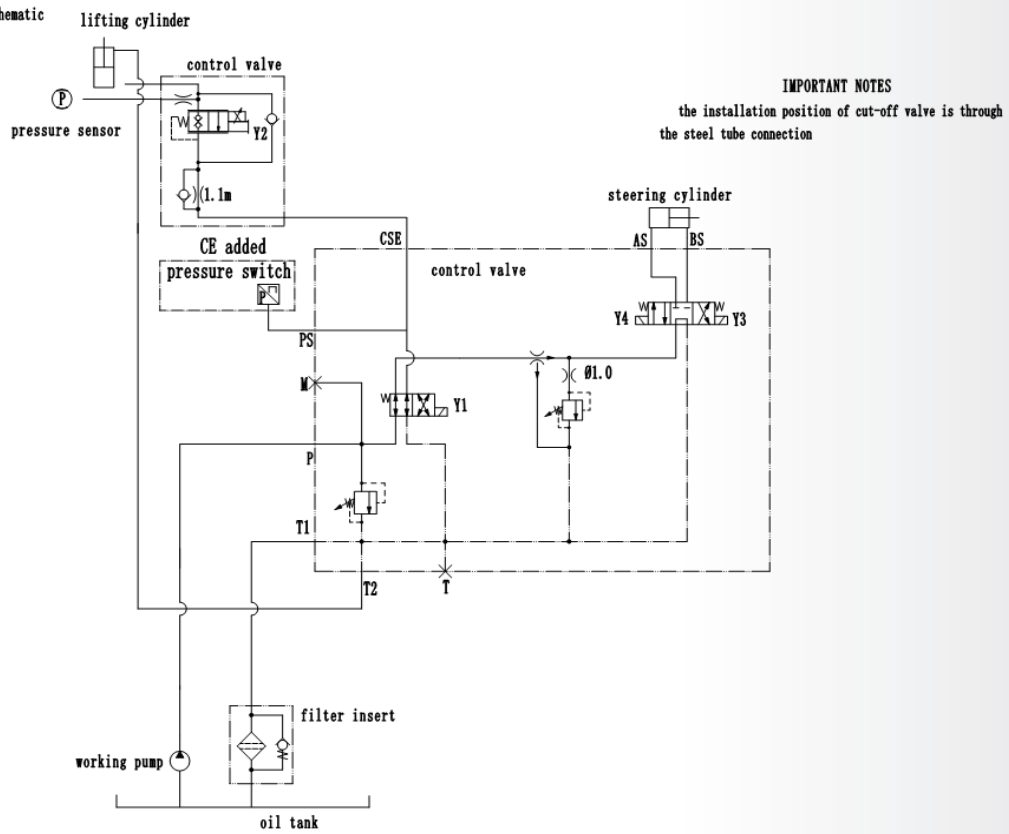

https://truckmanualshub.com/

AS0607W Hydraulic Schematic

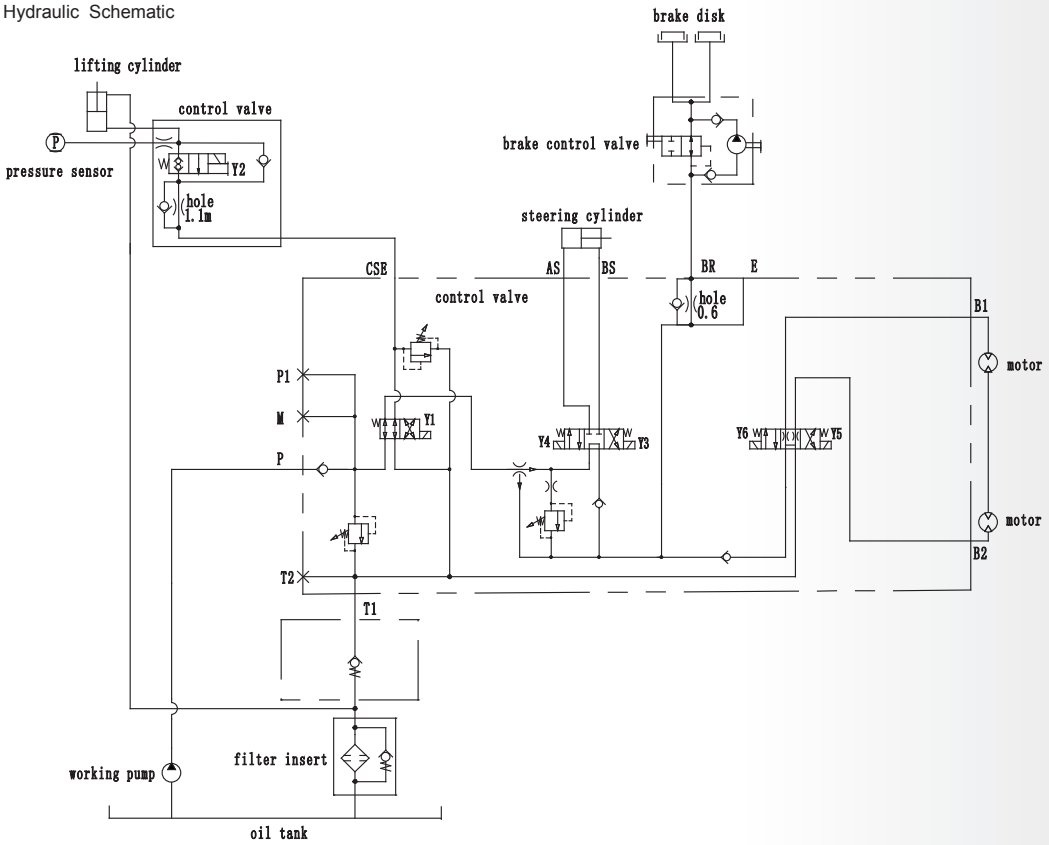

AS0608 hydraulic Schematic

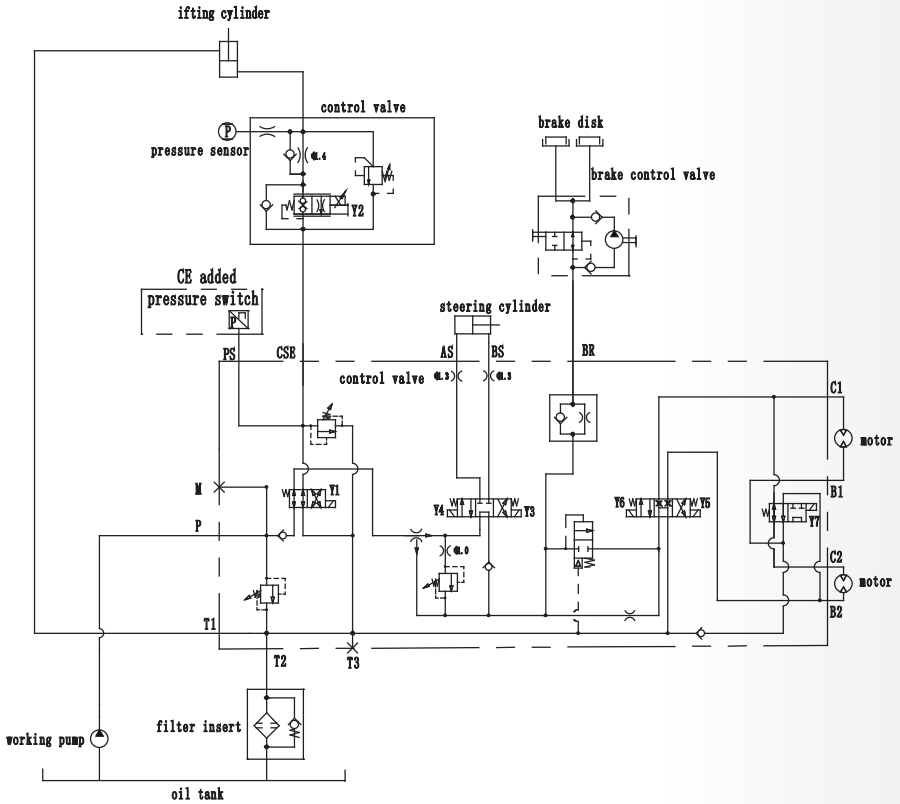

Chapter 13 - **Hydraulic diagram**

AS0608E Hydraulic schematic

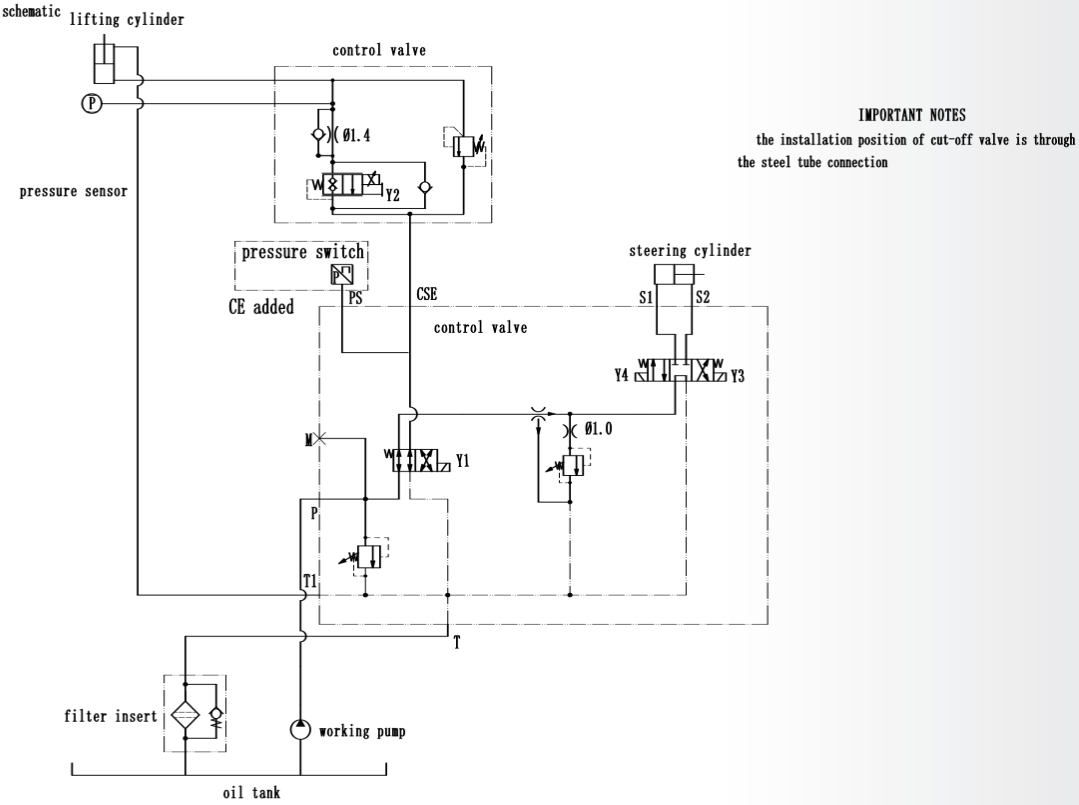

AS0808 Hydraylic Schematic

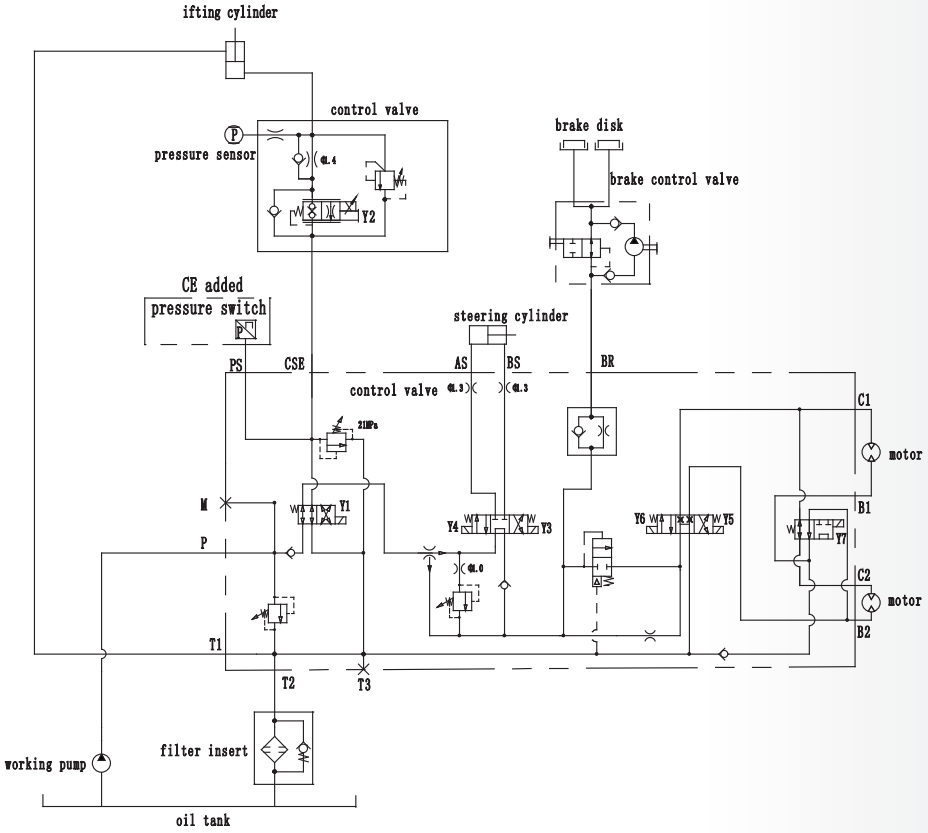

https://truckmanualshub.com/

AS0808E Hydraulic schematic

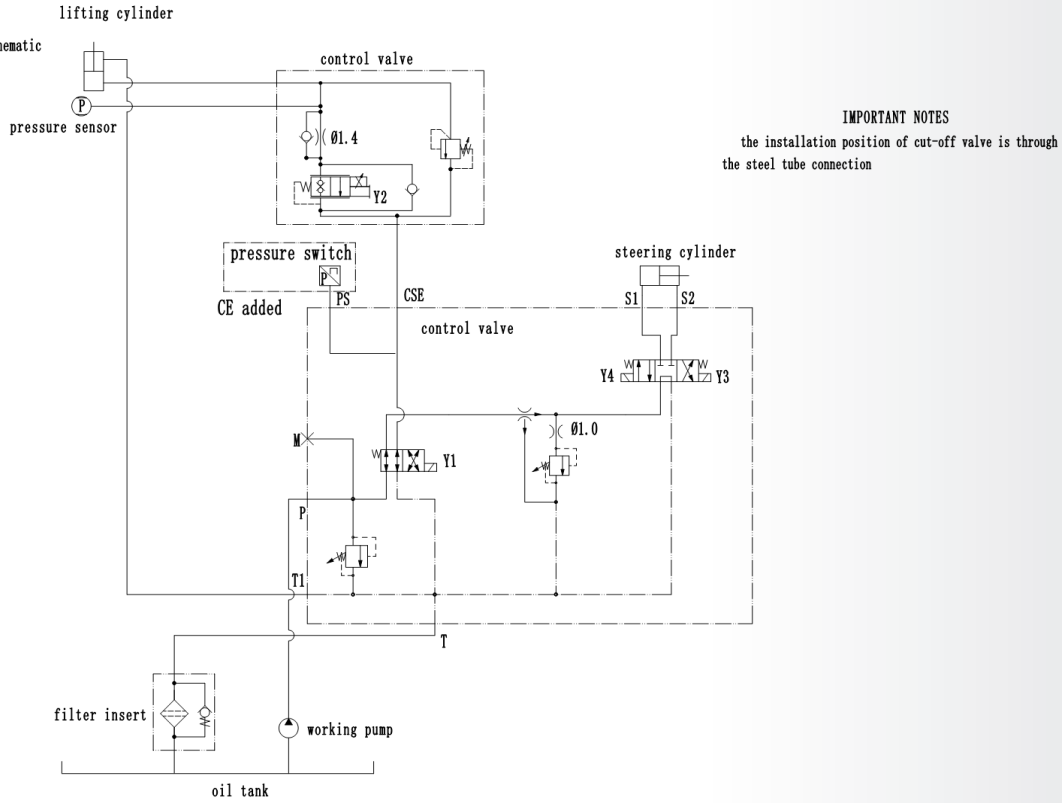

AS0812 Hydraulic Schematic

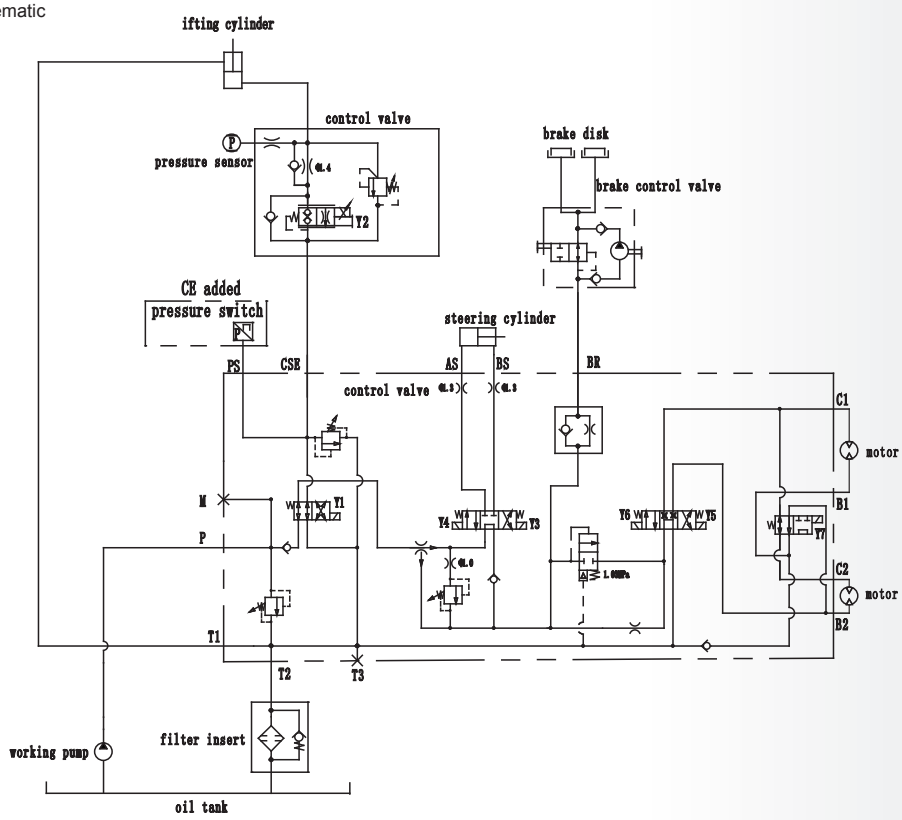

https://truckmanualshub.com/

Chapter 13 - **Hydraulic diagram**

AS0812E Hydraulic schematic

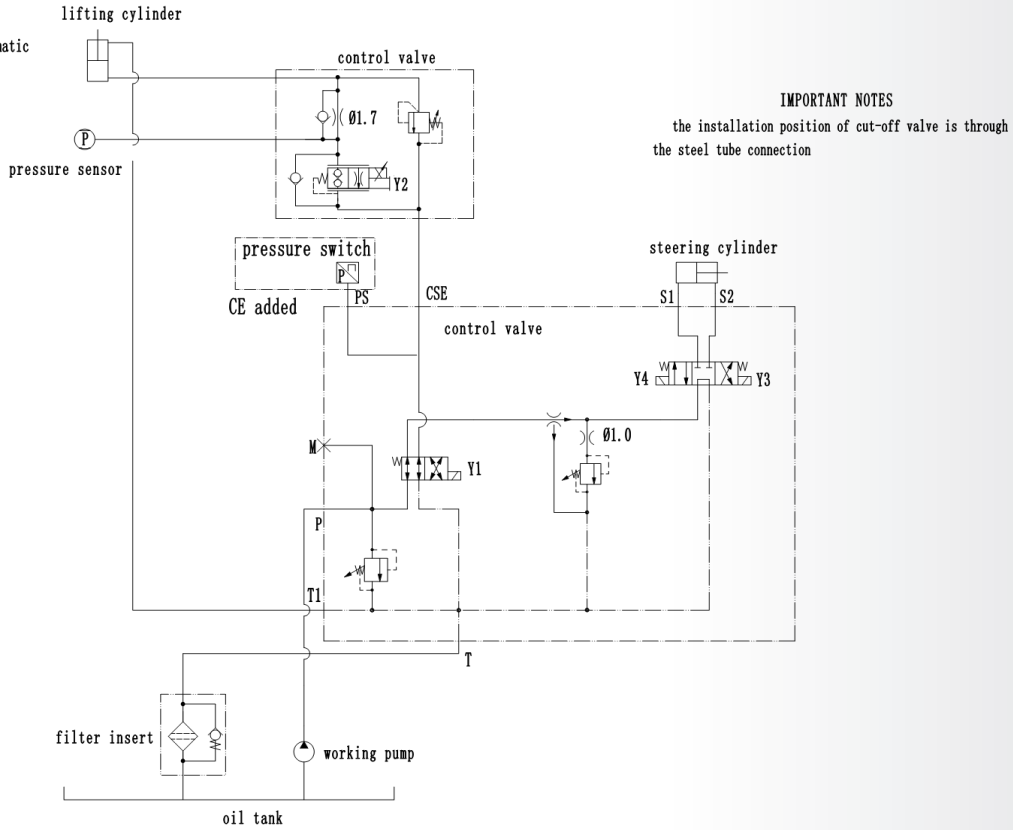

AS1012/AS1212 hydraulic Schematic

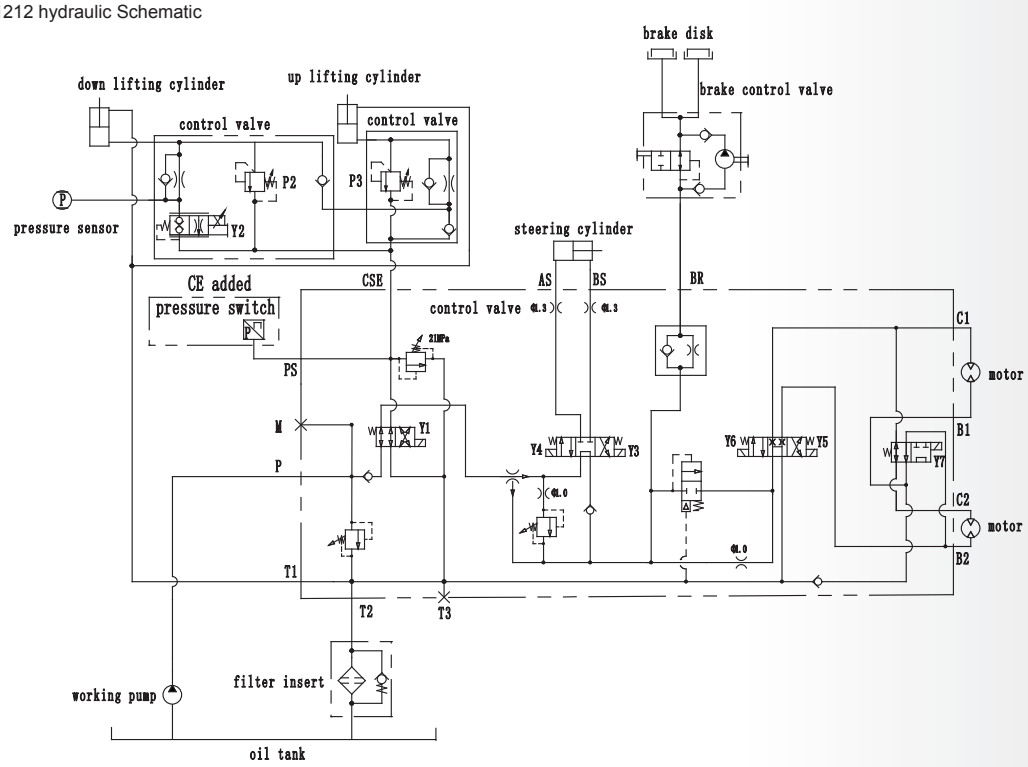

https://truckmanualshub.com/

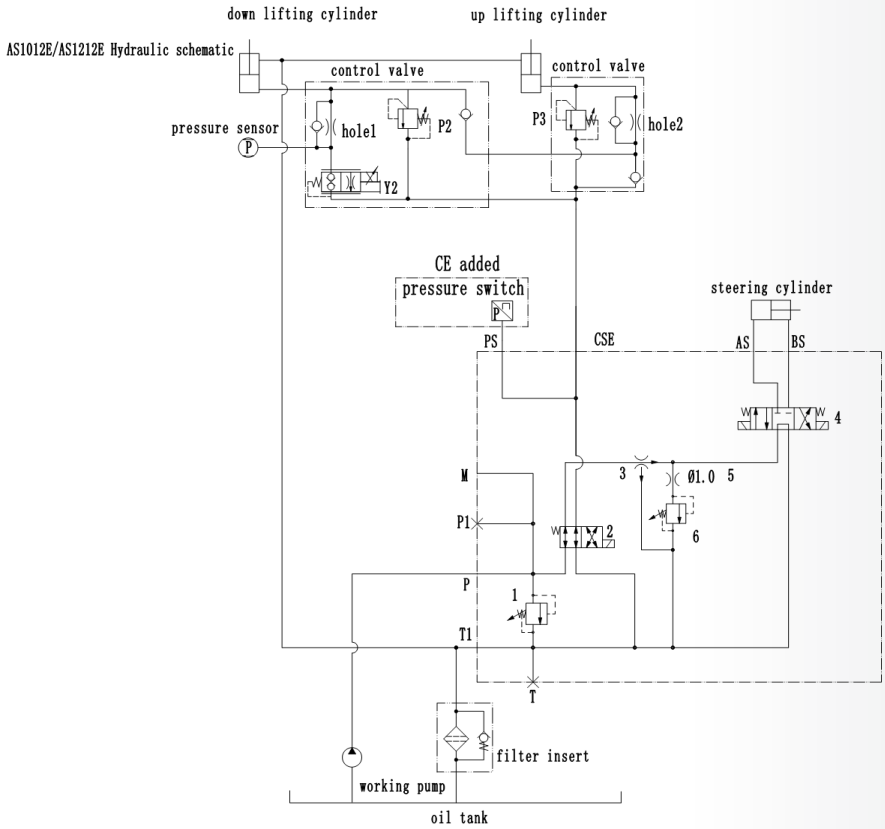

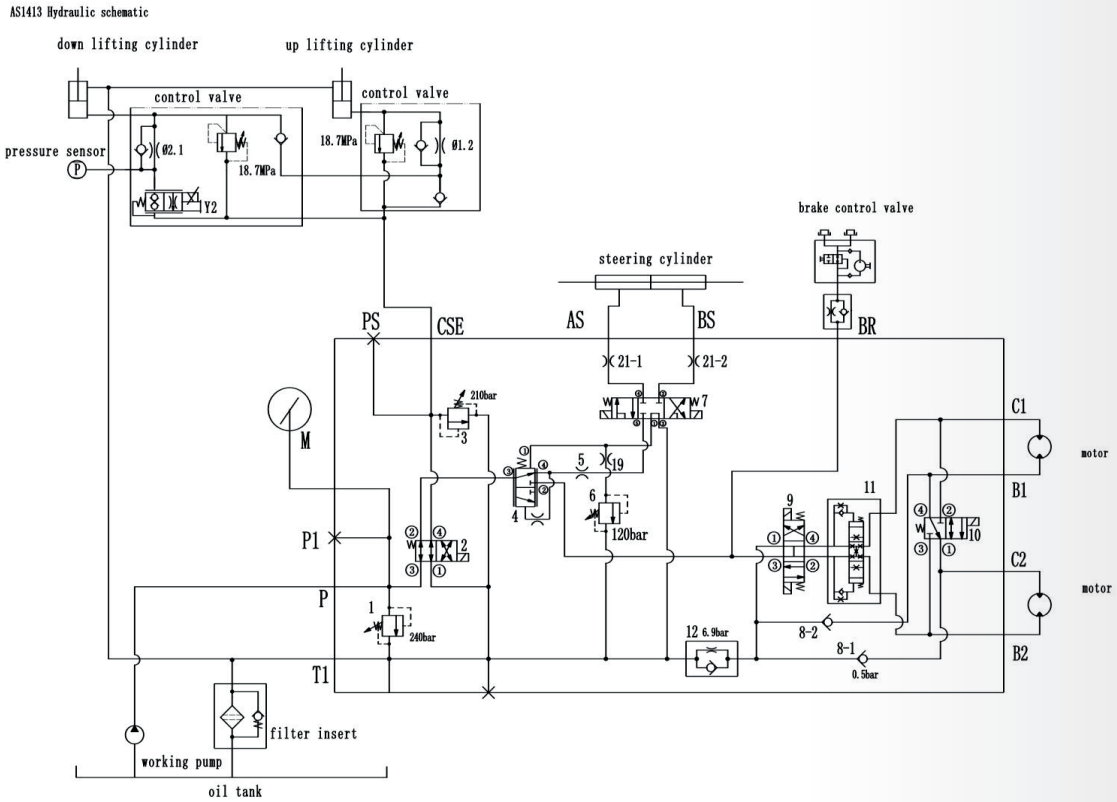

https://truckmanualshub.com/

Chapter 13 - **Hydraulic diagram**

SS0407E Hydraulic schematic
SS0507E Hydraulic schematic
SS0607E Hydraulic schematic

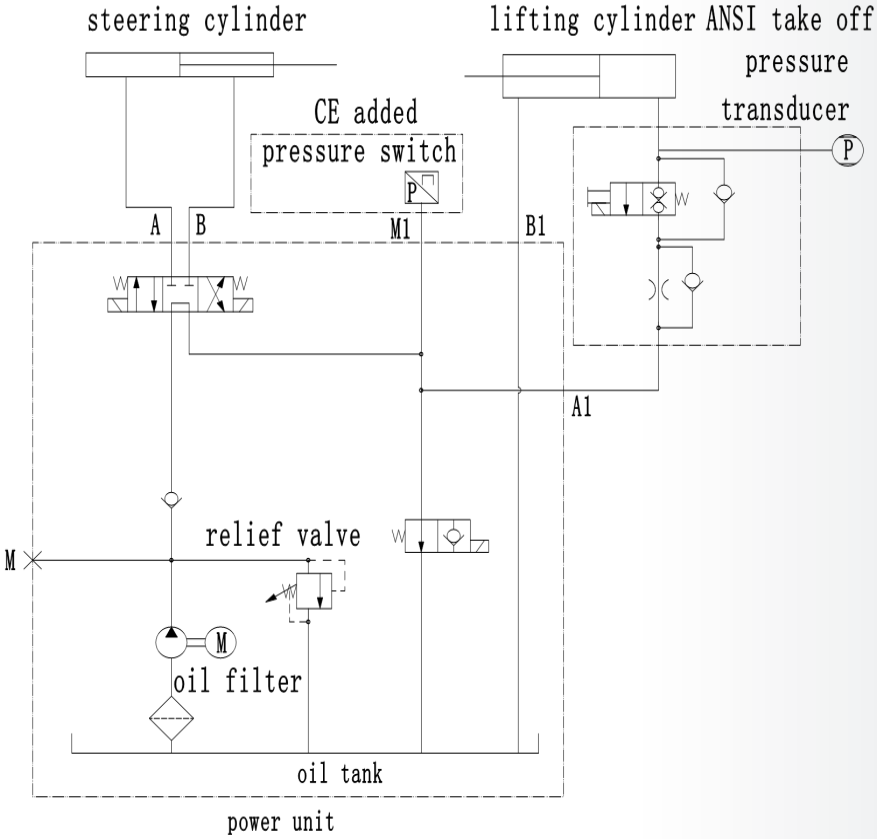

https://truckmanualshub.com/

Notes