https://truckmanualshub.com/

GEHL®

Z17 GEN:2

Compact Excavator

Serial Numbers 00701 and Up

Form No.
50940306
Revision A
Feb. 2015

Operator's Manual

© 2015 Manitou Americas, Inc. • All Rights Reserved. • Printed in USA

Courtesy of Machine.Market

https://truckmanualshub.com/

GEHL COMPANY

WARRANTY

GEHL COMPANY, hereinafter referred to as Gehl, warrants new Gehl equipment to the Original Retail Purchaser to be free from defects in material and workmanship for a period of twelve (12) months from the Warranty Start Date.

GEHL WARRANTY SERVICE INCLUDES:

Genuine Gehl parts and labor costs required to repair or replace equipment at the selling dealer's business location.

GEHL MAKES NO REPRESENTATIONS OR WARRANTIES OF ANY KIND, EXPRESS OR IMPLIED (INCLUDING THE IMPLIED WARRANTIES OF MERCHANTABILITY AND FITNESS FOR PARTICULAR PURPOSE), EXCEPT AS EXPRESSLY STATED IN THIS WARRANTY STATEMENT.

ANY OF THESE LIMITATIONS EXCLUDED BY LOCAL LAW SHALL BE DEEMED DELETED FROM THIS WARRANTY; ALL OTHER TERMS WILL CONTINUE TO APPLY.

SOME STATES DO NOT PERMIT THE EXCLUSION OR LIMITATION OF THESE WARRANTIES AND YOU MAY HAVE GREATER RIGHTS UNDER YOUR STATE LAW.

GEHL WARRANTY DOES NOT INCLUDE:

1. Transportation to selling dealer's business location or, at the option of the Original Retail Purchaser, the cost of a service call.
2. Used equipment.
3. Components covered by their own non-Gehl warranties, such as tires, batteries, trade accessories and engines.
4. Normal maintenance service and expendable, high-wear items.
5. Repairs or adjustments caused by: improper use; failure to follow recommended maintenance procedures; use of unauthorized attachments; accident or other casualty.
6. Liability for incidental or consequential damages of any type, including, but not limited to lost profits or expenses of acquiring replacement equipment.

No agent, employee or representative of Gehl has any authority to bind Gehl to any warranty except as specifically set forth herein.

Power-A-Tach® and Gehl® are registered trademarks of Manitou Americas.

Courtesy of Machine.Market

https://truckmanualshub.com/

1. Introduction

This Operation and Maintenance Manual is designed to provide you with important information and suggestions necessary for using the machine with safety and efficiency. Please be sure to read through the manual before using the machine, to make yourself familiar with the procedures and instructions for operating, inspecting and servicing. Keep in mind that failure to observe the precautions given in the manual or using any procedures not prescribed in the manual may cause a serious accident.

⚠ WARNING

Improper use of the machine may lead to hazards which can result in death or serious injury. Personnel engaged in operating and maintaining the machine are required to familiarize themselves with the contents of the manual before setting about their job.

- **Do not attempt to operate the machine before making yourself familiar with the contents of the manual.**
- **Personnel responsible for using the machine must keep the manual at hand and review it periodically.**
- **If the manual should be lost or damaged, promptly order a new copy from the dealer.**
- **When you transfer the machine to another user, always transfer the manual as well.**
- **The machine was designed and built in compliance with all applicable your country's regulations and industrial standards. If you are using a machine purchased abroad, the machine may lack some safety devices. Please consult your dealer to confirm whether or not that machine is in compliance with all applicable your country's regulations and industrial standards.**
- **Some machine specifications may differ from those which are described in this manual because of improvements in its design and performance. If you have any questions about the contents of the manual, don't hesitate to contact your dealer.**
- **Important safety instructions have been presented throughout this manual, and have been summarized in PART ONE: SAFETY. Be sure to review these pages and pay heed to those safety instructions before proceeding to operate the machine.**

Courtesy of Machine.Market

https://truckmanualshub.com/

2. Safety Information

- The following Signal Words have been used in this Manual and on the Safety Signs to indicate the seriousness of the hazards that could be encountered by failing to comply with the applicable Product Warnings, as follows:

⚠ DANGER

The word "DANGER" indicates an imminently hazardous situation which, if not avoided, will result in death or serious injury. "DANGER" is limited to the most extreme situations.

⚠ WARNING

The word "WARNING" indicates a potentially hazardous situation which, if not avoided, could result in death or serious injury.

⚠ CAUTION

The word "CAUTION" indicates a potentially hazardous situation which, if not avoided, may result in minor or moderate injury.

IMPORTANT

The signal Word “IMPORTANT” has been utilized in this Manual to denote those User Directions that must be followed to assure the safe operation and maintenance of the Excavator.

- **WARNING** : Never attempt to operate or service this Excavator until you have first read and understood all of the applicable Product Warnings and User Directions that are set forth in this Manual and on the Safety Signs that are affixed to this Excavator.

  The failure to comply with all relevant Safety Instructions could result in bodily injury.

- **WARNING** : Never modify the design of this Excavator or its engine; never remove or disable any of the installed safety guards or devices; and never use any unauthorized attachments in the operation of this equipment.

  The implementation of any unauthorized design modifications or the use of unauthorized attachments could result in bodily injury.

  Furthermore, since those actions would expressly violate the terms of the Product Warranty, the applicable Warranty would also be voided.

In this Manual, the major sections of the product are designated as follows:

Machine.....refers to the entire product.

Machine base.....refers to the section consisting of the upper structure and the undercarriage.

Implement.....refers to the section consisting of the arm, boom and bucket or other attachment.

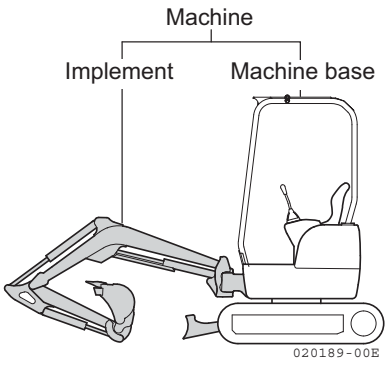

Courtesy of Machine.Market

https://truckmanualshub.com/

3. Product Overview

3-1. Intended uses

The excavator is intended to perform the following tasks:

- Digging
- Leveling of ground
- Shoveling
- Ditching and Guttering
- Loading

The machine should not be used for unintended tasks

For the details on how to work with the machine, refer to Section “13-14. Operations using the bucket“.

3-2. Break in period

The machine should not be subjected to severe stresses and loads during the initial break in period although it has been prepared well and stringently inspected before shipping. Otherwise the machine's performance may be affected and its service life shortened. Thus it is essential to break in the machine for the first approx. 100 service hours (reading of the hourmeter).

In breaking in the machine:

- You should warm up the engine by idling for 5 minutes before starting operations.
- You should not operate the machine under heavy loads or at high speed.
- You should not start and accelerate the engine too abruptly, or stop it too abruptly.
- You should not change travel direction too abruptly.

The safety instructions for operation and maintenance that are presented in this Manual are applicable to each of the intended tasks. Never misuse this machine by violating the applicable safety instructions or by attempting to perform unintended tasks, because of the danger of serious bodily injury.

Courtesy of Machine.Market

https://truckmanualshub.com/

3-3. Conditions to insure compliance with EPA emission standards
Conditions de conformité avec les standards d'émission EPA

An EPA approved engine has been mounted on this machine. The following are the conditions that must be met in order to insure that the emission during operation meets the EPA standards. Be sure to follow these.

- The surrounding conditions should be as follows.

(1) Ambient temperature : -4 to 104℉ (-20 to 40℃)
(2) Relative humidity : 80% or lower

- The fuel and lube oil used should be as follows.

(1) Fuel : Diesel light oil ASTM D975 No.1D S15, S500 or No.2D S15, S500 (ISO 8217 DMX)

- The fuel cetane number should be equal to 45 or higher.
- The sulfur content must not exceed 0.5% by volume. Less than 0.05% is preferred.
  In general, using a high sulfur fuel may possible result in corrosion inside the cylinder.
  Especially in U.S.A. and Canada, Ultra Low Sulfur fuel should be used.
- The water and sediment in the fuel should not exceed 0.05% by volume.

(2) Lube oil : Type API, class CD

- Do not remove the seals limiting the amount of fuel injected and the speed.
- Be sure to carry out inspections.
  Follow the basic guidelines outlined in Section "24. Maintenance Table" of this manual, and keep a record of the results. Pay particular attention to these important points: replacing the lube oil and lube oil filter, cleaning the air cleaning the air cleaner element and the radiator fins.

Un moteur thermique agréé EPA est installé sur cette machine. A la suite figurent les conditions d'utilisation permettant de satisfaire au standard EPA; il est impératif de les respecter.

・Environnement extérieur:
(1) Température ambiante : -4 à 104°F (-20 à 40°C)
(2) Humidité relative : 80 % au moins
・Carburant et huiles à utiliser
(1) Carburant : Diesel léger ASTM D975 N° 1D S15, S500 ou N° 2D S15, S500 (ISO 8217 DMX)
・L'indice de cétane du carburant doit être égal ou supérieur à 45.
・La teneur en souffre ne doit pas dépasser 0,5% par volume. Moins de 0,05% est préférable.
En général, l'utilisation d'un carburant à teneur élevée en souffre peut entraîner une corrosion à l'intérieur du vérin.
Aux U.S.A. et au Canada notamment, l'utilisation d'un carburant à très basse teneur en souffre est recommandée.
・L'eau et les sédiments présents dans le carburant ne doivent pas dépasser 0,05% par volume.
(2) Huiles : type API, classe CD
・Ne pas retirer les joints limitant la quantité de carburant injecté et la vitesse
・Respecter les inspections périodiques
Suivre les indications figurant dans ce manuel (Table de maintenance 24) et garder une trace des résultats. Faire très attention aux points importants suivant: remplacer l'huile et le filtre à huile, nettoyer l'élément de filtre à air et le radiateur.

Courtesy of Machine.Market

https://truckmanualshub.com/

4. Operation License

Before you operate this machine, confirm the licensing requirements that are applicable to the operation of this machine.
Comply with all applicable laws.
Ask your dealer about licensing requirements.

Courtesy of Machine.Market

https://truckmanualshub.com/

5. Ordering Replacement Parts and Service Calls

5-1. Location of machine serial number plate

The machine serial number plate is located on the turning frame as illustrated at the right. Never remove the plate for any reason.

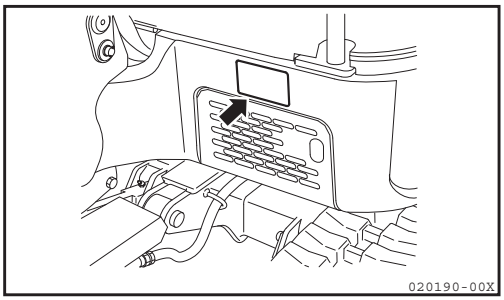

5-2. Location of engine serial number plate

The engine serial number plate is located on the top of the cylinder head cover. Never remove the plate for any reason.

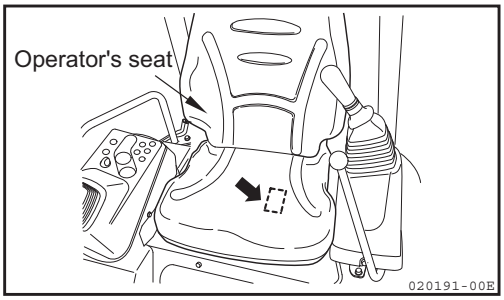

5-3. Location of EPA emission control plates
Localisation de la plaque signalétique EPA

The EPA emission control plates are located on the engine and engine hood as illustrated at right.
Never remove the plates for any reason.

La plaque signalétique est fixée sur le moteur (voir illustration à droite).
En aucun cas ne retirer cette plaque.

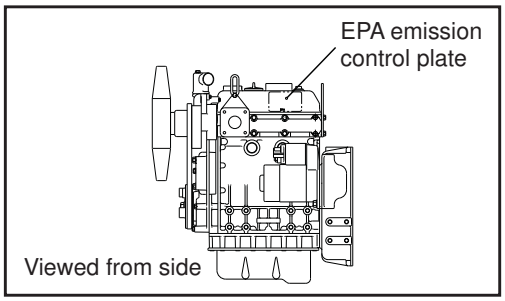

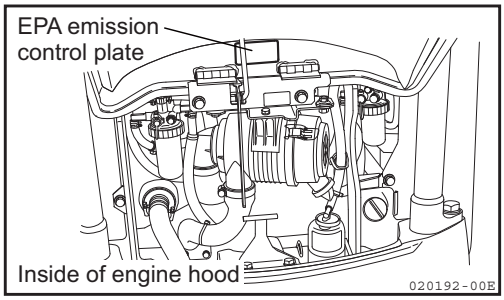

Courtesy of Machine.Market

https://truckmanualshub.com/

5-4. Ordering replacement parts and service calls

When ordering replacement parts or calling for service, let your dealer know the model designation, the machine serial number, and the engine serial number as well as the reading of the hourmeter.

- Machine serial number plate

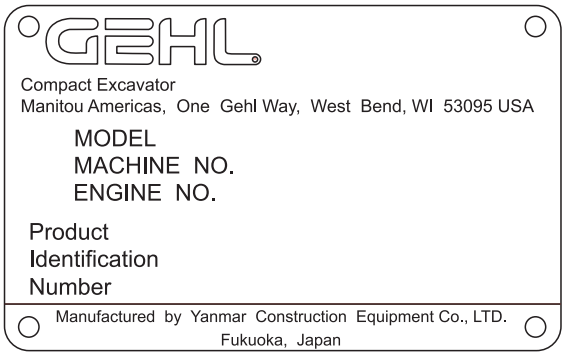

- Hourmeter

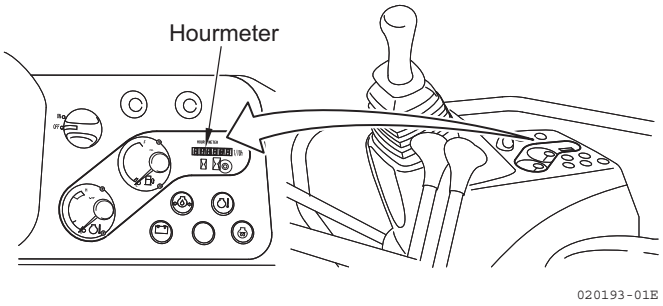

Courtesy of Machine.Market

https://truckmanualshub.com/

6. Contents

1. Introduction 0-1
2. Safety Information 0-2
3. Product Overview 0-3
3-1. Intended uses 0-3
3-2. Break in period 0-3
3-3. Conditions to insure compliance with EPA emission standards 0-4
4. Operation License 0-5
5. Ordering Replacement Parts and Service Calls 0-6
5-1. Location of machine serial number plate 0-6
5-2. Location of engine serial number plate 0-6
5-3. Location of EPA emission control plates 0-6
5-4. Ordering replacement parts and service calls 0-7
6. Contents 0-8

SAFETY

7. Basic Precautions 1-2
8. Operating Precautions 1-6
8-1. Precautions before starting the engine 1-6
8-2. Precautions for starting the engine, working and parking 1-8
8-3. Precautions for transportation 1-13
8-4. Precautions for the battery 1-14
8-5. Precautions for towing 1-15
9. Precautions for Servicing 1-17
9-1. Precautions before servicing 1-17
9-2. Precautions during servicing 1-19
10. Safety Messages (Warning Labels) 1-23
10-1. Location of warning labels 1-23

OPERATION

11. Identification of Important Parts 2-2
11-1. Overview of the machine 2-2
11-2. Controls and switches 2-3
12. Description of Control Devices 2-4
12-1. Monitor 2-4
12-2. Switches 2-7
12-3. Control levers and pedals 2-9
12-4. Engine hood 2-14
12-5. Storage space for the operation & maintenance manual 2-14
12-6. Operator’s seat 2-15
12-7. Fuse 2-16

Courtesy of Machine.Market

13. Operating Instructions 2-18
13-1. Checking before starting the engine 2-18
13-2. Starting up the engine 2-28
13-3. Operating and checking instructions after starting the engine 2-31
13-4. Traveling 2-33
13-5. Steering 2-37
13-6. Stopping the machine 2-39
13-7. Swinging the upper structure 2-40
13-8. Operating the implement 2-41
13-9. Operating the track gauge change 2-42
13-10. Precautions for operating the implement 2-44
13-11. Precautions for working 2-47
13-12. Precautions for going up and down a slope 2-48
13-13. Escaping from the mud 2-50
13-14. Operations using the bucket 2-51
13-15. Reversing the bucket 2-52
13-16. Parking the machine 2-54
13-17. Inspection requirements after completing operation 2-55
13-18. Stopping the engine 2-56
13-19. Inspection requirements after stopping the engine 2-57
13-20. Locking 2-57
13-21. Handling the rubber crawlers 2-58
13-22. Handling hydraulic P.T.O. 2-63
14. Transportation 2-68
14-1. Loading and unloading the machine 2-68
14-2. Precautions for loading the machine 2-70
14-3. Precautions for transporting the machine 2-71
14-4. Suspending the machine 2-72
15. Care and Service in Cold Weather 2-74
15-1. Preparing for cold weather 2-74
15-2. Precautions after a day's work 2-76
15-3. After cold weather ends 2-76
16. Long-term Storage 2-77
16-1. Before storing 2-77
16-2. Storing 2-78
16-3. Using the machine again 2-78
17. Troubleshooting 2-79
17-1. Phenomena that do not constitute faults 2-79
17-2. Towing 2-80
17-3. If the battery is overdischarged 2-81
17-4. Troubleshooting 2-86

Courtesy of Machine.Market

https://truckmanualshub.com/

MAINTENANCE

18. Precautions for Servicing 3-2
19. Basic Servicing Practices 3-5
19-1. Oils, fuel, and cooling water 3-6
19-2. Electrical equipment 3-9
19-3. Hydraulic system 3-10
20. Consumables 3-11
21. Fueling, Oiling and Greasing Based on Temperature Range 3-12
21-1. Fuel and oil 3-12
21-2. Cooling water 3-12
22. Standard Tightening Torque for Bolts and Nuts 3-13
22-1. Required tools 3-13
22-2. Torque table 3-14
23. Replacing Essential Parts Periodically 3-15
24. Maintenance Table 3-17
24-1. Table of service time intervals 3-17
24-2. Service intervals when using the hydraulic breaker 3-21
25. Procedures for Maintenance 3-22
25-1. First services 3-22
25-2. Non-periodic services 3-23
25-3. Checking before start-up 3-35
25-4. Maintenance every 50 service hours 3-43
25-5. Maintenance every 100 service hours 3-45
25-6. Maintenance every 200 service hours 3-46
25-7. Maintenance every 250 service hours 3-51
25-8. Maintenance every 400 service hours 3-52
25-9. Maintenance every 500 service hours 3-55
25-10. Maintenance every 1000 service hours 3-56
25-11. Maintenance every 2000 service hours 3-59

SPECIFICATIONS AND DIMENSIONAL DIAGRAMS

26. Specifications and Dimensional Diagrams 4-2

OPTIONAL PARTS AND ATTACHMENTS

27. General Precautions 5-2
27-1. Safety precautions 5-2
27-2. Precautions for mounting an attachment (implement) 5-3

NOTES

28. Maintenance Log 6-2
29. Notes 6-6

Courtesy of Machine.Market

https://truckmanualshub.com/

SAFETY

⚠ WARNING

Never attempt to operate or service this Excavator until you have first read and understood all of the applicable Safety Instructions that are set forth in this Manual.

The failure to comply with all relevant Safety Instructions could result in bodily injury.

Courtesy of Machine.Market

https://truckmanualshub.com/

7. Basic Precautions

⚠ WARNING **These instructions should be strictly followed for the safety of you, others and your machine.**

Follow safety rules at your workplace

- The operation and servicing of this machine is restricted to qualified persons.
- When operating or servicing the machine, follow all the safety rules, precautions and procedures.
- Any work performed by a team or with a signal person should be conducted in accordance with signals agreed on beforehand.

Install safety devices

- Make sure that all guards and covers are installed in their correct position. If any of them are damaged, repair them immediately.
- The proper use of all safety devices, such as lock levers, should be well understood by the machine operator.
- Never remove the safety devices. Always make sure that they operate properly.
  For lock levers, refer to Section "12-3. Control levers and pedals".
- Incorrect operation of the safety devices could cause serious bodily injury.

Wear proper clothing and safety items

- Do not wear loose clothing or jewelry that can be caught on the control levers and other machine parts. Also avoid wearing working clothes stained with oil as they can ignite.
- Be sure to wear a helmet, safety goggles, safety shoes, a mask, gloves and other protective items, as appropriate.
  Take particular precautions when generating metal debris, when striking metal objects with a hammer or when cleaning components with compressed air.
  Also make sure there are no persons near the machine.

For cleaning the fuel, oil and air filter elements, refer to Section "25-2. Non-periodic services".

Alcohol

- Never operate the machine after consuming alcoholic beverages, or while you are under the influence of alcohol or if you feel ill or unwell, as that could result in accidental bodily injury to yourself or others.

Courtesy of Machine.Market

https://truckmanualshub.com/

Avoid unauthorized modifications

- Unauthorized modifications may cause safety hazards.
- When you wish to modify your machine, contact your dealer. The implementation of unauthorized modifications or the use of unauthorized attachments could result in bodily injury. Since those actions would also violate the terms of the Warranty, it would be voided.

Always lock up your machine when leaving the operator's seat

- When leaving the operator's seat, be sure to place the lock levers in the lock position, to prevent accidental machine movement which could result in bodily injury.
- When you leave the machine:
  (1) Lower the bucket to the ground.
  (2) Place the lock levers in the lock position.
  (3) Stop the engine.
  (4) Set all the locks in to the lock position.
  (5) Be sure to take the starter switch key out of the starter switch.
  For information on parking the machine, refer to Section "13-16. Parking the machine".

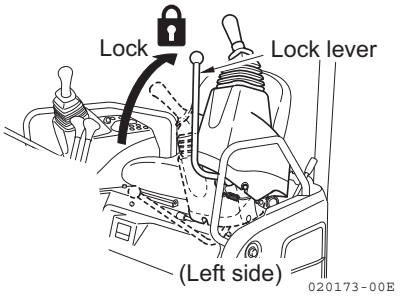

Use handrails and steps when getting on and off

- Do not jump on or off the machine. Never get on or off a machine in motion as it may result in bodily injury.
- When getting on and off the machine, face the machine and use the handrails and steps.
- Do not use control levers as handrails.
- Make sure that you maintain three point contact with the handrails or the steps.
- If the handrails and the steps are soiled with oil or dirt, clean them off immediately.
  Repair any damaged parts and retighten any loose bolts.

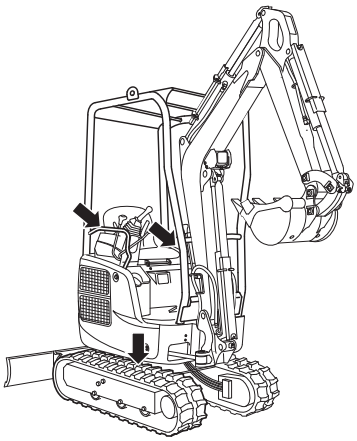

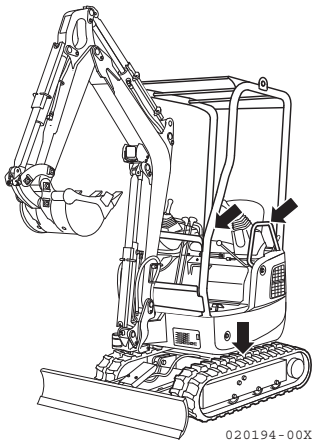

Courtesy of Machine.Market

https://truckmanualshub.com/

Keep fuel and oil away from sources of ignition

- Open flames can ignite fuel, oil, hydraulic oil or antifreeze solutions, which are flammable and dangerous. Special attention must be paid to the following matters.
  - Keep flammable materials away from lighted cigarettes or matches, or any other sources of ignition.
  - Never refuel while the engine is running. Smoking during refueling must be strictly prohibited.
  - Firmly tighten the caps on the fuel and oil tanks.
  - Store fuel and oil in a cool and well-ventilated place where they are not subjected to direct sunlight.
  - Fuel and oil must be stored in a place which meets all applicable safety regulations. Unauthorized persons should not be allowed entry.

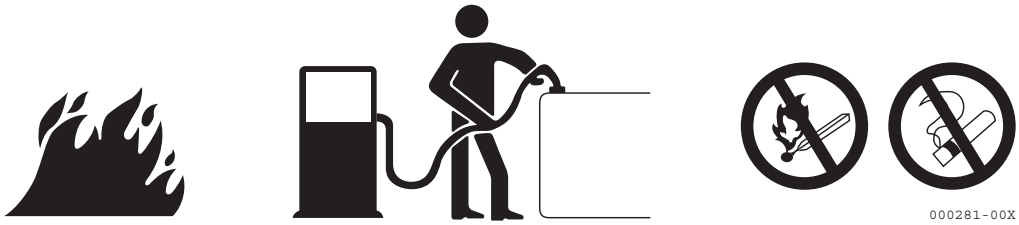

Avoid removing filler caps while temperatures are high

- The engine coolant, engine oil and hydraulic oil are hot and under pressure immediately after the machine stops operation.
  Removing caps, draining coolant or oil, or replacing a filter at such a time may cause burns. Allow temperatures to cool down and follow the procedures in this manual.
- When removing the radiator cap, stop the engine and allow the coolant to cool down, then turn the cap slowly to relieve all pressure.
- Before removing the cap from the hydraulic oil tank, stop the engine and turn the cap slowly to relieve all pressure to prevent oil from spouting out.

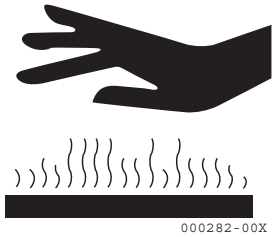

Avoid harmful asbestos dust

- Air containing asbestos dust is carcinogenic and is hazardous to humans. Inhalation of the air may cause lung cancer. When handling materials that may contain asbestos, keep in mind that:
  - Compressed air must not be used for cleaning.
  - Water must be used to clean the machine to prevent asbestos from scattering in the air.
  - You must work on the windward side when operating the machine in a place where there may be asbestos dust.
  - You should wear an appropriate respirator as necessary.

Courtesy of Machine.Market

https://truckmanualshub.com/

Prevent crush injuries by the implements

- Keep hands, arms and all other parts of your body away from all the moving parts, particularly between the implements and the machine and between the hydraulic cylinder and the implements, as pinch points are created in those areas.

Keep a fire extinguisher and first aid kit handy

- The workplace must be provided with a fire extinguisher. Read instructions on the label to familiarize yourself with how to use it.
- Keep a first aid kit in a prescribed place.
- Know what to do in the event of a fire or an accident.
- Know who to contact in an emergency and keep emergency telephone numbers in a prominent place.

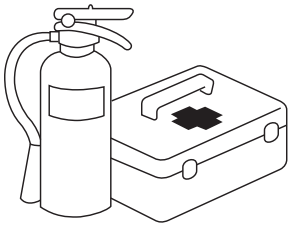

Precautions for installing optional parts and attachments

- When installing or using optional attachments, read the operating instructions for the attachments and the Manual Sections relating to the installation of attachments.
- Use only authorized attachments. The use of unauthorized attachments may affect not only the safety of the machine but also the proper operation and life of the machine.
- The use of unauthorized attachments would also violate the terms of the Warranty, so that it would be voided.

Courtesy of Machine.Market

https://truckmanualshub.com/

8. Operating Precautions

⚠ WARNING **These instructions should be strictly followed for the safety of you, others and your machine.**

8-1. Precautions before starting the engine

Ensure the safety of your workplace

- Before starting the machine, check to see if there are any hazards in your working area.
- Examine the terrain and soil, and decide the best way to do the work.
- When working on the street, provide a signal person or fence for the safety of vehicles and pedestrians.
- If there are underground utilities at the work site, such as water pipes, gas pipes, high-voltage conduits or others, contact the responsible companies to locate them exactly, so as not to damage them.
- Before operating the machine in water, or crossing a creek, confirm the condition of the submerged ground, the water depth and the water flow speed, and make sure that the depth is within the allowable level.

  For allowable water depth, refer to Section "13-11. Precautions for working".

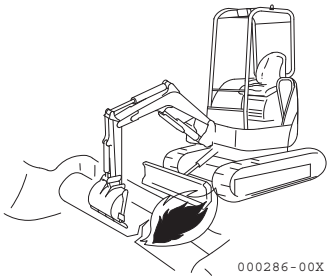

Prevent fire

- Wood chips, dead leaves, trash and other flammable materials in proximity to the engine are hazardous as they may cause fire. Always check and keep your machine clear of these flammable materials.
- Check for any leaks from fuel, lube oil or hydraulic oil lines. Repair faults and clean spilled oil as necessary.

  For additional information, refer to Section "13-1. Checking before starting the engine".
- Check to see where fire extinguishers are located and know how to use them.

Inspect around the operator's seat

- Dirt, oil and snow on the floor, levers, handrails or steps are slippery and hazardous. Remove them all completely.
- Keep parts and tools away from the operator's seat as they may damage the control levers or switches or create other hazards.

Courtesy of Machine.Market

https://truckmanualshub.com/

Provide adequate ventilation when working in an enclosed area

Engine exhaust fumes are harmful to the human body and their inhalation is extremely hazardous. When starting the engine in an enclosed area, open the windows and doors for ventilation. Also do not idle the engine unnecessarily or leave the engine running while the machine is not in use.

Fasten the seatbelt

- For your safety, ROPS (Roll Over Protective Structure)/FOPS (Falling Objects Protective Structures) and a seatbelt have been provided.
- Always fasten the seatbelt across the pelvic region and adjust it snugly before you operate the machine.
- The seatbelt must be replaced if the machine is involved in an accident.
- In addition, the seat and the seat mounting must also be checked by your dealer after an accident has occurred.
- If the seat and the seat mounting are damaged, they must be replaced immediately.

ROPS/FOPS

- Never modify a structural member of the ROPS/FOPS.
- If the ROPS/FOPS is damaged, replace it immediately to prevent bodily injury.
  Never repair or modify it.

Caution for the protection of plants from hot wind and exhaust gases

The wind and exhaust gases from the radiator and the muffler respectively are very hot.
Plants directly exposed to hot wind or exhaust gases may die.
Erect a barrier to protect plants from hot wind and exhaust gases when working near them.

Courtesy of Machine.Market

https://truckmanualshub.com/

8-2. Precautions for starting the engine, working and parking

Signal before starting the engine

- Check the machine carefully before initial start up for the day.
- Make sure there are no persons near the machine before getting on it.
- Never start the engine when the "SERVICING IN PROGRESS" tag is attached to the control system.
- Sound the horn to alert people nearby before starting the engine.
- Be sure to start the engine and operate the machine from the operator's seat only.
- Do not allow any other persons to get on the machine.

Check the position of the blade before operating the machine

- Check the position of the blade before operating the travel levers. When the blade is located in the back, the operation of the travel levers is reversed.
  For instructions on How the machine travels, refer to Section "13-4. Traveling".

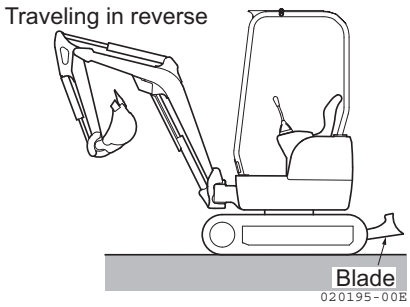

Make sure there are no persons nearby when turning or reversing the machine

- A signal person should be provided for safety when the work site is hazardous or when visibility is poor.
- Keep all other persons away from the work site or the traveling path of the machine.
- Alert persons nearby with a horn or other signal before starting the machine.
- The machine permits a limited range of vision toward the rear. Make sure there are no persons behind the machine before reversing.

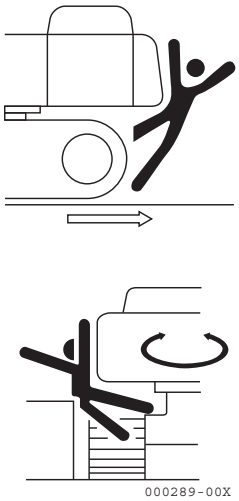

Courtesy of Machine.Market

https://truckmanualshub.com/

Precautions for traveling

- When traveling with the machine, keep the bucket 16 to 20 in. (40 to 50 cm) above the ground with boom and arm folded as illustrated below.
- If you need to operate the control levers while traveling, never move them abruptly.
- Travel the machine at a low speed and slow down when turning on rough terrain.
- Avoid running over obstacles if possible. If unavoidable, run the machine at a low speed while keeping the implement close to the ground. Never run over obstacles that may cause the machine to tilt more than 10 degrees.

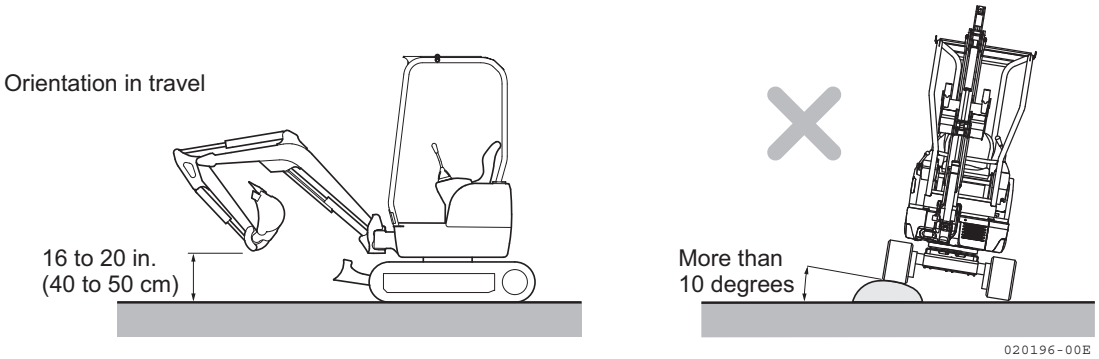

Running the machine on a slope

- Run the machine carefully on a slope to avoid overturning or skidding sidewards.
- When running the machine on a slope, keep the bucket 8 to 12 in. (20 to 30 cm) above the ground so that you can immediately lower it to the ground and stop the machine in an emergency.
- Never turn the machine on a slope or run it across the slope.
  Move down to flat ground and then make a turn.
  For instructions on how to run the machine on a slope, refer to Section "13-12. Precautions for going up and down a slope".
- On grasses, dead leaves or a wet metal plate, even with a slight gradient, the machine will easily slip. Under those circumstances, run the machine carefully at low speed to prevent it from skidding.

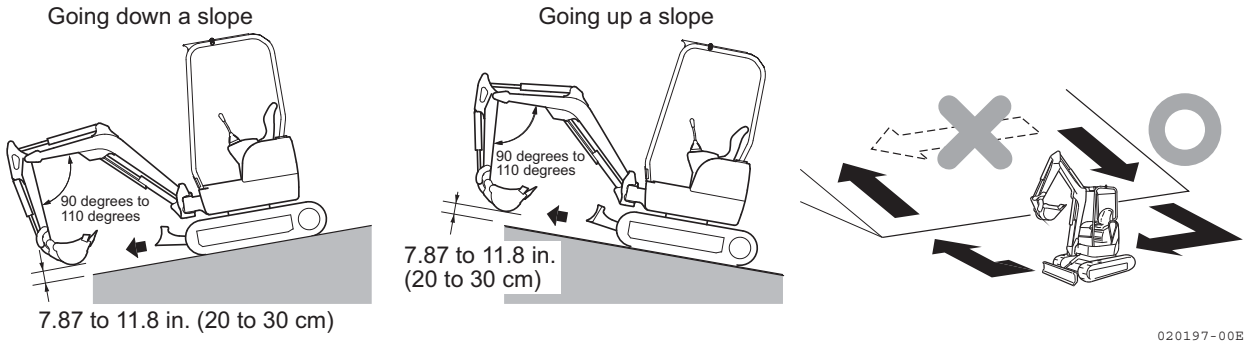

Courtesy of Machine.Market

https://truckmanualshub.com/

Avoid hazardous work

- Undermining a cliff is dangerous as it may cause a rockslide or landslide.
- Undercutting the machine is dangerous as it may cause a cave-in, resulting in the machine overturning and falling into the excavation.

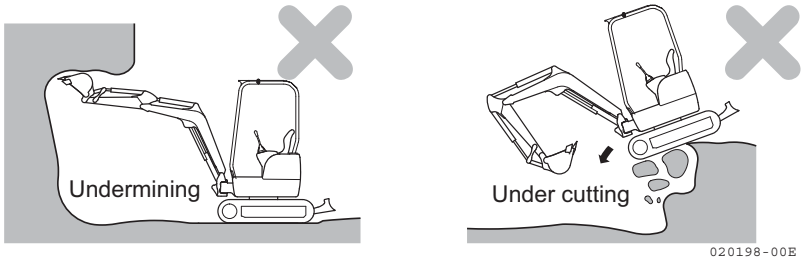

⚠ DANGER

Keep away from electric power lines

- Working in the vicinity of overhead electric power lines presents a very serious hazard and special precautions must be taken. For purposes of this manual you are considered to be working in the vicinity of overhead power lines when the attachment or load of your excavator, in any position, can reach to within the minimum safe distances shown below.
- The following procedures are effective in preventing accidents or injuries.
  1) Wear shoes with rubber or leather soles.
  2) Use a signal person to warn the operator when the machine is getting too close to a power line.
- If the machine should contact a wire, the operator must not leave the operator's seat.
- When working near power lines, caution all ground personnel to stand clear of the machine.
- To determine the transmission voltage at the working site, contact the electric utility concerned.

	Transmission voltage (V)	Minimum safe distance [ft. (m)]
Power distribution	100/200 or less	7 (2) or more
	6600 or less	7 (2) or more
Transmission line	22000 or less	10 (3) or more
	66000 or less	13.5 (4) or more
	154000 or less	16.5 (5) or more
	275000 or less	23 (7) or more

Courtesy of Machine.Market

https://truckmanualshub.com/

Prevent bumping the implements

- When traveling through tunnels or under bridges, or working at a site near other overhead obstacles, operate the machine carefully so as not to bump the boom, arm or the implement against those overhead obstacles.

Work only where visibility as good

- When working in a dark place, light up the area with the work lights and head lights, and prepare extra lighting equipment as necessary.
- Stop working when fog, snow or rain impedes your view.

Work carefully in a snow-covered areas

- Snow-covered ground and icy roads are dangerous as they may cause the machine to skid even on a slight slope. Run the machine at low speed, and never start, stop or turn abruptly on such ground or under such road conditions.
- Be careful removing snow as road shoulders or other hazards may be buried under snow.

Unstable ground creates a high possibility of overturn

- Keep away from cliffs, road shoulders or trenches if possible as the ground near them is unstable. The ground may crumble due to the weight or vibrations of the machine, resulting in an overturn or fall of the machine. Be particularly careful when working immediately after a rainstorm or after blasting as the ground may be unstable.
- Ground-fills or ground near a ditch may be unstable and may crumble due to the weight or vibrations of the machine, causing the machine to tilt. Much caution must be taken in working in these areas.
- When working in an area where there is a high possibility of falling rocks, wear a hard-hat and stay under the canopy.

Courtesy of Machine.Market

https://truckmanualshub.com/

Working on a slope

- Be aware that the machine may tip over when swinging the upper structure or swinging the implement on a slope.
- Never swing the upper structure toward the downward side of the slope with earth loaded in the bucket.
  (See the illustration at upper right.)
- If swinging is unavoidable, level off a work area to maintain the machine as horizontal as possible, then swing.
  (See the illustration at lower right.)
  For leveling off a work area, refer to Section "13-12. Precautions for going up and down a slope".

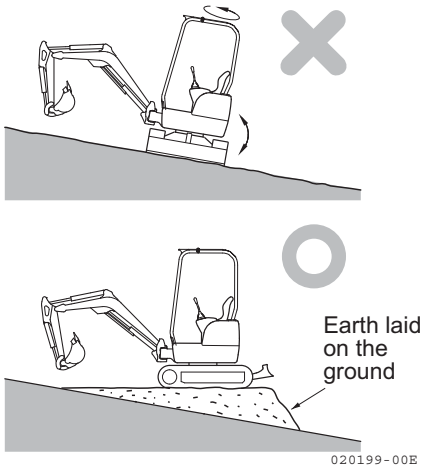

Parking the machine

- Park on level ground. If parking on a slope is unavoidable, block the tracks with solid pieces of wood and dig the bucket into the ground. (See the illustration at right.)

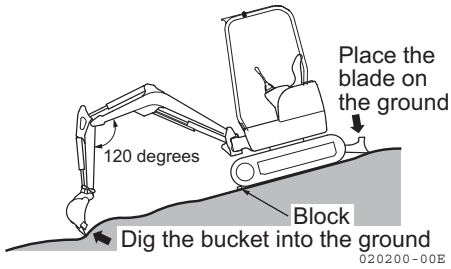

- If necessary to park the machine on the side of a road, set up a warning flag, fence, or lamp that can be easily recognized by passing cars and pedestrians but does not impede them.
  For parking procedures, refer to Section "13-16. Parking the machine".

- When leaving the operator's seat, do the following:
  (1) Be sure to place the bucket on the ground.
  (2) Set the lock levers to the lock position.
  (3) Stop the engine.
  (4) Set all the locks to the lock position.
  (5) Be sure to take the starter switch key out of the starter switch.
  For information about parking procedures, refer to Section "13-16. Parking the machine".
  For information about the parts to be locked, refer to Section "13-20. Locking".

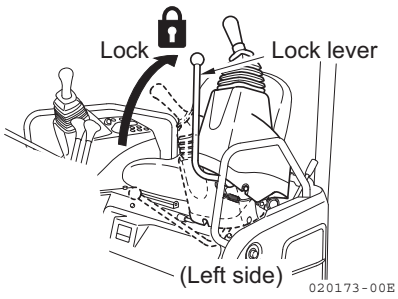

Courtesy of Machine.Market

https://truckmanualshub.com/

8-3. Precautions for transportation

Precautions for loading and unloading the machine

- Be careful in loading and unloading the machine, because it is a job of high hazard potential.
- Load or unload the machine at a low engine speed, and low travel speed.
- Load or unload the machine on the level, solid ground away from the shoulder of the road.
- Use ramp plates of adequate strength with hooks on their ends.
  Check to see that the ramp plates are wide, long, and thick enough to sustain the load so that you can load or unload the machine safely. Support the ramp plates with blocks, to provide additional strength.

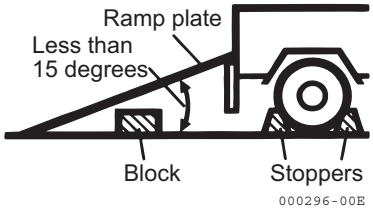

- Securely hook the ramp plates to the deck of the truck so that they will not come off.
- Remove grease, oil, and other slippery deposits from the ramp plates, and remove mud from the tracks to prevent the machine from skidding on the ramp plates.
- Do not load or unload the machine if the ramp plates are slippery because of rain, snow or ice.
- Never change travel direction while on the ramp plates. If you need to change travel direction, go down the ramp plates, and change direction on the ground.
- After loading the machine, block it with lumber and secure the machine with a chain or a wire rope so that the machine will not move during transit.

  For instructions on loading and unloading the machine, refer to Section "14. Transportation".

  For instructions on securing the machine, refer to Section "14. Transportation".

Precautions for transporting

- Transport the machine safely in accordance with local regulations and applicable law.
- Select a travel route consistent with the width, height and weight of the machine loaded on the truck.

Courtesy of Machine.Market

https://truckmanualshub.com/

8-4. Precautions for the battery

⚠ DANGER

Be careful in handling the battery

- The battery electrolyte contains dilute sulfuric acid, which can severely burn the eyes or skin. Always wear safety goggles and protective clothing when servicing the battery. If contact with the eyes or skin should occur, flush with a large amount of water and obtain prompt medical treatment.
- Because flammable hydrogen gas is produced by the battery, ignition and explosion may occur. Keep flames and sparks away from the battery.
- If you swallow battery electrolyte by mistake, drink a large amount of water, milk, or fresh eggs, and obtain medical treatment immediately.
- Before checking or handling the battery, be sure to stop the engine and turn the starter switch to the "OFF" position.
- Be careful not to cause a short circuit by placing a tool across the terminals of the battery.
- If a terminal connection is loose, sparks may be generated due to contact failure, causing possible ignition and explosion. Be sure to connect the terminals securely.
- Do not use the machine with the battery which is short of battery electrolyte. The shortage of battery electrolyte not only will reduce the life of the battery but also could cause an explosion.

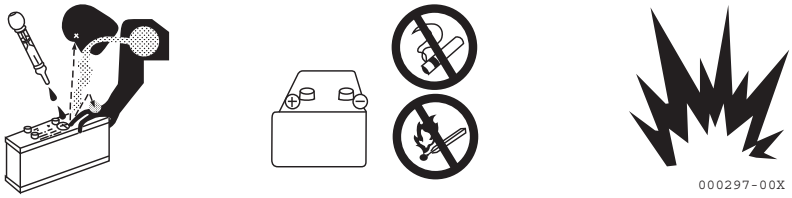

⚠ WARNING

Observe the procedures for starting the engine using booster cables

- When you start the engine using booster cables, wear safety goggles.
- If you start the engine by taking electric power from another machine, do not allow your machine to contact the other machine.
- To connect the booster cables, begin with the positive terminal, and to disconnect them, begin with the negative terminal (ground side).
- If a tool simultaneously touches the positive terminal and the machine, potentially hazardous sparks may be generated.
- Do not connect the booster cables to the terminals in reverse polarity. In other words, never connect the negative terminal on one machine to the positive terminal on the other machine.
- As the last step, connect the negative booster cable terminal to the upper structure frame. At that time, sparks will be generated. Consequently, connect the terminal to a point as far away from the battery as possible.

  For information about starting the engine using booster cables, refer to Section "17-3. If the battery is overdischarged".

Courtesy of Machine.Market

https://truckmanualshub.com/

8-5. Precautions for towing

Hook the wire rope on the frame when towing

- Improper towing procedures can cause death or serious injury.
- When towing a machine with another machine, use a wire rope strong enough to sustain the machine weight.
- Never tow a machine on a slope.
- Do not use a towing rope that is kinked, distorted or damaged.
- Do not ride on the towing cable or on the wire rope.
- When connecting an object to be towed, make sure that no person enters the space between the machine and the object.
- To connect an object to be towed, hook the sling belt as illustrated at right.
- The hook provided on the machine is intended for stabilizing the machine during transporting. Never use it for towing.

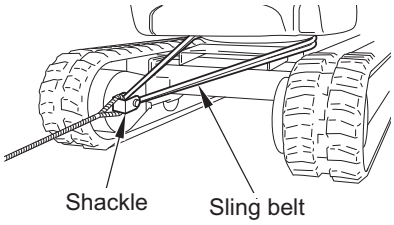

For information about towing the machine, refer to Section "17-2. Towing".

Courtesy of Machine.Market

https://truckmanualshub.com/

Courtesy of Machine.Market

https://truckmanualshub.com/

9. Precautions for Servicing

⚠ WARNING **Neglecting these instructions may cause extreme hazards.**

9-1. Precautions before servicing

Attach the "SERVICING IN PROGRESS" tag to an implement control lever

- If another person should start the engine or operate the control levers while service is in progress, the service personnel can sustain serious bodily injury.
  Always attach the "SERVICING IN PROGRESS" tag to one of the implement control levers, while service is in progress.
  The "SERVICING IN PROGRESS" tag is enclosed with the Operation & Maintenance Manual.

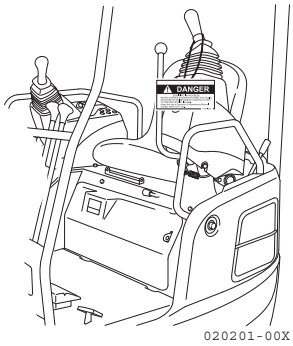

Use appropriate tools

- Using damaged or worn tools or using tools inappropriate for the required application is very dangerous, and may also cause damage to the machine. Make sure to use the tools that are appropriate for the specific job.
  For information about tools, refer to Section "22-1. Required tools".

Courtesy of Machine.Market

https://truckmanualshub.com/

Periodically replace the parts essential to safety

- Aging or damage to the parts listed below can cause a fire.
  Make sure that they are replaced periodically.
  - Fuel system : Fuel hose and fuel tube cap
  - Hydraulic system : Outlet hose of main pump
- The parts listed above must be replaced periodically even if no abnormality is found in them. (They age with time.)
- If any abnormality is found in them, replace or repair the parts even though the suggested replacement time has not been reached.
  For information about replacing essential safety parts, refer to Section "23. Replacing Essential Parts Periodically".

Stop the engine before beginning inspection and servicing

- Be sure to stop the engine before performing inspection and servicing.
- If necessary to perform service while running the engine, as when cleaning the inside of the radiator, be sure to set the lock levers to the lock position and do the job together with a partner.
  (One should take the operator's seat so that he or she can stop the engine at any time.)
  That person must be careful not to touch any levers in the cabin.
- Be extremely careful not to contact the moving fan or fan belt, or any hot surfaces.

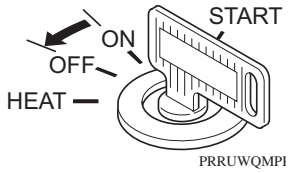

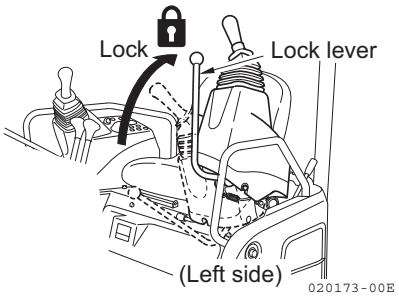

Courtesy of Machine.Market

https://truckmanualshub.com/

9-2. Precautions during servicing

Keep unauthorized persons away

- Never admit any persons into the work area who are not taking part in the work. Be conscious of the safety of other persons.
  Be especially careful when grinding, welding, or using a large hammer.

Removed attachments

- When an attachment is placed on the ground or against a wall after removing it or prior to reinstalling it, be sure that it is stable to prevent it from falling down.

Working under the machine

- Before performing service or repairs underneath the machine, place the implement on the ground in its lowest position.
- Be sure to apply blocks to the tracks to lock the tracks securely.
- Never perform service underneath the machine if it is not completely stable.

Keep the machine clean

- Spilled oil or grease, or scattered parts are dangerous and can cause falls. Keep the machine clean.
- Getting water into the electrical system may cause it to malfunction, resulting in faulty operation of the machine. Also it may permit electrical leaks that could cause a fire or electric shocks.
- Never clean the sensors, connectors or the operator's seat with water or steam.

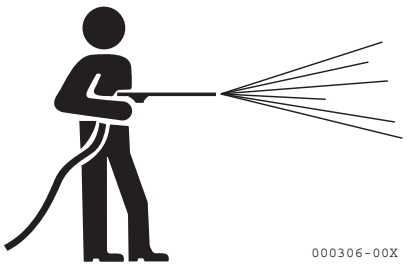

Courtesy of Machine.Market

https://truckmanualshub.com/

Precautions for fueling and oiling

- Spilled fuel and oil could cause a fire and they are dangerously slippery. Wipe up spills immediately.
- Close the fuel cap and oil cap securely.
- Never use fuel for cleaning.
- Provide good ventilation when replenishing fuel or oil.

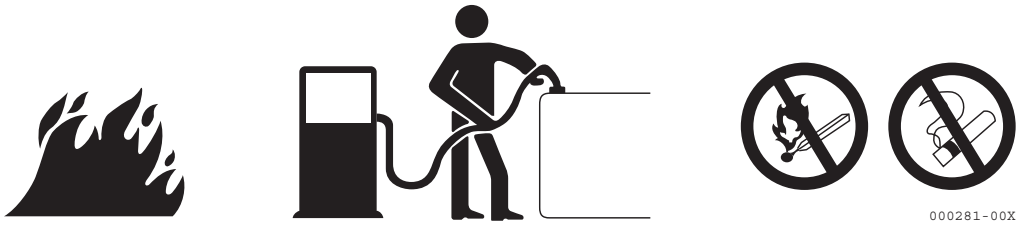

Radiator cooling water level

- Before checking the radiator cooling water level, stop the engine and wait until the engine and the radiator have cooled down.
- Slowly loosen the cap to release the inner pressure before removing the cap.

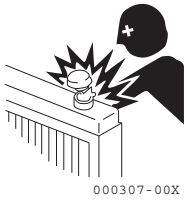

Use an explosion-proof lighting source

- Use an explosion-proof lighting source when checking the fuel, the oil, the cooling water, or the battery electrolyte. Failure to use an explosion-proof lighting source may cause ignition to occur, inducing an explosion.

Precautions for handling battery

- When welding or repairing the electrical system, disconnect the negative terminal of the battery to interrupt the electric circuit.

Courtesy of Machine.Market

https://truckmanualshub.com/

Handling high-pressure hoses

- Leaks of fuel and oil could cause a fire.
- Do not bend a high-pressure hose forcibly, or strike it with a hard object. Because abnormally bent or damaged piping, tubes, and hoses easily burst under high pressure, never use them.

Be careful of hot oil under high-pressure

- The hydraulic system for the implement operates under high pressure.
  When replenishing or draining hydraulic oil, or performing inspection or servicing, be sure to first relieve the high pressure.
- The emission of hot oil under high-pressure from a small leak could result in serious bodily injury. Wear safety goggles and thick gloves when checking for leaks. Use a piece of cardboard or a plywood block to detect emissions of hot oil.
  If the hot oil should contact your body, obtain prompt medical treatment.

Be careful when servicing systems under high temperature and high pressure

- The engine cooling water and various lube oil systems are still under high temperature and pressure immediately after the engine has stopped. Removing caps, draining oil and water, or replacing filter elements at that time may cause a burn. Wait until the temperature drops, then begin servicing in accordance with the procedures described in this manual.
  For cleaning the inside of the cooling system, refer to Section "25-2. Non-periodic services".
  For checking the level of the cooling water and the hydraulic oil, refer to Section "25-3. Checking before start-up".
  For checking the oil levels in various systems and replenishing the oil, refer to Sections "25-3 to 5. Periodic services".
  For replacing the oils in various systems and replacing the filter elements, refer to Sections "25-6 to 8. Periodic services".

Courtesy of Machine.Market

https://truckmanualshub.com/

Hazards from high-pressure grease when adjusting the track crawler tension

High-pressure grease is enclosed in the track crawler adjuster.

Failure to use the specified procedures for adjusting the track crawler tension could cause grease plugs or nipples to eject, which could result in bodily injury.

- Do not loosen the grease draining plug more than one turn.
- Never position your face, hands, legs, or body in line with the grease draining plug and valve.

  For information about adjusting track crawler tension, refer to Section "25-2. Non-periodic services".

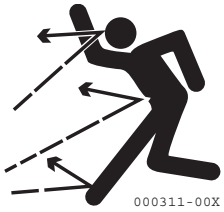

Rotating radiator fan and fan belt

- Never contact the rotating radiator fan or fan belt with any object.
- Contacting the rotating radiator fan or fan belt with any object can result in serious bodily injury.

Processing wastes

- Do not dispose of waste oil in the sanitary sewer system.
- Always drain the oil from the machine into a secure container, and never directly to the ground.
- When disposing of toxic wastes such as fuel, oil, cooling water, solvent, filters, and spent batteries, comply with all applicable disposal regulations.

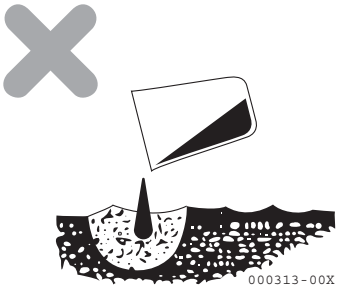

Courtesy of Machine.Market

https://truckmanualshub.com/

10. Safety Messages (Warning Labels)

There are a number of Warning Labels on the machine. Full descriptions of all Warning Labels and their locations are reviewed in this section. Periodically confirm whether all Warning Labels are still mounted in their correct locations and can be easily read.

If a warning label is missing, damaged or cannot be read, it must be promptly replaced. Also, if a warning label was mounted on a part which is replaced, a new warning label must be installed on the replaced part.

Contact your dealer to obtain new labels. The part code number is shown on each warning label as well as in the parts manuals.

10-1. Location of warning labels

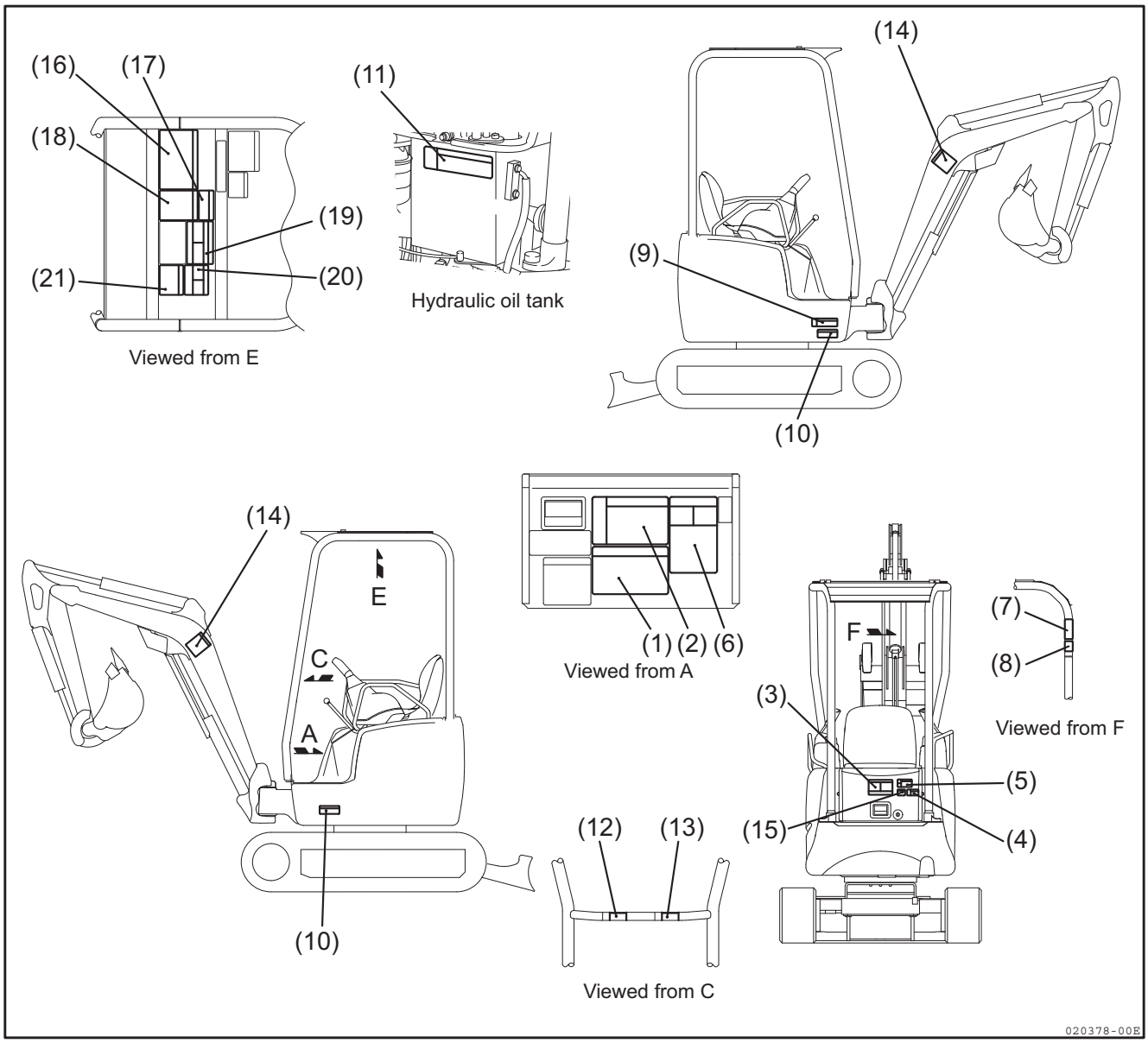

Courtesy of Machine.Market

https://truckmanualshub.com/

(1)

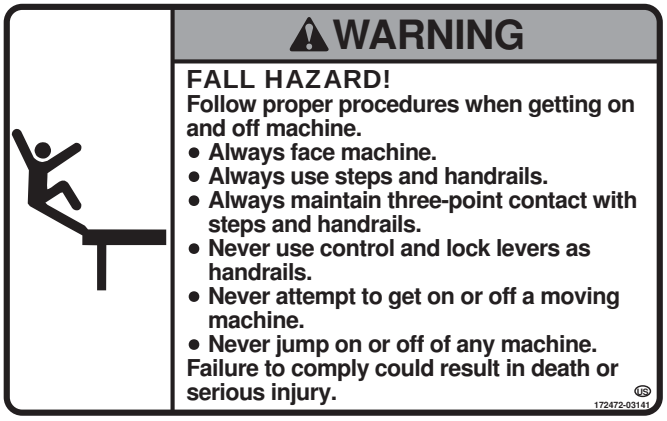

(2)

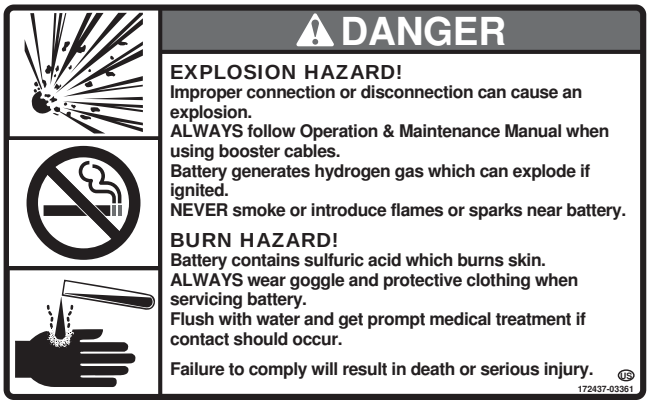

(3)

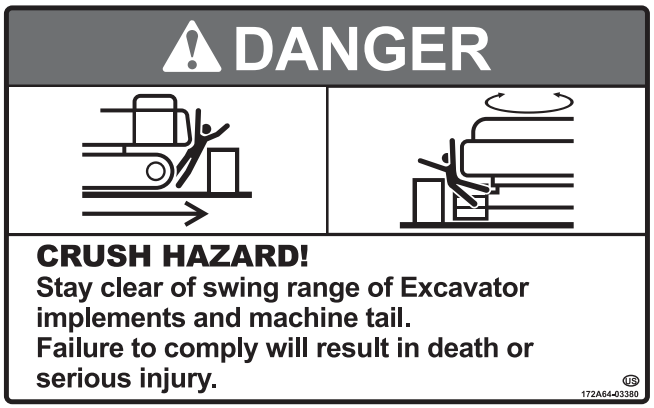

Courtesy of Machine.Market

https://truckmanualshub.com/

(4)

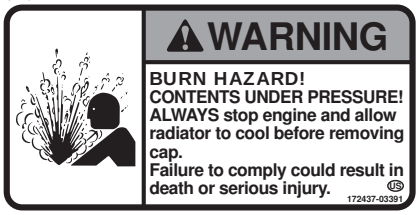

(5)

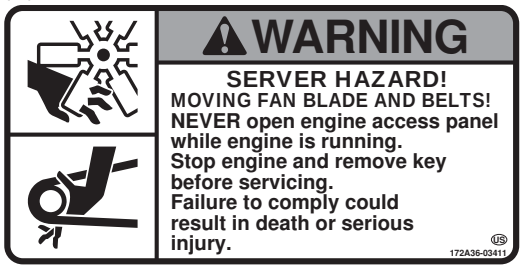

(6)

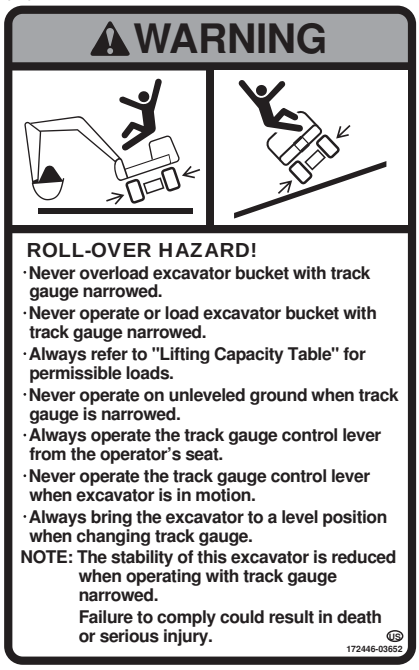

(7)

(8)

(9)

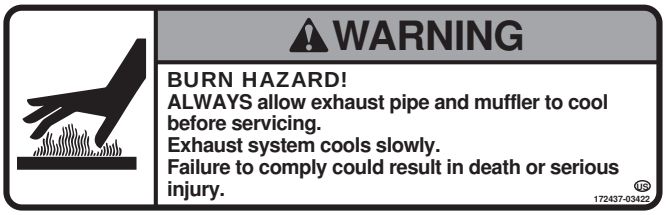

(10)

(11)

Courtesy of Machine.Market

https://truckmanualshub.com/

(12)

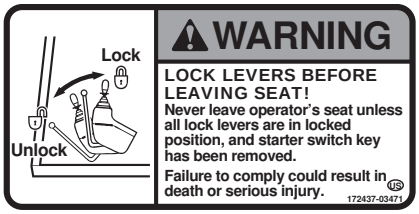

(13)

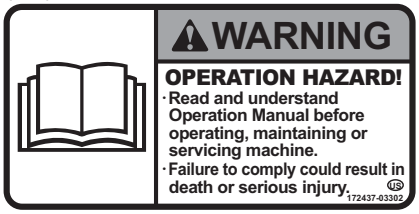

(14)

(15)

(16)

WARNING

TIP-OVER HAZARD!

Never allow total bucket weight to exceed excavator lift capacity, to prevent bodily injury from tip-overs.
Never operate or load excavator bucket with track gauge narrowed.
This table shows the lifting capacity with track gauge widened.

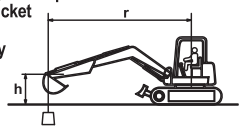

Note where applicable specifications conform to ISO standards.
Loads shown in table include weight of standard bucket (69 lbs.【32 kg】)
Weight of all lifting devices and attachment must be deducted to determine load that can be lifted.
Lift point is bucket hinge point with bucket fully curled.
Specifications subject to change without notice.
※Rated Hydraulic lift capacity

LIFT POINT HIGHT	(r) LIFT RADIUS · in. (mm)				(r) LIFT RADIUS · in. (mm)				(r) LIFT RADIUS · in. (mm)			
h in. (mm)	RATED LIFT CAPACITY OVER END BLADE DOWN · lbs. (kg)				RATED LIFT CAPACITY OVER END BLADE UP · lbs. (kg)				RATED LIFT CAPACITY OVER SIDE BLADE UP · lbs. (kg)			
	MAX	98.5 (2500)	78.7 (2000)	MIN	MAX	98.5 (2500)	78.7 (2000)	MIN	MAX	98.5 (2500)	78.7 (2000)	MIN
78.7 (2000)	*749 (340)	*705 (320)			496 (225)	*694 (315)			518 (235)	*694 (315)		
59.1 (1500)	*771 (350)	*815 (370)	*936 (425)		451 (205)	*672 (305)	*925 (420)		473 (215)	*815 (370)	*936 (425)	
39.4 (1000)	*804 (365)	*992 (450)	*1311 (595)	1466 (665)	407 (185)	628 (285)	903 (410)	1157 (525)	440 (200)	650 (295)	959 (435)	1212 (550)
19.7 (500)	*826 (375)	*1157 (525)	*1631 (740)	*2028 (920)	407 (185)	617 (280)	859 (390)	1036 (470)	440 (200)	650 (295)	914 (415)	1102 (500)
Ground (0)	*859 (390)	*1212 (550)	*1686 (765)	*2314 (1050)	418 (190)	584 (265)	804 (365)	1146 (520)	451 (205)	628 (285)	848 (385)	1091 (495)
-19.7 (-500)	*903 (410)	*1201 (545)	*1620 (735)		462 (210)	573 (260)	782 (355)		496 (225)	617 (280)	848 (385)	
-39.4 (-1000)	*925 (420)		*1499 (680)		551 (250)		826 (375)		584 (265)		892 (405)	

172A64-03560

Courtesy of Machine.Market

https://truckmanualshub.com/

(17)

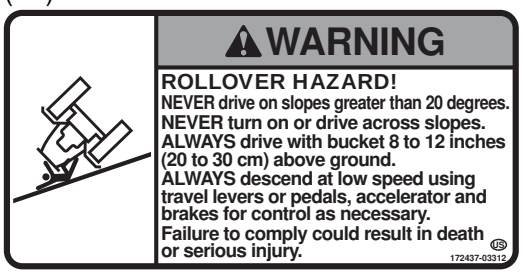

(18)

(19)

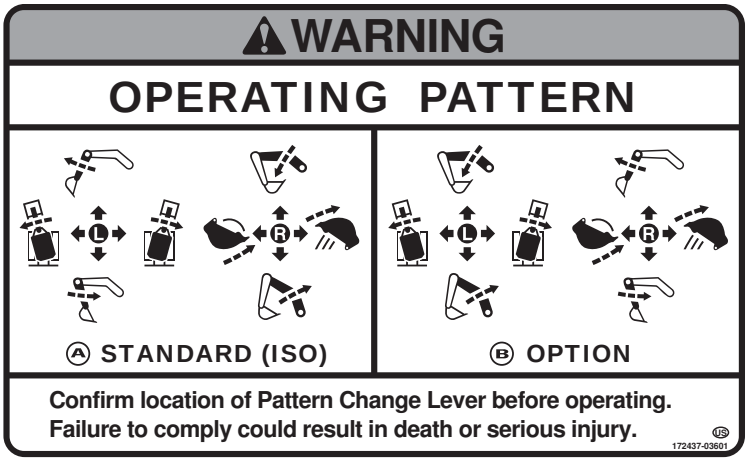

(20)

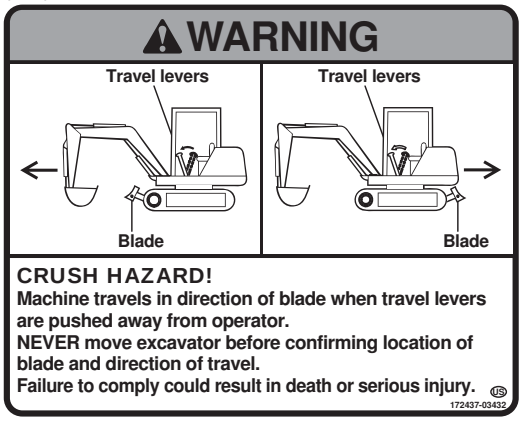

(21)

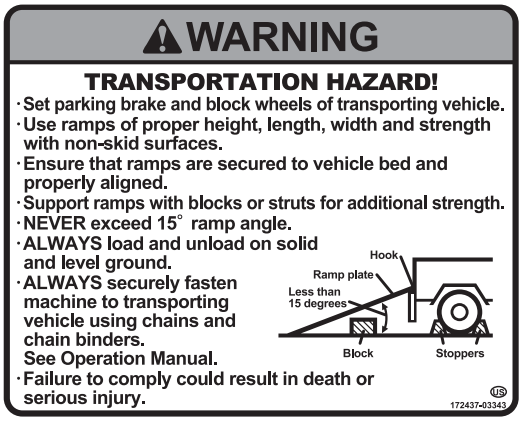

Courtesy of Machine.Market

https://truckmanualshub.com/

Courtesy of Machine.Market

https://truckmanualshub.com/

OPERATION

Courtesy of Machine.Market

https://truckmanualshub.com/

11. Identification of Important Parts

11-1. Overview of the machine

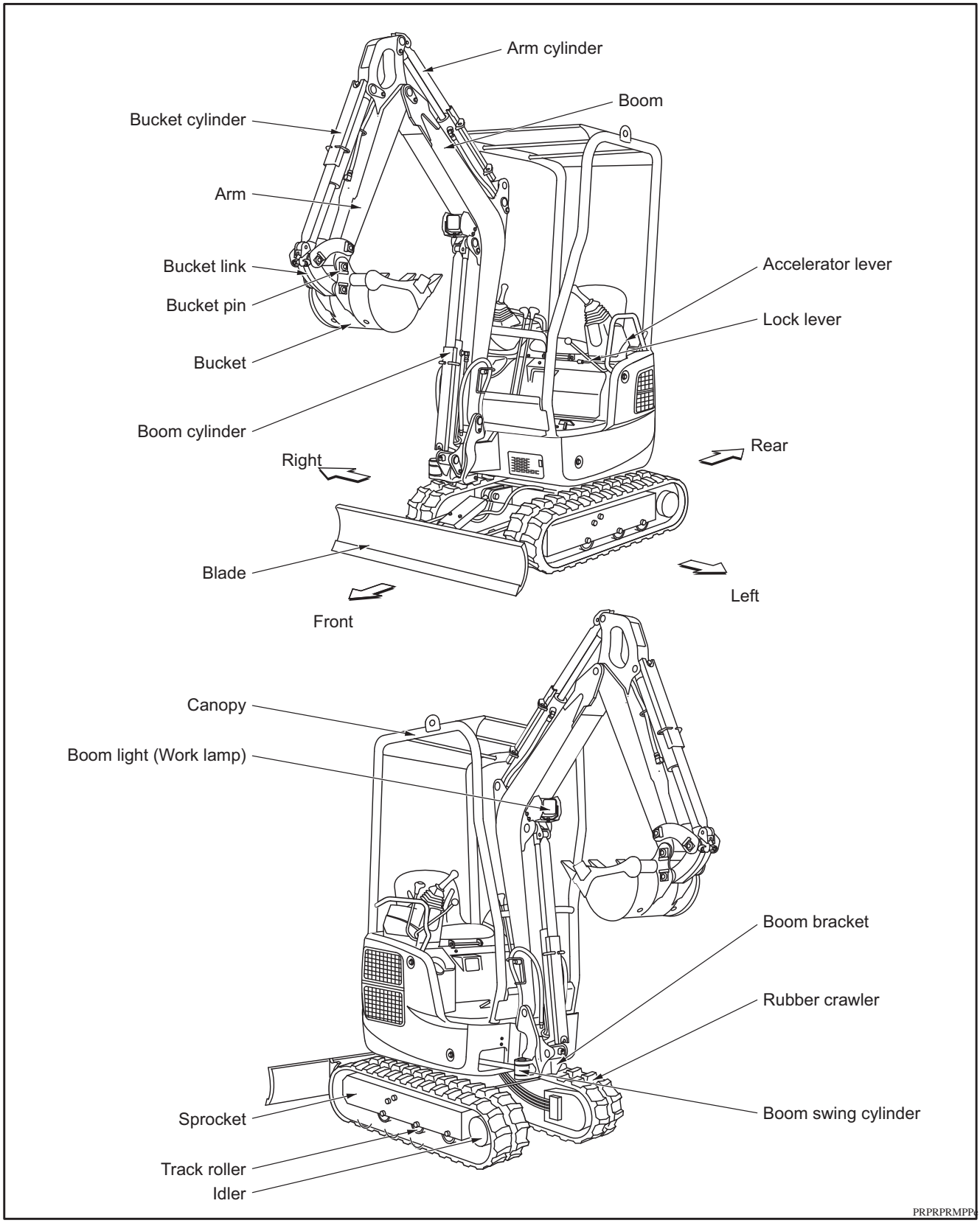

Courtesy of Machine.Market

11-2. Controls and switches

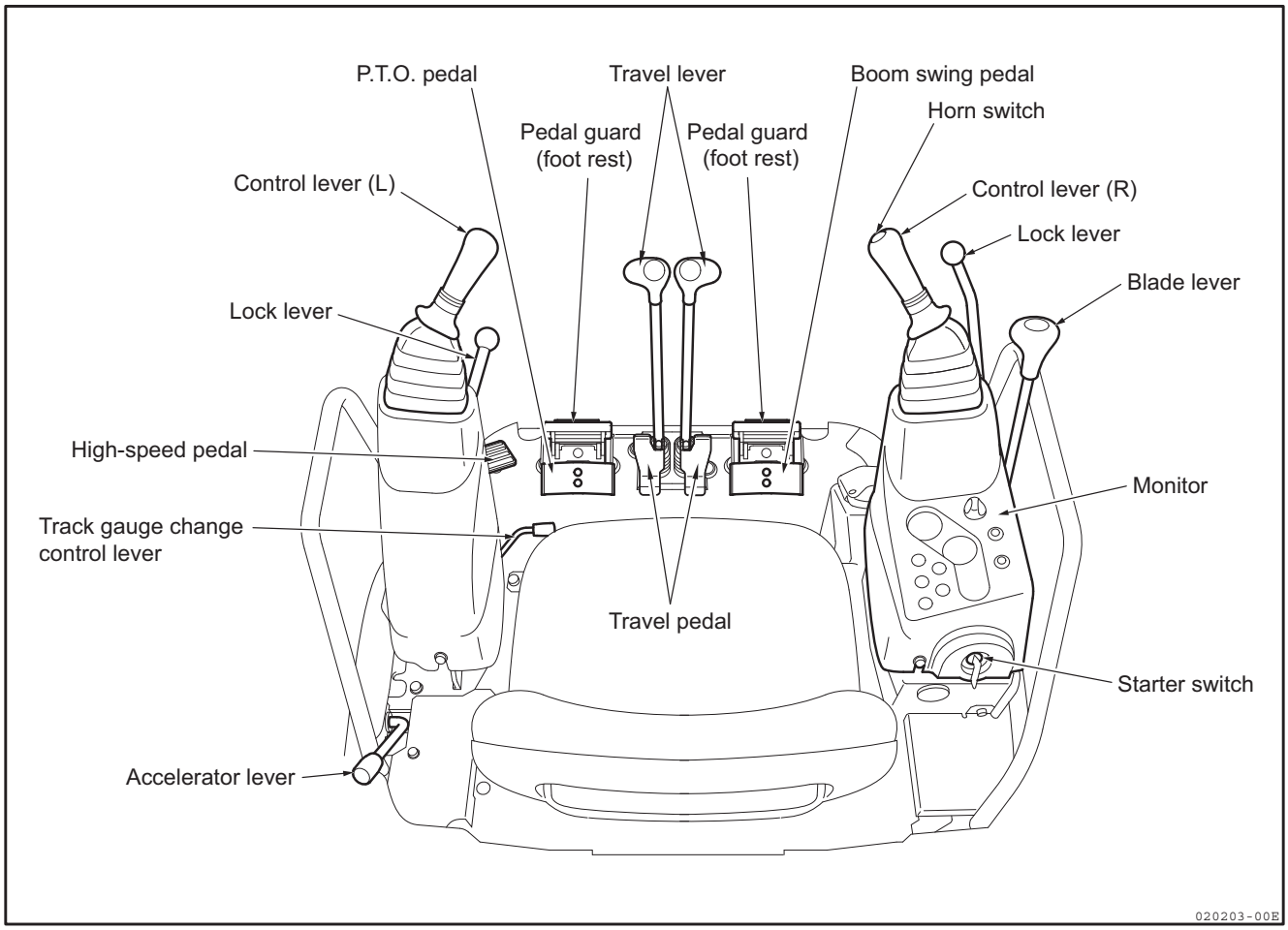

Courtesy of Machine.Market

https://truckmanualshub.com/

12. Description of Control Devices

This section describes several of the control devices necessary to operate the machine. In order to ensure safety and comfort in working with the machine, it is imperative for you to fully understand how to operate and interact with these devices.

12-1. Monitor

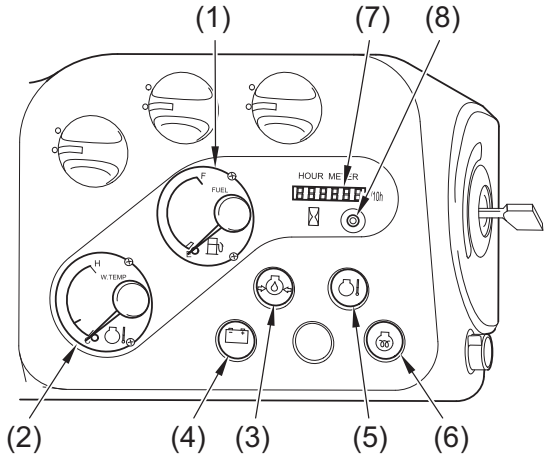

IMPORTANT

For start-up inspection, be sure to refer to PART THREE: MAINTENANCE, or Section "13. Operating Instructions" as well as the monitor messages as shown above.

⚠ WARNING

When an indicator lamp lights and a buzzer sounds during operation, immediately stop operation and check and service the abnormality.

When the starter switch key is in the “ON” position, the monitor lamps (3), (4) and (5) light and buzzer sounds.
(Only the water temp alarm lamp (5) goes off in a few seconds.)
Normally, all monitor lamps go off after the engine starts. When there is any failure during operation, a lamp lights and buzzer sounds. (If the starter switch key is in the “ON” position and a monitor lamp does not light, its bulb must be burnt out.)

Courtesy of Machine.Market

https://truckmanualshub.com/

(1) Fuel gauge

The fuel gauge works while the starter switch key is in the “ON” position and indicates the fuel amount in the fuel tank. When the gauge pointer indicates close to E (empty), refill fuel oil soon.

- It is not abnormal that the fuel gauge may not indicate properly immediately after the starter switch key is turned to the “ON” position.
- The reading on the fuel meter scale is affected by how much the machine is slanted.

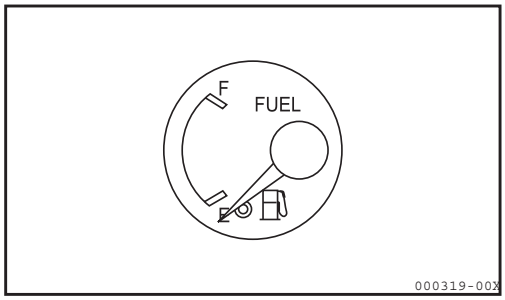

(2) Water temp meter

This indicates water temperature for engine.

When the water temp. meter indicates "H" and buzzer sounds during operation, idle the engine at low speed until the water temperature cools down.

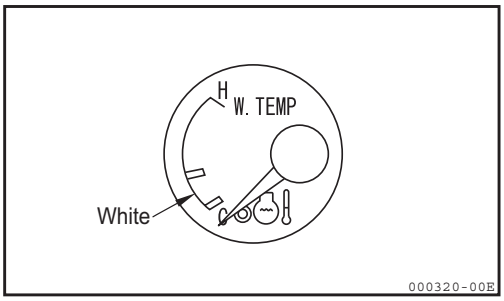

(3) Engine oil pressure alarm lamp

If engine oil pressure falls below the normal level, the alarm lamp will turn on and the buzzer will sound. In this event, stop the engine and inspect it according to Section "17-4. Troubleshooting".

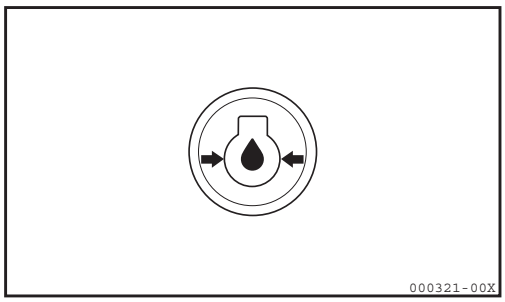

(4) Battery charge alarm lamp

If the battery is not charged properly, the alarm lamp will flash. In this event, inspect the battery charging circuit. If you find something abnormal with it, take corrective action by referring to Section "17-4. Troubleshooting".

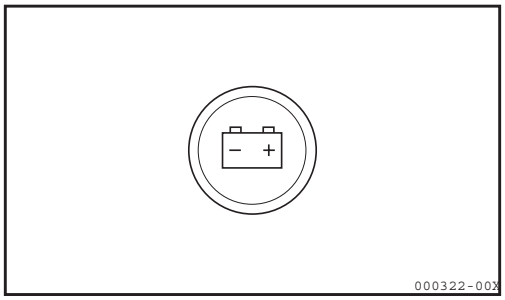

(5) Water temp alarm lamp

When the starter switch is turned to the "ON" position, the alarm lamp goes on and then goes off in a few seconds.

When the cooling water temperature rises abnormally during operation, the alarm lamp goes on and the buzzer sounds, indicating engine overheating.

Idle the engine for a while, and stop the engine. After the engine has cooled, take corrective actions.

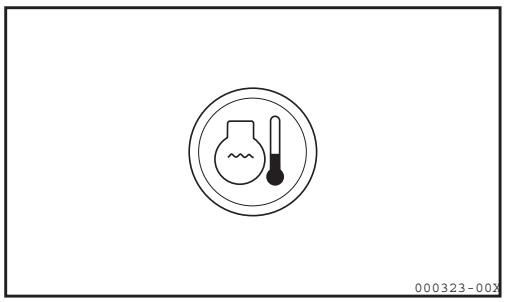

Courtesy of Machine.Market

https://truckmanualshub.com/

(6) Preheat pilot lamp

When the starter switch is turned to the "HEAT" position, the preheat pilot lamp goes on and then goes off in 15 seconds, which indicate it is okay to finish the preheat operation.

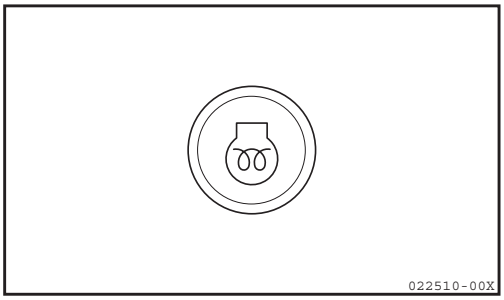

(7) Hourmeter

The hourmeter indicates the accumulated service hours for the machine.

The reading of the hourmeter helps you set time intervals for periodic servicing of the machine. While the engine is running, the hourmeter will continue registering even if the machine is not being operated.

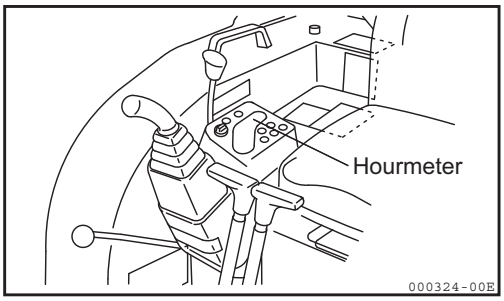

- The hourmeter reading increases by "1" per hour regardless of engine rotational speed.
  The digit at the far right registers "1" per 0.1 hour (6 min.).

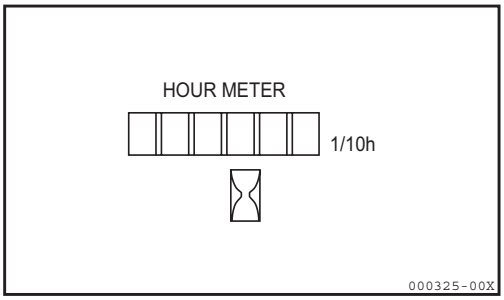

(8) Hourmeter display button

Even if the starter switch is in the "OFF" position, the operation time can be checked by pushing the hourmeter display button.

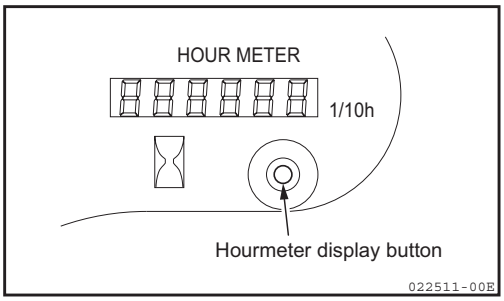

Courtesy of Machine.Market

https://truckmanualshub.com/

12-2. Switches

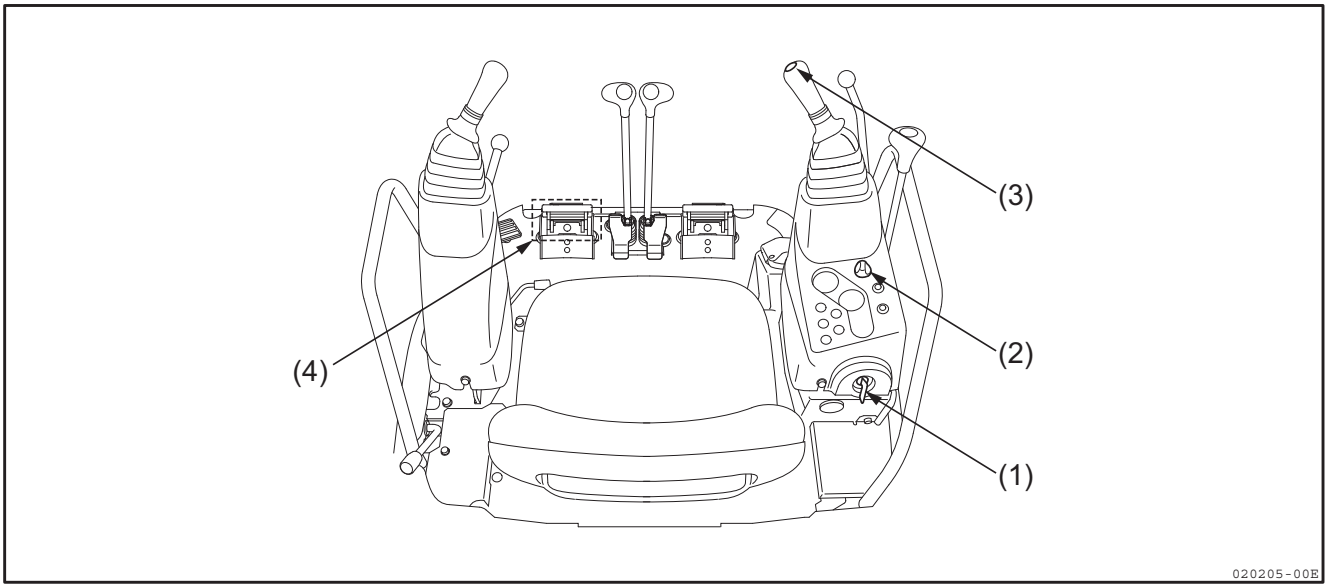

(1) Starter switch

Use this switch to start and stop the engine.

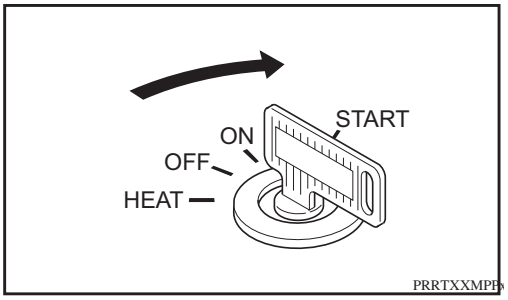

- OFF position
  Turn the starter switch key to "OFF" to stop the engine and disconnect electrical circuit or remove the starter switch key.
- ON position
  Turn the starter switch key to "ON" to connect the electrical fuel solenoid circuit, the electrical charging circuit and the lamp circuit. (Keep the starter switch key in this position while running the engine.)
  When the engine is not running and the starter switch key is in the "ON" position, a buzzer will sound.
  Turn the switch to the "OFF" position to stop the buzzer.
- START position
  Turn the starter switch key to "START" to start the engine. Release the starter switch key after the engine is started and it will return to the "ON" position.
- HEAT position
  Turn the starter switch key to activate the preheating circuit and warm up intake air to make engine starting easier in cold weather. (Set the starter switch key to this position when the outside temperature is low.)

Courtesy of Machine.Market

https://truckmanualshub.com/

(2) Light switch

The boom light goes on when the switch is turned on with the starter switch set to the “ON” position.

- ON : The lamp goes on.
- OFF : The lamp goes off.

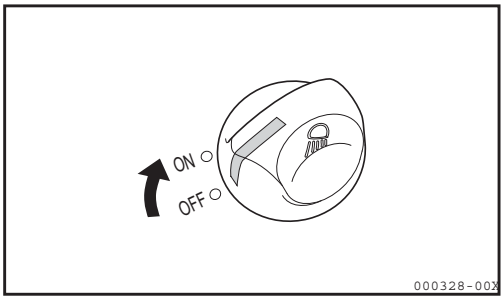

IMPORTANT

Do not keep the lamp on for a long time while the engine is not running. The battery will run down and the engine may not start.

(3) Horn switch

Press the switch on the top of the right control lever to sound the horn.

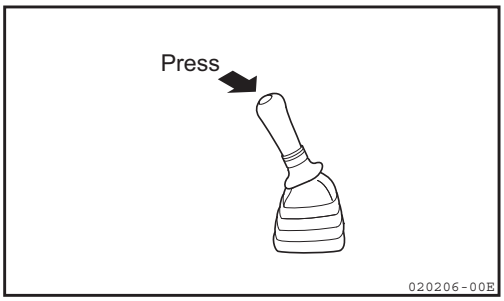

(4) Travel alarm switches

When the travel levers are pushed or pulled, the travel alarm switches automatically turn on and an alarm sounds.

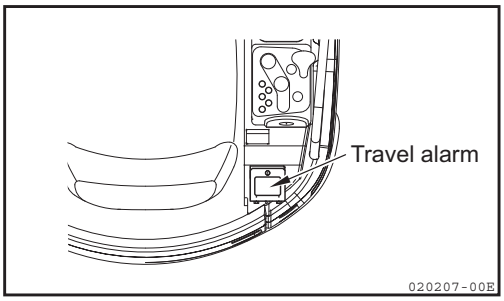

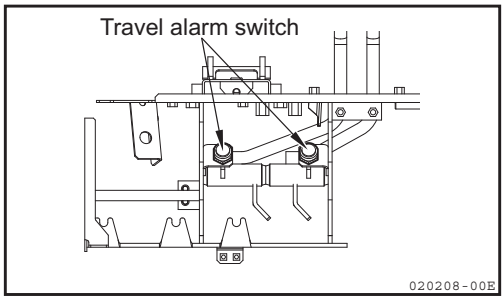

Courtesy of Machine.Market

https://truckmanualshub.com/

12-3. Control levers and pedals

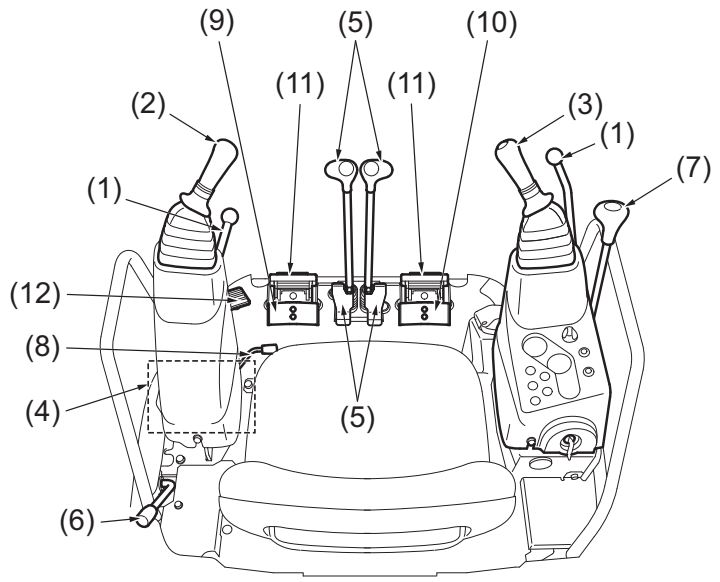

(1) Lock levers

The lock levers lock the implement operation and the swing operation. When the left lock lever is pulled back, the control lever stand on the left side comes up. However, when the right lock lever is pulled back, the control lever stand on the right side does not come up.

⚠ WARNING

- **When leaving the operator's seat, be sure to place the bucket on the ground and move all lock levers to the lock positions. Keep in mind that if you should touch an unlocked control lever inadvertently, a serious accident could occur.**
- **Be sure to place the lock levers securely in the lock position. If not, they could slip out of the lock position. Thus always make sure that the lock levers are in the lock position as illustrated in the figure at the right.**

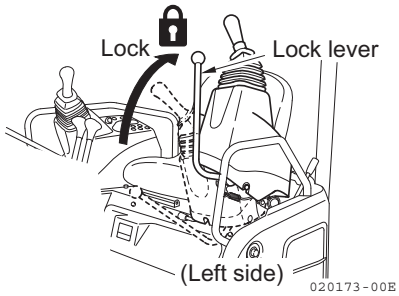

- **When pulling the lock levers back, be careful not to touch a control lever.**
- **Remember that if the lock lever is not pulled back fully, the implement will not be locked.**

IMPORTANT

This machine employs the hydraulic locking system. If the lock levers are in the lock position, all the hydraulic cylinders for the boom, arm, bucket, boom swing and P.T.O. as well as the swing motor and travel motors will not operate although the right and left control levers and control pedals are free to move.

Courtesy of Machine.Market

https://truckmanualshub.com/

⚠ WARNING

When pushing the lock levers forward, be careful not to accidentally touch the implement control levers.

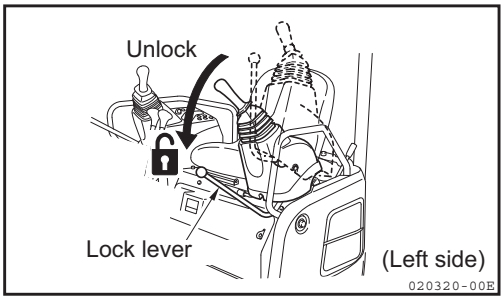

⚠ WARNING

The relationship between the control lever shift configuration and the implement movement is detailed in this manual. To prevent an accident due to operational error, therefore, the hydraulic system must never be modified by reconnecting the hydraulic hoses and valves.

(2) Control lever (L)

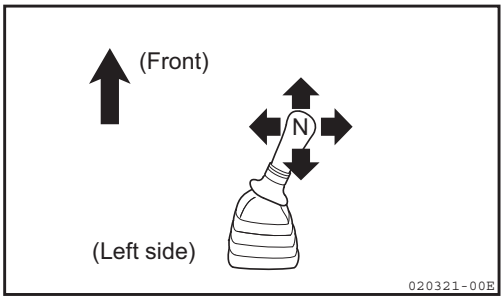

(3) Control lever (R)

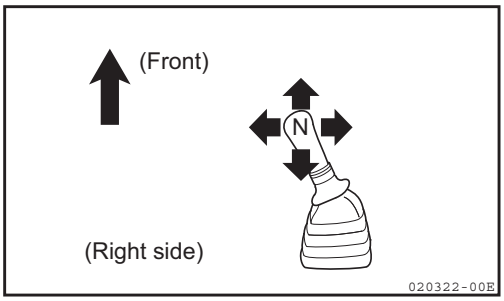

Use these levers to control the implements and swinging of upper structure.
Refer to Section "13-8. Operating the implement".

(4) 2 way valve
STD : ISO pattern
OPT : OPT pattern
Refer to Section "13-8. Operating the implement".

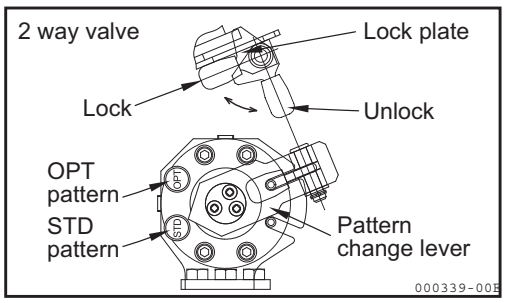

Courtesy of Machine.Market

(5) Travel levers and pedals

The travel levers and pedals control the traveling of the machine.

⚠ WARNING

- **If the blade is in the reverse direction, the travel levers and pedals should also be operated in reverse for forward and backward travel.**
- **When operating the travel levers and pedals, you must check to see if the blade is in the normal position or in the reverse position. Note that the blade is in the normal position when the sprocket is on the rear side.**

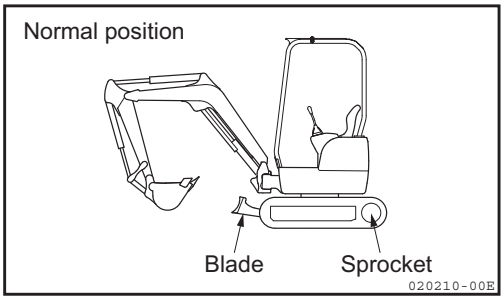

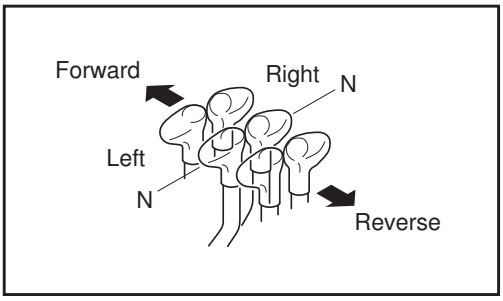

When the blade is in the normal position:

Forward : Push the travel levers forward.
Step on the front of the pedals.

Reverse : Pull the travel levers backward.
Unfold the extension plates to step on them.

N : Neutral...The machine stops.

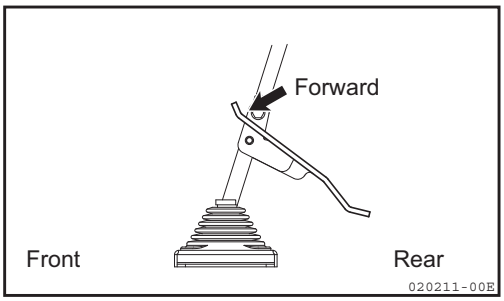

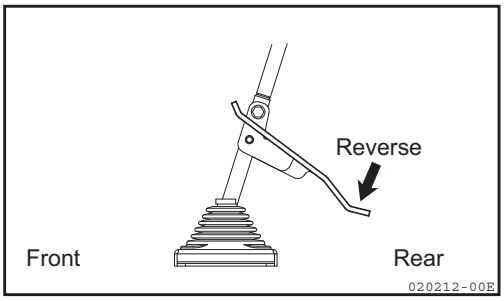

(6) Accelerator lever

The accelerator lever controls the engine speed (output).

(A) Idling : Push the lever fully forward.

(B) Run : Pull the lever fully backward.

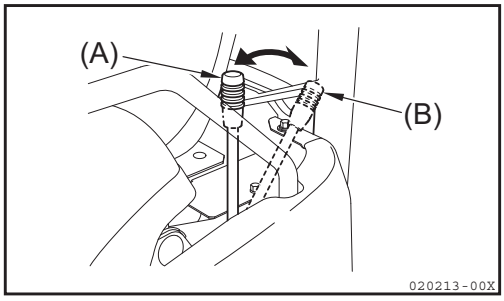

(7) Blade lever

Use this lever to control the blade.

IMPORTANT

The blade lever is not locked by setting the lock levers to the lock position. Never touch the blade lever when not operating the blade.

(A) : Down : Push the lever forward.

(B) : Up : Pull the lever backward.

N (Neutral) : When released, the lever will return to the neutral position and the blade is held as it is.

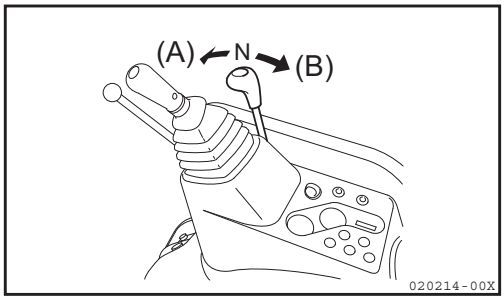

Courtesy of Machine.Market

https://truckmanualshub.com/

(8) Track gauge change control lever

Use this lever to widen or narrow the track gauge for proper work posture.

(A) : To widen the track gauge, push the lever forward.

(B) : To narrow the track gauge, pull the lever back.

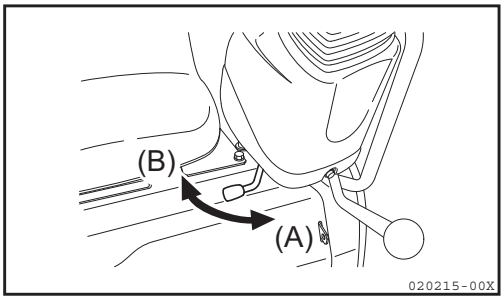

⚠ WARNING

- **Be sure to operate the track gauge change control lever at middle engine speed to avoid hazard.**
- **When operating the track gauge change, the crawlers move widthwise. Be sure to operate it from the operator's seat only to prevent your body from being caught between the crawler and the upper structure or between the crawler and nearby obstacles.**
- **For the procedure for changing the track gauge, refer to Section "13-9. Operating the track gauge change".**

(9) P.T.O. pedal

Use this pedal to control the attachment.

Refer to Section "13-22. Handling hydraulic P.T.O.".

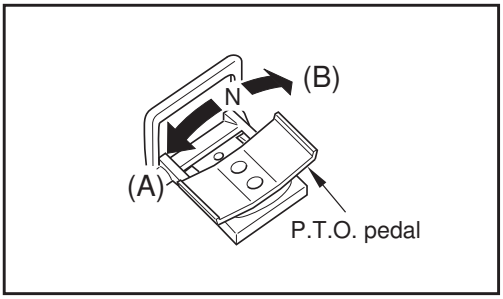

(10) Boom swing pedal

Use this pedal to swing the boom to right and left.

(A) : Swing right : move to the right

(B) : Swing left : move to the left

N (Neutral) : When released, the pedal will return to the neutral position and the boom is held as it is.

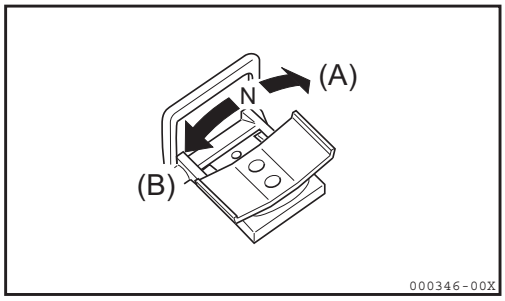

Courtesy of Machine.Market

https://truckmanualshub.com/

(11) Pedal guard (foot rest)

The boom swing pedal and the P.T.O. pedal have respective pedal guards.

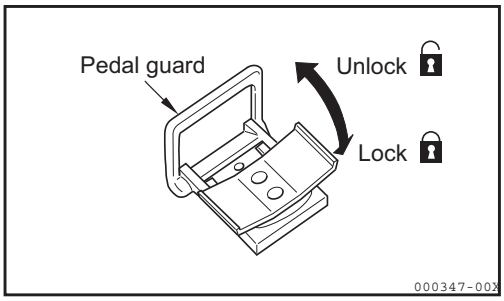

⚠ WARNING

To avoid bodily injury, securely place the respective pedal guard in the lock position whenever the boom swing pedal or the P.T.O. pedal is not being operated.

Placing the respective pedal guard in the lock position completely covers the boom swing pedal or the P.T.O. pedal.

To prevent misuse, always set the respective pedal guard in the lock position whenever the boom swing pedal or the P.T.O. pedal is not being operated. These pedal guards can be used as foot rests.

(12) High-speed pedal

Step on this pedal to control the travel speed. Step on the pedal while the travel levers are in operation to increase the travel speed.

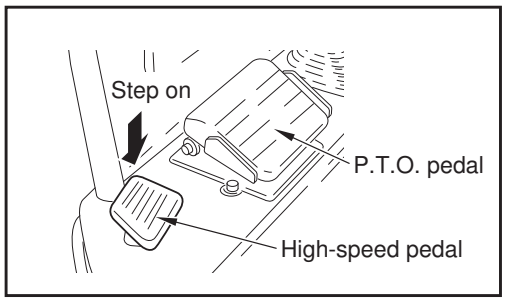

IMPORTANT

Do not travel at high speed for lengthy periods of time.

Do not step on the high-speed pedal while operating the blade.

Courtesy of Machine.Market

https://truckmanualshub.com/

12-4. Engine hood

⚠ WARNING

Do not open the engine hood while the engine is running. Check and service the engine after it has been stopped and temperatures have cooled.

(1) Opening the engine hood

1) Insert the starter switch key and turn it counterclockwise to unlock the engine hood.
2) Pull the engine hood lever to release the engine hood, and it will open.
3) When the engine hood is fully open, lock it in that position with the stopper rod.

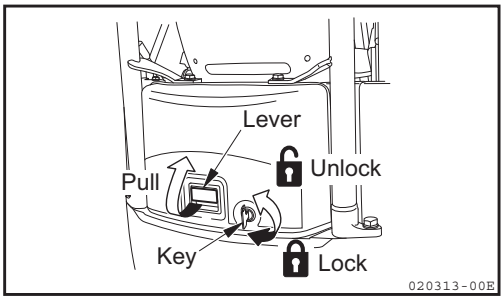

(2) Closing the engine hood

1) Lift the engine hood slightly and pull the stopper rod back to disengage it.
2) Close the engine hood and press it until it clicks shut.
3) Turn the starter switch key clockwise to lock the engine hood.

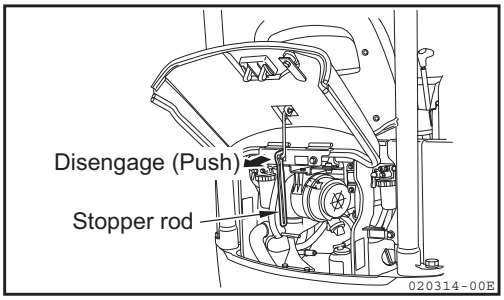

12-5. Storage space for the operation & maintenance manual

The storage space for the operation & maintenance manual is provided under the operator's seat.
Pull the lever up to open the cover (1).

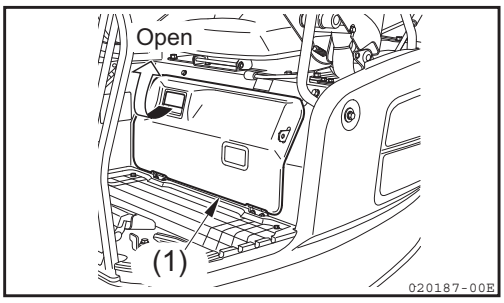

The storage space is behind the battery.
To close the cover, push it until it clicks shut.

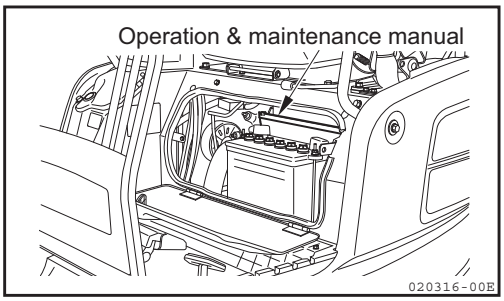

Courtesy of Machine.Market

https://truckmanualshub.com/

12-6. Operator's seat

⚠ WARNING

- **Be sure to adjust the seat slide to obtain the best operating position whenever you (or a new operator) starts operation.**
- **Do not place any foreign objects within the moving area of the operator's seat.**
- **Do not adjust the operator's seat while operating the machine.**

Adjust the seat so that the operator can easily operate the control levers in good posture.

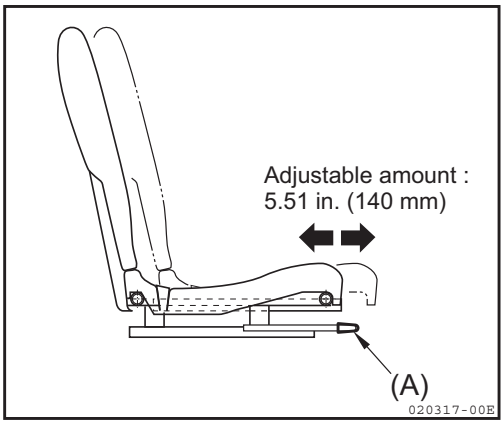

■ Seat position control adjustment (forward and backward)

Pull the slide lever (A) under the seat upward, to move the seat forward or backward.

The adjustable amount of seat movement is 5.51 in. (140 mm) maximum, in five separate positions.

Courtesy of Machine.Market

https://truckmanualshub.com/

12-7. Fuse

⚠ CAUTION

- **When replacing a fuse, be sure to turn off the power by turning the starter switch key to the OFF position.**
- **Using the wrong fuse or shorting out a fuse holder could damage the gauges, the electrical equipment and the wiring due to overheating.**
- **If a new fuse blows out immediately after replacement, there may be a problem with the electrical system. Ask your dealer for assistance.**

■ The following two types of fuses are used in the electrical wiring circuit :

Blade fuse

- Protect the electrical equipment from overcurrent which exceeds the allowable limit of the electrical equipment.
- Protect the wiring from overcurrent which exceeds the allowable limit of the wiring due to a problem with the electrical equipment.

Slow-blow fuse

- Protect the electrical equipment and the wiring from a burnout caused by overcurrent which flows in the circuit for large-capacity current when a problem occurs (such as short-circuit due to breaking of wire).

■ Position of the fuse box

Fuse box is on the right front of the seat mount.

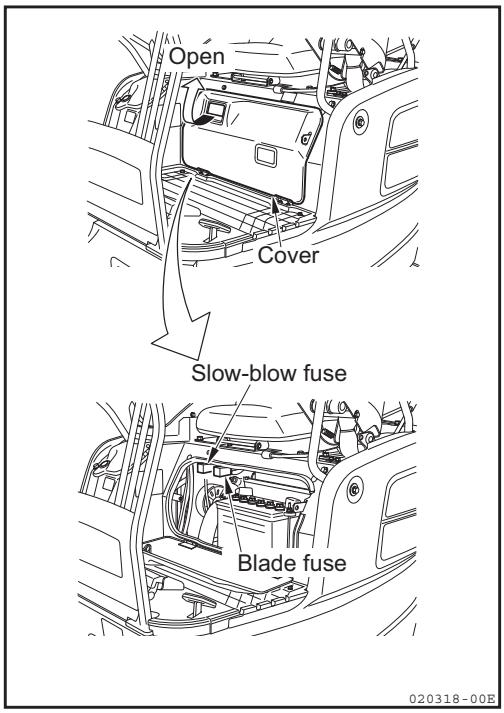

Courtesy of Machine.Market

https://truckmanualshub.com/

■ Replacing the fuses

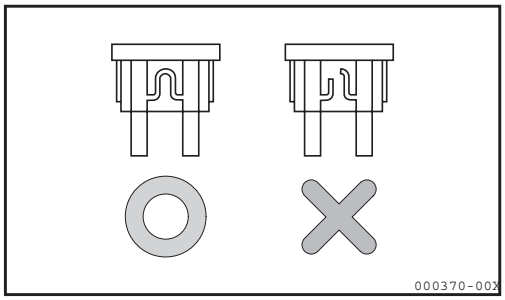

If any electrical equipment does not operate when the starter switch is set to "ON" or "START", the fuse may have been blown out. Follow the procedure below:

1) Turn the starter switch key to the “OFF” position.
2) Remove the fuse box cover to take the fuses out.
3) If a fuse is blown out, replace it with a spare fuse of rated capacity.

Blade fuse

Symbol	Fuse capacity	Circuit name
A	15A	Engine stop solenoid, Current limiter, Solenoid feed pump, Timer
B	15A	Boom light, Horn, High-speed valve
C	15A	Indicator box, Safety relay, Cut-off valve, Travel alarm
D	15A	Spare fuse

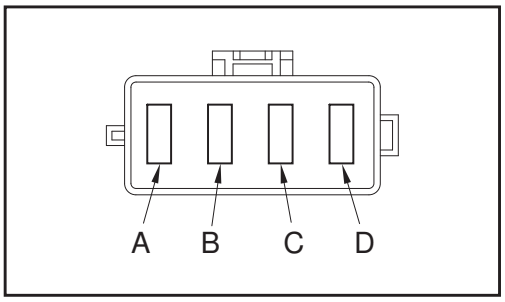

Slow-blow fuse

Remove the slow-blow fuse to check it and replace it if necessary.

Courtesy of Machine.Market

https://truckmanualshub.com/

13. Operating Instructions

13-1. Checking before starting the engine

13-1-1. Walking check (visual inspection) around the machine

⚠ WARNING

- **If there are any combustibles in any heat build-up areas, or if there are any fuel and/or oil leaks, a fire can result.**
- **Check for possible fire causes carefully. If there is anything abnormal, be sure to take corrective action or contact your dealer.**

Before starting the engine, visually check the outside and underside of the machine as follows:
Check bolts and nuts for loose connections; check the fuel, oil, and water for leaks; and also check the implement and the hydraulic system to see that they are operating properly. In addition, check the electrical wiring for loose connections and for dust deposits in the heat build-up areas.
Check the following points before initial start-up for the day.

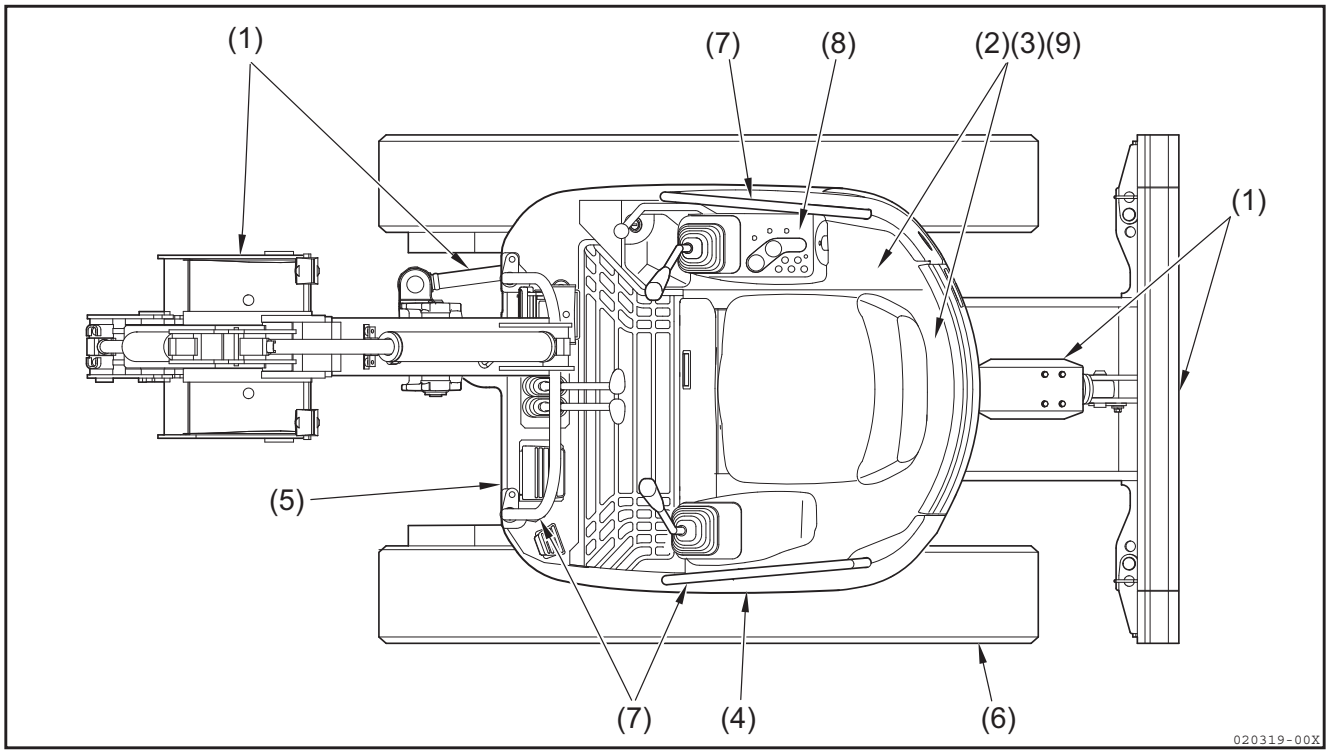

(1) Checking the implement, hydraulic cylinders, linkages, and hoses for damage, wear and loose connections

Check the implement, hydraulic cylinders, linkages, and hoses for damage, wear and loose connections. If any abnormality is found, take corrective action.

Courtesy of Machine.Market

https://truckmanualshub.com/

(2) Removing dust deposits from around the engine, battery, and radiator

Check to confirm that there are no dust deposits or other combustibles around the engine, on the radiator, or in other heat build-up areas, such as the muffler. If there are any, remove them.

(3) Checking the engine and its accessories for oil or water leakage

Check the engine for oil leakage and the cooling water system for water leakage.
If oil or water leakage is found, take corrective action.

(4) Checking the hydraulic system, hydraulic oil tank, hoses, and joints for oil leakage

Check for oil leakage. If oil leakage is found, take corrective action.

(5) Checking the grease piping for grease leakage

Check for grease leakage or ooze. If grease leakage or ooze is found, take corrective action.

(6) Checking the undercarriage (crawler, sprockets, and idlers) for breakage, wear, loose bolts, and oil leakage around the rollers

If any breakage or wear is found, correct it. Retighten the bolts if necessary.
If oil leakage is found, take corrective action.

(7) Checking the handrails and steps for breakage and loose bolts

If any breakage is found, take corrective action. Retighten the bolts if necessary.

(8) Checking the gauges and the monitor for breakage and loose bolts

Check the gauges and the monitor for breakage and loose bolts. If any abnormality is found, replace the gauge or the monitor with a new one, or retighten the bolts if necessary. Clean the surfaces of the gauges and monitor.

(9) Checking the water separator to see whether the red ring has sunk down to the cup bottom

If the red ring has sunk down to the cup bottom, no water has mixed into the oil; if the red ring is floating in the cup, water is mixed into the oil under the red ring. In this case, take out the cup to remove the water. Refer to Section "25-4-3. Cleaning the water separator element" for the removal and reinstallation procedure for the cup.

Courtesy of Machine.Market

https://truckmanualshub.com/

13-1-2. Checking before start-up

Check the following points before initial start-up for the day.

■ Checking and replenishing the cooling water

⚠ WARNING

- **Normally do not open the radiator cap.**
- **Check the cooling water level in the sub-tank when the engine is cool.**

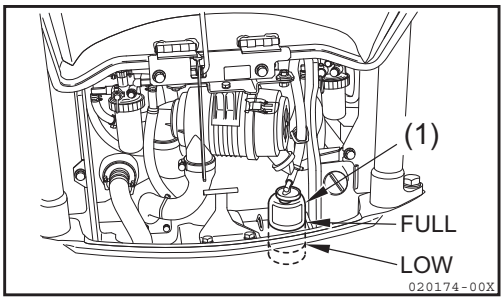

1) Open the engine hood. Then check whether the cooling water level in the sub-tank (1) (illustrated in the figure at the right) is between the FULL and LOW marks. If the water level is below the LOW mark, refill the sub-tank up to the FULL mark through the water supply port of the sub-tank (1).
   For the cooling water to be used, refer to Section "21. Fueling, Oiling and Greasing Based on Temperature Range".
2) After replenishing, securely tighten the cap.
3) If the sub-tank is empty, check it for water leakage, and then, check the water level in the radiator.
   If the water level is low, refill the radiator first, then refill the sub-tank (1).
4) If the cooling water level is proper, close the engine hood.

Courtesy of Machine.Market

https://truckmanualshub.com/

■ Checking and replenishing the engine oil

⚠ WARNING

- **At operating temperature, oil and dipstick areas are hot.**
  Do not allow hot oil or hot components to contact the skin, to prevent bodily injury.
- **Check oil level and replenish oil after engine has cooled down.**

1) Open the engine hood and securely lock it in that position with the stopper rod.

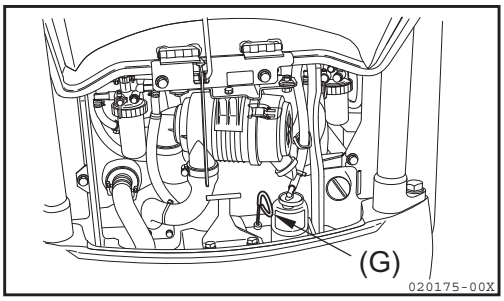

2) Pick up the dipstick (G) and wipe it with a rag to remove oil deposits.

3) Fully insert the dipstick (G) into the dipstick tube, then draw it out.

4) If the dipstick (G) is wet above the midpoint between the H and L marks, the engine oil level is appropriate. If the oil level is below the midpoint between the H and L marks, add engine oil through the oil supply port (F). For the quality of the engine oil to be used, refer to Section "21. Fueling, Oiling and Greasing Based on Temperature Range".

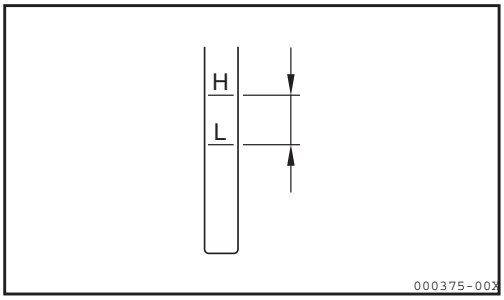

5) If the engine oil level is above the H mark, remove the excessive amount of oil through the drain plug (P), then recheck the engine oil level.

6) After verifying that the amount of engine oil is appropriate, securely retighten the oil supply port cap and close the engine hood.

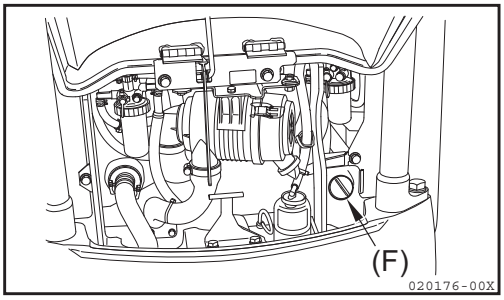

Note :

When checking the engine oil level after starting up the engine, stop the engine and allow more than 15 minutes for the engine to cool down.
If the machine is slanted, reposition the machine to ensure it is level before checking the engine oil level.
Keep in mind that the excess engine oil must not be disposed of on the ground or the road.

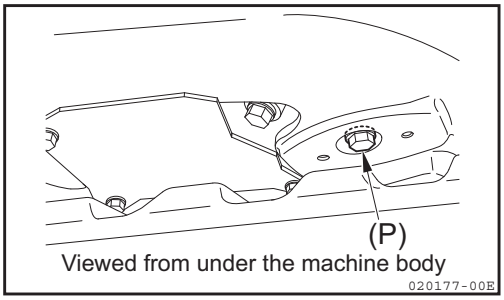

Courtesy of Machine.Market

https://truckmanualshub.com/

■ Checking and replenishing the fuel in the fuel tank

⚠ WARNING

Be careful not to overfill the fuel tank because it could cause a fire. If the tank is overfilled, completely wipe off the spilled fuel.

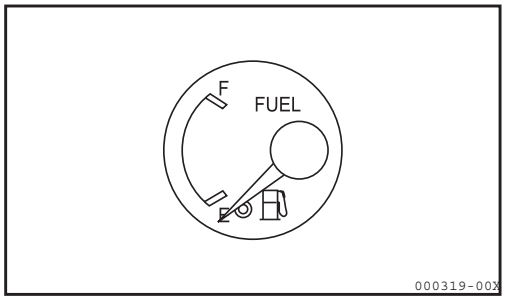

⚠ CAUTION

- **Do not remove the strainer from the fuel supply port of the fuel tank when supplying fuel.**
- **Be careful not to allow any water that may be in the fuel container or dirt on the refueling equipment to enter the fuel tank.**

1) Turn the starter switch key to the “ON” position, and check the fuel level with the fuel meter.

   When the fuel meter pointer is at “E”, approximately 1.32 Gals. (5 L) of fuel is left in the tank.

   Fuel tank capacity : 5.28 Gals. (20 L)

   For the quality of the fuel to be used, refer to Section "21. Fueling, Oiling and Greasing Based on Temperature Range".

2) Insert the starter switch key and turn it counterclockwise to unlock the cover (1) for the fuel supply port.

3) Open the cover (1) and add fuel to the fuel supply port.

4) After refueling, securely install and tighten the fuel supply port cap (2), and then close the cover (1).

5) Turn the starter switch key clockwise to lock the cover.

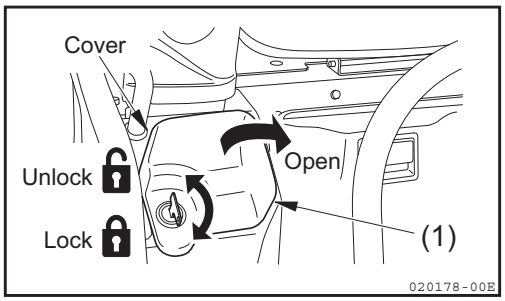

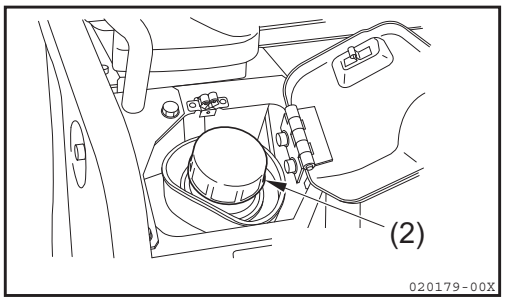

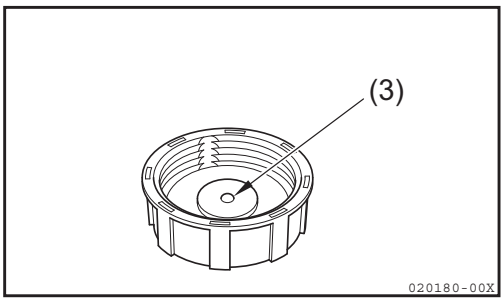

Note :

If the breather hole (3) in the fuel supply port cap is clogged, the pressure in the fuel tank will decrease and the fuel will not be supplied adequately to the engine. Clean the engine breather hole from time to time, to prevent that from happening.

Courtesy of Machine.Market

https://truckmanualshub.com/

■ Checking and replenishing the hydraulic oil in the hydraulic oil tank

⚠ WARNING

When removing the plug of the oil supply port, slowly loosen it to gradually relieve the internal pressure in the tank, or oil may spurt from the tank.

1) Park the machine as illustrated in the figure at the right. If the machine is not in that posture, start the engine, retract the bucket and arm cylinders to their stroke ends at low speed, lower the boom until the bucket teeth contact the ground, lower the blade to the ground, and stop the engine.

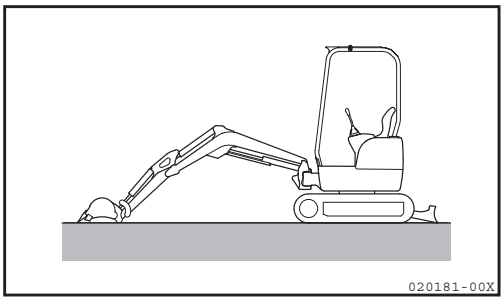

2) Check the oil level by reading the oil level gauge on the left side of the machine. Confirm that the oil level is between the upper and lower limit marks.

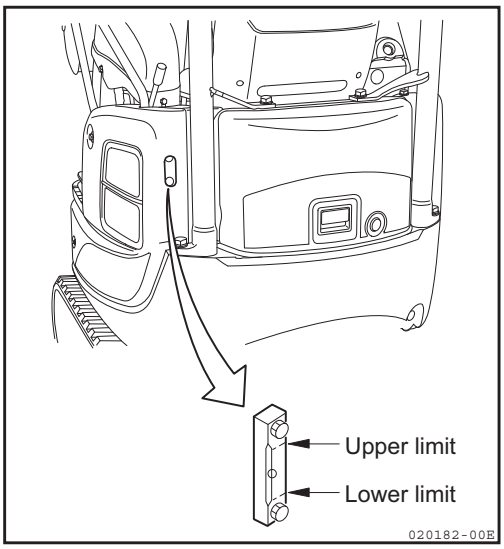

IMPORTANT

Do not replenish hydraulic oil above the upper limit mark on the oil level gauge. An excessive amount of hydraulic oil may damage the hydraulic system by placing stress on its components, causing a dangerous high-pressure leak.

3) Remove the hydraulic oil tank cover (1) and add oil to the oil supply port (F) if the oil level is below the lower limit.

   For the quality of the oil to be used, refer to Section "21. Fueling, Oiling and Greasing Based on Temperature Range".

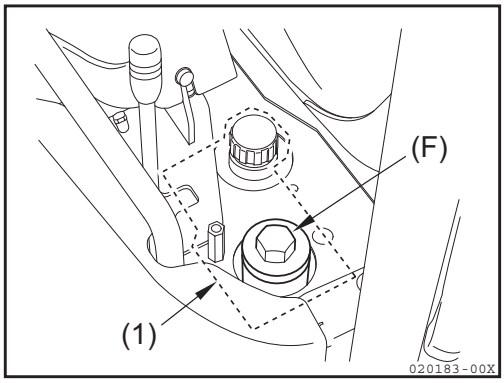

Note :

Note that the oil level varies with the oil temperature.
When reading the oil level, follow these guidelines:

- *Before start-up, the oil level gauge should read at or near the midpoint of the gauge scale [oil temperature : 50 to 86℉ (10 to 30℃)].*
- *During normal operation, the oil level gauge should read at or near the upper limit mark of the gauge scale [oil temperature : 122 to 176℉ (50 to 80℃)].*

Courtesy of Machine.Market

https://truckmanualshub.com/

■ Checking and adjusting the fan belt tension

1) Open the cover (1) under the operator's seat.

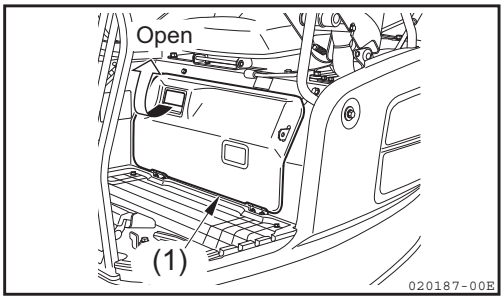

2) Press down on the fan belt between the generator pulley and the crank pulley with a finger, to check the fan belt tension.

   Pressing force : Approximately 22.1 lbs. (10 kg)
   Correct slack : 0.4 to 0.6 in. (10 to 15 mm)

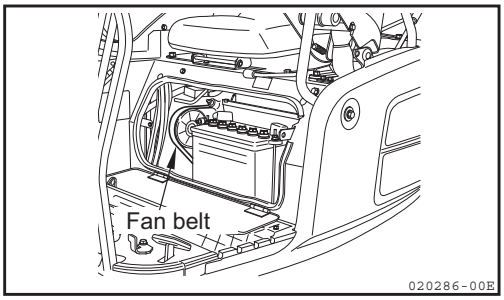

3) Adjust the tension if necessary.
   Refer to Section "25-3-5. Checking and adjusting the fan belt tension" for the adjustment procedure.

4) When the tension is proper, close the cover (1) under the operator's seat.

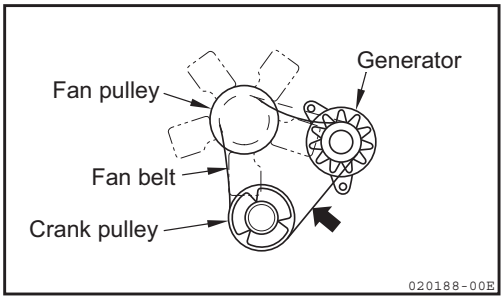

■ Checking and replenishing the battery electrolyte

⚠ DANGER

- **The battery generates flammable gas and can cause a fire and an explosion.**
  Keep sparks, flames and lit cigarettes away from the battery.
- **Battery electrolyte is strong acid. To avoid serious injury, do not allow the electrolyte to contact your skin or splash into your eyes.**
- **Always wear safety goggles and protective clothing, when adding electrolyte.**
- **Do not use the machine with the battery which is short of battery electrolyte. The shortage of battery electrolyte not only will reduce the life of the battery but also could cause an explosion.**

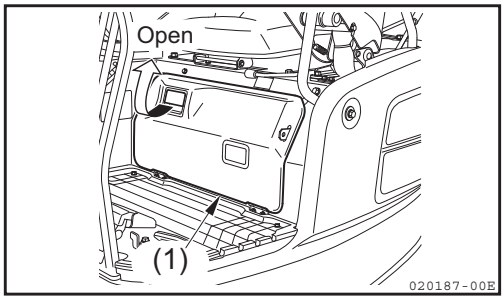

1) Open the cover (1) to check the battery (2) electrolyte level with the battery (2) electrolyte level gauge. If the battery (2) electrolyte level is at the midpoint between the upper and lower limit marks, the battery (2) electrolyte level is appropriate.
2) If the battery electrolyte level is below the lower limit mark, replenish the battery electrolyte.

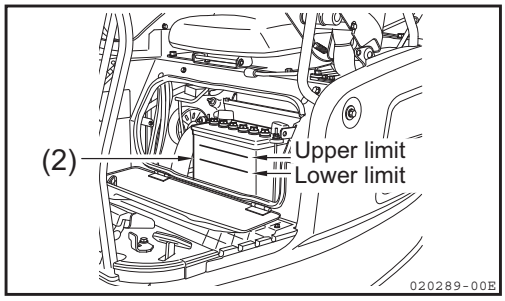

Courtesy of Machine.Market

https://truckmanualshub.com/

■ Greasing

IMPORTANT

Grease the fittings thoroughly after washing the machine or after operation in rain, on soft ground, or in muddy water.

1) Put the bucket and the blade on the ground and stop the engine.

2) Clean the grease nipples indicated by arrows in the figures at the right and grease them with a grease gun.

3) After greasing, wipe off any excess that remains.

■ Implement

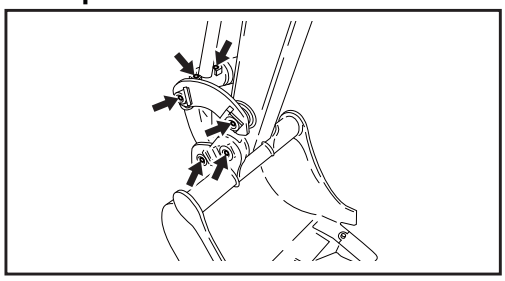

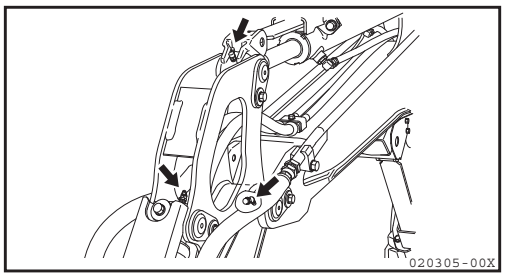

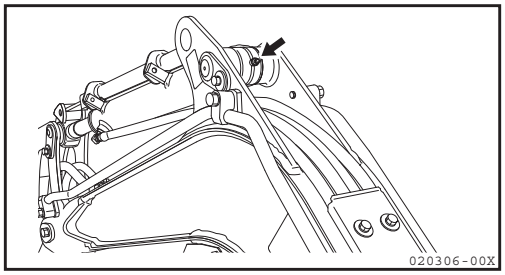

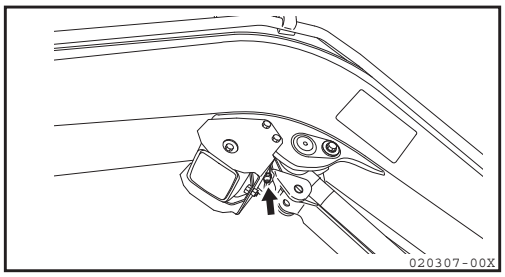

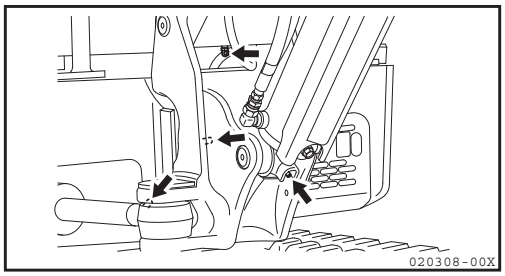

■ Blade

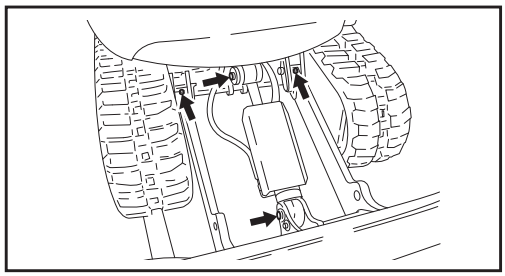

Courtesy of Machine.Market

https://truckmanualshub.com/

■ Checking the electrical equipment

⚠ CAUTION

If a fuse blows out frequently, contact your dealer for assistance.

Check fuses for damage, wiring for poor connections or short circuits, and battery terminals for corrosion or loose fits. Take corrective action.

Check the following items after the starter switch is turned to the "ON" position.

1) Check the monitor functions
- Check the fuel meter, water temperature gauge, and hourmeter.
- Check the engine oil pressure alarm lamp, battery charge alarm lamp and water temperature alarm lamp.

2) Check that the switch functions correctly and all lamp lights correctly.
- Check the horn
- Check the boom lights

3) Check the travel alarm function.
- To check the travel alarm function, push or pull the travel levers.

Courtesy of Machine.Market

https://truckmanualshub.com/

13-1-3. Operating and checking instructions before starting up the engine

⚠ WARNING

- **Accidentally operating a control lever can cause the machine to move suddenly, possibly causing a serious accident.**
- **When leaving the operator's seat, be sure to place the lock levers securely in the lock position.**

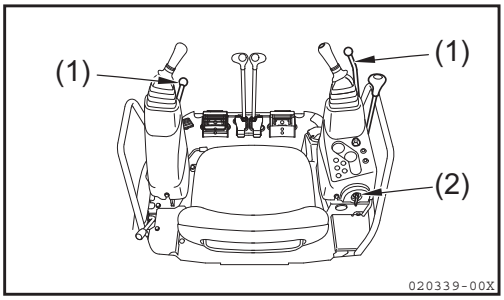

1) Check that the lock levers (1) are in the lock position.

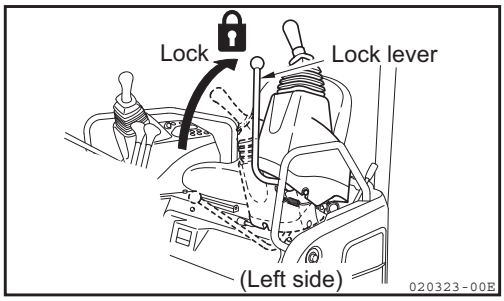

2) Check that all other levers are in their appropriate positions.

3) Fasten the seatbelt snugly.

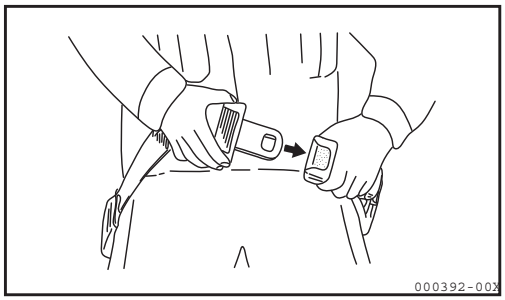

4) Insert the starter switch key into the starter switch (2) and set it to the "ON" position. Then check the following points:

[1] The buzzer will sound, and the following alarm lamps will go on.
- Engine oil pressure alarm lamp (3)
- Battery charge alarm lamp (4)
- Water temperature alarm lamp (5)
  (It goes off in 2 to 3 seconds)

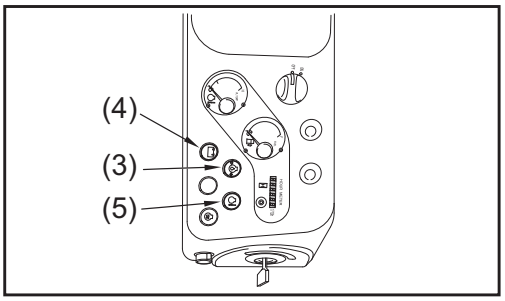

If any of the alarm lamps do not go on or the buzzer does not sound, it may mean that an alarm lamp has blown out or is broken. Take corrective action, or consult your dealer for assistance.

[2] Turn the light switch "ON" to see whether the boom light will go on. If it does not go on, the lamp might have blown out or might be broken. Take corrective action, or consult your dealer for assistance.

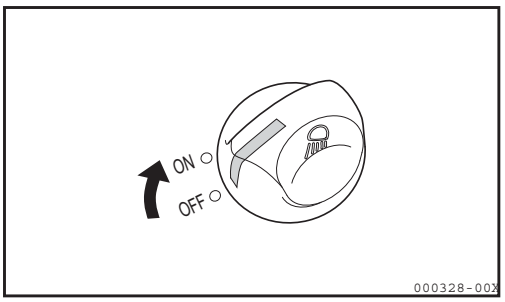

Courtesy of Machine.Market

https://truckmanualshub.com/

13-2. Starting up the engine

13-2-1. Normal start-up

⚠ WARNING

- **First check that there are no people or obstacles around the machine.**
  Then sound the horn and start the engine.
- **Be sure that you are seated on the operator's seat when starting the engine.**
- **When starting the engine in an enclosed place, be sure that there is adequate ventilation so that the exhaust gases can escape.**

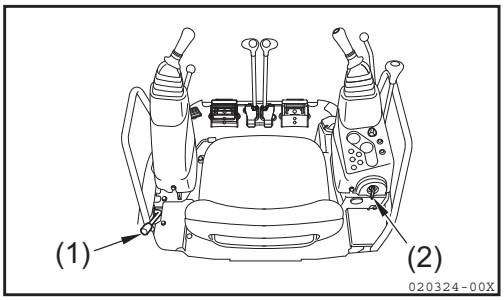

1) Pull the accelerator lever (1) back to the "RUN" position.

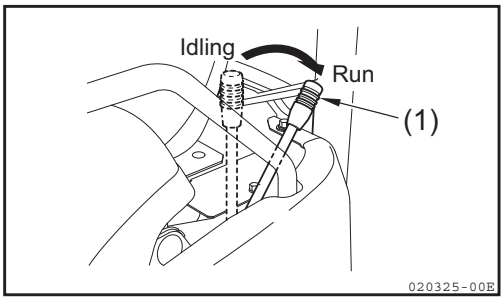

2) Set the starter switch key in the starter switch (2) to the "START" position. The engine will start.

3) After the engine has started, let go of the starter switch key.
   The starter switch key will return to the "ON" position by itself.

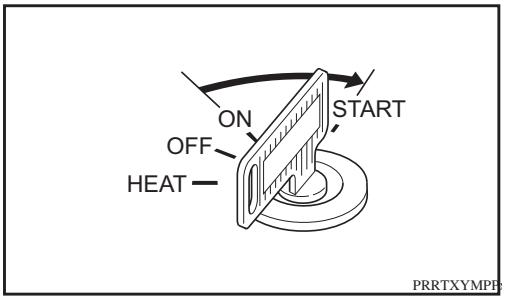

Note :
When the engine is warm, the engine can start up even if the accelerator lever is left in the "IDLING" position.

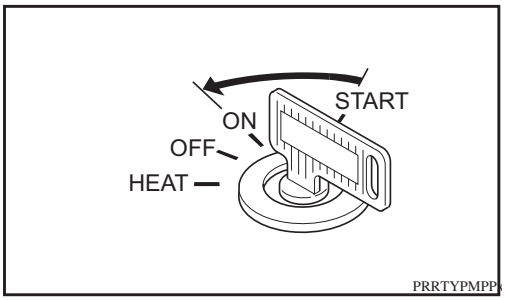

IMPORTANT
To protect the starter motor and the battery:

- **Do not keep the starter switch key in the "START" position for more than 10 seconds.**
- **If the engine fails to start, do not attempt to start the engine immediately again, but set the switch to the "OFF" position and wait for approximately 30 seconds, then start the engine again.**

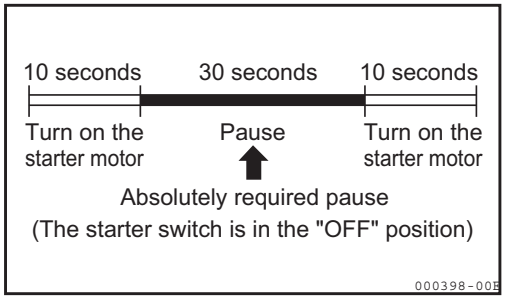

The swing motor brake is engaged when the engine is "OFF", but is released when the engine starts.

Courtesy of Machine.Market

https://truckmanualshub.com/

13-2-2. Starting the engine in cold weather

⚠ WARNING

- **First check that there are no people or obstacles around the machine.**
  Then sound the horn and start the engine.
- **Be sure that you are seated on the operator's seat when starting the engine.**
- **When starting the engine in an enclosed place, be sure that there is adequate ventilation so that the exhaust gases can escape.**

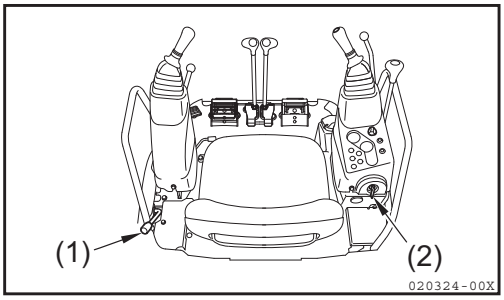

To start the engine when the outside air temperature is low, follow the steps below:

1) Pull the accelerator lever (1) back to the "RUN" position.

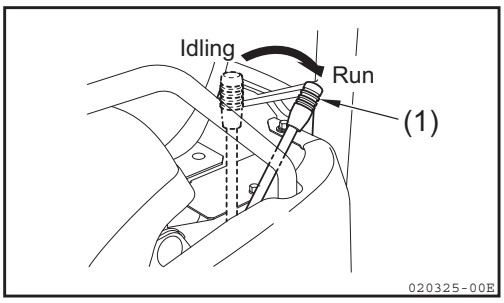

2) Turn the starter switch key in the starter switch (2) to the "HEAT" position and keep it there for approximately 10 to 15 seconds to preheat the intake air of the engine.

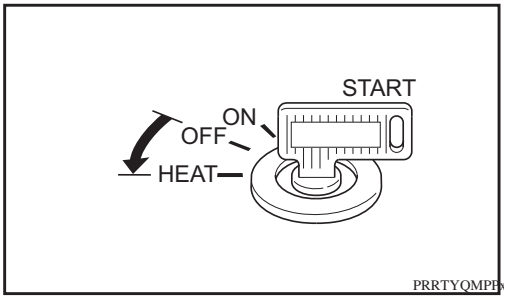

3) Turn the starter switch key in the starter switch (2) to the "START" position to start the engine.

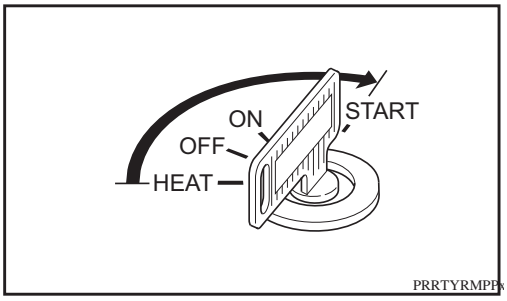

4) After the engine has started, let go of the starter switch (2) key.
   The starter switch key will return to the "ON" position by itself.

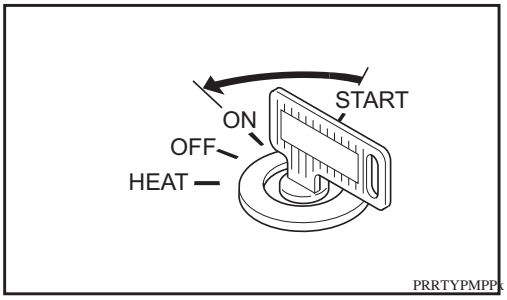

Courtesy of Machine.Market

https://truckmanualshub.com/

5) When the engine speed has increased, push the accelerator lever forward to the "IDLING" position immediately.

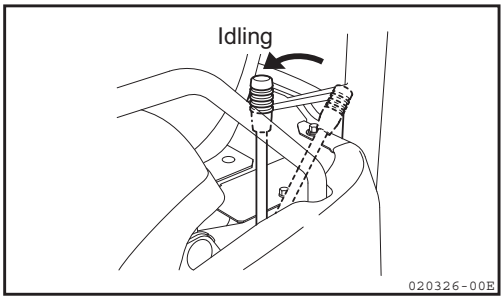

IMPORTANT

To protect the starter motor and the battery:

- **Do not keep the starter switch key in the "START" position for more than 10 seconds.**
- **If the engine fails to start, do not start the engine immediately again, but set the switch to the "OFF" position and wait for approximately 30 seconds, then start the engine again.**
- **Traveling or operating the machine without adequate warming in cold weather may adversely affect the machine performance.**

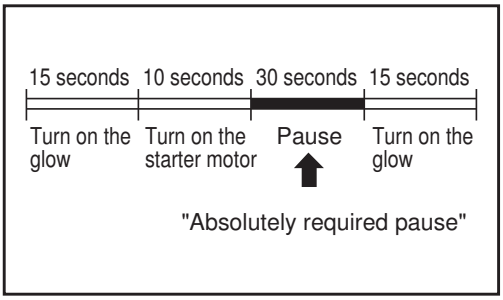

Courtesy of Machine.Market

https://truckmanualshub.com/

13-3. Operating and checking instructions after starting the engine

⚠ WARNING

- **Emergency stop.**
  If abnormal operation occurs, turn the starter switch key to the "OFF" position, to shut off the electrical system and the engine. Then ask your dealer to check the machine.
- **Be sure to warm up the engine. If you operate the implement without full warm-up, the machine may not respond or operate properly, especially in cold weather.**

IMPORTANT

- **The proper hydraulic oil temperature is between 122°F and 176°F (50°C and 80°C).**
  If you have to operate the machine at a low hydraulic oil temperature, increase the hydraulic oil temperature to about 68°F (20°C) before operating the implement.
- **In the event that you have to operate any control lever at a temperature lower than 68°F (20°C), operate it gently.**
- **Do not accelerate the engine rapidly until the engine warms up.**

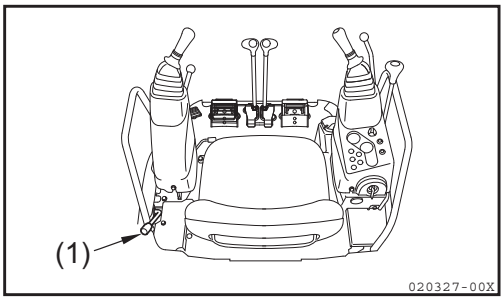

After starting the engine, do not start operating the machine immediately but follow this procedure:

1) Idle the engine, to check that the engine oil pressure alarm lamp is off.

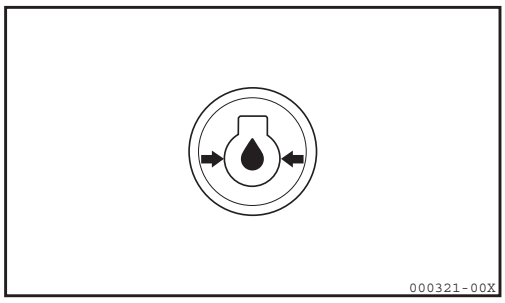

2) Pull the accelerator lever (1) to the midpoint between the "IDLING" and "RUN" positions, and run the engine with no load at medium speed for approximately five minutes.

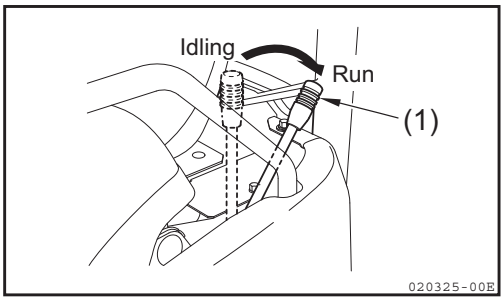

Courtesy of Machine.Market

https://truckmanualshub.com/

3) Unlock the lock levers, and lift the bucket from the ground.

4) Operate the bucket and arm control levers slowly to move the bucket and arm cylinders to their stroke ends. Operate the bucket for thirty seconds and the arm for thirty seconds alternately for approximately five minutes to increase the hydraulic oil temperature to 68°F (20°C).

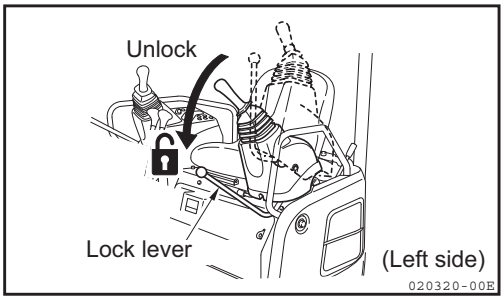

IMPORTANT

When moving the implement, be careful not to bump it against the machine or the ground.

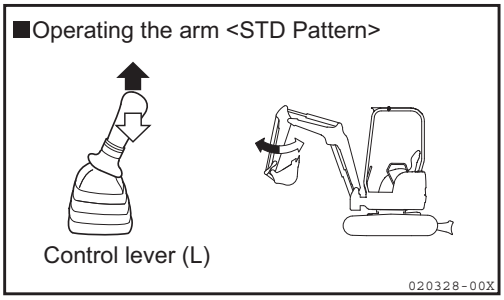

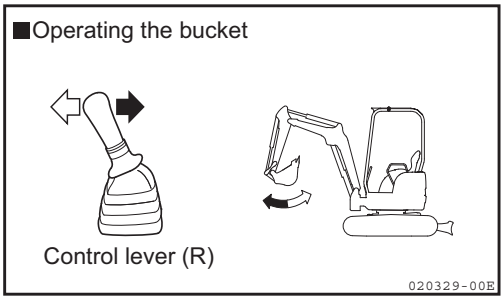

5) After warming up the engine, check that the gauges and the monitor are in the following status. If there is anything abnormal, take corrective action.

- Fuel gauge (1) ..... Normal
- Water temp. meter (2) ..... Normal
- Hourmeter (3) ..... Normal
- Engine oil pressure alarm lamp (4) ..... Off
- Battery charge alarm lamp (5) ..... Off
- Water temperature alarm lamp (6) ..... Off

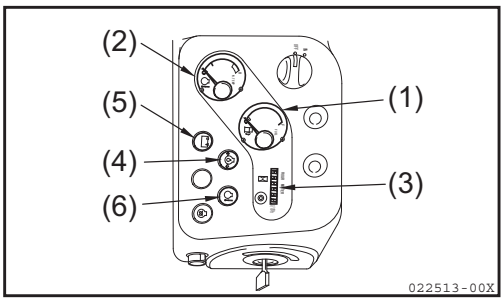

6) Check the exhaust gas color, the machine noise, and the vibration level for abnormality. If something is abnormal, take corrective action.

7) Set the lock levers to the "LOCK" position to confirm that the implement cannot be operated and the upper structure cannot be swung with the left and right control levers.

8) Unlock the lock levers and operate the control levers to check that the implement can be operated and the upper structure can be swung normally. If something is abnormal, take corrective action.

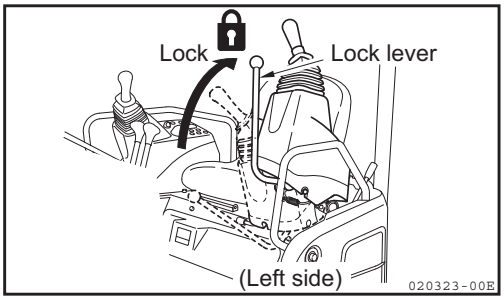

9) Check that the swing brake valve operates normally. If something is abnormal, take corrective action.

10) Check that no abnormal noise is heard from the hydraulic pump. If any abnormal noise is heard, take corrective action.

Ask your dealer to resolve any problems identified in steps 1) to 10) above.

Courtesy of Machine.Market

https://truckmanualshub.com/

13-4. Traveling

13-4-1. Traveling forward

⚠ WARNING

- **Always check the position of the blade before operating the travel levers and pedals.**
  When the blade is in the rear, the travel levers and pedals operate in the reverse of the normal operation.
- **A signal person should be in attendance to give signals at sites which are dangerous or not clearly in view of the operator.**
- **Clear all people from the working area.**
- **Sound the horn before beginning travel, to alert the people near the machine.**
- **Clear obstacles from the path of the machine.**
- **Do not operate the travel levers and pedals rapidly while the engine is running at high speed. Otherwise, the machine may move unexpectedly, causing a serious accident.**

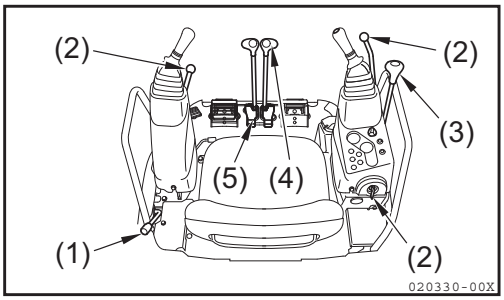

1) Pull the accelerator lever (1) back to the "RUN" position to increase the engine speed.

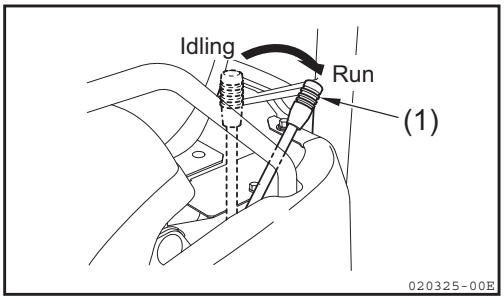

2) Unlock the lock levers (2), and retract the implement to raise it 16 to 20 in. (40 to 50 cm) above the ground.

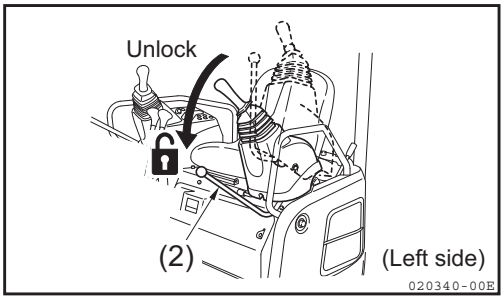

Courtesy of Machine.Market

https://truckmanualshub.com/

3) Pull back the blade lever (3) to raise the blade.

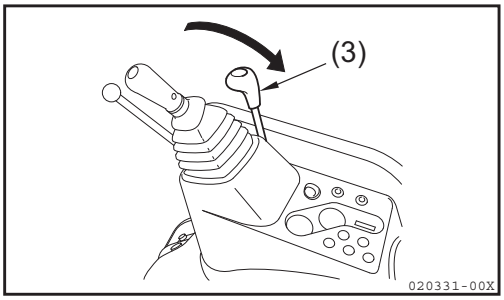

4) Operate the left and right travel levers (4) or pedals (5) as follows:

- When the blade is in the front of the machine;
  Slowly push the travel levers (4) forward or step on the front of the pedals (5) to move the machine forward.

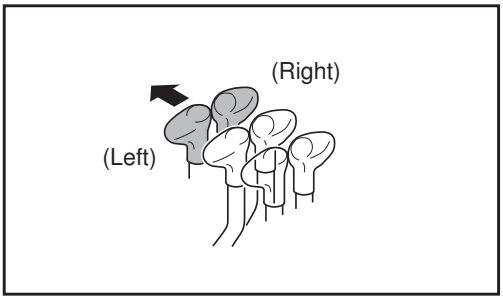

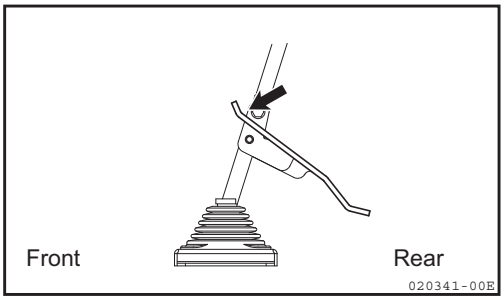

- When the blade is in the rear of the machine;
  Slowly pull the travel levers (4) back or unfold the extension plate to step on it in order to move the machine forward.

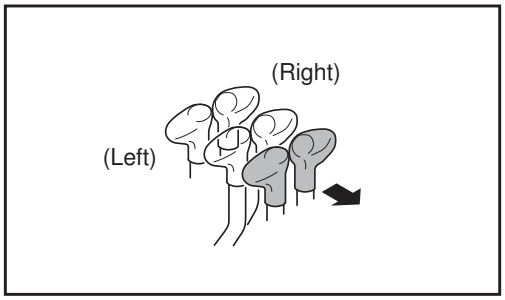

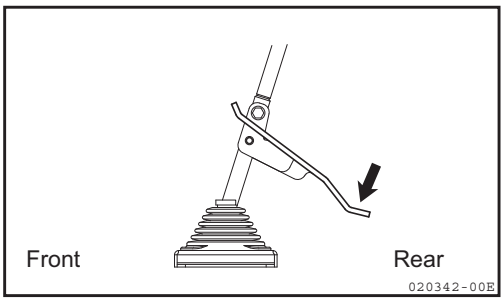

Courtesy of Machine.Market

https://truckmanualshub.com/

13-4-2. Traveling in reverse

⚠ WARNING

- **Always check the position of the blade before operating the travel levers and pedals.**
  When the blade is in the rear, the travel levers and pedals operate in the reverse of the normal operation.
- **A signal person should be in attendance to give signals at sites which are dangerous or not clearly in view of the operator.**
- **Clear all people from the working area.**
- **Sound the horn before beginning travel, to alert the people near the machine.**
- **Clear obstacles from the path of the machine.**
- **There is a blind spot behind the machine. Make sure that no people are in the blind spot before traveling backwards.**
- **Do not operate the travel levers and pedals rapidly while the engine is running at high speed. Otherwise, the machine may move unexpectedly, causing a serious accident.**

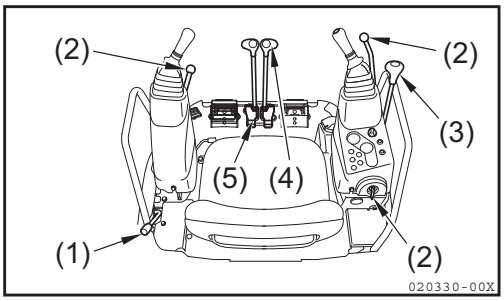

1) Pull the accelerator lever (1) back to the "RUN" position to increase the engine speed.

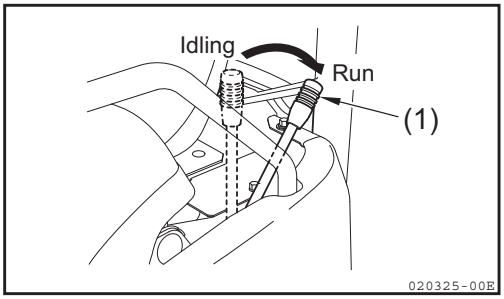

2) Unlock the lock levers (2), and retract the implement to raise it 16 to 20 in. (40 to 50 cm) above the ground.

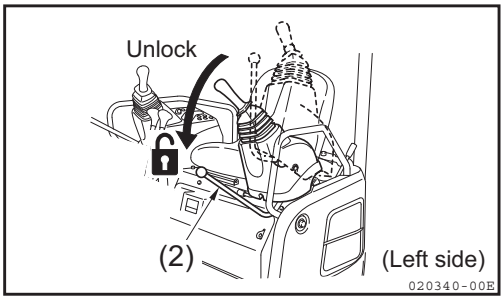

Courtesy of Machine.Market

https://truckmanualshub.com/

3) Pull back the blade lever (3) to raise the blade.

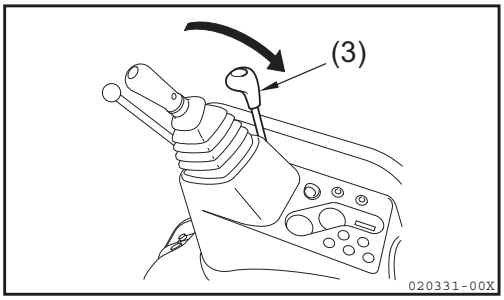

4) Operate the left and right travel levers (4) or pedals (5) as follows:

- When the blade is in the front of the machine;
  Slowly pull the travel levers (4) back or unfold the extension plate to step on it in order to move the machine backward.

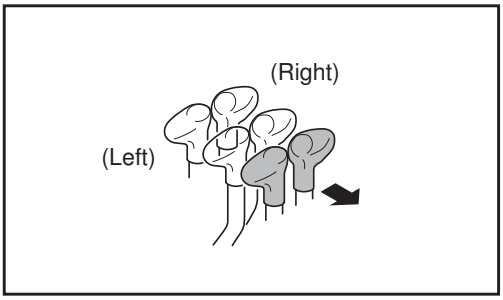

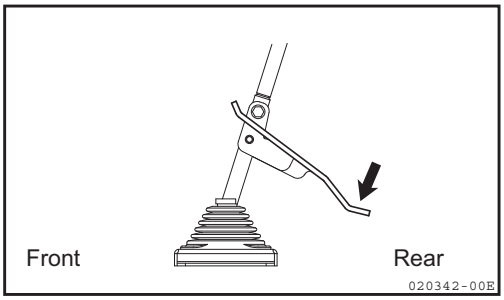

- When the blade is in the rear of the machine;
  Slowly push the travel levers (4) forward or step on the front of the pedals (5) to move the machine backward.

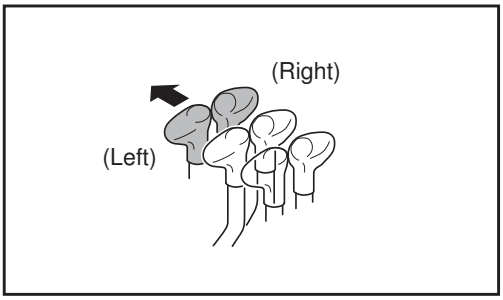

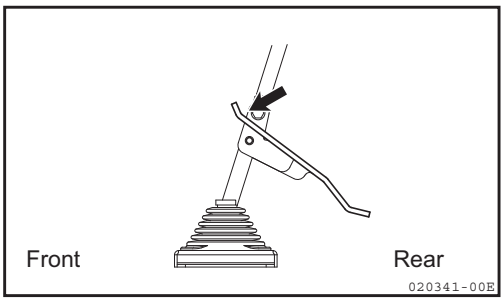

Courtesy of Machine.Market

https://truckmanualshub.com/

13-5. Steering

13-5-1. Steering (turning the machine)

⚠ WARNING

Always check the position of the blade before operating the travel levers.
When the blade is in the rear, the travel levers operate in the reverse of the normal operation.
Do not use the travel pedals to steer the machine, or the machine may not be controlled expectedly, causing a serious accident.

To steer the machine, operate the travel levers only.
Do not turn the machine too sharply. Before spin-turning, always stop the machine first.
Operate the two travel levers (1) as follows:

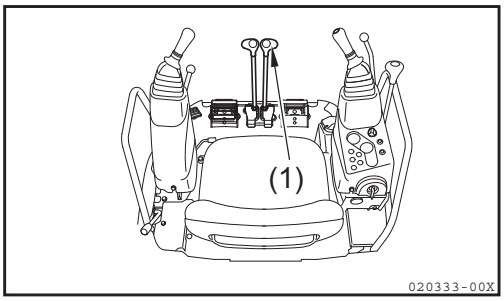

■ **Steering the machine when it is not traveling**

To turn left, push the right travel lever forward and start traveling forward to the left. Pull the right travel lever back and start traveling in reverse to the left.

Note :
To turn right, operate the left travel lever in the same manner as above.

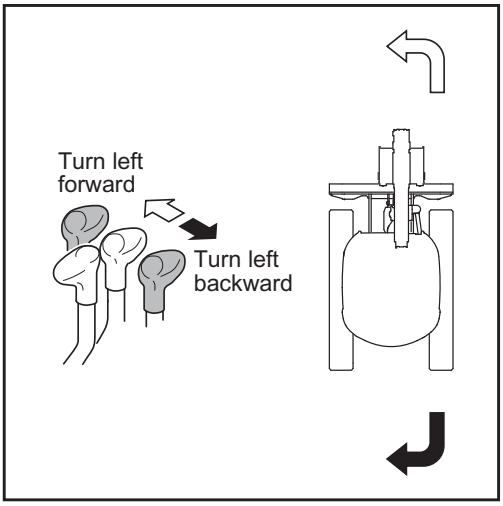

Courtesy of Machine.Market

https://truckmanualshub.com/

■ **Steering the machine while traveling (the left and right travel levers are both tilted in the same direction)**

To turn left, return the left travel lever to the neutral position.

Note :

To turn right, return the right travel lever to the neutral position.

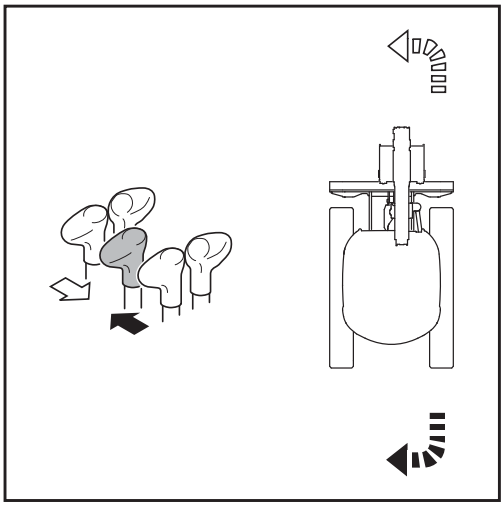

■ **Spin-turning the machine when it is not traveling**

To spin-turn left, push the right travel lever forward while pulling the left travel lever back.

Note :

To spin-turn right, push the left travel lever forward while pulling the right travel lever back.

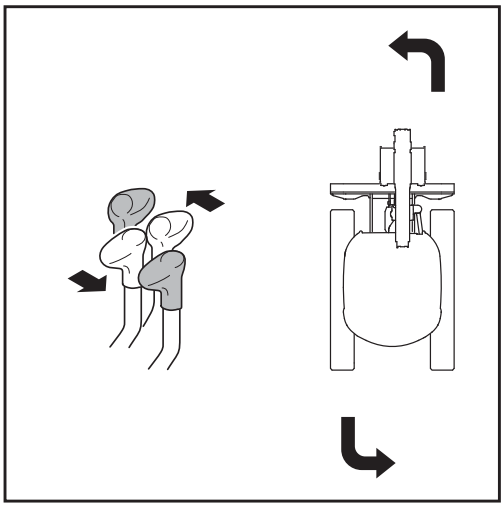

Courtesy of Machine.Market

https://truckmanualshub.com/

13-6. Stopping the machine

⚠ CAUTION

Do not stop the machine suddenly but provide a safety margin.

⚠ WARNING

- **Park on solid, level ground.**
- **Do not park on a slope. If it is unavoidable to park on a slope, place solid blocks of wood behind the crawlers, place the blade on the ground, and dig the bucket into the ground.**

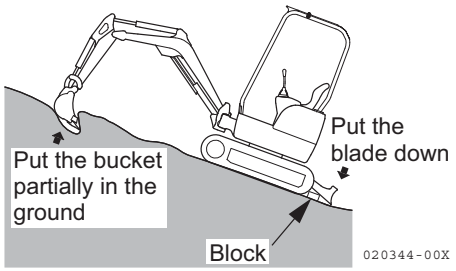

⚠ WARNING

- **Do not touch the control levers and pedals accidentally. Otherwise, the implement or the machine may move unexpectedly, causing serious bodily injury.**
- **Whenever leaving the operator's seat, be sure to place the lock levers securely in the lock position and remove the starter switch key.**

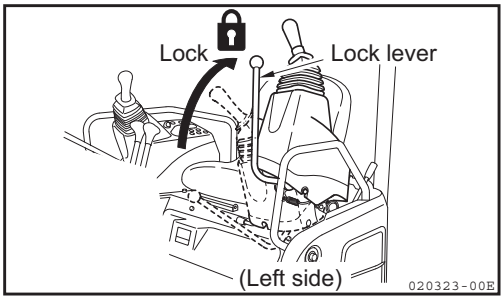

1) Set the right and left travel levers (1) to the neutral position to stop the machine.

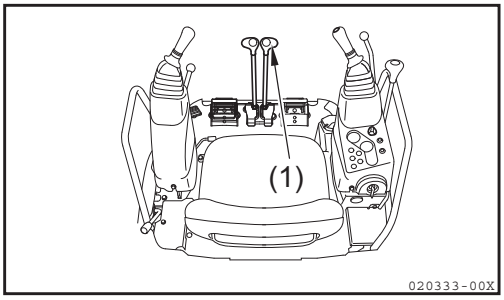

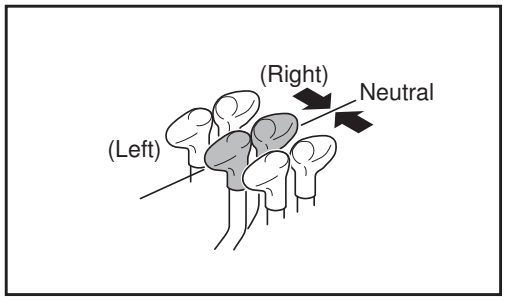

Courtesy of Machine.Market

https://truckmanualshub.com/

13-7. Swinging the upper structure

⚠ WARNING

Before swinging, make sure that there are no people or obstacles within the swing range of the implement or the machine tail.

1) To swing the upper structure, operate the left control lever as illustrated in the figure at the right.
   (A) : Swing right
   (B) : Swing left

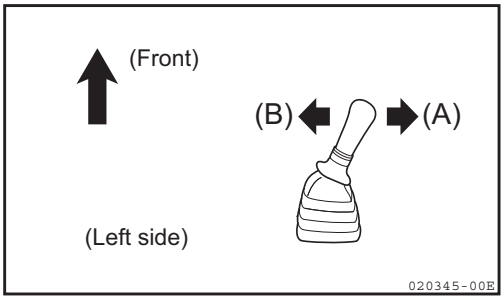

Courtesy of Machine.Market

https://truckmanualshub.com/

13-8. Operating the implement

⚠ WARNING

- **Check the area around the machine for safety and sound the horn before beginning to operate the machine.**
- **The setting of the pattern change lever alters control lever operation. Always chose the pattern (STD VS. OPT) that you prefer to use.**
- **To prevent accidental injury, never operate the Excavator before confirming the setting of the pattern change lever.**
- **Never operate or load excavator bucket with track gauge narrowed to prevent bodily injury.**

Operate the machine using the right and left control levers, the boom swing pedal and the blade lever.

<STD Pattern>
- Control lever (L) : Operates arm and upper structure swing.
- Control lever (R) : Operates boom and bucket.

<OPT Pattern>
- Control lever (L) : Operates boom and upper structure swing.
- Control lever (R) : Operates arm and bucket.

- Boom swing pedal : Operates boom swing.
- Blade lever : Operates blade.

The relationships between the operation of the control levers, the boom swing pedal and the movement of the implement are shown in the illustrations at the right.
On releasing the control levers and the boom swing pedal, they will return to their neutral positions and the implement will stop moving.

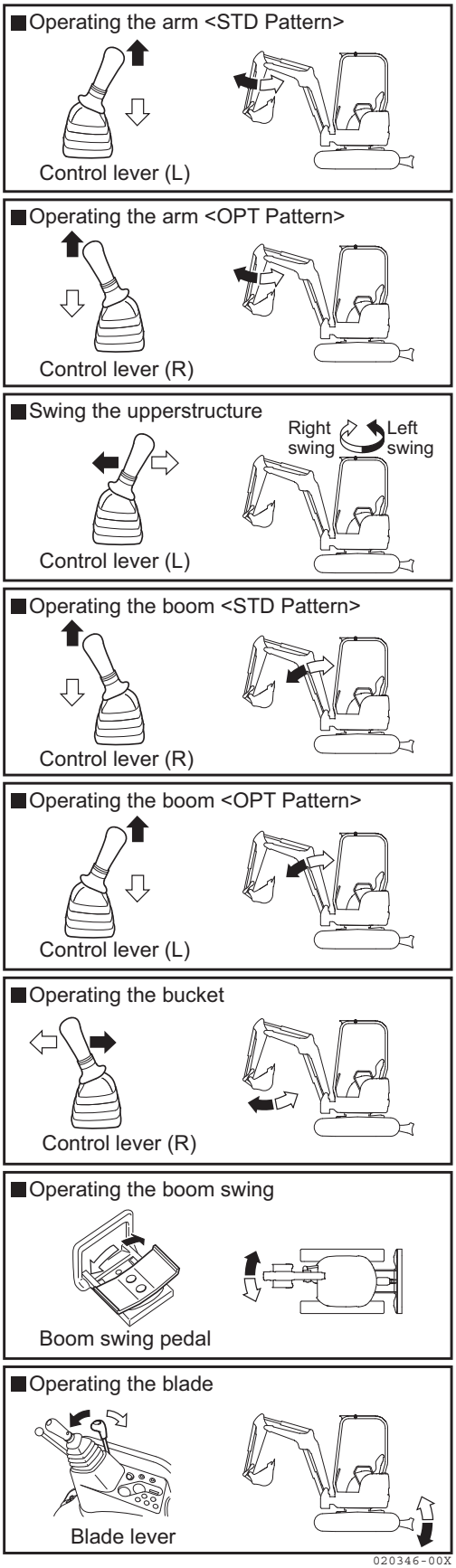

Courtesy of Machine.Market

https://truckmanualshub.com/

13-9. Operating the track gauge change

⚠ WARNING

- **Be sure to operate the track gauge change control lever at middle engine speed to avoid hazard.**
- **When operating the track gauge change, the crawlers move widthwise. Be sure to operate it from the operator's seat only to prevent your body from being caught between the crawler and the upper structure or between the crawler and nearby obstacles.**
- **Never operate the track gauge change control lever when the machine is in motion.**

Do not operate the track gauge change control lever while the machine is traveling.

IMPORTANT

- **Mud or readymixed concrete adhering to the track gauge change system may cause the system an abnormal operation.**
  - **While working, operate the track gauge change system periodically to make it discharge mud or readymixed concrete.**
  - **After working, be sure to operate the track gauge change system to make it discharge mud or readymixed concrete.**
- **If mud adheres to the moving parts for changing the track gauge, widen and narrow the variable track gauge type crawlers to remove it. (Remove mud before it gets hard.)**
- **In cold whether, to prevent the moving parts for changing the track gauge from getting stuck due to frozen mud or water deposits on it, carefully remove them after working.**

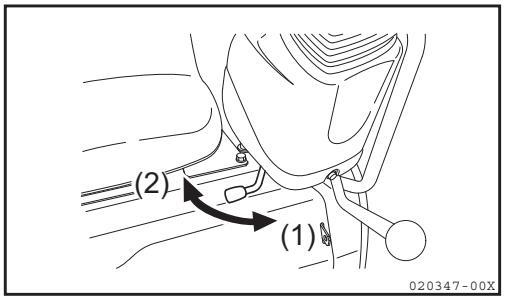

13-9-1. Changing the track gauge

1) Park the machine on level ground.
2) Operate the track gauge change control lever until the crawlers stop moving.

(1) Push the lever forward to widen the track gauge.
(2) Pull the lever back to narrow the track gauge.

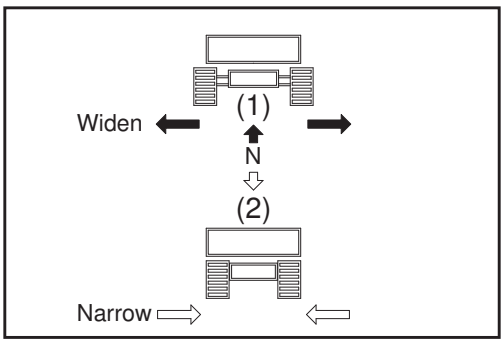

Notes:

- *To set the track gauge back to what it was, follow the above procedure.*
- *Normally operate the machine with the track gauge widened to keep it more stable.*

Courtesy of Machine.Market

https://truckmanualshub.com/

13-9-2. Changing the blade width

The blade width can be adjusted to 37.4 in. or 50.4 in. (950mm or 1280mm) by changing the positions of the pins.

1) Raise the blade to its stroke end.

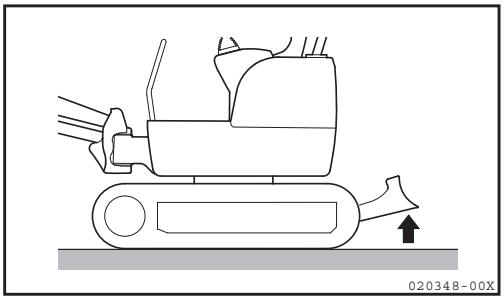

2) Change the positions of the pins as illustrated in the figure at the right and hold the extension blades to change the blade width.

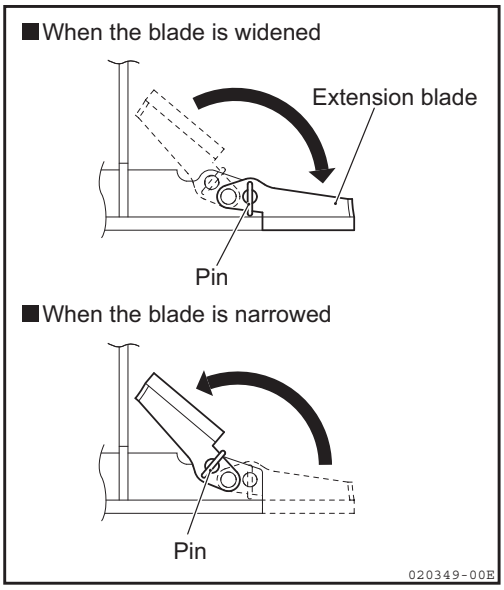

IMPORTANT

Installing the pin improperly may cause the pin to fall off during work.

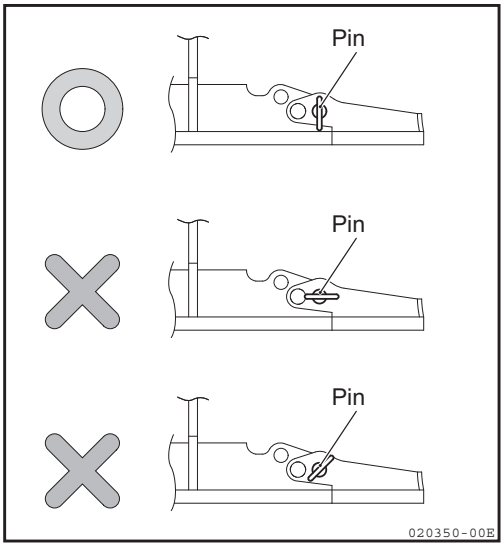

Courtesy of Machine.Market

https://truckmanualshub.com/

13-10. Precautions for operating the implement

⚠ WARNING

- **Do not operate the control levers while traveling. Stop traveling first and then operate the implement.**
- **Do not operate the implement on any rocky surface.**

■ Do not use the implement's swing force

Do not level the ground or break down a wall by the use of swing force, and do not dig the bucket teeth into the ground while swinging. Doing these may cause the implement to be damaged.

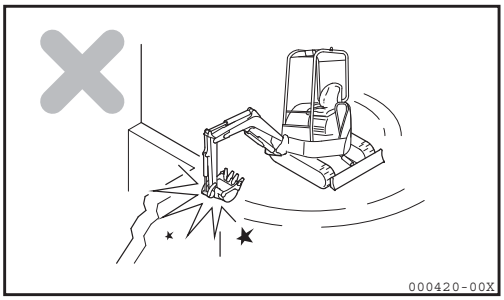

■ Do not use the implement's travel force

Do not excavate the ground by the use of travel force with the bucket teeth in contact with the ground. Doing this may cause excessive force to be imposed on the rear of the machine, shortening the machine life.

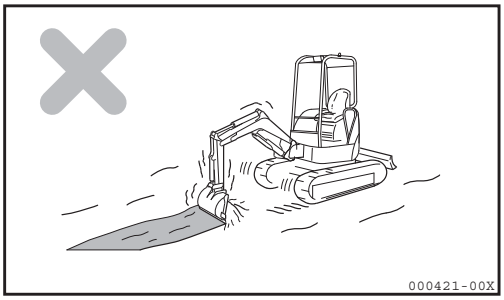

■ Take care not to operate the hydraulic cylinder to the stroke end

Operating the hydraulic cylinder to the stroke end may impose an undue force on the stopper in the hydraulic cylinder, shortening the implement life. Operate with a small safety margin.

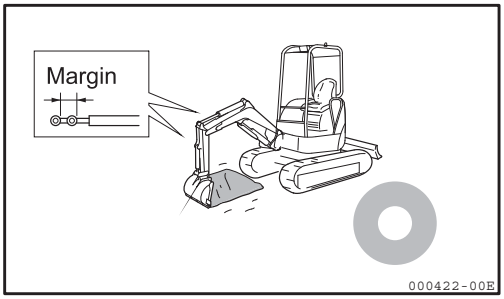

■ Do not operate the implement by the using the dropping force of the bucket

Do not excavate the ground by using the dropping force of the bucket as a pickaxe or pile driver. Doing this may cause excessive force to be imposed on the rear of the machine, shortening the machine life and possibly causing a serious accident.

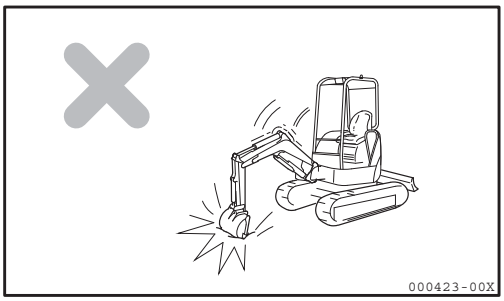

Courtesy of Machine.Market

https://truckmanualshub.com/

■ **Do not operate the implement by using the dropping force of the machine**

Do not excavate the ground by using the dropping force of the machine.

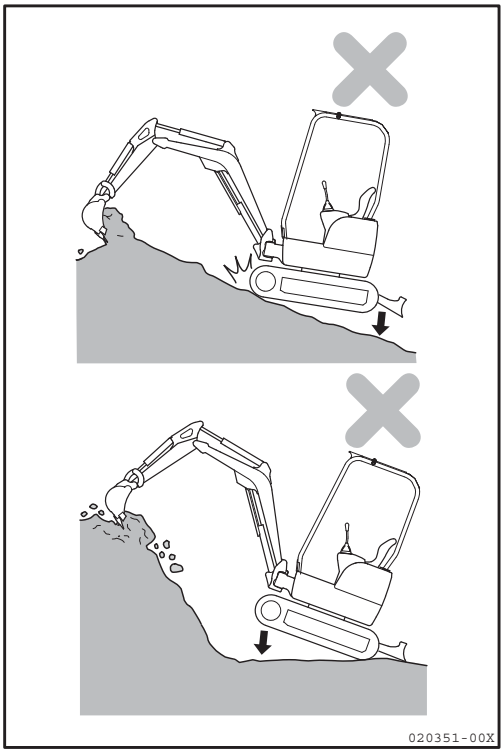

■ **Excavating a hard rock**

It is recommended that a hard rock first be broken into small pieces by other means. Doing so will prevent damage to the machine and will increase economy.

Courtesy of Machine.Market

https://truckmanualshub.com/

■ **Do not bump the blade against a large rock or boulder**

Never bump the blade against a large rock or boulder. Doing so may cause the blade or the hydraulic cylinder to be damaged.

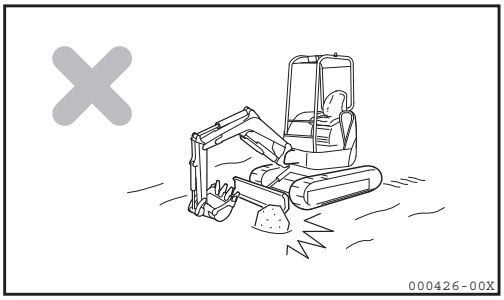

■ **Be careful when retracting the implement**

When retracting the implement for travel or transport, be careful that the bucket and the blade never bump against each other.

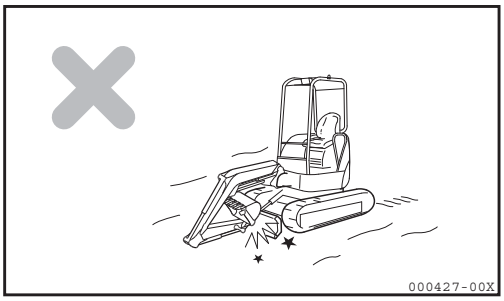

■ **Support the blade on both sides**

When you use the blade as an outrigger, support the blade on both sides.

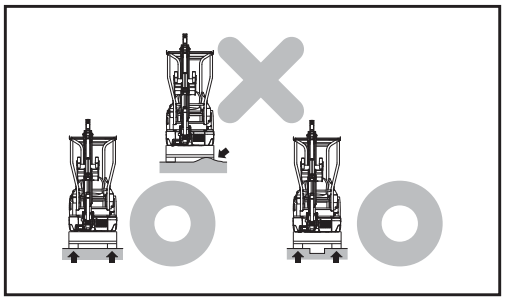

■ **Be careful not to bump the blade when excavating**

When excavating the ground with the blade in front, never let the blade bump against the boom cylinder.
Place the blade in the rear, when it is not being used.

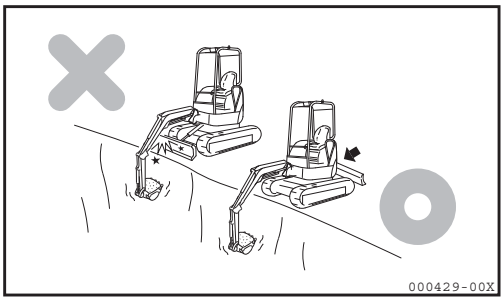

Courtesy of Machine.Market

https://truckmanualshub.com/

13-11. Precautions for working

■ Precautions for traveling

Driving over a stone or a stump subjects the machine (especially undercarriage) to a shock, which may cause damage to the machine.
Avoid such obstacles by driving around them, or removing them.
If driving over them is unavoidable, reduce speed, hold the implement close to the ground, and drive over the obstacles with the center of the track shoes.

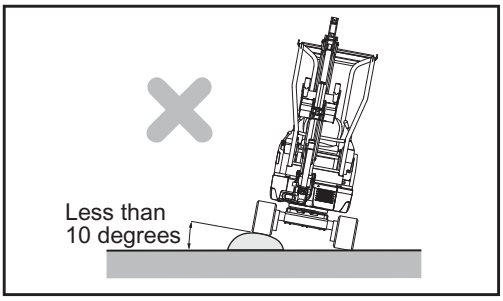

■ Allowable water depth

IMPORTANT

When driving out of water, if the machine climbs a slope at an angle of more than 15 degrees, the rear of the upper structure may submerge too deeply in the water, which may damage the radiator fan. Avoid this if possible when driving out of water.

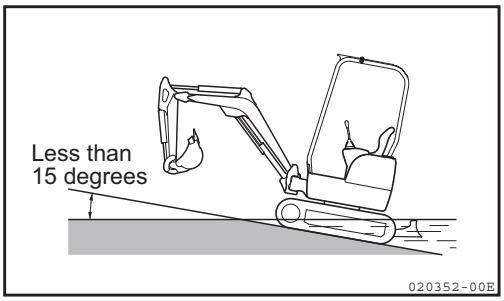

The maximum water depth in which the machine can be used is up to the center of the shoe slide plate.
Apply a generous amount of grease to the moving parts that have been submerged in the water for a long time until the used grease is extruded out of the bearings.
Wipe away the extruded used grease.

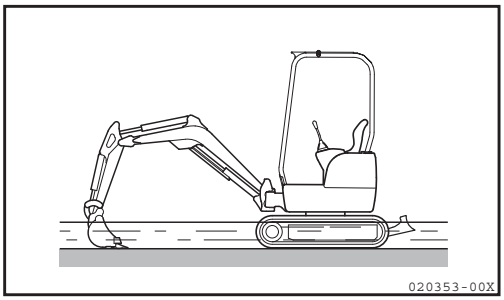

Courtesy of Machine.Market

https://truckmanualshub.com/

13-12. Precautions for going up and down a slope

⚠ WARNING

- **When traveling on a slope, place the implement in the direction of travel and raise the bucket 8 to 12 in. (20 to 30 cm) above the ground.**
- **When driving over obstacles such as foot paths, hold the implement close to the ground and drive the machine slowly.**
- **Never turn on or traverse a slope.**
  Descend to flat ground to make a course change.
- **If the machine is starting to slip or you feel that the machine is unstable, place the bucket on the ground and stop the machine at once.**
- **Recognize that the machine may roll over when swinging the upper structure or operating the implement on a slope.**
  Do not swing the upper structure toward the downward side of the slope with a load in the bucket.
  If swinging is unavoidable, first lay earth on the slope to maintain the machine as horizontal as possible, then swing the upper structure.
- **Do not travel on a slope of 20 degrees or more, as the machine may upset.**

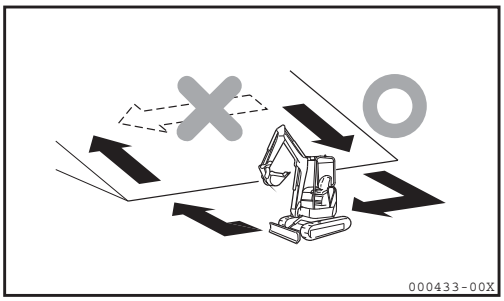

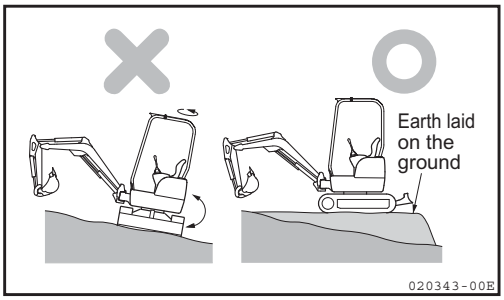

1) Go down slopes at low speed, using the travel levers and accelerator lever to control your speed.
   When going down a slope, drive the machine at low engine speed and position the implement as shown in the figure at the right.
   Also drive the machine with the track gauge widened by operating the track gauge change control lever to keep the machine more stable.

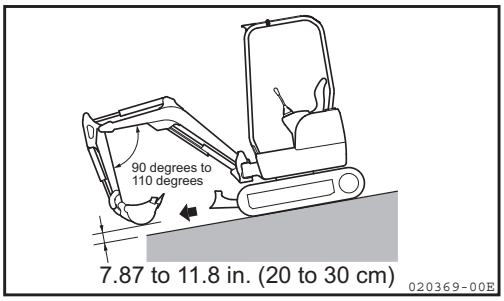

2) When going up a slope, drive the machine with the implement positioned as shown in the figure at the right.
   Also drive the machine with the track gauge widened by operating the track gauge change control lever to keep the machine more stable.

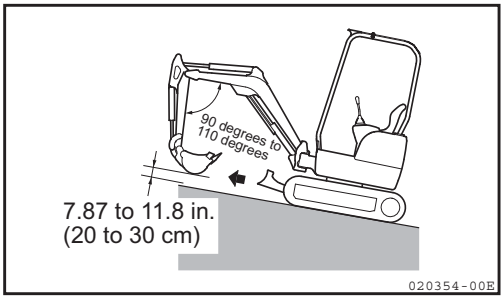

Courtesy of Machine.Market

https://truckmanualshub.com/

■ Braking when going down a slope

When going down a slope, you can automatically brake the machine by setting the travel levers to the neutral position.

■ When the crawler is slipping

If you cannot go up a slope by operating the travel levers because the crawler is slipping, retract the arm and use the pull-back power of the implement to help you go up the slope.

■ When the engine stops

If the engine stops while going up a slope, set the travel levers to the neutral position, stop the machine, and restart the engine.

Courtesy of Machine.Market

https://truckmanualshub.com/

13-13. Escaping from the mud

Carefully operate the machine not to allow it to get mired in mud. If the machine is mired in mud, the machine can escape as follows:

13-13-1. If only one track is mired in the mud

If only one track is mired in the mud, place the bucket on the muddy side, lift the track above the ground, lay a log or a wood block under the track shoe, and raise the bucket to escape.

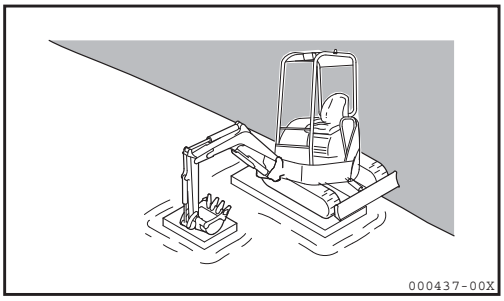

IMPORTANT

When lifting the machine above the ground with the boom or the arm, press on the ground with the bottom of the bucket. (Do not press on the ground with the bucket teeth.)

In doing this, the angle between the boom and the arm should be 90 degrees to 110 degrees.

The same procedure described above should be utilized when the bucket is in the reverse position.

13-13-2. If both tracks are mired in the mud

If both tracks are mired in the mud, lay a log or a wood block under the track shoes in the same manner as mentioned above, dig the bucket into the solid ground, retract the arm just as when excavating, and push the travel levers forward to escape from the mud.

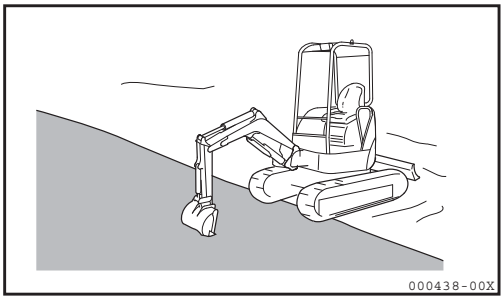

Courtesy of Machine.Market

https://truckmanualshub.com/

13-14. Operations using the bucket

You can greatly widen the range of work described here by using optional attachments.

13-14-1. Backhoe operation

Backhoe operation is suitable for digging the ground below the machine.

Suppose that the machine is operating as illustrated in the figure at the right : a maximum digging force of each cylinder can be obtained when the angle between the bucket cylinder and the bucket arm as well as between the arm cylinder and the arm is maintained at 90 degrees.

When digging, make good use of this angle to increase the operating efficiency.

To excavate the ground efficiently by manipulating the arm, the arm needs to be operated within a range of angles between 45 degrees forward and 30 degrees backwards, as illustrated in the figure at the right. Though the range differs according to the depth of the work, do not move the implement to the cylinder stroke end.

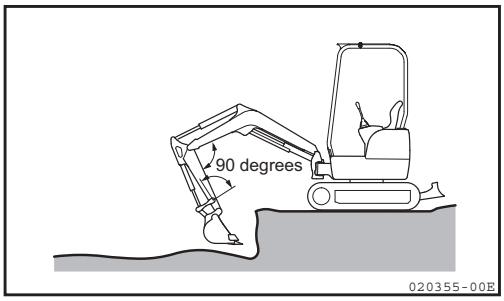

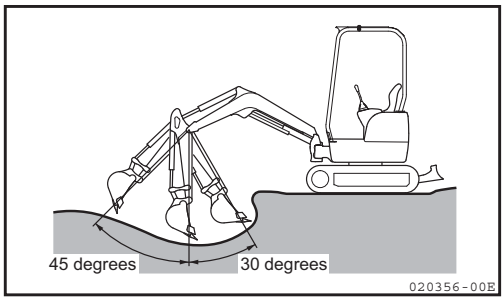

13-14-2. Shoveling

Shoveling is suitable for excavating ground that is higher than the machine bottom.

Install the bucket in the reverse position before operating.

For the procedure for installing the bucket in the reverse position, Refer to Section "13-15. Reversing the bucket".

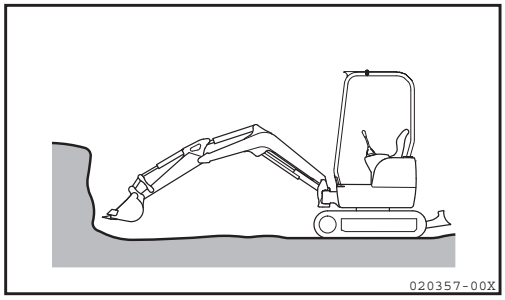

13-14-3. Ditching

To increase work efficiency, install a suitable bucket for ditching and position the tracks in parallel with the ditch to be made.

To make a wide ditch, first dig the two sides, and then dig the center.

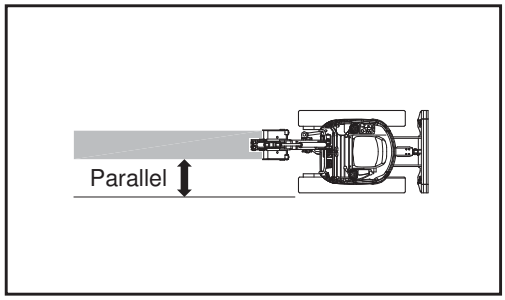

13-14-4. Loading

To increase work efficiency, locate the dump truck at a position where the swing angle of the machine will be minimized and the operator can clearly view the dump truck.

Load earth from the rear of the dump truck, because it can be loaded more easily and in larger amounts than from the side..

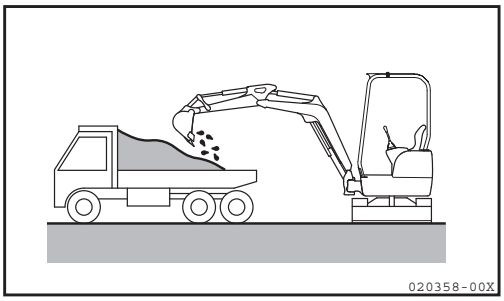

Courtesy of Machine.Market

https://truckmanualshub.com/

13-15. Reversing the bucket

⚠ WARNING

- **When driving pins into the bucket with a hammer, metal chips may fly. If metal chips should get into your eyes, they can cause serious injury. Use goggles, a hard hat and gloves for safety when reversing the bucket.**
- **After removing the bucket, place it on solid ground in a stable position.**
- **When aligning the holes for pin A and pin B, be careful not to insert your fingers into the holes to prevent serious injury to your fingers. Visually check the alignment of the holes.**

Work on level ground with good footing. If two or more persons work together, communicate with signals selected beforehand for safety.

■ Reversing procedure

Reverse the bucket according to the following procedure

1) Park the machine on level, flat ground, and lower the bucket onto the ground.

Note :

To remove the pins, place the bucket on the ground in such a way that it touches the ground lightly. Lowering the bucket down on the ground by its full weight will increase stresses on the pins and make the pins difficult to remove.

IMPORTANT

Keep the pins away from dirt or mud.

2) Stop the engine.
3) Clean the area around the bucket pins to prevent foreign material from entering the pin holes.
4) Remove pins A and B.
5) Reverse the bucket.
6) Connect the arm to hole (B), and then the link to hole (A). [You can easily align the hole of the link and hole (A) by lifting the bucket slightly.]
7) Install the collars and bolts into the bucket pins A and B.
8) Grease the connecting parts.

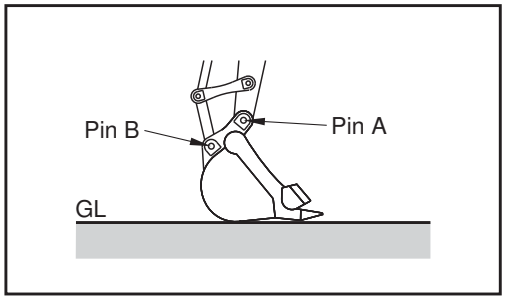

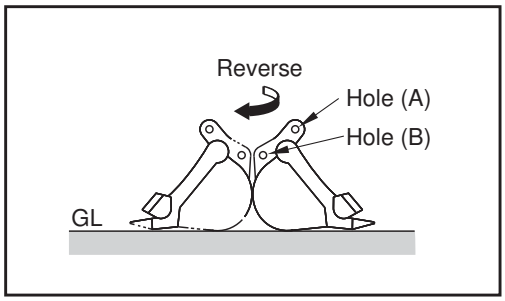

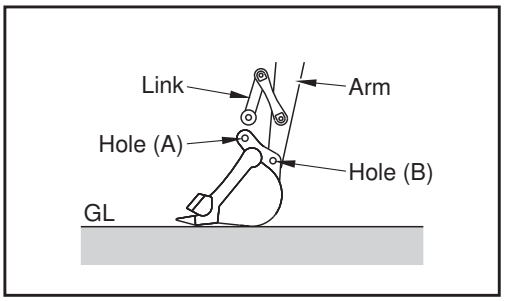

Courtesy of Machine.Market

https://truckmanualshub.com/

IMPORTANT

When using a reversed bucket, the bucket and the boom cylinder can contact each other when the arm is curled or the boom is lowered beyond the positions indicated in the figure at the right.

Never curl the bucket too much, and never allow it to contact the boom cylinder.

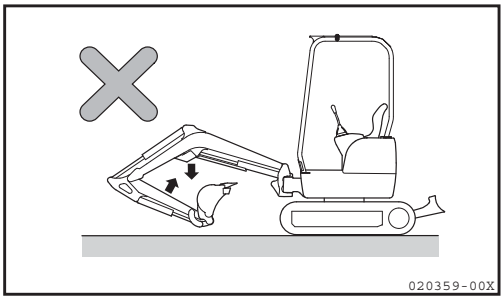

Courtesy of Machine.Market

https://truckmanualshub.com/

13-16. Parking the machine

⚠ CAUTION

Do not stop the machine suddenly but provide a safety margin.

⚠ WARNING

- **Park on solid, level ground.**
- **Do not park on a slope. If it is unavoidable to park on a slope, place solid blocks of wood behind the crawlers, place the blade on the ground, and dig the bucket into the ground.**

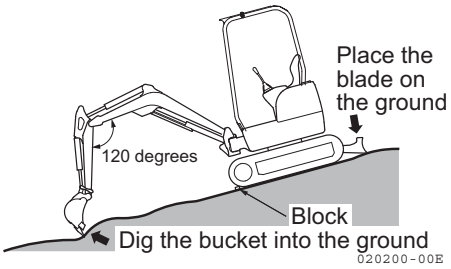

⚠ WARNING

- **Do not touch the control levers and pedals accidentally. Otherwise, the implement or the machine may move unexpectedly, causing a serious accident.**
- **When leaving the operator's seat, be sure to place the lock levers securely in the lock position and remove the starter switch key.**

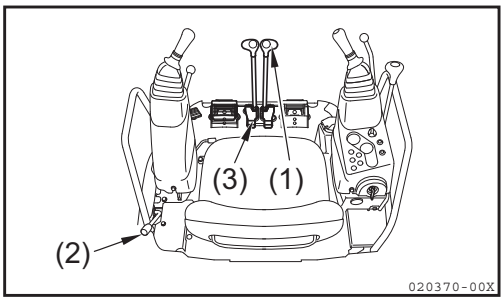

1) Set the left and right travel levers (1) or pedals (3) to the neutral position to stop the machine.

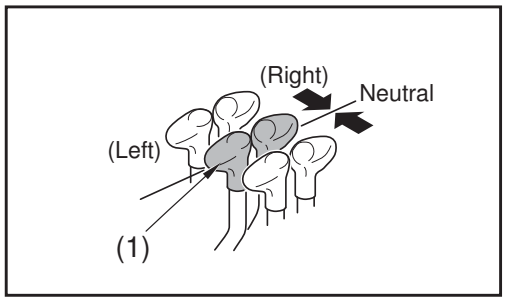

2) Idle the engine with the accelerator lever (2).

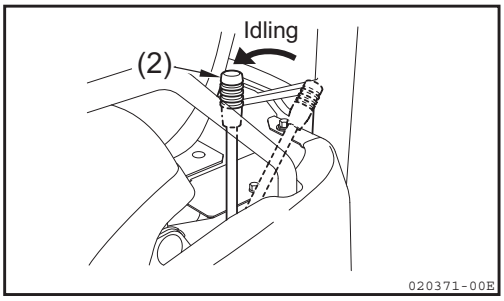

Courtesy of Machine.Market

https://truckmanualshub.com/

3) Place the bucket on the ground with its bottom surface in contact with the ground.

4) Place the blade on the ground.

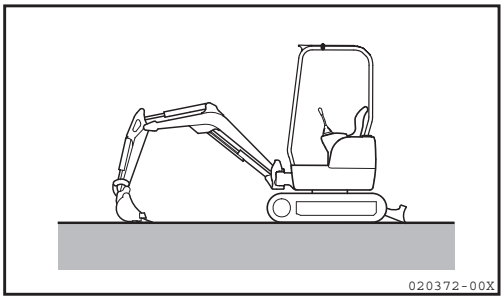

5) Set the lock lever to the "LOCK" position.

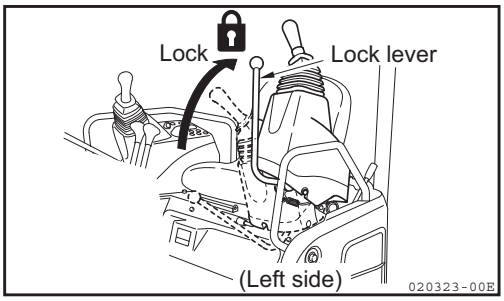

13-17. Inspection requirements after completing operation

Check the monitor for the engine cooling water temperature (1), the engine oil pressure (2), and the residual quantity of fuel (3). Take any actions necessary.

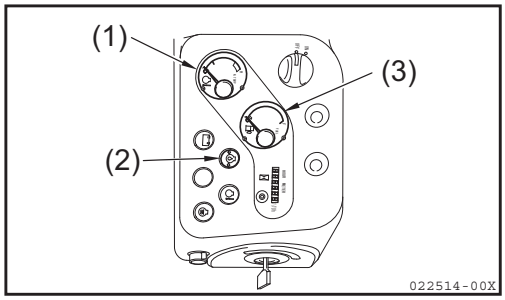

Courtesy of Machine.Market

https://truckmanualshub.com/

13-18. Stopping the engine

IMPORTANT

- **Stopping the engine after rotation at high speed may shorten the engine life. Do not stop the engine suddenly except in case of emergency.**
- **If the engine is overheated, do not stop the engine immediately. Gradually lower the engine temperature by rotating the engine at medium rotational speed before stopping the engine.**

1) Idle the engine for approximately five minutes with no load.
   (The engine temperature gradually lowers.)

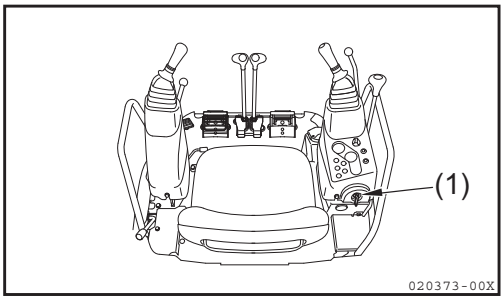

2) To stop the engine, turn the starter switch key (1) to the "OFF" position.

3) Take the starter switch key out of the starter switch (1).

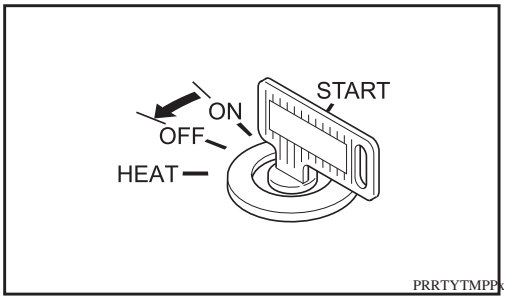

Note :

The swing motor brake will engage automatically when the engine stops.

Courtesy of Machine.Market

https://truckmanualshub.com/

13-19. Inspection requirements after stopping the engine

1) Check oil and water for leaks, and visually inspect the implement, the machine, and the undercarriage by walking around them.
   If there are any leaks of oil or water, or any observed abnormality, take corrective action.

2) Completely fill the fuel tank.

3) Confirm that the engine compartment is free of any foreign matter.
   Combustibles or dust in the engine compartment may cause a fire. Remove them, if any.

4) Remove mud adhering to the undercarriage of the machine.

13-20. Locking

Make sure that you lock the following :
(1) Cover for fuel supply port
(2) Engine hood

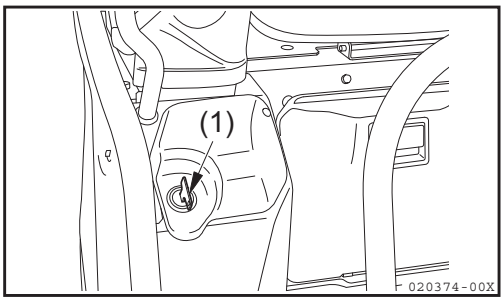

Note :
The starter switch key (1) is used to lock all of the items mentioned above.

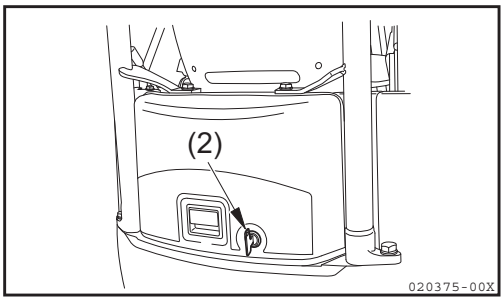

Courtesy of Machine.Market

https://truckmanualshub.com/

13-21. Handling the rubber crawlers

13-21-1. Using the rubber crawlers properly

Rubber crawlers have some advantages over steel crawlers.
However, you cannot take full advantage of them if you use them in the same manner as steel ones. Use care in operating with rubber crawlers in accord with the conditions of the work site and the type of work.

Comparison Table of Rubber and Steel Crawlers

	Rubber	Steel
Low vibration	◇	□
Smooth travel	◇	○
Silent travel	◇	□
Less damage to paved roads	◇	□
Simple handling	◇	□
Susceptibility to damage (strength)	□	◇
Tractive force	◇	◇

◇ : Excellent
○ : Good
□ : Ordinary

Rubber crawlers have many advantages inherent in the unique properties of the material. On the other hand, however, they are low in strength. It is essential that you fully understand the properties of rubber crawlers, and observe the precautions for operating and handling them to prolong their life and get the most out of them. Be sure to read Section "13-21-3. Precautions for using the rubber crawlers" before using them.

13-21-2. Warranty for rubber crawlers

The rubber crawlers are not warranted for free repair or replacement if they are damaged because of misuse by the customer, including the failure to comply with the prohibitions and the instructions for safe operation; (for example, the failure to check the tension of the rubber crawlers or service the rubber crawlers properly, or "using the rubber crawlers on surfaces and terrains which could physically damage them".)

Courtesy of Machine.Market

https://truckmanualshub.com/

13-21-3. Precautions for using the rubber crawlers

■ Prohibitions

Observe the following prohibitions:

- Do not operate or turn on surfaces or terrains that have sharp stones, a hard, uneven rock base, or that expose the crawlers to steel rods, scrap iron, or edges of iron plates. Failure to observe these prohibitions may damage the rubber crawlers.

- Do not operate the machine on a stony surface like a riverbed. Doing this may damage the rubber crawlers by catching gravel in the crawlers or may cause the crawlers to come off. Forcibly pushing obstacles will also shorten the life of the rubber crawlers.

- Prevent the rubber crawlers from getting exposed to oil, fuel, or chemical solvents. If they are exposed, immediately wipe them. Also, do not travel on roads which have oily surfaces.

- When storing the rubber crawlers for a long time period (more than three months), avoid placing them in a place subject to direct exposure to sunlight or rain.

- Do not operate the machine when the crawlers will be exposed to heat, (i.e., near an open-air fire, on a steel plate that has been exposed to the blazing sun, or on a hot asphalt road.)

- Never run on one rubber crawler track while the other is held above the ground with the implement. Doing this may damage the rubber crawler or cause it to come off.

Courtesy of Machine.Market

https://truckmanualshub.com/

13-21-4. Other precautions for using the rubber crawlers

Observe the following precautions when operating the machine:

- Never spin-turn on concrete or asphalt roads.
- Do not change course suddenly. Doing this will cause the rubber track to wear early or be damaged.
- Do not turn the machine across a large level gap while traveling. Remember that running over a level gap at a right angle will prevent the crawler from coming off.
- Slowly lower the machine after it has been lifted above the ground with the implement.
- It is not recommended that the machine be used to handle any materials that become oily after being crushed (e.g., soybeans, corn, rapeseed oil seeds, etc.). After unavoidably using the machine to handle such materials, clean the crawlers with water.
- It is not recommended that the machine be used to handle materials such as salt, ammonium sulfate, potassium chloride, potassium sulfate, or superbiphosphate of lime. Handling these materials may affect the core metal adversely. After using the machine to handle such materials, clean the crawlers with water.
- Do not operate the machine at the seashore. Doing this may affect the core metal adversely due to the salt content.
- If a rubber crawler is cracked, it could be easily damaged when exposed to salt, sugar, wheat, or soybeans. Be sure to repair any cracks in the rubber crawler to prevent rubber chips from getting into the materials being handled.
- Do not allow the rubber crawler to rub against a concrete wall.
- The rubber crawlers are prone to slip on snow or on a frozen road. Be careful of skidding when traveling or operating on a slope in cold weather.
- Operating the machine in extremely cold weather will deteriorate the rubber crawlers, shortening their life.
- Use the rubber crawlers between -13 ℉ to +131 ℉ (-25 ℃ to +55 ℃) because of the physical characteristics of rubber.
- Be careful not to damage the rubber crawlers with the bucket while operating the machine.

Courtesy of Machine.Market

https://truckmanualshub.com/

- Keep the crawlers in appropriate tension to prevent them from coming off.
  If the tension is too low, the rubber crawlers may come off under the following conditions.
  (Even if the tension is adequate, take care when operating the crawlers under these conditions.)

  - Do not steer the machine at an angle other than 90 degrees across a large level gap created by a curbstone or a rock [approximately more than 8 in. (20 cm)]. Run over a level gap at a right angle only to prevent the crawlers from coming off.

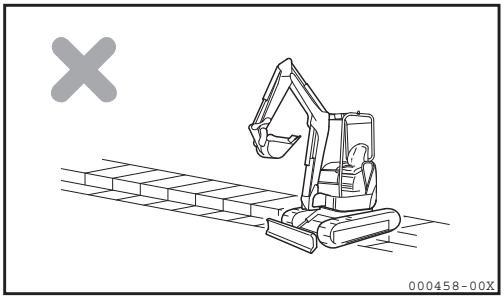

  - Do not steer the machine across a boundary between the flat ground and a slope, while moving backwards. If such travel is not avoidable, slow down the speed.

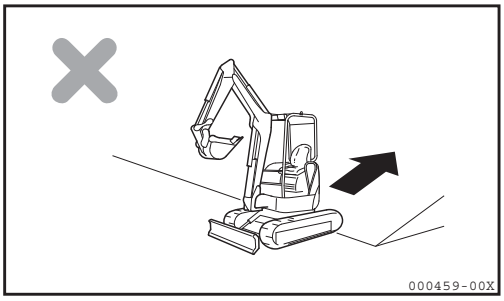

  - Do not travel with the crawler on one side on a slope or on convex ground (causing a machine angle of more than 10 degrees), and with the crawler on the other side on flat ground, to prevent the rubber crawler from being damaged. Be sure to travel with the crawlers on both sides on the same level surface.

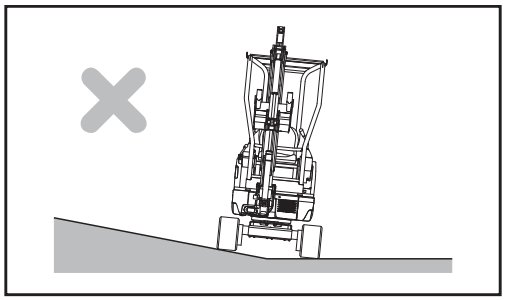

  - The three cases illustrated above are those which could cause the rubber crawlers to loosen. In addition, do not subject the machine to such ground conditions as are illustrated in the figure at the right.

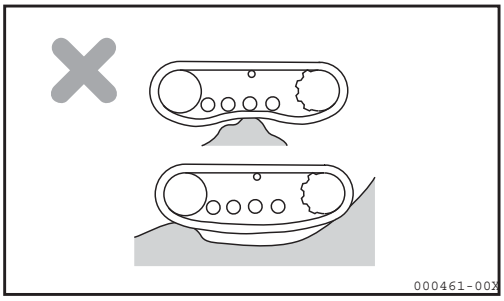

[How the rubber crawlers come off]

1) When running over a level gap, a clearance is created between the crawlers and the track rollers. At this point, the crawlers tend to come off.

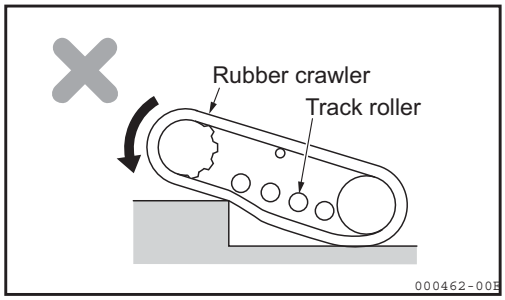

Courtesy of Machine.Market

https://truckmanualshub.com/

2) If the machine is traveling in reverse, clearance may also be created between the track rollers and the rubber crawlers, and between the idlers and the rubber crawlers, causing the rubber crawlers to come off.

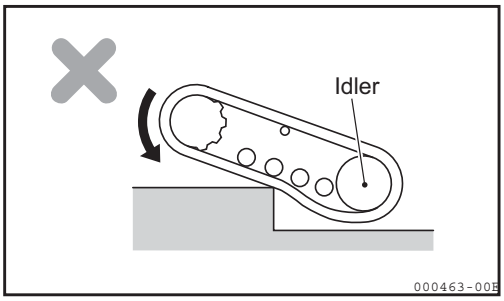

3) Other situations to be avoided.

- When the machine changes the travel direction while the rubber crawlers are blocked sideways by an obstacle or the like.

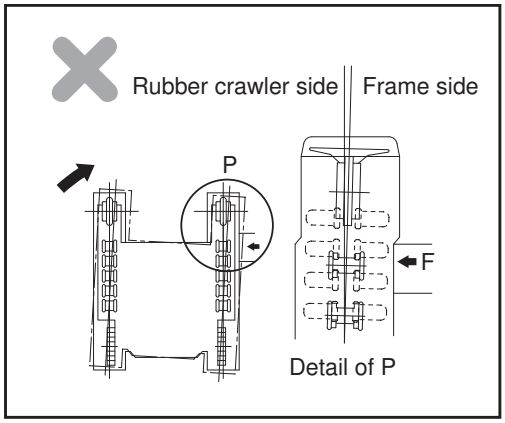

- When the idler and the track rollers are misaligned from the core metal, due to rubber crawler misalignment.

- Traveling in reverse under the condition illustrated will cause the rubber crawlers to come off.

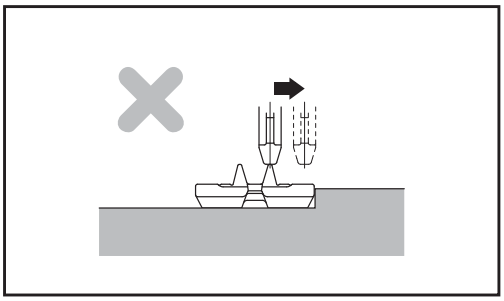

- Changing the travel direction of the machine under the condition illustrated will cause the rubber crawlers to come off.

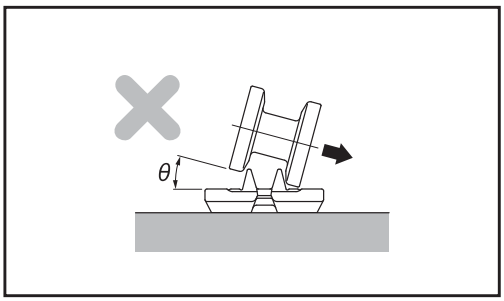

13-21-5. Checking and servicing the machine with rubber crawlers

To check and service the machine with rubber crawlers, refer to and follow Section "24-1. Table of service time intervals".

Courtesy of Machine.Market

https://truckmanualshub.com/

13-22. Handling hydraulic P.T.O.

13-22-1. Description of stop valve, P.T.O. selector valve, P.T.O. pedal and pedal lock

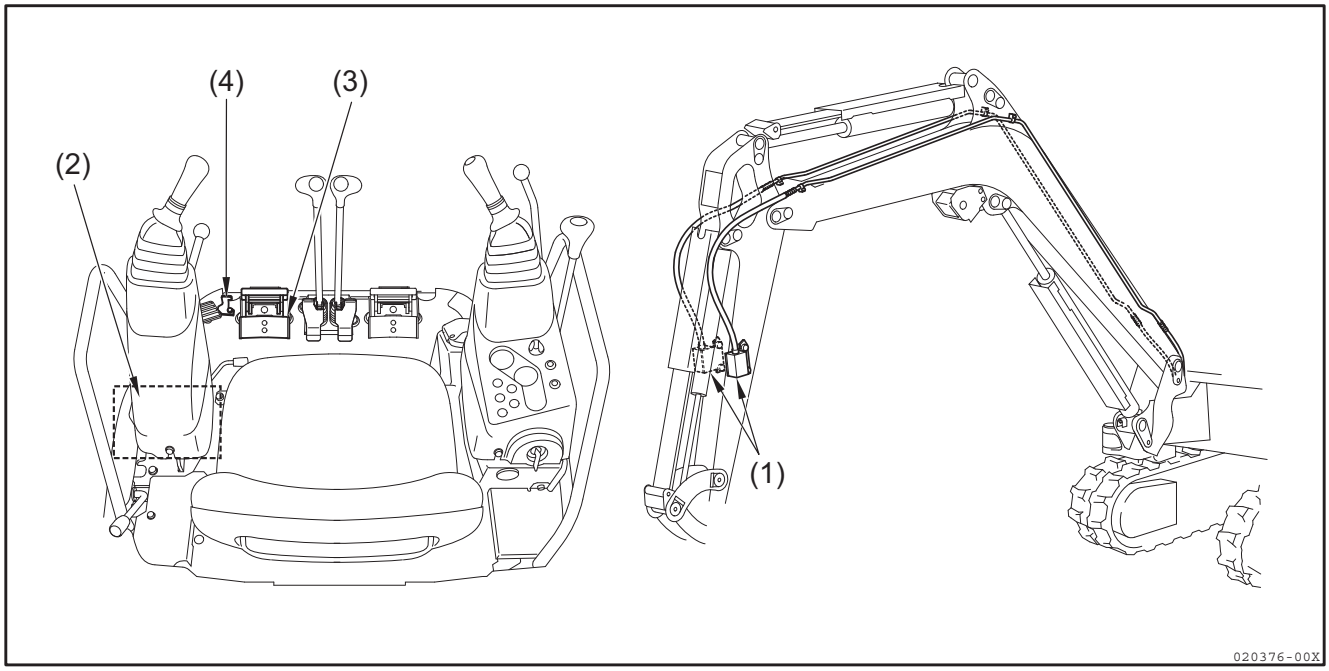

(1) Stop valve

This valve can stop the flow of the hydraulic oil.

(A) Open : The hydraulic oil flows

(B) Close: The hydraulic oil stops.

Set this valve at the closed position when removing and installing an attachment.

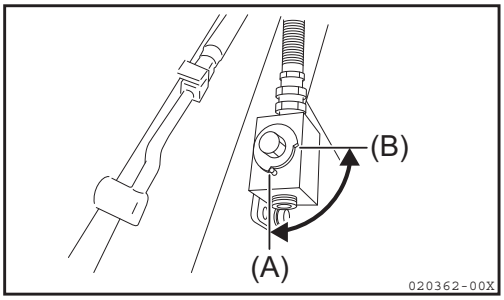

(2) P.T.O. selector valve

Use this valve to change the oil flow.

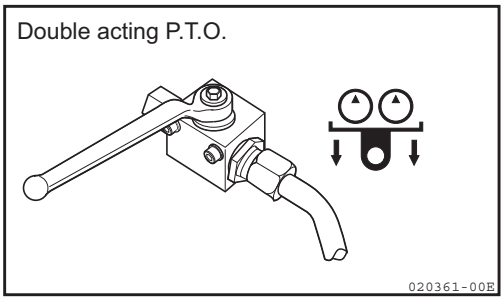

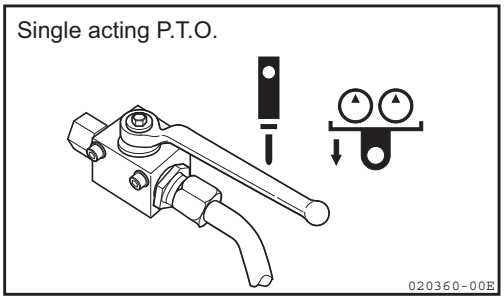

Courtesy of Machine.Market

https://truckmanualshub.com/

(3) P.T.O. pedal

Use this pedal to operate the attachment.

- Move the P.T.O. pedal to L side for operating the single acting actuator type of attachments, when the P.T.O. selector valve is in the single acting position.
  [Example of the P.T.O. : Breaker]

- Move the P.T.O. pedal to L or R side for operating the double acting actuator type of attachments, when the P.T.O. selector valve is in the double acting position.
  [Example of the P.T.O. : Tilt bucket, Clamshell, etc.]

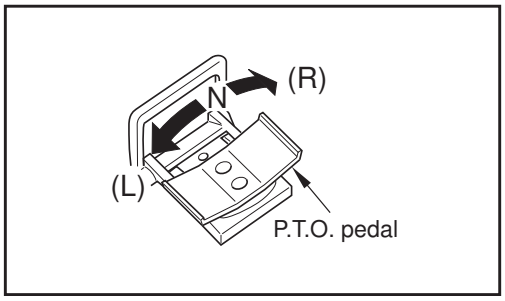

(4) P.T.O. pedal lock (for attachment control pedal)

⚠ WARNING

- **Securely look the P.T.O. pedal in the neutral position when the P.T.O operation is not required.**
- **If you touch the P.T.O. pedal carelessly when the P.T.O. pedal is unlocked, it may cause serious bodily injury.**

Use this device to lock the P.T.O. pedal.

- **Hand breaker position**

When the P.T.O. pedal lock is moved to the right with the P.T.O. pedal moved to the left, the P.T.O. pedal is locked. (The lock position when operating the hand breaker, etc.).

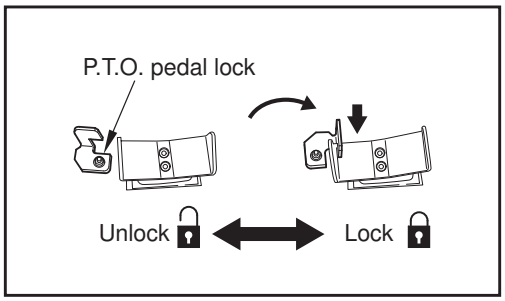

Courtesy of Machine.Market

https://truckmanualshub.com/

13-22-2. Hydraulic circuit

1) When mounting any attachment, follow the procedure below to connect the circuit.

(1) Make sure the stop valves are in the closed position and remove the screw plugs. Take care not to lose or damage the removed parts.

(2) Install the connectors supplied by the manufacturer of the attachment and connect the hoses.

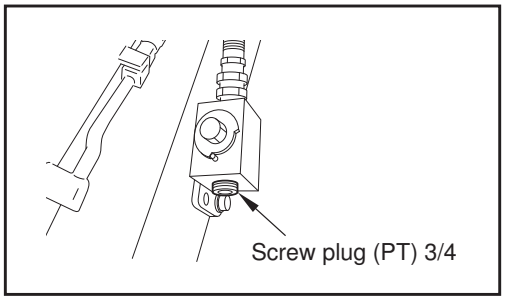

■ **Oil flow system**

The directions of pedal operation and the oil flow system are described in the figure below.

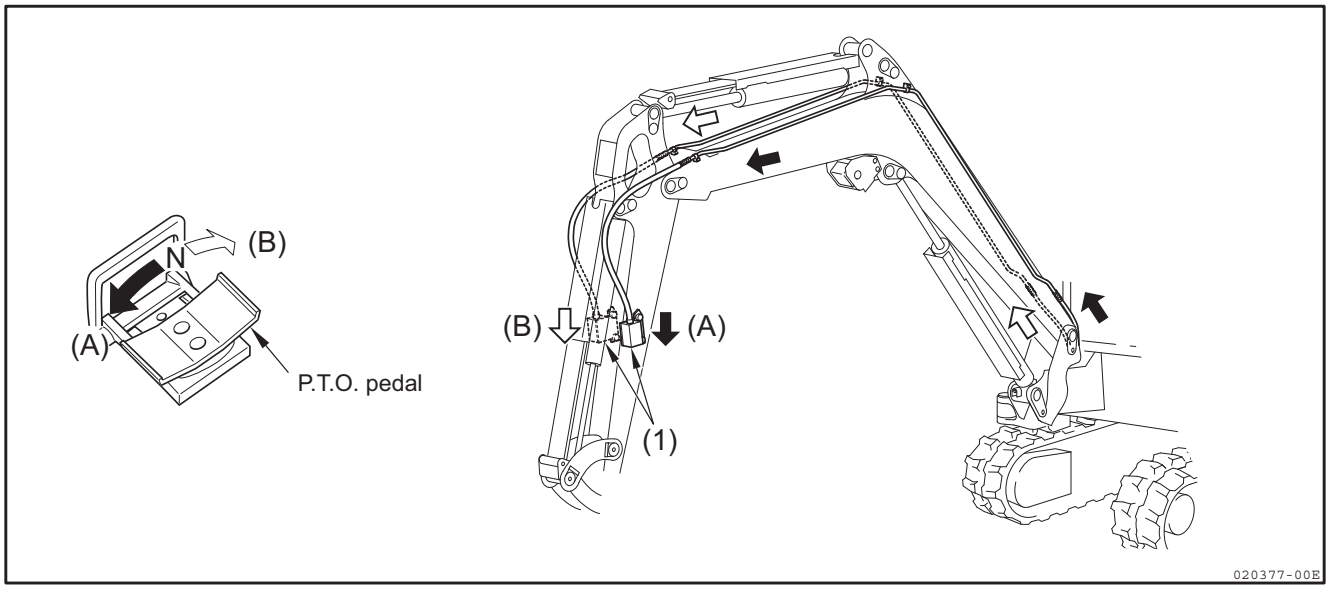

Courtesy of Machine.Market

https://truckmanualshub.com/

13-22-3. Operating attachment

⚠ WARNING

When changing the hydraulic piping connection, stop the engine and slowly loosen the connection to release the inner pressure.

If you use the oil pressure for other hydraulic devices as the power source, connect the piping by using the following procedure after the engine has stopped.

1) Close the stop valve.
2) Remove the screw plugs.
3) Connect the hose for the hydraulic tool.
4) Open the stop valve.

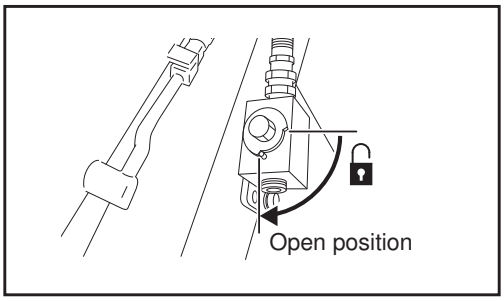

Operate the attachment as follows:

■ **Precautions**

- Make sure the stop valves are in the open position.
  Refer to Section "13-22-2. Hydraulic circuit" for oil flow system.

1) When using the breaker

The breaker operates when the P.T.O. pedal is moved to the arrowed direction.

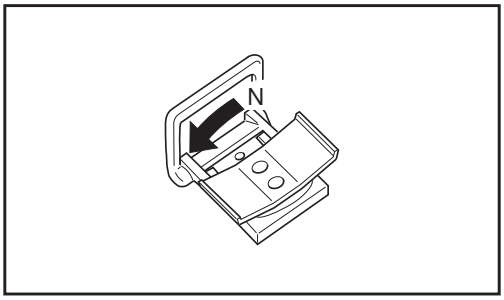

- Make sure the P.T.O. selector valve is in the single acting position.
  Refer to Section "13-22-1. Description of stop valve, P.T.O. selector valve, P.T.O. pedal and pedal lock".

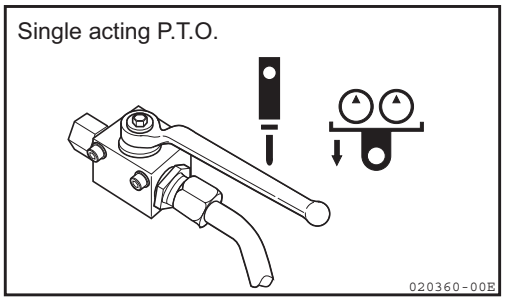

- Make proper use of the breaker following the handling instructions in the operation manual provided by the manufacturer of the breaker.

2) When using general attachments such as tilt bucket

Move the P.T.O. pedal to the right or the left, and the attachment operates.

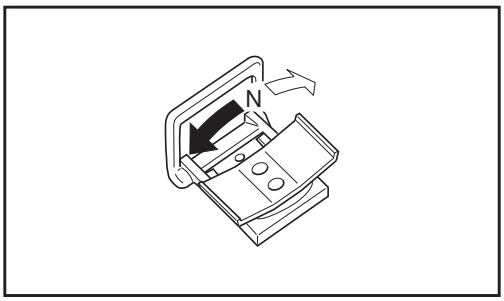

Courtesy of Machine.Market

https://truckmanualshub.com/

■ **Precautions**

- Make sure the P.T.O. selector valve is in the double acting position.
  Refer to Section "13-22-1. Description of stop valve, P.T.O. selector valve, P.T.O. pedal and pedal lock".

- Make proper use of the general attachments following the handling instructions in the operation manual provided by the manufacturer of the general attachments.

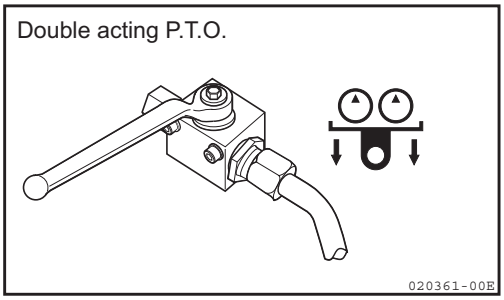

13-22-4. Long-term storage

If the hydraulic tool is not used, do the followings:

- Close the stop valves.

- Disconnect the hoses for the hydraulic tool. Wind the screw plug R (PT) 3/4 with seal tape and tighten them to the stop valve.

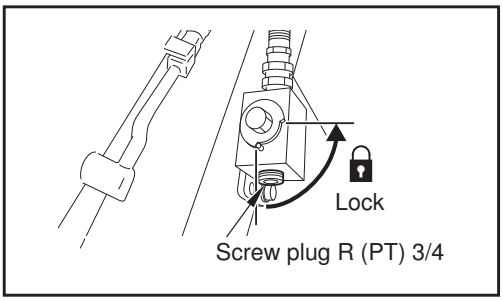

Operating the P.T.O. pedal when the breaker or general attachment is not mounted may cause overheating.

13-22-5. Specification

Hydraulic oil pressure specification

- Oil flow rate : 8.1 GPM (30.8 L / min)

Courtesy of Machine.Market

https://truckmanualshub.com/

14. Transportation

14-1. Loading and unloading the machine

For safety in transporting the machine, comply with all applicable regulations and laws.

⚠ WARNING

- **Be careful when loading and unloading the machine, because it is a job of high hazard potential.**
- **Load or unload the machine on level, solid ground far away from the shoulder of the road.**
- **Load or unload the machine at a low engine speed.**
- **Load or unload the machine with the track gauge widened to the maximum.**
- **Never operate the track gauge change control lever while loading or unloading the machine.**
- **Use ramp plates of adequate strength having hooks. Check to see that the ramp plates are wide, long, and thick enough to safely sustain the machine so that you can load or unload safely. To prevent the ramp plates from bending too much, support them with blocks.**
- **Securely hook the ramp plates to the deck of the truck so that they will not come off.**
- **Remove mud, grease, and other slippery deposits from the track shoes, and grease, oil, and ice deposits from the ramp plates to prevent the machine from skidding.**
- **Never change the travel direction on the ramp plates. If you need to change the travel direction, go back down the ramp plates, then do this.**
- **Swing slowly when on the truck bed, if it becomes necessary to do so, since the machine's position will be unstable.**

To load or unload the machine, be sure to use the ramp plates and follow the procedures outlined below.

Courtesy of Machine.Market

https://truckmanualshub.com/

1) Firmly brake the truck and apply wheel stoppers to the tires. Securely install the ramp plates on the bed of the truck in a position where the center of the truck aligns with the center of the machine. Make sure that the left and right ramp plates are at the same level.

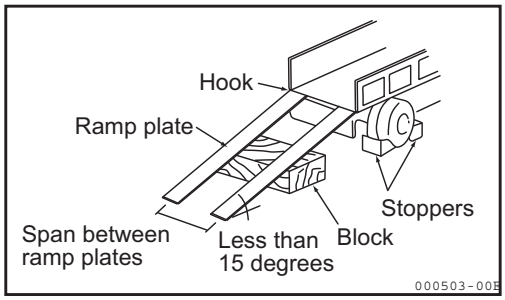

The ramp plates should be set at an angle of less than 15 degrees.
Determine the span between the ramp plates on the basis of the centers of the track shoes.
Do not operate the high-speed pedal.

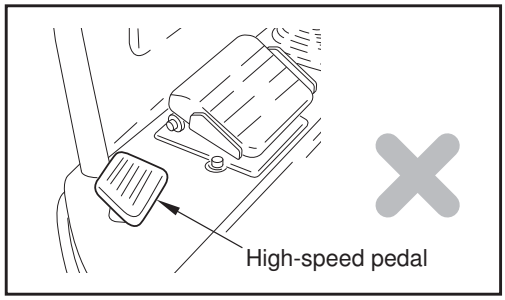

2) Return the accelerator lever to reduce engine speed.

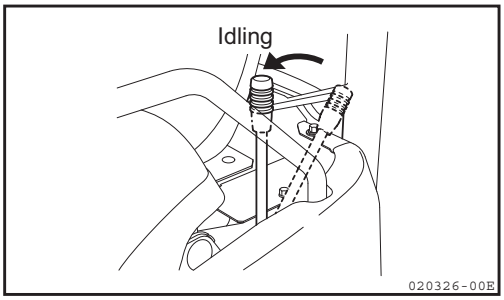

3) Travel toward the ramp plates at a low speed, and load or unload the machine with the implement lowered as close as possible to the deck of the truck.
Do not operate any levers other than the travel levers while driving on the ramp plates.

4) Load the machine in a safe position on the truck.

Courtesy of Machine.Market

https://truckmanualshub.com/

14-2. Precautions for loading the machine

⚠ WARNING

Load or unload the machine on level, solid ground far away from the shoulder of the road.

After loading the machine in a safe position on the truck, secure the machine as follows:

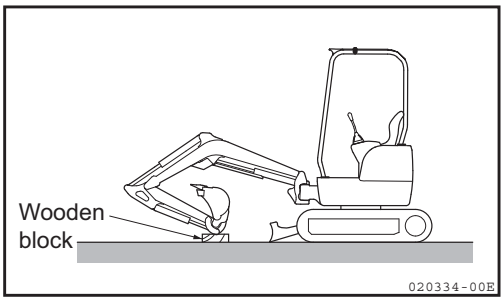

1) Place the blade down on the bed of the truck.

2) Extend the bucket and arm cylinders to the maximum limit, and slowly lower the boom down on a block of wood.

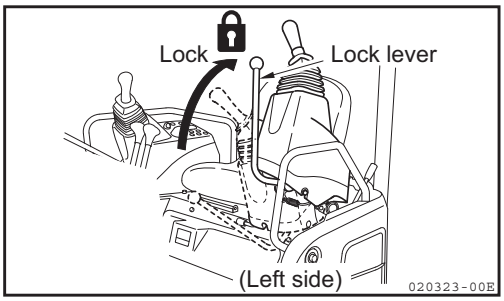

3) Stop the engine to take the starter switch key out of the starter switch.
   (The automatic brake locks the swing motor.)

4) Be sure to place the lock levers to the lock position.

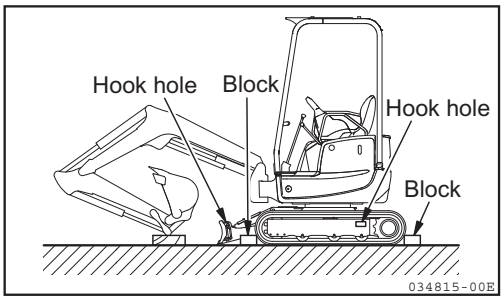

5) Provide wooded blocks in the front and back of the track and hook the shackles to the machine's hook holes, and secure the machine with a chain or a wire rope so that the machine will not move during shipping. In particular, be sure to secure it to prevent skidding.

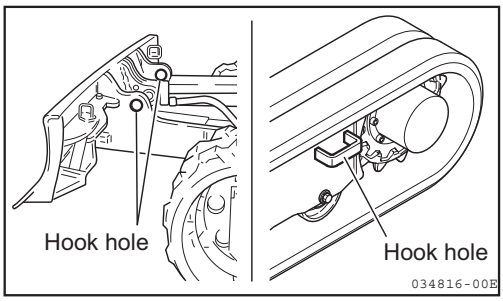

IMPORTANT

To protect the bucket cylinder from being damaged during shipping, place a wooden block under one end of the bucket cylinder to prevent it from directly touching the deck of the truck.

Do not use the hook for the purpose other than stabilizing the machine during shipping. In particular, do not use the hook in the truck frame section for lifting the machine.

Courtesy of Machine.Market

https://truckmanualshub.com/

14-3. Precautions for transporting the machine

⚠ WARNING

Select a route for transporting the machine based on the road width and clearance, and the height and weight of the machine.

For safer transportation, comply with all local regulations and laws.

Courtesy of Machine.Market

https://truckmanualshub.com/

14-4. Suspending the machine

⚠ WARNING

- **Never suspend the machine if any person is on the machine or the implement.**
- **Use wire ropes strong enough for the weight of the machine.**
- **Do not suspend the machine in any way other than that explained on the following page.**
  Failure to suspend the machine as prescribed will throw the machine off balance.
- **Do not swing the machine being suspended.**
- **When suspending the machine, keep the machine in balance taking note of the center of gravity of the machine.**
- **Never stand near or under the suspended machine.**

For safety in suspending the machine, comply with all applicable regulations.

Courtesy of Machine.Market

https://truckmanualshub.com/

Suspend the machine on level ground as follows:

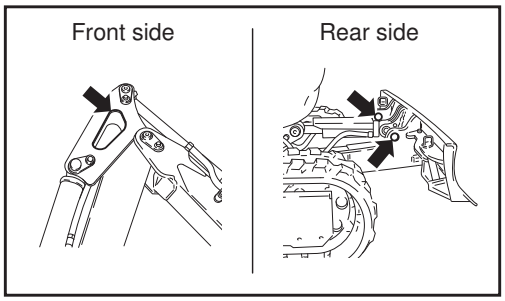

1) Swing the upper structure so that the blade is behind the operator's seat.

2) Raise the blade to the highest limit.

3) Extend the hydraulic cylinders of the front implement (except for the boom swing cylinder) to the maximum.

4) Stop the engine, and make sure that nothing is left around the operator's seat before leaving the machine.

5) Put a slingbelt (or a wire rope) through the hole in the arm illustrated in the figure on the right and install shackles in the right and left holes in the side plate of the blade on the rear side, then securely fasten the slingbelt to the shackles.

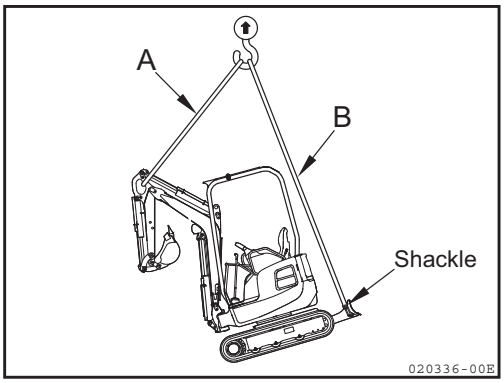

Note:

The length of sling belt (or wire rope) is as follows :

		A	B
Length	in. (m)	78.7 (2.0)	157.5 (4.0)
Number of sling	belts / machine	1	2

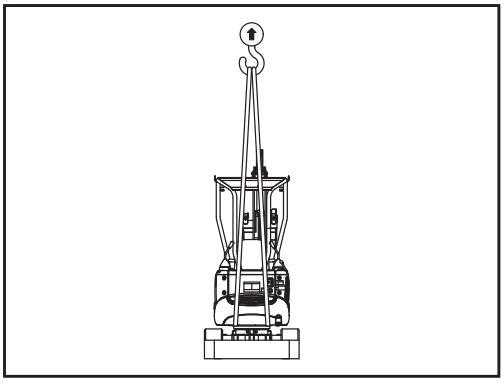

6) Suspend the machine above the ground, wait until the machine is stable and then suspend it slowly.

IMPORTANT

Set each lock lever at the lock position.

Shipping weight:

lbs. (kg)

Machine with rubber crawler
3671.3 (1665)

Courtesy of Machine.Market

https://truckmanualshub.com/

15. Care and Service in Cold Weather

15-1. Preparing for cold weather

In cold weather, you may have difficulty in starting the engine or the cooling water may freeze. So take measures as follows:

15-1-1. Fuel and lube oil

Use low viscosity fuel and lube oil. For the specified viscosities, refer to Section "21. Fueling, Oiling and Greasing Based on Temperature Range".

15-1-2. Cooling water

⚠ WARNING

Anti-freeze is flammable. When handling anti-freeze, keep away from any sources of ignition and do not smoke.

IMPORTANT

Never use an anti-freeze containing methanol, ethanol, or propanol.

For the timing of cooling water change and the mixing ratio of the anti-freeze, refer to Section "25-2. Non-periodic services".

Note :

Because a long-life coolant (LLC) is added to the cooling water, you need not change it until the temperature falls below -31°F (-35°C).

If the temperature falls below -31°F (-35°C), refer to Section "25-2. Non-periodic services" to control the density of the cooling water.

Courtesy of Machine.Market

15-1-3. Battery

⚠ WARNING

- **The battery generates flammable gas and it can cause a fire and an explosion. Keep sparks or flames away from the battery.**
- **Battery electrolyte contains dilute sulfuric acid which is a strong acid. To avoid serious injury, do not allow the electrolyte to contact skin or splash into eyes.**
  If the electrolyte contacts your skin or gets in your eyes, flush immediately with large amounts of water, and obtain medical treatment at once.

Battery performance deteriorates as the temperature goes down. When the battery voltage is low, battery electrolyte will easily freeze. Keep the charging rate close to 100% (full charging) and keep the battery warm for easy start the next day.

Note :

Measure the specific gravity of the electrolyte to determine the charge ratio using the conversion table given below.

Electrolyte temperature / Charging rate	68℉ (20℃)	32℉ (0℃)	14℉ (-10℃)	-4℉ (-20℃)
100%	1.28	1.29	1.30	1.31
90%	1.26	1.27	1.28	1.29
80%	1.24	1.25	1.26	1.27
75%	1.23	1.24	1.25	1.26

The specific gravity of the electrolyte varies with its temperature and recharged condition.

Courtesy of Machine.Market

https://truckmanualshub.com/

15-2. Precautions after a day's work

To prevent the machine from getting stuck in the morning due to frozen mud or water deposits on the undercarriage, be sure to observe the following precautions.

- Remove any mud or water adhering to the machine. If mud or water droplets adhering to the hydraulic cylinder rods should get into the seals, the seals could be damaged.
- Remove any mud or water adhering to the moving parts for changing the track gauge. If mud or water deposits are frozen, the variable track gauge type crawlers cannot be operated.
- Park the machine on solid, dry ground.
  If no solid, dry ground is available, lay plates on the ground and park the machine on the plates to prevent the frozen tracks from sticking to the ground.
- Drain the water accumulated in the fuel system by opening the drain cock, to prevent freezing.
- As battery performance deteriorates in low temperatures, cover the battery or move it to a warm place, and reinstall it in the machine on the next morning.
  If the level of the battery electrolyte is low, add distilled water before starting operation on the next morning. To prevent the battery from freezing at night, do not add distilled water after completing operation.

15-3. After cold weather ends

When the temperature rises, do the following:

- Replace the lube oil and fuel with the specified viscosities according to Section "21. Fueling, Oiling and Greasing Based on Temperature Range".
- If you have added an AF-PT anti-freeze (for one winter season only), fully drain the cooling system, flush the inside of the cooling system well, and fill the cooling system with tap water.

Courtesy of Machine.Market

https://truckmanualshub.com/

16. Long-term Storage

16-1. Before storing

IMPORTANT

When storing the machine, set up the machine as illustrated in the figure at the right, to protect the hydraulic cylinder rods from becoming corroded.

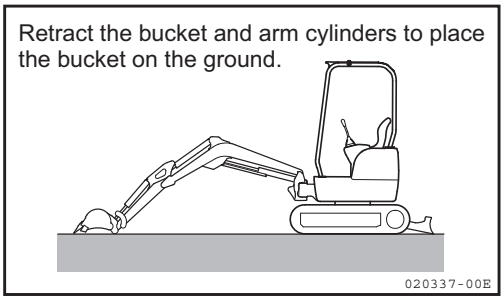

When storing the machine for a long period, do the following:

- Clean all parts and store the machine indoors. If you have to store the machine outdoors, park the machine on level ground and cover it with a protective sheet.
- Apply lube oil and grease to the machine and replace the engine oil.
- Apply a small amount of antirust to exposed parts of the hydraulic cylinder rods.
- Fill the battery with distilled water up to the upper level mark. After the battery has fully recharged, disconnect the negative terminal, and cover the battery or remove the battery from the machine to store it.
- Add an anti-freeze to the cooling water if the air temperature can fall below 32°F (0°C).
  Because a long-life coolant (LLC) is added to the cooling water, you need not change it until the temperature falls below -31°F (-35°C).
  If the temperature falls below -31°F (-35°C), refer to Section "25-2. Non-periodic services" to control the density of the cooling water.
- Place the lock levers and the pedal guards to the lock position respectively.
- Antirust
  When stored near the sea or in a place exposed to sea breezes, the machine easily becomes rusty. Carefully apply an antirust to all exposed parts of the piston rods and cover the machine with a polyethylene sheet or oil paper.

Recommended antirust	Manufacturer
P-1300 (Solvent cutback rust preventive oil)	Nihon Sekiyu
P-3 (Solvent cutback rust preventive oil)	Japan Energy
P-300 (Solvent cutback rust preventive oil)	Cosmo Sekiyu

  Some antirust solvent damages rubber materials. Be sure to use the recommended antirust or its equivalent.
- To prevent condensation inside the fuel tank, either drain the fuel tank or fill the tank completely.

Courtesy of Machine.Market

https://truckmanualshub.com/

16-2. Storing

⚠ WARNING

When you have to operate the machine indoors for the antirust procedure, be sure to ventilate the area well by opening windows and doors to prevent asphyxiation.

Move the machine at least once a month to form new oil films on all the moving parts during long-term storage, and recharge the battery at the same time.

16-3. Using the machine again

IMPORTANT
When reusing a machine that has been stored for a long time without receiving antirust treatment once a month, consult your dealer.

To use the machine again after a long period of storage, follow the procedure below:

- Wipe antirust off the hydraulic cylinder rods.
- Apply generous amounts of grease or oil to the moving parts.
- Drain water from the fuel tank, the engine oil pan and the hydraulic oil tank by opening the drain cock and removing the drain plugs.
- After starting the engine, warm-up the machine before use.

Courtesy of Machine.Market

https://truckmanualshub.com/

17. Troubleshooting

17-1. Phenomena that do not constitute faults

The following phenomena do not constitute faults:

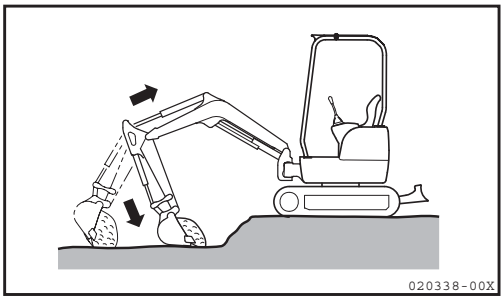

- Shaking of the bucket
  When the boom is raised immediately after extending the arm while curling the bucket, the bucket may shake. This phenomenon is not a fault.

- Discontinuous arm movement
  When digging the ground with the arm, the arm may slow down momentarily at the almost vertical position especially when the engine speed is low.
  This phenomenon is not a fault.

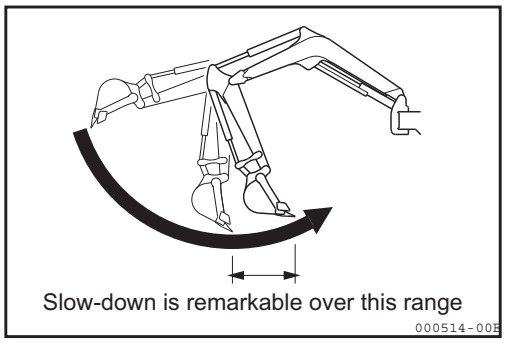

- Shift in upper structure position
  When turning the machine sharply as when spin-turning or pivot-turning, the upper structure may slightly shift out of position.
  This phenomenon is not a fault.

- Thermal shock of the travel motor
  If, in cold weather, the temperature of the hydraulic oil elevates after start-up and becomes 140°F (60°C) higher than the outside temperature by relief operation without traveling, sometimes the machine cannot pivot-turn because of thermal shock. This phenomenon is not a fault.

- The boom swing cylinder is extended when digging
  The boom swing cylinder may become extended in some digging situations or postures. This phenomenon is not a fault.

- Time lag in travel speed change response
  At low engine speed, a time lag in response may occur when the travel speed is changed from high-speed to low-speed. This phenomenon is not a fault.

- Looseness in the track frame and the moving parts for changing the track gauge
  When the track gauge change cylinders are not extended or retracted to their stroke end, the stoppers are not securely applied so that the moving parts for changing the track gauge may be loose in some working postures. This is not a fault.

Courtesy of Machine.Market

https://truckmanualshub.com/

17-2. Towing

⚠ WARNING

Always safely tow a disabled machine by using the proper equipment and procedures.
The use of incorrect methods or improper procedures could result in bodily injury.
Follow the recommendations below to properly perform the towing procedure.

If the machine becomes mired in muddy ground and must be towed out, or when it is necessary for the machine to tow a heavy object, attach the sling belt as illustrated at the right.

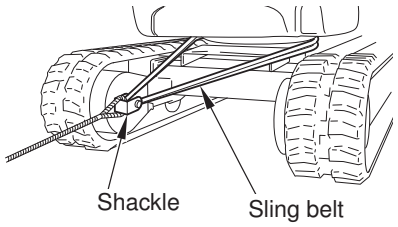

IMPORTANT
Check to see that the wire ropes, sling belts, and shackles to be used are of sufficient strength and are free from cracks and damage.

Courtesy of Machine.Market

https://truckmanualshub.com/

17-3. If the battery is overdischarged

⚠ WARNING

- **Stop the engine and turn the starter switch key to the "OFF" position before checking or servicing the battery.**
- **Flammable hydrogen gas is produced by the battery, which may cause ignition. Keep flames, sparks and lit cigarettes away from the battery.**
- **The battery electrolyte contains dilute sulfuric acid, which is a strong acid.**
  If the battery electrolyte contacts your clothes, they may be damaged.
  If the battery electrolyte gets into your eyes or contacts your skin, flush immediately with large amounts of water, and obtain medical treatment at once.
- **Be sure to wear safety goggles when handling a battery.**
- **To disconnect the terminals, begin with the negative terminal (ground side); to connect the terminals, begin with the positive terminal.**
  If a tool touches both the positive terminal and the machine, hazardous sparks may be generated.
- **If a terminal is loose, hazardous sparks may be generated due to poor contact, which could cause ignition and explosion.**
  Be sure to securely connect the terminals.

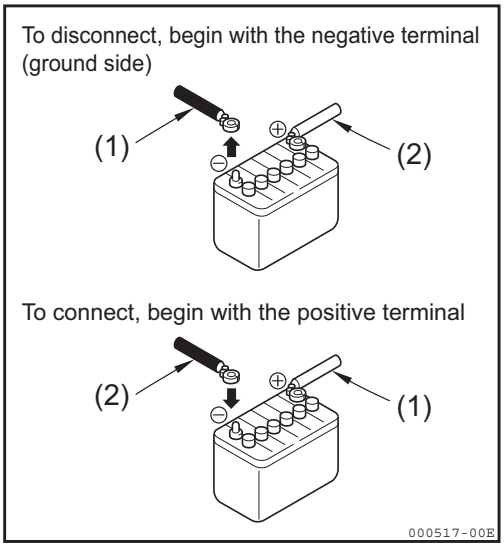

Courtesy of Machine.Market

https://truckmanualshub.com/

17-3-1. Starting the engine using booster cables

To start the engine using booster cables, do the following.

■ **Precautions for connecting and disconnecting the booster cables**

⚠ WARNING

- **When you start the engine using booster cables, wear safety goggles.**
- **If you start the engine by taking electric power from another machine, do not allow contact between your machine and the other machine.**
- **To connect the booster cables, begin with the positive terminal, and to disconnect them, begin with the negative terminal (ground side).**
- **If a tool touches the positive terminal and the machine at the same time, hazardous sparks may be generated.**
- **Do not connect the booster cables to terminals of reverse polarity. That is, never connect a negative terminal on one machine to the positive terminal on the other machine.**
- **As the last step, connect the negative booster cable to the upper structure. At this time, sparks will be generated. Connect the terminal to a point as far away from the battery as possible.**

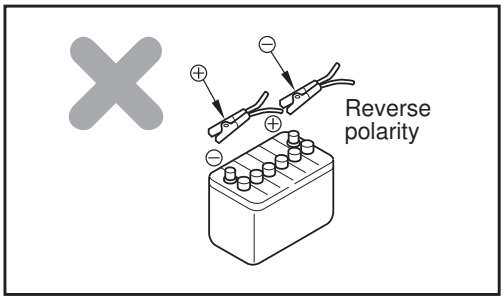

IMPORTANT

- **The booster cable capacity and the clip size should be suitable for the battery current.**
- **The battery of the normal machine should be the same capacity as that of the machine in trouble.**
- **Check the booster cables and clips for an absence of damage, cracks, and corrosion.**
- **Securely connect the clips.**

Courtesy of Machine.Market

https://truckmanualshub.com/

■ Charging with the battery mounted on the machine

- Remove the battery cables from the positive and negative terminals of the battery before charging it. If this is not done, abnormal voltage may be applied to the generator which could damage it.

- While charging the battery, remove all plugs to release the gases generated by charging.

- If the battery overheats [the temperature of the electrolyte exceeds 113℉ (45℃)], interrupt charging.

- Stop charging as soon as the process has been completed.
  Overcharging could cause the following troubles:
  - Overheating of the battery
  - Decrease in battery electrolyte
  - Battery failure

- Do not reverse polarity of the cable connections to the battery (i.e., the negative cable to the positive terminal, or the positive cable to the negative terminal).
  Reversing the polarity of the connections will cause the generator to be damaged.

- Handling the battery (except for checking the electrolyte level and measuring the specific gravity of the electrolyte) should be performed after disconnecting the battery cables.

Courtesy of Machine.Market

https://truckmanualshub.com/

■ Connecting the booster cables

Turn the starter switch to the "OFF" position, and connect the booster cables as follows:

(1) Turn the starter switches on both the normal machine and the machine in trouble to the "OFF" position.

(2) Connect the clip of the booster cable (A) (normally red) to the positive terminal on the machine in trouble.

(3) Connect the other clip of the booster cable (A) to the positive terminal on the normal machine.

(4) Connect the clip of the booster cable (B) (normally black) to the negative terminal on the normal machine.

(5) Connect the other clip of the booster cable (B) to the engine block of the machine in trouble.

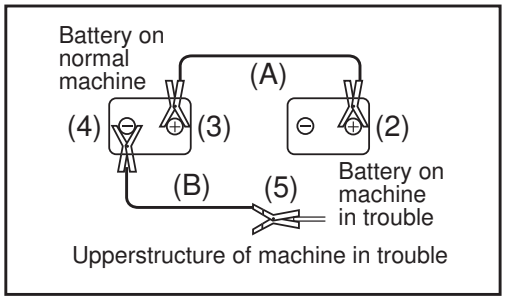

■ Starting the engine

(1) Make sure that the clips are securely connected to the battery terminals.

(2) Start the engine on the normal machine, and increase the engine speed to the maximum.

(3) Turn the starter switch on the machine in trouble to the "START" position to start the engine.
If the engine does not start, wait for more than two minutes and retry starting. (At this point, do not stop the engine on the normal machine and keep engine speed at full.)

Courtesy of Machine.Market

https://truckmanualshub.com/

■ Disconnecting the booster cables

After the engine on the machine in trouble has started, disconnect the booster cables in the reverse order of the connecting procedure.

(1) Remove the clip of the booster cable (B) from the engine block on the machine in trouble.

(2) Remove the clip of the booster cable (B) from the negative terminal on the normal machine.

(3) Remove the clip of the booster cable (A) from the positive terminal on the normal machine.

(4) Remove the clip of the booster cable (A) from the positive terminal on the machine in trouble.

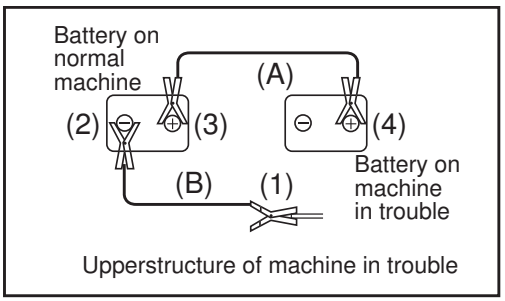

Courtesy of Machine.Market

https://truckmanualshub.com/

17-4. Troubleshooting

17-4-1. Engine and electrical equipment

- Contact your dealer for assistance, regarding the measures indicated in parentheses in the list below.
- If any abnormalities or troubles are encountered that are not included among those shown below, ask your dealer for assistance.

Trouble		Cause	Measure
Engine	Steam comes out of top of radiator.	• Shortage of cooling water	• Check cooling water level. Refill, if necessary. (Check cooling water for leak from water port.)
	Water temperature alarm lamp lights.	• Loose fan belt • Buildup of dust and water scale on cooling system • Defective thermostat • Clogged radiator fin or inclined fin • Defective electrical system	• Adjust belt tension. • Replace cooling water. Clean inside of cooling system. • Replace thermostat. • Clean or repair fin. • Check or replace electrical system.
	Turning on starter motor does not start engine.	• Shortage of fuel • Air mixed in fuel system • Defective fuel injection pump or deteriorated nozzle performance • Improper compression • Blown out fuse • Damaged starter switch key stop solenoid. Link disengagement	• Refill fuel tank. • Repair air leak. • Release air from fuel system. (• Replace pump or nozzle.) (• Check and repair.) • Replace fuse. (• Check and repair.)
	Dark fumes come out of machine.	• Clogged air cleaner element • Deteriorated nozzle performance • Improper compression	• Clean or repair element. (• Check and repair.) (• Check and repair.)
	Fume color is white or bluish white.	• Too much oil in oil pan • Improper fuel • Worn cylinder or piston ring	• Drain oil from oil pan up to specified level. • Replace fuel with recommended one. (• Repair.)
Electrical equipment	Turning starter switch to "START" dose not start starter motor.	• Defective wiring system • Defective starter switch • Insufficiently charged battery • Defective starter motor	• Check and repair wiring system. • Replace starter switch. • Recharge battery. (• Check and repair.)
	Maximum engine speed does not provide enough brightness of lamps.	• Defective wiring system • Defective generator or regulator	• Check terminals for looseness and disconnection. Repair terminal, if necessary. (• Check and repair.)
	During engine operation, lamp is extremely bright, and frequently burns out.	• Defective regulator	(• Replace regulator.)
	Electrolyte leaks from battery.	• Defective battery	(• Replace battery.)
	Speed of starter motor is too low.	• Defective wiring system • Insufficiently charged battery • Defective starter motor	• Check and repair wiring system. • Recharge battery. (• Check and repair.)

Courtesy of Machine.Market

https://truckmanualshub.com/

17-4-2. Machine body

- Contact your dealer for assistance, regarding the measures indicated in parentheses in the list below.
- If any abnormalities or troubles are encountered that are not included among those shown below, ask your dealer for assistance.

Trouble		Cause	Measure
Machine body	Power or speed of moving part is low.	• Deteriorated function caused by worn hydraulic pump • Pressures at system relief valve or circuit relief valve of control valve have dropped below set values • Damaged hydraulic cylinder • Insufficient amount of hydraulic oil • Clogged filter	(• Replace hydraulic pump.) (• Check and repair valves.) (• Check and repair.) • Replenish hydraulic oil up to specified level. • Clean or replace filter.
	upper structure does not swing or does not swing smoothly.	• Insufficient amount of grease • Defective swing brake valve • Defective swing motor • Swing brake has not released	• Check and grease. (• Check and repair.) (• Check and repair.) (• Check and repair.)
	Temperature of hydraulic oil is too high.	• Insufficient amount of hydraulic oil • Overload	• Replenish hydraulic oil up to specified level. • Lower load.
	Machine does not move straight.	• Improperly adjusted crawler or trapped foreign material • Damaged hydraulic motor • Defective hydraulic pump • Defective control valve • Damaged sprocket, idler or track roller	• Adjust or clean. (• Check and repair.) (• Check and repair.) (• Check and repair.) (• Check and repair.)
	Track gauge change does not operate.	• Clogging with mud or frozen water deposit. • Defective track gauge change cylinder.	• Clean and rinse mud. (• Check and service.)
	Track gauge change does not operate smoothly, or there is too much play.	• Peeling of track gauge change pipe or clogged pipe with mud • Damaged or deformed track gauge change stopper bolt • Deformed track gauge change part	• Repair peeling or clean mud off. (• Check and repair track gauge change stopper bolt.) (• Check and repair track frame.)

Courtesy of Machine.Market

https://truckmanualshub.com/

Courtesy of Machine.Market

https://truckmanualshub.com/

MAINTENANCE

Courtesy of Machine.Market

https://truckmanualshub.com/

18. Precautions for Servicing

Do not use any inspection or servicing procedures that are not described and recommended in this manual.
Park the machine on solid, level ground to inspect and service it.

Check the hourmeter
Read the hourmeter every day to check if any service item has reached the time prescribed for implementation.

Use genuine replacement parts
Use genuine parts specified in the Parts Catalog.

Use lube oil and grease as specified in this manual
Use lube oil and grease of specified viscosity for the operating temperature range.

Use clean lube oil and grease
Use clean lube oil, grease and containers and prevent dust from mixing into them.

Clean the machine
Clean the machine for easy isolation of faulty parts.
Particularly clean the grease nipple, breather, and the oil level gauge glass to prevent dust from entering into them.

Be careful of high water and oil temperatures
It is dangerous to replace the oil, the cooling water and the filter immediately after stopping the engine. Wait until their temperatures drop. When the engine oil is too cool, heat the oil to adequate temperature [approximately 68°F to 104°F (20°C to 40°C)] before draining oil to improve draining efficiency.

Check the drained oil and the old filter element
When replacing the engine oil, the hydraulic oil, or the filter element, check the drained oil and the old filter element for metallic dust and foreign solid deposits.

Observe precautions for replenishing oil
If a strainer is mounted on the oil port, do not remove the strainer to replenish oil.

Be careful of dust
When checking or replacing the oil, do this in a clean environment to prevent dust contamination.

Courtesy of Machine.Market

https://truckmanualshub.com/

Attach the warning tag

When the oil or the cooling water is being drained, attach the "SERVICING IN PROGRESS" tag to a control lever so that other persons will not start the engine.

Observe the warning labels

Observe the warning labels affixed to the machine.

Observe the precautions for welding

- Make sure to disconnect the battery cables (positive and negative terminals).
- Do not apply more than 200 V continuously.
- Ground the machine within 39 in. (1000 mm) from the welded part.
- Make sure that there is no seal or bearing between the welded part and the grounded part.
- Do not ground around the pins on the implement or the hydraulic cylinder.

Be careful of fire

Clean parts with noncombustible detergent.

Clean mating surfaces before assembly

When you have removed a part with an O-ring or a gasket seal, clean the mating surfaces before installing the new part.
At this point, do not fail to refit the O-ring or the gasket.

Do not drop anything from your breast pocket

When you open the cover and attempt to look down into the inside of the machine, remove loose items from your breast pocket to eliminate the risk that they may drop into the machine.

Check the undercarriage

After the machine is used at a rocky place, check the undercarriage for damage. Check for loose bolts and nuts, cracks, wear, and other damage. Loosen the tension of the crawlers more than usual.

Observe the precautions for cleaning the machine

- Do not spray steam directly at the connectors.
- Do not splash water on the monitors in the cabin.
- Do not spray high-pressure water directly at the radiator and the oil cooler.

Courtesy of Machine.Market

https://truckmanualshub.com/

Check before and after working

If the machine is to be used in mud, rain, snow, or on a beach, check for loose plugs and cocks before working. After working, clean the machine and check each part for cracks and damage and check for loose or missing bolts and nuts. Apply grease earlier than usual. Particularly apply grease every day to the pins on the implement which are submerged in mud.

Observe the precautions for working in a dusty place

If you use the machine in a dusty place, be careful of the following:

- Check the air cleaner for clogging.
  Clean the air cleaner element earlier than scheduled.
- Clean the radiator fin earlier to prevent it from clogging.
- Clean or replace the fuel filter element earlier than scheduled.
- Clean the electric equipment, especially the starter motor and the generator, to avoid dust deposits.

Do not mix oils

Never mix oils of different makes or types. If you have to replenish an oil with a different make or type than the one already in the tank, remove the remaining oil completely.

Courtesy of Machine.Market

https://truckmanualshub.com/

19. Basic Servicing Practices

- Use genuine replacement parts.

- Do not mix oils of different makes and types when replacing or replenishing oil.

- The following types of oil, fuel and cooling water are used at the factory for shipping unless otherwise specified:

Item	Type
Engine oil	Engine oil SAE10W30, CD class
Hydraulic oil	ISO VG46
Fuel	Diesel light oil
Engine cooling water	Long-life coolant (LLC) 51% added water

Courtesy of Machine.Market

https://truckmanualshub.com/

19-1. Oils, fuel, and cooling water

19-1-1. Oils

- Because the oil is used in the engine and implement under extreme conditions (high temperature and pressure), it deteriorates as time elapses.
  Be sure to use oils of the grades which are specified in the Operation & Maintenance Manual and suitable for the operating temperature range.
  Even if the oil is not contaminated, be sure to replace the oil within the specified service hours.

- Oil is equivalent to blood in a human body. Be careful in handling it so that impurities (water, metallic dust, and foreign solids) will not be mixed into it.
  Most machine failures are caused by impurities in the oils.
  Be careful not to mix impurities into the oils especially after storing the machine and replenishing oils.

- Do not mix oils of different makes and types.

- Use the specified amount of oil.
  Use of larger or smaller amounts of oil than specified may cause machine problems.

- If the oil becomes cloudy, it may suggest that water or air could have been mixed into the hydraulic system. If this event happens, ask your dealer for assistance.

- Be sure to replace the oil filter element with a new one when changing the oil.

- To know what condition the machine is in, it is recommended that you analyze the properties of the oil periodically.
  Ask your dealer for more information on this issue.

Courtesy of Machine.Market

https://truckmanualshub.com/

19-1-2. Fuel

- Because the fuel injection pump is a precision device, using a fuel containing water or dust will cause problems.
- Be careful that impurities will not be mixed into the fuel especially after storing the machine and refueling.
- Be sure to use a fuel recommended in the Operation & Maintenance Manual.
  In addition, keep in mind that you should use a fuel appropriate for the operating temperature range because it will freeze at temperatures lower than 5℉ (-15℃).
- Fully refuel every day after finishing the work so that the moisture in the fuel tank will not condense and water will not mix with the fuel.
- Before starting the engine, or ten minutes after refueling, drain any deposits and water through the drain plug on the fuel tank.
- If the fuel level becomes low or the filter element is replaced, the air should be bled from the fuel system.

19-1-3. Cooling water

- Because unpotable water may contain much calcium and impurities, using it will cause water scales to build up in the engine or the radiator, causing poor heat exchange and overheating.
  Never use unpotable water for cooling purposes.
- When using an anti-freeze, observe the precautions described in the Operation & Maintenance Manual.
- The machine is shipped with anticorrosive anti-freeze. The anti-freeze is anticorrosive to protect the cooling system. Because the anti-freeze can be used continuously over two years, you need not remove it in hot weather.

⚠ DANGER

Keep sources of ignition away from the anti-freeze because it is flammable.

- The mixing ratio of anti-freeze to water differs based on air temperature.
  For the mixing ratio, refer to Section "25-2-4. Cleaning the inside of the cooling system".
- If the engine is overheated, replenish the cooling water after the engine has cooled down.
- Shortage of cooling water will cause the cooling system not only to overheat but also to corrode, due to air which comes in the system.

Courtesy of Machine.Market

https://truckmanualshub.com/

19-1-4. Grease

- Grease ensures smooth operation of moving parts such as connectors and prevents operating noises.

- The nipples not listed on the pages for periodic service are those used for overhaul purposes. Normally it is not necessary to refill them.
  Grease them if any abnormal condition arises after long term use.

- Wipe away all excess grease after greasing.
  Carefully wipe the excess grease from all moving parts which might be easily worn by adhered sand or grit.

19-1-5. Storing the oil and fuel

- Store the oil and fuel indoors so that they will not be contaminated by impurities such as water or dust.

- When you store oil or fuel in drums for a long period, position them so that their outlets align in a straight line (to prevent moisture absorption).
  When storing the oil or the fuel outdoors, cover the drums with a waterproof sheet.

- To avoid deterioration caused by long-term storage, use the oil on a first-in first-out basis.

19-1-6. Filter

- The filters are very important parts which prevent impurities from getting into critical devices through the lube oil, fuel and air systems.
  Replace the filter elements periodically according to the instructions of the Operation & Maintenance Manual.
  Under difficult conditions, you need to replace the filter elements earlier than suggested in the Operation & Maintenance Manual depending on the type of oil and fuel (sulfur content).

- Never reuse the filter elements (cartridge type) by cleaning them.

- When replacing a filter element, confirm that no metallic dust or foreign solids are present on the old filter. If they are found to be present, contact the nearest dealer.

- Do not unpack the filter element before use.

- Use genuine original equipment replacement filter elements.

Courtesy of Machine.Market

https://truckmanualshub.com/

19-2. Electrical equipment

- If electrical equipment gets wet or wiring insulation is broken, electric leaks may occur and the machine may malfunction.
- Check the fan belt for tension and damage, and also check the battery for electrolyte level.
- Never disconnect or disassemble the electrical equipment mounted on the machine.
- Do not mount any electrical equipment other than those items provided by the manufacturer.
- Be careful not to spray water on the electrical equipment when washing the machine or operating in the rain.
- After working near the sea, take necessary precautions to protect the electrical equipment from corrosion.

Courtesy of Machine.Market

https://truckmanualshub.com/

19-3. Hydraulic system

- The hydraulic system is hot during and immediately after operation. It is also under high pressure during operation. Therefore, check and service the hydraulic system carefully as follows:
  - Put the bucket on level ground so that no pressure is applied to the hydraulic cylinder circuits.
  - Be sure to stop the engine.
  - Wait until the temperature drops sufficiently before starting maintenance.
    Do not suddenly remove any plugs, screws or connecting parts of the hoses. Otherwise oil may spout out due to residual internal pressure even when the oil temperature has lowered. Be careful not to stand in front of any plugs, screws or connecting parts when loosening them, to prevent injury. Loosen them gradually, to relieve the internal pressure.
  - Always relieve the internal pressure before checking and servicing the hydraulic system.
- Check the hydraulic oil level, replace the filter element, and replace the hydraulic oil when necessary.
- After removing hydraulic hoses and piping, check the O-rings and the packing for damage before reinstalling them.
  Replace them if they are damaged.
- Bleed air after replacing or cleaning the hydraulic oil filter element or strainer, repairing or replacing the hydraulic equipment, or reinstalling the hydraulic cylinder or piping.

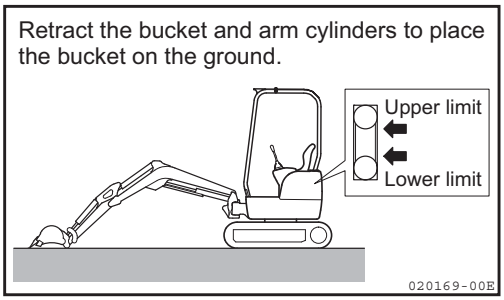

Bleed air according to the following procedure:

1) Set the engine rotation to medium. That is, set the lever in the middle of the stroke.
2) Slowly operate each cylinder 4 to 5 times to approximately 4 in. (100 mm) before both stroke ends.
3) Operate the cylinder 4 to 5 times at full stroke.
   - Failure to bleed air from the hydraulic cylinder and operating it suddenly to the stroke ends could cause piston seal damage.
   - If air is left in the hydraulic circuit, it will compress and expand and the hydraulic equipment will not operate smoothly.
     Air in the hydraulic circuit may shorten the service life of the hydraulic pump.
4) Check the hydraulic oil level and replenish hydraulic oil to the specified level if necessary.

Courtesy of Machine.Market

https://truckmanualshub.com/

20. Consumables

Replace consumable parts such as filter elements and bucket teeth periodically or before they reach their wear limit.
Periodic replacement prevents malfunction of the machine.
When you replace a part, be sure to use an original equipment part.
When ordering consumables, let us know the part numbers given in the parts catalog.

List of consumables

The parts in ( ) represent those which must be replaced at the same time.

Item	Name	Q'ty	Replacing time interval
Engine oil filter	Oil filter	1	Every 200 service hours (At first 50 service hours)
Hydraulic oil tank return filter	Return filter	1	Every 500 service hours (At first 250 service hours)
Fuel filter	Fuel filter element (O-ring)	1 1	Every 400 service hours
Air cleaner	Cleaner element	1	Every 400 service hours
Bucket	Point teeth (Lock pin) (Rubber pin)	3 (3) (3)	-

Courtesy of Machine.Market

https://truckmanualshub.com/

21. Fueling, Oiling and Greasing Based on Temperature Range

21-1. Fuel and oil

Select fuel and oil based on the air temperature range.
The prescribed amount of oil means the total amount of oil included in the piping and equipment. The amount of oil to be changed means the amount of oil replaced in checking and servicing.
If you start the engine at air temperatures lower than 32°F (0°C), use SAE10W, SAE10W-30, or SAE15W-40 even if the temperature in the daytime rises to 50°F (10°C) or so.

21-2. Cooling water

Because a long-life coolant (LLC) is added to the cooling water, you need not change it unless the temperature falls below -31°F (-35°C).
If the temperature falls below -31°F (-35°C), refer to Section "25-2. Non-periodic services" to control the density of the cooling water.

Part be refilled	Oil type	Recommendations based on temperature ranges (°F) -4 14 32 50 68 86 (°C) (-20) (-10) (0) (10) (20) (30)	Prescribed amount of oil	Amount of oil to be changed
Engine oil pan	Engine oil	SAE 10WCD SAE 10W-30CD SAE 15W-40CD	3.0 Qts. (2.8 L)	3.0 Qts. (2.8 L)
Hydraulic oil system	Hydraulic oil	ISO VG46	In the tank 4.36 Gals. (16.5 L) Other parts 2.51 Gals. (9.5 L)	4.36 Gals. (16.5 L)
Fuel tank	Diesel fuel	No.2-D No.3-D No.3-D (S)	5.3 Gals. (20.0 L)	–
Cooling system	Water	Long-life coolant (LLC) added	Radiator 2.9 Qts. (2.7 L) Subtank 0.42 Qts. (0.4 L)	–

PRPQWPMPQe¡£

Courtesy of Machine.Market

https://truckmanualshub.com/

22. Standard Tightening Torque for Bolts and Nuts

22-1. Required tools

The following tools are required for servicing:

No.	Name	Q'ty
1	Screw driver (universal system)	1
2	Filter wrench 68	1
3	Filter wrench 80	1
4	Filter wrench LO	1
5	Pressuring nozzle	1
6	Filter wrench 92	1
7	Wrench 8×10	1
8	Wrench 12×14	2
9	Wrench 17×19	1
10	Wrench 22×24	2
11	Wrench 27×30	1
12	Wrench 32×36	1
13	Hexagon bar wrench 4	1
14	Hexagon bar wrench 5	1
15	Hexagon bar wrench 8	1
16	Box wrench 27×140	1
17	Turning handle 12×250	1
18	Grease hose	1
19	Grease injector 800	1
20	Pliers 200	1

Courtesy of Machine.Market

https://truckmanualshub.com/

22-2. Torque table

Bolts or nuts in the metric system should be tightened at the torque described below unless specified otherwise.

Item		Thread size × pitch	Tightening torque ft•lbf (N•m)	Remarks
Hexagon bolt (7T) Nut	Coarse threads	M6 × 1	7.23 to 8.68 (9.8 to 11.8)	1) Apply 80% tightening torque when tightened to aluminum. 2) Apply 60% tightening torque for 4T bolt and lock nut. 3) Use fine thread screws for engine only.
		M8 × 1.25	16.6 to 21.0 (22.6 to 28.4)	
		M10 × 1.5	32.6 to 43.4 (44.1 to 58.8)	
		M12 × 1.75	57.9 to 72.3 (78.5 to 98.1)	
		M14 × 2	86.8 to 108.5 (117.7 to 147.1)	
		M16 × 2	123.0 to 151.9 (166.7 to 206.0)	
		M18 × 2.5	173.6 to 209.8 (235.4 to 284.4)	
		M20 × 2.5	238.7 to 296.6 (323.6 to 402.1)	
	Fine threads	M14 × 1.5	94.0 to 108.5 (127.5 to 147.1)	
		M16 × 1.5	155.5 to 177.2 (210.9 to 240.3)	
R (PT) plug		1/8	7.2 (9.8)	
		1/4	14.5 (19.6)	
		3/8	21.7 (29.4)	
		1/2	43.4 (58.8)	
Pipe joint bolt		M8	9.4 to 12.3 (12.7 to 16.7)	
		M12	18.1 to 25.3 (24.5 to 34.3)	
		M14	28.9 to 36.2 (39.2 to 49.0)	
		M16	36.2 to 43.4 (49.0 to 58.8)	

IMPORTANT

If a part to be tightened is made of resin like a panel board, excessive tightening torque may damage the tightened part. Be careful when tightening.

Courtesy of Machine.Market

https://truckmanualshub.com/

23. Replacing Essential Parts Periodically

For safe operation, the machine must be serviced periodically. To increase safety, be sure to periodically replace the parts listed in the table of safety parts on the next page. A fire could result if they deteriorate or are damaged.

These parts are vulnerable to aging and wear or deterioration and it is difficult to determine the degree to which they have deteriorated on the occasion of periodic service. To maintain their proper function at all times, therefore, replace them with new ones after using them for a specific period of time even if no abnormality is found with the parts.
If you find abnormalities in these parts before their scheduled replacement time is reached, repair or replace them immediately.
If a hose clamp is deformed or cracked, replace it immediately.
Check the hydraulic hoses, which are not periodic replacement parts. If any abnormality is found in them, retighten them or replace them immediately.

When replacing the hydraulic hoses, replace the O-rings and seals at the same time.

For further information about replacing the safety parts, ask your dealer.

Check the fuel and hydraulic hoses according to the periodic schedule described below.

Check categories	Check points
Start-up check	Oil leak from the connections or bodies of the fuel and hydraulic hoses
Voluntary monthly check	Oil leak from the connections or bodies of the fuel and hydraulic hoses Damage (crack, wear, or peeling) of the fuel and hydraulic hoses
Prescribed annual check	Oil leak from the connections or bodies of the fuel and hydraulic hoses Interference, crushing, aging, torsion, or damage (crack, wear, or peeling) of the fuel and hydraulic hoses

Courtesy of Machine.Market

https://truckmanualshub.com/

■ List of essential parts

No.	Essential parts to be replaced periodically	Q'ty	Replacement time intervals
1	Fuel hose (fuel tank to water separator)	1	Every 2 years or every 4000 service hours, whichever first occurs.
2	Fuel hose (water separator to feed pump)	1	
3	Fuel hose (feed pump to fuel filter)	1	
4	Fuel hose (fuel filter to fuel injection pump)	1	
5	Fuel hose (fuel filter to fuel tank)	1	
6	Fuel hose (fuel injection pump to fuel filter)	1	
7	Fuel hose (fuel injection valve to fuel injection pump)	1	
8	Main pump outlet hose (P1, P2, P3 to C/V)	3	

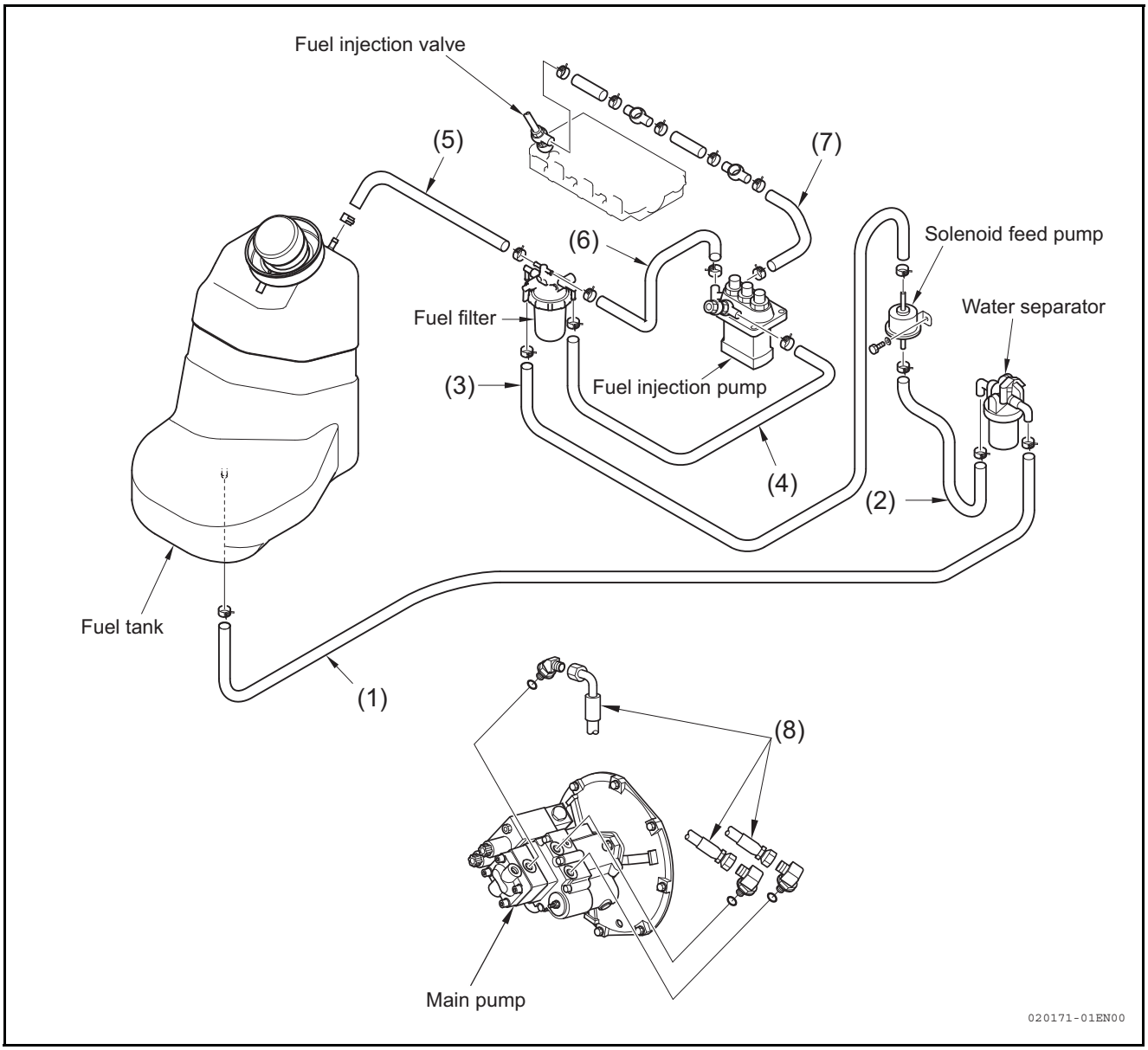

Courtesy of Machine.Market

https://truckmanualshub.com/

24. Maintenance Table

Daily and periodic inspection are important to keep the machine in its best condition. The following is a summary of inspection and servicing requirements by inspection interval. Periodic inspection intervals vary depending on the use, loads, fuels and lube oils used and handling conditions, and are hard to establish definitively. The following should be treated only as a general standard.
When the time for an inspection approaches, study the relevant pages in the Operation & Maintenance Manual. Keep a record of daily operation and the results of maintenance work.

24-1. Table of service time intervals

Check and service points	Page
■ **At first 50 hours (only once after the new machine has started to be used)**	
Replacing the engine oil and the engine oil filter	3-22
■ **At first 250 hours (only once after the new machine has started to be used)**	
Replacing the return filter in the hydraulic oil tank	3-22
Cleaning the suction filter in the hydraulic oil tank	3-22
■ **Non-periodic servicing**	
Checking the rubber crawlers	3-23
Checking and adjusting the rubber crawler tension	3-25
Replacing the rubber crawler	3-28
Cleaning the inside of the cooling system	3-31
■ **Checking before start-up**	
Checking and replenishing the cooling water	3-35
Checking and replenishing the engine oil	3-36
Checking and replenishing the fuel in the fuel tank	3-37
Checking and replenishing the hydraulic oil in the hydraulic oil tank	3-38
Checking and adjusting the fan belt tension	3-39
Checking and replenishing the battery electrolyte	3-40
Greasing	3-41
Checking the electrical equipment	3-42

Courtesy of Machine.Market

https://truckmanualshub.com/

Check and service points	Page
■ **Every 50 hours**	
Greasing the swing gear and the swing bearing	3-43
Draining the water and deposits in the fuel tank	3-43
Cleaning the water separator element	3-44
Cleaning the fuel filter element	3-45
■ **Every 100 hours**	
(Perform the same maintenance every 50 service hours)	3-45
■ **Every 200 hours**	
Replacing the engine oil and the engine oil filter	3-46
Checking and cleaning the air cleaner	3-48
Checking and cleaning the radiator fin	3-50
Adjusting the governor lever and accelerator devices	3-51
■ **Every 250 hours**	
(Perform the same maintenance every 50 service hours)	3-51
■ **Every 400 hours**	
Replacing the fuel filter element	3-52
Replacing the air cleaner element	3-54
■ **Every 500 hours**	
Replacing the return filter in the hydraulic oil tank	3-55
■ **Every 1000 hours**	
Replacing the hydraulic oil and cleaning the suction filter	3-56
Checking and adjusting the intake/exhaust valve clearances	Ask your dealer
Checking and adjusting the fuel injection valve	Ask your dealer
Retightening the cylinder head bolts	Ask your dealer
■ **Every 2000 hours**	
Checking and replacing fuel piping, cooling water piping	Ask your dealer
Lapping the intake/exhaust valves	Ask your dealer
Checking and adjusting fuel pump	Ask your dealer

Courtesy of Machine.Market

https://truckmanualshub.com/

■ List of periodic inspection and servicing

*Applicable to models with the relevant equipment ◇ : Check ○ : Supply ● : Replace □ : Adjust (clean) ■ : Oil & grease

Check & service items			Daily	Every 50	Every 100	Every 250	Every 500	Every 1000 hrs
General	Check falling off, breakage of parts		◇					
	Check loosened bolts & nuts, retighten		◇					
	Check engine condition		◇					
	Clean		□					
Lube oil	*Swing gear case oil	Check, resupply				◇/○		
		Replace			●1st time			●
	*Travel reduction gear oil	Check, resupply				◇/○		
		Replace			●1st time			●
	*Transmission oil	Check, resupply	◇/○					
		Replace			●1st time			●
	*Differential gear oil	Check, resupply			◇/○			
		Replace			●1st time			●
Hydraulic system	Hydraulic oil	Check, resupply	◇/○					
		Replace						●
	Clean suction filter					□1st time		□
	Replace return filter					● 1st time	●	
	Check for abnormality of hydraulic pump		◇					
Grease	Check grease-up positions, grease		■					
	Greasing the swing gears and the swing bearings			■				
	Greasing the track gauge change cylinder and the link fulcrum			■				
Undercarriage	Check, adjust track tension		◇/□					
	*Check air pressure, wear, flaw in tyres		◇					
Steering equipment	*Check performance, play of steering lever		◇					
	Check performance, play of travel lever		◇					
	*Check performance of speed change lever		◇					
	*Check performance of forward/reverse pedal		◇					
	*Check performance, play of steering wheel		◇					
	*Brake pedal	Stroke	◇					
		Performance	◇					
	*Parking brake	Stroke	◇					
		Performance	◇					
	Check performance of accel. lever		◇					
Electric equipment	Check front & work lights, horn		◇					
	Check hourmeter function		◇					
	Check function of change, oil and pilot lamps		◇					
	Check wire breakage, short-circuits, loosened terminals retighten		◇					
	Check, resupply battery fluid		◇/○					
	Check specific gravity of electrolyte						□As required	
	Check function of OK monitor		◇					

Courtesy of Machine.Market

https://truckmanualshub.com/

◇ : Check ○ : Supply ● : Replace □ : Adjust (clean) ■ : Oil & grease

Check & service items		Daily	Every 50	Every 200	Every 400	Every 1000	Every 2000 hrs
Fuel oil	Check & supply of oil to the tank	◇/○					
	Drain the fuel tank		□				
	Clean the oil/water separator		□				
	Replace the fuel filter element, pre-filter				●		
Lube oil	Check the quantity of engine oil	◇/○					
	Replace the engine oil		● 1st time	●			
	Replace the engine oil filter element		● 1st time	●			
Cooling water	Check & supply of cooling water	◇/○					
	Clean radiator fins			□			
	Check the fan-belt tension	◇/□					
	Replace the cooling water					●	
	Clean & check the cooling water system					● within one year	
Rubber hose	Check & replace fuel oil pipe, cooling water pipe						●
Operation system	Check & adjust governor lever, accelerator	◇		□			
Intake system	Clean air cleaner & replace element			□	●		
	*Check turbocharger, adjust					□	
Cylinder head	Adjust the intake and exhaust valve clearance					□	
	Lapping the intake and exhaust valve						□
Fuel pump & injection valve	Check fuel valve nozzle, clean					□	
	Check & adjustment of fuel injection pressure & atomizing condition					□	
	Check fuel pump, adjust						□

Note :

1) *When machine is used at dusty worksites, clean and replace filter element twice as often as specified in the table.*
2) *Execution of periodic inspection and servicing is indispensable to assuring conformance to EPA emission control regulations.*
   Keep a record of the results.

Courtesy of Machine.Market

https://truckmanualshub.com/

24-2. Service intervals when using the hydraulic breaker

When a hydraulic breaker is used, the hydraulic oil deteriorates earlier than in usual bucket excavating work. Set up the service time intervals as follows:

- **Replacing the hydraulic oil return filter**
  Replace the hydraulic oil return filter on the new machine once after the first 100 to 150 hours. After that, replace it in accordance with the chart at the right.

- **Replacing the hydraulic oil in the hydraulic oil tank**
  Replace the hydraulic oil in accordance with the chart at the right.

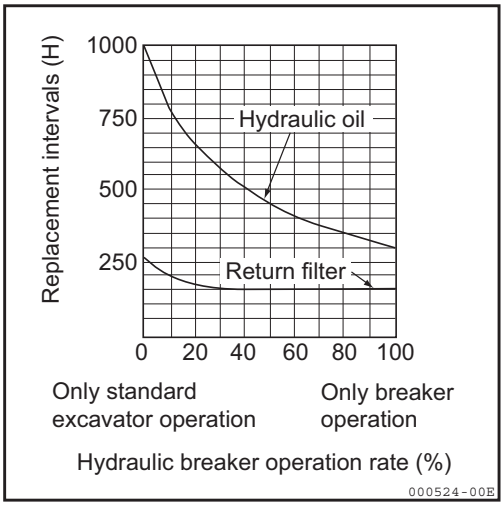

Courtesy of Machine.Market

https://truckmanualshub.com/

25. Procedures for Maintenance

25-1. First services

Service a new machine at 50, 100 and 250 hours, as follows.

25-1-1. At first 50 hours

- Replace the engine oil and the engine oil filter.
  For these procedures, refer to Section "25-6. Maintenance every 200 service hours".

25-1-2. At first 250 hours

- Replacing the return filter in the hydraulic oil tank.
  For this procedure, refer to Section "25-9. Maintenance every 500 service hours".
- Cleaning the suction filter in the hydraulic oil tank.
  For this procedure, refer to Section "25-10. Maintenance every 1000 service hours".

Courtesy of Machine.Market

https://truckmanualshub.com/

25-2. Non-periodic services

25-2-1. Checking the rubber crawlers

Rubber crawlers in the following condition require repair or replacement. Ask your dealer to repair or replace them.

■ Height of lugs

- As the lug height "a" is reduced by wear, the tractive force decreases.
  If "a" becomes 0.2 in. (5 mm) or less, replace the crawler with a new one.

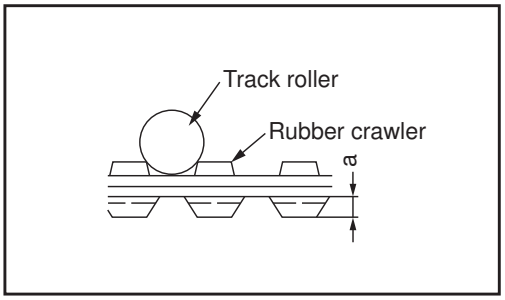

- If two or more links of the steel cord inside the crawler are exposed due to wear of the lugs, replace the crawler with a new one.

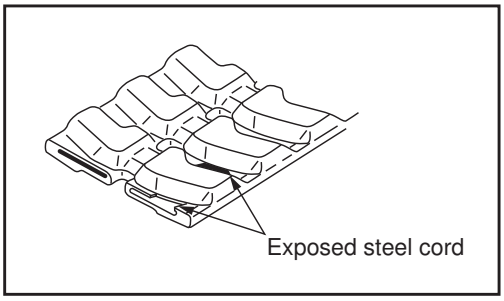

■ Rubber crawler steel cord breakage

If half or more of either of the steel cords is broken, replace the rubber crawler with a new one.

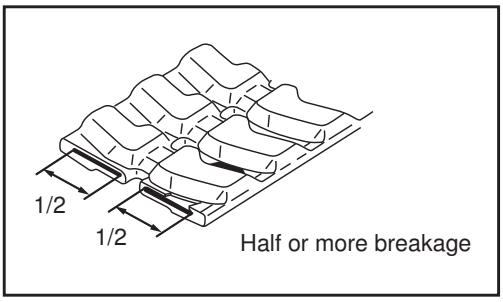

■ Separation of the core metal of the rubber crawler

If the core metal of the rubber crawler separates even at one place, replace the rubber crawler with a new one.

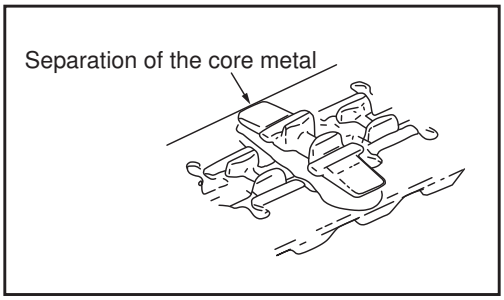

■ Rubber crawler tension

If the rubber crawler tension is habitually loose even after grease is injected, the grease adjuster may be defective internally. Ask your dealer to repair the grease adjuster.

Courtesy of Machine.Market

https://truckmanualshub.com/

■ Crack in the rubber crawler

If a crack occurs between any lugs of the rubber crawler, repair it if the crack length reaches approximately 2.4 in. (60 mm). If the inside steel cord is exposed even though the crack is small, repair the rubber crawler immediately.
If the crack length is less than 1.2 in. (30 mm) or the crack depth is less than 0.4 in. (10 mm), you do not need to repair the rubber crawler.
For a decision on whether the rubber crawler should be replaced, repaired or should continue to be used, ask your dealer.

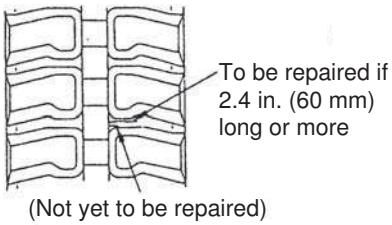

Courtesy of Machine.Market

https://truckmanualshub.com/

25-2-2. Checking and adjusting the rubber crawler tension

⚠ WARNING

- **When adjusting the rubber crawler tension while raising the machine, do not support the machine with the implement only.**
  The control levers could move or the hydraulic oil could flow out accidentally so that the machine would fall.
- **When raising the machine, support it with safety blocks of sufficient strength.**
  When the machine is being checked or adjusted by two persons, one must operate the machine in response to signs from the other.

How a rubber crawler wears out depends on the working conditions and the nature of the ground. Be sure to check the rubber crawlers for wear and tension from time to time. When a new rubber crawler is mounted, perform the first check after 30 hours operation.

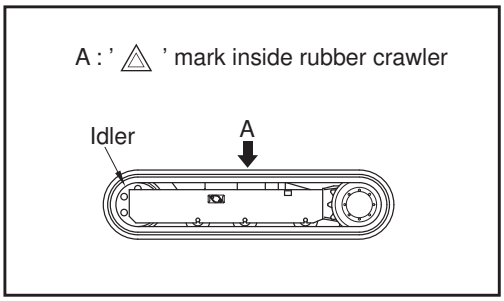

■ **Checking the rubber crawler tension**

1) Move the machine so that the joint (△ mark) on the inside surface of the rubber crawler is positioned at the upper center of the track frame.

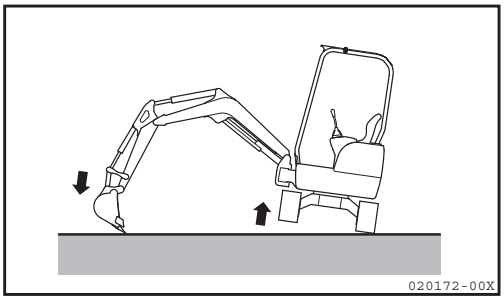

2) Lift the machine with the implement and the safety blocks.
   To do this, operate the control lever slowly.

3) The tension is proper if the clearance (H in the figure at the right) between the outside rolling surface of the second track roller from the idler side and the inside surface of the rubber crawler is within the following range :
   - H=0.31 to 0.51 in. (8 to 13 mm)

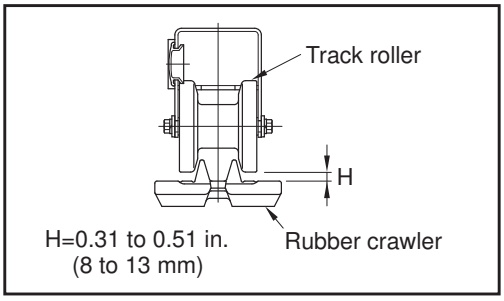

Working with the rubber crawler too loose will cause the rubber crawler to come off or the core metal to wear out earlier.

Courtesy of Machine.Market

https://truckmanualshub.com/

If the tension is improper, adjust it as follows:

■ Adjusting the rubber crawler tension

• To increase the tension

Prepare a grease gun.

1) Remove the cover.

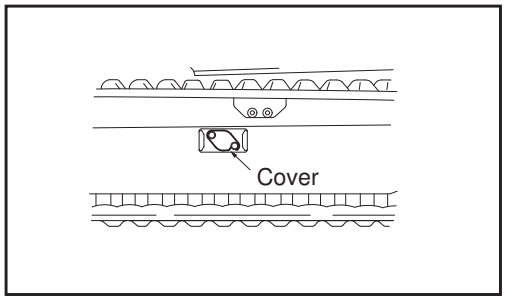

2) Raise the machine using the implement and the safety blocks. Inject grease through the nipple valve (1) using a grease gun until the rubber crawler tension has achieved a clearance (H) that is within the following range : 0.31 to 0.51 in. (8 to 13 mm).

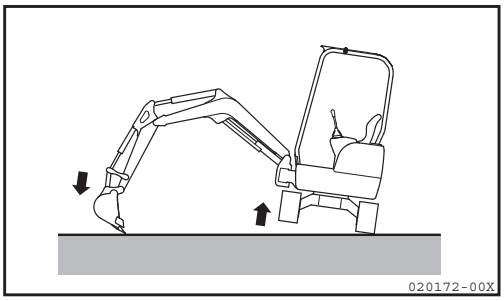

3) To check that the tension is proper, lower the machine and move the machine back and forth slightly.
4) Check the rubber crawler tension again. If the tension is improper, adjust it again.

5) Install the cover.

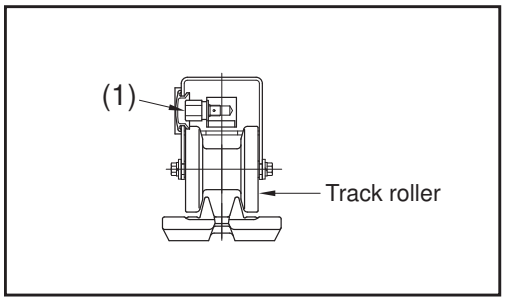

6) The tension is adjustable until the clearance "a" is reduced to 0 in. (0 mm). If the tension is still loose, the rubber crawler may need repairing due to excessive wear. Contact your dealer and ask for repair.

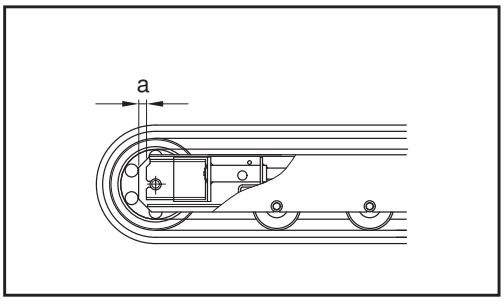

7) If the tension is loose even after grease injection, it is necessary to replace either the rubber crawler or the grease adjuster. Contact your dealer for assistance.

Courtesy of Machine.Market

https://truckmanualshub.com/

- **Loosening the tension**

⚠ WARNING

- **Grease is under high pressure. If the nipple valve (1) is opened suddenly, grease could be ejected or the valve could blow, which could cause bodily injury.**
- **Do not rely on valve appearance alone to determine whether or not grease has been discharged, but check that by measuring the tension of the rubber crawler.**
  Do not open the nipple valve (1) more than one turn.
- **It is very dangerous to discharge the grease by any procedure other than that described below.**
  If the tension of the rubber crawler cannot be loosened, contact your dealer and ask for repair.

1) Remove the cover.

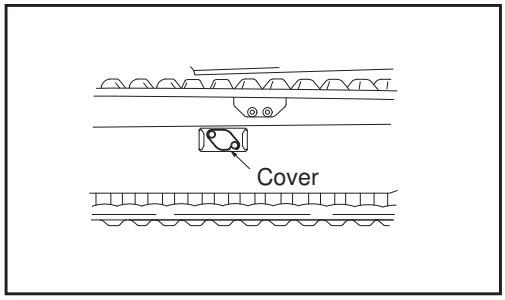

2) Raise the machine with the implement and the safety blocks. Slowly loosen the nipple valve (1) and discharge the grease to adjust the rubber crawler tension and to achieve a clearance (H) that is within the following range : 0.31 to 0.51 in. (8 to 13 mm).

3) Never loosen the nipple valve more than one turn.
   (If the grease is not discharging properly, lower the machine and move the machine back and forth slightly.)

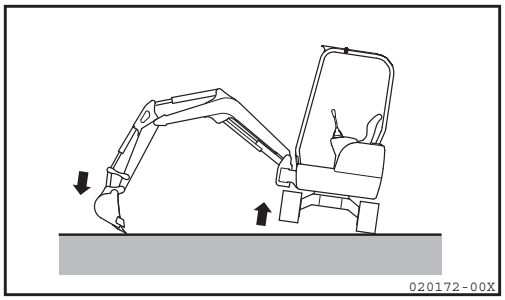

4) Tighten the nipple valve (1).
   Tightening torque : 36.1 ft•lbf (49 N•m)

5) To check that the tension is proper, lower the machine and move the machine back and forth slightly.

6) Recheck the rubber crawler tension and readjust it if necessary.

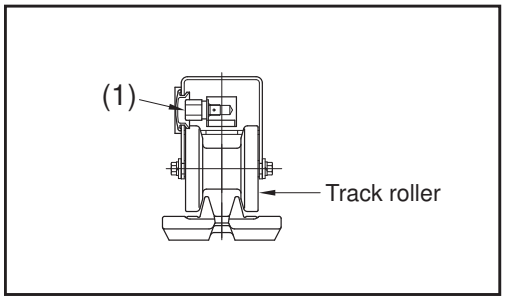

7) Completely wipe away all of the discharged grease.

IMPORTANT
The rubber crawler is not grease-resistant.
Completely wipe away all of the grease because grease will shorten its service life.

8) Install the cover.

Courtesy of Machine.Market

https://truckmanualshub.com/

25-2-3. Replacing the rubber crawler

⚠ WARNING

- **To replace the rubber crawler with a new one, work with a partner. You must operate the machine in response to signs from your partner.**
- **Because the rubber crawler is replaced with the machine in a raised position, there is a danger that the machine may accidentally fall. Do not move any parts other than the rubber crawler to be replaced in doing the job.**
- **The high internal pressure of the grease can cause the nipple valve to eject.**
  When you loosen the nipple valve (1), do not loosen it more than one turn.
  At this point, do not loosen any parts other than the nipple valve (1). Also, do not turn your face toward the nipple valve (1).
- **If the tension of the rubber crawler cannot be loosened by the procedure described here, ask your dealer to repair the rubber crawler.**

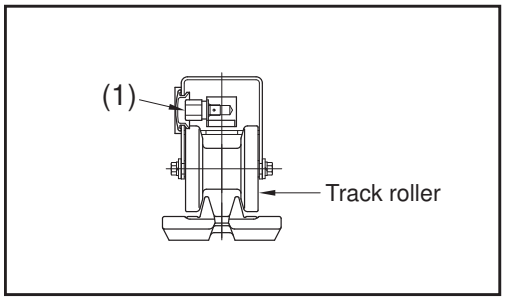

■ **Replacing the rubber crawler**

- Prepare a grease gun and steel pipes.

Courtesy of Machine.Market

https://truckmanualshub.com/

■ Removing the rubber crawler

⚠ WARNING

- **It is very dangerous to discharge the grease by any procedure other than that described below.**
- **If the tension of the rubber crawler cannot be properly adjusted, ask your dealer to repair or replace the rubber crawler.**
- **When removing the rubber crawler, make sure that all of the grease has been completely discharged before turning the sprocket.**

1) Raise the machine with the implement and the safety blocks.
   To do this, slowly operate the control lever.

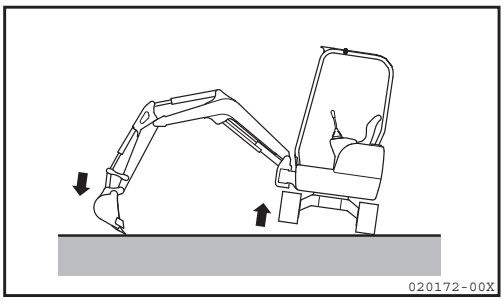

2) Loosen the nipple valve (1) little by little to gradually discharge the grease.

3) Never loosen the nipple valve (1) more than one turn.

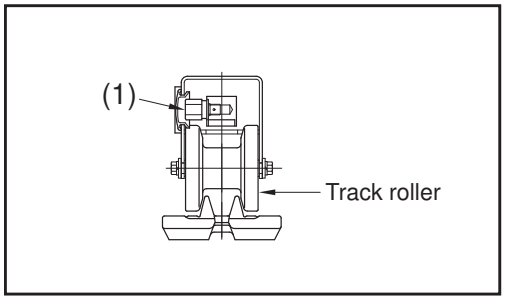

4) Insert the steel pipes into the rubber crawler and turn the sprocket in the reverse direction. When the rubber crawler is separated from the idler by the steel pipes, slide the rubber crawler off.

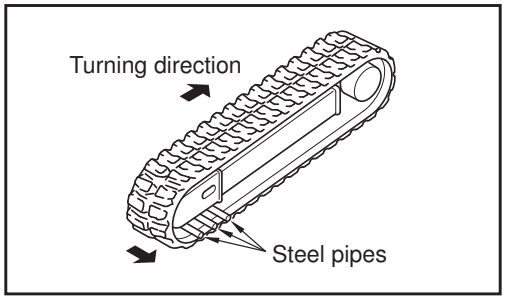

Courtesy of Machine.Market

https://truckmanualshub.com/

■ Installing the rubber crawler

1) Raise the machine with the implement and the safety blocks.
   To do this, slowly operate the control lever.

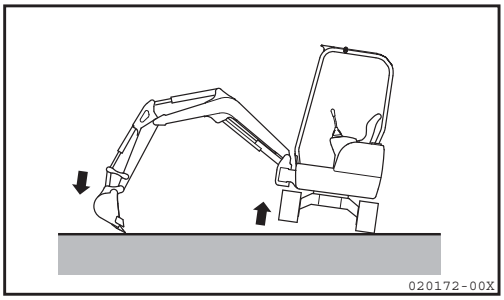

2) Engage the rubber crawler with the sprocket, and place the rubber crawler on the idler.

3) Rotate the sprocket in the reverse direction to push the rubber crawler in, and then stop rotating it.

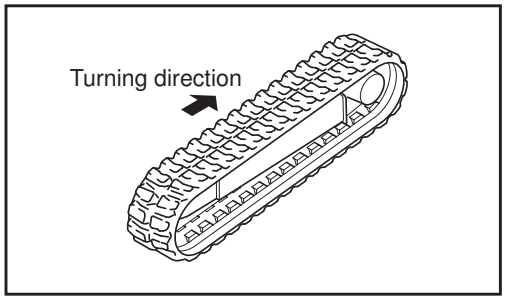

4) Insert a steel pipe into the rubber crawler, and rotate the sprocket again to place the rubber crawler on the idler.

5) Stop rotating the sprocket, and confirm that the rubber crawler is securely positioned on both the sprocket and the idler.

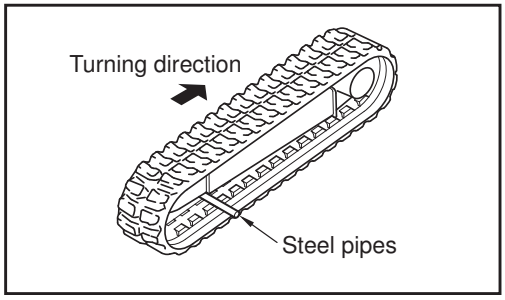

6) Adjust the rubber crawler tension, referring to Section "25-2-2. Checking and adjusting the rubber crawler tension".

7) Confirm that the rubber crawler is fully engaged with both the sprocket and the idler, and that the rubber crawler tension is sufficient. Then lower the machine to the ground.

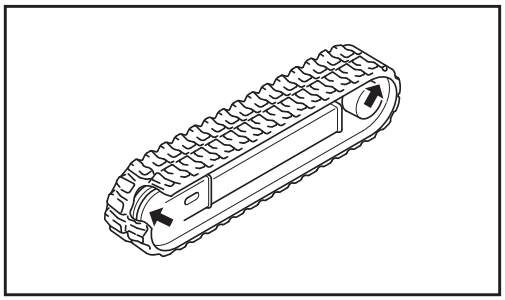

Courtesy of Machine.Market

https://truckmanualshub.com/

25-2-4. Cleaning the inside of the cooling system

⚠ WARNING

- **The cooling water is very hot immediately after the engine has stopped. Discharging the cooling water immediately after the engine has stopped may cause burns. Start cleaning the inside of the cooling system after the engine has cooled down sufficiently.**
- **Stepping into the area behind the machine to clean the inside of the cooling system while the engine is running is very dangerous, because you may not be visible from the operator's seat and the machine could start moving.**
  Also, with the engine hood being open, contacting the radiator fan or fan belt could result in serious bodily injury.
  Never step into the area behind the machine while the engine is running.
- **Do not remove the radiator cap while the water temperature in the radiator is high. Hot water may spout from the radiator.**
  When you do remove the radiator cap after the water has cooled down, slowly turn the radiator cap to relieve the internal pressure before removing it.

Clean the inside of the cooling system and replace the anti-freeze according to the following table.

Anti-freeze type	Cleaning inside of cooling system and replacing anti-freeze
Long-Life Coolant (LLC anti-freeze) (All season type for anti-corrosion)	Every 2 years (autumn)
LLC anti-freeze (all season type)	Every 1 year (autumn)
AF-PT anti-freeze (winter, one season type)	Every 6 months (spring, autumn) Add anti-freeze only in autumn
No anti-freeze	Every 6 months

Park the machine on level ground to clean or replace the cooling water.
The coolant added during manufacturing has anticorrosive effect as well as anti-freeze effect.
Though the mixing ratio of an anti-freeze to water differs with air temperature, at least 30% of anti-freeze by volume is required to obtain anticorrosive effect.
Determine the mixing ratio of the anti-freeze to water on the basis of the lowest past temperature, referring to the ratio table below.
Actually set the temperature 18℉ (10℃) lower than the lowest temperature.

Courtesy of Machine.Market

https://truckmanualshub.com/

Table of mixing ratio of anti-freeze to water

Lowest temperature	℉	23	14	5	-4	-13	-22	-31	-40
	(℃)	(-5)	(-10)	(-15)	(-20)	(-25)	(-30)	(-35)	(-40)
Amount of anti-freeze	Qts.	0.53	0.85	1.06	1.16	1.27	1.48	1.69	1.80
	(L)	(0.5)	(0.8)	(1.0)	(1.1)	(1.2)	(1.4)	(1.6)	(1.7)
Amount of water	Qts.	2.75	2.43	2.22	2.11	2.01	1.80	1.69	1.48
	(L)	(2.6)	(2.3)	(2.1)	(2.0)	(1.9)	(1.7)	(1.6)	(1.4)

Note :
At the delivery from the factory, water and anti-freeze are mixed in the ratio shown above for the -31℉ (-35℃) temperature.

⚠ DANGER

Keep sources of ignition away from the antifreeze because it is flammable.

Use tap water. If you obtain water from a river, a well or a small water-supply system, consult your dealer.

Use a densitometer to control the mixing ratio.

⚠ WARNING

When removing the drain plug, be careful that the anti-freeze does not contact your eyes or skin.

Courtesy of Machine.Market

https://truckmanualshub.com/

■ **How to clean the inside of the cooling system**

■ Things to prepare

- Container for cooling water
  Capacity : 3.70 Qts. (3.5 L) or more
- Hose for supplying water

1) Swing the upper structure so that the drain plug (P) is positioned in the middle of the right and left crawlers.

2) Place the container for cooling water under the drain plug (P).

3) Remove the cover (1) under the starter switch. Slowly turn and remove the radiator cap (2), and pour in a washing agent. Then, mount the radiator cap (2).

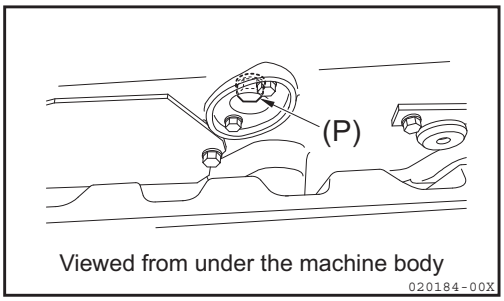

IMPORTANT
Washing methods vary depending on the manufacturer of the washing agent.
Follow the instructions of the manufacturer.

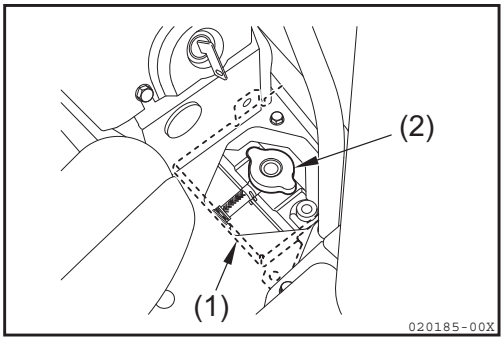

4) Start the engine until the water temperature rises to 176 °F (80°C) or more and idle the engine for 10 to 15 minutes. Then stop the engine.

5) After the engine has cooled down, slowly loosen the drain plug (P) to drain the water, and remove the radiator cap (2).
   When the drain plug (P) is removed, the water in the radiator and the engine cylinder block is completely discharged.

6) After the water is completely discharged, reinstall the drain plug (P) and pour tap water into the water supply port of the radiator.

7) When the cooling system is filled with water, remove the drain plug (P), idle the engine and flush the cooling system with running water until clean water comes out.
   While flushing with running water, always keep the cooling system completely filled with water by regulating the amounts of water to be drained out and poured in.
   Hold the water supply hose securely while flushing with running water.

Courtesy of Machine.Market

https://truckmanualshub.com/

8) After flushing with running water, stop the engine, drain the cooling system completely and then install the drain plug (P).

9) Pour water mixed with anti-freeze into the water supply port of the radiator, to fill it up.

10) To bleed air, idle the engine for 5 to 6 minutes and then run the engine without load at high speed for 5 to 6 minutes. (While running the engine, keep the radiator cap (2) removed.)

11) Approximately 5 minutes after stopping the engine, pour water mixed with anti-freeze up to the water supply port of the radiator, and install and tighten the cap.

12) Drain the cooling water from the sub-tank (3), wash the inside of the sub-tank (3) and pour water mixed with anti-freeze up to the "FULL" level.

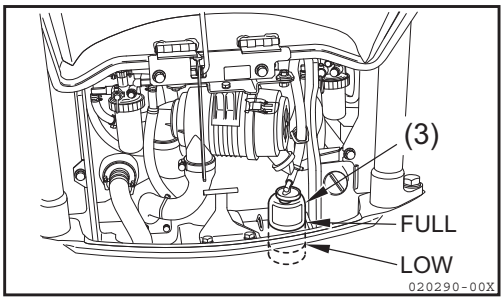

Courtesy of Machine.Market

https://truckmanualshub.com/

25-3. Checking before start-up

Check the items described here every day, before starting the engine for the first time.

25-3-1. Checking and replenishing the cooling water

⚠ WARNING

Normally do not open the radiator cap.
Check the cooling water in the sub-tank when the engine is cool.

1) Open the engine hood to check that the cooling water level is between the FULL and LOW marks on the sub-tank (1) (illustrated at the right). If the cooling water level is low, add cooling water to the FULL mark through the port of the sub-tank (1).
   For the cooling water to be used, refer to Section "21. Fueling, Oiling and Greasing Based on Temperature Range".

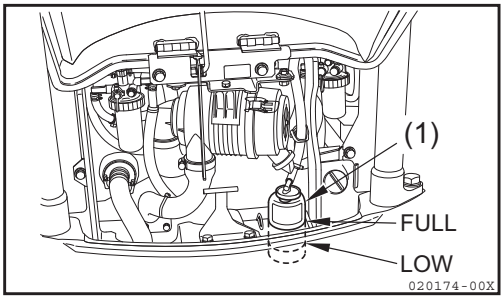

2) Securely close the cap after replenishing.

3) If the sub-tank is empty, check the sub-tank for leaks and then check the cooling water level in the radiator. If the cooling water is insufficient, refill the radiator and then the sub-tank with cooling water.

4) If the cooling water level is proper, close the engine hood.

Courtesy of Machine.Market

https://truckmanualshub.com/

25-3-2. Checking and replenishing the engine oil

⚠ WARNING

- **At operating temperature, the oil and dipstick areas are hot.**
- **Do not allow hot oil or hot components to contact the skin, to prevent bodily injury.**
  Check oil level and replenish oil after engine has cooled down sufficiently.

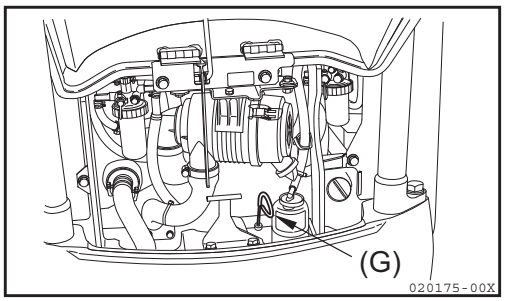

1) Open the engine hood.

2) Pull out the oil dipstick (G) and wipe oil off it with a cloth.

3) Insert the oil dipstick (G) fully again and pull it out.

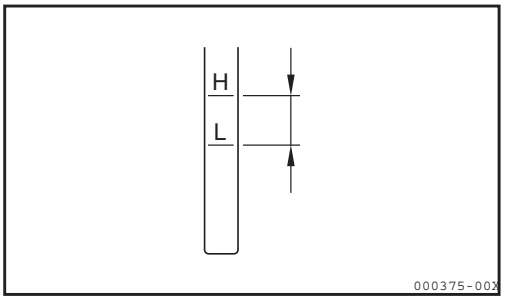

4) Check that the oil level is above the midpoint between the upper and lower limit marks (H and L).
   Open the cap of the oil supply port (F) and replenish oil if the oil level is below the midpoint.
   See Section "21. Fueling, Oiling and Greasing Based on Temperature Range" for the engine oil to be used.

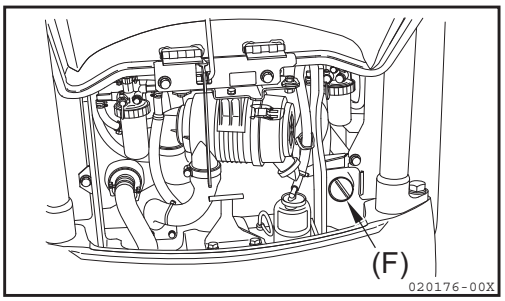

5) If the engine oil level is above the H mark, drain the excess engine oil through the drain plug (P), and check the engine oil level again.

6) If the engine oil level is proper, securely close the port cap and close the engine hood.

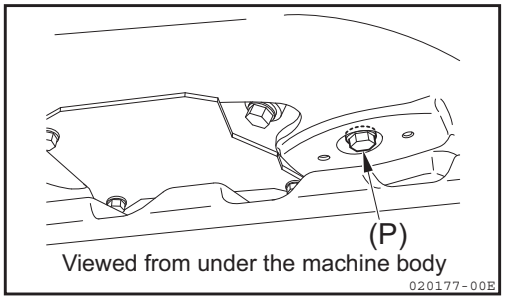

Note :

When checking the engine oil level after the engine has been running, stop the engine and wait at least 15 minutes before checking.
If the machine is on an incline, make it level before checking the engine oil level.
Do not discard the excess engine oil onto the ground or the road.

Courtesy of Machine.Market

https://truckmanualshub.com/

25-3-3. Checking and replenishing the fuel in the fuel tank

⚠ WARNING

Be careful not to overfill the fuel tank because it could cause a fire. If the fuel tank is overfilled, completely wipe off the spilled fuel.

⚠ CAUTION

- **Do not remove the strainer from the fuel supply port of the fuel tank when supplying fuel.**
- **Be careful not to allow any water that may be in the fuel container or dirt on the refueling equipment to enter the fuel tank.**

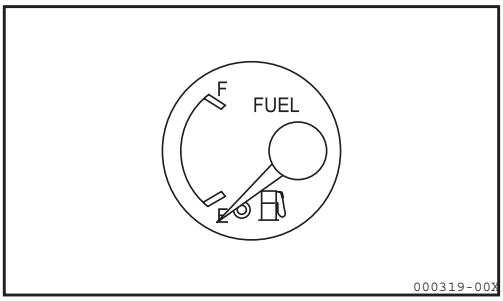

1) Turn the starter switch key to the "ON" position and check the fuel level with the fuel meter. Add necessary fuel to the fuel supply port.
   When the fuel meter pointer is at “E”, approximately 1.32 Gals. (5 L) of fuel is left in the tank.

   Fuel tank capacity : 5.28 Gals. (20 L)

   See Section "21. Fueling, Oiling and Greasing Based on Temperature Range" for the fuel to be used.

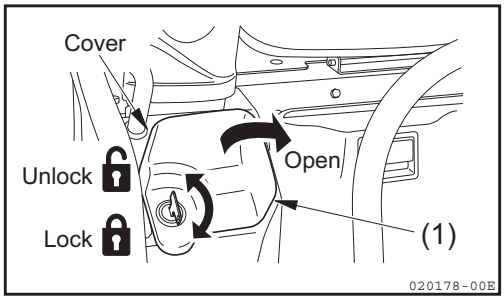

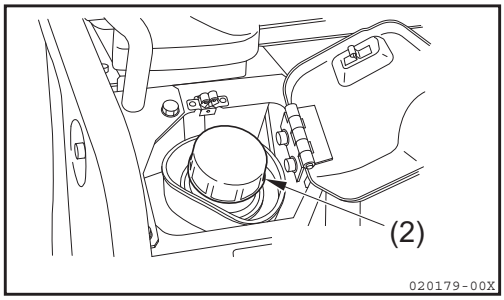

2) Insert the starter switch key and turn it counterclockwise to unlock the cover (1) for the fuel supply port.

3) Open the cover (1) and add fuel to the fuel supply port.

4) After refueling, securely install and tighten the fuel supply port cap (2), and then close the cover (1).

5) Turn the starter switch key clockwise to lock the cover.

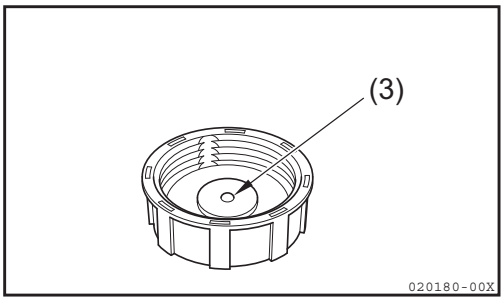

Note :

If the breather hole (3) in the cap is clogged, the pressure in the tank will decrease and the fuel will not be delivered adequately to the engine. Clean the engine breather hole from time to time, to prevent that from happening.

Courtesy of Machine.Market

https://truckmanualshub.com/

25-3-4. Checking and replenishing the hydraulic oil in the hydraulic oil tank

⚠ WARNING

When removing the cap of the oil supply port, slowly loosen it to gradually relieve the internal pressure in the tank, or oil may spurt from the tank.

1) Park the machine as illustrated in the figure at the right. If the machine is not in that posture, start the engine, retract the bucket and arm cylinders to their stroke ends at low speed, lower the boom until the bucket teeth are on the ground, lower the blade to the ground, and stop the engine.

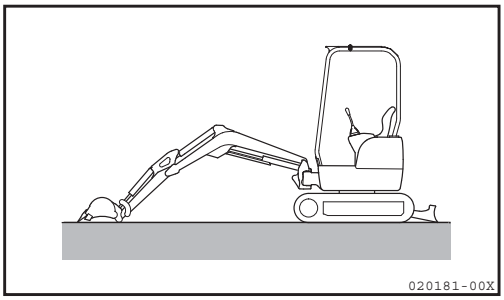

2) Check the oil level with the oil level gauge on the left side of the machine.
   Check that the oil level is between the upper and lower limit marks.

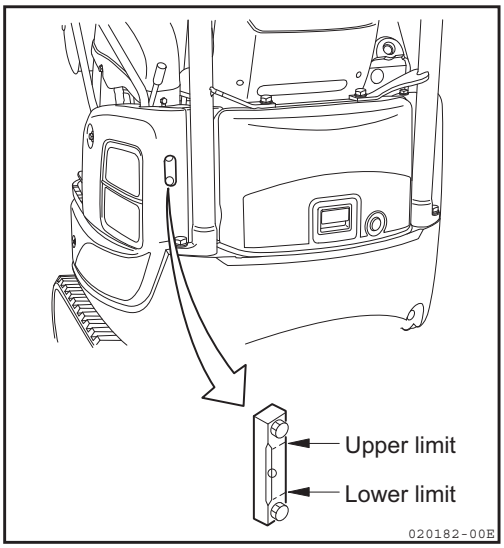

IMPORTANT

Do not replenish hydraulic oil above the upper limit mark on the oil level gauge. An excessive amount of hydraulic oil may damage the hydraulic system by placing stress on its components, causing a dangerous high-pressure leak.

3) Remove the hydraulic oil tank cover (1) and add oil to the oil supply port (F) if the oil level is below the lower limit.
   See Section "21. Fueling, Oiling and Greasing Based on Temperature Range" for the hydraulic oil to be used.

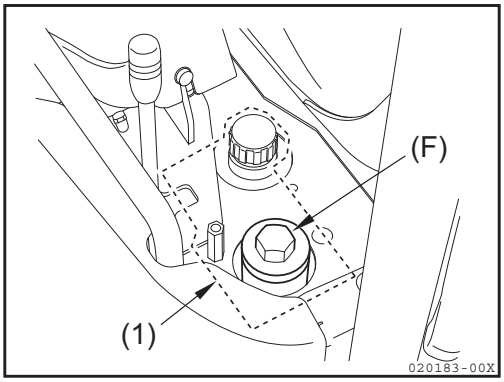

Note :

As the oil level differs with the oil temperature, check the oil level by referring to the following guidelines:

- *Before start-up : Near the middle of the oil level gauge [oil temperature 50 to 86°F (10 to 30°C)]*
- *During normal operation : Near the upper limit of the oil level gauge [oil temperature 122 to 176°F (50 to 80°C)]*

Courtesy of Machine.Market

https://truckmanualshub.com/

25-3-5. Checking and adjusting the fan belt tension

⚠ WARNING

- **Stop the engine, take out the starter switch key, and attach the "SERVICING IN PROGRESS" tag to a control lever.**
- **The fan belt is hot immediately after the engine is stopped.**
  Do not adjust the fan belt tension immediately after stopping the engine.
- **Adjust the fan belt tension after all of the parts of the engine have cooled sufficiently.**

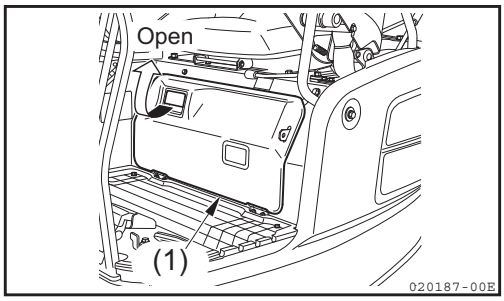

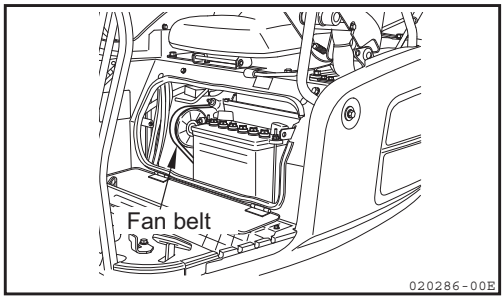

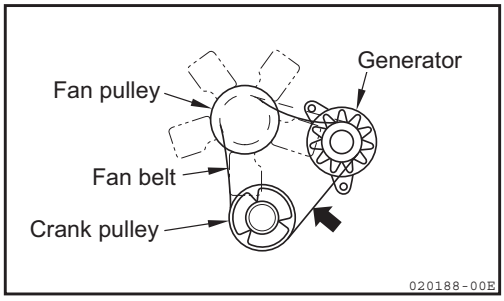

■ Checking the fan belt tension

1) Open the cover (1) under the operator's seat.

2) Press down on the fan belt between the generator pulley and the crank pulley with a finger, to check the fan belt tension.

   Pressing force : Approximately 22.1 lbs. (10 kg)
   Correct slack : 0.4 to 0.6 in. (10 to 15 mm)

3) Adjust the tension if necessary.

4) When the tension is proper, close the cover (1) under the operator's seat.

■ Adjusting the fan belt tension

■ Things to prepare

- Wooden bar (e.g., the handle of a hammer)

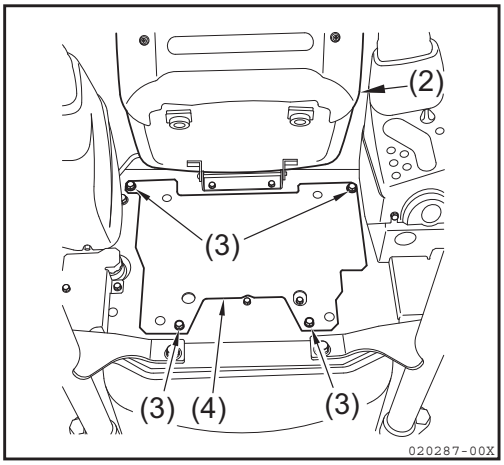

1) Open the cover (1) under the operator's seat (2).

2) Tilt the operator's seat (2) forward, remove the mounting bolts (3) and remove the cover (4).

3) Loosen the generator mounting bolt (5).

4) Insert a wooden bar between the generator (6) and the cylinder block, and move the generator (6) to adjust the tension of the fan belt (7) so that the belt will be depressed approximately 0.4 to 0.6 in. (10 to 15 mm) with a pressing force of 22.1 lbs. (10 kgf).

Courtesy of Machine.Market

https://truckmanualshub.com/

5) Retighten the mounting bolt (5) to secure the generator (6).

6) Check the pulleys, the V-grooves and the fan belt (7) for damage, and check that the fan belt (7) does not touch the bottom of each V-groove.

7) If the fan belt (7) cannot be properly adjusted because it has lost its elasticity or if it is damaged or cracked, replace the fan belt (7) with a new one.

[Fan belt size] (Inch)

	Size
Fan belt	A35

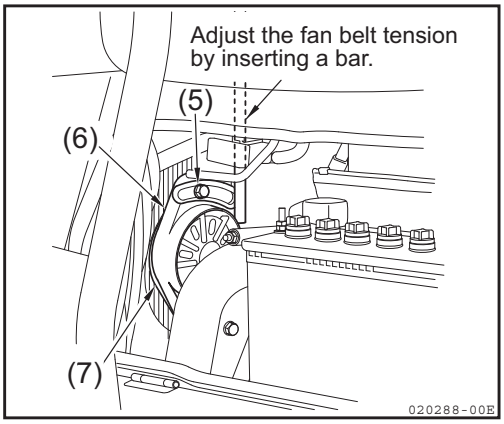

25-3-6. Checking and replenishing the battery electrolyte

⚠ DANGER

- **The battery generates flammable gas and can cause a fire and an explosion.**
  Keep sparks, flames and lit cigarettes away from the battery.
- **Battery electrolyte is strong acid. To avoid serious injury, do not allow the electrolyte to contact your skin or splash into your eyes.**
- **Always wear safety goggles and protective clothing, when adding electrolyte.**
- **Do not use the machine with the battery which is short of battery electrolyte. The shortage of battery electrolyte not only will reduce the life of the battery but also could cause an explosion.**

1) Open the cover (1) and check the battery (2) electrolyte level with the battery (2) electrolyte level gauge. If the battery (2) electrolyte level is between the upper and lower limit marks, the battery (2) electrolyte level is proper.

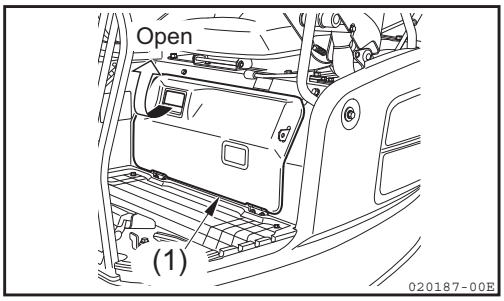

2) If the battery electrolyte level is below the lower limit mark, replenish the battery electrolyte.

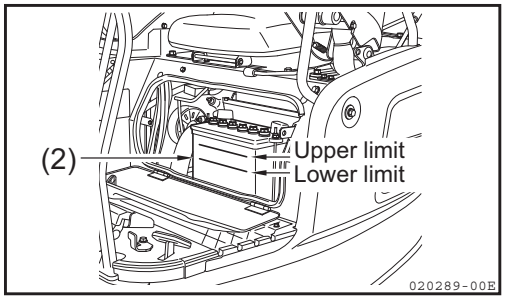

Courtesy of Machine.Market

https://truckmanualshub.com/

25-3-7. Greasing

IMPORTANT

Grease the fittings thoroughly after washing the machine or after operation in rain, on soft ground, or in muddy water.

1) Put the bucket and the blade on the ground and stop the engine.

2) Clean the grease nipples indicated by arrows in the figures at the right, and grease them with a grease gun.

3) After greasing, wipe off any excess that remains.

■ **Implement**

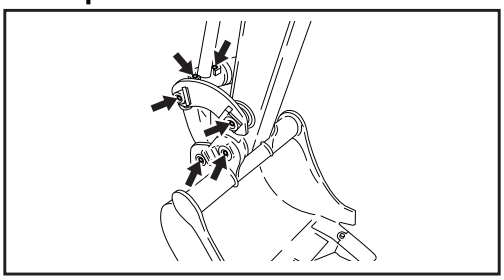

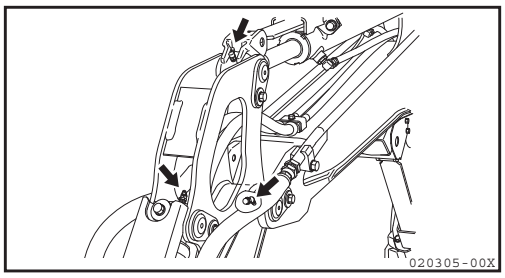

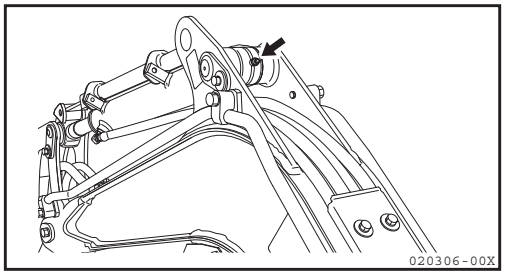

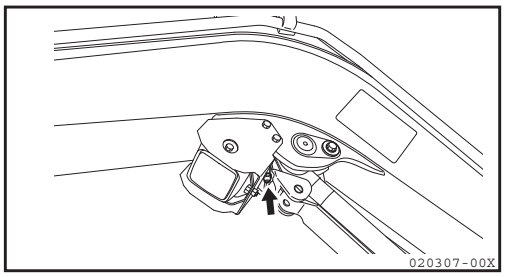

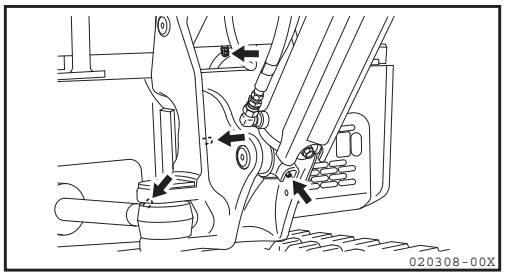

■ **Blade**

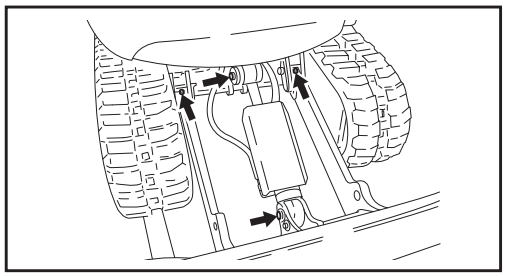

Courtesy of Machine.Market

https://truckmanualshub.com/

25-3-8. Checking the electrical equipment

⚠ CAUTION

If a fuse blows out frequently, contact your dealer for assistance.

Check fuses for damage, wiring for poor connections or short circuits, and battery terminals for corrosion or loose fits. Take corrective action.

Check the following items after the starter switch is turned to the "ON" position.

1) Check the monitor functions
- Check the fuel meter, water temperature gauge, and hourmeter.
- Check the engine oil pressure alarm lamp, battery charge alarm lamp and water temperature alarm lamp.

2) Check that the switch functions correctly and the lamp lights correctly.
- Check the boom lights

3) Check the travel alarm function.
- To check the travel alarm function, push or pull the travel levers after the lock levers have been unlocked.

Courtesy of Machine.Market

https://truckmanualshub.com/

25-4. Maintenance every 50 service hours

25-4-1. Greasing the swing gear and the swing bearing

⚠ WARNING

Do not swing the upper structure while greasing. Swing the upper structure after each stage of greasing is completed to avoid serious bodily injury.

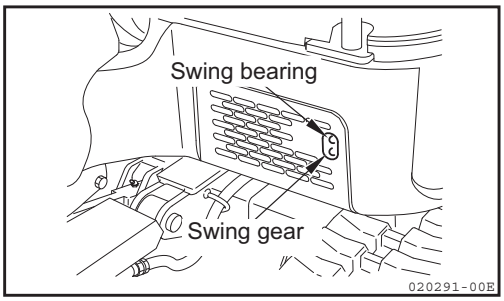

1) Grease the swing gear and bearing through the grease nipples indicated by arrows in the figure at the right, using a grease gun.

2) Swing the upper structure in small increments and grease after each stop, until the upper structure has made a full revolution.

25-4-2. Draining the water and deposits in the fuel tank

⚠ WARNING

Keep sparks, flames and lit cigarettes away.

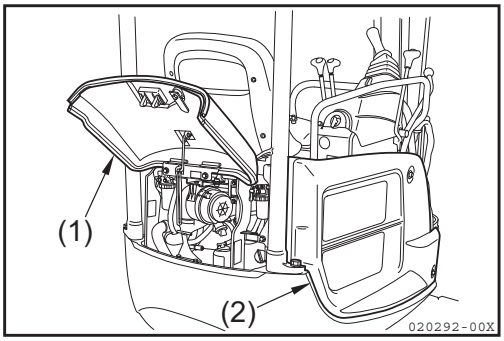

■ **Things to prepare**

- Container for fuel waste

1) Open the engine hood (1).

2) Remove the side cover R (2).

3) Loosen the hose clamp (4), remove the drain hose (3) and put the end of the hose outside of the upper structure frame. Place the container for fuel waste under the hose.

4) Move the hose clip (5) using pliers, remove the flat head pin (P), and drain the water and dirt deposits with the fuel in the fuel tank.
   Take care that the fuel does not contact your body.

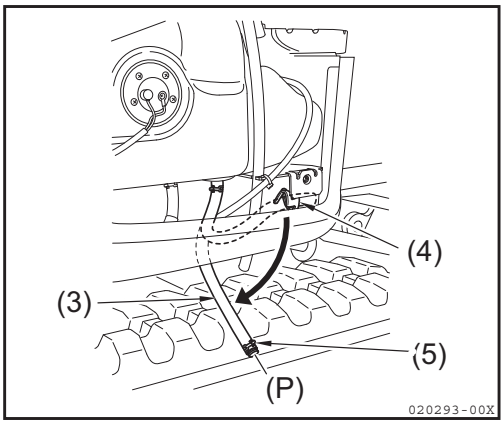

5) When clean fuel starts coming out, securely reinstall the flat head pin (P) and move the hose clip (5) back to its original position. Then, put the drain hose (3) back into place and secure it with the hose clamp (4).

6) Reinstall the side cover R (2).

7) Close the engine hood (1).

Courtesy of Machine.Market

https://truckmanualshub.com/

25-4-3. Cleaning the water separator element

⚠ WARNING

- **Keep sparks, flames and lit cigarettes away.**
- **At operating temperature, the engine components are hot and can cause a burn.**
- **Disconnect the battery and replace the element after the engine has cooled sufficiently.**
- **Fuel leaked or spilled onto hot surfaces or electrical components could cause a fire.**
- **Drain the fuel from the fuel oil filter into a container before removing the fuel oil filter.**

■ **Things to prepare**

- Container for fuel waste

1) Open the engine hood.

2) Place the container for fuel waste under the water separator.

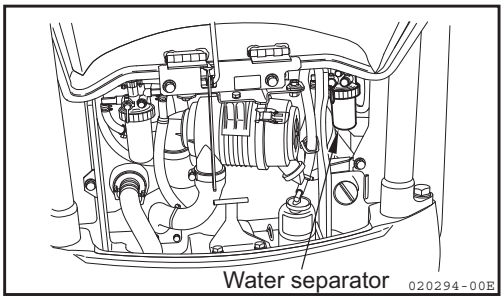

3) After setting the water separator cock to the closed position, loosen the retainer ring to remove the cup and drain the water from the cup.
   Do not lose the red ring in the cup.

4) Remove the element and clean it and the inside of the cup, using light oil or a washing agent.

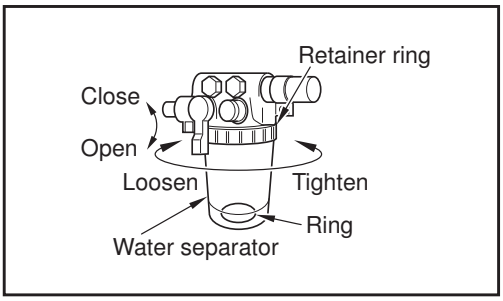

5) Check the O-ring and if it is damaged or deformed, replace it with a new one.

6) Install the element and the cup and turn the cock to the open position.

7) Close the engine hood.

Courtesy of Machine.Market

https://truckmanualshub.com/

25-4-4. Cleaning the fuel filter element

⚠ WARNING

- **Keep sparks, flames and lit cigarettes away.**
- **At operating temperature, the engine components are hot and can cause a burn.**
- **Disconnect the battery and replace the element after the engine has cooled sufficiently.**
- **Fuel leaked or spilled onto hot surfaces or electrical components could cause a fire.**
- **Drain the fuel from the fuel oil filter into a container before removing the fuel oil filter.**

■ Things to prepare

- Container for fuel waste

1) Open the engine hood.

2) Place the container for fuel waste under the fuel filter (1).

3) After setting the fuel filter (1) cock to the closed position, loosen the retainer ring (2) to remove the cup.

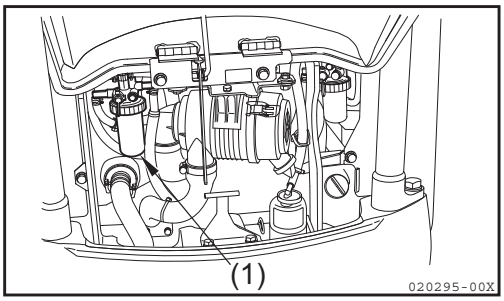

4) Remove the element and clean it and the inside of the cup, using light oil or a washing agent.

5) Check the O-ring and if it is damaged or deformed, replace it with a new one.

6) Install the element and the cup and turn the cock to the open position.

7) Close the engine hood.

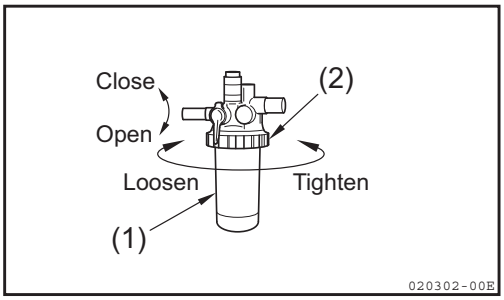

25-5. Maintenance every 100 service hours

Perform the same maintenance as indicated for every 50 service hours.

Courtesy of Machine.Market

https://truckmanualshub.com/

25-6. Maintenance every 200 service hours

Also perform the maintenance every 50 and 100 service hours.

25-6-1. Replacing the engine oil and the engine oil filter

⚠ WARNING

- **Do not replace the oil immediately after the engine stops to prevent bodily injury, because all the components are hot.**
- **Do not allow hot oil or components to contact your skin.**
- **Replace the oil and the filter element after the oil and the components have cooled sufficiently.**

■ Things to prepare

- Replacement new oil : 3.2 Qts. (3.0 L)
- Container for waste oil : Capacity of 3.2 Qts. (3.0 L) or more
- Filter wrench for engine oil filter cartridge

1) Swing the upper structure so that the drain plug (P) on the bottom of the engine is positioned in the middle of the right and left crawlers.

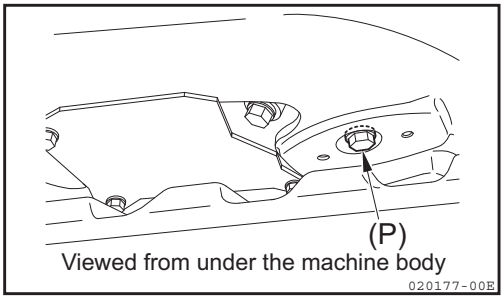

2) Place the container for waste oil under the drain plug (P).

3) Slowly remove the drain plug (P) so that the oil should not splash on you, and drain the waste oil.

4) Check the waste oil, and contact your dealer if any metallic particles or foreign objects are mixed in it.

5) Reinstall the drain plug (P).

6) Turn the oil filter cartridge (1) counterclockwise with the filter wrench to remove it.
After removing the oil filter, wait 10 to 15 minutes before replacing it.

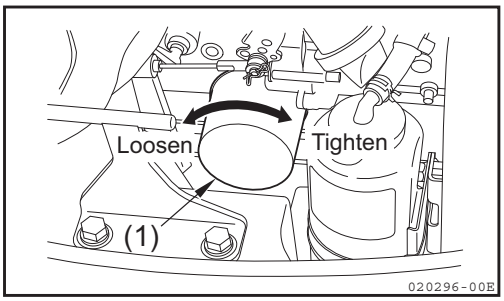

7) Wipe the dirt and oil from the filter mount and apply engine oil (or apply grease lightly) to the seal surface of a new oil filter cartridge.

Courtesy of Machine.Market

https://truckmanualshub.com/

8) When mounting the new filter cartridge, turn it 2/3 of a turn after the seal surface has contacted the filter mount.

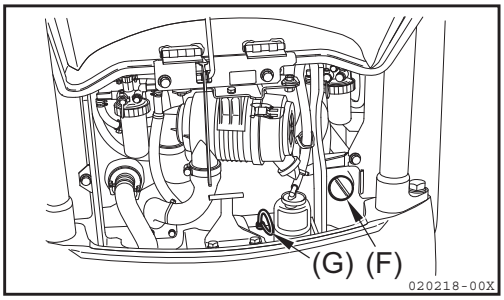

9) After replacing the oil filter cartridge, add engine oil up to the upper limit mark on the oil dipstick (G) through the oil supply port (F).
   Refer to Section "21. Fueling, Oiling and Greasing Based on Temperature Range" for the fuel to be used.

10) Idle the engine for several minutes and then stop the engine. Then check that the oil level exceeds the mid-point between the upper and lower limit marks on the oil dipstick.
    Refer to Section "25-3. Checking before start-up".

11) Install and tighten the oil supply port cap securely.

Replace the engine oil and the oil filter 6 months after the previous replacement, even if the service hours have not reached 200 service hours.
Also replace them at 200 service hours, even if 6 months have not elapsed since the previous replacement.

Courtesy of Machine.Market

https://truckmanualshub.com/

25-6-2. Checking and cleaning the air cleaner

⚠ WARNING

- **Never attempt to clean and replace the air cleaner while the engine is running.**
  Always stop the engine and allow it to cool first.
- **Compressed air is used to clean the element. Always wear safety goggles to prevent injury to your eyes.**
- **The maximum compressed air pressure should be less than 100 PSI (0.7 MPa) for cleaning purposes.**

■ **Cleaning procedure for element**

1) Open the engine hood.

2) Remove the clips (1) and remove the dust cup (2).

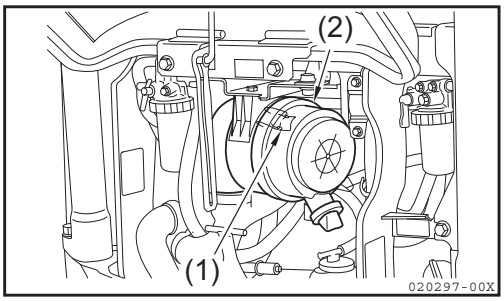

3) Remove the element (3).
   Cover the connector side at the back of the air cleaner body using a clean cloth and tape to prevent dirt from entering.

4) Clean the dust cup (2) and the inside of the body.

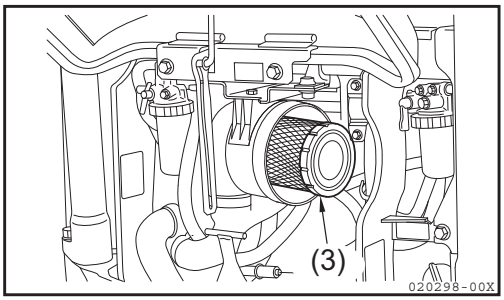

5) Blow the dry, compressed air [100 PSI (0.7 MPa) or less] from inside the element (3) along the pleats to initially remove the dirt. Then blow compressed air from outside the element (3) along the pleats to remove dirt. Blow compressed air again from inside the element (3), to complete the dirt removal.

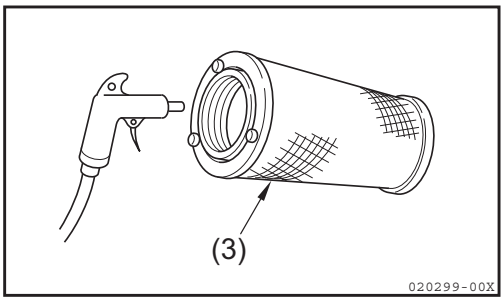

Courtesy of Machine.Market

https://truckmanualshub.com/

6) After cleaning, illuminate the element from inside with a light bulb and check it. If there are any small holes or thin areas, replace the element with a new one.

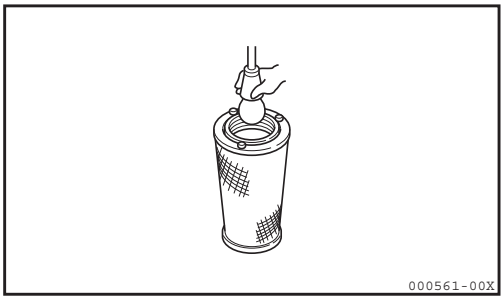

IMPORTANT

- **When cleaning the element, do not tap it or strike it against other objects. Otherwise the element may be damaged.**
- **Do not reuse the element if the pleat, gasket or seal is damaged.**
- **Replacement elements should be wrapped in clean paper and stored in a dry place.**

7) Remove the protective cloth and tape used to cover the air cleaner body.

8) Insert the newly-cleaned element.

9) Install the dust cup, using the arrow mark on it, to confirm proper alignment.

10) Close the engine hood.

Courtesy of Machine.Market

https://truckmanualshub.com/

25-6-3. Checking and cleaning the radiator fin

⚠ WARNING

- **Never attempt to check and clean the radiator fin while the engine is running.**
  Always stop the engine and allow it to cool first, before checking and cleaning it.
- **Compressed air can cause bodily injury since the objects around the radiator fin may scatter.**
- **Whenever using compressed air for cleaning, check that there are no other persons nearby, and always wear safety goggles and protective clothing and shoes.**
- **The maximum compressed air pressure should be less than 100 PSI (0.7 MPa) for cleaning purposes.**

1) Open the engine hood (1).

2) Remove the side cover R (2).

3) Clean off any mud, dirt or leaves clogged in the radiator fin (3) by blowing compressed air or by flushing with steam.

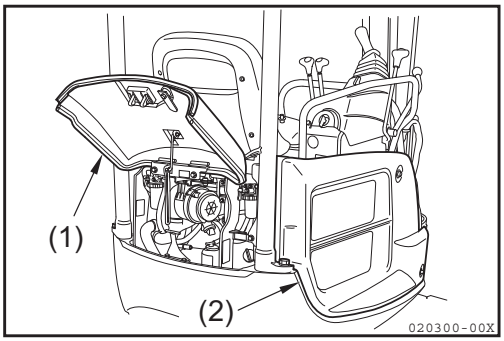

IMPORTANT

- **Always blow the compressed air away from the fin to prevent damage to the fin.**
- **A damaged fin will cause water leakage and overheating.**

4) Check that the radiator fin (3) is straight and that all the dirt has been removed completely.

5) Reinstall the side cover R (2).

6) Close the engine hood (1).

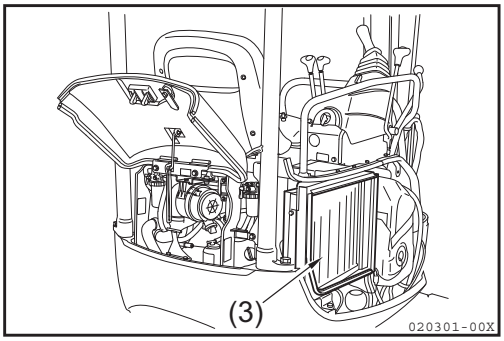

Courtesy of Machine.Market

https://truckmanualshub.com/

25-6-4. Adjusting the governor lever and accelerator devices

The governor lever and the accelerator devices (i.e., accelerator lever, pedal.) are connected by an accelerator wire. If the wire becomes stretched or if the connections loose, deviation in position may result and make operation unsafe. Inspect the wire periodically and adjust if necessary.

1) Check that the governor lever on the engine side is touching the restraint bolt on the high speed side when the accelerator device is in the high speed position.
2) Check that the governor lever on the engine side is touching the restraint bolt on the low speed side when the accelerator device is in the low speed position.
3) If the governor lever does not touch the restraint bolt on either the high or low speed side when you check them, loosen the setting screws on the fittings for the accelerator wire and adjust the position of the wire.

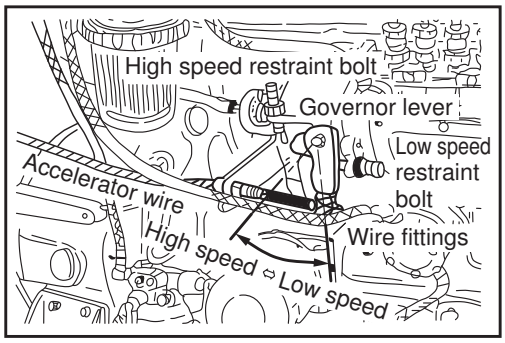

⚠ CAUTION

Never remove the restraint bolt for the fuel injection pump or the restraint bolt governing the amount of fuel injected. Doing so will impair safe operation, lower the efficiency of the engine and shorten its life.

25-7. Maintenance every 250 service hours

Perform the same maintenance as indicated for every 50 service hours.

Courtesy of Machine.Market

https://truckmanualshub.com/

25-8. Maintenance every 400 service hours

Also perform the maintenance every 50, 100, and 200 service hours.

25-8-1. Replacing the fuel filter element

⚠ WARNING

- **Keep sparks, flames and lit cigarettes away.**
- **At operating temperature, the engine components are hot and can cause a burn.**
- **Disconnect the battery and replace the element after the engine has cooled sufficiently.**
- **Fuel leaked or spilled onto hot surfaces or electrical components could cause a fire.**
- **Drain the fuel from the fuel filter into a container before removing the fuel filter.**

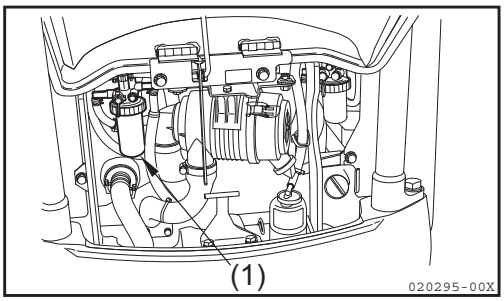

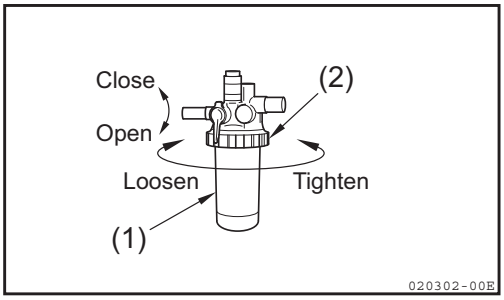

■ **Things to prepare**

- Container for fuel waste

1) Open the engine hood.

2) Place the container for fuel waste under the fuel filter (1).

3) After setting the fuel filter (1) cock to the closed position, loosen the retainer ring (2) to remove the cup, and remove the element.

4) Clean the cup using light oil or a washing agent and install a new element.
   Replace the O-ring when replacing the element.

5) After replacing the fuel filter element, release air from the fuel circuit in accordance with the procedure described on the next page.

6) After completing the air release procedure, start the engine and check that there are no fuel leaks or abnormalities.
   After checking that, stop the engine and close the engine hood.

Courtesy of Machine.Market

https://truckmanualshub.com/

How to release air:

This machine is equipped with an automatic air release device (a solenoid pump). Follow the air release procedure below:

1) Fill up the fuel tank.

2) Set the lock levers to the lock position and the accelerator lever to the "RUN" position.

3) Turn the starter switch to the "ON" position and leave it for approximately 10 to 15 seconds. (The air will normally be released in 10 to 15 seconds.)

4) Turn the starter switch to the "START" position and start the engine.

IMPORTANT

If the engine fails to start, turn the starter switch back to the "OFF" position and wait at least one minute before again turning the starter switch to the "START" position.

Whenever you refuel, release air from the fuel tank in the same way.

If the engine revolves irregularly after it starts, turn the starter switch to the "OFF" position, wait one minute or more and turn the starter switch to the "START" position again.

Courtesy of Machine.Market

https://truckmanualshub.com/

25-8-2. Replacing the air cleaner element

⚠ WARNING

Never attempt to replace the air cleaner element while the engine is running.
Replace the air cleaner element after the engine has been stopped and has cooled sufficiently.

1) Open the engine hood.

2) Remove the clips (1) and remove the dust cup (2).

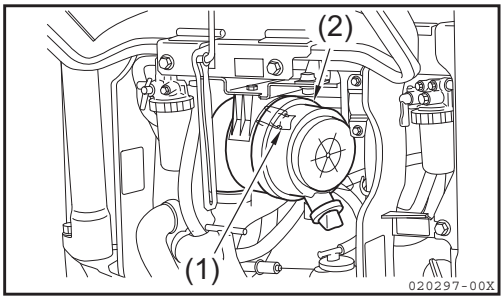

3) Remove the element (3).
   Cover the connector side at the back of the air cleaner body using a clean cloth and tape to prevent dirt from entering.

4) Clean the dust cup (2) and the inside of the body.
   Remove the protective cloth and tape used to cover the air cleaner body.

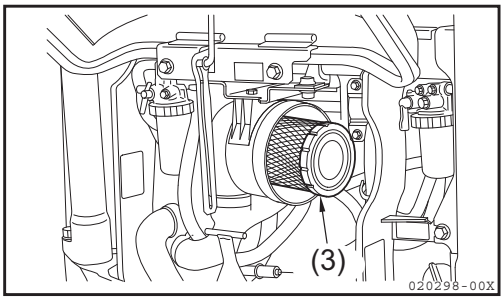

5) Install a new element (3).

6) Install the dust cup (2), using the arrow mark on it, to confirm proper alignment.

7) Close the engine hood.

Courtesy of Machine.Market

https://truckmanualshub.com/

25-9. Maintenance every 500 service hours

Also perform the maintenance every 50, 100, and 250 service hours.

25-9-1. Replacing the return filter in the hydraulic oil tank

⚠ WARNING

- **The hydraulic oil and the tank are hot and under pressure immediately after the engine stops, and can cause bodily injury.**
  Be sure to replace the filter only after the hydraulic oil tank has cooled enough to permit touching the tank surface with your bare hand.
- **If the flange on the tank is removed too quickly, the flange may pop out due to the spring force applied to the filter. Also, the hydraulic oil may spout out if the pressure inside the tank has not been gradually relieved.**
- **Slowly loosen the four bolts diagonally to remove the flange.**

■ **Things to prepare**

- Container for waste oil: Capacity of 0.66 Gals. (2.5 L) or more

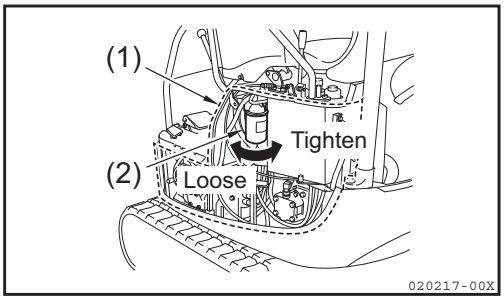

1) Open the engine hood.

2) Remove the side cover L (1).

3) Place the container for waste oil under the return filter (2).

4) Remove the return filter (2) using the filter wrench.

Courtesy of Machine.Market

https://truckmanualshub.com/

25-10. Maintenance every 1000 service hours

Also perform the maintenance every 50, 100, 250 and 500 service hours.

25-10-1. Replacing the hydraulic oil and cleaning the suction filter

⚠ WARNING

- **The hydraulic oil and the tank are hot and under pressure at operating temperature. Never replace the oil immediately after operation is stopped. Wait until the tank has cooled enough to permit you to touch its surface with your bare hand.**
- **When removing the oil supply port cap, slowly loosen it to relieve the internal pressure, then remove the cap carefully.**
- **If the cover of the tank is removed too quickly, the cover may pop out due to the spring force applied to the filter. Also, the hydraulic oil may spout out if the pressure inside the tank has not been gradually relieved.**
  Slowly loosen the four bolts diagonally to remove the cover.

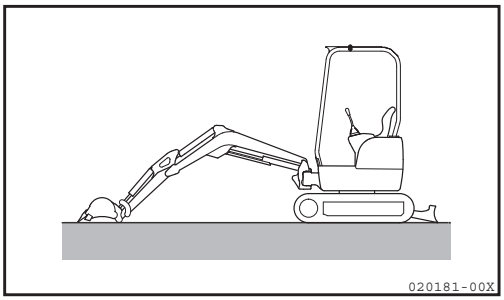

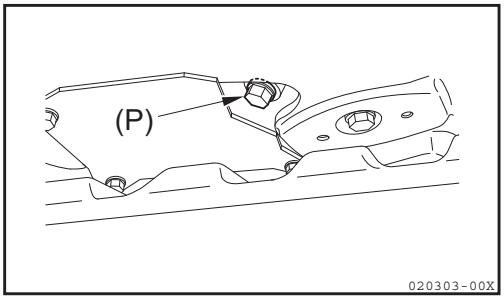

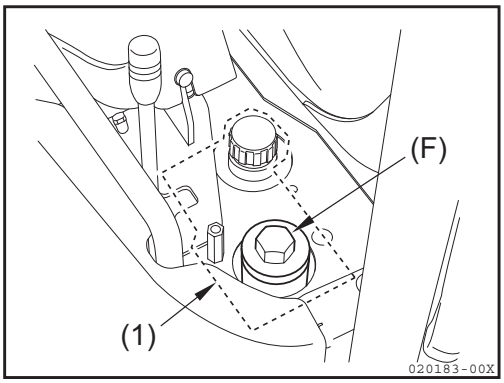

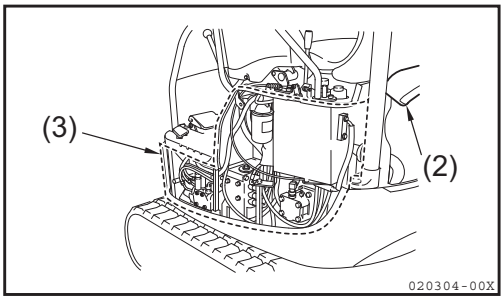

■ **Things to prepare**

- Container for waste oil : Capacity of 4.49 Gals. (17 L) or more
- New hydraulic oil : 4.36 Gals. (16.5 L) [When all oil is drained from all of the hydraulic equipment, pipes and hoses, the required new oil amount is 6.87 Gals. (26 L)].
- O-ring

1) Swing the upper structure so that the drain plug (P) on the bottom of the hydraulic oil tank is positioned in the middle of the right and left crawlers.
2) Retract the bucket and arm cylinders to their stroke ends, lower the boom and put the bucket teeth on the ground.
3) Put the blade on the ground and stop the engine.
4) Remove the hydraulic oil tank cover.
5) Open the engine hood (2).
6) Remove the side cover L (3).
7) Place the container for waste oil under the drain plug (P).
8) Remove the drain plug (P) and drain the waste oil.
   When removing the drain plug (P), take care that the oil does not splash on you.

Courtesy of Machine.Market

https://truckmanualshub.com/

9) Clean the area around the oil supply port (F) on the top of the hydraulic oil tank with a cloth. Slowly loosen and remove the oil supply port cap (F).

10) After draining the waste oil, install and tighten the drain plug (P).
Tightening torque : 115.7 to 137.4 ft•lbf (156.9 to 186.3 N•m)

11) Loosen the hose bands (4) and remove the hose (6) from the suction filter (5).

12) Remove the suction filter (5). Then, remove dirt from the suction filter (5) and wash it with a washing agent or light oil.

13) Check the suction filter (5). If the suction filter (5) is damaged or cracked, replace it with a new one.

14) Replace the O-ring on the threaded portion of the suction filter (5) with a new one, and install the suction filter with the new O-ring in the hydraulic oil tank.
Tightening torque : 72.3 to 87.0 ft•lbf (98 to 118 N•m)

IMPORTANT
Do not allow any dirt to enter the hydraulic oil tank when installing the suction filter.

15) Install the hose (6) to the suction filter (5) and tighten the hose hands (4).
Tightening torque : 1.8 to 2.5 ft•lbf (2.5 to 3.4 N•m)

16) Add oil to the specified level through the oil supply port. Check the oil level with the oil level gauge (G) on the left side of the machine and do not add oil beyond the midpoint between the upper and lower limit marks on the oil level gauge (G).
Refer to Section "21. Fueling, Oiling and Greasing Based on Temperature Range" for the oil to be used.

17) Install the oil supply port cap (F).

18) After replacing the oil, set all control levers to the neutral position and idle the engine for approximately 2 to 3 minutes, and then test each implement for proper operation.

19) Install the side cover L (3).

20) Close the engine hood (2).

21) Install the hydraulic oil tank cover (1).

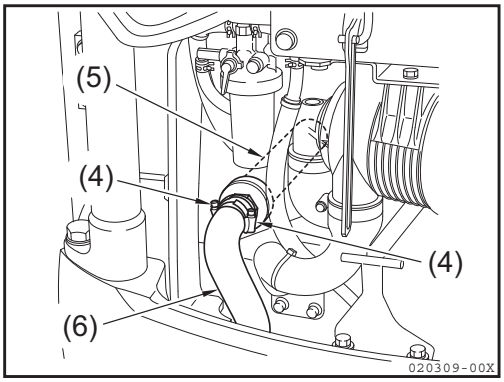

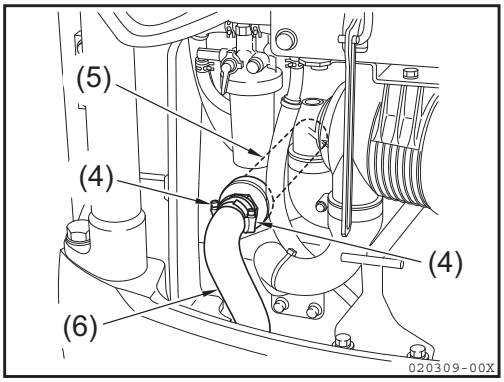

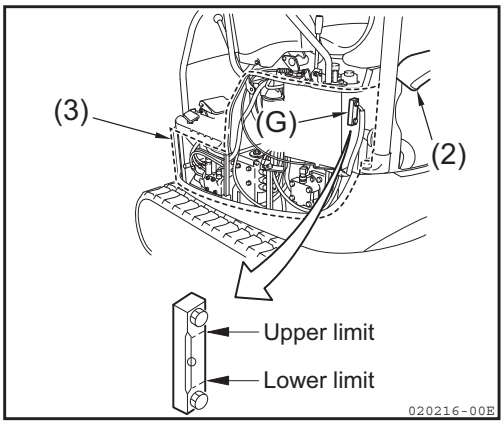

Courtesy of Machine.Market

https://truckmanualshub.com/

25-10-2. Checking and adjusting the intake/exhaust valve clearances

Ask your dealer about checking and adjusting.

25-10-3. Checking and adjusting the fuel injection valve

Ask your dealer about checking and adjusting.

25-10-4. Retightening the cylinder head bolts

Ask your dealer about retightening.

Courtesy of Machine.Market

https://truckmanualshub.com/

25-11. Maintenance every 2000 service hours

Also perform the maintenance every 50, 100, 250, 500 and 1000 service hours.

25-11-1. Checking and replacing fuel piping, cooling water piping

Ask your dealer.

25-11-2. Lapping the intake/exhaust valves

Ask your dealer.

25-11-3. Checking and adjusting fuel pump

Ask your dealer.

Courtesy of Machine.Market

https://truckmanualshub.com/

Courtesy of Machine.Market

https://truckmanualshub.com/

SPECIFICATIONS AND DIMENSIONAL DIAGRAMS

Courtesy of Machine.Market

https://truckmanualshub.com/

26. Specifications and Dimensional Diagrams

■ Specifications

Items \ Type	
	Rubber crawler
	Canopy

• Weight (in compliance with SAE standards)

Operating mass	lbs. (kg)	3836 (1740)
Machine mass (without implement)	lbs. (kg)	2900 (1315)

• Working range and performance

Bucket capacity, standard	cu.ft (cu.m)	1.77 (0.050)
Bucket width, standard	in. (mm)	17.7 (450)
Maximum digging depth <with the blade down>	in. (mm)	86.6 (2200) <90.9 (2310)>
Maximum vertical wall digging depth	in. (mm)	72.8 (1850)
Maximum cutting height	in. (mm)	145.3 (3690)
Maximum dumping height	in. (mm)	103.5 (2630)
Maximum digging radius of the ground	in. (mm)	146.1 (3710)
Front minimum swing radius <with the boom swing right>	in. (mm)	60.4 (1535) <54.3 (1380)>
Boom swing angle : left / right	degrees	42 / 65
Maximum digging force (bucket)	lbs. (kN)	3418 (15.2)
Travel speed : high / low	MPH (km / h)	1.3 (2.1) / 2.6 (4.2)
Swing speed	rpm	9.5
Average ground pressure, standard crawler	PSI (kPa)	4.1 (28.6)
Hydraulic pump displacement	GPM (L / min)	4.65 (17.6)×2 <Variable displacement pump> 3.48 (13.2)×1 <Gear pump> 2.09 (7.9)×1 <Gear pump>
System relief set pressure	PSI (MPa)	2986 (20.6)×2, 2417 (16.7)×1, 427 (2.9)×1

• Engine

Type	-	Vertical three-cylinder water-cooled diesel engine
Model	-	3TNV74F-SPBV
Rated output/revs	HP (kW) / rpm	14.5 (10.8) / 2400
Displacement	L	0.993
Compression pressure	PSI (MPa)	469.3 (3.2) at 250 rpm
Nozzle injection pressure	PSI (MPa)	1785 (12.3)
Fan belt (V-belt) size	-	A35
Generator capacity	V / A	12 / 20

• **Battery type and capacity.....65B24L / 12V, 40Ah (5 hours rated capacity)**

Courtesy of Machine.Market

https://truckmanualshub.com/

■ Model view and working range Unit : in. (mm)

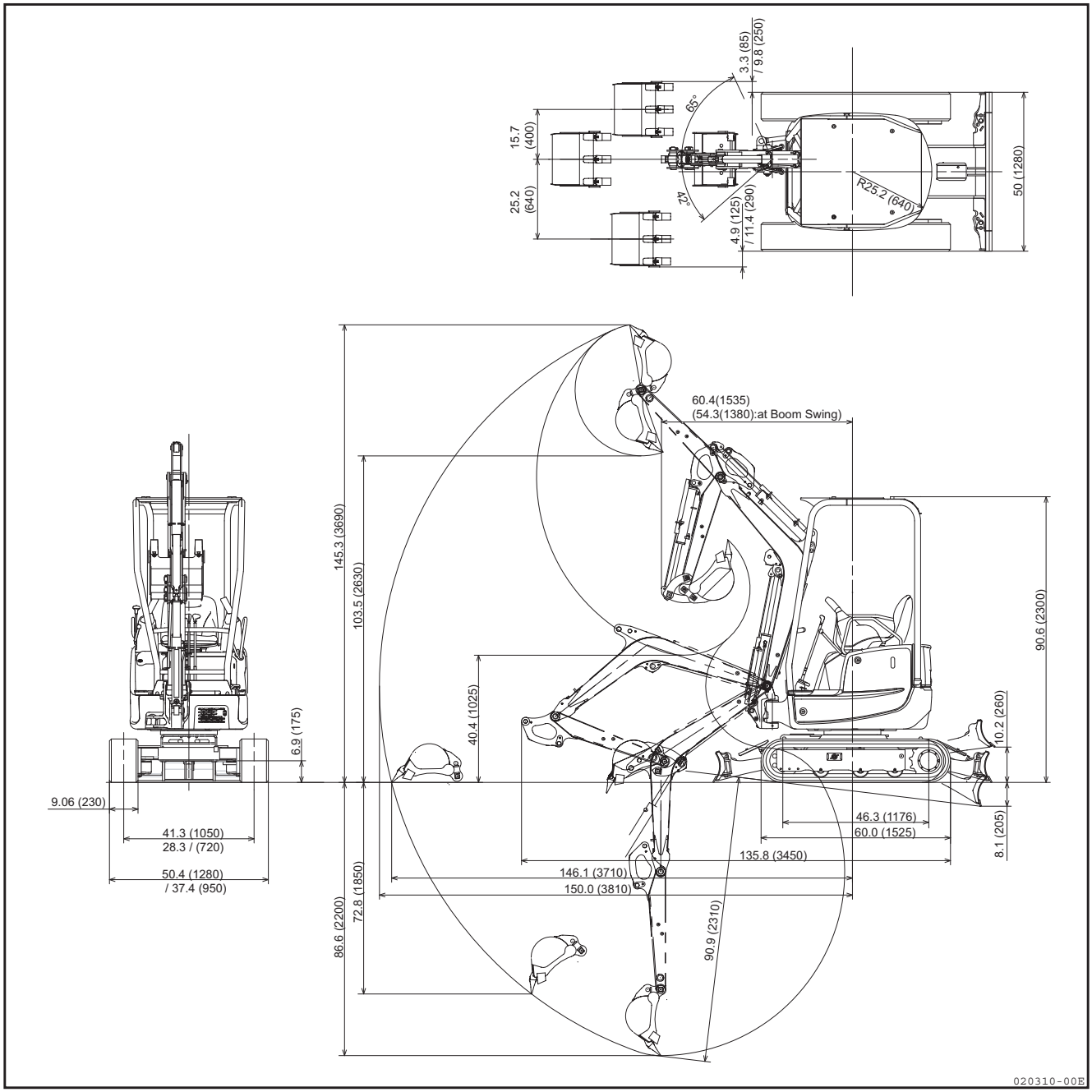

Courtesy of Machine.Market

https://truckmanualshub.com/

Courtesy of Machine.Market

https://truckmanualshub.com/

OPTIONAL PARTS AND ATTACHMENTS

Courtesy of Machine.Market

https://truckmanualshub.com/

27. General Precautions

27-1. Safety precautions

The mounting of attachments and optional parts that are not authorized may cause accidents as well as shorten the machine life.
If you need to mount any attachments other than those described in this manual, contact your dealer. If you fail to do so, the installation and use of unauthorized attachments and parts may void your Warranty.

⚠ WARNING

Precautions for mounting and dismounting an attachment
When mounting or dismounting an attachment, observe the following precautions for safety.

- **When mounting or dismounting a heavy implement or attachment, place the machine on level, solid ground.**
- **To prevent clashing against the canopy, never mount attachment over Max. wrist radius.**
- **When you work together with a partner, define hand signals and communicate in accordance with those signals.**
- **When moving a heavy load [more than 55 lbs. (25 kg)], use a crane.**
- **When removing a heavy part, be sure to support it adequately.**
  When lifting such a part with a crane, take note of its center of gravity.
- **Do not mount or dismount a heavy part while suspending it with a crane. Be sure to support it securely on a stable base.**
- **Securely support any attachment that has been removed or is to be installed, and take adequate precautions not to let it fall down.**
- **Never stand directly under a load suspended by a crane.**
  Stand far enough away to be safe if the load should fall.

IMPORTANT
Comply with all licensing requirements before operating a crane.
Do not permit an unauthorized person to operate a crane.
For more information about the procedures for mounting and dismounting attachments, ask your dealer.

Courtesy of Machine.Market

https://truckmanualshub.com/

27-2. Precautions for mounting an attachment (implement)

⚠ WARNING

A long implement may throw a machine off balance, and may cause the machine to roll over when the machine descends or swings on a slope.
The following operations are especially dangerous, and must never be done.

- **Descending a slope with the implement raised**
- **Traversing across a slope**
- **Swinging on a slope**

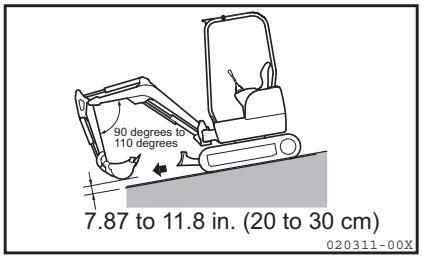

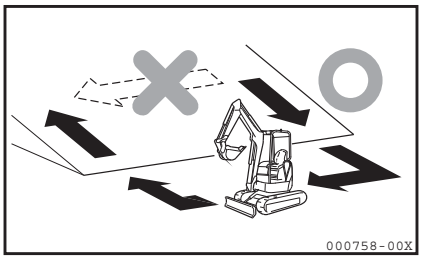

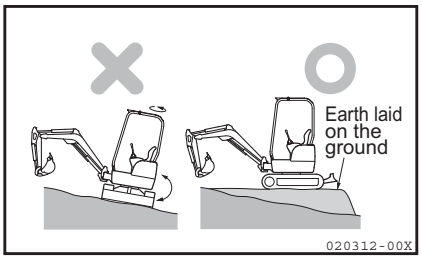

- **If you mount an unusually heavy implement (attachment) on the machine, the inertia of the upper structure will increase so that the upper structure will continue to turn over a longer distance after it has been deactivated. This can mislead the operator about the safe distance between the swinging implement and an object nearby and could cause the implement to bump against the object. To avoid this type of accident, deactivate the upper structure a little earlier than usual. Because of increased inertia, the implement will also drop a greater distance after it has been stopped in mid-air. (The unintentional drifting of the implement will be greater.)**
- **Be sure that the boom and the arm have been mounted correctly. Otherwise, serious accidents or damage may occur. If you do not know how to mount the boom or the arm correctly, ask your dealer.**
- **If you mount a long implement, you may misjudge the distance between the implement and a nearby object, and cause the implement to bump against the object.**
  Be sure to provide adequate clearance between long implements and nearby objects.

Courtesy of Machine.Market

https://truckmanualshub.com/

Courtesy of Machine.Market

https://truckmanualshub.com/

NOTES

Courtesy of Machine.Market

https://truckmanualshub.com/

28. Maintenance Log

Maintenance log

Date	Machine hours	Service performed

Courtesy of Machine.Market

https://truckmanualshub.com/

Date	Machine hours	Service performed

Courtesy of Machine.Market

https://truckmanualshub.com/

Date	Machine hours	Service performed

Courtesy of Machine.Market

https://truckmanualshub.com/

Date	Machine hours	Service performed

Courtesy of Machine.Market

https://truckmanualshub.com/

29. Notes

Notes

Courtesy of Machine.Market

https://truckmanualshub.com/

Courtesy of Machine.Market

https://truckmanualshub.com/

Courtesy of Machine.Market

https://truckmanualshub.com/

Courtesy of Machine.Market

https://truckmanualshub.com/

Courtesy of Machine.Market

https://truckmanualshub.com/

Courtesy of Machine.Market

https://truckmanualshub.com/

WARNING

THIS OPERATOR'S MANUAL IS PROVIDED FOR OPERATOR USE

DO NOT REMOVE FROM THIS MACHINE

Do not start, operate or work on the machine until you carefully read and thoroughly understand the contents of this Operator's Manual.

Failure to follow safety, operating and maintenance instructions can result in serious injury to the operator or bystanders, poor operation, and costly breakdowns.

If you have any questions on proper operation, adjustment or maintenance of the machine, contact your dealer or the Manitou Americas, Inc. Service Department before starting or continuing operation.

California Proposition 65 Warnings:

Diesel engine exhaust and some of its constituents are known to the State of California to cause cancer and birth defects and other reproductive harm. Battery post, terminals and related accessories contain lead and lead compounds, chemicals known to the State of California to cause cancer and birth defects and other reproductive harm. **Wash hands after handling battery.**

GEHL®

Manitou Americas, Inc.
P.O. Box 179
West Bend, WI 53095-0179 U.S.A
www.gehl.com

50940306/AP0215

© 2015 All rights reserved.

Printed in U.S.A

Courtesy of Machine.Market