https://truckmanualshub.com/

HT220

Operator’s Manual

CMW®

Issue 1.0

053-1292

https://truckmanualshub.com/

Overview

Chapter Contents

Serial Number Location 2

Intended Use 3

Equipment Modification 3

Unit Components 4

Operator Orientation. 5

About This Manual 5

- Bulleted Lists. 5
- Numbered Lists 5
- "Continued" Indicators. 5

https://truckmanualshub.com/

Serial Number Location

Record serial numbers and date of purchase in spaces provided. HT220 serial number is located as shown.

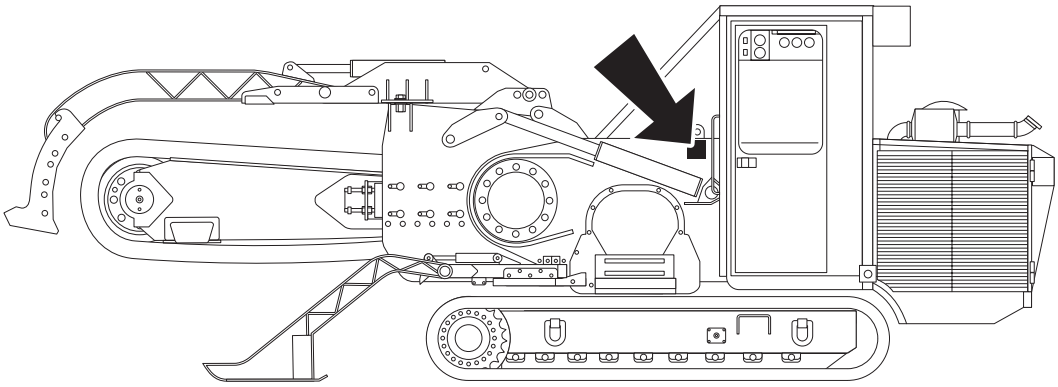

t21om001h.eps

Date of manufacture	
Date of purchase	
HT220 serial number	
Engine serial number	

https://truckmanualshub.com/

Intended Use

The HT220 is a large track trencher designed dig trenches up to 24" (609 mm) wide and 96" (2.44 m) deep. The trencher's hard metal teeth remove very hard, rocky ground and thinly crush it. The result is an even, rectangular-shaped trench ready for laying pipes or cables.

The unit is designed for operation in temperatures typically experienced in earth moving and construction work environments. Provisions may be required to operate in extreme temperatures. Contact your Ditch Witch dealer. Use in any other way is considered contrary to the intended use.

The HT220 should be used with genuine Ditch Witch chain, teeth, and sprockets. It should be operated, serviced, and repaired only by persons familiar with its particular characteristics and acquainted with the relevant safety procedures.

Equipment Modification

This equipment was designed and built in accordance with applicable standards and regulations. Modification of equipment could mean that it will no longer meet regulations and may not function properly or in accordance with the operating instructions. Modification of equipment should only be made by competent personnel possessing knowledge of applicable standards, regulations, equipment design functionality/requirements and any required specialized testing.

https://truckmanualshub.com/

Unit Components

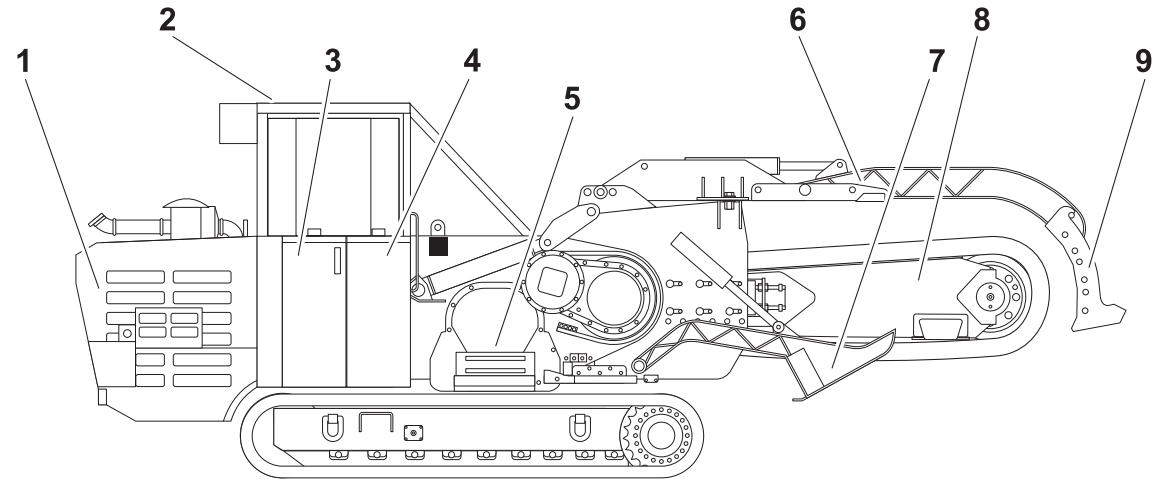

t21om002h.eps

1. engine compartment
2. operator's station
3. hydraulic reservoir
4. fuel tank
5. conveyor
6. trench cleaner
7. stabilizer
8. digging boom
9. trench cleaner shoe

https://truckmanualshub.com/

Operator Orientation

1. Front of unit
2. Right of unit
3. Rear of unit
4. Left of unit

Operator faces the left side of the unit while operating the controls.

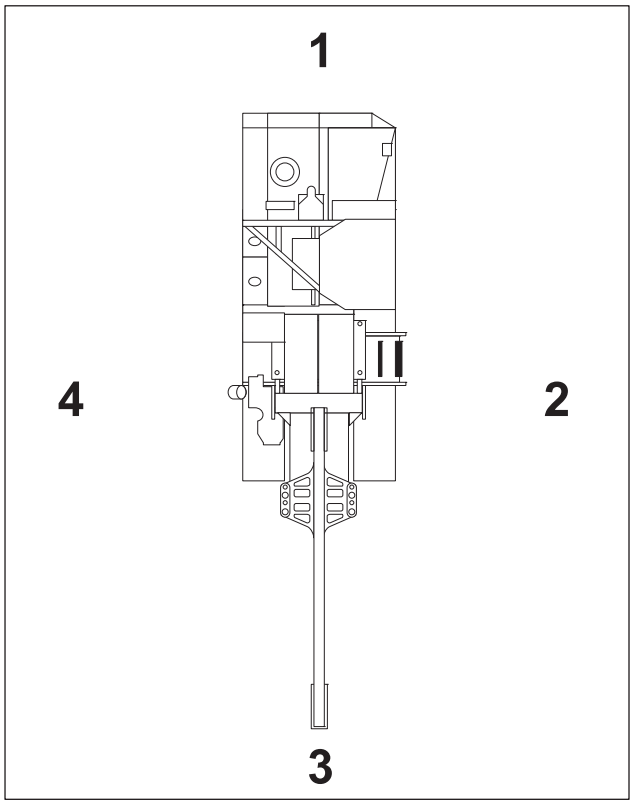

t21om003h.eps

About This Manual

This manual contains information for the proper use of this machine. See **Operation Overview** for basic operating procedures. Cross references such as "See page 50" will direct you to detailed procedures.

Bulleted Lists

Bulleted lists provide helpful or important information or contain procedures that do not have to be performed in a specific order.

Numbered Lists

Numbered lists contain illustration callouts or list steps that must be performed in order.

"Continued" Indicators

indicates that a procedure is continued on the next page.

https://truckmanualshub.com/

https://truckmanualshub.com/

Foreword

This manual is an important part of your equipment. It provides safety information and operation instructions to help you use and maintain your Ditch Witch equipment.

Read this manual before using your equipment. Keep it with the equipment at all times for future reference. If you sell your equipment, be sure to give this manual to the new owner.

If you need a replacement copy, contact your Ditch Witch dealer. If you need assistance in locating a dealer, visit our website at **www.ditchwitch.com** or write to the following address:

The Charles Machine Works, Inc.
Attn: Marketing Department
PO Box 66
Perry, OK 73077-0066
USA

The descriptions and specifications in this manual are subject to change without notice. The Charles Machine Works, Inc. reserves the right to improve equipment. Some product improvements may have taken place after this manual was published. For the latest information on Ditch Witch equipment, see your Ditch Witch dealer.

Thank you for buying and using Ditch Witch equipment.

https://truckmanualshub.com/

HT220 Tier 3
Operator's Manual

Issue number 1.0/OM-10/08
Part number 053-1292

Copyright 2008
by The Charles Machine Works, Inc.

Ditch Witch®, Ditch Witch, CMW, AutoCrowd, Jet Trac, Roto Witch, Subsite, Fluid Miser, Power Pipe, Super Witch, Pierce Airrow, The Underground, The Underground Authority Worldwide, and Zahn are registered trademarks of The Charles Machine Works, Inc.

https://truckmanualshub.com/

Contents

Overview 1
machine serial number, information about the type of work this machine is designed to perform, basic machine components, and how to use this manual

Foreword 7
part number, revision level, and publication date of this manual, and factory contact information

Safety 11
machine safety alerts and emergency procedures

Controls 23
machine controls, gauges, and indicators and how to use them

Operation Overview 49
an overview for completing a job with this machine: planning, setting up, installing product, and restoring the jobsite; with cross references to detailed procedures

Prepare 51
procedures for inspecting and classifying the jobsite, planning the installation path, and preparing the jobsite for work

Drive 57
procedures for startup, cold start, driving, and shutdown

Transport 63
procedures for lifting, hauling, and towing

Trench 71
procedures for trenching

Systems and Equipment 75
chain, teeth, sprockets, and optional equipment

Complete the Job 79
procedures for backfilling and restoring the jobsite and rinsing and storing equipment

Service 81
service intervals and instructions for this machine including lubrication, replacement of wear items, and basic maintenance

https://truckmanualshub.com/

Specifications 121
machine specifications including weights, measurements, power ratings, and fluid capacities

Support 201
the warranty policy for this machine, and procedures for obtaining warranty consideration and training

Service Record 205
a record of major service performed on the machine

https://truckmanualshub.com/

Safety

Chapter Contents

Guidelines 12

Safety Alert Classifications 13

Safety Alerts 14

Emergency Procedures 17

- Electric Strike Description 17
- If an Electric Line is Damaged 18
- If a Gas Line is Damaged 19
- If a Fiber Optic Cable is Damaged 20
- If Machine Catches on Fire 20

https://truckmanualshub.com/

Guidelines

Follow these guidelines before operating any jobsite equipment:

- Complete proper training and read operator's manual before using equipment.
- Contact your local One-Call (811 in USA) or the One-Call referral number (888-258-0808 in USA and Canada) to have underground utilities located before digging. Also contact any utilities that do not participate in the One-Call service.
- Classify jobsite based on its hazards and use correct tools and machinery, safety equipment, and work methods for jobsite.
- Mark jobsite clearly and keep spectators away.
- Wear personal protective equipment.
- Review jobsite hazards, safety and emergency procedures, and individual responsibilities with all personnel before work begins. Safety videos are available from your Ditch Witch dealer.
- Replace missing or damaged safety shields and safety signs.
- Use equipment carefully. Stop operation and investigate anything that does not look or feel right.
- Do not operate unit where flammable gas may be present.
- Contact your Ditch Witch dealer if you have any question about operation, maintenance, or equipment use.

https://truckmanualshub.com/

Safety Alert Classifications

These classifications and the icons defined on the following pages work together to alert you to situations which could be harmful to you, jobsite bystanders or your equipment. When you see these words and icons in the book or on the machine, carefully read and follow all instructions. YOUR SAFETY IS AT STAKE.

Watch for the three safety alert levels: **DANGER**, **WARNING** and **CAUTION**. Learn what each level means.

DANGER indicates an imminently hazardous situation which, if not avoided, will result in death or serious injury.

WARNING indicates a potentially hazardous situation which, if not avoided, could result in death or serious injury.

CAUTION indicates a potentially hazardous situation which, if not avoided, may result in minor or moderate injury.

Watch for two other words: **NOTICE** and **IMPORTANT**.

NOTICE can keep you from doing something that might damage the machine or someone's property. It can also alert you against unsafe practices.

IMPORTANT can help you do a better job or make your job easier in some way.

https://truckmanualshub.com/

Safety Alerts

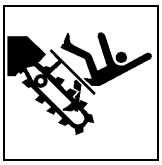

DANGER Moving digging teeth will kill you or cut off arm or leg. Stay away.

DANGER Turning shaft will kill you or crush arm or leg. Stay away.

DANGER Electric shock. Contacting electric lines will cause death or serious injury. Know location of lines and stay away.

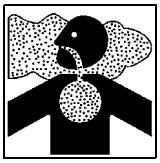

DANGER Deadly gases. Lack of oxygen or presence of gas will cause sickness or death. Provide ventilation.

WARNING Jobsite hazards could cause death or serious injury. Use correct equipment and work methods. Use and maintain proper safety equipment.

WARNING Crushing weight could cause death or serious injury. Use proper procedures and equipment or stay away.

WARNING Moving parts could cut off hand or foot. Stay away.

https://truckmanualshub.com/

WARNING Explosion possible. Serious injury or equipment damage could occur. Follow directions carefully.

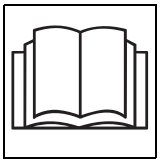

WARNING Incorrect procedures could result in death, injury, or property damage. Learn to use equipment correctly.

WARNING Fall possible. Riders can fall from machine and be injured or killed. Only operator is allowed on machine.

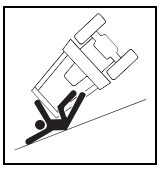

WARNING Rollover possible. If machine rolls over, you could be thrown from seat and killed or crushed. Wear seat belt.

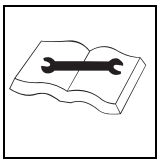

WARNING Improper control function could cause death or serious injury. If control does not work as described in instructions, stop machine and have it serviced.

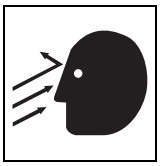

WARNING Looking into fiber optic cable could result in permanent vision damage. Do not look into ends of fiber optic or unidentified cable.

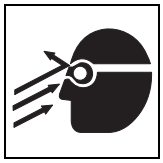

WARNING Pressurized fluid or air could pierce skin and cause injury or death. Stay away.

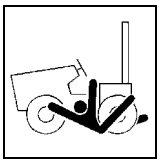

WARNING Runaway possible. Machine could run over you or others. Learn how to use all controls. Start and operate only from operator's position.

WARNING Fire or explosion possible. Fumes could ignite and cause burns. No smoking, no flame, no spark.

https://truckmanualshub.com/

WARNING Moving traffic - hazardous situation. Death or serious injury could result. Avoid moving vehicles, wear high visibility clothing, post appropriate warning signs.

WARNING Hot pressurized cooling system fluid could cause serious burns. Allow to cool before servicing.

CAUTION Flying objects may cause injury. Wear hard hat and safety glasses.

CAUTION Hot parts may cause burns. Do not touch until cool.

CAUTION Exposure to high noise levels may cause hearing loss. Wear hearing protection.

CAUTION Fall possible. Slips or trips may result in injury. Keep area clean.

CAUTION Battery acid may cause burns. Avoid contact.

CAUTION Improper handling or use of chemicals may result in illness, injury, or equipment damage. Follow instructions on labels and in material safety data sheets (MSDS).

https://truckmanualshub.com/

Emergency Procedures

WARNING Jobsite hazards could cause death or serious injury. Use correct equipment and work methods. Use and maintain proper safety equipment.

Before operating any equipment, review emergency procedures and check that all safety precautions have been taken.

EMERGENCY SHUTDOWN - Turn ignition switch to stop position or push remote engine stop button (if equipped).

Electric Strike Description

DANGER Electric shock. Contacting electric lines will cause death or serious injury. Know location of lines and stay away.

When working near electric cables, remember the following:

- Electricity follows all paths to ground, not just path of least resistance.
- Pipes, hoses, and cables will conduct electricity back to all equipment.
- Low voltage current can injure or kill. Many work-related electrocutions result from contact with less than 440 volts.

Most electric strikes are not noticeable, but indications of a strike include:

- power outage
- smoke
- explosion
- popping noises
- arcing electricity

If any of these occur, assume an electric strike has occurred.

https://truckmanualshub.com/

If an Electric Line is Damaged

If you suspect an electric line has been damaged and you are **on tractor**, DO NOT MOVE. Remain on tractor and take the following actions. The order and degree of action will depend upon the situation.

- Warn people nearby that an electric strike has occurred. Instruct them to leave the area and contact utility.
- Raise attachments and drive from immediate area.
- Contact utility company to shut off power.
- Do not return to jobsite or allow anyone into area until given permission by utility company.

If you suspect an electric line has been damaged and you are **off tractor**, DO NOT TOUCH TRACTOR. Take the following actions. The order and degree of action will depend upon the situation.

- LEAVE AREA. The ground surface may be electrified, so take small steps with feet close together to reduce the hazard of being shocked from one foot to the other. For more information, contact your Ditch Witch dealer.
- Contact utility company to shut off power.
- Do not return to jobsite or allow anyone into area until given permission by utility company.

https://truckmanualshub.com/

If a Gas Line is Damaged

WARNING Fire or explosion possible. Fumes could ignite and cause burns. No smoking, no flame, no spark.

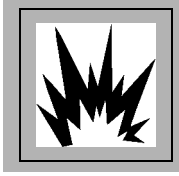

WARNING Explosion possible. Serious injury or equipment damage could occur. Follow directions carefully.

If you suspect a gas line has been damaged, take the following actions. The order and degree of action will depend on the situation.

- Immediately shut off engine(s), if this can be done safely and quickly.
- Remove any ignition source(s), if this can be done safely and quickly.
- Warn others that a gas line has been cut and that they should leave the area.
- Leave jobsite as quickly as possible.
- Immediately call your local emergency phone number and utility company.
- If jobsite is along street, stop traffic from driving near jobsite.
- Do not return to jobsite until given permission by emergency personnel and utility company.

https://truckmanualshub.com/

If a Fiber Optic Cable is Damaged

Do not look into cut ends of fiber optic or unidentified cable. Vision damage can occur.

If Machine Catches on Fire

Perform emergency shutdown procedure and then take the following actions. The order and degree of action will depend on the situation.

- Immediately move battery disconnect switch (if equipped) to disconnect position.
- If fire is small and fire extinguisher is available, attempt to extinguish fire.
- If fire cannot be extinguished, leave area as quickly as possible and contact emergency personnel.

https://truckmanualshub.com/

Controls

Chapter Contents

Center Console 24

- Switches 24
- Indicators 26
- Trenching Controls 29
- Gauges 33
- Drive Controls 36

Diagnostic Display 39

Seat 41

Top Console 42

Engine Compartment 44

Emergency Stop 46

https://truckmanualshub.com/

Center Console

Switches

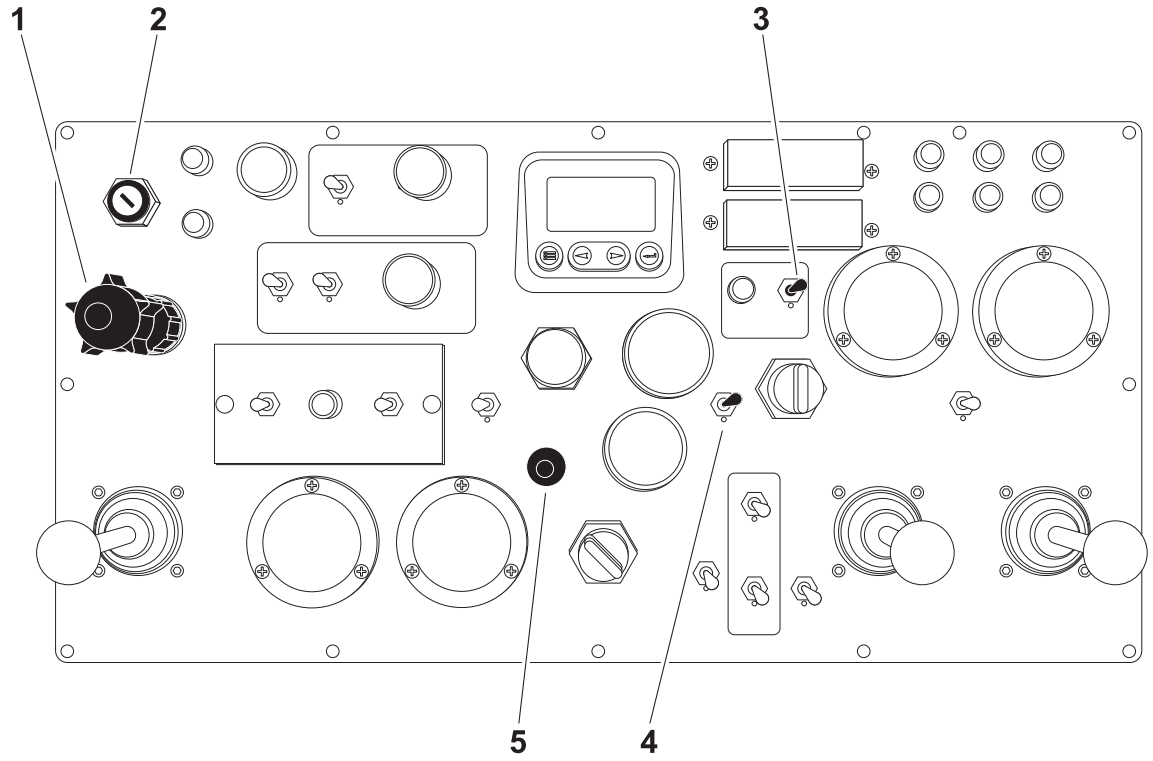

t21om088h.eps

1. Throttle
2. Engine Ignition Switch
3. Low Hydraulic Fluid Test Switch
4. Light Switch
5. Horn

Item	Description	Notes
1. Throttle 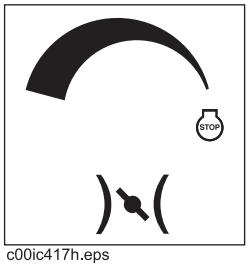 c00ic417h.eps	To increase throttle, turn knob counterclockwise. To idle, push knob in.	

https://truckmanualshub.com/

Item	Description	Notes
2. Engine ignition switch 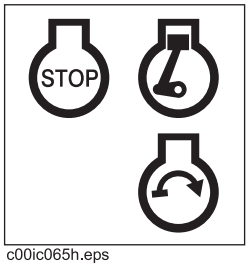 c00ic065h.eps	To start engine, insert key and turn clockwise. To stop engine, turn counterclockwise.	
3. Low hydraulic fluid test switch 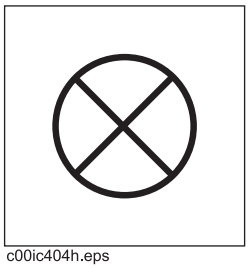 c00ic404h.eps	To check for low hydraulic fluid, move to down position.	Switch is normally centered.
4. Light switch 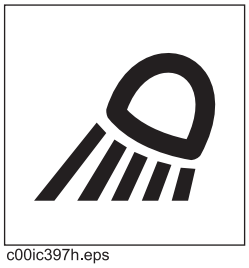 c00ic397h.eps	To turn on lights, move to up position. To turn off lights, move to down position.	
5. Horn 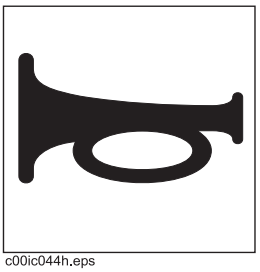 c00ic044h.eps	To sound horn, press.	

https://truckmanualshub.com/

Indicators

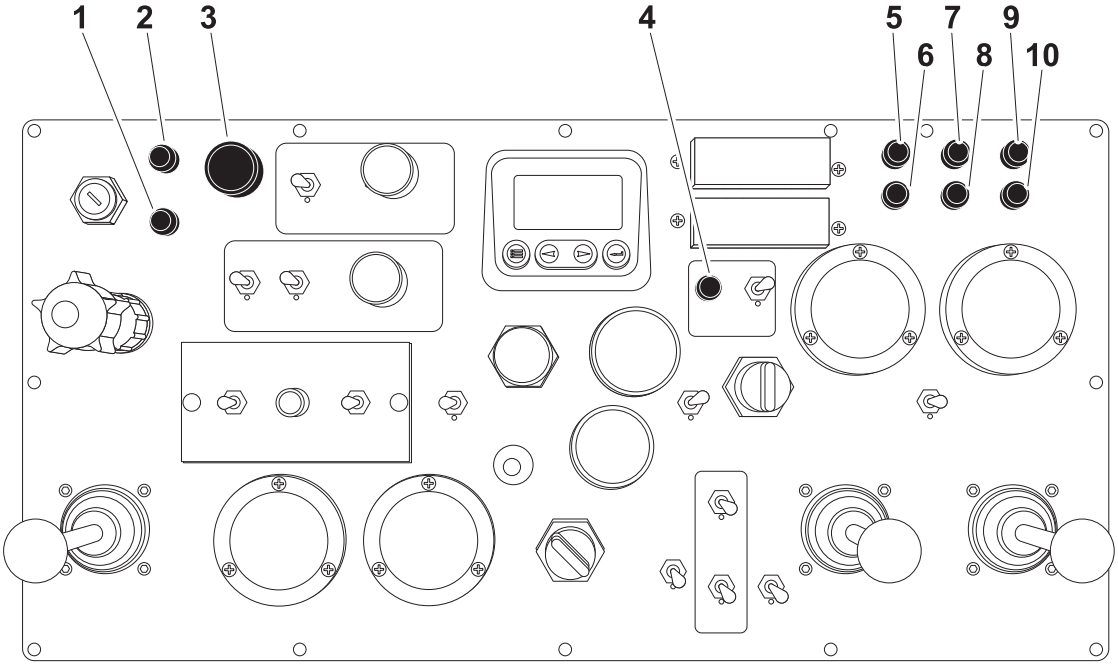

t21om089h.eps

1. Maintenance indicator
2. Wait to start indicator
3. Warning ignition "ON" indicator
4. Low hydraulic fluid indicator
5. Air filter indicator
6. Left track filter indicator
7. Double filter indicator
8. Right track filter indicator
9. Single filter indicator
10. Digging filter indicator

Item	Description	Notes
1. Maintenance indicator 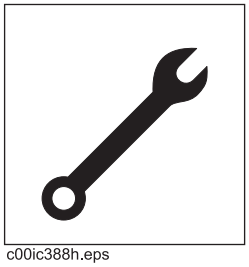 c00ic388h.eps	Light comes on when the engine needs maintenance.	

https://truckmanualshub.com/

Item	Description	Notes
2. Wait to start indicator 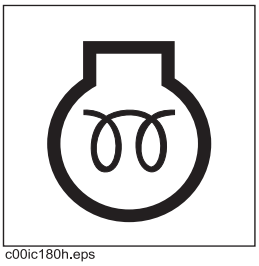 c00ic180h.eps	Light goes out when engine is ready to start.	
3. Warning ignition "On" indicator c00ic395h.eps	Buzzer sounds when engine is not running and the ignition switch is on.	
4. Low hydraulic fluid indicator 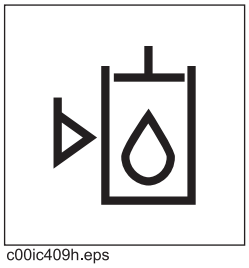 c00ic409h.eps	Light comes on when low fluid switch is pressed and fluid is low.	
5. Air filter indicator 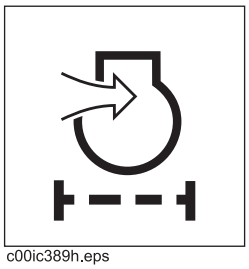 c00ic389h.eps	Light comes on when the air filter is dirty.	

https://truckmanualshub.com/

Item	Description	Notes
6. Left track filter indicator 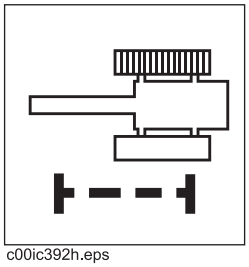 c00ic392h.eps	Light comes on when the left track filter needs replacing.	
7. Double filter indicator 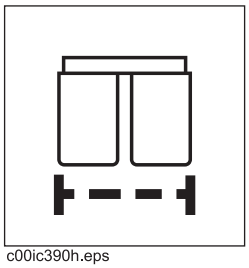 c00ic390h.eps	Light comes on when the double filter needs replacing.	
8. Right track filter indicator 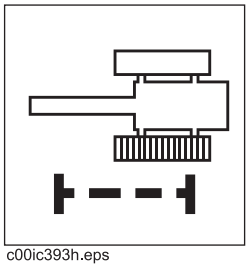 c00ic393h.eps	Light comes on when the right track filter needs replacing.	
9. Single filter indicator 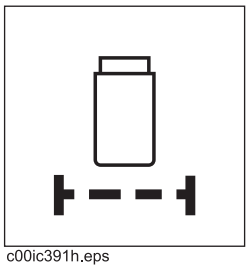 c00ic391h.eps	Light comes on when the single filter needs replacing.	
10. Digging filter indicator 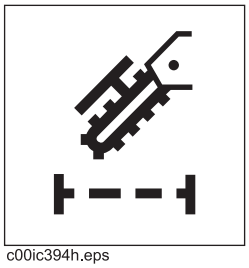 c00ic394h.eps	Light comes on when the digging filter needs replacing.	

https://truckmanualshub.com/

Trenching Controls

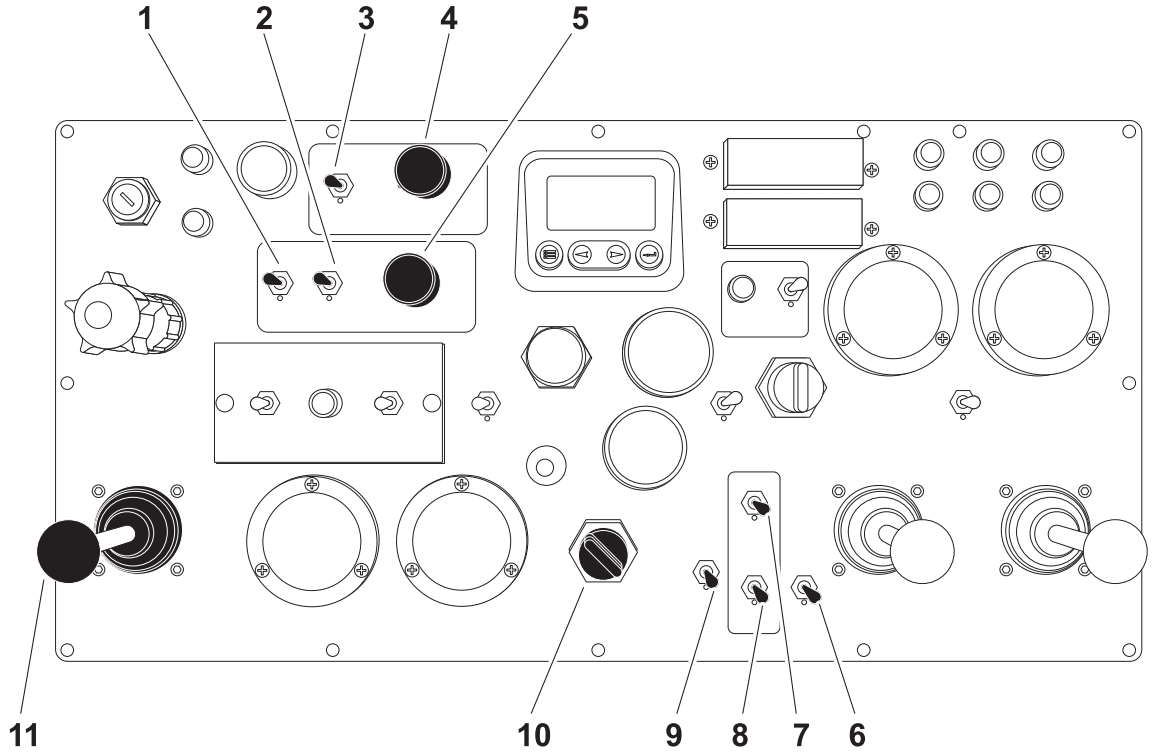

t21om090h.eps

1. Conveyor shift control
2. Conveyor direction control
3. Conveyor control (truck option)
4. Conveyor speed control (truck option)
5. Conveyor speed control
6. Trench cleaner control
7. Stabilizer control
8. Auto stabilizer control
9. Boom lift control
10. Cruise control set control
11. Trencher drive control

Item	Description	Notes
1. Conveyor shift control 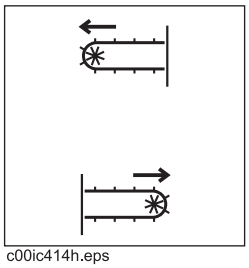 c00ic414h.eps	To shift left, move to up position. To shift right, move to down position.	

https://truckmanualshub.com/

Item	Description	Notes
2. Conveyor direction control 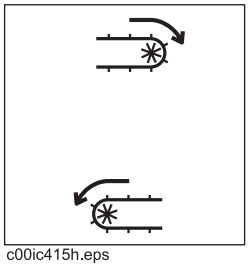 c00ic415h.eps	To dump spoil to the right, move to up position. To dump spoil to the left, move to down position.	
3. Conveyor direction control (truck option) 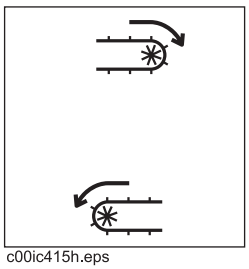 c00ic415h.eps	To dump spoil to the right, move to up position. To dump spoil to the left, move to down position.	Optional
4. Conveyor speed control (truck option) 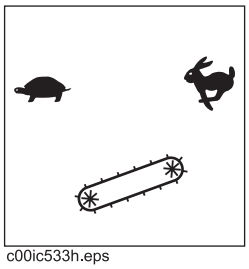 c00ic533h.eps	To increase conveyor belt speed, turn clockwise. To decrease conveyor belt speed, turn counterclockwise.	Optional
5. Conveyor speed control 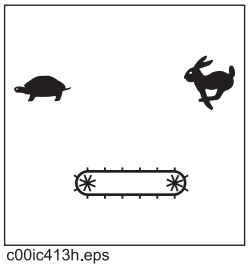 c00ic413h.eps	To increase conveyor belt speed, turn clockwise. To decrease conveyor belt speed, turn counterclockwise.	

https://truckmanualshub.com/

Item	Description	Notes
6. Trench cleaner control 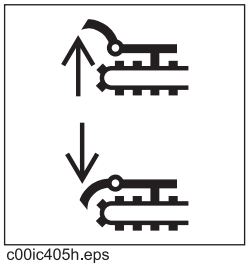 c00ic405h.eps	To raise trench cleaner, move to up position. To lower trench cleaner, move to down position.	
7. Stabilizer control 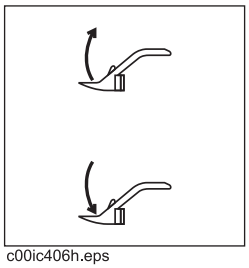 c00ic406h.eps	To raise stabilizers, move to up position. To lower stabilizers, move to down position.	
8. Auto stabilizer control 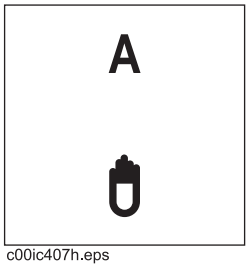 c00ic407h.eps	For automatic stabilizers, move to up position. For manual stabilizers, move to down position.	
9. Boom lift control 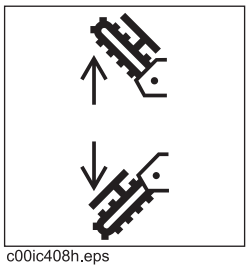 c00ic408h.eps	To raise boom, move to up position. To lower boom, move to down position.	
10. Cruise control set control 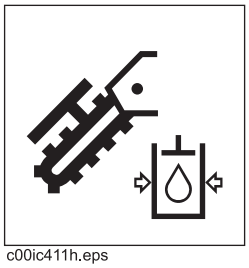 c00ic411h.eps	To set cruise control, turn knob.	

https://truckmanualshub.com/

Item	Description	Notes
11. Trencher drive control 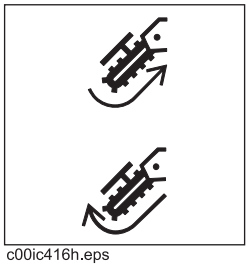 c00ic416h.eps	To rotate trencher forward, move up. To rotate trencher backward, move down.	

https://truckmanualshub.com/

Gauges

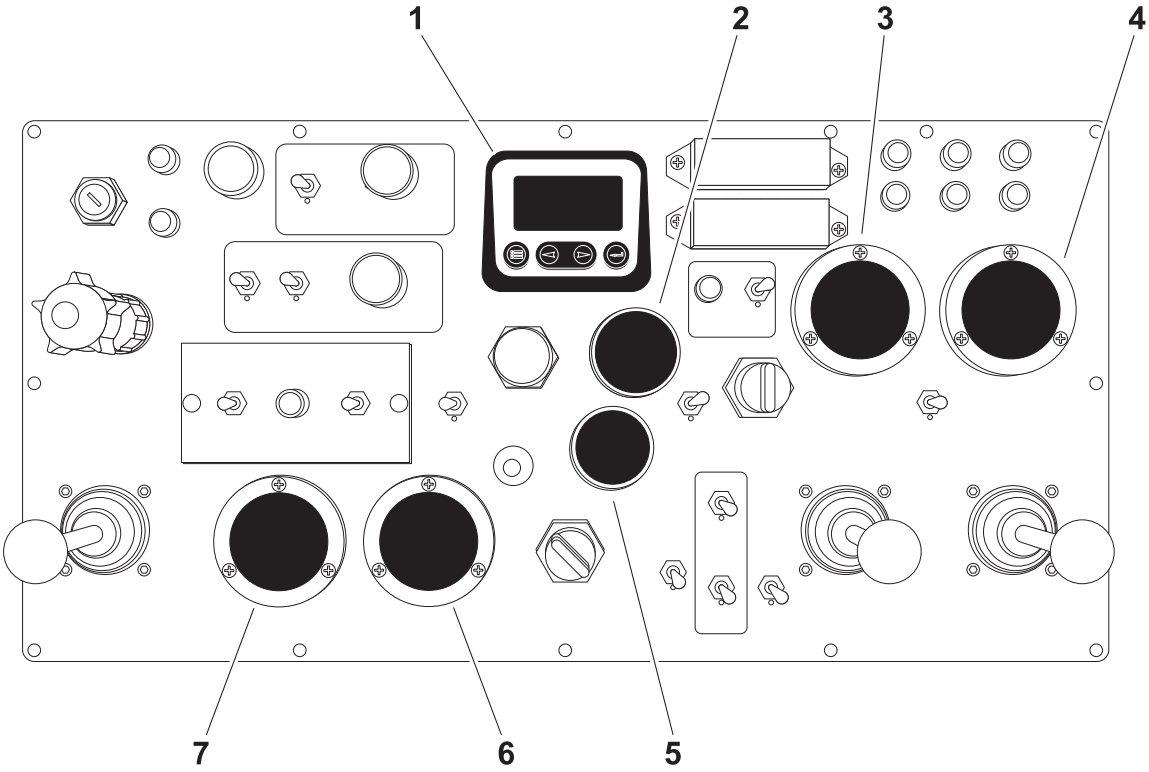

t21om091h.eps

1. Diagnostic display gauge
2. Hydraulic fluid temperature gauge
3. Left track pressure gauge
4. Right track pressure gauge
5. Fuel gauge
6. Trencher pressure gauge
7. Equipment system pressure gauge

Item	Description	Notes
1. Diagnostic Display Gauge 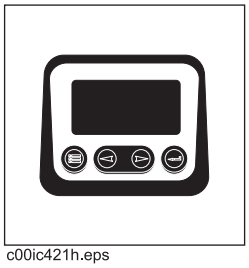 c00ic421h.eps	Digital display monitors engine functions.	See "Top Console" on page 42.

https://truckmanualshub.com/

Item	Description	Notes
2. Hydraulic fluid temperature gauge 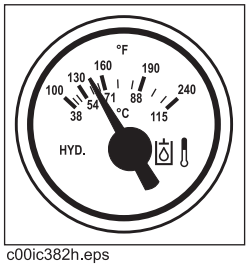 c00ic382h.eps	Displays hydraulic fluid temperature.	Do not exceed 190° F (88° C). Stop engine and wait until cool.
3. Left track pressure gauge 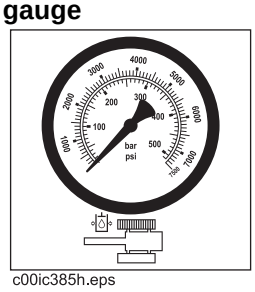 c00ic385h.eps	Displays hydraulic fluid pressure at the left track.	If pressure exceeds 5,000 PSI (344 bar), stop engine and have unit repaired.
4. Right track pressure gauge 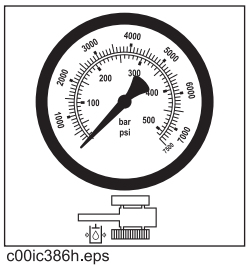 c00ic386h.eps	Displays hydraulic fluid pressure at the right track.	If pressure exceeds 5,000 PSI (344 bar), stop engine and have unit repaired.
5. Fuel gauge 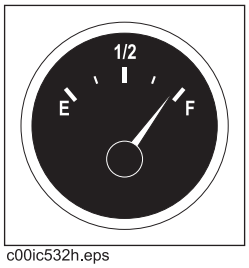 c00ic532h.eps	Displays fuel level in tank.	Use only #2 diesel fuel. Fuel tank holds 114 gal (431 L).

https://truckmanualshub.com/

Item	Description	Notes
6. Trencher pressure gauge 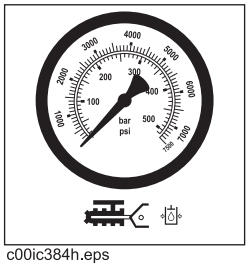 c00ic384h.eps	Displays hydraulic fluid pressure at the trencher.	If pressure exceeds 5,000 PSI (344 bar) stop engine and have unit repaired.
7. Equipment system pressure gauge 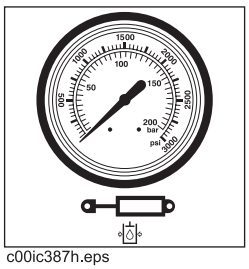 c00ic387h.eps	Displays hydraulic system pressure.	If pressure exceeds 2,500 PSI (172 bar) stop engine and have unit repaired.

https://truckmanualshub.com/

Drive Controls

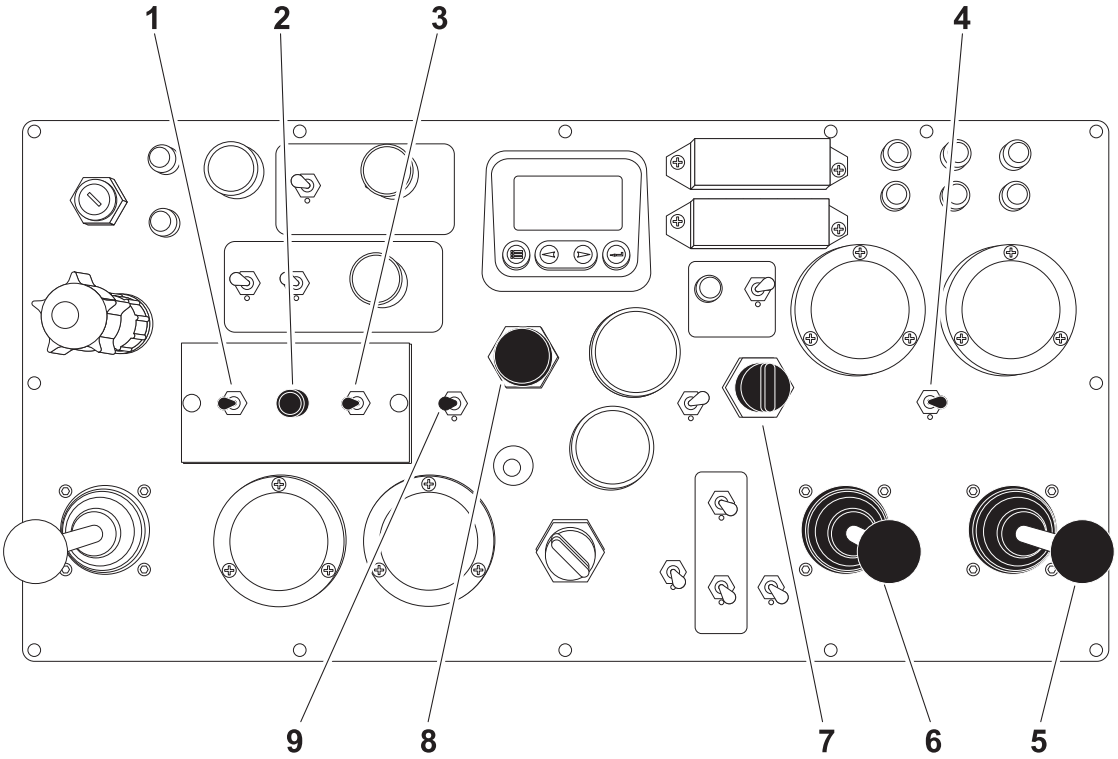

t21om092h.eps

1. Cruise control switch
2. Sensitivity control
3. auto - manual switch
4. Ground drive speed
5. Steering control
6. Direction control
7. Radius control
8. Emergency engine stop
9. Parking brake

Item	Description	Notes
1. Cruise control switch 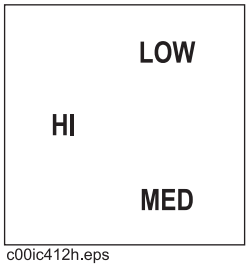 c00ic412h.eps	To position cruise control to low, move to up position. To position cruise control to medium, move to down position. To position cruise control to high, move to center position.	

https://truckmanualshub.com/

Item	Description	Notes
2. Sensitivity control 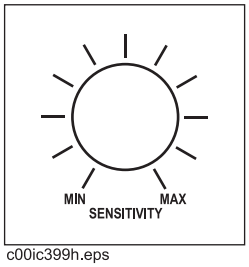 c00ic399h.eps	To decrease sensitivity, turn left. To increase sensitivity, turn right.	
3. Auto - manual switch 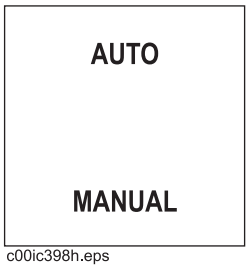 c00ic398h.eps	To engage cruise control, move to up position. To disengage cruise control, move to down position.	
4. Ground drive speed 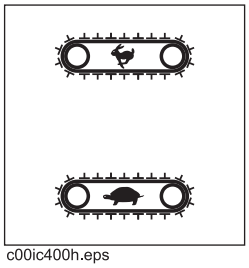 c00ic400h.eps	To drive in high range, move to up position. To drive in low range, move to down position.	
5. Steering control 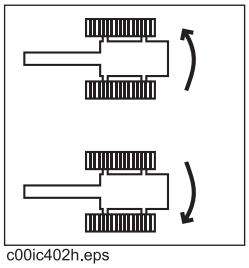 c00ic402h.eps	To steer machine left, move up. To steer machine right, move down.	Detent lever is normally centered.
6. Direction control 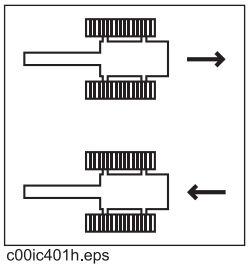 c00ic401h.eps	To move machine forward, move up. To move machine backward, move down.	Detent lever is normally centered.

https://truckmanualshub.com/

Item	Description	Notes
7. Radius control 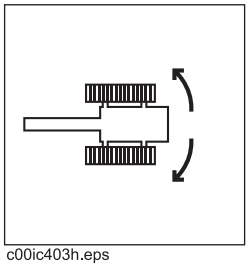 c00ic403h.eps	To increase pressure on the left track, turn knob to left. To increase pressure on the right track, turn knob to the right. To equalize pressure, turn knob to center.	
8. Emergency engine stop 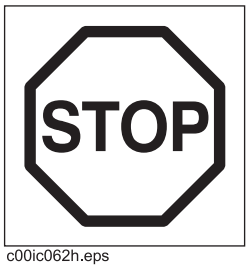 c00ic062h.eps	To stop engine, press button. To reset emergency stop, turn switch to the right.	Do not use emergency engine stop to stop engine on a regular basis.
9. Parking brake 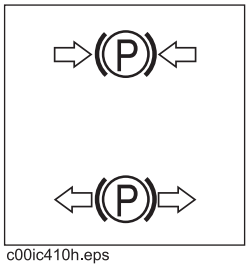 c00ic410h.eps	To engage brake, move to up position. To disengage brake, move to down position.	

https://truckmanualshub.com/

Diagnostic Display

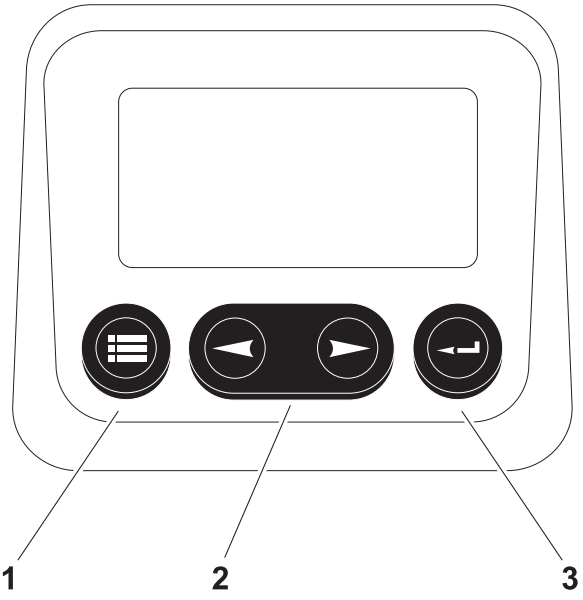

t21om080h.eps

1. Enter key
2. Arrow keys
3. Menu key

Item	Description	Notes
1. Enter key 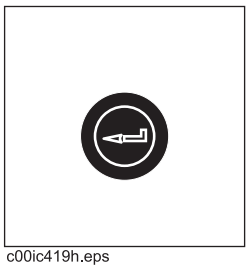 c00ic419h.eps	To select the highlighted parameter on the screen, press the ENTER key.	

https://truckmanualshub.com/

Item	Description	Notes
2. Arrow keys 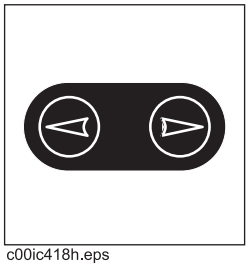 c00ic418h.eps	To scroll through the screen toward the right or downward, press the Right Arrow key. To scroll through the screen toward the left or upward, press the Left Arrow key.	
3. Menu key 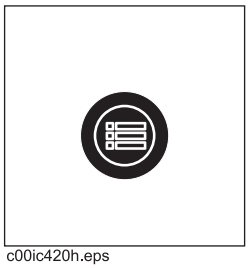 c00ic420h.eps	To enter or exit the menu screens, press the Menu key.	

https://truckmanualshub.com/

Seat

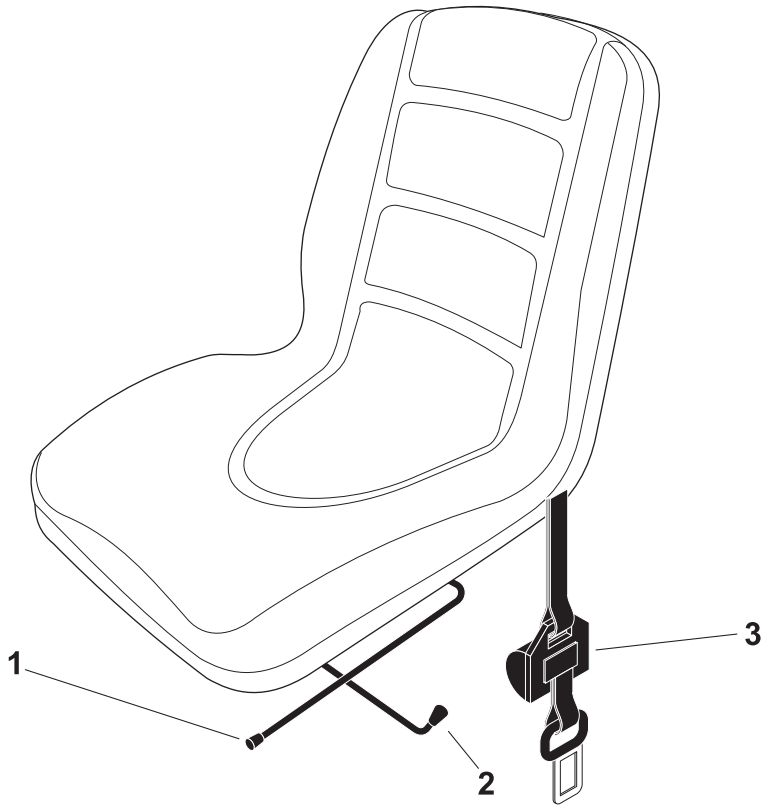

t21om010h.eps

1. Seat slide control
2. Seat swivel control
3. Seat belt

Item	Description	Notes
1. Seat swivel control	To slide seat, move control away from seat.	
2. Seat slide control	To swivel seat, move control toward back of seat.	
3. Seat belt	To fasten, insert latch into buckle. Adjust until seat belt is low and tight. To release, lift top of buckle.	

https://truckmanualshub.com/

Top Console

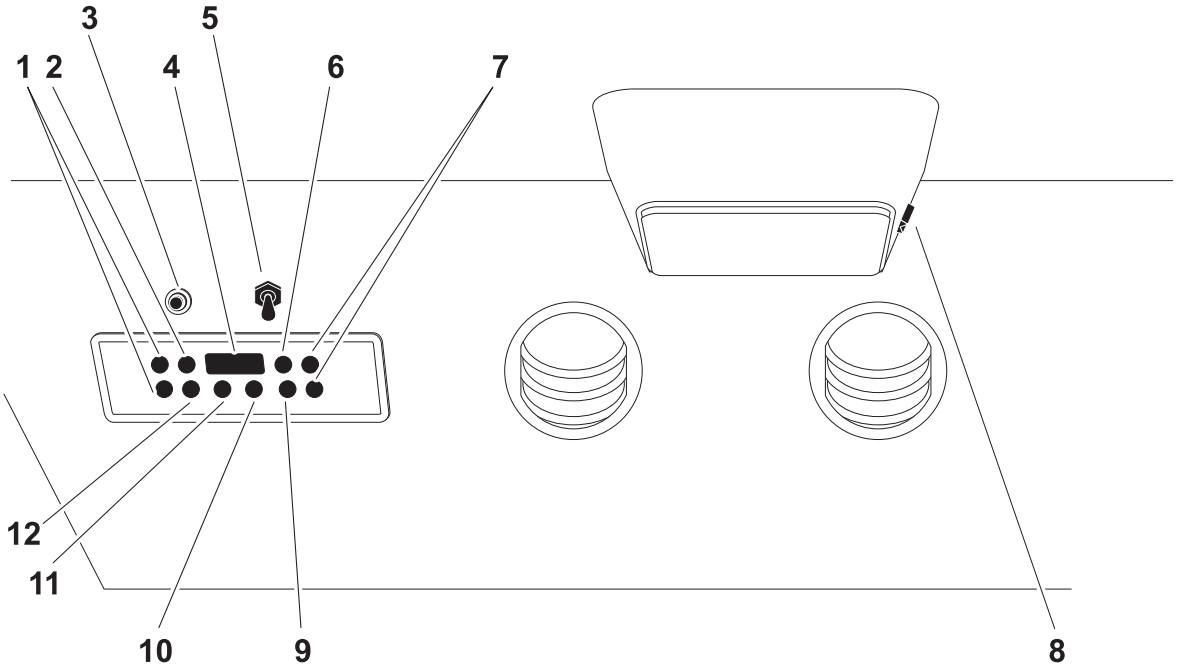

t21om093h.eps

1. Fan power control
2. Ext
3. Climate control circuit breaker
4. Display
5. Cab pressurizer switch
6. Econ
7. Temperature control
8. Cab light switch
9. Defrost
10. Auto
11. On
12. Off

Item	Description	Notes
1. Fan power control	To raise the rate of air flow, press control up. To lower the rate of air flow, press control down.	
2. EXT control	To change temperature display from Fahrenheit to or from Celsius, press.	

https://truckmanualshub.com/

Item	Description	Notes
3. Climate control circuit breaker	Press to reset climate control.	
4. Display	Displays climate control temperature setting.	
5. Cab pressurizer switch	To pressurize cab, move switch up. To depressurize cab, move switch down.	
6. Econ	To conserve energy, press once.	
7. Temperature control	To raise temperature, press up. To lower temperature, press down.	
8. Cab light switch	To turn cab light on, turn switch to the ON position. To turn cab light off, turn switch to the OFF position.	
9. Defrost	To start defrost, press once. To stop defrost, press twice.	
10. Auto	To adjust temperature automatically, press. To adjust temperature manually, press again.	
11. On	To turn climate control on, press.	
12. Off	To turn climate control off, press.	

https://truckmanualshub.com/

Engine Compartment

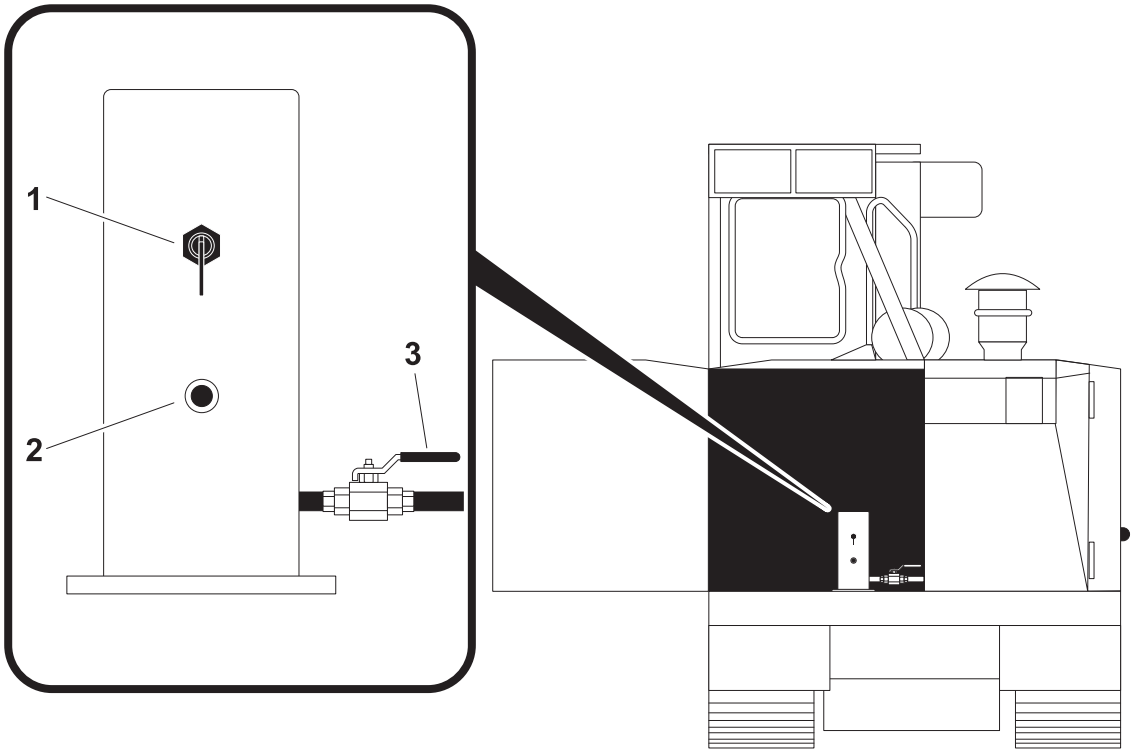

t21om094h.eps

1. Master disconnect (24V)
2. Master disconnect (0V)
3. Coolant Delivery Valve

Item	Description	Notes
1. Circuit breaker lever	To connect the battery to the electrical system, rotate clockwise. To disconnect the battery from the electrical system, rotate counterclockwise.	
2. Master disconnect (0V)	To connect the battery to the electrical system, rotate clockwise. To disconnect the battery from the electrical system, rotate counterclockwise.	

https://truckmanualshub.com/

Item	Description	Notes
3. Coolant delivery valve	To turn heater ON, turn valve inline. To turn heater OFF, turn valve perpendicular.	Ensure that air conditioner switch is in the 'OFF' position before opening the heater valves.

https://truckmanualshub.com/

Emergency Stop

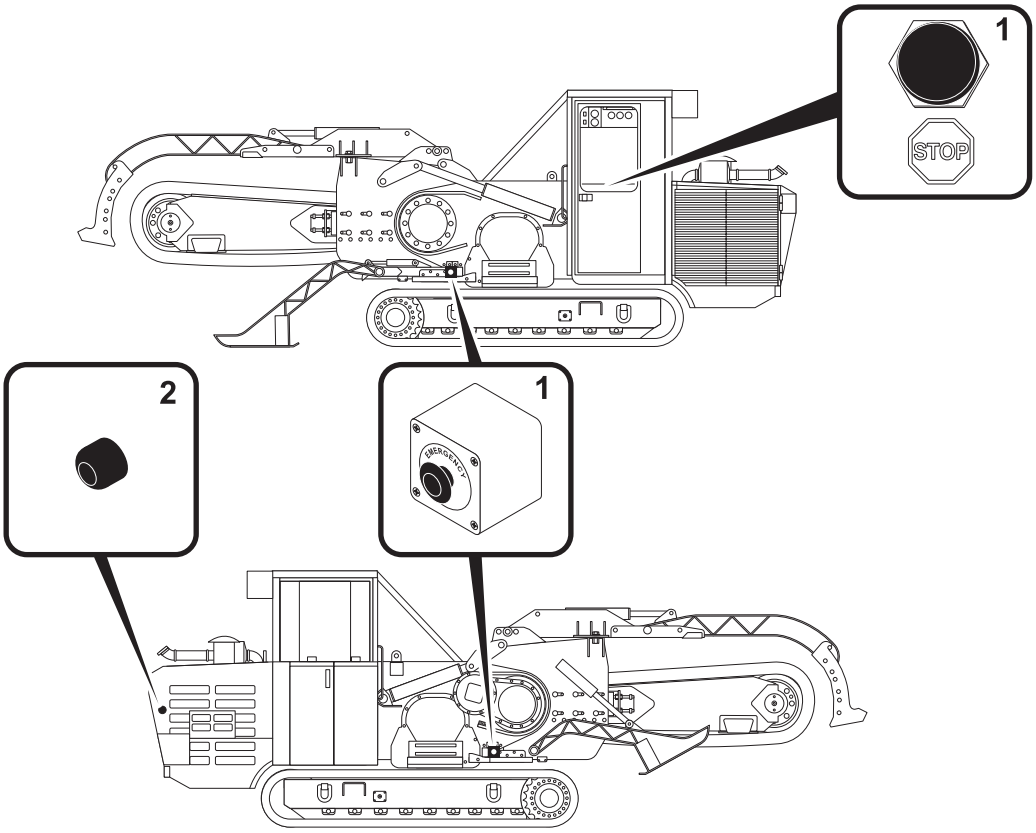

t21om095h.eps

1. Emergency engine stop button
2. Operator alert button

Item	Description	Notes
1. Emergency engine stop button 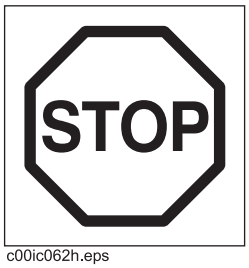 c00ic062h.eps	To stop machine immediately, press button.	To release the stop function, the button must be pulled "out" or twisted clockwise to the "out" position. The switches must be reset in order for the engine to start. Do not use emergency engine stop to stop engine on a regular basis.
2. Operator alert button	To alert operator of one's presence or danger, press button.	

https://truckmanualshub.com/

Operation Overview

Chapter Contents

Planning 50

Trenching 50

Leaving Jobsite 50

https://truckmanualshub.com/

Planning

1. Gather information about jobsite. See page 42.
2. Inspect jobsite. See page 43.
3. Classify jobsite. See page 44.
4. Select chain and teeth to match your soil type, if necessary. See page 78.
5. Check supplies and prepare equipment. See page 46.
6. Haul equipment to jobsite. See page 54.

Trenching

1. Start unit. See page 48.
2. Position tractor and controls. See page 60.
3. Begin trenching. See page 61.
4. Complete the installation. See page 61.
5. Shut down tractor. See page 50.

Leaving Jobsite

1. Rinse equipment. See page 82.
2. Stow tools. See page 82.
3. Haul equipment away from jobsite. See page 54.

https://truckmanualshub.com/

Prepare

Chapter Contents

Gather Information 52

- Review Job Plan 52
- Notify One-Call Services 52
- Arrange for Traffic Control 52
- Plan for Emergency Services 52

Inspect Site 53

- Identify Hazards 53

Classify Jobsite. 54

- Inspect Jobsite 54
- Select a Classification 54
- Apply Precautions 55

Check Supplies and Prepare Equipment 56

- Supplies 56
- Fluid Levels 56
- Condition and Function 56
- Accessories 56

https://truckmanualshub.com/

Gather Information

A successful job begins before you dig. The first step in planning is reviewing information already available about the job and jobsite.

Review Job Plan

Review blueprints or other plans. Check for information about existing or planned structures, elevations, or proposed work that may be taking place at the same time.

Notify One-Call Services

Call area One-Call or similar services and have existing lines located and marked. Call any utilities in your area that do not subscribe to One-Call.

Arrange for Traffic Control

If working near a road or other traffic area, contact local authorities about safety procedures and regulations.

Plan for Emergency Services

Have the telephone numbers for local emergency and medical facilities on hand. Check that you will have access to a telephone.

https://truckmanualshub.com/

Inspect Site

Inspect jobsite before transporting equipment. Check for the following:

- changes in elevation such as hills or other open trenches
- obstacles such as buildings, railroad crossings, or streams
- signs of utilities (See "Inspect Jobsite" on page 54.)
- traffic
- access
- soil type and condition

Identify Hazards

Identify safety hazards and classify jobsite. See "Classify Jobsite" on page 54.

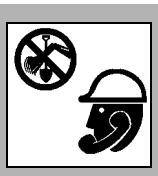

WARNING Jobsite hazards could cause death or serious injury. Use correct equipment and work methods. Use and maintain proper safety equipment.

NOTICE:

- Wear personal protective equipment including hard hat, safety eye wear, and hearing protection.
- Do not wear jewelry or loose clothing.
- Notify One-Call and companies which do not subscribe to One-Call.
- Comply with all utility notification regulations before digging or drilling.
- Verify location of previously marked underground hazards.
- Mark jobsite clearly and keep spectators away.

Remember, jobsite is classified by hazards in place -- not by line being installed.

https://truckmanualshub.com/

Classify Jobsite

Inspect Jobsite

- Follow U.S. Department of Labor regulations on excavating and trenching (Part 1926, Subpart P) and other similar regulations.
- Contact your local One-Call service by dialing 811 (USA only) to have underground utilities located. A One-Call referral number, 888-258-0808, is also available for both the USA and Canada. You should also call any utility companies which do not participate in the One-Call service.
- Inspect jobsite and perimeter for evidence of underground hazards, such as:
  - "buried utility" notices
  - utility facilities without overhead lines
  - gas or water meters
  - junction boxes
  - drop boxes
  - light poles
  - manhole covers
  - sunken ground
- Have an experienced locating equipment operator sweep area within 20' (6 m) to each side of trench path. Verify previously marked line and cable locations.
- Mark location of all buried utilities and obstructions.
- Classify jobsite.

Select a Classification

Jobsites are classified according to underground hazards present.

If working . . .	then classify jobsite as . . .
within 10' (3 m) of a buried electric line	electric
within 10' (3 m) of a natural gas line	natural gas
in sand, granite, or concrete which is capable of producing crystalline silica (quartz) dust	crystalline silica (quartz) dust
within 10' (3 m) of any other hazard	other

NOTICE: If you have any doubt about jobsite classification, or if jobsite might contain unmarked hazards, take steps outlined previously to identify hazards and classify jobsite before working.

https://truckmanualshub.com/

Apply Precautions

Once classified, precautions appropriate for jobsite must be taken.

Electric Jobsite Precautions

Use one or both of these methods.

- Expose line by careful hand digging or soft excavation.
- Have service shut down while work is in progress. Have electric company test lines before returning them to service.

Natural Gas Jobsite Precautions

In addition to positioning equipment upwind from gas lines, use one or both of these methods.

- Expose lines by careful hand digging or soft excavation.
- Have gas shut off while work is in progress. Have gas company test lines before returning them to service.

Crystalline Silica (Quartz) Dust Precautions

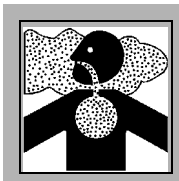

WARNING Jobsite hazards could cause death or serious injury. Use correct equipment and work methods. Use and maintain proper safety equipment.

NOTICE: Cutting, drilling or working materials such as, concrete, sand or rock containing quartz may result in exposure to silica dust. Use water spray or other means to control dust. If workers are exposed to dust they must wear appropriate breathing protection. Silica dust may cause lung disease and is known to the State of California to cause cancer.

https://truckmanualshub.com/

Check Supplies and Prepare Equipment

Supplies

- fuel
- keys
- personal protective equipment, such as hard hat and safety glasses
- digging teeth

Fluid Levels

- fuel
- hydraulic fluid
- battery
- engine oil
- transmission fluid

Condition and Function

- digging chain and teeth
- fan belts
- light bulbs
- filters (air, oil, hydraulic)
- tracks
- pumps and motors
- hoses and valves
- signs, guards, and shields

Accessories

Fire Extinguisher

Check fire extinguisher charge regularly.

https://truckmanualshub.com/

Drive

Chapter Contents

Start Unit 58

Drive 60

Shut Down 60

https://truckmanualshub.com/

Start Unit

Before operating tractor, read engine manufacturer's starting and operating instructions. Follow instructions for new engine break-in.

WARNING Runaway possible. Machine could run over you or others. Learn how to use all controls. Start and operate only from operator's position.

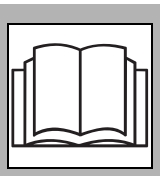

WARNING Incorrect procedures could result in death, injury, or property damage. Learn to use equipment correctly.

NOTICE:

- Read operator's manual before operating equipment. Follow instructions carefully. Contact your Ditch Witch dealership for operation information or demonstration.
- Wear hard hat, safety glasses, and other protective equipment required by job. Do not wear jewelry or loose clothing that can catch on controls.

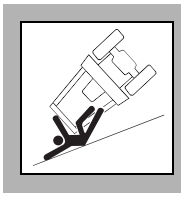

WARNING Rollover possible. If machine rolls over, you could be thrown from seat and killed or crushed. Wear seat belt.

1. Fasten and adjust seat belt.
2. Check that all controls are in neutral before starting.
3. Check that parking brake is engaged.
4. Move throttle to half open.

https://truckmanualshub.com/

5. Turn ignition switch to the run position (key on, engine off). Cold start wait indicator will light.
6. When cold start wait indicator goes off, turn ignition switch all the way clockwise to start tractor. Warning alarm will sound. Indicators will light.
   - If engine does not start within 20 seconds, release the ignition switch. Allow starter to cool before attempting to start the unit again.
   - If engine does not crank, check battery disconnect. See page 44 for battery disconnect information.

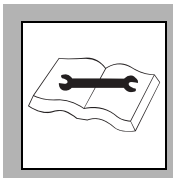

WARNING Improper control function could cause death or serious injury. If control does not work as described in instructions, stop machine and have it serviced.

NOTICE: If warning alarm does not sound, have machine repaired.

7. Run engine at half-throttle or less for five minutes before operating tractor. During warm-up, check that all controls work properly.

IMPORTANT: Some operations will not function if any controls are not in the neutral position upon start up. If some functions do not work, turn ignition key to the off position and ensure that all controls are in the neutral position.

https://truckmanualshub.com/

Drive

EMERGENCY SHUTDOWN: Press the emergency stop button to stop.

1. Verify that parking brake is disengaged.
2. Adjust throttle to about half way.
3. Adjust boom lift switch to raise boom.
4. Adjust the direction control lever to move unit forward or backward.
5. Adjust steering control lever to adjust the direction.
6. Change engine speed with throttle.

WARNING Moving traffic – hazardous situation. Death or serious injury could result. Avoid moving vehicles, wear high visibility clothing, post appropriate warning signs.

NOTICE: Drive carefully in congested areas. Know machine's clearance and turning radius.

WARNING Rollover possible – If machine rolls over, you could be thrown from seat and killed or crushed. Wear seat belt.

NOTICE: Keep attachments low when operating on slope. Drive slowly and cautiously.

Shut Down

1. Move direction control levers to the neutral position.
2. Lower boom to ground.
3. Engage parking brake.
4. Reduce engine speed to a minimum.
5. Wait five minutes for engine to cool down.
6. Turn ignition switch to STOP.
7. Turn off the air conditioner and the lights, if on.
8. If leaving the machine unattended, remove key and lock the following: cab window, door, engine compartment doors, tool compartment door and the tank locking caps.

https://truckmanualshub.com/

Start After Emergency Stop

1. Turn all panel controls in use at the moment of the emergency stop to the neutral position.
2. Turn the emergency stop push-button counterclockwise.
3. Turn the key to the start position.
4. Start the machine by following the standard procedure. See "Start Unit" on page 58.

https://truckmanualshub.com/

https://truckmanualshub.com/

Transport

Chapter Contents

Lift 64

- Points 64
- Procedure 65

Tie Down 66

- Points 66
- Procedure 66

Haul 67

- Procedure 67

Tow 69

- Procedure 69

https://truckmanualshub.com/

Lift

WARNING Crushing weight. If load falls or moves it could kill or crush you. Use proper procedures and equipment or stay away.

WARNING Incorrect procedures could result in death, injury, or property damage. Learn to use equipment correctly.

Points

Lifting points are identified by lifting decals. Lifting at other points is unsafe and can damage machinery.

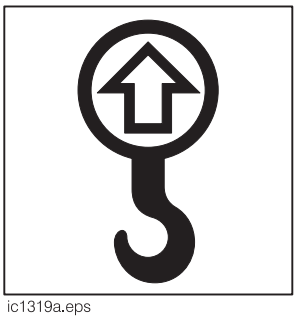

ic1319a.eps

https://truckmanualshub.com/

Procedure

Tractor

Use a crane capable of supporting the equipment's size and weight. See "Specifications" on page 121.
Use indicated lift points (shown).

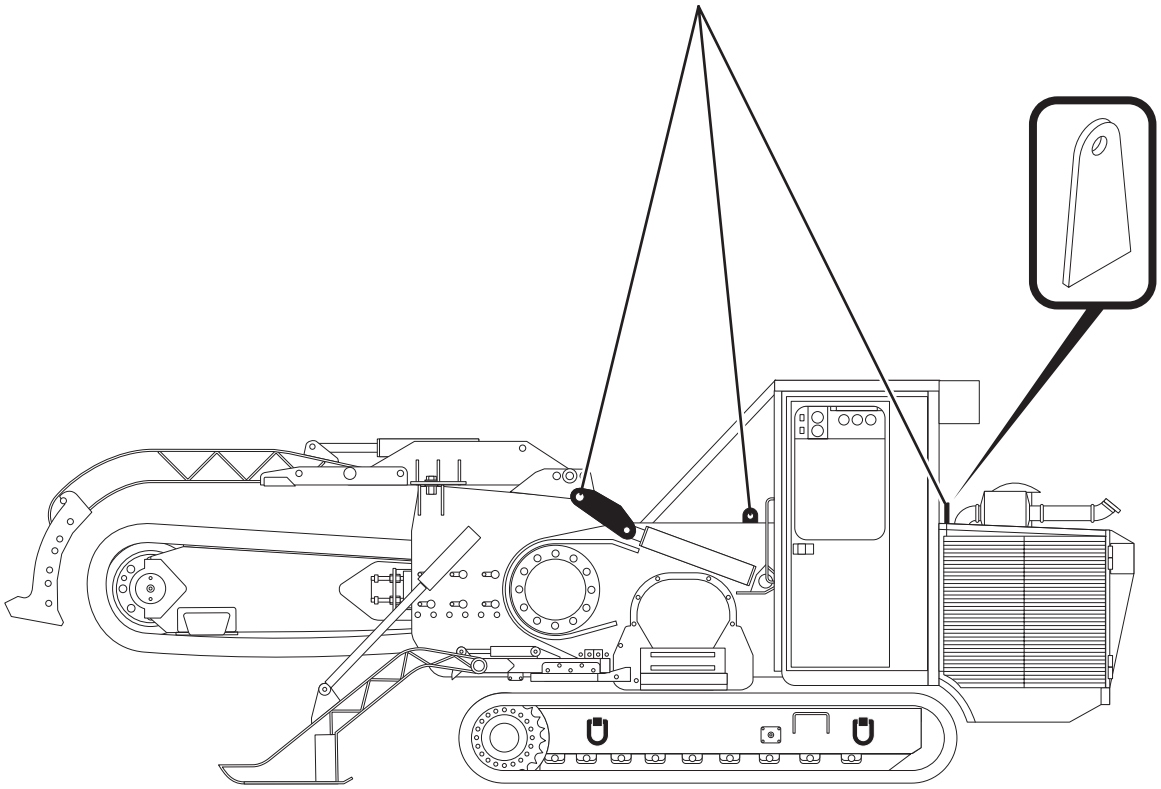

t21om015h.eps

https://truckmanualshub.com/

Tie Down

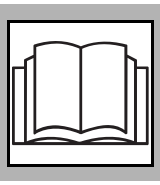

WARNING Incorrect procedures could result in death, injury, or property damage. Learn to use equipment correctly.

Points

Tiedown points are identified by tiedown decals. Securing to trailer at other points is unsafe and can damage machinery.

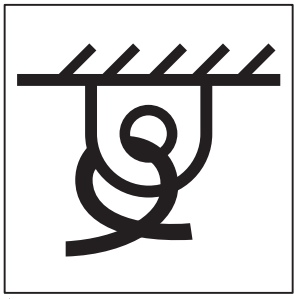

ic1320a.eps

Procedure

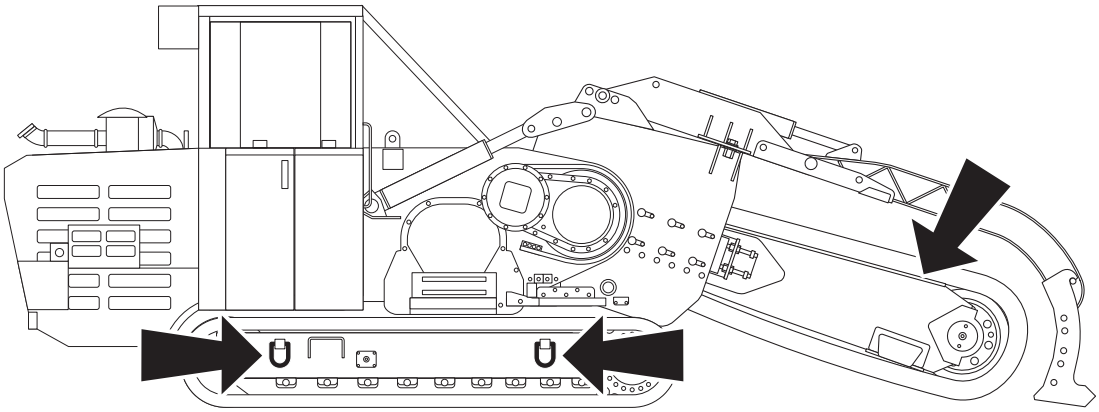

t21om014h.eps

Attach chains at front and rear tiedown points. Make sure chains are tight before transporting unit. Lower boom and secure unit.

https://truckmanualshub.com/

Haul

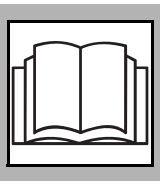

WARNING Incorrect procedures could result in death, injury, or property damage. Learn to use equipment correctly.

NOTICE:

- Read trailer operator's manual before loading or transporting your machine. Incorrectly loaded machine can slip or cause trailer sway.
- Attach trailer to tow vehicle before loading or unloading.
- Park, load, and unload trailer on level ground.
- Check that unit and trailer do not exceed size or weight regulations.
- Ensure that tow vehicle has proper tow capacity rating.

Procedure

Refer to trailer owner's manual and local and regional laws for correct hauling procedures.

Load

WARNING Crushing weight. If load falls or moves it could kill or crush you. Use proper procedures and equipment or stay away.

NOTICE:

- Attach trailer to tow vehicle before loading or unloading.
- Load and unload trailer on level ground.
- Put manual transmission into first or reverse gear or automatic transmission into park. Turn off ignition. Set parking brake.
- Block trailer wheels.
- Incorrect loading can cause trailer swaying.

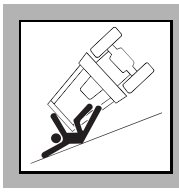

WARNING Rollover possible. If machine rolls over, you could be thrown from seat and killed or crushed. Wear seat belt.

https://truckmanualshub.com/

1. Fasten and adjust seat belt.
2. Start tractor. See page 56 for proper start-up procedures.
3. Raise trenching boom, but keep it low. Move ground drive speed switch to low range.
4. Release parking brake.
5. Use speed and direction controls to slowly drive unit onto trailer until tiedown position is reached.
6. Engage parking brake.
7. Lower boom to trailer bed and turn tractor off. See page 56 for proper shutdown procedures.
8. Attach chains to tractor where tiedown decals are located. See page 66.

Unload

WARNING Crushing weight. If load falls or moves it could kill or crush you. Use proper procedures and equipment or stay away.

NOTICE:

- Attach trailer to tow vehicle before loading or unloading.
- Load and unload trailer on level ground.
- Put manual transmission into first or reverse gear or automatic transmission into park. Turn off ignition. Set parking brake.
- Block trailer wheels.
- Incorrect loading can cause trailer swaying.

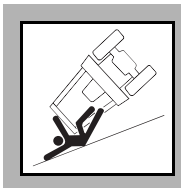

WARNING Rollover possible. If machine rolls over, you could be thrown from seat and killed or crushed. Wear seat belt.

1. Lower trailer or ramps.
2. Remove chains from tiedowns.
3. Fasten and adjust seat belt.
4. Start tractor. See page 54 for proper start-up procedures.
5. Raise trencher boom, but keep it low.
6. Move ground drive speed switch to low range.
7. Disengage parking brake.
8. Use speed and direction controls to slowly back unit down trailer or ramps.

https://truckmanualshub.com/

Tow

WARNING Incorrect procedures could result in death, injury, or property damage. Learn to use equipment correctly.

Under normal conditions, tractor should not be towed. If tractor becomes disabled and towing is necessary:

- Do not tow for more than 200 yd (180 m).
- Tow at less than 3 mph (4.8 km/h).
- Use maximum towing force of 1.5 times unit weight.

Procedure

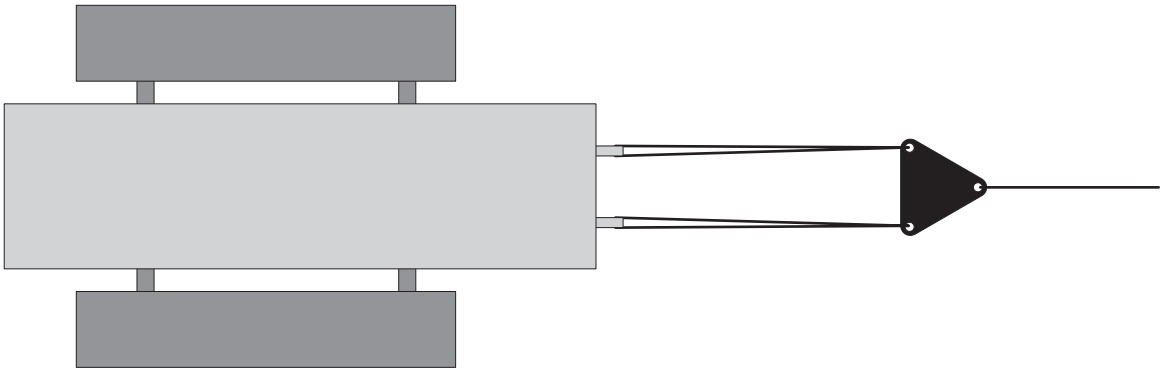

t21om096h.eps

WARNING Incorrect procedures could result in death, injury, or property damage. Learn to use equipment correctly.

Connect Tow Cables

1. Connect the tow cables or chains to the eyes on the front of the undercarriage.
2. Clevis pins may be added to the eyes to aid in the lining up of cables or chains.
3. Wrap a chain or cable around the boom, chain and baseplates.
4. Hook one tow vehicle in the front, and another in the back to aid in braking. Avoid towing over long distances. Do not exceed 3 mph (4.8 km/h).

https://truckmanualshub.com/

Disconnect Brakes

1. Block tracks to immobilize unit.
2. Disconnect the hydraulic brake hoses and cap the valve to keep contaminants out.
3. Connect a tee between the two disconnected hoses to provide equal pressure to each gearbox.
4. Connect a hand pump containing hydraulic fluid to the tee.
5. Pump to 500 psi but do not exceed 500 psi. This will release the brake.

Remove Ground Drive Motors

1. Remove the ground drive motor plates and unbolt the ground drive motor. Do not remove the hydraulic hoses. Support the motors by placing them on the lower support or by tying them up. Do not let them drag on the ground.
2. Tow machine slowly.
3. When towing is complete, reattach the brake line and motors so that the machine will not move after disconnecting.

https://truckmanualshub.com/

Trench

Chapter Contents

Setup 72

Operation 73

- Trenching 74

https://truckmanualshub.com/

Setup

EMERGENCY SHUTDOWN: Press the emergency stop button to stop.

WARNING Crushing weight could cause death or serious injury. Use proper procedures and equipment or stay away.

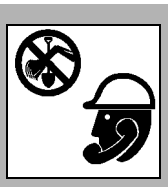

WARNING Jobsite hazards could cause death or serious injury. Use correct equipment and work methods. Use and maintain proper safety equipment.

NOTICE: Comply with all utility notification regulations before digging.

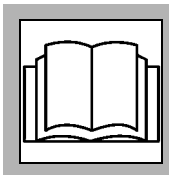

WARNING Incorrect procedures can result in death, injury, or property damage. Learn to use equipment correctly.

1. Fasten and adjust seat belt.
2. Start tractor. See page 58 for start-up procedures.
3. Drive to starting point. Move in line with planned trench.
4. Push throttle to low.
5. Lower boom to just above ground.
6. Engage parking brake.

https://truckmanualshub.com/

Operation

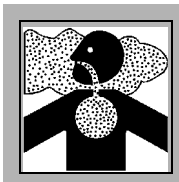

WARNING Jobsite hazards could cause death or serious injury. Use correct equipment and work methods. Use and maintain proper safety equipment.

NOTICE: Cutting, drilling or working materials such as, concrete, sand or rock containing quartz may result in exposure to silica dust. Use water spray or other means to control dust. If workers are exposed to dust they must wear appropriate breathing protection. Silica dust may cause lung disease and is known to the State of California to cause cancer.

DANGER Electrical shock. Contacting electrical lines will cause death or serious injury. Know location of lines and stay away.

NOTICE: Cutting high voltage cable can cause electrocution. Expose lines by hand before digging.

WARNING Incorrect procedures could result in death, injury, or property damage. Learn to use equipment correctly.

NOTICE:

- Comply with all utility notification regulations before digging or drilling.
- Notify companies that do not subscribe to One-Call.

CAUTION Flying objects thrown by machine may strike people. Wear hard hat and safety glasses.

1. Select the desired direction and position for conveyors to run and operate them at a moderate speed.
2. Lift the trench cleaner completely.

IMPORTANT: The only function of the trench cleaner is keeping the trench bottom clean. It must not be used for pushing or pulling anything. Make sure it does not get caught in the trench for any reason and the shoe is free to slide on its support.

https://truckmanualshub.com/

3. Place the chain operation control in the forward direction (or digging direction) at the desired speed.

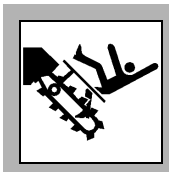

DANGER Moving digging teeth will cause death or serious injury. Stay away.

NOTICE:

- Ensure parking brake is engaged.
- Machine might jerk when digging starts. Allow 3' (1 m) between digging teeth and obstacle.
- Keep everyone at least 15' (5 m) from machine, attachments, and their range of movement.

4. Slowly lower the digging boom taking care not to stall the digging chain.
5. Release the parking brake.
6. Adjust the direction control lever to move the machine forward.
7. Ensure that the pressure values on the chain and track circuit pressure gauges do not exceed the maximum values. See "Gauges" on page 31.
8. Operate engine at full throttle under load for most productive trenching. If soil conditions permit, operating in this range gives longer engine life and more efficient use of available engine power.
9. If an object becomes lodged in the digging chain:
   - Move speed/direction control to neutral.
   - Raise boom slightly to clear bottom of trench.
   - Move transmission lever to reverse.
   - Chain should reverse and release object.
10. After digging enough space for the trench cleaner, lower it.

Note: When digging on slopes, it might be necessary to set the parking brake until the trencher reaches the desired digging depth. Under such circumstances, release the parking brake before operating the direction control.

https://truckmanualshub.com/

Systems and Equipment

Chapter Contents

Chain, Teeth, and Sprockets 76

- Chain and Tooth Maintenance 76
- Chain Types 76
- Chain Selection. 77

Optional Equipment 78

- Tractor. 78
- Trencher 78

https://truckmanualshub.com/

Chain, Teeth, and Sprockets

Chain and Tooth Maintenance

- Always replace sprockets at the same time you replace the digging chain. Sprockets and chain are designed to work together. Replacing one without the other will cause premature wear of the new part.
- Keep digging teeth sharp. Using dull, worn teeth will decrease production and increase shock load to other trencher components. It can also cause chain stretch, which leads to premature chain wear and failure.
- Maintain the proper amount of tension on the digging chain. Overtightening will cause chain stretch and loss of machine performance. For correct tightening procedure, see page 119.
- Use the tooth pattern most appropriate for your digging conditions. If you move to a different soil type, contact your Ditch Witch dealer for information about the most effective chain type and tooth pattern.

Chain Types

Chain type	Features
4-pitch	standard chain
2-pitch	more teeth for smoother cutting
alternating side bar	prevents spoil compaction on chain
bolt-on adapters	allow easy configuration changes
Shark Chain II	versatile, virtually maintenance-free
combination	provides pick and shovel effect

https://truckmanualshub.com/

Chain Selection

These charts are meant as a guideline only. No one chain type works well in all conditions. See your Ditch Witch dealer for soil conditions and chain recommendations for your area. Ask for the latest Chain, Teeth, and Sprockets Parts Catalog.

- 1 = best
- 2 = better
- 3 = good
- 4 = not recommended

Chain	Sandy Soil	Soft Soil	Medium Soil	Hard Soil	Rocky Soil	Sticky Soil
4-pitch cup tooth	3	1	2	3	4	1
2-pitch cup tooth	2	3	1	1	3	4
bolt-on adaptor, 2-pitch	4	4	3	2	1	4
bolt-on adaptor/cup tooth combo	4	3	2	1	2	4
Shark Chain II	4	3	2	1	1	4
alternating side bar	4	4	4	4	4	1

Soil	Description
sandy soil	sugar sand, blow sand, or other soils where sand is the predominant component
soft soil	sandy loam
medium soil	loams, loamy clays
hard soil	packed clays, gumbo, all compacted soils
rocky soil	chunk rock, glacial till, cobble, rip rap, gravel
sticky soil	gumbo, sticky clays

https://truckmanualshub.com/

Optional Equipment

See your Ditch Witch dealer for more information about the following optional equipment.

Tractor

Equipment	Description
light kit	p/n 215-1191
window cover kit	p/n 190-1174

Trencher

Equipment	Description
truck conveyor	p/n 140-1081
carbide bit	p/n 135-1015
spade bit	p/n 135-1016
trench cleaners	
restraint bar	p/n 140-1073
4', 6' (1.2, 1.8 m) depth	p/n 140-1074
8' (2.4 m) depth	p/n 140-1075
4' (1.2 m) double chain	p/n 140-1069
6' (1.8 m) double chain	p/n 140-1071
trench cleaner shoes	
shoe cleaner 12" (30.5 cm)	p/n 140-1076
shoe cleaner 14" (35.5 cm)	p/n 140-1077
shoe cleaner 16" (40.6 cm)	p/n 140-1078
shoe cleaner 18" (45.7 cm)	p/n 140-1079
shoe cleaner 24" (61 cm)	p/n 140-1080

https://truckmanualshub.com/

Complete the Job

Chapter Contents

Rinse Equipment 80

Stow Tools 80

https://truckmanualshub.com/

Rinse Equipment

Spray water onto equipment to remove dirt and mud.

NOTICE: Do not spray water into the cab. Electrical components could be damaged. Wipe down instead.

Stow Tools

Make sure all tools and accessories are loaded and properly secured on trailer.

https://truckmanualshub.com/

Service

Chapter Contents

Service Precautions 82

Lubrication Overview 83

Recommended Lubricants/Service Key 85

- Engine Oil Selection Chart 86

4 Hour 87

10 Hour 87

50 Hour 102

100 Hour 104

250 Hour 111

500 Hour 111

1500 Hour 115

2000 Hour 116

As Needed 118

https://truckmanualshub.com/

Service Precautions

WARNING Incorrect procedures could result in death, injury, or property damage. Learn to use equipment correctly.

NOTICES:

- Unless otherwise instructed, all service should be performed with engine off.
- Refer to engine manufacturer's manual for engine maintenance instructions.
- Before servicing equipment, lower unstowed attachments to ground.

Welding Precaution

NOTICE: Welding can damage electronics.

- Disconnect battery at battery disconnect switch before welding to prevent damage to battery. Do not turn off battery disconnect switch with engine running or alternator and other electronic devices may be damaged.
- Connect welder ground clamp close to welding point and make sure no electronic components are in the ground path.
- Always disconnect the ECU ground connection from the frame, harness connections to the ECU, and other electronic components prior to welding on machine or attachments.

Cleaning Precaution

NOTICE: When cleaning equipment, do not spray electrical components with water.

https://truckmanualshub.com/

Lubrication Overview

Lubrication Overview (left)

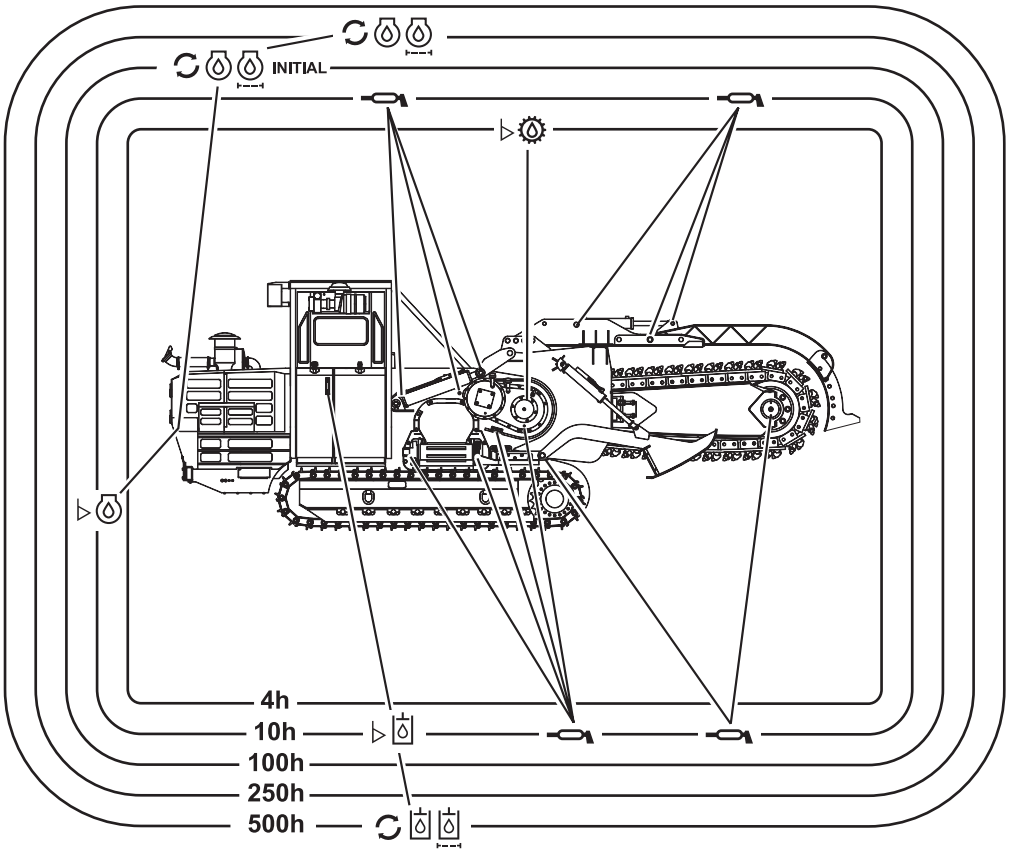

t21om083h.eps

https://truckmanualshub.com/

Lubrication Overview (right)

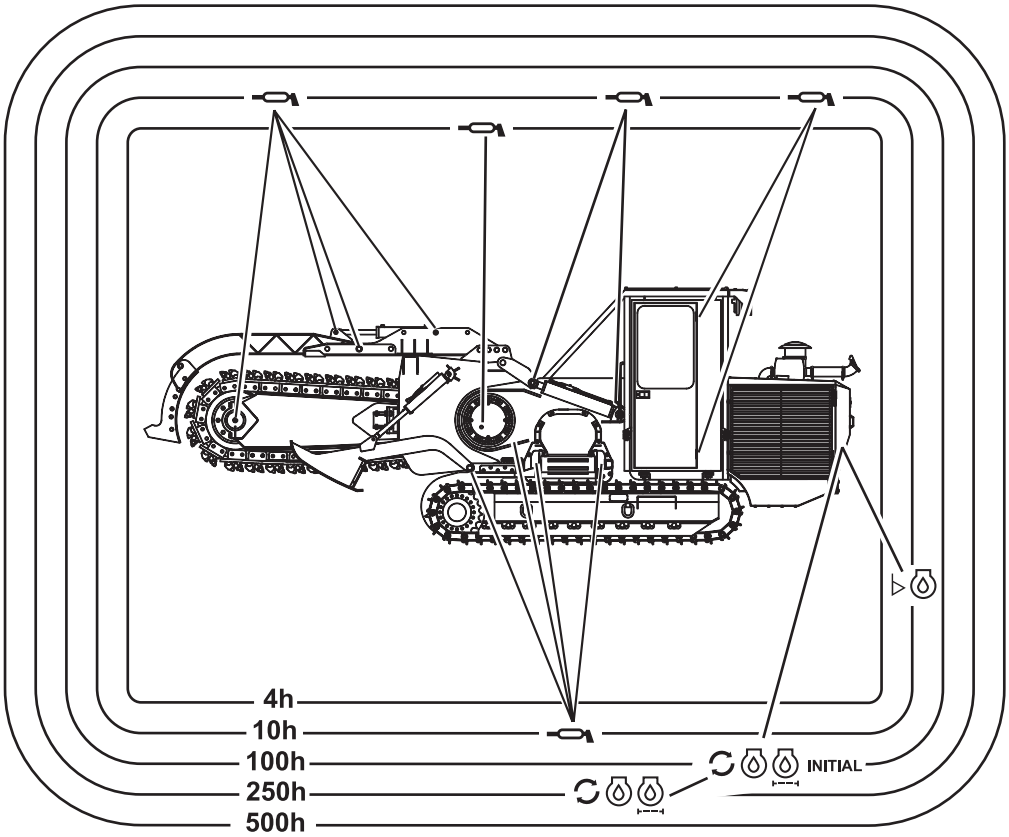

t21om082h.eps

https://truckmanualshub.com/

Recommended Lubricants/Service Key

Item	Description
DEO	Diesel engine oil meeting API service classification CI-4 ALEA E5 and SAE viscosity recommended by engine manufacturer (SAE 15W40)
MPG	Multipurpose grease meeting ASTM D217 and NLGI 5
MPL	Multipurpose gear oil meeting API service classification GL-5 (SAE 80W90)
THF	Tractor hydraulic fluid, similar to Phillips 66 HG, Mobilfluid 423, Chevron Tractor Hydraulic Fluid, Texaco TDH Oil, or equivalent
DEAC	Diesel engine antifreeze/coolant meeting ASTM D5345 (prediluted) or D4985 (concentrate)
	Check level of fluid or lubricant
	Check condition
	Filter
	Change, replace, adjust, service, or test

Proper lubrication and maintenance protects Ditch Witch equipment from damage and failure. Service intervals listed are for minimum requirements. In extreme conditions, service machine more frequently. Use only recommended lubricants. Fill to capacities listed in "Specifications" on page 121.

For more information on engine lubrication and maintenance, see your Cummins® engine manual.

NOTICE:

- Use only genuine Ditch Witch parts, filters, approved lubricants, TJC, and approved coolants to maintain warranty.
- Use the "Service Record" on page 205 to record all required service to your machine.

https://truckmanualshub.com/

Engine Oil Selection Chart

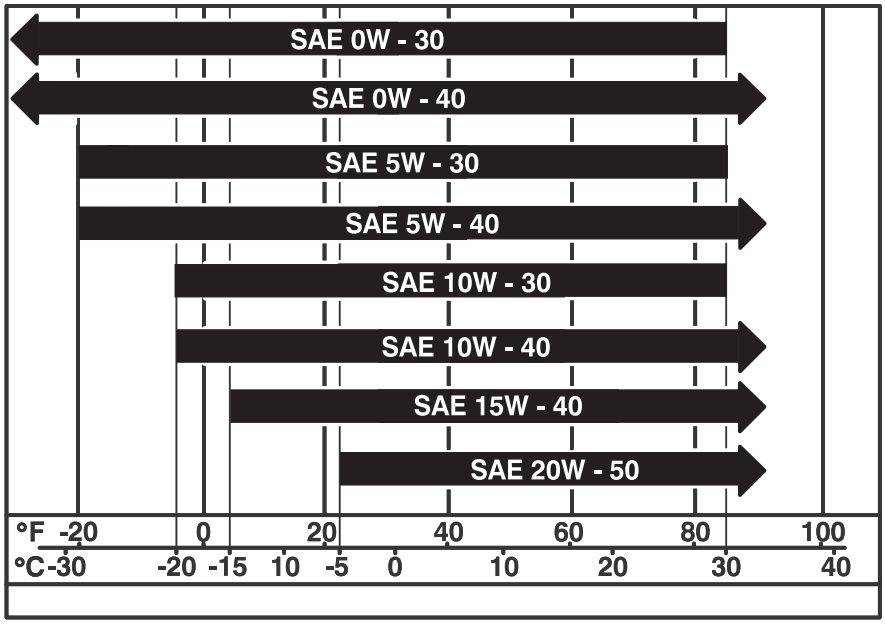

t11om076c.eps

Select oil based on ambient temperature range expected before next oil change.

WARNING Incorrect procedures could result in death, injury, or property damage. Learn to use equipment correctly.

NOTICE:

- Unless otherwise instructed, all service should be performed with engine off.
- Refer to engine manufacturer's manual for engine maintenance instructions.
- Before servicing equipment, lower attachments to ground.

https://truckmanualshub.com/

4 Hour

Location	Task	Notes
TRENCHER	Lube flywheel gearbox	
	Lube pivot bearings	left and right
	Lube digging chain shaft bearing	

Lube Flywheel Gearbox

Lube zerks with MPG every 4 hours.

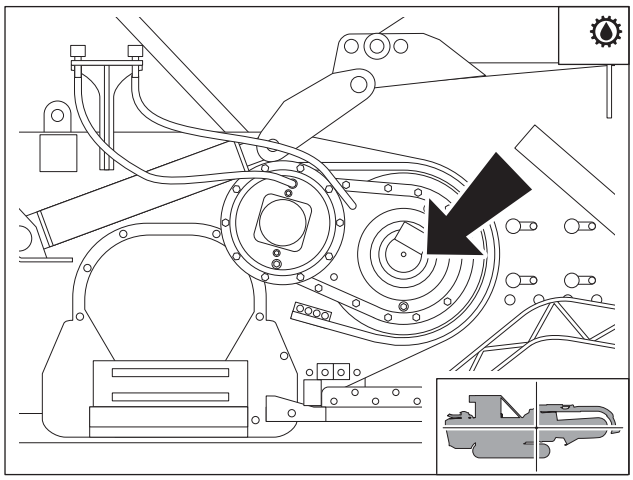

t21om081h.eps

Lube Pivot Bearings (Left & Right)

Lube zerks with MPG every 4 hours.

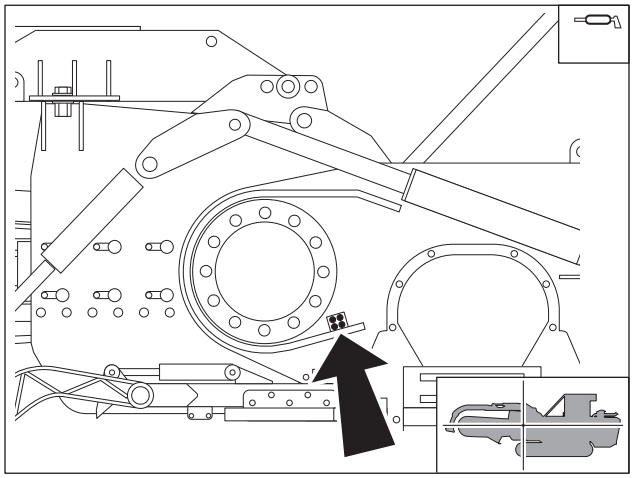

t21om097h.eps

https://truckmanualshub.com/

Lube Digging Chain Shaft Bearing

Lube zerks with MPG every 4 hours.

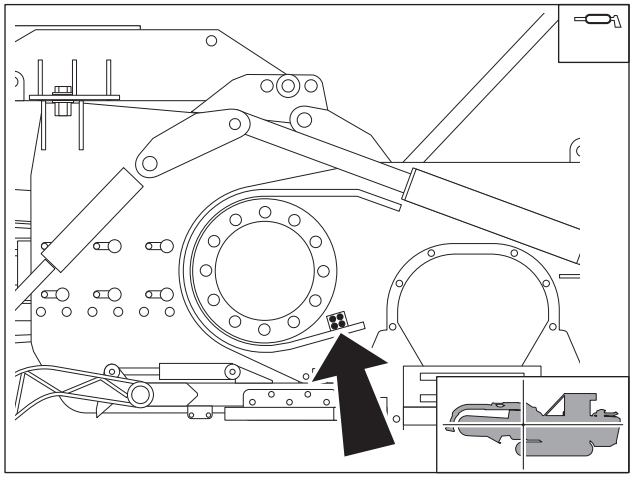

t21om097h.eps

https://truckmanualshub.com/

10 Hour

Location	Task	Notes
TRACTOR	Check emergency stop	
	Lube torque post	
	Lube cab door hinges	
	Check engine oil level	
	Check engine coolant level	
	Check air filters	
	Check cab air cleaner filters	
	Check hydraulic fluid level	
	Check hydraulic hoses	
	Check gearboxes and coupler	
	Clean cooling systems	
	Check nuts and bolts	
TRENCHER	Lube conveyor	left and right
	Lube stabilizer pins	left and right
	Check and adjust conveyor belts	
	Check hydraulic cylinder rods	
	Check tail roller	
	Lube trench cleaner cylinder pins	
	Lube digging boom cylinder pins	
	Check digging chain	
	Check digging teeth	
	Check chain baseplates and toothstops	
	Check boom and wearplates	
	Check chain sprocket	

https://truckmanualshub.com/

Check Emergency Stop

Test function of each emergency stop buttons (shown) every 10 hours. See "Start After Emergency Stop" on page 57.

1. Turn ignition switch to the on position but do not start the engine.
2. Press an emergency stop button. See "Start After Emergency Stop" on page 57.
3. Repeat process for each emergency stop button. Service machine as required.

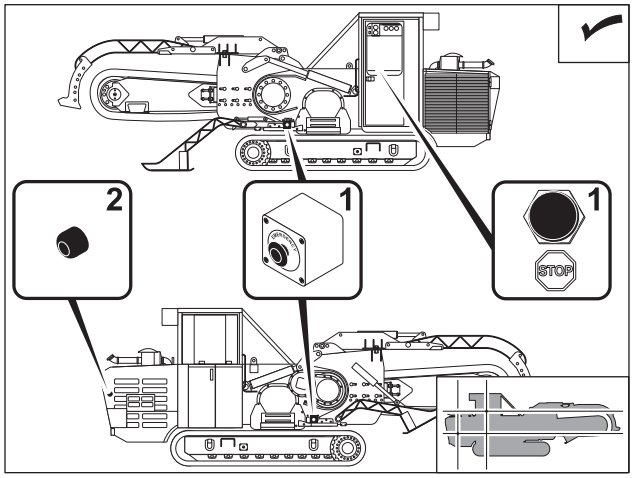

t21om098h.eps

Lube Torque Post

Lube zerks with MPG every 10 hours.

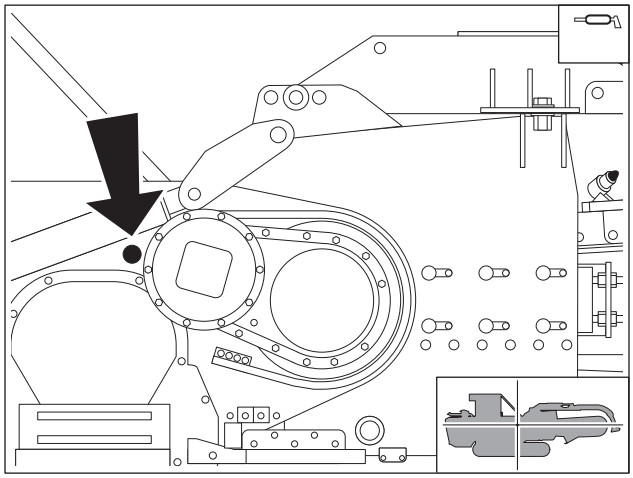

t21om052h.eps

Lube Cab Door Hinges

Lube cab door hinges with MPG every 10 hours.

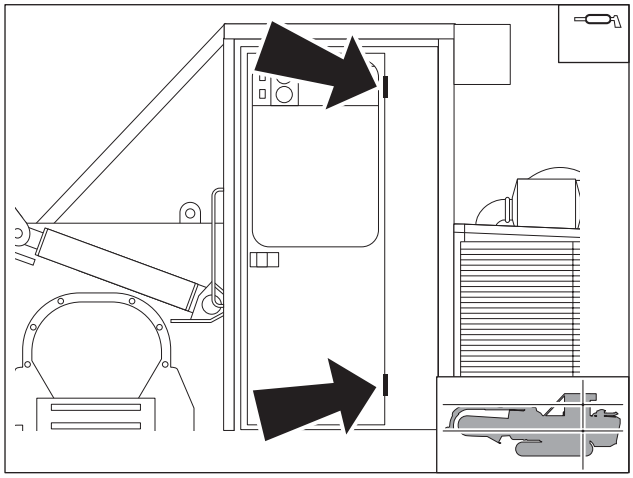

t21om026h.eps

https://truckmanualshub.com/

Check Engine Oil Level

Check engine oil level at dipstick (1) every 10 hours.

Add DEO (1) at fill as needed.

Ensure that engine oil level is correct and inspect for contamination.

Typical signs of oil contamination are:

- oil discoloration
- water in the oil

Change oil and filter if contaminants are present.

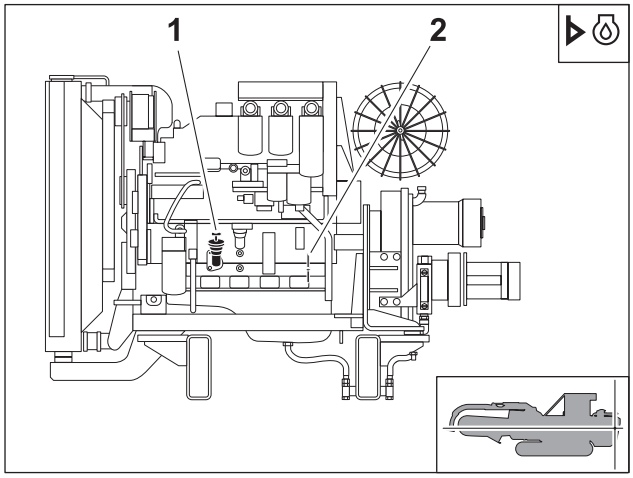

t21om030h.eps

Check Engine Coolant level

Check engine coolant level every 10 hours.

Ensure that level is at the maximum level and inspect for signs of contamination.

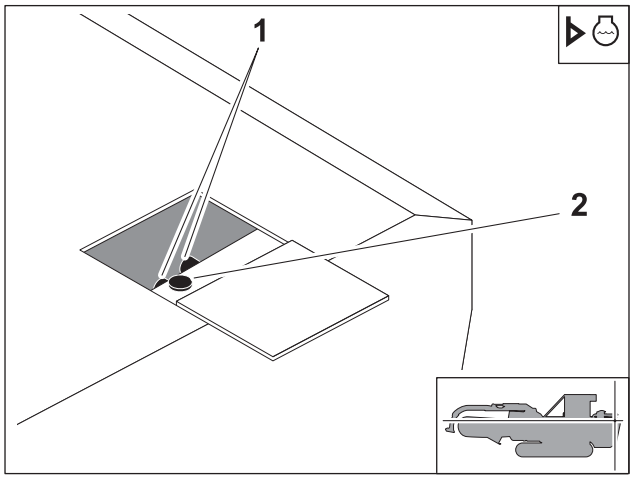

t21om032h.eps

Check Air Filter Light

Check air filter light every 10 hours or more frequently if operating extremely dusty conditions.

The main filter can be cleaned up to six times before replacing. The secondary filter must not be reused.

Replace air filters as necessary. See "Change Engine Air Filters" on page 106.

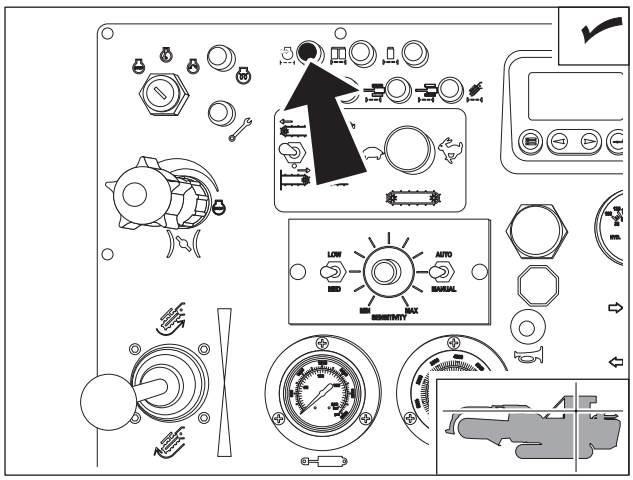

t21om086h.eps

https://truckmanualshub.com/

Check Cab Air Cleaner Filters

Check cab air cleaner every 10 hours.

Replace as necessary.

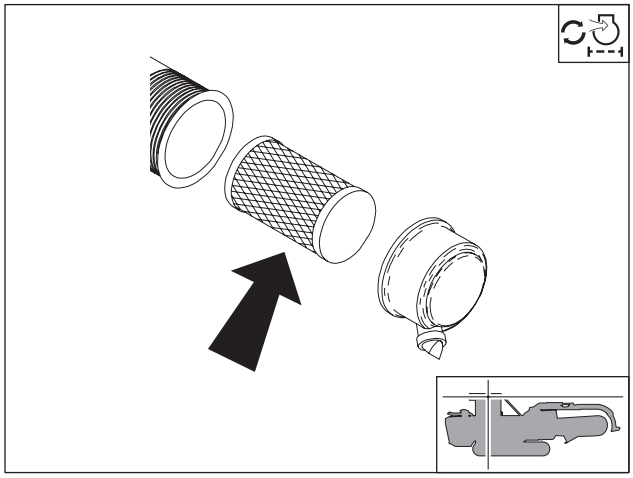

t21om070h.eps

Check Hydraulic Fluid Level

Inspect hydraulic fluid level every 10 hours.

If the fluid level is not visible through the sight glass (2) then add fluid at fill (1) until fluid can be seen through the sight glass (2).

The level must be checked when fluid is cold.

Lock the tank plug after each refilling.

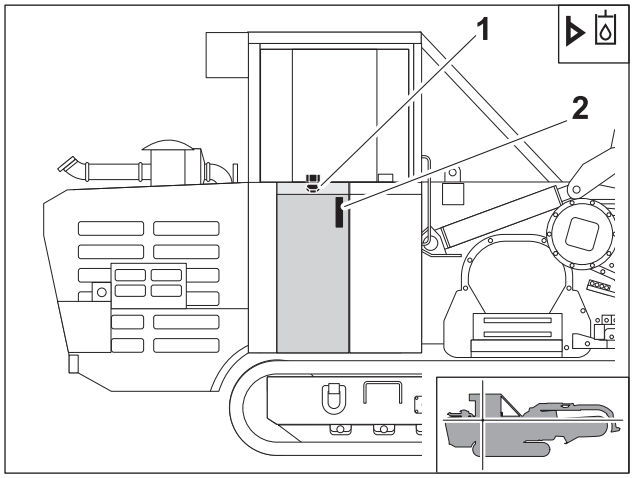

t21om034h.eps

https://truckmanualshub.com/

Check Hydraulic Hoses

WARNING Fluid or air pressure could pierce skin and cause injury or death. Stay away.

NOTICE: Escaping pressurized fluid can cause injury or pierce skin and poison.

- Before disconnecting a hydraulic line, turn engine off and operate all controls to relieve pressure. Lower, block, or support any raised component with a hoist. Cover connection with heavy cloth and loosen connector nut slightly to relieve residual pressure. Catch all fluid in a container.
- Before using system, check that all connections are tight and all lines are undamaged.
- Fluid leaks can be hard to detect. Use a piece of cardboard or wood, rather than hands, to search for leaks.
- Wear protective clothing, including gloves and eye protection.

If you are injured, seek immediate medical attention from a doctor familiar with this type of injury.

Inspect the hydraulic lines every 10 hours.

Check the condition of hoses and lines and replace those that appear damaged.

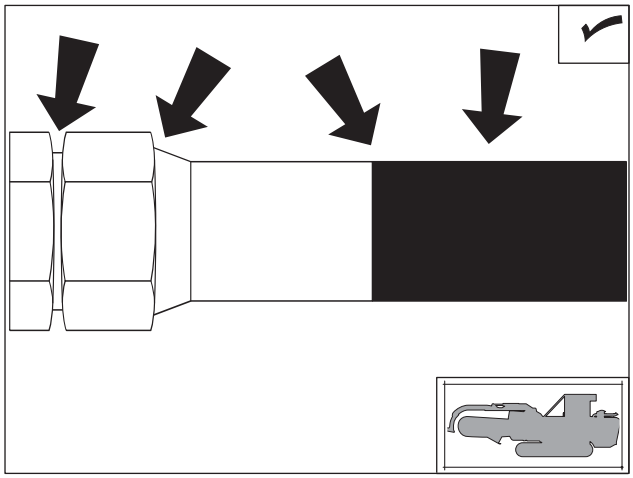

t21om056h.eps

https://truckmanualshub.com/

Check Gearbox and Coupler

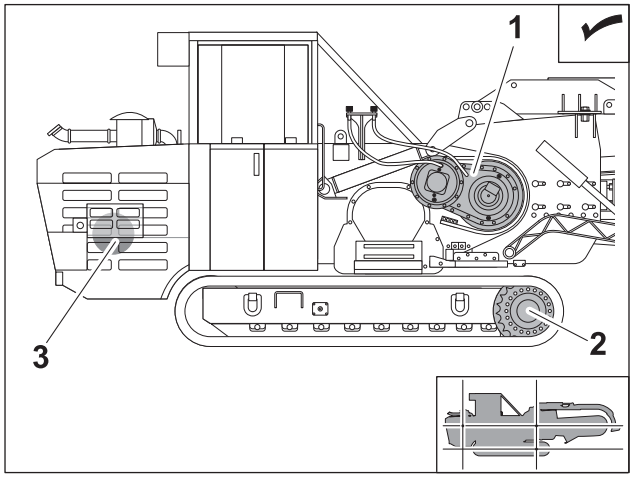

t21om054h.eps

Check gearboxes every 10 hours.

Inspect the flywheel gearbox (1), the two track gearboxes (2) and the engine pump drive (3) to spot possible leakages.

The flywheel gearbox cases and the coupler case are all equipped with an air vent, oil level tank plug and drain plug.

The track gearboxes are equipped with oil level tank plug and drain plug for inspection. Rotate the gearbox until the oil drain plug is in the lowest position.

Fill all gearboxes to indicated level with MPL.

Change the oil in the gearboxes and in the coupler every 500 hours and each time any contamination is detected. Unscrew a level plug to allow a small amount of oil to leak out and inspect for sediments that may call for an unscheduled lubricant change.

Note: There are two separate and specific zones that require lubrication in the digging chain flywheel gearbox. These zones are separated and failure to service both zones can bring premature breakage to the flywheel.

Clean Cooling System

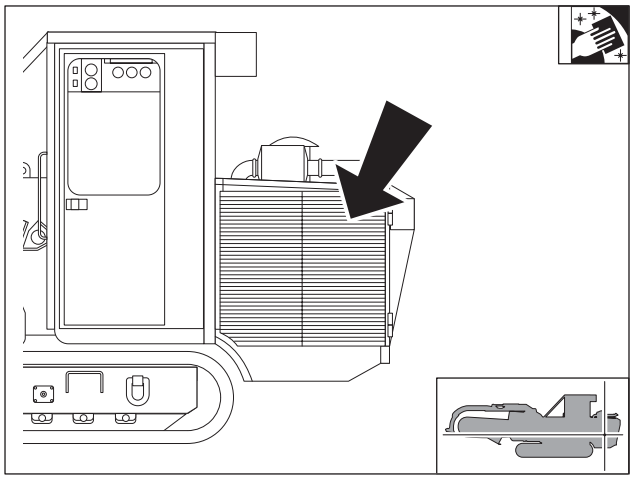
t21om044h.eps

Clean engine and hydraulic fluid radiators every 10 hours.

Possible forms of obstructions include: dust layers, oil layers, leaves, twigs and other objects that may cause obstructions and lower the cooling efficiency. Clean any obstructions to allow a proper air flow and cooling action.

https://truckmanualshub.com/

Check Nuts and Bolts

Check nuts and bolts every 10 hours.

Check that there are no loose fasteners. If any fasteners are loose, tighten them to the correct torque specifications.

IMPORTANT: Check the chain digging plates retaining screws.

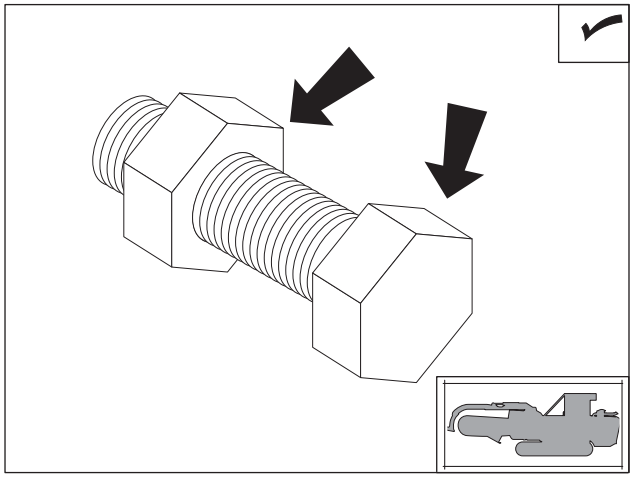

t21om057h.eps

https://truckmanualshub.com/

Trencher

Lube Conveyor (Left and Right)

Lube zerks with MPG every 10 hours.

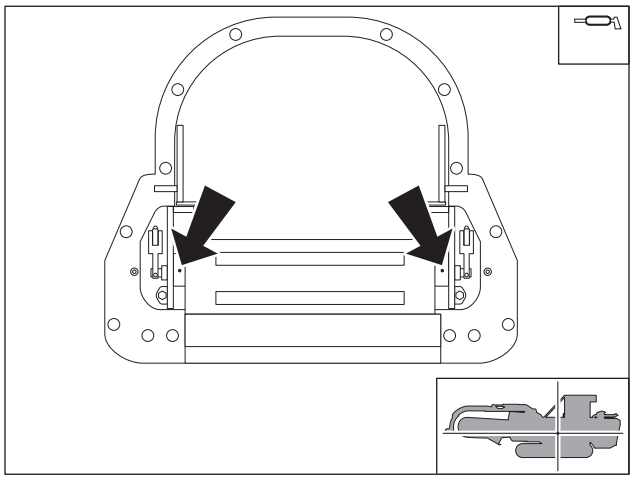

t21om099h.eps

Lube Stabilizer Pins (Left and Right)

Lube zerks with MPG every 10 hours.

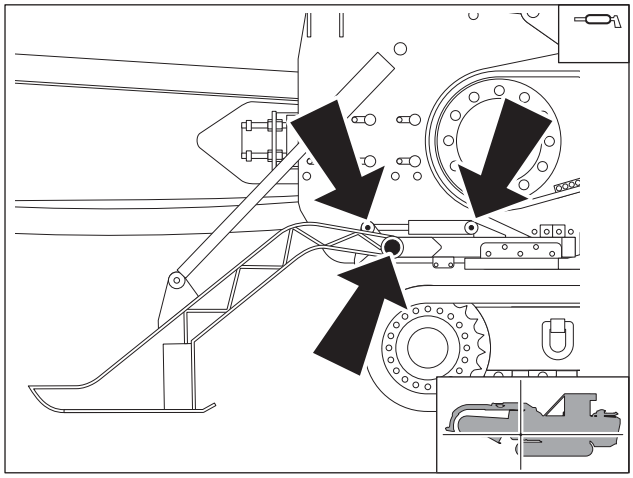

t21om029h.eps

https://truckmanualshub.com/

Check and Adjust Conveyor Belts

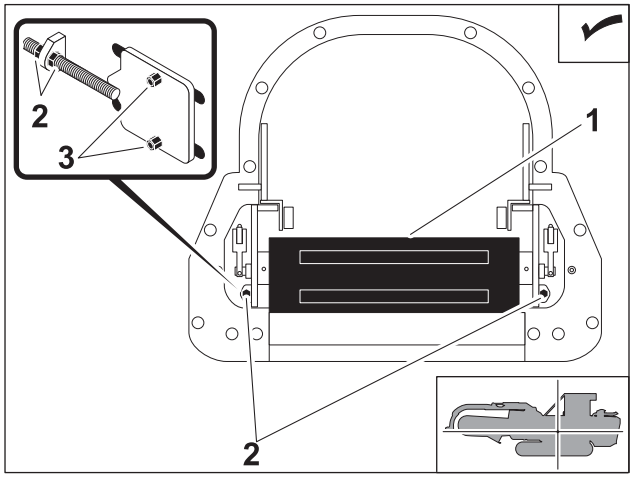

t21om066h.eps

Check conveyor belts every 10 hours.

Ensure that belt (1) is not excessively worn and is set at the proper tension. Too much tension will cause excessive friction between the belt and the side sills, performance loss and premature wear. A loose belt may cause the driving drum to slip and stop the belt movement.

The belt must neither be so tight that it gets out of the guides, nor so loose it sags until touching the conveyor frame. Stop operation and make adjustments as needed.

If conveyor belts are worn, see "Replace Conveyor Belt" on page 118.

Allow for material load to increase tension.

To adjust:

Loosen screws (3) and adjust tension at screws (2). Tighten all adjusting screws (2,3) on each drum to keep it perpendicular to the belt direction.

Check Hydraulic Cylinder Rods

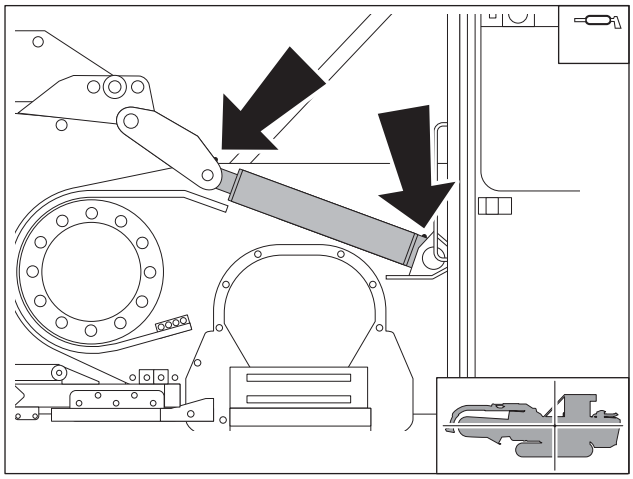
t21om025h.eps

Check hydraulic cylinder rods every 10 hours.

Check that the rods are not nicked or damaged and that they do not show signs of oil leakage. Clean and ream, if necessary. If this is not done, the scraper ring and the rod packing may get broken.

https://truckmanualshub.com/

Check Tail Roller

Check tail roller every 10 hours.

Check that the tail roller does not show excessive wear signs and that the bearings (shown) do not have any backlash. Make sure that the seals do not leak.

For tail roller lubrication, see "Lube Tail Roller" on page 103.

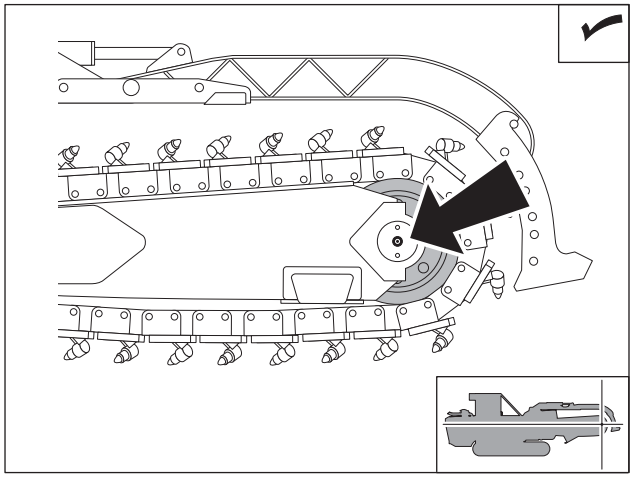

t21om100h.eps

Lube Trench Cleaner Cylinder Pins

Lube zerks with MPG every 10 hours.

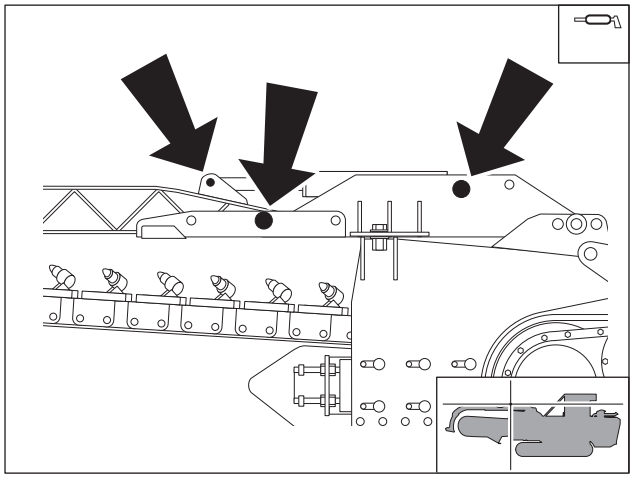

t21om021h.eps

Lube Digging Boom Cylinder Pins (Right and Left)

Lube zerks with MPG every 10 hours.

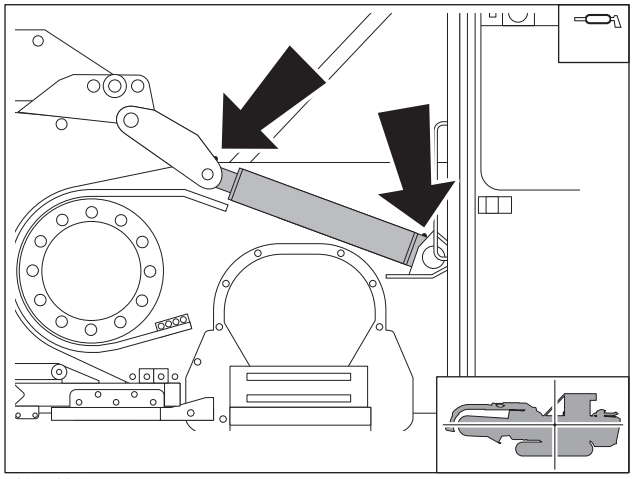

t21om025h.eps

https://truckmanualshub.com/

Check Digging Chain

Inspect Digging Chain

Inspect for excessive wear (shown) and proper tension every 10 hours.

The proper limit is 2" - 2.5" (5.08 cm - 6.35 cm) sag (A) on a cold chain with baseplates installed, measured at the point of greatest sag with the boom in a horizontal position. Do not adjust chain when it is hot.

Proper distance (A) is measured from the chain point that is furthest from the boom.

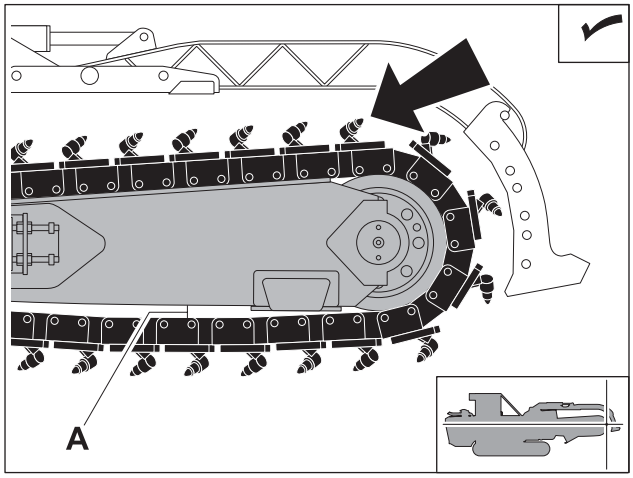

t21om060h.eps

Adjust chain tension as needed. "Adjust Digging Chain Tension" on page 119.

Check Digging Teeth

Inspect digging teeth every 10 hours.

Replace teeth when the carbide tip:

- splinters or breaks.
- rounds, flattens or becomes square.
- is broken or not functioning properly.

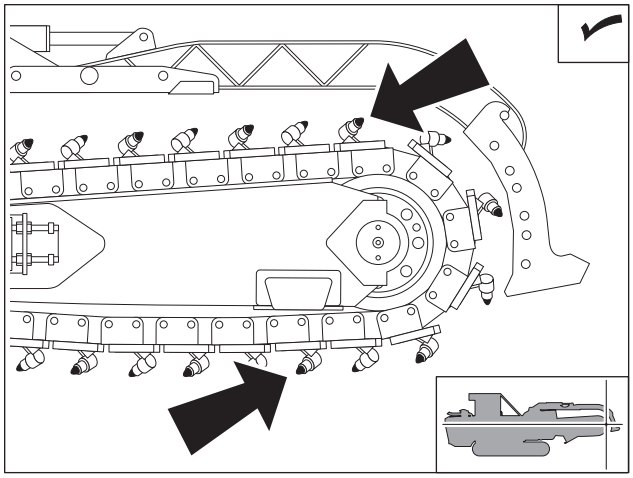
t21om019h.eps

https://truckmanualshub.com/

Check Chain Baseplates and Tooth-stops

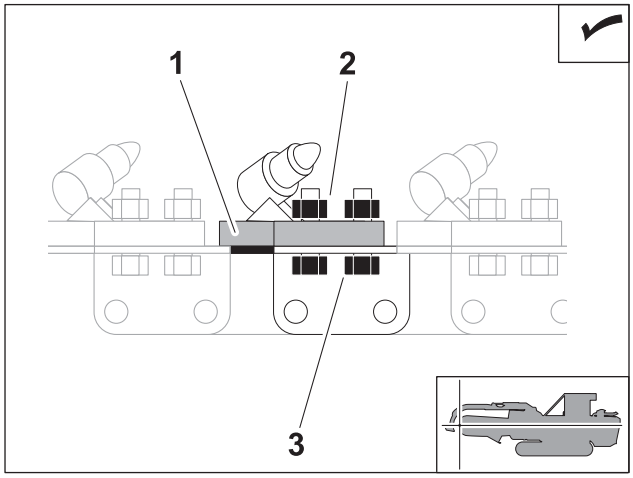

t21om041h.eps

The machine is equipped with specific-width tooth-stop plates (1).

The tooth-stop plates and pockets are provided with a hard metal coating in their easily-worn parts. This coating must always be preserved to guarantee the life of the tooth-stop pocket plates. The machine operator must take note of the hardened parts and preserve them. The antirollover plates (not provided on the narrow chain) are originally installed on the tooth-stop plates. The machine operator must overhaul these plates.

During assembly, make the plates touch the ground in ascending order (from the right side, in clockwise ascending order) and by turning their teeth toward the digging direction.

Check the screws (3) and the locknuts (2) of the chain plates regularly. Use only high-tensile screws, nuts and washers (8 grade).

Check plate nuts and screws daily. Their loosening may cause the chain to break and the plate to get damaged.

Check Boom and Wearplates

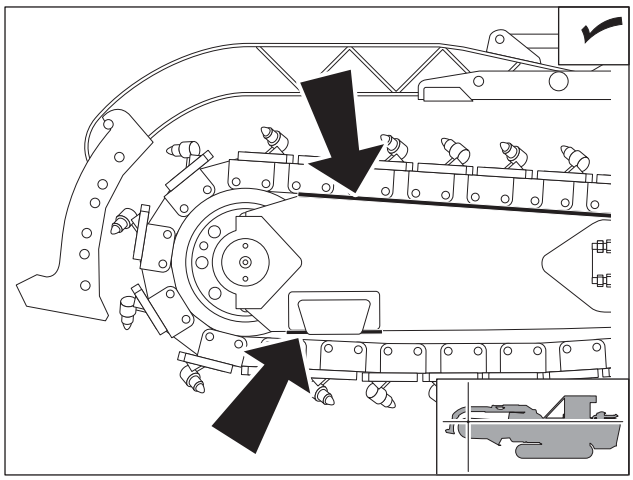
t21om043h.eps

Check wearplates every 10 hours.

These plates (shown) must be replaced periodically in order to avoid damage to the boom and to the excavation material internal recess.

If the wearplate is worn out to the extent that the digging chain "nicks" the boom, the wearplate must be "rotated" or replaced. A hard metal coating applied to the severest wear position will extend the plate life. See "Replace Wearplate" on page 120.

https://truckmanualshub.com/

Check Chain Sprocket

Check digging chain sprocket every 10 hours.

Check that the sprocket is not damaged or exceedingly worn. Replace or rotate the sprocket if the other side is not worn. Avoid any "hook" effect that takes place when the sprocket is exceedingly worn.

"Hook" effects happen when the sprocket tooth profile does not allow the chain sprocket to get easily disconnected during the tooth rotation because of excessive wear.

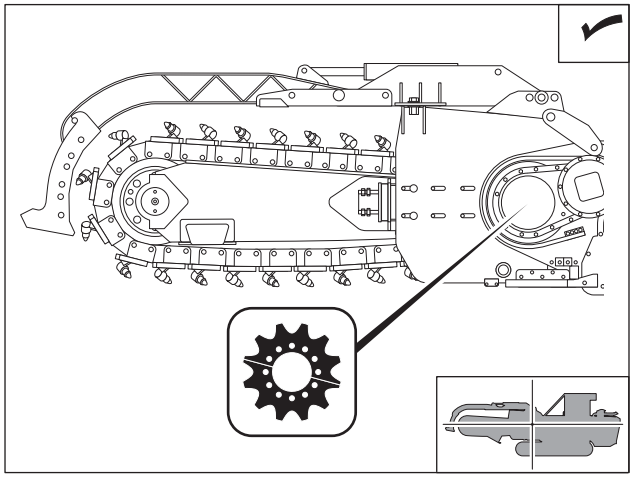

t21om042h.eps

https://truckmanualshub.com/

50 Hour

Location	Task	Notes
TRACTOR	Inspect undercarriage pins and bushings	
TRENCHER	Check and adjust digging chain gearbox and flywheel fluid level	
	Lube tail roller	

Tractor

Check Undercarriage Pins and Keepers

Check undercarriage pins and keepers every 50 hours.

Visually inspect for proper pin keeper position as well as excess movement. Inspect keeper bolts for loosening.

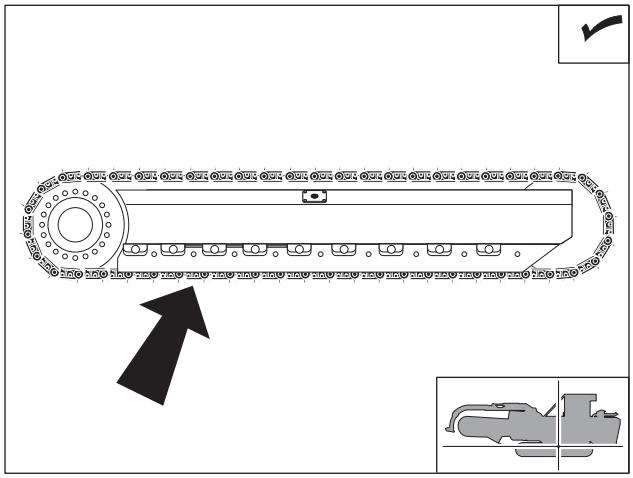

t21om069h.eps

Trencher

Check Digging Chain Gearbox and Flywheel Fluid Level

Check fluid levels in the flywheel gearbox every 50 hours.

There are two points (3-6) per gearbox. Check the gearboxes when the oil is cold. Add lubricant if the level is low. Should any leakage be noticed, fill more frequently. Find the causes and fix them.

To fill, remove the respective breather (1 or 2) and fill with oil.

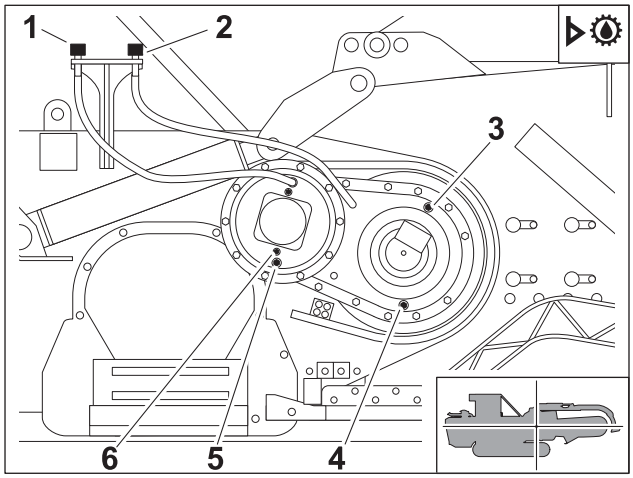

t21om101h.eps

https://truckmanualshub.com/

Lube Tail Roller

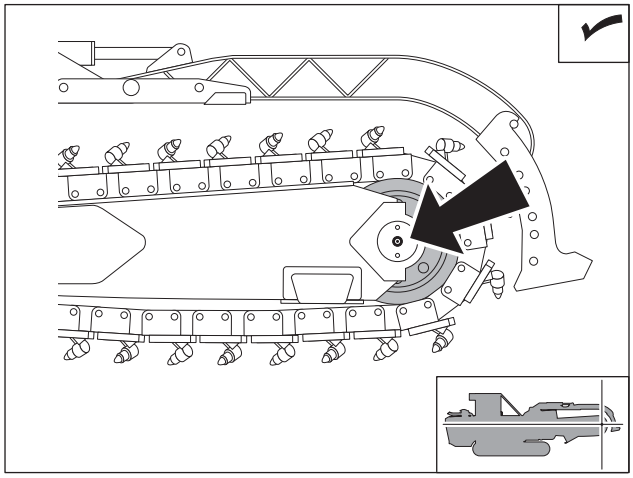
t21om100h.eps

Lube tail roller every 50 hours.

Short Boom

IMPORTANT: Schedule lubrication during an idle time to prevent water from oxidizing the bearings.

Remove cap and lube with MPG.

IMPORTANT:

- Do not mix different greases.
- Lube more frequently in case the seals are worn and schedule a change of seals for the next maintenance.

Standard Boom

1. Unscrew the endcap center port.
2. Lube standard tail roller with DEO (both sides must be serviced).

https://truckmanualshub.com/

100 Hour

Location	Task	Notes
TRENCHER	Check rubber mount supports	
	Check undercarriage rollers	
	Clean breathers	
	Check track tension	
	Lube hydraulic motors	splined shafts
	Change engine air filters	
	Change engine oil (initial)	
	Change engine oil filter (initial)	

Check Rubber Mounts

Check rubber mounts every 100 hours.

Check the bolt tightness and rubber condition.

If the rubber is worn or cracked, replace as necessary. If mounts are loose, tighten according to specifications.

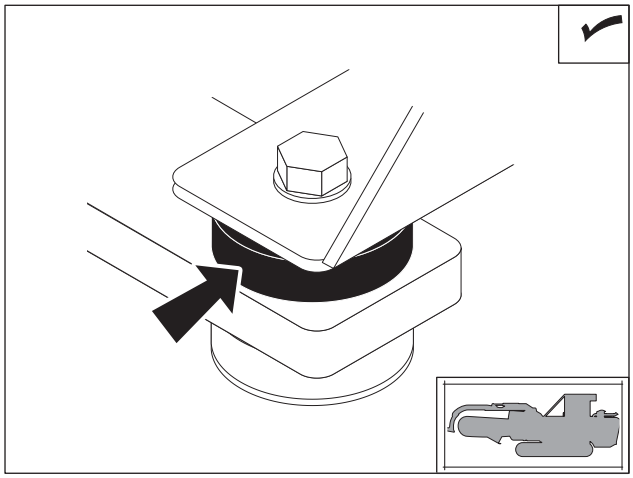

t21om1021h.eps

Check Undercarriage Rollers

Check undercarriage rollers every 100 hours.

Inspect for leaks and "out of round" wearing. Replace as necessary.

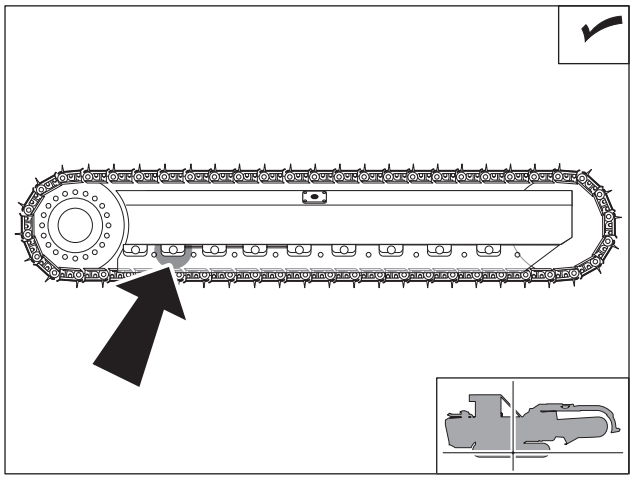

t21om061h.eps

https://truckmanualshub.com/

Check Breathers

Check breathers (shown) every 100 hours.

Check that there are no obstructions or sediment build-ups. Clean the breathers in case of obstructions. Use an oil-based solvent.

Do not carry out the operation using flammable solvents or standing near a fire, sparks or other flammable sources.

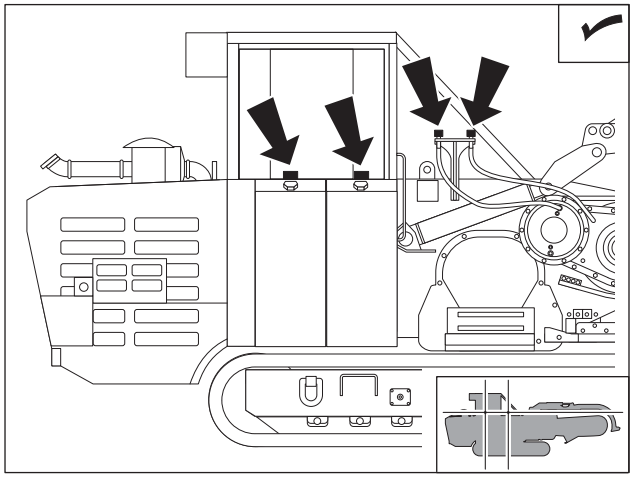

t21om063h.eps

Check Track Tension

Check track tension every 10 hours.

Correct tension (A) is 3/8" (10 cm) chain sag between the conveyor rollers. If distance (A) is greater than 3/8" (10 cm), see"Adjust Track Tension" on page 118.

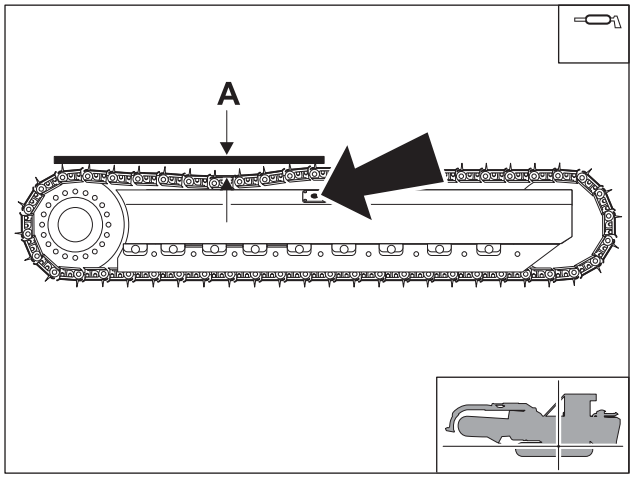

t21om047h.eps

https://truckmanualshub.com/

Lubricate Hydraulic Motor Splines

Lubricate all hydraulic motor and flywheel gearbox drive motor splines every 100 hours.

1. Unbolt and slide motors out of position.
2. Lubricate the female spline with a heavy-duty wheel bearing grease.
3. Re-bolt the drive motors in position, and tighten fasteners properly.

Hydraulic Motor Bolt Torque Values	
Size	**Torque**
1/2" - 13NC	58 ft•lb
5/8" - 11NC	115 ft•lb

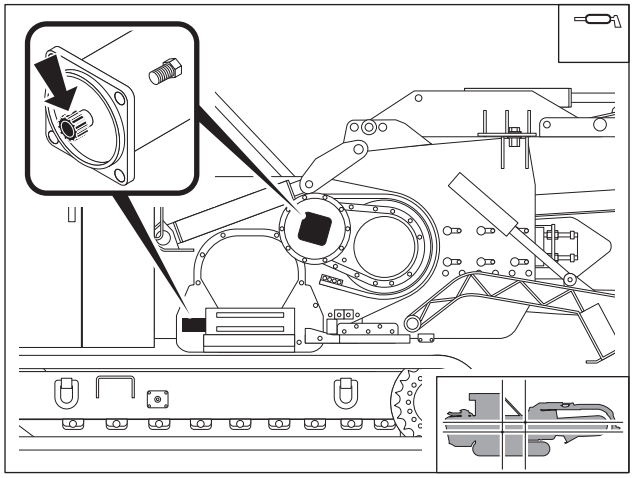

t21om072h.eps

Note: All hydraulic motor bolts are either 1/2" or 5/8" bolts. Correct identification of bolt size is a must. Failure to correctly identify a bolt before tightening may lead to stripped holes, broken bolts, improperly loaded bearings, etc.

Change Engine Air Filters

Change engine air filters every 100 hours.

The main air filter can be cleaned up to six times before replacing. The secondary filter must not be reused.

Replace filters as necessary.

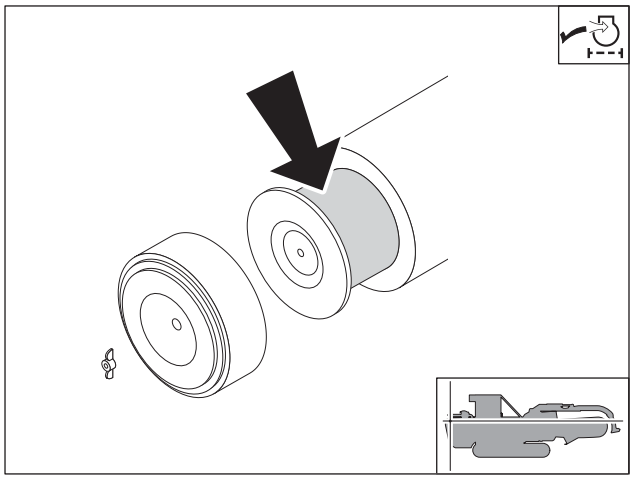

t21om033h.eps

https://truckmanualshub.com/

Change Engine Oil and Filter (initial)

Change the engine oil and filter after first 100 hours and at 250 hours.

1. Place a container, capable of holding 27 qt (26 L) of oil, below drain plug (3).
2. Remove drain plug (3) and allow oil to drain.
3. Change engine oil filter. See "Change Engine Oil Filter", below.
4. Add DEO at fill neck (1). See "Fluid Capacities" on page 124.
5. Use dipstick to indicate the proper oil level (2).

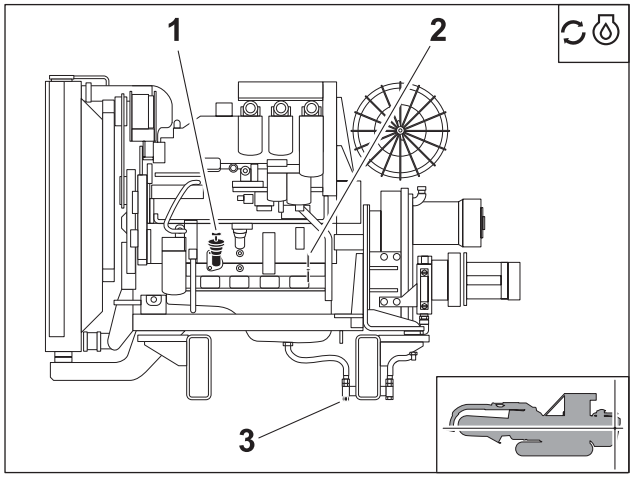

t21om031h.eps

Change Engine Oil Filter (initial)

1. Remove engine oil filter (shown).
2. Clean the gasket surface of the filter head.

Note: The gasket can stick on the filter head. Make sure it is removed before installing the new filter.

3. Fill new filter with clean oil before installation. Apply a light film of oil to the gasket sealing surface before installing the filter.

Note: Mechanical overtightening of filter can distort the threads or damage the filter element seal. Install the filter as specified by the filter manufacturer.

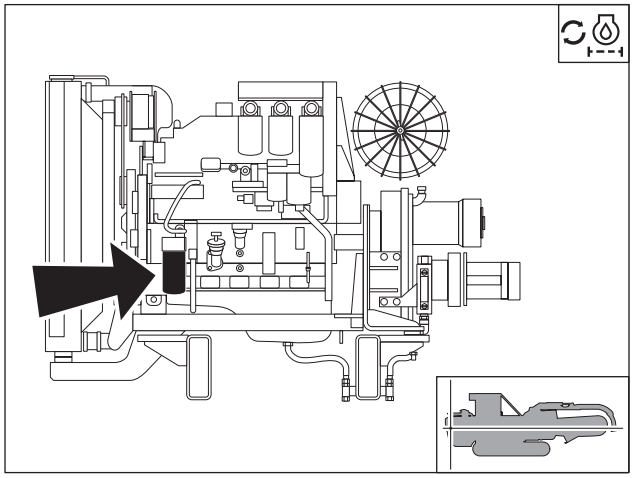
t21om078h.eps

https://truckmanualshub.com/

250 Hour

Location	Task	Notes
TRACTOR	Change engine oil and filter	
	Check engine oil breather	
	Inspect engine belts	
	Change hydraulic filters (initial)	

Change Engine Oil and Filter

Change the engine oil and filter after first 100 hours and at 250 hours.

1. Place a container, capable of holding 27 qt (26 liters) of oil, below drain plug (3).
2. Remove drain plug (3) and allow oil to drain.
3. Change engine oil filter. See "Change Engine Oil Filter" below.
4. Replace drain plug.
5. Refill with DEO at fill neck (1). See "Fluid Capacities" on page 124.
6. Use dipstick to indicate the proper oil level (2).

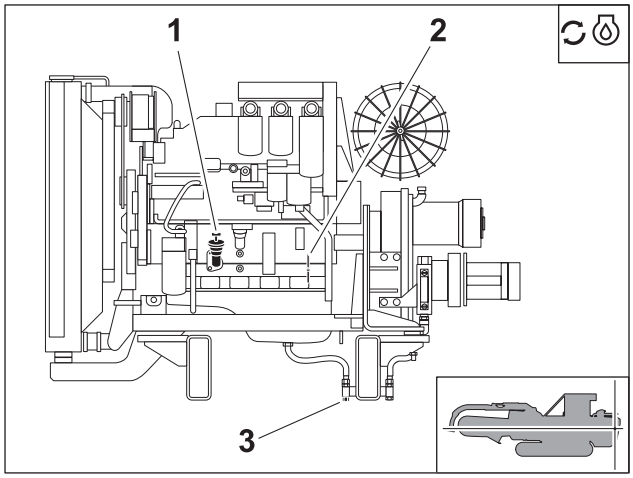

t21om031h.eps

Change Engine Oil Filter

7. Remove engine oil filter (shown).
8. Clean the gasket surface of the filter head.

Note: The gasket can stick on the filter head. Make sure it is removed before installing the new filter.

9. Fill new filter with clean oil before installation. Apply a light film of oil to the gasket sealing surface before installing the filter.

Note: Mechanical overtightening of filter can distort the threads or damage the filter element seal. Install the filter as specified by the filter manufacturer.

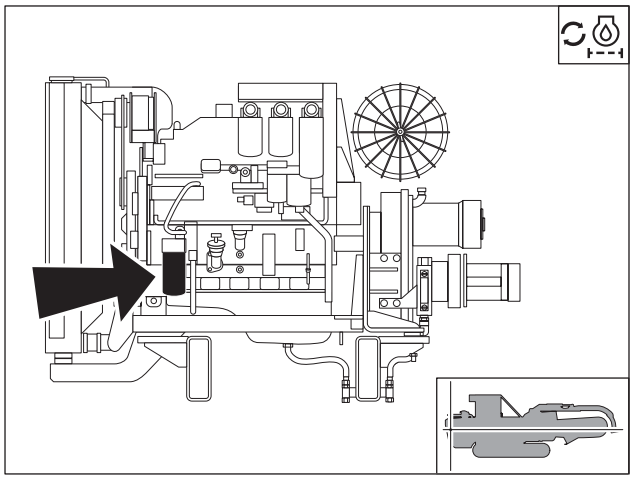
t21om078h.eps

https://truckmanualshub.com/

Check Engine Oil Breather

Check engine oil breather every 250 hours.

Clean or replace as necessary.

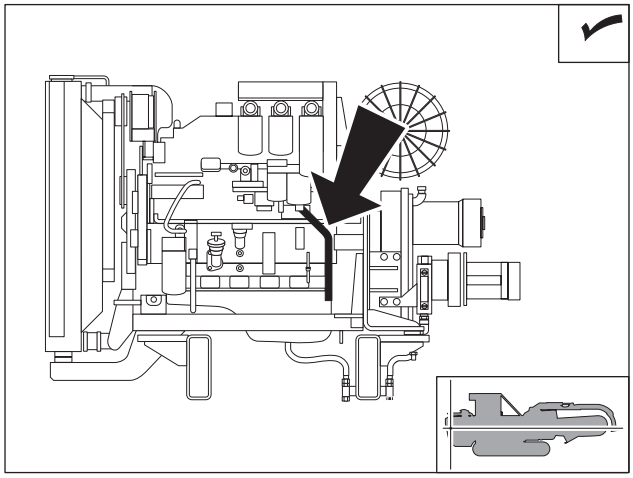

t21om084h.eps

Check Engine Belts

Check engine belt tension every 250 hours.

Check that the air conditioner compressor belt is correctly tightened. Tighten the belt if loose. Replace the belt if it is worn.

Check and replace the radiator fan belt, if necessary.

Check the belt tightener bearing and the fan bearing.

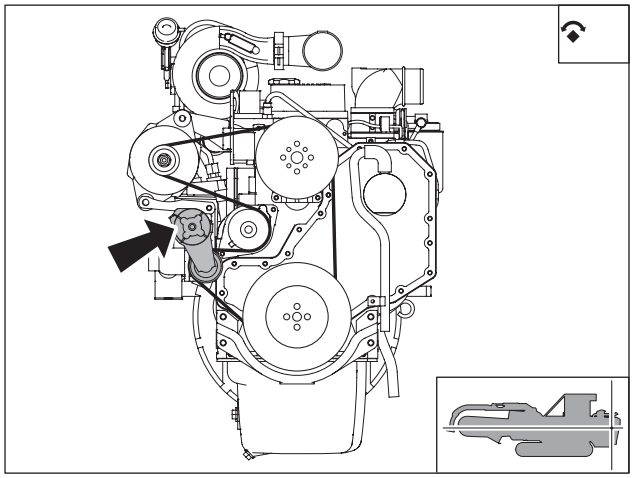

t21om076h.eps

https://truckmanualshub.com/

Change Hydraulic Filters (Initial)

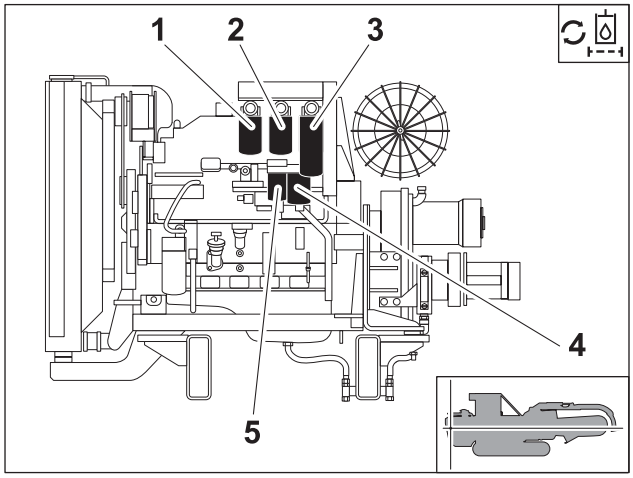

t21om048h.eps

Change hydraulic filters every 250 hours.

Replace the hydraulic filters:

1. Close all six valves on the hydraulic fluid tank.
2. Clean the external filter casings.
3. Loosen and remove the filter casing.
4. Remove all filtering elements (1-5) by loosening them from the heads and clean the casing and all other parts with a non-flammable solvent.
5. Install new filter elements.
6. Open all valves of the hydraulic tank.

IMPORTANT: Make sure that the tank valves are completely open.

7. After opening the valves, wait three minutes before starting the engine.
8. All operating controls must be in neutral (idle) position.
9. Start the engine and let it run for 5 minutes without performing any additional functions. At this stage, it is possible to hear an unusual sound caused by the air getting into the system during filter replacement.
10. Turn the diesel engine off and wait 2 minutes (this operation enables the air bubbles to surface and to be expelled more quickly).
11. Start the diesel engine again and let it idle without using the machine at all for 3 minutes.
12. Operate the trench cleaner. If this function makes a harsh sound, immediately stop using the control and wait for one more minute with the engine idling (the noise means that air is in the circuit).
13. Repeat the trench cleaner operation but immediately release the control if the noise persists. In that case, turn the engine off and repeat the procedure.
14. If the trench cleaner is operated again and no more harsh sounds are heard, ensure the other controls work properly (boom lifting, side conveyor, swivel conveyor, belts, etc.).
15. If harsh sounds are still perceived, immediately release the controls and wait one more minute with the engine idling. When all controls are working properly, the machine can be operated.
16. Fill the hydraulic tank to the proper level (use the sight glass to determine the proper level).

https://truckmanualshub.com/

500 Hour

Location	Task	Notes
TRACTOR	Change ground drive gearbox oil	
	Change coupler oil	
	Change hydraulic fluid	
	Change hydraulic filters	
	Replace fluid suction filters	
	Check parking brakes	
Trencher	Change digging chain gearbox and flywheel oil	
	Change digging boom tail roller gaskets	

Change Ground Drive Gearbox Oil

Change ground drive gearbox oil every 500 hours.

1. Place a container under drain plug (1) and remove drain plug.
2. Remove oil level plug (2) and allow oil to drain.
3. Reinstall oil level plug (1).
4. Add MPL.
5. Service breather with respective gearbox.

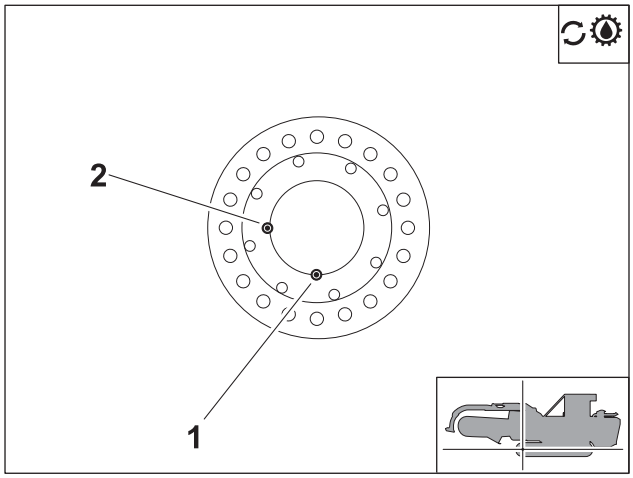

t21om037h.eps

Change Coupler Fluid

Change coupler fluid every 500 hours.

IMPORTANT: The engine-pump/coupler, flywheel gearbox, and the two track gearboxes must be serviced at the same time.

The flywheel gearbox cases and the coupler case are all equipped with air vent (1), oil level tank plug (2) and drain plug (3).

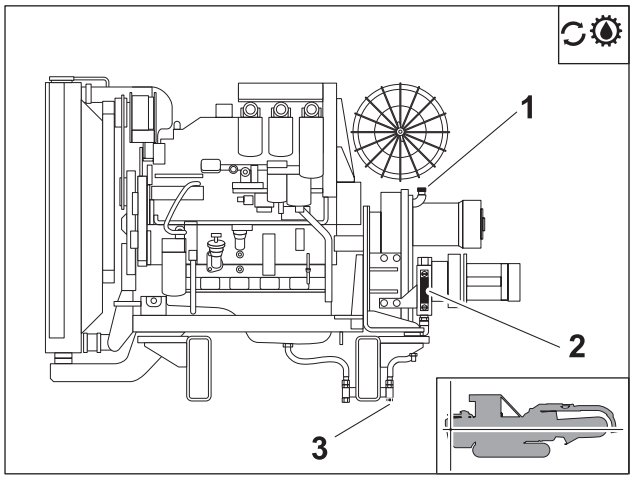

t21om039h.eps

https://truckmanualshub.com/

Change Hydraulic Fluid

Change hydraulic fluid and filters every 500 hours.

Drain hydraulic fluid from the tank (3) into a container suitable for transport or disposal. Remove breather (1) and add hydraulic fluid. Use the sight glass (2) to ensure that the proper amount of hydraulic fluid has been added.

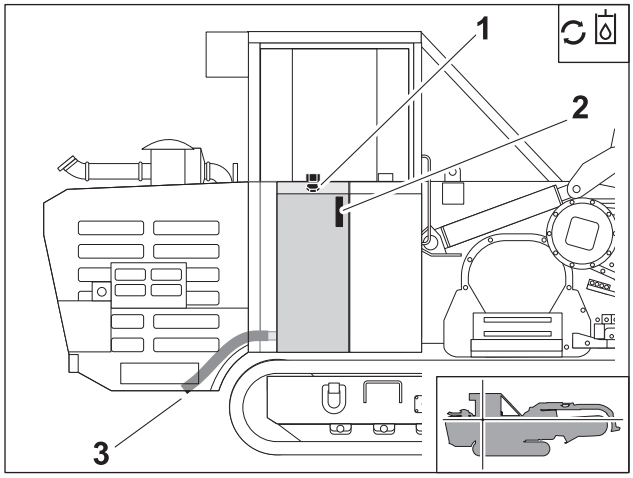

t21om050h.eps

Change Hydraulic Filters

Replace the hydraulic oil filters every 500 hours.

1. Close all six valves on the hydraulic fluid tank.
2. Clean the external filter casings.
3. Loosen and remove the filter casing.
4. Remove all filtering elements (1-5) by unscrewing them from the relevant heads. Clean the casing and all other parts with a non-flammable solvent.
5. Mount new filter elements.

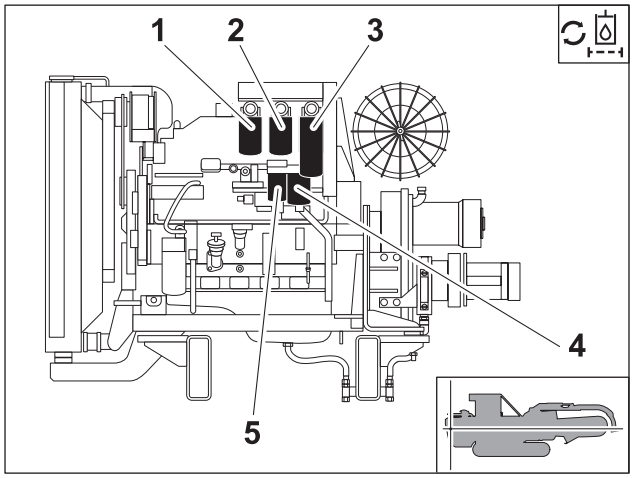

t21om048h.eps

IMPORTANT: Make sure that the tank valves are completely open.

6. Open all valves of the hydraulic tank.
7. After opening the valves, wait three minutes before starting the engine.
8. All operating controls must be in neutral (idle) position.

https://truckmanualshub.com/

Replace Hydraulic Fluid Suction Filter

Replace hydraulic fluid suction filter every 500 hours.

1. Remove the tank suction filter.
2. Clean the suction filter and breather, the magnetic plug and relevant wire net filter with non-flammable solvent.
3. Mount the suction filter.
4. Apply silicone on plug and tank then mount them back together. Pay attention that excess silicone does not fall in the tank.
5. Tighten the plug bolts with sealant and reinstall the breather in the plug.
6. Fill with hydraulic fluid.

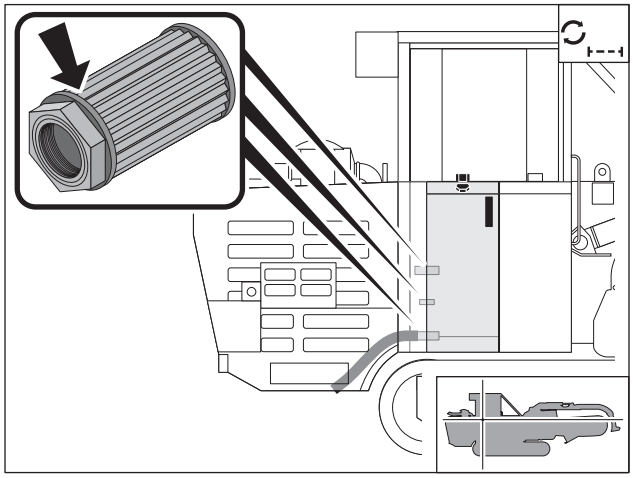

t21om075h.eps

IMPORTANT:

- Change the hydraulic filters following this procedure.
- Do not mix any hydraulic oils produced by different oil companies.
- The machine is equipped with the oil indicated in the machine configuration card. This oil must be used for operations to be carried out at ambient temperatures between -13° - 104°F (-25° - 40° C). For operations with colder or hotter temperatures, please contact your Ditch Witch dealer.

Check Parking Brakes

Check the parking brake and replace the brake discs every 500 hours.

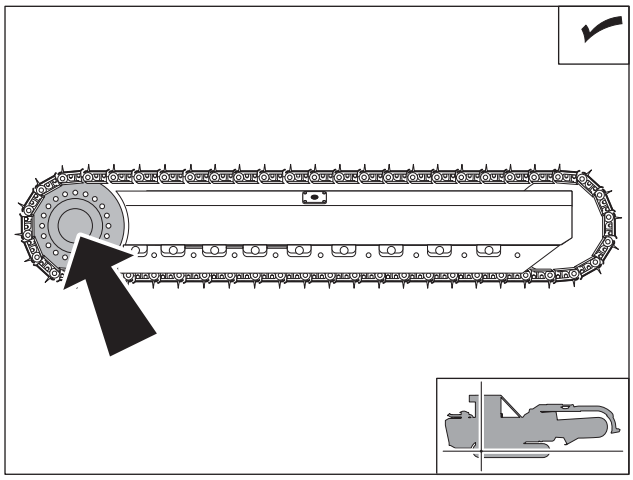

t21om077h.eps

https://truckmanualshub.com/

Change Flywheel Gearbox Fluid

Change flywheel gearbox fluid every 500 hours.

IMPORTANT: The engine-pump/coupler, flywheel gearbox, and the two track gearboxes must be serviced at the same time.

1. To fill, remove the breathers (1, 2).
2. Remove the plugs (3, 6) marked "OIL LEVEL" on the gearbox (7) and flywheel (8).
3. Fill with suitable oil until it leaks out of the oil level holes.
4. When the oil is to be changed, use the drain plugs marked "OIL DRAIN" (4,5).

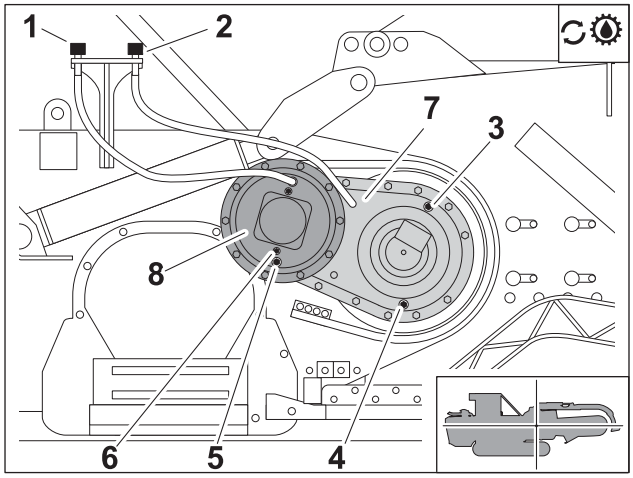

t21om036h.eps

Replace Tail Roller Gaskets

Replace tail roller gaskets every 500 hours.

Disassemble the tail roller, check the bearing conditions and replace the grease retainer gaskets.

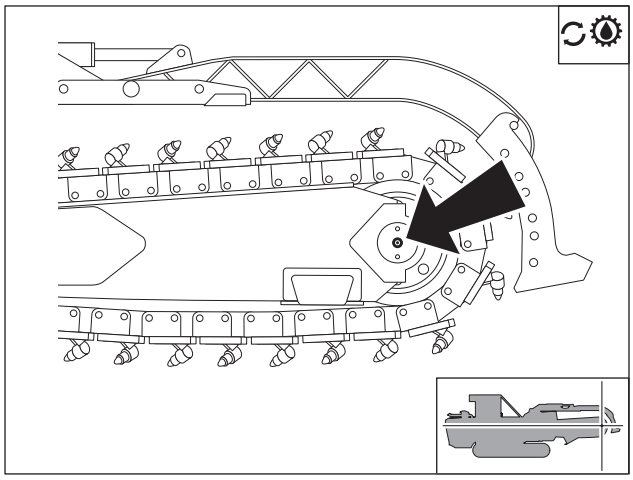
t21om073h.eps

https://truckmanualshub.com/

1500 Hour

Location	Task	Notes
TRENCHER	Exchange flywheel gearbox	

Exchange Flywheel Gearbox

Schedule flywheel gearbox to be exchanged every 1500 hours.

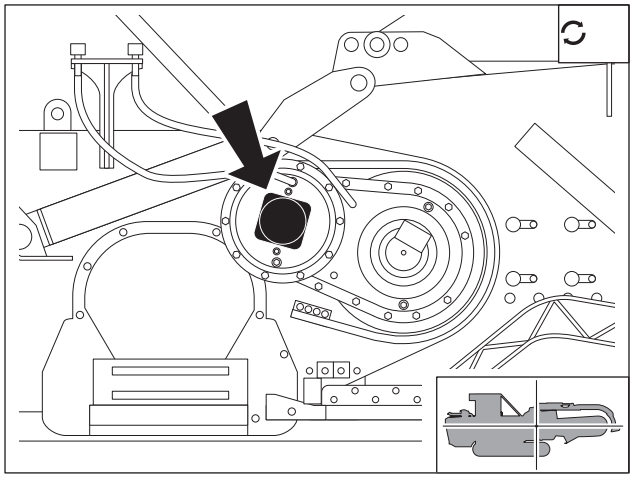

t21om074h.eps

https://truckmanualshub.com/

2000 Hour

Location	Task	Notes
TRACTOR	Change engine coolant	

Change Engine Coolant

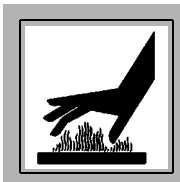

CAUTION Hot parts may cause burns. Do not touch until cool.

NOTICE: Do not remove the pressure cap from a hot engine. Wait until the coolant temperature is below 122° F (50° C) before removing the pressure cap. Heated coolant spray or steam can cause personal injury.

Change engine coolant every 2000 hours.

Drain cooling system at drain (2) every two years or 2000 hours. Add approved coolant according to instructions below. Refill capacity is 23 qt (21.8 L).

NOTICE:

- The use of non-approved coolant may lead to engine damage or premature engine failure and will void engine warranty.
- See "Approved Coolant" on page 202 for list of approved coolants.
- Use only distilled water for mixing coolants. Do not use tap water.

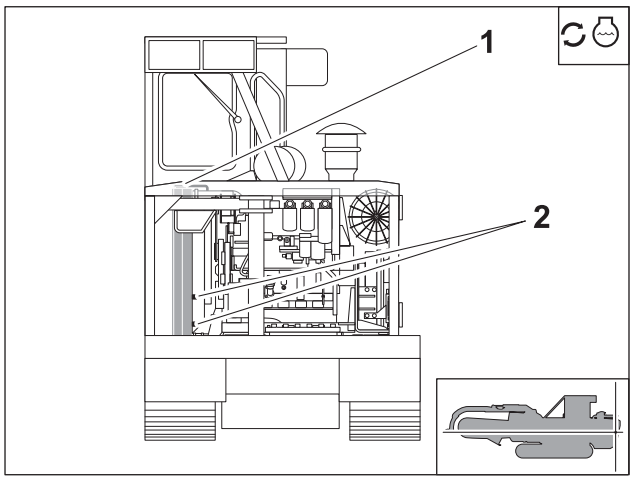

t21om051h.eps

To fill:

1. Add coolant at radiator fill (2) at a rate of 3 gpm (11.4 L/min) or less until full.
2. Run engine with thermostat open (>195°F/90°C engine temperature) for several minutes.
3. Stop engine and let it cool.
4. Maintain coolant level at halfway point on sight glass (3).

https://truckmanualshub.com/

Flush

CAUTION Hot parts may cause burns. Do not touch until cool.

NOTICE: Do not remove the pressure cap from a hot engine. Wait until the coolant temperature is below 122° F (50° C) before removing the pressure cap. Heated coolant spray or steam can cause personal injury.

1. Fill the system with a mixture of sodium carbonate and water (or a commercially available equivalent).
2. Operate the engine for 5 minutes with the coolant temperature above 176° F (80° C).
3. Shut the engine off and drain the cooling system.
4. Fill the cooling system with good-quality water.
5. Operate the engine for 5 minutes with the coolant temperature above 176° F (80° C).
6. Shut the engine off, and drain the cooling system.

Fill

1. The system has a designed fill rate of 5 gal (19 L) per minute. Only use extended life coolant. Refer to the cooling system specifications for capacity.
2. Check the coolant level again to make certain the system is full of coolant.

https://truckmanualshub.com/

As Needed

Location	Task	Notes
TRACTOR	Adjust track tension	
TRENCHER	Replace conveyor belt	
	Adjust digging chain	
	Replace wearplate	

Adjust Track Tension

Adjust tension as needed.

Check the track chain to make sure that it is suitably tightened. See "Check Track Tension" on page 105.

To adjust, use the tensioner located on the undercarriage external sides.

IMPORTANT: Do not tighten the track.

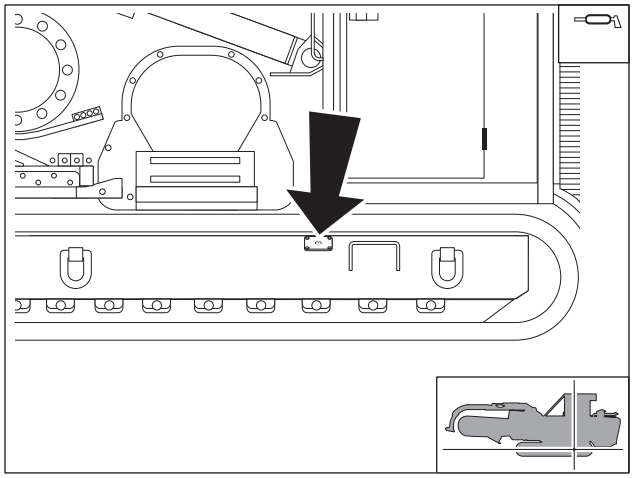

t21om027h.eps

Replace Conveyor Belt

Replace conveyor belt as needed.

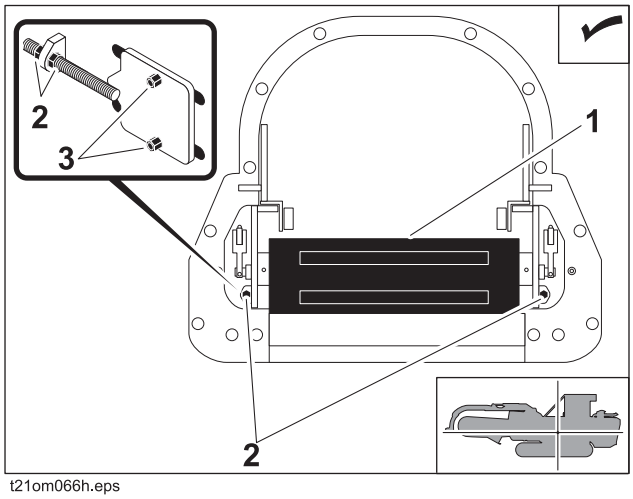

t21om066h.eps

1. With the engine running, move the conveyor toward the right side of the machine (to maximum translation point), by operating the panel controls. Turn engine off after adjustment.
2. Loosen the belt (1) tension by loosening the adjusting tie-rods (2).
3. Slip off the two hydraulic motors directly connected with the motor shafts of the conveyor.
4. Remove the retaining locking pins of the security dowels (3) of the connecting rods.
5. Remove the four conveyor retaining bulkheads (one front left, one front right, one rear left, one rear right).
6. Slip off the conveyor from one side of the machine.

https://truckmanualshub.com/

7. Remove the lateral hose-end fitting sideboards (without removing the rubber from the metal sideboards).
8. Disassemble the motor roller (left or right).
9. Remove the "old" belt or cut it if unusable.
10. Fit the new belt starting from the end without roller.
11. Reinsert the previously disassembled motor roller and reassemble repeating the above-mentioned operations in reverse order.

Adjust Digging Chain Tension

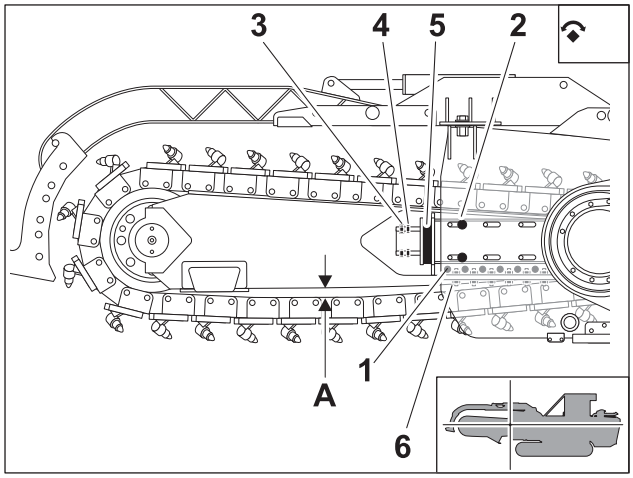

t21om040h.eps

Adjust digging chain tension as needed.

1. Loosen (by one turn) the twelve screws that keep the gibs in place below the digging boom (6) on both sides.
2. Loosen (by one turn) the twelve screws that hold the gibs sideways (1).
3. Loosen (by one turn) the 12 screws that fasten the digging boom on both sides (2).
4. Clean and lube the four tightening screws (3) and loosen the four locknuts (4).
5. Adjust the chain tension by tightening the four tightening screws when necessary (3).
6. Insert one of two shims (5) when the screw travel is not enough to adjust the tension.
7. Remove the boom screws (2) when slot length too tight and reinsert.
8. After achieving the proper tension, tighten the twelve screws that keep the gib in place from below; start from the external screws.
9. Tighten the twelve screws that keep the gibs in place below the digging boom (6).
10. Tighten the twelve screws that hold the gibs sideways (1).
11. Tighten the twelve screws that fasten the digging boom on both sides (2).
12. Tighten and lock the four tensioning screws with their four locknuts (4).
13. Check that the twelve screws that keep the gibs in place from below are all properly tightened.

NOTICE:

- Excessive tension in the digging chain could cause premature damage to the bearings of the digging gearbox.
- Possible chain wear and breakage caused by worn-out sprockets, incorrect tension or excessively worn baseplate antiroller plates will not be covered by warranty.
- The chain adjustment must be carried out when the chain is cold and the baseplates assembled. Do not adjust the chain when it is hot.

https://truckmanualshub.com/

Replace Wearplate

Replace wearplate as needed.

1. Inspect wearplate (shown).
1. Turn all battery disconnects to the off position. See "Battery Disconnects" on page 43.
2. Cut the welds holding the wearplate to the boom.
3. Inspect bottom surface of wearplate. Use bottom surface of wearplate if it has not been used.
4. Weld new wearplate onto digging boom.
5. Connect batteries.

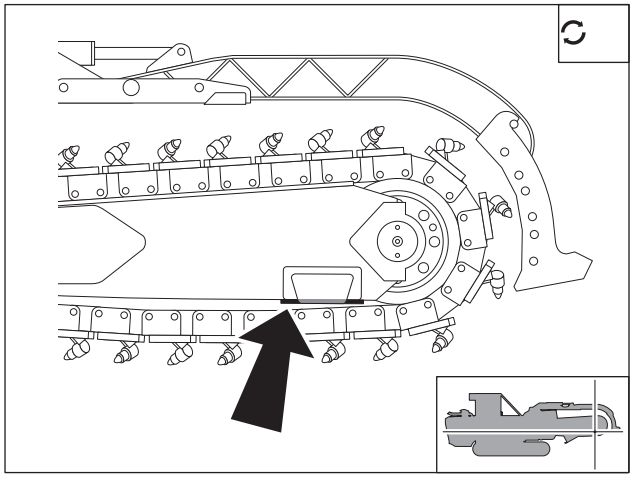

t21om085h.eps

https://truckmanualshub.com/

Specifications

HT220 Trencher

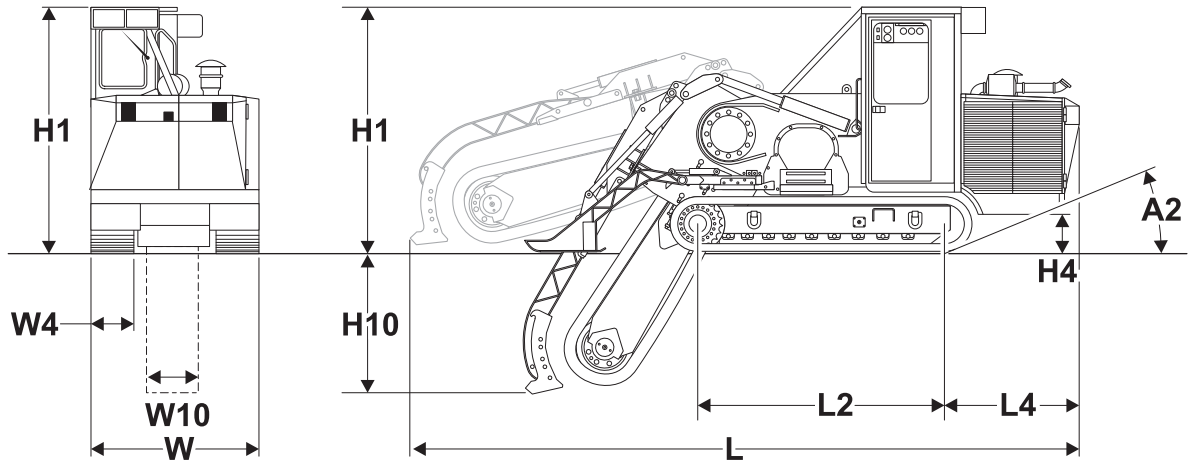

Dimensions		U.S.	Metric
A2	Angle of approach	22°	22°
W10	Trench width, maximum		
	single chain boom	12-18 in	305-460 mm
	double chain boom	24 in	610 mm
H1	Operating height	112.2 in	2.85 m
H4	Engine compartment clearance	17.71 in	450 mm
H10	Trench depth, maximum		
	4' boom	48 in	1.2 m
	5' boom	60 in	1.5 m
	6' boom	72 in	1.8 m
	8' boom	96 in	2.4 m

https://truckmanualshub.com/

L	Length, transport (with trench cleaner)		
	4' boom	302 in	7.66 m
	5' boom	315 in	8 m
	6' boom	331 in	8.4 m
	8' boom	358 in	9.1 m
L2	Pitch - length from center drive sprocket to center idler	112 in	2.84 m
L4	Engine compartment	60 in	1.54 m
	Spoil discharge reach, minimum to maximum	17-20 in	4.3-5.1 m
W	Width, transport (with 20"/51 cm Track Pads)	88 in	2.24 m
W4	Width, track	20 in	510 mm
W10	Trench width, maximum	24 in	610 mm

Operation		**U.S.**	**Metric**
Forward, infinitely variable speed			
	Low range	1.2 mph	2.0 km/h
	High range	2.1 mph	3.3 km/h
Reverse, infinitely variable speed			
	Low range	0-1.2 mph	0-2.0 km/h
	High range	0-2.1 mph	0-3.3 km/h
Digging chain speed @ 2200 rpm		0-650 fpm	0-200 m/min
Allowable operating weight, maximum		46,297 lb	21,000 kg
Operator orientation: facing left of vehicle in full view of all operations			

https://truckmanualshub.com/

Power	U.S.	Metric
Engine: Cummins QSB 6.7, diesel		
Cooling medium: extended life coolant		
Injection: direct		
Aspiration: turbocharged and charge air cooled		
Number of cylinders: 6 in-line		
Displacement	409 in^3	6.7 L
Bore	4.21 in	107 mm
Stroke	4.88 in	124 mm
Engine manufacturer's maximum gross power	220 hp	164 kW
Rated speed (no load)	2,200 rpm	2,200 rpm

Power Train
Ground drive transmission: hydrostatic
Dual path hydrostatic: planetary transmissions capable of full counter rotation with single lever steering, single lever direction.
Service brake: wet disc, spring applied, hydraulic release
Parking brake: wet disc, spring applied, hydraulic release
Trencher drive: hydrostatic

https://truckmanualshub.com/

Hydraulic System		U.S.	Metric
Type: pressure and flow compensated (load sensing)			
	Maximum flow	46 gpm	174 L/min
	Maximum pressure	2,610 psi	180 bar
Ground drive: closed loop			
	Maximum flow	34 gpm	129 L/min
	Maximum pressure	4,206 psi	290 bar
Digging drive: closed loop			
	Maximum flow	64 gpm	242 L/min
	Maximum pressure	5,280 psi	364 bar
	Ground drive pump capacity at 2,200 rpm	13.6 gpm	51.5 L/min
	Ground drive pump relief setting	5,000 psi	344.7 bar
Chain pump pressure			
	Maximum	5,000 psi	344.7 bar
Service pump pressure			
	Hydraulic fluid maximum temperature	176° F	80° C
	Pump flow	45 gpm	170 L/min
	Pressure setting	2,600 psi	180 bar

Fluid Capacities	U.S.	Metric
Fuel tank	114 gal	431 L
Engine oil	26.5 qt	100.3 L
Flywheel compartment	2 pt	0.9 L
Gearbox	20 qt	9.5 L
Hydraulic reservoir	85 gal	290 L
Hydraulic system	87 gal	322 L

Batteries
Group 49, SAE reserve capacity rating 150 minutes, SAE cold crank rating 825 amps

https://truckmanualshub.com/

Noise Levels
Operator 81 dBA sound pressure per ISO 6394
Exterior 111 dBA sound power per ISO 6393

Specifications are called out according to SAE recommended procedures. Specifications are general and subject to change without notice. If exact measurements are required, equipment should be weighed and measured. Due to selected options, delivered equipment may not necessarily match that described.

https://truckmanualshub.com/

https://truckmanualshub.com/

Support

Procedure

Notify your dealer immediately of any malfunction or failure of Ditch Witch equipment.

Always give model, serial number, and approximate date of your equipment purchase. This information should be recorded and placed on file by the owner at the time of purchase.

Return damaged parts to dealer for inspection and warranty consideration if in warranty time frame.

Order genuine Ditch Witch replacement or repair parts from your authorized Ditch Witch dealer. Use of another manufacturer's parts may void warranty consideration.

Resources

Publications

Contact your Ditch Witch dealer for publications and videos covering safety, operation, service, and repair of your equipment.

Ditch Witch Training

For information about on-site, individualized training, contact your Ditch Witch dealer.

https://truckmanualshub.com/

Warranty

Ditch Witch Equipment and Parts Limited Warranty Policy

Subject to the limitations and exclusions herein, free replacement parts will be provided at any authorized Ditch Witch dealership for any Ditch Witch equipment or parts manufactured by The Charles Machine Works, Inc. (CMW) that fail due to a defect in material or workmanship within one (1) year of first commercial use (Exception: 2 years for all SK5 attachments). Free labor will be provided at any authorized Ditch Witch dealership for installation of parts under this warranty during the first year following initial commercial use of the serial-numbered Ditch Witch equipment on which it is installed.

Exclusions from Product Warranty

- Wear-related failure of parts subject to ground contact including, but not limited to, digging teeth, digging chains, sprockets, backhoe buckets, plow blades, drill pipe, drill bits, backreamers, and swivels.
- All incidental or consequential damages.
- All defects, damages, or injuries caused by misuse, abuse, improper installation, alteration, neglect, or uses other than those for which products were intended.
- All defects, damages, or injuries caused by improper training, operation, or servicing of products in a manner inconsistent with manufacturer's recommendations.
- All engines and engine accessories (these are covered by original manufacturer's warranty).
- Tires, belts, and other parts which may be subject to another manufacturer's warranty (such warranty will be available to purchaser).
- All implied warranties not expressly stated herein, including any warranty of fitness for a particular purpose and merchantability.

IF THE PRODUCTS ARE PURCHASED FOR COMMERCIAL PURPOSES AS DEFINED BY THE UNIFORM COMMERCIAL CODE, THEN THERE ARE NO WARRANTIES WHICH EXTEND BEYOND THE FACE HEREOF AND THERE ARE NO IMPLIED WARRANTIES OF ANY KIND WHICH EXTEND TO A COMMERCIAL BUYER. ALL OTHER PROVISIONS OF THIS LIMITED WARRANTY APPLY INCLUDING THE DUTIES IMPOSED.

Ditch Witch products have been tested to deliver acceptable performance in most conditions. This does not imply they will deliver acceptable performance in all conditions. Therefore, to assure suitability, products should be operated under anticipated working conditions prior to purchase.

Defects will be determined by an inspection within thirty (30) days of the date of failure of the product or part by CMW or its authorized dealer. CMW will provide the location of its inspection facilities or its nearest authorized dealer upon inquiry. CMW reserves the right to supply remanufactured replacements parts under this warranty as it deems appropriate.

Extended warranties are available upon request from your local Ditch Witch dealer or CMW.

Some states do not allow exclusion or limitation of incidental or consequential damages, so above limitation of exclusion may not apply. Further, some states do not allow exclusion of or limitation of how long an implied warranty lasts, so the above limitation may not apply. This limited warranty gives product owner specific legal rights and the product owner may also have other rights which vary from state to state.

For information regarding this limited warranty, contact CMW's Product Support department, P.O. Box 66, Perry, OK 73077-0066, or contact your local Ditch Witch dealer.

First version: 1/91; Latest version: 1/03

A Note To Ditch Witch Equipment Owners:

If your equipment was purchased through a Ditch Witch dealer, there is no need to read further.

However, if you purchased from any other source, please fill out the form on the reverse side and return it to us.

This will enable you to receive updates on this equipment as well as information on new products of interest.

Thanks for using Ditch Witch equipment.

(Please Fold Along This Line And Seal At Bottom With Tape)

NO POSTAGE NECESSARY IF MAILED IN THE UNITED STATES

BUSINESS REPLY MAIL

FIRST CLASS PERMIT NO 23 PERRY OKLAHOMA

POSTAGE WILL BE PAID BY

The Charles Machine Works, Inc.
P.O. Box 66
Perry, Oklahoma 73077-9989

A Note To Ditch Witch Equipment Owners:

If your equipment was purchased through a Ditch Witch dealer, there is no need to read further.

However, if you purchased from any other source, please fill out the form on the reverse side and return it to us.

This will enable you to receive updates on this equipment as well as information on new products of interest.

Thanks for using Ditch Witch equipment.

(Please Fold Along This Line And Seal At Bottom With Tape)

NO POSTAGE NECESSARY IF MAILED IN THE UNITED STATES

BUSINESS REPLY MAIL

FIRST CLASS PERMIT NO 23 PERRY OKLAHOMA

POSTAGE WILL BE PAID BY

The Charles Machine Works, Inc.
P.O. Box 66
Perry, Oklahoma 73077-9989

https://truckmanualshub.com/

Ditch Witch® Registration Card

Please Type or Print All Information

Purchaser's Company Name

Attention

Street Address or P.O. Box

City County

State Zip Nation

( )

Phone Number With Area Code

Model Serial Number

Attachments/Accessories Serial Numbers

Attachments/Accessories Serial Numbers

Attachments/Accessories Serial Numbers

Name of Ditch Witch Dealership

Your Signature

Ditch Witch® Registration Card

Please Type or Print All Information

Purchaser's Company Name

Attention

Street Address or P.O. Box

City County

State Zip Nation

( )

Phone Number With Area Code

Model Serial Number

Attachments/Accessories Serial Numbers

Attachments/Accessories Serial Numbers

Attachments/Accessories Serial Numbers

Name of Ditch Witch Dealership

Your Signature

https://truckmanualshub.com/

https://truckmanualshub.com/

Service Record

Service Performed	Date	Hours

https://truckmanualshub.com/

Service Performed	Date	Hours