https://truckmanualshub.com/

OWNER/OPERATOR MANUAL

PETTIBONE

MODEL 6036/6044/8036/8044 10044/10056

ROUGH TERRAIN FORKLIFT

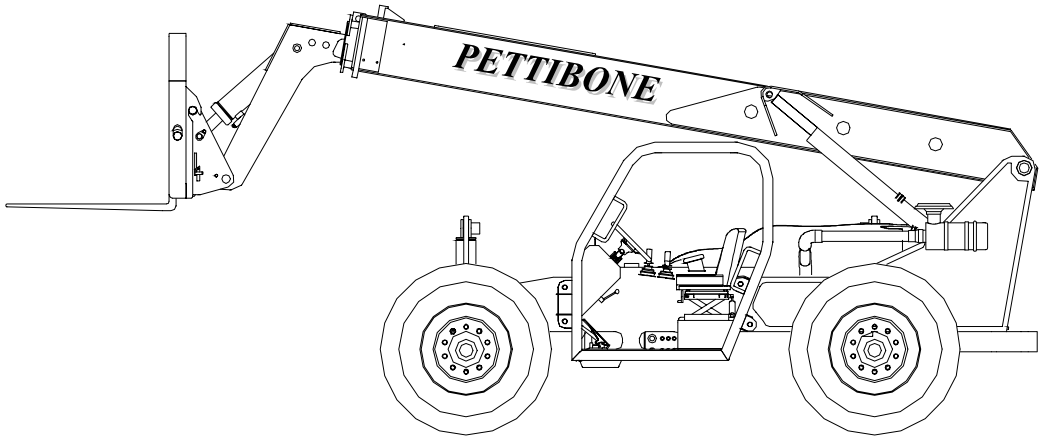

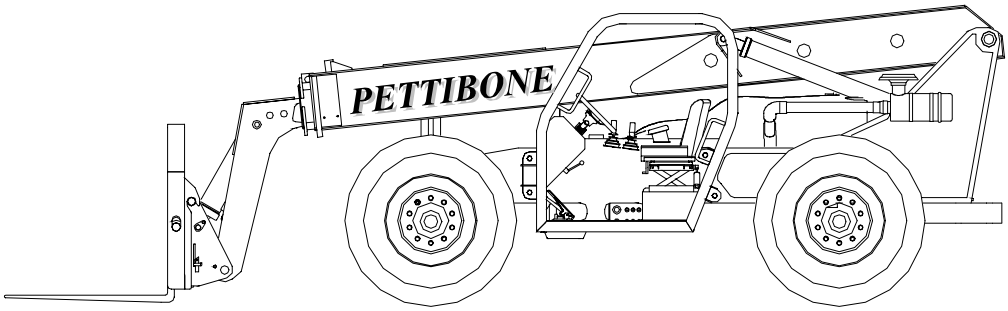

OM-4009

https://truckmanualshub.com/

The information and illustrations in this manual have been approved as accurate at the time of printing. However, the manual may contain information on options not present on your machine. Pettibone Michigan L.L.C. reserves the right to make changes and improvements in its products at anytime without notice or obligation.

This manual is to remain with the unit at all times. The storage compartment for this manual is located in the operator's cab behind the seat.

Contact Pettibone Michigan or an authorized dealer for replacement manuals.

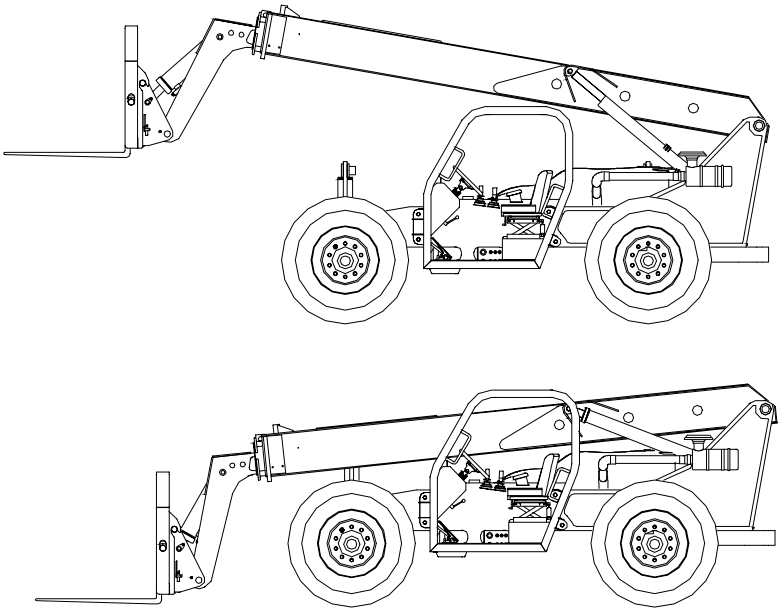

6036/6044/8036/8044 OWNER/OPERATOR MANUAL

Copyright December 1999
Pettibone Michigan, L.L.C.
Technical Publications
Baraga, MI

https://truckmanualshub.com/

Table of Contents

INTRODUCTION 6
PREFACE 6
CALIFORNIA PROPOSITION 65 WARNING 7
HYDRAULIC PRESSURE WARNING SHEET 8
SAFETY 9
SAFETY RULES 9
EXPLANATION OF "⚠ DANGER" 9
EXPLANATION OF "⚠ WARNINGS" 9
EXPLANATION OF "⚠ CAUTIONS" 9
EXPLANATION OF "NOTES " 9
BEFORE OPERATION 10
MACHINE OPERATION 11
TRANSPORTING SAFELY 12
PARKING THE MACHINE 12
BURN PREVENTION 12
FIRE OR EXPLOSION PREVENTION 13
MAINTENANCE 14
SAFETY WHILE SERVICING THE MACHINE 14
MAINTENANCE PROCEDURES 14
SAFETY 16
DECAL LOCATIONS 16
DECALS 16
Left Side View of Machine Decals 17
Decals Located Behind Seat 18
Hydraulic and Fuel Tank Decals 21
MATERIAL SAFETY DATA SHEETS (MSDS) 40
IDENTIFICATION NUMBERS 40
EQUIPMENT 42
MACHINE INSPECTION AND DELIVERY REPORT 42
SAFETY 42
RIGHT, LEFT, FRONT AND REAR OF MACHINE 43
EXPLANATION OF "⚠ DANGER" 44
EXPLANATION OF "⚠ WARNINGS" 44
EXPLANATION OF "⚠ CAUTIONS" 44
EXPLANATION OF "NOTES " 44
SAFETY PRECAUTIONS 44

continued on next page

continued from previous page

INTRODUCTION 46
IDENTIFICATION 46
FORKLIFT IDENTIFICATION PLATE 46
ENGINE IDENTIFICATION PLATE 46
TRANSMISSION IDENTIFICATION PLATE 46
AXLE IDENTIFICATION PLATE LOCATION 46
EQUIPMENT DESCRIPTION 48
FORKLIFT DESCRIPTION 48
STANDARD ENGINE DESCRIPTION 48
TRANSMISSION DESCRIPTION 48
AXLE DESCRIPTION 48
OPTIONS 48
OPERATION 51
Operator's Seat 51
Entering the Operator's Compartment 51
Seat Suspension Adjustment (optional) 51
Arm Rest 51
Seat Belt 52
Instrument Panel 53
Fuel Gauge 53
Engine Coolant Temperature Gauge 53
Engine Coolant Temperature Warning Light (Optional) 53
Inclinometer 55
Parking Brake Switch 55
Clutch Cut-off Switch 55
Axle Lock Warning Light 55
Brake Oil Pressure Warning Light 55
Park Brake Indicator Light 55
Low Voltage Warning Light 55
Engine Oil Pressure Warning Light 56
Ignition Switch 56
Steering Selector 56
Hydraulic Controls 57
Throttle and Brake Controls 58
Transmission Controls 59
CHECK TRANSMISSION OIL 60
CHECK HYDRAULIC FLUID LEVEL 61
TIRES AND RIMS 61
INSPECTION FOR LEAKS 62
GENERAL INSPECTION 62
GAUGES AND INDICATORS 62
HYDRAULIC FLUID LEVEL 62
CHANGES IN PERFORMANCE 62
TABLE IV. TIRE PRESSURES 62

(Continued on next page)

https://truckmanualshub.com/

continued from previous page

OPERATIONAL CHECKS & SERVICES 63
OPERATING INSTRUCTIONS 63
STARTUP AND DRIVING 63
RAISING THE LOAD 67
MAINTENANCE 69
INTRODUCTION 69
TABLE V. SCHEDULED MAINTENANCE 69
TABLE VI. FLUIDS AND LUBRICANTS 71
LUBRICATION 73
TABLE VII. LUBRICATION POINTS 75
TROUBLESHOOTING 76
HOW TO USE TROUBLESHOOTING TABLES 76
TABLE VIII. ENGINE TROUBLESHOOTING 76
TABLE IX. ENGINE ELECTRICAL TROUBLESHOOTING 80
TABLE X. TRANSMISSION TROUBLESHOOTING 81
TABLE XI. HYDRAULIC SYSTEM TROUBLESHOOTING 83
MAIN DIRECTIONAL VALVE TROUBLESHOOTING 85
REMOTE CONTROL (JOYSTICK) VALVE TROUBLESHOOTING 87
ACCUMULATOR CHARGING VALVE TROUBLESHOOTING 88
FRAME TILT CYLINDER TROUBLESHOOTING 89
FORK TILT CYLINDER TROUBLESHOOTING 90
EXTENSION CYLINDER TROUBLESHOOTING 91
REPLACE FUEL FILTER ELEMENT 92
BLEEDING THE FUEL SYSTEM 92
MAINTENANCE PROCEDURES 92
SERVICE AIR CLEANER 94
DRAIN AND REFILL COOLING SYSTEM 95
THERMOSTAT TEST 96
FUSE REPLACEMENT 98
ENGINE OIL CHANGE 98
TRANSMISSION OIL CHANGE 99
TRANSMISSION FILTER ELEMENT REPLACEMENT 100
AXLE LUBRICANT CHANGE 100
SUMMARY 101

https://truckmanualshub.com/

NOTES

THIS PAGE
INTENTIONALLY
LEFT BLANK

https://truckmanualshub.com/

INTRODUCTION

PREFACE

This manual instructs the owner/operator in the correct operation of the Pettibone Michigan Extendo forklift. The location and operation of all controls are explained in this manual. It also contains lubrication tables, which indicate the recommended servicing intervals for all fluids and greased components.

This manual should be considered a permanent part of your vehicle. It should stay with the vehicle, if sold, to provide the next owner with required operating instructions.

All instructions, illustrations and specifications contained herein are based upon the latest product information available at the time of printing. Pettibone Michigan reserves the right to change specifications without prior notice in order to follow its policy of constantly striving to manufacture a better product without incurring any liability to provide these new features on any units previously manufactured.

Be sure your dealer has returned the Warranty Registration Form for your machine to Pettibone Michigan. This form must be filled out properly in initiate warranty coverage on the machine. In addition, your dealer will fill out a Machine Inspection Report, which the owner should sign. Also, a 30-day check up is recommended as defined in this manual. If a problem occurs with your machine during the warranty period, contact your dealer immediately. Do not continue to operate the machine until authorized.

https://truckmanualshub.com/

CALIFORNIA PROPOSITION 65 WARNING

Diesel engine exhaust and some of its constituents are known to the State of California to cause cancer, birth defects, and other reproductive harm

https://truckmanualshub.com/

HYDRAULIC PRESSURE WARNING SHEET

WARNING

OBSERVE ALL MAXIMUM HYDRAULIC SYSTEM PRESSURE WARNINGS AND DECAL FOR THIS MACHINE.

SETTINGS HIGHER THAN POSTED PRESSURES MAY RESULT IN DEATH, SEVERE INJURY OR PROPERTY DAMAGE.

In many instances we have learned that the hydraulic relief valves of this equipment have been reset, thereby increasing the maximum pressures and, with this, the load the unit will lift before the relief valve opens. In some instances, the consequences of increasing this setting have been serious. The function of the relief valve is to provide a fuse action to protect the machine and the operator from overloading. When overloaded, different portions of the machine can become stressed to a level at which parts fracture, possibly resulting in death, severe injury or property damage. **Resetting hydraulic pressures above factory settings is an extremely dangerous practice.**

Accordingly, you are advised that the settings of these valves are limited to the maximum listed above. Pressure settings in excess of this level render each and all Pettibone Michigan warranties null and void, and constitute an obvious misuse and abuse of our product.

Pettibone Michigan, L.L.C.

https://truckmanualshub.com/

SAFETY

SAFETY RULES

Most accidents involving machine operation and maintenance can be avoided by following basic rules and precautions. Read and understand all the safety messages in this manual, and the safety signs on the machine before operating or servicing the machine. See the dealer for any questions. **Failure to read and follow these instructions could result in death, serious injury or damage to the machine.**

READ THIS MANUAL COMPLETELY and be sure to understand the characteristics of speed, stability, and steering of this machine. **Do not remove this manual from the machine.** This manual must remain with the machine at all times. The manual storage box is located inside the operator's compartment, behind the operator's seat. See your dealer or contact Pettibone Michigan for additional manuals.

The safety information given in this manual does not replace safety codes, insurance regulations, or federal, state and local laws. Be sure the machine has the correct equipment according to these rules or laws.

IMPORTANT: *Safety messages in this section point out situations that can be encountered during the normal operation and maintenance of your machine. These safety messages also give possible ways of dealing with these conditions.*

Additional safety messages are used in the text of the manual to show specific safety hazards.

EXPLANATION OF "⚠ DANGER"
Denotes a hazard which **WILL** result in death or injury if proper precautions are not taken.

EXPLANATION OF "⚠ WARNINGS"
A warning is a statement that informs the reader of a condition that is unsafe to personnel. **Failure to heed a warning may result in DEATH or INJURY to personnel.**

EXPLANATION OF "⚠ CAUTIONS"
Cautions are provided as statements, which identify conditions and/or practices that **could** result in property damage or damage to the equipment.

EXPLANATION OF "*NOTES* "
Notes are statements that simply provide additional information.

https://truckmanualshub.com/

BEFORE OPERATION

- Avoid loose fitting clothing, loose or uncovered long hair, jewelry or loose personal articles.
- Different jobs will require different protective equipment. Items such as hard hats, protective shoes, heavy gloves, reflector type vests, respirators, and ear protection may be required. Know and use the equipment that is required before starting the job.
- Be prepared for emergencies. Always have a first aid kit and a good fire extinguisher. Know how to use both.
- Know the hand signals used on the job. Follow the instructions of the flag man, signs, etc.
- Check that all guards and covers are installed correctly.
- Foreign material or grease on the step or hand rail can cause an accident. Keep the step and hand rail clean.
- Before operating at night, check that all lamps illuminate.
- Know the rules, laws and safety equipment necessary for transporting this machine on road or highway.
- Before starting the engine, walk around the machine and check for oil or fluid leaks. Replace all broken or missing parts and do the required lubrication and maintenance as shown in this manual. Clean all trash and debris from the machine.
- Always face the machine and use the hand rail and step when climbing aboard. Do not rush.
- Remove all loose objects from the operator's compartment and from the machine. Loose objects can jam controls and cause accidents.
- Before starting the engine, always properly fasten and securely tighten the seat belt, and always keep the seat belt fastened while operating the machine. **Failure to do so could result in death or serious injury.**
- Engine exhaust fumes can cause death. If you operate this machine in an enclosed area, use good ventilation to replace the exhaust fumes with fresh air.
- Make sure all persons are away from the machine and give a warning before starting the engine.

https://truckmanualshub.com/

MACHINE OPERATION

- Check all controls in a clear area and make sure the machine is operating correctly.

- Do not allow other persons to ride on the machine. Other persons can fall or can cause an accident.

- Do not use the machine to lift personnel or to lift any type of personnel carrier, including platforms. The machine operator may not have control over such a carrier device, **which could result in serious injury or death**.

- Dust, fog, smoke, etc., can decrease your vision and cause an accident. Stop the machine or decrease the speed until everything can be seen.

- Contact with high voltage power lines, underground cables, etc., **can cause serious injury or death from electrocution.**

NOTE

Before driving or operating in an area with high voltage lines or cables, HAVE THE POWER DISCONNECTED OR KEEP A SAFE WORKING DISTANCE from the lines or cables. Know the safe working distance from the high voltage power equipment and observe federal, state/provincial, or local safety codes or regulations that apply to the job site.

- Electrical cables, gas pipes, water pipes, sewers, or other underground objects **can cause death or serious injury.** Learn the location of underground hazards before operating the machine in a new area.

- **If this machine rolls over, death or serious injury may occur**. Determine if weather, road, or earth conditions will permit safe operation on a hill, ramp, or rough ground.

- Stay away from hazardous areas such as ditches, overhangs, etc. Walk around the work area before starting the forklift and look for hazards.

- Be alert and always know the location of all workers in the area. Keep all other persons completely away from the machine. **Serious injury or death can result if these instructions are not followed**.

- Operate the machine controls from the operator's seat only.

- Keep the forks low when moving around the work area and be careful when raising the load.

- Before operating the equipment where visibility is reduced, such as next to a building, install safety markers to warn others of possible danger.

TRANSPORTING SAFELY

NOTE
When correctly loaded on the flatbed of a tractor-trailer, this machine is designed to be transported between local work sites.

- Know which warnings must be placed on machine for highway travel and whether an escort is needed.

- Flag attachment on furthest projection of machine for safety.

- Know measurements of machine when mounted on truck. Be sure machine is within proper limits for highway transporting.

- Become familiar with public laws and ordinances affecting driving on public roads with a mounted machine. Check route for clearance. Check bridges for weight limits.

- Always shut down machine engine when transporting, even over short distances, and never ride on machine while transporting. **Serious injury or death can result if these instructions are not followed**.

- Do not put chains over or against hydraulic lines or hoses.

- Always use tape or cap exhaust pipe to prevent air from spinning turbocharger while vehicle is transported at highway speeds. The turbochargers depend upon engine oil pressure to lubricate shaft bearings and may be damaged if spun dry. **BE SURE TO REMOVE TAPE AFTER TRANSPORTING OR BEFORE STARTING ENGINE**.

PARKING THE MACHINE

- When parking the machine and before leaving the operator's seat, engage the parking brake by flipping the switch located on the right side of the dashboard.

- Always face the machine and use the hand rail and step when getting off. Do not rush and do not jump from the machine.

BURN PREVENTION

- Battery acid causes severe burns. Batteries contain sulfuric acid. Avoid contact with skin, eyes or clothing. Antidote- EXTERNAL: Flush with water. INTERNAL: Drink large quantities of water

continued on following page

or milk. Follow with milk of magnesia, beaten egg or vegetable oil. Call a doctor immediately. EYE: Flush with water for 15 minutes and get prompt medical attention.

- If the battery electrolyte freezes, the battery may explode if, (1) battery charge is attempted, or (2) trying to jump start the engine. To prevent the battery electrolyte from freezing, keep the battery at full charge.

- Hot coolant can spray out when the radiator cap is removed. To remove the radiator cap, let the cooling system cool, turn to the first notch, wait until the pressure is released, then remove the radiator cap.

FIRE OR EXPLOSION PREVENTION

- Sparks or flame can cause the hydrogen gas in a battery to explode. To prevent an explosion, when disconnecting the battery cables, disconnect the negative (-) cable first. When connecting battery cables, connect the negative (-) cable last. When connecting jumper cables to start the engine, connect the negative (-) cable last and disconnect the negative (-) cable first after the engine starts.

- Do not short circuit the battery posts with metal items.

- Do not weld, grind, or smoke near a battery.

- Sparks from the electrical system or engine exhaust can cause an explosion and fire. Before you operate this machine in an area with flammable dust or vapors, use good ventilation to remove the flammable dust or vapors.

- Engine fuel can cause an explosion or fire. Do not fill the fuel tank with the engine running or near open flames or sparks.

- Use nonflammable cleaning solvent to clean parts.

- Fire can cause injury or death. Always have a fire extinguisher near or on the machine. Make certain the fire extinguisher is serviced according to the manufacturer's instructions.

- If a fire extinguisher has been used, always recharge or replace the fire extinguisher before operating the machine.

- Remove all trash or debris from the machine each day. Especially check the engine area and exhaust system.

- **Starting fluid (ether) can cause death or serious injury**. Do not inhale starting fluid vapors. Wear face protection when removing or installing a starting fluid container or when using aerosol spray starting fluid. Use starting fluid according to the instructions in this manual.

https://truckmanualshub.com/

- If the machine has an oil, fuel, or hydraulic leak, always repair the leak and clean the area before operating.

- Keep the cooling system clean and maintain the correct coolant level.

- Check the electrical system for loose connections or frayed insulation. Repair or replace the loose or damaged parts.

- Before welding or using a torch on the machine, clean the entire machine to reduce risk of fire hazard.

WARNING

Do not weld on any structural member unless specifically authorized by Pettibone Michigan. Any unauthorized welding will void the warranty and may cause death, severe injury or damage to the equipment.

MAINTENANCE

SAFETY WHILE SERVICING THE MACHINE

The following section gives suggested guidelines for operational maintenance on your machine. It is not intended for use as a service manual.

Check the Hour Meter regularly to determine when the machine needs periodic maintenance. In severe conditions (extreme dust, heat, cold, humidity, etc.) you will need to service your machine more often. Your experience may dictate a more severe servicing program.

Safety while servicing machine is the owner's responsibility. Only qualified and authorized personnel should be permitted to maintain, repair, adjust and inspect the machine.

Read and understand warnings and safety precautions in the "SAFETY" section and elsewhere in this manual before doing any service on machine. The following precautions should be used as a reminder to safe servicing.

WARNING

Improper service or repair can cause death, serious injury and/ or damage to the equipment. Refer to the service manual for proper maintenance procedures, including any supplied component manuals.

MAINTENANCE PROCEDURES

- Before servicing the machine, put a DO NOT OPERATE tag on the instrument panel.

- Lower boom to ground, shut down machine to a zero energy state, remove key from ignition and allow machine to cool before beginning work.

continued on following page

https://truckmanualshub.com/

- Relieve all hydraulic pressure in the hydraulic reservoir before breaking any hydraulic connection or before opening the reservoir access cover.

- Disconnect battery.

WARNING

If it is necessary to have the engine running while servicing the machine, have another person assist with the procedure. Do not leave the operator's seat with the engine running. Failure to follow these precautions could result in death, serious injury or damage to the equipment.

- Do not support the machine, the boom, or any attachments on cinder blocks, hollow tiles, or props that may crumble under a load. Do not work under a machine that is supported solely by a jack.

- Remove, block or guard against body contact with all other sources of hazardous pressure, temperature, electricity or machine motion.

- Make sure that boom and attachments are grounded to avoid electrical shock.

- Do not make any modifications to this machine or weld on any structural member unless specifically authorized by Pettibone Michigan. Any unauthorized modifications made or welding will void the warranty and may cause death, serious injury or damage to the equipment.

WARNING

Unauthorized modifications to this machine can cause injury or death. Refer to your authorized dealer or Pettibone Michigan before modifying the machine.

- Metal chips or debris can cause eye injury. Always wear eye or face protection when using a hammer on this machine. Use a hammer with a soft face, such as brass, to drive hardened pins.

- Hydraulic fluid or grease injected into skin can cause severe injury or death. Keep hands and body away from any pressurized leak. If fluid is injected into skin, see a doctor immediately.

- When servicing this machine, always wear safety protection, including but not limited to hard hat, workshoes and safety glasses.

- Don't leave loose tools and rags on the machine. Make sure that all walking and climbing surfaces are clean.

- Handle fuel carefully. Do not smoke while filling fuel tank or working near fuel. Refer to the "Lubricants" table when replacing oils, fluids or filling fuel tank.

https://truckmanualshub.com/

DECALS

SAFETY

The decals pictured in this section were accurate at this publication was printed. Pettibone Michigan reserves the right to add additional safety decals to the machine as necessary to ensure operator safety. It is the operator's responsibility to follow the instruction decals on the particular machine being operated.

WARNING

Injury or death can result if safety decals are not followed. Immediately replace any missing or damaged safety decal(s), and keep all safety decals clean and legible. Contact an authorized dealer or Pettibone Michigan for new safety decals.

- Be sure to read all safety decals and all instruction decals. Check these decals daily. Keep these decals clean.
- To clean the decals, use only a cloth, water, and soap. Do not use solvents, gasoline, etc.
- Replace decals if damaged, missing, or unreadable. If a decal is on a part that is replaced, install a new decal on the replacement part.

DECAL LOCATIONS

Table I., "MACHINE DECALS" consists of a list of decals located on the 6044 forklift. The table is divided into five columns:

- ITEM#: gives the number by which the particular decal is identified in Figures 1a. and 1b., "Decal Locations".
- PART#: gives number of that decal the Pettibone Michigan part number for reordering purposes.
- DESCRIPTION: gives a description of the decal.
- SERIAL # / DATE OF CHANGE: references if the decal was added to or changed on a particular machine.
- QTY. : lists the total number of that particular decal needed for the machine.

Full-size illustrations of these decals, along with expanded descriptions of each decal's location, are shown on pages 23-39 following Table I.

https://truckmanualshub.com/

Left Side View of Machine Decals

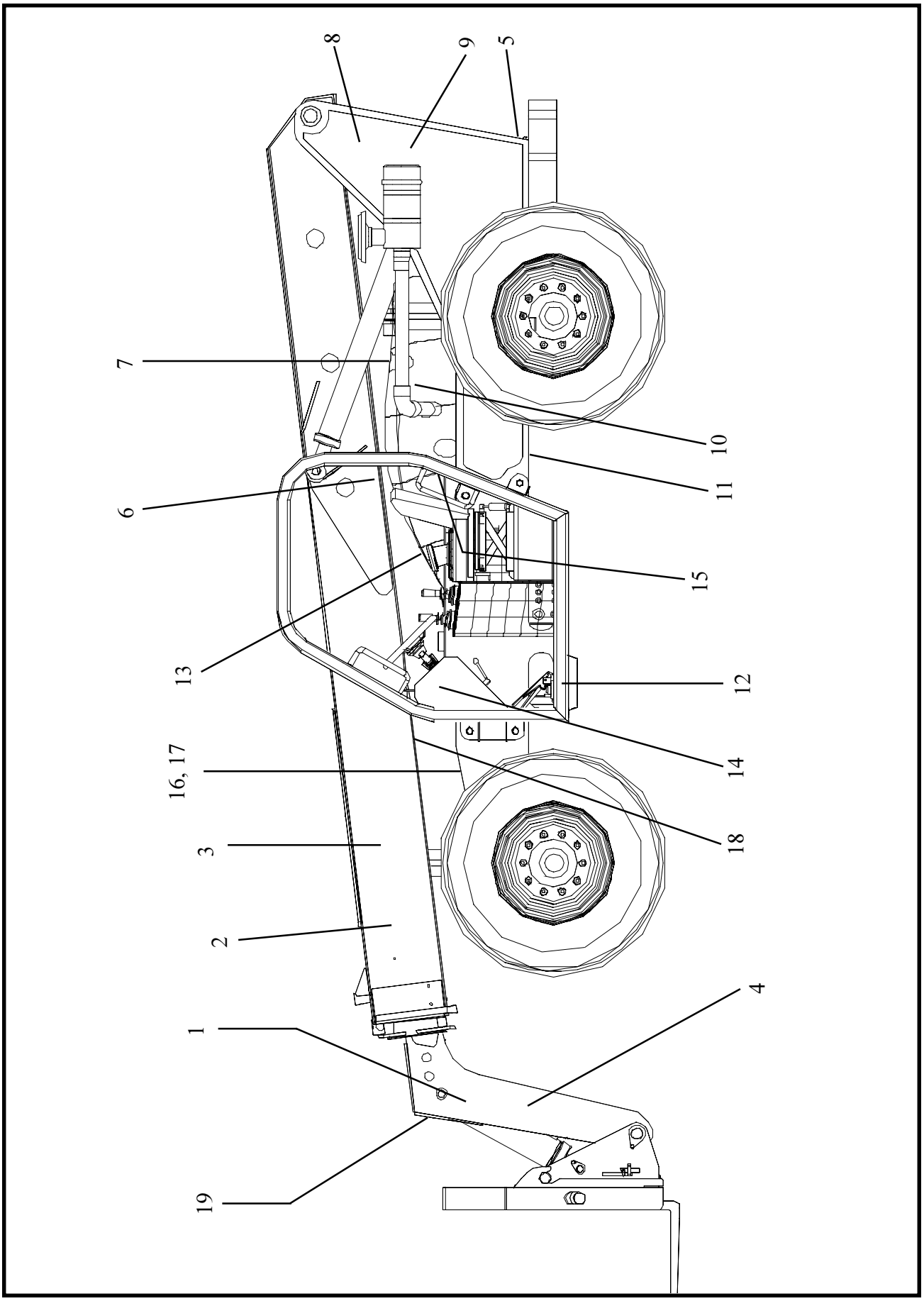

https://truckmanualshub.com/

Decals Located Behind Seat

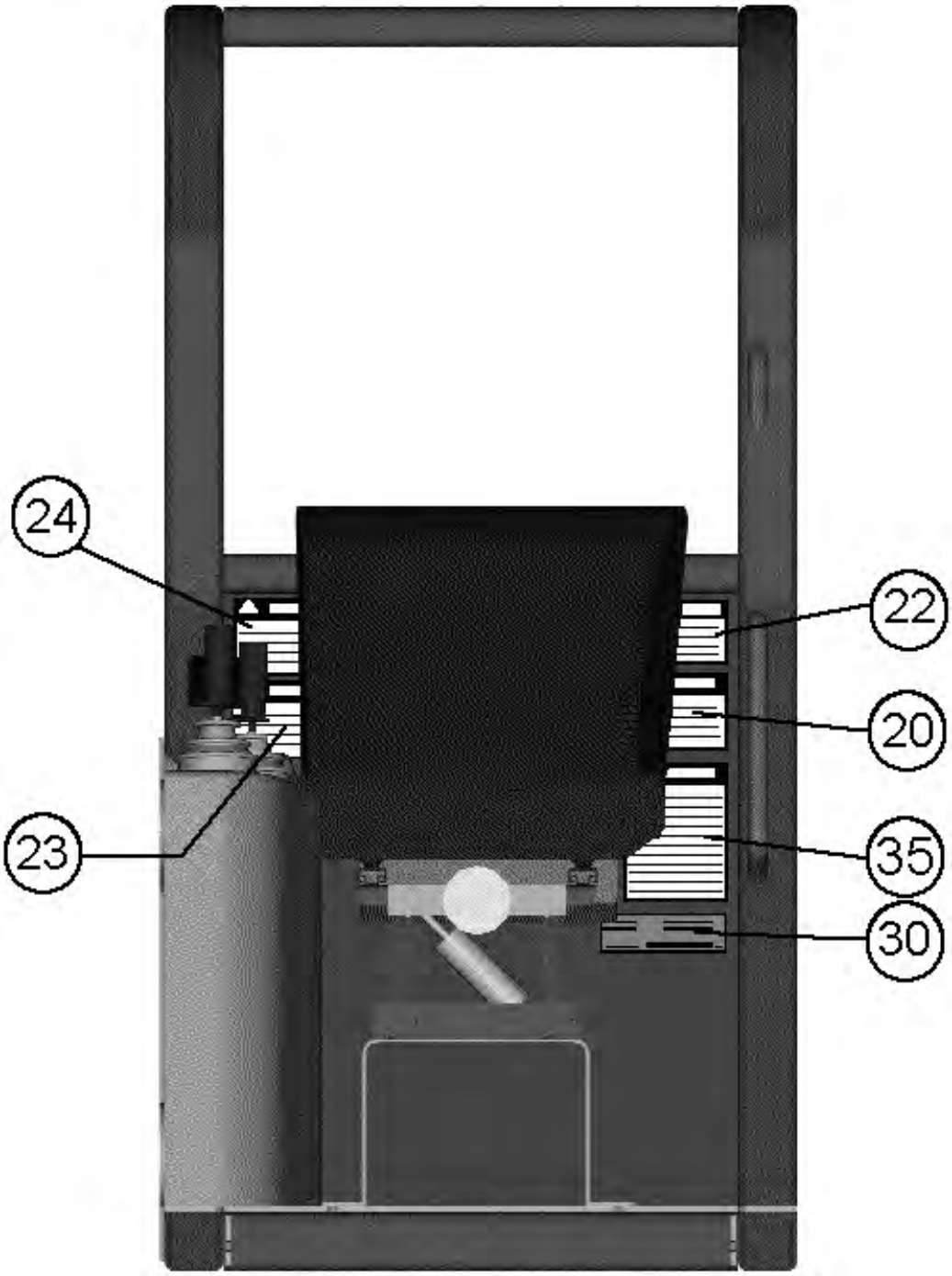

https://truckmanualshub.com/

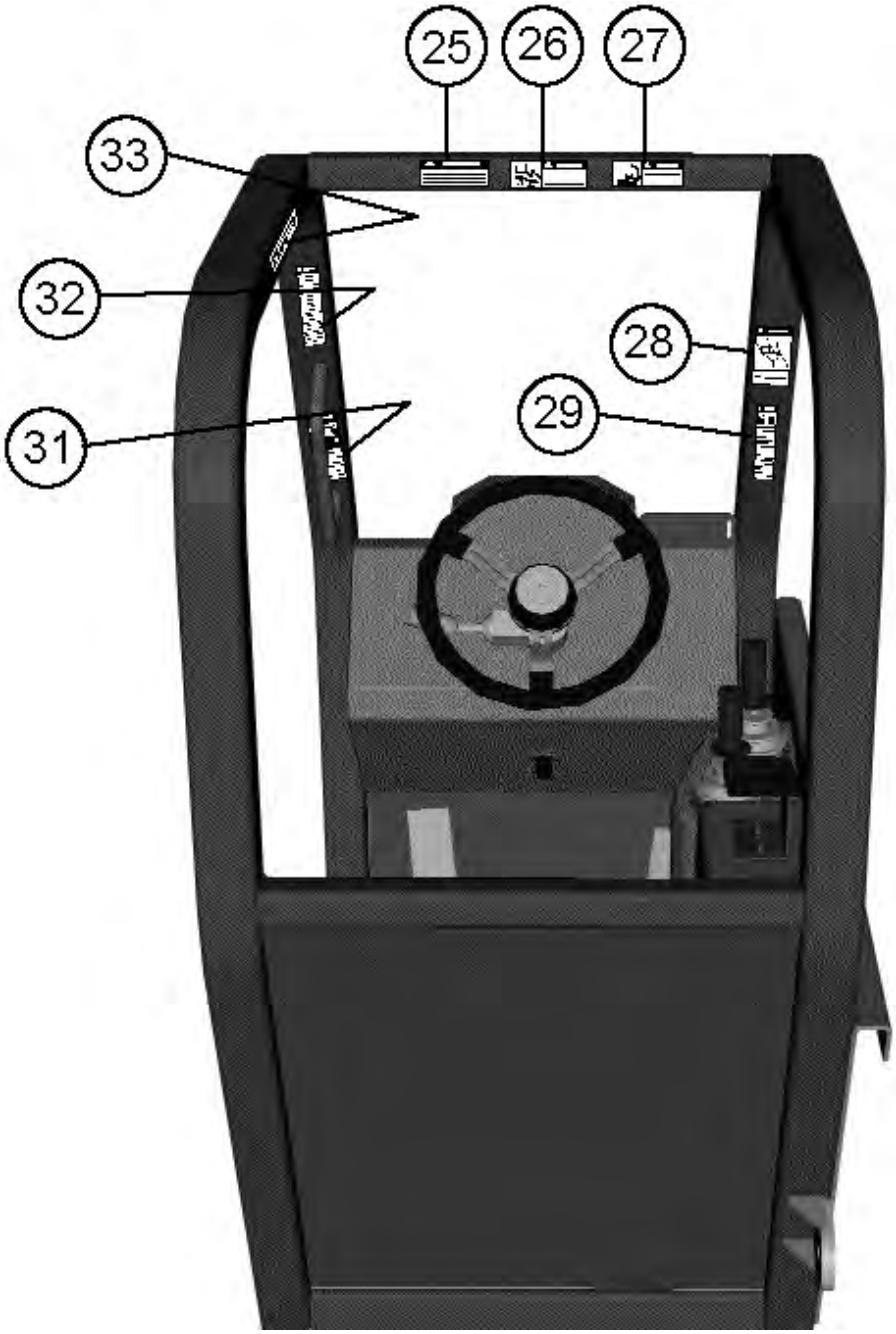

https://truckmanualshub.com/

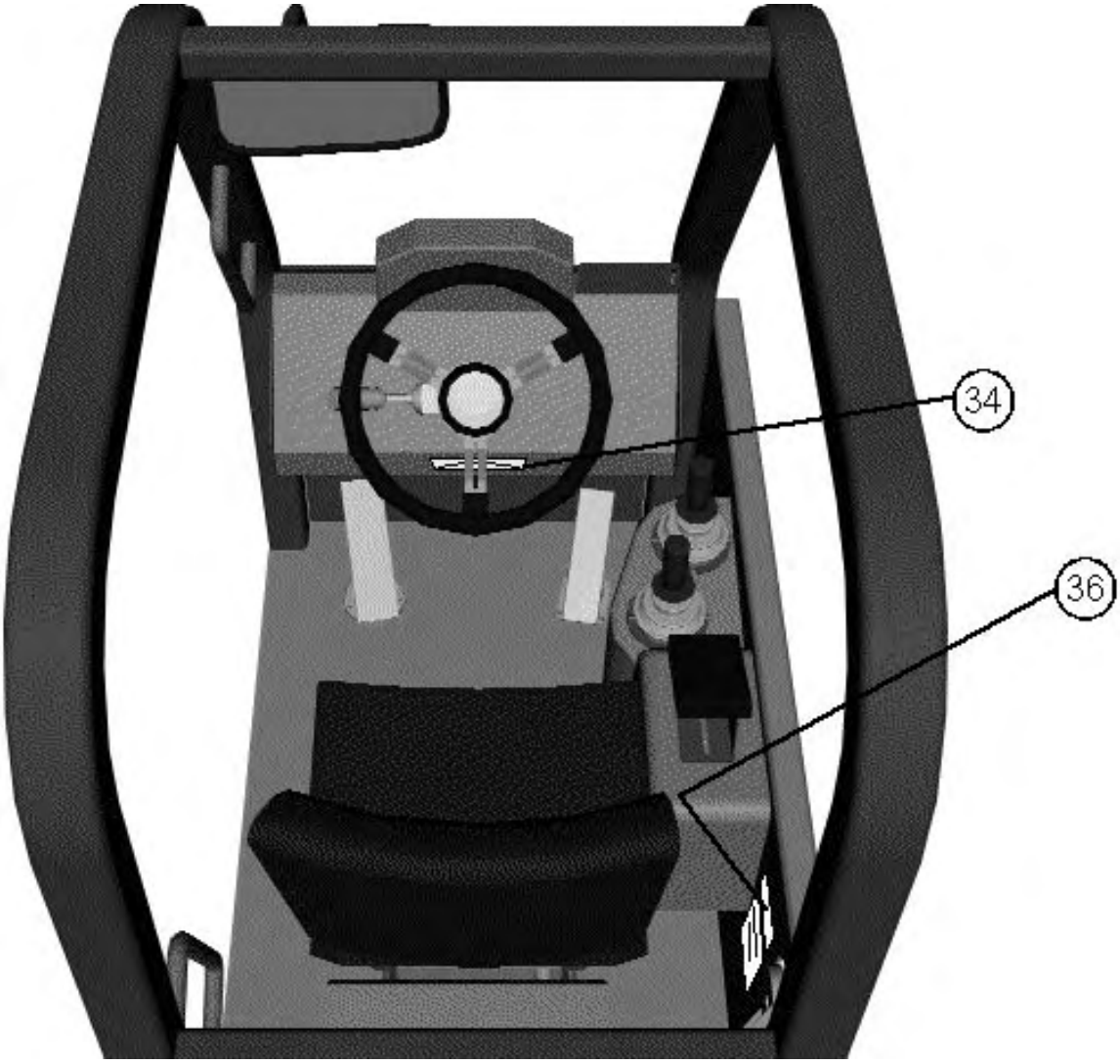

https://truckmanualshub.com/

Hydraulic and Fuel Tank Decals

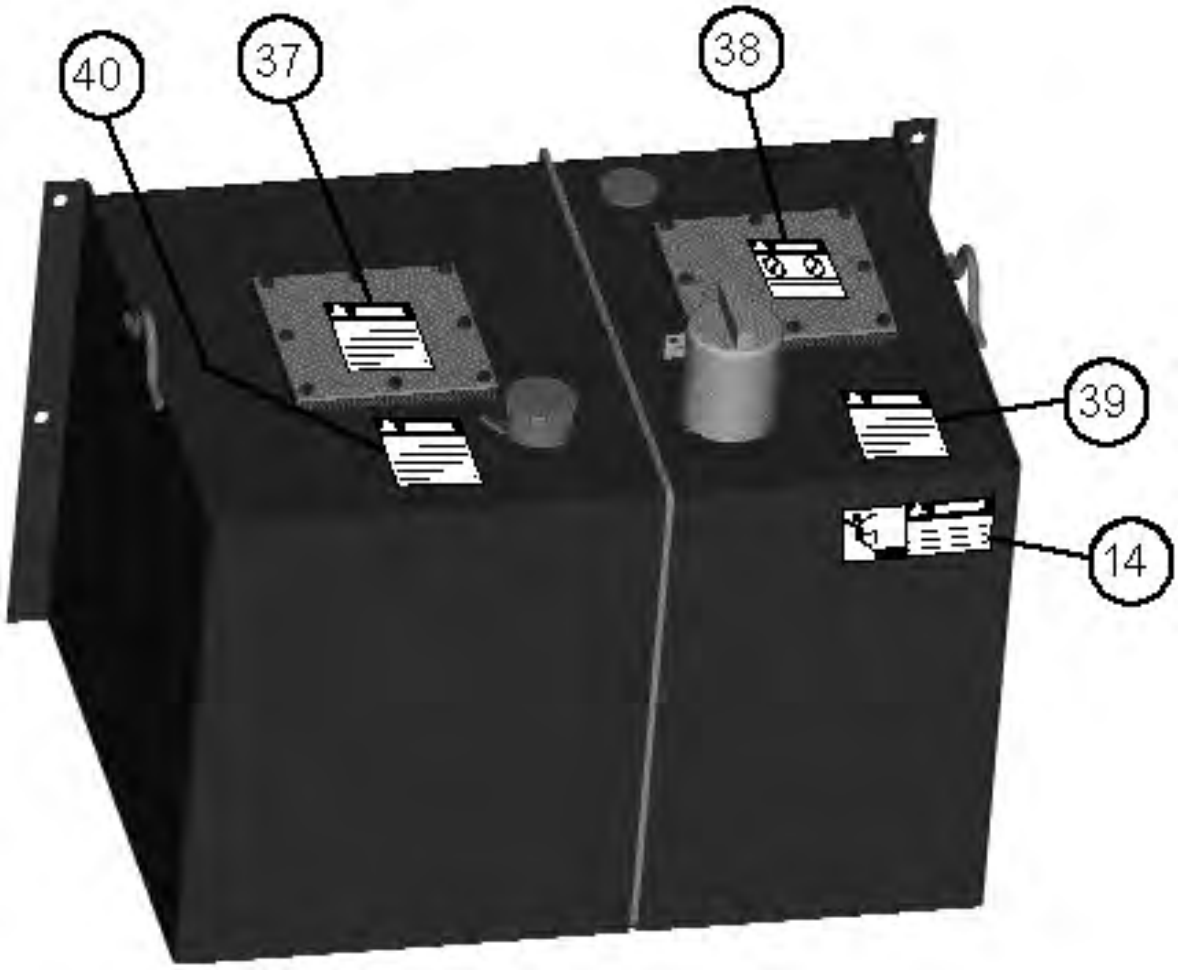

https://truckmanualshub.com/

Illustrated Decal Locations--Part No. Listing

REF	Part No.	Description	Req'd
1	LL-4778	Work Horse Decal	2
2	BL-9969	Boom Angle Indicator Decal	1
3	LL-7278	Pettibone Logo Decal	2
4	See Parts Manual	Extendo Decal	2
5	LL-6466	Explosion Warning	1
6	LL-6480	Pinchpoint Danger	2
7	LL-6467	Hot & Pressurized Fluid	2
8	LL-6039	Made in U.S.A. Pettibone Decal	2
9	See Parts Manual	Left Rear Model Decal	1
	See Parts Manual	Right Rear Model Decal	1
10	LL-6469	Moving Belts & Spinning Blades	2
11	LL-6471	Hot Exhaust Pipe Warning	1
12	LL-6476	Caution Watch your Step	2
13	See Parts Manual	Load Chart Decal	1
14	LL-6482	No Riding Warning	2
15	LL-6677	Weight Tag	1
16	LL-6477	No Step Caution	1
17	LL-6494	High Pressure Hydraulic Fluid Warning	1
18	LL-6464	Falling Boom or Load Decal	1
19	LL-6468	No Riding Warning	1
20	LL-6453	Welding and Modification Warning	1
21	See Parts Manual	Lube Chart Decal	1
22	LL-6457	Pre-start Checklist Decal	2
23	LL-6492	Carbon Monoxide Hazard	1
24	LL-6472	Personal Injury Hazard	1
25	LL-6475	Machine Tip Over Hazard	1
26	LL-6489	Falling Boom or Load Decal	1
27	LL-6474	Backward Tip Over Hazard	1
28	LL-6465	Electrocution Hazard	1
29	LL-6497	Untrained Personnel Warning	1
30	LL-6470	Machine Tip-Over	1
31	LL-6463	Machine Roll Away Warning	1
32	FL-6458	Safe Operation Checklist	1
33	LL-6490	Fall Hazard	1
34	LL-5940	Steering Selector Decal	1
35	LL-6491	Uncontrolled Machine Motion & Energy	1

https://truckmanualshub.com/

Standard Decals Used--Part No. Listing

REF	Part No.	Description	Req'd
36	LL-1994-600	Prevent Roll Away Decal	1
37	LL-7157	Contents Under Pressure	1
38	LL-6456	Combustible & Flammable Fluids	1
39	LL-6455	Diesel Fuel Only Decal	1
40	LL-6454	Hydraulic Oil Only Decal	1

Standard Decals Used--Service Bulletin Reference

Service Bulletin Reference			
Number	Date	Subject	Changes

https://truckmanualshub.com/

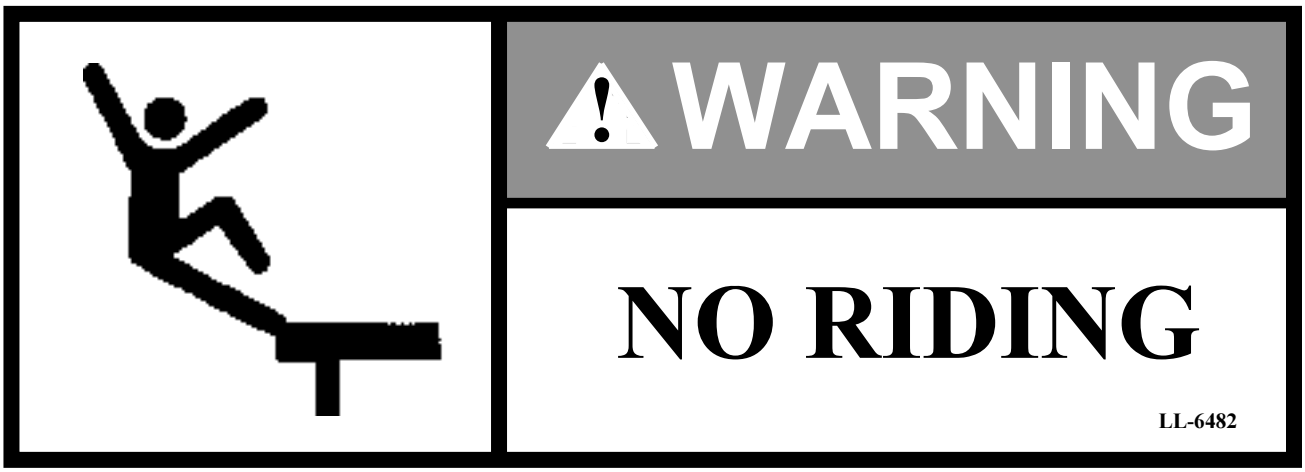

#1: TWO (2) TOTAL: ONE BOOM, TOP FRONT; ONE ON LEFT OUTER SIDE OF DASHBOARD PANEL OF OPERATOR'S CAB.

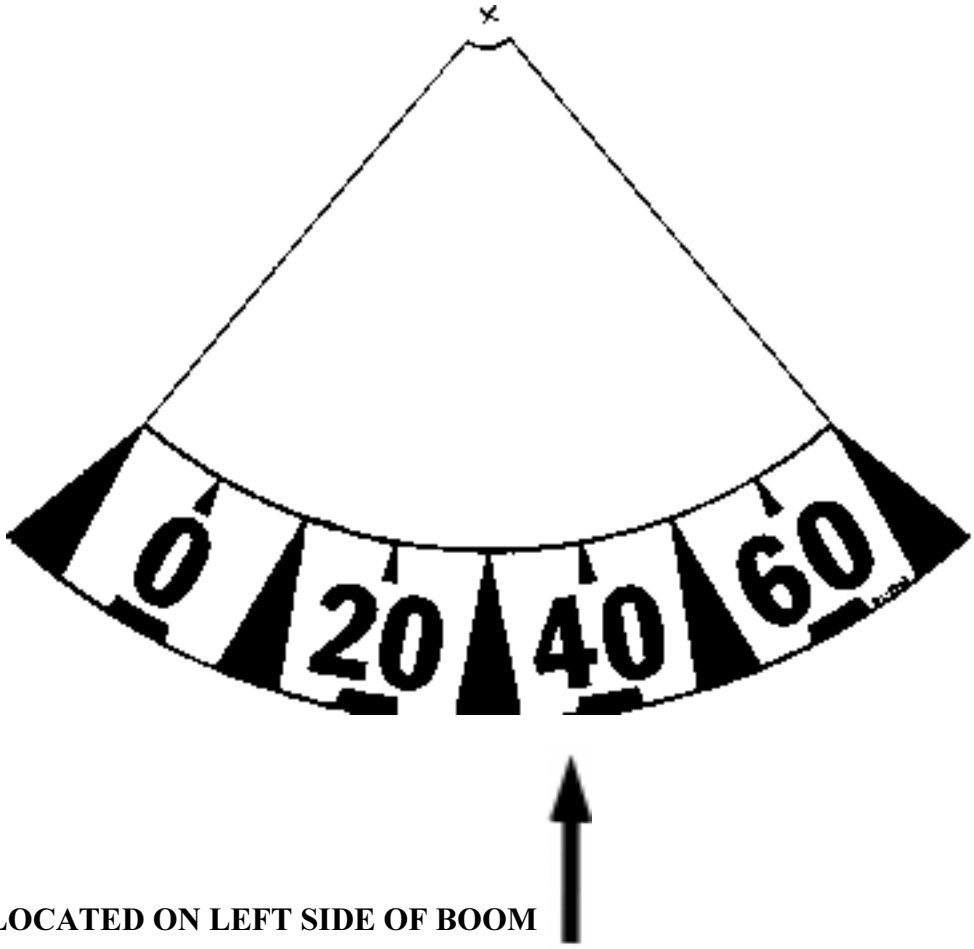

#2: ONE (1) LOCATED ON LEFT SIDE OF BOOM

https://truckmanualshub.com/

#3: ONE (1) LOCATED INSIDE OPERATOR'S CAB ON LEFT FRONT CAB FRAME ABOVE HAND GRIP

WARNING

MACHINE ROLL AWAY
Can cause death or severe injury.

Before dismounting:

- **engage parking brake.**
- **lower boom attachment and load to ground.**
- **follow other shutdown procedures.**

LL-6463

WARNING

SAFE OPERATION CHECKLIST:
Follow proper operating procedures for the safety of all personnel.

- **Wear seatbelts at all times.**
- **Never allow riders on machine.**
- **Wear personal protective equipment.**
- **Clear all people and obstacles from work area.**
- **Keep clear of overhead power lines.**
- **Operate machine from seat position only.**
- **Allow proper warm-up time and wait for all gauges to register properly.**
- **Check operation of all controls and functions.**
- **Position machine to allow good visibility of work area.**
- **Never use boom or attachment as personnel carrier.**
- **Position boom and load as low as possible to maintain maximum stability.**
- **Know machine's operating capabilities and limitations.**
- **Know hand signals used in work area.**
- **Ground boom and engage hand brake before leaving machine.**
- **Shut down machine when:**
  - **not functioning properly.**
  - **volt meter, water temperature or transmission oil temperature exceed normal limits.**
  - **leaving machine.**
  - **engine oil pressure too low.**
  - **drive oil pressure too low.**

See machine manuals for additional safety precautions and operating procedures.

LL-6458

#4: ONE (1) LOCATED INSIDE OPERATOR'S CAB ON LEFT FRONT CAB FRAME BY HAND GRIP, BELOW "Machine Roll Away" DECAL

https://truckmanualshub.com/

#5: ONE (1) LOCATED INSIDE OPERATOR'S CAB ON RIGHT FRONT CAB FRAME

CAUTION

PRE-START MAINTENANCE CHECKLIST:
Conduct pre-start maintenance inspections to ensure machine is in proper and safe operating condition.

- **Battery and electrical system: no loose connections, frayed wires, damage?**
- **Engine air cleaner: no inlet restriction or damage?**
- **Engine compartment: clean, free of dirt, debris and flammable materials?**
- **Engine oil: no leaks, proper level?**
- **Fan and drive belts: no loose or worn belts?**
- **Fuel: no leaks, proper level?**
- **Gearbox and transmission: no leaks, proper fluid level?**
- **Grease fittings: lubricated?**
- **Guards and shrouding: installed, secure, clean?**
- **Hydraulic components: no leaks, loose fittings or damage?**
- **Hydraulic oil: no leaks, proper level?**
- **Machine components: clean, no cracks, damage, signs of vandalism, or missing or loose parts?**
- **Radiator: clean, free of dirt and debris, no leaks, proper fluid level?**
- **Safety decals: clean, legible, secure?**
- **Walking, climbing, and control surfaces: clean, and free of dirt, fluids, debris, tools, rags, unsecured items?**
- **Attachments: properly secured?**

See machine manuals for additional maintenance recommendations.

LL-6457

https://truckmanualshub.com/

#7:

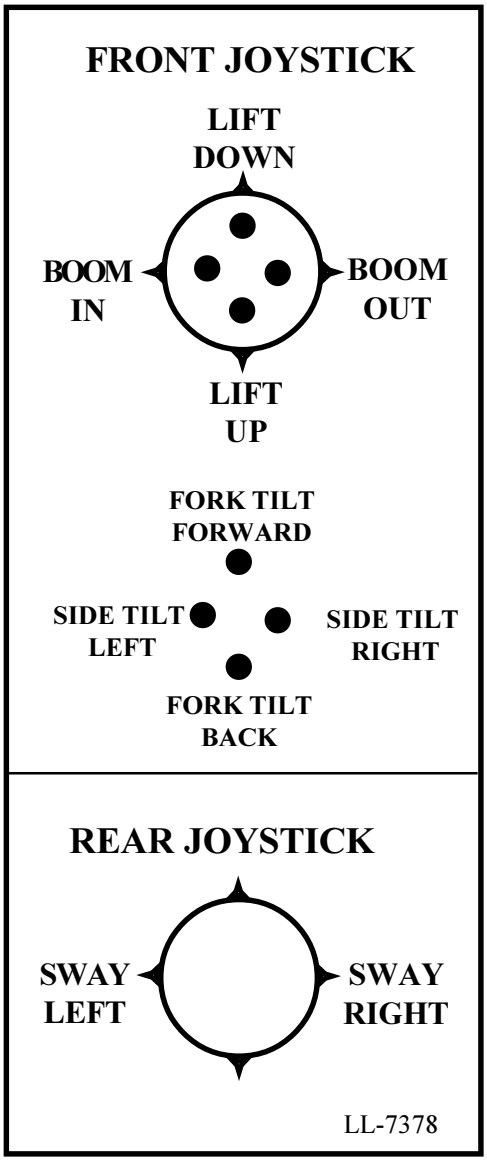

LL-7265-6

https://truckmanualshub.com/

#9:

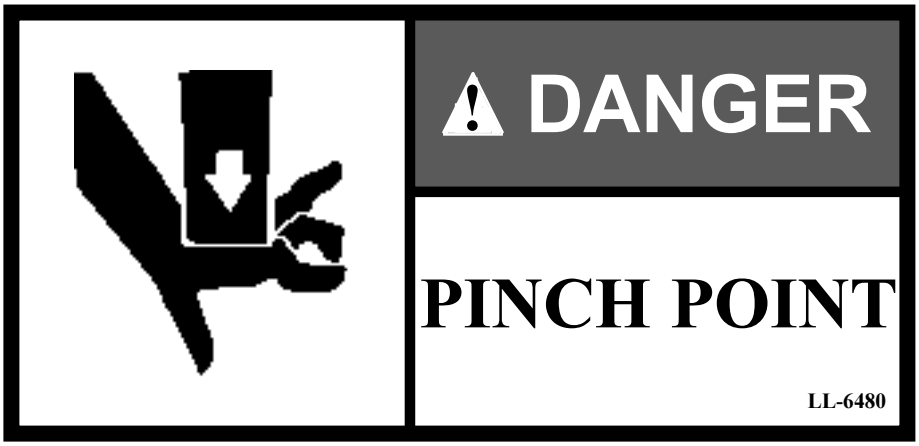

#11:

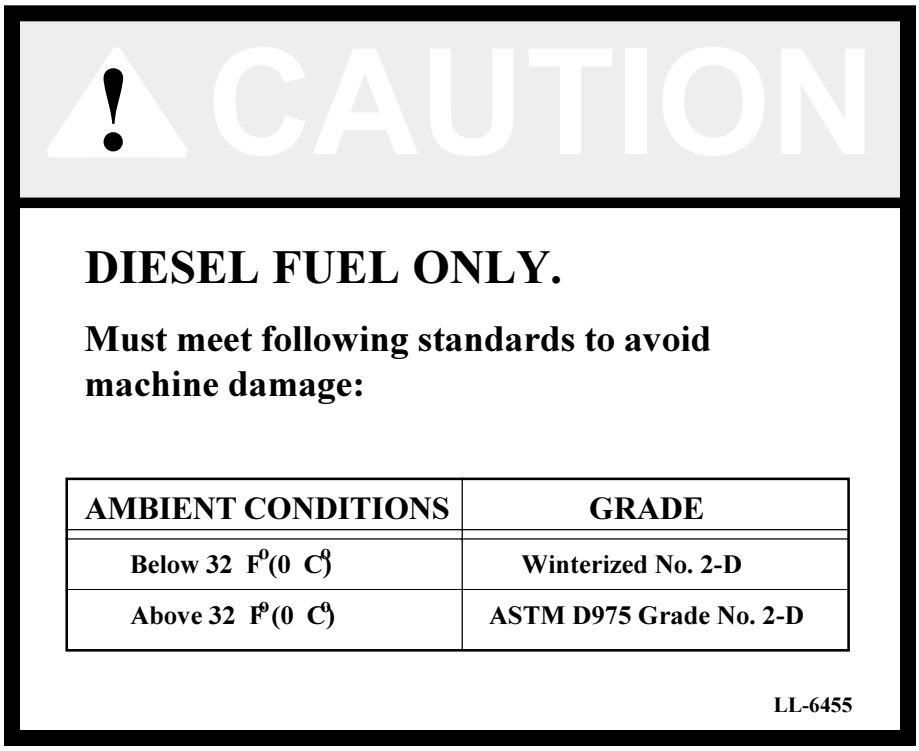

https://truckmanualshub.com/

WARNING

COMBUSTIBLE AND FLAMMABLE FLUIDS

Can cause death or severe injury.

Keep sparks, flames and lighted materials away from fuel and hydraulic fluid.

Do not refuel while engine is hot or running.

Do not refuel without proper ventilation.

LL-6456

#12:

https://truckmanualshub.com/

LL-6039

#13:

https://truckmanualshub.com/

#14:

WARNING

WELDING AND MODIFICATION HAZARD

Can cause death or severe injury.

Welding may cause electrical or structural damage to machine.

Disconnect battery cables and alternator connections before welding on machine.

Do not weld on any structural member or make modifications without factory authorization.

Modifications made without factory authorization will void warranty.

LL-6453

#15:

CAUTION

NO STEP

LL-6477

#16:

CAUTION

PLEASE FASTEN SEAT BELT

https://truckmanualshub.com/

#18:

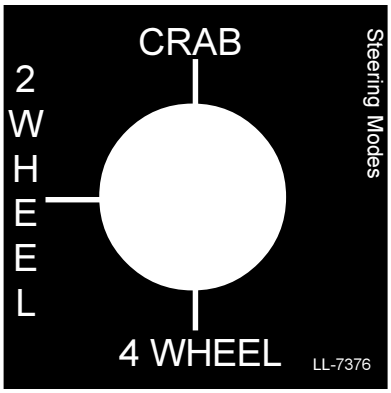

WARNING

CONTENTS UNDER PRESSURE.

REMOVE FILLER CAP SLOWLY!

Check Breather Daily for Obstructions.

LL-7157

https://truckmanualshub.com/

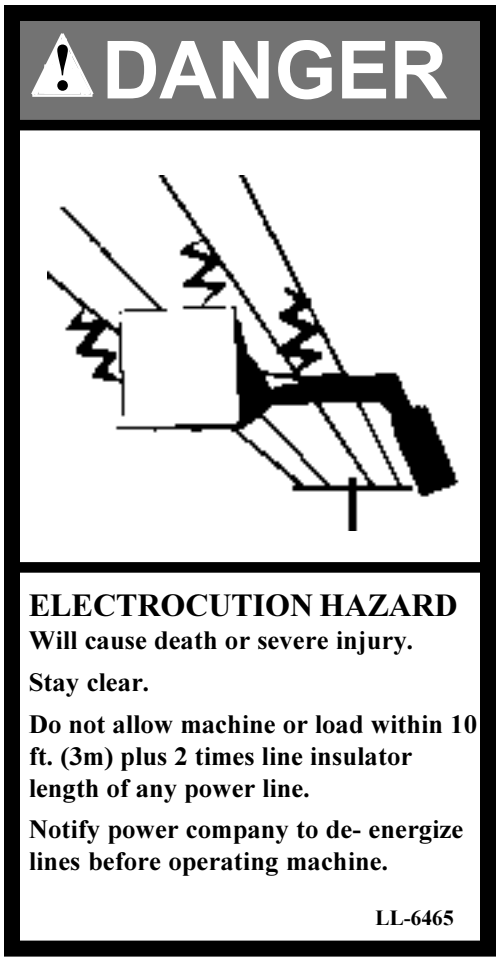

#19: ONE (1) LOCATED INSIDE CAB ON RIGHT PANEL

#20: ONE (1) LOCATED INSIDE CAB ON RIGHT PANEL, BELOW "Electrocution Hazard" DECAL

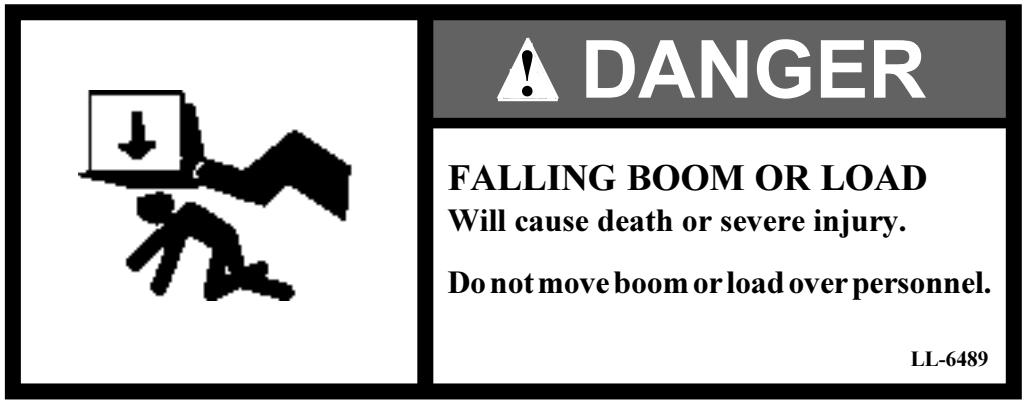

#21: ONE (1) LOCATED INSIDE CAB ON RIGHT PANEL, BELOW "Falling Boom or Load" DECAL

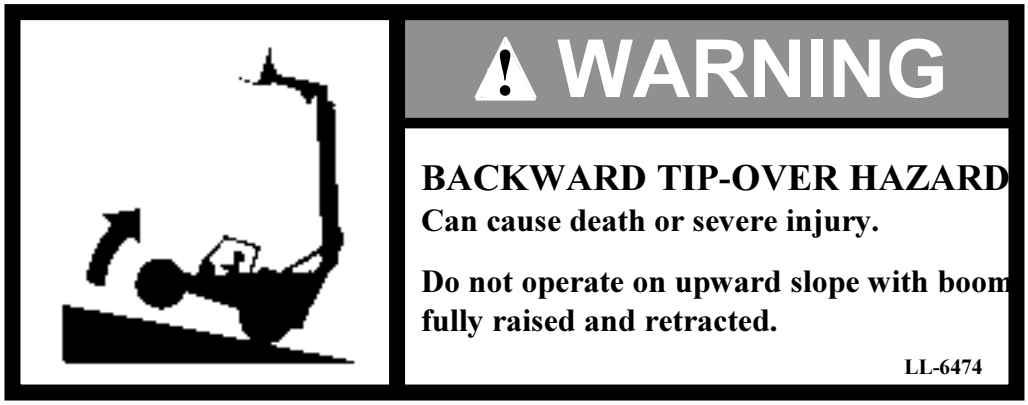

https://truckmanualshub.com/

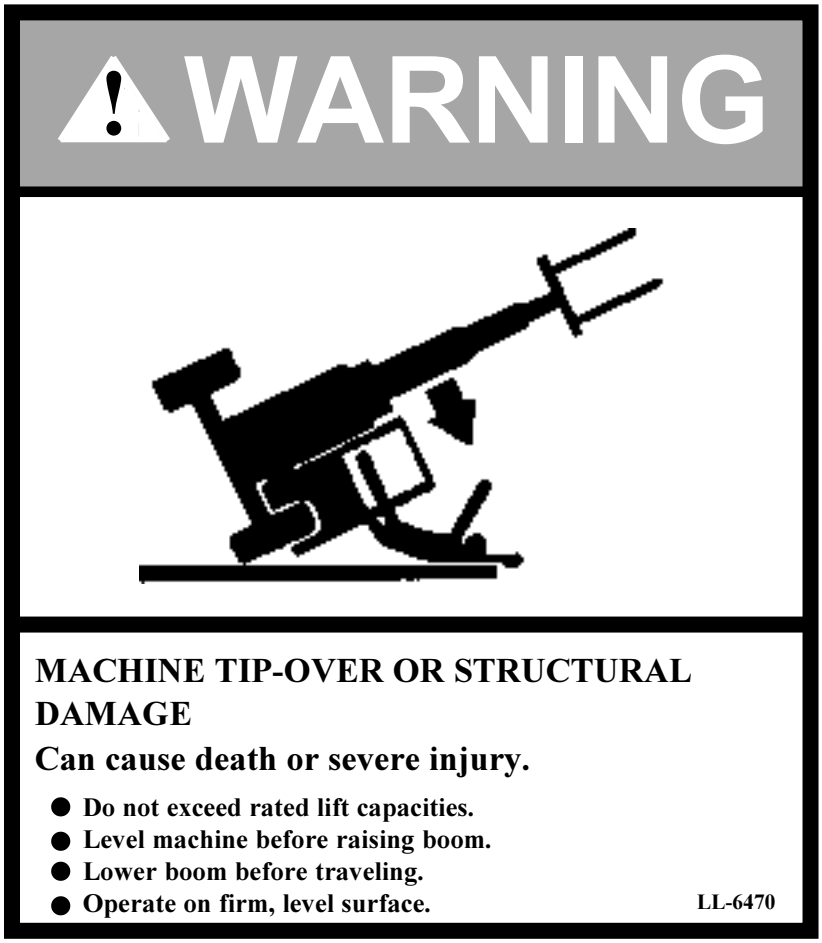

#22: ONE (1) LOCATED INSIDE CAB ON RIGHT PANEL, BELOW "Backward Tipover Hazard" DECAL

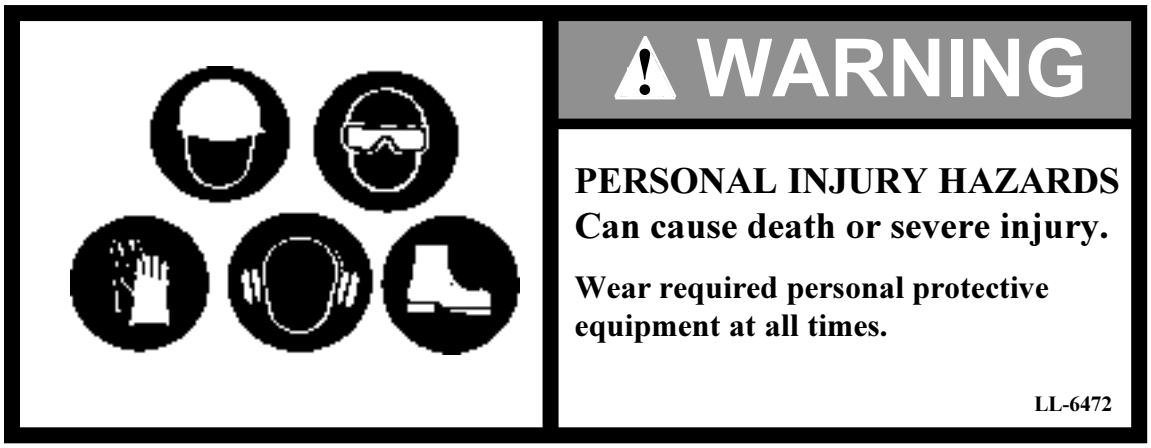

#23: ONE (1) LOCATED ON LEFT OUTER SIDE OF DASHBOARD PANEL, BELOW "No Riding" DECAL

https://truckmanualshub.com/

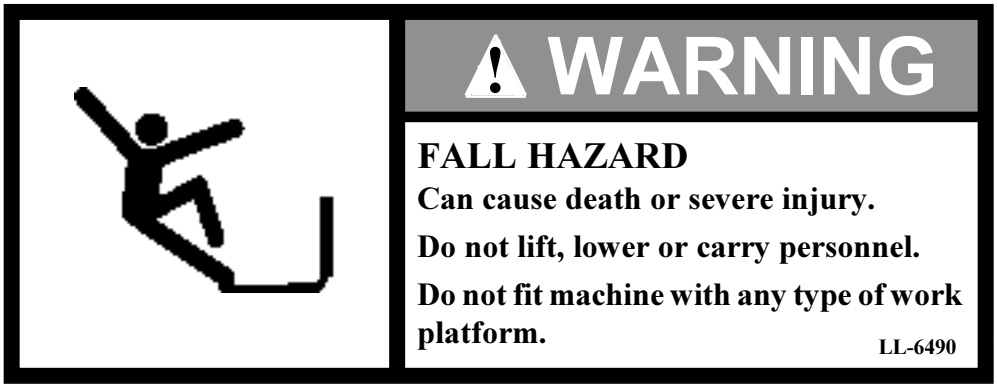

#24: ONE (1) LOCATED ON LEFT OUTER SIDE OF DASHBOARD BELOW "Personal Injury Hazard" DECAL

#25: ONE (1) LOCATED ON THE UNDERSIDE OF FRONT BOOM, ACTUAL SIZE: 12" x 12"

https://truckmanualshub.com/

#26: TWO (2) TOTAL: ONE ON EACH SIDE OF FORK CARRIAGE

#27 ONE (1) LOCATED ON TOP OF HYDRAULIC TANK

CAUTION

HYDRAULIC OIL ONLY.

Must meet following standards to avoid machine damage:

Hydraulic System Operating Temperature Range*	ISO Viscosity Grade
-5 to 140 °F (-21 to 60 °C)	22
5 to 170 °F (-15 to 77 °C)	32
15 to 190 °F (-9 to 88 °C)	46
30 to 210 °F (-1 to 99 °C)	68

*Temperatures shown are cold (ambient) start-up to maximum

LL-6454

https://truckmanualshub.com/

#28: ONE (1) LOCATED BENEATH ENGINE COWLING ON PISTON ACCUMULATOR

⚠ WARNING

HIGH PRESSURE HYDRAULIC FLUID

Can penetrate skin causing death, gangrene or other severe injury.

Seek immediate medical help to remove fluid.

- **Keep hands and body away from areas ejecting fluid. Use piece of cardboard to check for leaks.**
- **Wear proper hand and eye protection.**
- **Relieve hydraulic pressure before loosening any hydraulic connections.**
- **Tighten all hydraulic connections before applying hydraulic pressure.**

LL-6494

#29 ONE (1) LOCATED ON TOP OF ENGINE COWLING NEAR RADIATOR CAP

⚠ WARNING

HOT AND PRESSURIZED FLUID

Can cause severe burns.

Let system cool before removing cap.

Remove cap slowly.

LL-6467

https://truckmanualshub.com/

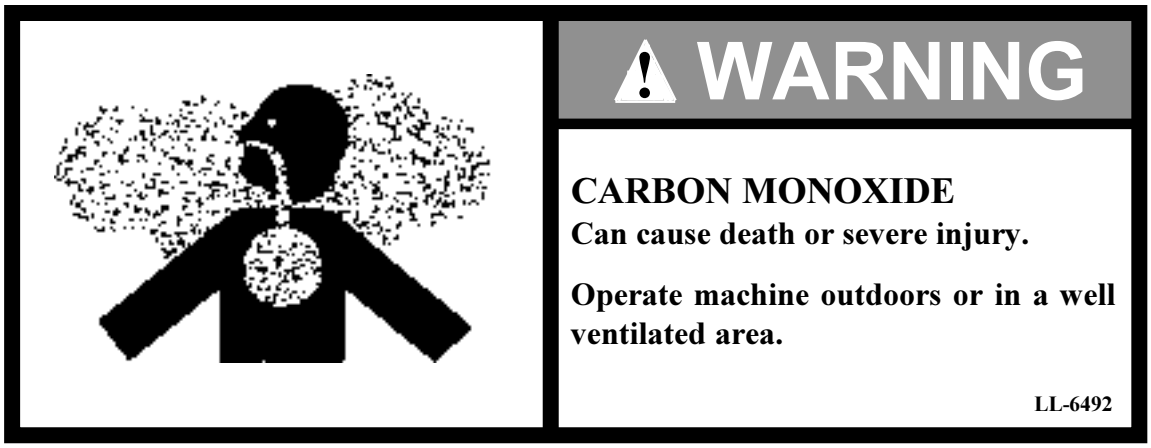

#30: ONE (1) LOCATED ON RIGHT SIDE OF FRAME, UNDER FRAME TILT HOSING

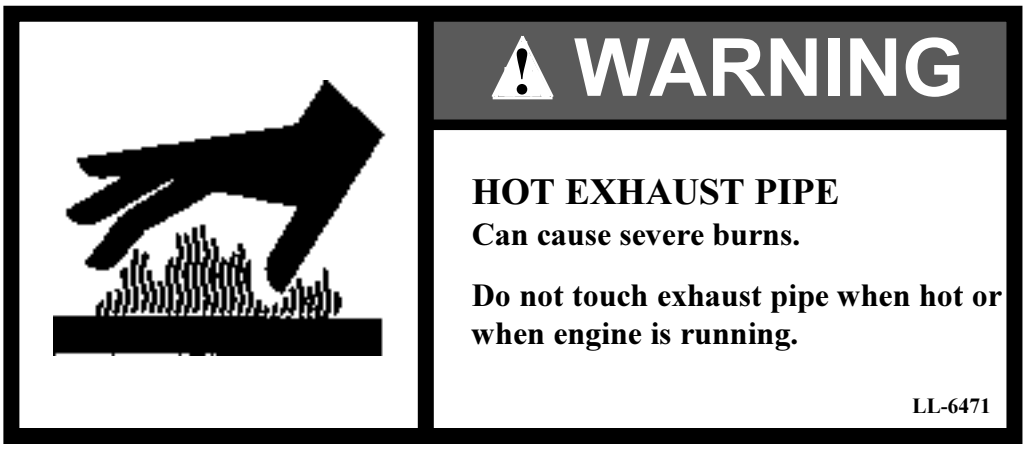

#31: ONE (1) LOCATED ON FRAME NEAR EXHAUST PIPE

https://truckmanualshub.com/

#32: TWO (2) NEEDED: ONE ON EACH SIDE OF FRAME

#34: ONE (1) LOCATED BEHIND OPERATOR'S SEAT ON COVER OF MANUAL COMPARTMENT

https://truckmanualshub.com/

MATERIAL SAFETY DATA SHEETS (MSDS)

The Federal Occupational, Safety and Health Administration (OSHA) Standard 29 CFR 1910.1200 and in some cases, state and local Right-To-Know laws, may require that specific Material Safety Data Sheets be available to employees prior to operating this equipment. These sheets include information on substances contained in the equipment such as antifreeze, battery acid, diesel fuel, engine oil, grease and hydraulic oil.

Upon written request, Pettibone Michigan, L.L.C. will provide the Material Safety Data Sheets applicable to our product line, at no extra cost. Write to:

Pettibone Michigan L.L.C.
P.O. Box 368
Baraga, MI 49908

Ph. 906-353-6611
Fax 906-353-6325

The customer's return address, machine model and serial number must be included to ensure a prompt response.

IDENTIFICATION NUMBERS

Write the machine's model number, Product Identification Number and serial numbers on the lines provided below. If necessary, give these numbers to the dealer when parts or information are needed for

https://truckmanualshub.com/

THIS PAGE
INTENTIONALLY
LEFT BLANK

https://truckmanualshub.com/

EQUIPMENT

the machine.

Make a record of the numbers. Keep the record in a safe place. If the machine is stolen, report the numbers to the local law enforcement agency.

MACHINE MODEL NUMBER _____

PRODUCT IDENTIFICATION NUMBER _____

ENGINE SERIAL NUMBER
_____

ROPS SERIAL NUMBER _____

SAFETY

MACHINE INSPECTION AND DELIVERY REPORT

The Machine Inspection and Delivery report is shipped loose in the back of this manual. Make sure your dealer performs a checkup within the first 150 hours of operation or 30 days after delivery, whichever comes first.

NOTE

The customer's cost for this inspection will be for filters, oil or other accessories. If the dealer comes to the machine, there may also be a cost for the time and travel.

https://truckmanualshub.com/

RIGHT, LEFT, FRONT AND REAR OF MACHINE

All directional references (right, left, front and rear) used in this manual are as seen from the operator's seat.

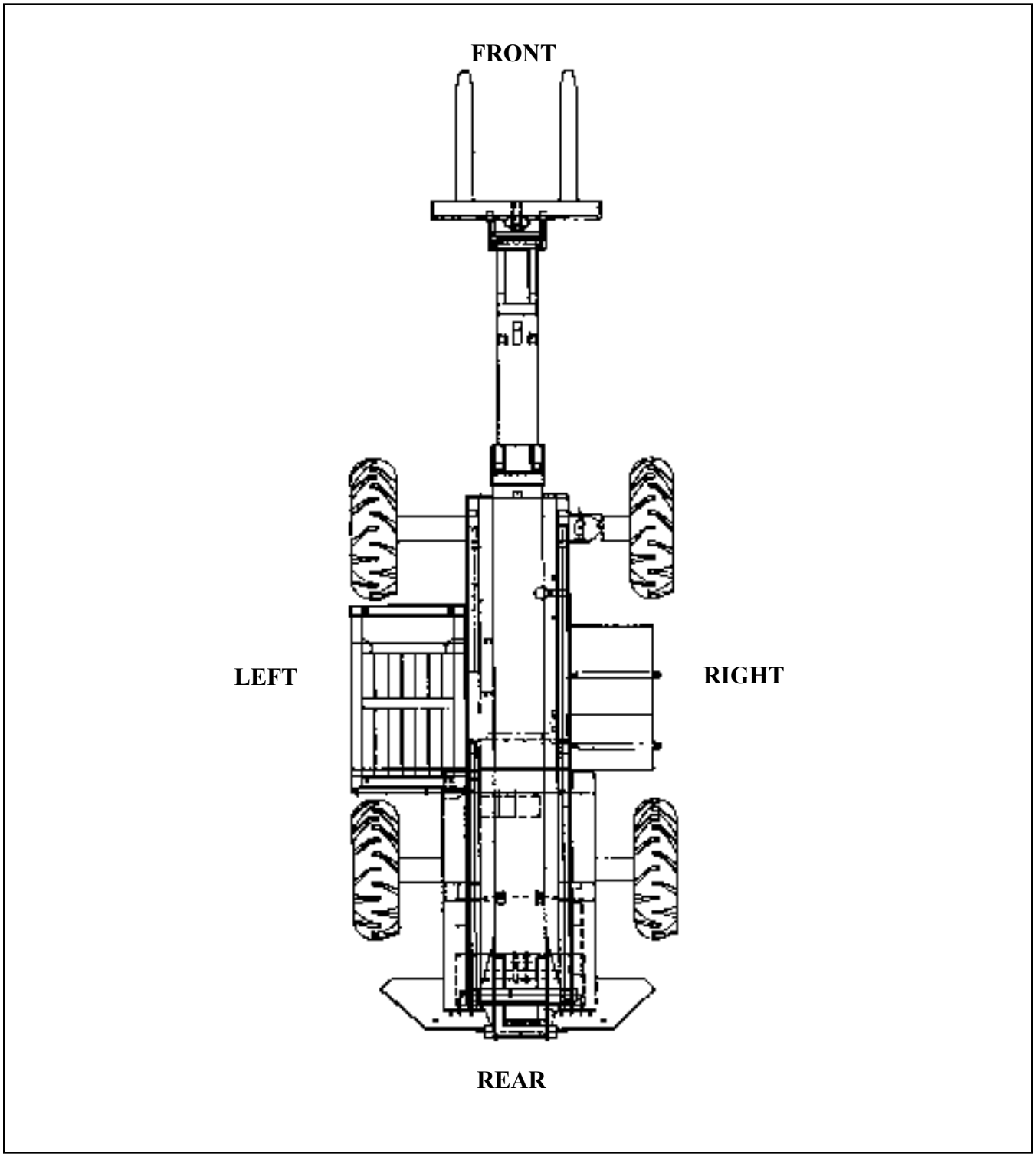

Figure 2. Directional Reference

EXPLANATION OF "⚠ DANGER"

Denotes a hazard which **WILL** result in death or injury if proper precautions are not taken.

EXPLANATION OF "⚠ WARNINGS"

A warning is a statement that informs the reader of a condition that is unsafe to personnel. **Failure to heed a warning may result in DEATH or INJURY to personnel.**

EXPLANATION OF "⚠ CAUTIONS"

Cautions are provided as statements, which identify conditions and/or practices that **could** result in damage to the equipment.

EXPLANATION OF "*NOTES* "

Notes are statements that simply provide additional information.

SAFETY PRECAUTIONS

1. Read and fully understand the operator's manual before attempting to operate the forklift.

2. Always pay attention to decals located on the forklift. **Failure to do so can result in death, serious injury and/or damage to equipment.**

3. Only qualified personnel who have received OSHA-required training should operate the forklift.

NOTE:
Effective December 31, 1999, OSHA requires all forklift operators to be trained according to rule 29CFR1910.178(1).

4. Under no circumstances are passengers allowed to ride on the forklift.

5. Always wear the seat belt when operating the forklift, making sure that the seat belt is properly fastened and securely tightened. **Failure to do so can result in death or serious injury**.

6. Controls are to be operated only by the person seated in the operator's compartment.

7. No personnel should ever walk or stand under a raised boom or walk alongside a moving forklift.

8. Do not operate the forklift near electrical power lines.

9. Do not use the forklift to lift personnel.

10. Raise the boom only if there is sufficient overhead clearance.

11. Make certain that the load is positioned squarely and evenly on both (or all) forks before raising.

12. Do not attempt to remove a load from the forks by stopping the forklift suddenly.

13. Do not attempt to raise or land loads that exceed the forklift's capacity. Refer to the Specifications table or the Load Chart located in the operator's compartment.

14. Always pick up a load with consideration to its center of gravity. Position the load on the forks accordingly.

15. Never land a load in such a way that it may topple. Always land the load squarely on a solid, level landing area, never on an uneven surface. Stacking loads is not advisable; however if stacking is unavoidable, exercise extreme caution.

16. Do not operate the forklift or handle loads in a reckless manner.

17. Position the load no higher than eye level when transporting.

18. Always be aware of the machine and load width and the width of the path in which you are operating.

19. Make certain that the load is stable before transporting. Do not transport or lift loads that are obviously unsafe or questionable.

20. When driving, do not make any sudden stops or turns.

21. When possible, do not park the forklift on an incline. If parking on an incline is unavoidable, apply the parking brake and chock the wheels.

22. Do not make modifications to the forklift. **Unauthorized modifications can result in death and/or serious injury to personnel, damage to equipment and/or poor equipment performance.**

23. When leaving the operator's compartment, always lower the forks to the ground, apply the parking brake, stop the engine and turn off the key.

24. Prior to starting the forklift, warn all personnel in the area.

25. Do not operate a forklift that is in need of maintenance. Make sure a "Do Not Operate" lockout tag is placed on a forklift in need of maintenance.

26. Do not operate the forklift in a closed building. **Death or sickness from carbon monoxide poisoning could result.** Always operate in a well ventilated area.

https://truckmanualshub.com/

INTRODUCTION

The Extendo rough-terrain forklift is manufactured by Pettibone Michigan L.L.C., a subsidiary of the Pettibone L.L.C. The Extendo is designed to provide years of reliable operation with minimal maintenance.

IDENTIFICATION

FORKLIFT IDENTIFICATION PLATE

The forklift identification plate is located outside, on the left end of a rear frame member of the operator's compartment. It contains the equipment model number, serial number and gross vehicle weight (GVW). (See Figure 3.)

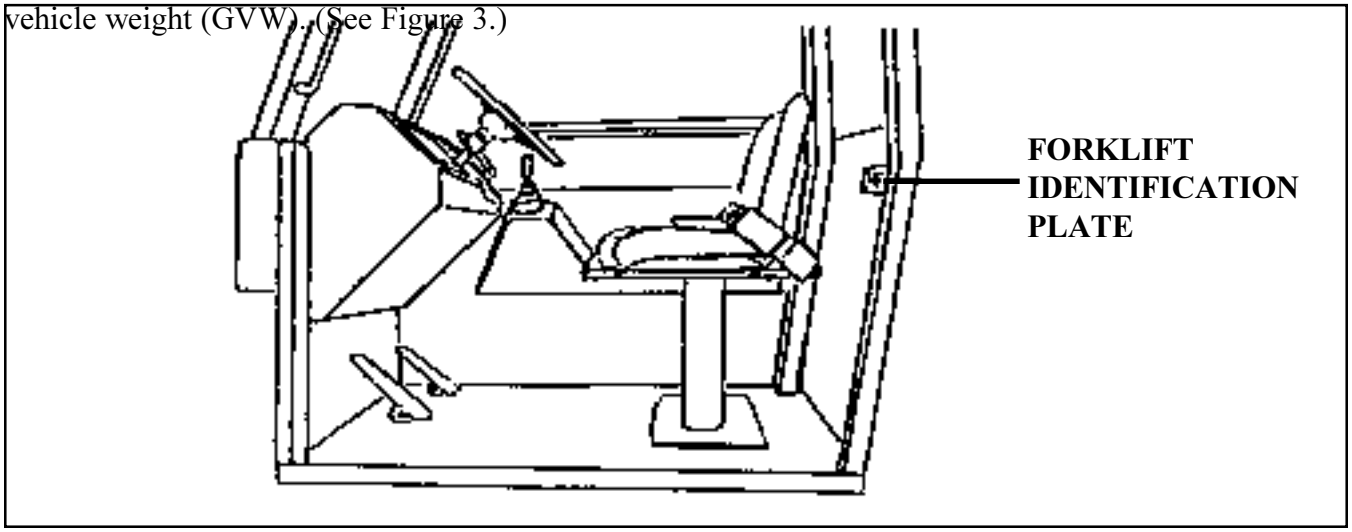

Figure 3. Forklift Identification Plate Location

ENGINE IDENTIFICATION PLATE

The Cummins engine identification plate is located on the timing cover at the engine's left front (right side of forklift). (See Figure 4.)

TRANSMISSION IDENTIFICATION PLATE

The transmission identification plate is located atop the transmission housing, centered behind the engine. It contains the model, specification number and serial number. (See Figure4.)

AXLE IDENTIFICATION PLATE LOCATION

https://truckmanualshub.com/

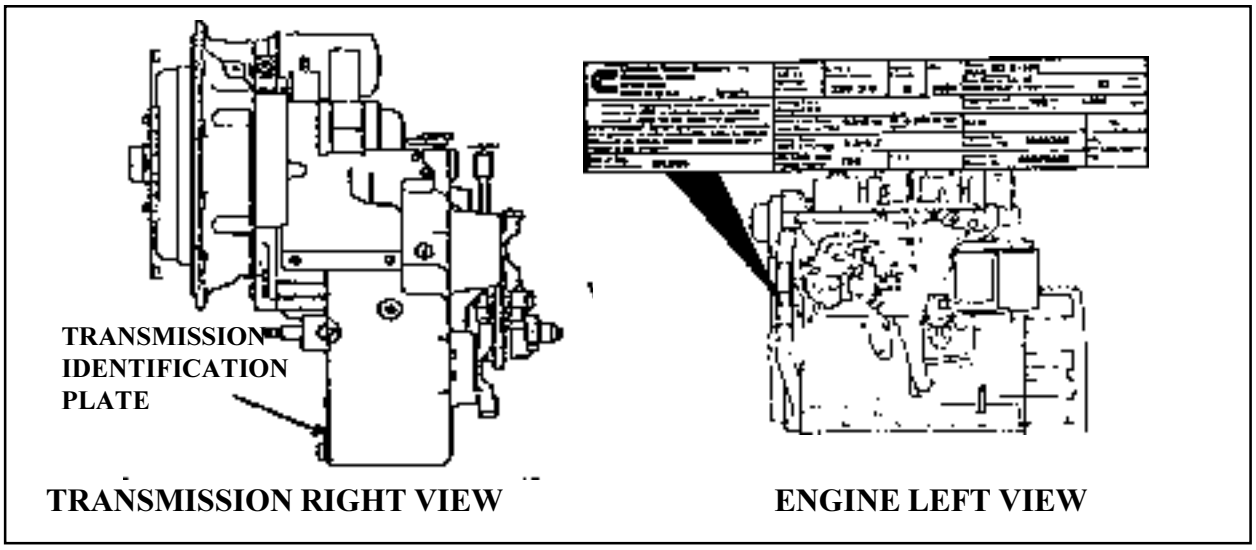

Figure 4. Transmission and Engine Identification Plate Locations.

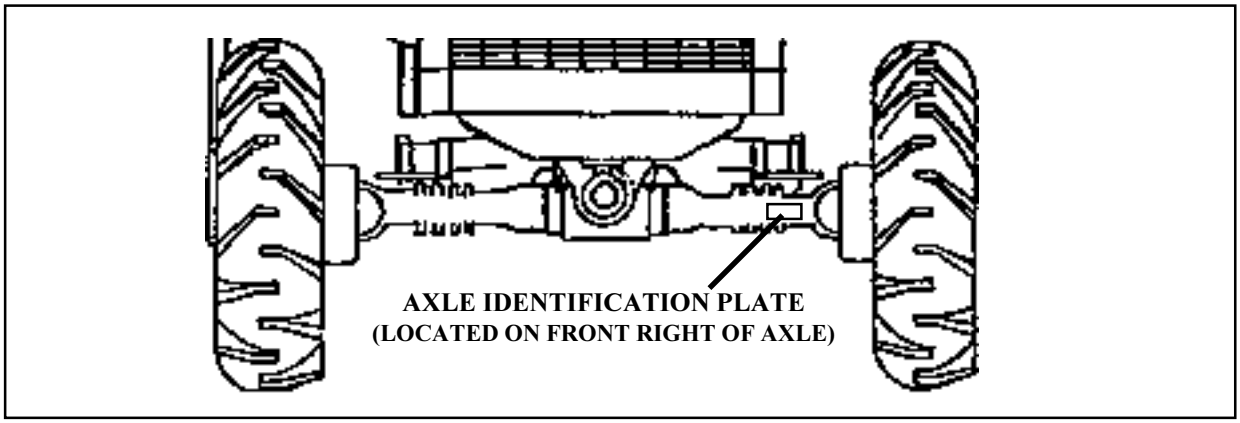

Figure 5. Axle Identification Plate Location.

The axle identification plate is located on the backside of the axle, to the right of the differential. The plate contains the axle part number, serial number and build date. The front axle is mounted with its backside toward the front of the forklift. (See Figure 5.)

EQUIPMENT DESCRIPTION

FORKLIFT DESCRIPTION

The Extendo is a low profile, rough-terrain forklift with an approximate gross vehicle weight of 24,000 pounds (depending on the options used) and a lifting capacity of 6,000 to 8000 pounds. The Extendo is equipped with four-wheel drive and a steering system that is capable of two-wheel steering, four-wheel steering and oblique (crab) steering as selected by the operator.

STANDARD ENGINE DESCRIPTION

The Extendo is equipped with a Cummins Model 4BT3.9-CPL engine. This engine is a liquid-cooled, four cylinder, four stroke, diesel engine with a displacement of 239 cubic inches (3.9L). The engine is fuel injected and turbocharged with a rated output of 110 horsepower at 2500 rpm. The compression ratio is 17.5:1.

TRANSMISSION DESCRIPTION

The transmission has three forward speeds and three reverse speeds. The transmission is equipped with a mechanical disc-type parking brake, located on the output shaft to the forward drive axle.

AXLE DESCRIPTION

The forklift is equipped with two steerable drive axles. Both axles are equipped with internal, wet-type disc brakes, located inside the planetaries, and a parking brake in both axles.

OPTIONS

Your Pettibone dealer offers a wide assortment of options for the Extendo forklift, including a variety of forks, carriages, buckets and more. Contact your dealer for additional information and prices.PRE-OPERATIONAL CHECKS AND SERVICES

https://truckmanualshub.com/

Notes

https://truckmanualshub.com/

Notes

https://truckmanualshub.com/

OPERATION

This section describes the location and function of each gauge and control in the operator's compartment. With the engine "off", practice reaching for these controls as you read about them. This should help you become familiar with their location.

Entering the Operator's Compartment

Proper care should be used whenever entering or leaving the operator's compartment. Use the step and grab handle provided and always keep them clear of debris.

NEVER USE THE STEERING WHEEL OR ARM REST AS A GRAB HANDLE!

⚠ **Use both hands when climbing on machine. Failure to comply may result in personal injury.**

⚠ **Never jump down from the operator's compartment when leaving the machine.**

Operator's Seat

The operator's seat can be adjusted to move forward or back. The horizontal adjustment lock lever is located under the front of the seat. (See Fig. 2-2)

Adjust the seat as follows:

1. Move lock lever to the left and hold.
2. Slide the seat forward or back to your desired position.
3. Release lever to lock.

⚠ **Do not adjust the operator's seat while the vehicle is moving. Operating this machine with one or both hands away from the steering wheel may result in a loss of vehicle control.**

Arm Rest

Raise the arm rest for safe entering or exiting of the operator's compartment. (See Fig. 2-1)

Fig. 2-1, Arm rest shown in the up position for entering and exiting the operator's compartment.

Seat Suspension Adjustment (optional)

The adjustment for the suspension is located under the front of of the operator's seat. To adjust for a firmer ride, rotate the knob clockwise. To adjust for a softer ride, rotate the knob counterclockwise. (See Fig 2-2)

https://truckmanualshub.com/

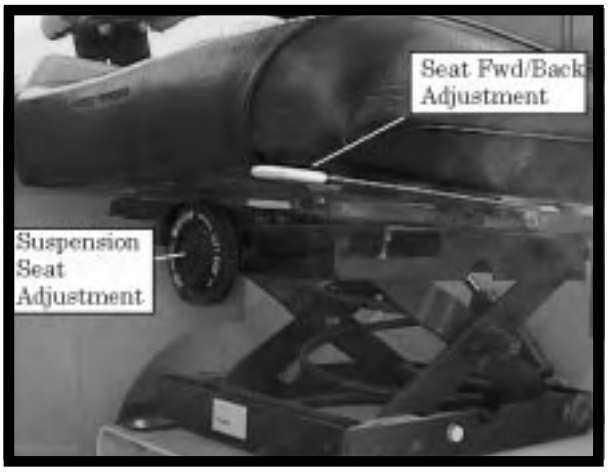

Fig. 2-2, Location of the seat adjustments.

Fig. 2-3, Insert until it “clicks” into place.

Seat Belt

Fasten the seat belt as follows:

1. Position both belts across your lap. If latch belt is too tight to pull, slide the latch plate up along the belt webbing. This will provide more belt slack.

Position the belt across your waist as low on the hips as possible. This is necessary to spread the force of the belt over the hipbone instead of across the abdomen.

2. Insert latch plate into buckle until a “click” is heard(See Fig. 2-3). Pull the loose end of the belt to tighten(See Fig. 2-4). To unlock the seat belt, press button on buckle and pull latch plate from buckle(See Fig. 2-5).

Make sure that seat belt fits snugly across your waist with a minimal amount of slack. If the belt has too much slack, it may not be able to restrain you in an accident.

Never wear a twisted seat belt.

Pettibone recommends that operators use the seat belt at all times when driving this machine and will not be held responsible if the operator does not use the safety restraints available..

Fig. 2-4, Pull loose end of belt to tighten.

Fig. 2-5, Press the button to release the belt.

https://truckmanualshub.com/

Instrument Panel

The instrument panel indicates the location of each standard and optional gauge, warning light and control.

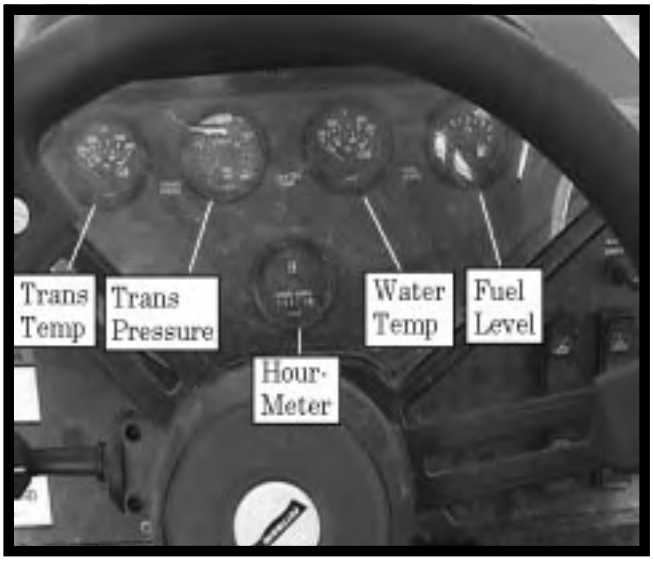

Fuel Gauge

Indicates the level of diesel fuel in the fuel tank. The fuel gauge is electrically-operated and registers only when the ignition switch in the “on” or “start” positions. (#4)

Engine Coolant Temperature Gauge

Indicates the temperature of the fluid in the engine cooling system. Normal coolant temperature for the Cummins 4BT3.9 engine is 160 - 194° F (70 - 90° C). (#3)

Do not operate engine if coolant temperature exceeds 212° F (100° C).

Engine Coolant Temperature Warning

Light (Optional)

This light glows red and activates an alarm if the engine coolant temperature rises above approximately 212° F (100° C).

Engine Hourmeter

Indicates acual hours of engine operation. It records up to 9,999.9 hours and then restarts at zero. (#5)

Transmission Temperature Gauge

Indicates the temperature of the transmission oil.
Normal Operating Range: 180-250°F (82-121°C)
Red Lined Temperature: 250°F (121°C) (#1)

Transmission Oil Pressure Gauge

Indicates the pressure of the transmission oil.
Normal Operating Range: 240-280 PSI @2200 RPM (1655-1930 kPa) (#2)

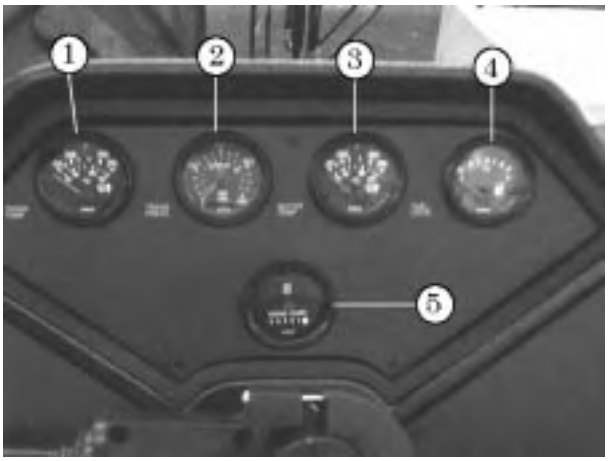

GAUGES

WARNING LIGHTS

EXTENDO INSTRUMENT PANEL COMPOSITE

PARK BRAKE AND CLUTCH CUT-OFF SWITCHES

INCLINOMETER

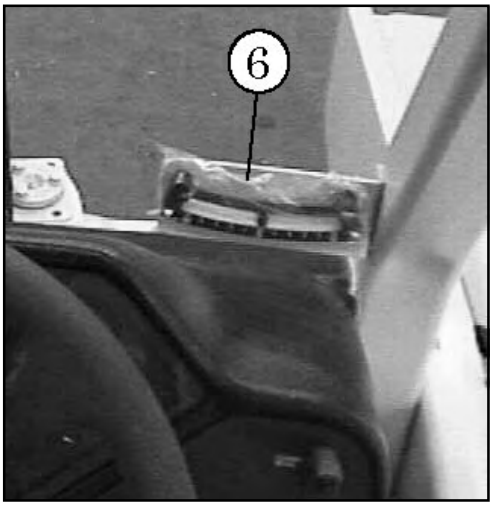

Bottom Area of Dash

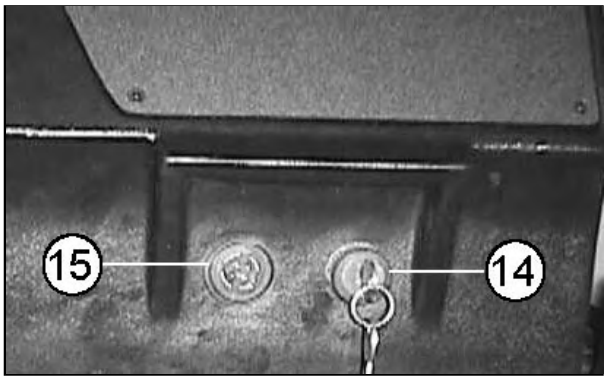

https://truckmanualshub.com/

Inclinometer

This instrument shows the degree of deviation (left or right) of the machine frame relative to horizontal ground level. It helps you keep your load level when operating over uneven terrain. The frame is approximately level when the inclinometer indicates 0° deviation. (#6)

Parking Brake Switch

This switch activates the parking brake when it is in the up postition, and releases it when it is in the down position. (#7)

BRAKE OFF BRAKE ON

Clutch Cut-off Switch

This toggle switch disengages the transmission when you apply the service brake pedal. Use this feature to increase the speed of your hydraulic functions. (#8)

Axle Lock Warning Light

This light glows **orange** when the vehicle is in axle lock mode (boom above 25°, parking brake on). (#9)

Brake Oil Pressure Warning Light

This light glows red and activates a warning buzzer if there is low hydraulic brake oil pressure. (Normally, light should not come on at engine start-up). (#10)

Park Brake Indicator Light

This light glows **red** when the parking brake is applied and goes out when brake is released. NOTE: Parking brake should be applied whenever any maintenance is performed. (#11)

Low Voltage Warning Light

This light glows red and activates a warning buzzer if there is a malfunction of the charging system. (Light should come on at engine start-up and go out when engine is revved.) (#12)

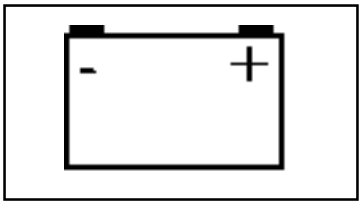

https://truckmanualshub.com/

Engine Oil Pressure Warning Light
This light glows red and activates warning buzzer if the engine oil pressure drops below normal. (Light should come on at engine start- up and go out when oil pressure rises to normal.) (#13)

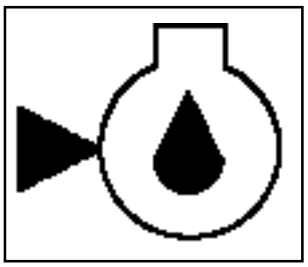

Ignition Switch
The ignition switch has four positions: ACC, OFF, ON, and START. (#14)

Sonalert (Warning Buzzer)

BUZZER SWITCH INGITION

Steering Selector
This lever controls the steering modes: oblique, two-wheel or four-wheel.

Hydraulic Controls

DISPLAY, CONTROL, OR INDICATOR	FUNCTION
HYDRAULIC CONTROLS	All hydraulic controls (except the steering selector) are self-centering to neutral. When you release them, they return to their center (neutral) positions.
REMOTE CONTROL JOYSTICK	Both joysticks are located on a console to your right. They control the following boom, fork frame, and machine frame motions: 1. Raise boom 2. Lower boom 3. Extend boom 4. Retract boom 5. Fork tilt up 6. Fork tilt down 7. Fork side tilt left 8. Fork side tilt right 9. Frame sway right 10. Frame sway left

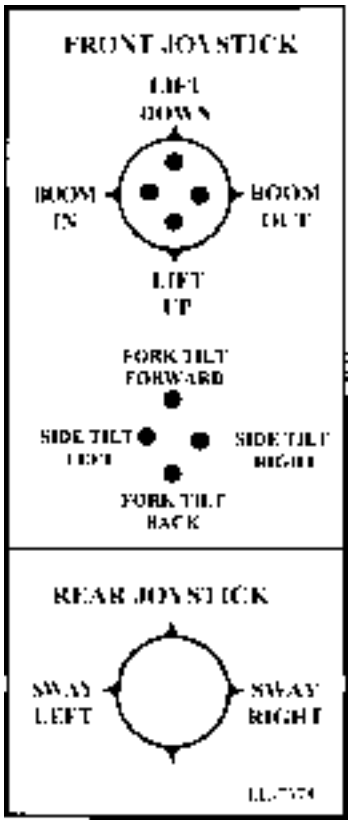

As shown, the boom and fork frame functions are controlled by the forward most joystick and the machine sway functions are controlled by the rearward joystick. The fork frame side tilt function is operated by pressing and holding the left button to tilt the fork frame left and the right button to tilt the fork frame right. The front button will tilt the fork frame forward and the rear button will tilt the fork frame back. Pushing the rear joystick to the right will sway the machine to the right and pushing it to the left will sway the machine to the left.

https://truckmanualshub.com/

Throttle and Brake Controls

DISPLAY, CONTROL, OR INDICATOR	FUNCTION
THROTTLE AND BRAKE CONTROLS	The throttle and brake controls are shown below.
BRAKE PEDAL	Depress this pedal to apply brakes to all four wheels.
THROTTLE PEDAL	Depress this pedal to increase engine speed.

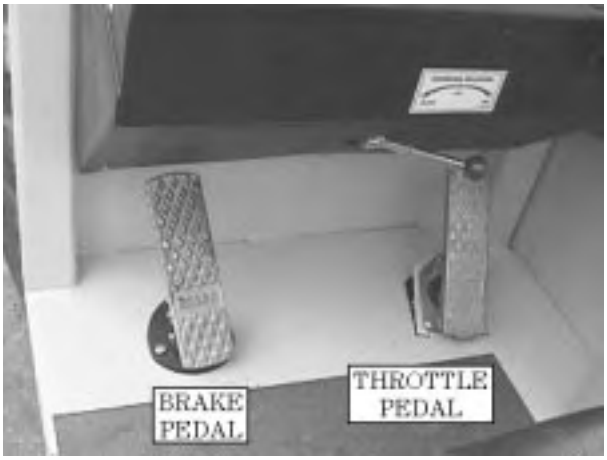

https://truckmanualshub.com/

Transmission Controls

DISPLAY, CONTROL, OR INDICATOR	FUNCTION
POWERSHIFT TRANSMISSION CONTROLS	This machine is equipped with a 3 speed forward, 3 speed reverse, CLARK-HURTH COMPONENTS T-12000 Powershift Transmission.
TWIST GRIP GEAR SHIFTER / DIRECTIONAL SELECTOR	The twist grip on the control lever shifts the transmission gears and also selects the direction.

STEERING WHEEL	The steering wheel and gear are of the conventional type. Turning the wheel clockwise turns the vehicle to the right; turning the wheel counterclockwise turns the vehicle to the left.

1. With engine off, pull the engine oil dipstick from the engine and wipe it clean.

2. Insert the dipstick back into its position in the engine block and withdraw it again.

2. Look into the radiator filler neck to check the coolant level. The proper level is approximately 3/4 inch below the bottom of the radiator filler neck. Add coolant as needed.

3. Replace the radiator cap by pressing down while turning it clockwise.

CHECK TRANSMISSION OIL

1. Start the engine and allow it to idle with the transmission in neutral until the transmission reaches operating temperature.

2. Remove the transmission dipstick and check the oil level on the dipstick.

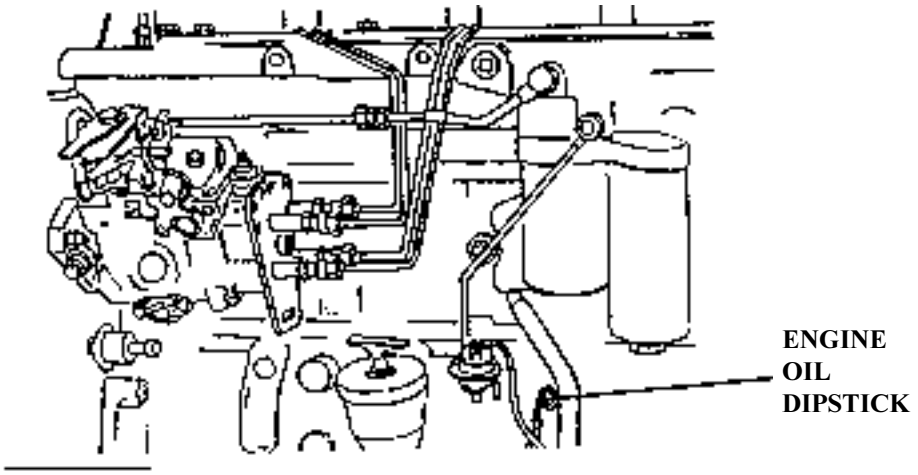

Figure 9. Cummins Engine Oil Dipstick.

3. Using a wrench, remove the breather, add transmission oil as needed and insert the dipstick back into the transmission. Install the breather.

Check the fuel level as indicated on the fuel gauge. Add fuel if necessary.

https://truckmanualshub.com/

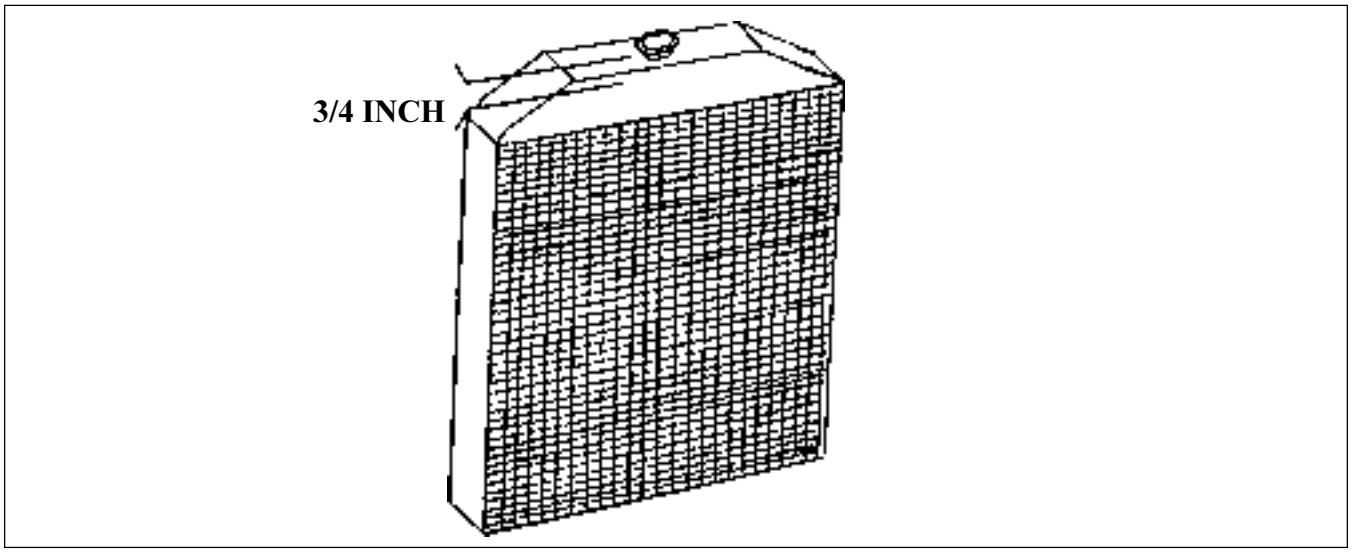

Figure 10. Radiator Coolant Level Check

CHECK HYDRAULIC FLUID LEVEL

The boom should be in the down (frame level) position and fully retracted. Check hydraulic fluid level as indicated on the sightglass, located on the side of the hydraulic tank. Add hydraulic oil as needed. Do not overfill hydraulic tank.

TIRES AND RIMS

Inspect the tires for punctures, wear and if applicable, proper tire pressure. Check the rims for missing lug nuts and wheel studs.

CAUTION

The tire specifications of the Extendo apply to the machine as it was tested in accordance with ASME B56.6A-1994. Any replacement of tires must meet or exceed these specifications for sidewall stiffness.

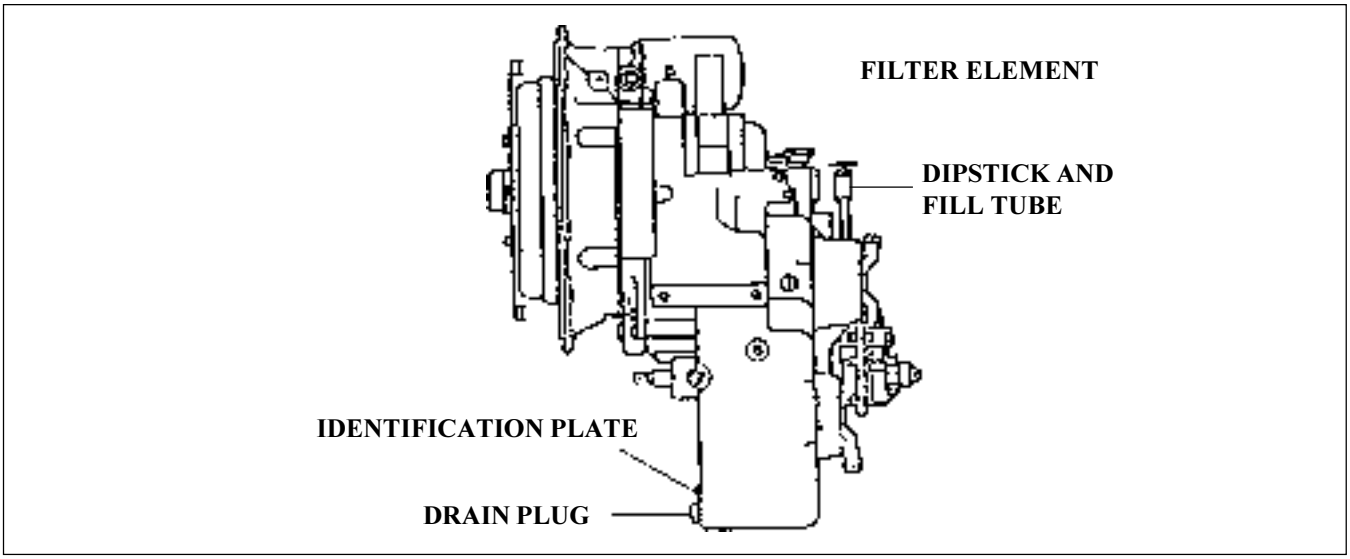

Figure 11. Transmission Fluid Dipstick.

INSPECTION FOR LEAKS

Visually inspect the area beneath the forklift for puddles, indicating a leak. Locate the cause of the leak and correct the problem before operating the forklift. Recheck all fluid levels at this point.

GENERAL INSPECTION

Perform a walk-around inspection of the forklift, looking for loose items (tools, shop towels etc.) that may have been left on forklift. Remove any such items.

The following checks and services are to be performed during forklift operation:

GAUGES AND INDICATORS

Observe all gauges and indicators and be prepared to halt operation in the event of any abnormal indication. Be constantly aware of the fuel level, engine coolant temperature, transmission oil temperature and electrical system voltage.

HYDRAULIC FLUID LEVEL

Perform a daily check of the hydraulic oil level and temperature as indicated on the sightglass, located on the side of the hydraulic tank. Add hydraulic oil if necessary.

CHANGES IN PERFORMANCE

Be constantly alert to changes in the equipment's operating characteristics. Such changes in performance are sometimes an indication of a malfunction.

TABLE IV. TIRE PRESSURES

	SIZE	PLY RATING	FRONT	REAR
Goodyear Galaxy	13:00 x 24	12	65 psi	65 psi
	13:00 x 24	14	80 psi	80 psi

https://truckmanualshub.com/

OPERATIONAL CHECKS & SERVICES

OPERATING INSTRUCTIONS

STARTUP AND DRIVING

CAUTION

Never operate the starter for more than 20 seconds continuously. Allow 2 minutes between starting efforts. If using starting fluid for a cold weather start, inject the starting fluid only while the engine is cranking.

1. Start the engine by applying the parking brake, placing the transmission in neutral, inserting the ignition key into the switch and turning the key clockwise. Release the key when the engine starts.

WARNING

The forklift must be standing still when selecting the steering mode. **Serious injury and/or equipment damage** could occur if the mode is selected while the forklift is moving.

2. Determine which of the following steering modes is to be selected:

https://truckmanualshub.com/

a. OBLIQUE. (Shown in Figure 12 on the following page.) In this position all four wheels will turn in the same direction. This steering mode should not be used at speeds exceeding 2 MPH.

b. TWO-WHEEL STEER. (Shown in Figure 13 on the following page.) In this position only the front wheels will steer. Before selecting this mode, the rear wheels must be turned straight using the 4 WHEEL STEER mode. Use ONLY 2 WHEEL STEER mode when travel speeds exceed 10 MPH.

c. FOUR-WHEEL (CRAB) STEER. (Shown in Figure 14 on the folling page.) In this mode the rear wheels will turn in the opposite direction from the front wheels, providing the shortest turn radius. Do not use 4 wheel steer at speeds over 10 mph.

3. Position the steering selector lever (Figure 15) in the desired mode of steer, either, OBLIQUE (left position) , TWO-WHEEL STEER (center position) or FOUR-WHEEL STEER(CRAB) (right position) .

https://truckmanualshub.com/

STEERING MODES

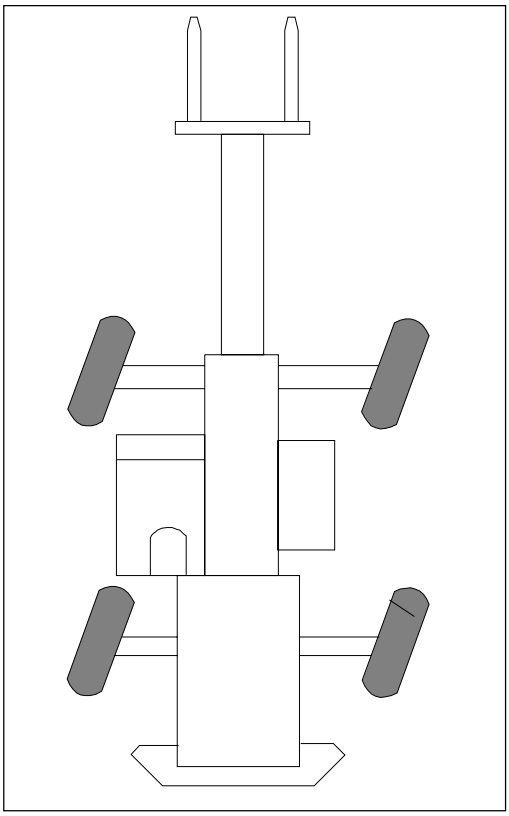

Figure 12. Oblique Steering Mode.

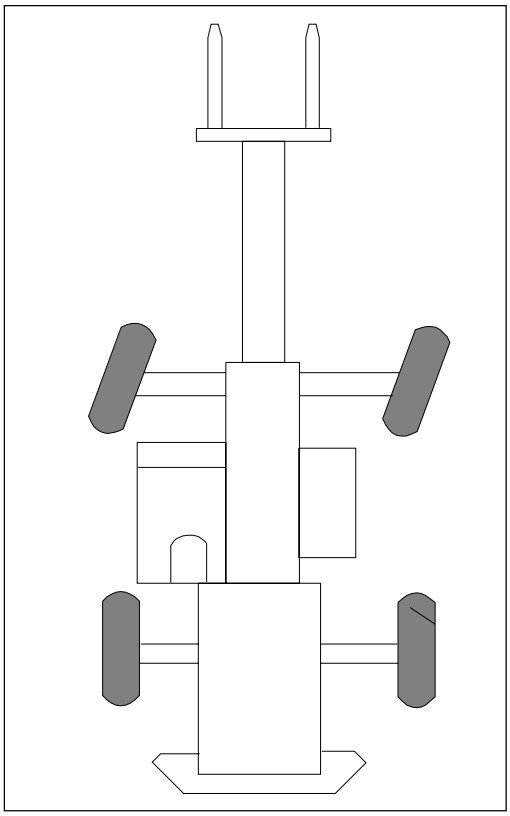

Figure 13. Two-Wheel Steering Mode.

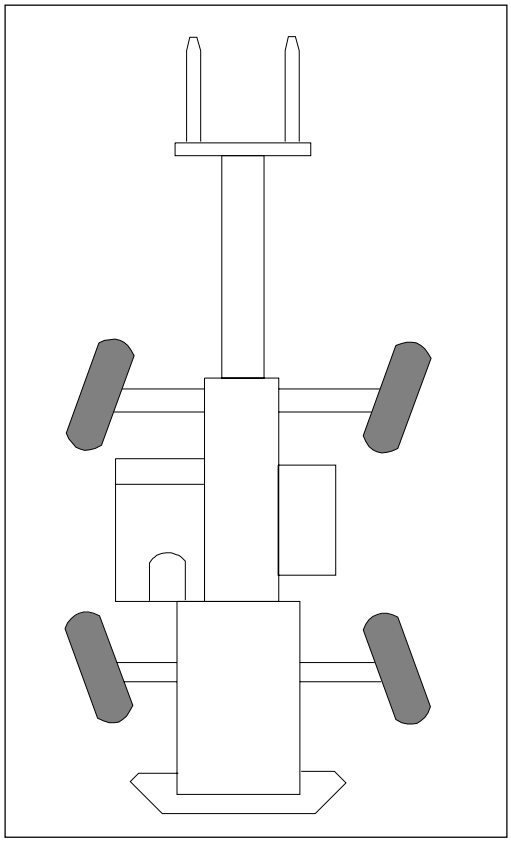

Figure 14. Four-Wheel (Crab) Steering Mode.

https://truckmanualshub.com/

4. Raise the forks to a safe travel height by pulling the boom control joystick to the rear until a safe height is reached.

5. Hold the brake pedal down and select either forward (F) or reverse (R) travel, using the forward and reverse gear shift lever. While continuing to hold the brake pedal down, select either 1 for first gear, 2 for second gear, 3 for third gear or 4 for fourth, using the gear shift lever.

6. Make certain that the area around the forklift is clear. Continue to hold the brake pedal down and release the parking brake.

7. The forklift is now ready to drive by carefully releasing the brake pedal.

WARNING

The Extendo forklift is capable of a maximum speed of 20 mph regardless of direction. Make certain the intended direction has been selected. **Death, serious injury or damage could result from acceleration in an unintended direction.**

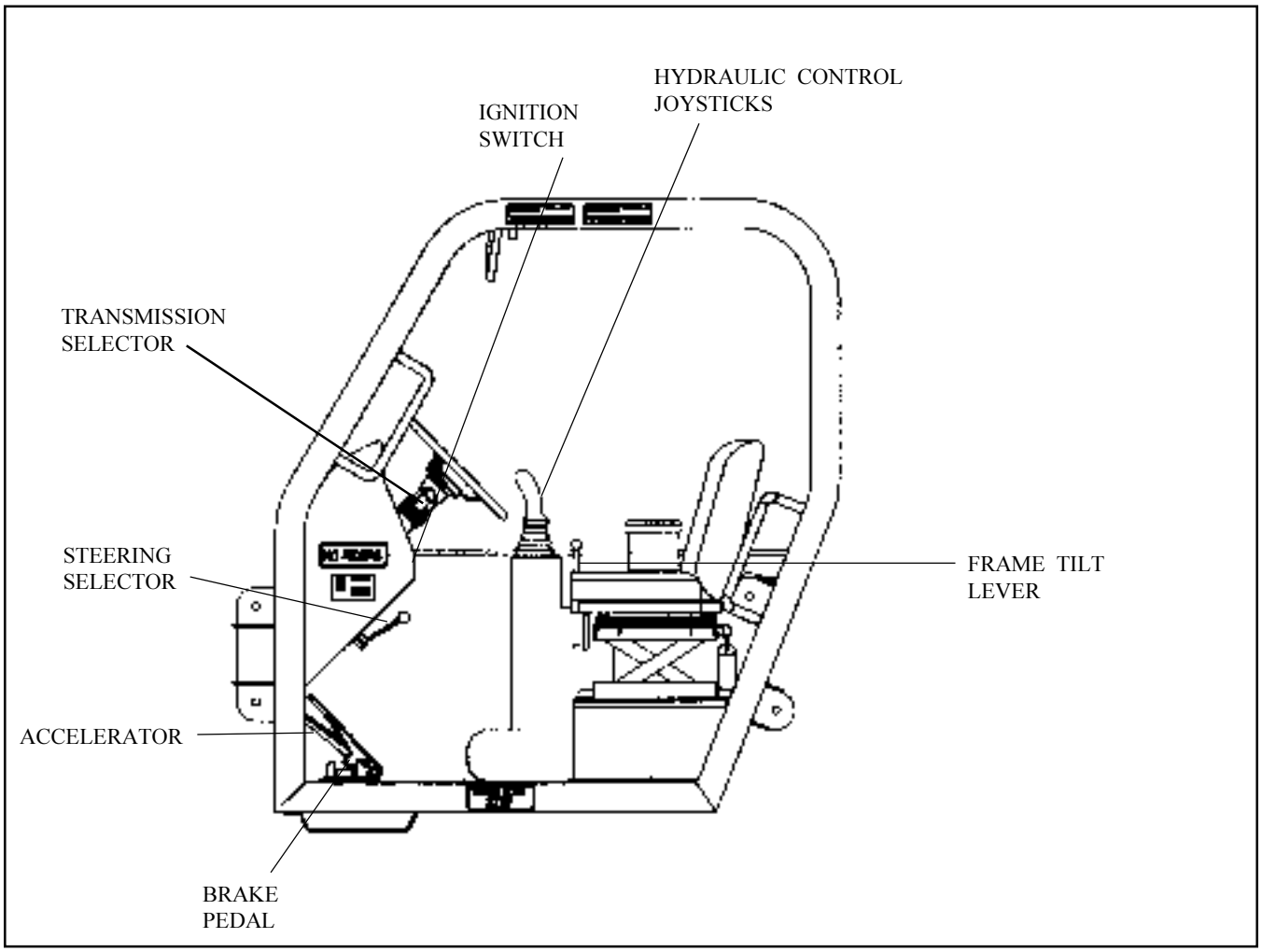

Figure 16. Startup and Driving.

https://truckmanualshub.com/

RAISING THE LOAD

NOTE

Refer to Figure 16, "Startup and Driving," for identification of components mentioned in this procedure.

1. Inspect every load before attempting to lift. Make certain the loads are properly bound and will not fall apart while lifting and transporting. Also, make sure the weight of the loads are within the safe lifting range of the forklift.

2. Position the forklift directly and squarely in front of the load.

3. Lower the boom by pushing the front joystick forward until the forks are at the necessary level to engage the load.

4. If machine is equipped with the Fork Rotate function, level the forks by depressing and holding either button on the rear joystick. Press the joystick forward to rotate fork frame to the left and pull the joystick back to rotate the fork frame to the right. (See instruction decal on page 76.)

5. If necessary, adjust the width of the forks to accommodate the load.

6. To position the load for transport:

a) tilt the forks back by pulling the rear joystick back without pressing any buttons,
b) retract the boom by moving the front joystick to the left, and
c) once the boom is down, ensure the forks are tilted back to a stable position by pulling the rear joystick back without pressing any buttons.

7. Pull the front joystick back to lift the load only enough to clear obstacles. Keep the top of the load below eye level. The load is now ready to transport.

WARNING

Do not attempt to transport stacked loads. The top of a stacked load may not be visible to the operator . If the load is too tall, it should be transported in two or more moves. Failure to do so could result in death, serious injury or damage to the equipment.

https://truckmanualshub.com/

Refer to Figure 16, "Startup and Driving," for identification of components mentioned in this procedure.

1. Make certain that all the steps outlined in "STARTUP AND DRIVING" have been performed.

2. Always observe the path ahead and be aware of anything to the sides of the path that may pose a problem and act accordingly. **DO NOT OVERDRIVE THE CONDITIONS**.

3. Be constantly aware of the area overhead and make sure, before entering an area with limited overhead, that the forklift will fit. **NEVER OPERATE NEAR POWER LINES**.

4. Keep the load as close to the ground as possible when moving and **DO NOT STOP SUDDENLY**. Approach turns, uneven and/or slippery surfaces slowly. Sound horn and drive slowly in congested areas.

WARNING

Never attempt to drive across an excessively steep incline, regardless of circumstances. **Serious injury and/or death could otherwise result.** EXERCISE GOOD JUDGEMENT.

5. Driving on inclines or unstable surfaces is unsafe but sometimes unavoidable. If driving on an incline cannot be avoided, level the forklift by using the Frame Tilt lever as follows (see Figure 17.):

a. Pull lever to left to tilt the forklift frame to the left.

b. Pull the lever to right to tilt the forklift frame to the right.

6. When traveling on inclines, do so as follows:

https://truckmanualshub.com/

Maintenance

INTRODUCTION

The information provided on the following pages will allow the owner to establish an effective preventive maintenance plan. Close adherence to such a plan will add greatly to the equipment's performance and longevity. Always keep an accurate record of the maintenance performed. The maintenance procedures included in the following are those that can be accomplished by the owner, using common hand tools. For more complex maintenance, contact an authorized dealer or service representative.

WARNING

Safety while servicing is the user's responsibility. Only qualified and authorized personnel should be permitted to maintain, repair, adjust and inspect the machine.

TABLE V. SCHEDULED MAINTENANCE

SERVICE	Daily	20 hr	40 hr	50 hr	100 hr	200 hr	500 hr	1000 hr	2000 hr
Engine Oil	C			*CR	CR				
Engine Oil Filter				*CR	CR				
Fuel Filter							CR		
Engine Vent Tube							Clean		
Alternator Belt						Adjust			
Transmission Fluid		C		*CR				CR	
Transmission Filter				*CR				CR	
Hydraulic Fluid	C							CR	
Hydraulic Filter							CR		
Air Cleaner Element					Clean		CR		
Radiator Coolant		C							
Battery		C							

https://truckmanualshub.com/

TABLE IV. SCHEDULED MAINTENANCE . . . (CONTINUED)

SERVICE	Daily	20 hr	40 hr	50 hr	100 hr	200 hr	500 hr	1000 hr	2000 hr
Axle Differential				*CR		C		CR	
Planetary Hubs				*CR		C	CR		
Boom Pivot	Lube								
Front Tilt Cyl. Pivots	Lube								
Rear Tilt Cyl. Pivots	Lube								
Quick Attach Pivots	Lube								
Frame Tilt Cylinder	Lube								
Fork Tilt Cylinder	Lube								
Attachments/Hyd. Options	Lube								
Axle U-joints		Lube							
Steer Cyl. Pivots		Lube							
Steer Spindles		Lube							
Tie Rod End Pivots		Lube							
Driveshaft U-joints		Lube							

C= Check Fluid levels and add fluid as necessary
CR= Change fluid or replace filter

* = First hours of operation

https://truckmanualshub.com/

TABLE VI. FLUIDS AND LUBRICANTS

APPLICATION	DESCRIPTION
ENGINE OIL	API Service Classification CE or CE
(SINGLE GRADE)	CCMC Specification D5 or D4
At temperatures:	
Below -4 degrees F (-20 degrees C)	Arctic Oil
4 to 50 degrees F (-20 to 10 degrees C)	SAE 10W
32 to 86 degrees F (0 to 30 degrees C)	SAE 30W
50 to 104 degrees F (10 to 40 degrees C)	SAE 40W
ENGINE OIL	API Service Classification CE or CE
(MULTI-GRADE)	CCMC Specification D5 or D4
At temperatures:	
-22 to 68 degrees F (-30 to 20 degrees C)	SAE 5W-30
-4 to 86 degrees F (-20 to 30 degrees C)	SAE 10W-30
14 to 122 degrees F (-10 to 50 degrees C)	SAE 15W-40
ENGINE COOLANT	John Deere Low Silicate Antifreeze or equivalent
TRANSMISSION FLUID	The following hydraulic transmission fluids, as applicable
At temperatures:	
Above -10 degree F (-23 degrees C)	Type C-3 (except Grade 30)
Below -10 degree F (-23 degrees C)	Type C-3 (except Grade 30) with auxiliary preheat to raise temperature to above -10 degrees F (-23 degrees C)
Above 32 degrees F (0 degrees C)	Type C-3 or Type C-3 Grade 30

https://truckmanualshub.com/

TABLE VI. FLUIDS AND LUBRICANTS (CONTINUED)

APPLICATION	DESCRIPTION
AXLE LUBRICANT	Multi-purpose gear lubricants meeting MIL Spec
(SINGLE GRADE)	L-2105 and suitable for API Service Classification GL-4
	SAE 80W TRACTELF SF3
AXLE LUBRICANT	Milti-purpose Libricants meeting MIL-Spec
(MULTI-GRADE)	L-2105C and suitable for API Service Classification GL-5
At temperatures:	
-15 to 100 degrees F (-26 to 38 degrees C)	SAE 80W-90 FINA PONTONIC MPX
10 to 120 degrees F (-12 to 50 degrees C)	SAE 85-140 FINA PONTONIC MPX
NOTE: FINA PONTONIC MPX Gear Oil is suitable for limited Slip differentials (Front Axle). If excessive chatter occurs, the axle must be drained and refilled with 9 oz. of additive Part No. APP866 and then filled with FINA PONTONIC MPX up to the normal level.	
GREASE ZERKS	NLGI-2
HYDRAULIC FLUID	ISO-32

https://truckmanualshub.com/

LUBRICATION

All grease fittings on the Extendo are to be serviced with NLGI-2 grease at the intervals specified on Table IV., “Scheduled Maintenance”. Figures 18a. through 18e., used in conjunction with Table VII., “Lubrications Points” show the locations of the various grease fittings.

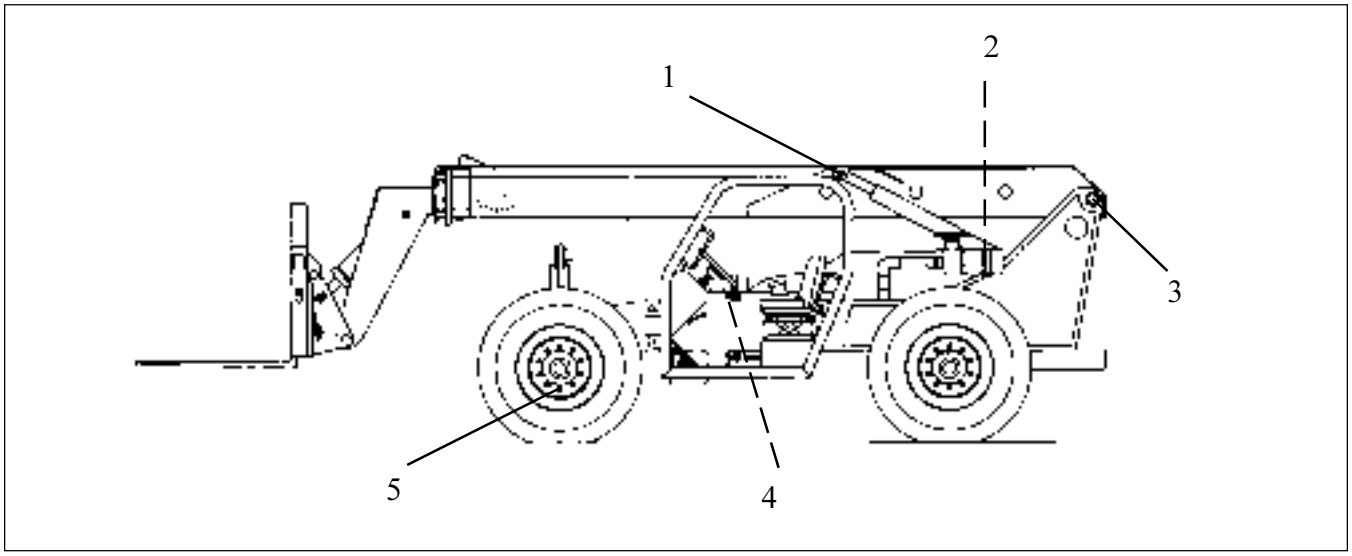

Figure 18a. Machine Lubrication Points

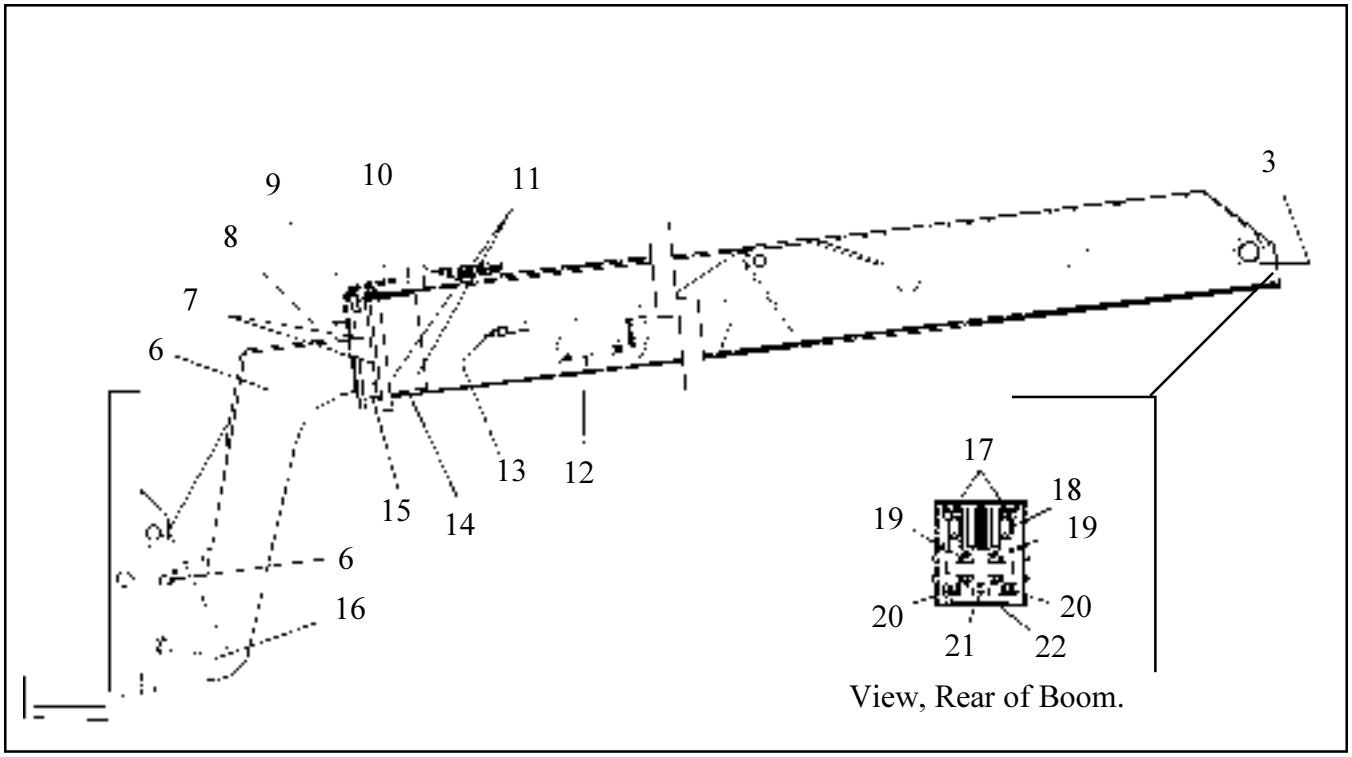

Figure 18b. Boom Lubrication Points.

https://truckmanualshub.com/

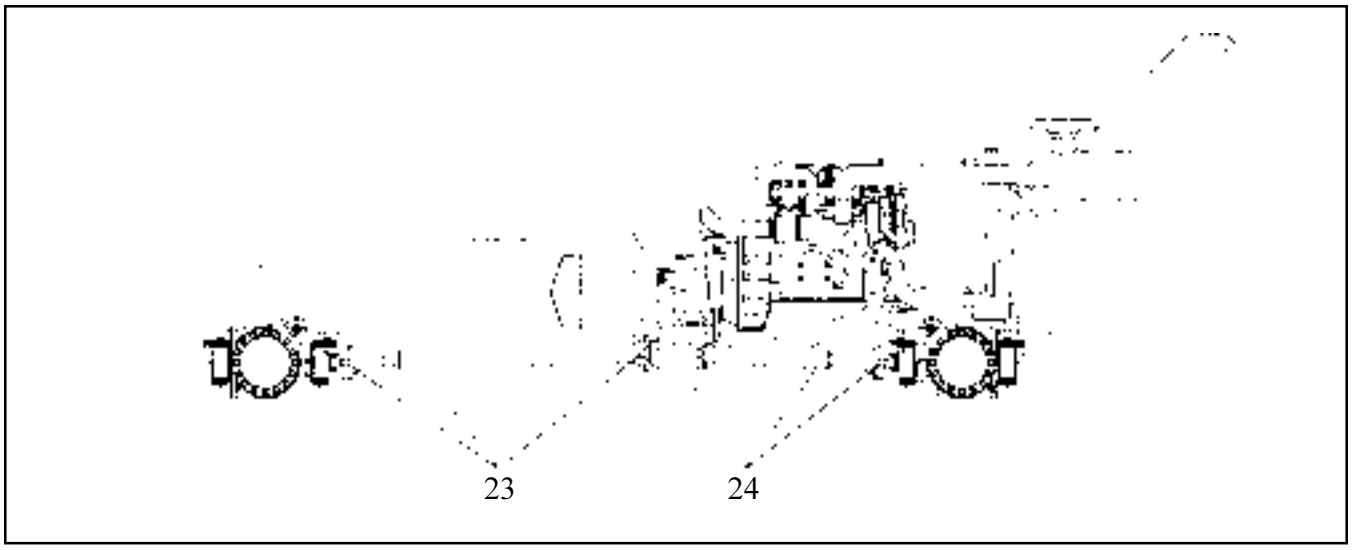

Figure 18c. Drive Shaft Lubrication Points

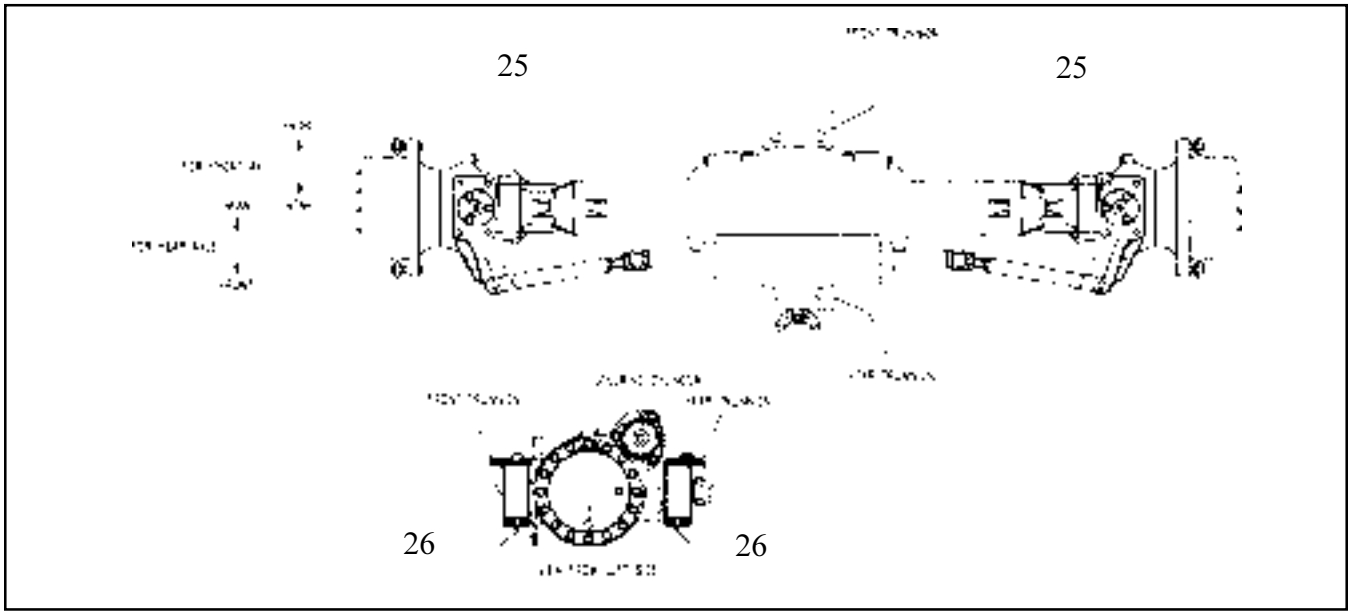

Figure 18d. Axle Lubrication Points

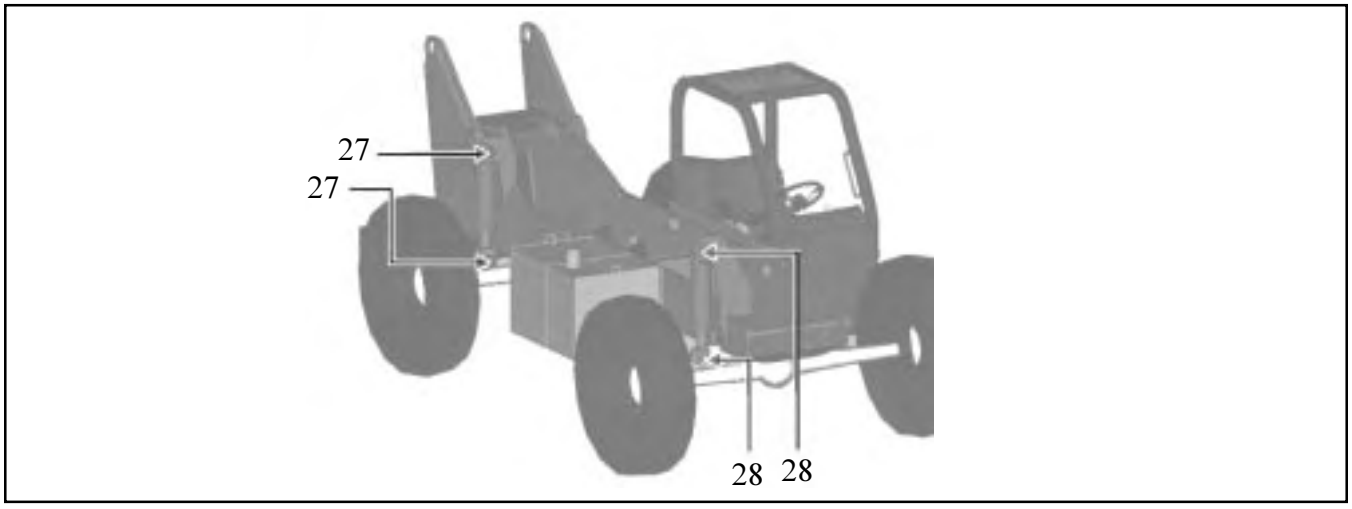

Figure 18e. Chassis Lubrication Points

https://truckmanualshub.com/

TABLE VII. LUBRICATION POINTS

ITEM #	GREASE POINT LOCATION(S)
1	Lift cylinder, shaft end (2)
2	Lift cylinder, base end (2)
3	Boom pivot pin (2)
4	Hydraulic system return line filter (1)
5	Wheel nuts, four locations
6	Tilt cylinder bushings (2), one on each end of cylinder
7	Machine boom side wear pads (2)*
8	Middle boom spacer blocks (2)
9	Front chain sheave (1)
10	Large boom spacer blocks (2)
11	Large boom side wear pads (2)*
12	Extend cylinder wear pad (1)*
13	Lube line for small boom top wear pads (2)*
14	Large boom bottom wear pad (1)*
15	Middle boom bottom wear pad (1)*
16	Fork frame pivot pin (2)
17	Middle boom rear top wear pads (2)*
18	Rear chain sheave (2)
19	Middle boom rear side wear pads (2)*
20	Small boom rear side wear pads (2)*
21	Small boom rear bottom wear pad (1)*
22	Middle boom rear bottom wear pad (1)*
23	Front drive shaft (3)
24	Rear drive shaft (3)
25	Steering knuckle (8)
26	Axle trunnion mounts (4)
27	Rear stabilization cylinder bushings (2) one on each end of cylinder
28	Sway cylinder bushings (2), one on each end of cylinder
	** NOTE: No lube required on Nylatron wear pads*

TROUBLESHOOTING

The following troubleshooting tables provide some of the most common problems occurring in forklifts and their possible causes. If, after following the recommendations provided, the malfunction is still present, consult an authorized dealer or service representative.

HOW TO USE TROUBLESHOOTING TABLES

Locate the symptom in the "SYMPTOM" column of the table. Move across the page to the next column, "PROBLEM." This column will give the most probable cause(s) of the malfunction. The "SOLUTION" column will provide the necessary maintenance action to correct the problem. If a problem cannot be solved by using the troubleshooting tables, contact an authorized dealer or service representative.

TABLE VIII. ENGINE TROUBLESHOOTING

SYMPTOM	PROBLEM	SOLUTION
Engine hard to start or will not start	Improper starting procedure	Review starting procedure
	No fuel	Check fuel level
	Air in fuel line	Bleed fuel line
	Cold weather	Use cold weather starting aids
	Slow starter speed	See "Starter Cranks Slowly"
	Crankcase oil too heavy	Use proper viscosity oil
	Improper type of fuel	Consult fuel supplier; use proper type fuel for conditions
	Water, dirt or air in fuel system	Drain, flush, fill and bleed system
	Clogged fuel filter	Replace filter element
	Dirty or faulty injection nozzles	Have authorized dealer or engine distributor check injectors
	Injection pump shut-off not reset	Turn key switch to 'OFF" then to "ON"

https://truckmanualshub.com/

TABLE VIII. ENGINE TROUBLESHOOTING (Continued)

SYMPTOM	PROBLEM	SOLUTION
Engine knocks	Low engine oil level	Add oil to engine crankcase
	Injection pump out of time	See authorized dealer or engine distributor
	Low coolant temperature	Check thermostat
	Engine overheating	See “Engine Overheats”
Engine runs irregularly or stalls frequently	Low coolant temperature	Check thermostat
	Clogged fuel filter	Replace filter element
	Water, dirt or air in fuel system	Drain, flush, fill and bleed system
	Dirty or faulty injection nozzles	Have authorized dealer or engine distributor check injectors
Below normal engine temperature	Defective thermostat	Check thermostat
	Defective temperature gauge or sender	Check gauge, sender and connections
Lack of power	Engine overloaded	Reduce load
	Air intake restriction	Service air cleaner
	Clogged fuel filter	Replace filter element
	Improper type of fuel	Use proper fuel
	Overheated engine	See “Engine Overheats”
	Low engine temperature	Check thermostat
	Improper valve clearance	See authorized servicing dealer or engine distributor

TABLE VIII. ENGINE TROUBLESHOOTING (Continued)

SYMPTOM	PROBLEM	SOLUTION
Lack of power (con't)	Dirty or faulty injection nozzles	Have authorized servicing dealer or engine distributor check injectors
	Injection pump out of time	See authorized servicing dealer or engine distributor
	Leaking exhaust manifold gasket	See authorized servicing dealer or engine distributor
	Defective aneroid control line	See authorized servicing dealer or engine distributor
	Restricted fuel hose	Clean or replace fuel hose
	Low fast idle speed	See authorized servicing dealer or engine distributor
Low engine oil pressure	Low oil level	Add oil
	Improper type oil	Drain, then fill crankcase with oil of proper viscosity and quality
	Clogged inlet screen on oil pump pickup tube	See authorized servicing dealer or engine distributor
	Faulty oil pump	See authorized servicing dealer or engine distributor
High oil consumption	Crankcase oil too light	Use proper viscosity oil
	Oil leaks	Check for leaks in lines, gaskets, and oil drain plug
	Restricted crankcase vent tube	Clean vent tube
Engine emits white smoke	Improper type of fuel	Use proper fuel
	Low engine temperature	Warm up engine to normal operating temperature

https://truckmanualshub.com/

TABLE VIII. ENGINE TROUBLESHOOTING (Continued)

SYMPTOM	PROBLEM	SOLUTION
Engine emits white smoke (con't)	Defective thermostat	Check thermostat
	Defective injection nozzles	See authorized servicing dealer or engine distributor
	Engine out of time	See authorized servicing dealer or engine distributor
Engine emits black or gray exhaust smoke	Improper type of fuel	Use proper fuel
	Clogged or dirty air cleaner	Service air cleaner
	Engine overloaded	Reduce load
	Injection nozzles dirty	See authorized servicing dealer or engine distributor
	Engine out of time	See authorized servicing dealer or engine distributor
Engine overheats	Engine overloaded	Reduce load
	Low coolant level	Fill radiator, check radiator and hoses for loose connections or leaks
	Faulty radiator cap	Have serviceman check
	Loose or defective fan belt	Adjust belt tension; replace as required
	Low engine oil level	Check oil level; add oil as required
	Cooling system needs flushing	Flush cooling system
	Defective thermostat	Remove and check thermostat
	Defective temperature gauge or sender	Check coolant temperature with a thermometer and replace gauge or sender as necessary

TABLE VIII. ENGINE TROUBLESHOOTING (Continued)

SYMPTOM	PROBLEM	SOLUTION
High fuel consumption	Improper type of fuel	Use proper type of fuel
	Clogged or dirty air cleaner	Service air cleaner
	Engine overloaded	Reduce load
	Improper valve clearance	See authorized servicing dealer or engine distributor
	Injection nozzles dirty	See authorized servicing dealer or distributor
	Engine out of time	See authorized servicing dealer or engine distributor
	Low engine temperature	Check thermostat

TABLE IX. ENGINE ELECTRICAL TROUBLESHOOTING

SYMPTOM	PROBLEM	SOLUTION
Undercharged system	Excessive electrical load from added accessories	Remove accessories or install higher output alternator
	Excessive engine idling	Increase engine rpm when using heavy electrical load
	Poor electrical connections on battery, ground strap, starter or alternator	Inspect and clean as necessary
	Defective battery	Test battery and replace as required
Battery uses too much water	Cracked battery case	Test battery and replace if necessary
	Battery charging rate too high	Test charging system; replace faulty component
Battery will not charge	Loose or corroded connections	Clean and tighten connections

https://truckmanualshub.com/

TABLE IX. ENGINE ELECTRICAL TROUBLESHOOTING (Continued)

SYMPTOM	PROBLEM	SOLUTION
Battery will not charge (con't)	Sulfated or worn-out battery	See authorized servicing dealer or engine distributor
	Loose or defective alternator belt	Adjust belt tension or replace belts
Starter cranks slowly	Low battery output	See authorized servicing dealer or engine distributor
	Crankcase oil too heavy	Use proper viscosity oil
	Loose or corroded connections	Clean and tighten loose connections
Starter and hourmeter functions; rest of electrical system does not function	Blown fuse on magnetic switch	Replace fuse (14 amp)
Entire electrical system does not function	Faulty battery connection	Clean and tighten connections
	Sulfated or worn-out battery	See authorized servicing dealer or engine distributor
	Blown fuse (MDL-25)	Replace fuse

TABLE X. TRANSMISSION TROUBLESHOOTING

SYMPTOM	PROBLEM	SOLUTION
Transmission slips	Low transmission oil level	Fill transmission with proper oil to proper level
	Worn clutches	See authorized dealer
	Contaminated transmission oil	Drain transmission, replace filter element, and refill with clean oil. If problem persists, see authorized dealer
Transmission will not change into selected gear	Linkage loose or out of adjustment	Connect and/or adjust linkage

https://truckmanualshub.com/

TABLE X. TRANSMISSION TROUBLESHOOTING (Continued)

SYMPTOM	PROBLEM	SOLUTION
	Internal damage to transmission valve	See authorized dealer for service
	Low transmission oil level	Fill transmission with proper oil to proper level

https://truckmanualshub.com/

TABLE XI. HYDRAULIC SYSTEM TROUBLESHOOTING

SYMPTOM	PROBABLE CAUSE	REMEDY
Pump not delivering oil	Plugged sump strainer.	Clean strainer.
	Pump driveshaft coupling sheared (direct drive).	Remove pump and determine damage. Replace defective parts.
	Oil suction port in reservoir blocked.	Remove contamination and flush suction line with clean hydraulic oil. Check sump strainer for dirt and sludge.
	Oil viscosity too heavy to pick up prime.	Drain system and replace with new oil of correct viscosity (ASTM ISO VG 32).
	Air leaks on suction line, pump not priming.	(1) Inspect suction line for leaks by pouring oil over fittings. Tighten loose connections. (2) Check reservoir oil level. The oil level must be above the suction port. (3) Check minimum speed of pump driveshaft which may be too slow to prime the pump.

https://truckmanualshub.com/

SYMPTOM	PROBABLE CAUSE	REMEDY
Pump makes excessive noise	Partially blocked suction line or sump strainer.	Remove contamination and flush suction line with clean hydraulic oil. Check for loose lining in suction hose. Clean sump strainer.
	Low oil level in reservoir.	Add oil to 'FULL' mark on filler cap/dipstick.
	Air leak at pump suction hose joint or pump shaft seal.	Pour oil over fittings and around driveshaft to check for air leaks. Replace defective pump seal.
	Collapsed suction hose.	Test at full rpm as hose may be normal at low speed, but collapses at high speed.
Pump never stops pumping, oil is excessively hot, or main directional valve makes excessive noise.	Improper △P setting between pump and main directional valve	Adjust △P pressure setting using the pressure adjustment procedures outlined on page 1-46.

https://truckmanualshub.com/

MAIN DIRECTIONAL VALVE TROUBLESHOOTING

SYMPTOM	PROBABLE CAUSE	REMEDY
Oil leaks at either end of spool	Defective O-ring(s) in spool control.	Replace O-ring(s).
Oil leaks between sections	Pinched or blown seal(s).	Replace seal(s).
	Tie rod fasteners not correctly torqued.	Torque fasteners to 44 ft. lbs. (60 Nm).
Spool does not return to neutral position	Broken centering spring(s) in spool control.	Replace spring(s).
	Bent spool.	Replace section.
	Foreign particles in valve.	Clean valve.
Solenoid for fork frame side tilt fails to energize	Defective fuse, switch or solenoid.	Ensure that 12 vdc is available to solenoid coil. If no voltage available, replace fuse or switch. If voltage is available, replace solenoid.
	Defective electrical wire from switch to solenoid.	Repair wiring defects or replace wiring.
	Electrical plug disconnected from solenoid.	Connect plug to solenoid.
No motion, slow or jerky action of hydraulic system	Low oil level in reservoir.	Add oil to 'FULL' mark on filler cap/dipstick.
	Plugged sump strainer.	Clean strainer.
	Valve body cracked inside.	Replace valve section.
	Spool not moved to full stroke.	Check spool travel.

https://truckmanualshub.com/

SYMPTOM	PROBABLE CAUSE	REMEDY
Main valve makes excessive noise, oil excessively hot, or pump does not stop pumping	Improper △P setting between pump and valve.	Refer to page 1-46 for adjustment procedure of main valve and pump.
Load drops when spool moved to a working position	Load larger than capacity.	Reduce to rated load capacity at rated load center.

https://truckmanualshub.com/

REMOTE CONTROL (JOYSTICK) VALVE

SYMPTOM	PROBABLE CAUSE	REMEDY
Pilot-operated spools in main valve do not shift when joystick is actuated	Improper stand-by pressure.	Adjust the pressure compensator using the instructions on page 1-xx.
	Not enough pilot pressure supplied to main valve.	Pilot pressure should be within the range of 500 psi (±25 psi). If it is not, clean filter and clean or replace pilot spool.
	Leak(s) in pilot lines from remote control valve.	Tighten pilot hose couplings or replace defective hoses.
	Blocked pilot lines.	Remove contamination and flush pilot lines with clean hydraulic oil.
Joystick chatters	Pilot pressure too high.	Check pilot pressure using a 600 psi pressure gauge. Correct pressure should be within the range of 500 psi (±25 psi). If pressure is too high, clean or replace pilot spool in main directional valve. (Refer to page 1-12).
Wrong response to joystick movement	Pilot lines connected to wrong valve ports.	Reconnect lines to correct ports.
Joystick does not center	Broken centering springs.	Replace springs.
0il leaks between sections of remote control valve	Defective section O-ring.	Replace O-ring.

https://truckmanualshub.com/

ACCUMULATOR CHARGING VALVE TROUBLESHOOTING

SYMPTOM	PROBABLE CAUSE	REMEDY
Accumulator fails to charge	Hi-Low limit switch not working	Replace Limit switch.
	Solenoid valve not energizing	Check wiring between switch and solenoid. If wiring is good, replace solenoid.
	Spool in solenoid valve dirty	Clean spool and valve.
	Spool in solenoid valve damaged	Replace spool or whole valve as needed.

https://truckmanualshub.com/

FRAME TILT CYLINDER TROUBLESHOOTING

SYMPTOM	PROBABLE CAUSE	REMEDY
Cylinder will not operate when toggle switch is actuated	Failed hose or hose connections leaking.	Replace hose or tighten loose connections.
	Low oil level in reservoir.	Add oil to 'FULL' mark on reservoir dipstick.
	Plugged sump strainer.	Clean strainer.
	Oil bypassing spool in main valve.	Replace defective spool seal(s).
	Rod wiper leaking excessively.	Replace defective wiper.
	Oil bypassing cylinder piston.	Replace defective piston seal.
	Faulty pump operation.	Repair or replace pump.
Cylinder drifts (will not remain in position)	Oil bypassing cylinder piston.	Replace defective piston seal.
	Oil bypassing dual pilot check valve on cylinder.	Replace defective check valve ball(s) or spring(s).
	Oil bypassing spool in main valve.	Replace defective spool seal (s).
	Spool not centered in main valve.	Replace spool centering springs.

https://truckmanualshub.com/

FORK TILT CYLINDER TROUBLESHOOTING

SYMPTOM	PROBABLE CAUSE	REMEDY
Cylinder will not operate when rocker switch is actuated	Failed hose or hose connections.	Replace hose or tighten loose connections.
	Low oil level in reservoir.	Add oil to 'FULL' mark on reservoir dipstick.
	Plugged sump strainer.	Clean strainer.
	Oil bypassing spool in main valve.	Replace defective spool seal(s).
	Rod wiper leaking excessively.	Replace defective wiper.
	Oil bypassing cylinder piston.	Replace defective piston seal.
	Faulty pump operation.	Repair or replace pump.
	Load larger than capacity.	Reduce to rated load capacity at rated load center.
Cylinder drifts (will not remain in position)	Oil bypassing cylinder piston.	Replace defective piston seal.
	Oil bypassing counterbalance valve cartridge.	Replace defective cartridge seal(s).
	Oil bypassing spool in main valve.	Replace defective spool seal (s).
	Spool not centering in main valve.	Replace spool centering springs.

https://truckmanualshub.com/

EXTENSION CYLINDER TROUBLESHOOTING

SYMPTOM	PROBABLE CAUSE	REMEDY
Cylinder will not operate when joystick is actuated	Failed hose or hose connections leaking.	Replace hose or tighten loose connections.
	Low oil level in reservoir.	Add oil to 'FULL' mark on reservoir dipstick.
	Plugged sump strainer.	Clean strainer.
	Insufficient pilot pressure supplied to main valve.	Check pilot pressure with a 600 psi pressure gauge. Correct pressure should be 500(±25) psi.
	Oil bypassing spool in main valve.	Replace defective spool seal (s).
	Rod wiper leaking excessively.	Replace defective wiper.
	Oil bypassing cylinder piston.	Replace defective piston seal.
	Faulty pump operation.	Repair or replace pump.
	Load larger than capacity.	Reduce to rated load capacity at rated load center.
Cylinder drifts (will not remain in position)	Oil bypassing spool in main valve.	Replace defective spool seal(s).
	Oil bypassing cylinder piston.	Replace defective piston seal.
	Oil bypassing counterbalance valve cartridge.	Replace defective cartridge seal (s).
	Spool not centered in main valve.	Replace spool centering springs.
	Main relief valve not holding.	Clean cartridge or replace.
	Load larger than capacity.	Reduce to rated load capacity at rated load center.

https://truckmanualshub.com/

MAINTENANCE PROCEDURES

Procedures included in the following paragraphs cover those that can normally be achieved by the owner or operator, using common hand tools. For more complex maintenance, contact an authorized dealer or service representative.

REPLACE FUEL FILTER ELEMENT

1. Working through the right side engine compartment opening, clean the filter heads to prevent fuel contamination during filter element replacement.

2. Using a filter wrench, remove the two filter elements.

3. Apply a light film of engine oil to the inner and outer seal of each element. Make certain that the inner seal is positioned in the center bore of each element.

4. Fill the first element with fuel and install it on the filter head. Hand tighten the element only. DO NOT OVER TIGHTEN.

5. Fill the second element with fuel and install it on the filter head. Hand tighten the element. DO NOT OVER TIGHTEN.

6. Start the engine and allow it to idle while check for leaks. Correct leaks if found.

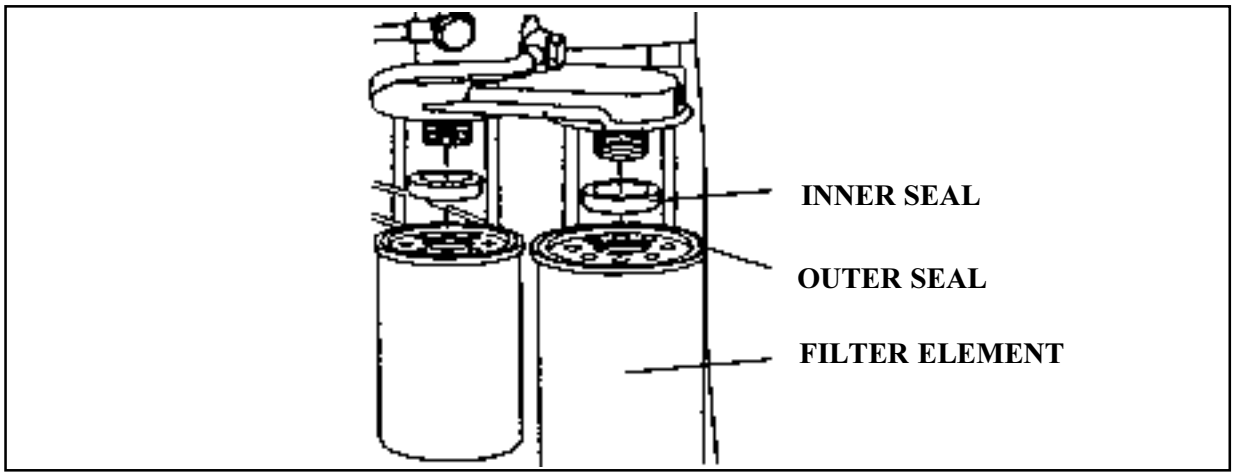

Figure 19. Fuel Filter Replacement

BLEEDING THE FUEL SYSTEM

WARNING

Never attempt to bleed the fuel system of a hot engine. A fuel spill on a hot surface could cause a fire, resulting in serious injury or death.

1. Bleed the low pressure lines and fuel filters as follows:

a. Open the vent screw, located on the side of the filter. (See Figure 20.)

Continued on following page

https://truckmanualshub.com/

continued from previous page

b. Operate the plunger lever, located on the fuel pump, until the fuel flow from the open vent screw is a steady stream, free of air.

c. Tighten the vent screw.

2. Bleed the injection pump as follows:

a. Open the vent screw, located on the injection pump.

b. Energize the fuel solenoid.

c. Operate the plunger lever, located on the fuel pump, until the fuel flow from the injection pump bleed port is free of air.

d. Close (tighten) the vent screw and de-energize the fuel solenoid.

3. Bleed the high pressure fuel lines as follows:

WARNING

The pressure of the fuel in these lines is great enough that the fuel escaping can penetrate the skin, causing serious and possibly long-term injury.

a. Loosen one or more of the high pressure lines at the injectors.

b. Crank the engine while observing the fuel flow.

c. When the fuel flow is free of air, stop cranking the engine and tighten the high pressure lines.

d. Start the engine and allow to idle.

e. Bleed each high pressure line individually, with the engine idling, to remove any air that may yet be in the lines.

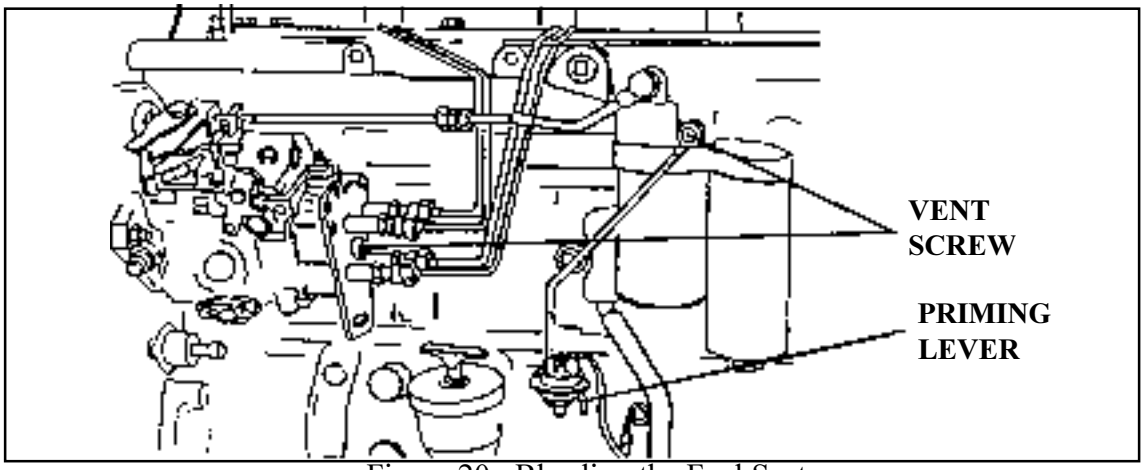

Figure 20. Bleeding the Fuel System

SERVICE AIR CLEANER

1. Loosen the cup assembly retaining clamp and remove the cup assembly from the air cleaner housing.

2. Remove the wing nut from the center post of the air filter housing and remove the primary filter element.

CAUTION

Remove the safety element only if it is to be replaced. DO NOT attempt to clean the safety element. If the safety element is to be replaced, immediately install a new element in its place to prevent contaminants from entering the engine.

3. Remove the wing nut from the center post of the canister and remove the safety element.

4. Install the safety element immediately by positioning it in the air cleaner housing and installing the wing nut.

5. Gently pat the sides of the primary element to loosen dirt. DO NOT tap the element against a hard surface.

CAUTION

When using compressed air to clean the element, make certain the air pressure is less than 30 psi. Clear the area of bystanders, guard against flying chips and wear proper protective safety equipment, including eye protection.

6. Clean the primary element from the inside with compressed air. Hold the nozzle next to the inner surface and move up and down pleats. Repeat as necessary until clean.

7. If necessary, wash the primary element, as follows:

a. If the element is coated with oil or soot, wash it in a solution of warm water and filter element cleaner. Let the element soak at least 15 minutes, then agitate gently to flush out dirt.

b. Rinse the element thoroughly from the inside with clean water. Keep the water pressure under 40 psi to avoid damaging the filtering pleats.

c. Allow the element to dry completely before using. This usually takes from one to three days. Do not oven dry or use drying agents. Protect the element from freezing until it is dry.

8. Inspect the primary element as follows:

a. Hold a bright light inside the filter element and check it for holes. Discard the filter element if holes are found.

Continued on next page

b. Inspect the outer screen for dents. Discard the element if dented.

c. Check the filter gasket for nicks and distortions. Replace the element if the gasket is nicked, distorted or damaged.

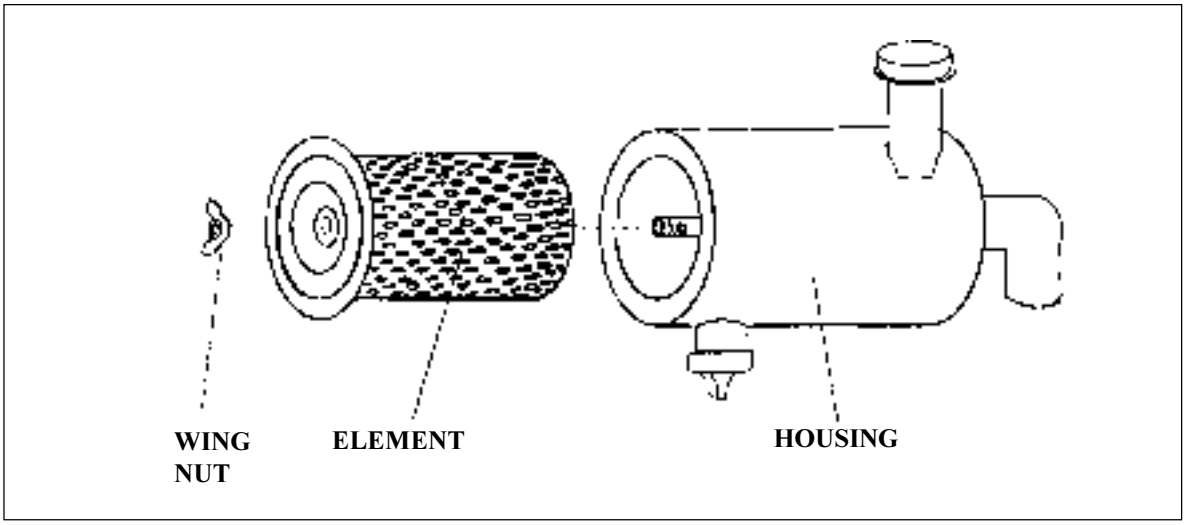

Figure 21. Air Cleaner Service.

9. Install the primary filter element as follows:

a. Position the primary element over the safety element, inside the canister.

b. Install the wing nut to secure the element.

c. Position the cup assembly on the air cleaner housing.

d. Install the cup assembly retaining clamp and tighten.

DRAIN AND REFILL COOLING SYSTEM

1. Place a drain pan beneath the radiator drain valve.

2. Remove the radiator cap, open the drain valve and allow the radiator coolant to drain.

3. Position a drain pan beneath the engine coolant drain plug, located on the underside of the engine water inlet.

4. While holding a long-spout funnel beneath the water inlet, remove the drain plug and allow coolant to drain into the pan.

5. Install the drain plug after the coolant has drained.

continued on next page

https://truckmanualshub.com/

6. Close the radiator drain valve.

7. Fill the radiator with a mixture of 50% ethylene glycol antifreeze and 50% water.

8. Install the radiator cap and operate the engine until it reaches a temperature of 180°F and check for leaks. Correct any leaks found.

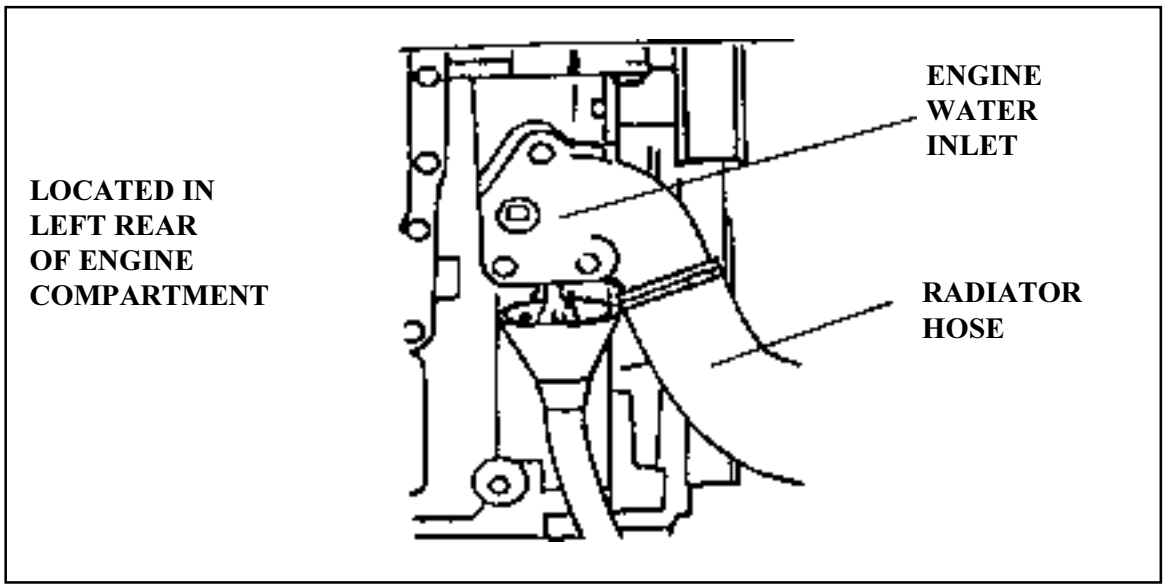

Figure 22. Draining and Refill Cooling System

THERMOSTAT TEST

1. Place the thermostat in a pot of water and position a thermometer to indicate water temperature.

2. Heat the water on a burner while observing the thermometer.

3. The thermostat should open when the thermometer indicates a water temperature of 180 degrees F. If not, replace the thermostat.

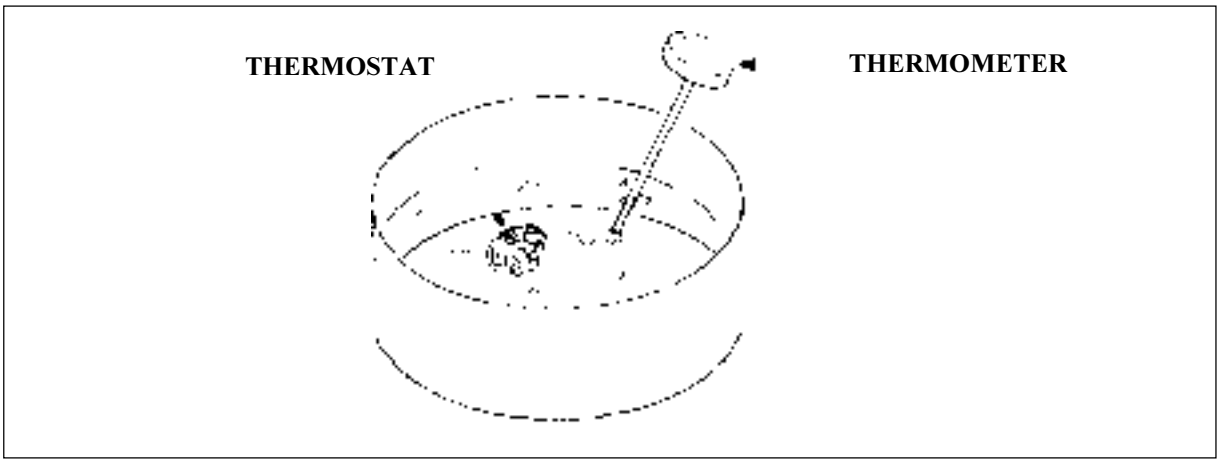

Figure 23. Thermostat Test.

Continued on next page

https://truckmanualshub.com/

DRIVE BELT TENSION ADJUSTMENT

The Cummins engine is equipped with a spring-loaded tensioner and requires no drive belt adjustment.

BATTERY REPLACEMENT

WARNING

The Environmental Protection Agency has established guidelines for the disposal of batteries. Make certain that EPA requirements are met when disposing of batteries.

1. Unlock and open door at rear of unit where battery box is located.
2. Unfasten the hold down strap and remove the lid from battery box. (See Figure 23.)
3. Remove the nut from each battery post.
4. Remove the battery ground cable from the negative (-) battery post, then remove the positive cable from the positive (+) battery post.
5. Loosen the two battery clamp nuts and lift the hold-down clamp from the battery.
6. Remove the battery box from the from the forklift.
7. Position the new battery in the battery box.
8. Replace the battery box in rear of forklift.
9. Place the battery hold-down clamp on the battery with the threaded rods of the clamp hooked into the slots provided.
10. Tighten the hold-down clamp nuts.
11. Position the battery cables on the posts in the following order, first the red cable to the positive (+) post and then the black cable to the negative (-) post.
12. Install a nut on each battery post.
13. Replace the battery box lid and securely refasten hold down strap.
14. Dispose of the old battery in a manner approved by the EPA.

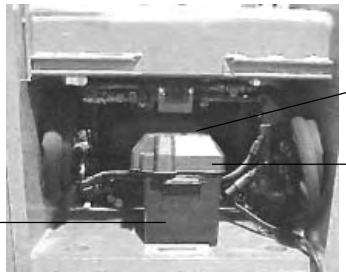

Figure 24. Battery Replacement

https://truckmanualshub.com/

FUSE REPLACEMENT

1. Using a phillips head screwdriver, remove the four screws on the fuse panel cover, which is located below the operator's panel on the left.

2. Remove the panel cover to reveal the fuse panel at the lower left.

3. Using a fuse puller, remove the faulty fuse and replace.

4. Replace the panel cover and refasten the screws.

ENGINE OIL CHANGE

WARNING

Never dispose of engine oil by pouring it on the ground or down a drain. Contact the local EPA or Cummins distributor for information.

1. Operate the engine until the engine water temperature reaches 140° F.

2. Position a drain pan beneath the engine oil pan drain plug.

3. Remove the oil pan drain plug and allow the oil to drain into the drain pan.

4. Using a filter wrench, remove the filter element.

5. Apply a light film of engine oil to the filter element gasket and fill the filter element with engine oil. Install and hand tighten the element only. **DO NOT OVER TIGHTEN**.

6. Install and tighten the engine oil drain plug.

7. Fill the engine crankcase with oil to the proper level as indicated on the oil dipstick.

8. Start the engine and allow the oil pressure to come up to operating pressure. Check for, and correct, any oil leaks.

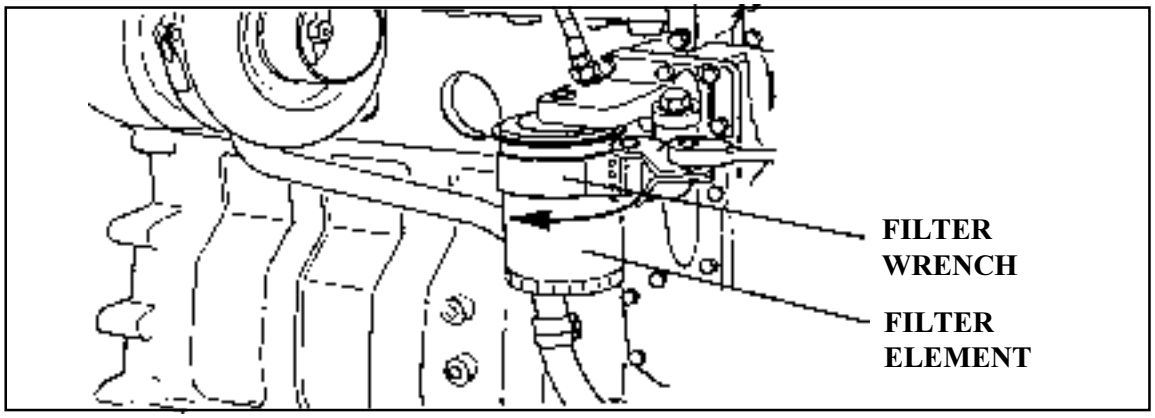

Figure 25. Engine Oil Filter

https://truckmanualshub.com/

TRANSMISSION OIL CHANGE

NOTE
Transmission oil should be changed with the transmission warm.

WARNING
Never dispose of transmission oil by pouring it out on the ground or pouring it down a drain. Contact the local Environmental Protection Agency (EPA) office or the nearest Clark Distributor for proper disposal information.

1. If this is the first transmission service, fill the transmission with four (4) gallons of C-3 type transmission oil. If this is not the first time the transmission has been serviced, disregard this step and proceed to step two.

2. Position a container beneath the oil drain plug located on the lower front of the transmission.

3. Remove the plug and allow the oil to drain into the container. Install the drain plug.

4. Fill the transmission to the proper level shown on the dipstick.

5. Start the engine, put the transmission in neutral and check the oil level on the transmission joystick.

6. Dispose of transmission oil in a manner prescribed by the EPA.

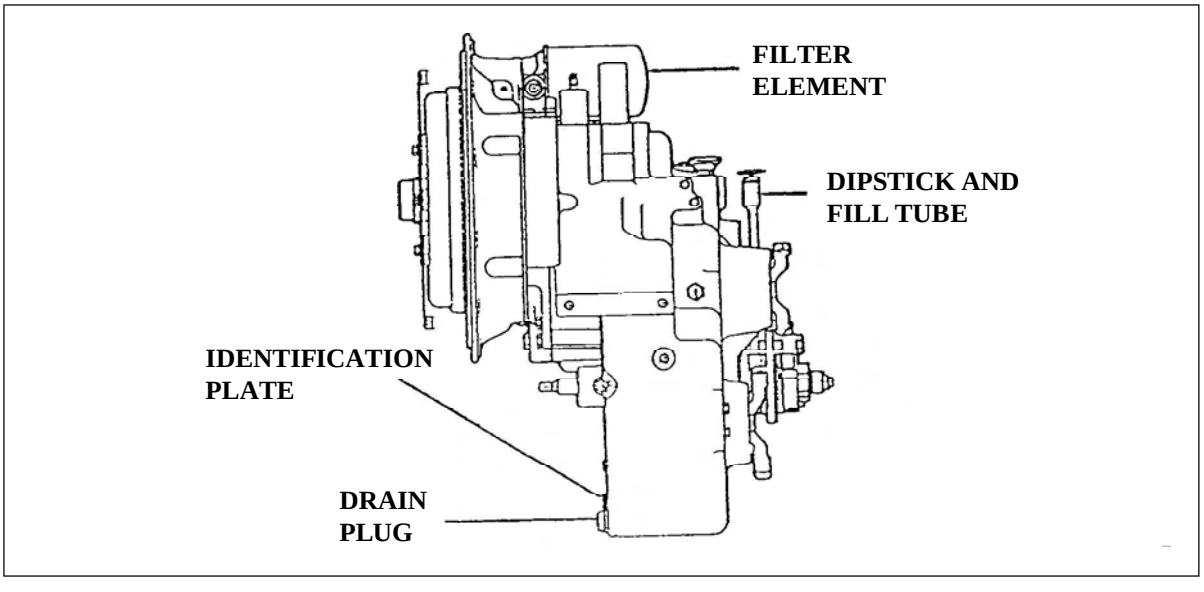

Figure 26. Transmission Drain Plug Location.

https://truckmanualshub.com/

TRANSMISSION FILTER ELEMENT REPLACEMENT

1. With the engine shut off, place a container beneath the transmission filter, located at the right front of the engine compartment.

2. Using a filter wrench, remove the filter element.

3. Apply a light coat of transmission fluid to the surface of the element's gasket.

4. Install element onto filter base and hand tighten only.

5. Start engine and check for leaks. Tighten element if leaking.

AXLE LUBRICANT CHANGE

WARNING

The Environmental Protection Agency has established guidelines for lubricant disposal. Contact the local office of the EPA or the nearest axle manufacturer distributor for the proper disposal procedure.

1. Position a container beneath the differential drain plug, located on the underside, center of the axle.

2. Remove the drain plug and allow lubricant to drain into the container.

3. After the axle has drained, install the drain plug and remove the high lubricant level inspection plug.

4. Fill the axle through the high lubricant level plug opening until the lubricant level is even with the bottom of the opening. Install the plug.

5. To drain a planetary, park the forklift so that the drain plug on the planetary is in the lowest position. Remove the plug and allow the planetary to drain. After draining, park the forklift so that the arrow, located on the face of the planetary hub, is pointed downward. Fill the planetary to a level even with the bottom of the drain plug opening. Install the drain plug. Repeat this step for each planetary.

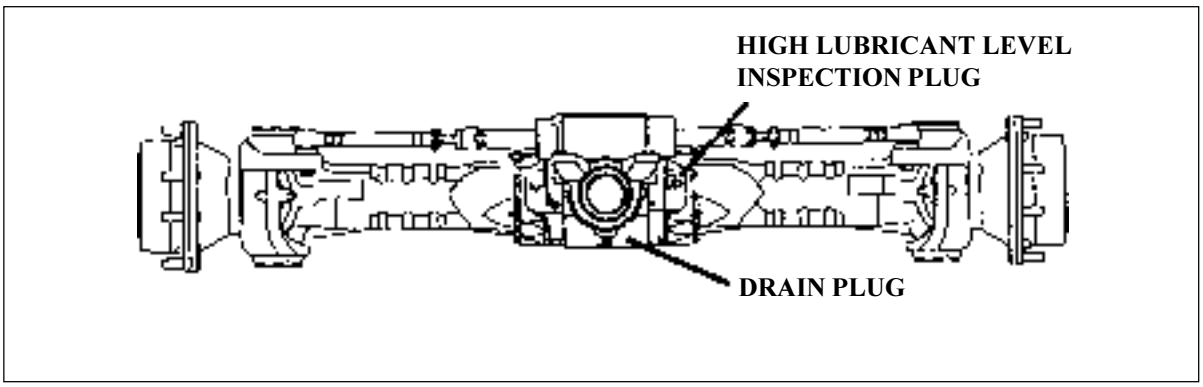

Figure 27. Axle Drain and Fill Plug Location.

https://truckmanualshub.com/

SUMMARY

This manual has been furnished by Pettibone Michigan L.L.C. to be used as a guide for equipment operation and routine maintenance. Remember, this machine can be extremely dangerous when operated recklessly. The most important safety feature of a Pettibone machine is the operator.

The Extendo is designed to encourage daily, routine maintenance by locating maintenance points in easily accessible locations. Constant adherence to the maintenance schedules listed herein will serve to lengthen the usable life of this machine. Should a problem arise which you cannot resolve, contact your servicing dealer immediately, or call us at (906) 353-6611; we're here to ensure your satisfaction with Pettibone Michigan products.

THANK YOU FOR CHOOSING PETTIBONE