https://truckmanualshub.com/

SH125/135X-3

(Emission Control Regulation Compliant Machine)

SERVICE TEXT

Main Body Section

SUMITOMO (S.H.I.) CONSTRUCTION MACHINERY MANUFACTURING CO., LTD.

https://truckmanualshub.com/

https://truckmanualshub.com/

Table of Contents

Main Body Section

Specifications

Specifications(SH125X-3) **125-1-01-00-27**
1/5

Complete Machine Dimensions(SH125X-3) **125-1-01-01-28**
Standard Arm (2.39 m) 1/2
Long Arm (2.85 m) 2/2

Work Range (SH125X-3) **125-1-01-02-28**
Standard Arm (2.39 m) 1/2
Long Arm (2.85 m) 2/2

Specifications(SH125X-3 with Blade) **125-1-01-00-28**
1/5

Complete Machine Dimensions(SH125X-3 with Blade) **125-1-01-01-29**
Standard Arm (2.39 m) 1/2
Long Arm (2.85 m) 2/2

Work Range (SH125X-3 with Blade) **125-1-01-02-29**
Standard Arm (2.39 m) 1/2
Long Arm (2.85 m) 2/2

Specification(SH135X-3 with Blade) **135-1-01-00-31**
1/5

Complete Machine Dimensions(SH135X-3 with Blade) **135-1-01-01-32**
Standard Arm (2.39 m) 1/2
Long Arm (2.85m) 2/2

Work Range(SH135X-3 with Blade) **135-1-01-02-32**
Standard Arm (2.39 m) 1/2
Long Arm (2.85 m) 2/2

Optional Components **125-1-01-03-12**
List of Optional Components 1/1

https://truckmanualshub.com/

Table of Contents

Major Equipment Specifications

Equipment Configuration **125-2-01-00-09**
Overall 1/2
Operator's Cab 2/2
Lower Mechanism **125-2-01-01-35**
Lower Assembly Diagram (Overall) 1/4
Travel Unit (with Parking Brake) 3/4
Take-up Roller 3/4
Upper Roller 3/4
Lower Roller (External Roller) 3/4
Recoil Spring 4/4
Shoes 4/4
Upper Mechanism **125-2-01-02-36**
Swing Unit 1/1
Engine and Related Areas **125-2-01-03-35**
Engine 1/3
Muffler 2/3
Air Cleaner 2/3
Radiator 2/3
Fuel Tank 3/3
Hydraulic System **125-2-01-04-36**
Hydraulic Pump 1/5
Sump Tank 3/5
Rotating Joint 4/5
Solenoid Valve 5/5
Controls **125-2-01-05-37**
Remote Control Valve 1/2
Control Valve 2/2
Backhoe Attachments **125-2-01-06-37**
Cylinder 1/2
Attachments 2/2

https://truckmanualshub.com/

Specifications

Specifications(SH125X-3)

	SH125X-3	
1. Main data:		
Model name	SH125X-3 Ultra Small Tail Swing Hydraulic Excavator	
Operating weight	12,400 kg (500 mm grouser shoe)	
Engine output	64 kw / 2,100 rpm	
Bucket capacity	Heaped 0.45 m^3 Leveled 0.32 m^3	
2. Performance		
Standard weight	5.7 kN	
Swing speed	10 rpm	
Travel speed	Low Speed 3.2km/h High Speed 5.0 km/h	
Maximum drawbar pull	115 kN	
Grade ability	70% (35°)	
Ground pressure	40 kPa (500 mm grouser shoe)	
3. Complete machine dimensions		
	Standard arm (2.39 m)	Long arm (2.85 m)
Length	7,240 mm	7,210 mm
Width	2,490 mm	2,490 mm
Height	2,750 mm	2,750 mm
4. Main body dimensions		
Main body length	3,510 mm	
Main body width	2,490 mm	
Upper swing body width	2,415 mm	
Cab width	1,000 mm	
Main body height	2,750 mm	
Tail swing radius	1,480 mm	
Distance of rear swing body	1,480 mm	
Ground clearance for upper structure	880 mm	
Center-to-center of wheels	2,785 mm	
Overall track length	3,510 mm	
Maximum track width	2,490 mm	
Center-to-center for track	1,990 mm	
Width of track shoe	500 mm	
Minimum ground clearance	455 mm (to bottom of lower frame)	

https://truckmanualshub.com/

	SH125X-3
5. Engine	
Name	ISUZU BB-4BG1T
Model	4-cycle water-cooling overhead valve In-line direct injection engine (electronically controlled) with air-cooling type inter-cooler turbo
No. of cylinders – bore x stroke	4 – dia. 105 mm x 125 mm
Cylinder capacity	4,329 mL
Maximum torque	324 N·m / 1,600 rpm
Fuel consumption rate	251.8 g/kW·h
Starter	24 V 4.5 kW
Alternator	24 V 50 A AC system
Battery	12 V 64 Ah (2)
6. Hydraulic system	
Hydraulic pump drive system	Directly-coupled to motor (no transmission)
Hydraulic pump	
Model	Double variable displacement piston pump (1) Gear pump (1)
Discharge	Piston pump: 2 x 117 L/min Gear pump (for pilot use): 21.5 L/min
Pump control method	Simultaneous total output horsepower control
Set pressure of main relief valve	
Boom/Arm/Bucket/Travel	34.3 MPa
Swing	28.0 MPa
Set pressure of overload relief valve	
Boom/Arm/Bucket	37.8 MPa
7. Control valve	
Model	4-spool section + 5-spool section (1)
Operation method	Hydraulic pilot method: travel, swing and operating machine
8. Cooling system	
Fan type	Air intake
Radiator	Pressure type
Oil cooler	
Cooling method	Air-cooling type
Radiation area	15.73 m^2

https://truckmanualshub.com/

	SH125X-3
9. Operating devices	
Operator's seat	
Location	Left side
Structure	Forward-backward and up-down adjustable type with reclining mechanism and seat suspension
Cab	Steel made enclosure type, reinforced glass (all sides)
Levers and pedals	
For travel use	Levers (hydraulic pilot type) (2)
For operating machine use	Levers (hydraulic pilot type) (2)
Instruments and switches	
Travel speed switchover	Low Speed / High Speed panel switch type
One-touch idle	Knob switch type
Monitor devices	
Instruments	
Fuel gauge	Analog type
Engine coolant temperature gauge	Analog type
Hour meter	Digital type
Machine Status and Warning Alarms ..... *Items have a warning alarm	
Over heat* / Abnormal battery charging* / Check engine*	
Refill fuel* / Engine oil pressure* / Engine preheat	
Lighting	
Working light	Cab upper side: 24 V 55 W (1)
	Above boom: 24 V 70 W (1)
Interior light	24 V 6 W (1)
Horn	Electric horn (1)
Other	Wiper with intermittent function, window washer, air conditioner, rear view mirror (counterweight) (1 each)
10. Swing unit	
Swing circle	Swing bearing type (with internal gears)
Swing hydraulic motor	Fixed displacement piston motor (1)
Reduction gears	Planetary gear 2-speed reduction system
Swing parking brake	Mechanical lock (operational lever linkage type)

https://truckmanualshub.com/

	SH125X-3	
11. Travel lower body		
Travel hydraulic motor	Variable displacement piston motor (2)	
Reduction gears	Planetary gear 2-speed reduction system	
Travel brake	Hydraulic lock	
Parking brake	Mechanical lock (travel lever linkage type)	
Track shoe		
Model	Assembly-type triple grouser shoe	
Number of shoes (per side)	43	
Shoe width	500 mm	
Shoe lug height	20 mm	
Link pitch	171.5 mm	
Roller		
Number of upper rollers (per side)	1	
Number of lower rollers (per side)	6	
Track belt tension adjuster	Grease cylinder type (with cushion spring)	
12. Work Unit		
Model	Backhoe attachment	
Capacity / dimensions / working dimensions:	Standard arm (2.39 m)	Long arm (2.85 m)
Bucket capacity	Heaped 0.45 m^3 (Leveled 0.32 m^3)	Heaped 0.37 m^3 (Leveled 0.29 m^3)
Bucket width	823 mm	703 mm
Width of bucket with side cutter	899 mm	777 mm
Weight of bucket with side cutter	349 kg	333 kg
Boom length	4,730 mm	4,730 mm
Arm length	2,390 mm	2,850 mm
Bucket wrist radius	1,200 mm	1,200 mm
Bucket wrist angle	178°	178°
Maximum dig radius	8,205 mm	8,565 mm
Maximum dig radius at groundline	8,065 mm	8,430 mm
Maximum dig depth	5,470 mm	5,930 mm

https://truckmanualshub.com/

	SH125X-3	
Maximum vertical straight wall dig depth	4,845 mm	5,075 mm
Maximum reach height	9,305 mm	9,520 mm
Maximum dump height	6,905 mm	7,125 mm
Minimum swing radius at front	1,780 mm	2,225 mm
Overall height with minimum swing radius at front	6,885 mm	6,925 mm
13. Hydraulic Cylinder	Quantity × Inner diameter of tube – Rod diameter – Stroke	
Boom cylinder	2 × dia. 105 mm – dia. 75 mm – 1,120 mm	
Arm cylinder	1 × dia. 115 mm – dia. 80 mm – 1,108 mm	
Bucket cylinder	1 × dia. 95 mm – dia. 65 mm – 881 mm	
14. Digging force (new JIS)		
Bucket digging force	89.7 kN	
Arm digging force	63.9 kN	
15. Capacity of coolant and lubricants		
Coolant	19 L	
Fuel	165 L	
Lubricant for engine	14 L	
Lubricant for travel reduction gear (per side)	2.5 L	
Lubricant for swing reduction gear	3 L	
Hydraulic oil	160 L	
Capacity of hydraulic oil tank	81 L	
16. Hydraulic oil filter		
Suction filter (inside tank)	150 mesh	
Return filter (inside tank)	10 µm	
Nephron filter (inside housing)	1 µm	
Pilot line filter (inside housing)	10 µm	

https://truckmanualshub.com/

Complete Machine Dimensions (SH125X-3)

Standard Arm (2.39 m)

Note 1: Numerical values may be changed without notice due to design alterations or other reasons.

Note 2: The values in the diagram include the lug height of shoe (20 mm).

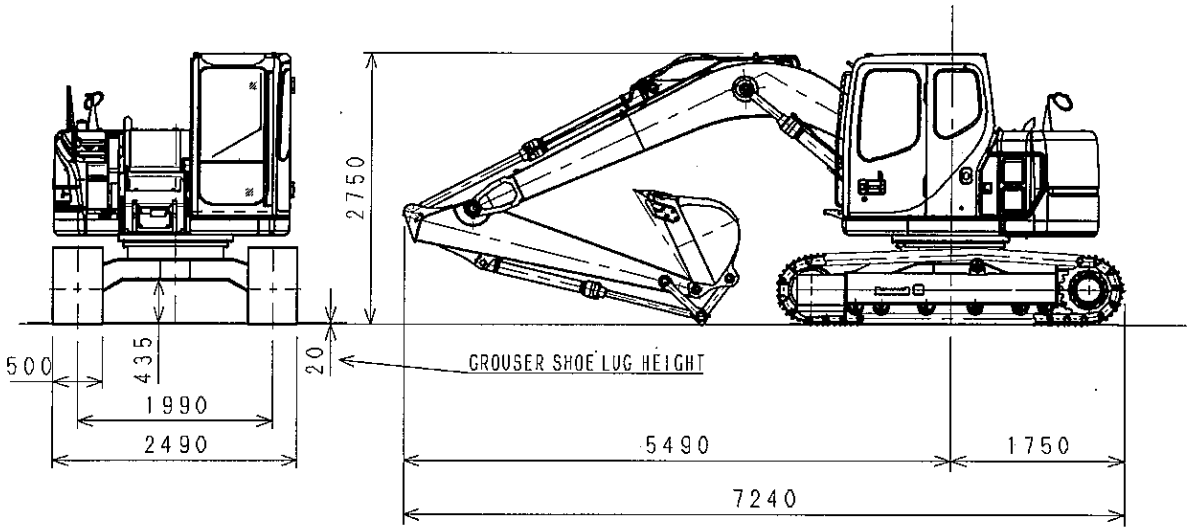

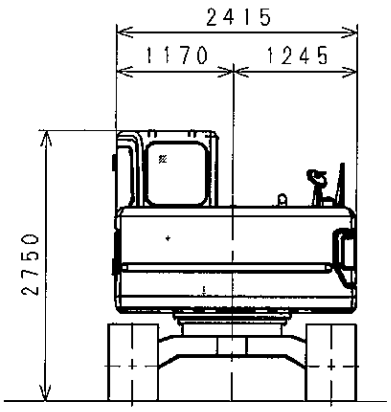

https://truckmanualshub.com/

Complete Machine Dimensions (SH125X-3)

Long Arm (2.85 m)

Note 1: Numerical values may be changed without notice due to design alterations or other reasons.

Note 2: The values in the diagram include the lug height of shoe (20 mm).

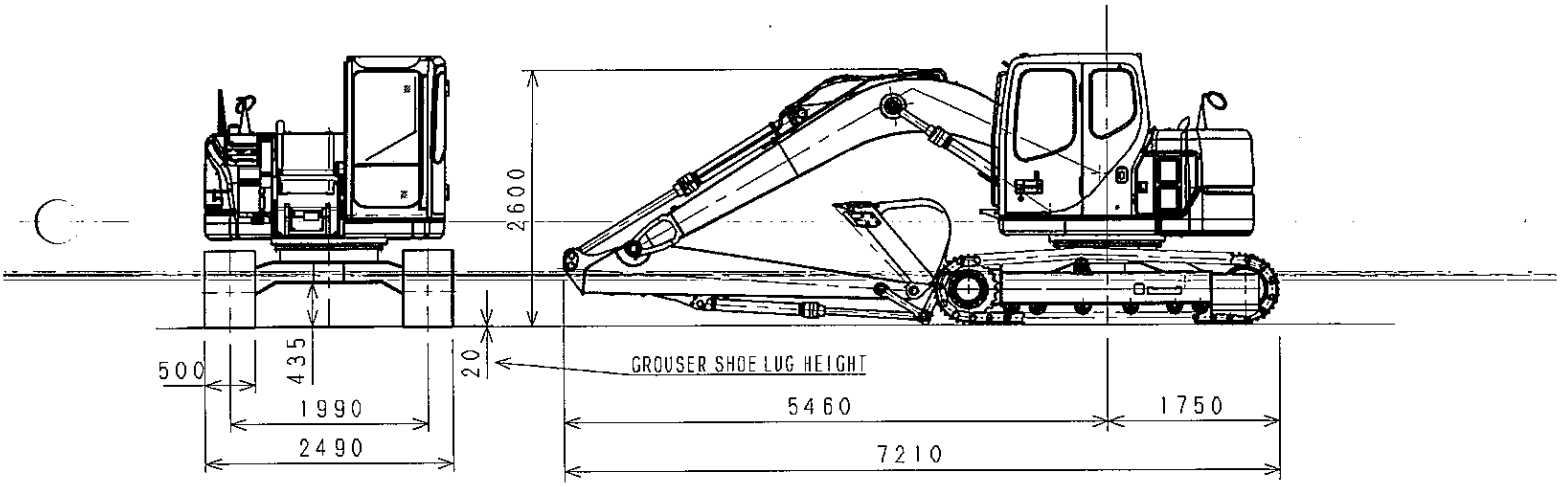

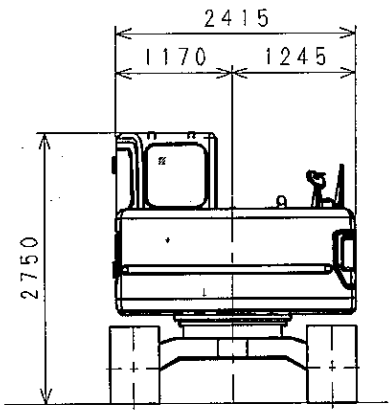

https://truckmanualshub.com/

Work Range (SH125X-3)

Standard Arm (2.39 m)

Note 1: Numerical values may be changed without notice due to design alterations or other reasons.

Note 2: The values in the diagram exclude the lug height of shoe (20 mm).

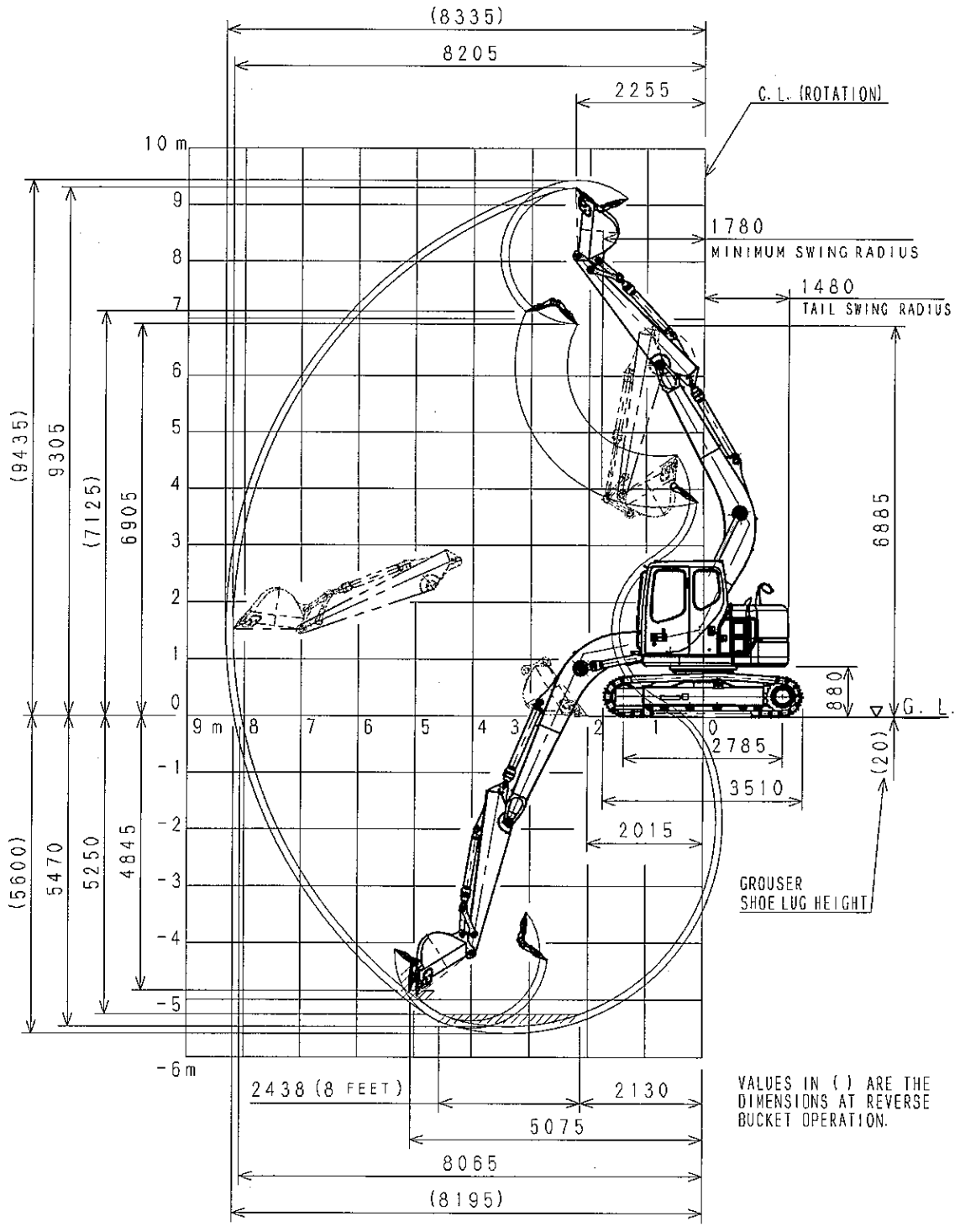

https://truckmanualshub.com/

Work Range (SH125X-3)

Long Arm (2.85 m)

Note 1: Numerical values may be changed without notice due to design alterations or other reasons.

Note 2: The values in the diagram exclude the lug height of shoe (20 mm)

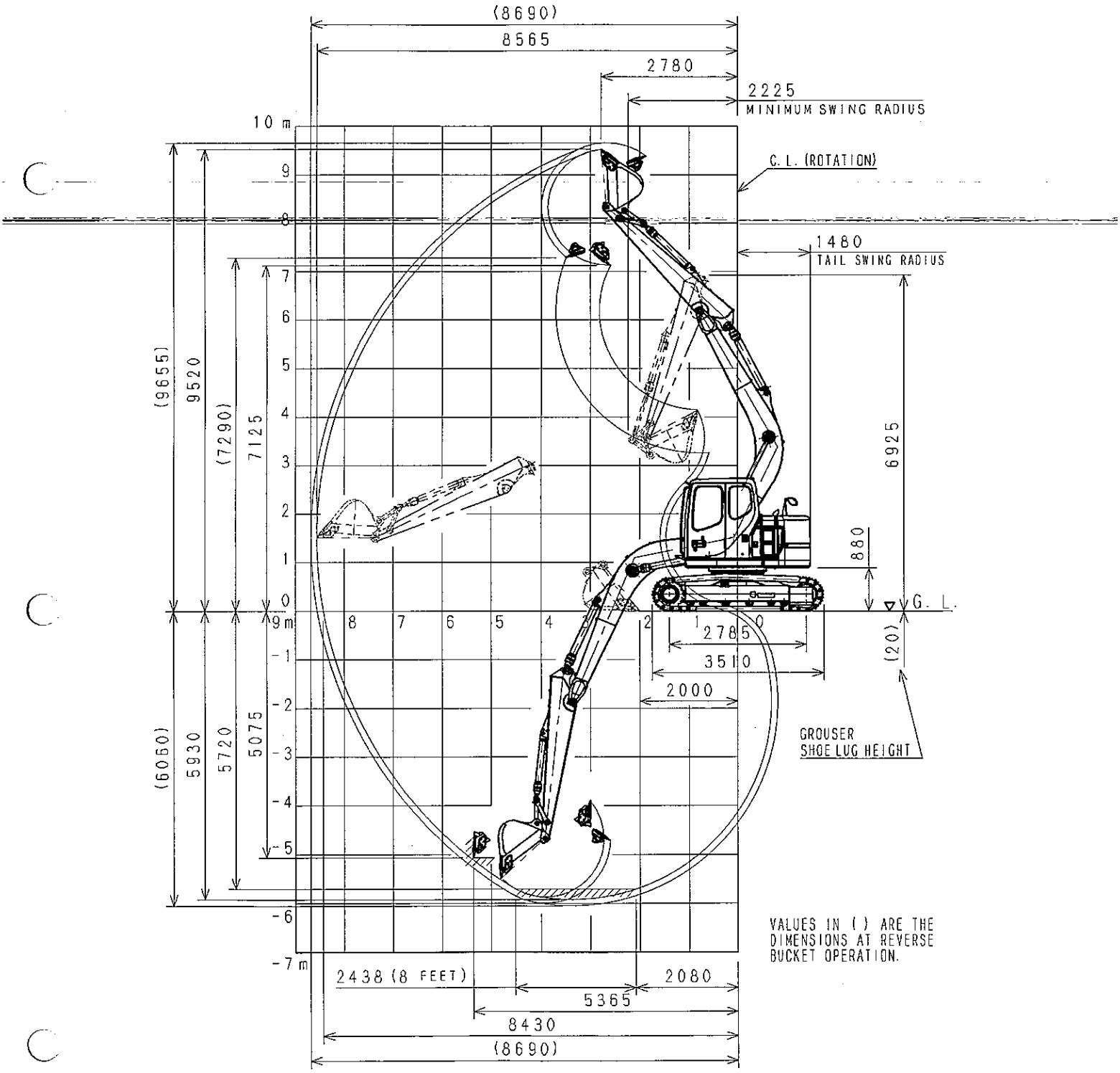

https://truckmanualshub.com/

Specifications

Specifications

	SH125X-3 (with blade)	
1. Main data:		
Model name	SH125X-3 Ultra Small Tail Swing Hydraulic Excavator	
Operating weight	13,250 kg (500 mm grouser shoe)	
Engine output	64 kw / 2,100 rpm	
Bucket capacity	Heaped 0.45 m^3 Leveled 0.32 m^3	
2. Performance		
Standard weight	5.7 kN	
Swing speed	10 rpm	
Travel speed	Low Speed 3.2 km/h High Speed 5.0 km/h	
Maximum drawbar pull	115 kN	
Grade ability	70% (35°)	
Ground pressure	43 kPa (500 mm grouser shoe)	
3. Complete machine dimensions	Standard arm (2.39 m)	Long arm (2.85 m)
Length	7,755 mm	7,725 mm
Width	2,490 mm	2,490 mm
Height	2,750 mm	2,750 mm
4. Main body dimensions		
Main body length	3,510 mm	
Main body width	2,490 mm	
Upper swing body width	2,415 mm	
Cab width	1,000 mm	
Main body height	2,750 mm	
Tail swing radius	1,480 mm	
Distance of rear swing body	1,480 mm	
Ground clearance for upper structure	880 mm	
Center-to-center of wheels	2,785 mm	
Overall track length	3,510 mm	
Maximum track width	2,490 mm	
Center-to-center for track	1,990 mm	
Width of track shoe	500 mm	
Minimum ground clearance	455 mm (to bottom of lower frame)	

https://truckmanualshub.com/

	SH125X-3 (with blade)		
5. Engine			
Name	ISUZU BB-4BG1T		
Model	4-cycle water-cooling overhead valve In-line direct injection engine (electronically controlled) with air-cooling type inter-cooler turbo		
No. of cylinders – bore x stroke	4 – dia. 105 mm x 125 mm		
Cylinder capacity	4,329 mL		
Maximum torque	324 N·m / 1,600 rpm		
Fuel consumption rate	251.8 g/kW·h		
Starter	24 V	4.5 kW	
Alternator	24 V	50 A	AC system
Battery	12 V	64 Ah	(2)
6. Hydraulic system			
Hydraulic pump drive system	Directly coupled to motor (no transmission)		
Hydraulic pump			
Model	Double variable displacement piston pump (1)		
	Gear pump (2)		
Discharge	Piston pump: 2 x 117 L/min		
	Gear pump (for blade use): 53.5 L/min		
	Gear pump (for pilot use): 21.5 L/min		
Pump control method	Simultaneous total output horsepower control		
Set pressure of main relief valve			
Boom/Arm/Bucket/Travel	34.3 MPa		
Swing	28.0 MPa		
Blade	20.6 MPa		
Set pressure of overload relief valve			
Boom/Arm/Bucket	37.8 MPa		
Blade	23.5 MPa		
7. Control valve			
Model	4-spool section + 5-spool section + 1-spool section (1)		
Operation method	Hydraulic pilot method: travel, swing, blade and operating machine		

https://truckmanualshub.com/

	SH125X-3 (with blade)
8. Cooling system	
Fan type	Air intake
Radiator	Pressure type
Oil cooler	
Cooling method	Air-cooling type
Radiation area	15.73 m^2
9. Operating devices	
Operator's seat	
Location	Left side
Structure	Forward-backward and up-down adjustable type with reclining mechanism and seat suspension
Cab	Steel made enclosure type, reinforced glass (all sides)
Levers and pedals	
For travel use	Levers (hydraulic pilot type) (2)
For operating machine use	Levers (hydraulic pilot type) (2)
For blade use	Lever (hydraulic pilot type) (1)
Instruments and switches	
Travel speed switchover	Low Speed / High Speed panel switch type
One-touch idle	Knob switch type
Monitor devices	
Instruments	
Fuel gauge	Analog type
Engine coolant temperature gauge	Analog type
Hour meter	Digital type

Machine Status and Warning Alarms . . . . . *Items have a warning alarm

Over heat*	Abnormal battery charging*	Check engine*
Refill fuel*	Engine oil pressure*	Engine preheat

Lighting				
Working light	Cab upper side:	24 V	55 W	(1)
	Above boom:	24 V	70 W	(1)
Interior light		24 V	6 W	(1)
Horn	Electric horn (1)			
Other	Wiper with intermittent function, window washer, air conditioner, rear view mirror (counterweight) (1 each)			

https://truckmanualshub.com/

	SH125X-3 (with blade)	
10. Swing unit		
Swing circle	Swing bearing type (with internal gears)	
Swing hydraulic motor	Fixed displacement piston motor (1)	
Reduction gears	Planetary gear 2-speed reduction system	
Swing parking brake	Mechanical lock (operational lever linkage type)	
11. Travel lower body		
Travel hydraulic motor	Variable displacement piston motor (2)	
Reduction gears	Planetary gear 2-speed reduction system	
Travel brake	Hydraulic lock	
Parking brake	Mechanical lock (travel lever linkage type)	
Track shoe		
Model	Assembly-type triple grouser shoe	
Number of shoes (per side)	43	
Shoe width	500 mm	
Shoe lug height	20 mm	
Link pitch	171.5 mm	
Roller		
Number of upper rollers (per side)	1	
Number of lower rollers (per side)	6	
Track belt tension adjuster	Grease cylinder type (with cushion spring)	
12. Work Unit		
Model	Backhoe attachment	
Capacity / dimensions / working dimensions:	Standard arm (2.39 m)	Long arm (2.85 m)
Bucket capacity	Heaped 0.45 m^3 (Leveled 0.32 m^3)	Heaped 0.37 m^3 (Leveled 0.29 m^3)
Bucket width	823 mm	703 mm
Width of bucket with side cutter	899 mm	777 mm
Weight of bucket with side cutter	349 kg	333 kg
Boom length	4,730 mm	4,730 mm
Arm length	2,390 mm	2,850 mm
Bucket wrist radius	1,200 mm	1,200 mm
Bucket wrist angle	178°	178°
Maximum dig radius	8,205 mm	8,565 mm
Maximum dig radius at groundline	8,065 mm	8,430 mm
Maximum dig depth	5,470 mm	5,930 mm

https://truckmanualshub.com/

	SH125X-3 (with blade)	
Maximum vertical straight wall dig depth	4,845 mm	5,075 mm
Maximum reach height	9,305 mm	9,520 mm
Maximum dump height	6,905 mm	7,125 mm
Minimum swing radius at front	1,780 mm	2,225 mm
Overall height with minimum swing radius at front	6,885 mm	6,925 mm
13. Hydraulic Cylinder	Quantity × Inner diameter of tube – Rod diameter – Stroke	
Boom cylinder	2 × dia. 105 mm – dia. 75 mm – 1,120 mm	
Arm cylinder	1 × dia. 115 mm – dia. 80 mm – 1,108 mm	
Bucket cylinder	1 × dia. 95 mm – dia. 65 mm – 881 mm	
Blade cylinder	2 × dia. 110 mm – dia. 70 mm – 240 mm	
14. Digging force (new JIS)		
Bucket digging force	89.7 kN	
Arm digging force	63.9 kN	
15. Capacity of coolant and lubricants		
Coolant	19 L	
Fuel	165 L	
Lubricant for engine	14 L	
Lubricant for travel reduction gear (per side)	2.5 L	
Lubricant for swing reduction gear	3 L	
Hydraulic oil	160 L	
Capacity of hydraulic oil tank	81 L	
16. Hydraulic oil filter		
Suction filter (inside tank)	150 mesh	
Return filter (inside tank)	10 µm	
Nephron filter (inside housing)	1 µm	
Pilot line filter (inside housing)	10 µm	

https://truckmanualshub.com/

Specifications

Complete Machine Dimensions (SH125X-3 with Blade)

Standard Arm (2.39 m)

Note 1: Numerical values may be changed without notice due to design alterations or other reasons.

Note 2: The values in the diagram include the lug height of shoe (20 mm).

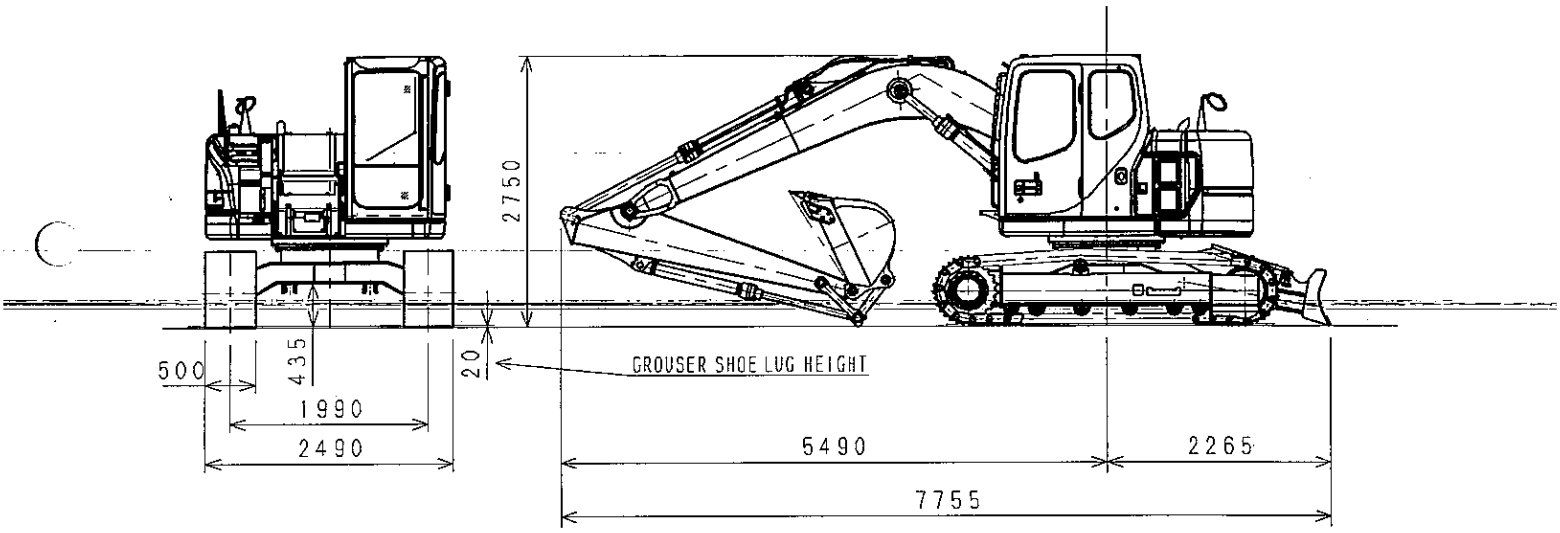

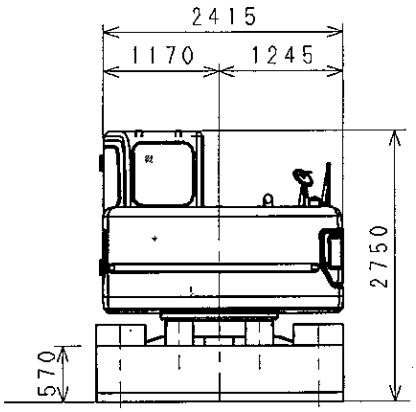

https://truckmanualshub.com/

Complete Machine Dimensions (SH125X-3 with Blade)

Long Arm (2.85 m)

Note 1: Numerical values may be changed without notice due to design alterations or other reasons.

Note 2: The values in the diagram include the lug height of shoe (20 mm).

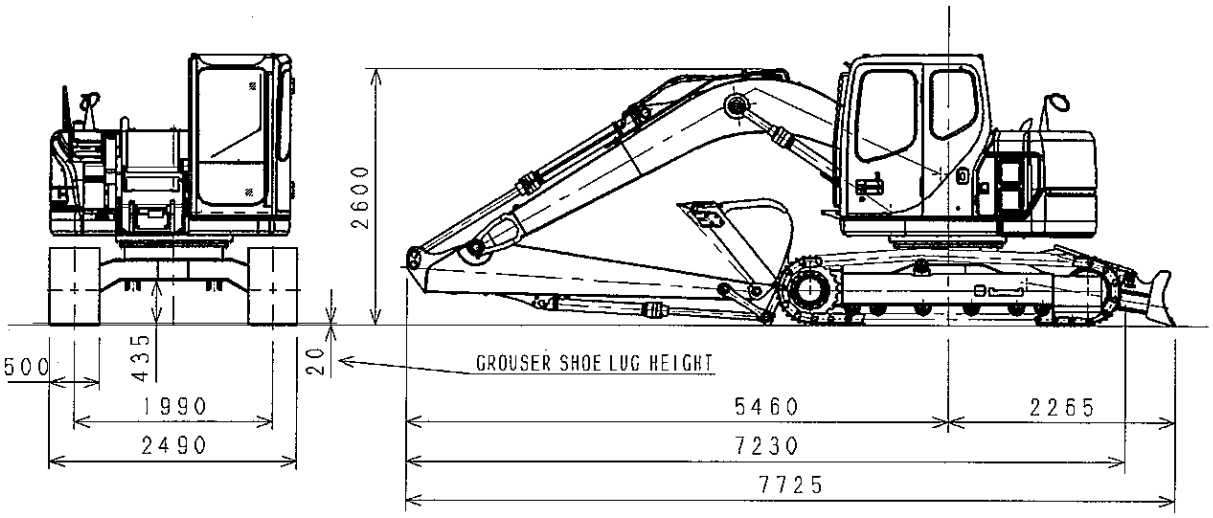

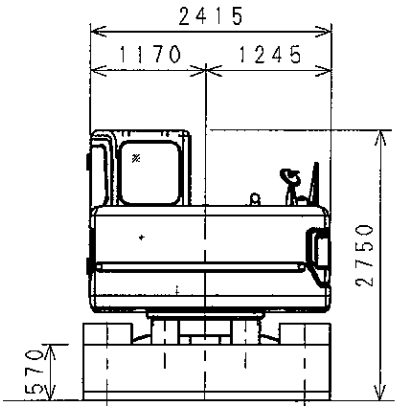

https://truckmanualshub.com/

Work Range (SH125X-3 with Blade)

Standard Arm (2.39 m)

Note 1: Numerical values may be changed without notice due to design alterations or other reasons.

Note 2: The values in the diagram exclude the lug height of shoe (20 mm).

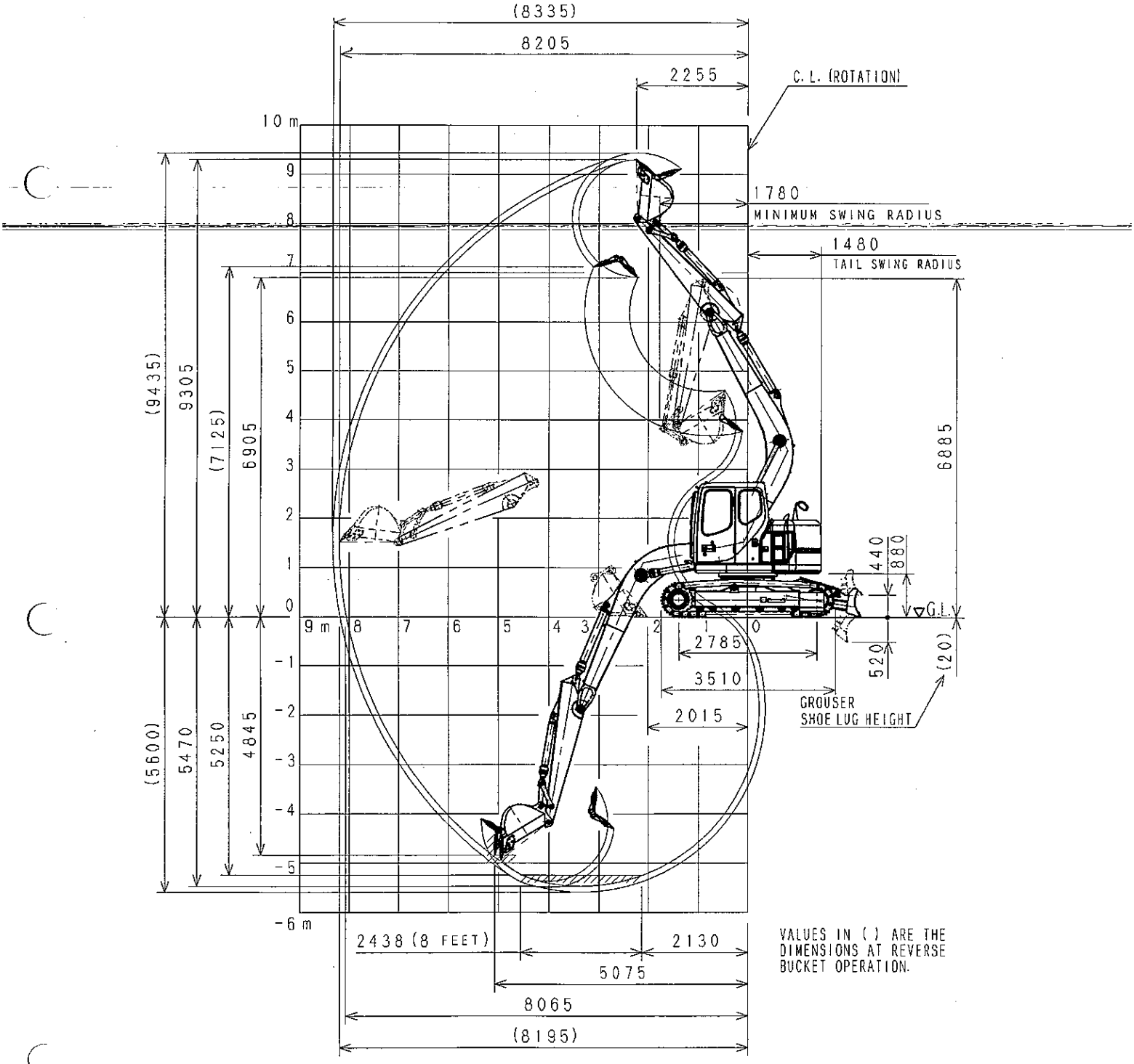

https://truckmanualshub.com/

Work Range (SH125X-3 with Blade)

Long Arm (2.85 m)

Note 1: Numerical values may be changed without notice due to design alterations or other reasons.

Note 2: The values in the diagram exclude the lug height of shoe (20 mm)

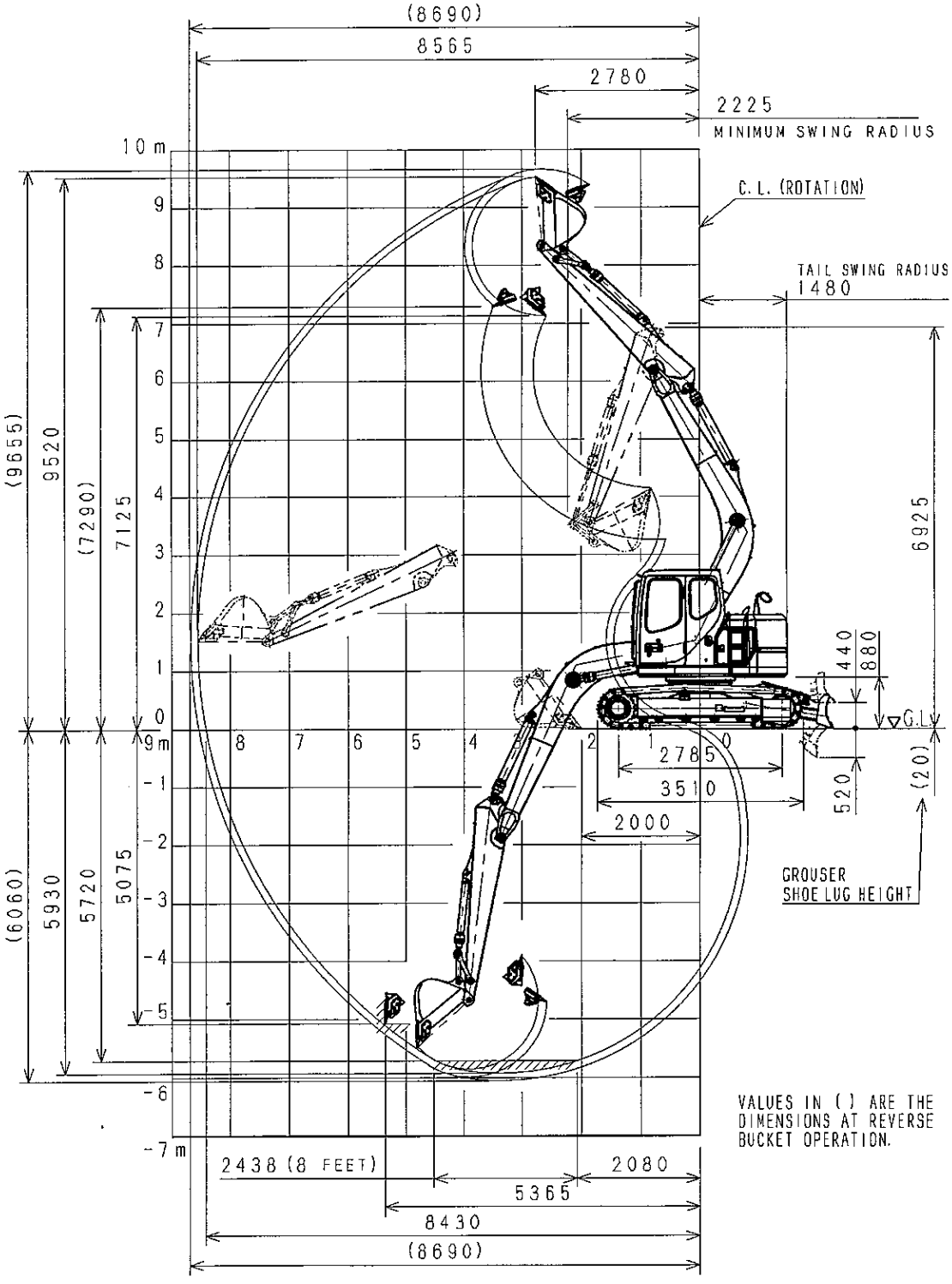

https://truckmanualshub.com/

Specifications

Specifications

	SH135X-3 (with blade)	
1. Main data:		
Model name	SH135X-3 Ultra Small Tail Swing Hydraulic Excavator	
Operating weight	13,850 kg (500 mm grouser shoe)	
Engine output	64 kw / 2,100 rpm	
Bucket capacity	Heaped 0.50 m^3 Leveled 0.35 m^3	
2. Performance		
Standard weight	6.3 kN	
Swing speed	10 rpm	
Travel speed	Low Speed 3.2 km/h High Speed 5.0 km/h	
Maximum drawbar pull	115 kN	
Grade ability	70% (35°)	
Ground pressure	43 kPa (500 mm grouser shoe)	
3. Complete machine dimensions		
	Standard arm (2.39 m)	Long arm (2.85 m)
Length	7,755 mm	7,725 mm
Width	2,490 mm	2,490 mm
Height	2,750 mm	2,750 mm
4. Main body dimensions		
Main body length	3,510 mm	
Main body width	2,490 mm	
Upper swing body width	2,415 mm	
Cab width	1,000 mm	
Main body height	2,750 mm	
Tail swing radius	1,480 mm	
Distance of rear swing body	1,480 mm	
Ground clearance for upper structure	880 mm	
Center-to-center of wheels	2,785 mm	
Overall track length	3,510 mm	
Maximum track width	2,490 mm	
Center-to-center for track	1,990 mm	
Width of track shoe	500 mm	
Minimum ground clearance	455 mm (to bottom of lower frame)	

https://truckmanualshub.com/

	SH135X-3 (with blade)
5. Engine	
Name	ISUZU BB-4BG1T
Model	4-cycle water-cooling overhead valve In-line direct injection engine (electronically controlled) with air-cooling type inter-cooler turbo
No. of cylinders – bore x stroke	4 – dia. 105 mm x 125 mm
Cylinder capacity	4,329 mL
Maximum torque	324 N·m / 1,600 rpm
Fuel consumption rate	251.8 g/kW·h
Starter	24 V 4.5 kW
Alternator	24 V 50 A AC system
Battery	12 V 64 Ah (2)
6. Hydraulic system	
Hydraulic pump drive system	Directly coupled to motor (no transmission)
Hydraulic pump	
Model	Double variable displacement piston pump (1) Gear pump (2)
Discharge	Piston pump: 2 x 117 L/min Gear pump (for blade use): 53.5 L/min Gear pump (for pilot use): 21.5 L/min
Pump control method	Simultaneous total output horsepower control
Set pressure of main relief valve	
Boom/Arm/Bucket/Travel	34.3 MPa
Swing	28.0 MPa
Blade	20.6 MPa
Set pressure of overload relief valve	
Boom/Arm/Bucket	37.8 MPa
Blade	23.5 MPa
7. Control valve	
Model	4-spool section + 5-spool section + 1-spool section (1)
Operation method	Hydraulic pilot method: travel, swing, blade and operating machine

https://truckmanualshub.com/

Specifications

	SH135X-3 (with blade)
8. Cooling system	
Fan type	Air intake
Radiator	Pressure type
Oil cooler	
Cooling method	Air-cooling type
Radiation area	15.73 m^2
9. Operating devices	
Operator's seat	
Location	Left-side
Structure	Forward-backward and up-down adjustable type with reclining mechanism and seat suspension
Cab	Steel made enclosure type, reinforced glass (all sides)
Levers and pedals	
For travel use	Levers (hydraulic pilot type) (2)
For operating machine use	Levers (hydraulic pilot type) (2)
For blade use	Lever (hydraulic pilot type) (1)
Instruments and switches	
Travel speed switchover	Low Speed / High Speed panel switch type
One-touch idle	Knob switch type
Monitor devices	
Instruments	
Fuel gauge	Analog type
Engine coolant temperature gauge	Analog type
Hour meter	Digital type

Machine Status and Warning Alarms . . . . . *Items have a warning alarm

Over heat*	Abnormal battery charging*	Check engine*
Refill fuel*	Engine oil pressure*	Engine preheat

Lighting				
Working light	Cab upper side:	24 V	55 W	(1)
	Above boom:	24 V	70 W	(1)
Interior light		24 V	6 W	(1)
Horn	Electric horn (1)			
Other	Wiper with intermittent function, window washer, air conditioner, rear view mirror (counterweight) (1 each)			

https://truckmanualshub.com/

	SH135X-3 (with blade)	
10. Swing unit		
Swing circle	Swing bearing type (with internal gears)	
Swing hydraulic motor	Fixed displacement piston motor (1)	
Reduction gears	Planetary gear 2-speed reduction system	
Swing parking brake	Mechanical lock (operational lever linkage type)	
11. Travel lower body		
Travel hydraulic motor	Variable displacement piston motor (2)	
Reduction gears	Planetary gear 2-speed reduction system	
Travel brake	Hydraulic lock	
Parking brake	Mechanical lock (travel lever linkage type)	
Track shoe		
Model	Assembly-type triple grouser shoe	
Number of shoes (per side)	43	
Shoe width	500 mm	
Shoe lug height	20 mm	
Link pitch	171.5 mm	
Roller		
Number of upper rollers (per side)	1	
Number of lower rollers (per side)	6	
Track belt tension adjuster	Grease cylinder type (with cushion spring)	
12. Work Unit		
Model	Backhoe attachment	
Capacity / dimensions / working dimensions:	Standard arm (2.39 m)	Long arm (2.85 m)
Bucket capacity	Heaped 0.50 m^3 (Leveled 0.35 m^3)	Heaped 0.45 m^3 (Leveled 0.32 m^3)
Bucket width	894 mm	823 mm
Width of bucket with side cutter	970 mm	899 mm
Weight of bucket with side cutter	375 kg	349 kg
Boom length	4,730 mm	4,730 mm
Arm length	2,390 mm	2,850 mm
Bucket wrist radius	1,200 mm	1,200 mm
Bucket wrist angle	178°	178°
Maximum dig radius	8,205 mm	8,565 mm
Maximum dig radius at groundline	8,065 mm	8,430 mm
Maximum dig depth	5,470 mm	5,930 mm

https://truckmanualshub.com/

Specifications

	SH135X-3 (with blade)	
Maximum vertical straight wall dig depth	4,845 mm	5,075 mm
Maximum reach height	9,305 mm	9,520 mm
Maximum dump height	6,905 mm	7,125 mm
Minimum swing radius at front	1,780 mm	2,225 mm
Overall height with minimum swing radius at front	6,885 mm	6,925 mm
13. Hydraulic Cylinder	Quantity × Inner diameter of tube – Rod diameter – Stroke	
Boom cylinder	2 × dia. 105 mm – dia. 75 mm – 1,120 mm	
Arm cylinder	1 × dia. 115 mm – dia. 80 mm – 1,108 mm	
Bucket cylinder	1 × dia. 95 mm – dia. 65 mm – 881 mm	
Blade cylinder	2 × dia. 110 mm – dia. 70 mm – 240 mm	
14. Digging force (new JIS)		
Bucket digging force	89.7 kN	
Arm digging force	63.9 kN	
15. Capacity of coolant and lubricants		
Coolant	19 L	
Fuel	165 L	
Lubricant for engine	14 L	
Lubricant for travel reduction gear (per side)	2.5 L	
Lubricant for swing reduction gear	3 L	
Hydraulic oil	160 L	
Capacity of hydraulic oil tank	81 L	
16. Hydraulic oil filter		
Suction filter (inside tank)	150 mesh	
Return filter (inside tank)	10 µm	
Nephron filter (inside housing)	1 µm	
Pilot line filter (inside housing)	10 µm	

https://truckmanualshub.com/

Complete Machine Dimensions (SH135X-3 with Blade)

Standard Arm (2.39 m)

Note 1: Numerical values may be changed without notice due to design alterations or other reasons.

Note 2: The values in the diagram include the lug height of shoe (20 mm).

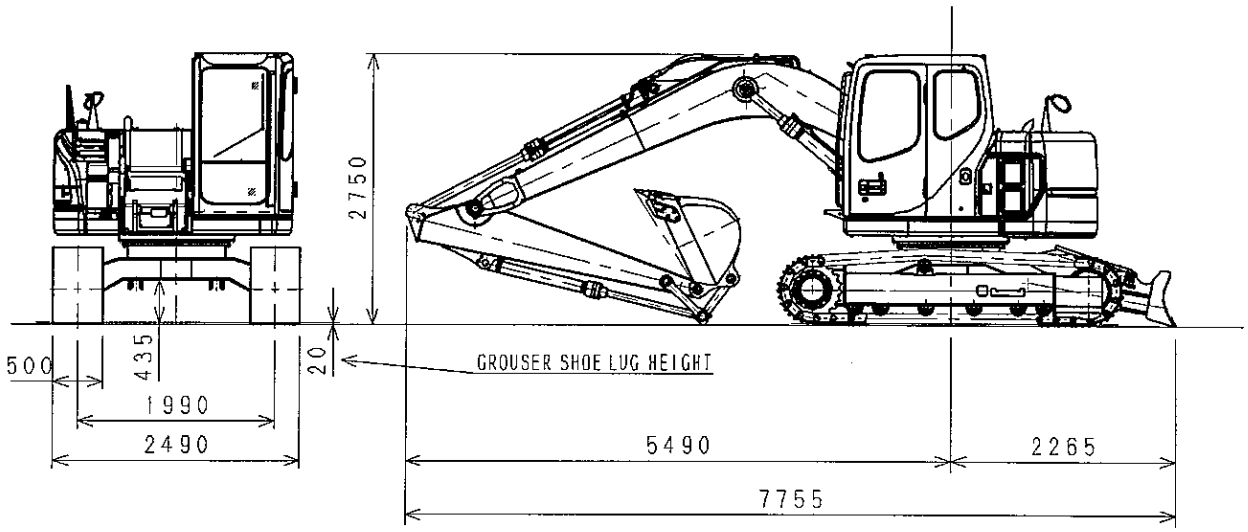

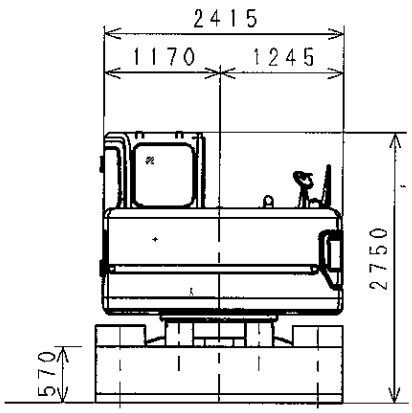

https://truckmanualshub.com/

Complete Machine Dimensions (SH135X-3 with Blade)

Long Arm (2.85 m)

Note 1: Numerical values may be changed without notice due to design alterations or other reasons.

Note 2: The values in the diagram include the lug height of shoe (20 mm).

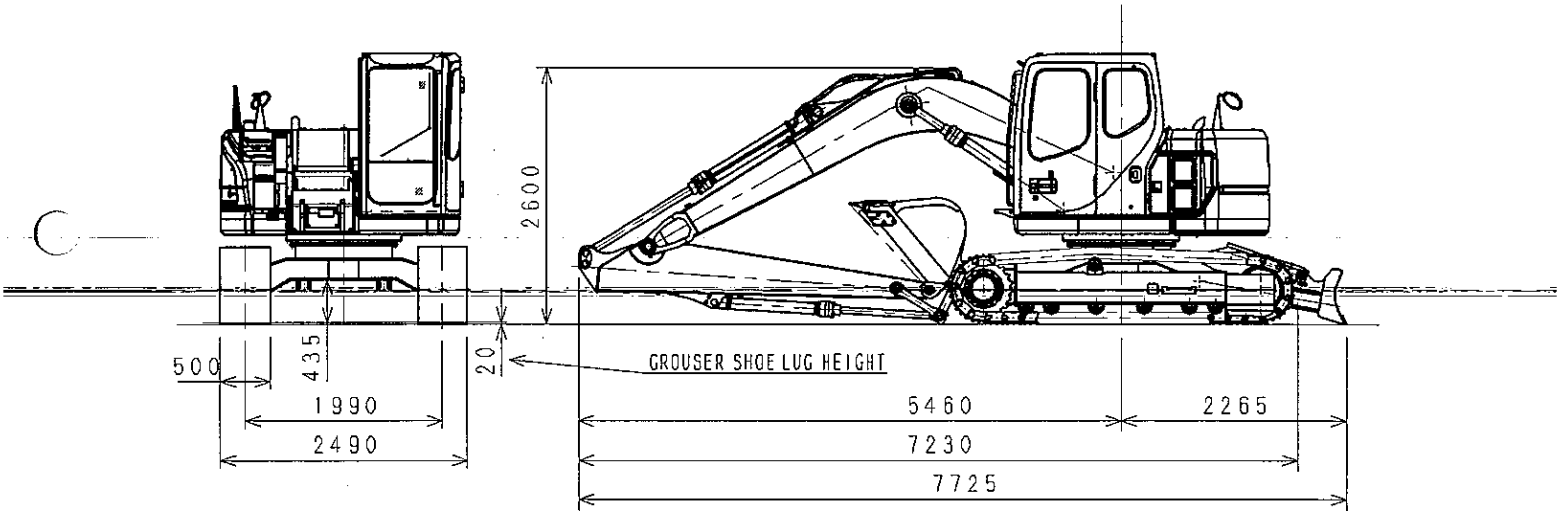

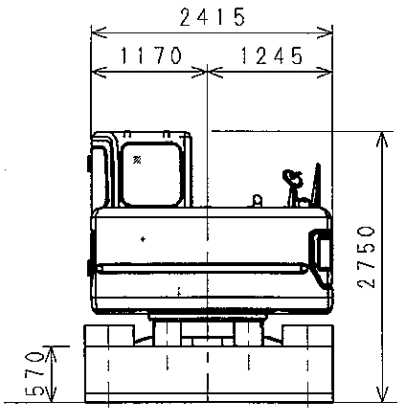

https://truckmanualshub.com/

Work Range (SH135X-3 with Blade)

Standard Arm (2.39 m)

Note 1: Numerical values may be changed without notice due to design alterations or other reasons.

Note 2: The values in the diagram exclude the lug height of shoe (20 mm).

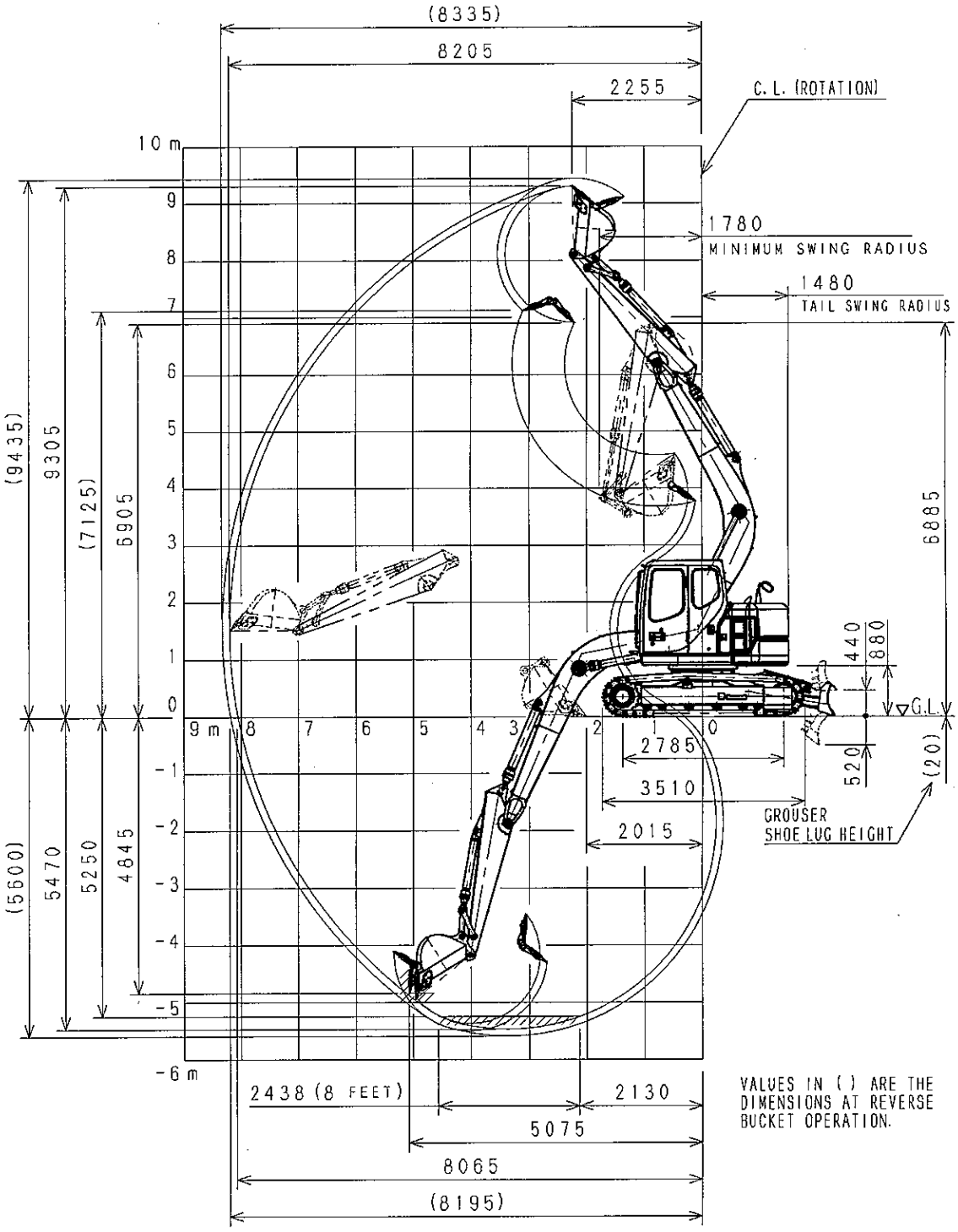

https://truckmanualshub.com/

Work Range (SH135X-3 with Blade)

Long Arm (2.85 m)

Note 1: Numerical values may be changed without notice due to design alterations or other reasons.

Note 2: The values in the diagram exclude the lug height of shoe (20 mm)

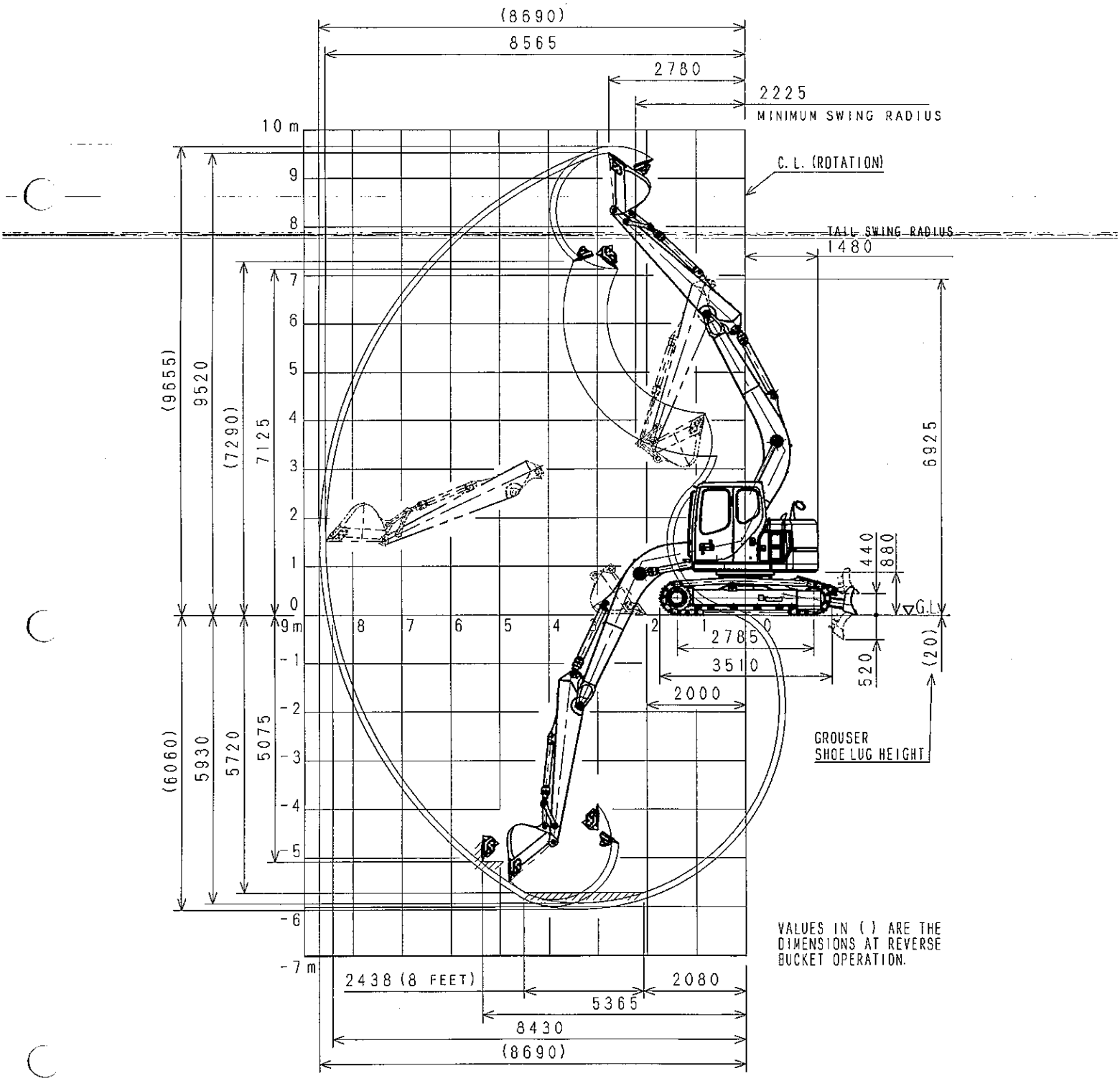

https://truckmanualshub.com/

Optional Components

List of Optional Components

◎ Standard ● Optional

Specifications / Model:	SH125X-3 Single boom	SH125X-3 Single boom with blade	SH135X-3 Single boom with blade
500 G shoe	◎	◎	◎
Divided-type rubber track (500)	●	●	●
600 G shoe	●	●	●
700 G shoe	●	●	●
Blade	—	◎	◎
Lower bottom cover	●	●	●
Double element air cleaner	◎	◎	◎
Nephron filter	◎	◎	◎
Travel alarm	◎	◎	◎
Breaker circuit (for standard arm)	●	●	●
Shuttle circuit	●	●	●
Combined circuit (2-speed and breaker)	●	●	—
Second backup circuit	●	●	—
Att reinforcing plate	●	●	●
Air conditioner	◎	◎	◎
Seat with arm and head rest	◎	◎	◎
Travel pedal	●	●	●
KAB seat	◎	◎	◎
Seat belt	◎	◎	◎
ISO operating method	◎	◎	◎
Rear-view mirror	◎	◎	◎
EMS (Att only)	◎	◎	◎
Radiator dust-proof net	◎	◎	◎
Small storage	◎	◎	◎
AM/FM radio	◎	◎	◎
Dog chain	◎	◎	◎

https://truckmanualshub.com/

Specifications

MAJOR EQUIPMENT SPECIFICATIONS

Equipment Configuration

Overall

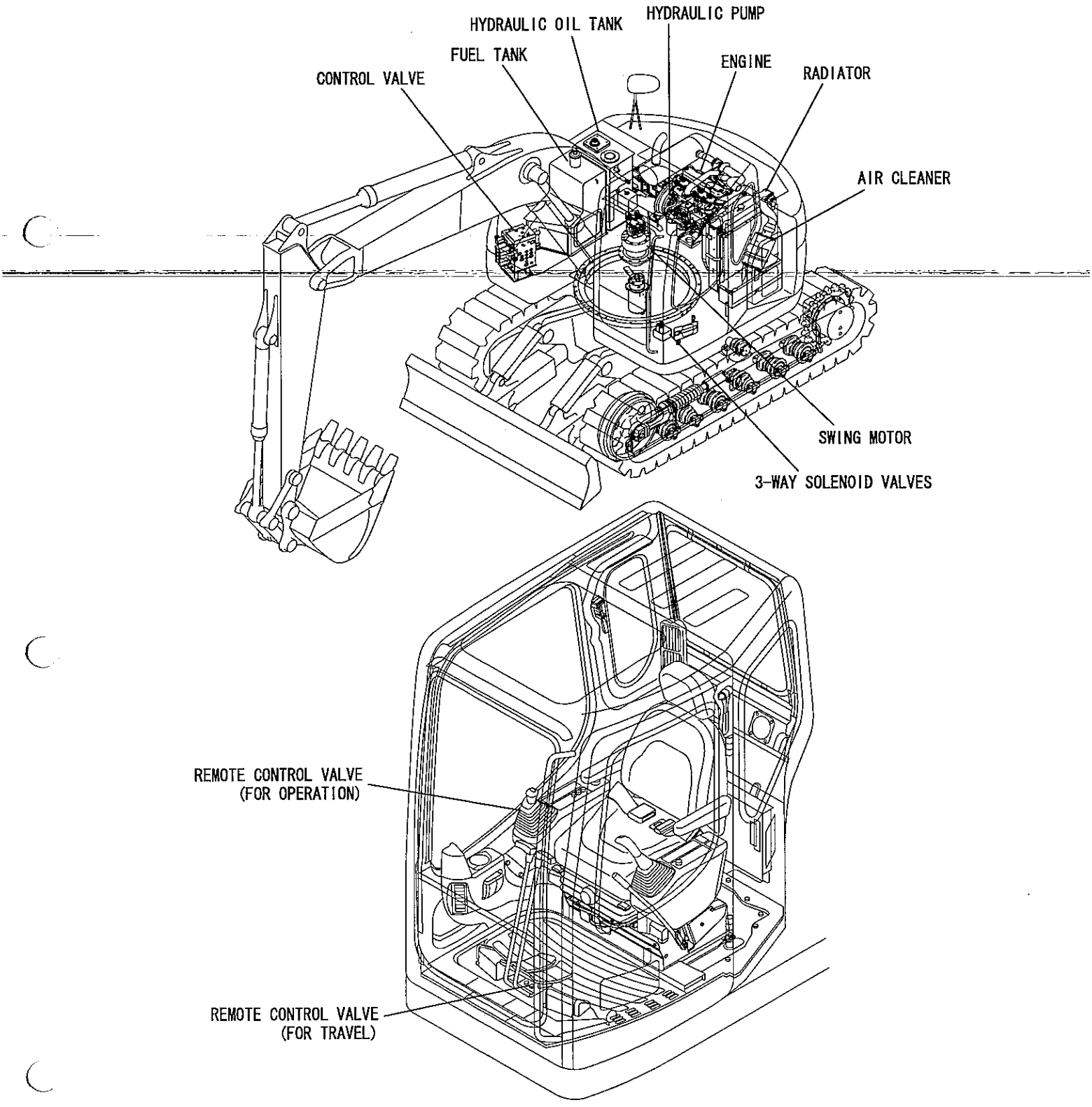

https://truckmanualshub.com/

Operator's Cab

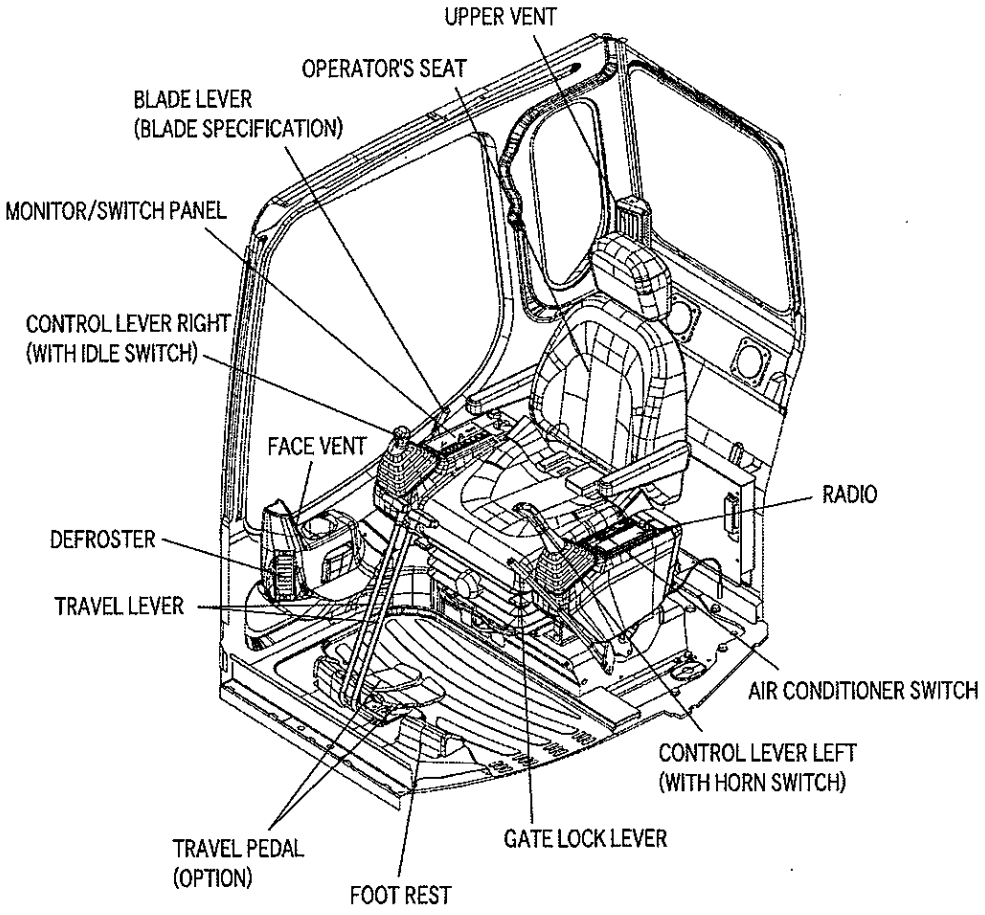

Lower Mechanism

Lower assembly diagram (overall) SH125X-3

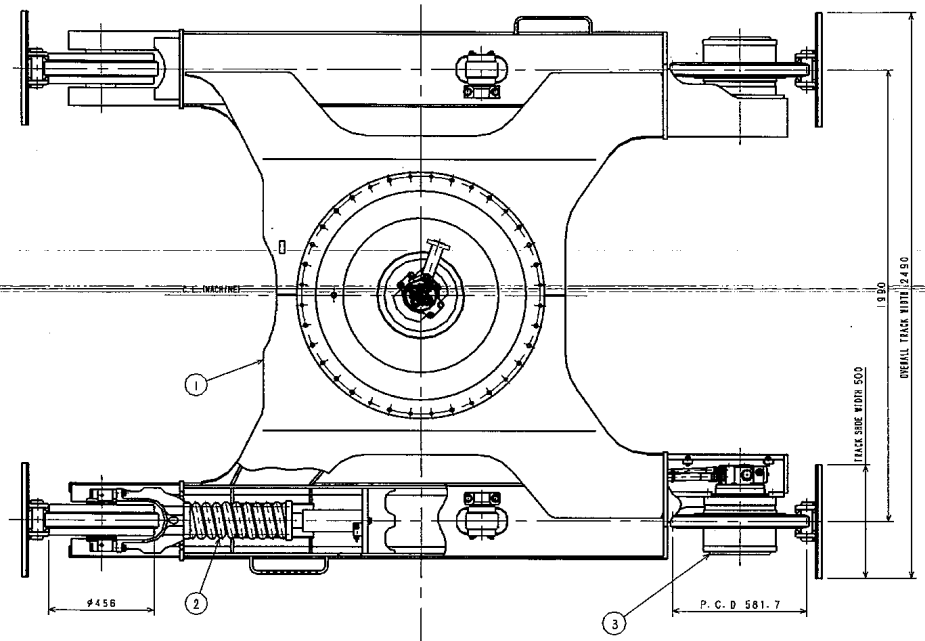

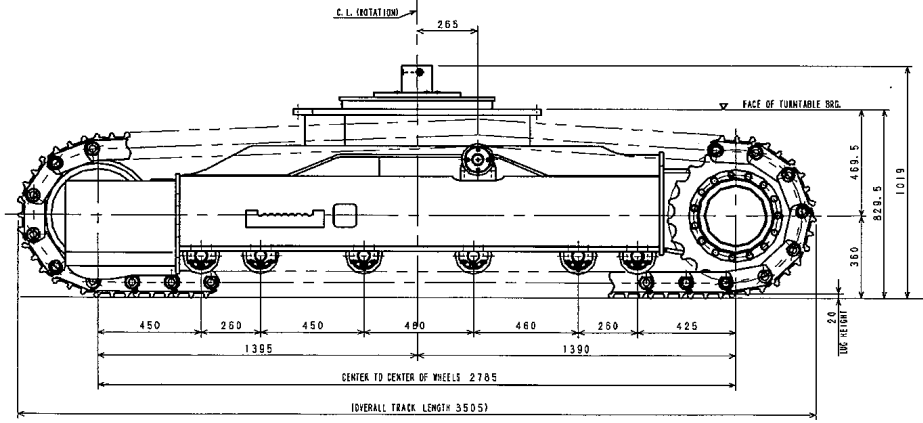

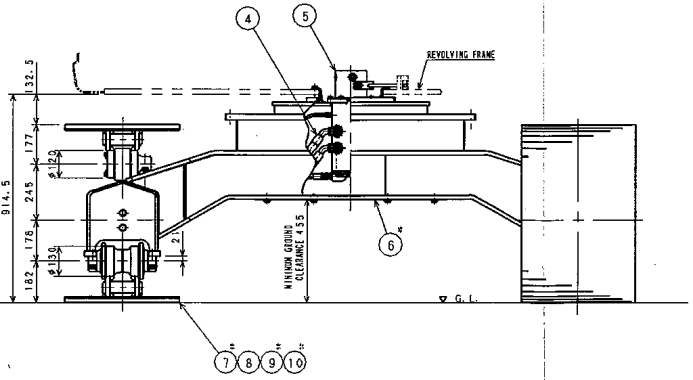

DESCRIPTION	SYMBOL	QTY.	TOTAL WT.
LOWER FRAME ASSY	1	1	1,572.6
RECOIL SPRING AND ROLLER ASSY	2	2	560.8
TRAVEL UNIT ASSY	3	2	385.8
TRAVEL MOTOR LINE ASSY	4	1	15.7
ROTATING JOINT ASSY	5	1	30.2
※ LOWER BOTTOM COVER ASSY	6	1	14.5
※ LINK CHAIN SHOE ASSY 500	7	2	1,499.2
GROUSER SHOE 500 (SEALS INCLUDED)	8	2	1,421.7
※ GROUSER SHOE 600 (SEALS INCLUDED)	9	2	1,585.1
※ GROUSER SHOE 700 (SEALS INCLUDED)	10	2	1,885.1

NOTES
1. TOTAL WEIGHT DOES NOT INCLUDE OPTIONS.
2. PARTS MARKED WITH ※ ARE OPTIONAL.

https://truckmanualshub.com/

https://truckmanualshub.com/

Lower Mechanism

Lower assembly diagram (overall) SH125/135X-3(with blade)

NOTES
1. AMOUNT OF WEIGHT DON'T CONTAIN OPTIONALLY.
2. ※ IS OPTIONAL.

	DESCRIPTION	SYMBOL	QTY.	TOTAL WT.
	BLADE ASSY (2.49 M)	1	1	667.8
	LOWER FRAME ASSY	2	1	1,665.0
	RECOIL SPRING AND ROLLER ASSY	3	2	560.8
	TRABEL UNIT ASSY	4	2	385.8
	TRAVEL MOTOR LINE ASSY	5	1	15.7
	ROTATING JOINT ASSY	6	1	60.0
※	LOWER BOTTOM COVER ASSY	7	1	14.5
※	SHOE	8	2	1,499.2
	GROUSER SHOE 500 (SEALS INCLUDED)	9	2	1,421.7
※	GROUSER SHOE 600 (SEALS INCLUDED)	10	2	1,585.1
※	GROUSER SHOE 700 (SEALS INCLUDED)	11	2	1,888.1

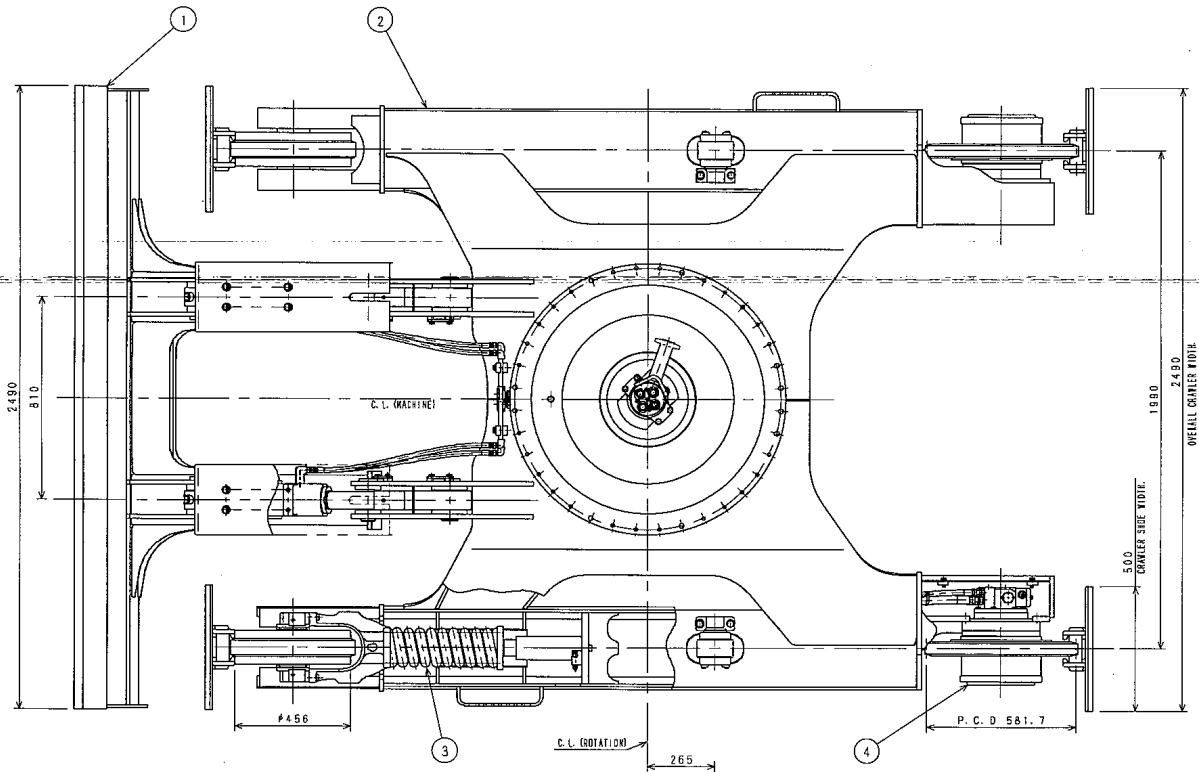

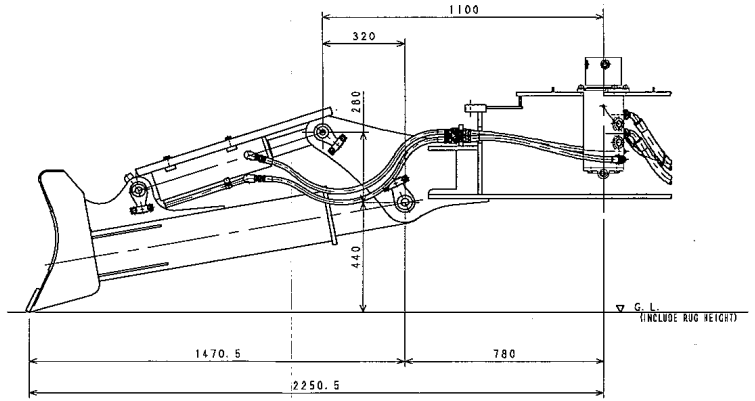

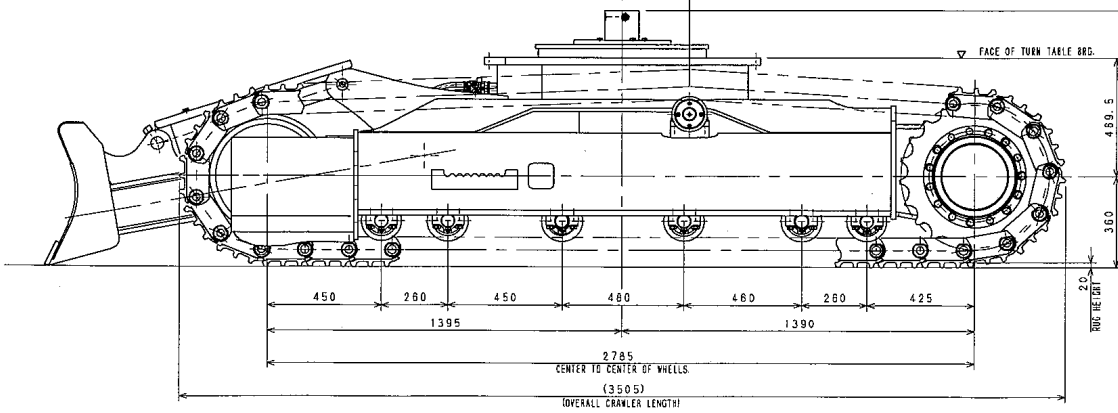

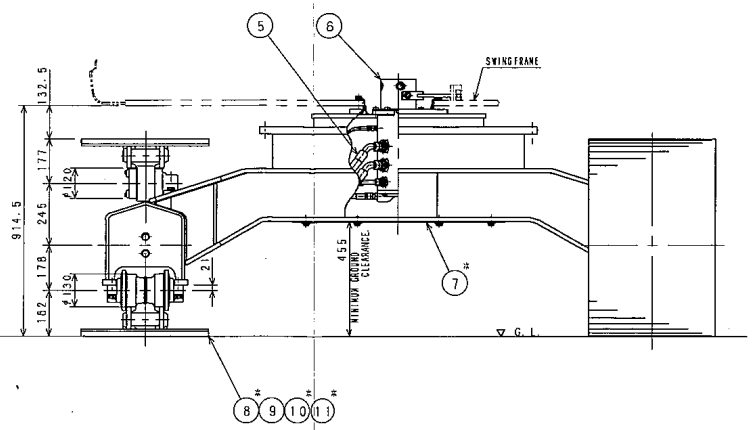

https://truckmanualshub.com/

https://truckmanualshub.com/

https://truckmanualshub.com/

Travel Unit (with Parking Brake)

Sumitomo Part No.	KMA1321
Manufacturer	Teijin Seiki Co., Ltd.
Power unit	Variable displacement piston motor (automatic 2-speed switch-over)
Suction capacity	52.7/34.0 cm^3/rev
Working pressure	34.3 MPa
Working flow	117 L/min
Reduction gears	
Reduction ratio	72
Parking brake	
Brake torque	10.4 kN·m or over
Dry weight	144.0 kg

Take-up Roller

Sumitomo Part No.	KMA1265
Weight	61.0 kg

Upper Roller

Sumitomo Part No.	KMA1275
Weight	15.6 kg

Lower Roller (External Roller)

Sumitomo Part No.	KNA0693
Weight	20.4 kg

https://truckmanualshub.com/

Recoil Spring

Item	Sumitomo Part No.	
Yoke	KMA1299	15.1
SEMS bolt M16x50	105R016Y050R	0.8
Threaded rod	KMA1300	13.6
Nut with deep grooves M30x2	165R039HSN	0.6
Spring pin 6x56	338W060Z063B	—
Recoil spring	KMA1284	32.7
Grease cylinder assembly	KMA1317	14.4
Assembly	Total	77.2
	Mounting length of spring:	419 mm

Shoes

Item	Sumitomo Part No.	
500 Grouser	KMA1280	711.0 kg
Link	KMA1281	One set
Shoe	KNA0632	43
Bolt	KNA0396	172
Nut	KNA0397	172

Item	Sumitomo Part No.	
600 Grouser	KMA1336	792.6 kg
Link	KMA1281	One set
Shoe	KNA0775	43
Bolt	KNA0396	172
Nut	KNA0397	172

Item	Sumitomo Part No.	
700 Grouser	KMA1337	943.1 kg
Link	KMA1281	One set
Shoe	KNA0776	43
Bolt	KNA0396	172
Nut	KNA0397	172

Item	Sumitomo Part No.	
500 Geo grip	KMA1282	749.6 kg
Link	KMA1281	One set
Shoe	KNA1283	43
Bolt	KNA0396	172
Nut	KNA0397	172

https://truckmanualshub.com/

Specifications

MAJOR EQUIPMENT SPECIFICATIONS

Upper Mechanism

Swing Unit

Item	Specifications
Motor type	Fixed displacement piston motor (1)
Reduction gear type	Planetary gear 2 speed reduction system
Type of swing parking brake	Mechanical lock (swing lever / swing lock switch linkage type)

Sumitomo Part No.	KMC0093
Manufacturer	Kawasaki Heavy Industries, Ltd.
Power unit	Fixed displacement piston motor
Suction capacity	64.0 cm^3/rev
Working pressure	28.0 MPa
Relief set pressure	28.0 ± 0.4 MPa at 84 L/min
Reduction gears	
Reduction ratio	19.2
Swing brake	
Brake torque	284.7 N·m or over
Brake release pressure	min. 2.3 MPa (max. 4.9 MPa)
Dry weight	103.0 kg

https://truckmanualshub.com/

Engine and Related Areas

Engine

Sumitomo Part No.	KMH0805
Engine model name	Isuzu 4BG1T Diesel Engine
Engine type	4-cycle, in-line, direct-injection, water-cooled, overhead valve
Number of cylinders – Bore x Stroke	4 - dia. 105 mm × 125 mm
Displacement	4.329 L
Compression ratio	18.0
Rated output	65.6 ± 1.8 Kw/ 2100 rpm
Maximum torque	322.3 N·m or over / approx.1600 rpm
Fuel consumption	246.8 g / Kwh or less
Engine dry weight	Approximately 361 kg
Engine dimensions	L904.0 × W684.8 × H907.0 mm
Oil pan	All directions 35°, inclinable
Cooling fan	540 mm in dia., suction type, 8 blades, resin
Pulley ratio	1.01 (speed increase)
Alternator	24 V × 50 A AC type
Starter-generator	24 V × 4.5 Kw, reduction type
Coolant capacity	8.5 L
Oil pan capacity	max.: 13.2 L min.: 11.0 L (excluding oil filter)
Direction of rotation	Right (viewed from fan side)

Compliant with JISD1006-1994
Conditions for rated output: muffler with fan and generator, without air cleaner

https://truckmanualshub.com/

Muffler

Sumitomo Part No.	KNH0761
Manufacturer	Toei Industries Co., Ltd.
External dimensions	dia. 240 × 600 mm
Weight	12.0 kg

Air Cleaner (Double Element)

Sumitomo Part No.	KMH0827
Manufacturer	Donaldson Co., Ltd. (Japan)
Element (Outer)	KMH0781
Element (Inner)	KMH0830
Weight	2.8 kg

Radiator

Sumitomo Part No.		KMH0831
Manufacturer		Tokyo Radiator Mfg. Co., Ltd.
Oil cooler	Weight	19.0 kg
	Oil capacity	7.0 L
Radiator	Weight	13.0 kg
	Water capacity	6.8 L
Weight		48.5 kg

https://truckmanualshub.com/

Specifications

MAJOR EQUIPMENT SPECIFICATIONS

Fuel Tank

Sumitomo Part No.	KMH0786
Individual part weight	62.3 kg
Tank capacity	165 L
Fuel	Light oil (fuel for diesel engine)

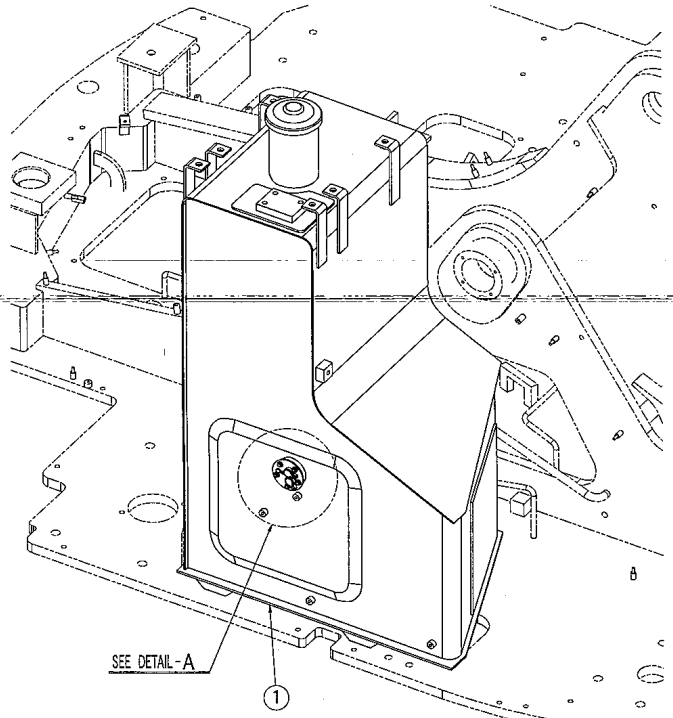

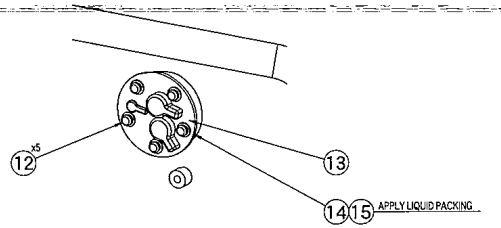

DETAIL- A

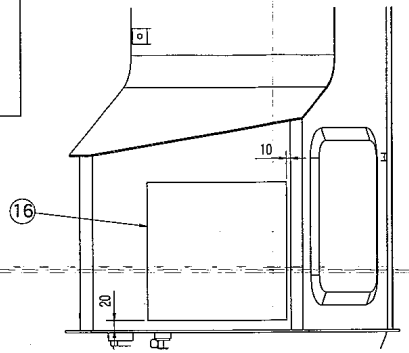

TANK FRONTSIDE VIEW

DESCRIPTION	SYM	QTY
TANK:FUEL	1	1
BOLT:SEMS M16X55	2	4
BOND	3	NEED
SHIM:PLATE (t=0.8)	4	NEED
SHIM:PLATE (t=2.0)	5	NEED
PLUG G3/4	6	1
COCK:DRAIN	7	1
MISSING NUMBER	8	
MISSING NUMBER	9	
MISSING NUMBER	10	
MISSING NUMBER	11	
SCREW:PAN HD M5X12	12	5
SENSOR:SPL	13	1
PACKING:SPL	14	1
PACKING:LIQUID	15	NEED
PLATE:RUBBER	16	1

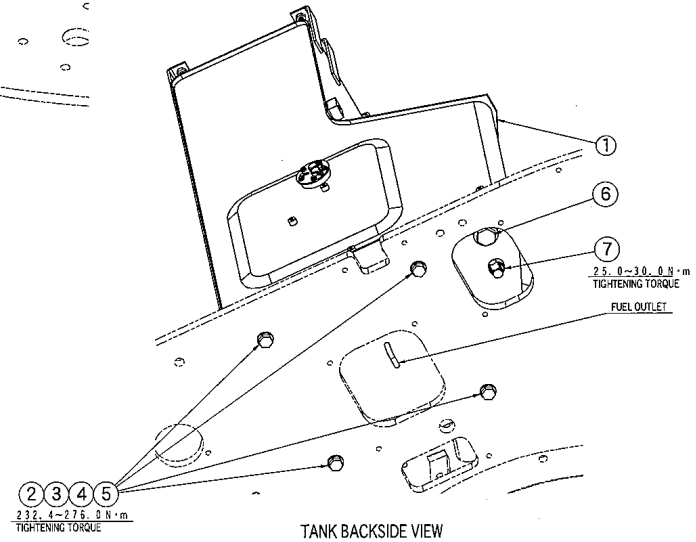

TANK BACKSIDE VIEW

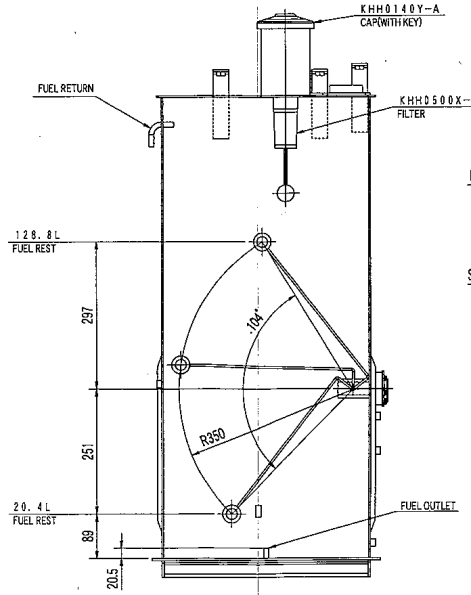

NOTES

1) TIGHTEN BOLTS (2) BY THE SPECIFIED TORQUE AFTER APPLYING LOCTITE #262 ON THE THREAD.

SPECIFICATIONS

FUEL TANK

1. TANK CAPACITY 165L
2. LIMITED INCLINED ANGLE 35°

KMH0816Z-D02

https://truckmanualshub.com/

https://truckmanualshub.com/

https://truckmanualshub.com/

Specifications

MAJOR EQUIPMENT SPECIFICATIONS

Hydraulic System

Hydraulic Pump

	SH125X-3	SH125/135X-3 with blade
Sumitomo Part No.	KMJ2936	KMJ2937
Manufacturer	Kawasaki Heavy Industries, Ltd.	Kawasaki Heavy Industries, Ltd.
Main pump		
Type	Double variable displacement piston pump (1)	Double variable displacement piston pump (1)
Displacement volume	54.5 cm^3/rev x 2	54.5 cm^3/rev x 2
Rated working pressure	34.3 MPa	34.3 MPa
Maximum working pressure	34.3 MPa	34.3 MPa
Maximum output	117 x 2 L/min at 2150 rpm	117 x 2 L/min at 2150 rpm
Pilot pump		
Type	Fixed displacement gear pump (1)	Fixed displacement gear pump (1)
Displacement volume	10 cm^3/rev	10 cm^3/rev
Working pressure	3.9 MPa	3.9 MPa
Maximum output	21.5 L/min at 2150 rpm	21.5 L/min at 2150 rpm
Gear pump		
Type		Fixed displacement gear pump (1)
Displacement volume		24.9 cm^3/rev
Working pressure		20.6 MPa
Maximum output		53.5 L/min at 2150 rpm
Dry weight	91 kg	94 kg

https://truckmanualshub.com/

P-Q Line Diagram of Hydraulic Pump

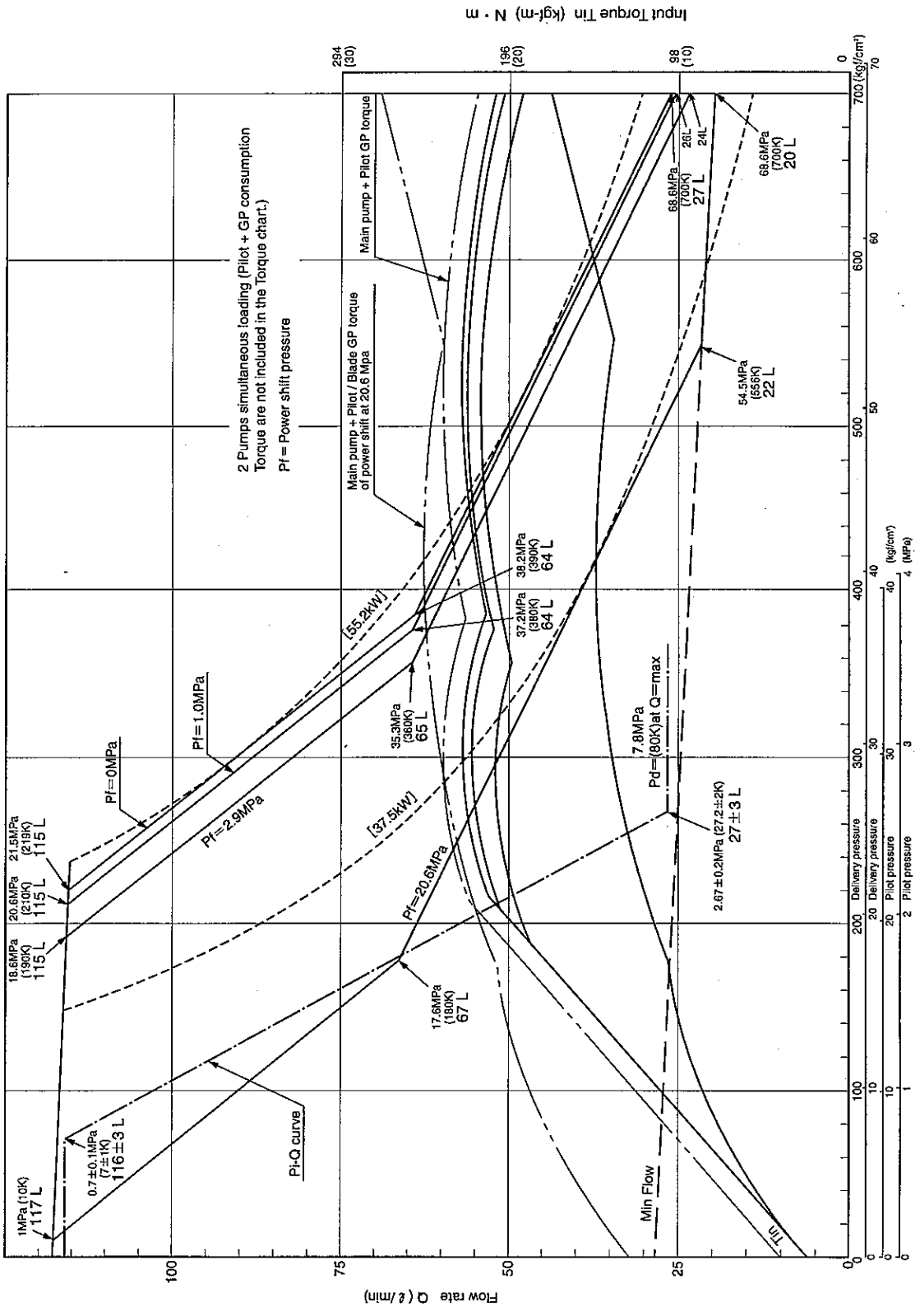

KMJ2936/7X-B00

Sump Tank

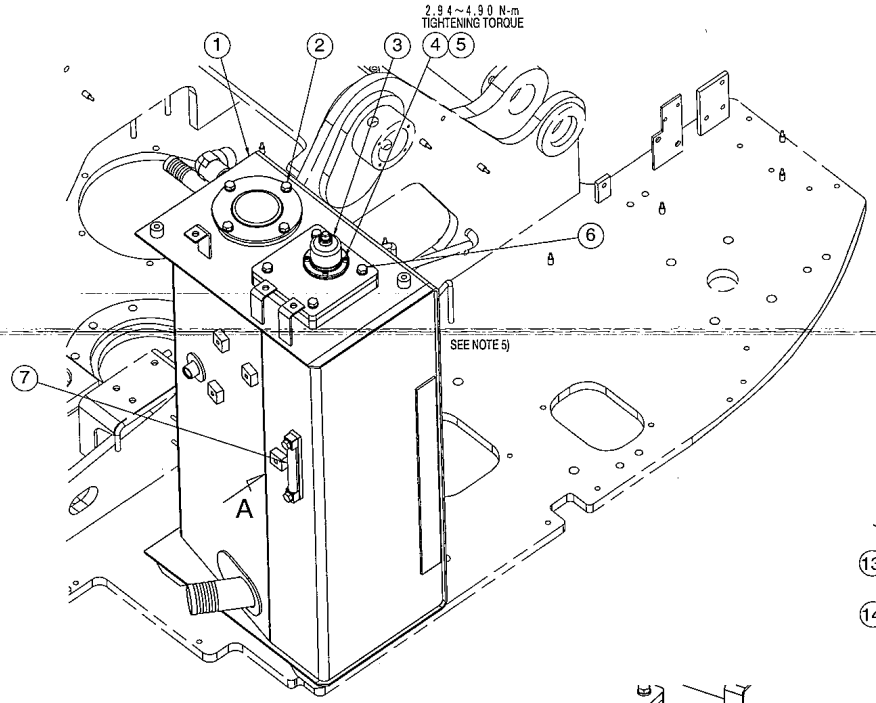

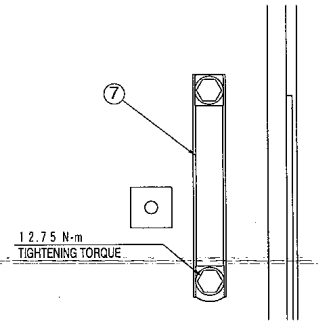

DESCRIPTION	SYMBOL	QTY.
SUMP TANK	1	1
SEMS BOLTS M10X20	2	4
AIR BREATHER	3	1
HEX SOCKET HEAD BOLTS M6X16	4	4
SPRING WASHERS	5	4
SEMS BOLTS M10X30	6	4
OIL LEVEL GAUGE	7	1
SEMS BOLTS M16X55	8	4
LOCTITE 262	9	AS NEEDED
PLATE SHIM (T=0.8)	10	AS NEEDED
PLATE SHIM (T=2.0)	11	AS NEEDED
PLUG G 3/4	12	1
COMPRESSION SPRING	13	1
RELIEF VALVE	14	1
RETURN FILTER	15	1
STRAINER	16	1
PLUG, G 3/4	17	1
PLUG, G 3/8	18	1

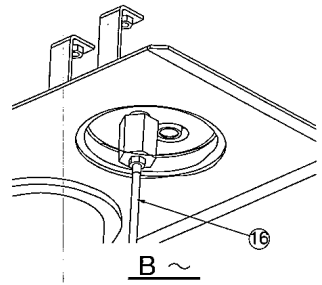

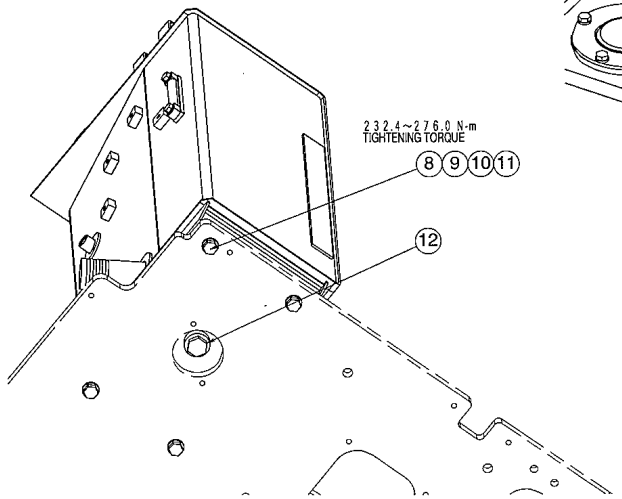

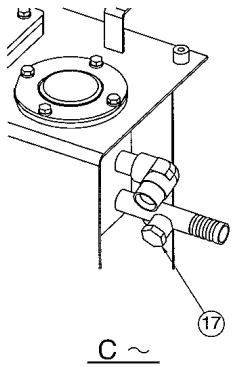

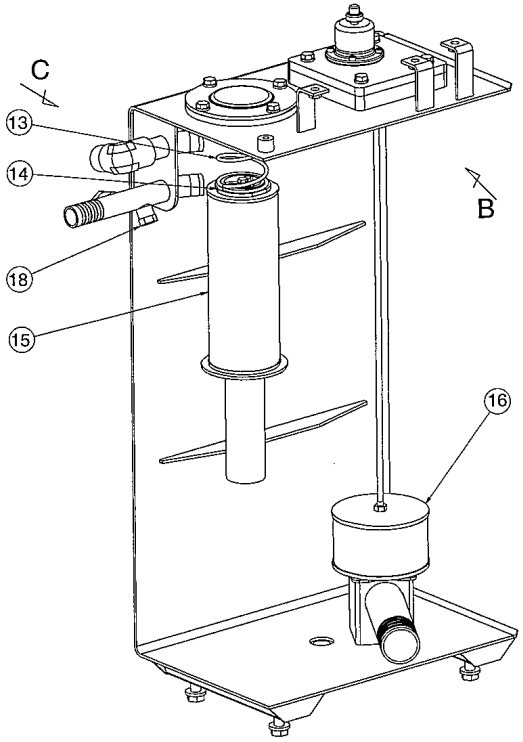

THE INSIDE OF SUMP TANK

NOTES

1) THE SPECIFICATION OF SUMP TANK REFER TO THE BELLOWS.
   TANK CAPACITY : 125 L
   CAPACITY OF HYDRAULIC OIL : 81 L

2) TIGHTEN BOLTS ⑧TO THE INDICATEED TORQUE AFTER APPLYING LOCTITE #262 ⑨TO THE THREAD.

3) BE CAREFUL THAT PAINT AND GASOLINE NOT ADHERE TO HYD. OIL GAGE⑦. NO USE THINNER AND LIGHT OIL etc WHEN PAINT AND GASOLINE ADHERE TO HYD.OIL GAGE⑦.

4) BE CAREFUL OF DIRECTION WHEN ATTACHING GAGE;OIL⑦ TO THE SUMP TANK.

5) MAKE SURE THE AIR BREATHER③ IS LOCATED TOWARD FRONT OF MACHINE WHEN ATTACHING THE COVER.

https://truckmanualshub.com/

https://truckmanualshub.com/

https://truckmanualshub.com/

Rotating Joint

	SH125X-3	SH125/135X-3 with blade	
Working pressure			
	High pressure passage (ABCD)	High pressure passage (ABCD)	34.3 MPa
	–	High pressure passage (EF)	20.6 MPa
	Pilot port (F)	Pilot port (H)	3.9 MPa
	Drain port (E)	Drain port (G)	0.5 MPa
Hydrostatic test pressure	High pressure passage (ABCD)	High pressure passage (ABCD)	51.5 MPa
	–	High pressure passage (EF)	30.9 MPa
	Pilot port (F)	Pilot port (H)	5.9 MPa
	Drain port (E)	Drain port G)	1.0 MPa
Flow	High pressure passage (ABCD)	High pressure passage (ABCD)	117 L/min
	–	High pressure passage (EF)	53.5 L/min
	Pilot port (F)	Pilot port (H)	21.5 L/min
	Drain port (E)	Drain port (G)	15 L/min
Number of revolutions			15 rpm
Torque	When pressurizing 2 ports		147 N·m
Hydraulic oil used			ISO VG46
Range of hydraulic oil temperature			-20 to +95°C
Sumitomo Part No.	KMA1325	KMA1260	
Weight	26.1 kg	56.2 kg	
Port A	Forward right	Forward right	G3/4-A Class
Port B	Forward left	Forward left	G3/4-A Class
Port C	Backward right	Backward right	G3/4-A Class
Port D	Backward left	Backward left	G3/4-A Class
Port E	Drain port (G1/2-A Class)	Blade-up (G1/2-A Class)	
Port F	Pilot port (G1/4-A Class)	Blade-down (G1/2-A Class)	
Port G	–	Drain port (G1/2-A Class)	
Port H	–	Pilot port (G1/4-A Class)	

https://truckmanualshub.com/

Solenoid Valve

Sumitomo Part No.	KNJ2781	
Manufacturer	Uchida Hydraulics Co., Ltd.	
Weight	5.7 kg	
Valve specifications		
Maximum flow	P→B: 20 L/min	Other: 5 L/min
Rated pressure	3.9 MPa	
Solenoid specifications		
Working voltage	DC 24 V	
Power comsumption	13.0 W (at 24 V, 20°C)	

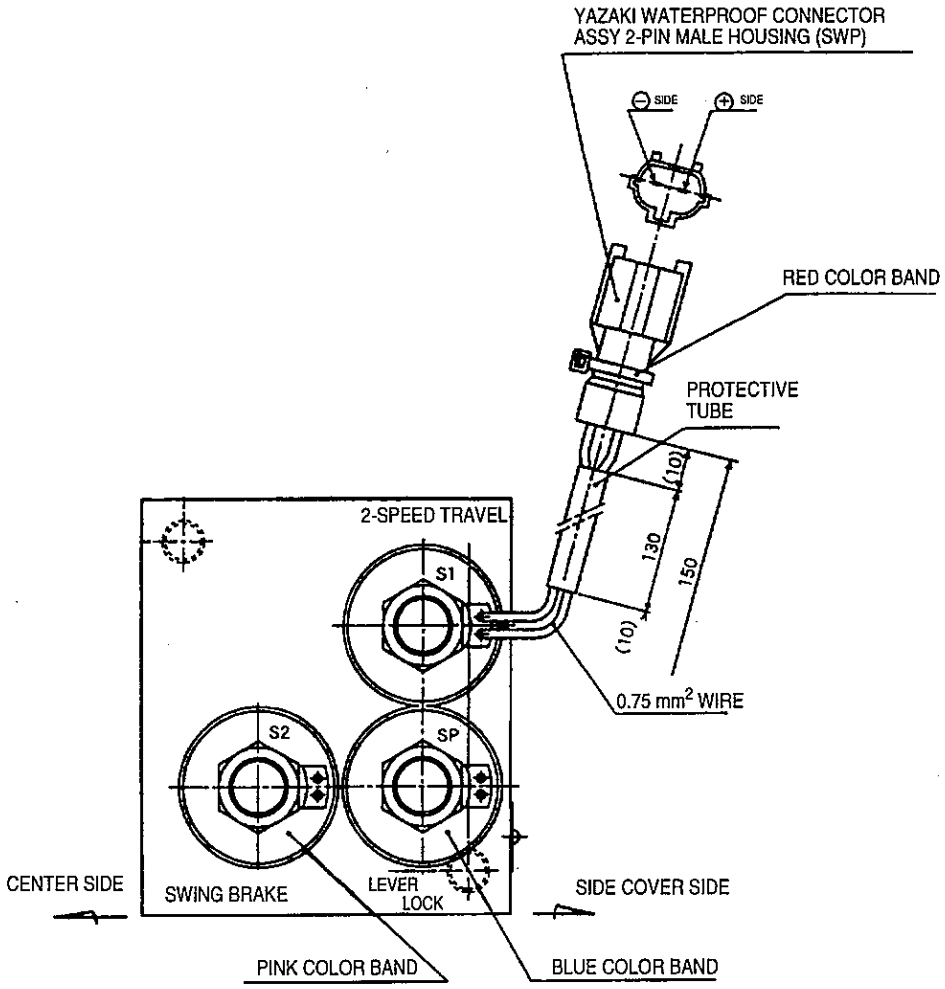

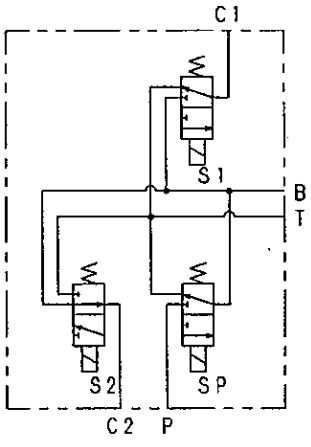

HYDRAULIC SYMBOL

https://truckmanualshub.com/

Specifications

MAJOR EQUIPMENT SPECIFICATIONS

Controls

Remote Control Valve

Valve for Left/Right Operations		
SUMITOMO Part No.		KHJ1925
Manufacturer		KAWASAKI Heavy Industries, Ltd.
Working pressure		3.92 MPa
Secondary pressure		0.64 ± 0.1 to 2.45 ± 0.15 MPa: Primary short type
Operating angle	Ports 1, 3 Ports 2, 4	19 ± 1.9° 25 ± 2.5°
Operating torque	Port 1 Port 3 Ports 2, 4	1.18 to 2.67 N·m 0.94 to 2.38 N·m 1.37 to 3.19 N·m
Hydraulic oil		ISO VG46
Range of working temperature		253 to 368K (-20 to 95°C)
Weight		1.6 kg

Valve for Travel Operation (with damper)		
Sumitomo Part No.		KHJ1969
Manufacturer		Kawasaki Heavy Industries, Ltd.
Working pressure		3.92 MPa
Secondary pressure		0.64 ± 0.1 to 2.45 ± 0.15 MPa: Primary pressure short type
Operating angle		12.4 ± 0.6°
Operating torque	Valve Damper	2.62 to 8.61 N·m 12.9 N·m at 0.0275 m/s
Hydraulic oil		ISO VG46
Range of working temperature		253 to 373 K (-20 to 100°C)
Weight		3.9 kg

Valve for Blade Operation	
Sumitomo Part No.	KHJ1928
Manufacturer	Kawasaki Heavy Industries, Ltd.
Secondary pressure	0.64 ± 0.1 to 2.45 ± 0.15 MPa: Primary pressure short type
Operating angle	10 ± 0.6°
Operating torque	2.79 to 5.43 N·m
Hydraulic oil	ISO VG46
Range of working temperature	253 to 373 K (-20 to 100°C)
Weight	0.95 kg

https://truckmanualshub.com/

Control Valve

	SH125X-3	SH125/135X-3 With blade
Sumitomo Part No.	KMJ2633	KMJ2798
Manufacturer	Kayaba Industry Co., Ltd.	Kayaba Industry Co., Ltd.
Maximum flow	117.2 L/min (at 2160 rpm)	117.2 L/min (at 2160 rpm)
Pressure setting for overload	37.8 ± 0.5 MPa (at 20 L/min)	37.8 ± 0.5 MPa (at 20 L/min)
Pressure setting for main relief	34.3 ± 0.3 MPa (at 54L/min)	34.3 ± 0.3 MPa (at 54 L/min)
Range of working temperature	-20 to +100°C	-20 to +100°C
Functions	Straight travel circuit	Straight travel circuit
	Boom-up; 2-speed, internal confluence for arm	Boom-up; 2-speed, internal confluence for arm
	Boom/arm load holding circuit	Boom/arm load holding circuit
	Boom-down regenerative circuit	Boom-down regenerative circuit
	Arm-in forced regenerative circuit	Arm-in forced regenerative circuit
	Swing override variable throttle valve	Swing override variable throttle valve
	Backup 2-speed confluence	Backup 2-speed confluence
Weight	140.0 kg	166.5 kg

https://truckmanualshub.com/

Specifications

MAJOR EQUIPMENT SPECIFICATIONS

Backhoe Attachments

Cylinder

Boom Cylinder	
Sumitomo Part No.	KMV2134 / KMV2135
Manufacturer	Kayaba Industry Co. Ltd.
Cylinder bore	dia. 105 mm
Rod diameter	dia. 75 mm
Max. retracted length	1598 ± 1.8 mm
Stroke	1120 ± 1.8 mm
Dry weight	121.0 / 124.0 kg

Arm cylinder	
Sumitomo Part No.	KNV1681
Manufacturer	Kayaba Industry Co. Ltd.
Cylinder bore	dia. 115 mm
Rod diameter	dia. 80 mm
Max. retracted length	1619 ± 1.8 mm
Stroke	1108 ± 1.8 mm
Dry weight	157.0 kg

Bucket cylinder	
Sumitomo Part No.	KMV2192
Manufacturer	Kayaba Industry Co. Ltd.
Cylinder bore	dia. 95 mm
Rod diameter	dia. 65 mm
Max. retracted length	1373 ± 1.8 mm
Stroke	881 ± 1.8mm
Dry weight	93.0 kg

Blade cylinder	
Sumitomo Part No.	KMV2367/KMV2368
Manufacturer	Kayaba Industry Co. Ltd.
Cylinder bore	dia. 110 mm
Rod diameter	dia. 70 mm
Max. retracted length	670 ± 2.0 mm / 670 ± 1.5 mm
Stroke	240 ± 1.25 mm
Dry weight	50.0 kg

https://truckmanualshub.com/

Attachments

SH125/135X-3 Bucket Types

● Standard bucket
◎ For general digging
○ For light digging
Δ For loading only
x Do not use

Bucket capacity		Heaped	m^3	0.24	0.30	0.37	0.45	0.50
		Leveled	m^3	0.20	0.24	0.29	0.32	0.35
Number of teeth			Number	3	4	4	4	5
Bucket width		Without side cutter	mm	503	598	703	823	894
		With side cutter	mm	577	672	777	899	970
Applicable front	SH125X-3	Standard arm (2.39 m)		◎	◎	◎	●	○
		Long arm (2.85 m)		◎	◎	●	○	Δ
	SH135X-3	Standard arm (2.39 m)		◎	◎	◎	◎	●
		Long arm (2.85 m)		◎	◎	●	○	Δ

https://truckmanualshub.com/

SH125/135X-3

(Emission Control Regulation Compliant Machine)

SERVICE TEXT

Hydraulics Section

SUMITOMO (S.H.I.) CONSTRUCTION MACHINERY MANUFACTURING CO., LTD.

https://truckmanualshub.com/

https://truckmanualshub.com/

Table of Contents

2nd Edition: 09/2002

Hydraulics Section

Hydraulic Pump: Operational Description. 125-1-02-01-11

1. Structure and operation principle. 1/4

Control Valve: Operation. 125-1-02-02-10

1. When all spools are in neutral position 1/17
   1-1. Neutral passage 1/17
   1-2. Signal passage 1/17
2. Independent Operation 4/17
   2-1. Travel spool changeover 4/17
   2-2. Extra spool changeover. 5/17
   2-3. Swing spool changeover 6/17
   2-4. Bucket spool changeover 6/17
   2-5. Boom spool changeover 7/17
   2-6. Arm spool changeover. 10/17
   2-7. Parallel throttle for arm 13/17
   2-8. Neutral cut spool changeover (Extra combination) 14/17
   2-9. Blade spool changeover 14/17
   2-10. Relief valve 15/17
3. Compound Operations. 16/17
   3-1. Travel compound operation. 16/17
   3-2. Anti-drift valve 17/17

Swing Unit 125-1-02-03-09

1. Swing Motor. 1/10
2. Mechanical Brake 2/10
3. Make-up Valve. 3/10
4. Swing Relief Valve. 5/10
5. Anti-reverse Valve 6/10
6. Swing Reduction Gears. 7/10
7. Problems and Remedies 8/10
8. Structural Drawings 10/10

https://truckmanualshub.com/

Table of Contents

Travel Unit: Travel Motor **125-1-02-04-11**

1. Outline Drawings 1/15
2. Basic Structure and Drawings 2/15
   2-1. Basic structure of motor 2/15
   2-2. Assembly sectional drawings 3/15
   2-3. Parts list 4/15
   2-4. Exploded view 5/15
3. Operational Description 7/15
   3-1. Reduction gears 7/15
   3-2. Hydraulic motor section
   (with brake valve, high/low 2-speed switching mechanism) 9/15

https://truckmanualshub.com/

1. Structure and operation principle

This pump is constructed in such way that 2 pumps are combined with spline coupling (114), and 2 pumps are driven simultaneously by transiting the engine rotation to driving shaft F (111) at the front side.
Oil suction and delivery ports are concentrated to the connection portion of the 2 pumps, namely, to the valve block (312), and suction port is commonly used for the front and rear pumps.
Since the structure and operation principle are same for the front and rear pumps, explanation is as follows, which is made to the front pump only ;
In general following classification is made for the structure of this pump, namely, consisting of Rotary group, which is the major portion of the pump and performs rotating motion, Swash plate group, which changes the delivery amount of oil, and Valve cover group, which switches suction / delivery of oil.
The rotary group consists of driving shaft F (111), cylinder block (141), piston and shoe (151) (152), detent plate (153), spherical bush (156) and cylinder spring (157). The driving shaft is supported on both ends with bearings (123)(124). Shoe is caulked for piston, forming spherical joint, and at the same time, it decreases thrust force generated by loading pressure and has pocket portion to assume hydraulic balance for making smooth sliding on the shoe plate (211).
Subgroup of piston and shoe is pushed on shoe plate by the cylinder spring via detent plate and spherical bush in order to make smooth sliding on the shoe plate.Also, cylinder block is pushed on valve plate (313) by cylinder spring.
Swash plate group consists of swash plate (212), shoe plate (211), swash plate supporting table (251), slanting bush (214), slant pin (531) and servo piston (532). Swash plate is consisting of cylindrical portion formed on the opposition side of shoe sliding surface and is supported on swash plate supporting table.
Servo piston moves right and left when pressured oil controlled by the regulator is led to the oil pressure chamber furnished on both ends of the servo piston, and, then, swash plate rocks on swash plate supporting table through spherical portion of slant pin and changes its swash angle (α).
Valve cover group consists of valve block (312), valve plate (313) and valve plate pin (885). The valve plate, having two nail shaped ports, is mounted on the valve block, and works as a role for supplying and recovering oil to and from the cylinder block.
Oil switched by valve plate is connected to the external piping through valve block.
When driving shaft is driven by the engine (Motor, engine, etc.), cylinder block rotates through spline coupling at the same time. When swash plate is on a slant, piston incorporated in cylinder block makes reciprocal movement relatively against cylinder, while it rotates together with cylinder block.
Accordingly, if watching one piston, during one cycle of rotation of the cylinder block, it moves away from valve plate (oil sucking stroke) for the first 180 degrees rotation and moves toward valve plate (oil discharging struck) for the remaining 180 degrees rotation. During zero slanting angle of swash plate, piston does not stroke and does not discharge oil.

https://truckmanualshub.com/

Attached drawing 1 Pump development diagram

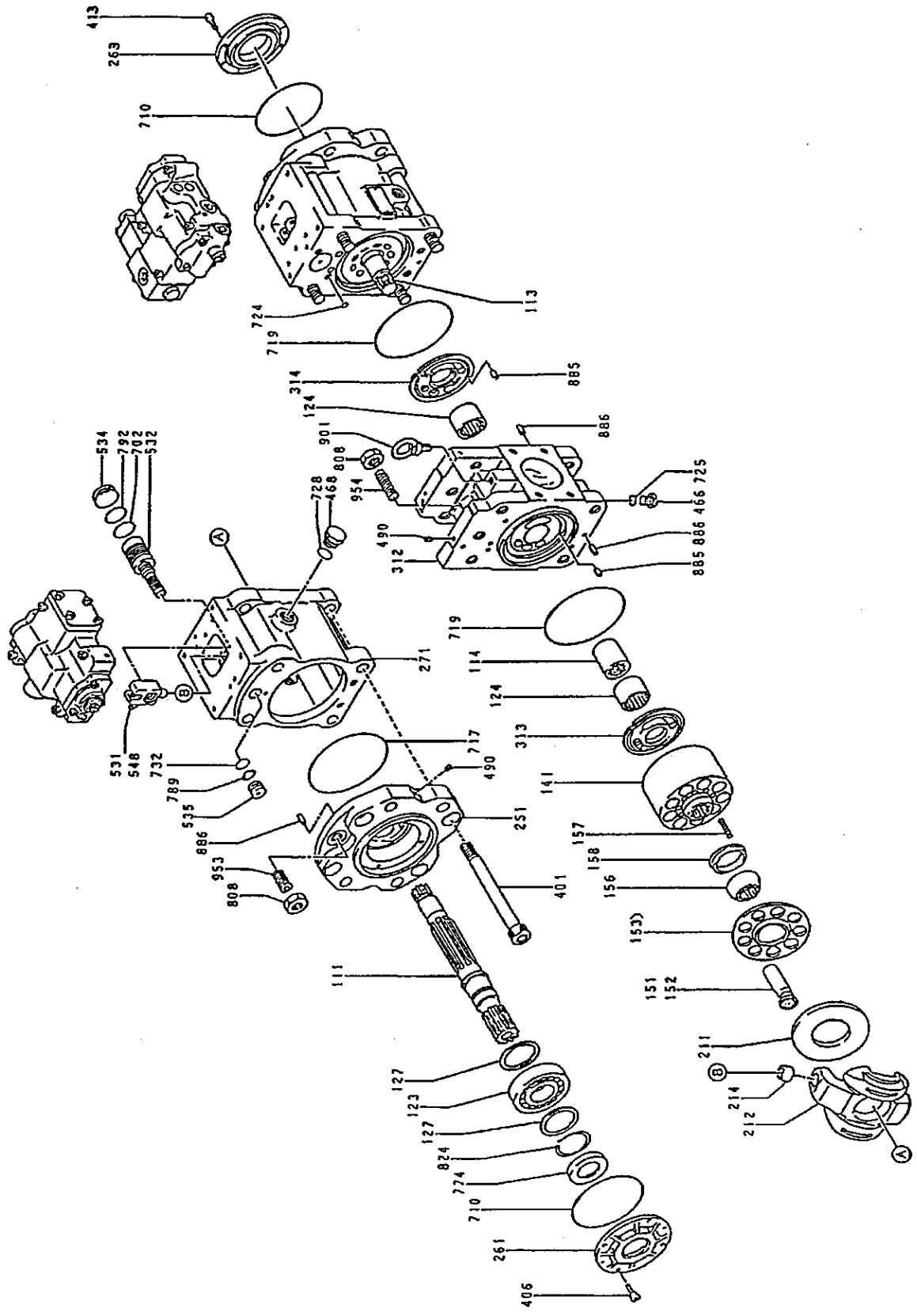

https://truckmanualshub.com/

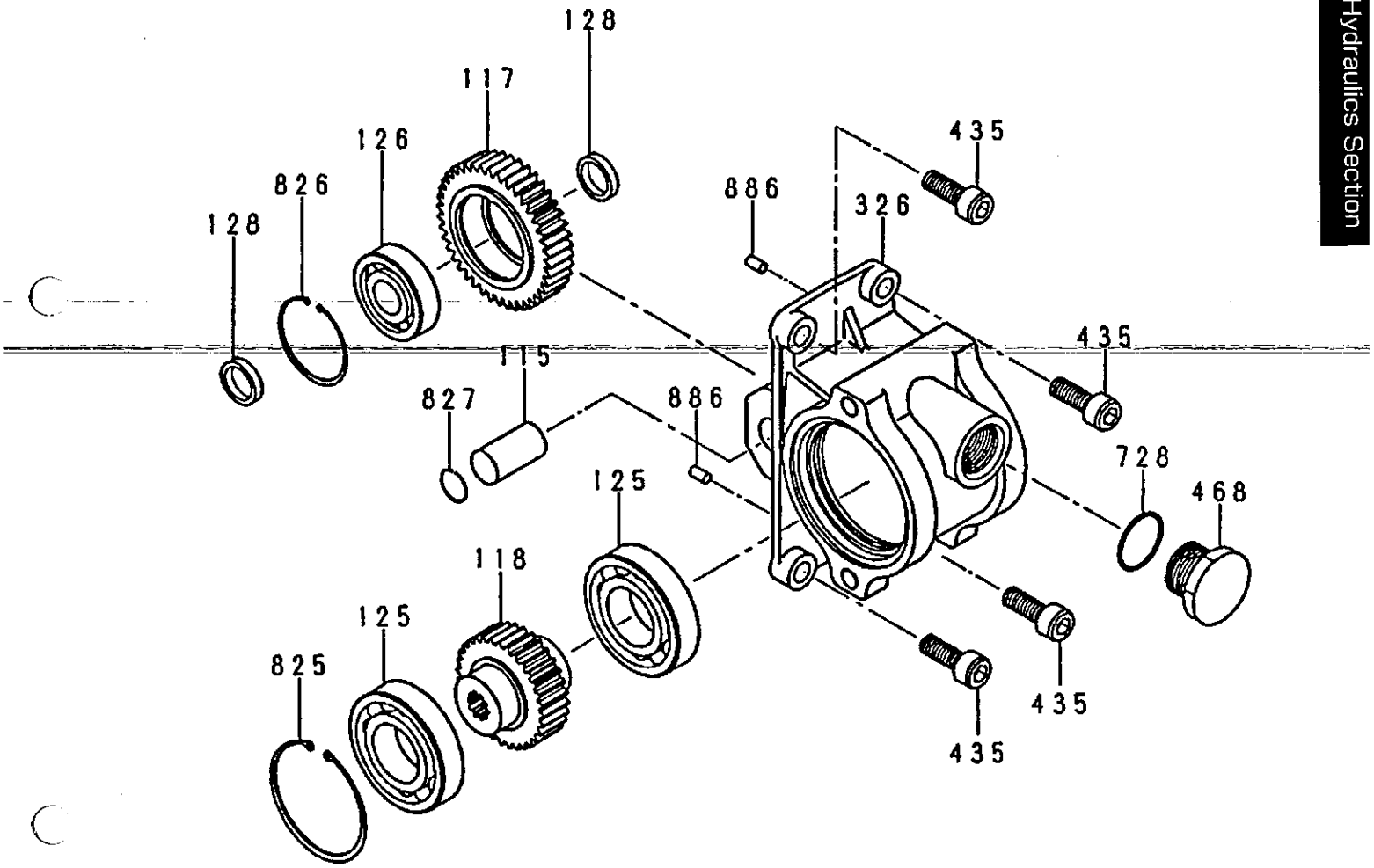

https://truckmanualshub.com/

Attached drawing 2 Pump structure drawing

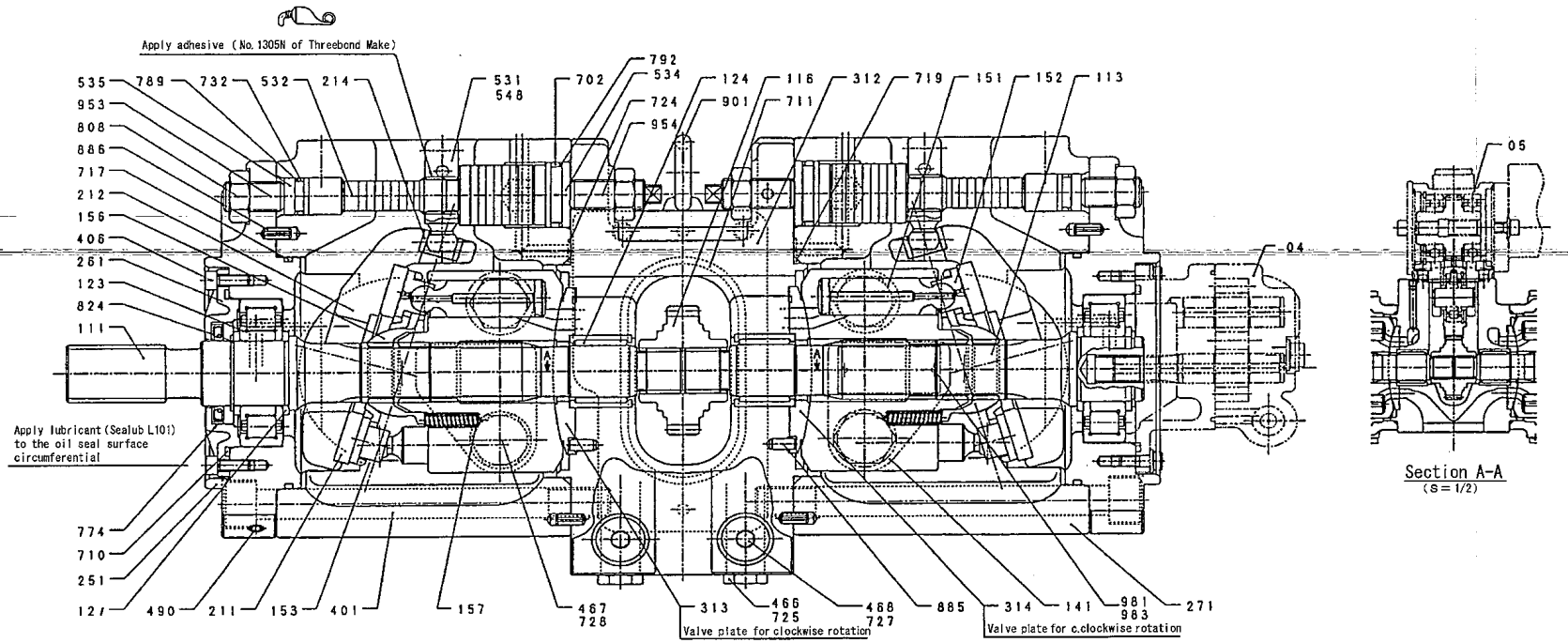

Tightening torque for bolt, plug, nut and servo piston

Part number	Screw size	Tightening torque N-m
401	M16	240
406	M6	12
466	G1/4	36
467	G1/2	110
468	G3/8	74
490	NPTF1/16	8.8
531,532	M20x1.5	240
808	M16	130

Item	Part name	Quantity
983	Driving rivet	2
981	Nameplate	1
954	Setscrew	2
953	Hexagonal hole setscrew	2
901	Eyebolt	2
886	Spring pin	4
885	Valve plate pin	2
824	Stop ring	2
808	Hexagonal nut	4
792	Backup ring	2
789	Backup ring	2
774	Oil seal	1
732	O-ring	2
728	O-ring	4
727	O-ring	2
725	O-ring	2
724	O-ring	18
719	O-ring	2
717	O-ring	2
711	O-ring	1
710	O-ring	1
702	O-ring	2
548	Feedback pin	2
535	Stopper (S)	2
534	Stopper (L)	2
532	Servo piston	2
531	Slant pin	2
490	Plug	15
468	ROH Plug	2
467	VP Plug	4
466	VP Plug	3
406	Hexagonal hole bolt	4
401	Hexagonal hole bolt	8
314	Valve plate (L)	1
313	Valve plate (R)	1
312	Valve block	1
271	Pump casing	2
261	Seal cover (F)	1
251	Swash plate supporting table	2
214	Slanting bush	2
212	Swash plate	2
211	Shoe plate	2
157	Cylinder spring	18
156	Spherical bush	2
153	Detent plate	2
152	Shoe	18
151	Piston	18
141	Cylinder block	2
127	Bearing spacer	4
124	Needle roller bearing	2
123	Cylindrical roller bearing	2
116	1st Gear	1
113	Drive shaft (R)	1
111	Drive shaft (F)	1
530	Slant pin sub	2ST
030	Swash plate sub	2ST
014	Cylinder sub (L)	1ST
013	Cylinder sub (R)	1ST
011	Piston sub	2ST
05	PTO Unit	1ST
04	Gear pump	1ST

https://truckmanualshub.com/

https://truckmanualshub.com/

https://truckmanualshub.com/

1. When all spools are in neutral position

1-1 Neutral passage (Fig. 1) (Fig. 2)

Oil supplied from port P1 enters into tank passage (Ta) through (L2) from neutral passage (L1) and low pressure relief throttle (Lc1), and returns to ports T1 and T2. Oil supplied from port P2 runs through neutral passage (R1) and neutral cut spool, and through oil passage (R2) and low pressure relief throttle (Rc1). It goes to tank passage (Ta) and returns to ports T1 and T2. Pressure in the pressured chambers (L2) and (R2) in the upper stream of low pressure relief valve is led to the pump from ports ps1 and ps2, and controls the delivery volume of pumps P1 and P2.

When excess oil runs into the neutral passage, the low relief valve works and prevents the pressure in the ports ps1 and ps2 from becoming abnormally high.

Also, oil supplied from port P1 is led to parallel passage (L3) via passage (1) through passage (2) and bridge (4) and straight travel valve. Then it goes to each check valve, and is connected to the extra, swing, boom 2 and arm 1 sections. The spool in each section stops its stream.

Noted is that parallel passage (L3) is connected to the neutral passage (L1) through passage (S1-2) and check valve (S1-1), and the oil runs to parallel passage (L3) from port P1, but does not run to the straight travel valve, during travel (Section 1) non-operation time.

Oil supplied from port Pr (3rd pump) runs to neutral passage (Pg) from inlet section passage (L3).

Oil runs in blade section goes to the inlet section from passage (Tg) via outlet section (Cover) and joins to the machine tank passage (Ta).

Oil supplied from port Pr is connected to the blade section through parallel passage (G3) and check valve, and its flow is stopped by spool.

1-2 Signal passage (Fig.1)

Oil supplied from port PP goes to port PT via throttle (Lc3). At the same time, it runs to the land (Lc4) and passage (6) and to drain passage (DR) from land (Rc3).

A part of the oil supplied from port PP goes to port PA through throttle (Lc5).

Also, it runs through passage (L4), (9) and (R4) and reaches to the drain passage (DR) through bucket spool land (Rc4).

Oil passed through throttle (Lc6) runs into tank passage (Ta) from land (Lc7).

Or, it runs into tank passage (Ta) from travel spool land (Rc5) through passage (5).

At this time, oil which runs through passage (5) is led to the pressure changeover chamber (Pts) from spool circular passage of the straight travel valve.

Opposite chamber (Tts) of the straight travel spool is connected to the tank passage (Ta) via spool peripheral notch throttle, which affects to reduce shock being occurred during changeover operation.

https://truckmanualshub.com/

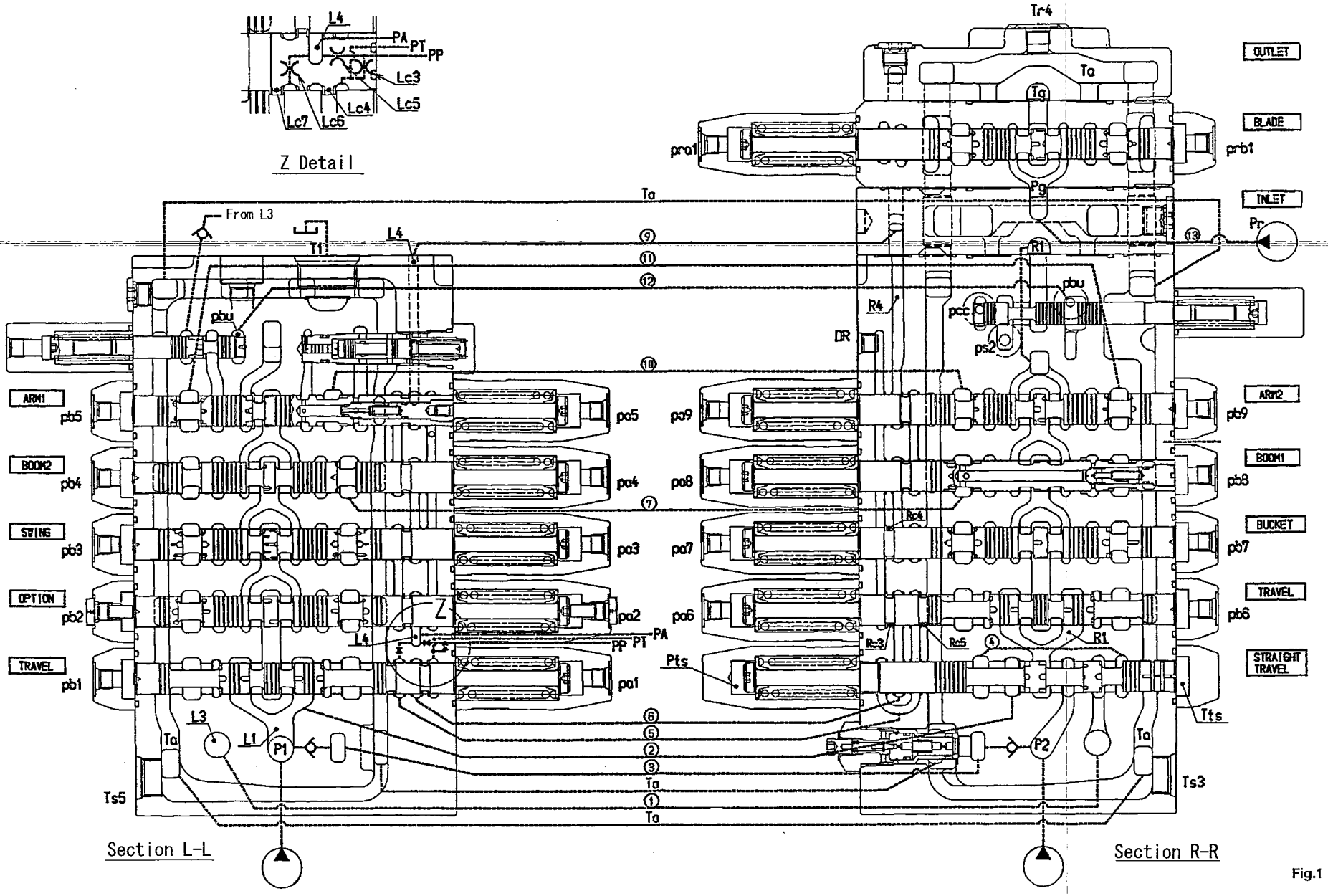

Fig.1

https://truckmanualshub.com/

https://truckmanualshub.com/

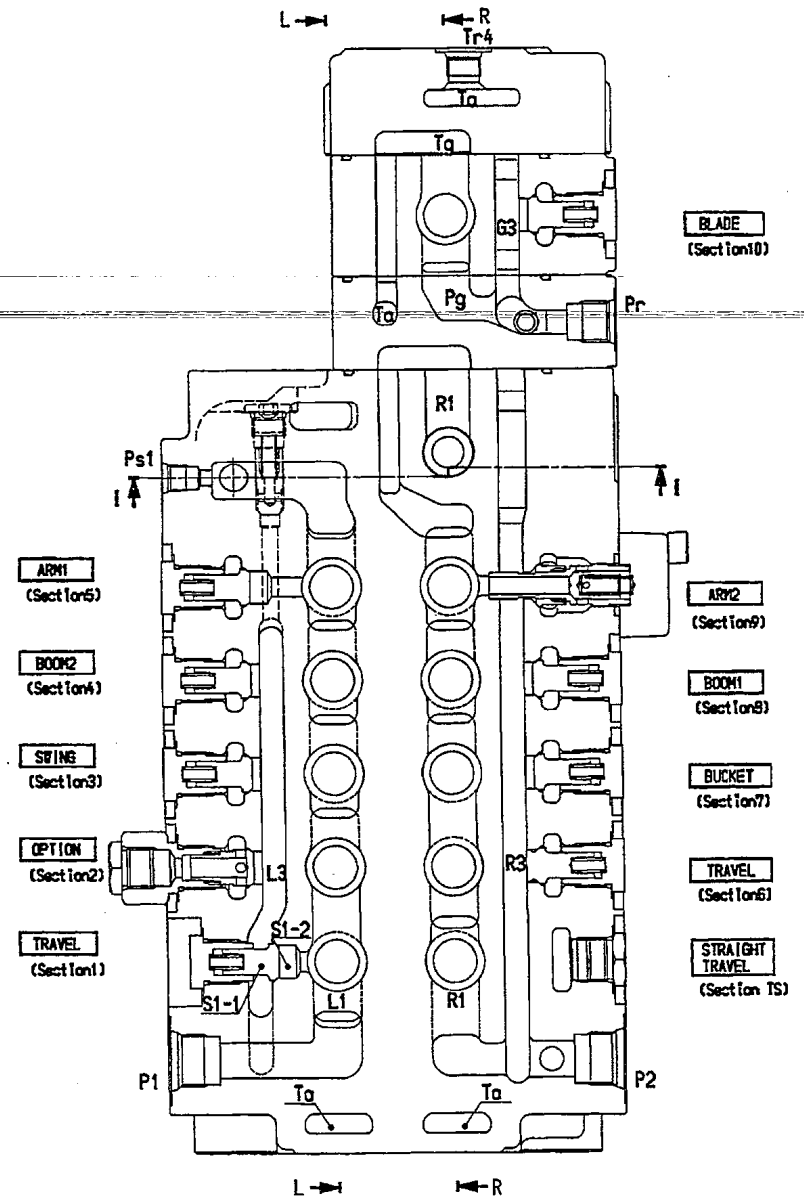

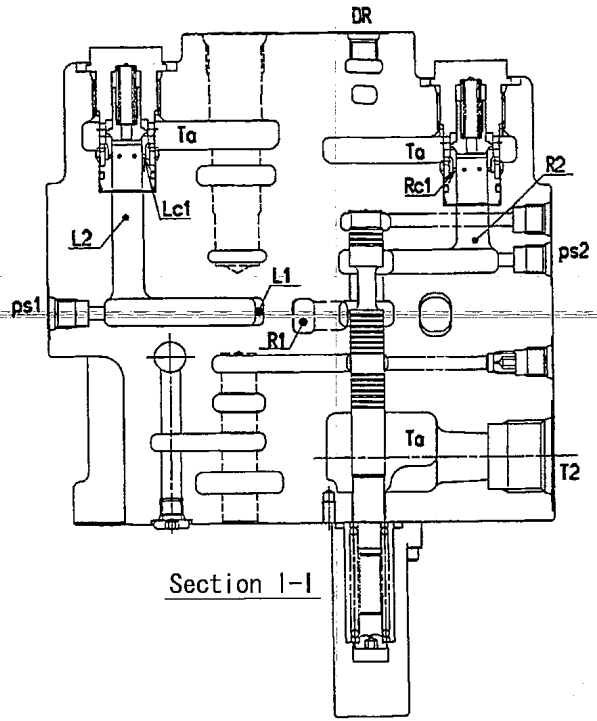

Section I-I

Fig.2

Hydraulics Section
https://truckmanualshub.com/

2. Independent operation

2-1 Travel spool changeover (Fig.3) (Fig.4)

When travel spool is switched by pressurizing from pilot port pb1 (pa1) of the travel (Section 1), oil supplied from port P1 runs to port B1 (A1) through the neutral passage (L1) and to the spool mainportion. Returning oil returns to tank passage (Ta) from port A1 (B1) and the spool main portion.
When travel spool is switched by pressurizing from pilot port pb6 (pa6) of the travel (Section 6), oil supplied from port P2 runs to port B6 (A6) through the neutral passage (R1) and the spool main portion or passage (S6-1).
At this time, poppet (S6-2) does not open due to same pressure in parallel passage (R3) and in passage (S6-1).
Returning oil returns to tank passage (Ta) through port A6 (B6) and through the spool main portion.
When only one side of the travel (Section 1 or 6) spool is switched, either of land (Lc4) or (Rc3) closes.
Port PT is pressurized since the stream of the oil to tank passage being supplied from port PP is shut off.

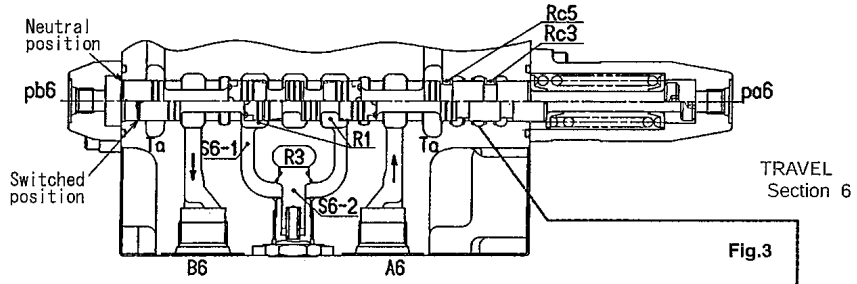

Fig.3

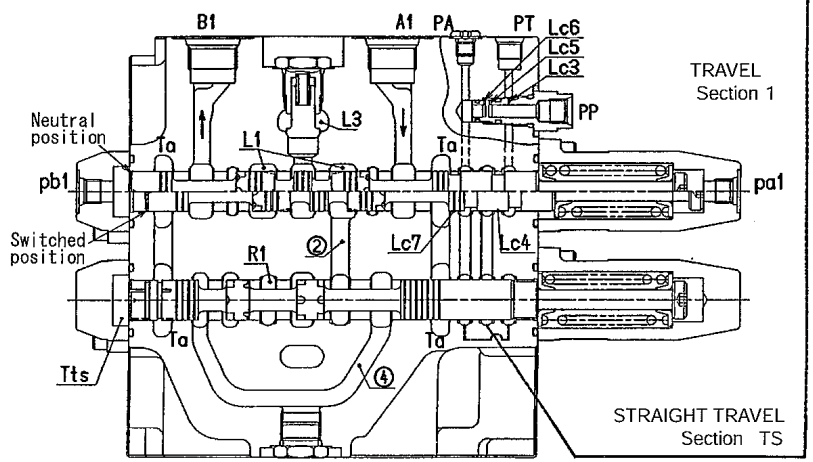

Fig.4

https://truckmanualshub.com/

https://truckmanualshub.com/

2-2 Extra spool changeover (Fig.5)

Stop valve of both pilot caps must be taken off to use this section.
If necessary, switch the shutoff valve to overload relief valve and take off plug of port P4.
When changeover to extra spool by pressurizing from pilot port pb2 (pa2) of the extra (Section 2), neutral passage (L1) closes. Oil supplied from port P1 goes through parallel passage (L3) and load check valve (S2-1), passage (S2-2) and spool main portion, and runs into port B2 (A2). Returning oil returns to tank passage (Ta) through A2 (B2) and then spool main portion.
This section has the load check valve where outside flow from port P4 can be joined

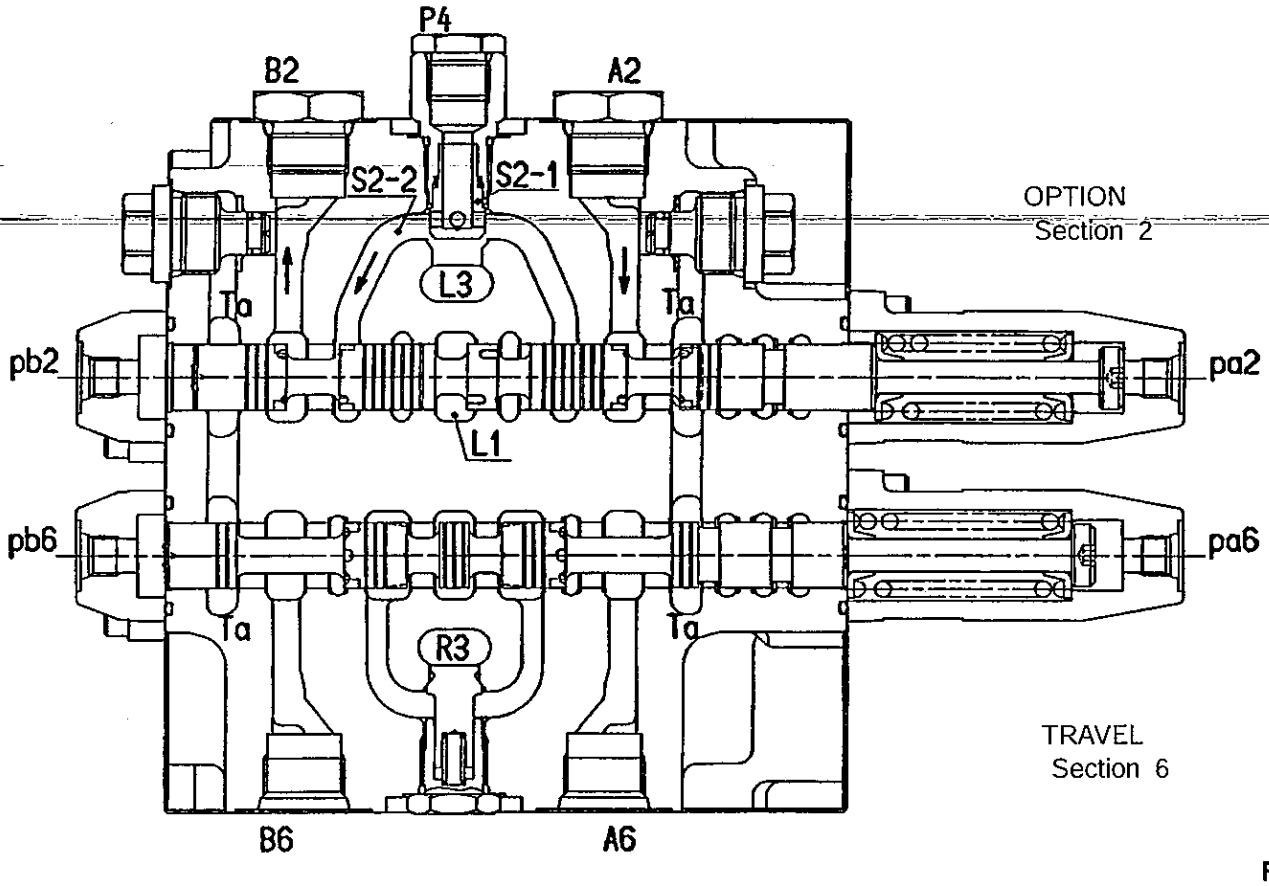

Fig.5

https://truckmanualshub.com/

2-3 Swing spool changeover (Fig.6)

When pressurize from pilot port pb3 (pa3) of the swing (Section 3) and changeover swing spool, neutral passage (L1) closes. Oil supplied from port P1 goes to parallel passage (L3) and to load check valve (S3-1), passage (S3-2) and spool main port, and runs to port B3 (A3). Returning oil returns to tank (Ta) through A3 (B3) and spool main portion.

2-4 Bucket spool changeover (Fig.6)

When pressurize pilot port pb7 (pa7) of the bucket (Section 7) and changeover bucket spool, neutral passage (R1) closes. Oil supplied from port P2 goes to parallel passage (R3), load check valve (S7-1), passage (S7-2) and spool main portion and runs to port B7 (A7). Returning oil returns to tank (Ta) through A7 (B7) and spool main portion.

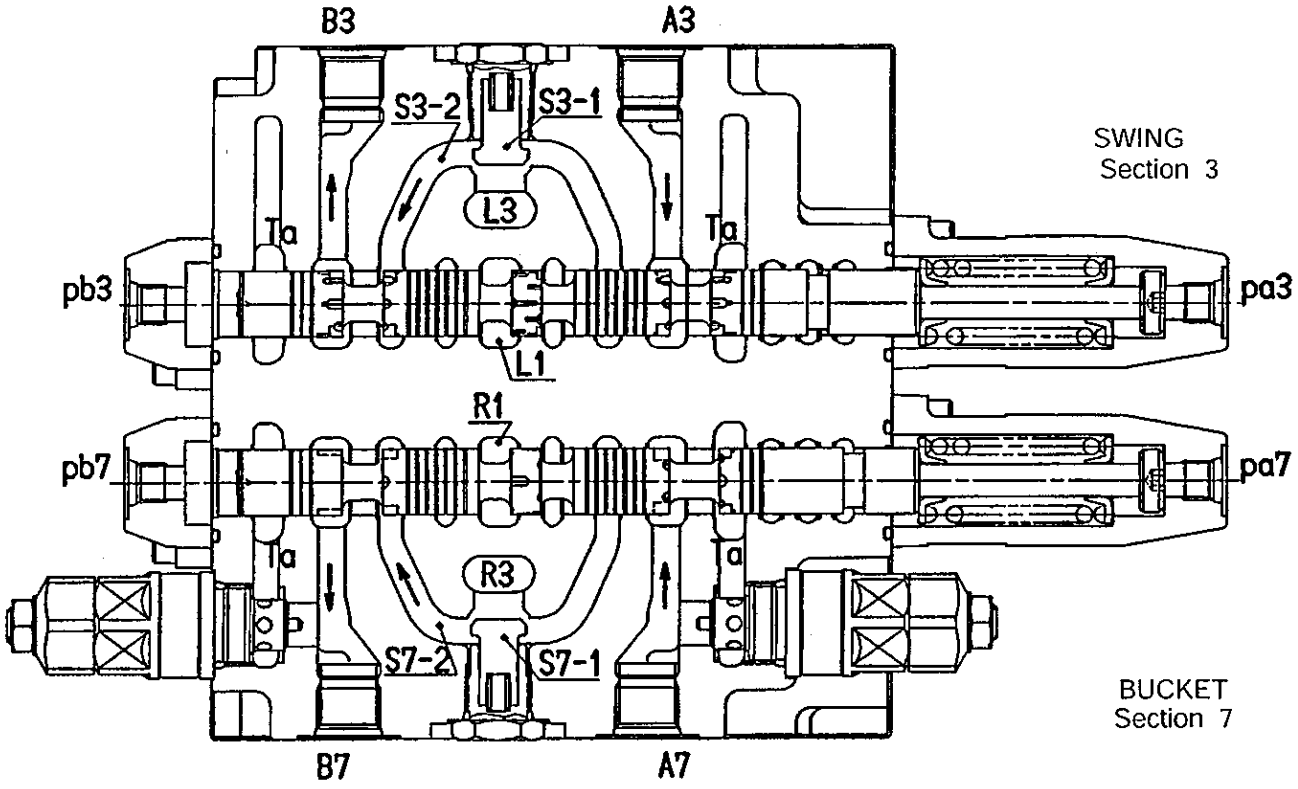

Fig.6

https://truckmanualshub.com/

2-5 Boom spool changeover

(1)Neutral (Fig. 7)

This valve has anti-draft valve that is furnished at the cylinder bottom side of the boom 1. During neutral position, poppet (AD1) is firmly seated by pressure in the port (A8) that is led to spring chamber (AD5) through passage (AD2), poppet (AD3) and passage (AD4).

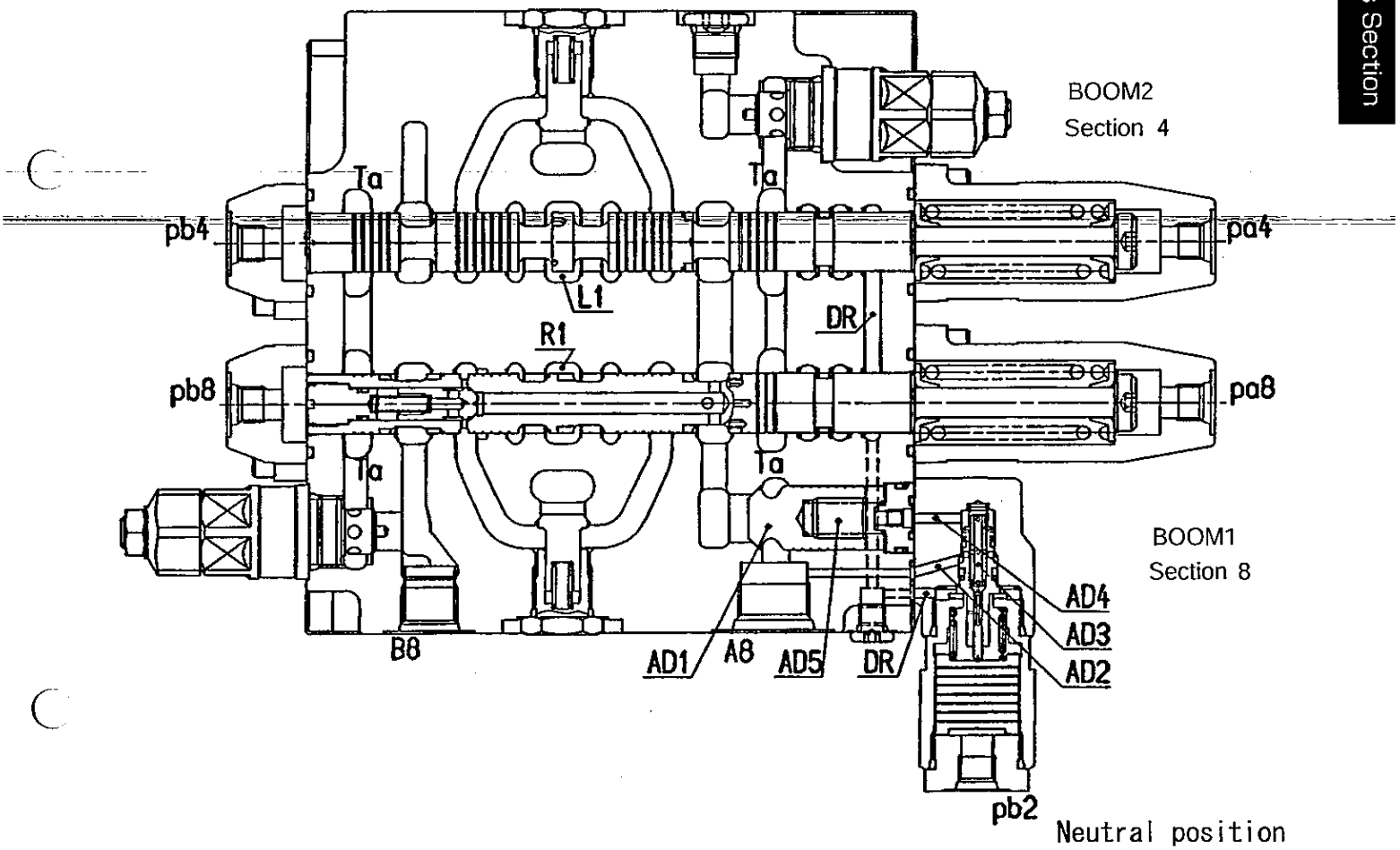

Neutral position

Fig.7

https://truckmanualshub.com/

(2)Hoisting (2 flows combination) (Fig. 8)

When pressurize pilot port pa8 of the boom 1 (Section 8) and changeover boom 1 spool, neutral passage (R1) closes. Oil supplied from port P2 goes to parallel passage (R3), load check valve (S8-1) and spool main portion, and runs to port A8.
When pressurize pilot port pa4 of the boom 2 (Section 4) and changeover boom 2 spool, neutral passage (L1) closes. Oil supplied from port P1 goes to parallel passage (L3), load check valve (S4-1), spool main portion and passage (7). And it runs to port A8.
Returning oil returns to tank passage (Ta) through port B8 and spool main portion.

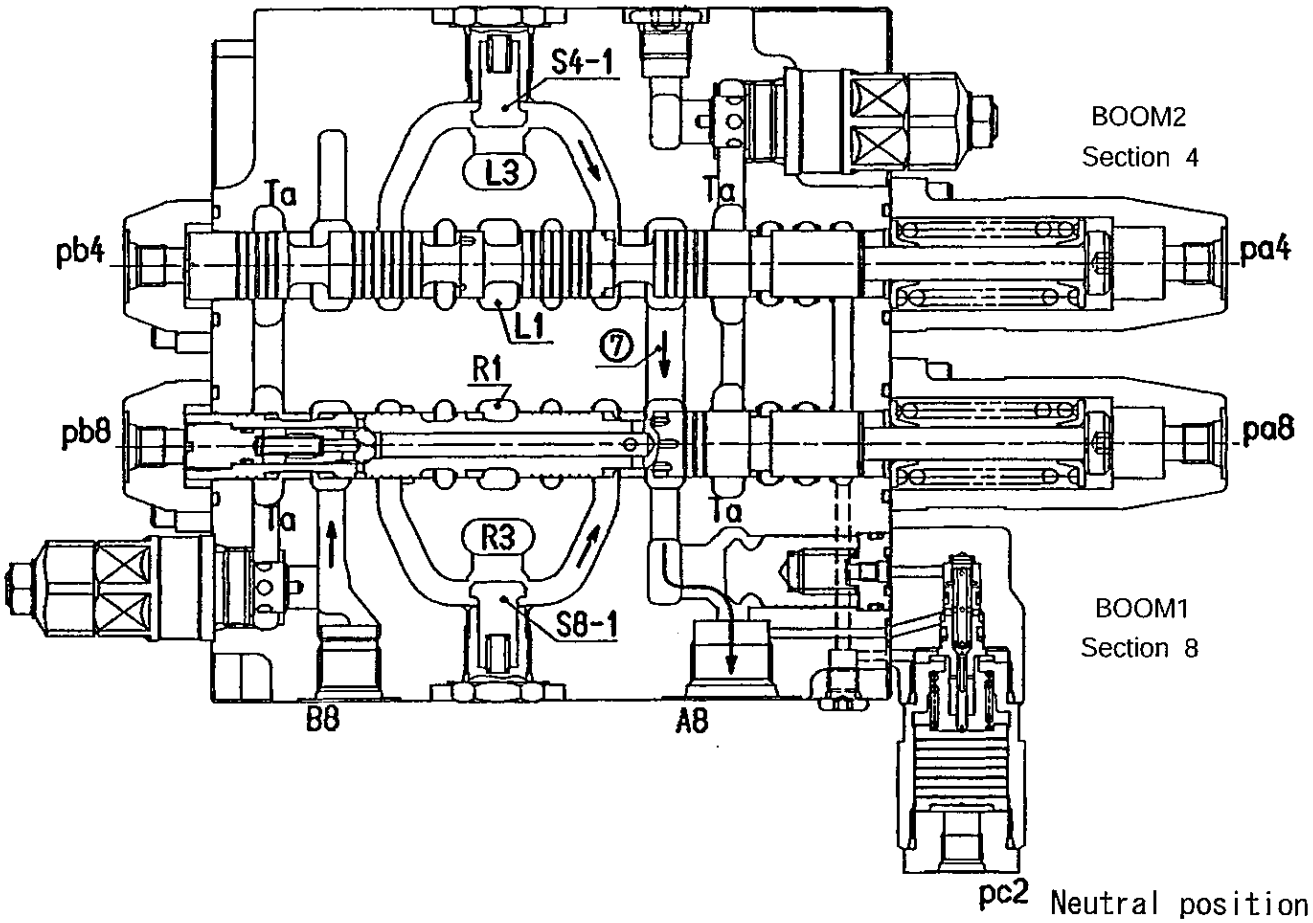

Fig.8

https://truckmanualshub.com/

(3)Lowering (Recycling) (Fig.9)

When pressurize pilot port pb8 of the boom 1 (Section 8) and changeover boom 1 spool, neutral passage (R1) closes. Oil supplied from port P2 goes to parallel passage (R3), load check valve (S8-1) and spool main portion, and runs to port B8. At the same time, when pressurize port pc2 and changeover poppet (AD3) of the anti-drift valve and reduce pressure in spring chamber (AD5), poppet (AD1) opens. And returning oil from port A8 returns to tank passage (Ta).
A part of the returning oil pushes and opens poppet (S8-3) incorporated in the boom 1 spool and goes to passage (S8-2) and joins to port B8. And it prevents cavitation in the cylinder rod side.

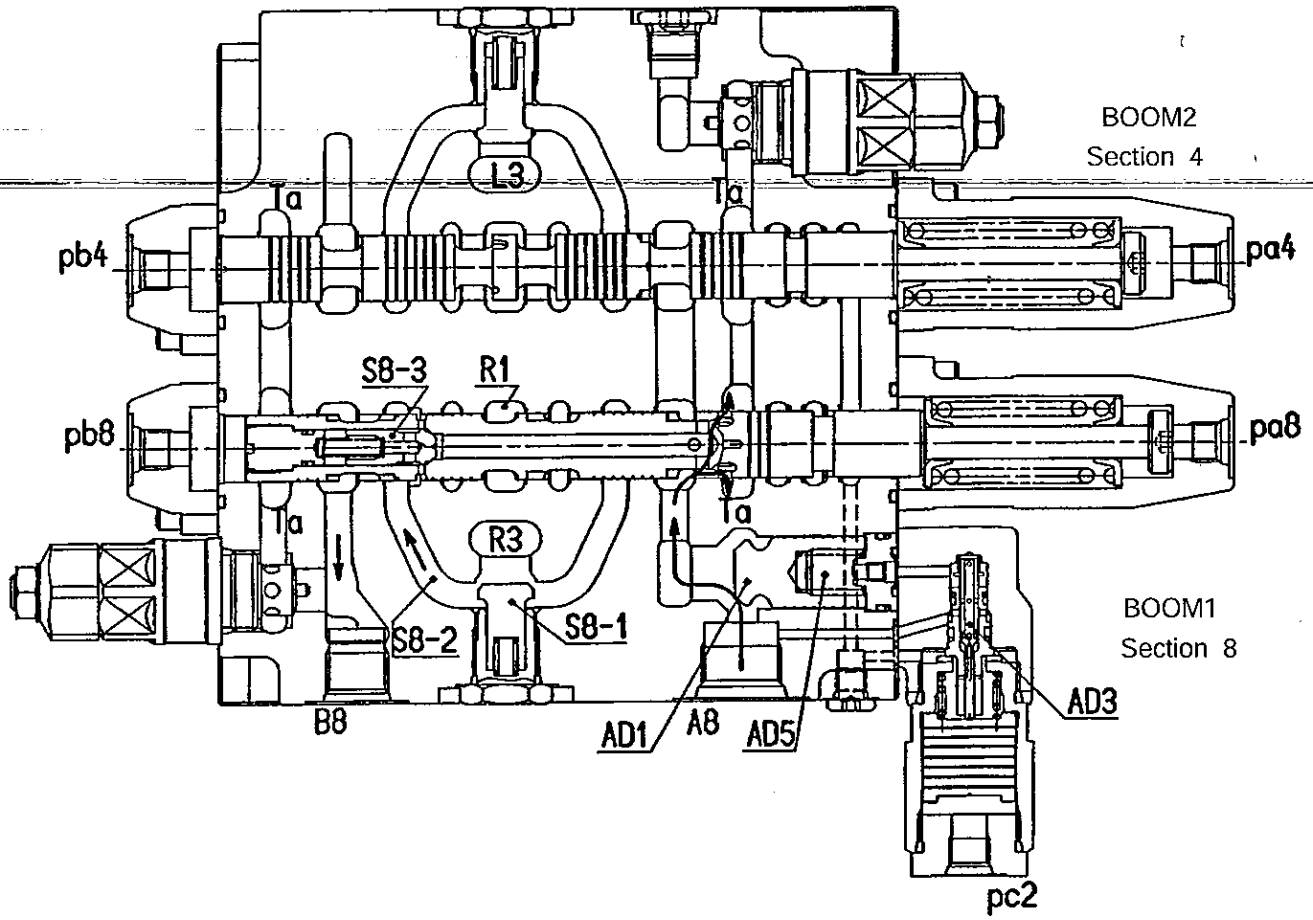

Lowering position

Fig.9

https://truckmanualshub.com/

2-6 Arm spool changeover

(1) Dump (2 flows combination) (Fig.10)

When pressurize pilot port pa5 of the arm 1 (Section 5) and changeover arm 1 spool, oil supplied from port P1 goes to neutral passage (L1), load check valve (S5-1) and passage (S5-2), and to spool main portion. And it runs to port A5.
When pressurize pilot port pa9 of the arm 2 (Section 9) and changeover arm 2 spool, oil supplied from port P2 goes to neutral passage (R1), load check valve (S9-1), passage (S9-2), spool main portion and passage (10), and joins to port A5.
At the same time, a part of the oil from port P2 goes to throttle (S9-3), check valve (S9-4), passage (S9-2) and passage (10) through passage (R3), and runs to port A5. Returning oil goes to port B5 and arm 1 spool main portion and returns to tank passage (Ta). At the same time, it returns to tank passage (Ta) through passage (11) and arm 2 spool main portion.

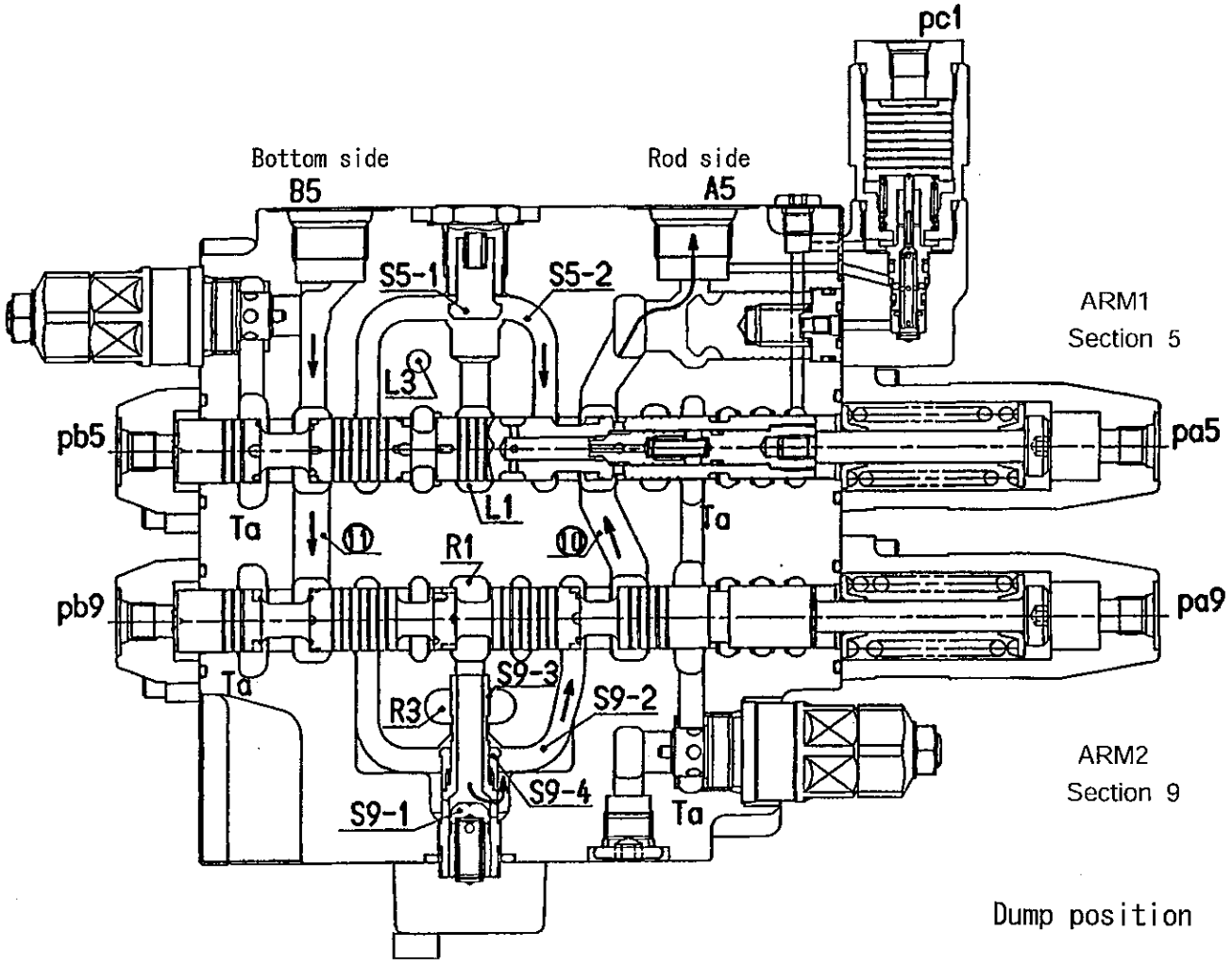

Fig.10

https://truckmanualshub.com/

(2) Crowd (2 flows combination) (Fig.11) (Fig.12)

When pressurize pilot port pb5 of the arm 1 (Section 5) and changeover arm 1 spool, oil supplied from port P1 goes to neutral passage (L1), load check valve (S5-1), passage (S5-2) and spool main portion, and runs to port B5.
When pressurize pilot port pb9 of the arm 2 (Section 9) and changeover arm 2 spool, oil supplied from port P2 goes to neutral passage (R1), load check valve (S9-1), passage (S9-2), spool main portion and passage (11), and joins to port B5.
At the same time, a part of oil from port P2 runs to passage R3 and to throttle (S9-3), check valve (S9-4), passage (S9-2) and passage (11), and reaches to port B5.
When pressurize port pc1 and changeover spool (AD3) of anti-drift valve and reduce pressure in the spring chamber (AD5), poppet (AD1) opens. And oil returned from port A5 goes to spool main portion, passage (S5-3) and arm variable recycle throttle (LC8) and returns to tank passage (Ta). A part of returning oil pushes to open poppet (SD5-4) furnished in the arm 1 spool and goes through passage (S5-2) and joins to port B5. Thus, it increases cylinder speed. At the same time, it prevents cavitation In the bottom side.

(3) Variable recycle (During crowd) (Fig.11) (Fig.12)

During arm crowding, spool (S5-6) strokes according to the pressure in passage (S5-2) being led from passage (S5-5), and opening of arm variable recycle throttle (Lc8) changes.
When pressure in passage (S5-2) becomes higher, spool (S5-6) strokes more, and thus, throttles (LC8) opens more. On the contrary, when passage (S5-2) pressure is low, stroke of spool (S5-6) is reduced, and thus, opening of throttle (Lc8) changes to small. Accordingly, recycle flow volume changes in response to pressure in arm cylinder bottom.

https://truckmanualshub.com/

Fig.11

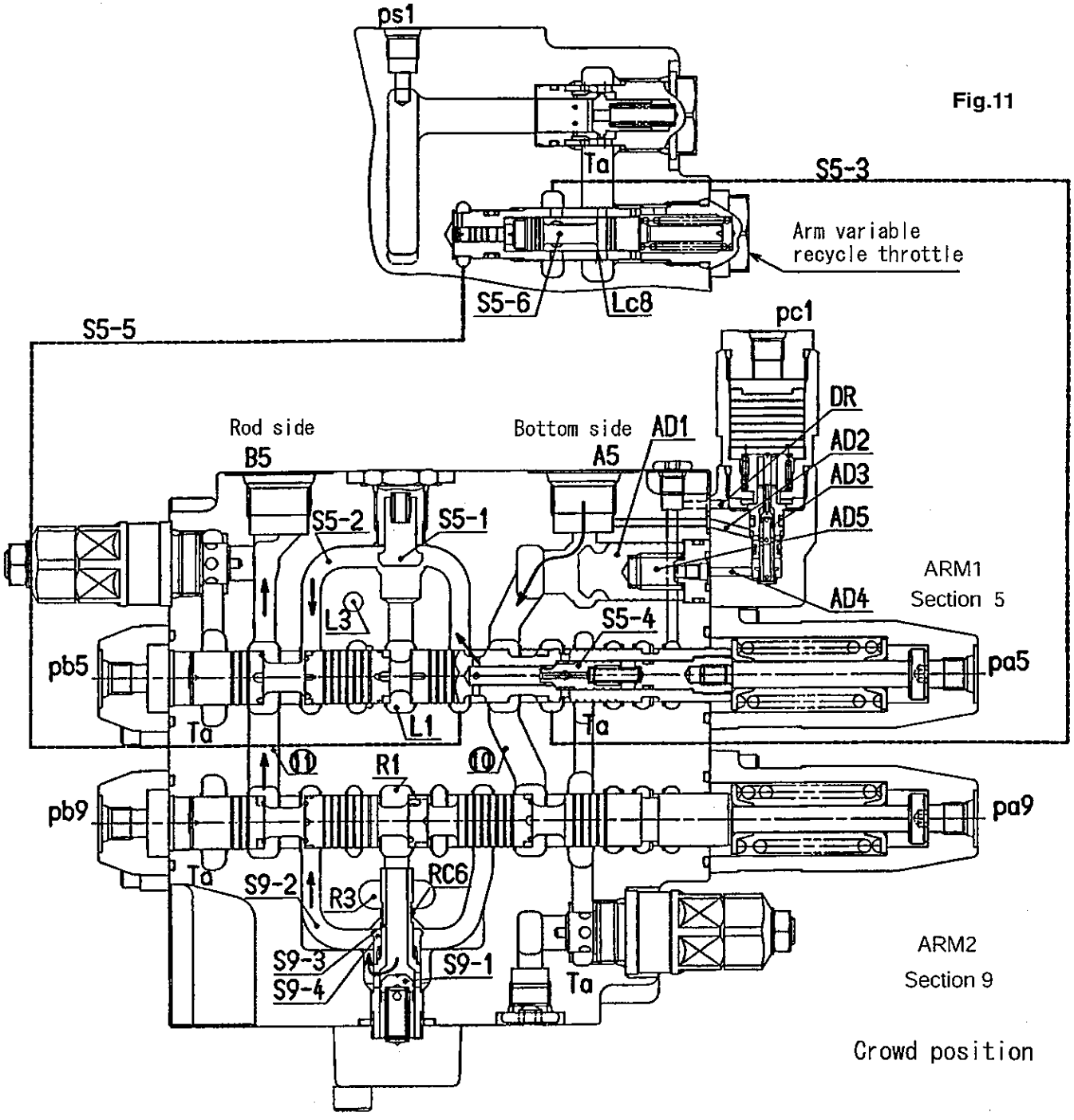

Fig.12

https://truckmanualshub.com/

2-7 Parallel throttle for arm (Fig.10) (Fig.11) (Fig.13) (Fig.14)

In the arm parallel circuit, throttle valves are furnished for arm 1 (section 5) and also for arm 2 (section 9). Flow is controlled so that suitable arm speed can be obtained even in the combined operation.
Oil in the parallel circuit of arm 2 (Section 9) runs through parallel passage (R3) and is throttled by the throttle (Rc6) in sleeve (S9-3). After this, it runs through poppet (S9-4) and connects to passage (S9-2).
Oil in the parallel circuit of arm 1 (Section 5) runs through parallel passage (L3) and pushes to open poppet (S5-8), and is throttled by throttle (Lc9) of parallel variable throttle spool After this, it connects to passage (S5-2) (Fig.12).
Throttle amount in the throttle (Lc9) can be altered by pressurizing pilot port (pbu) (Pc3).

Fig.14

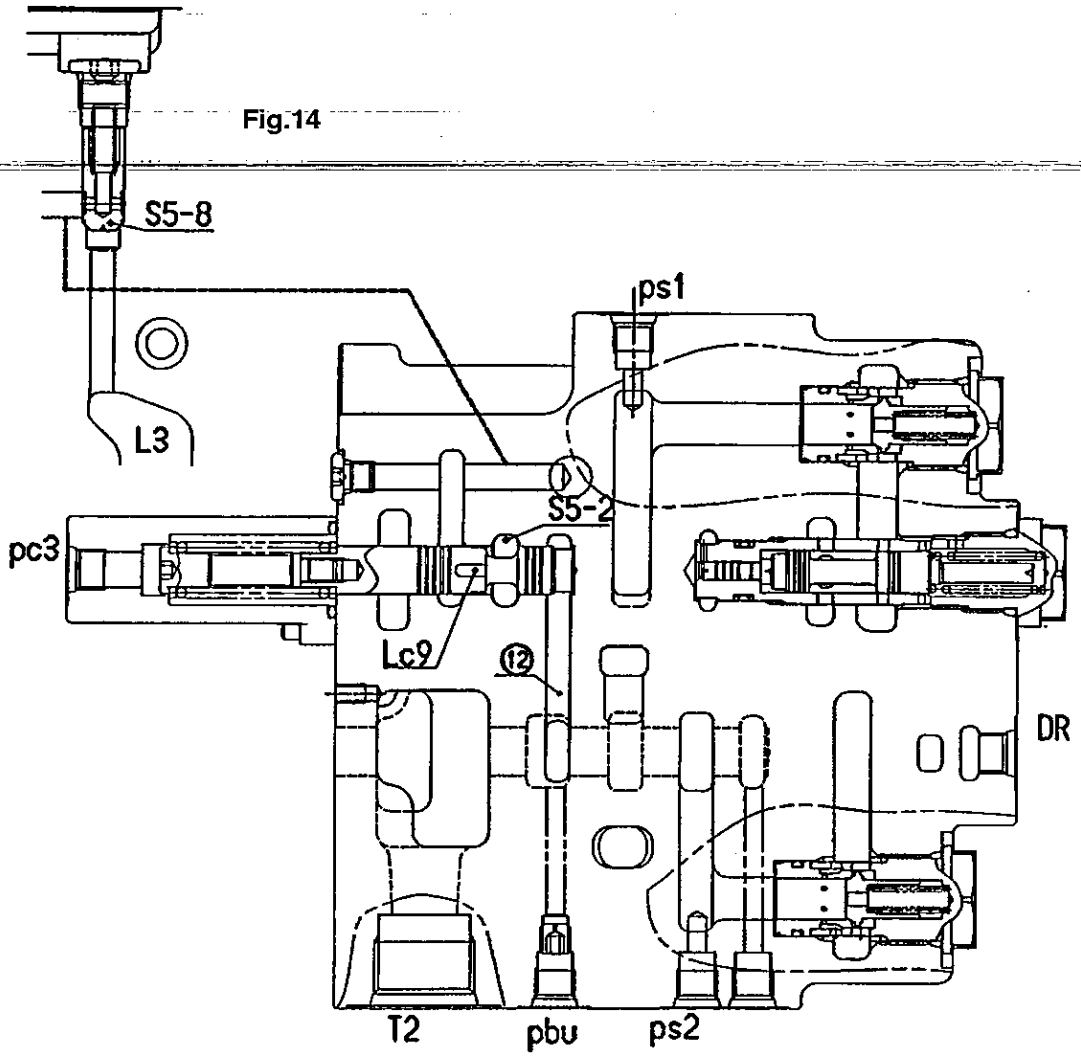

Fig.13

https://truckmanualshub.com/

2-8Neutral cut spool changeover (Extra combination) (Fig.15)

Neutral cut spool is furnished in the bottom flow portion (upper stream portion of low relief valve) of the neutral passage (R1).
When pressurize port pcc and changeover neutral cut spool (R), neutral passage (R1) closes, due to which, flow to nega-con relief valve (Rc1) closes, and pressure of signal ps2 changes. Meanwhile, oil supplied from port P2 runs through P3 (Fig.17) being connected from outside piping, and goes to P4 (Fig.5) through outside fitted check valve. Then it goes through hollow portion of poppet (S2-1) of the extra (Section 2), and joins to passage (S2-2).

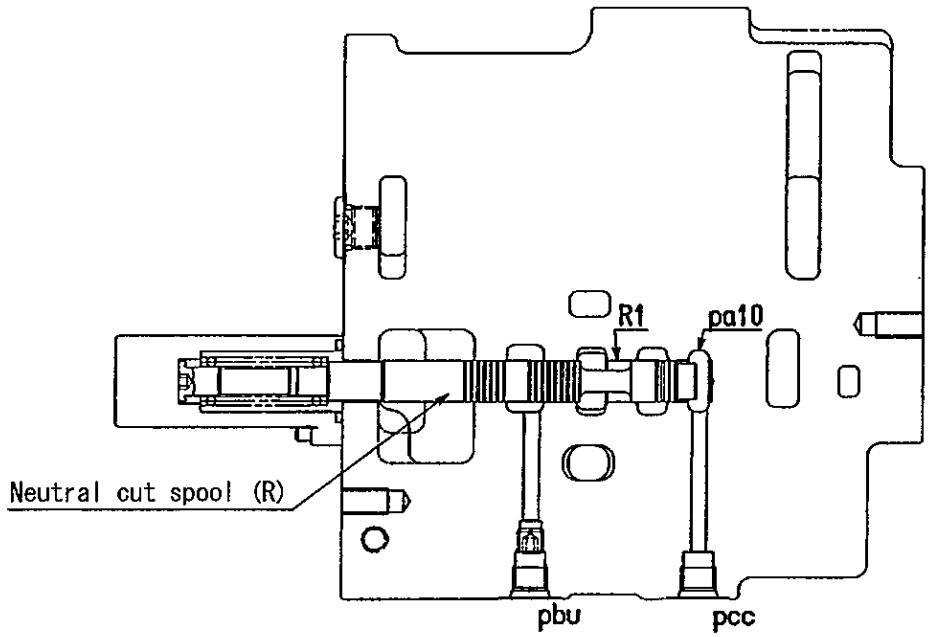

Fig.15

2-9 Blade spool changeover (Fig.16)

When pressurize from pilot port prb1 (pra1) of the blade (Section 10) and changeover blade spool, neutral passage (Pa) closes. Oil supplied from port Pr runs through parallel passage (G3), load check valve (S10-1) and passage (S10-2), and runs to port BR1 (AR1) through spool main portion.
Returning oil returns to tank passage (Ta) after passing from AR1 (BR1) and spool main portion.

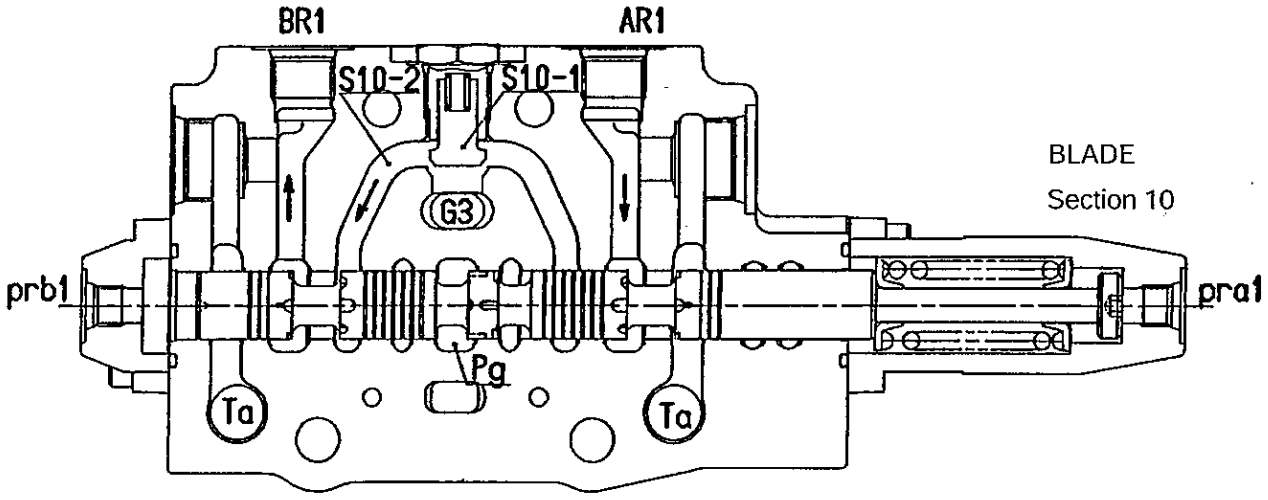

Fig.16

https://truckmanualshub.com/

2-10 Relief valve

(1) Machine body main relief valve (Fig.17)

Oil supplied from port P1 runs to poppet (LP). While, oil supplied from port P2 runs to poppet (RP) and passage (3), and is led to main relief valve.
Due to the main relief valve operated, maximum pressure of pump at P1 and P2 side is regulated

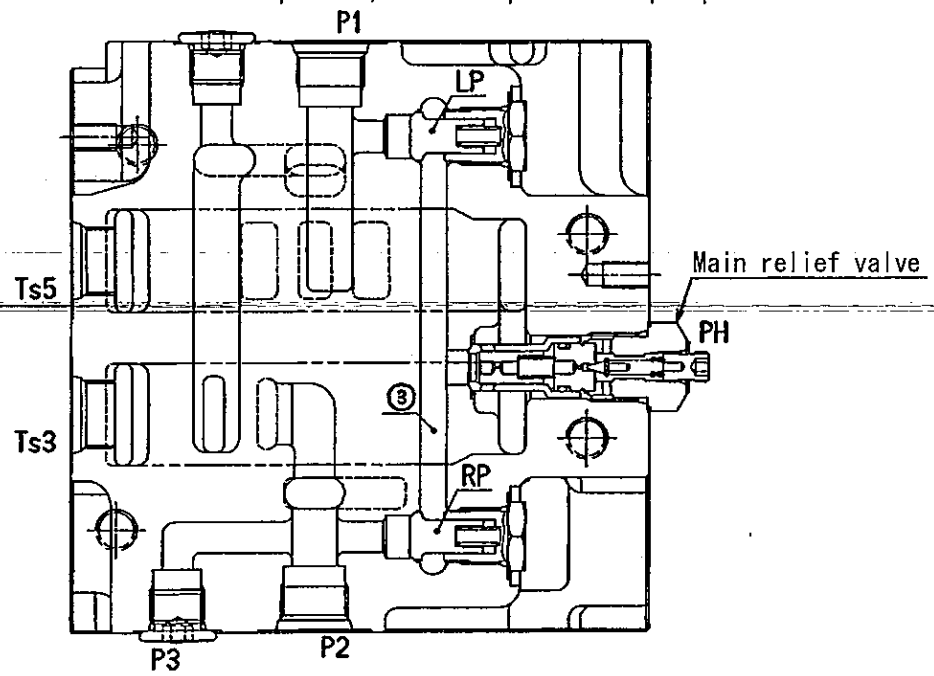

Fig.17

(2) Relief valve for add-on Pr (Fig.18)

Oil supplied from port Pr is led to main relief valve. Due to the main relief valve being operated, Pr pump maximum pressure is regulated.

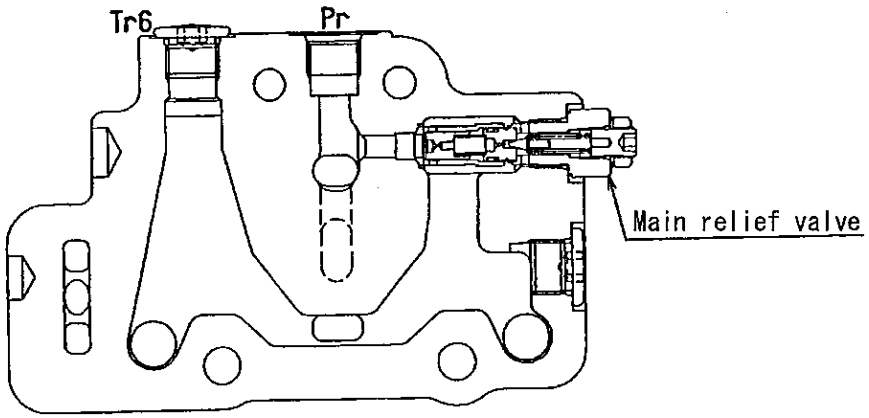

Fig.18

(3) Overload relief valve

Overload relief valve is furnished in cylinder port each for boom 1, boom 2, arm 1, arm 2, bucket and blade.
These valves are furnished for the purpose of preventing pressure in actuators from becoming abnormally high by external force.
Also, this relief valve has a function to prevent cavitation by sucking oil from the tank, when cylinder port becomes negative pressure.

https://truckmanualshub.com/

3. Compound operation

3-1 Travel compound operation (Fig.19) (Fig.20)

When any operation other than travel is made at the same time during travel right and left simultaneous operation being made (during forward travel, backward travel or spin turn), or travel right and left simultaneous operation is made during any operation other than travel being made, oil supplied from port PP is shut off from tank passage (Ta) at the land (Lc4), (Lc7), (Rc3), (Rc5) and the signal land portion of switched section other than travel, due to which, pressure in signal passage goes up to the relief setting pressure for signal oil pressure source.
With increase of signal pressure, straight travel spool is switched over.
Pressure in ports PT and PA is increased.
When straight travel spool is switched over, oil supplied from port P1 runs to neutral passage (L1) and to the travel (Section 1). At the same time, it runs through passage 2, straight travel spool main portion, neutral passage (R1), and runs to the travel (Section 6).
Oil supplied from port P2 runs through straight travel spool main portion and passage 1, and runs into parallel passage (L3). Since the travel (Section 1 and 6) is operated by the oil supplied from port P1 and other operations than the travel are operated by the oil supplied from port P2, straight travel is maintained even when combination of travel right and left simultaneous operation and any other operations is made.
When loading pressure of section other than travel is higher than that of the travel (Section 6), a part of oil supplied from port P2 pushes and opens poppet (S6-2), and runs through throttle furnished at the poppet top end, and joins into passage (S6-1). Owing to this, travel speed reduction shock is reduced, which may happen during valve of straight travel being switched over.

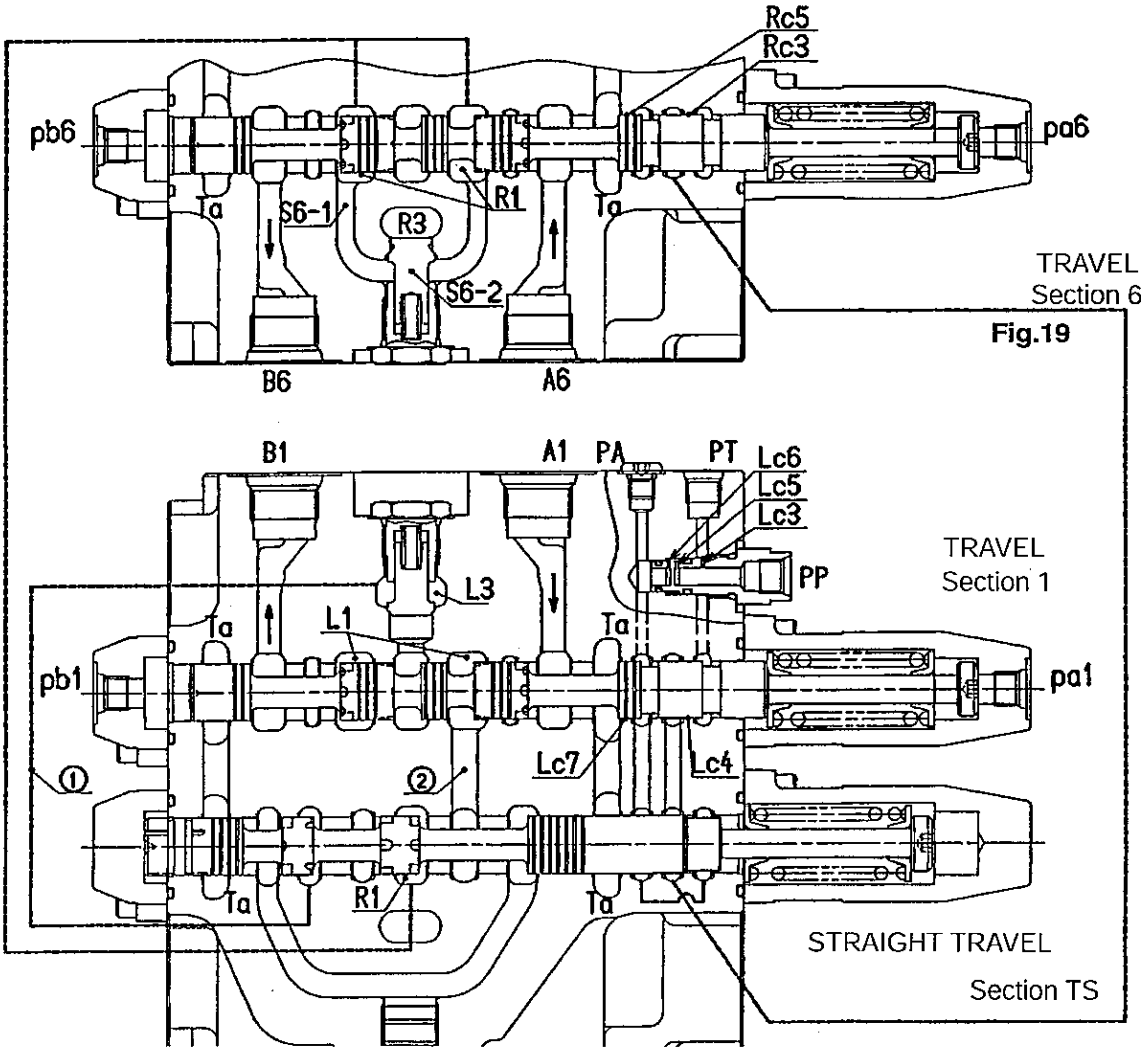

Fig.19

Fig.20

https://truckmanualshub.com/

3-2Anti-drift valve

Anti-drift valve is furnished in the cylinder port located at arm rod side (boom bottom), in order to prevent arm (boom) cylinder from being free-drifted.
During neutral position (Fig.21), pressure in cylinder port runs through passage (AD2) and hollow hole of poppet (AD3), and is led into spring chamber (AD5) through passage (AD4).
Poppet (AD1) is firmly seated due to pressure difference between spring force and pressure caused by poppet area space difference.
During arm dump (boom hoisting) (Fig.22), oil supplied from pump pushes to open poppet (AD1) and runs out to cylinder port.
During arm crowding (boom lowering) (Fig.23), the oil pressurizes pc1 (pc2) and switches poppet (AD3), due to which, oil in spring chamber (AD5) is led to drain passage (DR) through hollow holes of poppet (AD3) and spool (AD6). Then, poppet (AD1) opens and oil returning from cylinder port runs through spool and runs to tank passage (Ta).

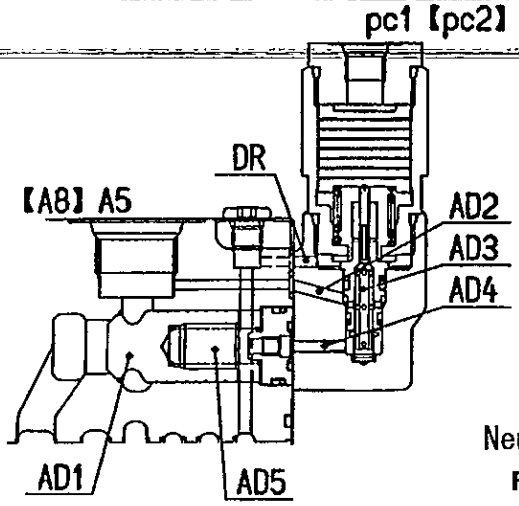

Neutral position

Fig.21

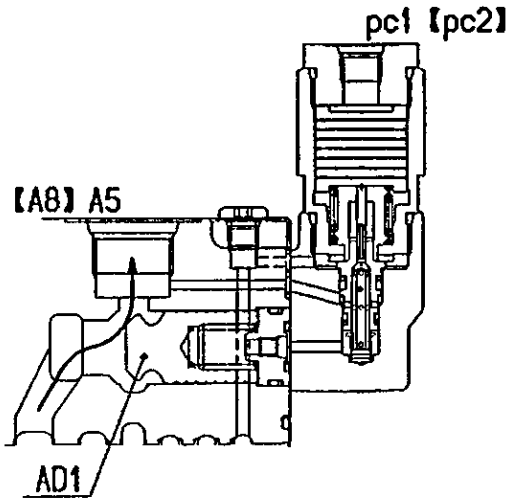

Arm dump position
(Boom hoisting)

Fig.22

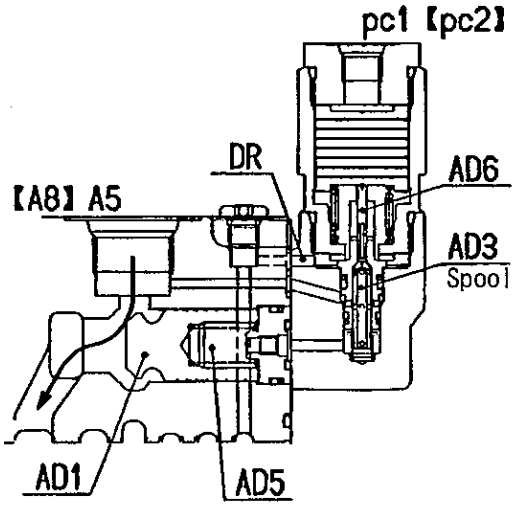

Spool switched position

Arm crowd position
(Boom lowering)

Fig.23

https://truckmanualshub.com/

1. Swing Motor

When swinging left, pressurized oil supplied from the pump via the control valve nters through Port B on the cover (1) to be drained to Port A. When swinging right, the oil flows in the reverse direction. Also, oil leaking from gaps in sliding parts returns to the tank through Drain Port Dr on cover (1).

The pressurized oil from Port B is supplied to the piston hole (d) in cylinder (3) passing through the passage (a) inside cover (1), the passage (b) of the balance plate (2) which has a crescent-shaped port and switches between supply and drain every 180 degrees per one turn of the motor, and the passage (c) of cylinder (3).

The oil pressure acts on piston (4), which is then pressed to the cam plate (6) via shoe section (5). Because the sliding face of the shoe is inclined on the cam plate (6), the pressing force of the piston shoe upon which the hydraulic oil pressure acted, will be converted to a force that allows shoe (5) to slide on the cam plate (6).

Because the spherical shoe section of piston (5) is connected to serve as a universal joint, the sliding force of the shoe (5) on cam plate (6) is transferred to the motor output shaft as a turning force via piston (4) and cylinder (3).

As described above, each piston (4) receives pressurized oil as it travels the stroke from the inclined plane's top dead center to the bottom dead center, transforms the oil pressure into a turning force to rotate cylinder (3) and discharges oil as it travels the stroke from the bottom dead center to the top dead center.
The discharge route is the reverse of the supply route described above and the oil is discharged from Port A.

Note: For relief valve, X-2 type is shown here. For the relief valve of swing operation,refer to the undermentioned item of the swing relief valve.

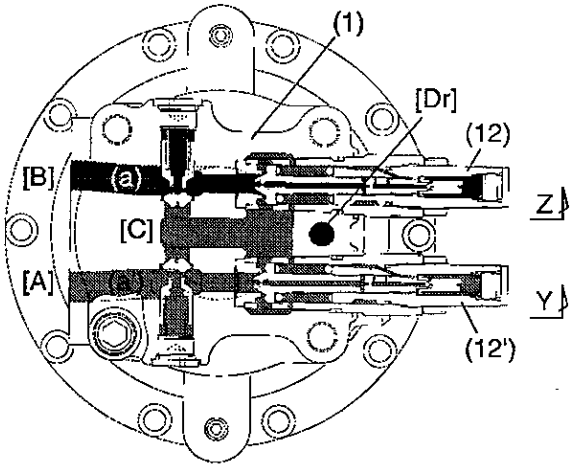

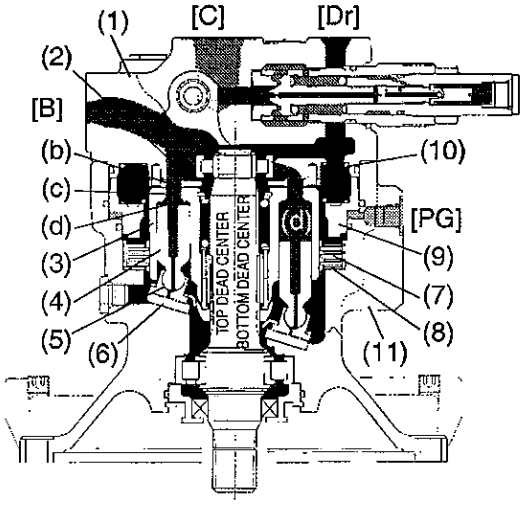

Zsec

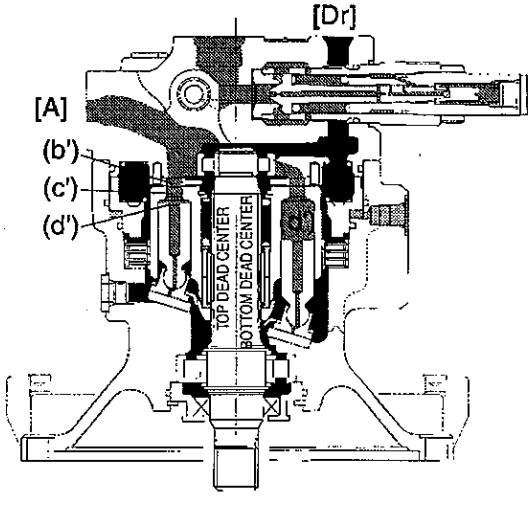

Ysec

https://truckmanualshub.com/

2. Mechanical Brake

The friction plate (7) is connected to the circumference of cylinder (3) via spline. Also, the counterpart plate(8)is connected to the housing (11). When the signal pressure is zero (0) on the brake release port PG, the brake piston (9), under the force of the spring (10), pushes the counterpart plate (8) and the friction plate (7) and the cylinder (3) is locked in order to prevent from rotating.
On the other hand, when the release pressure acts on the brake release port PG, the brake piston (9) overcomes the force of spring (10) and moves until it hits the edge of cover (1), creating a space between the friction plate (7) and the counterpart plate (8). As a result, the mechanical brake is released.

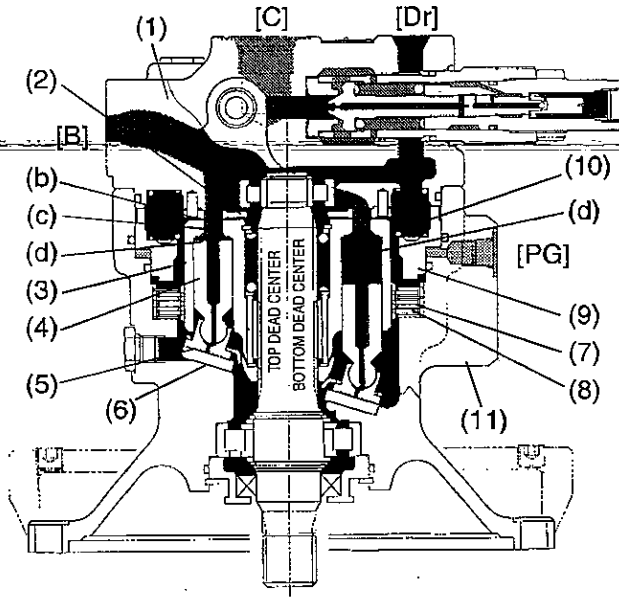

Note: For relief valve, X-2 type is shown here. For the relief valve of swing operation,refer to the undermentioned item of the swing relief valve.

https://truckmanualshub.com/

3. Make-up Valve

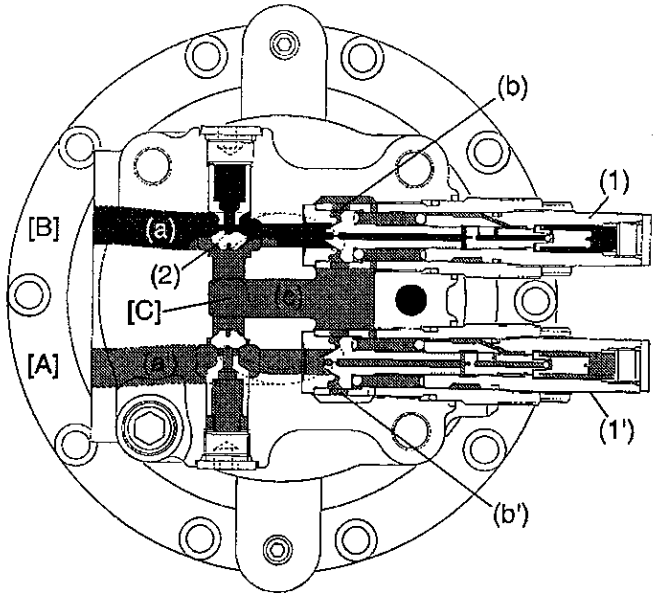

Shown here is the half brake position (in which the cross relief (1) is not active). Accelerating the swing body first and decelerating with the operational lever in the half-lever position will decrease the supply volume to Port B from the pump. If the swing body had been rotating at a relatively high speed, the pressure at passage (a) becomes negative due to the motor's pumping action. In this case, the oil needs to be supplemented. Also, if pressure on Port A is less than the working pressure on the cross relief (1'), the volume of oil from Port B itself is not enough for the absolute quantity of oil needed for passage A because the entire volume of oil flowing into passage (a) through Port B will be discharged into the control valve via Port A.

To prevent this from happening, oil is supplemented from the make-up check (2) to passage (a) via make-up Port C.

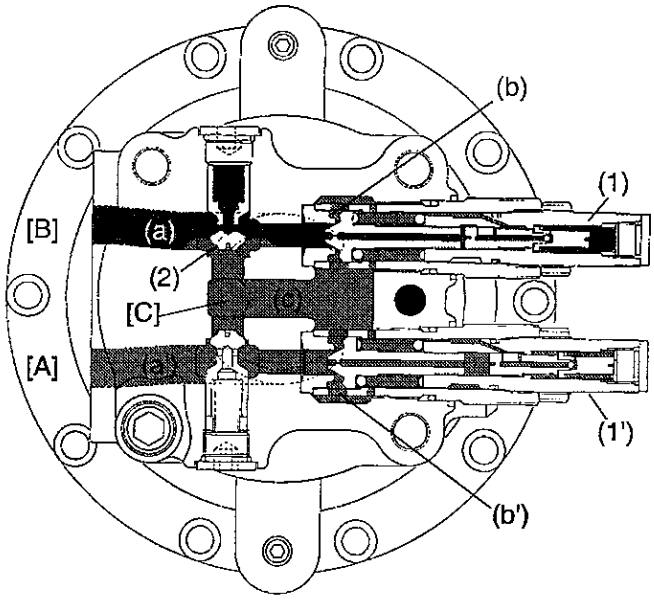

Shown here is the brake operating position (in which the cross relief (1') is active). Repositioning the operational lever quickly to neutral from the normal swing position, the control valve spool moves to neutral and the oil volume supplied from the pump to the port (B) becomes zero (0). As a result, the swing body tries to turn due to inertial force.
At this time, the cross relief (1') on Port A side works to direct the oil from cross relief (1') through passages (b') and (c), and the make-up check (2) on the Port B side is pushed open, and oil is supplied to passage (a). Yet, the amount of oil that leaked and escaped from the cross relief (1') falls still short.
To prevent this from happening, the make-up check (2) is pushed open and oil is supplemented to passage (a) via make-up Port C. This prevents cavitation.

Note: For relief valve, X-2 type is shown here. For the relief valve of swing operation,refer to the undermentioned item of the swing relief valve.

https://truckmanualshub.com/

1) Explanation of operation when relief valve is pressurized.

Following explanation is in case port P is pressurized from tank pressure.Ports P and R are in the same pressure as in the tank initially, which is in the position as shown in the following figure 1. Since the oil pressure set by the product of plunger (301) pressure receiving space A1 and pressure P and the oil pressure set by the spring (321) load Fsp plus force of the product of plunger (301) pressure receiving space A2 and pressure Pg in chamber g are balanced, relief valve starts to operate.Later, pressure in the chamber g increases and piston 1 (302) starts to stroke. With this movement, load for the spring (321) increases. Because of this movement, increase of the relief pressure P is restricted from P1 to P5 within the increasing time t1.
Following explanation is for the relation between the relief pressure and the movement of each component parts shown in the undermentioned figures 1-2 through 1-4.

(a) Position shown in figure 1-2

When pressurized the relief valve port P, pressure in chamber g is generated through throttle m furnished in plunger (301).
When the oil pressure works to plunger (301) increases and reaches the pressure balanced with spring (321) load Fsp, the relief valve starts relief operation with the pressure P1.
The relation at this time is shown in the following formula;

P1 x A1 = Fps1 / (Pgi x A2) Fsp1 : Initial set load of spring (321)

(b) Position shown in figure 1-3

Pressure in chamber g works on the piston (302) pressure receiving space A3 - A4.When this oil pressure becomes larger than the spring (321) load, piston 1 starts to move to the left.
Since the piston moves to the left while the oil in chamber h furnished between piston 1 and adjusting plug (401) is being discharged through throttle n in piston (302), chamber h functions as the dumping chamber. Owing to this, the spring load increases gradually until piston 1 reaches the end of the adjusting plug and relief pressure P rises up smoothly.

(c) Position shown in figure 1-4

When piston 1 (302) reaches the end of adjusting plug (401), it works as the normal condition since the piston 1 does not go further left, and then the relief pressure is maintained to P2.

Relief pressure changes as shown in the figure 2 under the processes explained in the above items (a) through (c).

2) Explanation of operation when relief valve is depressurized

Following explanation is when port P is depressurized.
When port P is not pressurized, the pressure in chamber g decreases until the tank pressure together with the port P pressure. Owing to this operation, plunger (301), which is being open, moves to the left and is seated to seat (341). At the same time, piston 1 (302) is also moved to the right by spring (321) and returns to the position ..0shown in figure 1.

https://truckmanualshub.com/

4. Swing relief valve

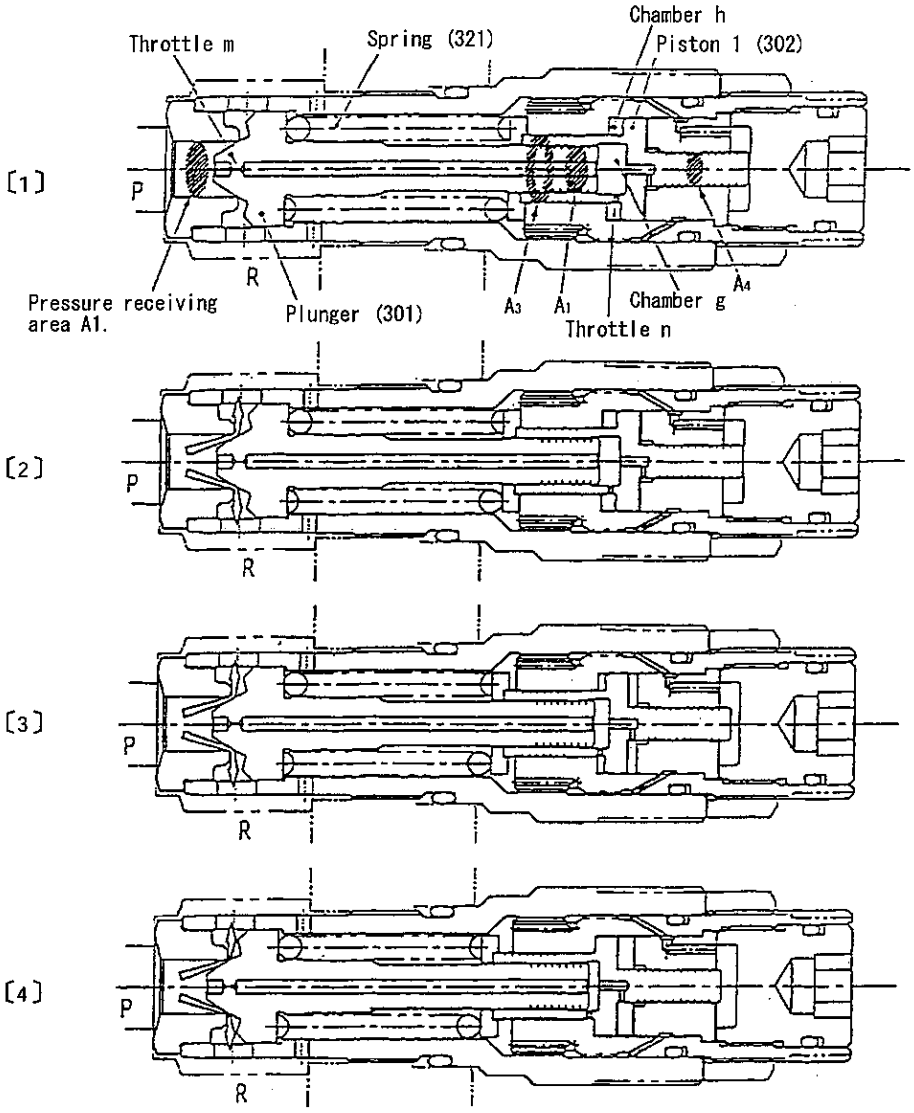

Fig.1 Explanatory drawing of relief valve operation

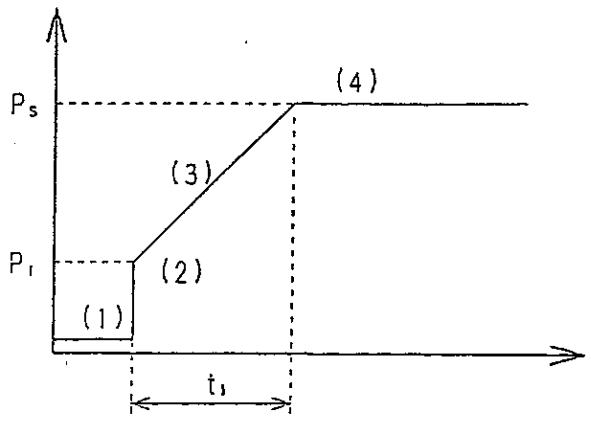

Fig.2 Pressurization characteristic

https://truckmanualshub.com/

5. Anti-reverse Valve

Swing anti-reverse valves are incorporated in swing motors to reduce the Swing fluctuation that occurs when stopping the swing movement.
Right before the swing movement comes to a halt, the pressure on the return line from

the motor drops sharply.
The anti-reverse valve starts working at this time to connect the pressure line to the motor and the return line from the motor to equalize the pressure on those lines.
This reduces the reverse movement of the swing motor.

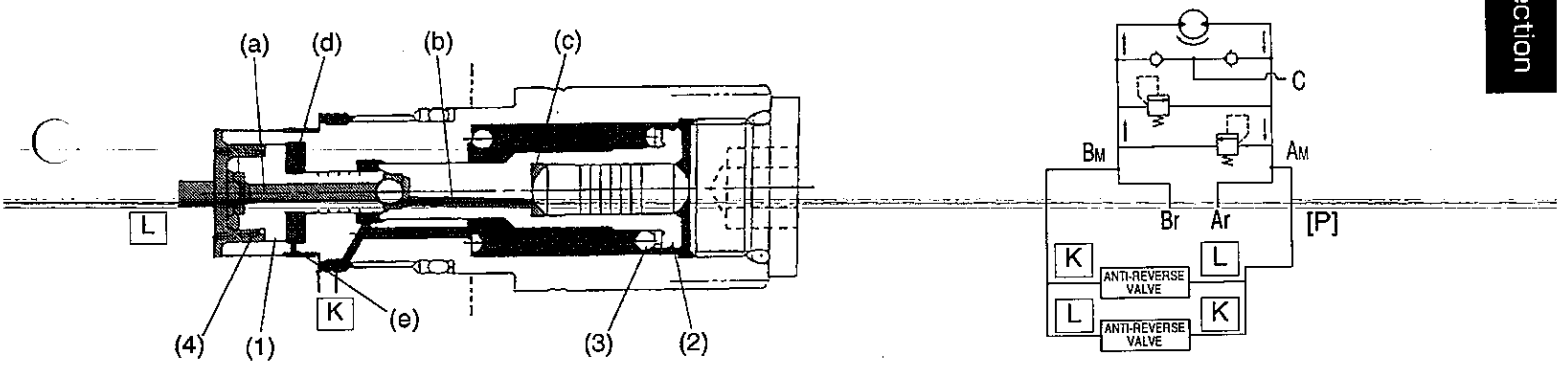

When the swing operational lever is in neutral, the anti-reverse valve is in the neutral position.

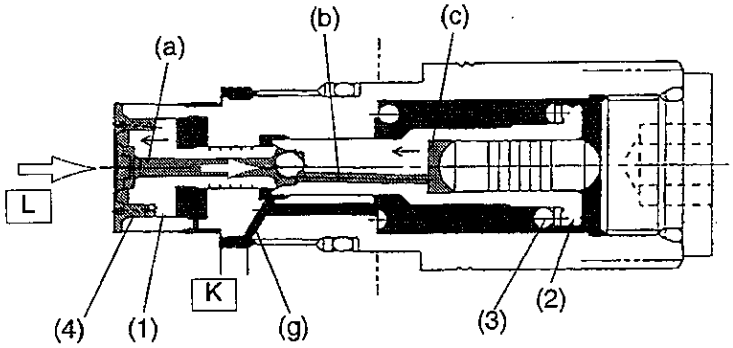

Described below is the state in which a swing operation is carried out and the brake pressure is generated on Port AM side.
When brake pressure (P) builds up on Port AM side, the pressure passes the passage (L) and is directed into the chamber (c) through hole (a) on the shaft seat (1) and passage (b) in the spool (2).
When the pressure (P) exceeds the specified value set at spring (3), the spool (2) moves left bending spring (3). Also, seat (1), pushed by spool (2), moves towards the left bending the weaker spring (4).

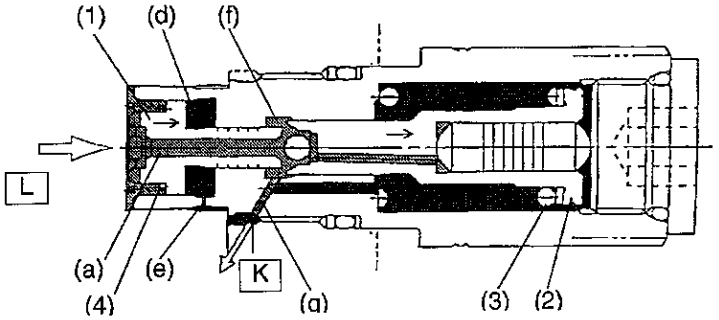

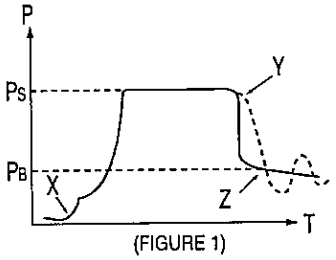

(FIGURE 1)

When the inertial load movement comes to a stop (Point Y in Fig. 1), the brake pressure (P) will be affected to decrease the pressure. When P is less than Ps, spool (2) is moved towards the right (Return side) by spring (3).
The seat (1) also tries to move towards the right due to the force of spring (4), but because of the chamber (d) receiving dumping function by throttle (e), the movement of the seat (1) is delayed against the movement of spool (2).
Thus, the seat section (f) opens and forms a passage connecting to ports (AM) and (BM) through (L), (a), (f), (g) and (k).
Thus the pressures on Port AM and Port BM suddenly equalize (Point Z in Fig. 1) and prevent the reversal rotation of the swing motor caused by the pressure trapped at Port AM.

https://truckmanualshub.com/

6. Swing Reduction Gears

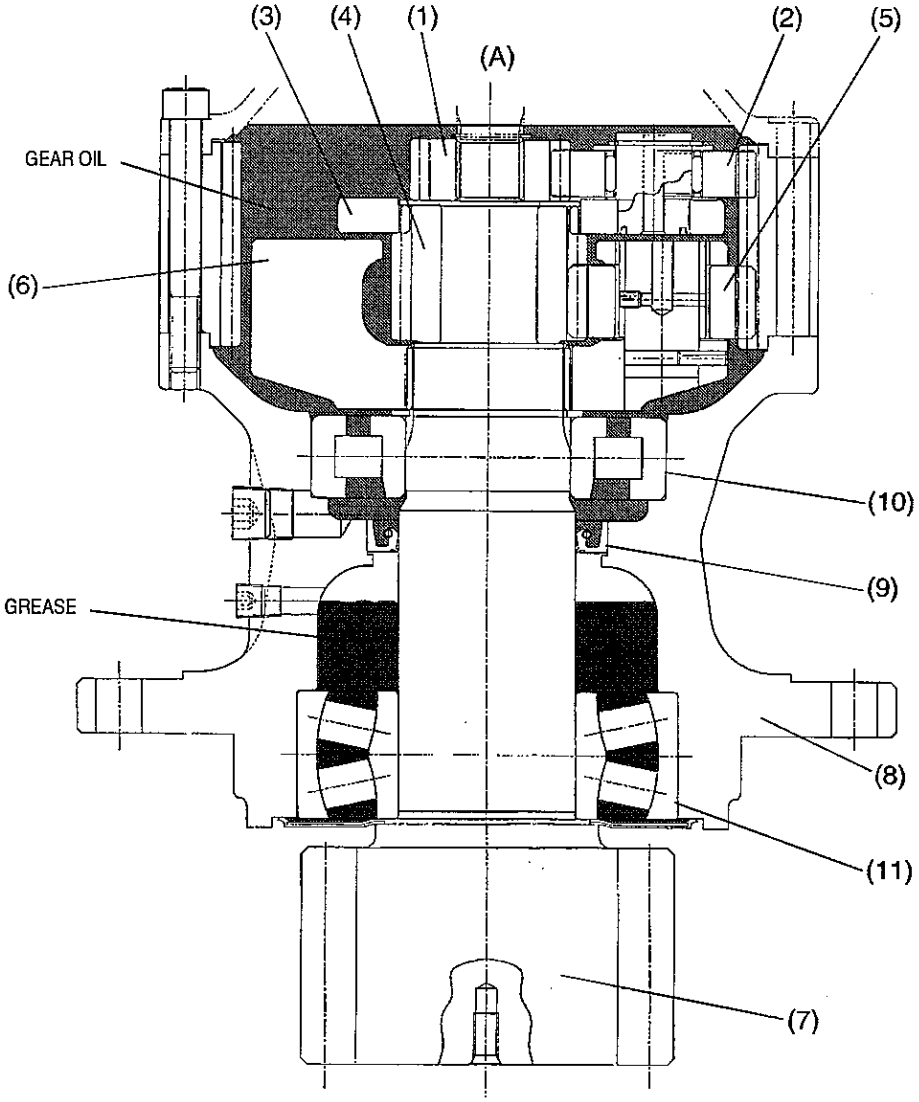

The power transferred through the motor's output shaft (A) will be transferred to sun gear (4) in the second stage via sun gear (1), planetary gear (2) and holder (3) in the first stage. In a similar way, the power is transferred to output shaft (7) via planetary gear (5) and holder (6).
The output shaft (7) is one body type with the pinion and is supported with two bearings (10) and (11) furnished in gear case (8). This is gear oil sealed conventional type having oil seal (9) in gear case (8).
The bearing (11) on the output shaft is of grease lubrication type.

https://truckmanualshub.com/

7. Problems and Remedies

Problem	Cause	Remedy
Pressure does not rise (swing motor does not rotate).	Relief pressure in circuit is not set correctly.	Adjust pressure to the specified value.
	Poppet is sticking.	Repair or replace section that is sticking in relief valve. Disassemble and clean.
	Throttle in poppet is blocked..	
	Hydraulic oil leaks from poppet seat.	Check seat and replace if damaged.
	Hydraulic oil leaks from anti-reverse valve seat.	Replace the anti-reverse valve cartridge or block.
Pressure rises (swing motor does not rotate).	Overloaded.	Remove load.
	Moving part is seized.	Check and repair inside of motor.
	Release pressure is influencing brake.	Check pressure in brake circuit. Check brake switch-over valve.
	Brake piston is sticking.	Disassemble and check braking section.
	Friction plate is seized.	Disassemble and check. Replace seized portion.
Swing motor does not reach specified revolution.	Insufficient oil inflow.	Check pump delivery and circuit to motor.
	Excessive leakage from sliding parts.	Check oil temperature. If it is hot, find out why. Check oil viscosity and replace with appropriate oil. Disassemble to check and replace parts that are worn out.
Insufficient braking torque.	Friction plate is worn.	Disassemble to check and replace parts that are worn out.
	Brake piston is sticking.	Disassemble and check.
	Unable to release brake pressure.	Check circuit pressure. Check brake switch-over valve.
	The spline on friction plate is damaged.	Disassemble to check and replace parts that are worn out.
When external driving torque acts on hydraulic motor, motor slips a lot.	Relief pressure in the circuit is not set correctly.	Adjust pressure to specified value.
	Poppet is sticking.	Repair or replace portion sticking in the relief valve. Disassemble and clean.
	Hydraulic oil leaks from poppet seat.	Check seat and replace if damaged.
	Seat section in make-up check is leaking.	Check seat section and repair if repairable. If not repairable, replace the motor.
	Hydraulic oil leaks from anti-reverse valve seat section.	Replace anti-reverse valve cartridge or block.

https://truckmanualshub.com/

Problem	Cause	Remedy
Oil leaks from oil seal.	Pressure in motor casing is abnormally high, and oil seal is damaged.	Check drain piping for abnormality and repair or replace if necessary.
Oil flow in reduction gears increases, and viscosity is low.	Oil seal is damaged by dirt blocked in seal lips.	Replace oil seal.

CAUTION: When swing motors or reduction gears are disassembled/reassembled, it may be necessary to carry out adjustments under the bench test to maintain the proper motor performance.

8.Structural Drawings

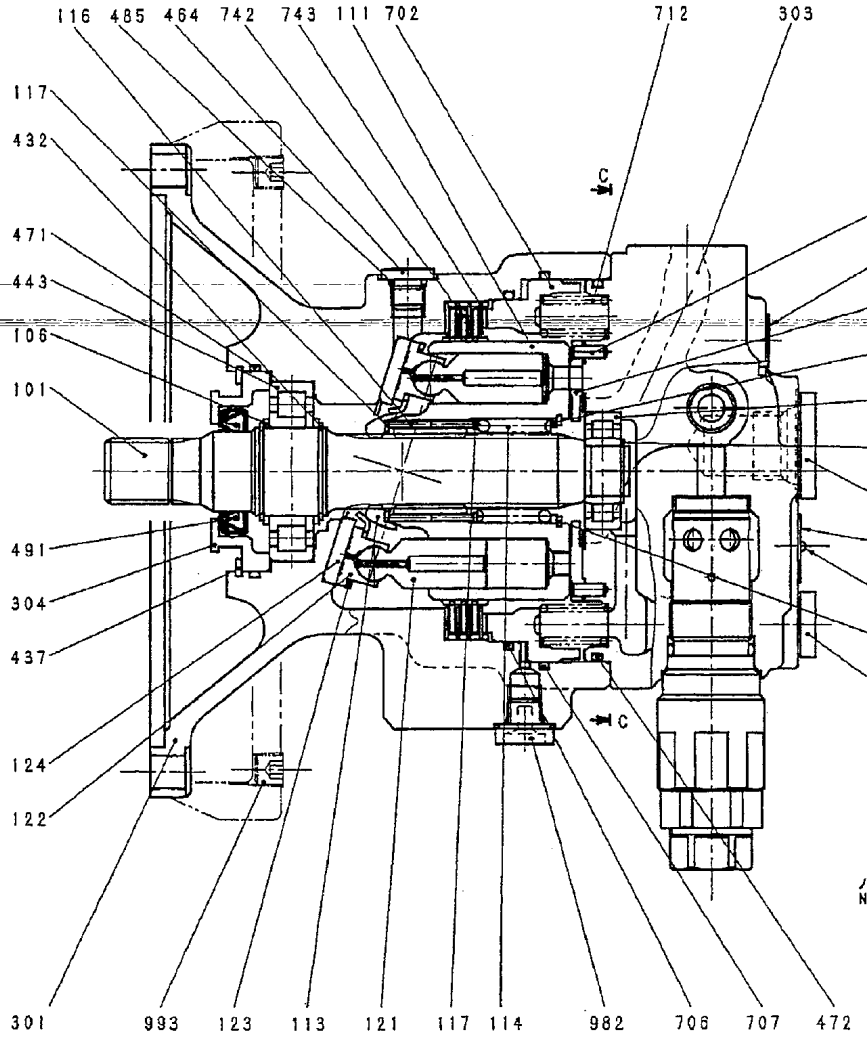

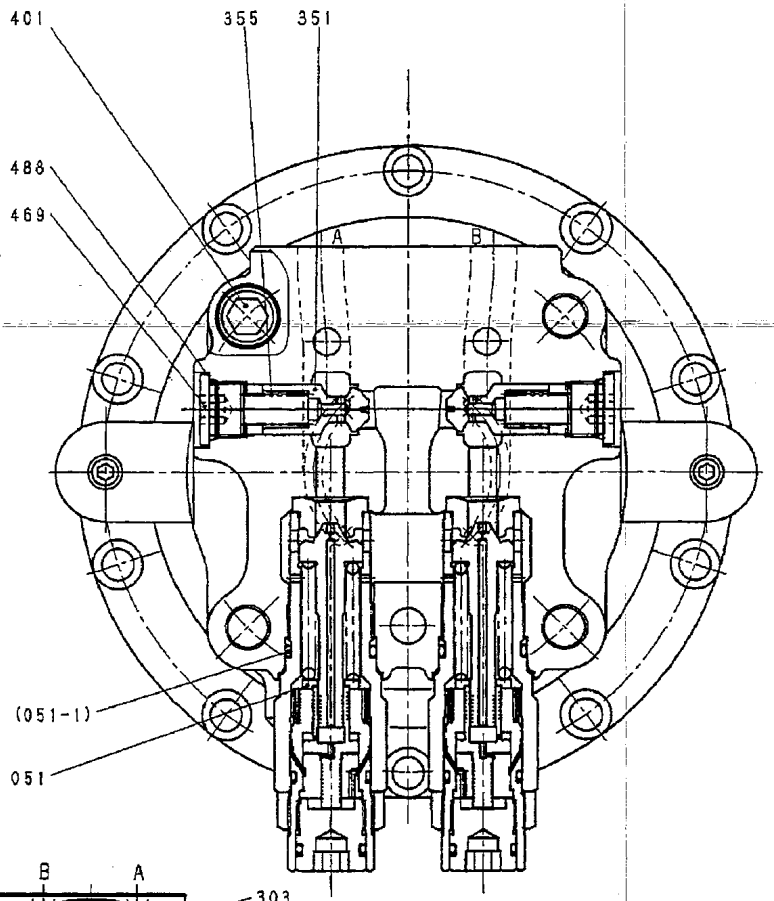

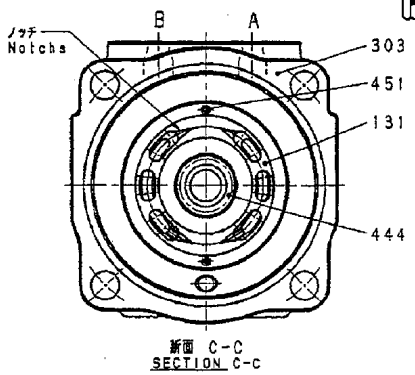

80	ASS'Y SEAL KIT	1SET
(850-1)	O-RING	2
051	VALVE RELIAF	2SET
993	PLUG	2
982	PLUG	1SET
981	PLUG	1SET
980	PLUG	1SET
743	PLATE SEPARATOR	4
742	PLATE FRICTION	3
712	SPRING BRAKE	20
707	O-RING	1
706	O-RING	1
702	PISTON BRAKE	1
491	SEAL OIL	1
488	O-RING	2
487	O-RING	2
485	O-RING	1
472	O-RING	1
471	O-RING	1
469	PULG	2
468	PULG	2
464	PULG	1
444	BEARING ROLLER	1
443	BEARING ROLLER	1
438	RING STOP	1
437	RING STOP	1
433	RING	1
432	RING STOP	2
401	SCREW HAX S.M.C.	4
391	PIN	2
390	PLATE NAME	1
355	SPRING	2
351	PLUNGER	2
304	COVER FRONT	1
301	CASING E	1
131	PLATE VALVE	1
124	PLATE SHOE	1
123	PLATE SET	1
117	SPACER F	2
116	ROD PUSH	12
114	SPRING CYLINDER	1
113	RETAINER	1
111	CYLINDER	1
106	SPACER	3
101	SHAFT DRIVE	1
451	PIN	2
303	CASING M VALVE	1
20	ASS'Y VALVE CASING H	1
122	SHOE	9
121	PISTON	9
11	ASS'Y PISTON	1SET
NO.	PART NAME	Q'TY

https://truckmanualshub.com/

https://truckmanualshub.com/

1. Outline Drawings

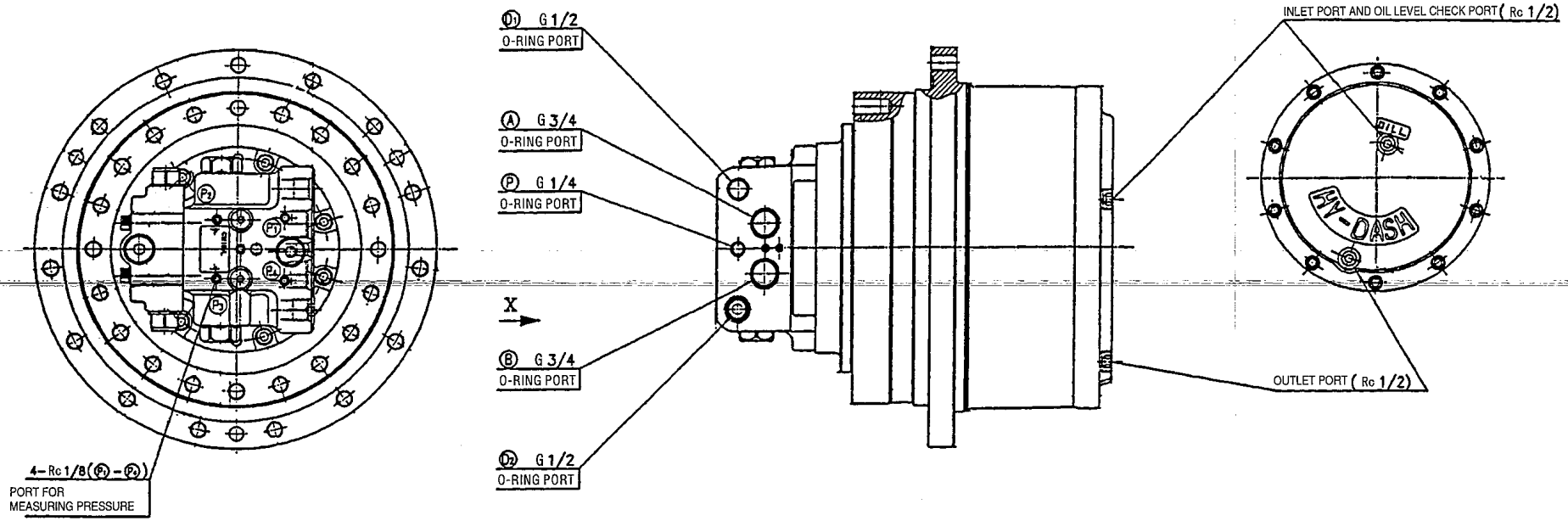

Hydraulic Circuit Diagram

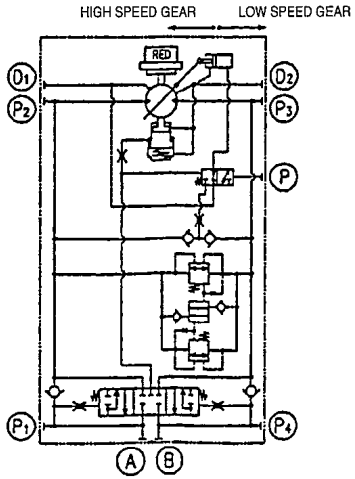

RELATIONSHIP BETWEEN ROTATIONAL DIRECTION OF REDUCTION GEAR AND OIL INLETS/OUTLETS

ROTATIONAL DIRECTION (VIEWED FROM X)	OIL INLET	OIL OUTLET
CLOCKWISE	A	B
COUNTERCLOCKWISE	B	A

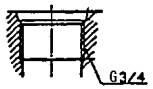

PORTS (A), (B)

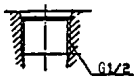

PORTS (D1), (D2)

PORT (P)

https://truckmanualshub.com/

2. Basic Structure and Drawings

2-1. Basic structure of motor

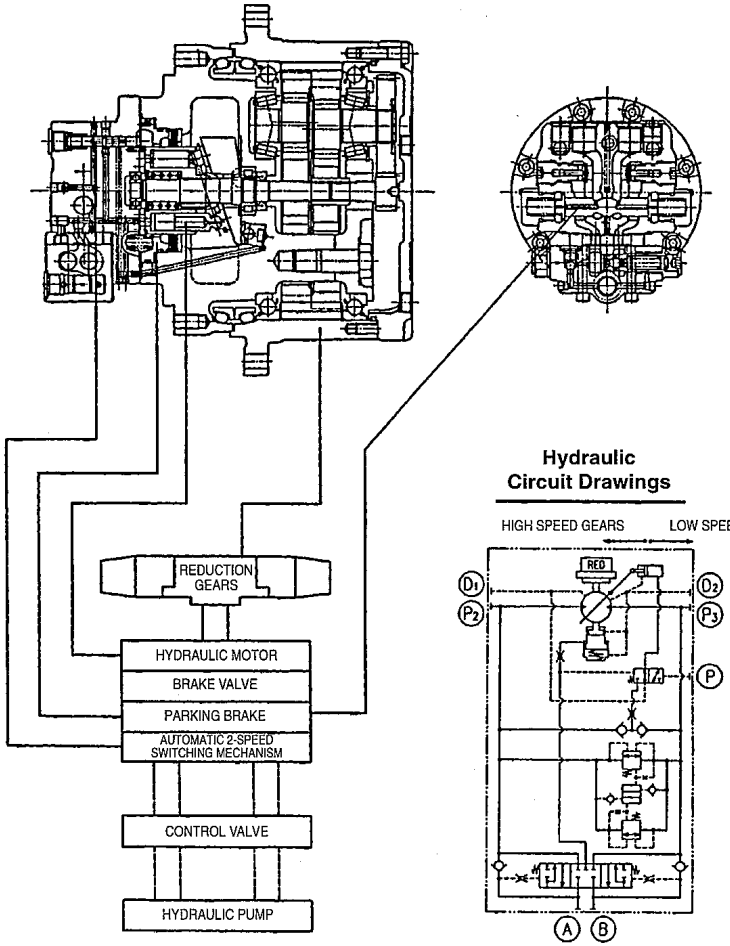

https://truckmanualshub.com/

2-2. Assembly sectional drawings

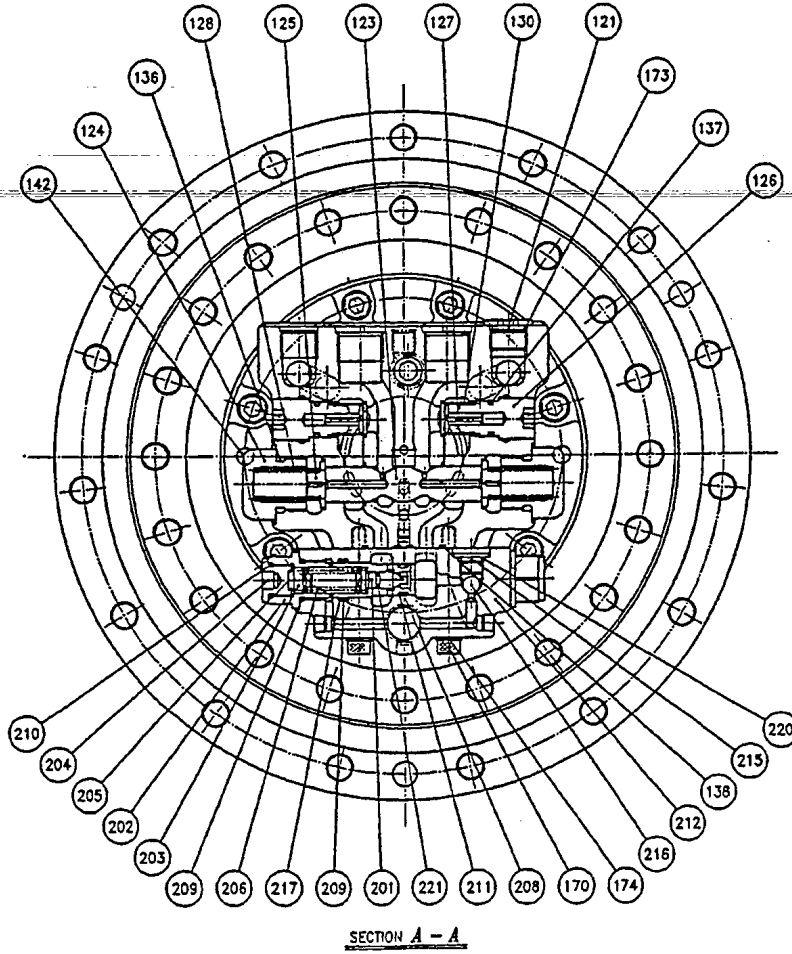

SECTION A – A

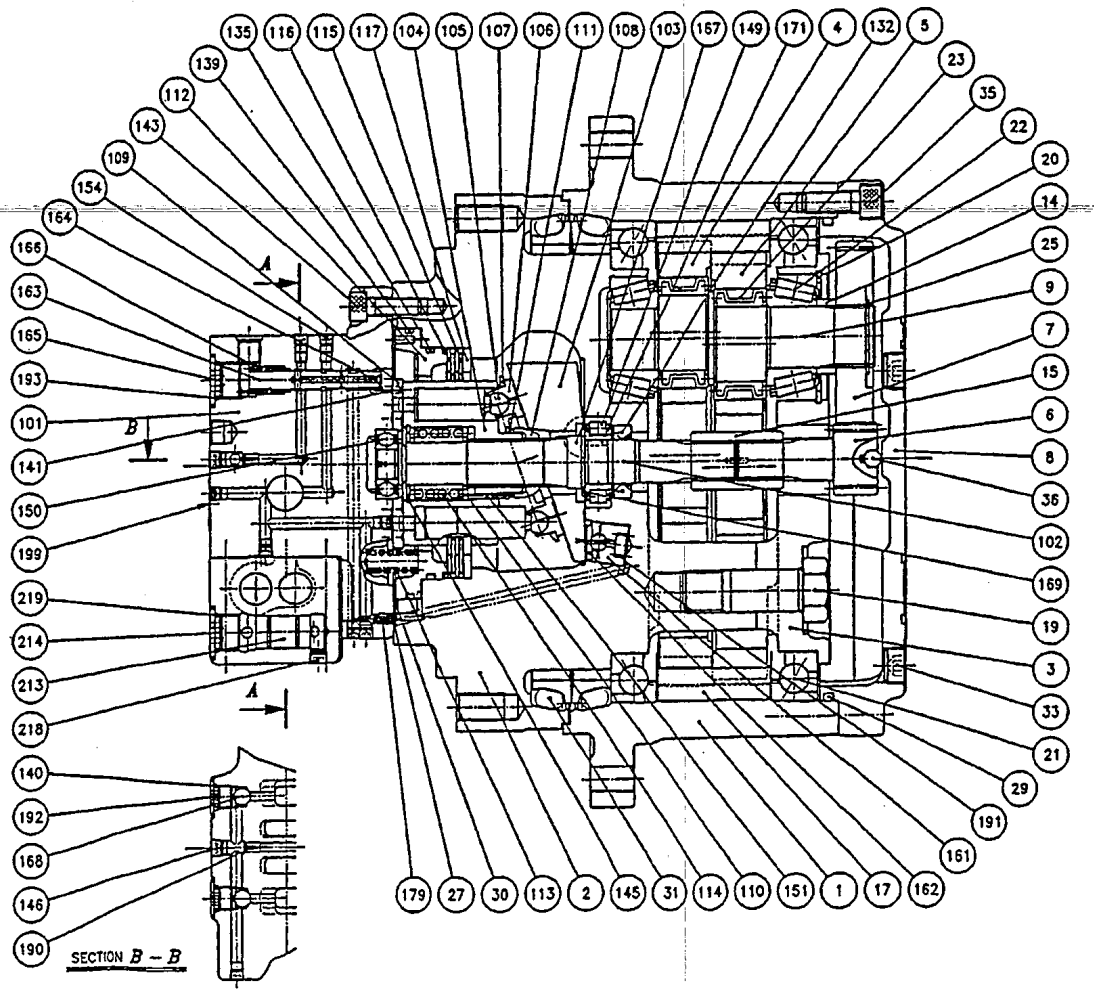

SECTION B – B

Hydraulics Section

https://truckmanualshub.com/

2-3. Parts list

SYMBOL	NAME OF PART	QTY.	SYMBOL	NAME OF PART	QTY.	SYMBOL	NAME OF PART	QTY.
1	HUB	1	179	FILTER	1	141	PARALLEL PIN	1
			190	ORIFICE	1	142	PARALLEL PIN	2
	SPINDLE KIT	1	199	NAME PLATE	1	143	HEXAGONAL SOCKET HEAD CAP SCREW	8
	SPINDLE ASSEMBLY	1	124	PLUG	2			
2	SPINDLE	1	125	SPRING RETAINER	2	145	THS SNAP RING	1
3	HOLD FLANGE	1	126	PLUG	2	149	CYLINDRICAL ROLLER BEARING	1
19	REAMER BOLT	3	127	VALVE	2	150	DEEP GROOVE BALL BEARING	1
	RV GEAR ASSEMBLY	1	128	SPRING	2	151	NEEDLE ROLLER	3
	RV GEAR KIT	1	130	SPRING	2		PISTON ASSEMBLY	1
4	RV GEAR A	1	136	O-RING	2	161	PISTON	1
5	RV GEAR B	1	137	O-RING	2	162	SHOE	1
9	CRANKSHAFT	3	140	O-RING	2			
22	NEEDLE ROLLER BEARING	6		SPOOL KIT	1	167	PIVOT	2
23	NEEDLE ROLLER BEARING	6	163	SPOOL	1	169	COLLAR	1
			164	OIL STOPPER	1	170	HEXAGONAL SOCKET HEAD CAP SCREW	8
			165	PLUG	1	171	PARALLEL PIN	2
6	INPUT GEAR	1	166	SPRING	1	173	O-RING	1
			168	STEEL BALL	2	174	SUPER LOCK WASHER	4
	SPUR GEAR KIT	1	192	PLUG	2	191	SPRING	1
7	SPUR GEAR	3	193	O-RING	1		VALVE KIT	2
						201	VALVE	1
8	COVER	1	102	SHAFT	1	202	SLEEVE	1
14	DISTANCE PIECE	3	103	SWASH PLATE	1	203	SPRING RETAINER	1
15	COUPLING	1		CYLINDER AND PISTON KIT	1	204	PLUG	1
17	PIN	24	104	CYLINDER BLOCK	1	205	SHIM	1
20	RETAINING RING	3		PISTON KIT	1	206	SPRING	1
	2.20 < T ≤ 2.25			PISTON ASSEMBLY	9	208	O-RING	1
	(AT 0.05 INTERVAL)		105	PISTON	1	209	O-RING	1
	2.75 < T ≤ 2.80		106	SHOE	1	210	O-RING	1
21	ROLLER BEARING	2	107	RETAINER PLATE	1	211	BACKUP RING	2
25	C-SHAPED RETAINING RING FOR SHAFT	3	108	THRUST BALL	1	221	PISTON SEAL	1
27	O-RING	2	109	TIMING PLATE	1			
29	O-RING	1	110	WASHER	2		BODY KIT	1
30	O-RING	1	111	WASHER	1		BODY PISTON KIT	1
31	FLOATING SEAL	2	112	PISTON	1	212	BODY	1
33	HEXAGON SOCKET HEAD PLUG	2	113	SPRING	8	213	PISTON	1
35	HEXAGONAL SOCKET HEAD CAP SCREW	10	114	SPRING	1	209	O-RING	2
36	STEEL BALL	1	115	FRICTION PLATE	2	214	PLUG	1
			116	COUNTERPART PLATE	2	215	PLUG	2
	REAR FLANGE ASSEMBLY	1	117	COUNTERPART PLATE	1	216	STEEL BALL	2
	REAR FLANGE KIT	1	121	PLUG	1	217	BACKUP RING	4
101	REAR FLANGE	1	132	OIL SEAL	1	218	HEXAGON SOCKET HEAD PLUG	5
123	SPOOL	1	135	O-RING	1	219	O-RING	1
146	HEXAGON SOCKET HEAD PLUG	3	138	O-RING	2	220	O-RING	2
154	HEXAGON SOCKET HEAD PLUG	8	139	O-RING	1			

https://truckmanualshub.com/

https://truckmanualshub.com/

2-4. Exploded view

1. Exploded view of reduction gear section

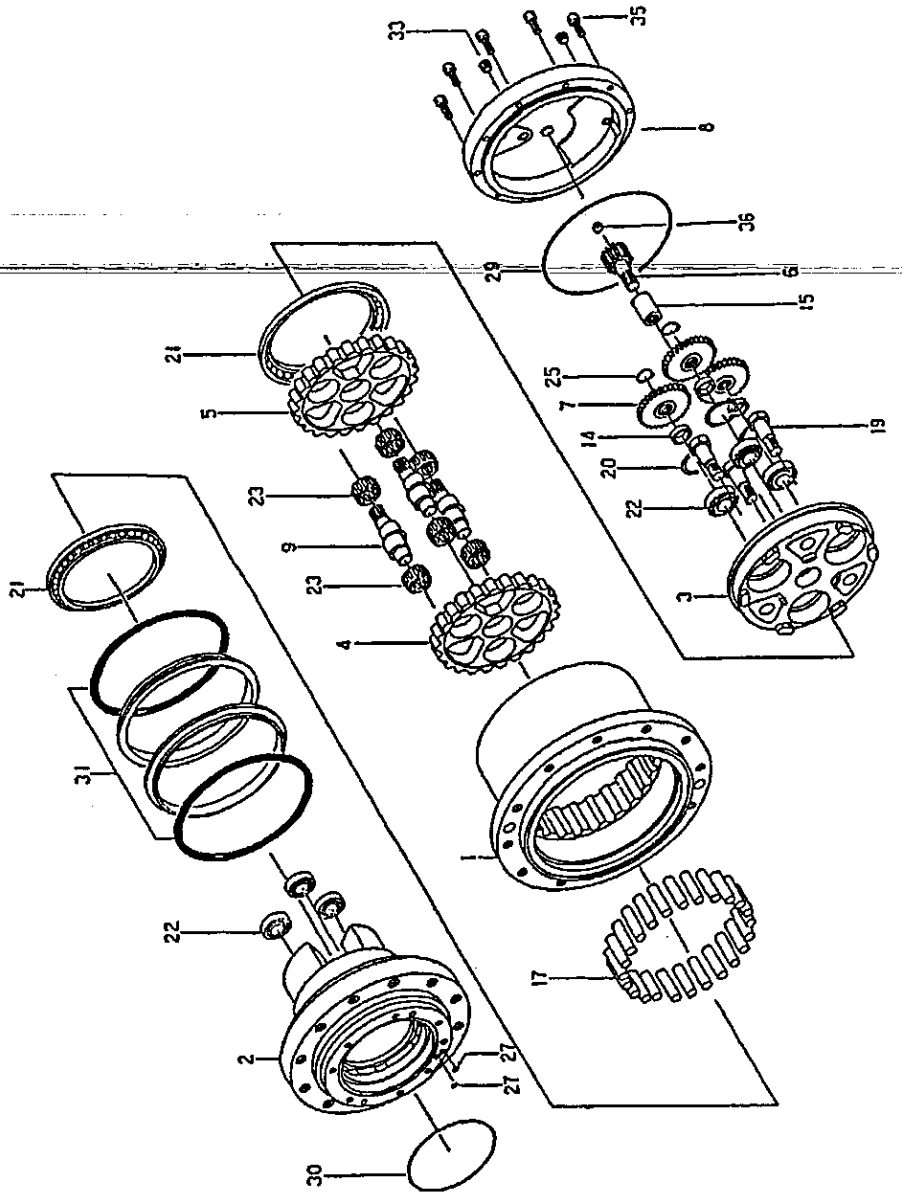

https://truckmanualshub.com/

2. Exploded view of hydraulic motor section

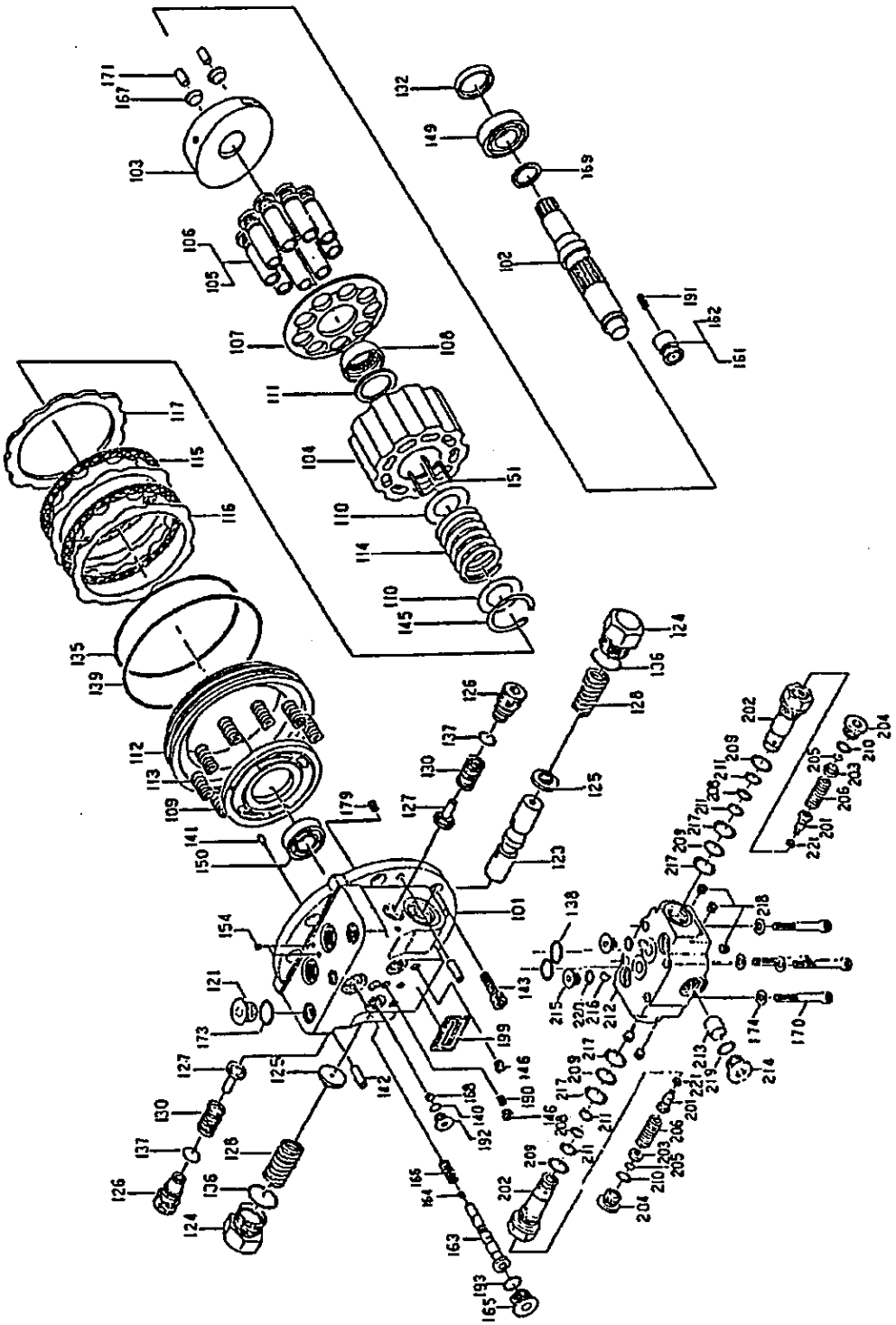

https://truckmanualshub.com/

3. Operational Description

3-1. Reduction gears

1. Functions

The reduction gears are composed of a spur gearbox (referred to hereafter as primary reduction gears) and a differential gearbox (referred to hereafter as secondary reduction gears) in which peri-cycloid tooth profiles are adopted. The gears function to reduce the high-speed rotational motion from the hydraulic motor and convert it into a low speed, high torque motion to obtain hub (1) (case) rotation.

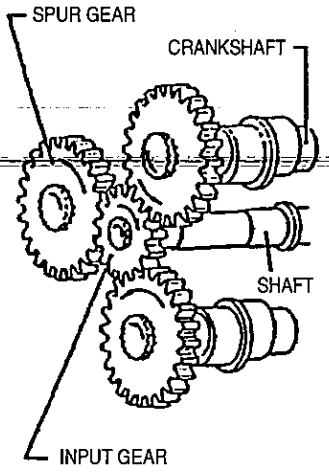

2. Operational description

a. Primary reduction gears section

- The rotational movement of the hydraulic motor shaft is transferred onto the input gear (6) which is spline jointed with shaft (102). At this time, three spur gears (7) are engaged with the input gear so they will rotate in reduced speeds.

The reduction ratio in the primary reduction gears section is as follows:

$$i_1 = -\frac{Zs}{Zi}$$

i = Reduction ratio in the primary reduction gears section
Zi = Number of teeth of input gear
Zs = Number of teeth of spur gear

b. Secondary reduction gears section

1) Spur gears (three) are spline jointed with each crankshaft (9). Each acts as an input device from the primary reduction gears to the secondary reduction gears.

When the crankshaft (9) rotates, its eccentric body sections A and B start their eccentric motion while they rotate (orbital motion).

Through these eccentric bodies A and B as well as needle bearings incorporated into the eccentric bodies A and B, the eccentric motion only (out of their eccentric and orbital motions) is transferred onto RV gears A (4) and B (5).

In this manner, the RV gears A and B engage in eccentric motion in the same direction, with the same number of revolutions with the spur gears and crankshaft.

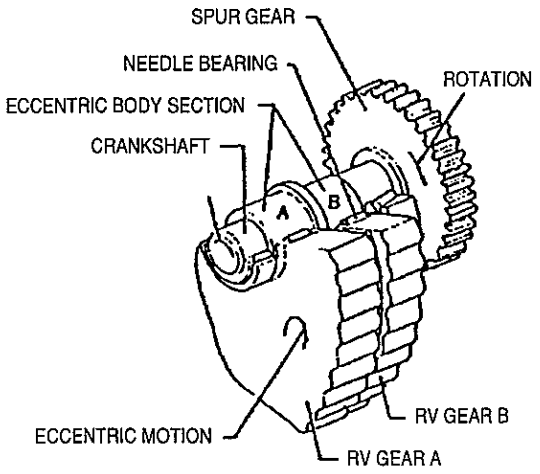

https://truckmanualshub.com/

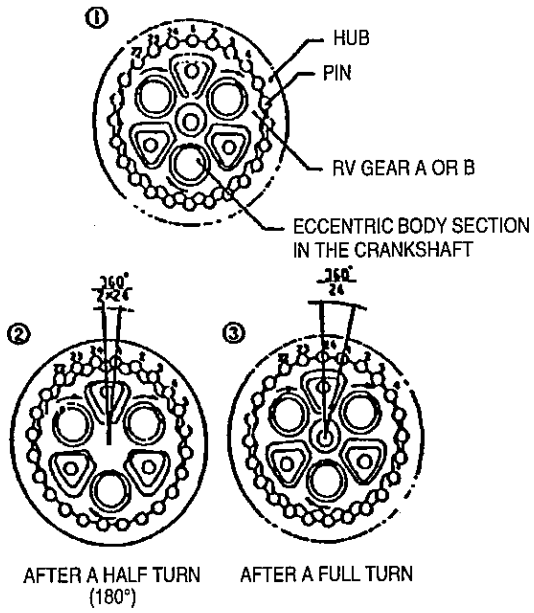

2) When RV gear A and RV gear B engage in the eccentric motion, the faces of teeth (whose number is expressed in ZR) in the ZR RV gear A and RV gear B change the mesh point one after another with constant mesh pins (17) (whose number is expressed in ZP) while rolling.

When RV gear A and RV gear B rotate one turn of eccentric motion, the pin revolves by the differential between the number of teeth ZR and the number of pins ZP [(ZP-ZR)/ZP] in the same direction of the eccentric motion.

This revolution of the pin is transferred to the hub and the rotation will be the output rotation for the reduction gears.

The reduction ratio in the primary reduction gears section is as follows:

$i_2 = -(ZP-ZR)/ZP$
i_2 = Reduction ratio in the secondary reduction gears section
ZR = Number of teeth in RV gear A or B
ZP = Number of pins

Thus, the number of output revolutions, when the hydraulic motor has made one turn, is as follows:

$$i = i_1 \times i_2$$

$$i = -\frac{Zs}{Zi} \times \frac{(ZP - ZR)}{ZP}$$

i_1 = reduction ratio in the primary reduction gears section
i_2 = reduction ratio in the secondary reduction gears section

https://truckmanualshub.com/

3-2. Hydraulic motor section (with brake valve, high/low 2-speed switching mechanism)

1. Functions

a. Hydraulic motor

- This hydraulic motor is called a swash plate type axial piston motor, which works to convert the hydraulic force delivered from the pump into a rotational motion.

b. Brake valve

1) Smooth braking is brought by controlling the inertial force of the main body trying to rotate the travel motor when the travel motor comes to a stop.

2) Functions as a check valve to prevent cavitation in the hydraulic motor.

3) Functions as a serge cut valve to control braking pressure in the hydraulic motor and as an anti-cavitation valve to prevent cavitation.

c. High/low 2-speed switching mechanism

- The switch-over valve and the control piston will work to switch the inclination angle of the swash plate in two levels: high speed with low torque and low speed with high torque.

d. Parking brake

- The parking brake works to prevent escaping or slipping while the power shovel is stopped or parked on a sloped surface. It utilizes a friction-plate type braking mechanism and it is integrated into the hydraulic motor section.

2. Principle and operational description

a. Hydraulic motor

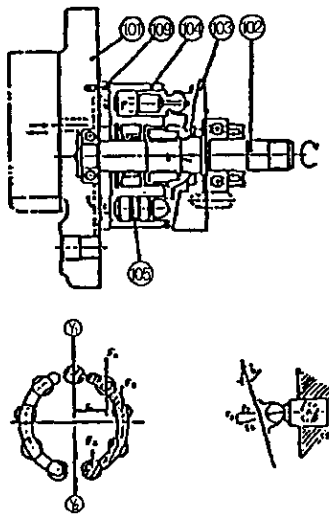

The pressurized oil from the hydraulic pump enters the rear flange (101) in the travel motor, passes the brake valve mechanism and is directed into the cylinder block (104) through timing plate (109). The pressurized oil is directed into only one side of the area divided by the Y1–Y2 line drawn from the top to bottom dead centers of piston (105) stroke. The pressurized oil that has entered one side of the cylinder block (104) pushes each piston (4 or 5) and generates the following force:

$$F\,kg = \frac{P\,MPa}{0.098} \times A\,cm^2$$

This force is divided into component forces (F_2 and F_3) because the swash plate is fixated with an angle of $\alpha°$ against the axial line of the motor shaft (102). One component force, the radial component force (F_3), generates torque ($T = F_3 \times ri$) individually for Y_1–Y_2.

This resultant force,

$$T = \Sigma(F_3 \times (ri))$$

rotates the cylinder block by applying a rotational force on the piston. Since the cylinder block is spline jointed with the motor shaft, the torque is transferred when the motor shaft rotates.

https://truckmanualshub.com/

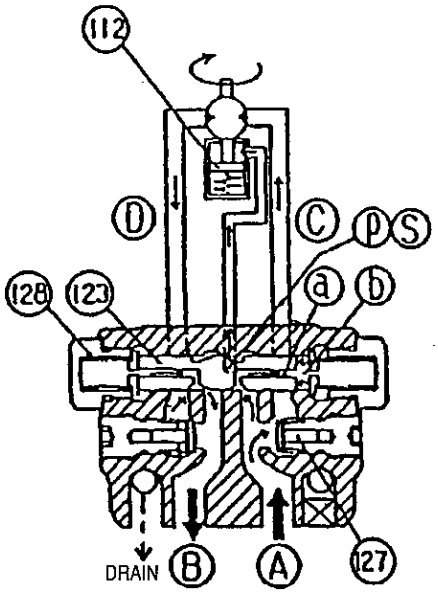

b. Brake valve

1) During operation (with brake released)

The pressurized oil supplied from Port A opens the valve (127) and enters Port C on the inlet side of the hydraulic motor to rotate the hydraulic motor. At the same time, the pressurized oil passes a piping (a) through the small hole in the spool (123), enters chamber (b) and acts on the edge of the spool to generate force. This force then slides a spool towards the left from the neutral by the force of spring (128).

When the spool slides, a space (passage) is formed between the spool groove and the rear flange. This passage connects Port D on the return passage side of the hydraulic motor with other Port B. As a result, the returning oil goes back to the tank and the hydraulic motor will rotate.

Also, the pressurized oil enters Ports P and S as a result of spool (123) sliding.

The pressurized oil that entered Port P runs the piston (112) for the parking brake and releases the force of the parking brake.

(Refer to *3. Parking brake* for more details.)

When the pressurized oil is supplied from Port B, the movements of spool (123) and valve (127) are reversed and the direction of rotation will be reversed.

https://truckmanualshub.com/

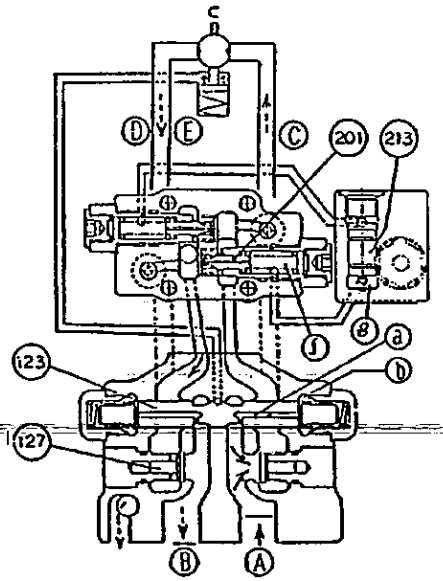

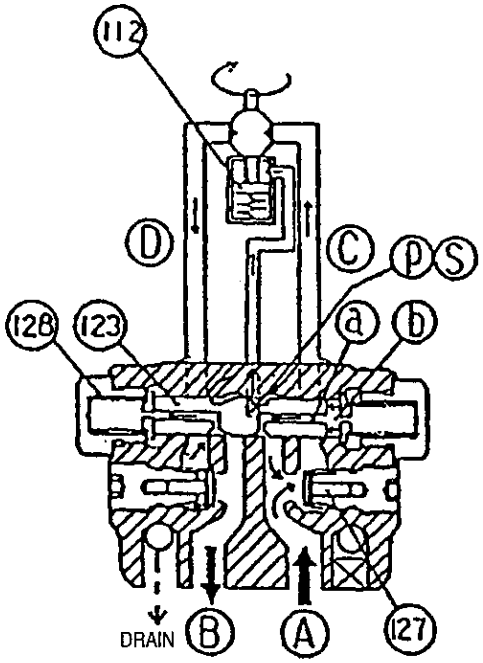

2) At stop or while stalling (with brake engaged)

When the flow of pressurized oil for travelling is stopped, the hydraulic oil loses its force. As a result the spool (123), which slid to the left by the force of spring (128), attempts to return to the right (neutral) via stopper (164). At the same time, the hydraulic motor still tries to rotate by inertia when the flow of pressurized oil is stopped from Port A. Consequently, the oil delivered from the hydraulic motor cannot be directed further and the oil in Port D builds pressure. The highly pressurized oil enters the chamber (g) via chamber (f) passing the restriction in valve (201) on the right-hand side. When the oil enters chamber (g), the piston (213) moves upward as shown in the Figure to prevent pressure from rising further. While this takes place, the valve (201) on the right-hand side will be pushed open by the pressurized oil in chamber D.

Therefore, the pressurized oil in chamber D flows into chamber C keeping relatively low pressure. This controls the pressure in chamber D and also prevents cavitation in chamber C. When the piston (213) reaches the end of stroke, the pressures in chambers (g) and (f) rise and the valve (201) on the right-hand side closes again. When the valve (201) on the right-hand side closes, the oil pressure in Port D rises further. Then the valve on the left-hand side opens and the oil in Port D enters Port C with higher pressure than the preset relief pressure for the shovel. Thus, controlling the pressure in Port D in two steps enables the hydraulic motor to brake smoothly before the machine comes to a stop.

3) During overrun

If the machine goes down a steep hill during shovel travel, the travelling speed naturally increases, at which time the hydraulic motor is forced to rotate more than the volume of oil supplied from the hydraulic pump. This is called an overrun.

When overrun takes place, the brake valve operates in the same way because there is no hydraulic force as in the case of a machine stop. The brake valve generates a back pressure by restricting the passage on the return side of the hydraulic motor to reduce speed of the hydraulic motor that is rotating due to inertia. The revolution of the hydraulic motor is thus controlled according to the oil volume supplied from the pump.

https://truckmanualshub.com/

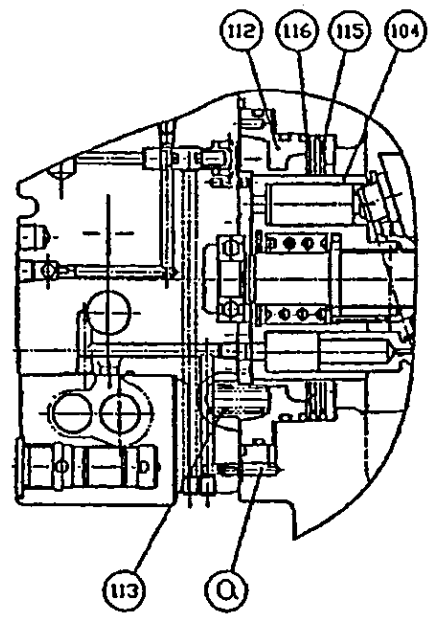

c. Parking brake

1) While travelling

When pressurized oil is supplied from the brake valve, the spool (123) in the brake valve of the hydraulic motor section starts working and the passage to the parking brake opens. The oil is directed into the cylinder chamber (a) which is composed of spindle (2) in reduction gears section and piston (112).

The pressurized oil overcomes the force of spring (113) when the pressure reaches 0.784 MPa or above and it moves the piston (112) toward the rear flange (101). Due to this movement of the piston (112), the pressing force from the piston (112) onto the counterpart plate (116) and friction plate (115) becomes zero. As a result, the friction plate (115) which is inserted in the cylinder block (104) of the hydraulic motor section is free to move, and the braking force to the cylinder block (104) is released.

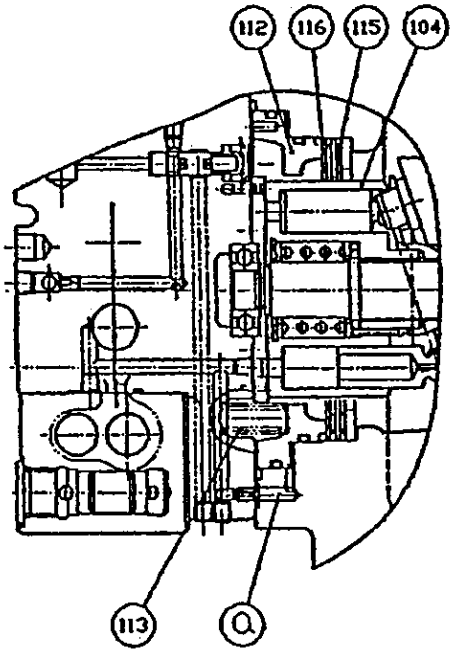

2) While stopped

When the pressurized oil from the brake valve is shut off and the pressure in the cylinder chamber (a) falls to 0.784 MPa or below, the piston (112) will try to return by the force of spring (113). Due to the force of this spring (113), the piston (112) will be pressed. Then the counterpart plate (116), which can move freely, and friction plate (115) will be pressed to the spindle (2) in the reduction gears section.The friction force generated by the pressing stops the rotational force of the cylinder block (104) and gives braking torque (145 N·m) to the hydraulic motor shaft. Also, since the oil is controlled through the appropriate oil passage, the operation will be nice and smooth.

https://truckmanualshub.com/

d. Description of automatic 2-speed switching mechanism

1) At low speed

If the pilot pressure is not supplied from Port D, the valve (163) is pressed upward by the force of spring (166) and the pressurized oil from Port A or Port B. As a result, the pressurized oil from Port C will be shut off and the oil in chamber P will be released into the drain (motor case) via valve (163).

Therefore the swash plate (103) inclines to its maximum angle θ_1 and the stroke volume of the hydraulic motor reaches its maximum, resulting in rotating at low speeds.

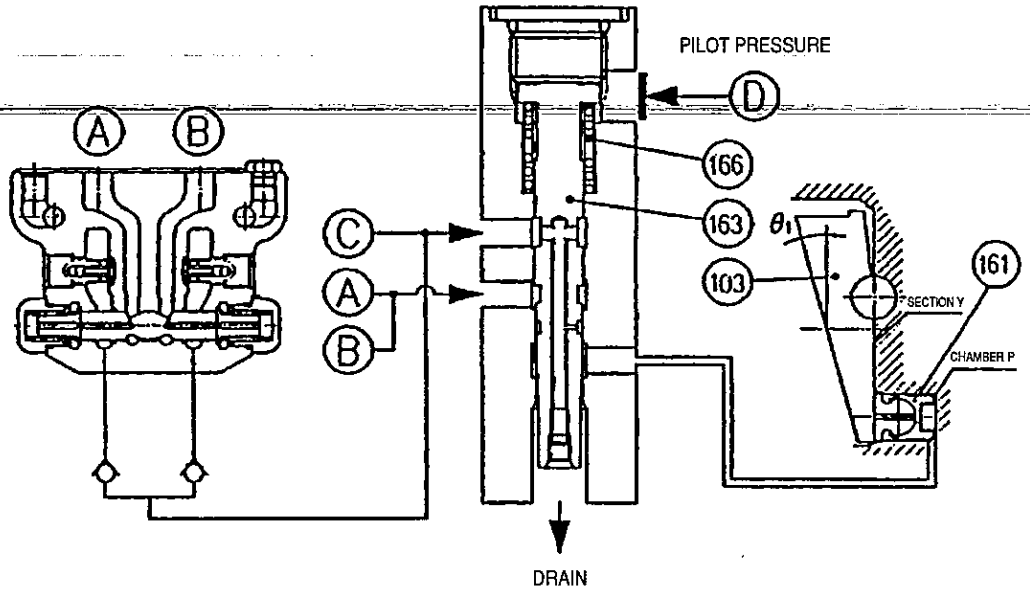

https://truckmanualshub.com/

2) At high speed

When the pilot pressure (3.92 MPa) is supplied from Port D, the valve (163) overcomes the force of spring (166) and the pressurized oil from Port A or B; and is pressed downwards. As a result, the pressurized oil on Port C is introduced into chamber P via valve (163). The piston (161) then pushes the swash plate upward until it hits the X section and it keeps holding the plate there at that position.

At this time, the swash plate (103) inclines to its minimum angle of θ_2 and the hydraulic motor reaches its minimum stroke volume, resulting in rotating at high speed.

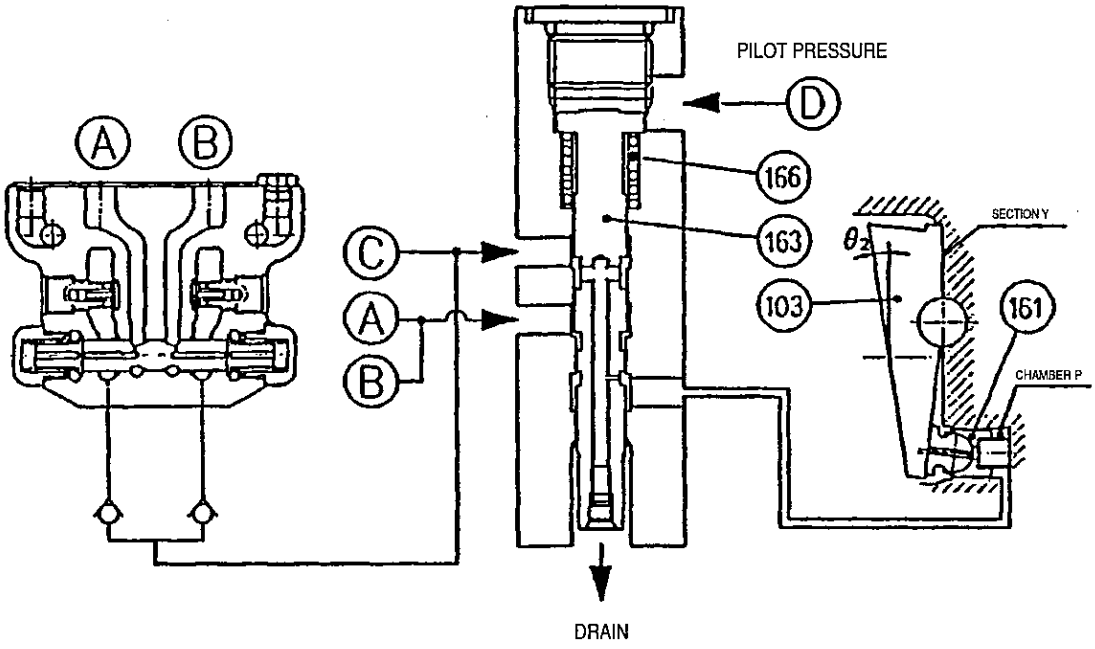

https://truckmanualshub.com/

3) Operational description of automatic switch-over to low speed from high speed operation

If the load increases during high speed operation, the pressure on Port A or B also increases. When the pressure reaches 25.5 MPa, the valve overcomes the pilot pressure (3.92 MPa) from Port D and is pressed upwards. As a result, the oil in chamber P is released into the drain (motor case) via valve (163).

At this time, the swash plate (103) hits section Y on the spindle and reaches and holds its maximum angle of inclination θ_1. As a result, the hydraulic motor rotates at low speeds. 0

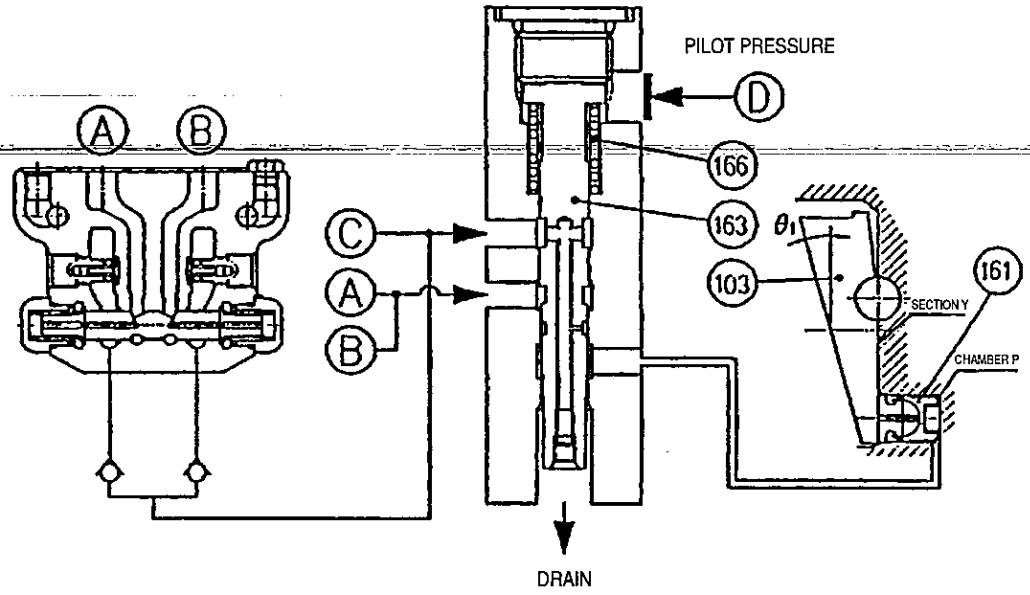

https://truckmanualshub.com/

Pilot P&T Line

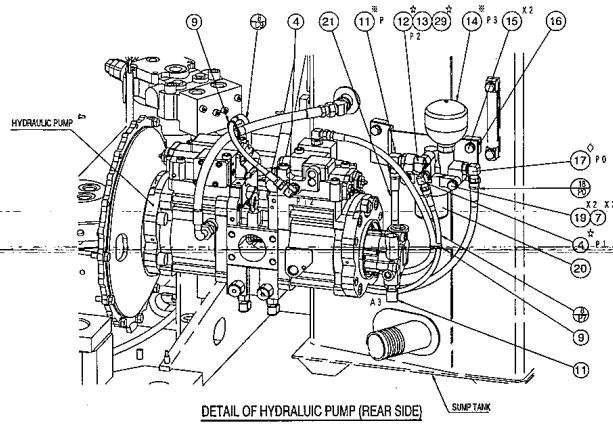

DETAIL OF HYDRALUIC PUMP (REAR SIDE)

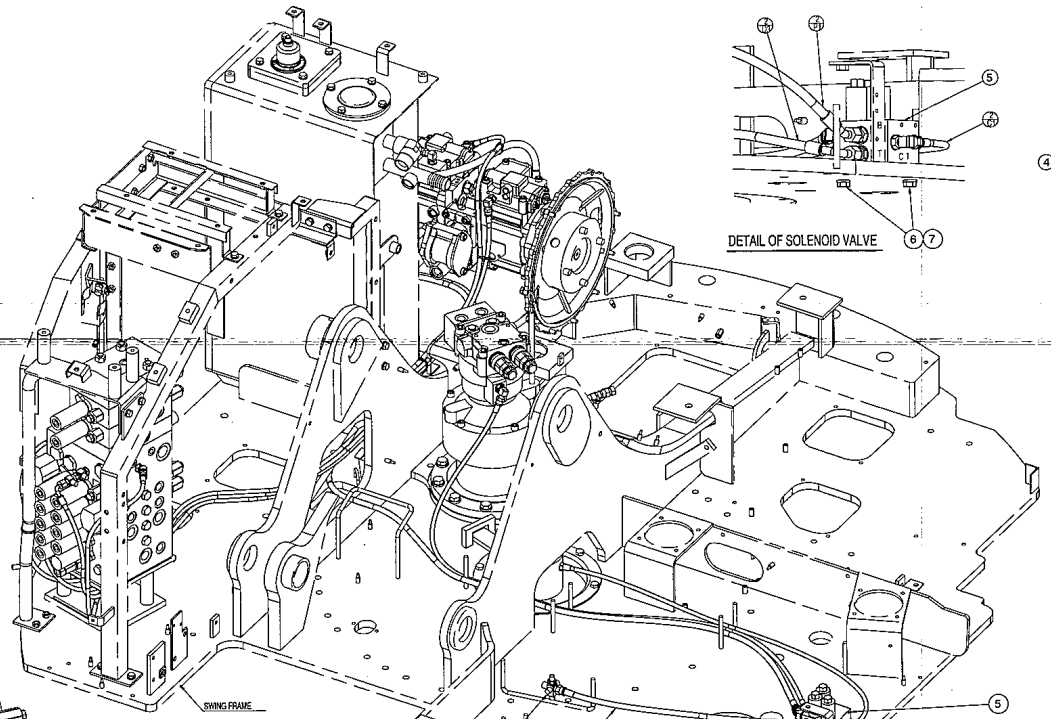

DETAIL OF SOLENOID VALVE

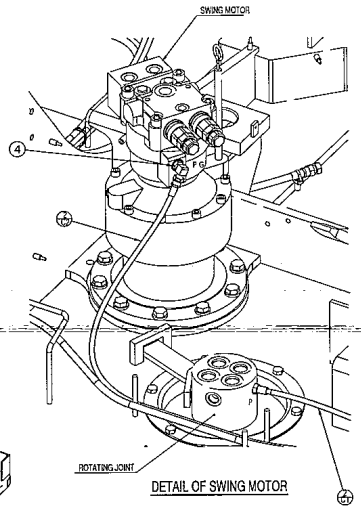

DETAIL OF SWING MOTOR

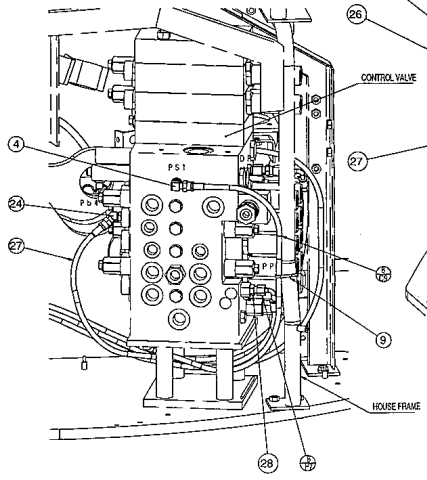

DETAIL OF CONTROL VALVE (RIGHT SIDE)

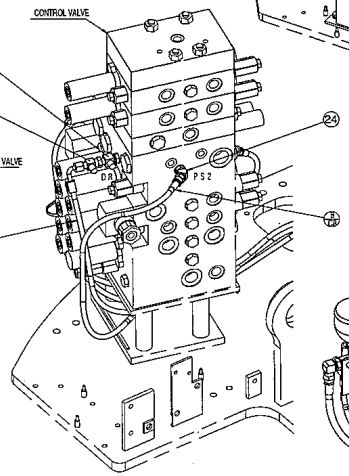

DETAIL OF CONTROL VALVE (LEFT SIDE)

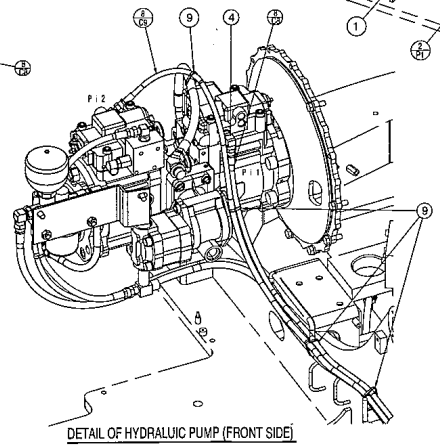

DETAIL OF HYDRALUIC PUMP (FRONT SIDE)

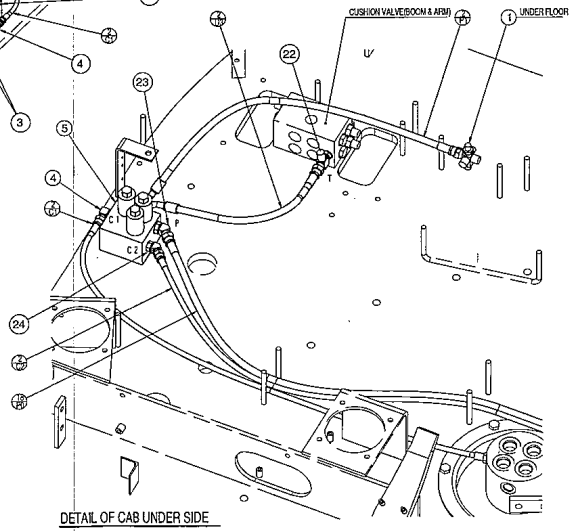

DETAIL OF CAB UNDER SIDE

Hydraulic Circuits Section
https://truckmanualshub.com/

https://truckmanualshub.com/

Hydraulic Circuits

PILOT HOSE CONNECTION DIAGRAMS

Pilot Control Line

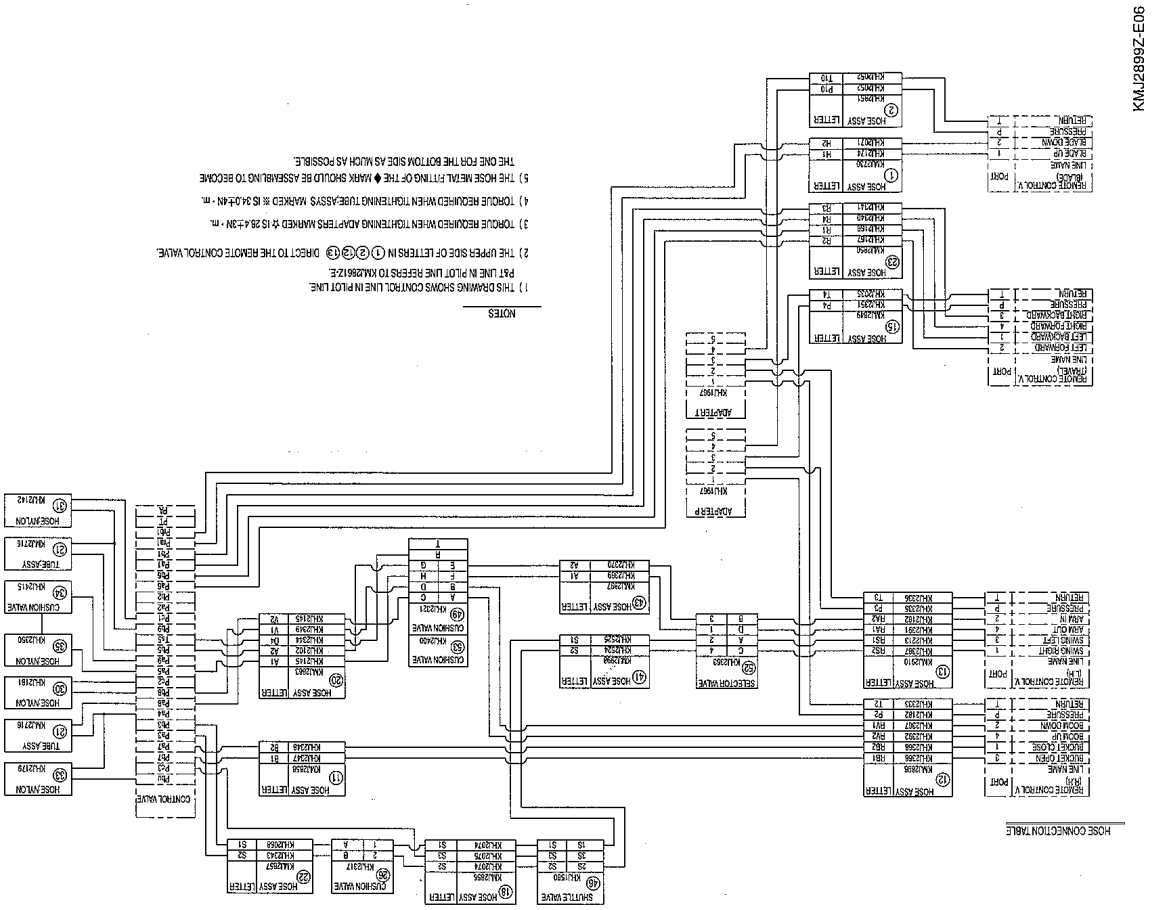

Hydraulic Circuits

PILOT HOSE CONNECTION DIAGRAMS

Pilot Control Line

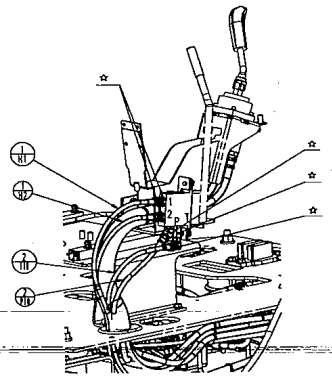

DETAIL OF BLADE REMOTO CONTROL VALVE

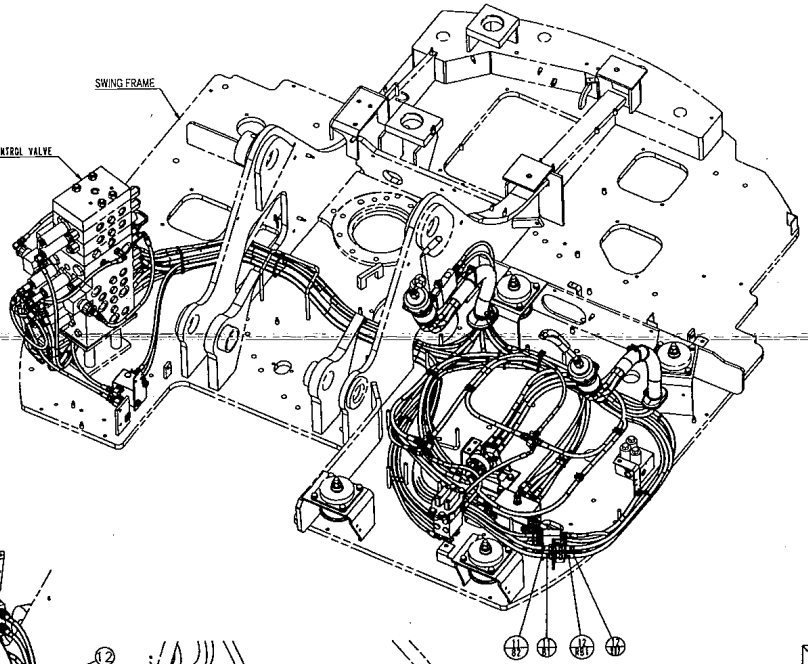

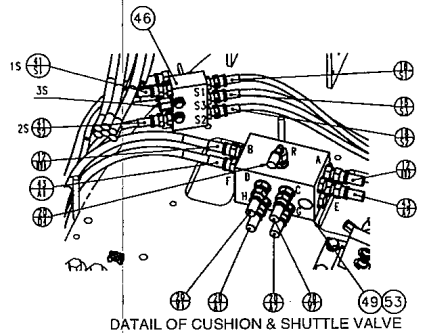

DATAIL OF CUSHION & SHUTTLE VALVE

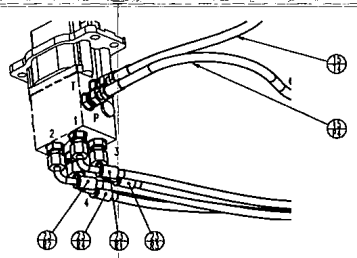

DATAIL OF TRAVEL REMOTE CONTROL VALVE

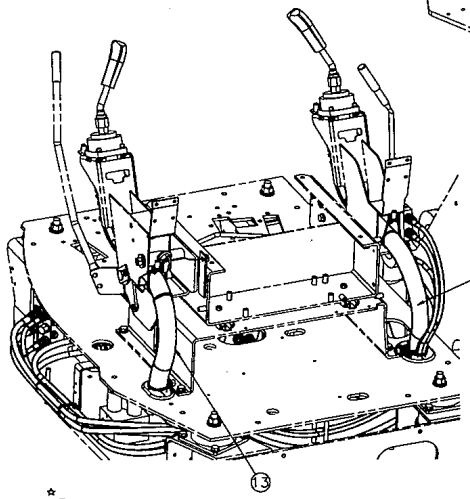

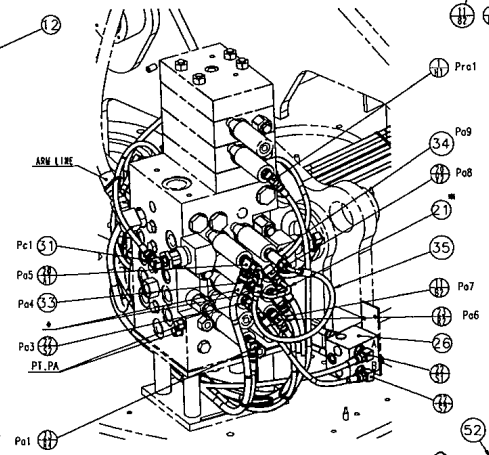

DATAIL OF CONTROL VALVE FRONT

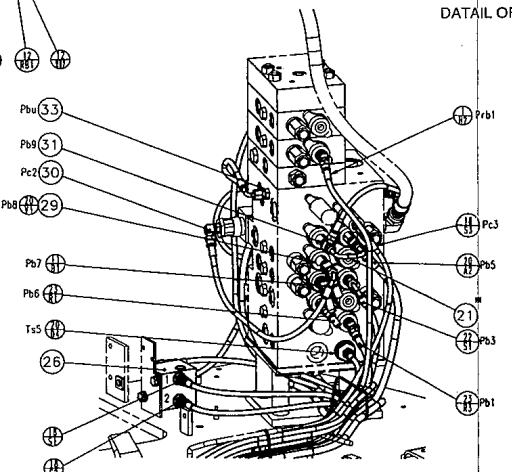

DATAIL OF CONTROL VALVE REAR

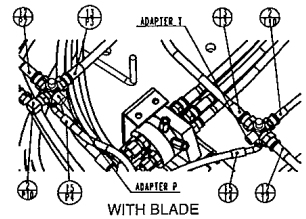

WITH BLADE

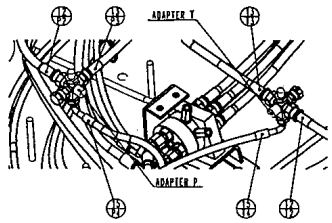

WITHOUT BLADE

DATAIL OF ADAPTER P& T

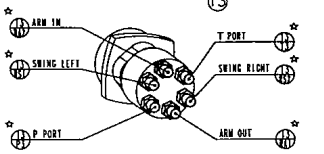

REMOTE CONTROL VALVE(LEFT SIDE)

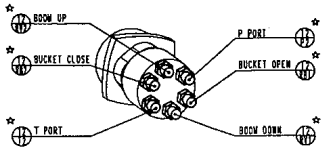

REMOTE CONTROL VALVE(RIGHT SIDE)

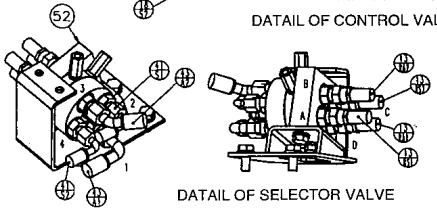

DATAIL OF SELECTOR VALVE

https://truckmanualshub.com/

https://truckmanualshub.com/

https://truckmanualshub.com/

SH125/135X-3

(Emission Control Regulation Compliant Machine)

SERVICE TEXT

Hydraulic Circuits Section

SUMITOMO (S.H.I.) CONSTRUCTION MACHINERY MANUFACTURING CO., LTD.

https://truckmanualshub.com/

https://truckmanualshub.com/

Table of Contents

2nd Edition: 09/2002

Hydraulic Circuits Section

Port Locations **125-1-03-00-12**
Hydraulic Pump 1/5
Control Valve 2/5
Pilot Hose Connection Diagram **125-1-03-01-12**
Pilot P & T Line 1/4
Pilot Control Line 3/4
Functional Description **125-1-03-02-11**
List of Functions 1/3
Control Valve Configuration Table 3/3
Travel Circuits **125-1-03-03-11**
High Speed Travel Circuit 1/6
Low Speed Travel Circuit 3/6
Straight Travel Circuit (Simultaneous Operation of Travel-forward and Boom-up) 5/6
Swing Circuits **125-1-03-04-12**
Swing Parking Circuit 1/4
Swing Override Variable Throttle Circuit 3/4
Arm Circuits **125-1-03-06-11**
Arm-In/Arm-Out 2-speed Circuit 1/6
Arm-In Load Holding Valve Circuit 3/6
Arm-In Forced Regenerative Circuit 5/6
Boom Circuits **125-1-03-07-11**
Boom-Up 2-speed Circuit 1/4
Boom-Down Load Holding Valve Circuit 3/4
Boom-Down Regenerative Circuit 3/4
Boom-Down Windage Prevention Circuit 3/4
Backup Circuits **125-1-03-09-09**
Breaker and Crusher Circuit (2-Speed Confluence Crusher Circuit) 1/7
Breaker and Crusher Circuit (Backup Line Holding Valve) 3/7
Breaker and Crusher Circuit (Breaker Circuit) 4/7
Secondary Backup Reciprocating Circuit 6/7
Hydraulic Circuit Diagram **125-1-07-00-13**

https://truckmanualshub.com/

https://truckmanualshub.com/

Hydraulic Pump

	Port name	Port size
A_1, A_2	Delivery port	SAE 6000_{psi} 3/4"
B_1	Suction port	SAE 2500_{psi} $2^1/2$"
$D_{r1,2,3}$	Drain port	G 1/2
D_{r4}	Drain port	G 3/4
$P_{i1,2}$	Negative control port	G 1/4
P_1	Power shift port	G 1/4
$a_{1,2,4}$	Guage port	G 1/4
~~A_3~~	~~Pilot pump delivery port~~	~~G 1/2~~
A_4	Gear pump delivery port	G 1/2
B_3	Pilot pump suction port	G 3/4
B_4	Gear pump suction port	G 1
a_3	Guage port	G 1/4

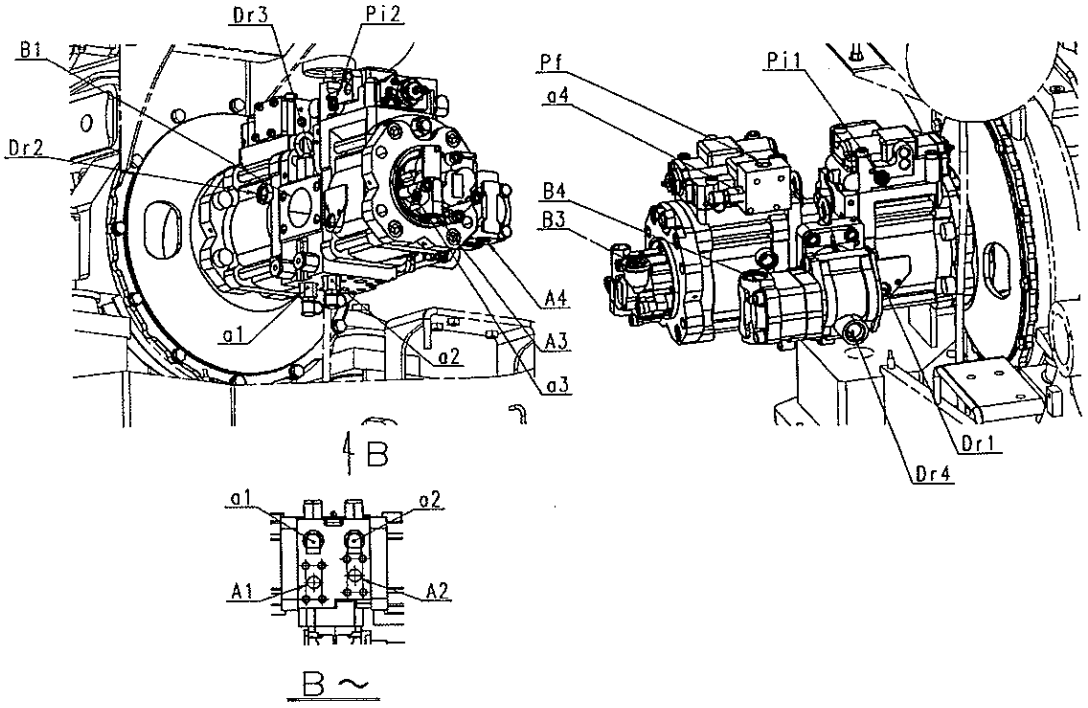

https://truckmanualshub.com/

Control Valve (SH125X-3)

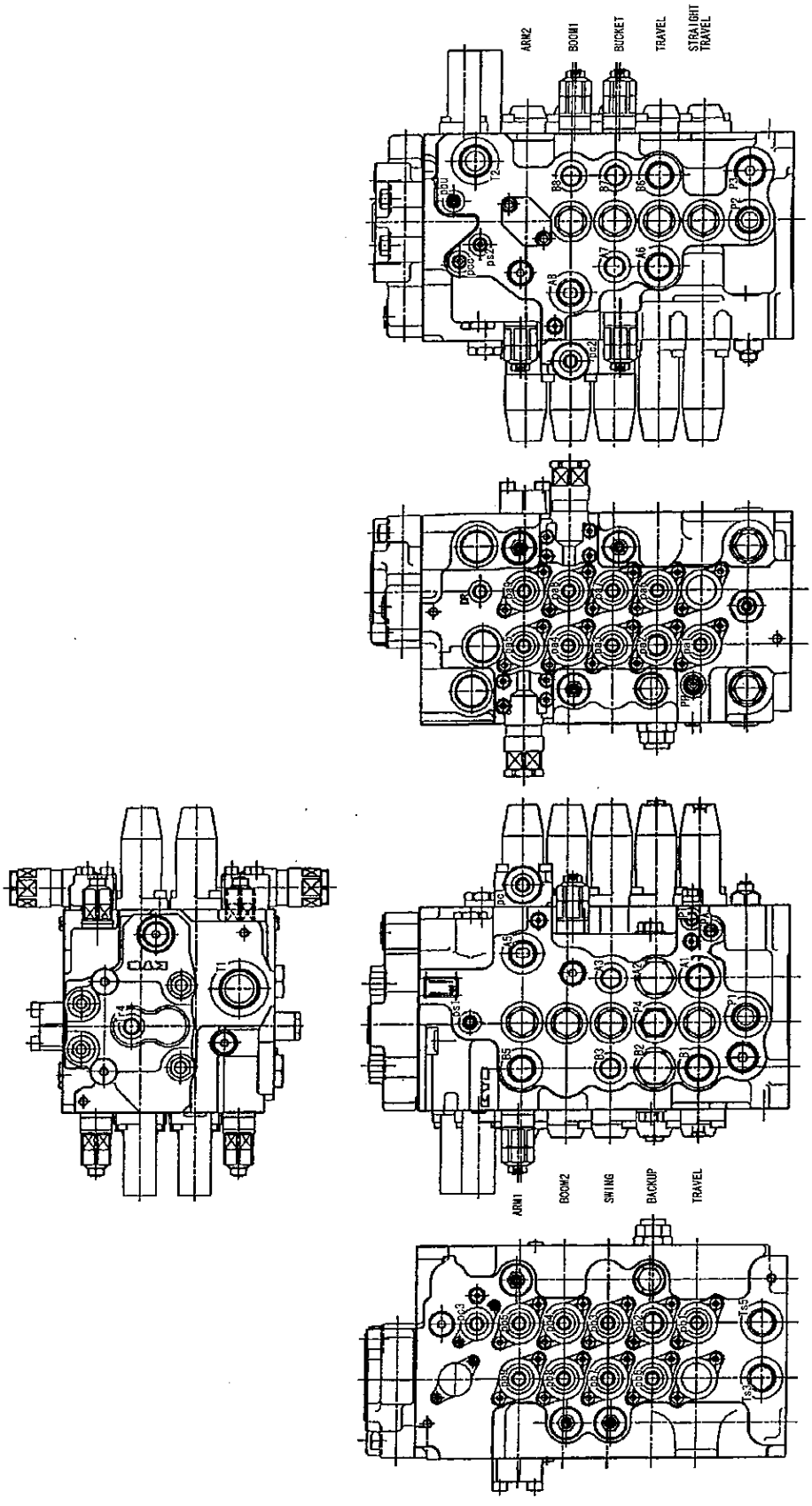

https://truckmanualshub.com/

Control Valve (SH125X-3)

Line name	Main port	Line name	Main port
Travel Right Forward Line	A1	Travel Right Backward Pilot Line	pb1
Backup Line	A2	Backup Pilot Line	pb2
Swing Right Line	A3	Swing Left Pilot Line	pb3
Arm Out Line	A5	Boom Down 2-speed Pilot Line	pb4
Travel Left Forward Line	A6	Arm In Pilot Line	pb5
Bucket Close Line	A7	Travel Left Backward Pilot Line	pb6
Boom Up Line	A8	Bucket Open Pilot Line	pb7
Travel Right Backward Line	B1	Boom Down Pilot Line	pb8
Backup Line	B2	Arm In 2-speed Pilot Line	pb9
Swing Left Line	B3	Load Holding at Arm	pc1
Arm In Line	B5	Load Holding at Boom	pc2
Travel Left Backward Line	B6	Swing Override	pc3
Bucket Open Line	B7	Swing Override Release	pbu
Boom Down Line	B8	Backup Confluence Pilot Line	pcc
Drain	DR	Negative Control Signal	Ps1, Ps2
Pressure Line	P1, P2, PP	Return Line	T1, T2
Backup Confluence Line	P3, P4	Swing Motor Make-up	Ts3
Attachment Signal Pressure Measurement	PA	Bypass Filter	Tr4
Travel Signal Pressure Measurement	PT	Heat Circuit	Ts5
Travel Right Forward Pilot Line	pa1		
Backup Pilot Line	pa2		
Swing Right Pilot Line	pa3		
Boom Up 2-speed Pilot Line	pa4		
Arm Out Pilot Line	pa5		
Travel Left Forward Pilot Line	pa6		
Bucket Close Pilot Line	pa7		
Boom Up Pilot Line	pa8		
Arm Out 2-speed Pilot Line	pa9		

https://truckmanualshub.com/

Control Valve (SH125/135X-3 with Blade)

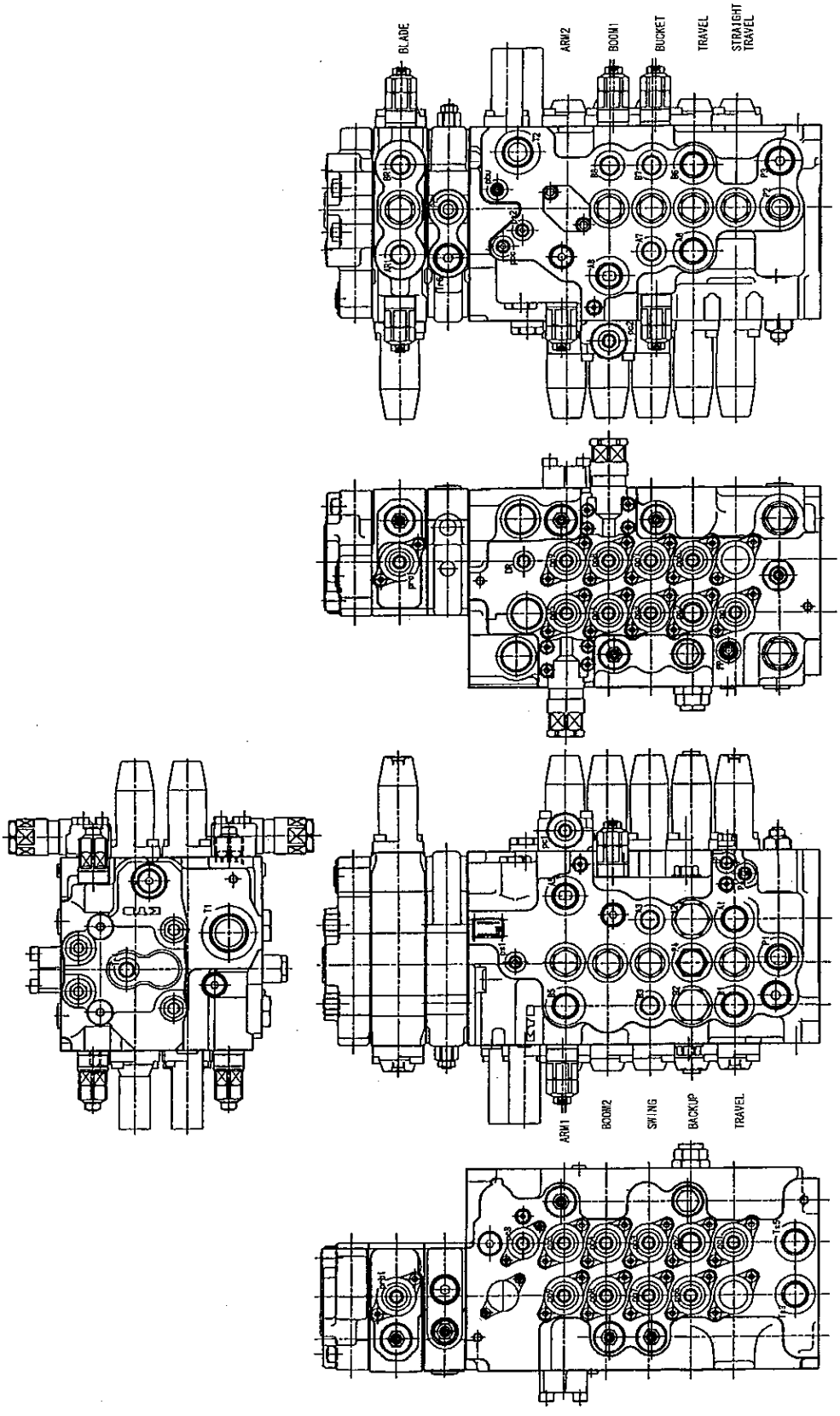

https://truckmanualshub.com/

Control Valve (SH125/135X-3 with Blade)

Line name	Main port	Line name	Main port
Travel Right Forward Line	A1	Travel Right Backward Pilot Line	pb1
Offset Left Line	A2	Offset Right Pilot Line	pb2
Swing Right Line	A3	Swing Left Pilot Line	pb3
Arm Out Line	A5	Boom Down 2-speed Pilot Line	pb4
Travel Left Forward Line	A6	Arm In Pilot Line	pb5
Bucket Close Line	A7	Travel Left Backward Pilot Line	pb6
Boom Up Line	A8	Bucket Open Pilot Line	pb7
Travel Right Backward Line	B1	Boom Down Pilot Line	pb8
Offset Right Line	B2	Arm In 2-speed Pilot Line	pb9
Swing Left Line	B3	Load Holding at Arm	pc1
Arm In Line	B5	Load Holding at Boom	pc2
Travel Left Backward Line	B6	Swing Override	pc3
Bucket Open Line	B7	Swing Override Release	pbu
Boom Down Line	B8	Backup Confluence Pilot Line	pcc
Drain	DR	Negative Control Signal	Ps1, Ps2
Pressure Line	P1, P2, PP, Pr	Return Line	T1, T2
Backup Confluence Line	P3	Swing Motor Make-up	Ts3
Attachment Signal Pressure Measurement	PA	Bypass Filter	Tr4
Travel Signal Pressure Measurement	PT	Heat Circuit	Ts5
Travel Right Forward Pilot Line	pa1	Blade Up Line	AR1
Offset Left Pilot Line	pa2	Blade Down Line	BR1
Swing Right Pilot Line	pa3	Blade Up Pilot Line	pra1
Boom Up 2-speed Pilot Line	pa4	Blade Down Pilot Line	prb1
Arm Out Pilot Line	pa5		
Travel Left Forward Pilot Line	pa6		
Bucket Close Pilot Line	pa7		
Boom Up Pilot Line	pa8		
Arm Out 2-speed Pilot Line	pa9		

https://truckmanualshub.com/

Hydraulic Circuits

PILOT HOSE CONNECTION DIAGRAMS

Pilot P & T Line

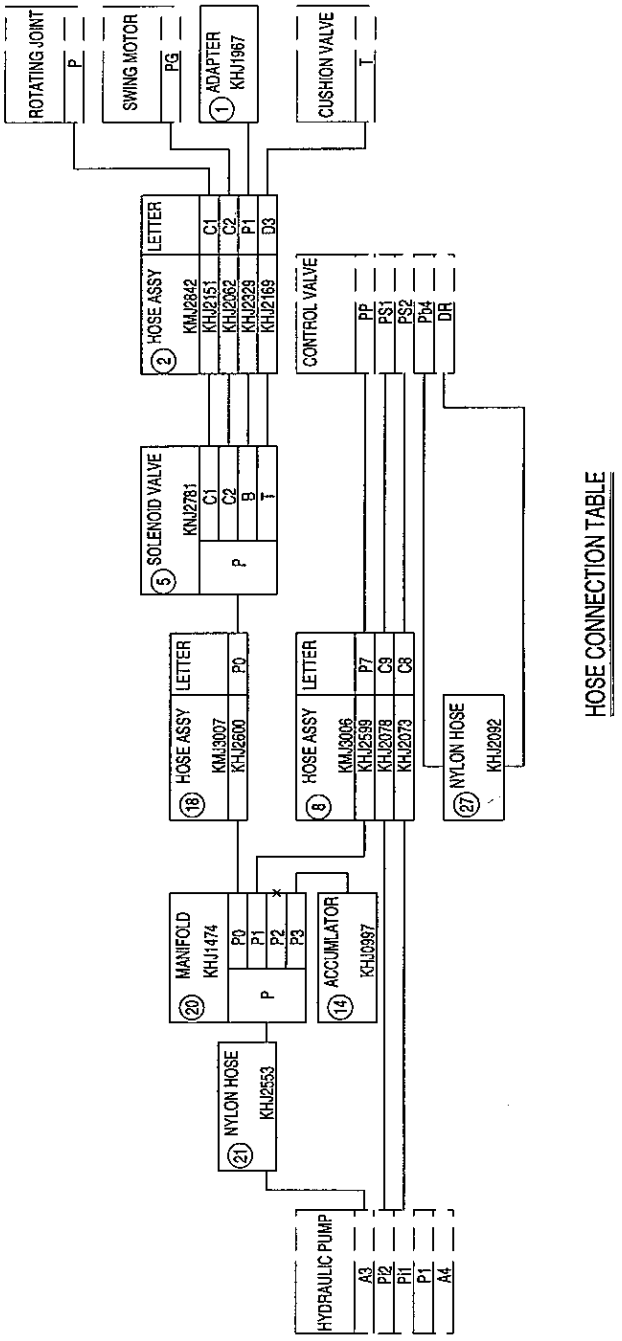

HOSE CONNECTION TABLE

NOTES

1) WHEN ASSEMBLING EACH HOSE,THE DIRECTION OF THE HOSE FITTING SHOULD BE ADJUSTED TO GET SMOOTH RADIUS.
2) TORQUE REQUIRED WHEN TIGHTENING ADAPTERS MARKED ☆ IS 28.4±2.9N-m.
3) TORQUE REQUIRED WHEN TIGHTENING ADAPTERS MARKED ※ IS 58.8±5.9N-m.
4) TORQUE REQUIRED WHEN TIGHTENING ADAPTERS MARKED ◇ IS 49.0±4.9N-m.

https://truckmanualshub.com/

List of Functions

Item	Functional Description	SH125X-3 Single Boom	SH125/135X-3 Single Boom with Blade
Travel Circuit	125-1-03-03-11		
High-speed	High speeds can be achieved by setting the two-stage incline angle of the travel motor to the smaller angle. The load pressure for travel motor will automatically switch speeds to low when necessary.	○	
Low-speed	Low speeds can be achieved by setting the two-stage incline angle of the travel motor to the larger angle.	○	
Straight Travel	Straight travel is maintained in spite of attachment/swing operations during travel.	○	
Swing Circuit	125-1-03-04-12		
Parking	1. While the swing lever is positioned at neutral, the swing parking will be activated to fully hold the swing. 2. By handling the swing lever, the mechanical brake will be released to go into normal swing operation. The swing parking will stay released if attachments such as boom, arm, and bucket are operated following the swing operation. 3. The swing parking will be activated 5 seconds after the swing lever is put in neutral or the attachment movement is stopped.	○	
Override Throttle	1. Swing pushing is obtained by the swing override throttle which is integrated in the control valve. 2. During trenching, the swing variable override throttle valve is activated in order to secure enough flow at the arm.	○	
Super Shockless Relief Valve	This is installed on the swing motor. It is designed to moderate shocks at start-ups and stops by the two-stage relief valve which comes with a time-lag function.	○	
Swingback	The swing motor is equipped with an anti-reverse valve. The valve works to reduce the swingbacks when the swing brake is applied.	○	
Cushion Valve	Cushion valves work to moderate shocks. They are on the swing pilot line.	○	

https://truckmanualshub.com/

Item	Functional Description	SH125X-3 Single Boom	SH125/135X-3 Single Boom with Blade
Arm Circuit	125-1-03-06-11		
2-Speed Arm-In/Out	Switch-over of arm (2) spools enables internal confluence, thus achieving higher speeds.	○	
Arm-In Load Holding Valve	Arm in movement will be enabled by releasing the load holding valve which is integrated in the control valve.	○	
Arm In Forced Regeneration	The release valve for forced regeneration enables faster movements during combined operation.	○	
Boom Circuit	125-1-03-07-11		
2-speed Boom Up	Switch-over of boom (2) spools enables internal confluence, thus achieving higher speeds.	○	
Boom Down Load Holding Valve	Boom down movement is enabled by releasing the load holding valve which is integrated in the control valve.	○	
Boom Down Regeneration	The regeneration circuit in the boom spool works to achieve higher speeds. It also prevents negative pressure.	○	
Boom Down Windage Prevention	The bleed-off circuit controls high pressure to reduce windage.	○	
Backup Circuit	125-1-03-09-09		
Backup Circuit	Standard equipment includes a backup section in the main control valve. The section is intended for special attachments such as a breaker and a crusher.	○	
Backup Circuit	An additional backup section can be added as an option to accommodate special attachments such as a slide arm.	×	
Secondary Backup Circuit	A secondary backup section can further be added as an option to accommodate special attachments such as a rotating fork.	○	
Others			
Cushion Valve	The cushion valve with heat circuit softens shocks. The valve is on the pilot line for boom and arm.	○	
Negative control	During operation with no load, this reduces power consumption by minimizing the discharge volume from the hydraulic pump.	○	

Note: See the tables in the following pages for the relationship between each specification and the optional equipment.

https://truckmanualshub.com/

Control Valve Configuration Table

Overview

Control valves are configured as follows according to model and specification.

	SH125X-3 Single boom	SH125/135X-3 Single boom with blade
Standard		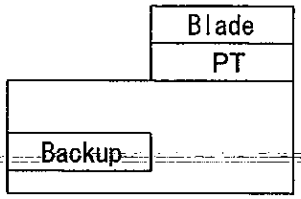
Optional	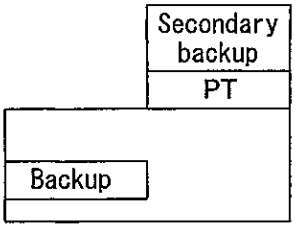	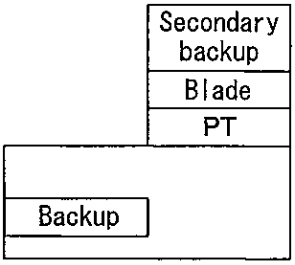

https://truckmanualshub.com/

High Speed Travel Circuit

With High Speed Travel, high speeds can be achieved by setting the two-stage incline angle of the travel motor to the smaller angle. The circuit has a travel motor, which switches over to lower speeds by utilizing load pressure on the travel motor while traveling at high speeds.

Discharged oil from A1 enters port P2 at the control valve entry, while discharged oil from A2 enters port P1 at the control valve entry. Each flow goes into the travel motor through the switch-over of the left and right travel spools to obtain forward/backward travel of the machine. To obtain high speeds, electronic signals are sent to the switch panel through the travel change-over switch. Then electronic signals are sent to the solenoid valve for 2-speed travel in the assembly valves to switch the solenoid valves. This enables the original pilot pressure (4.2 MPa) from port C1 of the assembly valves to be connected with port P of the left and right travel motors through the central joint. The original pressure (4.2 MPa) that entered port P of the left and right travel motors positions the incline angle of the travel motor to the smaller angle, enabling faster speeds.

https://truckmanualshub.com/

High Speed Travel Circuit

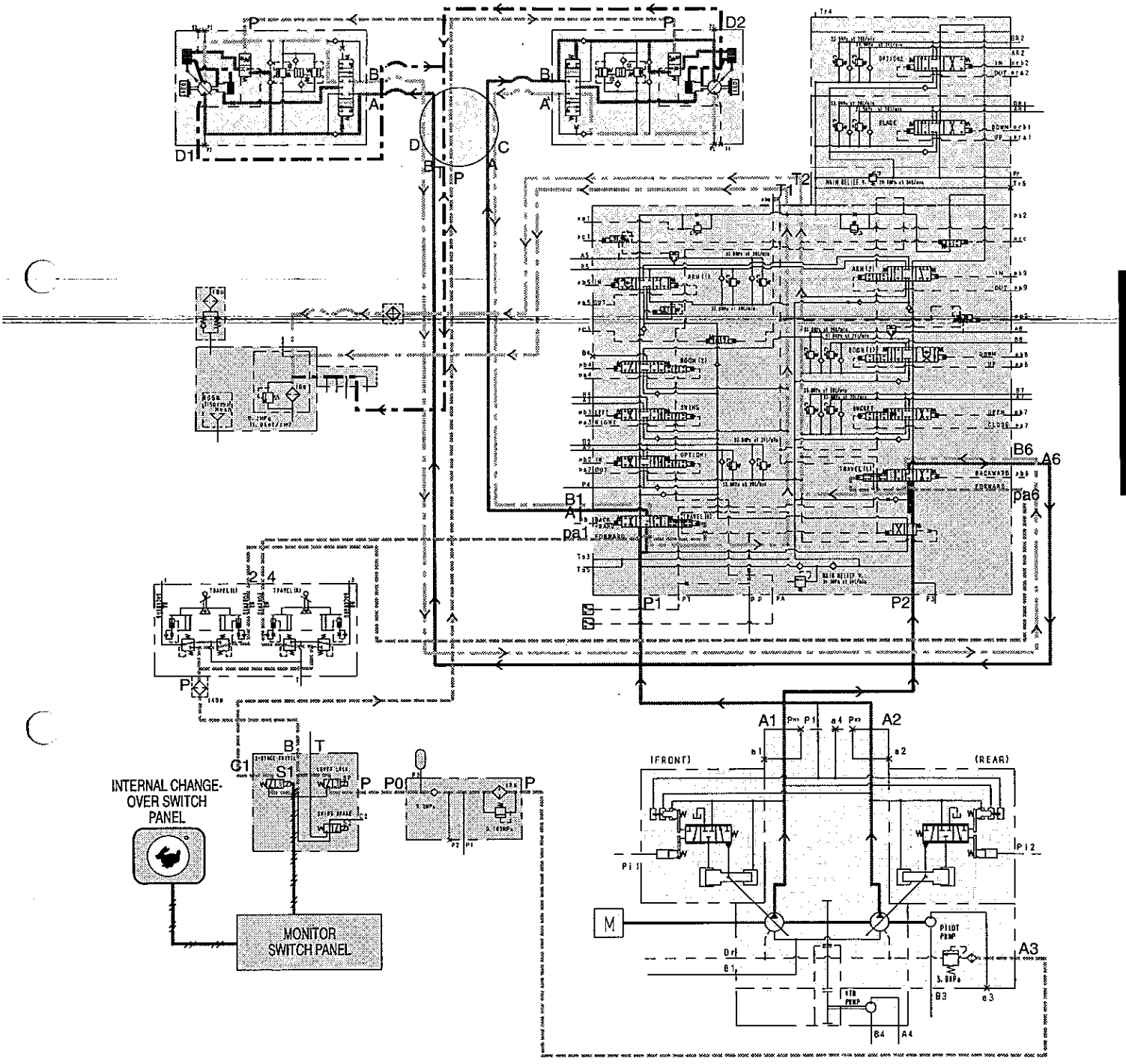

PRESSURE LINE

PILOT PRESSURE LINE

DRAIN LINE

TANK LINE

PILOT TANK LINE

ELECTRIC LINE

https://truckmanualshub.com/

Low Speed Travel Circuit

The travel patterns are normal. Turning the key OFF once and switching it back ON during high speed travel will always set the speed back to low.

Discharged oil from A1 enters port P2 at the control valve entry, while discharged oil from A2 enters port P1 at the control valve entry. Each flow goes into the travel motor through the switch-over of the left and right travel spools to obtain forward/backward travel of the machine. The 2-speed travel solenoid valve will be turned OFF and the hydraulic oil in port P3 of the travel motor will be connected to the pilot tank line.

https://truckmanualshub.com/

Low Speed Travel Circuit

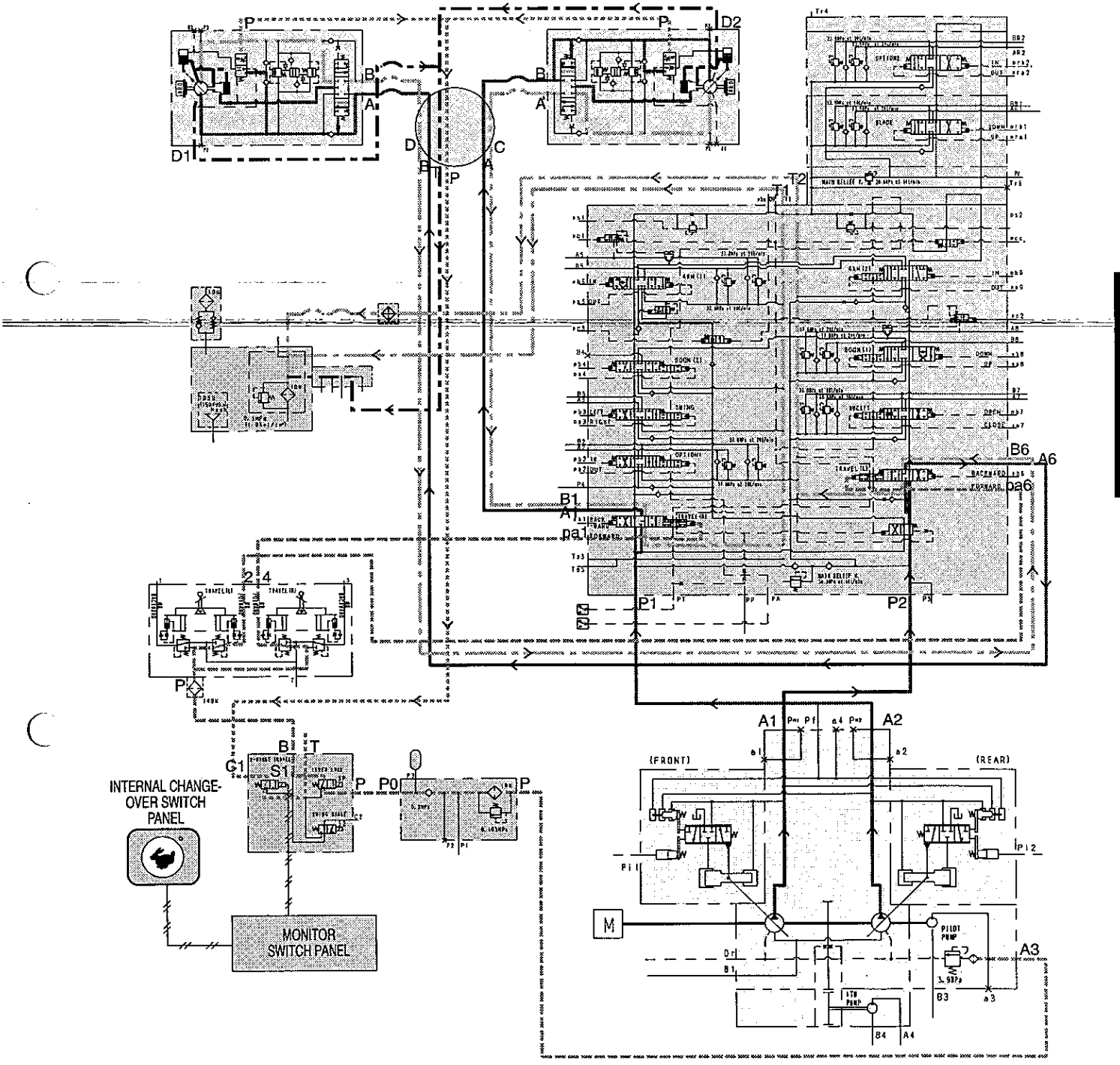

PRESSURE LINE

TANK LINE

PILOT PRESSURE LINE

PILOT TANK LINE

DRAIN LINE

ELECTRIC LINE

https://truckmanualshub.com/

Straight Travel Circuit (Simultaneous Operation of Travel Forward and Boom-up)

The description here applies when travel and boom up operations are conducted at the same time.

The hydraulic oil that entered the pilot pump from PP, which is connected to the tank via travel spool, will be shut off by switch-over of the travel spool. Also, switch-over of the spool to the boom shuts off the branch channels from PP via all spools for attachments (boom, arm, bucket, swing, including offset if so equipped) that are connected to the tank. Therefore, the hydraulic oil from the pilot pump entering from PP cannot flow any further and the circuit pressure rises to the original pressure (4.2 MPa). This original pressure acts on the pilot chamber of the straight travel valve and the straight travel valve switches over. The switch-over of the straight travel valve enables P1 to achieve travel and P2 to drive attachments. The left and right pressures are equal for travel because one pump drives the left and right motors, thus enabling straight travel. Additionally, extra hydraulic oil from P2 is supplied to the travel side through the check with travel confluence throttle to keep speed loss to a minimum.

This also applies when travel and the upper actuators other than boom are operated at the same time.

https://truckmanualshub.com/

Straight Travel Circuit (Simultaneous Operation of Travel Forward and Boom-up)

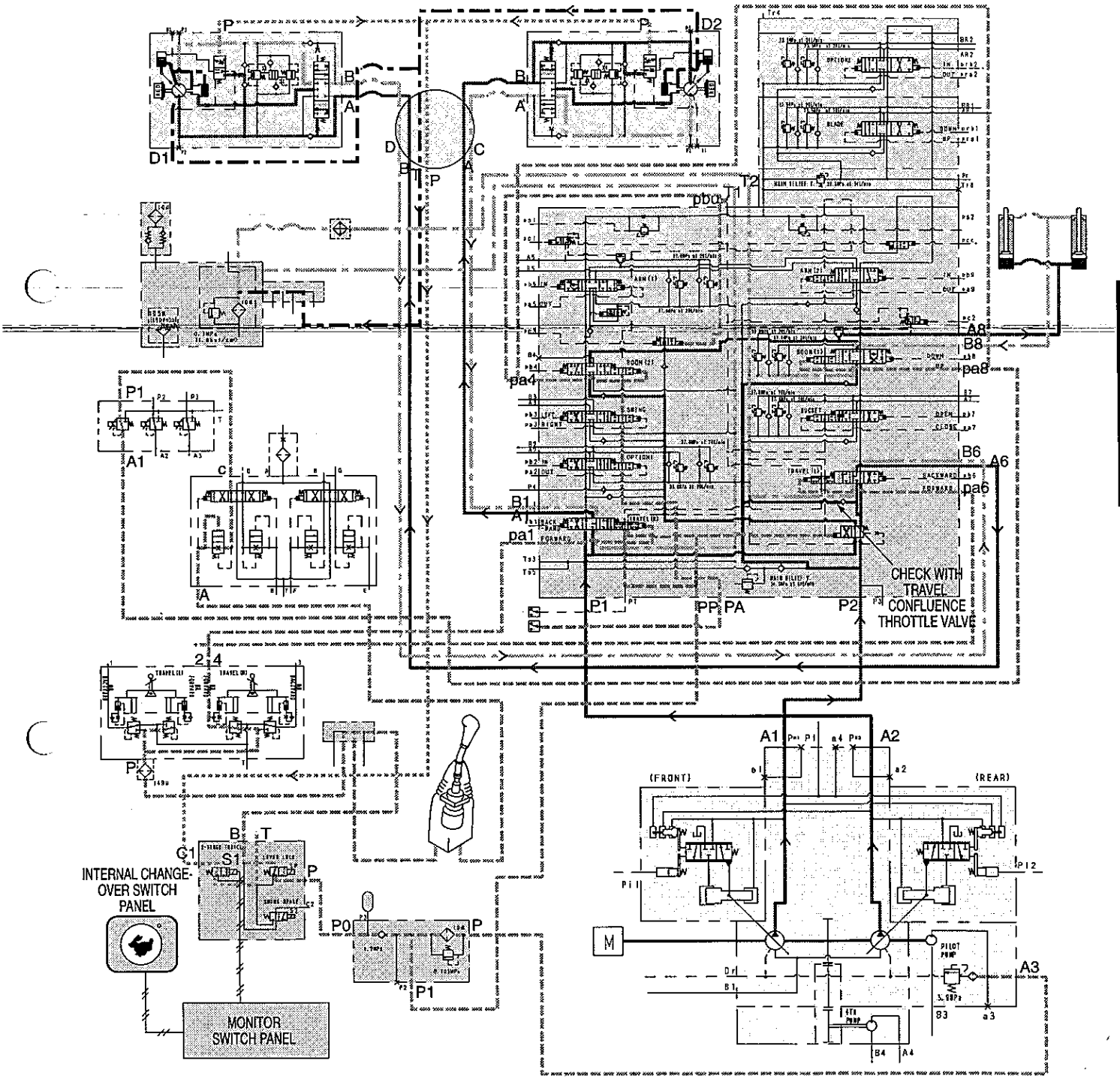

PRESSURE LINE — TANK LINE

PILOT PRESSURE LINE — PILOT TANK LINE

DRAIN LINE — ELECTRIC LINE

https://truckmanualshub.com/

Swing Parking Circuit

When the engine is started and the swing lever is in neutral, the swing brake solenoid valve will be turned ON (SH75: 12V, SH125/135: 24 V input) and the swing parking brake activated.

When the swing pressure switch is turned ON through shifting the lever, output to the swing brake solenoid valve from the switch panel will be turned OFF. Then the swing parking brake will be released to enable swing operations. If an attachment such as an arm is moved within 5 seconds after the swing lever is returned to neutral, a lateral force is generated for the swing movement. In order to prevent dragging caused by braking, the parking bake will be released.

When the signals from attachment pressure switch (2.0MPa: ON, 1.5MPa: OFF) are sent to the switch panel and when the output to the swing brake solenoid valve from the switch panel is turned OFF, the swing parking brake is released.

Five seconds after the swing pressure switch and the attachment pressure switch are turned OFF, the solenoid valve will be turned ON, enabling the swing parking brake to operate.

Key switch	Swing pressure switch	Attachment pressure switch	Swing brake solenoid valve	Swing motor mechanical brake	Remarks
OFF	OFF	OFF	OFF	ON*	Key Switch OFF
ON	OFF	OFF	ON	ON	Key Switch ON
ON	OFF	ON	ON	ON	Attachment operations
ON	ON	ON	OFF	OFF	Independent operation of swing
ON	ON	ON	OFF	OFF	Simultaneous operation of attachment and swing
ON	OFF	OFF	ON (in 5 seconds)	ON	Attachment in neutral

Notes:

- When the spool for boom, arm, bucket, swing (including offset if so equipped) is switched over, the original pilot pressure will be applied and the attachment pressure switch will be turned ON.
- Swing motor mechanical brake ON with * mark indicates that the swing parking release pressure is automatically returning to the tank pressure to enable the mechanical brake to work because others are switched OFF.

https://truckmanualshub.com/

Swing Parking Circuit (Independent Operation of Swing)

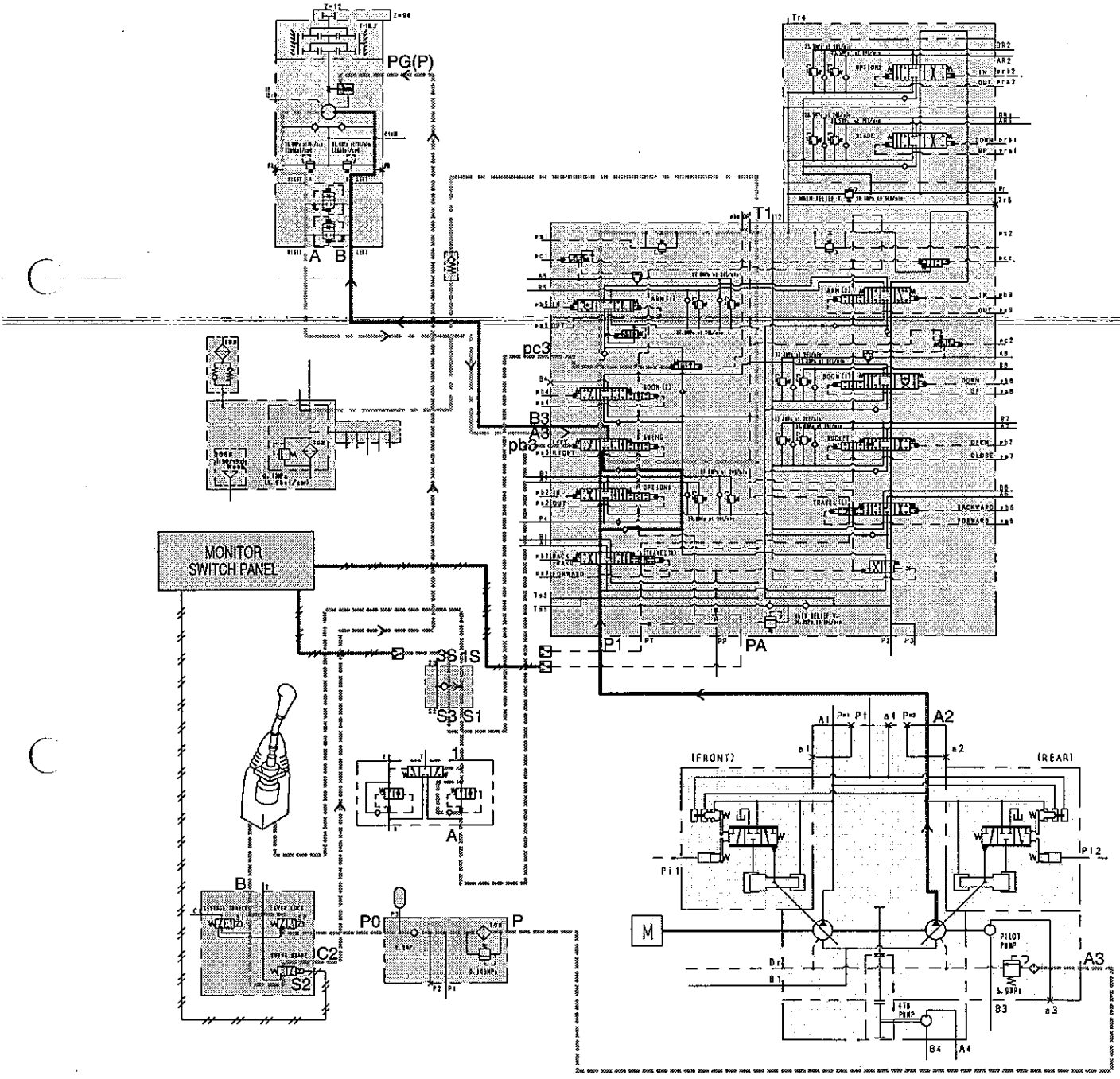

PRESSURE LINE

TANK LINE

PILOT PRESSURE LINE

PILOT TANK LINE

DRAIN LINE

ELECTRIC LINE

https://truckmanualshub.com/

Swing Override Variable Throttle Circuit

Swing pilot pressure is supplied to port Pc3 via shuttle valve and acts on the swing override variable throttle. This will throttle the parallel circuit to raise the swing pressure and to secure the swing force for press digging when the arm/swing operations are conducted at the same time.

Also during trenching, boom-up pilot pressure is supplied to port Pbu, and the supply of hydraulic oil to the arm (1) is secured through moving the swing variable throttle to the left to open the parallel circuit. Smooth trenching operation is obtained even when the central bypass is shut off by the boom (2) spool.

When swing and arm-in or swing and boom-up are operated at the same time, the swing override variable throttle remains restricted to retain the swing pressure.

https://truckmanualshub.com/

Swing Override Variable Throttle Circuit

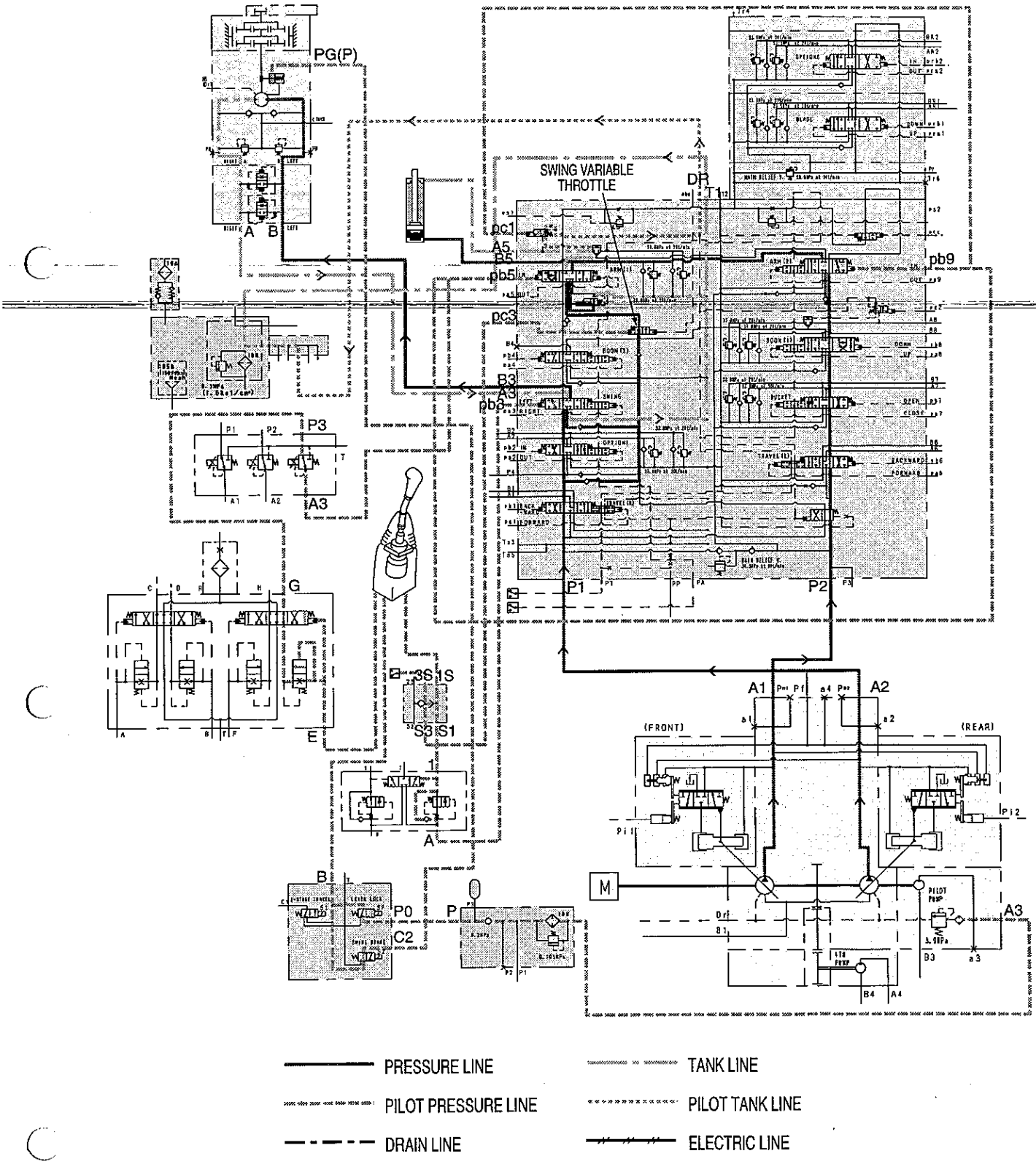

https://truckmanualshub.com/

Arm-In/Arm-Out 2-Speed Circuit

The discharged oil from A2 is supplied to the arm (1) spool via parallel oil passage through the central bypass oil passage or straight travel spool.

The discharged oil from A1 is supplied to the arm (2) spool through the central bypass oil passage or parallel oil passage. It then merges at the downstream of the arm (1) spool and flows into the rod side of the arm cylinder via the holding valve. The returning oil from the bottom side flows back to the tank oil passage via the arm (1) and arm (2) spools.

https://truckmanualshub.com/

Arm-In/Arm-Out 2-Speed Circuit

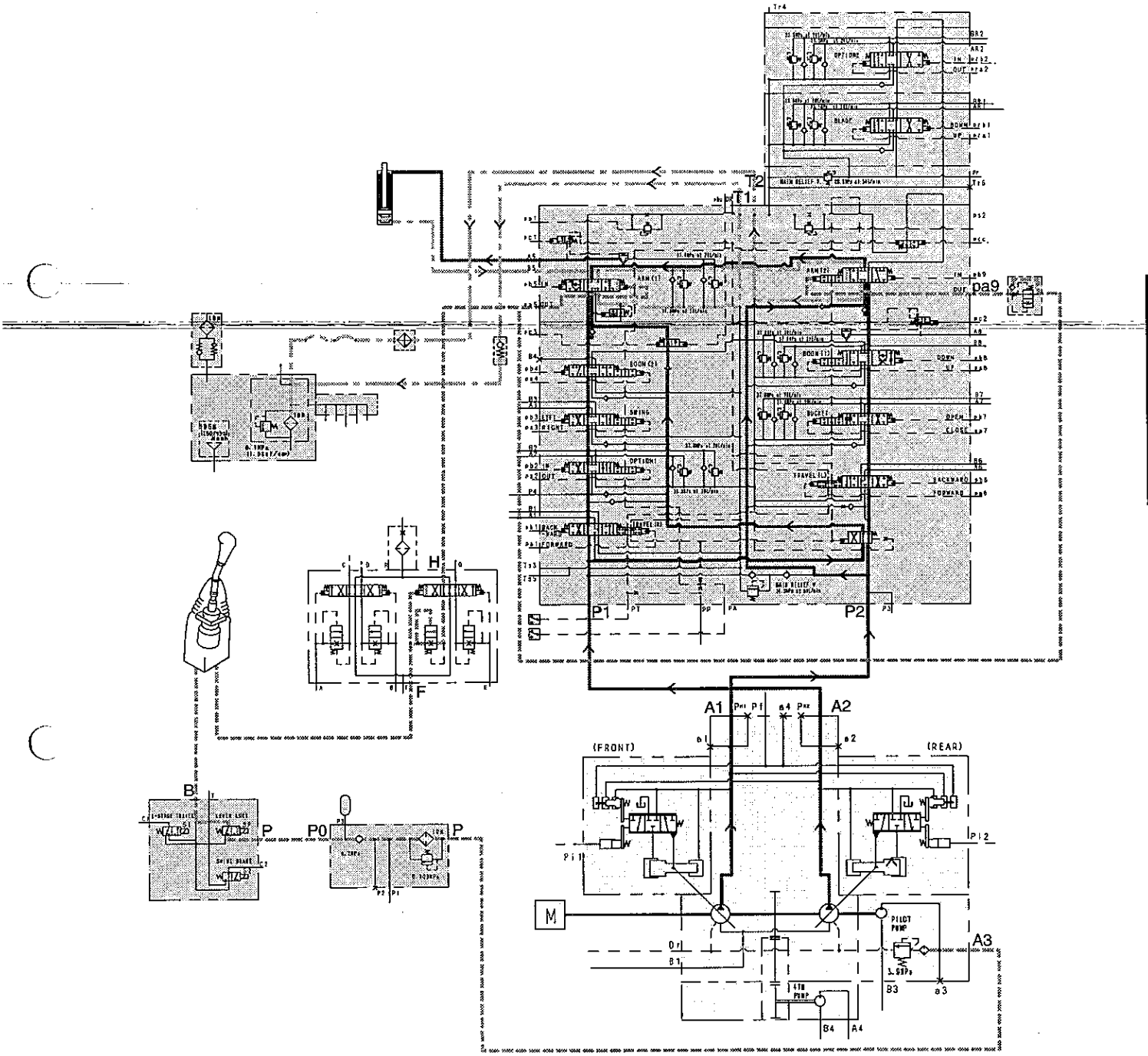

PRESSURE LINE

TANK LINE

PILOT PRESSURE LINE

PILOT TANK LINE

DRAIN LINE

ELECTRIC LINE

https://truckmanualshub.com/

Arm-In Load Holding Valve Circuit

The arm-in pilot pressure enters Pb5 of the control valve and the arm (1) spool moves to the right. At the same time, the pilot pressure also enters Pb9 and the arm (2) spool moves to the left.

Also, the pilot pressure detached from Pb5 enters Pc1 and the load holding valve spool moves to the right. The oil in the spring chamber of the load holding valve check then passes through the load holding valve spool to the tank line. The pressure in the spring chamber decreases and the load holding valve check is released. The hydraulic oil at the arm cylinder rod is returned to the tank line, extending the cylinder and closing the arm.

https://truckmanualshub.com/

Arm-In Load Holding Valve Circuit

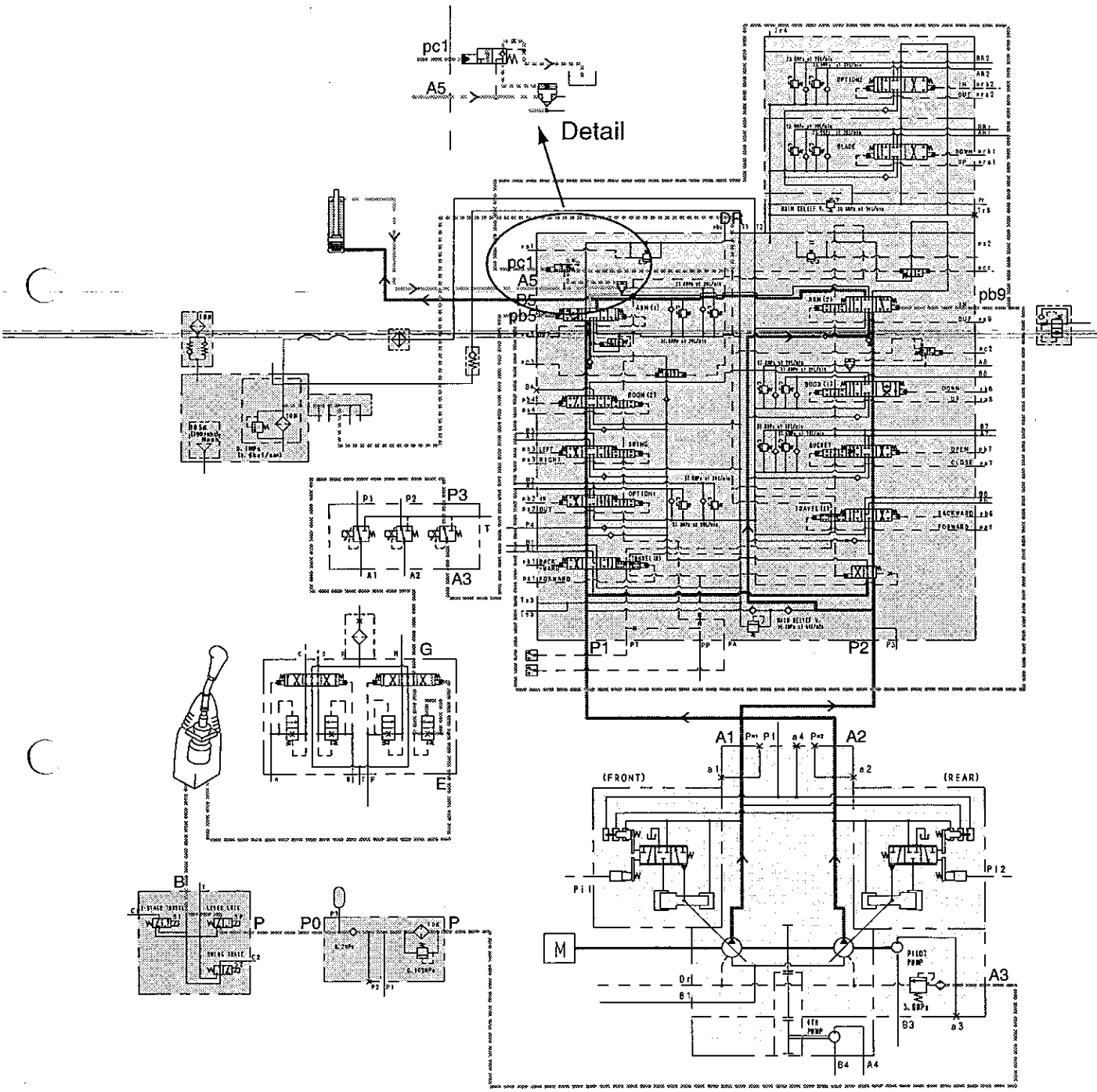

PRESSURE LINE

TANK LINE

PILOT PRESSURE LINE

PILOT TANK LINE

DRAIN LINE

ELECTRIC LINE

https://truckmanualshub.com/

Arm-In Forced Regenerative Circuit

This circuit restricts the rod side return passage at the forced regenerative release valve and forces the returned oil to be regenerated to the bottom side via check in the spool. This secures the arm speed for trenching and other operations.

When the load pressure becomes high at the bottom side, the forced regenerative release valve will be switched over to the right. The return opening on the rod side grows large and no regeneration takes place.

https://truckmanualshub.com/

Arm-In Forced Regenerative Circuit

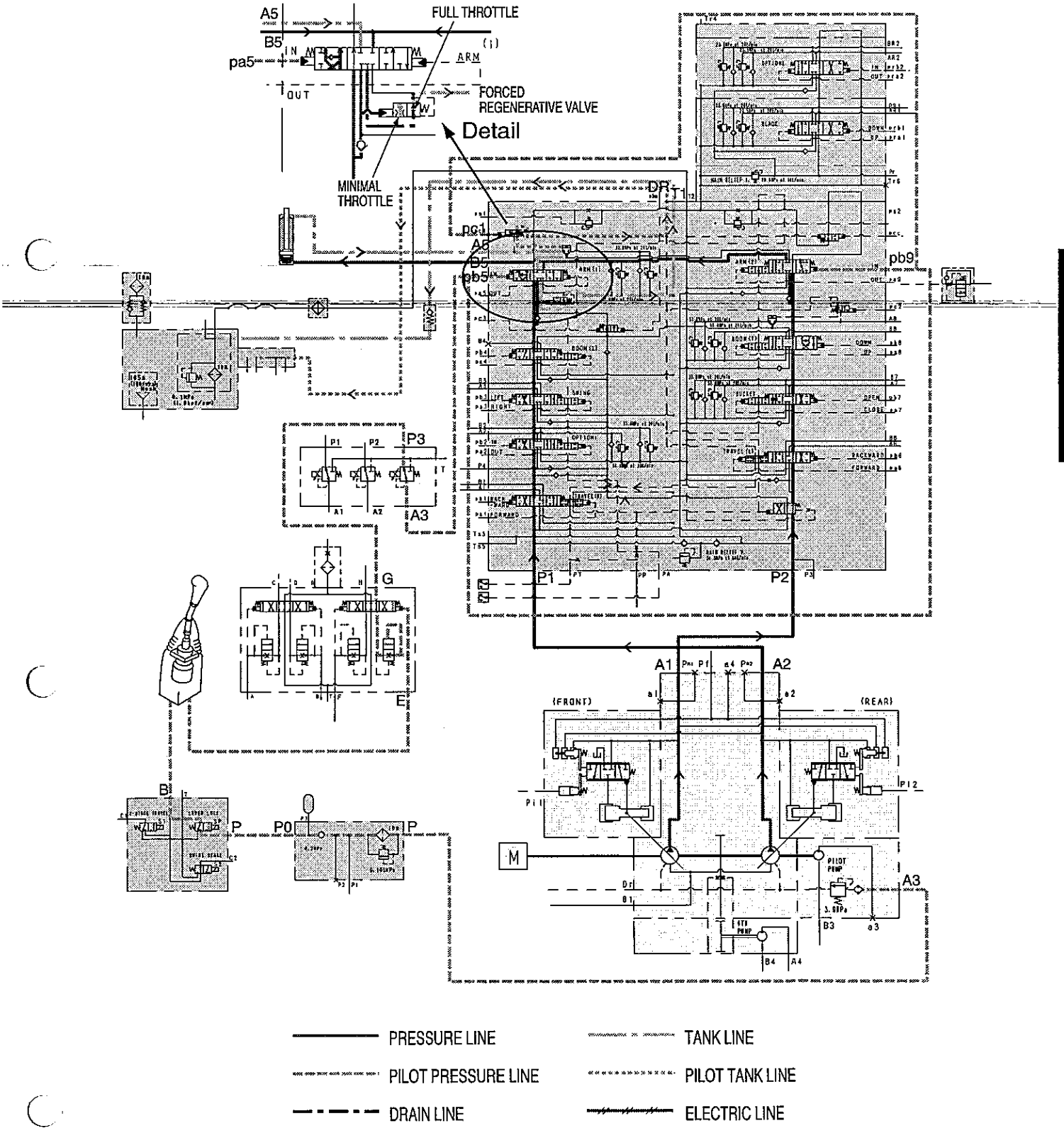

PRESSURE LINE

TANK LINE

PILOT PRESSURE LINE

PILOT TANK LINE

DRAIN LINE

ELECTRIC LINE

https://truckmanualshub.com/

Boom-Up 2-Speed Circuit

The discharged oil from A2 is supplied to the boom (2) spool through the parallel oil passage via the right travel spool or the straight travel valve, and merges at the downstream of the boom (1) spool.

The discharged oil from A1 merges with the discharged oil from boom (2) via the boom (1) spool through the parallel oil passage, and flows into the bottom side of the boom cylinder via the holding valve.

https://truckmanualshub.com/

Boom-Up 2-Speed Circuit

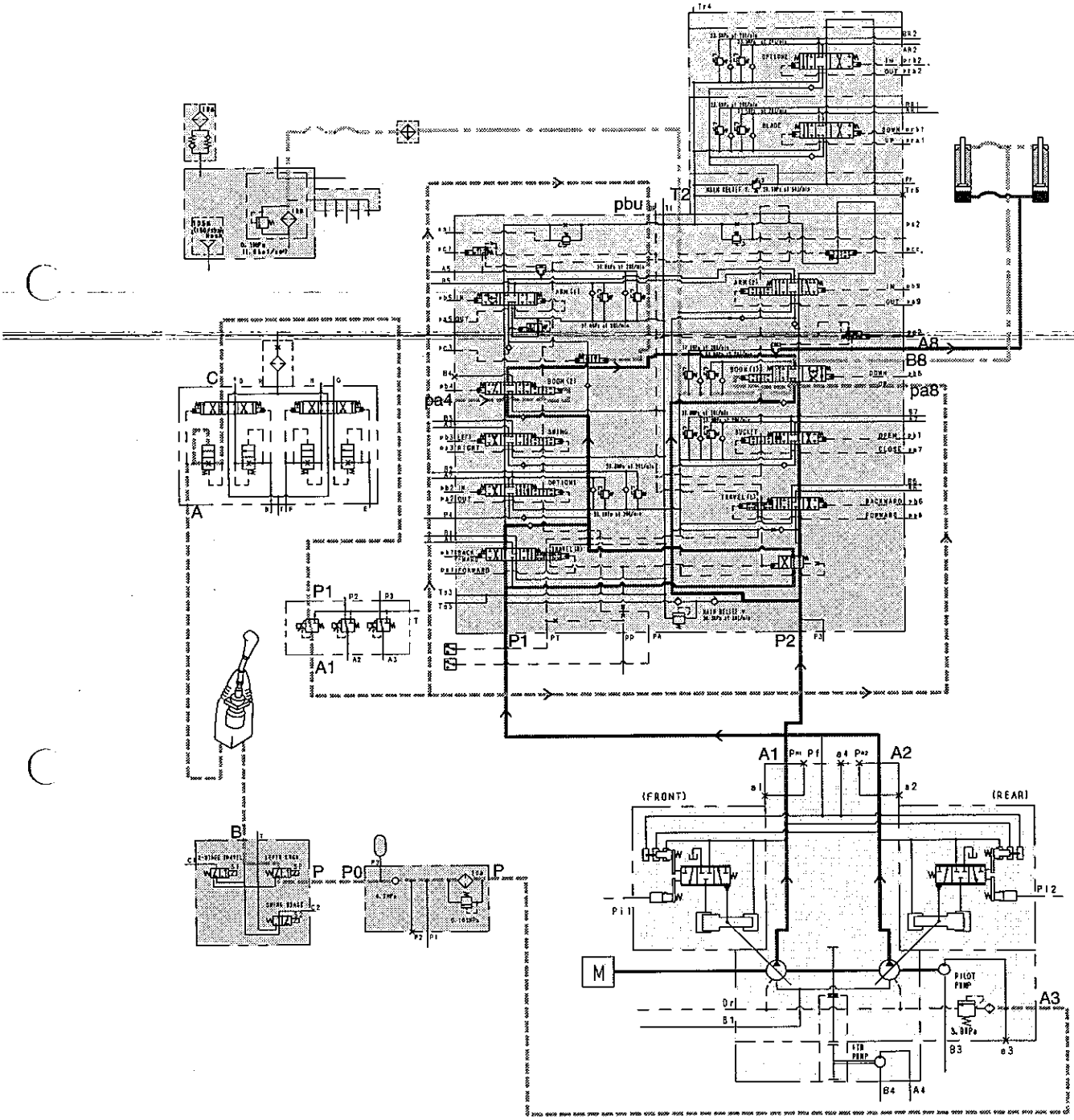

PRESSURE LINE

TANK LINE

PILOT PRESSURE LINE

PILOT TANK LINE

DRAIN LINE

ELECTRIC LINE

https://truckmanualshub.com/

Boom-Down Load Holding Valve Circuit

The boom-down pilot pressure goes into port Pb8 of the control valve and the main control valve spool moves to the left.

Also, the pilot pressure enters Port Pc2 and moves the load holding valve spool to the left. Through this movement, the oil in the spring chamber of the load holding valve check passes the load holding valve spool, creating a connection to the tank. As a result, the pressure on the spring chamber decreases and the load holding valve check is released.

The oil working as a side pressure at the boom cylinder bottom opens the load holding valve and returns to the tank line. As a result, the boom cylinder rod retracts and the boom is lowered.

Boom-Down Regenerative Circuit

With boom-down operation, pilot pressure is supplied at Pb8 and the boom spool moves to the left. At the same time, the pilot pressure from Pb8 opens the boom load holding valve and partially regenerates the discharged oil from the boom cylinder bottom to the rod side via the check in the spool. (The lower the load pressure on the cylinder rod side, the greater the regenerated volume will be.)

Even though the spool makes a full stroke, due to the bleed-oil passage of the central bypass, the negative control pressure will be generated to prevent the pump from discharging at full flow. Since the regeneration compensates for the pressure, the engine power is utilized efficiently.

Boom-Down Windage Prevention Circuit

Due to the bleed-oil passage to the central bypass, generation of high pressure is controlled. Windage will be defused even when a very quick boom-down takes place because the hydraulic oil has been bled.

https://truckmanualshub.com/

Boom-Down Load Holding Valve Circuit,Boom-Down Regenerative Circuit, Boom-Down Windage Prevention Circuit

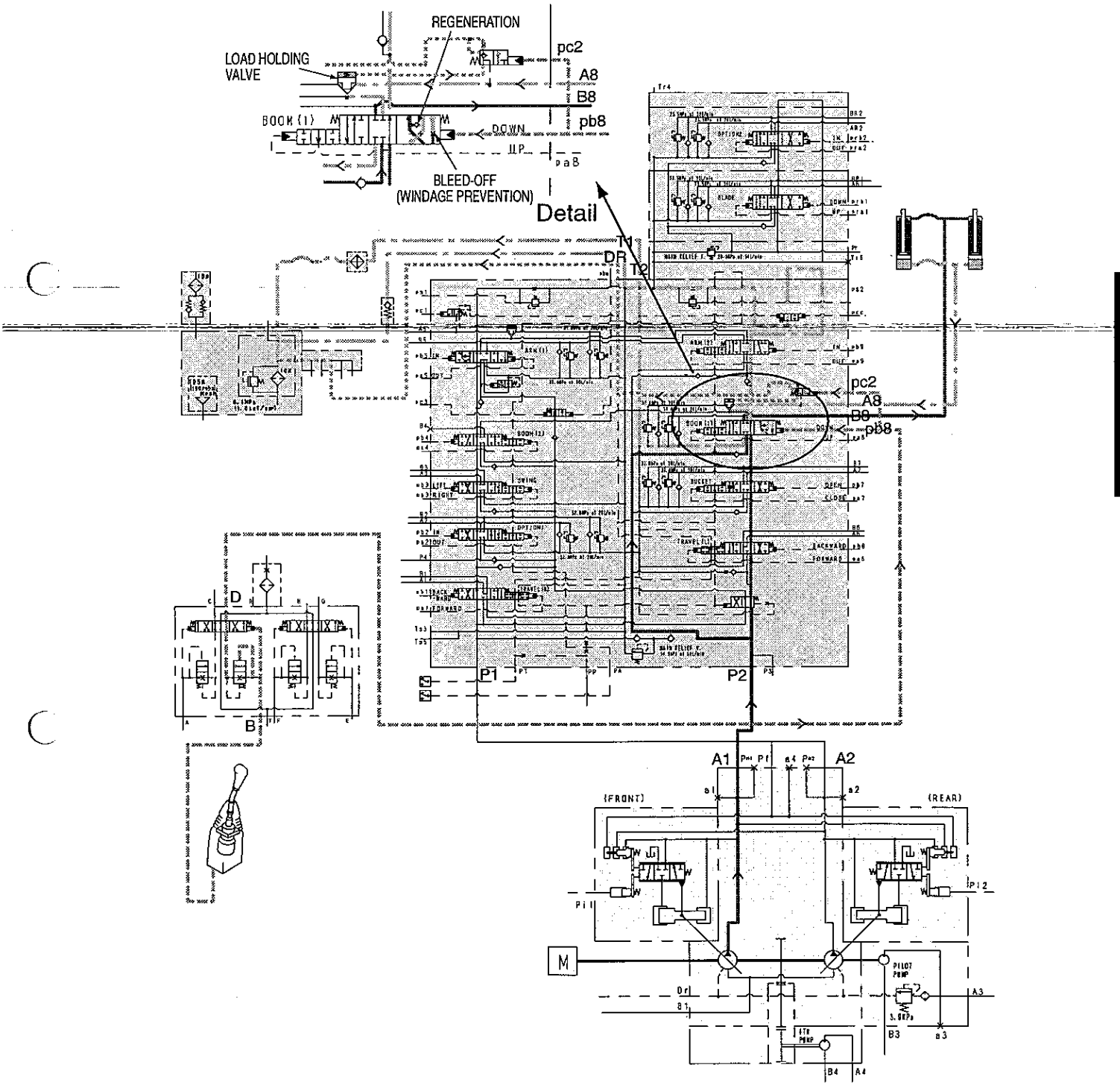

PRESSURE LINE

TANK LINE

PILOT PRESSURE LINE

PILOT TANK LINE

DRAIN LINE

ELECTRIC LINE

https://truckmanualshub.com/

Breaker and Crusher Circuit (2-Speed Confluence Crusher Circuit)

When the switch in the cab is turned to the crusher side, the solenoid valve is turned ON.

By stepping on the backup pedal, the pilot pressure from the remote control valve passes through the solenoid valve via the shuttle valve and enters Port P of the holding valve and Port Pb2 of the backup (2) spool.

The backup (2) spool moves to the right and shuts off the central bypass.

The pilot pressure from the solenoid valve acts on Port pcc of the confluence spool and moves the spool to the left to shut off the central bypass.

Thus, the oil in Port P2 flows into the holding valve through Port P3 in the control valve.

The holding valve acts on the holding valve release spool by communicating the pilot pressure from the solenoid valve to Port P. The valve thus returns the oil in the spring chamber to the tank, and also releases the check in the holding valve.

The hydraulic oil at Port P3 of the control valve enters Port P4, which is upstream of the control valve backup spool, via the holding valve check and merges with the hydraulic oil from P1.

https://truckmanualshub.com/

Breaker and Crusher Circuit (2-Speed Confluence Crusher Circuit)

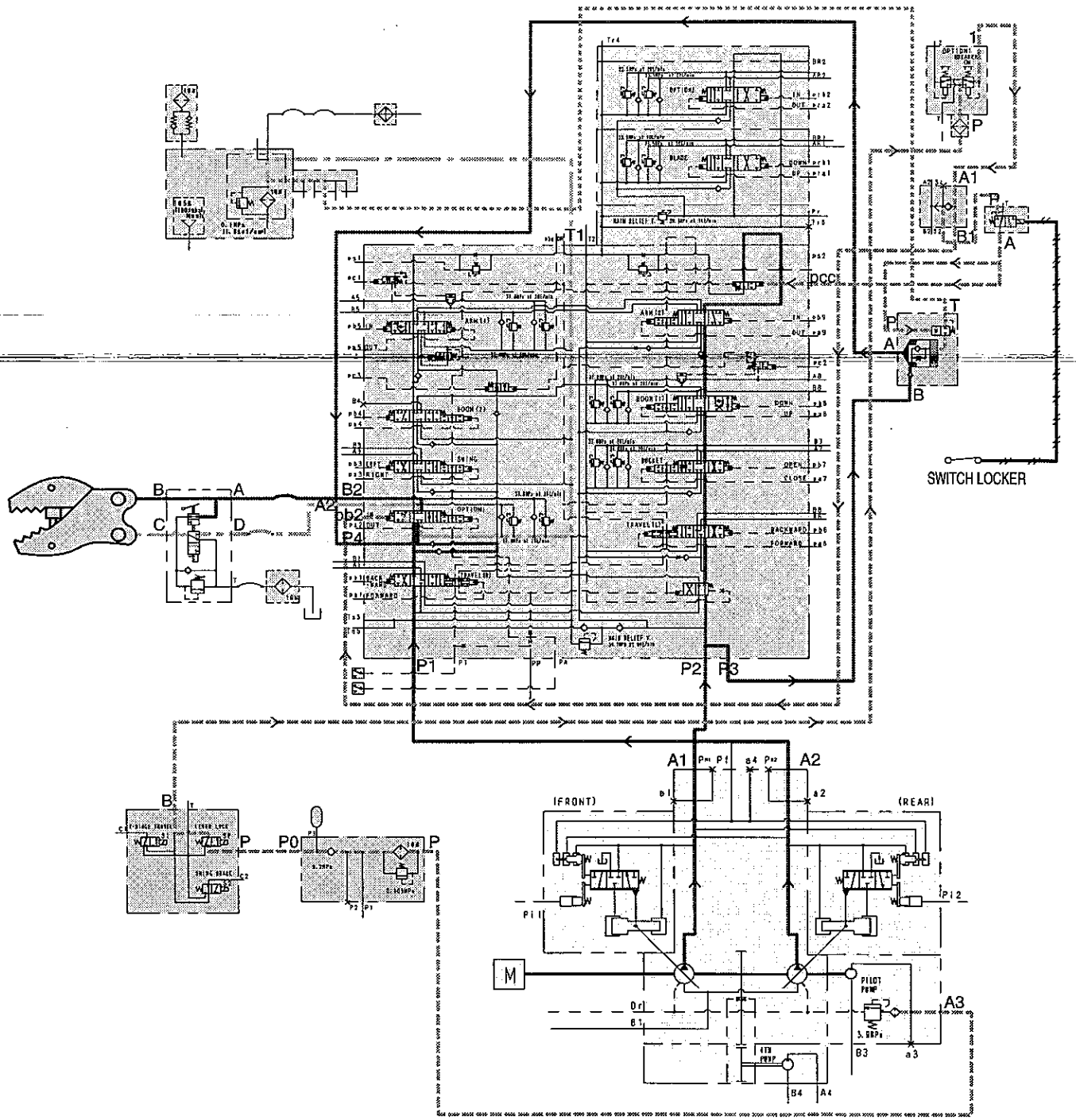

PRESSURE LINE

TANK LINE

PILOT PRESSURE LINE

PILOT TANK LINE

DRAIN LINE

ELECTRIC LINE

https://truckmanualshub.com/

Breaker and Crusher Circuit (Backup Line Holding Valve)

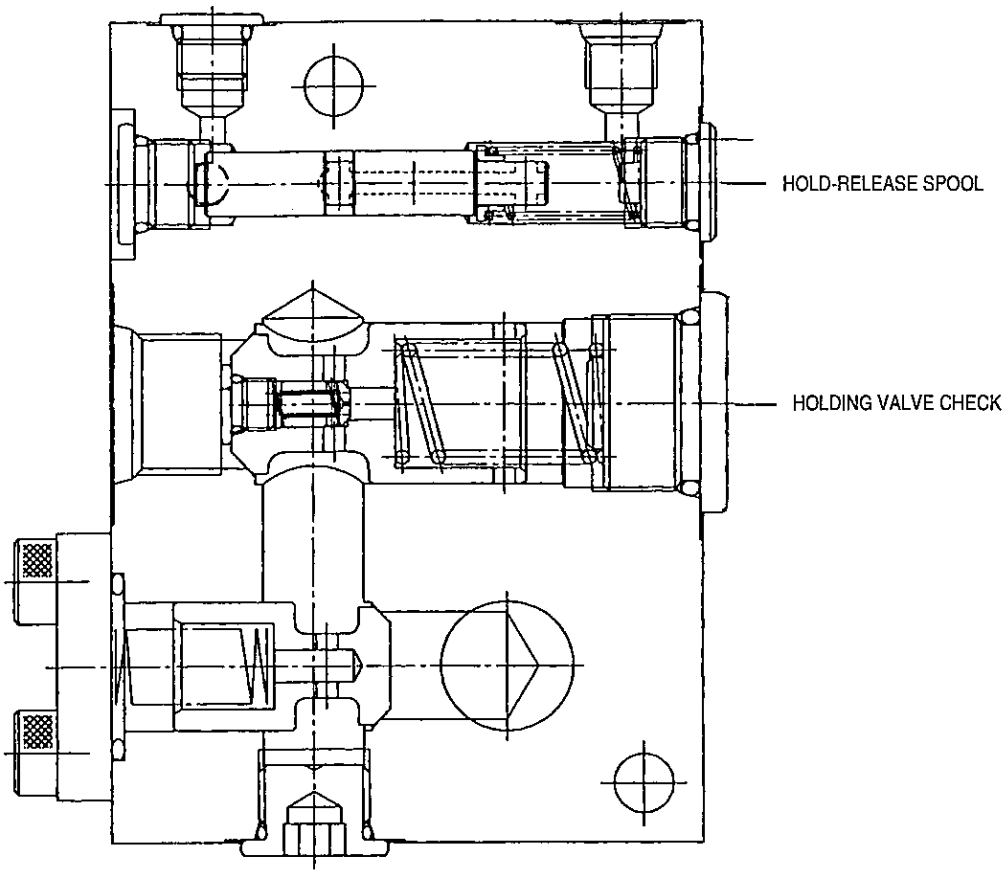

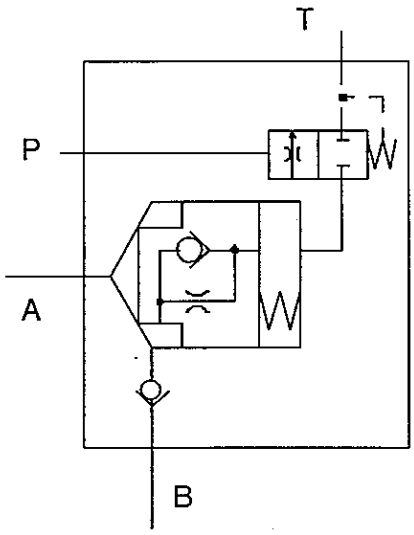

https://truckmanualshub.com/

Breaker and Crusher Circuit (Breaker Circuit)

When turning the switch in the cab to the breaker side and stepping on the pedal, the pilot pressure, which entered Pb2 in the control valve, switches over to the backup spool. As a result, the hydraulic oil from A2 is supplied to the breaker from the direction valve.

https://truckmanualshub.com/

Breaker and Crusher Circuit (Breaker Circuit)

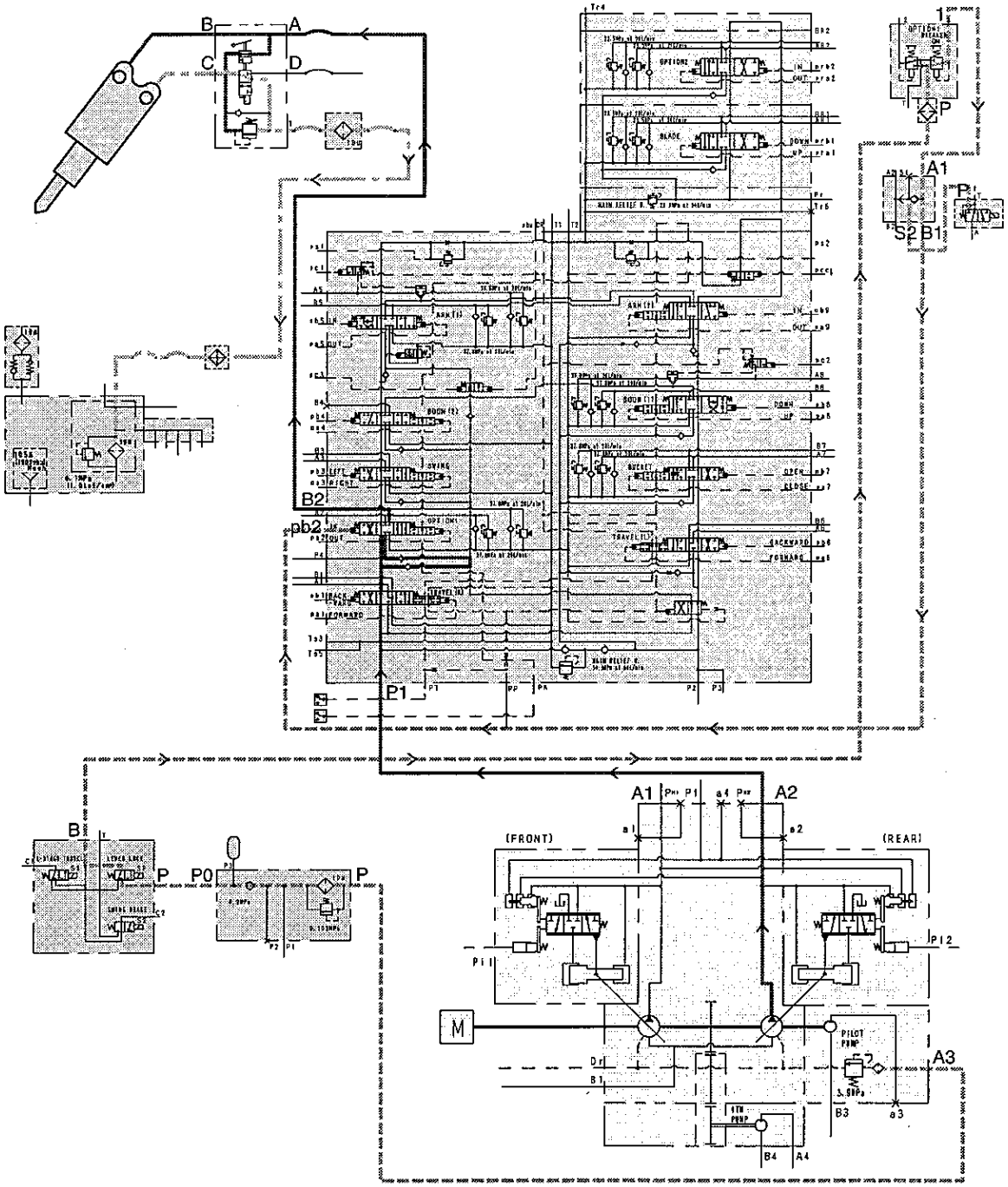

PRESSURE LINE

TANK LINE

PILOT PRESSURE LINE

PILOT TANK LINE

DRAIN LINE

ELECTRIC LINE

https://truckmanualshub.com/

Secondary Backup Reciprocating Circuit

The pilot hydraulic oil enters Port prb2 or Port pra2 by switch-over of the backup remote control valve, and the oil at the PR5 from the gear pump flows into the backup valve BR2 or Port AR2 via the parallel passage. The returning oil flows into the tank via Port AR2 or Port BR2.

For the secondary backup, drain lines are pre-installed to accommodate special attachments such as a rotating fork.

https://truckmanualshub.com/

Secondary Backup Reciprocating Circuit

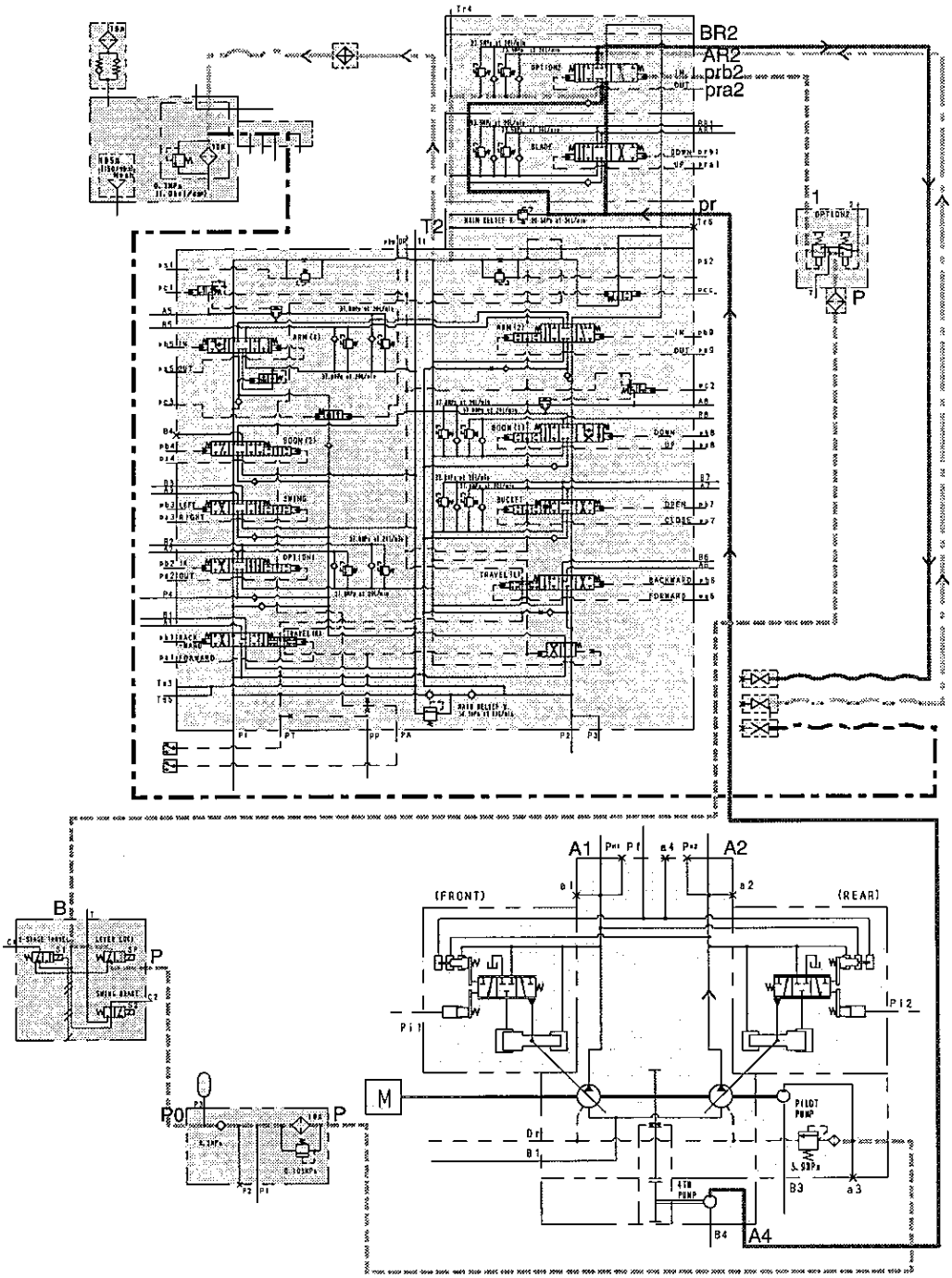

Hydraulic Circuits

HYDRAULIC CIRCUIT DIAGRAMS

2nd Edition: 09/2002

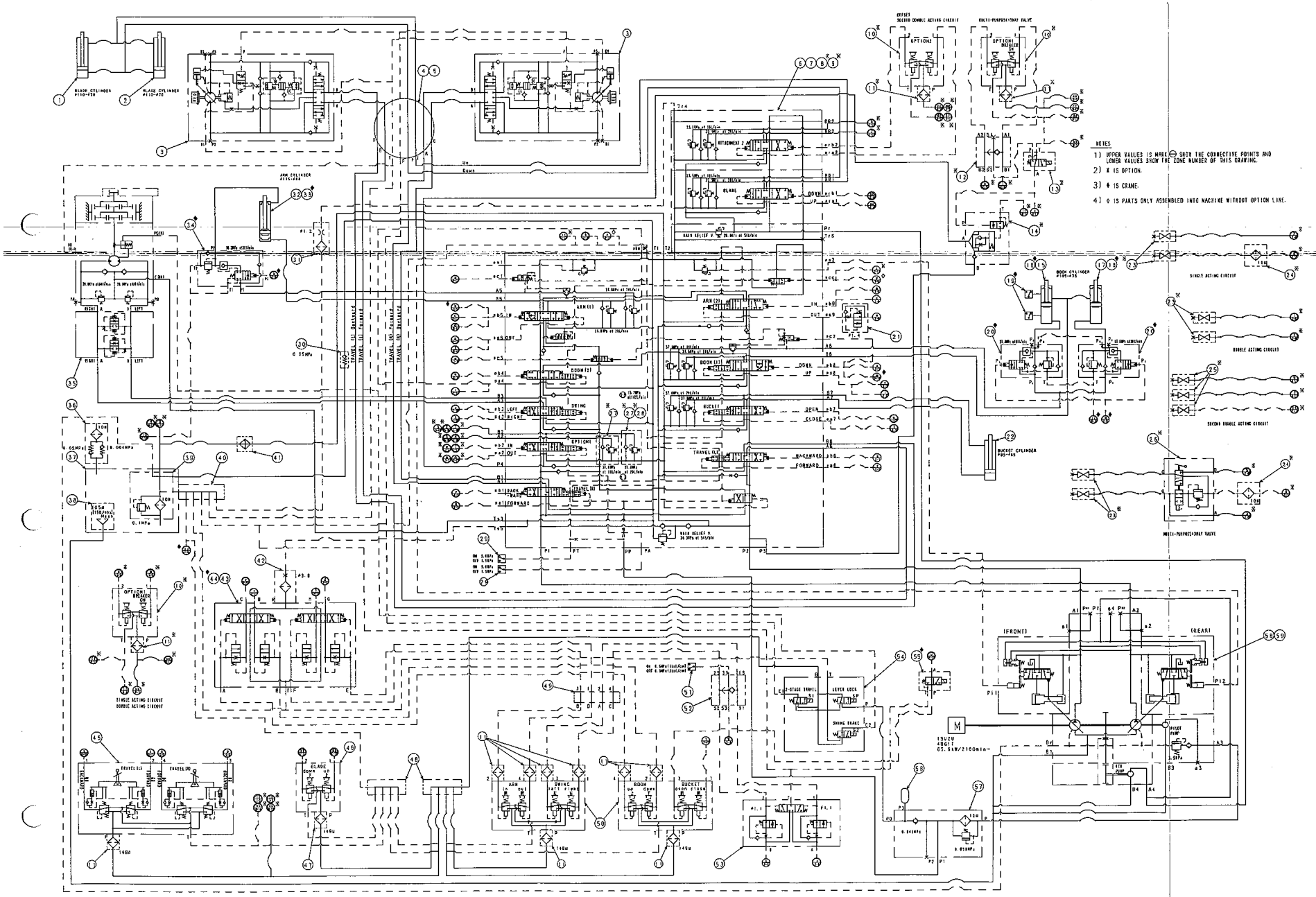

PART NAME	SYMBOL	QTY.
CYLINDER BLADE (L)	1	1
CYLINDER BLADE (R)	2	1
TRAVEL UNIT MOTOR	3	2
ROTATING JOINT	4	1
ROTATING JOINT	5	1
CONTROL VALVE	6	1
CONTROL VALVE	7	1
※ CONTROL VALVE	8	1
※ CONTROL VALVE	9	1
※ REMOTE CONTROL VALVE (OFFSET AND BACKUP)	10	3
※ HOSE ADAPTER (WITH FILTER)	11	12
※ SHUTTLE VALVE	12	1
※ SOLENOID VALVE	13	1
※ HOLDING VALVE	14	1
BOOM CYLINDER (EMS L)	15	1
◆ BOOM CYLINDER (EMS CRANE L)	16	1
BOOM CYLINDER (EMS R)	17	1
◆ BOOM CYLINDER (EMS CRANE R)	18	1
◆ PRESSURE SENSOR	19	2
◆ HOLDING VALVE	20	2
SHOCKLESS VALVE	21	1
※ CYLINDER BUCKET(EMS)	22	1
※ STOP VALVE	23	6
※ LINE FILTER	24	2
※ STOP VALVE	25	3
※ DIRECTION VALVE	26	1
※ PORT RELIEF VALVE	27	2
※ PORT RELIEF VALVE	28	1
PRESSURE SWITCH	29	2
CHECK VALVE	30	1
NEPHRON CASE	31	1
CYLINDER ARM(EMS)	32	1
◆ CYLINDER ARM(EMS CRANE)	33	1
◆ HOLEDING VALVE	34	1
SWING MOTOR	35	1
AIR BREATHER	36	1
SUMP TANK	37	1
STRAINER	38	1
RETURN FILTER	39	2
HOSE ADAPTER	40	1
RADIATOR	41	2
HOSE ADAPTER	42	1
CUSHION VALVE(HEATING CIRCUIT)	43	1
◆ CUSHION VALVE(HEATING CIRCUIT)	44	1
REMOTE CONTROL VALVE	45	1
REMOTE CONTROL VALVE	46	1
HOSE ADAPTER	47	1
HOSE ADAPTER	48	2
SELECTOR VALVE	49	1
REMOTE CONTROL VALVE	50	2
PRESSURE SWITCH	51	1
SHUTTLE VALVE	52	1
CUSION VALVE	53	1
SOLENOID VALVE	54	1
◆ SOLENOID VALVE	55	1
ACCUMULATOR	56	1
MANIFOLD(WITH FILTER)	57	1
HYDRAULIC PUMP	58	1
HYDRAULIC PUMP	59	1

https://truckmanualshub.com/

https://truckmanualshub.com/

https://truckmanualshub.com/

SH125/135X-3

(Emission Control Regulation Compliant Machine)

SERVICE TEXT

Electric Circuits Section

SUMITOMO (S.H.I.) CONSTRUCTION MACHINERY MANUFACTURING CO., LTD.

https://truckmanualshub.com/

https://truckmanualshub.com/

Table of Contents

2nd Edition: 09/2002

Electric Circuits Section

Operational Description **125-1-04-01-10**

Monitor Display 1/25

List of Functions 2/25

1. Engine Control 3/25

1-1. Engine start-up Control 3/25

1-2. Throttle control 6/25

1-3. One-touch idling 7/25

2. Monitor Output Control 8/25

2-1. 2-speed travel 8/25

2-2. Swing brake 9/25

2-3. Travel alarm 10/25

2-4. Working light 11/25

2-5. Windshield wiper / washer 12/25

2-6. Power cut delay 14/25

3. Monitor Display Control 15/25

3-1. Overheat warning 15/25

3-2. Engine oil pressure warning 16/25

3-3. Low fuel warning 17/25

3-4. Battery charge warning 18/25

3-5. Auto preheat 19/25

3-6. Idle up 22/25

3-7. Faulty electrical system at engine 23/25

https://truckmanualshub.com/

Table of Contents

Electric Circuit Diagrams **125-1-07-01-10**
Electric Circuit Diagram 1 ..... 1/9
Electric Circuit Diagram 2 ..... 2/9
Electric Circuit Diagram 3 ..... 3/9
Electric Circuit Diagram 4 ..... 4/9
Electric Circuit Diagram 5 ..... 5/9
Electric Circuit Diagram 6 ..... 6/9
Electric Circuit Diagram: Air Conditioner 1 ..... 7/9
Electric Circuit Diagram: Air Conditioner 2 ..... 8/9
Electric Circuit Diagram (A3 version) 9/9
Wiring Diagrams **125-1-04-07-09**
Electrical Components and Wiring for Upper Frame 1/2
Electrical Components and Wiring for Cab 2/2
Harness Diagrams **125-1-04-08-09**
Upper Frame 1/3
Inside Cab 2/3
Assembly Drawings
Air Conditioner **125-1-04-09-04**
Inside Cab 1/2
Inside Frame 2/2

https://truckmanualshub.com/

Monitor Display

Monitor switch panel

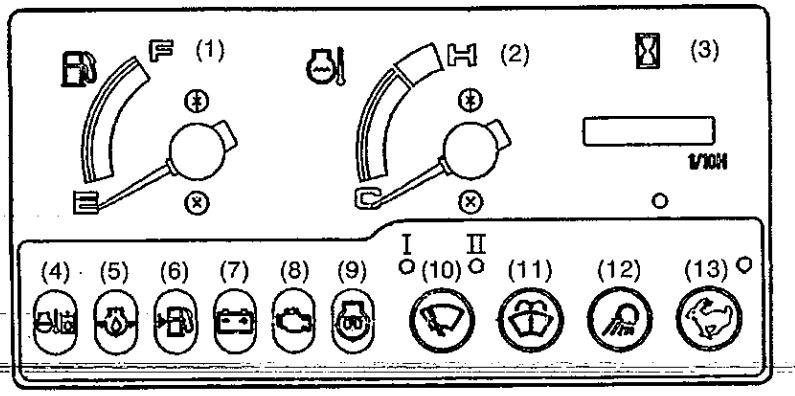

1. FUEL GAUGE
2. COOLANT TEMPERATURE GAUGE
3. HOUR METER
4. OVERHEAT
5. ABNORMAL ENGINE OIL PRESSURE
6. LOW FUEL
7. BATTERY CHARGE ERROR
8. FAULTY ELECTRICAL SYSTEM AT ENGINE
9. GLOW (PREHEAT) INDICATOR
10. WIPER SWITCH
11. WASHER SWITCH
12. WORKING LIGHT SWITCH
13. HIGH SPEED TRAVEL SWITCH

https://truckmanualshub.com/

List of Functions

(O: Standard, OPT: Optional, —: Not provided)

	Functions			SH125/135X-3 Single boom 24V	Remarks
1	Engine control	1.1	Engine start-up control	O	See Page 3/25
		1.2	Throttle control	O	See Page 6/25
		1.3	One-touch idling	O	See Page 7/25
2	Monitor Output control	2.1	2-speed travel	O	See Page 8/25
		2.2	Swing brake	O	See Page 9/25
		2.3	Travel alarm	O	See Page 10/25
		2.4	Working light	O	See Page 11/25
		2.5	Windshield wiper/ washer	O	See Page 12/25
		2.6	Power cut delay	O	See Page 14/25
3	Monitor Display control	3.1	Overheat warning	O	See Page 15/25
		3.2	Engine oil pressure warning	O	See Page 16/25
		3.3	Low fuel warning	O	See Page 17/25
		3.4	Battery charge warning	O	See Page 18/25
		3.5	Auto preheat	O	See Page 19/25
		3.6	Idle up	O	See Page 22/25
		3.7	Faulty electrical system at engine	O	See Page 23/25
		3.8	Hour meter	O	
	Gate lock			O	
	Horn			O	
	Radio		AM/FM	O	
	Interior light			O	
5	Air Conditioner			O	See Air conditioner.
6	Combined Line for Brake and Crusher			OPT	See Hydraulic circuits.

https://truckmanualshub.com/

1. Engine Control

1-1. Engine start-up control

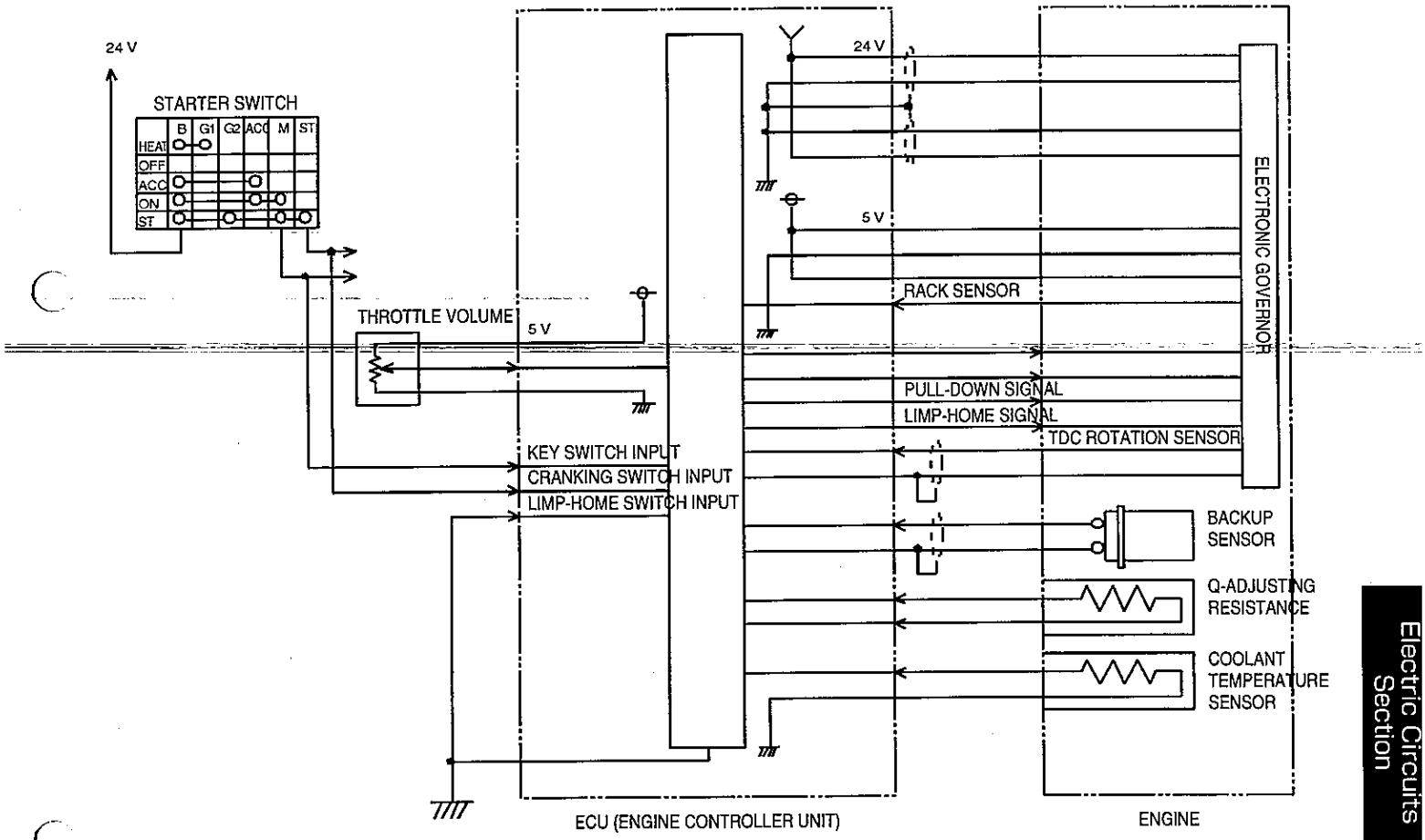

https://truckmanualshub.com/

1. Fuel flow control
   a. ECU (Engine Controller Unit) determines the target number of revolutions based on the throttle volume signals, the coolant temperature sensor signals and ECU power voltage input signals.
   b. ECU determines the required amount of rack movement based on the difference between the target number of revolutions and the actual number of revolutions (detected by TDC and backup sensors).
   c. At this time, the maximum rack movement is regulated by the Q-adjusting resistance.
   d. ECU outputs the determined target rack position to the electronic governor.
   e. The electronic governor performs computations based on the amount of rack movement signaled from ECU and the actual rack position signaled from the governor's built-in rack sensor. The governor moves the DC motor according to the computational results to regulate the rack position (i.e. the fuel flow).

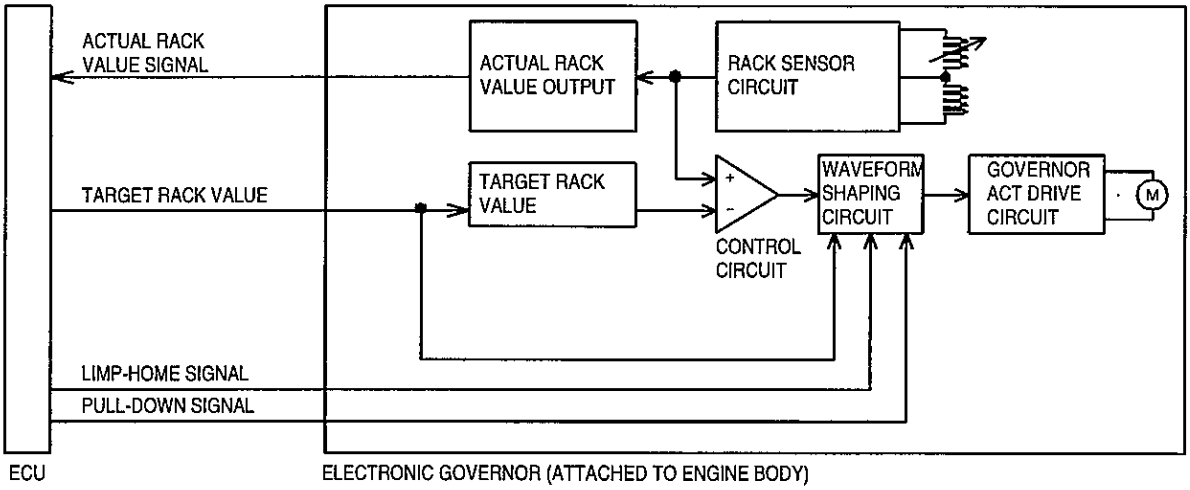

2. Engine control at start-up
   a. By positioning the starter switch to cranking, the starter motor turns ON and the cranking signal is input to ECU at the same time.
   b. When the cranking signal is ON, ECU determines the start-up fuel injection volume based on data on the coolant temperature and the actual number of engine revolutions.
   c. ECU conducts normal injection flow control upon completion of engine start-up routines.
3. Engine control at shut-off
   a. Upon recognizing that the KEY switch is turned OFF, ECU turns the pull-down signal ON (=GND). It also outputs a rack position signal for no injection to the governor.
   b. When the pull-down signal turns ON, the governor unconditionally moves the rack to the no injection position via drive circuit.
   c. The engine is normally shut off according to the pull-down signals. In the event that the pull-down signal line has a break, the rack is moved to the no injection position by the rack target position signal, and the engine will also be stopped.
4. Governor servo error and limp-home
   a. Signals from the rack sensor in the governor are also input to ECU.
   b. ECU compares the target position that is signaled out to the governor and the actual rack position that is signaled from the rack sensor. The controller determines from the result if the rack is positioned properly.
   c. If the ECU determines that the rack is not positioned where targeted, it recognizes this as a governor servo error and stops the engine.

https://truckmanualshub.com/

d. If the limp-home switch is ON (= GND) during governor servo error, the engine will run in limp-home mode (the engine will not start when the limp-home switch is off). Since this model is designed to have the limp-home switch connected to GND (ON) constantly, the engine will automatically start in limp-home mode when it is restarted following a governor servo error. This happens even when the key switch is not turned off after the engine shut-off.

e. In limp-home mode, rack position is regulated solely through the engine rpm that is attained from engine rotational sensors (TDC and backup). No control takes place with regard to the actual position of rack.

https://truckmanualshub.com/

1-2. Throttle control

1. Circuit Configuration

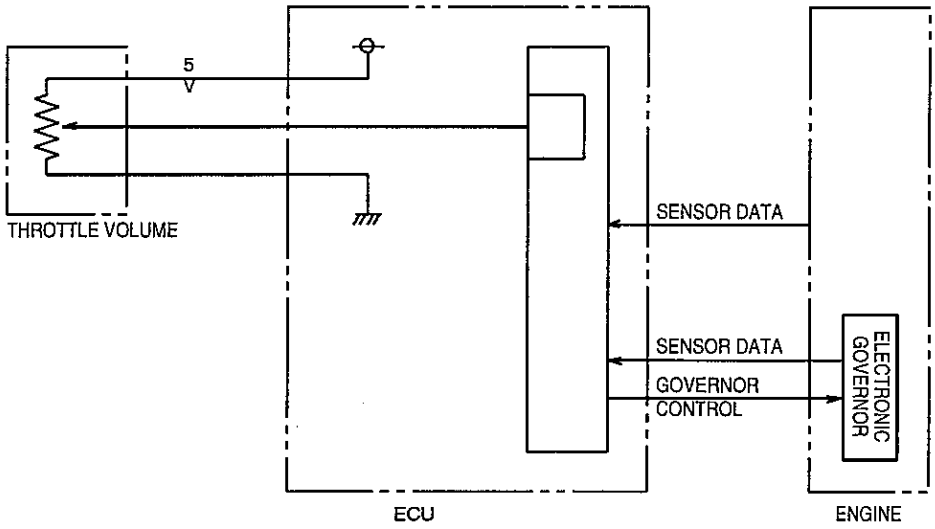

2. Operation

a. The target number of revolutions is determined based on the throttle volume signals input to ECU.

b. ECU calculates the amount of rack movement based on the determined value of target revolutions and data from each sensor (actual number of engine revolutions, actual position of rack, Q-adjusting resistance). The engine controller then transmits the signal to the electronic governor.

c. The electronic governor performs computations based on the amount of rack movement that was signaled and the actual position of rack (the reading of governor's built-in rack sensor). The governor then activates the DC motor and moves the rack to adjust the fuel injection level.

d. ECU repeats the processes above to regulate the electronic governor until the adjustment is complete and the actual number of revolutions equals the target number of revolutions.

Throttle volume versus target number of engine revolutions

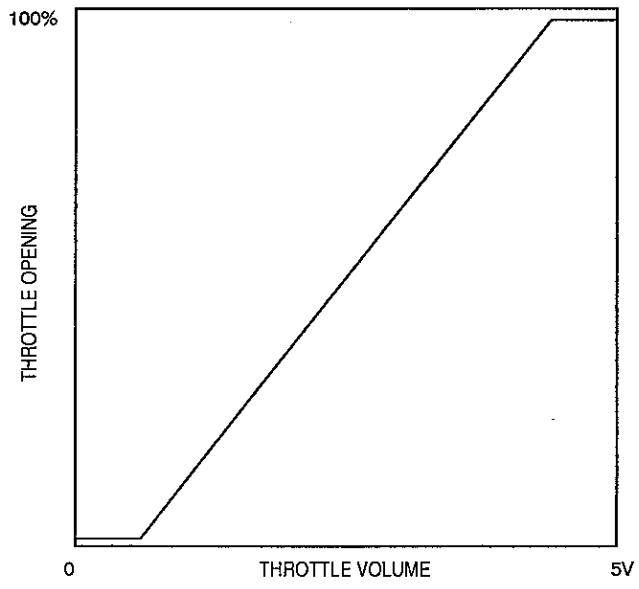

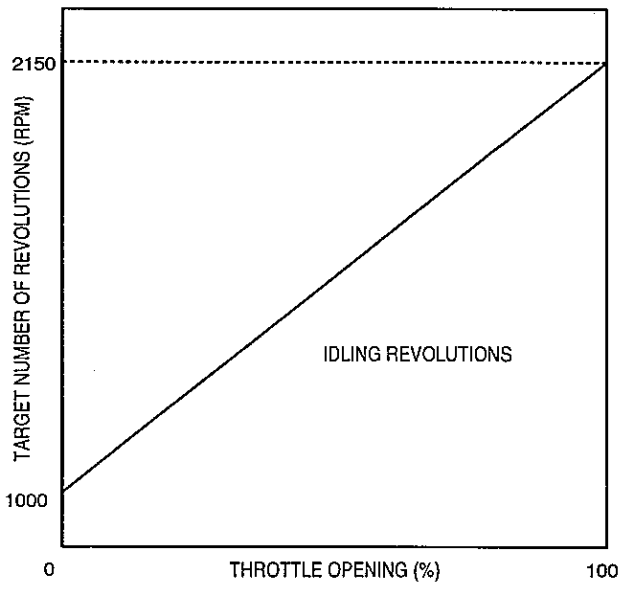

https://truckmanualshub.com/

1-3. One-touch idling

1. Circuit Configuration

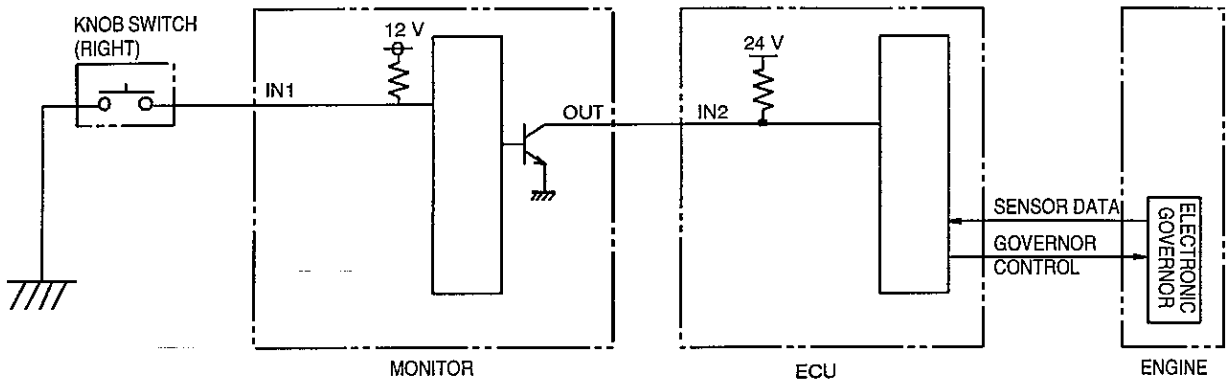

2. Time chart

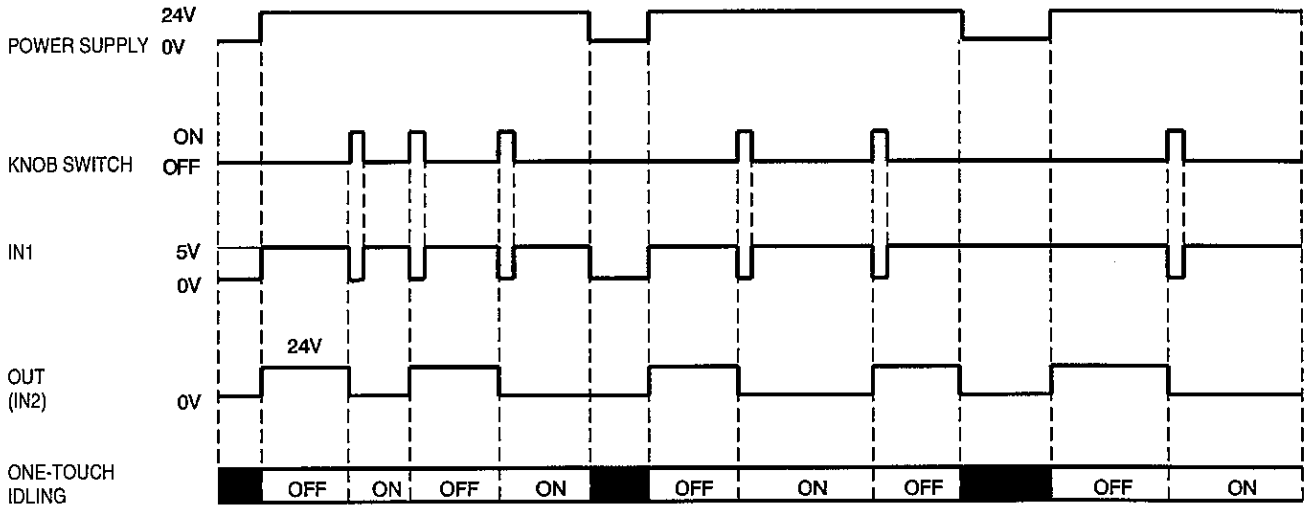

3. Switch-over of One-touch idling (idling at 1000 rpm)

a. If the key switch is turned OFF while one-touch idling is ON, it will be OFF when the key switch is turned ON again. (The previous data will be reset.)

b. Each time the knob switch is pressed, the one-touch idling is switched alternately as ON → OFF → ON → OFF and so on.

Note: The idling number of revolutions is maintained even when the crane mode is applied during one-touch idling.

https://truckmanualshub.com/

2. Monitor Output Control

2-1. 2-Speed travel

1. Configuration

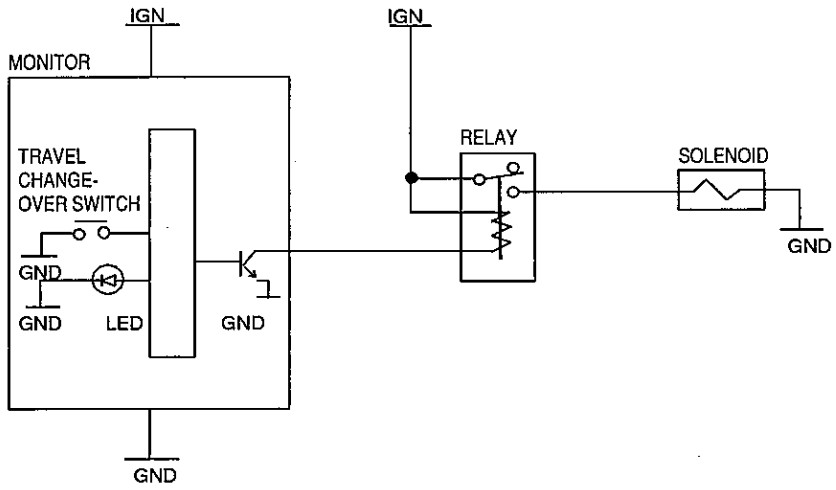

2. Operation

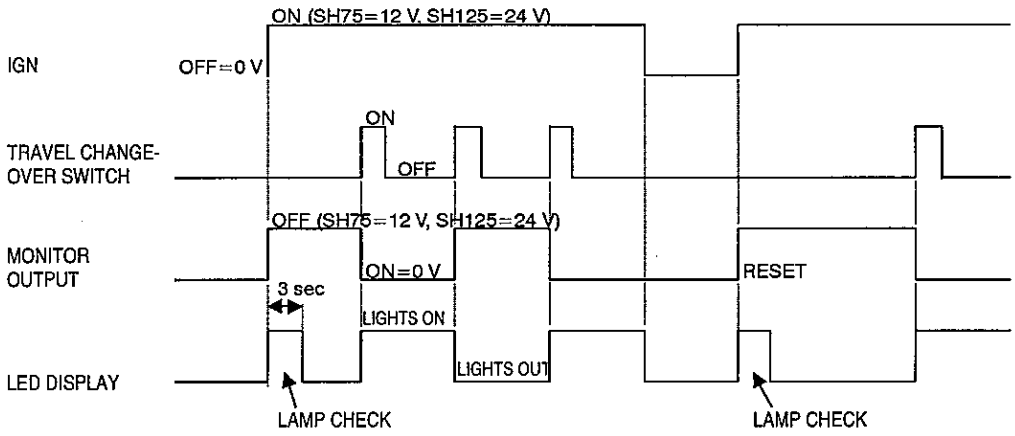

- If the key switch is turned ON again after it was turned OFF, the low travel speed is always selected.

https://truckmanualshub.com/

2-2. Swing brake

1. Configuration

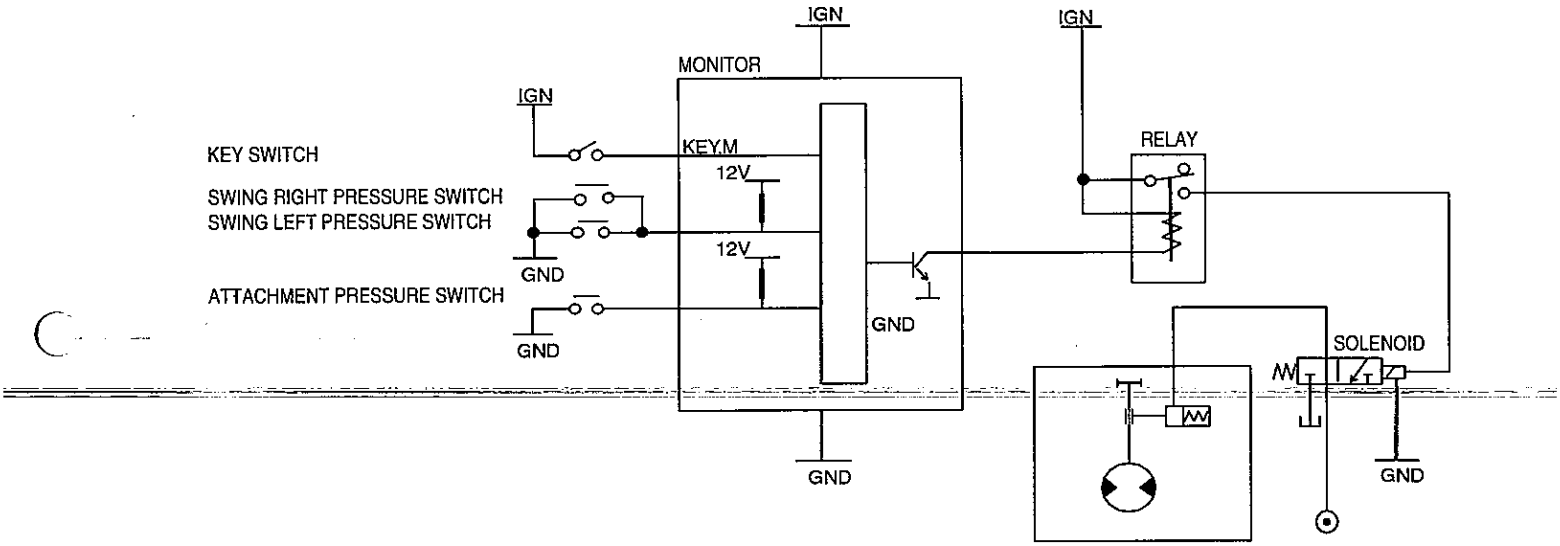

2. Operation

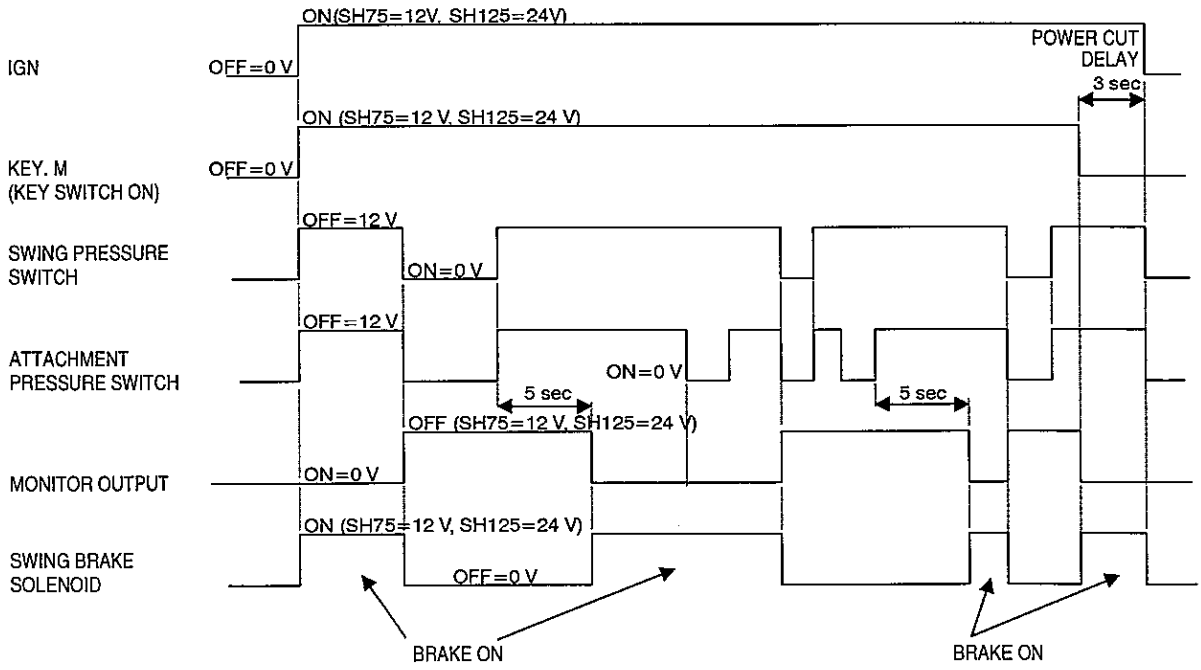

- The brake will go ON 5 seconds after the attachment switch is turned OFF.
- The brake will go ON 3 seconds after the power cut delay.

https://truckmanualshub.com/

2-3. Travel alarm

1. Configuration

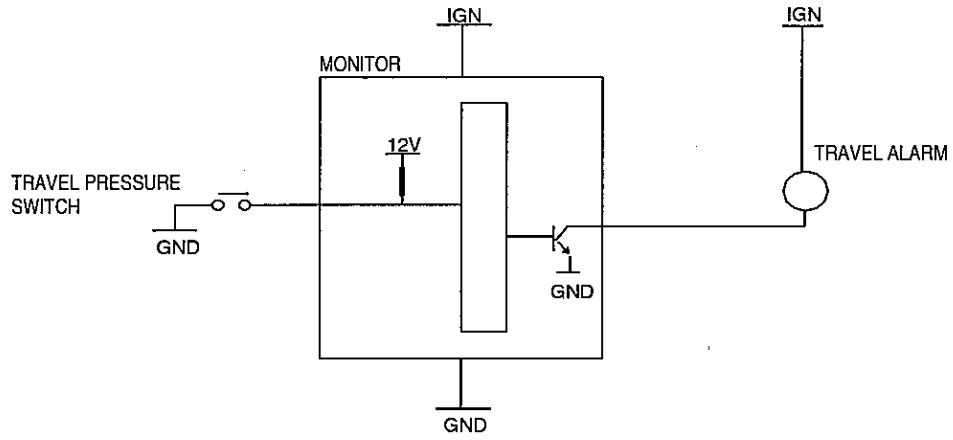

2. Operation

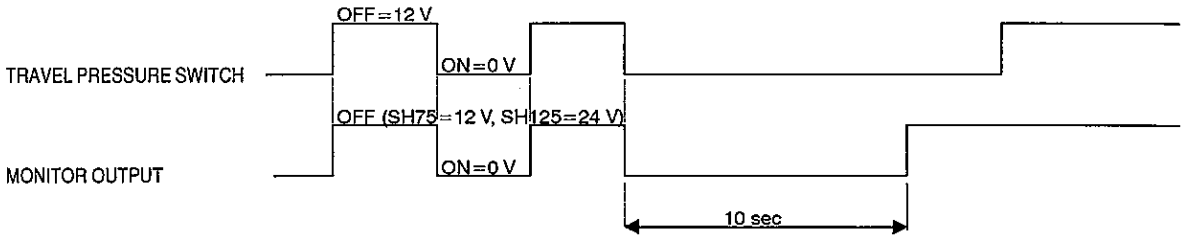

- The travel pressure switch will also be turned ON through steering/pivot turn operations, thus activating the alarm.

https://truckmanualshub.com/

2-4. Working light

1. Configuration

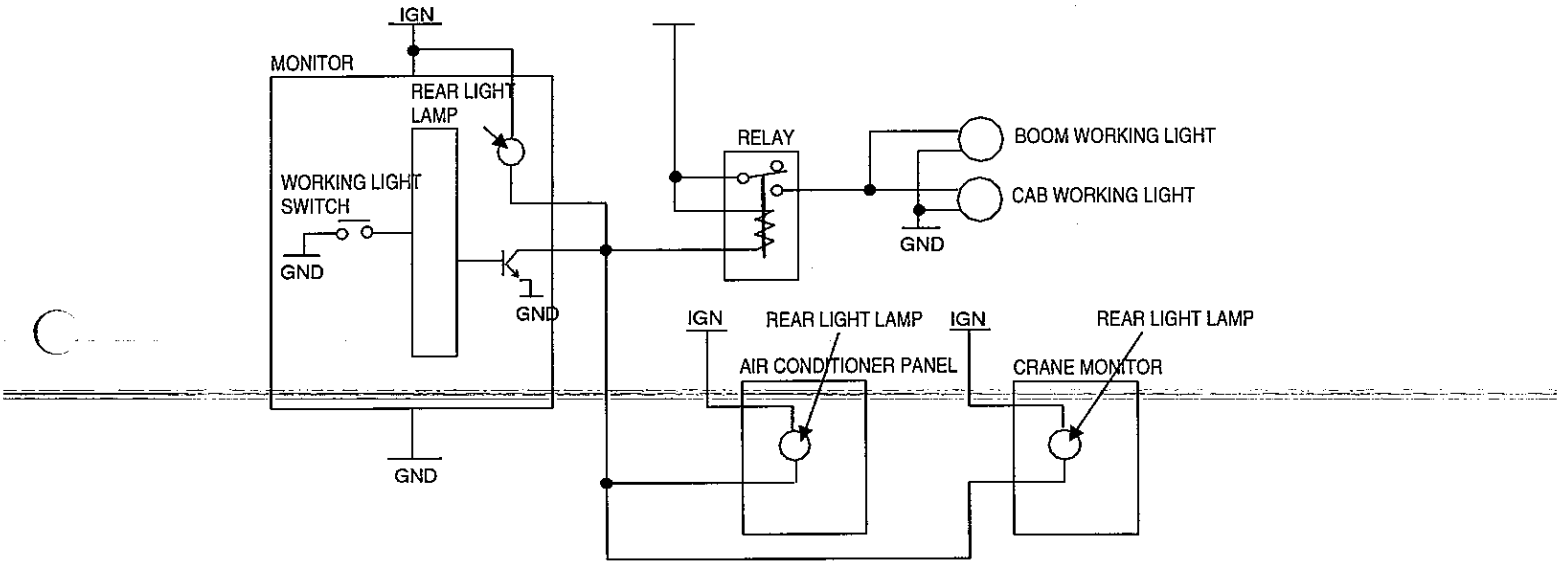

2. Operation

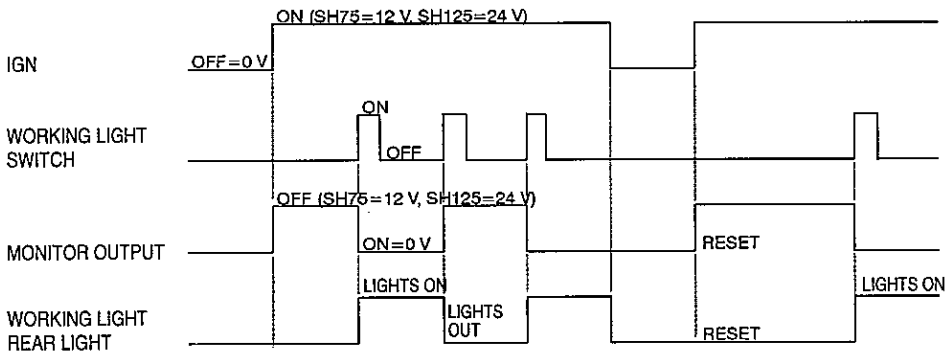

- If the key switch is turned ON again after it was turned OFF, the working lights and the rear lights will be reset.

https://truckmanualshub.com/

2-5. Windshield wiper / washer

1. Configuration

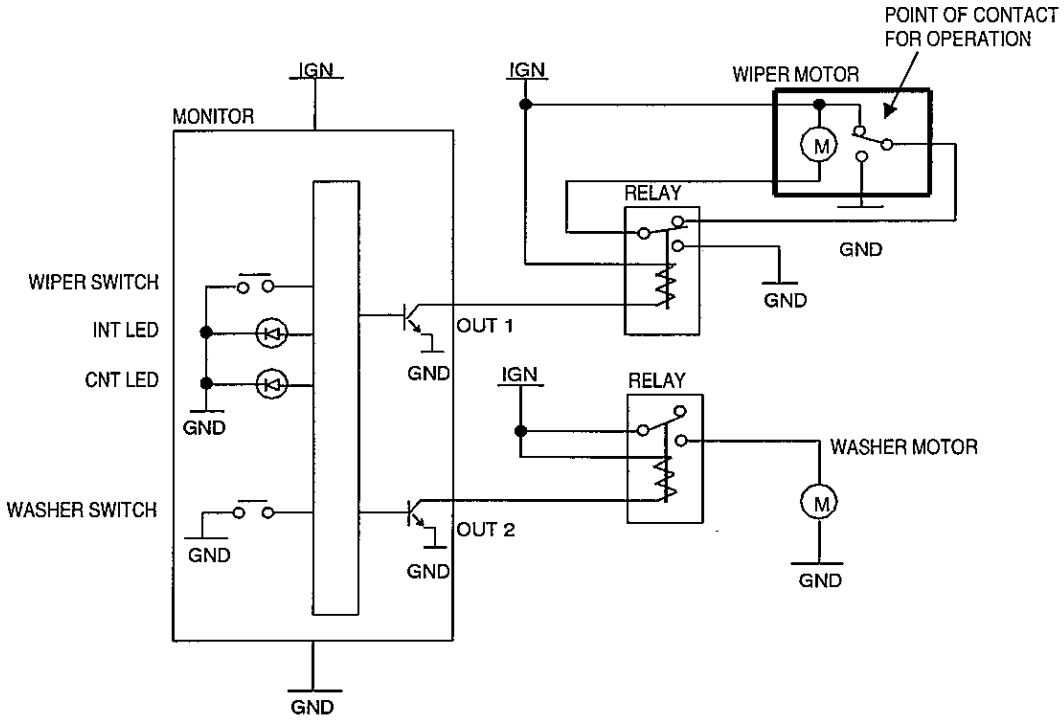

2. Operation

a. Wiper

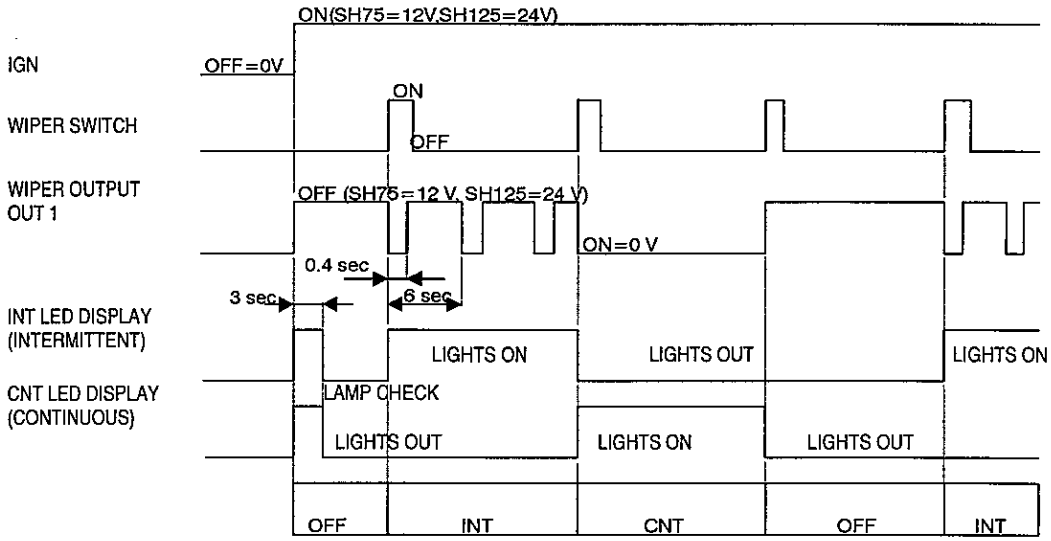

https://truckmanualshub.com/

b. Windshield wiper / washer

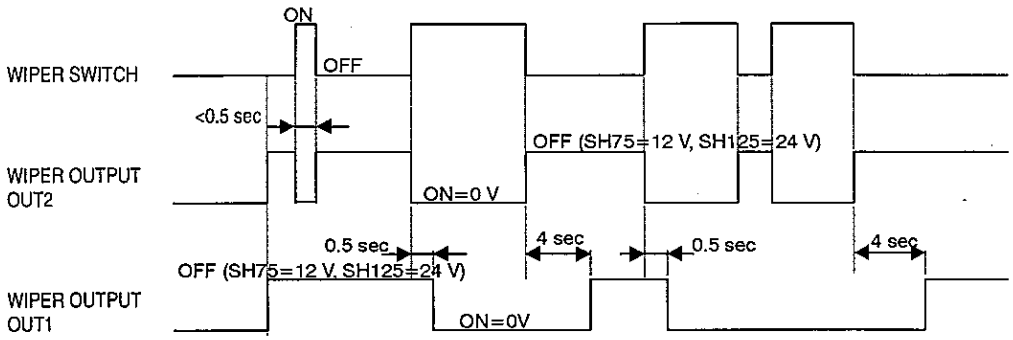

- The LED for intermittent/continuous movements will not be turned ON when the windshield washer switch is turned ON.

https://truckmanualshub.com/

2-6. Power cut delay

1. Configuration

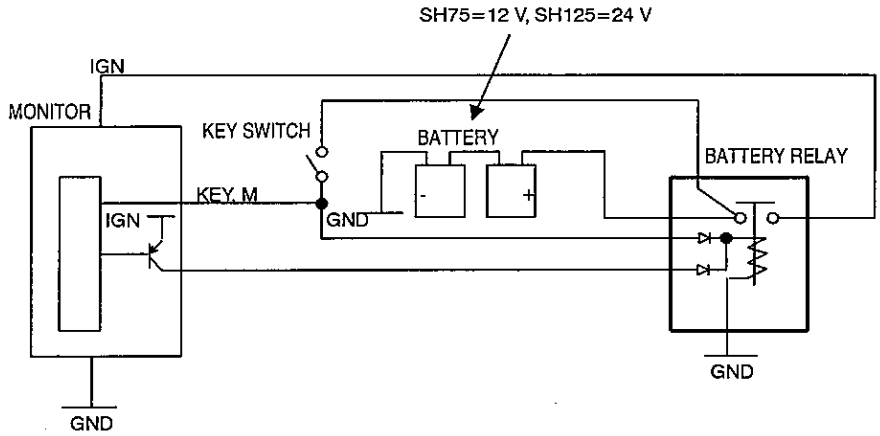

2. Operation

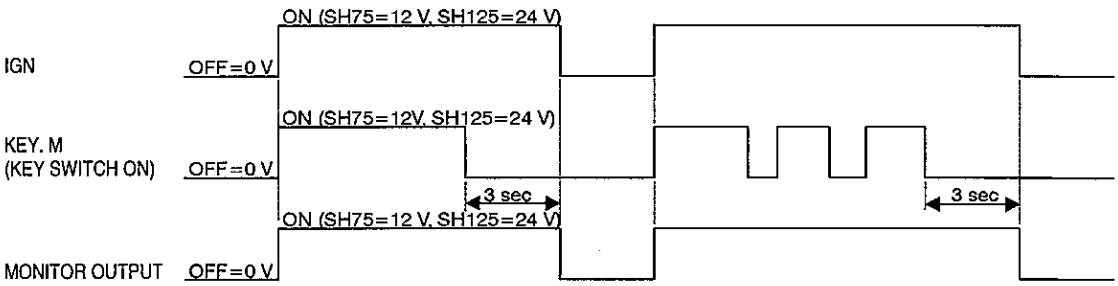

- Due to the overcurrent protection circuit provided in the monitor output, the monitor will not be damaged in the event that a short circuit occurs in the harness or in the battery relay coil.

https://truckmanualshub.com/

3. Monitor Display Control

3-1. Overheat warning

1. Configuration

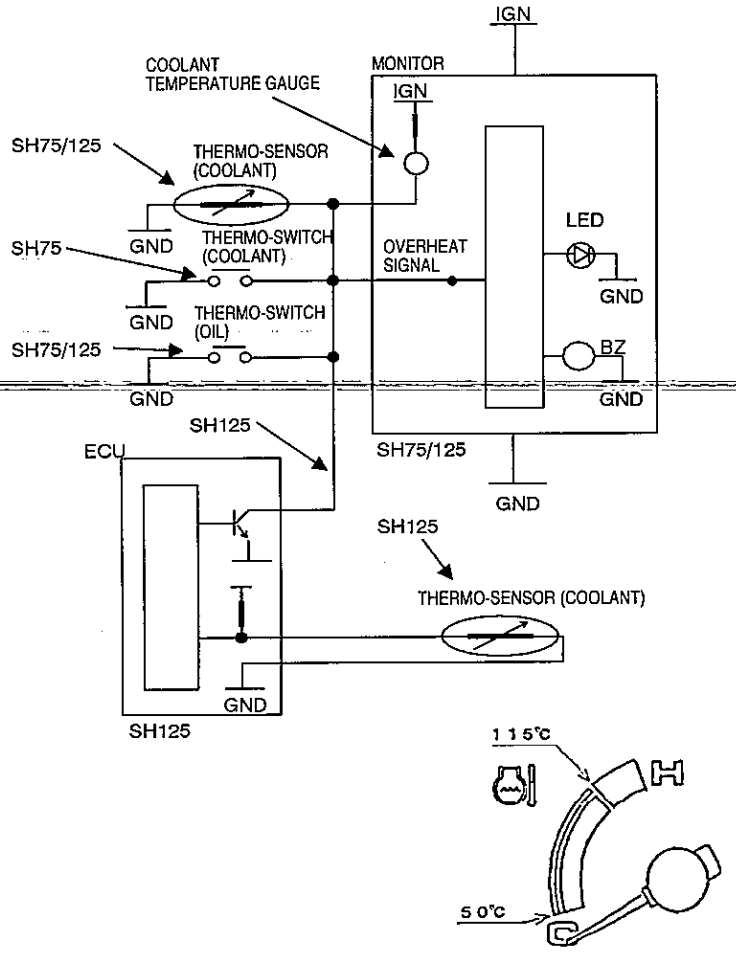

Thermo-sensor specifications for analog meters

Temperature(°C)	50	95	115
Resistance (Ω)	153.9	32.3	18.4

Thermo-switch (oil) specifications

Switch ON (°C)	98
Switch OFF (°C)	91

ECU thermo-sensor specifications for overheat signals

Temperature(°C)	20	80	105
Resistance (Ω)	6004	8949	4731

ECU thermo-sensor overheat signal specifications

Output ON (°C)	105
Output OFF (°C)	92

2. Operation

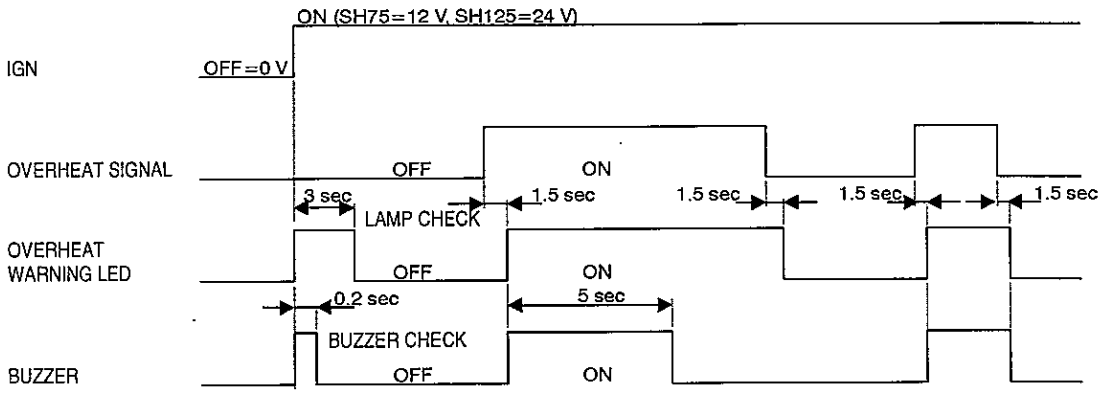

- When the overheat signal falls 1V or below, the monitor recognizes this as the switch being ON and turns the LED on. Therefore, even when the signal line is removed, the LED will still be turned ON.

https://truckmanualshub.com/

3-2. Engine oil pressure warning

1. Configuration

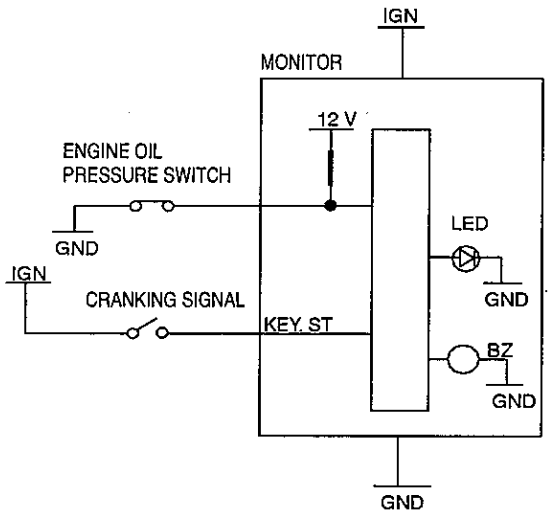

Pressure switch

SH125X-3	0.04MPa or less (0.4 kgf/cm^2)

2. Operation

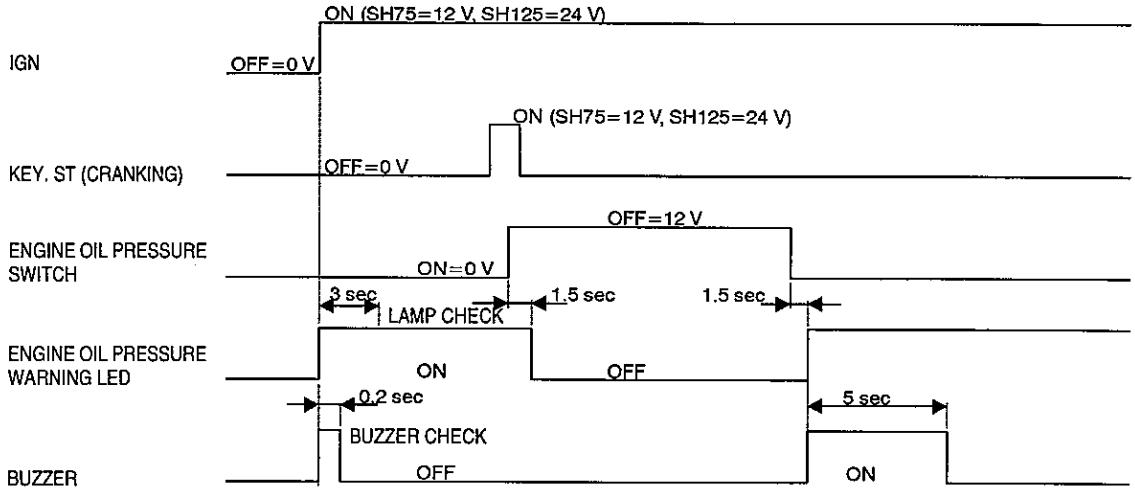

- Even if a warning is requested, the buzzer will not be activated until the key switch signal (cranking signal) is received.

https://truckmanualshub.com/

3-3. Low fuel warning

1. Configuration

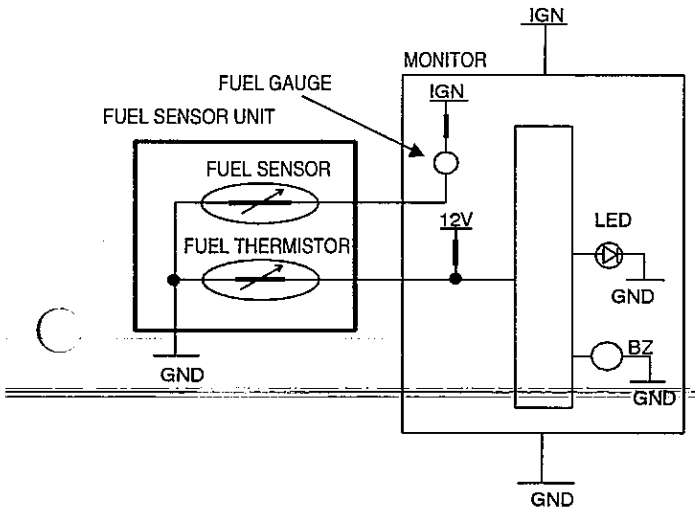

Fuel sensor specifications

Fuel remaining	Empty	1/2	Full
Sensor resistance (Ω)	90	38	10

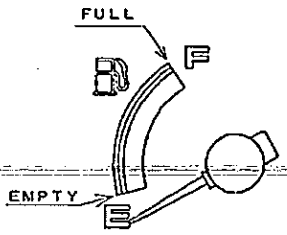

2. Operation

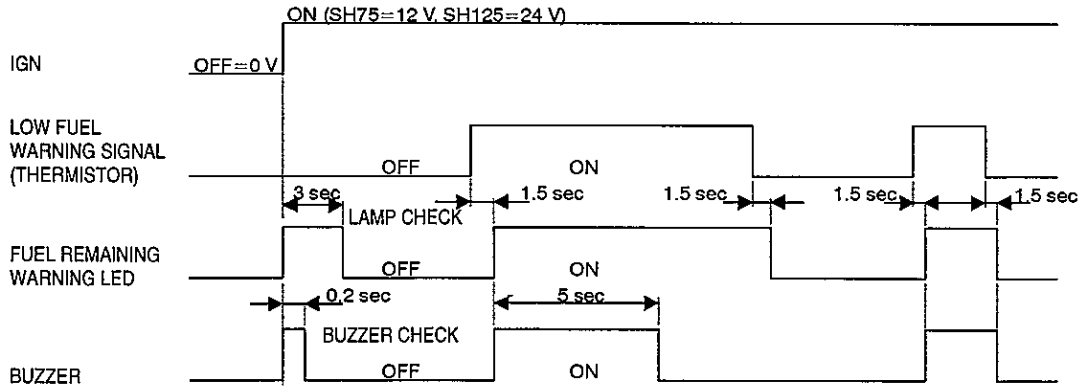

- When the thermistor resistance falls to 37 ohm or below, the monitor recognizes this as the signal being ON and turns on the LED.

https://truckmanualshub.com/

3-4. Battery charge warning

1. Configuration

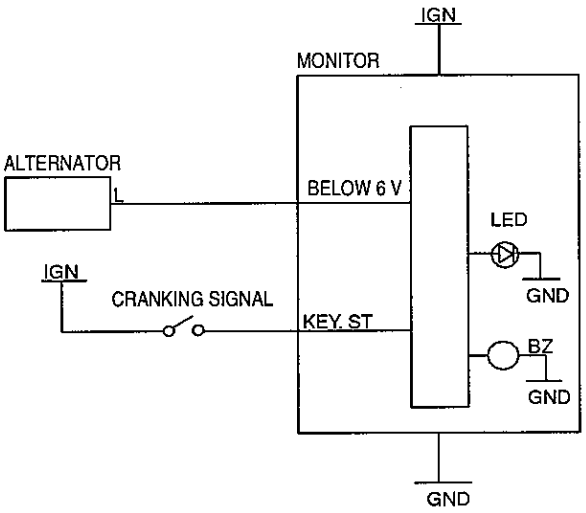

2. Operation

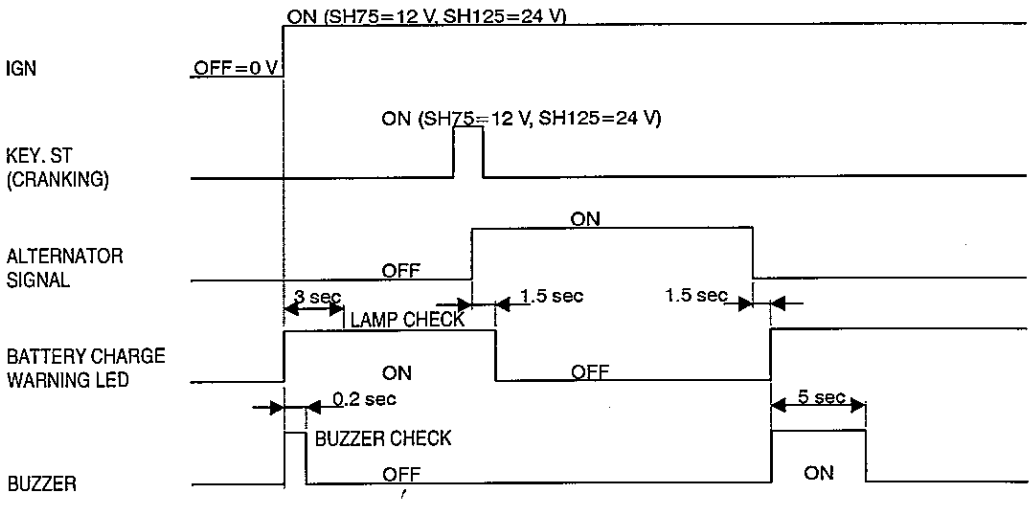

- Even if a warning is requested, the buzzer will not be activated until the key switch signal (cranking signal) is received.
- When the alternator signal falls below 6V, the monitor turns the warning ON.

https://truckmanualshub.com/

3-5. Auto preheat

1. Circuit Configuration

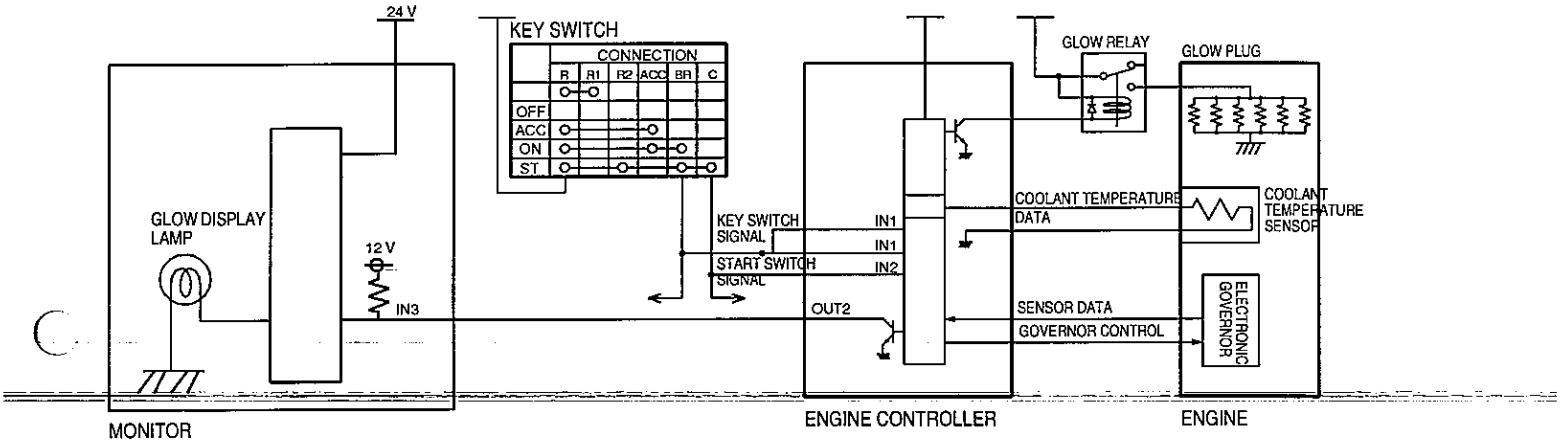

2. Operation

a. When the key switch is turned ON (IN1 = ON), the engine controller computes the pre-glow time (Tp) according to the engine coolant temperature, referring to the map shown on the next page.

b. The engine controller turns on the glow relay output (OUT1) during the computed pre-glow time frame (Tp), and also turns on the glow lamp output (OUT2).

c. When the pre-glow duration is over, engine controller turns OFF the glow lamp output (OUT2), but continues to maintain the glow relay output (OUT1) ON for 2 additional seconds.

(Cranking normally starts after the glow lamp is turned off. However, due to the fact that the temperature in the combustion chamber will fall too abruptly if the glow is terminated upon the switch-off of the lamp, the glow time is programmed to extend for 2 additional seconds.)

d. When the key switch is turned to START (IN2 = ON), the engine controller turns ON the glow relay output once more. The engine controller, however, does not turn on the glow lamp output (OUT2).

e. The monitor display turns ON the glow lamp while IN3 (=OUT2) is ON.

f. Because the control described above starts immediately after the starter switch is turned ON, it will not be possible to confirm that the glow has actually taken place until the pre-glow time frame grows more than 3 seconds (i.e. the coolant temperature is -5Åé or below).

(For 3 seconds after the key switch is turned ON, all lamps will be turned on unconditionally as part of the lamp self-check.)

g. The engine controller computes the after glow time (Ta) according to the engine coolant temperature, referring to the map shown on the next page.

h. After the key switch is turned from the START to the ON position (IN 1 = ON, IN 2 = OFF), the engine controller turns ON the glow relay output during the after glow time frame (Ta).

The engine controller, however, does not turn on the glow lamp output (OUT2).

i. The after glow control takes place in order to stabilize engine revolutions upon start-up and also to educe the amount of smoke.

https://truckmanualshub.com/

3. Pre-glow time (Tp) map / After glow time (Ta) map

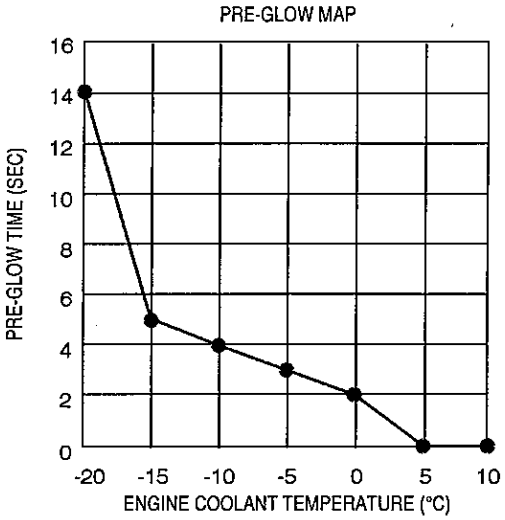

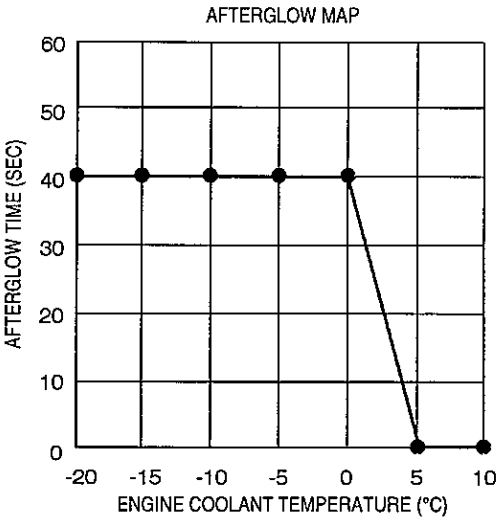

4. Flow chart

Auto preheat (engine glow) flow

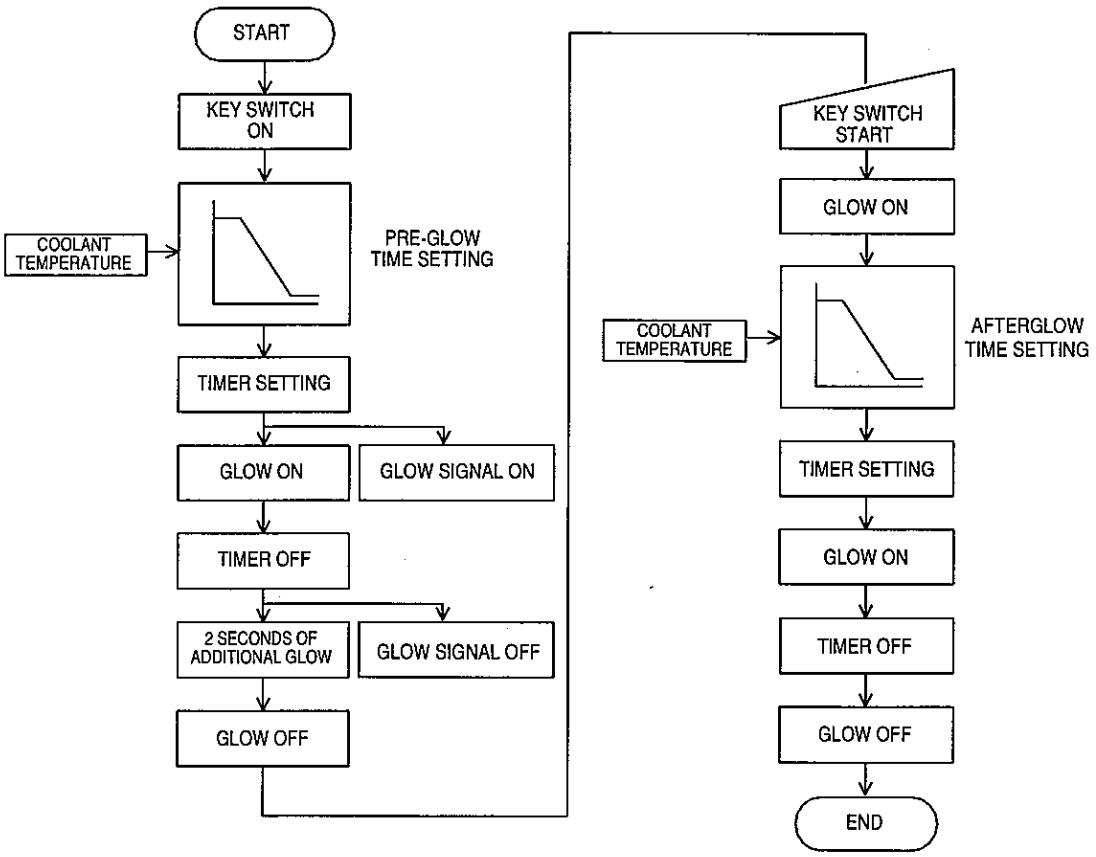

https://truckmanualshub.com/

5. Time chart

a. If cranked within 2 seconds upon completion of 'Glow lamp' display (Normal status)

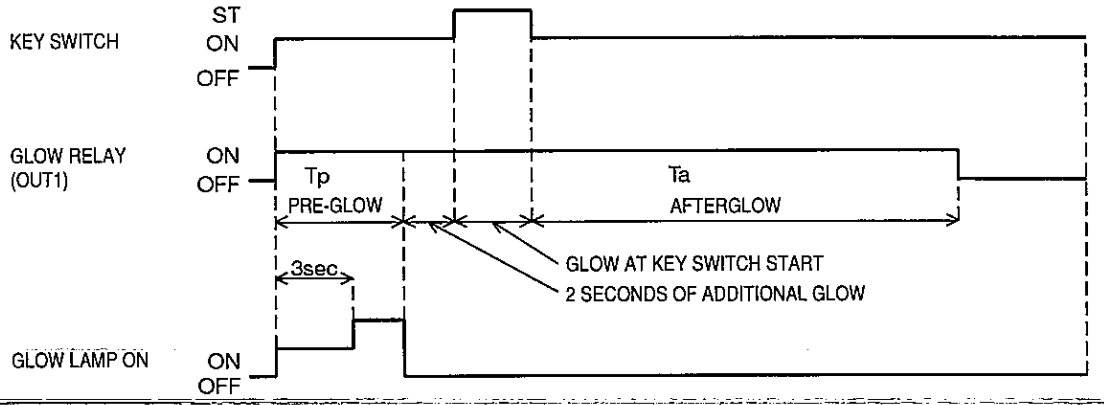

b. When cranked 2 seconds after completion of 'Glow lamp' display

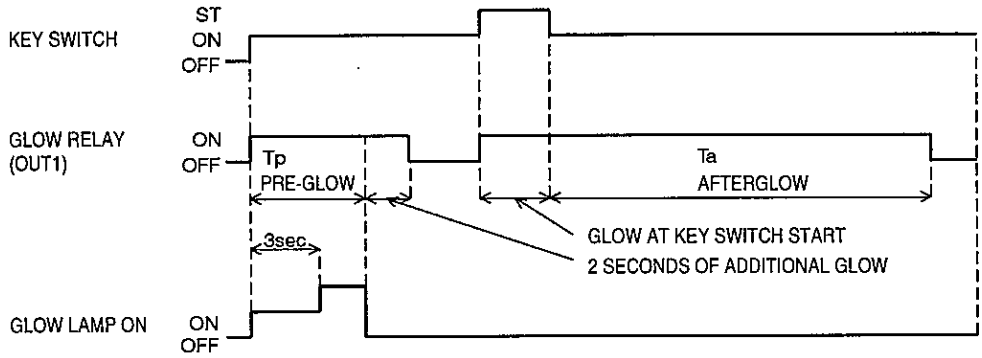

c. When cranked during 'Glow lamp' display

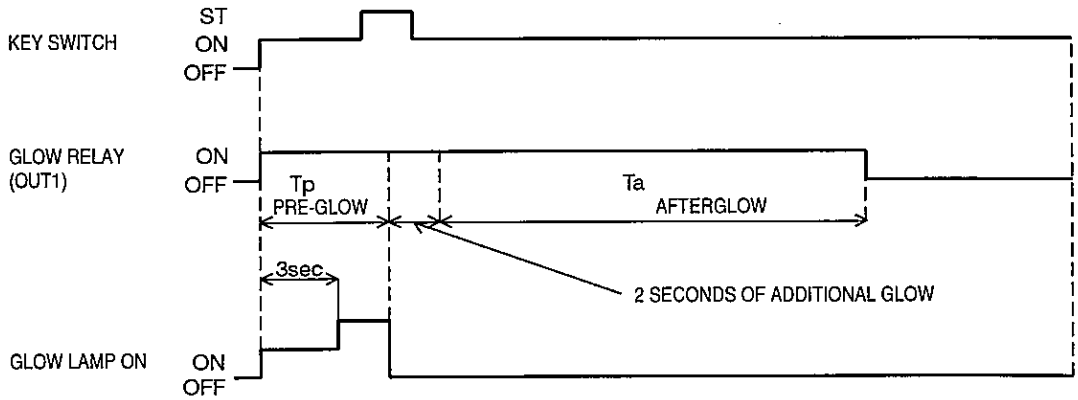

https://truckmanualshub.com/

3-6. Idle up

The idle up function is designed to prevent the battery from discharging or to prevent the coolant temperature from dropping when the machine has been left idling for an extended period of time. This is achieved by automatically raising the idling rpm when the power voltage to the engine controller drops or when the engine coolant temperature drops.

1. Circuit Configuration

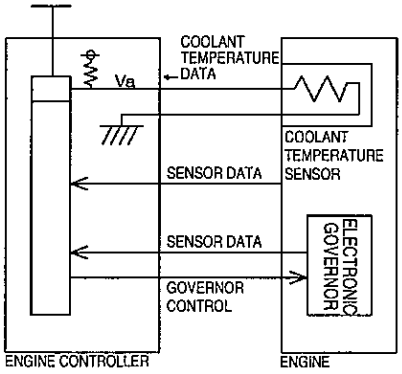

2. Operation

The idling rpm for adjusting battery voltage is determined according to the power voltage supplied to the engine controller. The map shown below is used as a reference to obtain the rpm.

The idling rpm value (for adjusting coolant temperature) is determined based on the coolant temperature value that was converted from the transmitted voltage (Va) value from the coolant temperature sensor. The following map is also used as a reference to determine the final value.

Of the two output values: a) idling rpm output for adjusting battery voltage and b) idling rpm output for adjusting coolant temperature, the greater value will be the idling rpm value.

3. Characteristics of idling rpm for voltage adjustment and idling rpm for coolant temperature adjustment

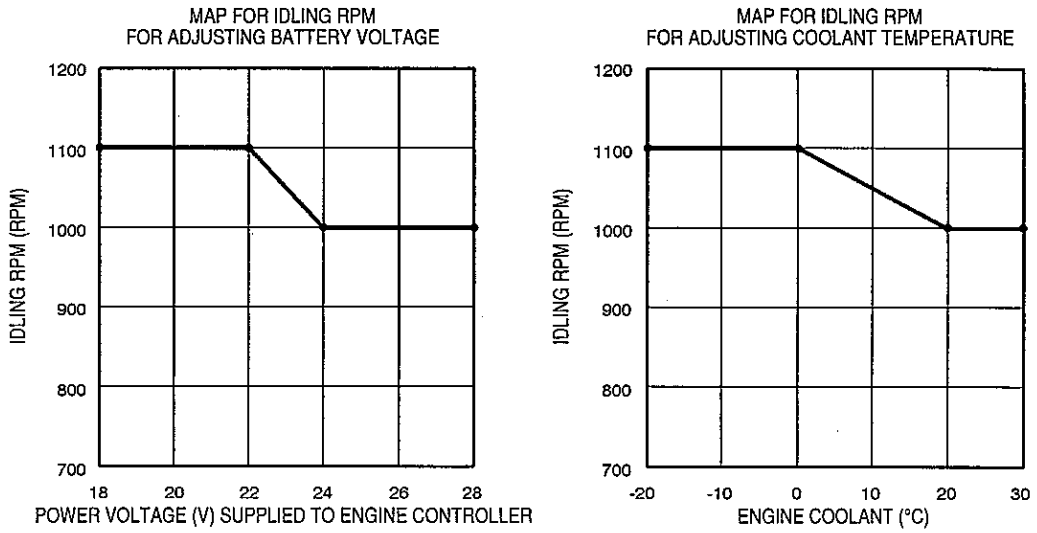

https://truckmanualshub.com/

3-7. Faulty electrical system at engine

1. Circuit Configuration

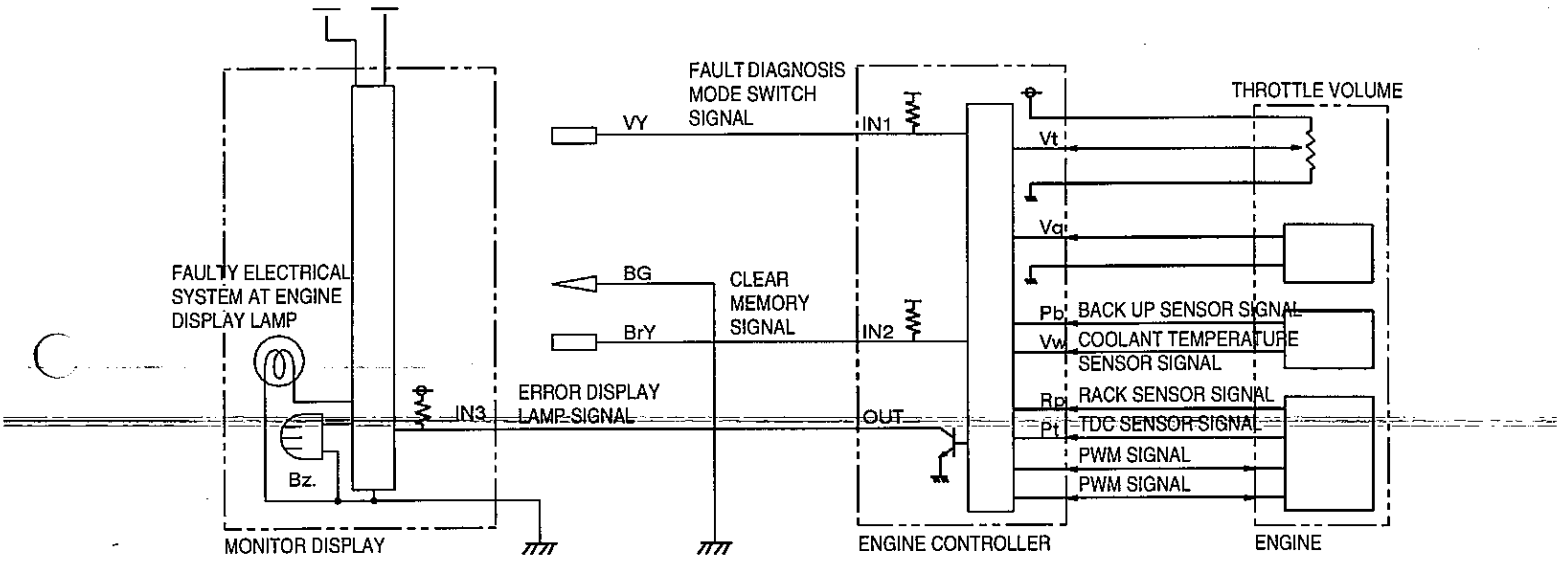

NOTE: IN ISUZU CHECKER MODE, VG LINE AND BG LINE ARE CONNECTED.

2. Time chart

The chart below shows the state in which a TDC sensor error (Error Code=41) took place while the engine was in operation.

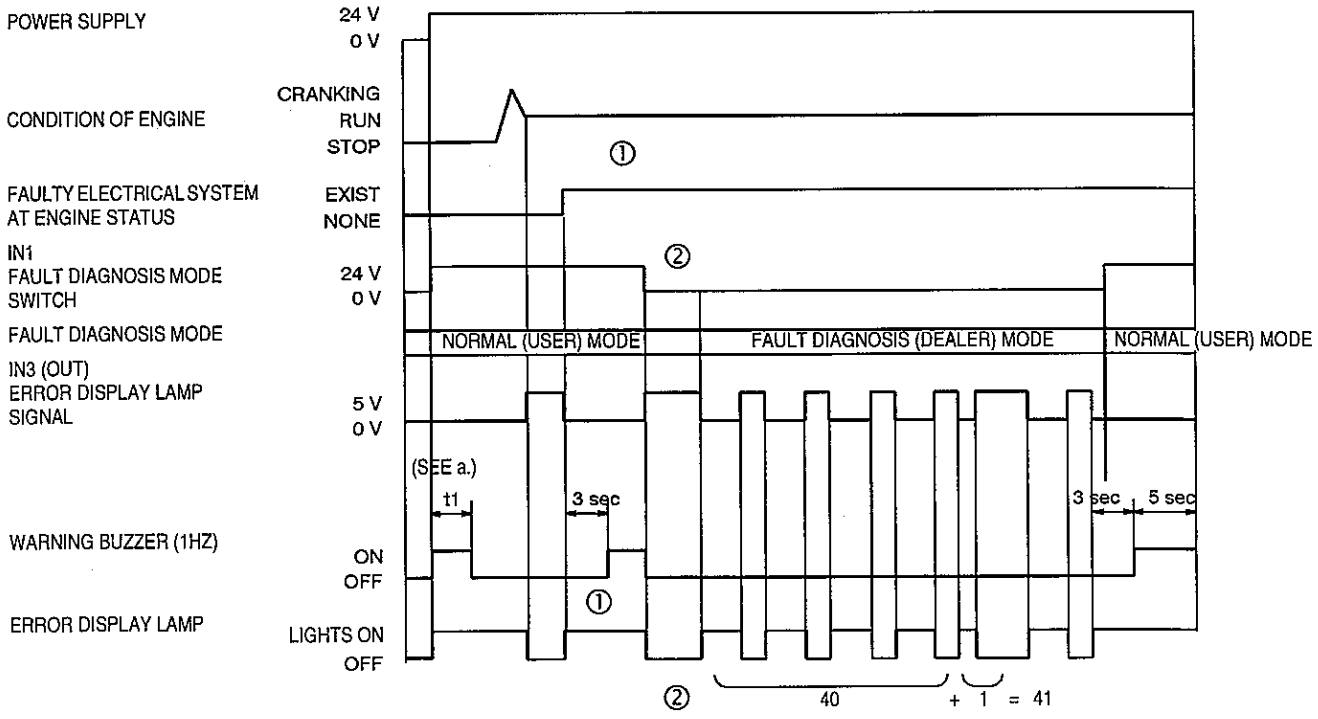

a. During normal (User) mode, the fault diagnosis mode switch (IN1) stays OFF (≠GND). When an error takes place, the error display lamp will be turned on and it will stay on continuously.

https://truckmanualshub.com/

b. When the fault diagnosis mode switch (IN1) is ON (=GND), the fault diagnosis (Dealer) mode is activated and the type of error that took place will be shown by the pattern of flashes on the error display lamp.

The chart below shows a state in which a throttle sensor error (Error Code=21) took place while the engine was in operation.

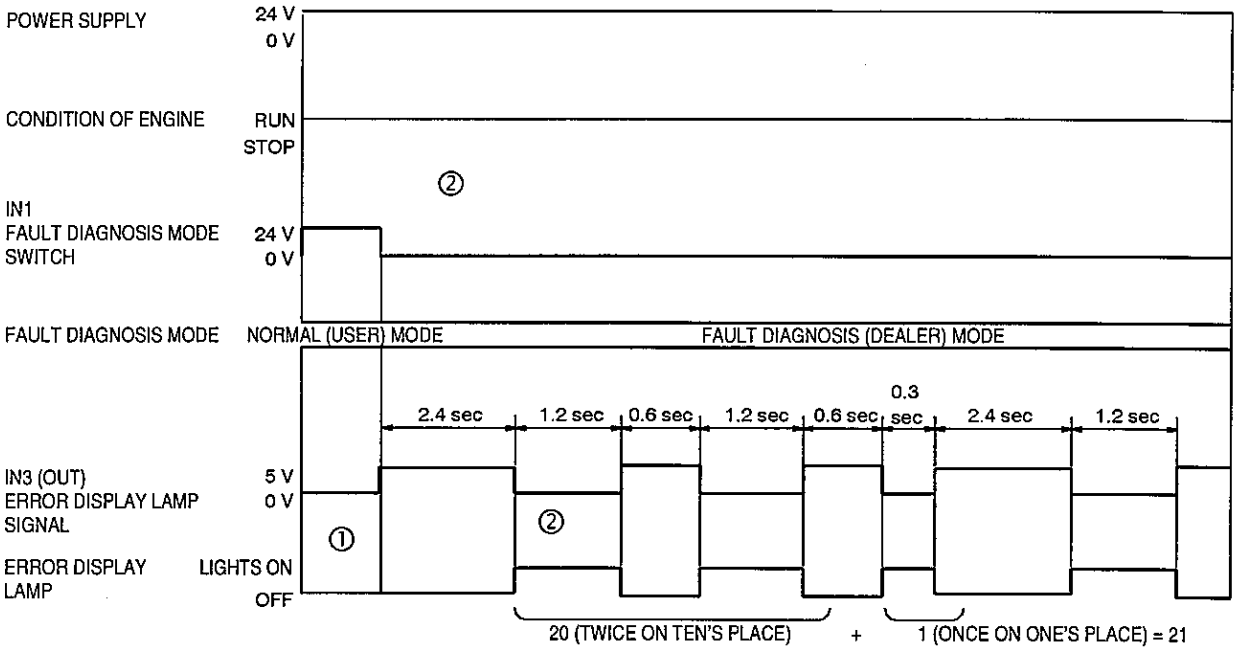

a. The error display lamp will not light up when the throttle sensor error (Error Code=21) occurs during the normal (User) mode.

b. When the fault diagnosis mode switch (IN1) is turned ON (=GND) to switch the mode to fault diagnosis (Dealer mode), the applicable error code will be shown by the pattern of flashes on the lamp.

The chart below shows a state in which multiple errors took place at the same time.

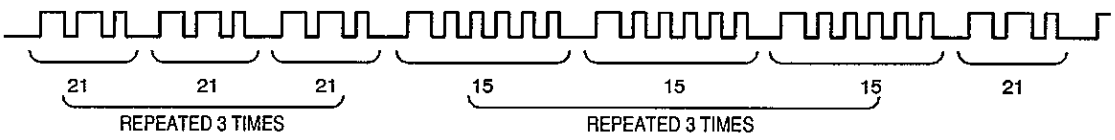

a. When the fault diagnosis mode (Dealer Mode) is activated while the engine is in operation, the applicable error codes will be shown by the pattern of flashes on the lamp. The flashing pattern for one error code will repeat three times before the pattern moves to the one for the next error code.

b. When the fault diagnosis mode (Dealer Mode) is activated while the engine is stopped, the current applicable error code along with the past error codes will be shown by the pattern of flashes on the lamp. The flashing pattern for one error code will repeat three times before the pattern moves to the one for the next error code.

The chart below shows the state in which no errors are taking place.

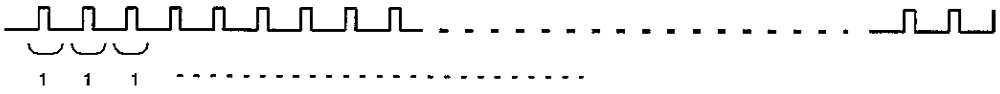

a. Whether the engine was in operation or not, if the fault diagnosis (Dealer) mode is activated, the lamp will flash at equal intervals (every second).

https://truckmanualshub.com/

3. Error code list

Error code	Name of error	Lamp comes on at error?
32	Rack sensor error	Yes
31	Governor internal circuit error Linear servo motor error	Yes
41	TDC sensor error	Yes
42	Backup sensor error	Yes
21	Throttle sensor error	No
15	Coolant temperature sensor error	No
25	Q-adjusting resistance error	No

4. Clearing memory

All the previous and the current diagnosis results will be cleared if the engine controller receives the clear memory signal (IN2) being ON (=0 V) for 1 second or longer followed by the OFF (≠0 V) signal for 0.5 seconds or longer.

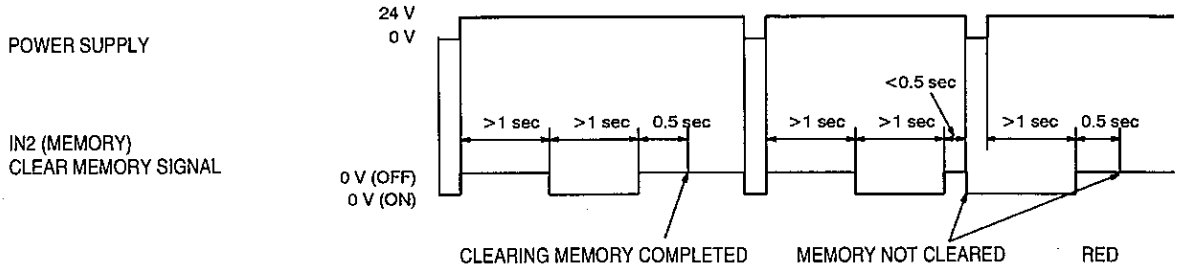

https://truckmanualshub.com/

Electric Circuits

ELECTRIC CIRCUIT DIAGRAMS

Electric Circuit Diagram 1

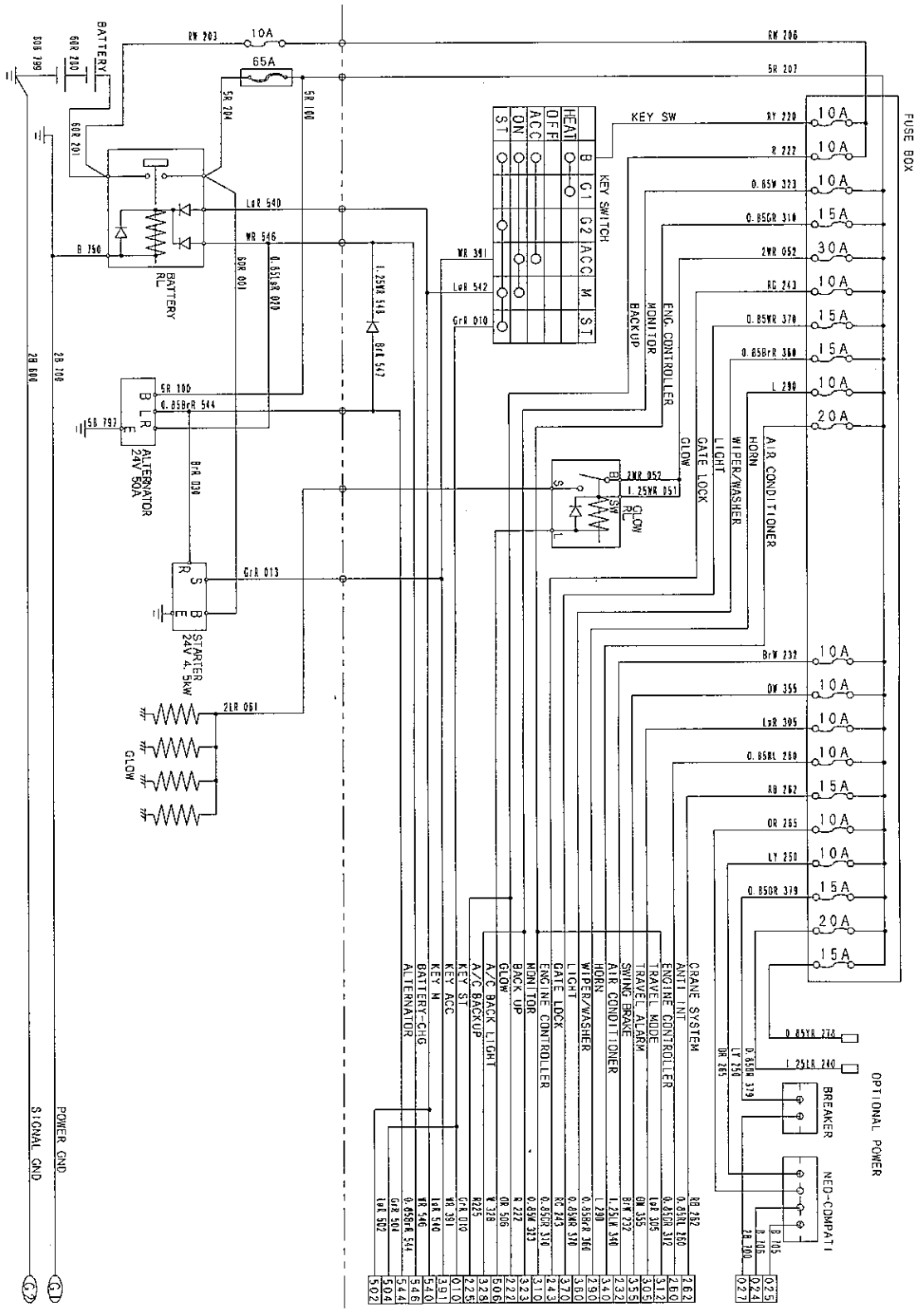

https://truckmanualshub.com/

Electric Circuit Diagram 2

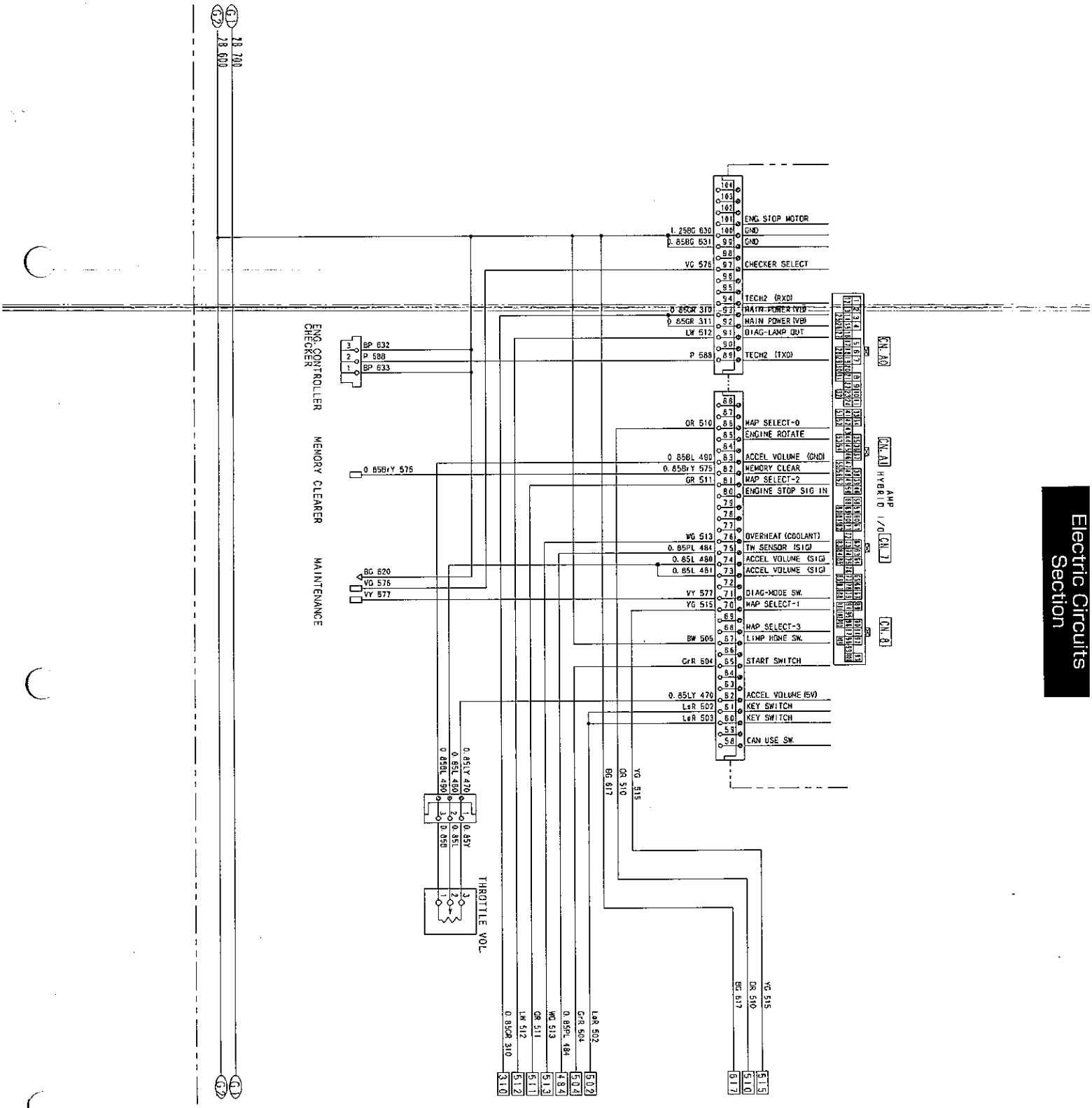

https://truckmanualshub.com/

Electric Circuit Diagram 3

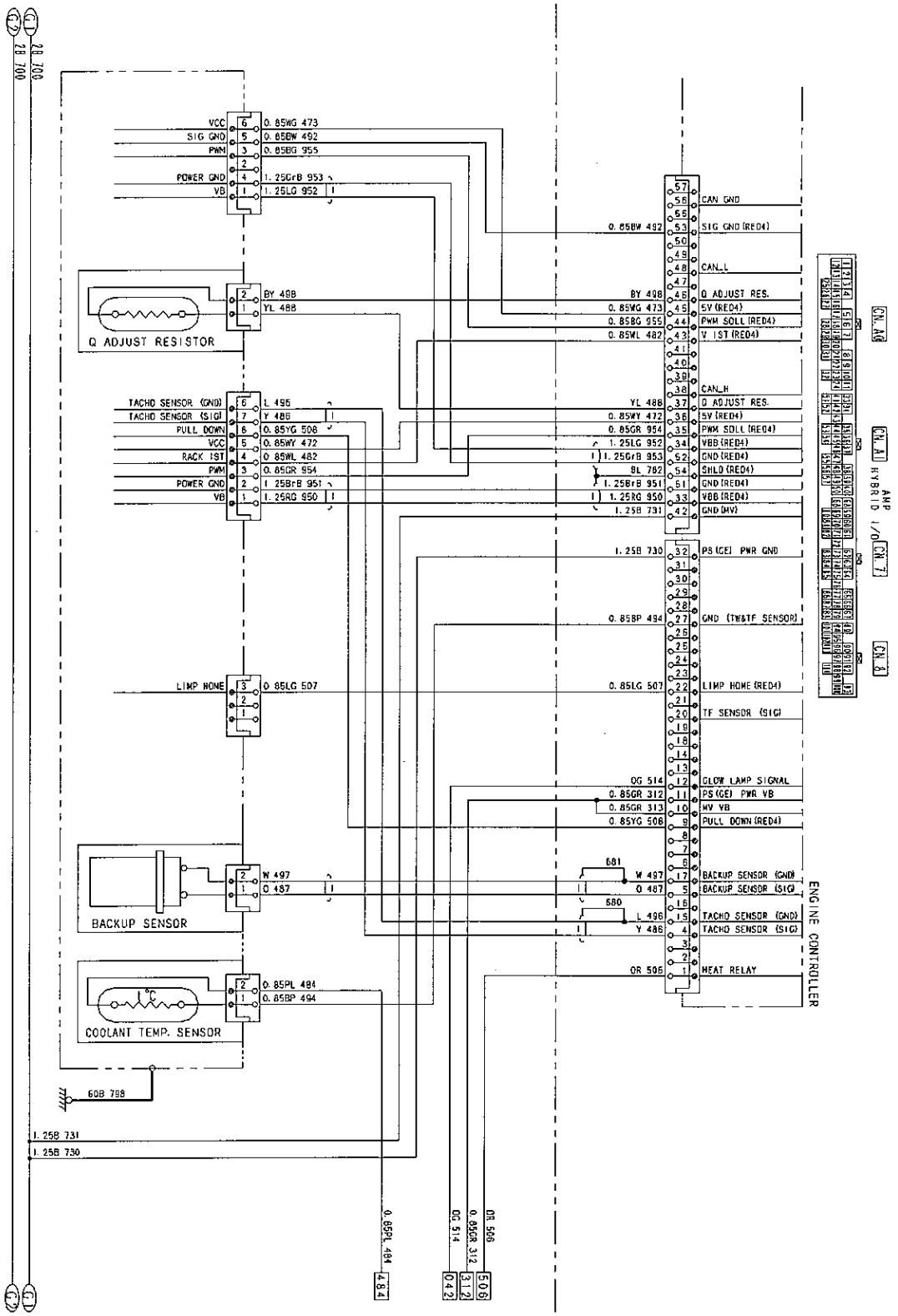

https://truckmanualshub.com/

Electric Circuit Diagram 4

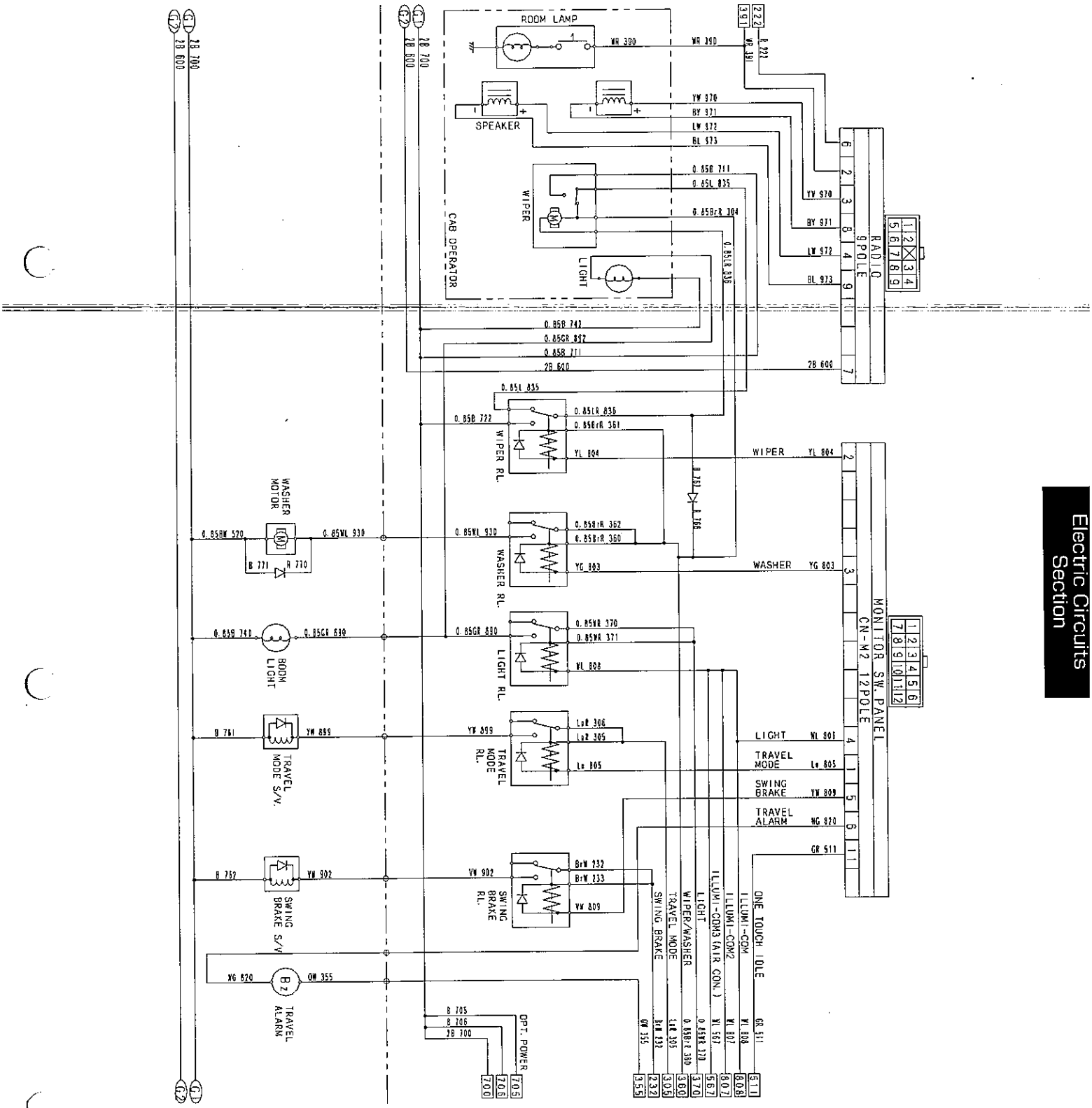

https://truckmanualshub.com/

Electric Circuit Diagram 5

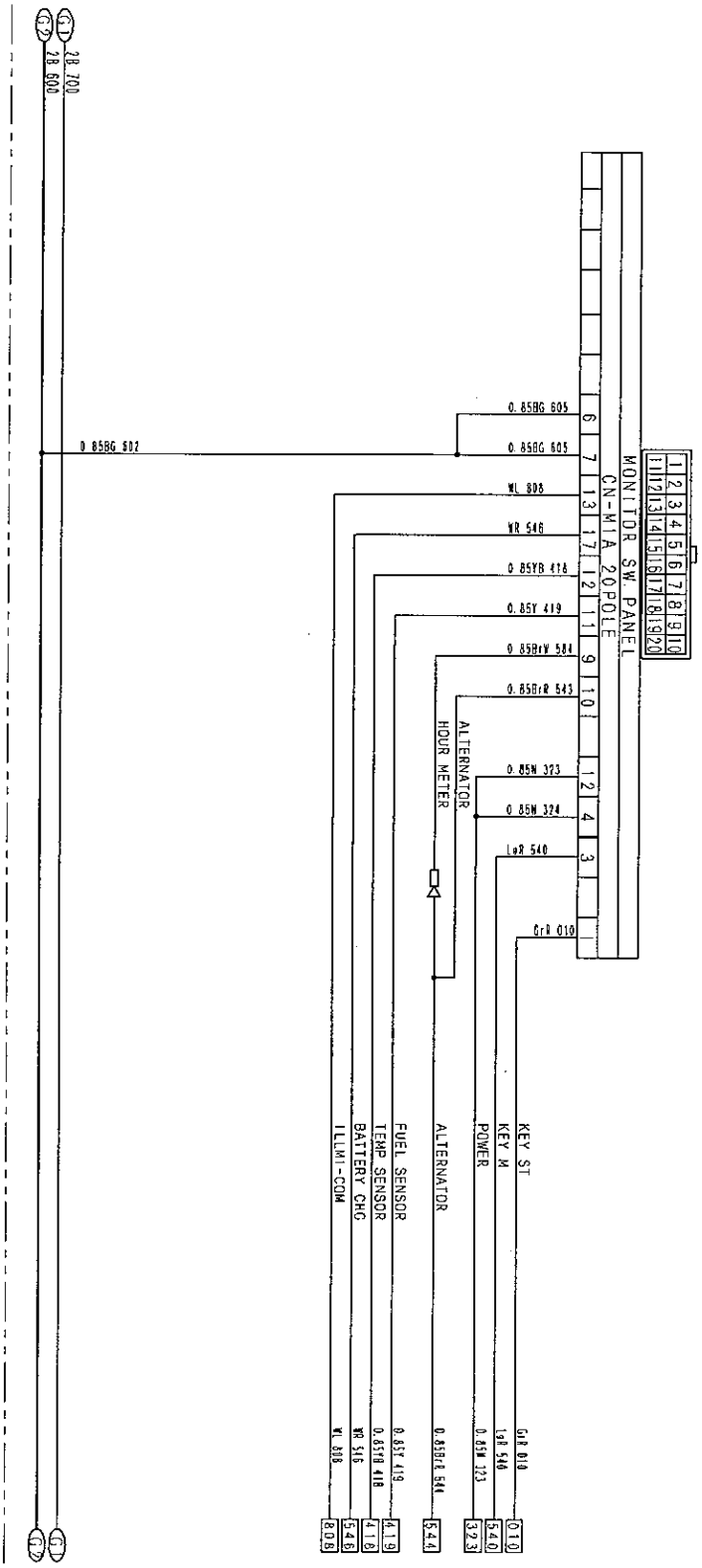

https://truckmanualshub.com/

Electric Circuit Diagram 6

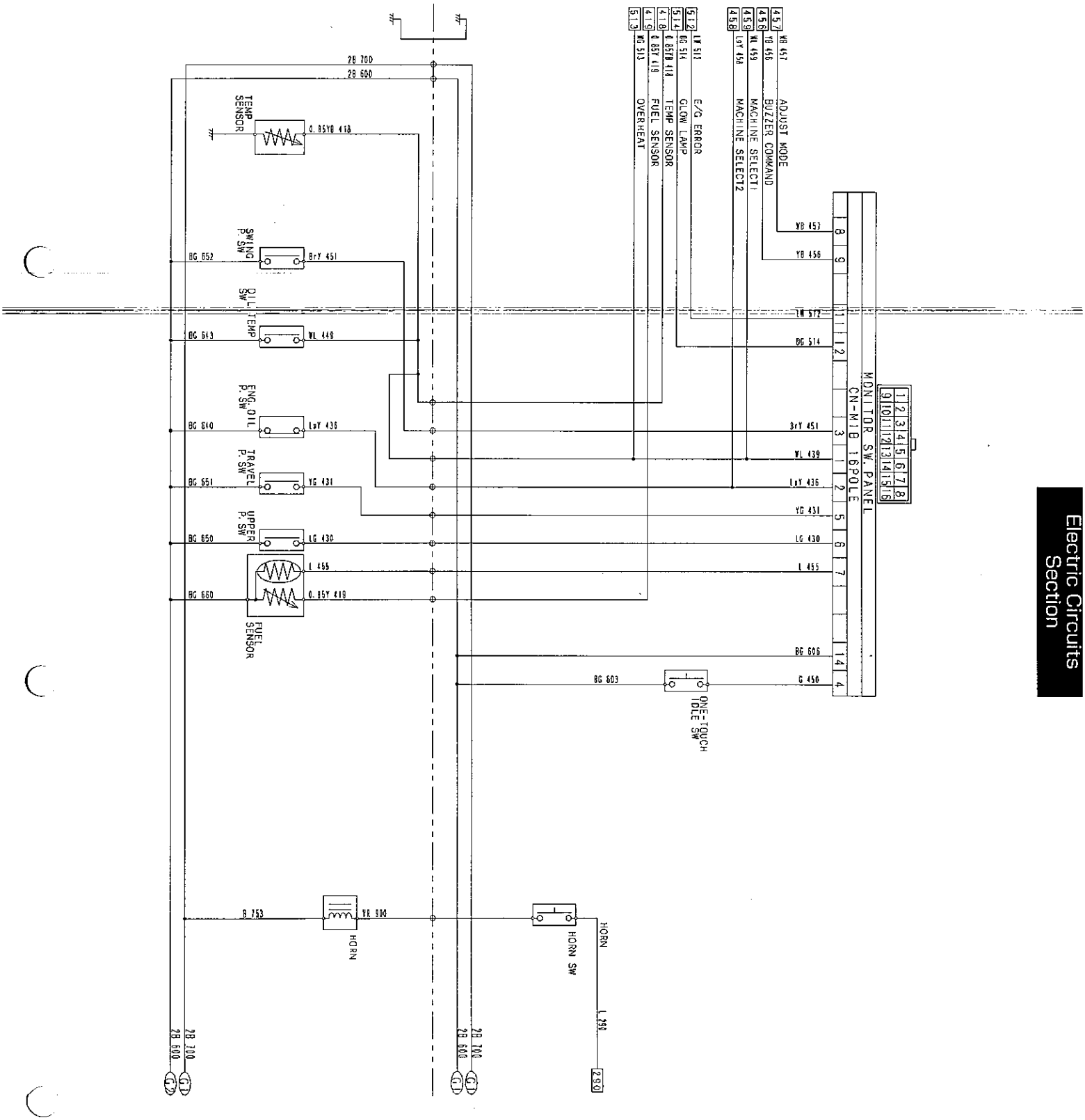

https://truckmanualshub.com/

Electric Circuit Diagram: Air Conditioner 1

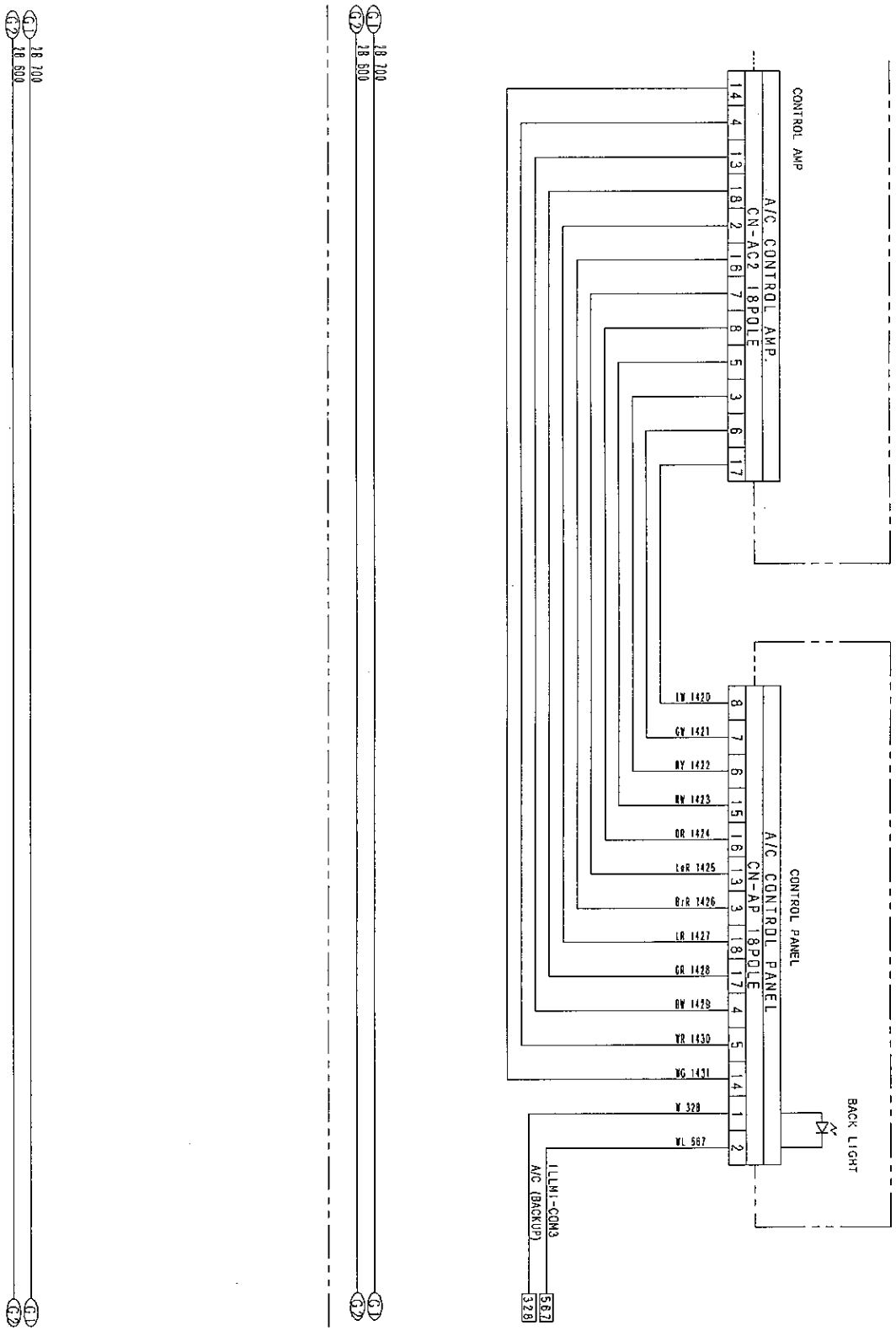

https://truckmanualshub.com/

Electric Circuit Diagram: Air Conditioner 2

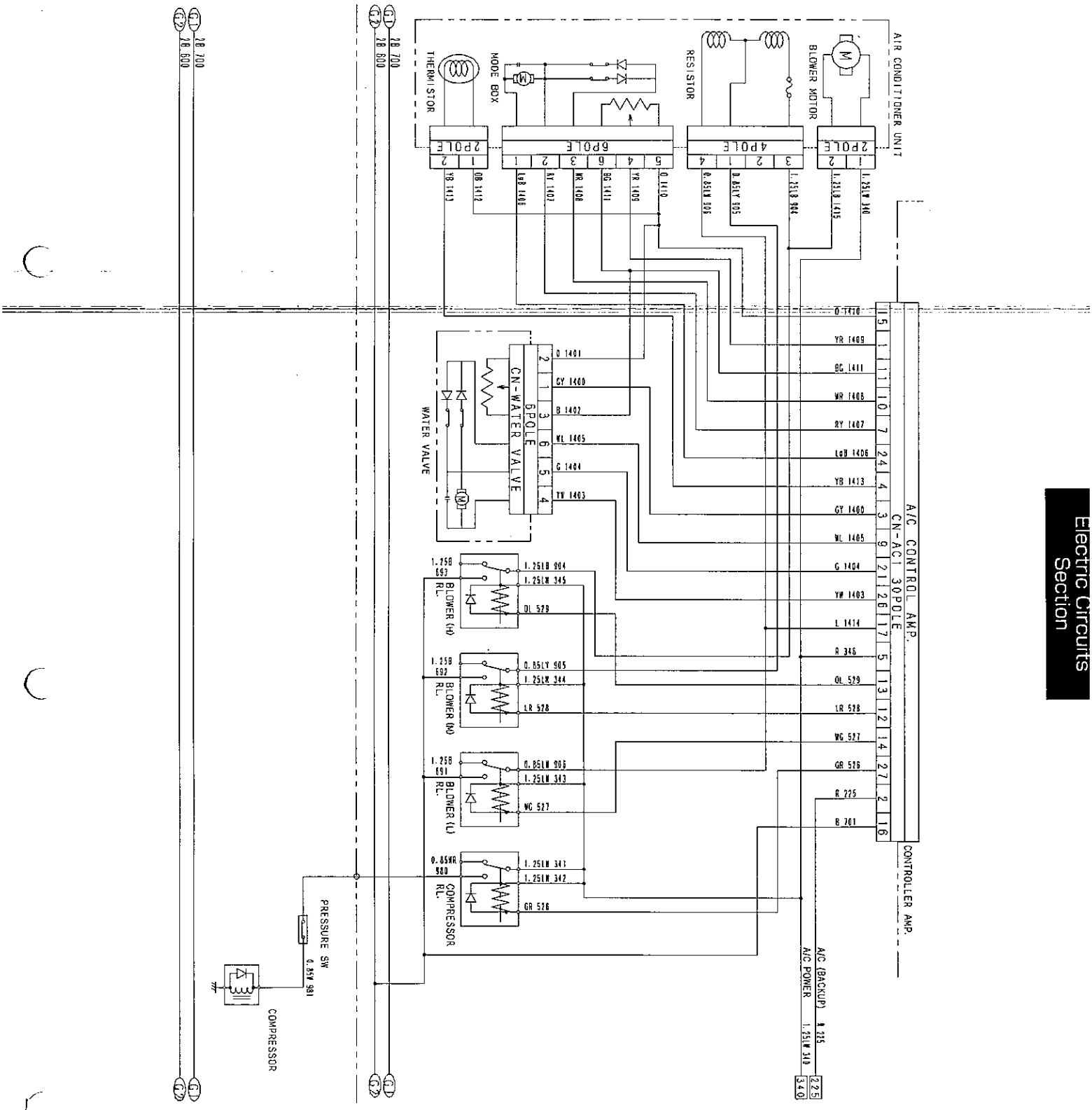

https://truckmanualshub.com/

Electric Circuits

ELECTRIC CIRCUIT DIAGRAMS

2nd Edition: 09/2002

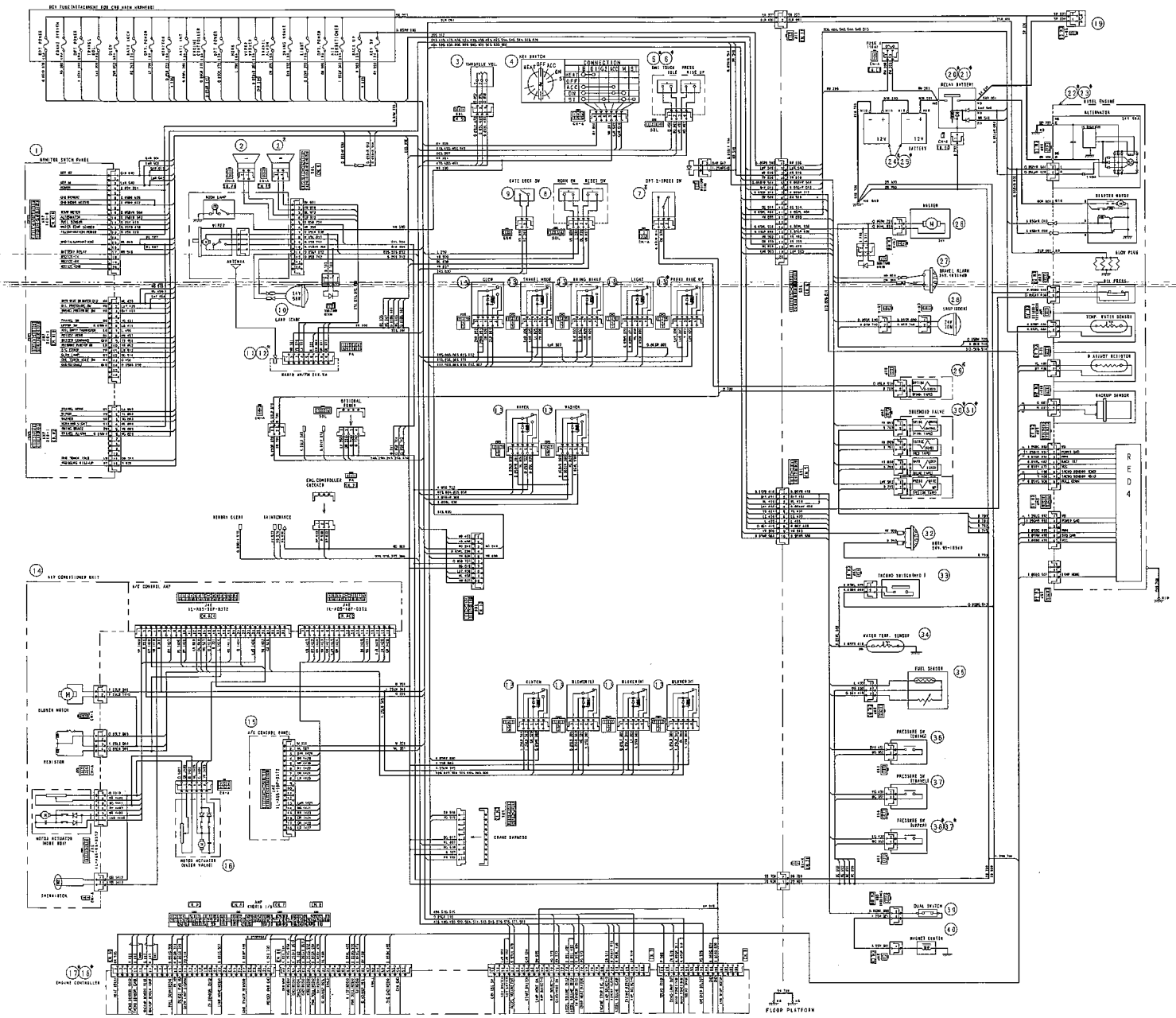

	PART NAME	SYMBOL	QTY.
	MONITOR	1	1
	LOUDSPEAKER	2	※ 1 2
	THROTTLE SWITCH	3	1
	STARTER SWITCH (MAIN BODY)	4	1
*	KNOB (R)	5	1
◆	KNOB (R)	6	1
※	ROCKER SWITCH (MAIN BODY)	7	1
	KNOB (L)	8	1
	LIMIT SWITCH	9	1
	WORKING LIGHT	10	1
	RADIO SET AM	11	1
※	RADIO SET AM/FM (STEREO)	12	1
	RELAY (SWITCHOVER)	13	* 10 ◆ 11
	HEATING UNIT	14	1
	CONTROL PANEL	15	1
	CONTROL BOX	16	1
*	ENGINE CONTROLLER	17	1
◆	ENGINE CONTROLLER	18	1
	FUSE (FUSIBLE)	19	1
*	BATTERY RELAY	20	1
◆	BATTERY RELAY	21	1
*	DIESEL ENGINE	22	1
◆	DIESEL ENGINE	23	1
*	BATTERY	24	2
◆	BATTERY	25	2
	WASHER TANK	26	1
	TRAVEL ALARM	27	1
	WORKING LIGHT 24 V X 70 W	28	1
*	SOLENOID VALVE	29	1
◆	SOLENOID VALVE (3-WAY)	30	1
◆	SOLENOID VALVE (4-WAY)	31	1
	ELECTRIC HORN (LOW)	32	1
	THERMOSTAT SWITCH	33	1
	THERMOSTAT SENSOR	34	1
	FUEL SENSOR	35	1
	PRESSURE SWITCH	36	1
	PRESSURE SWITCH	37	* 2 ◆ 1
◆	PRESSURE SWITCH	38	1
	DRIER RECEIVER	39	1
	COMPRESSOR	40	1

COLOR CODING TABLE

SYMBOL	COLOR	SYMBOL	COLOR
B	BLACK	R	RED
W	WHITE	Y	YELLOW
Br	BROWN	Lg	LIGHT GREEN
P	PINK	Sb	SKY BLUE
V	VIOLET	L	BLUE
G	GREEN	Gr	GRAY
O	ORANGE		

TWO SYMBOLS TOGETHER INDICATE A BASE COLOR (FIRST LETTER) AND A STRIPE COLOR (SECOND LETTER).
EXAMPLE: BR INDICATES A BLACK WIRE WITH RED STRIPES.

NOTES

1. ITEMS MARKED WITH * ARE USED ONLY FOR SH125X-3.
2. ITEMS MARKED WITH ◆ ARE USED ONLY FOR SH135X-3.
3. ITEMS MARKED WITH ※ ARE OPTIONAL PARTS.
4. SYMBOLS FOR GROUND TYPES AND CROSSING POINTS IN THIS SCHEMATIC DIAGRAM ARE AS FOLLOWS:

HARNESS — BODY GROUND — GROUND BY CABLE — CONNECTED — NOT CONNECTED

5. LETTER(S) ON EACH LINE INDICATE WIRE COLOR, NUMBERS BEFORE LETTERS INDICATE CABLE AREA*, AND NUMBERS AFTER LETTERS INDICATE CIRCUIT NUMBER.
NOTE: NO NUMBER INDICATES 0.5 MM².
EXAMPLE: AREA 50 — COLOR 6 — CIRCUIT NO. 601

6. CONNECTOR SYMBOLS ARE AS FOLLOWS:

FEMALE TERMINAL — MALE TERMINAL

CONNECTOR NAME — CONNECTOR NO.

https://truckmanualshub.com/

https://truckmanualshub.com/

Electric Circuits

WIRING DIAGRAMS

Electrical Components and Wiring for Upper Frame

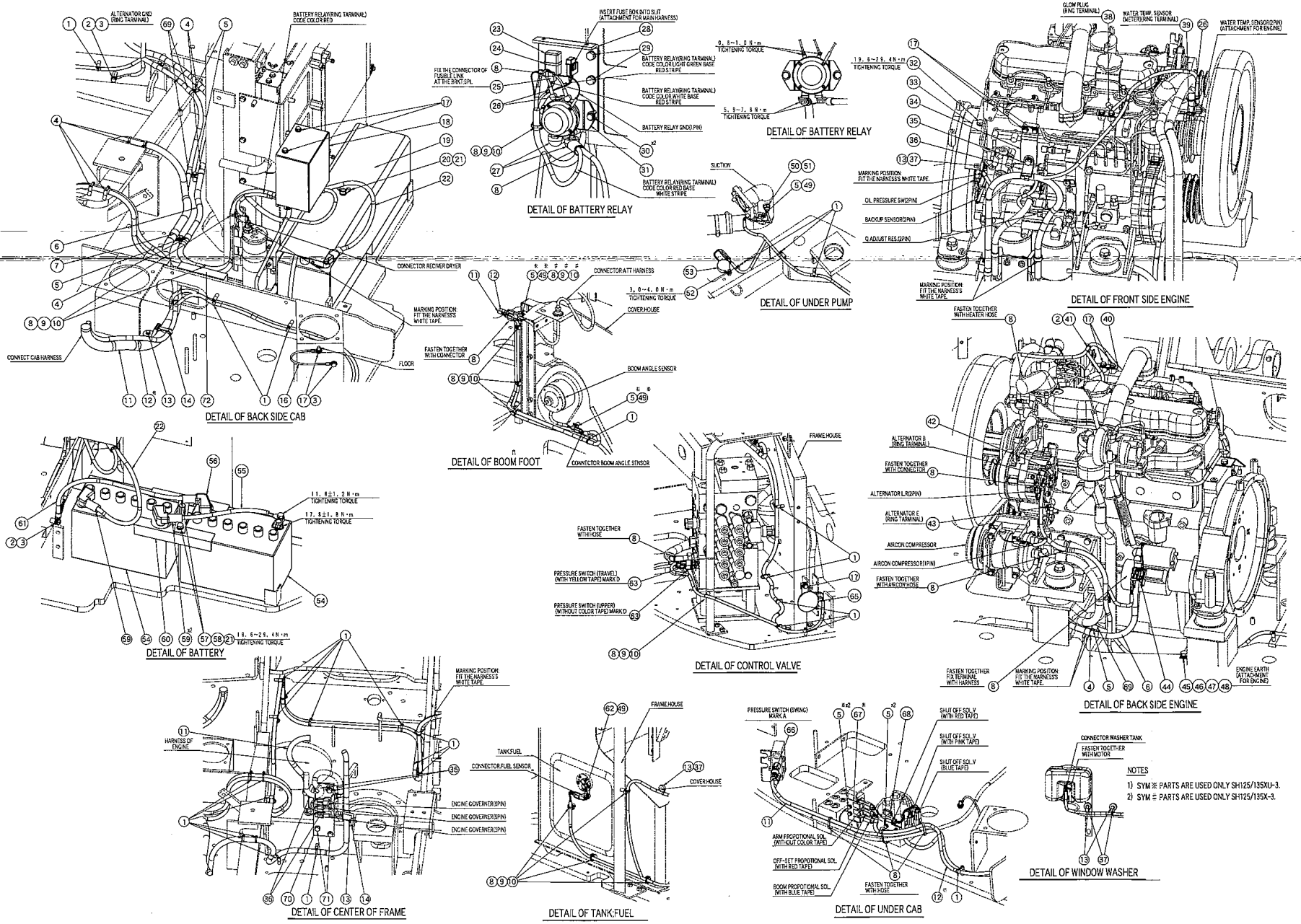

DESCRIPTION	SYMBOL	QTY.
CLAMP	1	28
M8X20 SPECIAL BOLT (WITH WASHER)	2	3
TOOTHED WASHER	3	4
CLIP CLAMP (D18)	4	4
※ M6X16 BOLT (WITH WASHER)	5	# 7 ※ 11
BATTERY CABLE	6	1
CLIP CLAMP (D25)	7	1
HARNESS BAND L=250	8	AS NEEDED
※ CLAMP	9	# 12 ※ 11
※ M6X8 PAN HEAD SCREW	10	# 12 ※ 11
WIRE HARNESS	11	1
※ WIRE HARNESS	12	1
M8X25 BOLT (WITH WASHER)	13	5
CLAMP WITH BAND (M) M6	14	2
	15	
WIRING HARNESS	16	1
M16X55 SEMS BOLT	17	9
RELAY COVER	18	1
RUBBER PLATE	19	1
WING HEAD BOLT	20	1
HIGH-STRENGTH WASHER M10 PLATED	21	3
BATTERY CABLE	22	1
FUSE COVER	23	1
HARNESS BAND L=250	24	1
FUSE (FUSIBLE LINK) 65 A	25	1
TERMINAL CAP M4X2.0	26	3
TERMINAL CAP	27	2
RELAY BRACKET	28	1
M10X25 SEMS BOLTS	29	2
SPECIAL BOLTS (WITH WASHERS)	30	2
BATTERY RELAY	31	1
M10X20 SEMS BOLT	32	1
OIL P.S. CONNECTOR BRACKET	33	1
GOVERNOR HARNESS BRACKET	34	1
M10X25 BOLT (WITH WASHERS)	35	3
CLAMP WITH BAND (M) M10	36	3
CLAMP WITH BAND (S) M6	37	3
TERMINAL CAP M4X3.8	38	1
THERMOSTAT SENSOR	39	1
BRACKET	40	1
CLAMP WITH BAND (S) M8	41	1
TERMINAL CAP M4X3.8	42	1
TOOTHED WASHER 12	43	1
TERMINAL CAP M8-12X14	44	1
PLAIN WASHER	45	1
M10X20 HIGH-STRENGTH BOLT	46	1
SPRING WASHER 12	47	1
TOOTHED WASHER 12	48	1
※ CLIP	49	# 2 ※ 4
THERMOSTAT SWITCH	50	1
SEAL WASHER M16	51	1
M5X20 BOLT (WITH WASHER)	52	1
TRAVEL ALARM	53	1
BATTERY 95D31R	54	2
BATTERY CABLE	55	1
TERMINAL CAP	56	1
M5X20 BOLT	57	2
SPRING WASHER 10	58	2
TERMINAL CAP (RED)	59	3
BATTERY HOLDER	60	1
BATTERY GROUND CABLE	61	1
M5X20 BOLT (WITH WASHER)	62	1
PRESSURE SWITCH	63	2
	64	
HORN	65	1
PRESSURE SWITCH	66	1
※ CONNECTOR BRACKET	67	1
CONNECTOR BRACKET	68	1
CLIP CLAMP (D15)	69	3
CONNECTOR BRACKET	70	1
M10X25 SEMS BOLT	71	1
CUSHION SEAL	72	1

NOTES

1) SYM ※ PARTS ARE USED ONLY SH125/135XU-3.
2) SYM # PARTS ARE USED ONLY SH125/135X-3.

https://truckmanualshub.com/

https://truckmanualshub.com/

Electrical Components and Wiring for Cab

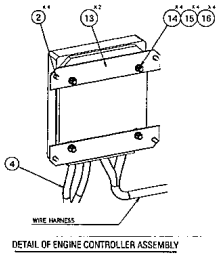

DETAIL OF ENGINE CONTROLLER ASSEMBLY

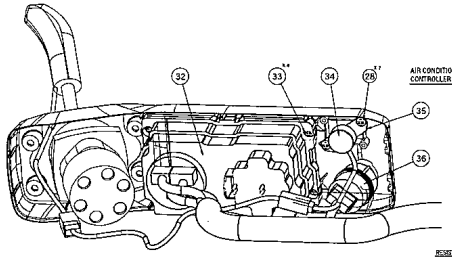

BACK SIDE OF TOP COVER (RIGHT OF CONSOLE)

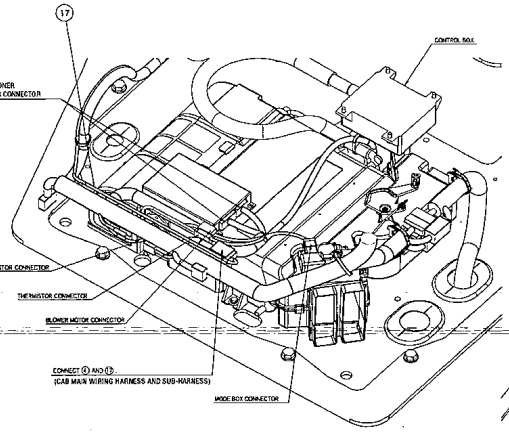

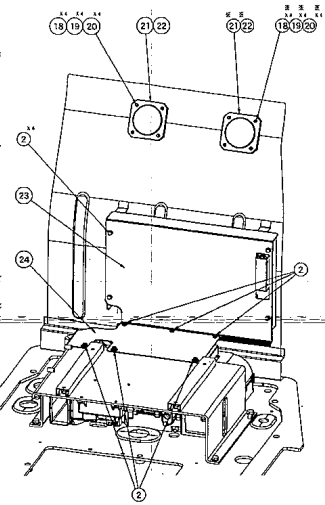

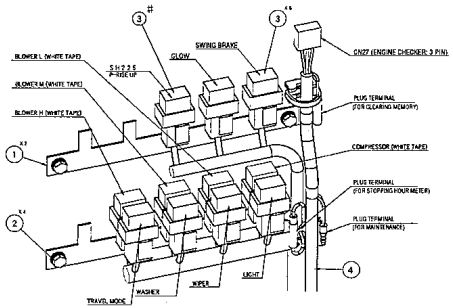

DETAIL OF RELAY ASSEMBLY

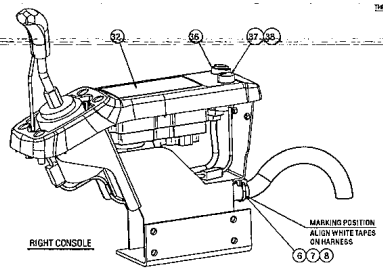

RIGHT CONSOLE

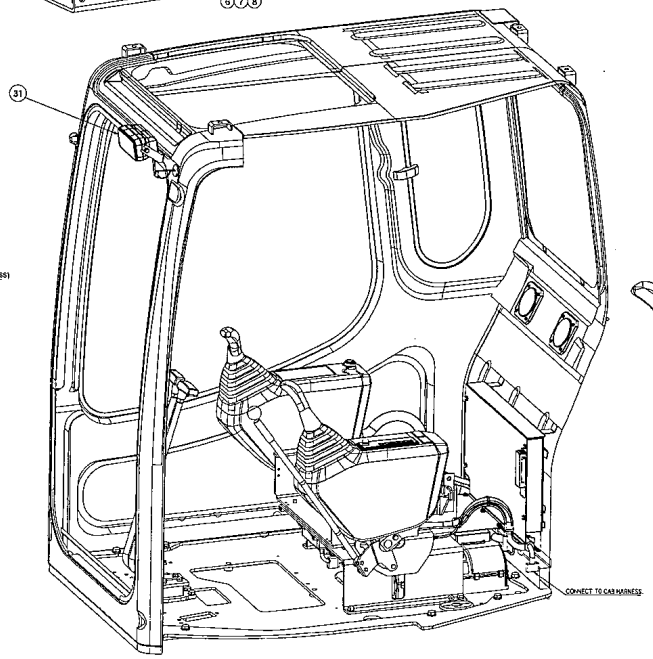

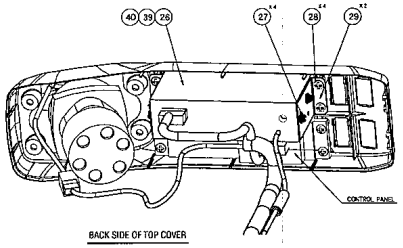

BACK SIDE OF TOP COVER

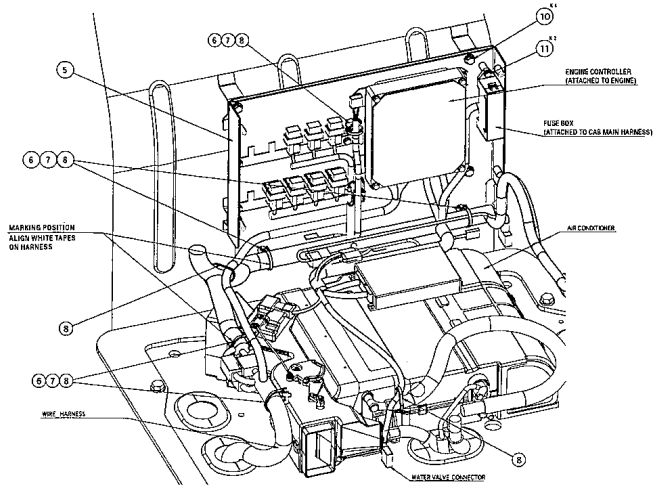

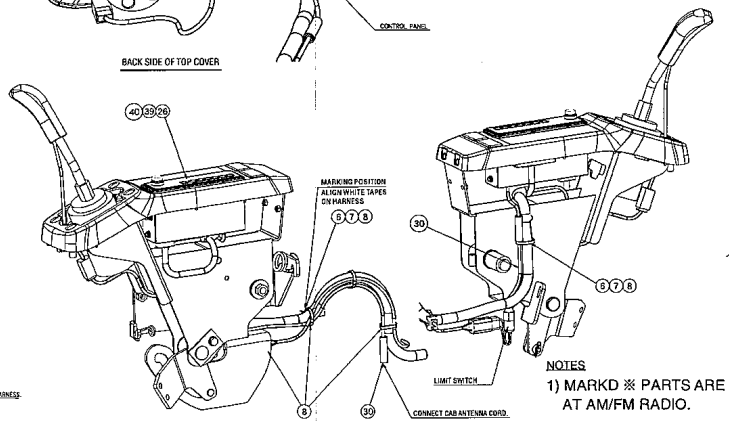

LEFT CONSOLE

DESCRIPTION	SYMBOL	QTY.
RELAY BRACKET	1	2
M6X12 SPECIAL BOLT (WITH WASHERS)	2	18
CHANGEOVER RELAY	3	#7 6
CAB WIRING MAIN HARNESS	4	1
BRACKET	5	1
MOUNTING CLAMP	6	8
M5X8 PAN HEAD SCREW	7	8
HARNESS BAND L=250	8	AS NEEDED
NUMBER MISSING	9	
M8X16 SEMS BOLTS	10	4
M6X20 BOLT (WITH WASHER)	11	2
NUMBER MISSING	12	
BRACKET ECU	13	2
PLAIN WASHER 6	14	4
SPRING WASHER 6	15	4
HEX NUT M6	16	4
CAB WIRING SUB-HARNESS	17	1
M6X8 PAN HEAD SCREW	18	#8 ×4
SPRING WASHER 4 (BLACK PLATED)	19	#8 ×4
PLAIN WASHER 4 (BLACK PLATED)	20	#2 ×1
LOUDSPEAKER	21	#2 ×1
GRILL	22	#2 ×1
COVER	23	1
REAR SEAT COVER	24	1
	25	
AM/FM RADIO SET	26	1
M5X8 PAN HEAD SCREW (WITH WASHERS)	27	4
TAPPING SCREW M5X14	28	6
RADIO BRACKET	29	2
ANTENNA CORD	30	1
WORKING LIGHT	31	1
MONITOR 24 V	32	1
TAPPING SCREW M5X20	33	4
THROTTLE SWITCH	34	1
THROTTLE VOLUME BRACKET	35	1
STARTER SWITCH ASSY	36	1
KNOB	37	1
PACKING	38	1
AM RADIO SET	39	1
AM/FM RADIO SET(H1)	40	1

NOTES

1) MARKD ※ PARTS ARE USED ONLY AT AM/FM RADIO.

https://truckmanualshub.com/

https://truckmanualshub.com/

Inside Cab

Cab wiring main harness

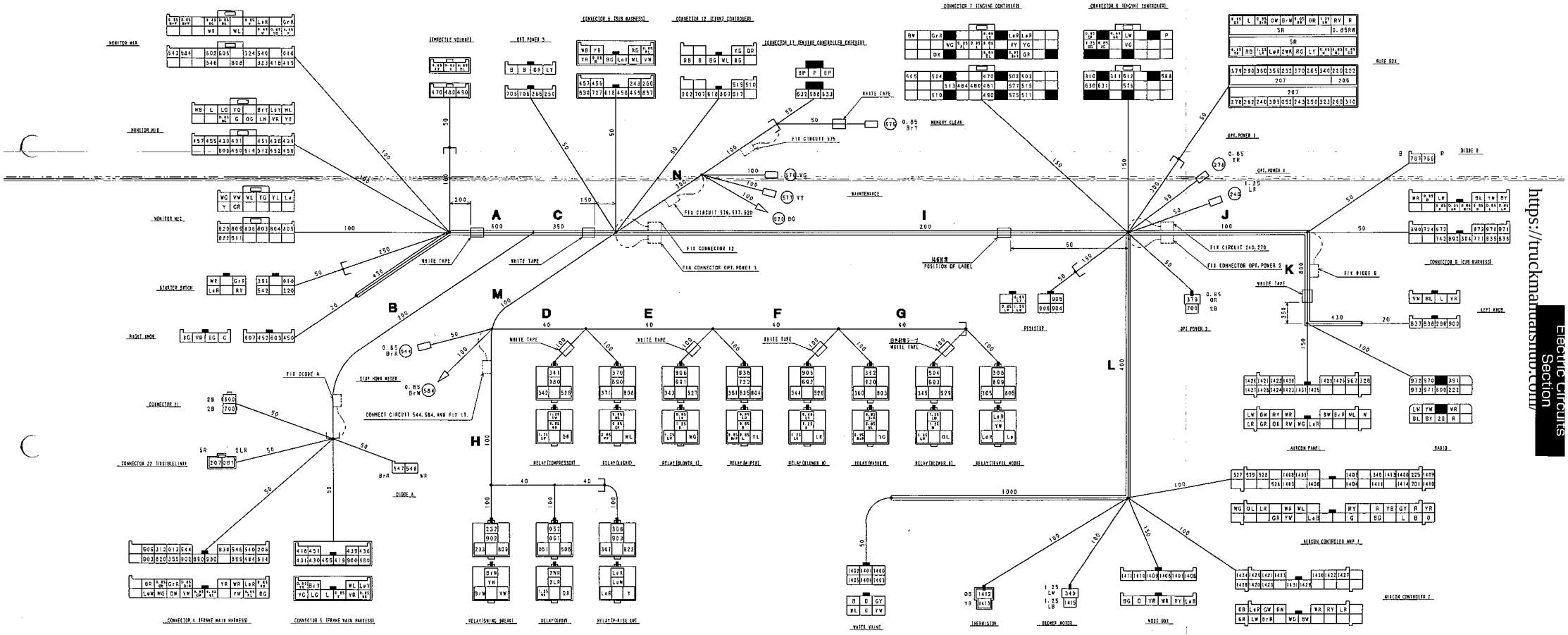

https://truckmanuals.com/

Inside Cab

Cab Wiring Sub Harness

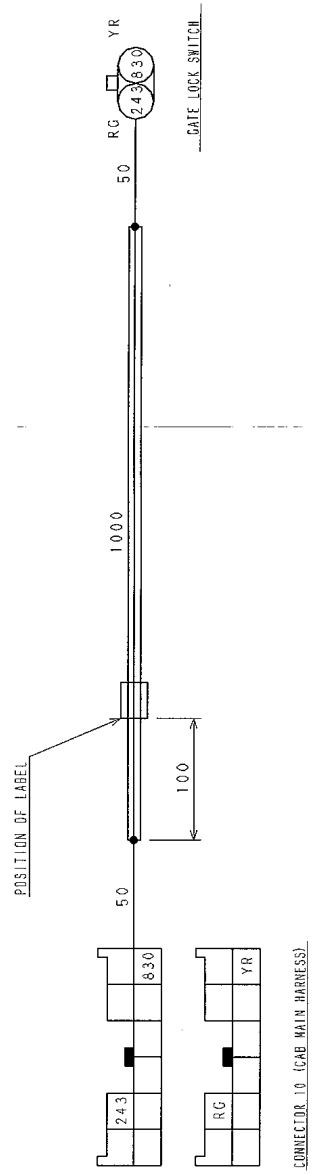

KMR0879X-B01

https://truckmanualshub.com/

Electric Circuits

HARNESS DIAGRAMS

Upper Frame

Frame wiring main harness

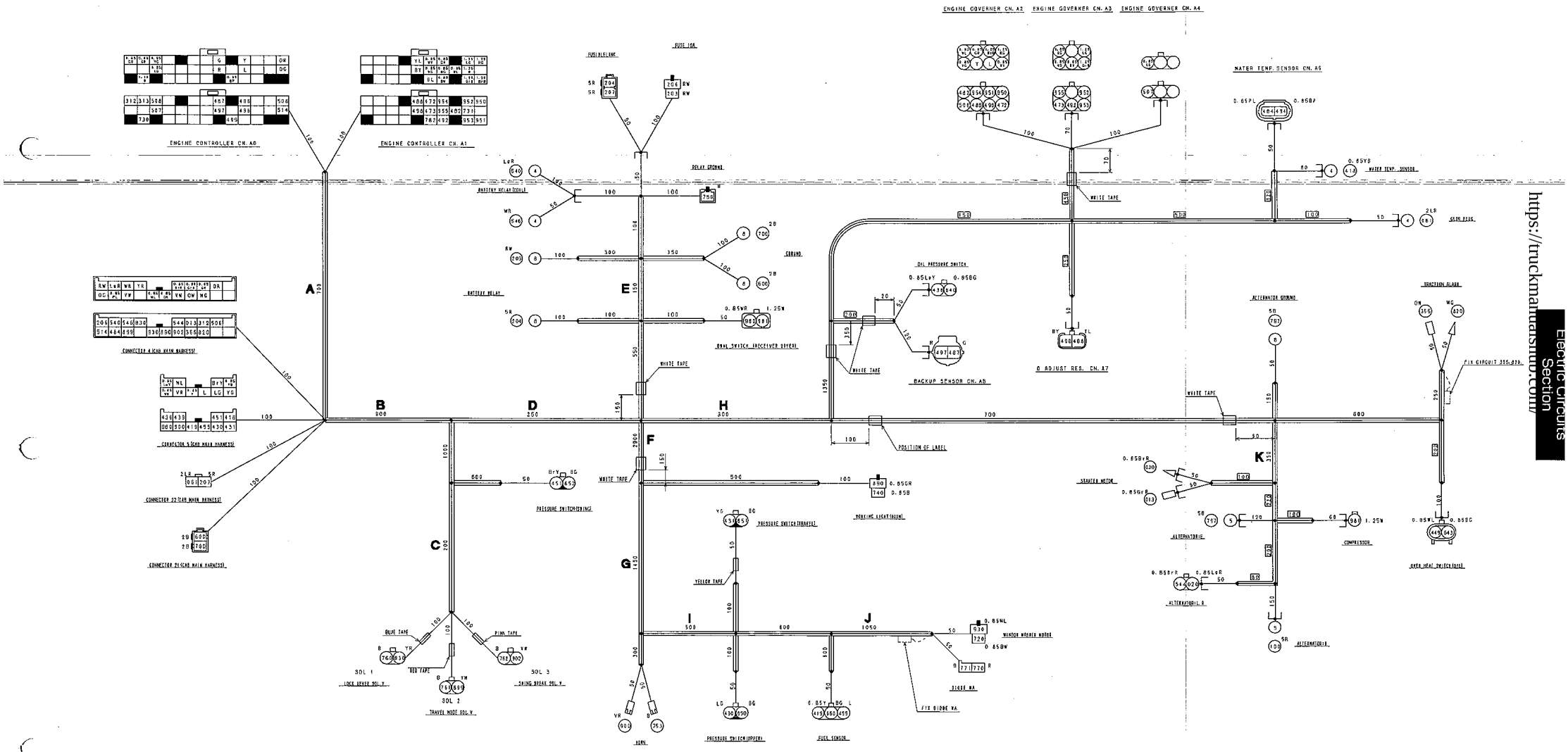

https://truckmanuals.com/

https://truckmanualshub.com/

Electric Circuits

ASSEMBLY DIAGRAMS

Air Conditioner
Inside Cab

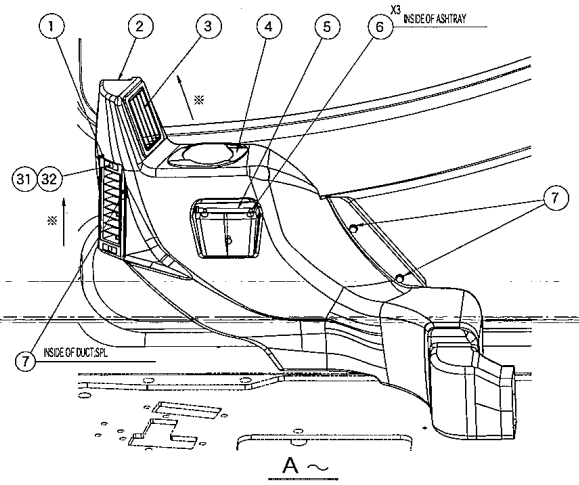

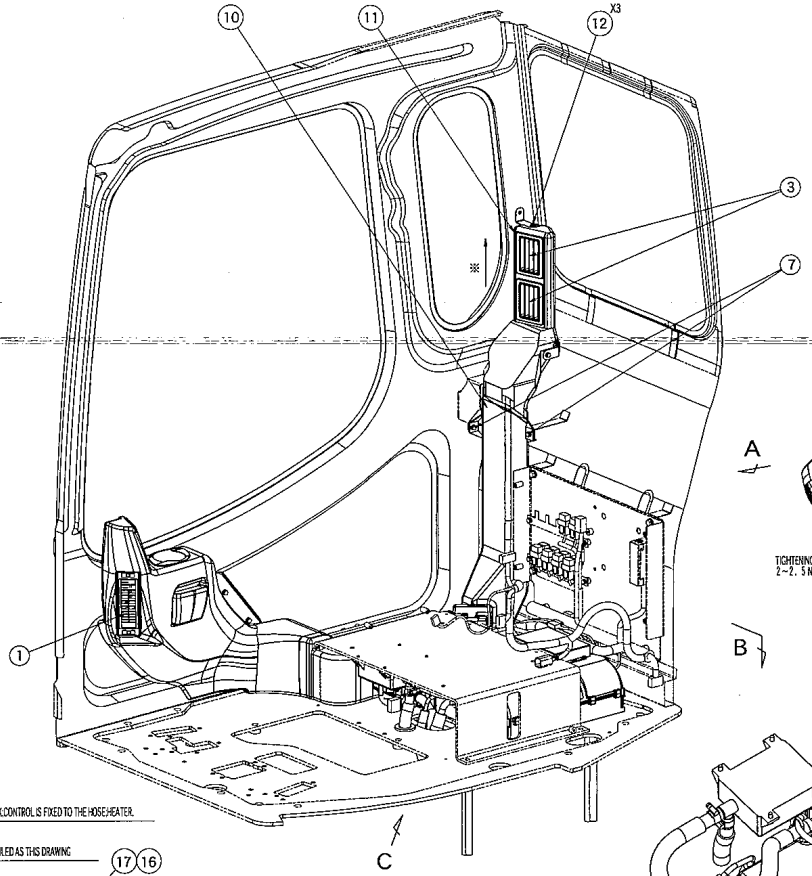

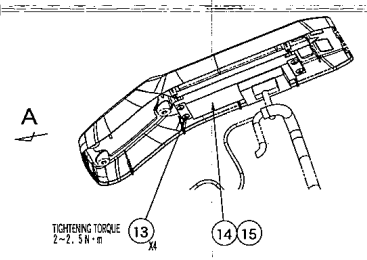

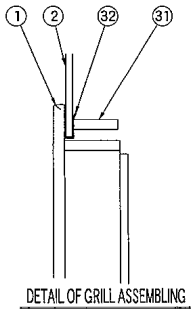

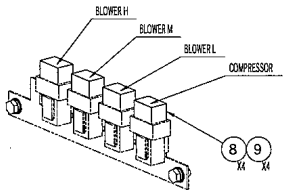

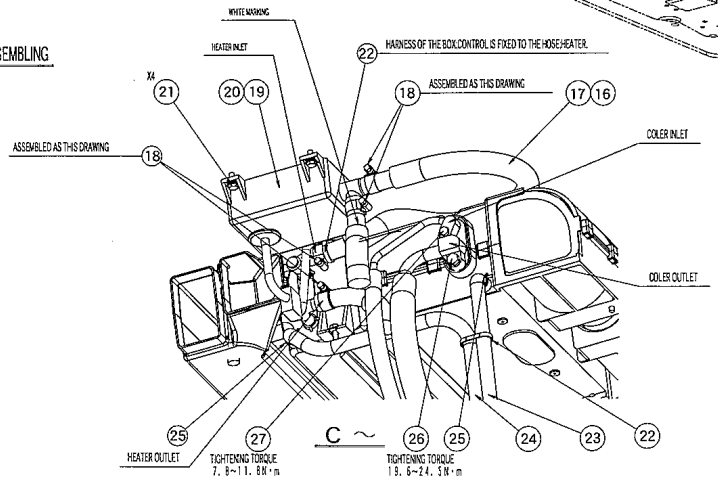

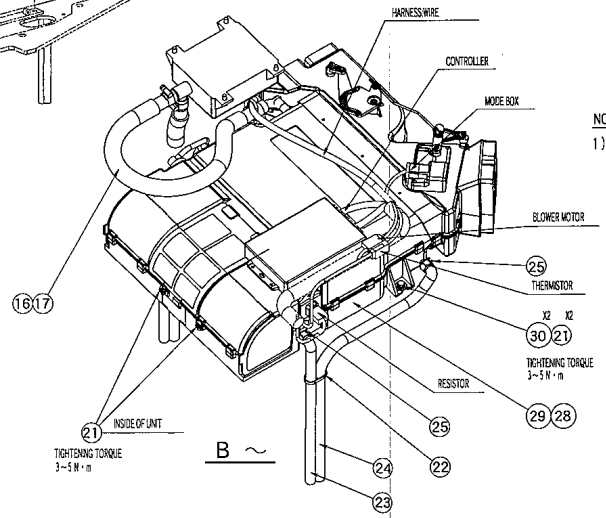

DESCRIPTION	SYMBOL	QTY.
GRILL	1	1
AIR CONDITIONER FACE DUCT	2	1
GRILL	3	3
CUP HOLDER	4	1
ASHTRAY	5	1
M5X10 FLUSH HEAD SCREW	6	3
M6X16 HIGH-STRENGTH BOLT (WITH WASHER)	7	5
SWITCH-OVER RELAY	8	4
SWITCH-OVER RELAY	9	4
AIR CONDITIONER CONNECTING DUCT	10	1
AIR CONDITIONER DUCT	11	1
M6X10 PAN HEAD SCREW (WITH WASHER)	12	3
M5X14 TAPPING SCREW	13	4
CONTROL PANEL	14	1
CONTROL PANEL	15	1
RUBBER HOSE (L=800)	16	1
22X650 CORRUGATED TUBE	17	1
JUBILEE CLIP	18	4
CONTROL BOX	19	1
CONTROL BOX	20	1
M6X16 BOLT (WITH WASHER)	21	8
HARNESS BAND L=250	22	AS NEEDED
DRAIN HOSE	23	2
DRAIN HOSE	24	2
HOSE BAND	25	4
M8X25 BOLT (WITH WASHER)	26	1
M6X25 BOLT	27	1
AIR CONDITIONER UNIT	28	1
AIR CONDITIONER UNIT	29	1
M6 WASHER (PLATED)	30	2
THREDED SCREW;SPL	31	2
NUT;SPL	32	2

NOTES

1) DIRECTION OF GRILLE SHUT OFF IS AGREED WITH THE ARROW MARKED ※.

https://truckmanualshub.com/

https://truckmanualshub.com/

Electric Circuits

ASSEMBLY DIAGRAMS

Air Conditioner
Inside Frame

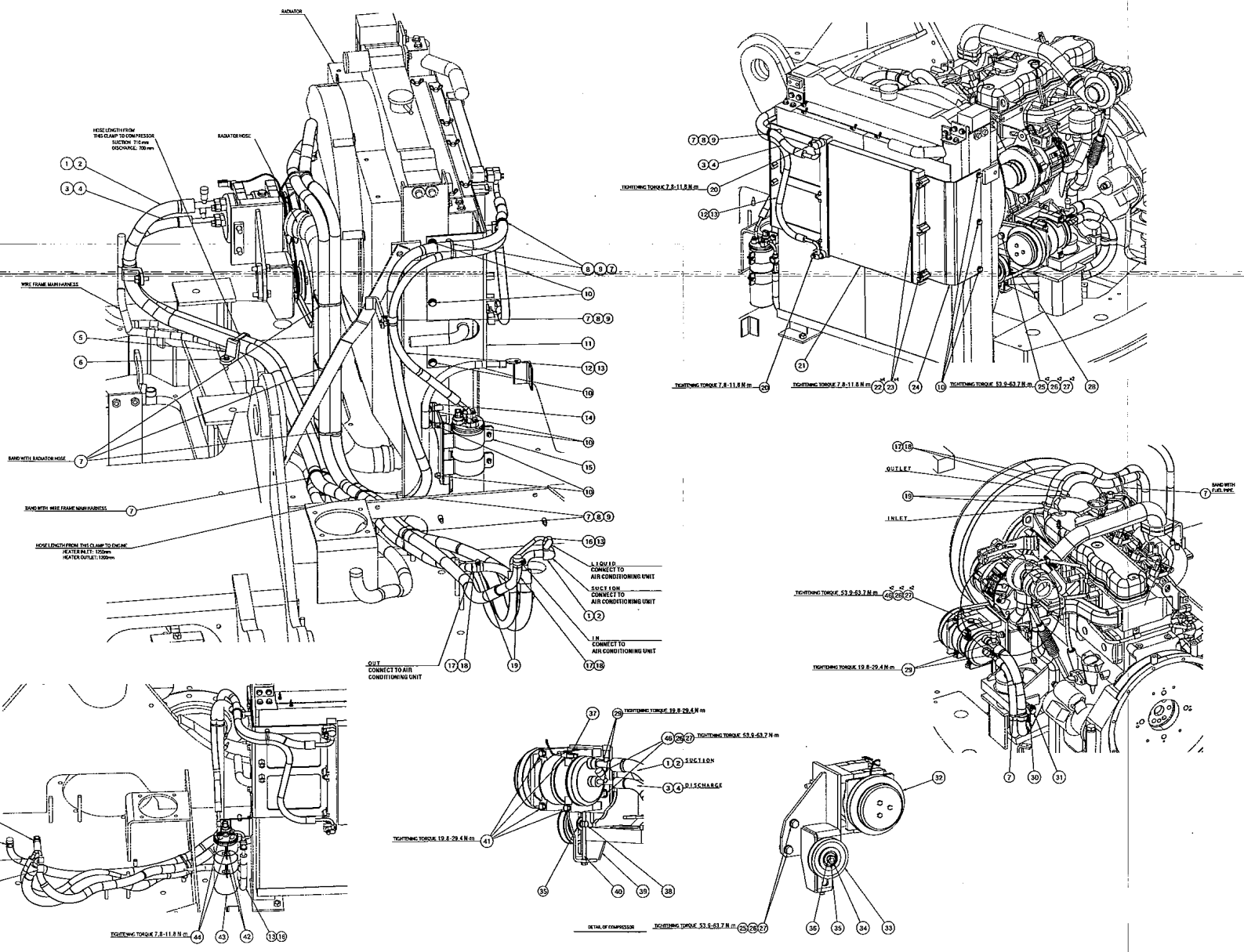

DESCRIPTION	SYMBOL	QTY.
HOSE COOLER	1	1
CORRUGATED TUBE 25X2200	2	1
HOSE COOLER	3	1
CORRUGATED TUBE 19X2500	4	1
CLAMP	5	1
M6X25 BOLT (WITH WASHER)	6	1
HARNESS BAND L=250	7	AS NEEDED
MOUNTING CLAMP	8	5
M5X8 PAN HEAD SCREW	9	5
M8X20 SEMS BOLT	10	10
BRACKET	11	1
HOSE	12	1
CORRUGATED TUBE 15X1000	13	2
BRACKET	14	1
BRACKET	15	1
HOSE	16	1
RUBBER HOSE (L=2300)	17	2
CORRUGATED TUBE 22X2200	18	2
JUBILEE CAP	19	4
M6X25 BOLT	20	2
CONDENSOR	21	1
CONDENSOR BRACKET	22	4
M6X45 BOLT (WITH WASHER)	23	4
CONDENSOR BRACKET	24	1
M10X1.25X35 HIGH-STRENGTH BOLT	25	2
HIGH-STRENGTH WASHER M10	26	4
LOCTITE 262	27	AS NEEDED
V BELT BX1175	28	1
M8X25 BOLT (WITH WASHER)	29	2
CLAMP WITH BAND (M) M10	30	1
M10X25 BOLT (WITH WASHER)	31	1
AIR CONDITIONER COMPRESSOR	32	1
TENSION PULLEY	33	1
NUT M10XP1.25	34	1
HIGH-STRENGTH WASHER M10	35	2
SPRING WASHER 10	36	1
CLIP	37	1
SLIDE SHAFT	38	1
COMPRESSOR BRACKET	39	1
ADJUSTING BOLT	40	1
M8X90 BOLT	41	4
M6X20 BOLT (WITH WASHER)	42	2
DRYER RECEIVER	43	1
M8X28 BOLT (WITH WASHER)	44	2
REFRIGERANT GAS R134a	45	AS NEEDED
M10X40 HIGH-STRENGTH BOLT	46	2

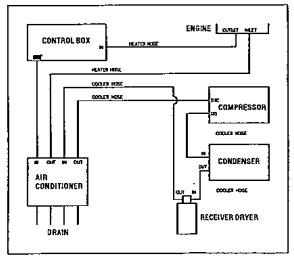

https://truckmanualshub.com/

https://truckmanualshub.com/

https://truckmanualshub.com/

SH125/135X-3

(Emission Control Regulation Compliant Machine)

SERVICE TEXT

Maintenance Section

SUMITOMO (S.H.I.) CONSTRUCTION MACHINERY MANUFACTURING CO., LTD.

https://truckmanualshub.com/

https://truckmanualshub.com/

Table of Contents

2nd Edition: 09/2002

Maintenance Section

Measuring / Adjusting Pressure **125-1-05-00-13**

1. Measuring Pressure 1/8

A. Basic conditions 1/8

B. Pressure settings 1/8

C. Ports for measuring pressure 2/8

D. Preparation for measuring pressure 3/8

E. Measuring pressure 5/8

2. Pressure Adjustment 7/8

A. Pressure adjusting points 7/8

Compatibility **125-1-05-05-11**

List of Common Features and Compatibility of Main Parts 1/4

Dimensions of Bucket and Peripheral **125-1-05-04-11**

Bucket Dimensions 1/2

Arm Dimensions 2/2

https://truckmanualshub.com/

https://truckmanualshub.com/

1. Measuring Pressure

A. Basic conditions

Oil temperature	45 to 55°C
Engine revolutions at no load	2150 rpm

B. Pressure settings

			Relief valve Individual pressure settings	Actual readings measured on machines (reference)	Method of measurement
Main relief pressure			34.3 MPa at 60 L/min (350 kgf/cm^2)	34.6 MPa (353 kgf/cm^2)	Arm relief
Boom overload relief		Up	37.8 MPa at 20 L/min (385 kgf/cm^2)	39.1 MPa (399 kgf/cm^2)	Fasten main relief 180° + Boom-up relief
		Down	37.8 MPa at 20 L/min (385 kgf/cm^2)	38.5 MPa (392 kgf/cm^2)	Fasten main relief 180° + Boom-down relief
Arm overload relief		Out	37.8 MPa at 20 L/min (385 kgf/cm^2)	39.5 MPa (403 kgf/cm^2)	Fasten main relief 180° + Arm-out relief
		In	37.8 MPa at 20 L/min (385 kgf/cm^2)	39.3 MPa (401 kgf/cm^2)	Fasten main relief 180° + Arm-in relief
Bucket overload relief		Open	37.8 MPa at 20 L/min (385 kgf/cm^2)	39.5 MPa (403 kgf/cm^2)	Fasten main relief 180° + Bucket-open relief
		Close	37.8 MPa at 20 L/min (385 kgf/cm^2)	39.7 MPa (405 kgf/cm^2)	Fasten main relief 180° + Bucket-closed relief
Swing relief		Right	28.0 MPa at 78 L/min (285 kgf/cm^2)	28.5 MPa (291 kgf/cm^2)	Swing relief
		Left	28.0 MPa at 78 L/min (285 kgf/cm^2)	28.5 MPa (291 kgf/cm^2)	Swing relief
Blade	Main		20.6 MPa at 54 L/min (210 kgf/cm^2)	21.5 MPa (220 kgf/cm^2)	Blade-up relief
	Overload relief	Up	23.5 MPa at 20 L/min (240 kgf/cm^2)	25.0 MPa (255 kgf/cm^2)	Fasten blade main relief 180° + Blade-up relief
		Down	23.5 MPa at 20 L/min (240 kgf/cm^2)	25.0 MPa (255 kgf/cm^2)	Fasten blade main relief 180° + Blade-down relief
Pilot relief			4.2 MPa (43 kgf/cm^2)	3.9 MPa (40 kgf/cm^2)	Lever neutral

https://truckmanualshub.com/

C. Ports for measuring pressure

1. Main pump and Pilot line

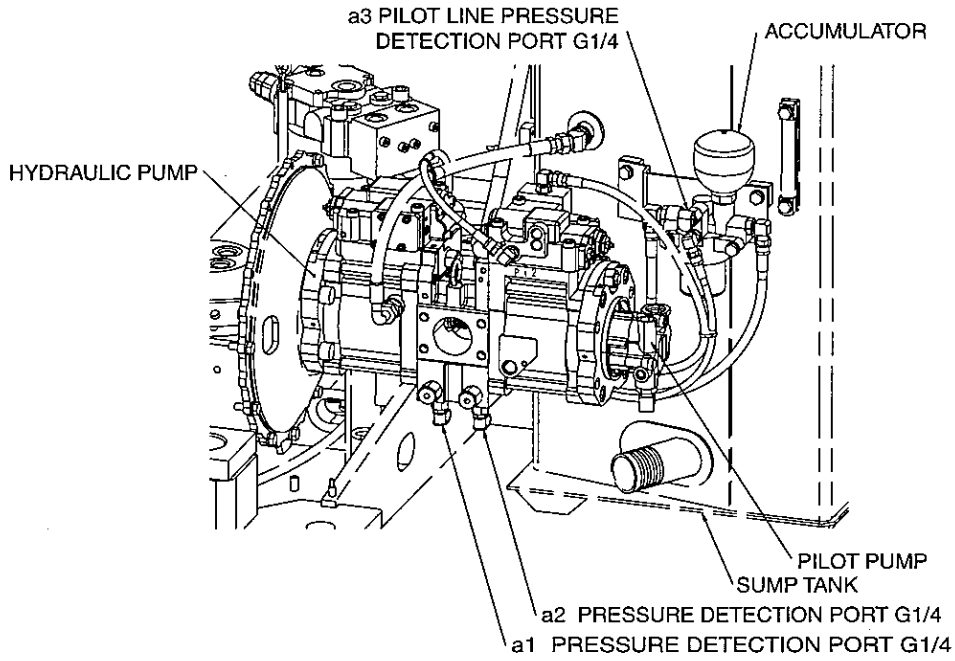

2. Blade pump

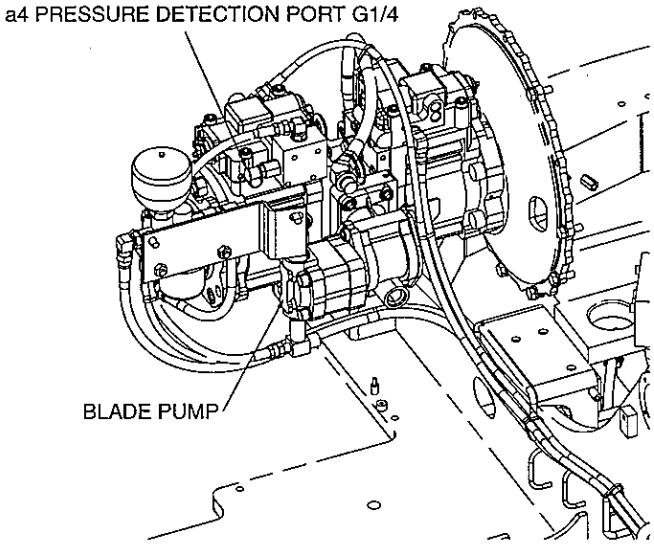

https://truckmanualshub.com/

D. Preparation for Measuring Pressure

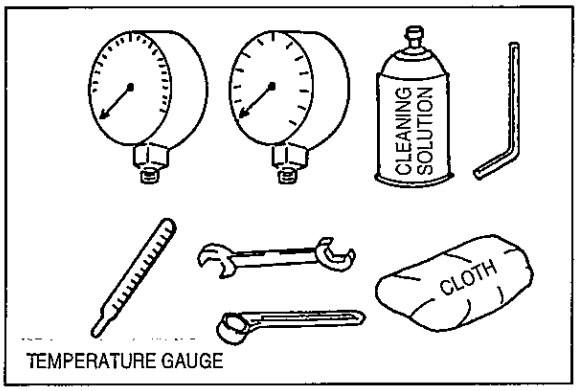

1. Items needed
   - Pressure gauges
     for 49.1MPa (500 kgf/cm^2)
     for 9.81 MPa (100 kgf/cm^2)
   - Tools: Spanners (closed wrench),
     17 mm and 27 mm
     Hexagonal bar wrenches, 5mm and 6mm
   - Other: Cloth, cleaning solution,
     temperature gauge

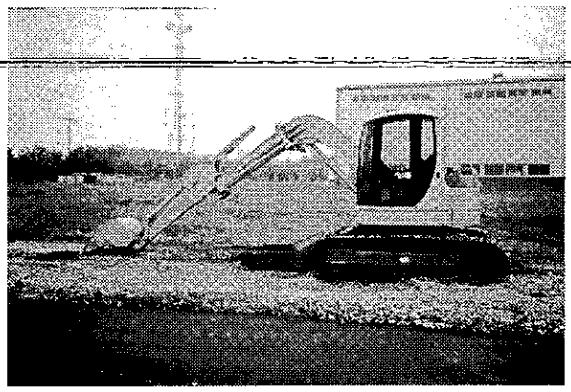

2. Positioning the machine
   - Position the machine on solid level ground.
     Lower the boom so the arm end touches the ground with the bucket cylinder out at stroke end and the arm cylinder out at stroke end.
     The blade should also be lowered to touch the ground.

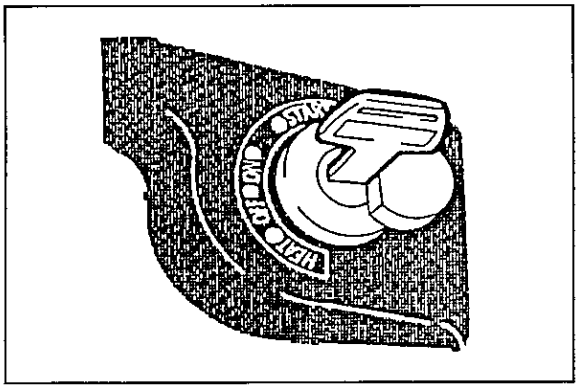

3. Relieving pressure in circuit
   - Turn the starter switch off and confirm that the engine has stopped. Turn the key on again.

   Note: Do not start the engine.
   - Operate each lever 10 times or more and check that the attachments no longer move. Then turn off the starter switch.

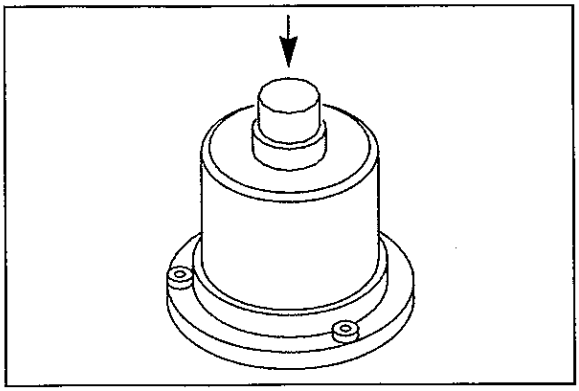

4. Relieving pressure in hydraulic oil tank
   - Press the air breather button located on the hydraulic oil tank to release the pressure in the tank.

https://truckmanualshub.com/

5. Attaching the pressure gauge

See section 3 on the previous page for the port positions for measuring.

Measuring actuator	Port	Pressure gauge	Port size	Tool
Main, Left travel, Bucket,Boom	a1	49.1 MPa (500 kgf/cm2)	G 1/4	Hexagonal bar wrench 6 mm
Main, Right travel, Swing,Arm	a2	49.1 MPa (500 kgf/cm2)	G 1/4	Hexagonal bar wrench 6 mm
Pilot	a3	9.8 MPa (100 kgf/cm2)	G 1/4	Spanner 17 mm
Blade	a4	49.1 MPa (500 kgf/cm2)	G 1/4	Hexagonal bar wrench 6 mm

6. Checking oil temperature

Check hydraulic oil temperatures using a temperature gauge.

Oil temperature	45 to 55°C

If the oil temperature is low, follow the instructions for warm-up in the Operator's Manual to increase the temperature.

The preparation is now complete.

https://truckmanualshub.com/

E. Measuring Pressure

1. Main relief pressure

Lever operation	Arm-in relief
Pressure gauge to be used	49.1 MPa (500 kgf/cm^2)
Pressure setting	34.3 ± 1.0 MPa (339 to 360 kgf/cm^2)

2. Swing relief pressure

Lever operation	Swing relief
Pressure gauge to be used	49.1 MPa (500 kgf/cm^2)
Pressure setting	28.2 ± 1.0 MPa (277 to 298 kgf/cm^2)

Attach the pressure gauge to the a2 side of the pressure detection port on the main pump.

When measuring the pressure for swing, first activate the mechanical brake by disconnecting the connector on the swing pressure switch located on the lower left of the cab.

The swing pressure switch will be revealed after removing the side cover located on the lower left of the cab. See the figure below.

CAUTION:

- Before positioning the swing lever in place for the first time, the engine revolutions should be reduced to approximately 1,000 rpm. When the swing is confirmed to be no longer moving, increase the engine revolutions to the maximum.
- Disconnecting the hose to the swing motor's parking release port PG would also work for measuring pressure along with disconnecting the connector.

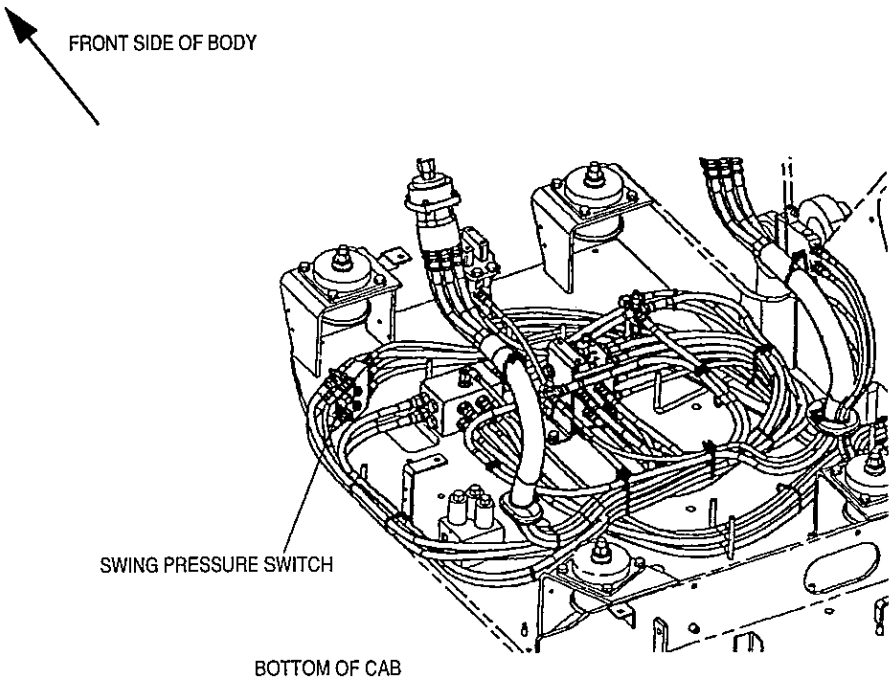

https://truckmanualshub.com/

3. Pilot relief pressure

Lever operation	Neutral
Pressure gauge to be used	9.8 MPa (100 kgf/cm^2)
Pressure setting	3.9 ± 0.2 MPa (37 to 42 kgf/cm^2)

4. Blade relief pressure

Main relief pressure for blade

Lever operation	Blade up
Pressure gauge to be used	49.1 MPa (500 kgf/cm^2)
Pressure setting	21.5 ± 1.0 MPa (210 to 229 kgf/cm^2)

Overload relief pressure for blade

Lever operation	Blade up/down
Pressure gauge to be used	49.1 MPa (500 kgf/cm^2)
Pressure setting	25.0 ± 1.0 MPa (245 to 265 kgf/cm^2)

When measuring the overload relief pressure, fasten the main relief valve of the blade 180° to temporarily adjust it.

5. Other overload relief pressures

Lever operation	Boom up	Boom down	Arm out	Arm in	Bucket open	Bucket closed
Actual pressure reading	39.5 ± 1.0 MPa (392 to 413 kgf/cm^2)		39.5 ± 1.0 MPa (392 to 413 kgf/cm^2)		39.5 ± 1.0 MPa (392 to 413 kgf/cm^2)	
Port for detection	a1		a2		a1	

Temporary adjustments are required because the overload relief pressures of the attachments are set higher than those for the main relief.

https://truckmanualshub.com/

2. Pressure adjustment

A. Pressure adjusting points

1. Control valve

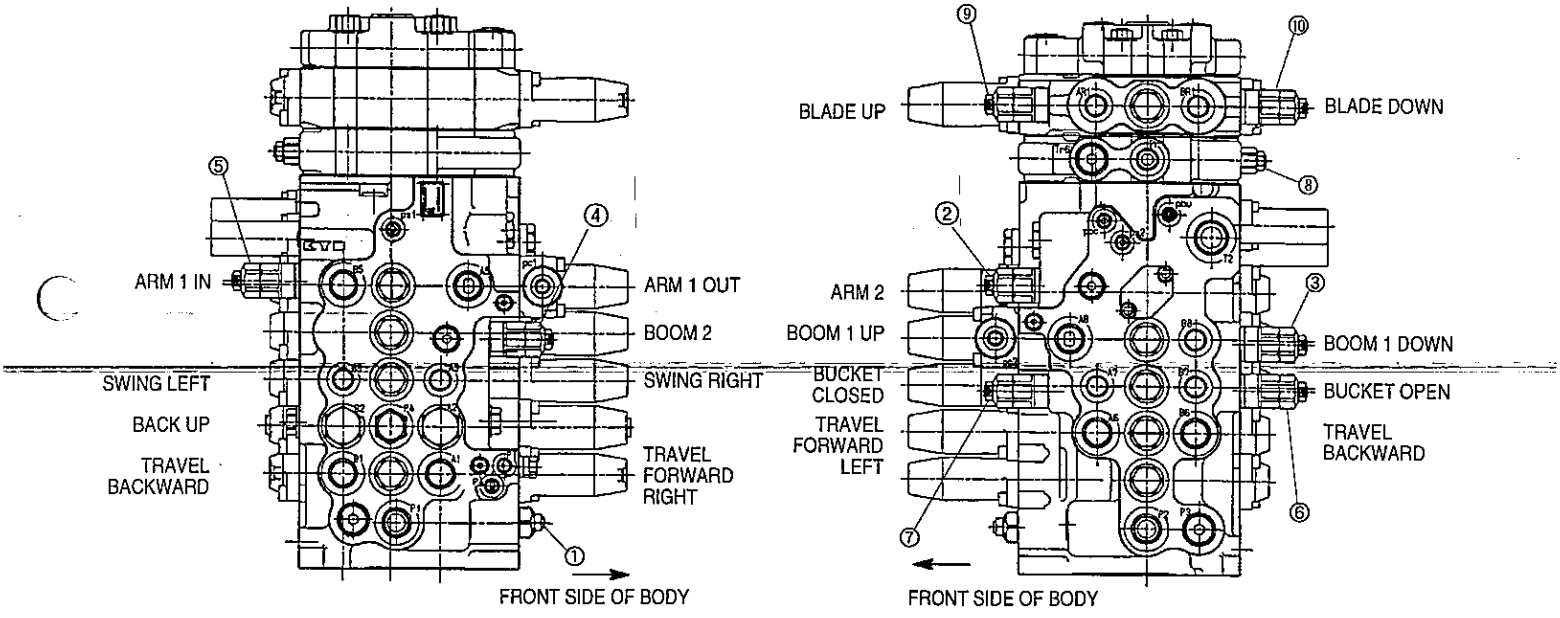

	Location	Tool needed		Pressure setting	Pressure per one turn of adjustment screw
		Lock nut	Adjustment screw		
(1)	Main	17 mm	Hexagonal wrench 6 mm	34.3 MPa (350 kgf/cm^2)	17.8 MPa (181 kgf/cm^2)
(2)	Boom up			39.5 MPa (403 kgf/cm^2)	21.2 MPa (216 kgf/cm^2)
(3)	Boom down				
(4)	Arm out			39.5 MPa (403 kgf/cm^2)	
(5)	Arm in				
(6)	Bucket open			39.5 MPa (403 kgf/cm^2)	
(7)	Bucket closed				
(8)	Blade main			21.5 MPa (220 kgf/cm^2)	
(9)	Blade Up			25.0 MPa (255 kgf/cm^2)	
(10)	Blade down				

https://truckmanualshub.com/

2. Hydraulic pump

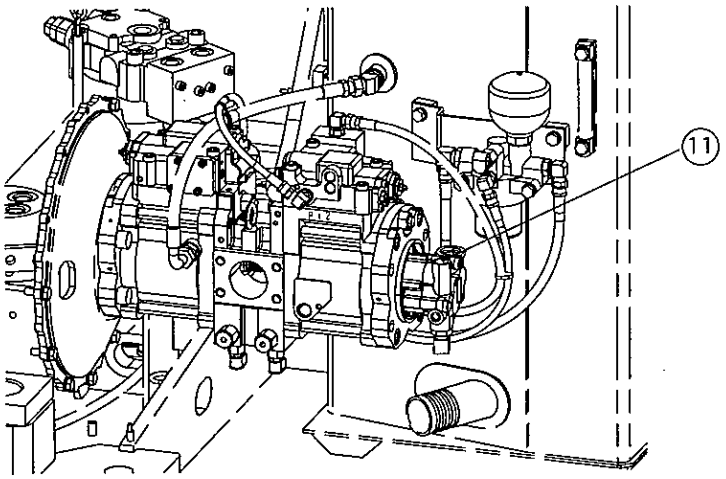

3. Swing motor

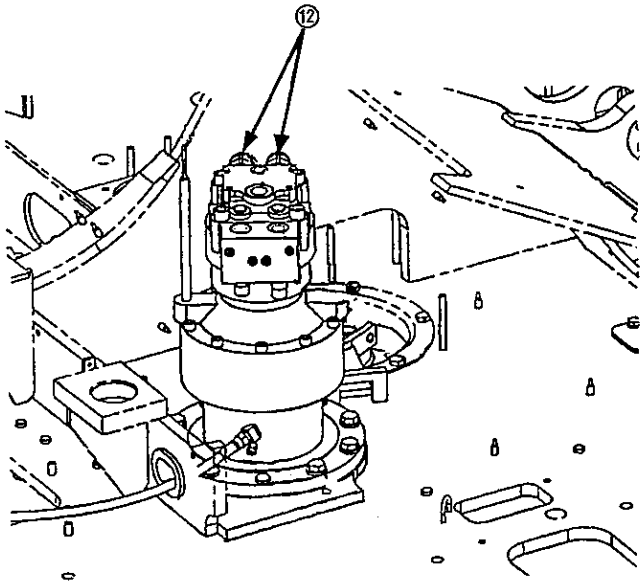

	Name	Tool needed		Pressure setting	Pressure per one turn of adjustment screw
		Lock nut	Adjustment screw		
(11)	Pilot	24 mm	Hexagonal wrench 6 mm	3.9 MPa (40 kgf/cm^2)	1.56 MPa (16 kgf/cm^2)
(12)	Swing Motor	32 mm	24 mm	28.2 MPa (288 kgf/cm^2)	11.7 MPa (119 kgf/cm^2)

https://truckmanualshub.com/

List of Common Features and Compatibility of Major Parts (SH125X-3 and SH135X-3)

- Common features — O: Common parts — Δ: Partially different — X: Different
- Compatibility — ←O→: OK, bi-directional — —O→, —X→, ←O—, ←X—: OK, one direction only — ←X→: None

Part Name	Common Features	SH125X-3 Single Boom	Compatibility	SH125X-3 Single Boom with blade	Compatibility	SH135X-3 Single Boom with blade	Common Features	Remarks
Travel motor	O	KMA1321	←O→	KMA1321	←O→	KMA1321	O	
Shoe/link (iron) Assembly	O	KMA1280	←O→	KMA1280	←O→	KMA1280	O	
Single shoe	O	KNA0632	←O→	KNA0632	←O→	KNA0632	O	
Link assembly	O	KMA1281	←O→	KMA1281	←O→	KMA1281	O	
Lower roller	O	KNA0693	←O→	KNA0693	←O→	KNA0693	O	
Upper roller	O	KMA1275	←O→	KMA1275	←O→	KMA1275	O	
Takeup roller	O	KMA1265	←O→	KMA1265	←O→	KMA1265	O	
Drive sprocket	O	KNA0826	←O→	KNA0826	←O→	KNA0826	O	
Rotating joint	Δ	KMA1325	←X→	KMA1260	←O→	KMA1260	Δ	With/without blade port
Counterweight	O	KMB0531	←O→	KMB0531	←X→	KMB0532	Δ	Different weight
Turntable bearing	O	KMB0499	←O→	KMB0499	←O→	KMB0499	O	
Swing motor	O	KMC0093	←O→	KMC0093	←O→	KMC0093	O	
Engine	O	KMH0805	←O→	KMH0805	←O→	KMH0805	O	
Engine controller	O	KNH0895	←O→	KNH0895	←O→	KNH0895	O	
Radiator/oil cooler	O	KMH0831	←O→	KMH0831	←O→	KMH0831	O	
Air cleaner Assembly	O	KMH0827	←O→	KMH0827	←O→	KMH0827	O	
Muffler	O	KNH0761	←O→	KNH0761	←O→	KNH0761	O	
Fuel tank	O	KMH0786	←O→	KMH0786	←O→	KMH0786	O	
Hydraulic pump	Δ	KMJ2936	←X→	KMJ2937	←O→	KMJ2937	O	With/without pump for blade
Control valve	Δ	KMJ2633	←X→	KMJ2798	←O→	KMJ2798	O	Difference in blade sections
Remote control valve (for operation)	O	KHJ1925	←O→	KHJ1925	←O→	KHJ1925	O	
Remote control valve (for travel)	O	KHJ1969	←O→	KHJ1969	←O→	KHJ1969	O	
Remote control valve (for blade)		—		KHJ1928	←O→	KHJ1928	O	
Hydraulic oil tank	O	KMJ2949	←O→	KMJ2949	←O→	KMJ2949	O	
Operator's cab	O	KHN3416	←O→	KHN3416	←O→	KHN3416	O	
Operator's seat	O	KHN3245	←O→	KHN3245	←O→	KHN3245	O	

https://truckmanualshub.com/

Part Name	Common Features	SH125X-3 Single Boom	Compatibility	SH125X-3 Single Boom with blade	Compatibility	SH135X-3 Single Boom with blade	Common Features	Remarks
Monitor	O	KHR3277	←O→	KHR3277	←O→	KHR3277	O	
Air conditioning								
Air conditioning unit G	O	KHR3745	←O→	KHR3745	←O→	KHR3745	O	
Compressor G	O	KHR2785	←O→	KHR2785	←O→	KHR2785	O	
Capacitor G	O	KHR3742	←O→	KHR3742	←O→	KHR3742	O	
Receiver dryer G	O	KHR3747	←O→	KHR3747	←O→	KHR3747	O	
Boom	O	KMV2160	←O→	KMV2160	←O→	KMV2160	O	
Arm	O	KMV2370	←O→	KMV2370	←O→	KMV2370	O	
Bucket	O	KMV2131	←O→	KMV2131	←X→	KMV2392	Δ	SH125: 0.45 m^3 SH135: 0.50 m^3
Blade		—		KMV2145	←O→	KMV2145	O	
Boom cylinder								
Right	O	KMV2134	←O→	KMV2134	←O→	KMV2134	O	
Left	O	KMV2135	←O→	KMV2135	←O→	KMV2135	O	
Arm cylinder	O	KNV1681	←O→	KNV1681	←O→	KNV1681	O	
Bucket cylinder	O	KMV2192	←O→	KMV2192	←O→	KMV2192	O	
Blade cylinder								
Right		—		KMV2367	←O→	KMV2367	O	
Left		—		KMV2368	←O→	KMV2368	O	

https://truckmanualshub.com/

List of Common Features and Compatibility of Major Parts (SH125X-3 and SH120-3)

- Common features
- Compatibility

O: Common parts
←O→: OK, bi-directional

Δ: Partially different
—O→, —X→, ←O—, ←X—: OK, one direction only

X: Different
←X→: None

Part Name	Common Features	SH125X-3 Single Boom	Compatibility	SH120-3	Remarks
Motor	X	KMA1321	←X→	KNA0767	
Shoe/Link (iron) Assembly	X	KMA1280	←X→	KNA0653	
Single shoe	O	KNA0632	←O→	KNA0632	
Link Assembly	X	KMA1281	←X→	KNA0654	
Lower roller External Internal	O	KNA0693	←O→	KNA0693	
Upper roller	X	KMA1275	←X→	KNA0625	
Takeup roller	X	KMA1265	←X→	KNA0686	
Drive sprocket	X	KNA0826	←X→	KNA0323	
Rotating joint	X	KMA1325	←X→	KNA0632	
Counterweight	X	KMB0531	←X→	KNB0688	
Turntable bearing	X	KMB0499	←X→	KNB0782	
Motor	X	KMC0093	←X→	KNC0081	
Engine	X	KMH0805	←X→	KNH0879	
Engine controller	X	KNH0895	←X→	KNH0877	
Radiator/oil cooler	X	KMH0831	←X→	KNH0830	
Air cleaner Assembly	X	KMH0827	←X→	KRH1221	
Muffler	O	KNH0761	←O→	KNH0761	
Fuel tank	X	KMH0786	←X→	KNH0771	
Hydraulic pump	X	KMJ2936	←X→	KNJ2900	
Control valve	X	KMJ2633	←X→	KNJ2741	
Remote control valve (for operation)	Δ	KHJ1925	←X→	KRJ5804	Different secondary pressure setting
Remote control valve (for TRAVEL)	X	KHJ1969	←X→	KNJ2557	
Hydraulic oil tank	X	KMJ2949	←X→	KNJ2554	
Operator's cab	X	KHN3416	←X→	KHN2353	
Operator's seat	X	KHN3245	←X→	KHN2225	

https://truckmanualshub.com/

Maintenance

COMPATIBILITY

Part Name	Common Features	SH125X-3 Single Boom	Compatibility	SH120-3	Remarks
Monitor	X	KHR3277	←X→	KHR3825	
Air conditioning					
Air conditioning unit G	X	KHR3745	←X→	KHR2756	
Compressor G	X	KHR2785	←X→	KHR3197	
Capacitor G	X	KHR3742	←X→	KHR2592	
Receiver dryer G	X	KHR3747	←X→	KHR2594	
Boom	X	KMV2160	←X→	KNV1420	
Arm	X	KMV2370	←X→	KNV1424	
Bucket	Δ	KMV2131	←O→	KNV1299	See supporting data
Boom cylinder					
Right	X	KMV2134	←X→	KNV1109	
Left		KMV2135		KNV1110	
Arm cylinder	Δ	KNV1681	←O→	KNV1111	Different bushes
Bucket cylinder	Δ	KMV2192	←X→	KNV1112	Different piping

https://truckmanualshub.com/

Bucket Dimensions

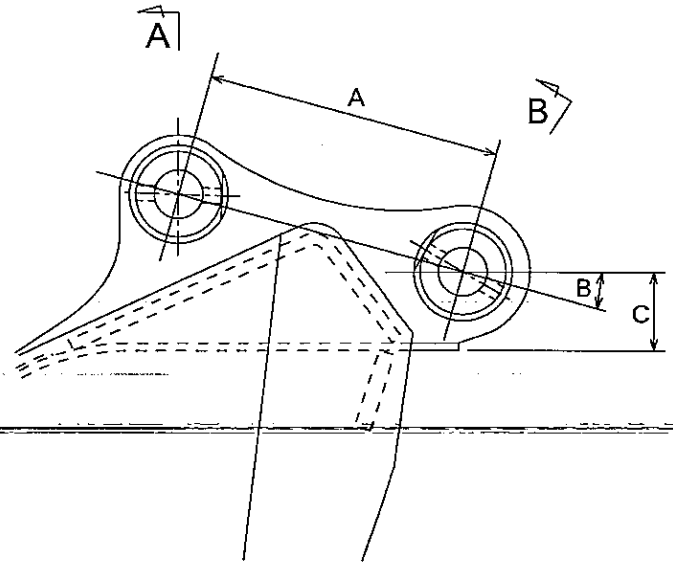

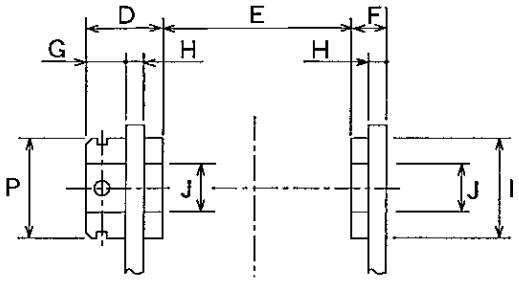

View from A

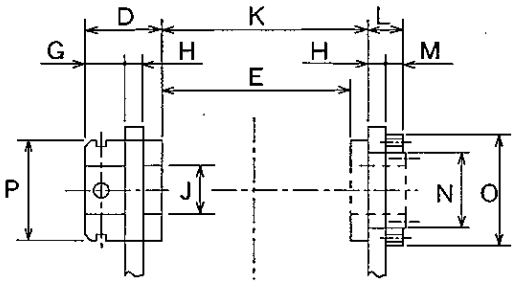

View from B

(mm)

Location	SH125/135X-3 Single Boom
A	355
B	13.9°
C	98
D	82
E	255
F	44
G	38
H	19
I	dia. 130
J	dia. 65
K	280
L	33
M	14
N	dia. 95
O	dia. 150
P	dia. 100

https://truckmanualshub.com/

Arm Dimensions

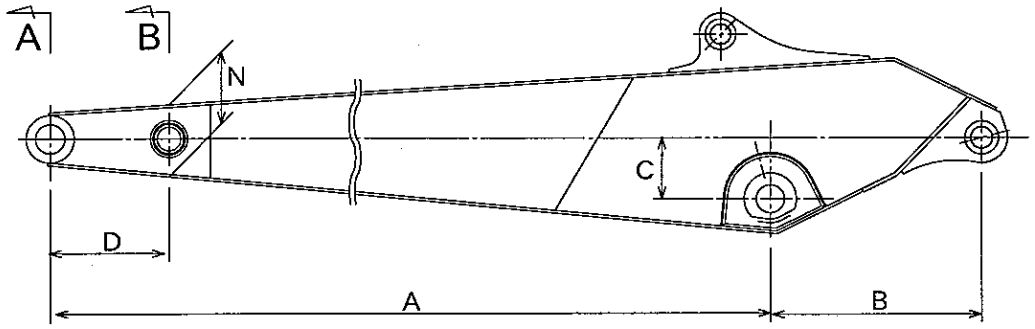

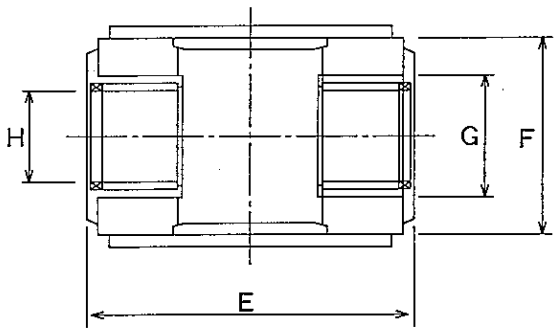

View from A

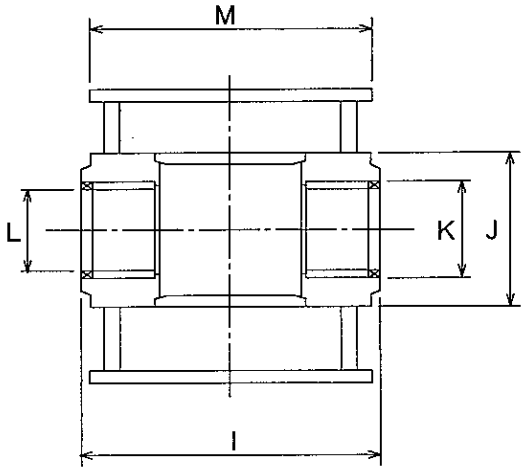

View from B

(mm)

Location	SH125/135X-3 Single Boom
A	2380
B	590
C	245
D	330
E	254
F	dia. 150
G	dia. 95
H	dia. 65
I	254
J	dia. 120
K	dia. 80
L	dia. 65
M	220
N	209.4

https://truckmanualshub.com/

SH125/135X-3 SERVICE TEXT

Revision,
First Printing May,2002
2nd Printing Sep.,2002

Published by SUMITOMO (S.H.I.)CONSTRUCTION MACHINERY MANUFACTURING CO., LTD.

5-9-11 Kita-Shinagawa
Shinagawa-ku Tokyo 141-8686
TEL +81-3-5421-8535

Printed at San-ai Kikaku Inc.

1-2-5 Higashi Morioka
Toyohashi-shi Aichi 441-1113
TEL +81-532-88-0556

All rights reserved.

https://truckmanualshub.com/

SUMITOMO (S.H.I.)
CONSTRUCTION MACHINERY
MANUFACTURING CO., LTD.