https://truckmanualshub.com/

Genie®

Operator's Manual

with Maintenance Information

First Edition
Tenth Printing
Part No. 48735

GS™-2668 RT
GS™-3268 RT

Downloaded from www.Manualslib.com manuals search engine

https://truckmanualshub.com/

Genie® GS-2668 RT
Genie® GS-3268 RT

Important

Read, understand and obey these safety rules and operating instructions before operating this machine. Only trained and authorized personnel shall be permitted to operate this machine. This manual should be considered a permanent part of your machine and should remain with the machine at all times. If you have any questions, please call Genie Industries.

Contents

	Page
Safety	1
Legend	7
Controls	8
Pre-operation Inspection	12
Maintenance	14
Function Tests	17
Work Place Inspection	20
Operating Instructions	21
Transport Instructions	25
Floor Loading	26
Decals	27
Specifications	29

Contact us:

Internet: http://www.genielift.com
e-mail: techpub@genieind.com

Genie® Industries

Copyright © 1998 by Genie Industries

First Edition: Tenth Printing, January 2004

"Genie" is a registered trademark of Genie Industries in the U.S.A. and many other countries. "GS" is a trademark of Genie Industries.

These machines comply with ANSI/SIA 92.6-1999.

Printed on recycled paper

Printed in U.S.A.

Downloaded from www.Manualslib.com manuals search engine

https://truckmanualshub.com/

Safety Rules

Danger

Failure to obey the instructions and safety rules in this manual will result in death or serious injury.

Do Not Operate Unless:

☑ You learn and practice the principles of safe machine operation contained in this operator's manual.

1 Avoid hazardous situations.

Know and understand the safety rules before going on to the next section.

2 Always perform a pre-operation inspection.

3 Always perform function tests prior to use.

4 Inspect the work place.

5 Only use the machine as it was intended.

☑ You read, understand and obey:

Manufacturer's instructions and safety rules—safety and operator's manuals and machine decals

employer's safety rules and worksite regulations

applicable governmental regulations

☑ **You** are properly trained to safely operate the machine.

Downloaded from www.Manualslib.com manuals search engine

https://truckmanualshub.com/

SAFETY RULES

Electrocution Hazards

This machine is **not** electrically insulated and will **not** provide protection from contact with or proximity to electrical current.

Maintain safe distances from electrical power lines and apparatus in accordance with applicable governmental regulations and the following chart.

Voltage Phase to Phase	**Minimum Safe Approach Distance Feet**	**Meters**
0 to 300V	Avoid Contact	
300V to 50KV	10	3.05
50KV to 200KV	15	4.60
200KV to 350KV	20	6.10
350KV to 500KV	25	7.62
500KV to 750KV	35	10.67
750KV to 1000KV	45	13.72

Allow for platform movement, electrical line sway or sag and beware of strong or gusty winds.

Keep away from the machine if it contacts energized power lines. Personnel on the ground or in the platform must not touch or operate the machine until energized power lines are shut off.

Do not operate the machine during lightning or storms.

Do not use the machine as a ground for welding.

Tip-over Hazards

Occupants and equipment shall not exceed the maximum platform capacity or the maximum capacity of the platform extension.

Maximum capacity - GS-2668RT		
Platform retracted	1250 lbs	567 kg
Platform extended - Platform only	950 lbs	431 kg
Platform extended - Extension only	300 lbs	136 kg
Maximum occupants - ANSI and CSA		4
Maximum occupants - CE		
Outdoor use		4
Indoor use only		4

1250 lbs / 567 kg | Extension only 300 lbs / 136 kg | Platform only 950 lbs / 431 kg

Maximum capacity - GS-3268RT		
Platform retracted	1000 lbs	454 kg
Platform extended - Platform only	700 lbs	318 kg
Platform extended - Extension only	300 lbs	136 kg
Maximum occupants - ANSI and CSA		4
Maximum occupants - CE		
Outdoor use		2
Indoor use only		4

1000 lbs / 454 kg | Extension only 300 lbs / 136 kg | Platform only 700 lbs / 318 kg

Downloaded from www.Manualslib.com manuals search engine

https://truckmanualshub.com/

Do not alter or disable the limit switch(s).

Do not drive over 0.5 mph (0.8 km/h) with the platform raised.

Models without outriggers: Do not raise the platform unless the machine is on a firm, level surface.

Models with outriggers: Do not lower the outriggers unless the machine is on a firm surface. Avoid drop-offs, holes, unstable or slippery surfaces and other possible hazardous conditions.

Models with outriggers: Do not raise the platform unless the machine is level. Do not set the machine up on a surface where it cannot be leveled using only the outriggers.

Models with outriggers: Use common sense and planning when lowering the outriggers on a slope. The steer end outriggers must be lowered first.

Do not use the platform controls to free a platform that is caught, snagged or otherwise prevented from normal motion by an adjacent structure. All personnel must be removed from the platform before attempting to free the platform using the ground controls.

Do not depend on the tilt alarm as a level indicator. The tilt alarm sounds on the chassis and in the platform when the machine is on a severe slope.

If tilt alarm sounds:
Lower the platform. Move the machine to a firm, level surface. If the tilt alarm sounds when the platform is raised, use extreme caution to lower the platform.

Do not operate the machine in strong or gusty winds. Do not increase the surface area of the platform or the load. Increasing the area exposed to the wind will decrease machine stability.

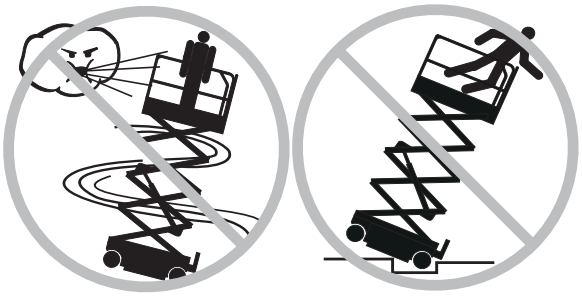

Do not drive the machine on or near uneven terrain, unstable surfaces or other hazardous conditions with the platform raised.

Use extreme care and slow speeds while driving the machine in stowed position across uneven terrain, debris, unstable or slippery surfaces and near holes and drop-offs.

Do not push off or pull toward any object outside of the platform.

GS-2668 RT	
ANSI & CSA - 4 person	200 lbs / 890 N
CE - Indoor use only - 4 person	200 lbs / 890 N
CE - Outdoor use - 4 person	90 lbs / 400 N
GS-3268 RT	
ANSI & CSA - 4 person	200 lbs / 890 N
CE - Indoor use only - 4 person	200 lbs / 890 N
CE - Outdoor use - 2 person	150 lbs / 667 N

Downloaded from www.Manualslib.com manuals search engine

https://truckmanualshub.com/

SAFETY RULES

Do not alter or disable machine components that in any way affect safety and stability.

Do not replace items critical to machine stability with items of different weight or specification.

Do not modify or alter an aerial work platform. Mounting attachments for holding tools or other materials onto the platform, toeboards or guard rail system can increase the weight in the platform and the surface area of the platform or the load.

Do not place or attach fixed or overhanging loads to any part of this machine.

Do not place ladders or scaffolds in the platform or against any part of this machine.

Do not use the machine on a moving or mobile surface or vehicle.

Be sure all tires are in good condition, castle nuts are properly tightened and cotter pins are properly installed.

Do not use the machine as a crane.

Do not push the machine or other objects with the platform.

Do not contact adjacent structures with the platform.

Do not tie the platform to adjacent structures.

Do not place loads outside the platform perimeter.

Fall Hazards

Occupants should wear a safety belt or harness and comply with applicable governmental regulations. Attach lanyard to anchor provided in platform.

Do not sit, stand or climb on the platform guard rails. Maintain a firm footing on the platform floor at all times.

Do not climb down from the platform when raised.

Keep the platform floor clear of debris.

Close the entry gate before operating.

Do not operate the machine unless the guard rails are properly installed and the entry is secured for operation.

Downloaded from www.Manualslib.com manuals search engine

https://truckmanualshub.com/

Collision Hazards

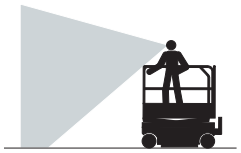

Be aware of limited sight distance and blind spots when driving or operating.

Be aware of extended platform position when moving the machine.

Machine must be on level surface or secured before releasing brakes.

It is recommended that operators wear an approved hard hat when operating the machine.

Check work area for overhead obstructions or other possible hazards.

Be aware of crushing hazard when grasping the platform guard rail.

Observe and use color-coded direction arrows on the platform controls and platform decal plate for drive and steer functions.

Do not operate a machine in the path of any crane or moving overhead machinery unless the controls of the crane have been locked out and/or precautions have been taken to prevent any potential collision.

No stunt driving or horseplay while operating a machine.

Do not lower the platform unless the area below is clear of personnel and obstructions.

Limit travel speed according to condition of ground surface, congestion, slope, location of personnel and any other factors which may cause collision.

Component Damage Hazards

Do not use any battery or charger greater than 12V to jump-start the engine.

Do not use the machine as a ground for welding.

Be sure hydraulic shutoff valves (located by hydraulic tank) are open before starting engine.

Explosion and Fire Hazards

Do not start the engine if you smell or detect liquid petroleum gas (LPG), gasoline, diesel fuel or other explosive substances.

Do not refuel the machine with the engine running.

Refuel the machine and charge the battery only in an open, well-ventilated area away from sparks, flames and lighted tobacco.

Do not operate the machine in hazardous locations or locations where potentially flammable or explosive gases or particles may be present.

Downloaded from www.Manualslib.com manuals search engine

https://truckmanualshub.com/

Damaged Machine Hazards

Do not use a damaged or malfunctioning machine.

Conduct a thorough pre-operation inspection of the machine and test all functions before each work shift. Immediately tag and remove from service a damaged or malfunctioning machine.

Be sure all maintenance has been performed as specified in this manual and the appropriate Genie service manual.

Be sure all decals are in place and legible.

Be sure the operator's, safety and responsibilities manuals are complete, legible and in the storage container located on the platform.

Crushing Hazards

Keep hands and limbs out of scissors.

Use common sense and planning when operating the machine with the controller from the ground. Maintain safe distances between the operator, the machine and fixed objects.

Maintain a firm grasp on the platform rail when pulling the snap pin. Do not allow the platform guard rails to fall.

Bodily Injury Hazard

Always operate the machine in a well-ventilated area to avoid carbon monoxide poisoning.

Do not operate the machine with a hydraulic oil or air leak. An air leak or hydraulic leak can penetrate and/or burn skin.

Decal Legend

Genie product decals use symbols, color coding and signal words to identify the following:

⚠	Safety alert symbol—used to alert personnel to potential personal injury hazards. Obey all safety messages that follow this symbol to avoid possible injury or death.
⚠ DANGER	Red—used to indicate the presence of an imminently hazardous situation which, if not avoided, will result in death or serious injury.
⚠ WARNING	Orange—used to indicate the presence of a potentially hazardous situation which, if not avoided, could result in death or serious injury.
⚠ CAUTION	Yellow with safety alert symbol—used to indicate the presence of a potentially hazardous situation which, if not avoided, may cause minor or moderate injury.
CAUTION	Yellow without safety alert symbol—used to indicate the presence of a potentially hazardous situation which, if not avoided, may result in property damage.
NOTICE	Green—used to indicate operation or maintenance information.

Downloaded from www.Manualslib.com manuals search engine

https://truckmanualshub.com/

Legend

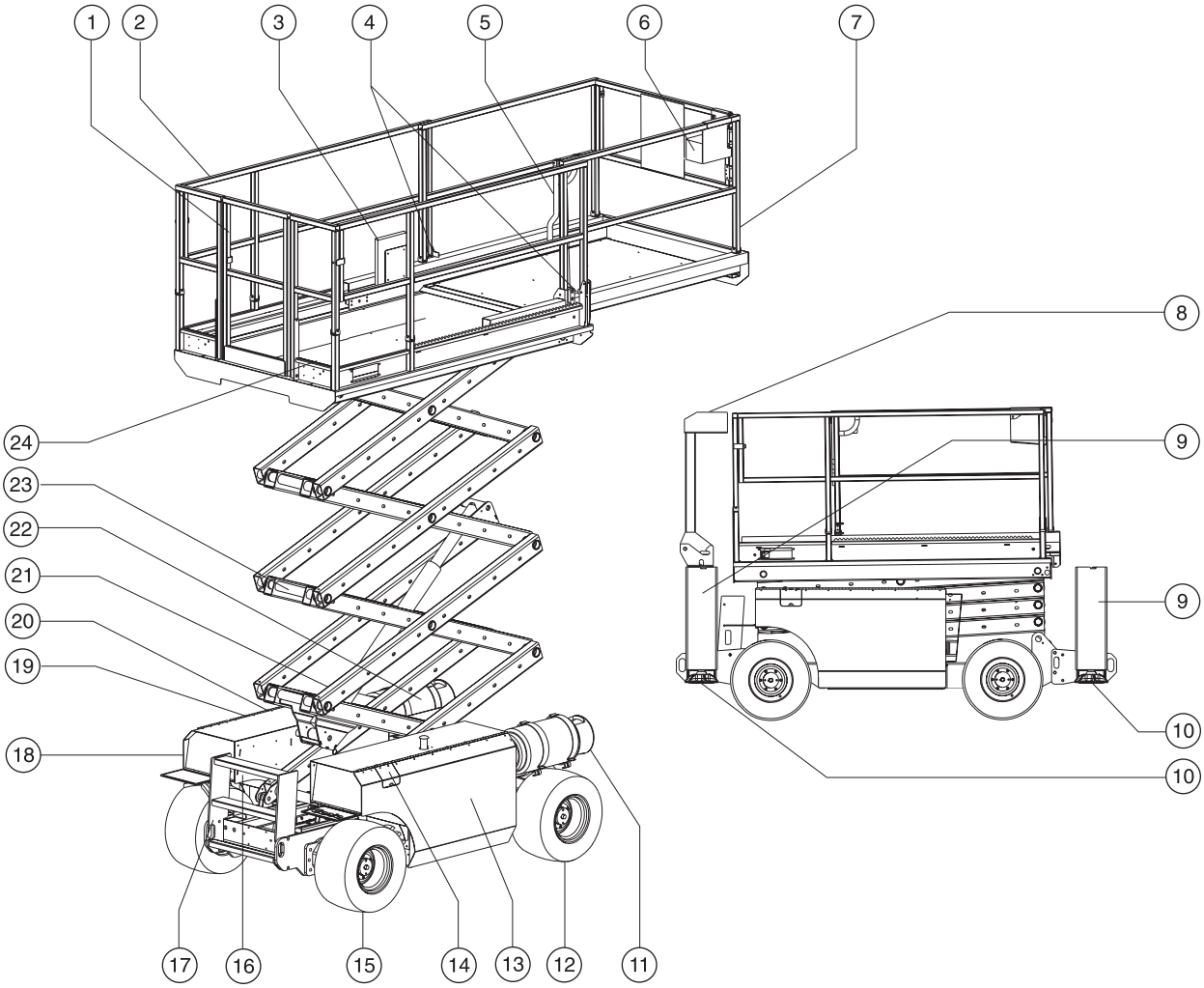

1 Platform entry gate
2 Platform guard rails
3 Manual storage container
4 Lanyard anchorage point
5 Platform extension lock handle
6 Platform controls
7 Platform extension
8 Outrigger control panel (if equipped with manual control outriggers)
9 Outrigger housing (if equipped with outriggers)
10 Outrigger footpad (if equipped with outriggers)
11 LPG tank
12 Steer tire
13 Engine side cover
14 Fuel tank
15 Non-steer tire
16 Tilt alarm (under cover)
17 Entry ladder/transport tie-down
18 Ground controls with manual lowering valve and LED diagnostic readout
19 Ground controls side cover
20 Hydraulic oil level indicator (under cover)
21 Brake release pump knob and brake release knob (hidden from view in this picture)
22 LPG tank (optional)
23 Safety arm
24 GFCI outlet

Downloaded from www.Manualslib.com manuals search engine

https://truckmanualshub.com/

Controls

Diesel models

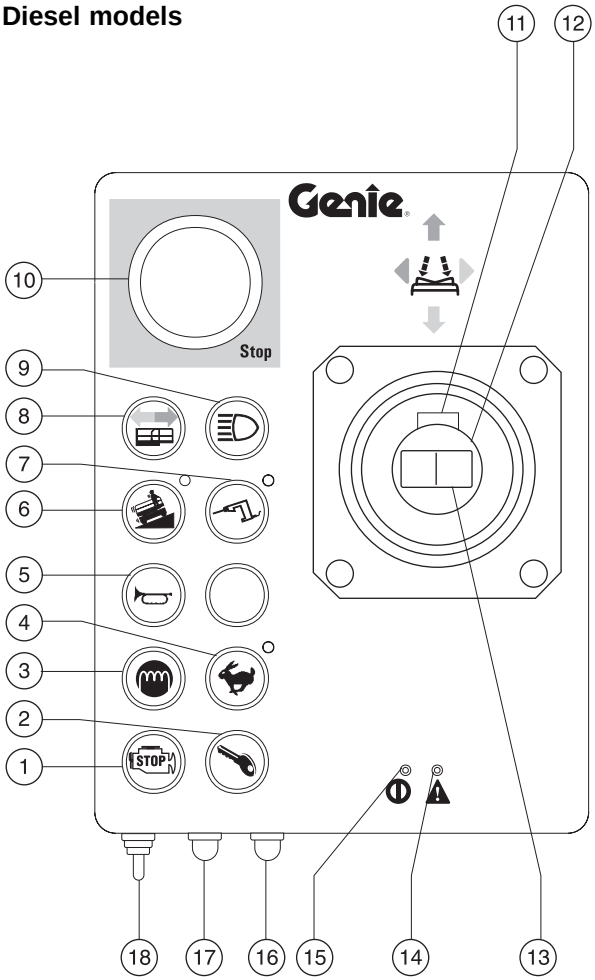

Gasoline/LPG models

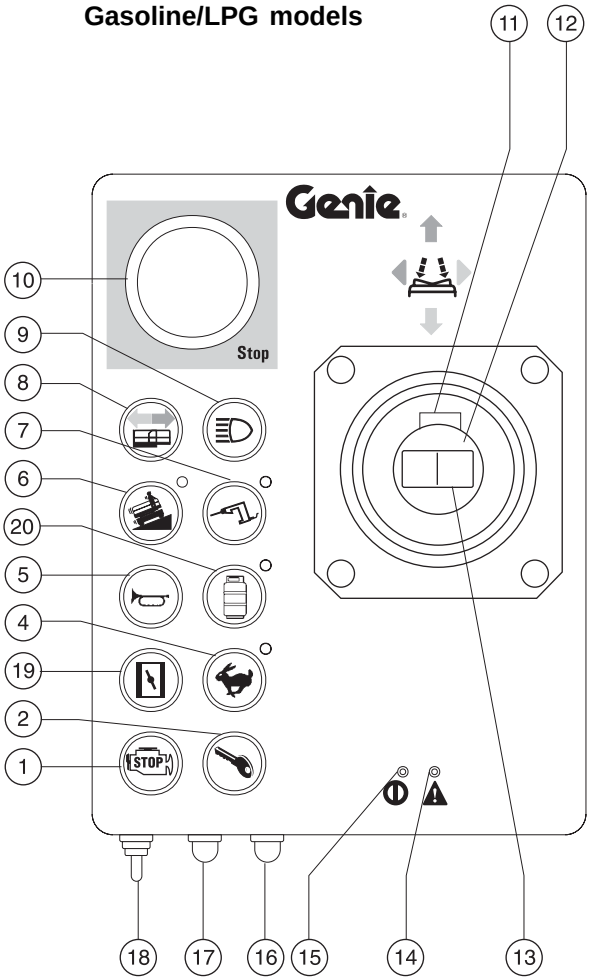

Platform Controls (models without outriggers)

1 Engine stop button

2 Engine start button

3 Glow plug button (Diesel models)

4 High idle button with indicator light

5 Horn button

6 Machine on incline button: Low speed operation for inclines

7 Generator select switch with indicator light

8 Platform extend/retract enable button (option)

9 Headlight/taillight button (option)

10 Emergency Stop button

11 Function enable switch

12 Proportional control handle for drive functions and optional platform extend/ retract function

13 Thumb rocker switch for steer function

14 Error indicator light

15 Power light

16 Function enable/high speed select button for up/down function

17 Function enable/low speed select button for up/down function

18 Platform up/down select switch

19 Choke button (Gasoline/LPG models)

20 LPG operation button with indicator light (Gasoline/LPG models)

Downloaded from www.Manualslib.com manuals search engine

https://truckmanualshub.com/

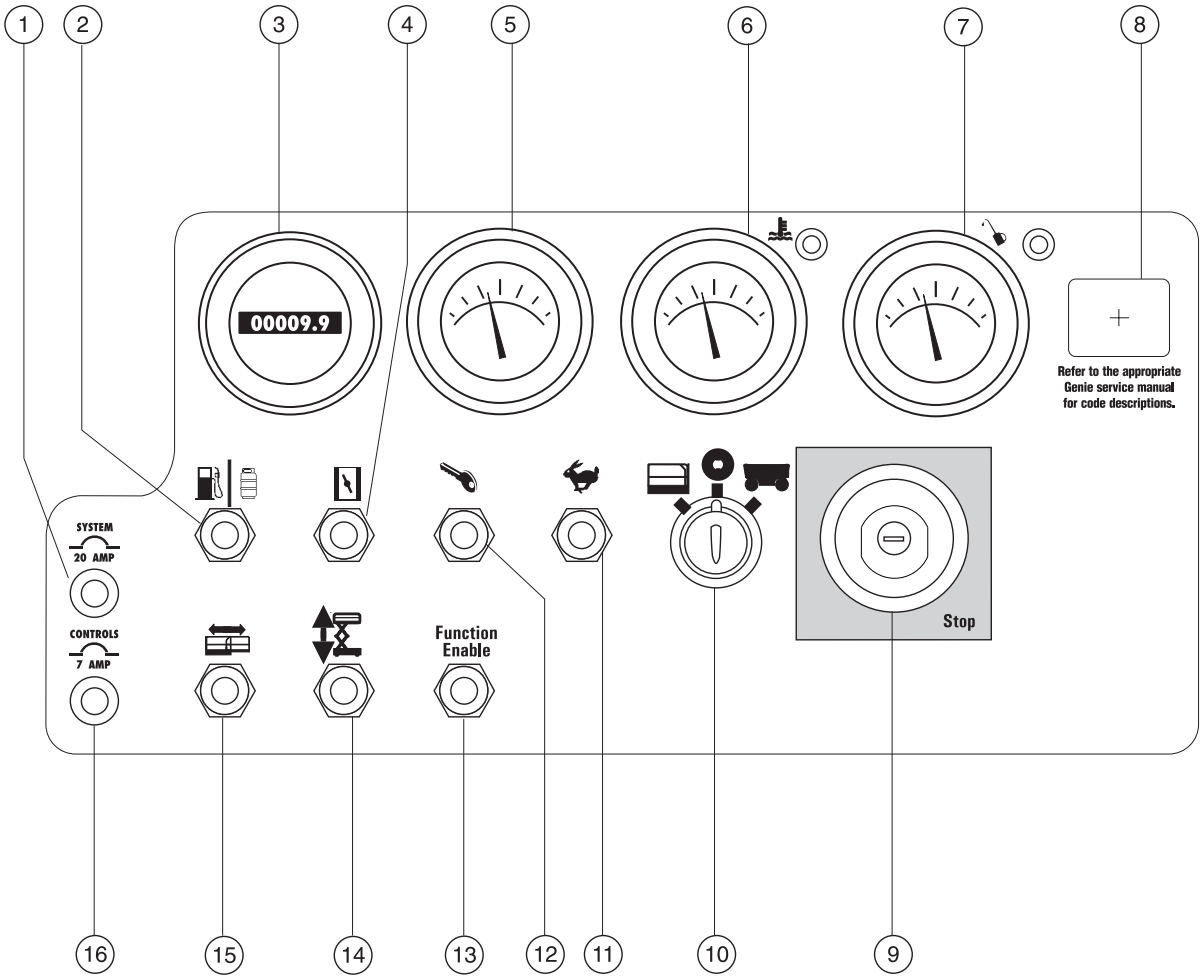

Ground Control Panel

1 20 amp circuit breaker for system circuit

2 Fuel select switch (Gasoline/LPG models)

3 Hour meter

4 Choke switch (Gasoline/LPG models)
Glow plug switch (option - Diesel models)

5 Volt meter (option)

6 Water temperature gauge with indicator light (option)

7 Engine oil pressure gauge with indicator light (option)

8 LED diagnostic readout

9 Emergency Stop button

10 Keyswitch for platform/off/ground control selection

11 High idle select toggle switch

12 Engine start toggle switch

13 Function enable toggle switch

14 Platform up/down toggle switch

15 Platform extend/retract toggle switch (option)

16 7 amp circuit breaker for controls circuit

Downloaded from www.Manualslib.com manuals search engine

https://truckmanualshub.com/

CONTROLS

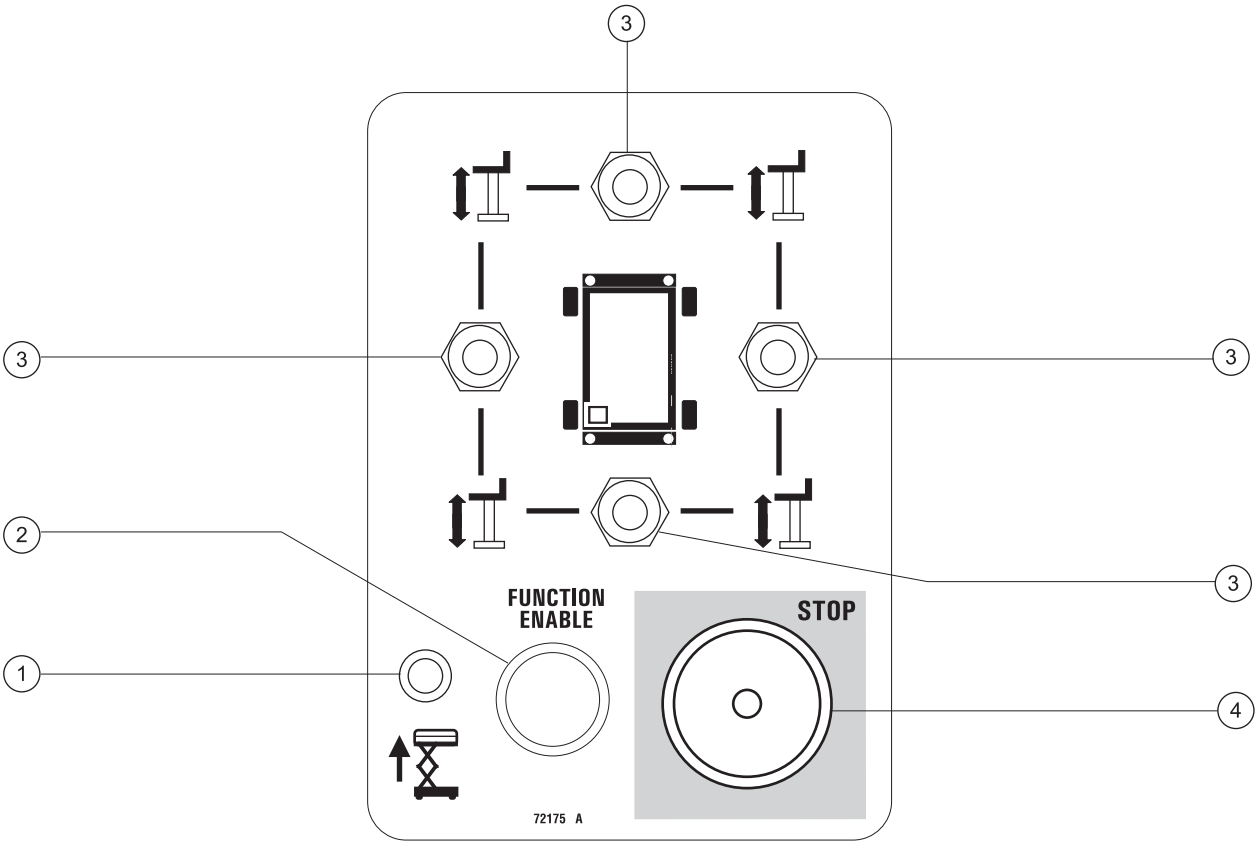

Outrigger Control Panel (if equipped with manual control outriggers)

1 Lift error indicator light
2 Function enable button
3 Outriggers raise/lower button
4 Emergency Stop button

Downloaded from www.Manualslib.com manuals search engine

https://truckmanualshub.com/

Diesel models

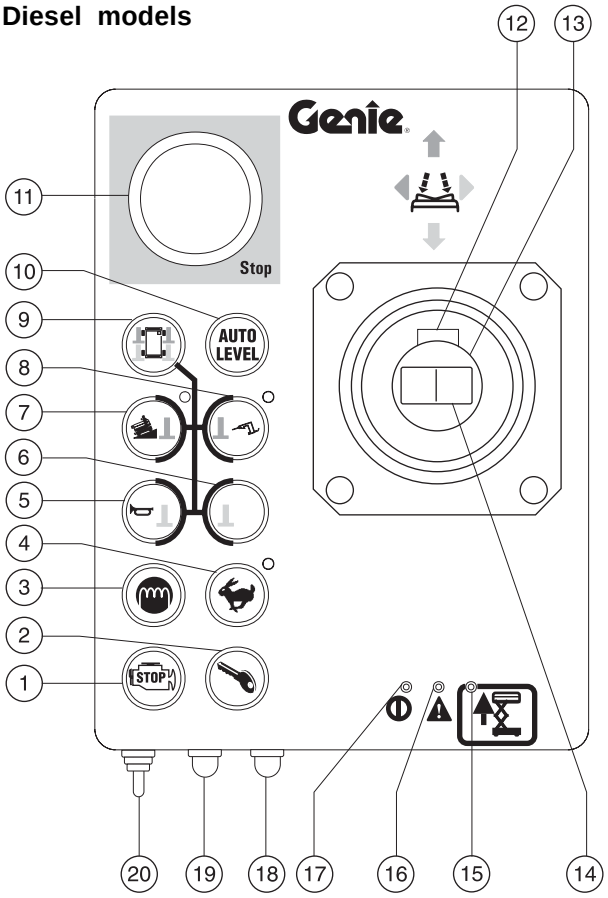

Gasoline/LPG models

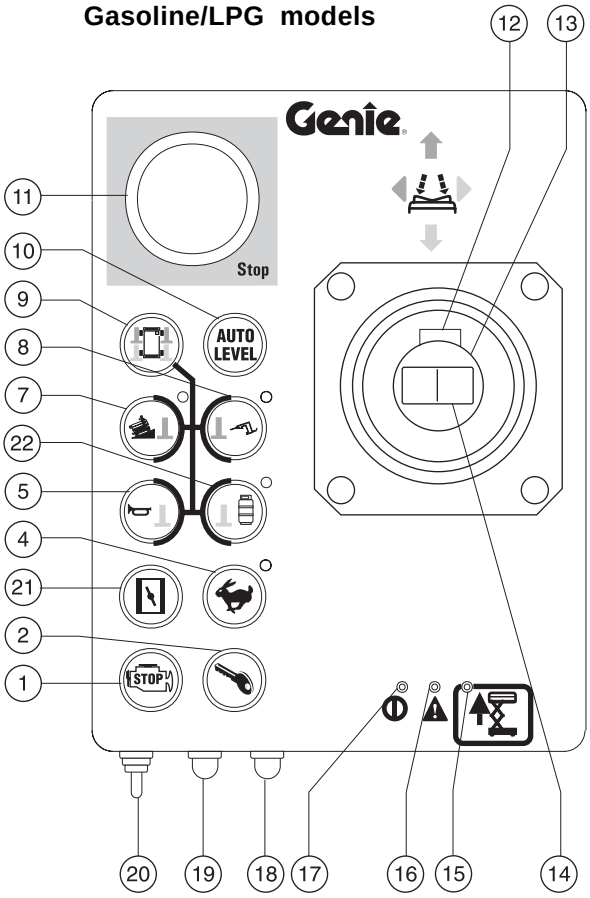

Platform Controls (if equipped with auto level outriggers)

1 Engine stop button

2 Engine start button

3 Glow plug button (Diesel models)

4 High idle button with indicator light

5 Outrigger and horn button

6 Outrigger button

7 Outrigger and machine on incline button: Low speed operation for inclines

8 Outrigger and generator select button with indicator light

9 Outrigger function enable button

10 Outrigger auto level button

11 Emergency Stop button

12 Function enable switch

13 Proportional control handle for drive functions and optional platform extend/retract function

14 Thumb rocker switch for steer function

15 Lift error indicator light

16 Error indicator light

17 Power light

18 Function enable/high speed select button for up/down function

19 Function enable/low speed select button for platform up/down function

20 Platform up/down and outrigger up/down toggle switch

21 Choke button (Gasoline/LPG models)

22 Outrigger and LPG operation button with indicator light (Gasoline/LPG models)

Downloaded from www.Manualslib.com manuals search engine

https://truckmanualshub.com/

Pre-operation Inspection

Do Not Operate Unless:

☑ You learn and practice the principles of safe machine operation contained in this operator's manual.

1 Avoid hazardous situations.

2 Always perform a pre-operation inspection.

Know and understand the pre-operation inspection before going on to the next section.

3 Always perform function tests prior to use.

4 Inspect the work place.

5 Only use the machine as it was intended.

Fundamentals

It is the responsibility of the operator to perform a Pre-operation Inspection and routine maintenance.

The Pre-operation Inspection is a visual inspection performed by the operator prior to each work shift. The inspection is designed to discover if anything is apparently wrong with a machine before the operator performs the function tests.

The Pre-operation inspection also serves to determine if routine maintenance procedures are required. Only routine maintenance items specified in this manual may be performed by the operator.

Refer to the list on the next page and check each of the items and locations for modifications, damage or loose or missing parts.

A damaged or modified machine must never be used. If damage or any variation from factory delivered condition is discovered, the machine must be tagged and removed from service.

Repairs to the machine may only be made by a qualified service technician, according to the manufacturer's specifications. After repairs are completed, the operator must perform a pre-operation inspection again before going on to the function tests.

Scheduled maintenance inspections shall be performed by qualified service technicians, according to the manufacturer's specifications and the requirements listed in the responsibilities manual.

Downloaded from www.Manualslib.com manuals search engine

https://truckmanualshub.com/

Pre-operation Inspection

- Be sure that the operator's, safety and responsibilities manuals are complete, legible and in the storage container located in the platform.
- Be sure that all decals are legible and in place. See Decals section.
- Check for engine oil leaks and proper oil level. Add oil if needed. See Maintenance section.
- Check for hydraulic oil leaks and proper oil level. Add oil if needed. See Maintenance section.
- Check for engine coolant leaks and proper level of coolant. Add coolant if needed. See Maintenance section.
- Check for battery fluid leaks and proper fluid level. Add distilled water if needed. See Maintenance section.

Check the following components or areas for damage, modifications and improperly installed or missing parts:

- Electrical components, wiring and electrical cables
- Hydraulic hoses, fittings, cylinders and manifolds
- Fuel and hydraulic tanks
- Drive motors
- Wear pads
- Tires and wheels
- Engine and related components
- Limit switches, alarms and horn
- Nuts, bolts and other fasteners
- Platform entry gate
- Beacon and alarms (if equipped)
- Brake release components
- Safety arm
- Platform extension
- Scissor pins and retaining fasteners
- Platform control joystick
- Generator (if equipped)

Check entire machine for:

- Cracks in welds or structural components
- Dents or damage to machine
- Be sure that all structural and other critical components are present and all associated fasteners and pins are in place and properly tightened
- Side rails are installed and snap pins and bolts are fastened

Downloaded from www.Manualslib.com manuals search engine

https://truckmanualshub.com/

Maintenance

Observe and Obey:

- ☑ Only routine maintenance items specified in this manual shall be performed by the operator.
- ☑ Scheduled maintenance inspections shall be completed by qualified service technicians, according to the manufacturer's specifications and the requirements specified in the responsibilities manual.

Maintenance Symbols Legend

NOTICE The following symbols have been used in this manual to help communicate the intent of the instructions. When one or more of the symbols appear at the beginning of a maintenance procedure, it conveys the meaning below.

Indicates that tools will be required to perform this procedure.

Indicates that new parts will be required to perform this procedure.

Indicates that a cold engine is required before performing this procedure.

Check the Engine Oil Level

Maintaining the proper engine oil level is essential to good engine performance and service life. Operating the machine with an improper oil level can damage engine components.

NOTICE Check the oil level with the engine off.

1 Check the oil level dipstick.

⊙ Result: The oil level should be at the FULL mark on the dipstick. Add oil as needed.

Kubota DF-750 Engine Oil capacity (including filter)	3.44 quarts 3.25 liters
Oil viscosity requirements	
Use oils meeting API classification SF (labeled SF/CC or SF/CD) for improved wear protection. Units ship with 10W-40 SG/CC	
Kubota D-905 Engine Oil capacity (including filter)	5.4 quarts 5.1 liters
Oil viscosity requirements	
Engine oil should have properties of API classification CC/SE, CD/SE, CC/SF or CD/SF grades. Units ship with 10W-40 SG/CC.	

Downloaded from www.Manualslib.com manuals search engine

https://truckmanualshub.com/

Check the Hydraulic Oil Level

Maintaining the hydraulic oil at the proper level is essential to machine operation. Improper hydraulic oil levels can damage hydraulic components. Daily checks allow the inspector to identify changes in oil level that might indicate the presence of hydraulic system problems.

NOTICE Perform this procedure with the platform in the stowed position and the engine off.

1 Visually inspect the sight gauge located on the side of the hydraulic oil tank.

⊙ Result: The hydraulic oil level should be within the top 2 inches (5 cm) of the sight gauge.

2 Add oil if necessary. Do not overfill.

Hydraulic oil specifications

Hydraulic oil type	Dexron equivalent	
Tank capacity	21.5 gallons	81.4 liters
Hydraulic system (including tank)	25 gallons	94.6 liters

Check the Batteries

Proper battery condition is essential to good engine performance and operational safety. Improper fluid levels or damaged cables and connections can result in engine component damage and hazardous conditions.

⚠WARNING Electrocution hazard. Contact with hot or live circuits may result in death or serious injury. Remove all rings, watches and other jewelry.

⚠WARNING Bodily injury hazard. Batteries contain acid. Avoid spilling or contacting battery acid. Neutralize battery acid spills with baking soda and water.

1 Put on protective clothing and eye wear.

2 Be sure that the battery cable connections are free of corrosion.

3 Be sure that the battery hold downs and cable connections are tight.

4 Remove the battery vent caps.

5 Check the battery acid level. If needed, replenish with distilled water to the bottom of the battery fill tube. Do not overfill.

6 Install the vent caps.

NOTICE Adding terminal protectors and a corrosion preventative sealant will help eliminate corrosion on the battery terminals and cables.

Downloaded from www.Manualslib.com manuals search engine

https://truckmanualshub.com/

Check the Engine Coolant Level

Maintaining the engine coolant at the proper level is essential to engine service life. Improper coolant level will affect the engine's cooling capability and damage engine components. Daily checks will allow the inspector to identify changes in coolant level that might indicate cooling system problems.

1 Check the fluid level in the coolant recovery tank. Add fluid as needed.

⊙ Result: The fluid level should be in the NORMAL range.

⚠WARNING Bodily injury hazard. Fluids in the radiator are under pressure and extremely hot. Use caution when removing cap and adding fluids.

Scheduled Maintenance

The scheduled maintenance items must be completed by a person trained and qualified to perform maintenance on this machine according to the procedures found in the service manual for this machine.

Inspections and maintenance described below require the qualified entity to record and retain records of all inspections and maintenance items for four years.

Machines that have been out of service for more than three months must receive the quarterly inspection before placing the machine back into service.

The Schedule

There are five types of maintenance inspections that must be performed according to a schedule—daily, quarterly, six months, annual, two year. To account for repeated procedures, the *Scheduled Maintenance Procedures Section and the Maintenance Inspection Report* have been divided into five subsections—A, B, C, D and E. Use the following chart to determine which group(s) of procedures are required to perform a scheduled inspection.

Inspection	Table or Checklist
Daily or every 8 hours	A
Quarterly or every 250 hours	A + B
Six months or every 500 hours	A + B + C
Annual or every 1000 hours	A + B + C + D
Two year or every 2000 hours	A + B + C + D + E

Maintenance Inspection Report

The maintenance inspection report contains checklists for each type of scheduled inspection.

Make copies of the *Maintenance Inspection Report* to use for each inspection. Store completed forms for three years.

Downloaded from www.Manualslib.com manuals search engine

https://truckmanualshub.com/

Function Tests

Do Not Operate Unless:

☑ You learn and practice the principles of safe machine operation contained in this operator's manual.

1 Avoid hazardous situations.

2 Always perform a pre-operation inspection.

3 Always perform function tests prior to use.

Know and understand the function tests before going on to the next section.

4 Inspect the work place.

5 Only use the machine as it was intended.

Fundamentals

The Function Tests are designed to discover any malfunctions before the machine is put into service. The operator must follow the step-by-step instructions to test all machine functions.

A malfunctioning machine must never be used. If malfunctions are discovered, the machine must be tagged and removed from service. Repairs to the machine may only be made by a qualified service technician, according to the manufacturer's specifications.

After repairs are completed, the operator must perform a pre-operation inspection and function tests again before putting the machine into service.

1 Select a test area that is firm, level and free of obstruction.

At the Ground Controls

2 Pull out the platform and ground red Emergency Stop button to the ON position.

3 Turn the key switch to ground control.

4 Observe the diagnostic LED readout.

⊙ Result: LED should look like picture at right.

5 Start the engine. See Operating Instructions section.

Test Emergency Stop

6 Push in the ground red Emergency Stop button to the OFF position.

⊙ Result: The engine should turn off and no functions should operate.

7 Pull out the red Emergency Stop button to the ON position and restart the engine.

Test the Up/Down Functions

The audible warnings on this machine and the standard horn all come from the same central alarm. The horn is a constant tone. The descent alarm sounds at 60 beeps per minute. The alarm that goes off when the machine is not level sounds at 180 beeps per minute.

8 Do not hold the function enable switch to either side and activate the platform up function.

⊙ Result: No function should operate.

Downloaded from www.Manualslib.com manuals search engine

https://truckmanualshub.com/

9 Hold the function enable switch to either side and activate the platform up function.

⊙ Result: The platform should raise.

10 Hold the function enable switch to either side and activate the platform down function.

⊙ Result: The platform should lower. The descent alarm should sound while the platform is lowering.

Test the Manual Lowering

11 Hold the function enable switch to either side and activate the platform up function and raise the platform approximately 2 feet (0.6 m).

12 Pull the manual lowering knob or push the manual lowering button located next to the ground controls.

⊙ Result: The platform should lower. The descent alarm will not sound.

13 Turn the keyswitch to platform control.

At the Platform Controls

Test Emergency Stop

14 Push in the platform red Emergency Stop button to the OFF position.

⊙ Result: No functions should operate.

15 Pull the red Emergency Stop button out to the ON position.

⊙ Result: The green power light should come on.

Test the Horn

16 Push the horn button.

⊙ Result: The horn should sound.

Test the Up/Down Functions and the Function Enable Switches

17 Start the engine.

18 Activate the platform up function.

⊙ Result: The platform should not raise.

19 Push and hold a function enable/speed select button.

20 Activate the platform up function.

⊙ Result: The platform should raise.

21 Release the function enable button.

⊙ Result: The platform should stop raising.

22 Push and hold a function enable/speed select button. Activate the platform down function.

⊙ Result: The platform should lower. The descent alarm should sound while the platform is lowering.

Test the Steering

Note: When performing the steer and drive function tests, stand in the platform facing the steer end of the machine.

23 Press and hold the function enable switch.

24 Depress the thumb rocker switch on top of the control handle in the direction identified by the blue triangle on the control panel.

⊙ Result: The steer wheels should turn in the direction that the blue triangle points on the control panel.

Downloaded from www.Manualslib.com manuals search engine

https://truckmanualshub.com/

25 Depress the thumb rocker switch in the direction identified by the yellow triangle on control panel.

⊙ Result: The steer wheels should turn in the direction that the yellow triangle points on the control panel.

Test Drive and Braking

26 Press and hold the function enable switch.

27 Slowly move the control handle in direction indicated by the blue arrow on the control panel until the machine begins to move, then return the handle to the center position.

⊙ Result: The machine should move in the direction that the blue arrow points on the control panel, then come to an abrupt stop.

28 Press and hold the function enable switch.

29 Slowly move the control handle in the direction indicated by the yellow arrow on the control panel until the machine begins to move, then return the handle to the center position.

⊙ Result: The machine should move in the direction that the yellow arrow points on the control panel, then come to an abrupt stop.

Note: The drive brakes must be able to hold the machine on any slope it is able to climb.

Test Limited Drive Speed

30 Move and hold a function enable/speed select switch. Raise the platform approximately 6 feet (1.83 m) from the ground.

31 Press and hold the function enable switch.

32 Slowly move the control handle to the full drive position.

⊙ Result: The maximum achievable drive speed with the platform raised should not exceed 0.73 feet per second (0.22 meters per second).

If the drive speed with the platform raised exceeds 0.73 feet per second (0.22 meters per second), immediately tag and remove the machine from service.

Test Platform Extension Limit Switch (if equipped)

Note: Some GS-2668 machines do not have a platform extension limit switch. Check under the extension end of the platform to locate this switch. This test is not necessary on machines that are not equipped with this limit switch.

33 Move and hold a function enable/speed select switch. Raise the platform to full height.

34 Extend the platform extension.

35 Press and hold the function enable switch.

36 Slowly move the control handle to the full drive position.

⊙ Result: The drive function should not operate.

Lower the platform or retract the platform extension to drive.

Test the Tilt Sensor Operation

Note: Perform this test from the ground with the platform controller. Do not stand in the platform.

37 Fully lower the platform.

38 Drive both wheels on one side onto a 4 inch (10 cm) block or onto a curb.

39 Raise the platform.

⊙ Result - ANSI and CSA models: The tilt alarm will sound at 180 beeps per minute.

⊙ Result - CE models: The drive function and the lift function will not operate and the tilt alarm will sound at 180 beeps per minute.

40 Lower the platform and drive the machine off the block.

Downloaded from www.Manualslib.com manuals search engine

https://truckmanualshub.com/

Work Place Inspection

Do Not Operate Unless:

☑ You learn and practice the principles of safe machine operation contained in this operator's manual.

1 Avoid hazardous situations.

2 Always perform a pre-operation inspection.

3 Always perform function tests prior to use.

4 Inspect the work place.

Know and understand the work place inspection before going on to the next section.

5 Only use the machine as it was intended.

Fundamentals

The Work Place Inspection helps the operator determine if the work place is suitable for safe machine operation. It should be performed by the operator prior to moving the machine to the work place.

It is the operator's responsibility to read and remember the work place hazards, then watch for and avoid them while moving, setting up and operating the machine.

Work Place Inspection

Be aware of and avoid the following hazardous situations:

- drop-offs or holes
- bumps, floor obstructions or debris
- overhead obstructions and high voltage conductors
- hazardous locations
- inadequate surface support to withstand all load forces imposed by the machine
- wind and weather conditions
- the presence of unauthorized personnel
- other possible unsafe conditions

Downloaded from www.Manualslib.com manuals search engine

https://truckmanualshub.com/

Operating Instructions

Do Not Operate Unless:

☑ You learn and practice the principles of safe machine operation contained in this operator's manual.

1 Avoid hazardous situations.

2 Always perform a pre-operation inspection.

3 Always perform function tests prior to use.

4 Inspect the work place.

5 Only use the machine as it was intended.

Fundamentals

The Operating Instructions section provides instructions for each aspect of machine operation. It is the operator's responsibility to follow all the safety rules and instructions in the operator's, safety and responsibilities manuals.

Using the machine for anything other than lifting personnel and tools to an aerial work site is unsafe and dangerous.

Only trained and authorized personnel should be permitted to operate a machine. If more than one operator is expected to use a machine at different times in the same work shift, they must all be qualified operators and are all expected to follow all safety rules and instructions in the operator's, safety and responsibilities manuals. That means every new operator should perform a pre-operation inspection, function tests, and a work place inspection before using the machine.

Emergency Stop

Push in the red Emergency Stop button to the OFF position at the ground controls or the platform controls to stop all functions.

Repair any function that operates when either Emergency Stop button is pushed in.

Downloaded from www.Manualslib.com manuals search engine

https://truckmanualshub.com/

OPERATING INSTRUCTIONS

Starting the Engine

1 At the ground controls, turn the key switch to the desired position.

2 Be sure both ground and platform control red Emergency Stop buttons are pulled out to the ON position.

3 Gasoline/LPG models: Choose the fuel source. Ground control panel: Move the fuel select toggle switch to the desired position. Platform control panel: Push the fuel select button.

4 Push the engine start button.

If engine fails to start after 15 seconds of cranking, determine cause and repair any malfunction. Wait 60 seconds before trying to start again.

All models: In extreme cold conditions, 20°F (-6°C) and below, warm engine for 5 minutes before operating to prevent hydraulic system damage.

Gasoline/LPG models: In extreme cold conditions, 20°F (-6°C) and below, machine should be started on gasoline, then switched to LPG.

When operating the machine in gasoline mode, use the choke as necessary.

Operation From Ground

1 Turn the key switch to ground control.

2 Pull out both ground and platform red Emergency Stop buttons to the ON position.

3 Start the engine.

To Position Platform

1 Hold the function enable switch to either side.

2 Move the up/down toggle switch according to the markings on the control panel.

Drive and steer functions are not available from the ground controls.

Operation From Platform

1 Turn the key switch to platform control.

2 Pull out the ground and platform red Emergency Stop button to the ON position.

3 Start the engine.

To Position Platform

1 Move and hold a function enable/speed select switch.

2 Activate the platform up/down function toggle switch in the desired direction of travel.

To Steer

1 Press and hold the function enable switch.

2 Turn the steer wheels with the thumb rocker switch located on the top of the control handle.

To Drive

1 Press and hold the function enable switch.

2 Increase speed: Slowly move the control handle off center.

Decrease speed: Slowly move the control handle toward center.

Stop: Return the control handle to center or release the function enable switch.

Use the color-coded direction arrows on the platform controls and on the platform to identify the direction the machine will travel.

Machine travel speed is restricted when the platform is raised.

Drive Select Switch

Machine on incline symbol:
Low range operation for inclines

Downloaded from www.Manualslib.com manuals search engine

https://truckmanualshub.com/

To Extend and Retract Platform (Manual Platform Extension)

1 Lift the platform extension lock handle to the horizontal position.

2 Push the platform extension lock handle to extend the platform to the desired position.

Do not stand on the platform extension while trying to extend it.

3 Lower the platform extension lock handle.

GS-2668RT models: The platform extension limit switch (if equipped) will disable the drive function when the platform is extended and the platform is raised above 20 ft (6.1 m). Lower the platform or retract the platform extension to drive the machine.

GS-3268RT models: The platform extension limit switch will disable the drive function when the platform is extended and the platform is raised above 26 ft (7.9 m). Lower the platform or retract the platform extension to drive the machine.

To Extend and Retract Platform (Powered Platform Extension - option)

1 Press and hold the platform extend/retract enable button.

2 Move the control handle in the blue direction to extend the platform or in the yellow direction to retract the platform.

GS-2668RT models: The platform extension limit switch (if equipped) will disable the drive function when the platform is extended and the platform is raised above 20 ft (6.1 m). Lower the platform or retract the platform extension to drive the machine.

GS-3268RT models: The platform extension limit switch will disable the drive function when the platform is extended and the platform is raised above 26 ft (7.9 m). Lower the platform or retract the platform extension to drive the machine.

Operation From Ground with Controller

Maintain safe distances between operator, machine and fixed objects.

Be aware of the direction the machine will travel when using the controller.

Engine Stop Button

Press the engine stop button to turn off the engine. The down function and the horn will still operate.

After Each Use

1 Select a safe parking location—firm level surface, clear of obstructions and traffic.

2 Lower the platform.

3 Turn the key switch to the off position and remove the key to secure from unauthorized use.

4 Chock the wheels.

Downloaded from www.Manualslib.com manuals search engine

https://truckmanualshub.com/

OPERATING INSTRUCTIONS

Manual Control Outriggers (if equipped)

An outrigger option is available for Genie GS-2668RT and GS-3268RT models that can be installed in the field. The outriggers are operated from a control box mounted outside of the platform. These instructions apply to this additional control box.

1 Position machine below the desired work area.

2 Pull out the red Emergency Stop buttons at the ground and platform controls. Also pull out the red Emergency Stop button on the outrigger control panel.

3 Activate the outrigger raise/lower toggle switches and adjust to level the machine and raise the wheels slightly off the ground. Use the bubble level located on the control box mount. Each toggle switch operates two outriggers.

4 Raise the platform. If the tilt alarm sounds, fully lower the platform and adjust the outriggers. Use the bubble level located on the control box mount.

The red indicator light above the lift symbol on the outrigger control panel comes on when one but not all outriggers are down. All drive and lift functions are disabled.

The light turns off when all outriggers are in firm contact with the ground. The drive function is disabled while the outriggers are down.

If you try to operate a function that is locked out, the fault light on the platform control panel will come on and the machine will be disabled. This will happen even if the outriggers are in firm contact with the ground and the red indicator light on the outrigger control box is off.

To operate the machine, push in the red Emergency Stop button and then pull it out to ON position. Restart the machine.

Auto Level Outriggers (if equipped)

These instructions apply to machines with the black auto level outrigger control box.

1 Position machine below the desired work area.

2 Pull out the red Emergency Stop buttons at the ground and platform controls.

3 Push and hold the auto level button.

4 Activate the outrigger up/down toggle switch in the down direction.

Result: The outriggers will extend and level the machine. A beep will sound when the machine is level.

The red indicator light above the lift symbol on the outrigger control panel comes on when one but not all outriggers are down. All drive and lift functions are disabled.

The light turns off when all outriggers are in firm contact with the ground. The drive function is disabled while the outriggers are down.

To control individual outriggers

1 Push and hold the outrigger function enable button.

2 Push and hold an outrigger button.

3 Activate the outrigger up/down toggle switch in the desired direction to level the machine.

Positioning machine on a slope

When setting the machine up on a slope, the steer-end outriggers must be lowered first.

Downloaded from www.Manualslib.com manuals search engine

https://truckmanualshub.com/

Transport Instructions

Observe and Obey:

- ☑ Common sense and planning must be applied to control the movement of the machine when lifting it with a crane.
- ☑ Transport vehicle must be parked on a level surface.
- ☑ Transport vehicle must be secured to prevent rolling while machine is being loaded.
- ☑ Be sure vehicle capacity, loading surfaces and chains or straps are sufficient to withstand machine weight. See Specifications section.
- ☑ Machine must be on level surface or secured before releasing brakes.

Securing to Truck or Trailer for Transit

Always chock machine wheels in preparation for transport.

Use tie-down points on chassis for anchoring down to transport surface.

Use chains or straps of ample load capacity.

Turn key switch to the OFF position and remove key before transporting.

Inspect entire machine for loose or unsecured items.

Brake Release Operation

1 Chock wheels to prevent machine from rolling.

2 Be sure winch line is properly secured to drive chassis tie points and path is clear of all obstructions.

3 Turn the brake release knob counterclockwise to open the brake valve.

4 Pump the brake release pump knob.

After machine is loaded:

1 Chock wheels to prevent machine from rolling.

2 Turn the brake release knob clockwise to reset the brakes.

Towing the Genie GS-2668 RT or the GS-3268 RT is not recommended. If the machine must be towed, do not exceed 2 mph (3.2 km/h).

Downloaded from www.Manualslib.com manuals search engine

https://truckmanualshub.com/

Floor Loading

Fundamentals

The floor loading section provides information about two specific pressures imposed by the machine on load-bearing surfaces.

Localized Pressure (per tire)

This measurement is of concern where the floor surface under the machine must be protected from damage resulting from high pressure being exerted on a small area.

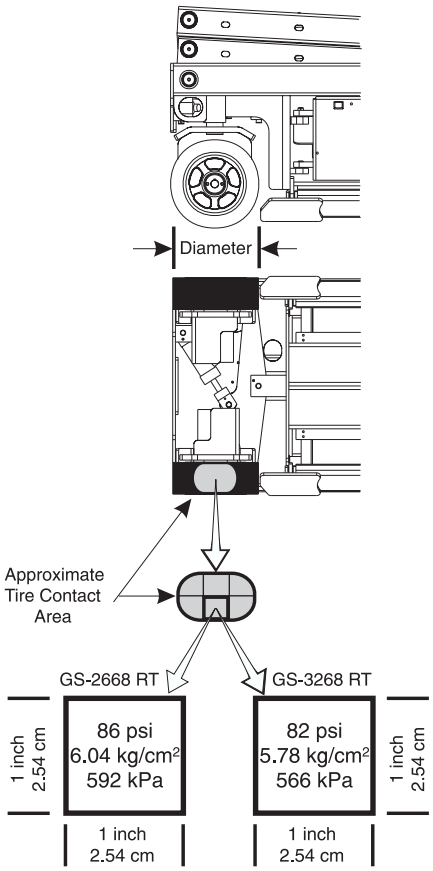

Additional Floor Loading Information

Model		GS-2668 RT
GVW + Rated Load	7800 lbs	3538 kg
Axle load, maximum	4120 lbs	1868 kg
Wheel load, maximum	2060 lbs	934 kg
Model		**GS-3268 RT**
GVW + Rated Load	8520 lbs	3865 kg
Axle load, maximum	3940 lbs	1787 kg
Wheel load, maximum	1970 lbs	893 kg

Occupied Pressure

This measurement is of concern where the machine is being used on a beam-supported floor or surface. The occupied pressure imposed by the machine must not exceed what the floor or surface can support.

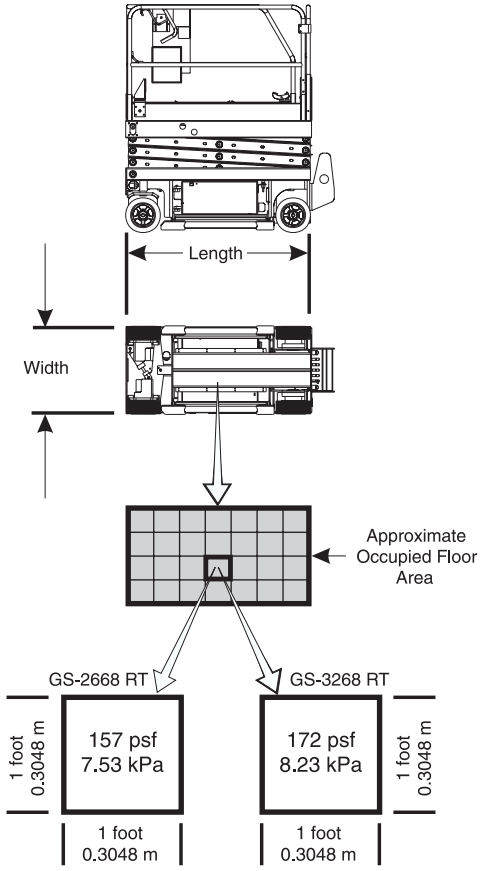

Downloaded from www.Manualslib.com manuals search engine

https://truckmanualshub.com/

Decals

Decal Inspection

Use the pictures on the next page to verify that all decals are legible and in place.

Below is a numerical list with quantities and descriptions.

Part No.	Description	Quantity
25994	Caution - Component Damage	1
28157	Label - Dexron	1
28158	Label - Unleaded (Gasoline/LPG models)	1
28159	Label - Diesel (Diesel models)	1
28160	Label - LPG (Gasoline/LPG models) (1 additional with extra LPG tank option)	1
28164	Notice - Hazardous Materials	1
28171	Label - No Smoking	1
28174	Power to Platform, 230V	2
28175	Caution - Compartment Access	1
28176	Notice - Missing Manuals	1
28235	Power to Platform, 115V	2
28236	Warning - Failure To Read . . .	1
31060	Danger - Do Not Alter Limit Switch	2
40434	Label - Lanyard Anchorage	2
43091	Danger - General Safety Rules	2
43618	Label - Directional arrows	1
43619	Label - Safety Arm	1
43696	Danger - Electrocution Hazard	2
44220	Danger/Notice - Brake Release Safety & Operating Instructions	1
44255	Danger - Crushing Hazard	4
44736	Danger - Tilt Alarm	1
48694	Platform Control Panel, Gas/LPG models	1
48695	Platform Control Panel, Diesel models	1
48705	Ground Control Panel	1
49911	Notice - Maximum Capacity 1200/300 lbs - GS-2668 RT & DC	1
52069	Notice - Operating Instructions - Ground	1
52070	Notice - Tire Specifications	4
52071	Notice - Kubota Gas Engine Specs	1
52072	Notice - Kubota Diesel Engine Specs	1
52073	Notice - Operating Instructions - Platform	1

Part No.	Description	Quantity
52324	Label - Up/Down & Function Enable	1
52431	Label, Ground Control Panel	1
52458	Serial Plate - CE	1
52475	Label - Transport Tie-down	4
52494	Caution - Crushing Hazard - Rails	1
52523	Serial Plate - ANSI & CSA	1
52617	Label - Manual Lowering Valve	1
52673	Notice - Max Side Force, ANSI & CSA - GS-2668 RT & DC	1
52674	Notice - Max Side Force, CE - GS-2668 RT & DC	1
52682	Notice - Maximum Capacity 1000/300 lbs - GS-3268 RT & DC	1
52802	Notice - Max Side Force, ANSI & CSA - GS-3268 RT & DC	1
52803	Notice - Max Side Force, CE - GS-3268 RT & DC	1
52805	Notice - Platform Extension Cut-out - GS-3268 RT & DC	1
52967	Cosmetic - 4x4	2
62059	Cosmetic - Genie GS-2668 RT	2
62060	Cosmetic - Genie GS-3268 RT	2
65053	Label - Fault Codes	1
71245	Platform Control Panel, Gas/LPG models, Automatic Outriggers	1
71246	Platform Control Panel, Diesel models, Automatic Outriggers	1
72175	Outrigger Control Panel, Manual	1
72185	Caution - Crushing Hazard	1
72186	Caution - Crushing Hazard	4
72187	Danger - Safety and Instructions, Manual	1
72197	Danger - Safety and Instructions, Automatic	1

Downloaded from www.Manualslib.com manuals search engine

https://truckmanualshub.com/

DECALS

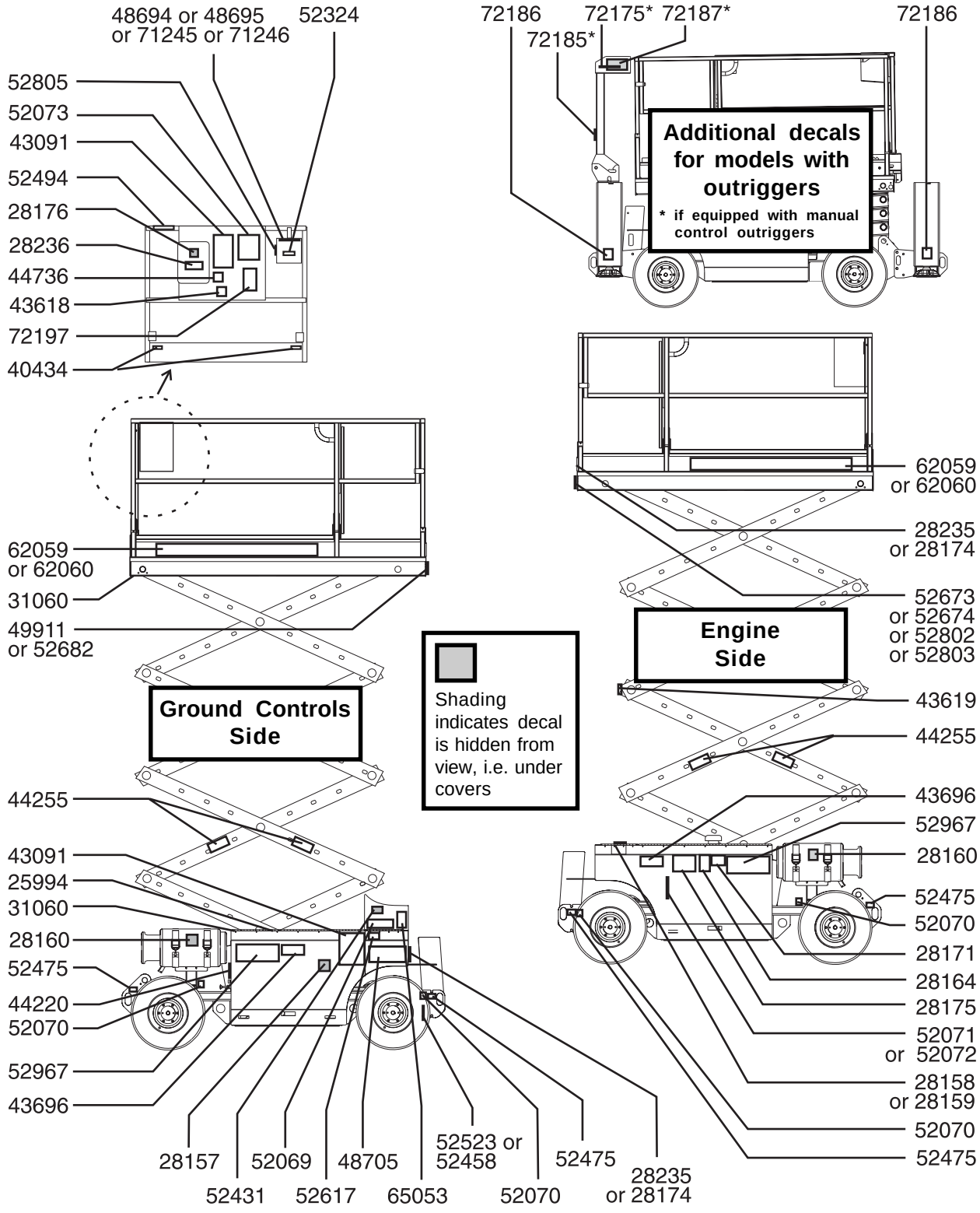

Downloaded from www.Manualslib.com manuals search engine

https://truckmanualshub.com/

Specifications

Model	GS-2668 RT
Height, working maximum	32 ft 9.8 m
Height, platform maximum	26 ft 7.9 m
Height, stowed maximum Rails up	91 1/2 in 2.3 m
Height, stowed maximum Rails lowered	60 in 1.5 m
Height, stowed maximum Rails off	47 in 1.2 m
Height, guard rails	40 in 1.02 m
Width	68 in 1.73 m
Length, platform retracted	105 in 2.67 m
Length, platform retracted Models with outriggers	130 in 3.3 m
Length, platform extended	165 in 4.2 m
Maximum load capacity	1250 lbs 567 kg
Wheelbase	73 in 1.85 m
Turning radius (outside)	145 in 3.7 m
Turning radius (inside)	60 in 1.5 m
Ground clearance	8 in 20.3 cm
Weight	6550 lbs 2971 kg
Weight with outrigger option	7650 lbs 3470 kg
Gradeability	40%
Airborne noise emissions Maximum sound level at normal operating workstations (A-weighted)	>80 dB

Power source		Kubota 23 Hp Dual Fuel OR Kubota 20 Hp Diesel
Controls		Proportional
AC outlet in platform		standard
Maximum hydraulic pressure (functions)	3500 psi	241.3 bar
Tires size		26 x 12 x 12
Hydraulic system capacity		22.5 gallons 85.17 liters
Platform dimensions		
Platform length x width		99 in x 61 in 2.5 x 1.5 m
Platform extension length		60 in 1.5 m
Drive speeds		
Stowed, maximum		3.8 mph 6.1 km/h
Platform raised, maximum		0.5 mph 0.8 km/h 40 ft/54.6 sec 12.2 m/54.6 sec

Continuous improvement of our products is a Genie policy. Product specifications are subject to change without notice or obligation.

Downloaded from www.Manualslib.com manuals search engine

https://truckmanualshub.com/

SPECIFICATIONS

Model	**GS-3268 RT**
Height, working maximum	38 ft 11.8 m
Height, platform maximum	32 ft 9.8 m
Height, stowed maximum Rails up	97 1/2 in 2.5 m
Height, stowed maximum Rails lowered	70 in 1.8 m
Height, stowed maximum Rails off	52 in 1.3 m
Height, guard rails	40 in 1.02 m
Width	68 in 1.73 m
Length, platform retracted	105 in 2.67 m
Length, platform retracted Models with outriggers	130 in 3.3 m
Length, platform extended	165 in 4.2 m
Maximum load capacity	1000 lbs 454 kg
Wheelbase	73 in 1.85 m
Turning radius (outside)	145 in 3.7 m
Turning radius (inside)	60 in 1.5 m
Ground clearance	8 in 20 cm
Weight	7520 lbs 3411 kg
Weight with outrigger option	8620 lbs 3910 kg
Gradeability	35%
Airborne noise emissions Maximum sound level at normal operating workstations (A-weighted)	>80 dB

Power source		Kubota 23 Hp Dual Fuel OR Kubota 20 Hp Diesel
Controls		Proportional
AC outlet in platform		standard
Maximum hydraulic pressure (functions)	3500 psi	241.3 bar
Tires size		26 x 12 x 12
Hydraulic system capacity		22.5 gallons 85.17 liters
Platform dimensions		
Platform length x width		99 in x 61 in 2.5 x 1.5 m
Platform extension length		60 in 1.5 m
Drive speeds		
Stowed, maximum		3.8 mph 6.1 km/h
Platform raised, maximum		0.5 mph 0.8 km/h 40 ft/54.6 sec 12.2 m/54.6 sec

Continuous improvement of our products is a Genie policy. Product specifications are subject to change without notice or obligation.

Downloaded from www.Manualslib.com manuals search engine

https://truckmanualshub.com/

California Proposition 65

WARNING

The exhaust from this product contains chemicals known to the State of California to cause cancer, birth defects or other reproductive harm.

Genie North America
Phone 425.881.1800
Toll Free USA and Canada 800.536.1800
Fax 425.883.3475

Genie Australia Pty Ltd.
Phone +61 7 3375 1660
Fax +61 7 3375 1002

Genie Scandinavia
Phone +46 31 575100
Fax +46 31 579020

Genie China
Phone +86 21 53852570
Fax +86 21 53852569

Genie France
Phone +33 (0)2 37 26 09 99
Fax +33 (0)2 37 26 09 98

Genie Malaysia
Phone +65 98 480 775
Fax +65 67 533 544

Genie Iberica
Phone +34 93 579 5042
Fax +34 93 579 5059

Genie Japan
Phone +81 3 3453 6082
Fax +81 3 3453 6083

Genie Germany
Phone +49 (0)4202 88520
Fax +49 (0)4202 8852-20

Genie Korea
Phone +82 25 587 267
Fax +82 25 583 910

Genie U.K.
Phone +44 (0)1476 584333
Fax +44 (0)1476 584334

Genie Brasil
Phone +55 11 41 665 755
Fax +55 11 41 665 754

Genie Mexico City
Phone +52 55 5666 5242
Fax +52 55 5666 3241

Genie Holland
Phone +31 183 581 102
Fax +31 183 581 566

Distributed By:

Downloaded from www.Manualslib.com manuals search engine