https://truckmanualshub.com/

WSM

WORKSHOP MANUAL
FRONT LOADER

LA525,LA765

Kubota

KiSC issued 06, 2017 A

https://truckmanualshub.com/

TO THE READER

This Workshop Manual tells the servicing personnel about the mechanism, servicing and maintenance of the Front Loader LA525 and LA765. It contains 4 parts: **"Information"**, **"General"**, **"Mechanism"** and **"Servicing"**.

■ **Information**

This section primarily contains information below.

- Safety First
- Safety Decal
- Terminology
- Specification

■ **General**

This section primarily contains information below.

- Loader Identification
- General Precautions
- Lubricants
- Tightening Torques
- Maintenance Check List
- Check and Maintenance

■ **Mechanism**

This section contains information on the structure and the function of the unit. Before you continue with the subsequent sections, make sure that you read this section.

■ **Servicing**

This section primarily contains information below.

- Troubleshooting
- Servicing Specifications
- Tightening Torques
- Removing Front Loader from Tractor
- Checking, Disassembling and Servicing

All illustrations, photographs and specifications contained in this manual are of the newest information available at the time of publication.

KUBOTA reserves the right to change all information at any time without notice.

Since this manual includes many models, information or illustrations and photographs can show more than one model.

February, 2014

© KUBOTA Corporation 2014

KiSC issued 06, 2017 A

https://truckmanualshub.com/

Record of Revisions

For pdf, use search function {Search word} to find all the revised locations.

Last digit of the Code No.	Issue month	Main Revised Point and Corrective Measures {Search word}	Reference Page
1	2014.08	Add new adaptable tractor {L2501}	I-9
2	2017.06	Revised the contents of safety decals	I-7

https://truckmanualshub.com/

I INFORMATION

https://truckmanualshub.com/

INFORMATION

CONTENTS

1. SAFETY FIRST I-1
2. SAFETY DECALS I-4
3. LOADER TERMINOLOGY I-8
4. SPECIFICATIONS I-9
   [1] LOADER SPECIFICATIONS I-9
   [2] BUCKET SPECIFICATIONS I-9
   [3] DIMENSIONAL SPECIFICATIONS I-10
      (1) LA525 ..... I-10
      (2) LA765 ..... I-11
   [4] OPERATIONAL SPECIFICATIONS I-12
      (1) Specifications Table I-12
      (2) Performance Curves I-14

1. SAFETY FIRST

⚠ SAFETY FIRST

- **This symbol, the industry's "Safety Alert Symbol", is used throughout this manual and on labels on the machine itself to warn of the possibility of personal injury. Read these instructions carefully.**
- **It is essential that you read the instructions and safety regulations before you try to repair or use this unit.**

⚠ DANGER
- **Indicates an imminently hazardous situation which, if not avoided, will result in death or serious injury.**

⚠ WARNING
- **Indicates a potentially hazardous situation which, if not avoided, could result in death or serious injury.**

⚠ CAUTION
- **Indicates a potentially hazardous situation which, if not avoided, could result in minor or moderate injury.**

■ IMPORTANT
- **Indicates that equipment or property damage could result if instructions are not followed.**

■ NOTE
- **Gives helpful information.**

WSM000001INI0001US1

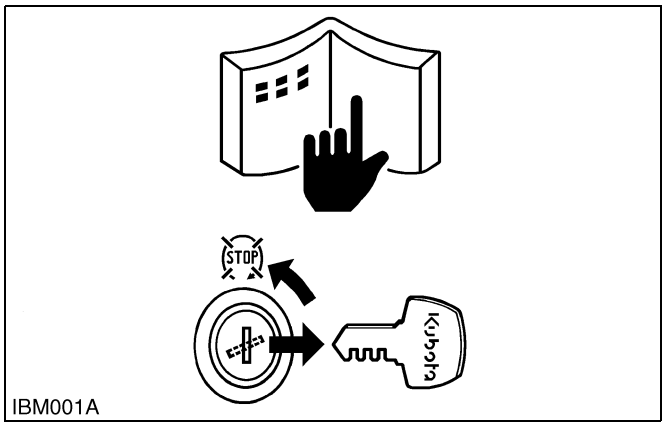

IBM001A

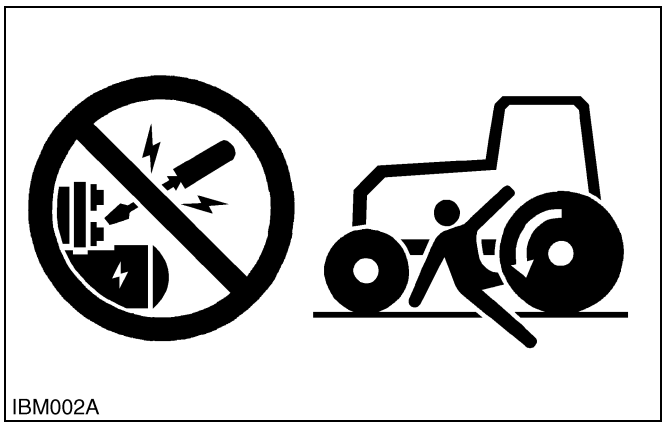
IBM002A

BEFORE YOU START SERVICE

- Read all instructions and safety instructions in this manual and on your machine safety decals.
- Clean the work area and machine.
- Park the machine on a stable and level ground, and set the parking brake.
- Lower the implement to the ground.
- Stop the engine, then remove the key.
- Disconnect the battery negative cable.
- Hang a **"DO NOT OPERATE"** tag in the operator station.

WSM000001INI0010US0

START SAFELY

- Do not do the procedures below when you start the engine.
  - short across starter terminals
  - bypass the safety start switch
- Do not alter or remove any part of machine safety system.
- Before you start the engine, make sure that all shift levers are in neutral positions or in disengaged positions.
- Do not start the engine when you stay on the ground. Start the engine only from operator's seat.

WSM000001INI0015US0

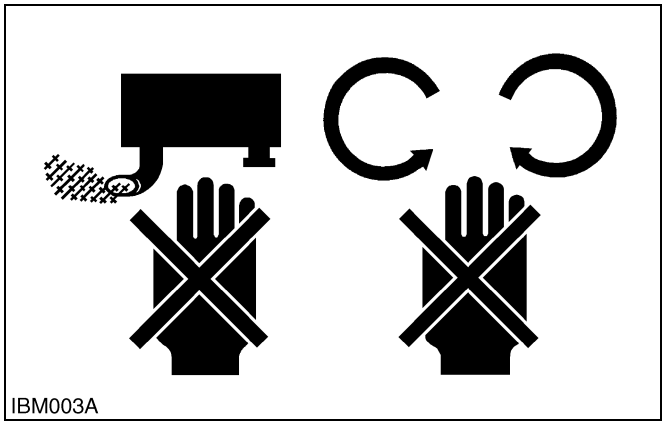
IBM003A

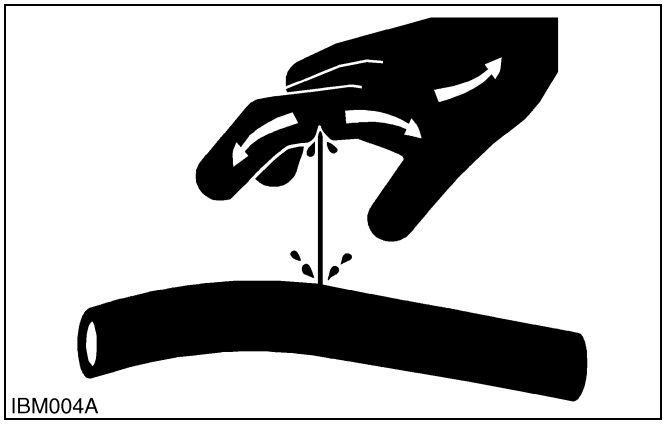
IBM004A

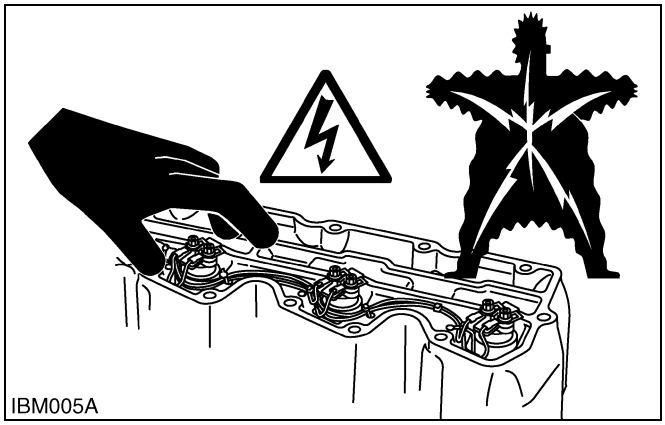
IBM005A

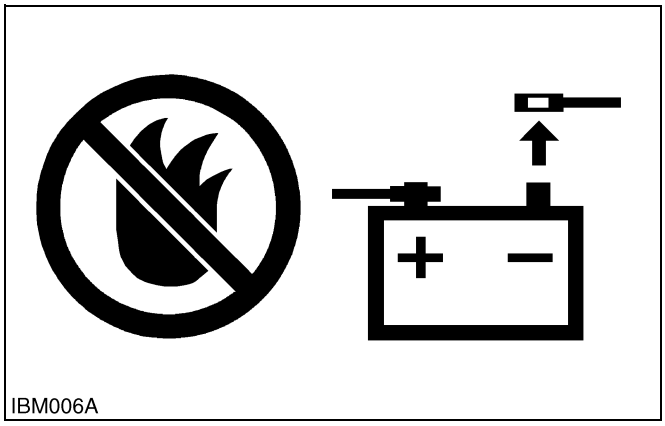
IBM006A

OPERATE SAFELY

- Do not use the machine after you consume alcohol or medication or when you are tired.
- Put on applicable clothing and safety equipment.
- Use applicable tools only. Do not use alternative tools or parts.
- When 2 or more persons do servicing, make sure that you do it safely.
- Do not operate below the machine that only a jack holds. Always use a safety stand to hold the machine.
- Do not touch the hot parts or parts that turn when the engine operates.
- Do not remove the radiator cap when the engine operates, or immediately after it stops. If not, hot water can spout out from the radiator. Only remove the radiator cap when it is at a sufficiently low temperature to touch with bare hands. Slowly loosen the cap to release the pressure before you remove it fully.
- Released fluid (fuel or hydraulic oil) under pressure can cause damage to the skin and cause serious injury. Release the pressure before you disconnect hydraulic or fuel lines. Tighten all connections before you apply the pressure.
- Do not open a fuel system under high pressure.
  The fluid under high pressure that stays in fuel lines can cause serious injury. Do not disconnect or repair the fuel lines, sensors, or any other components between the fuel pump and injectors on engines with a common rail fuel system under high pressure.
- Put on an applicable ear protective device (earmuffs or earplugs) to prevent injury against loud noises.
- Be careful about electric shock. The engine generates a high voltage of more than DC100 V in the ECU and is applied to the injector.

WSM000001INI0012US0

PREVENT A FIRE

- Fuel is very flammable and explosive under some conditions. Do not smoke or let flames or sparks in your work area.
- To prevent sparks from an accidental short circuit, always disconnect the battery negative cable first and connect it last.
- The battery gas can cause an explosion. Keep the sparks and open flame away from the top of battery, especially when you charge the battery.
- Make sure that you do not spill fuel on the engine.

WSM000001INI0005US0

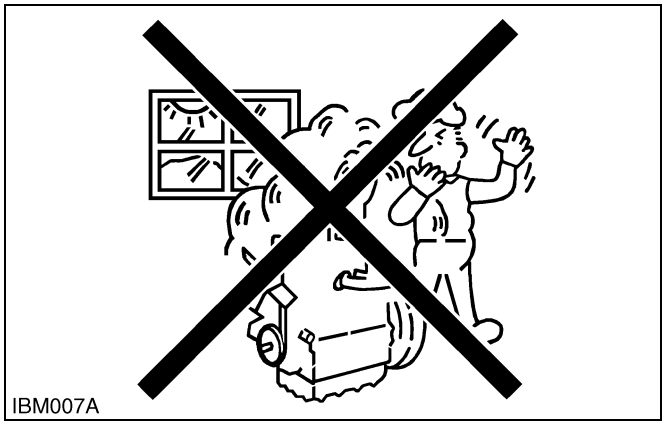
IBM007A

KEEP A GOOD AIRFLOW IN THE WORK AREA

- If the engine is in operation, make sure that the area has good airflow. Do not operate the engine in a closed area. The exhaust gas contains poisonous carbon monoxide.

WSM000001INI0006US0

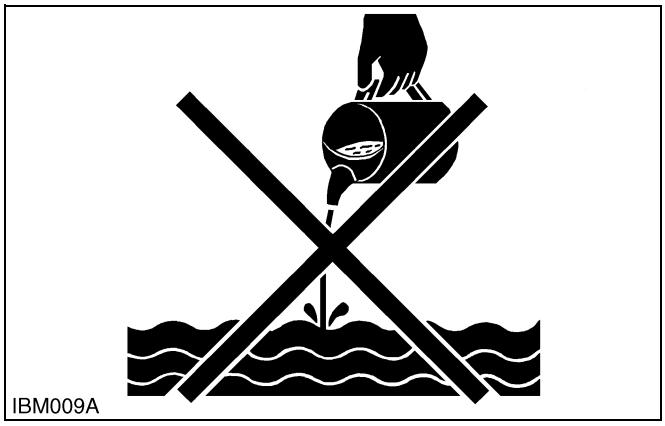
IBM009A

DISCARD FLUIDS CORRECTLY

- Do not discard fluids on the ground, down the drain, into a stream, pond, or lake. Obey related environmental protection regulations when you discard oil, fuel, coolant, electrolyte and other dangerous waste.

WSM000001INI0007US0

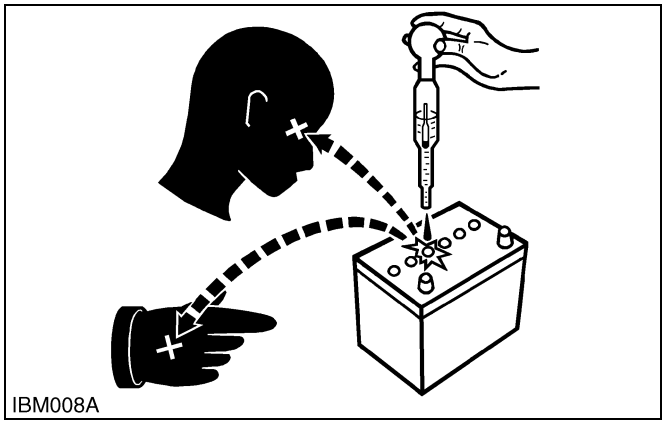
IBM008A

PREVENT ACID BURNS

- Keep electrolyte away from your eyes, hands and clothing. Sulfuric acid in battery electrolyte is poisonous and it can burn your skin and clothing and cause blindness. If you spill electrolyte on yourself, clean yourself with water, and get medical aid immediately.

WSM000001INI0008US0

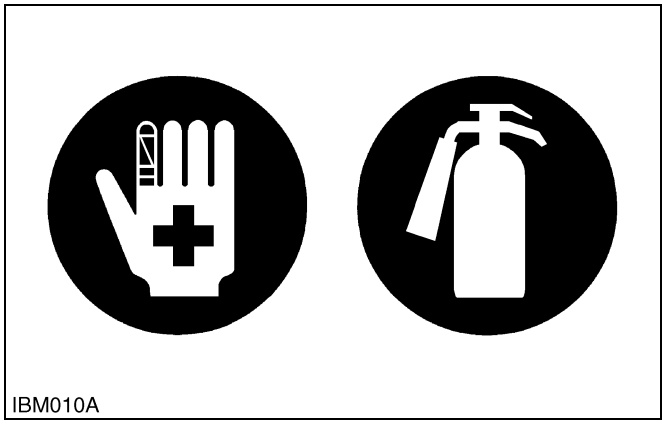
IBM010A

PREPARE FOR EMERGENCIES

- Keep a first aid kit and fire extinguisher ready at all times.
- Keep the emergency contact telephone numbers near your telephone at all times.

WSM000001INI0009US0

2. SAFETY DECALS

The following safety decals are installed on the machine. If a decal becomes damaged, illegible or is not on the machine, replace it. The decal part number is listed in the parts list.

WSM000001INI0013US0

[LA525]

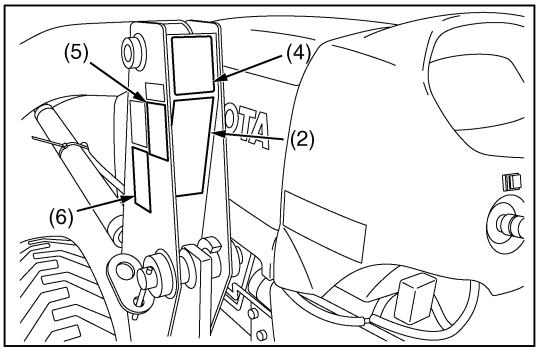

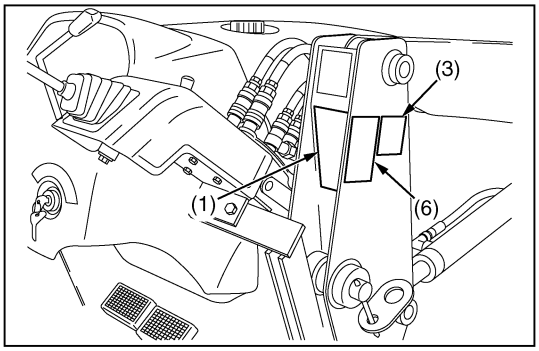

(1) Part No. 7J246-5643-1

1AIABAHAP016A

(2) Part No. 7J246-5641-1

1AIABAHAP017A

(3) Part No. 7J266-5649-2

1AIABACAP077A

(4) Part No. 7J246-5642-1

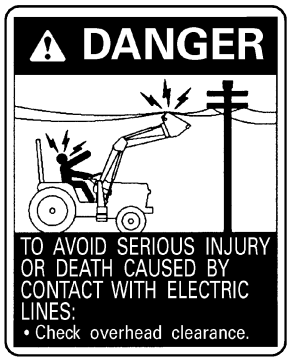

1AIABAHAP018A

(5) Part No. 7J246-5645-1

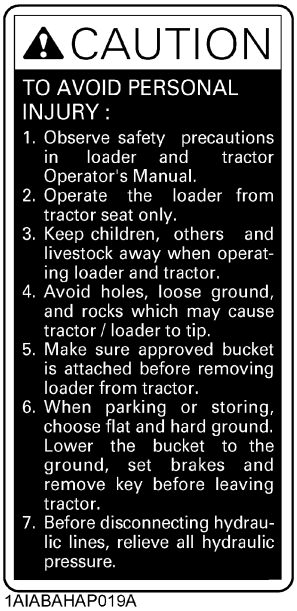

1AIABAHAP019A

(6) Part No. 7J246-5644-2 (Both sides)

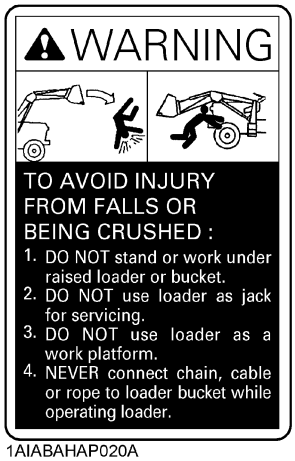

1AIABAHAP020A

9Y1211014ICI004US

9Y1211014INI0015US0

[LA765]

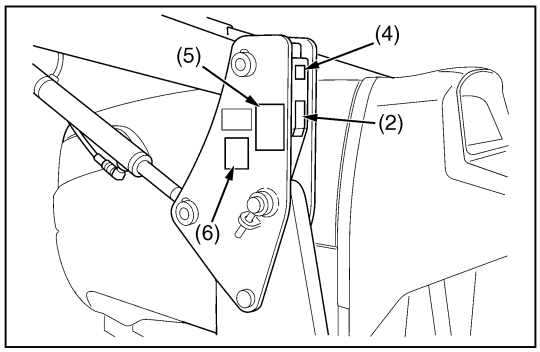

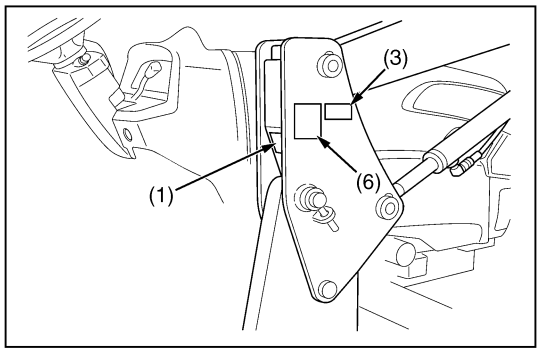

(1) Part No. 7J246-5643-1

1AIABAHAP016A

(2) Part No. 7J246-5641-1

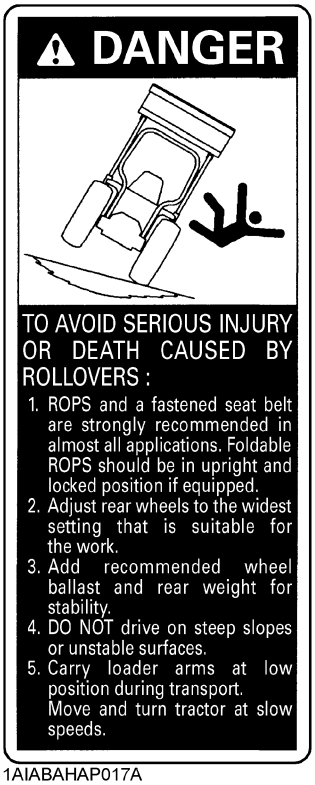

1AIABAHAP017A

(3) Part No. 7J266-5649-2

1AIABACAP077A

(4) Part No. 7J246-5642-1

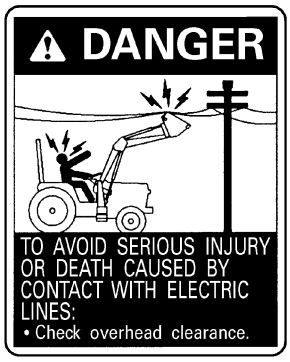

1AIABAHAP018A

(5) Part No. 7J246-5645-1

1AIABAHAP019A

(6) Part No. 7J246-5644-2 (Both sides)

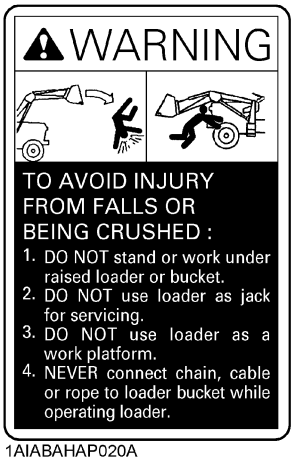

1AIABAHAP020A

9Y1211014ICI001US

9Y1211014INI0001US0

[Bale spear]

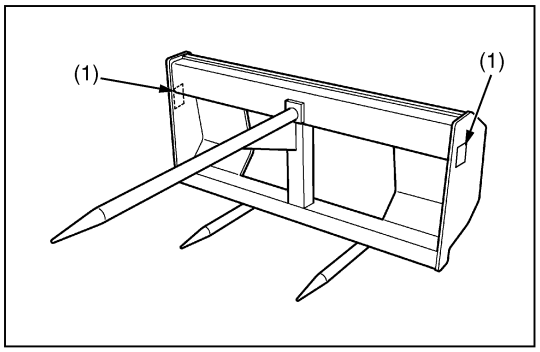

[Pallet fork]

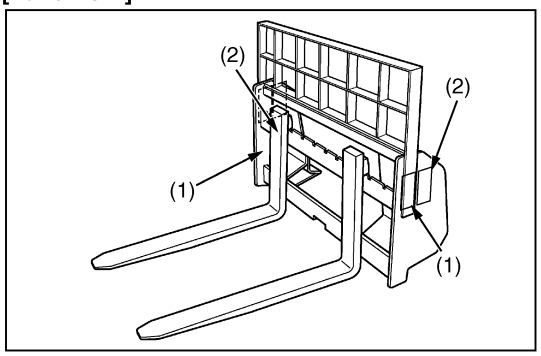

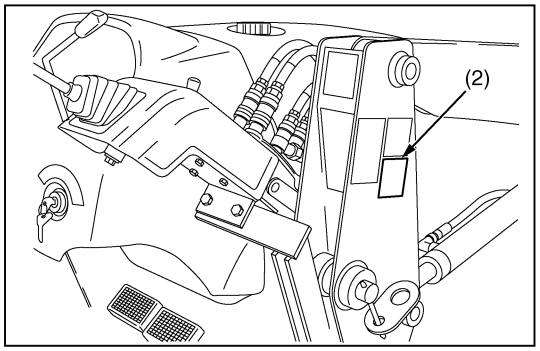

(1) Part No. 7J246-5643-1
(Both sides)

1AIABACAP075A

(2) Part No. 7J293-3923-1

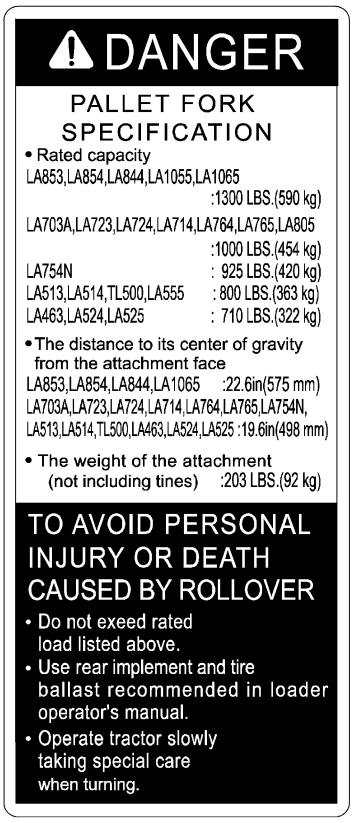

9Y1211014ICI005US

9Y1211014INI0002US0

[LA525]

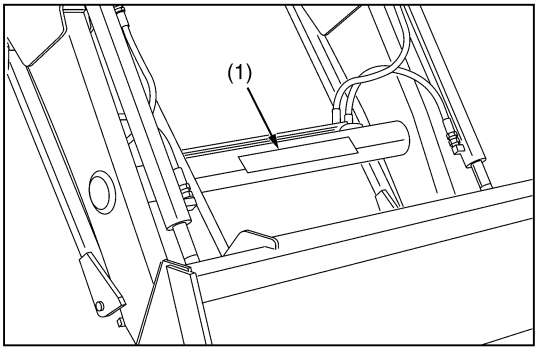

(1) Part No. 7J802-3648-5 [If the loader is equipped with quick attach coupler]

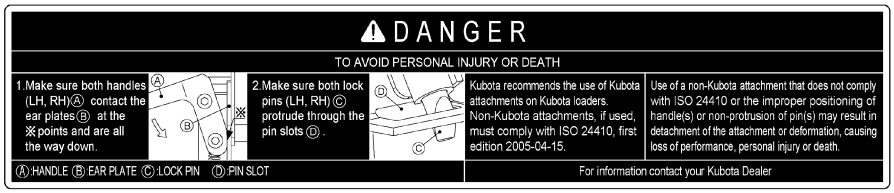

1AIABAAAP119A

[LA765]

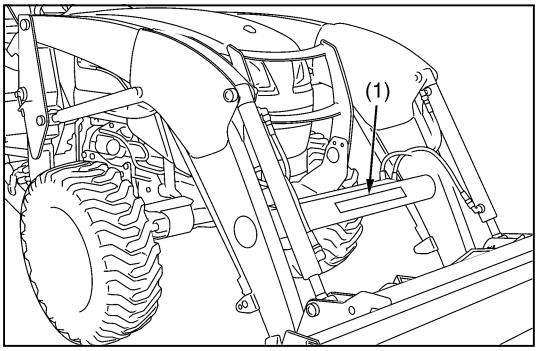

(1) Part No. 7J802-3648-5

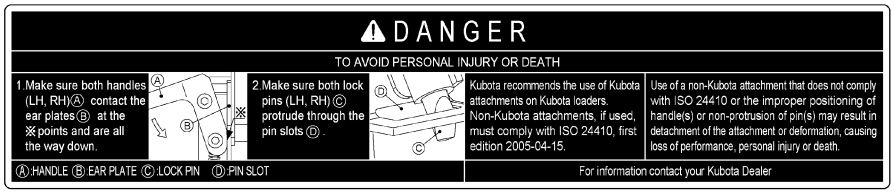

1AIABAAAP119A

9Y1211014ICI006US

9Y1211014INI0003US0

CARE OF DANGER, WARNING AND CAUTION LABELS

1. Keep danger, warning and caution labels clean and free from obstructing material.
2. Clean danger, warning and caution labels with soap and water, dry with a soft cloth.
3. Replace damaged or missing danger, warning and caution labels with new labels from your local KUBOTA dealer.
4. If a component with danger, warning and caution label(s) affixed is replaced with new part, make sure new label(s) is (are) attached in the same location(s) as the replaced component.
5. Attach new danger, warning and caution labels on a clean dry surface. Push any bubbles to outside edge.

9Y1211014INI0004US0

3. LOADER TERMINOLOGY

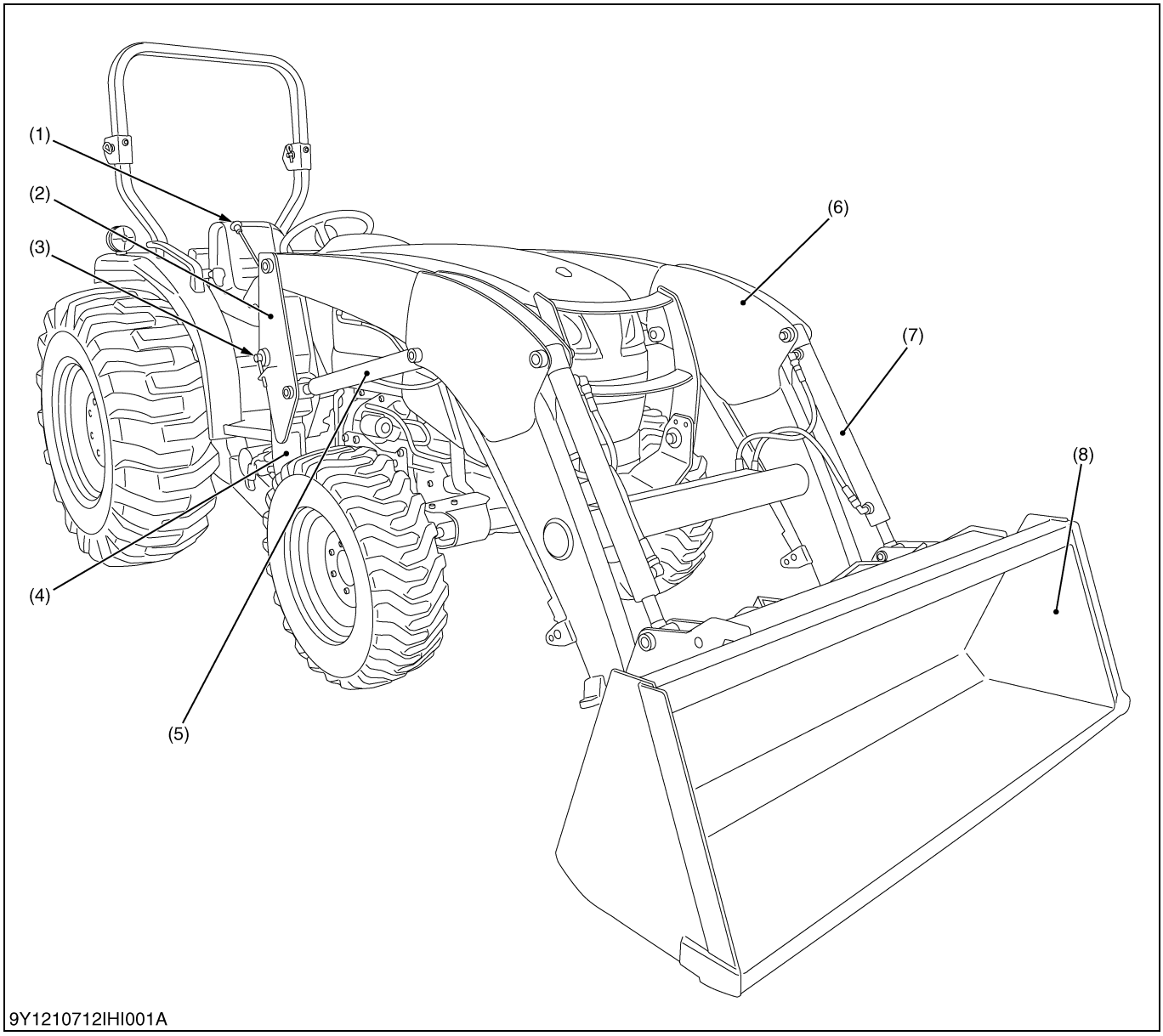

(1) Loader Control Lever	(3) Mounting Pin	(5) Boom Cylinder	(7) Bucket Cylinder
(2) Side Frame	(4) Main Frame	(6) Boom	(8) Bucket

9Y1211014INI0005US0

4. SPECIFICATIONS

■ Suitable Tractor

Loader Model	LA525	LA765
Tractor Model	L2501, L3301, L3901	L4701

9Y1211014INI0006US0

[1] LOADER SPECIFICATIONS

Loader Model		LA525				LA765	
Tractor Model		L2501		L3301, L3901		L4701	
Model		2WD	4WD	2WD	4WD	2WD	4WD
Wheel Base (WB)		1610 mm (63.3 in.)				1850 mm (72.8 in.)	1845 mm (72.6 in.)
Front Tires		7 - 16				7.5L-15	8.3-16
Rear Tires		11.2-24				14.9-24	
Boom Cylinder	Bore	45 mm (1.77 in.)				50 mm (1.97 in.)	
	Stroke	476 mm (18.7 in.)				520 mm (20.5 in.)	
Bucket Cylinder	Bore	45 mm (1.77 in.)				50 mm (1.97 in.)	
	Stroke	476 mm (18.7 in.)				480.5 mm (18.9 in.)	
Control Valve	3 position bucket control type	One Detent Float Position, Regenerative Bucket Dump, Power Beyond Circuit					
Rated Flow		23.9 /min. (6.3 GPM)				29.4 /min. (7.8 GPM)	
Maximum Pressure		15.7 MPa 160 kgf/cm^2 2275 psi		16.2 MPa 165 kgf/cm^2 2347 psi		17.7 MPa 180 kgf/cm^2 2560 psi	
Net Weight (Approximate)		365 kg (805 lbs)				524 kg (1155 lbs)	

9Y1211014INI0007US0

[2] BUCKET SPECIFICATIONS

Loader Model		LA525		LA765		
Model		SQUARE 60"	SQUARE 66"	SQUARE 72"	ROUND 72" HD	SQUARE 72" LIGHT MATERIAL
Type		Rigid	Quick Attach	Quick Attach	Quick Attach	Quick Attach
Width		1525 mm (60 in.)	1675 mm (66 in.)	1830 mm (72 in.)		
Depth **"L"**		463 mm (18.2 in.)	458 mm (18 in.)	547 mm (21.5 in.)	477 mm (18.8 in.)	607 mm (23.9 in.)
Height **"M"**		559 mm (22 in.)	562 mm (22.1 in.)	570 mm (22.4 in.)	608 mm (23.9 in.)	570 mm (22.4 in.)
Length **"N"**		511 mm (20.1 in.)	544 mm (21.4 in.)	630 mm (24.8 in.)	610 mm (24 in.)	691 mm (27.2 in.)
Capacity	Struck	0.22 m^3 (7.8 cu.ft.)	0.23 m^3 (8.1 cu.ft.)	0.31 m^3 (10.9 cu.ft.)		0.36 m^3 (12.7 cu.ft.)
	Heaped	0.26 m^3 (9.2 cu.ft.)	0.28 m^3 (9.9 cu.ft.)	0.37 m^3 (13.1 cu.ft.)		0.45 m^3 (16.0 cu.ft.)
Weight		82 kg (181 lbs)	120 kg (265 lbs)	150 kg (331 lbs)	180 kg (397 lbs)	136 kg (300 lbs)

9Y1211014INI0008US0

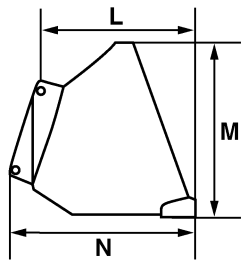

3UFAAABDP002A

[3] DIMENSIONAL SPECIFICATIONS

(1) LA525

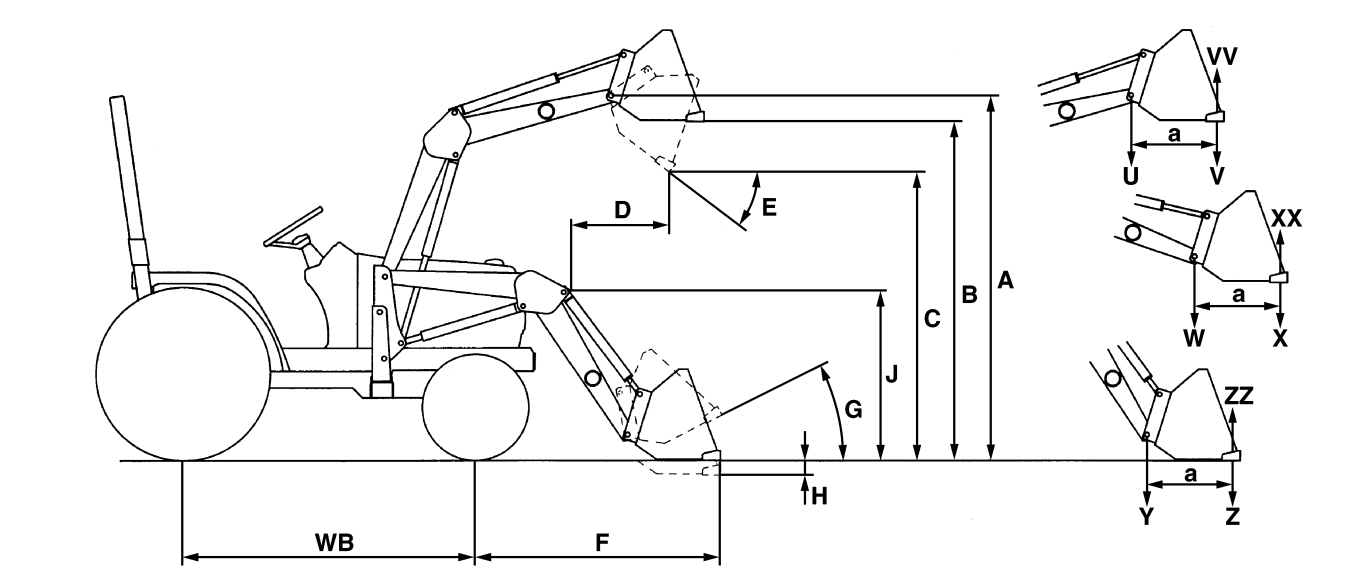

9Y1210407IFI001C

Loader Model		LA525
Tractor Model		L2501, L3301, L3901
Bucket Type		Rigid
A	Maximum lift height (To bucket pivot pin)	2394 mm (94.3 in.)
B	Maximum lift height under level bucket	2224 mm (87.6 in.)
C	Clearance with bucket dumped	1936 mm (76.2 in.)
D	Reach at maximum lift height (Dumping Reach)	645 mm (25.4 in.)
E	Maximum dump angle	0.70 rad (40 °)
F	Reach with bucket on ground	1618 mm (63.7 in.)
G	Bucket roll-back angle	0.54 rad (31 °)
H	Digging depth	176 mm (6.9 in.)
J	Overall height in carry position	1302 mm (51.3 in.)
a	Length	500 mm (19.7 in.)

9Y1211014INI0009US0

(2) LA765

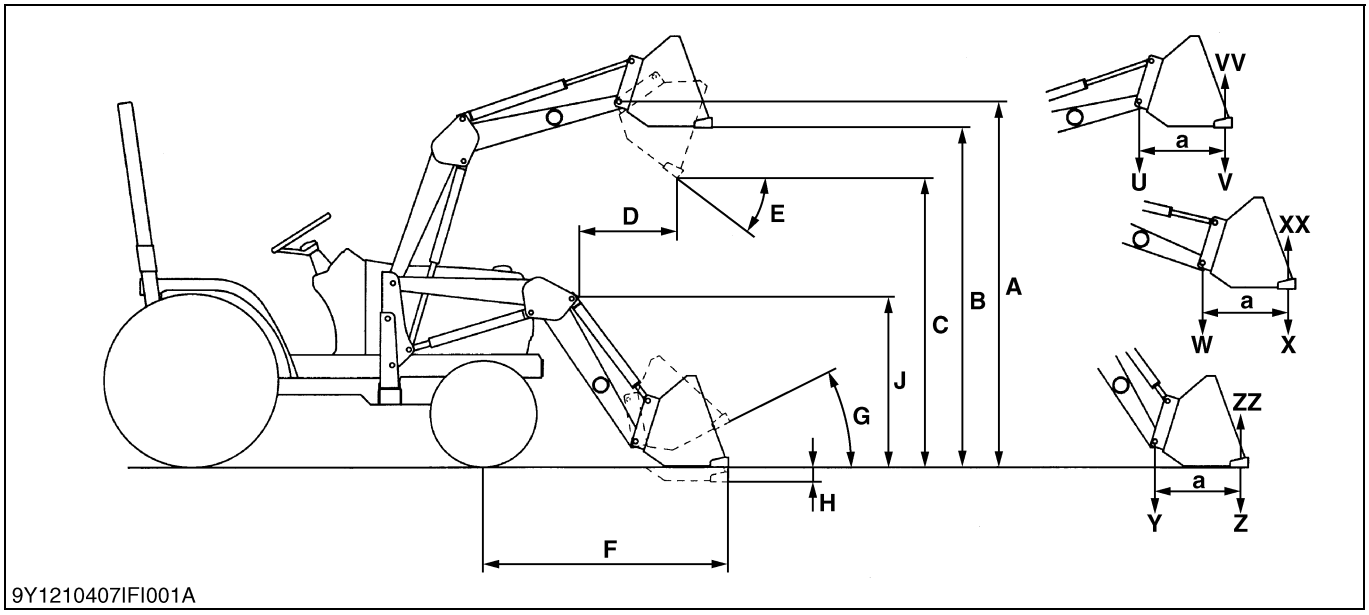

9Y1210407IFI001A

Loader Model		LA765
Tractor Model		L4701
A	Maximum lift height (To bucket pivot pin)	2673 mm (105.2 in.)
B	Maximum lift height under level bucket	2431 mm (95.7 in.)
C	Clearance with bucket dumped	2063 mm (81.2 in.)
D	Reach at maximum lift height (Dumping Reach)	537 mm (21.1 in.)
E	Maximum dump angle	0.72 rad (41 °)
F	Reach with bucket on ground	1783 mm (70.2 in.)
G	Bucket roll-back angle	0.47 rad (27 °)
H	Digging depth	156 mm (6.1 in.)
J	Overall height in carrying position	1387 mm (54.6 in.)
a	Length	500 mm (19.7 in.)

9Y1211014INI0010US0

[4] OPERATIONAL SPECIFICATIONS

(1) Specifications Table

[A] LA525

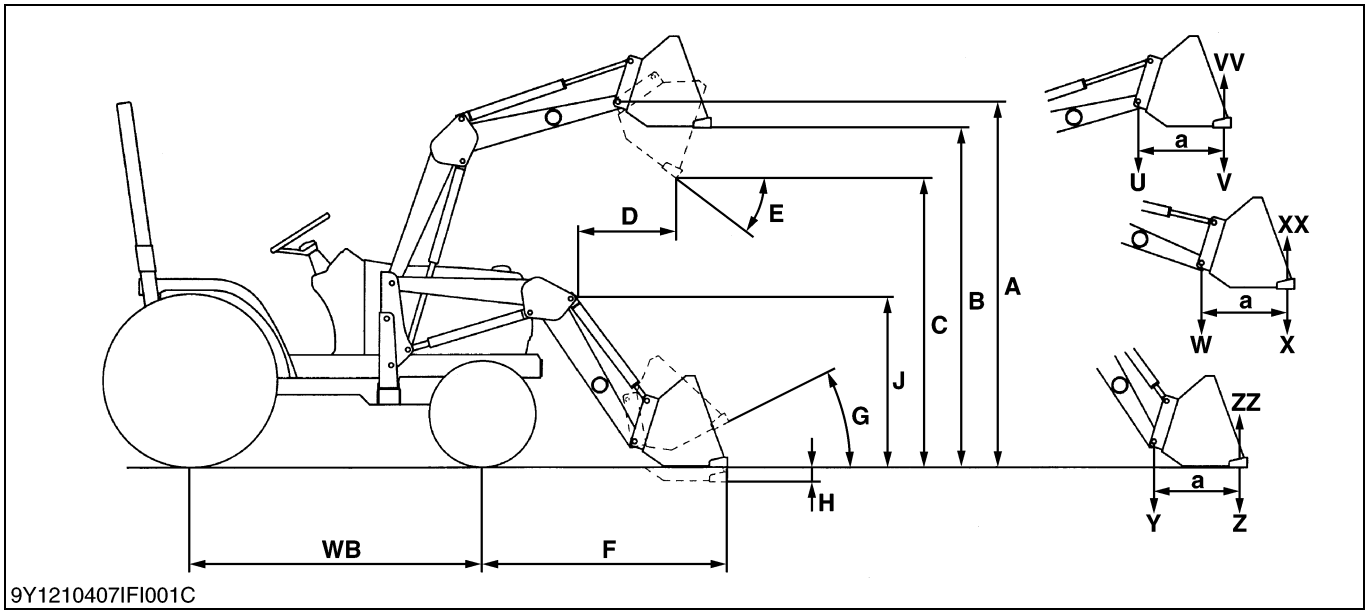

9Y1210407IFI001C

Loader Model		LA525	
Tractor Model		L2501	L3301, L3901
Bucket Type		Rigid	
U	Lift capacity (Bucket pivot pin, max. height)	491 kg (1082 lbs)	513 kg (1131 lbs)
V	Lift capacity (500 mm forward, max. height)	372 kg (820 lbs)	388 kg (855 lbs)
W	Lift capacity (Bucket pivot pin, 1500 mm height)	649 kg (1431 lbs)	676 kg (1490 lbs)
X	Lift capacity (500 mm forward, 1500 mm height)	515 kg (1135 lbs)	536 kg (1182 lbs)
Y	Breakout force (Bucket pivot pin)	10554 N (2373 lbf)	10951 N (2462 lbf)
Z	Breakout force (500 mm forward)	8033 N (1806 lbf)	8335 N (1874 lbf)
VV	Bucket roll-back force at maximum height	9403 N (2114 lbf)	9685 N (2177 lbf)
XX	Bucket roll-back force at 1500 mm	11646 N (2618 lbf)	11998 N (2697 lbf)
ZZ	Bucket roll-back force at ground level	9545 N (2146 lbf)	9855 N (2215 lbf)
Raising time (Rated flow)		4.1 sec.	3.5 sec.
Lowering time (Rated flow)		2.4 sec.	2.3 sec.
Bucket dumping time (Rated flow)		2.0 sec.	1.7 sec.
Bucket roll-back time (Rated flow)		2.6 sec.	2.2 sec.

9Y1211014INI0011US0

[B] LA765

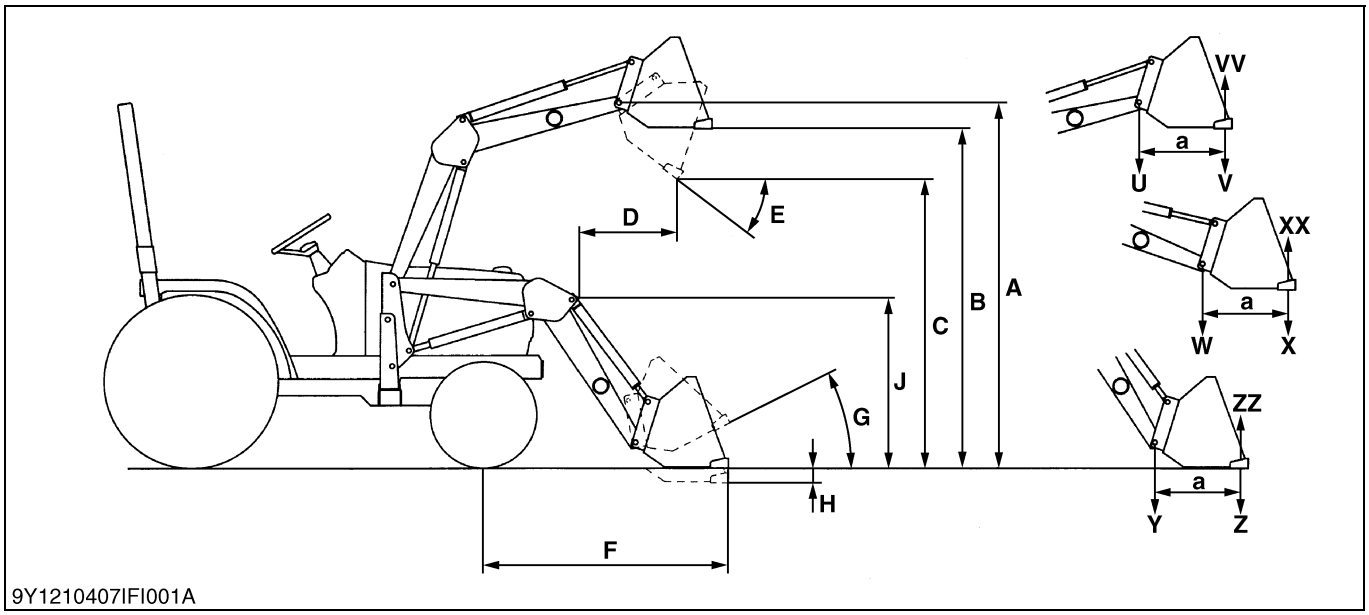

Loader Model		LA765
Tractor Model		L4701
U	Lift capacity (Bucket pivot pin, max. height)	764 kg (1684 lbs)
V	Lift capacity (500 mm forward, max. height)	573 kg (1263 lbs)
W	Lift capacity (Bucket pivot pin, 1500 mm height)	977 kg (2154 lbs)
X	Lift capacity (500 mm forward, 1500 mm height)	783 kg (1726 lbs)
Y	Breakout force (Bucket pivot pin)	14023 N (3153 lbf)
Z	Breakout force (500 mm forward)	10865 N (2443 lbf)
VV	Bucket roll-back force at maximum height	12763 N (2869 lbf)
XX	Bucket roll-back force at 1500 mm	16429 N (3673 lbf)
ZZ	Bucket roll-back force at ground level	13345 N (3000 lbf)
Lifting time (Rated flow)		4.0 sec.
Lowering time (Rated flow)		2.5 sec.
Bucket dumping time (Rated flow)		1.6 sec.
Bucket roll-back time (Rated flow)		2.5 sec.

9Y1211014INI0012US0

(2) Performance Curves

[A] LA525

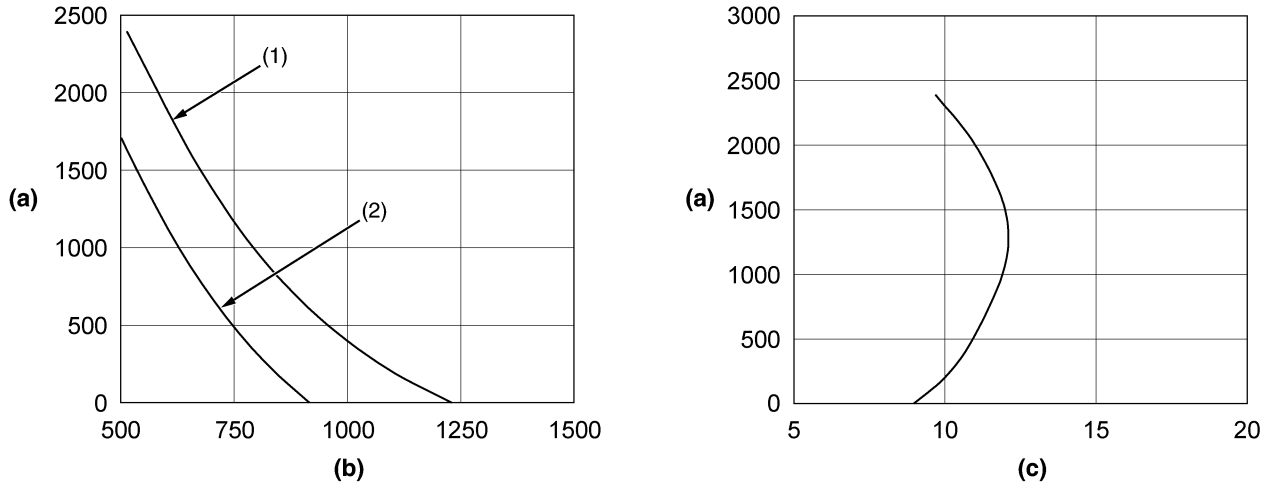

(1) At Pivot Pin
(2) 500 mm Forward of Pivot Pin

(a) Height (mm) **(b) Lift Capacity (kg)** **(c) Rollback Force (kN)**

9Y1211014INI0014US0

[B] LA765

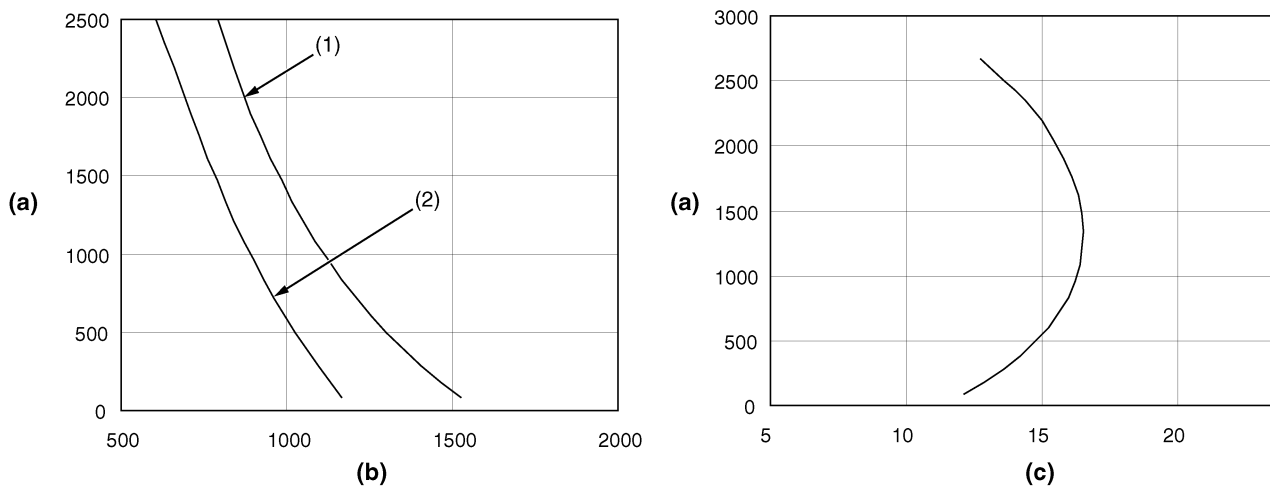

(1) At Pivot Pin
(2) 500 mm Forward of Pivot Pin

(a) Height (mm) **(b) Lift Capacity (kg)** **(c) Rollback Force (kN)**

9Y1211014INI0013US0

https://truckmanualshub.com/

G GENERAL

https://truckmanualshub.com/

GENERAL

CONTENTS

1. LOADER IDENTIFICATION G-1
2. GENERAL PRECAUTIONS G-2
3. LUBRICANTS G-3
4. TIGHTENING TORQUES G-4
   [1] GENERAL USE SCREWS, BOLTS AND NUTS (FOR FRONT LOADER) G-4
   [2] STUD BOLTS G-4
   [3] AMERICAN STANDARD SCREWS, BOLTS AND NUTS WITH UNC OR UNF THREADS G-5
   [4] PLUGS AND GREASE FITTINGS G-5
   [5] HYDRAULIC FITTINGS G-6
      (1) Adapters, Elbows and Others G-6
5. MAINTENANCE CHECK LIST G-7
6. CHECK AND MAINTENANCE G-8
   [1] CHECK POINTS OF EACH USE OR DAILY G-8
   [2] CHECK POINT OF EVERY 10 HOURS G-9
   [3] CHECK POINT OF INITIAL 20 TO 30 HOURS G-10
   [4] CHECK POINT OF EVERY 50 HOURS G-10
7. SPECIAL TOOLS G-12
   [1] SPECIAL TOOL FOR TRACTOR G-12

1. LOADER IDENTIFICATION

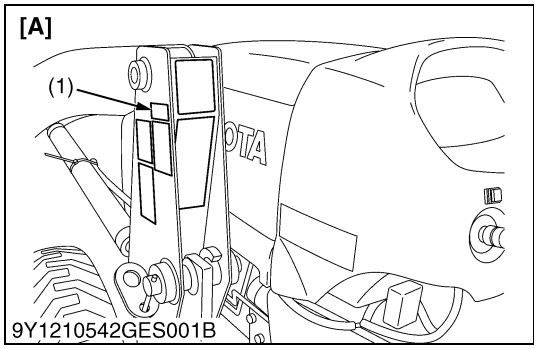

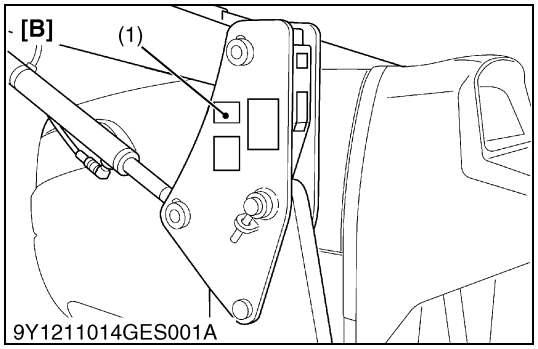

When you get contact to your local KUBOTA distributor, always show the model and front loader's serial number (1).

(1) Serial Number

[A] LA525
[B] LA765

9Y1211014GEG0002US0

2. GENERAL PRECAUTIONS

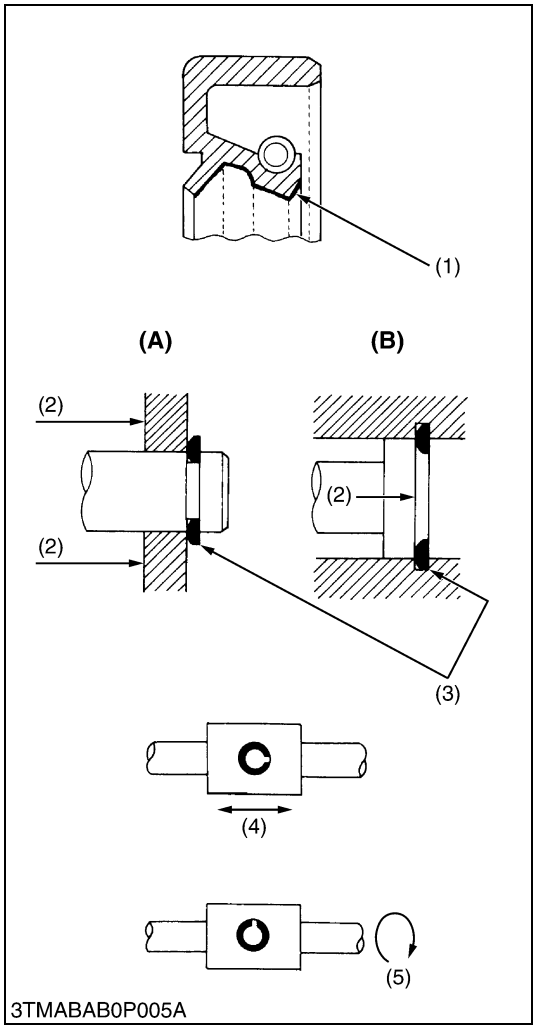

- When you disassemble, carefully put the parts in a clean area to make it easy to find the parts. You must install the screws, bolts and nuts in their initial position to prevent the reassembly errors.
- When it is necessary to use special tools, use KUBOTA special tools. Refer to the drawings when you make special tools that you do not use frequently.
- Before you disassemble or repair machine, make sure that you always disconnect the ground cable from the battery first.
- Remove oil and dirt from parts before you measure.
- Use KUBOTA genuine parts for replacement to keep the machine performance and to make sure of safety.
- You must replace the gaskets and O-rings when you assemble again. Apply grease **(1)** to new O-rings or oil seals before you assemble.
- When you assemble the external or internal snap rings, make sure that the sharp edge **(3)** faces against the direction from which force **(2)** is applied.
- When inserting spring pins, their splits must face the direction from which a force is applied. See the figure on the left side.
- To prevent damage to the hydraulic system, use only specified fluid or equivalent.
- Clean the parts before you measure them.
- Tighten the fittings to the specified torque. Too much torque can cause damage to the hydraulic units or the fittings. Not sufficient torque can cause oil leakage.
- When you use a new hose or pipe, tighten the nuts to the specified torque. Then loosen (approx. by 45°) and let them be stable before you tighten to the specified torque (This is not applied to the parts with seal tape).
- When you remove the two ends of a pipe, remove the lower end first.
- Use two pliers in removal and installation. One to hold the stable side, and the other to turn the side you remove to prevent twists.
- Make sure that the sleeves of flared connectors and tapers of hoses are free of dust and scratches.
- After you tighten the fittings, clean the joint and apply the maximum operation pressure 2 to 3 times to check oil leakage.

(1) Grease
(2) Force
(3) Sharp Edge
(4) Axial Force
(5) Rotating Movement

(A) External Cir-clip
(B) Internal Cir-clip

WSM000001GEG0106US0

3. LUBRICANTS

To prevent serious damage to hydraulic systems, use only specified fluid or its equivalent.

Place	Capacity						Lubricants, type of grease
	L3301, L3901			L4701			
	Manual Transmission		HST	Manual Transmission		HST	
	2WD	4WD	4WD	2WD	4WD	4WD	
Transmission case (Front loader is not attached)	28.0 L 7.4 U.S.gals 6.1 Imp.gals	28.5 L 7.5 U.S.gals 6.3 Imp.gals	23.5 L 6.2 U.S.gals 5.2 Imp.gals	40.0 L 10.6 U.S.gals 8.80 Imp.gals			KUBOTA SUPER UDT-2 fluid*
Grease fitting	Until grease overflows						Moly Ep type grease**

Place	Capacity			Lubricants, type of grease
	L2501			
	Manual Transmission		HST	
	2WD	4WD	4WD	
Transmission case (Front loader is not attached)	27.0 L 7.1 U.S.gals 5.9 Imp.gals	27.5 L 7.3 U.S.gals 6.1 Imp.gals	23.5 L 6.2 U.S.gals 5.2 Imp.gals	KUBOTA SUPER UDT-2 fluid*
Grease fitting	Until grease overflows			Moly Ep type grease**

■ **NOTE**

- *** KUBOTA original transmission hydraulic fluid.**
- **** "Extreme pressure" and containing Molybdenum disulfide is recommended. This grease may specify "Moly Ep" on it's label.**

9Y1211014GEG0003US0

4. TIGHTENING TORQUES

[1] GENERAL USE SCREWS, BOLTS AND NUTS (FOR FRONT LOADER)

Tighten screws, bolts and nuts whose tightening torques are not specified in this Workshop Manual according to the table below.

Indication on top of bolt	4 No-grade or 4T						7 8.8 7T or Property class 8.8						9 10.9 9T or Property class 10.9		
Material of opponent part	Ordinariness			Aluminum			Ordinariness			Aluminum			Ordinariness		
Unit	N·m	kgf·m	lbf·ft	N·m	kgf·m	lbf·ft	N·m	kgf·m	lbf·ft	N·m	kgf·m	lbf·ft	N·m	kgf·m	lbf·ft
M6 (6 mm, 0.24 in.)	7.9 to 9.3	0.80 to 0.95	5.8 to 6.8	7.9 to 8.8	0.80 to 0.90	5.8 to 6.5	9.81 to 11.2	1.00 to 1.15	7.24 to 8.31	7.9 to 8.8	0.80 to 0.90	5.8 to 6.5	12.3 to 14.2	1.25 to 1.45	9.05 to 10.4
M8 (8 mm, 0.31 in.)	18 to 20	1.8 to 2.1	13 to 15	17 to 19	1.7 to 2.0	13 to 14	24 to 27	2.4 to 2.8	18 to 20	18 to 20	1.8 to 2.1	13 to 15	30 to 34	3.0 to 3.5	22 to 25
M10 (10 mm, 0.39 in.)	40 to 45	4.0 to 4.6	29 to 33	32 to 34	3.2 to 3.5	24 to 25	48 to 55	4.9 to 5.7	36 to 41	40 to 44	4.0 to 4.5	29 to 32	61 to 70	6.2 to 7.2	45 to 52
M12 (12 mm, 0.47 in.)	63 to 72	6.4 to 7.4	47 to 53	–	–	–	78 to 90	7.9 to 9.2	58 to 66	63 to 72	6.4 to 7.4	47 to 53	103 to 117	10.5 to 12.0	76.0 to 86.7
M14 (14 mm, 0.55 in.)	108 to 125	11.0 to 12.8	79.6 to 92.5	–	–	–	124 to 147	12.6 to 15.0	91.2 to 108	–	–	–	167 to 196	17.0 to 20.0	123 to 144
M16 (16 mm, 0.63 in.)	167 to 191	17.0 to 19.5	123 to 141	–	–	–	197 to 225	20.0 to 23.0	145 to 166	–	–	–	260 to 304	26.5 to 31.0	192 to 224
M18 (18 mm, 0.71 in.)	246 to 284	25.0 to 29.0	181 to 209	–	–	–	275 to 318	28.0 to 32.5	203 to 235	–	–	–	344 to 402	35.0 to 41.0	254 to 296
M20 (20 mm, 0.79 in.)	334 to 392	34.0 to 40.0	246 to 289	–	–	–	368 to 431	37.5 to 44.0	272 to 318	–	–	–	491 to 568	50.0 to 58.0	362 to 419

WSM000001GEG0006US0

[2] STUD BOLTS

Material of opponent part	Ordinariness			Aluminum		
Unit	N·m	kgf·m	lbf·ft	N·m	kgf·m	lbf·ft
M8 (8 mm, 0.31 in.)	12 to 15	1.2 to 1.6	8.7 to 11	8.9 to 11	0.90 to 1.2	6.5 to 8.6
M10 (10 mm, 0.39 in.)	25 to 31	2.5 to 3.2	18 to 23	20 to 25	2.0 to 2.6	15 to 18
M12 (12 mm, 0.47 in.)	30 to 49	3.0 to 5.0	22 to 36	31	3.2	23
M14 (14 mm, 0.55 in.)	62 to 73	6.3 to 7.5	46 to 54	–	–	–
M16 (16 mm, 0.63 in.)	98.1 to 112	10.0 to 11.5	72.4 to 83.1	–	–	–
M18 (18 mm, 0.71 in.)	172 to 201	17.5 to 20.5	127 to 148	–	–	–

WSM000001GEG0007US0

[3] AMERICAN STANDARD SCREWS, BOLTS AND NUTS WITH UNC OR UNF THREADS

Grade	SAE GR.5			SAE GR.8		
Unit	**N·m**	**kgf·m**	**lbf·ft**	**N·m**	**kgf·m**	**lbf·ft**
1/4	11.7 to 15.7	1.20 to 1.60	8.63 to 11.5	16.3 to 19.7	1.67 to 2.00	12.0 to 14.6
5/16	23.1 to 27.7	2.36 to 2.82	17.0 to 20.5	33 to 39	3.4 to 3.9	25 to 28
3/8	48 to 56	4.9 to 5.7	36 to 41	61 to 73	6.3 to 7.4	45 to 53
1/2	110 to 130	11.3 to 13.2	81.2 to 95.8	150 to 178	15.3 to 18.1	111 to 131
9/16	150 to 178	15.3 to 18.1	111 to 131	217 to 260	22.2 to 26.5	160 to 191
5/8	204 to 244	20.8 to 24.8	151 to 179	299 to 357	30.5 to 36.4	221 to 263

WSM000001GEG0008US0

[4] PLUGS AND GREASE FITTINGS

Shape	Size	Material of opponent part					
		Ordinariness			Aluminum		
		N·m	**kgf·m**	**lbf·ft**	**N·m**	**kgf·m**	**lbf·ft**
Tapered screw 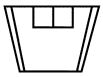	**R1/8**	13 to 21	1.3 to 2.2	9.4 to 15	13 to 19	1.3 to 2.0	9.4 to 14
	R1/4	25 to 44	2.5 to 4.5	18 to 32	25 to 34	2.5 to 3.5	18 to 25
	R3/8	49 to 88	5.0 to 9.0	37 to 65	49 to 58	5.0 to 6.0	37 to 43
	R1/2	58.9 to 107	6.00 to 11.0	43.4 to 79.5	59 to 78	6.0 to 8.0	44 to 57
Straight screw 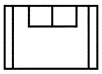	**G1/4**	25 to 34	2.5 to 3.5	18 to 25	–	–	–
	G3/8	62 to 82	6.3 to 8.4	46 to 60	–	–	–
	G1/2	49 to 88	5.0 to 9.0	37 to 65	–	–	–

WSM000001GEG0005US0

[5] HYDRAULIC FITTINGS

(1) Adapters, Elbows and Others

Item	Shape	Thread size	Tightening torque		
			N·m	kgf·m	lbf·ft
Adjustable elbow, Adapter (O-ring port) (UNF)	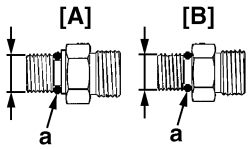 [A] Nut Type [B] No Nut Type a: O-ring	7/16	18.0 to 20.0	1.84 to 2.03	13.3 to 14.7
		9/16	37.0 to 44.0	3.78 to 4.48	27.3 to 32.4
		3/4	48.0 to 54.0	4.90 to 5.50	35.4 to 39.8
		7/8	77.0 to 85.0	7.86 to 8.66	56.8 to 62.6
Hose fitting, Flare nut (UNF)	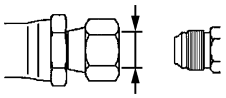	9/16	22.0 to 25.0	2.2 to 2.5	16.0 to 19.0
		3/4	36.0 to 40.0	3.67 to 4.07	26.6 to 29.5
		7/8	43.0 to 50.0	4.39 to 5.09	31.8 to 36.8
		1 1/16	107 to 119	11.0 to 12.1	79.0 to 87.7
Adapter (NPT)	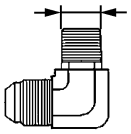	1/4	30.0 to 50.0	3.06 to 5.09	22.2 to 36.8
		3/8	39.0 to 60.0	3.98 to 6.11	28.8 to 44.2
		1/2	49.0 to 58.0	5.00 to 5.91	36.2 to 42.7
Grease Fitting	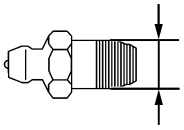	1/8	4.1 to 6.7	0.42 to 0.68	3.1 to 4.9
		1/4	4.1 to 6.7	0.42 to 0.68	3.1 to 4.9

■ **NOTE**

- **When connecting a hose with flare nut, after tightening the nut with the specified tightening torque, return it approximately 45 degrees (0.79 rad) and re-tighten it to the specified tightening torque.**

WSM000001GEG0010US0

5. MAINTENANCE CHECK LIST

To keep the machine work in good condition as well as to prevent any accident and trouble, do periodic inspection and maintenance. Check the following points before use.

Service Interval	Check Points	Reference page
Daily (Each use)	Check the transmission fluid level	G-8
	Check the hardware (Main and sub frame)	G-9
	Check the hydraulic hoses	G-9
Every 10 hours	Grease all grease fittings	G-9
Initial 20 to 30 hours	Re-tightening of hardware	G-10
Every 50 hours	Check the main frame and sub frame bolt torques	G-10

9Y1211014GEG0004US0

6. CHECK AND MAINTENANCE

CAUTION
- **For check and repair, park the tractor on flat ground and apply the parking brake.**
- **For check and repair, lower the bucket and stop the engine.**
- **Remove the key.**

9Y1211014GEG0005US0

[1] CHECK POINTS OF EACH USE OR DAILY

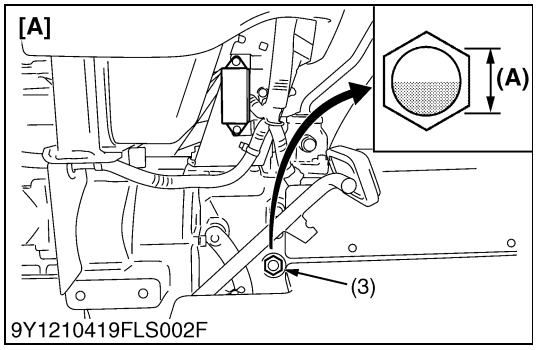

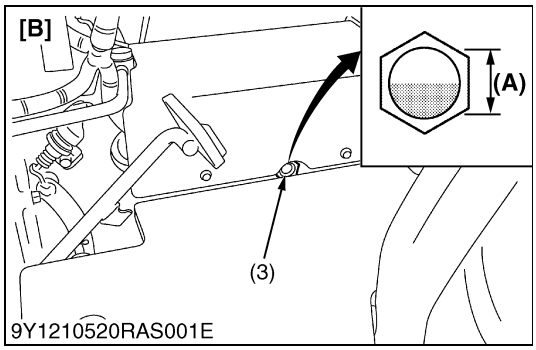

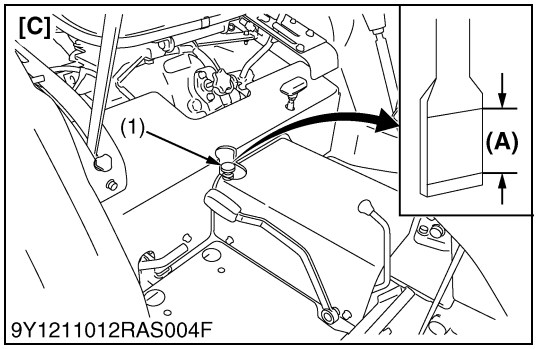

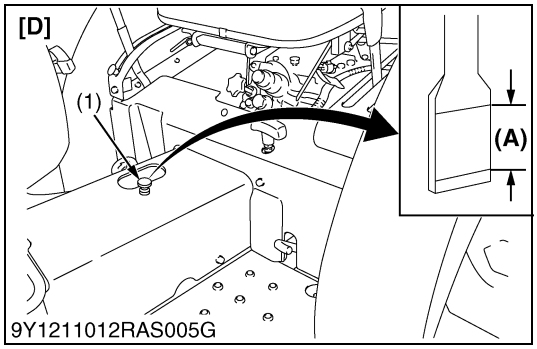

Checking Transmission Fluid Level

1. Park the machine on a flat surface, lower the implement and stop the engine.
2. To check the oil level, pull out the dipstick, clean it, replace it, and pull it out again. Check to see that the oil level is between the two notches.
   If the level is too low, add new oil to the prescribed level at the oil inlet.
   (Refer to "3. LUBRICANTS" on page G-3)

■ **IMPORTANT**
- **If oil level is low, do not operate engine.**

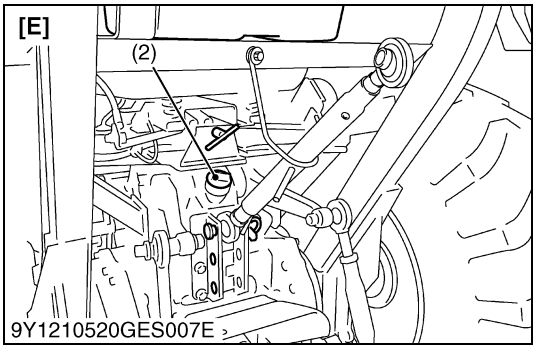

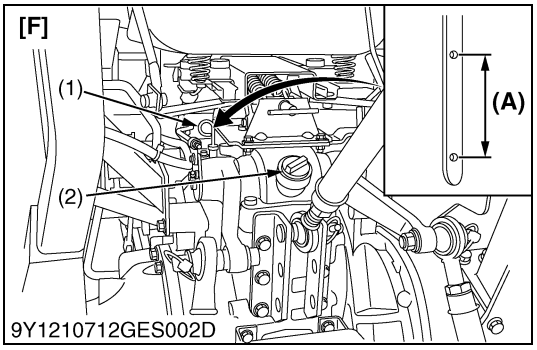

(1) Dipstick
(2) Oil Inlet
(3) Gauge

(A) Oil level is acceptable within this range.

[A] L2501 Manual Transmission Model
[B] L2501 HST Model
[C] L3301, L3901 Manual Transmission Model
[D] L3301, L3901 HST Model
[E] L2501,L3301,L3901
[F] L4701

9Y1211014GEG0006US0

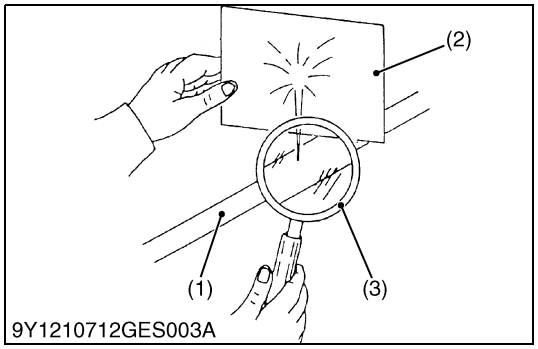

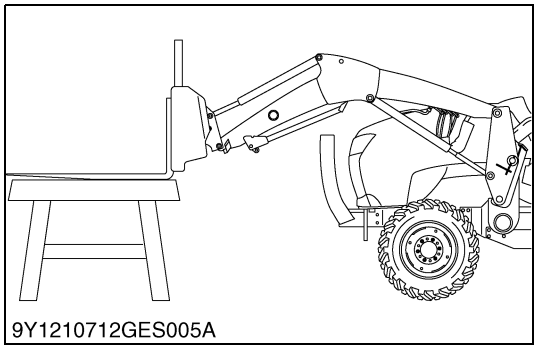

Hardware (Main and Sub Frame) and Hydraulic Hoses

1. Check all hardware daily before operation.
   Tighten hardware to torque values as specified in the next page.
2. With the engine off and the bucket on the ground, examire all hoses for cuts or wear. Check for signs of leaks and make sure all fittings are tight.

WARNING

To avoid serious personal injury:

- **Hydraulic fluid splash under pressure can have sufficient force to go into skin and cause serious personal injury. Before disconnecting lines, be sure to relieve all pressure. Before applying pressure to the system, be sure all connections are tight and that lines, tubes, and hoses are not damaged. Fluid escaping from a very small hole can be almost invisible. Use a piece of cardboard or wood, rather than your hands, to look for suspected leaks.**
  If injured by escaping fluid, see a doctor at once. Serious infection or allergic reaction will occur if you do not get proper medical treatment immediately.
- **When removing the engine side covers, be careful not to touch hot loader cylinders.**
  Allow all surfaces to cool before maintenance.
- **Before servicing the loader or the tractor, be sure to lower the loader boom in contact with the ground. If the loader boom must be lifted during service or maintenance, hold the boom as shown in the figure.**

(1) Hydraulic Line
(2) Cardboard
(3) Magnifying Glass

9Y1211014GEG0007US0

[2] CHECK POINT OF EVERY 10 HOURS

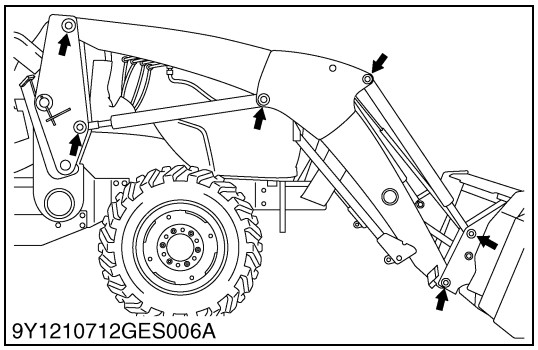

Lubrication

1. Lubricate all grease fittings every 10 hours of operation. Also, lubricate joints of control lever linkage every 10 hours. High quality grease "extreme pressure" and containing molybdenum disulfide is recommended. This grease may specify "Moly EP" on its label.
2. Daily before operation, check the tractor hydraulic fluid level. If low, add as in the previous page. Also change the filter element and the hydraulic fluid as recommended in the tractor's operator's manual.

9Y1211014GEG0008US0

[3] CHECK POINT OF INITIAL 20 TO 30 HOURS

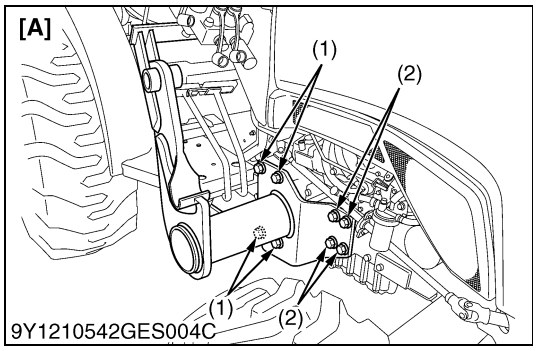

9Y1210542GES004C

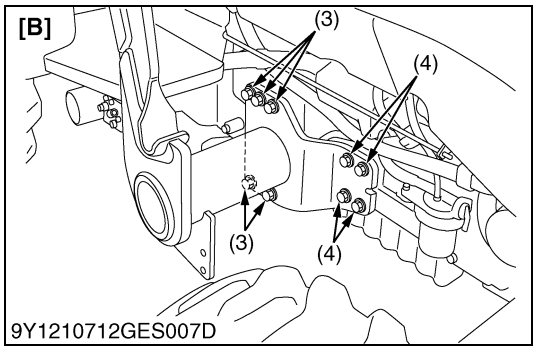

9Y1210712GES007D

Re-tightening of Hardware

After 20 to 30 hours of initial loader operation, re-tighten all mounting bolts and nuts to the required torque value as follows.

Tightening torque	Main frame bolts (M16)	226 N·m 23.0 kgf·m 166 lbf·ft

(1) 18-M16 × 40 Bolt
8-M16 Spring Lock Washer
8-5/8 Hardened Plain Washers
(2) 8-M16 × 40 Bolt
8-M16 Spring Lock Washer
(3) 10-M16 × 45 Bolt
10-M16 Spring Lock Washer
10-5/8 Hardened Plain Washer
(4) 8-M16 × 45 Bolt
8-M16 Spring Lock Washer

[A] LA525
[B] LA765

9Y1211014GEG0009US0

[4] CHECK POINT OF EVERY 50 HOURS

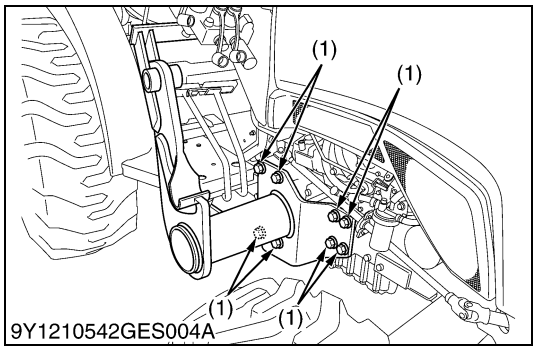

9Y1210542GES004A

Checking Main Frame Mounting Bolts (LA525)

CAUTION

To avoid personal injury:

- **Never operate front loader with a loose main frame.**
- **Any time bolts are loosened, retighten to specified torque.**
- **Check all bolts frequently and keep them tight.**

1. Check main frame bolts and nuts regularly especially when new. If they are loose, tighten them as follows.

Tightening torque	Main frame mounting bolt	226 N·m 23.0 kgf·m 166 lbf·ft

(1) Main Frame Mounting Bolt

9Y1211014GEG0010US0

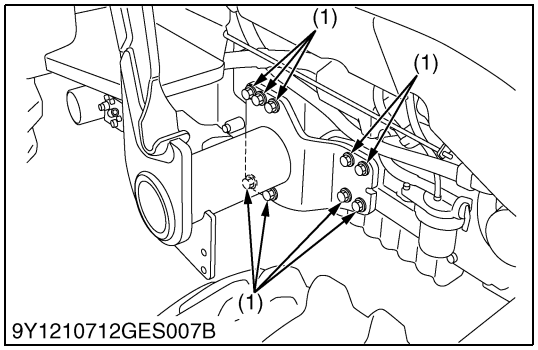

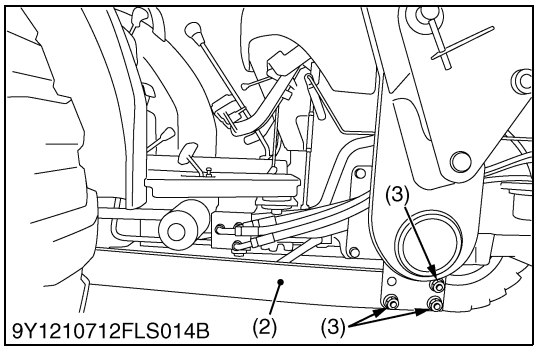

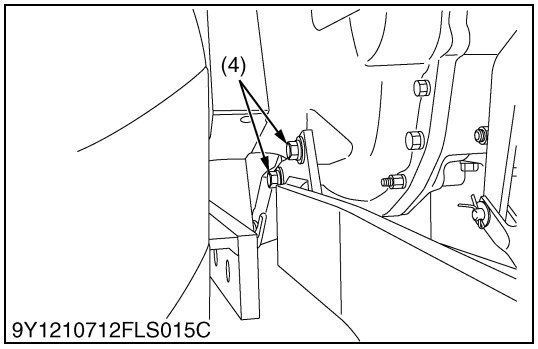

Checking Main Frame and Sub Frame Bolt Torque (LA765)

CAUTION

To avoid personal injury:

- **Never operate front loader with a loose main frame.**
- **Any time bolts and nuts are loosened, retighten to specified torque.**
- **Check all bolts and nuts frequently and keep them tight.**

1. Check main frame bolts and sub frame bolts (1) regularly especially when new. If they are loose, tighten them as follows.

Tightening torque	Main frame bolts (M16)	226 N·m 23.0 kgf·m 166 lbf·ft
	Sub frame mounting bolt and nut (M16)	226 N·m 23.0 kgf·m 166 lbf·ft
	Sub frame mounting bolt and nut (M12)	90.2 N·m 9.20 kgf·m 66.5 lbf·ft

(1) Main Frame Bolt
(2) Sub Frame
(3) Sub Frame Bolt and Nut (M16)
(4) Sub Frame Bolt and Nut (M12)

9Y1211014GEG0011US0

7. SPECIAL TOOLS

[1] SPECIAL TOOL FOR TRACTOR

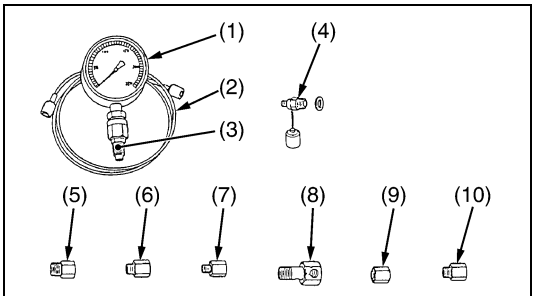

3TMABAB0P077A

Relief Valve Pressure Tester

Code No.

- 07916-50045

Application

- This allows easy measurement of relief set pressure.

(1) Gauge (07916-50322)
(2) Cable (07916-50331)
(3) Threaded Joint (07916-50401)
(4) Threaded Joint (07916-50341)
(5) Adaptor **B** (M18 × P1.5) (07916-50361)
(6) Adaptor **C** (PS3/8) (07916-50371)
(7) Adaptor **D** (PT1/8) (07916-50381)
(8) Adaptor **E** (PS3/8) (07916-50392)
(9) Adaptor **F** (PF1/2) (07916-62601)
(10) Adaptor **58** (PT1/4) (07916-52391)

WSM000001GEG0027US0

https://truckmanualshub.com/

1 FRONT LOADER

https://truckmanualshub.com/

MECHANISM

CONTENTS

1. HYDRAULIC CIRCUIT 1-M1
2. HYDRAULIC BLOCK 1-M2
   [1] STRUCTURE 1-M3
3. CONTROL VALVE ASSEMBLY 1-M4
   [1] STRUCTURE 1-M4
   [2] OPERATION 1-M5
      (1) Neutral 1-M5
      (2) Up 1-M6
      (3) Down 1-M7
      (4) Floating 1-M8
      (5) Roll-back 1-M9
      (6) Dump 1-M10

1. HYDRAULIC CIRCUIT

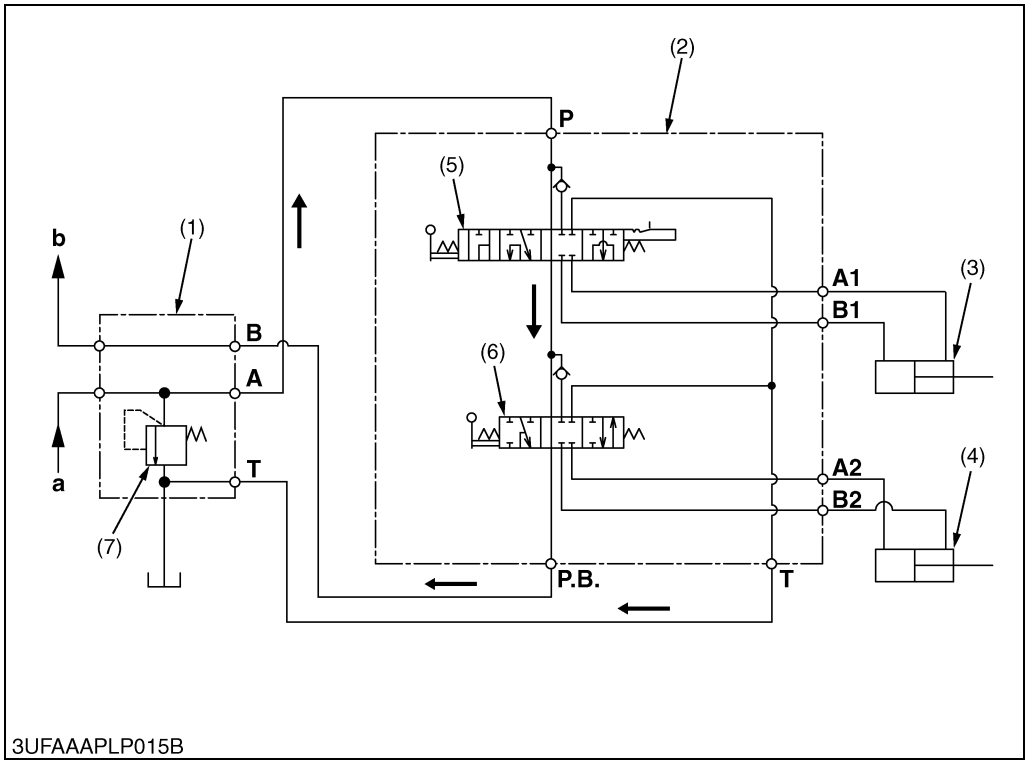

(1) Hydraulic Block
(2) Control Valve Assembly
(3) Boom Cylinder
(4) Bucket Cylinder
(5) Boom Control Valve
(6) Bucket Control Valve (3 Position Type)
(7) Relief Valve

P: P Port
T: T Port
A1: A1 Port
B1: B1 Port
A2: A2 Port
B2: B2 Port
P.B.:Power Beyond Port

a: From Pump
b: To 3-Point Hydraulic System

To operate the front loader, the hydraulic oil pressurized by the hydraulic pump flows from **P** port through the boom control valve (5) and the bucket control valve (6) to **P.B.** port.

Specification of Hydraulic Parts

(7)	L2501: 15.2 to 16.2 MPa (155 to 165 kgf/cm^2, 2210 to 2340 psi)
	L3301/L3901: 15.7 to 16.6 MPa (160 to 170 kgf/cm^2, 2280 to 2410 psi)
	L4701: 17.1 to 18.1 MPa (174 to 185 kgf/cm^2, 2480 to 2630 psi)

9Y1211014FLM0001US0

2. HYDRAULIC BLOCK

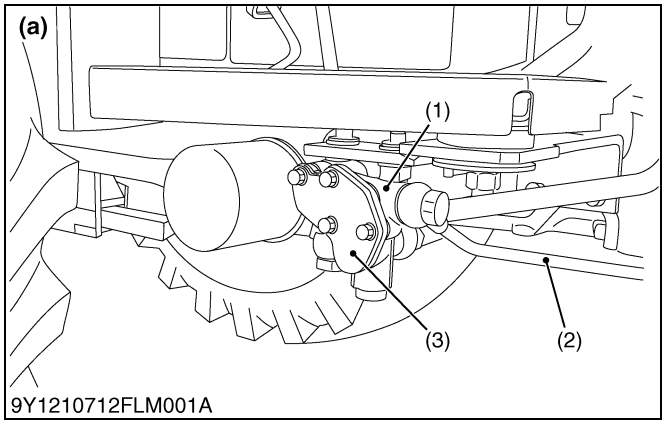

9Y1210712FLM001A

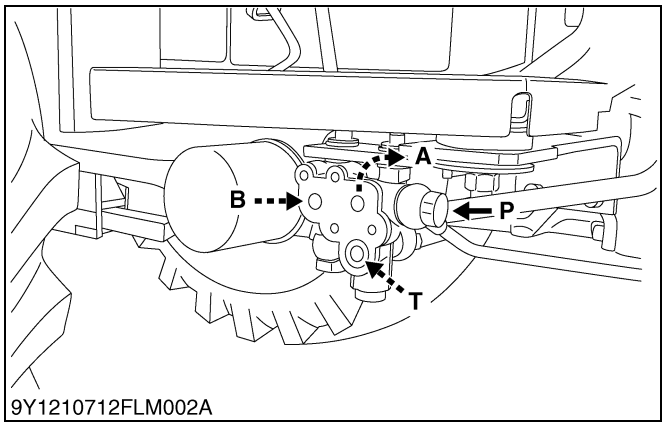

9Y1210712FLM002A

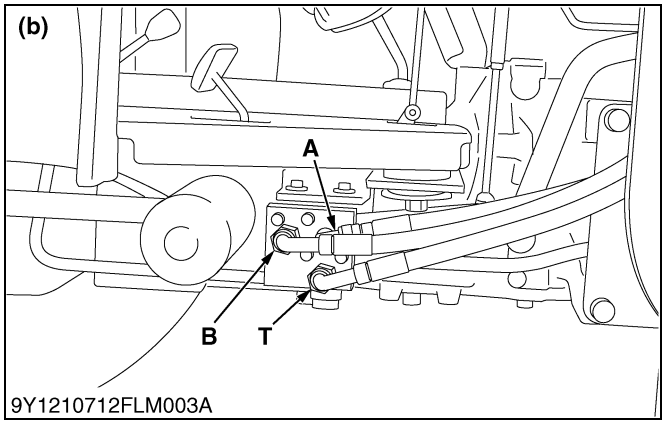

9Y1210712FLM003A

Filtered oil is sent out by the hydraulic pump to the hydraulic block (1) through the delivery pipe (2).

There is a relief valve in hydraulic block.

(a) When Front Loader is not Attached

1. Oil from the hydraulic pump goes to 3-point hydraulic system through the hydraulic block (1).

(b) When Front Loader is Attached

1. Oil from the hydraulic pump is sent into the **P** port of the control valve through the hydraulic block (1).
2. Oil from the **PB** (power beyond) port of loader control valve is sent into the three point hydraulic system through the **B** port of the hydraulic block.
3. Oil from the **T** (tank) port of the loader control valve is sent into the transmission case through the tank port of the hydraulic block (1).

(1) Hydraulic Block
(2) Delivery Pipe
(3) Block Cover

P: From Gear Pump (P Port)
A: To Implement (A Port)
B: From Implement (Outlet) (B Port)
T: From Implement (Tank Port)

9Y1211014FLM0002US0

[1] STRUCTURE

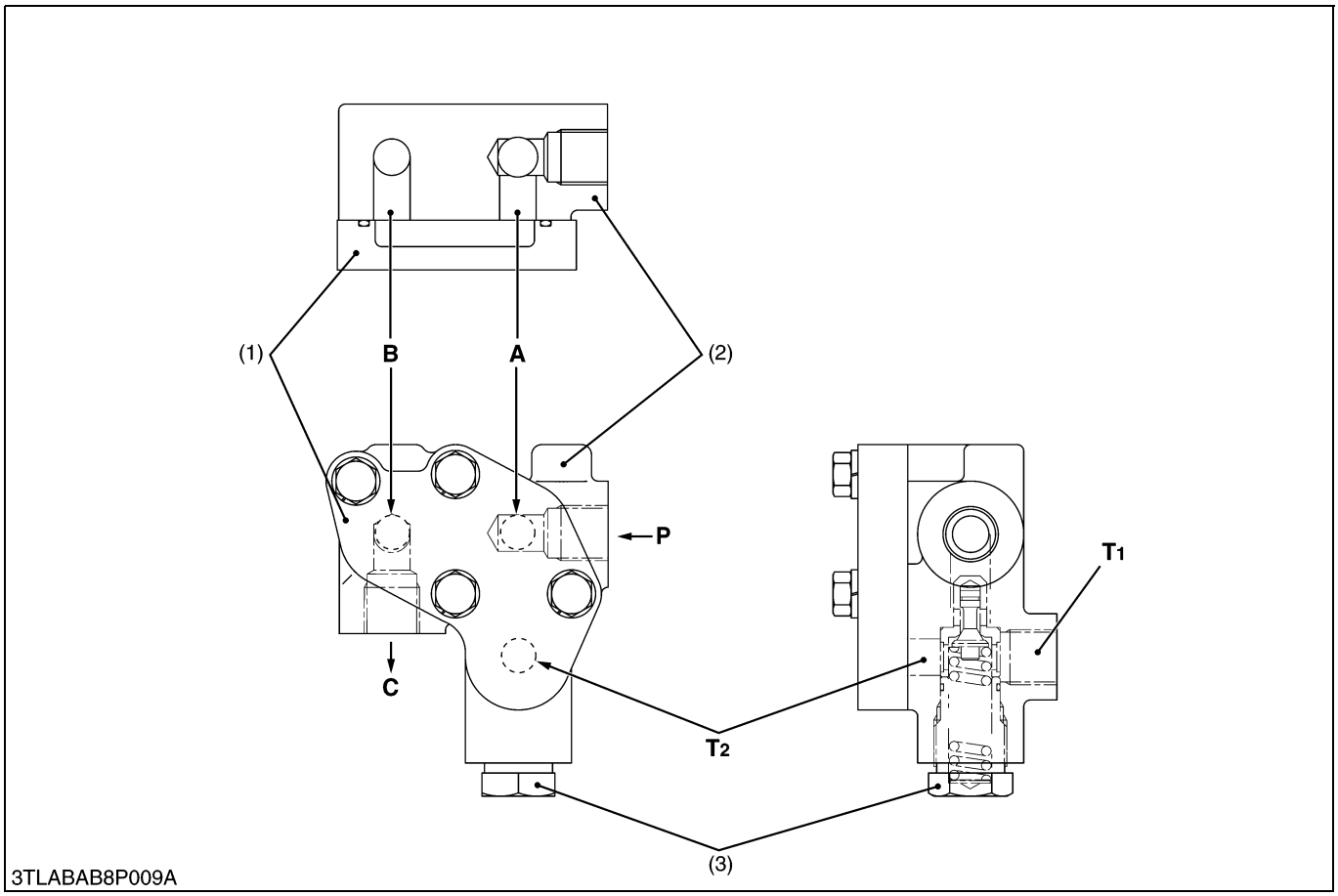

(1)	Block Cover	**A:**	**To Implement Control Valve**	**C:**	**To Position Control Valve**	**T_1:**	**To Transmission Case**
(2)	Hydraulic Block	**B:**	**From Implement Control Valve**	**P:**	**From Hydraulic Pump**	**T_2:**	**From Implement Control Valve**
(3)	Relief Valve						

The hydraulic block is installed to get power out from the tractor to operate the hydraulic cylinders on the implement, such as front loader, front blade and so on.

9Y1211014FLM0003US0

3. CONTROL VALVE ASSEMBLY

[1] STRUCTURE

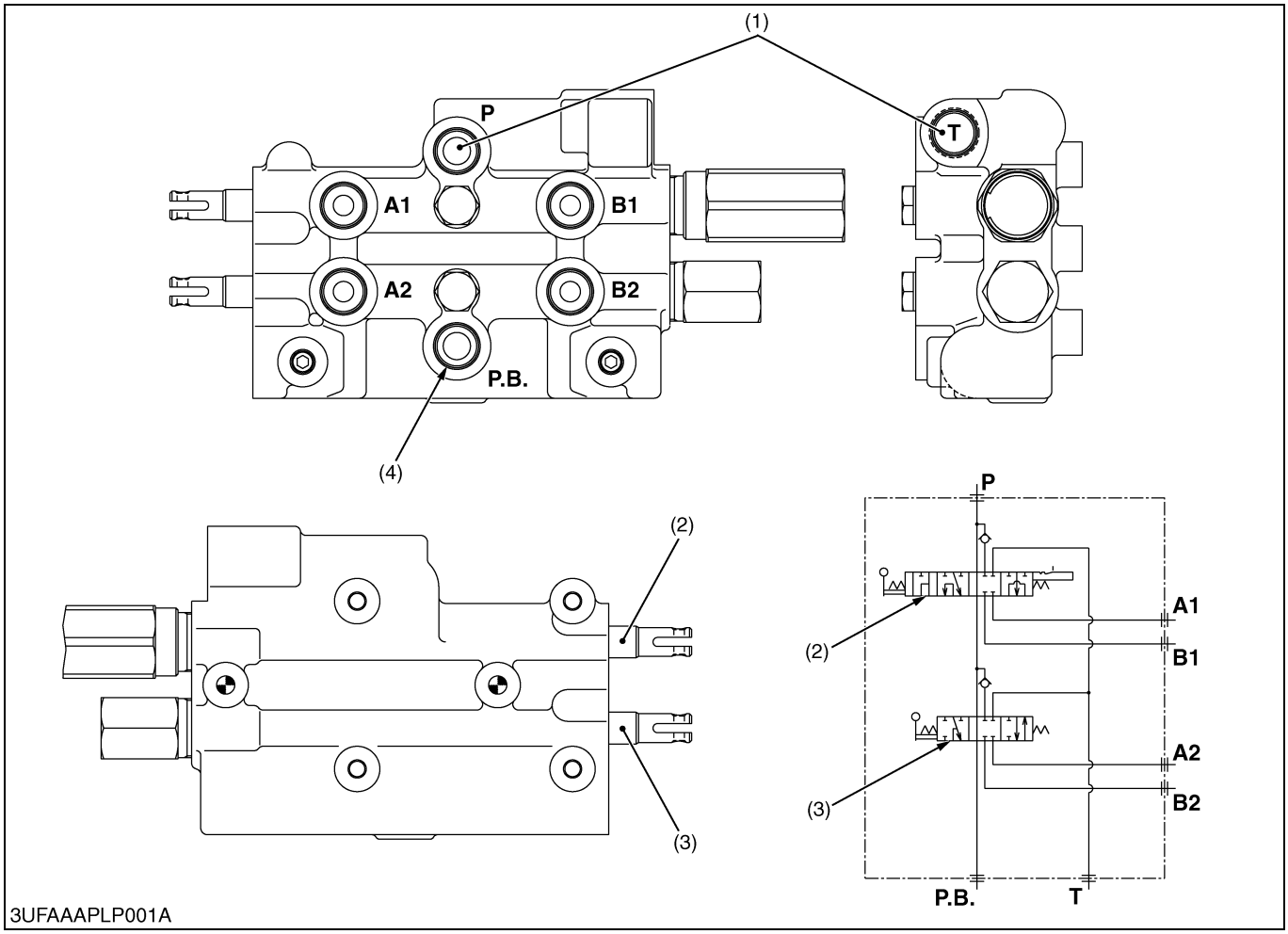

(1) Inlet and Outlet Section	**P: P Port**	**A1: A1 Port**	**B1: B1 Port**
(2) Boom Control Section	**T: T Port**	**A2: A2 Port**	**B2: B2 Port**
(3) Bucket Control Section			**PB: PB Port**
(4) Power Beyond			

The control valve assembly is 3-position bucket control type and has one casting block and four major sections as shown above.

(1) Inlet and Outlet Section

There are **P** port and **T** port in this section.

The P port is connected to the **OUTLET** port of hydraulic block by the hydraulic hose.

The T port is connected to the **TANK** port of hydraulic block by the hydraulic hose.

(2) Boom Control Section

The boom control valve has 4-position, 6-connection, detent, spring center type spool, a mono block valve housing, load check valve, etc. This valve connects to **A1** and **B1** ports and controls oil flow to the boom cylinder.

(3) Bucket Control Section

The bucket control valve has 3-position, 6-connection, no detent, spring center type spool, a mono block valve housing, load check valve, etc. This valve connects to **A2** and **B2** ports and controls oil flow to the bucket cylinder.

(4) Power Beyond

This section includes **PB** port which is connected to the **INLET** port of hydraulic block by the hydraulic hose, and feeds oil to the 3-P hydraulic control valve.

9Y1211014FLM0004US0

[2] OPERATION

(1) Neutral

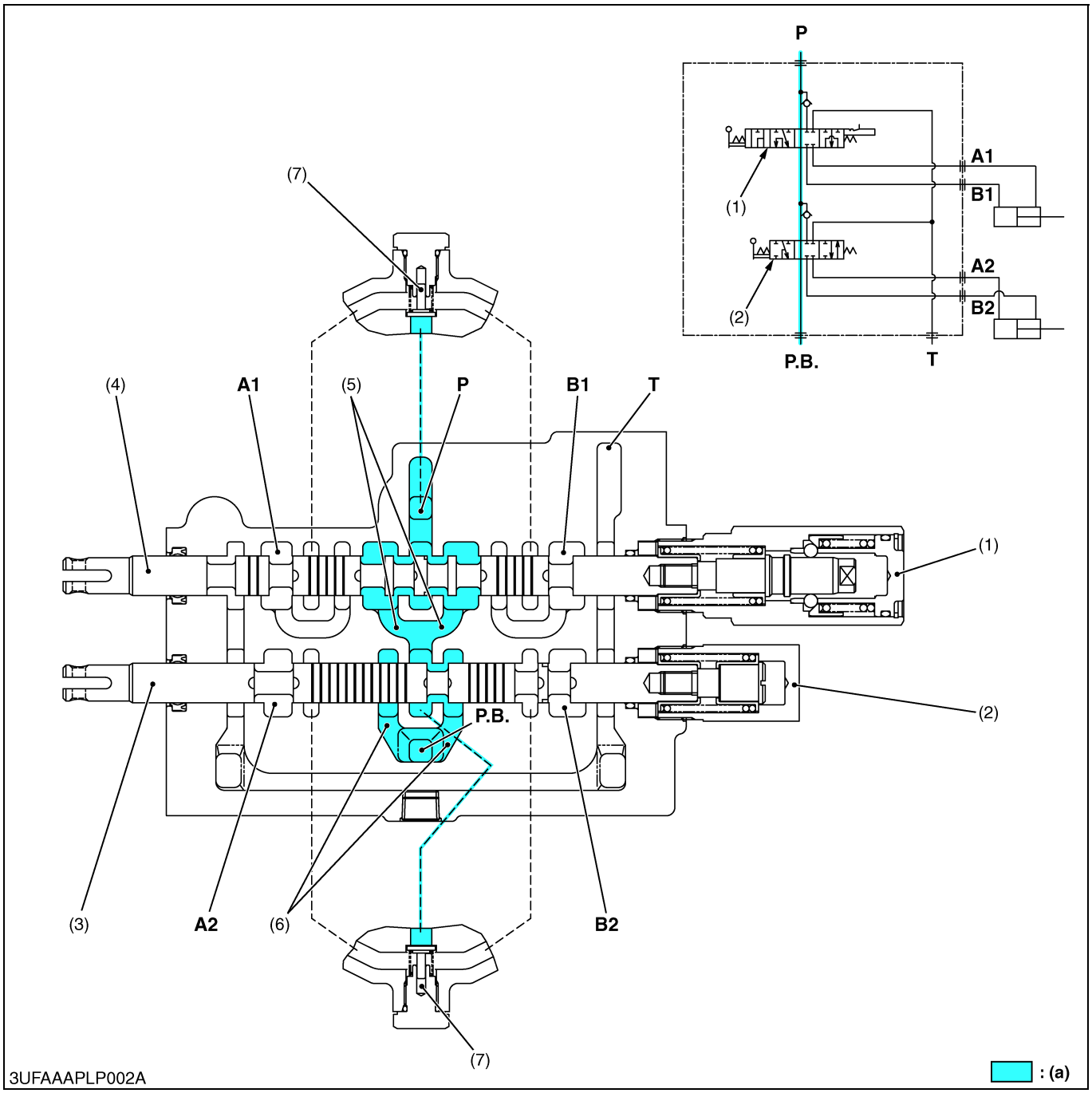

(1) Boom Control Section	(5) **PB** Passage 1	**T: T Port**	**B1: B1 Port**
(2) Bucket Control Section	(6) **PB** Passage 2	**P: P Port**	**B2: B2 Port**
(3) Spool	(7) Load Check Valve	**A1: A1 Port**	**PB: PB Port**
(4) Spool		**A2: A2 Port**	**(a) Low Pressure**

Control valve components are shown in the above figure.

9Y1211014FLM0005US0

(2) Up

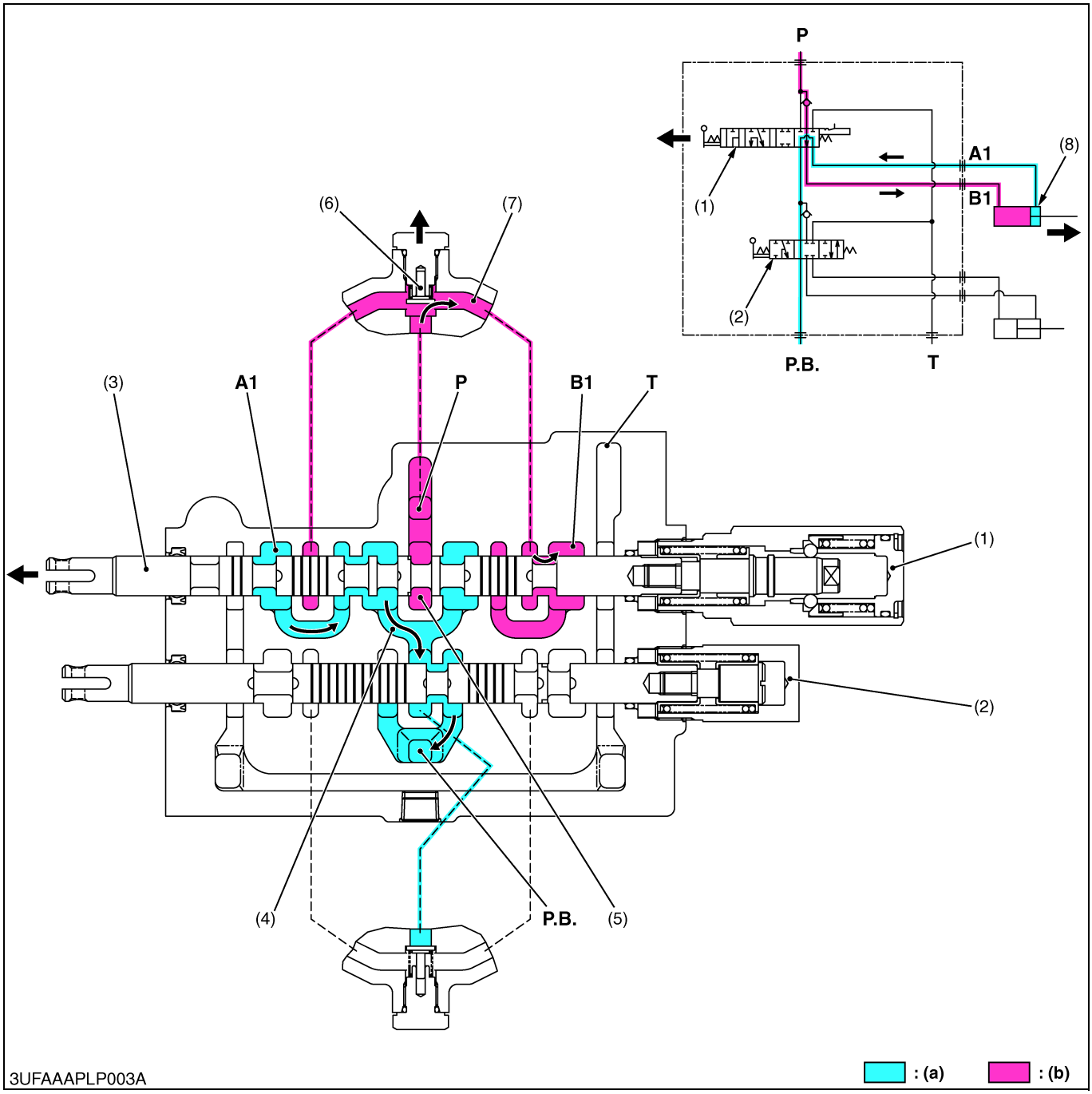

(1)	Boom Control Section	(5)	Neutral Passage 1	**P:**	**P Port**
(2)	Bucket Control Section	(6)	Load Check Valve	**T:**	**T Port**
(3)	Spool	(7)	Passage 1	**A1:**	**A1 Port (From Boom Cylinder)**
(4)	**PB** Passage 1	(8)	Boom Cylinder	**B1:**	**B1 Port (To Boom Cylinder)**

PB: PB Port
(a) Low Pressure
(b) High Pressure

1. When the hydraulic control lever is set to the **"UP"** position, the spool (3) of the boom control section (1) moves to the left. This makes oil passages between passage 1 (7) and **B1** port, also between **A1** port and **PB** passage 1 (4).
2. As the oil passage from the neutral passage 1 (5) to the **PB** passage 1 (4) is closed by the spool (3), the pressure-fed oil from the **P** port opens the load check valve (6) and flows through the notched section of the spool (3) and **B1** port to extend the boom cylinder (8).
3. Return oil from the boom cylinder (8) flows from the **A1** port through the passage in the spool (3) and **PB** passage 1 (4) to the bucket control section (2).

9Y1211014FLM0006US0

(3) Down

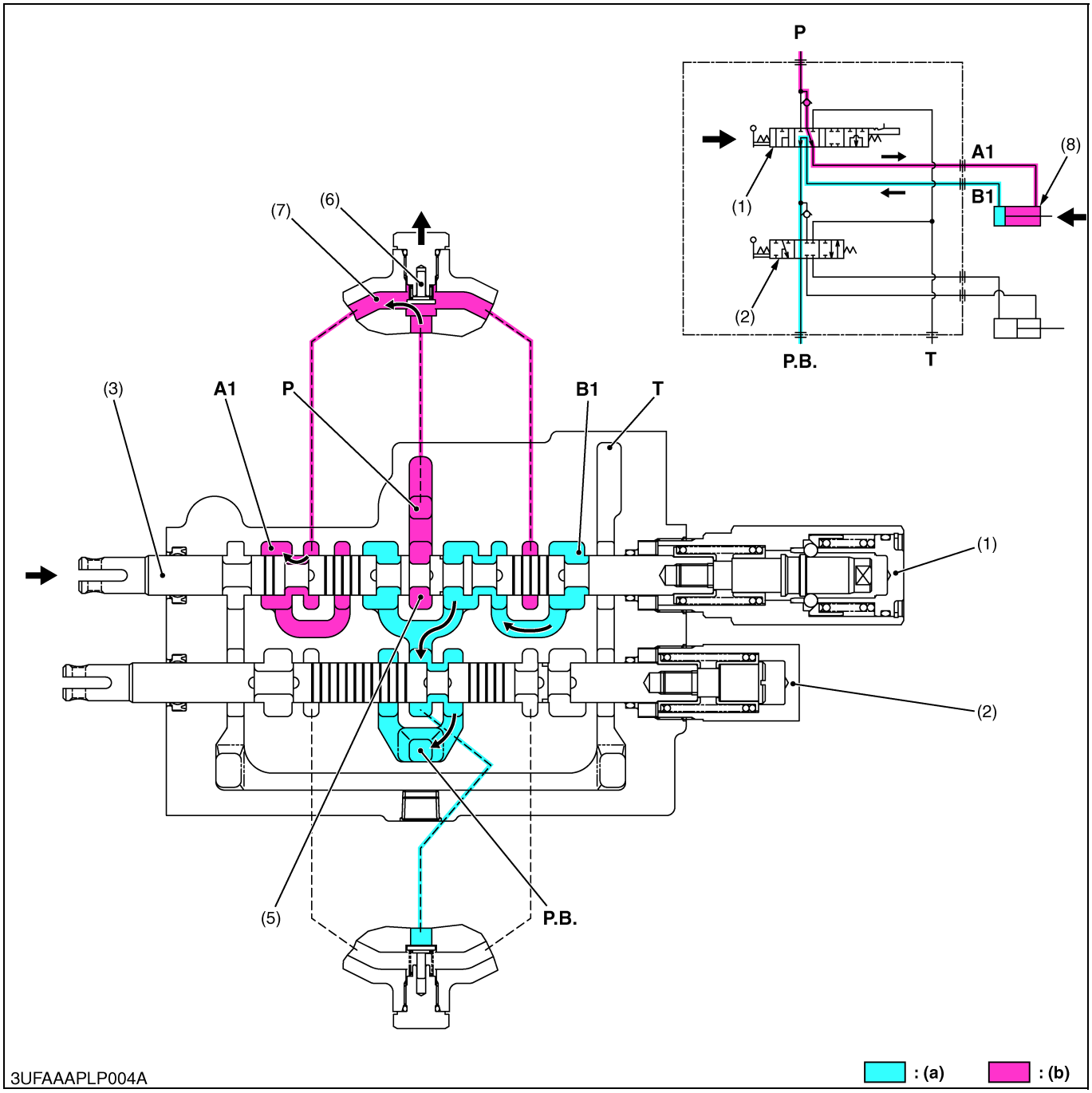

(1)	Boom Control Section	(5)	Neutral Passage 1	**P:**	**P Port**	**PB:**	**PB Port**
(2)	Bucket Control Section	(6)	Load Check Valve	**T:**	**T Port**	**(a)**	**Low Pressure**
(3)	Spool	(7)	Passage 1	**A1:**	**A1 Port (To Boom Cylinder)**	**(b)**	**High Pressure**
(4)	**PB** Passage 1	(8)	Boom Cylinder	**B1:**	**B1 Port (From Boom Cylinder)**		

1. When the hydraulic control lever is set to the **"DOWN"** position, the spool (3) moves to the right. This makes oil passages between passage 1 (7) and **A1** port, also between **B1** port and **PB** passage 1 (4).
2. As the oil passage from the neutral passage 1 (5) to the **PB** passage 1 (4) is closed by the spool (3), the pressure-fed oil from the **P** port opens the load check valve (6) and flows through the notched section of the spool (3) and **A1** port to retract the boom cylinder (8).
3. Return oil from the boom cylinder (8) flows from the **B1** port through the passage in the spool (3) and **PB** passage 1 (4) to the bucket control section (2).

9Y1211014FLM0007US0

(4) Floating

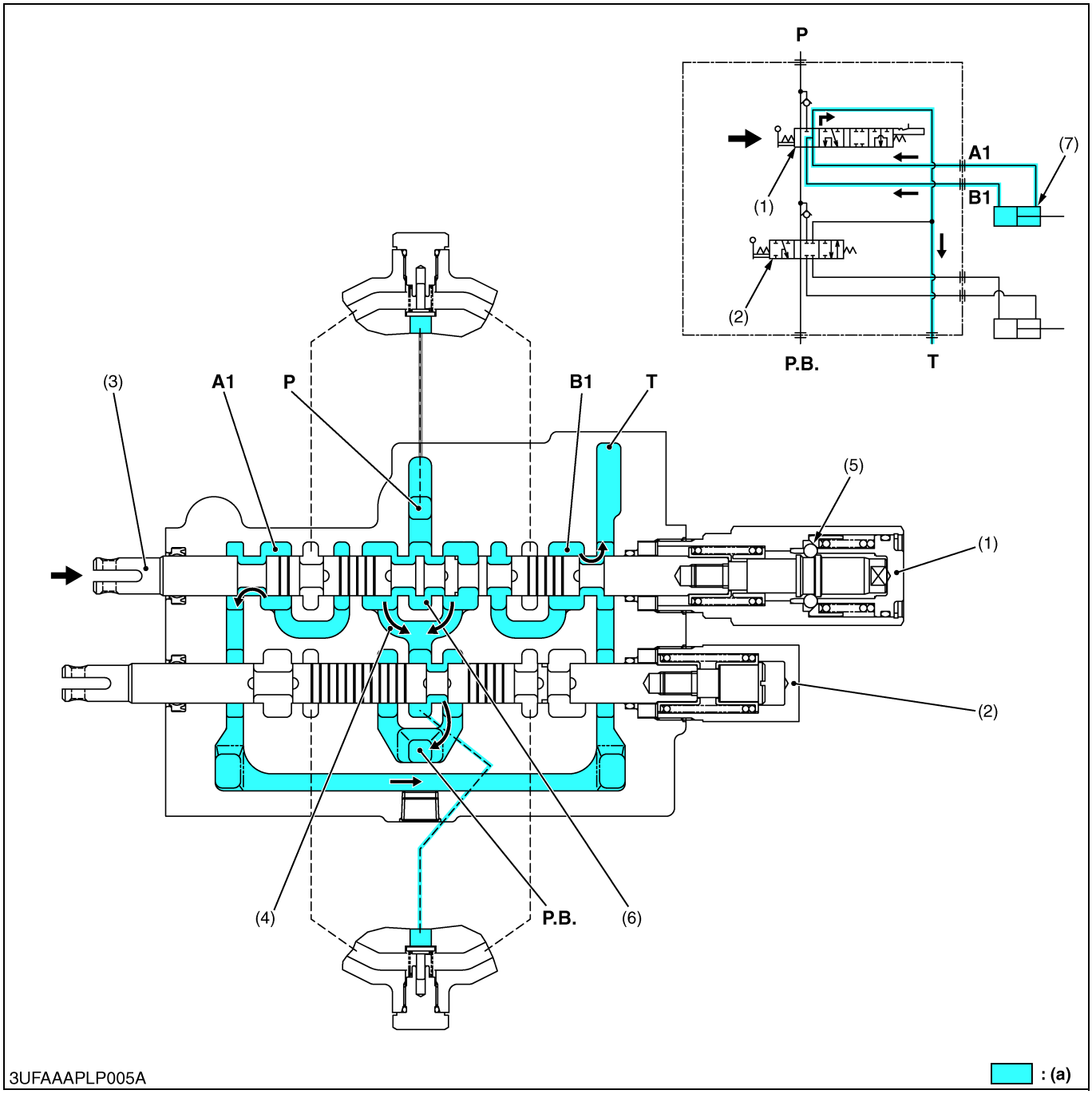

(1) Boom Control Section	(5) Detent Mechanism	**P: P Port**	**A1: A1 Port**
(2) Bucket Control Section	(6) Neutral Passage 1	**T: T Port**	**B1: B1 Port**
(3) Spool	(7) Boom Cylinder		**PB: PB Port**
(4) **PB** Passage 1			**(a) Low Pressure**

1. When the hydraulic control lever is set to the **"FLOAT"** position, the spool (3) moves further to the right from the **"DOWN"** position and is retained by the detent mechanism (5).
2. This makes oil passages among the **A1** port, **B1** port and **T** port. As a result, oil in the boom cylinder (7) flows freely from the **A1** port and **B1** port through the **T** port to the transmission case.
3. Oil entering the **P** port flows to the bucket control section (2) through the neutral passage 1 (6) and **PB** passage 1 (4).

9Y1211014FLM0008US0

(5) Roll-back

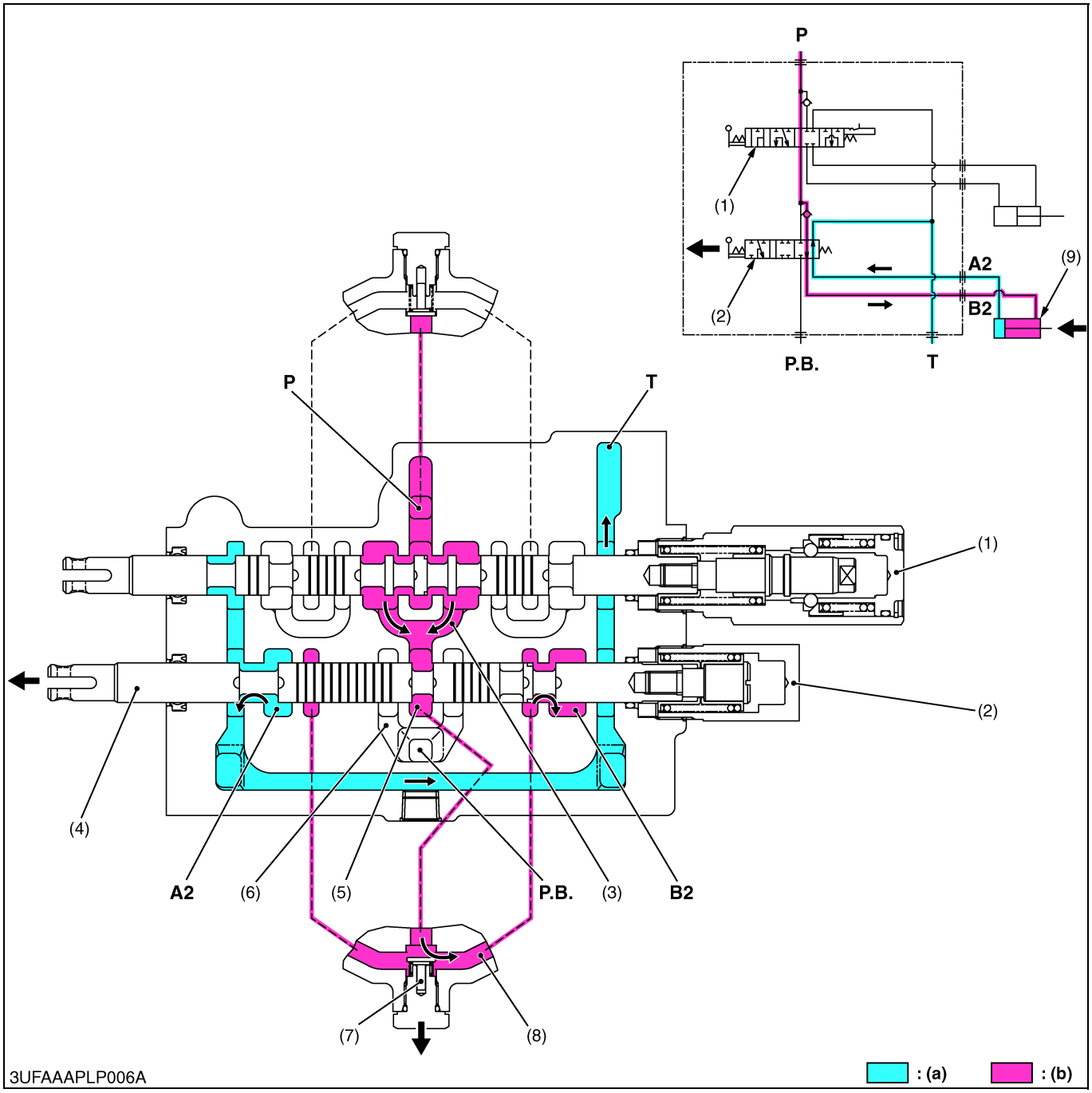

(1) Boom Control Section
(2) Bucket Control Section
(3) **PB** Passage 1
(4) Spool
(5) Neutral Passage 2
(6) **PB** Passage 2
(7) Load Check Valve
(8) Passage 2
(9) Bucket Cylinder

P: P Port
T: T Port
PB: PB Port

A2: A2 Port (From Bucket Cylinder)
B1: B2 Port (To Bucket Cylinder)
(a) Low Pressure
(b) High Pressure

1. When the hydraulic control lever is set to the **"ROLL-BACK"** position, the spool (4) of the bucket control section (2) moves to the left. This makes oil passages between passage 2 (8) and **B2** port, also between **A2** port and **T** port.
2. The pressure-fed oil from the **P** port flows to the neutral passage 2 (5) through the boom control section (1) and **PB** passage 1 (3). As the oil passage from the neutral passage 2 (5) to the **PB** passage 2 (6) is closed by the spool (4), this oil opens the load check valve (7), and flows through the notched section of the spool (4) and **B2** port to retract the bucket cylinder (9).
3. Return oil from the bucket cylinder (9) flows to the transmission case through the **A2** port and T port.

9Y1211014FLM0009US0

(6) Dump

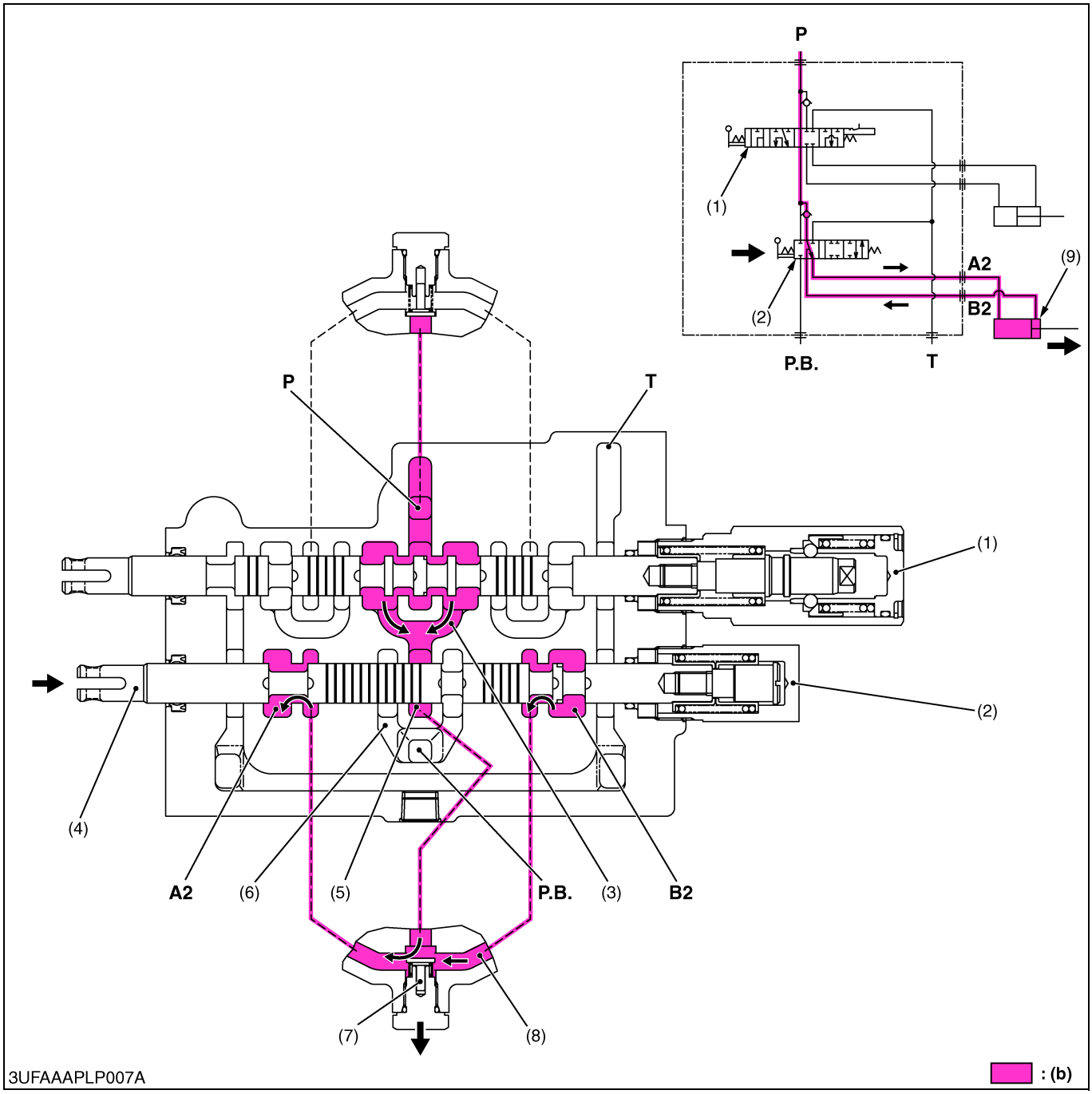

(1) Boom Control Section
(2) Bucket Control Section
(3) **PB** Passage 1
(4) Spool
(5) Neutral Passage 2
(6) **PB** Passage 2
(7) Load Check Valve
(8) Passage 2
(9) Bucket Cylinder

P: P Port
T: T Port
PB: PB Port

A2: A2 Port (To Bucket Cylinder
B1: B2 Port (From Bucket Cylinder)
(b) High Pressure

(To be continued)

(Continued)

1. When the hydraulic control lever is set to the **"DUMP"** position, the spool (4) of the bucket control section (2) moves to the right. This makes oil passages among passage 2 (8), **A2** port and **B2** port.
2. The pressure-fed oil from the **P** port flows through the boom control valve (1), opens the load check valve (7), and flows through the notched section of the spool and **A2** port to the bucket cylinder to extend the cylinder.
3. Return oil from the bucket cylinder (9) flows from the **B2** port to the passage 2 (8), and flows to the **A2** port together with the pressure-fed oil from the **P** port.
   As a result, the dump speed is increased.

(Reference)

- The oil pressure of the **A2** port and **B2** port is identical, but the bucket cylinder extends by the difference of received pressure area (cylinder rod part).

9Y1211014FLM0010US0

https://truckmanualshub.com/

SERVICING

CONTENTS

1. TROUBLESHOOTING 1-S1
2. SERVICING SPECIFICATIONS 1-S11
3. TIGHTENING TORQUES 1-S12
4. REMOVING THE LOADER 1-S13
   [1] REMOVING THE LOADER 1-S13
   [2] ATTACHING THE LOADER 1-S15
5. CHECKING, DISASSEMBLING AND SERVICING 1-S17
   [1] CHECKING AND ADJUSTING 1-S17
      (1) Relief Valve 1-S17
   [2] DISASSEMBLING AND ASSEMBLING 1-S18
      (1) Separating Control Valve Assembly 1-S18
      (2) Disassembling Control Valve 1-S19
      (3) Bucket 1-S20
      (4) Boom and Hydraulic Cylinder 1-S23
      (5) Side Frame, Main Frame and Others (LA525) 1-S27
      (6) Side Frame, Main Frame and Others (LA765) 1-S30
   [3] SERVICING 1-S32

1. TROUBLESHOOTING

Symptom	Probable Cause and Checking Procedure	Solution	Reference Page
Boom Does Not Rise	1. Transmission fluid is low	Fill the oil to proper level	G-8
	2. Oil is leaking from the hydraulic hose	Solution order 1. Check the connecting parts of the hose	G-9
		2. Check the hose is not worn or damaged	G-9
		3. Replace the hydraulic hose	1-S28, 1-S31
	3. Oil is leaking from the boom cylinder	Solution order 1. Check the piston ring and o-ring are not worn or damaged	1-S25
		2. Check the piston rod is not bent or scratched	1-S32
		3. Replace the piston ring and/or o-ring	1-S25
		4. Replace the piston rod	1-S24
		5. Replace the boom cylinder assembly	1-S23
	4. Control lever linkage is damaged	Solution order 1. Check the length of the control lever linkages	1-S18
		2. Adjust the length of the control lever linkages	1-S18
		3. Replace the control lever linkages	1-S18

Symptom	Probable Cause and Checking Procedure	Solution	Reference Page
Boom Does Not Rise	5. Relief valve is damaged	Solution order 1. Check the operating pressure of relief valve	1-S17
		2. Adjust the relief valve operating pressure	1-S17
		3. Check the oil filter cartridge condition	Tractor WSM
		4. Clean the oil filter cartridge	Tractor WSM
		5. Replace the oil filter cartridge	Tractor WSM
		6. Check the relief valve is not dirty	1-S17
		7. Clean the relief valve	1-S17
		8. Replace the relief valve assembly if the pressure is not sufficient	1-S17
	6. Hydraulic pump is malfunctioning	Solution order 1. Check the pump delivery oil flow rate	Tractor WSM
		2. Replace the hydraulic pump if oil flow rate does not reach to allowable limit	Tractor WSM
	7. Control valve is damaged	Solution order 1. Check the movement of control valve	–
		2. Repair the control valve	1-S19
		3. Replace the control valve assembly if symptom persists	1-S18

Symptom	Probable Cause and Checking Procedure	Solution	Reference Page
Boom Does Not Lower	1. Control lever linkage is damaged	Solution order 1. Check the length of the control lever linkages	1-S18
		2. Adjust the length of the control lever linkages	1-S18
		3. Replace the control lever linkages	1-S18
	2. Control valve is damaged	Solution order 1. Check the movement of control valve	–
		2. Repair the control valve	1-S19
		3. Replace the control valve assembly if symptom persists	1-S18

Symptom	Probable Cause and Checking Procedure	Solution	Reference Page
Insufficient Boom Speed	1. Transmission fluid is low	Fill the oil to proper level	G-8
	2. Oil is leaking from the hydraulic hose	Solution order 1. Check the connecting parts of the hose	G-9
		2. Check the hose is not worn or damaged	G-9
		3. Replace the hydraulic hose	1-S28, 1-S31
	3. Oil is leaking from the boom cylinder	Solution order 1. Check the piston ring and o-ring are not worn or damaged	1-S25
		2. Check the piston rod is not bent or scratched	1-S32
		3. Replace the piston ring and/or o-ring	1-S25
		4. Replace the piston rod	1-S24
		5. Replace the boom cylinder assembly	1-S23
	4. Control lever linkage is damaged	Solution order 1. Check the length of the control lever linkages	1-S18
		2. Adjust the length of the control lever linkages	1-S18
		3. Replace the control lever linkages	1-S18

Symptom	Probable Cause and Checking Procedure	Solution	Reference Page
Insufficient Boom Speed	5. Relief valve is damaged	Solution order 1. Check the operating pressure of relief valve	1-S17
		2. Adjust the relief valve operating pressure	1-S17
		3. Check the oil filter cartridge condition	Tractor WSM
		4. Clean the oil filter cartridge	Tractor WSM
		5. Replace the oil filter cartridge	Tractor WSM
		6. Check the relief valve is not dirty	1-S17
		7. Clean the relief valve	1-S17
		8. Replace the relief valve assembly if the pressure is not sufficient	1-S17
	6. Hydraulic pump is malfunctioning	Solution order 1. Check the pump delivery oil flow rate	Tractor WSM
		2. Replace the hydraulic pump if oil flow rate does not reach to allowable limit	Tractor WSM
	7. Control valve is damaged	Solution order 1. Check the movement of control valve	–
		2. Repair the control valve	1-S19
		3. Replace the control valve assembly if symptom persists	1-S18

Symptom	Probable Cause and Checking Procedure	Solution	Reference Page
Bucket Does Not Move	1. Transmission fluid is low	Fill the oil to proper level	G-8
	2. Oil is leaking from the hydraulic hose	Solution order 1. Check the connecting parts of the hose	G-9
		2. Check the hose is not worn or damaged	G-9
		3. Replace the hydraulic hose	1-S28, 1-S31
	3. Oil is leaking from the bucket cylinder	Solution order 1. Check the piston ring and o-ring are not worn or damaged	1-S25
		2. Check the piston rod is not bent or scratched	1-S32
		3. Replace the piston ring and/or o-ring	1-S25
		4. Replace the piston rod	1-S24
		5. Replace the bucket cylinder assembly	1-S23
	4. Control lever linkage is damaged	Solution order 1. Check the length of the control lever linkages	1-S18
		2. Adjust the length of the control lever linkages	1-S18
		3. Replace the control lever linkages	1-S18

Symptom	Probable Cause and Checking Procedure	Solution	Reference Page
Bucket Does Not Move	5. Relief valve is damaged	Solution order 1. Check the operating pressure of relief valve	1-S17
		2. Adjust the relief valve operating pressure	1-S17
		3. Check the oil filter cartridge condition	Tractor WSM
		4. Clean the oil filter cartridge	Tractor WSM
		5. Replace the oil filter cartridge	Tractor WSM
		6. Check the relief valve is not dirty	1-S17
		7. Clean the relief valve	1-S17
		8. Replace the relief valve assembly if the pressure is not sufficient	1-S17
	6. Hydraulic pump is malfunctioning	Solution order 1. Check the pump delivery oil flow rate	Tractor WSM
		2. Replace the hydraulic pump if oil flow rate does not reach to allowable limit	Tractor WSM
	7. Control valve is damaged	Solution order 1. Check the movement of control valve	–
		2. Repair the control valve	1-S19
		3. Replace the control valve assembly if symptom persists	1-S18

Symptom	Probable Cause and Checking Procedure	Solution	Reference Page
Insufficient Bucket Speed	1. Transmission fluid is low	Fill the oil to proper level	G-8
	2. Oil is leaking from the hydraulic hose	Solution order 1. Check the connecting parts of the hose	G-9
		2. Check the hose is not worn or damaged	G-9
		3. Replace the hydraulic hose	1-S28, 1-S31
	3. Oil is leaking from the bucket cylinder	Solution order 1. Check the piston ring and o-ring are not worn or damaged	1-S25
		2. Check the piston rod is not bent or scratched	1-S32
		3. Replace the piston ring and/or o-ring	1-S25
		4. Replace the piston rod	1-S24
		5. Replace the bucket cylinder assembly	1-S23
	4. Control lever linkage is damaged	Solution order 1. Check the length of the control lever linkages	1-S18
		2. Adjust the length of the control lever linkages	1-S18
		3. Replace the control lever linkages	1-S18

Symptom	Probable Cause and Checking Procedure	Solution	Reference Page
Insufficient Bucket Speed	5. Relief valve is damaged	Solution order 1. Check the operating pressure of relief valve	1-S17
		2. Adjust the relief valve operating pressure	1-S17
		3. Check the oil filter cartridge condition	Tractor WSM
		4. Clean the oil filter cartridge	Tractor WSM
		5. Replace the oil filter cartridge	Tractor WSM
		6. Check the relief valve is not dirty	1-S17
		7. Clean the relief valve	1-S17
		8. Replace the relief valve assembly if the pressure is not sufficient	1-S17
	6. Hydraulic pump is malfunctioning	Solution order 1. Check the pump delivery oil flow rate	Tractor WSM
		2. Replace the hydraulic pump if oil flow rate does not reach to allowable limit	Tractor WSM
	7. Control valve is damaged	Solution order 1. Check the movement of control valve	–
		2. Repair the control valve	1-S19
		3. Replace the control valve assembly if symptom persists	1-S18
Front End Loader Falls by Its Weight	1. Transmission fluid is low	Fill the oil to proper level	G-8
	2. Oil is leaking from the hydraulic hose	Solution order 1. Check the connecting parts of the hose	G-9
		2. Check the hose is not worn or damaged	G-9
		3. Replace the hydraulic hose	1-S28, 1-S31

Symptom	Probable Cause and Checking Procedure	Solution	Reference Page
Front End Loader Falls by Its Weight	3. Oil is leaking from the boom cylinder	Solution order 1. Check the piston ring and o-ring are not worn or damaged	1-S25
		2. Check the piston rod is not bent or scratched	1-S32
		3. Replace the piston ring and/or o-ring	1-S25
		4. Replace the piston rod	1-S24
		5. Replace the boom cylinder assembly	1-S23
	4. Relief valve is damaged	Solution order 1. Check the operating pressure of relief valve	1-S17
		2. Adjust the relief valve operating pressure	1-S17
		3. Check the oil filter cartridge condition	Tractor WSM
		4. Clean the oil filter cartridge	Tractor WSM
		5. Replace the oil filter cartridge	Tractor WSM
		6. Check the relief valve is not dirty	1-S17
		7. Clean the relief valve	1-S17
		8. Replace the relief valve assembly if the pressure is not sufficient	1-S17
	5. Control valve is damaged	Solution order 1. Check the movement of control valve	–
		2. Repair the control valve	1-S19
		3. Replace the control valve assembly if symptom persists	1-S18

9Y1211014FLS0001US0

2. SERVICING SPECIFICATIONS

Item		Factory Specification	Allowable Limit
Relief Valve **Condition** • Engine speed: Maximum • Oil temperature: 40 to 60 °C (104 to 140 °F)	Setting Pressure [L2501]	15.2 to 16.2 MPa 155 to 165 kgf/cm^2 2210 to 2340 psi	–
	Setting Pressure [L3301, L3901]	15.7 to 16.6 MPa 160 to 170 kgf/cm^2 2280 to 2410 psi	–
	Setting Pressure [L4701]	17.1 to 18.1 MPa 174 to 185 kgf/cm^2 2480 to 2630 psi	–
Piston Rod	Bend	–	0.25 mm 0.0098 in.

9Y1211014FLS0002US0

3. TIGHTENING TORQUES

Tightening torques of screws, bolts and nuts on the table below are especially specified.
(For general use screws, bolts and nuts: Refer to "4. TIGHTENING TORQUES" on page G-4.)

Item	N·m	kgf·m	lbf·ft
Relief plug	49 to 68	5.0 to 7.0	37 to 50
Control valve cover mounting bolt	9.8 to 10	1.0 to 1.1	7.3 to 7.9
Control valve mounting bolt	24 to 27	2.4 to 2.8	18 to 20
Adapter and elbow	48 to 54	4.9 to 5.5	35 to 40
Fitting	39 to 60	4.0 to 6.1	29 to 44
Cylinder head	200 to 230	20.4 to 23.5	145 to 169
Boom and bucket cylinder piston mounting nut [LA525]	150 to 180	15.3 to 18.3	111 to 132
Boom and bucket cylinder piston mounting nut [LA765]	200 to 230	20.4 to 23.5	147 to 170
Front guard mounting bolt	124 to 147	12.6 to 15.0	91.2 to 108
Main frame mounting bolt (M16)	226	23.0	166
Sub frame mounting bolt and nut (M16) [LA765]	226	23.0	166
Sub frame mounting bolt and nut (M12) [LA765]	90.2	9.20	66.5

9Y1211014FLS0003US0

4. REMOVING THE LOADER

[1] REMOVING THE LOADER

WARNING

To avoid serious injury:

- **Make sure an approved bucket is attached before removing the loader from the tractor.**
- **To remove the loader, use flat and hard ground, preferably concrete.**
- **If the ground surface is soft, set suitable planks on the ground for the bucket and stands.**
- **Before starting the engine or using the hydraulic control valve, always stay in the operator's seat.**
- **Make sure the bucket and stands are at ground level.**

9Y1211014FLS0004US0

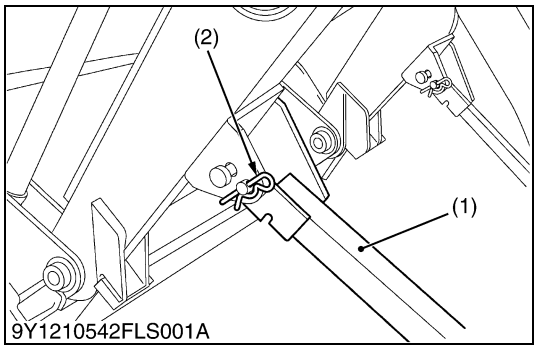

9Y1210542FLS001A

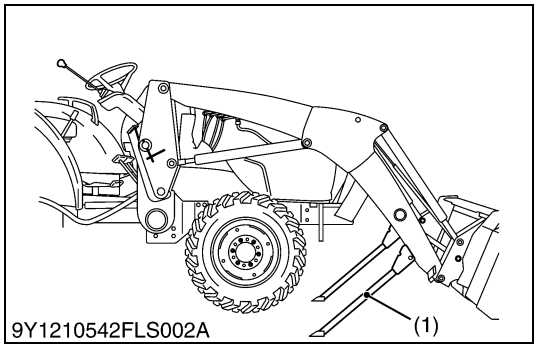

9Y1210542FLS002A

Stand

1. Lift the boom until the stands (1) can turn.
2. Stop the engine.
3. Remove the spring pins (2) holding the stands to the boom.
4. Move the stands outward and turn them until the hole in the stand and pin on the boom are aligned. Then move the stands inward and put the spring pin as shown.
5. Start the engine.
6. Dump the bucket approximately 20 degrees.
7. Lower the boom and lift the front wheels slightly.

■ **IMPORTANT**

- **Lift the front wheels with the bucket. Do not try to lift them with the stands.**

8. Stop the engine.

(1) Stand (2) Spring Pin

9Y1211014FLS0005US0

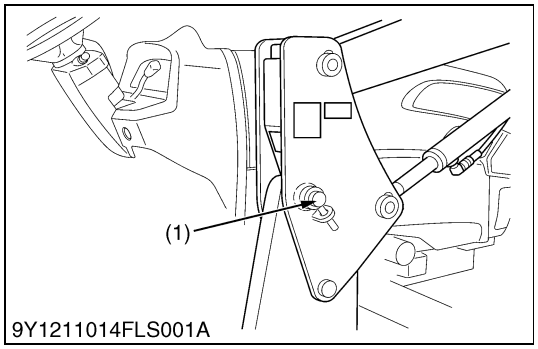

9Y1211014FLS001A

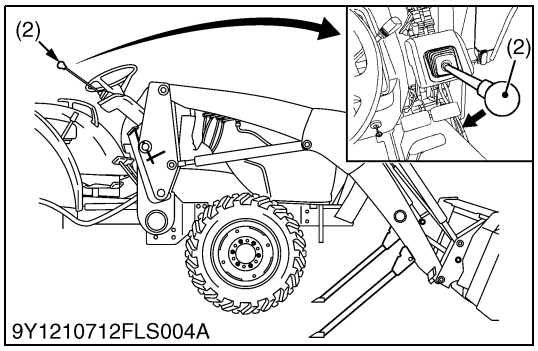

9Y1210712FLS004A

Side Frame

1. Remove the mounting pins (1) from the loader main frame and hold them on the side frames.
2. Start the engine and keep at idle. Slowly move the loader control lever (2) to **rollback position** to lift the loader side frames up and out of the receivers of the main frames as shown.
3. Stop the engine.

(1) Mounting Pin (2) Loader Control Lever

9Y1211014FLS0006US0

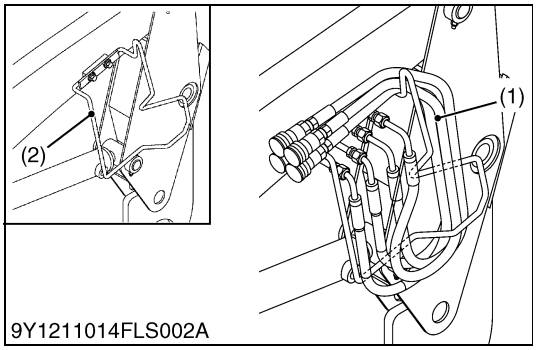

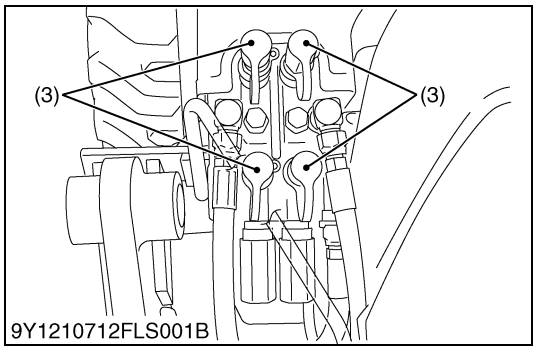

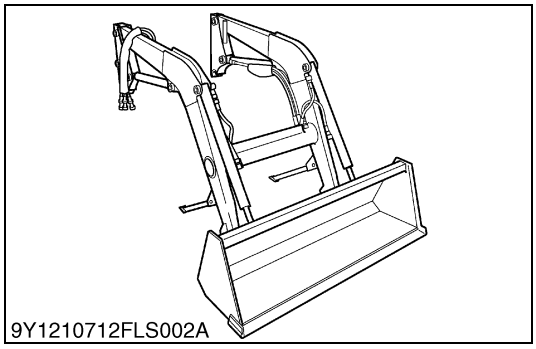

Hoses

1. Slowly release all hydraulic pressure by moving the hydraulic control lever in all directions.
2. Disconnect the four hoses with quick couplers at the control valve and place them to the hose guide as shown.
3. Put the protective caps (1) and plugs on the quick coupler ends.
4. Start the engine and slowly move back the tractor away from the loader.

(1) Hose
(2) Hose Guide
(3) Protective Cap

9Y1211014FLS0007US0

[2] ATTACHING THE LOADER

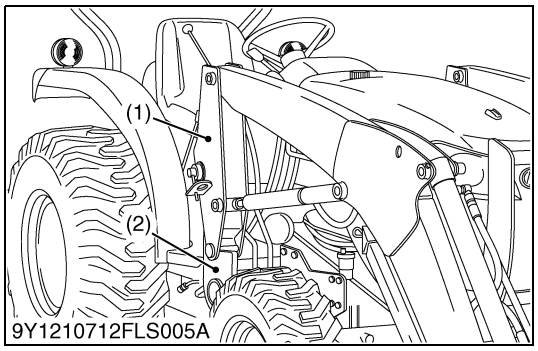

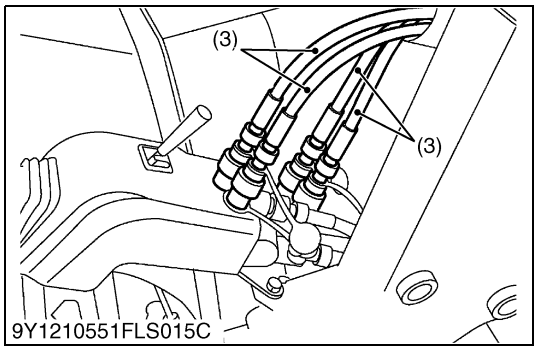

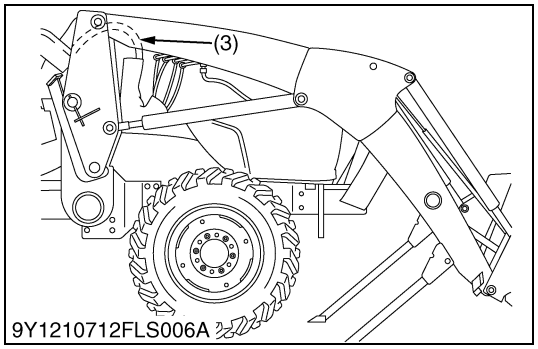

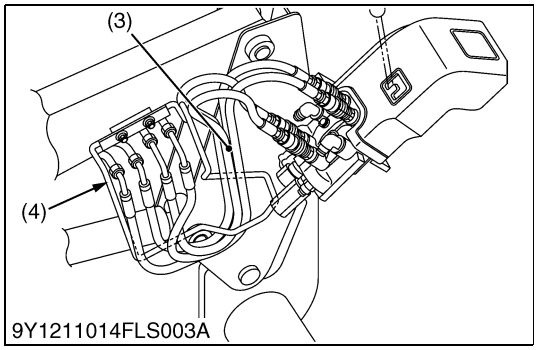

WARNING

To avoid serious injury:

- **Before starting the engine and operating the control valve, always stay in the operator's seat.**

1. Slowly move the tractor between the loader side frames (1) until the rear portion of both side frames touches the main frames (2) as shown.
2. Stop the engine.
3. Connect the four hoses (3) with couplers to the fittings on the control valve as shown with color marks. Then connect the protective caps and plugs to each other.

■ **NOTE**

- **Adjust the route of the hoses as shown.**

(1)	Loader Side Frame	(3)	Hose
(2)	Main Frame	(4)	Hose Guide

(To be continued)

(Continued)

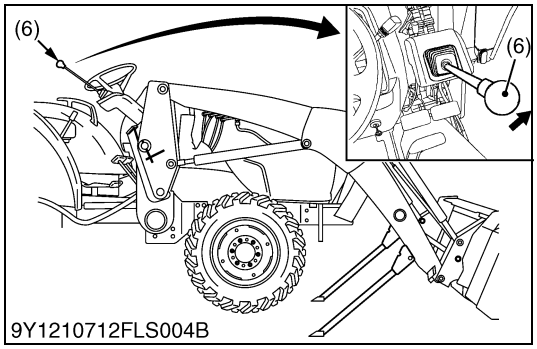

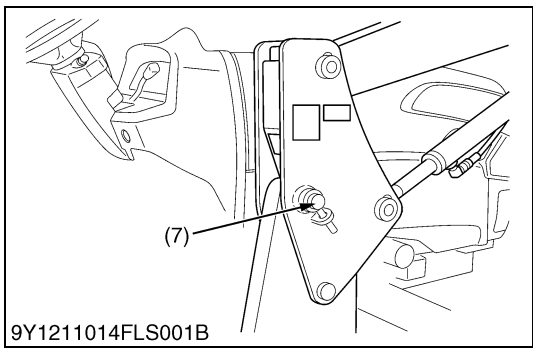

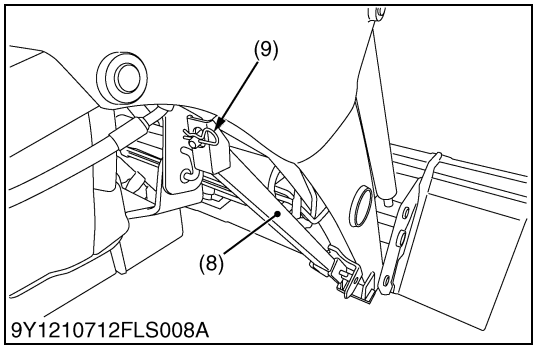

4. Start the engine and keep at idle.
5. Slowly move the loader control lever (6) to **dump position** to lower the side frames into the main frames and engage the bosses of the side frames to the guide plates of the main frames. Then lift the weight off the front wheels with the loader-do not lift the wheels off the ground.

■ **IMPORTANT**

- **Do not try to lift the front wheels with the stands.**

6. Stop the engine. Install the mounting pins (7) and put the slide bar of the mounting pins to the hole of the side frame.
7. Start the engine.
8. Lift the boom until the stands can turn.
9. Stop the engine.
10. Set the stands (8) to their original positions and set them with the spring pins (9) as shown.
11. Start the engine.
12. Lower the boom and set the bucket level.

(6)	Loader Control Lever	(8)	Stand
(7)	Mounting Pin	(9)	Spring Pin

9Y1211014FLS0008US0

5. CHECKING, DISASSEMBLING AND SERVICING

[1] CHECKING AND ADJUSTING

(1) Relief Valve

9Y1210520HYS004A

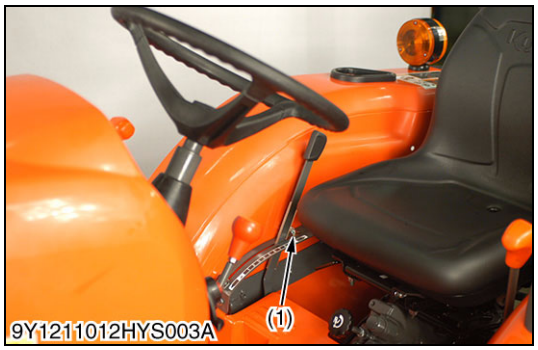

9Y1211012HYS003A

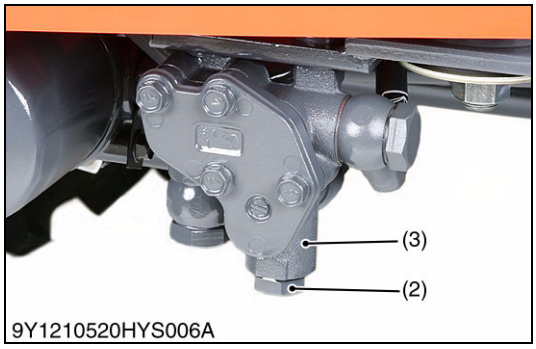

9Y1210520HYS006A

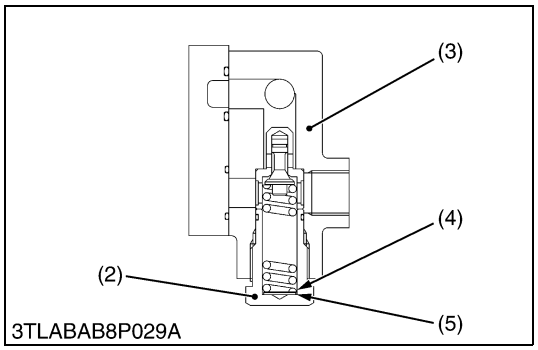

3TLABAB8P029A

Relief Valve Setting Pressure

■ **IMPORTANT**
- **When removing the plug from hydraulic cylinder, be sure to lower the three point hitch.**

1. Remove the plug from hydraulic cylinder.
2. Connect the cable and pressure gauge to hydraulic cylinder (thread size : G1/4).
3. Remove the position control lever stopper (1).
4. Start the engine and set at maximum speed.
5. Move the position control lever all way up to operate the relief valve and read the gauge.
6. If the pressure is not within the factory specifications, remove the relief plug (2) of front hydraulic block (3) and adjust with the adjusting shims (4).
7. After the relief valve setting pressure test, reset the position control lever stopper firmly.

Relief Valve Setting Pressure	Factory specification	L2501	15.2 to 16.2 MPa 155 to 165 kgf/cm^2 2210 to 2340 psi
		L3301/ L3901	15.7 to 16.6 MPa 160 to 170 kgf/cm^2 2280 to 2410 psi
		L4701	17.1 to 18.1 MPa 174 to 185 kgf/cm^2 2480 to 2630 psi

Condition
- Engine speed:
  Maximum
- Oil temperature:
  40 to 60 °C (104 to 140 °F)

(Reference)
- Thickness of shims (4):
  0.1 mm (0.004 in.)
  0.2 mm (0.008 in.)
  0.4 mm (0.02 in.)
- Pressure change per 0.1 mm (0.004 in.) shim:
  Approx. 260 kPa (2.7 kgf/cm^2, 38 psi)
- When shims are added, the pressure increases.

Tightening torque	Relief plug	49 to 68 N·m 5.0 to 7.0 kgf·m 37 to 50 lbf·ft

(1) Stopper
(2) Relief Plug
(3) Front Hydraulic Block
(4) Adjusting Shim
(5) Washer

9Y1211014FLS0009US0

[2] DISASSEMBLING AND ASSEMBLING

(1) Separating Control Valve Assembly

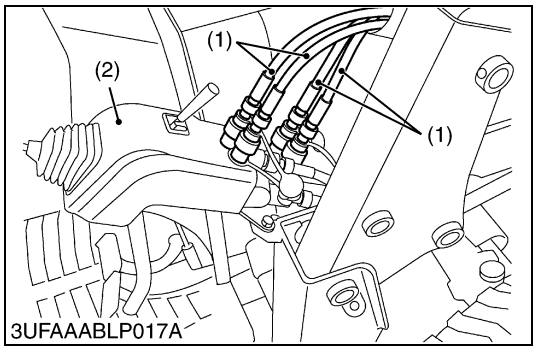

Hydraulic Hose and Control Valve Cover

1. Disconnect the hydraulic hoses (1) from the control valve.
2. Remove the control valve cover (2).

(When reassembling)

3. Assemble the control valve cover (2) to the control valve.
4. Connect the hydraulic hoses (1) to the control valve.

Tightening torque	Control valve cover mounting bolt	9.8 to 10 N·m 1.0 to 1.1 kgf·m 7.3 to 7.9 lbf·ft

(1) Hydraulic Hose
(2) Control Valve Cover

9Y1211014FLS0010US0

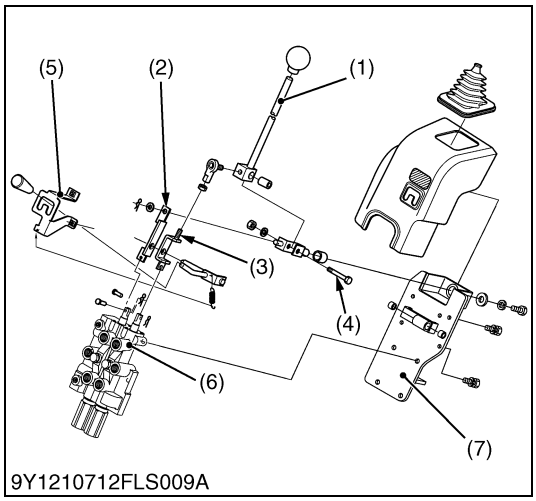

Control Lever and Control Valve

1. Disconnect the spool plate (2) and rod 1 (3) from the control valve spools.
2. Remove the bolt (4) and remove the control lever (1).
3. Remove the control valve (6) from the valve stay (7).

(When reassembling)

- Apply LOCK-TITE 242 (Blue) to the male thread of the joint (8).
- The length **"A"** of the rod 1 (3) must be 115.3 to 116.3 mm (4.54 to 4.58 in.).

Tightening torque	Control valve mounting bolt	24 to 27 N·m 2.4 to 2.8 kgf·m 18 to 20 lbf·ft

(1) Control Lever
(2) Spool Plate
(3) Rod 1
(4) Bolt
(5) Lever Guide
(6) Control Valve
(7) Valve Stay
(8) Joint

A: 115.3 to 116.3 mm (4.54 to 4.58 in.)

9Y1211014FLS0011US0

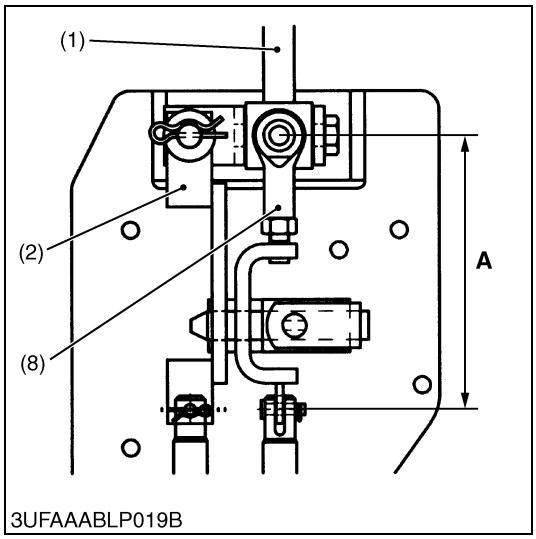

(2) Disassembling Control Valve

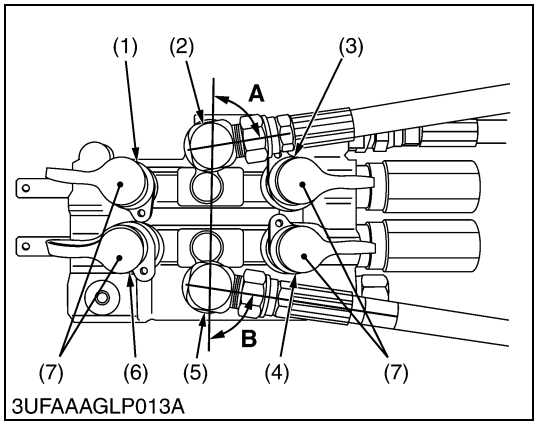

Adapter and Elbow

1. Remove the fitting, adapters and elbows from the control valve.

(When reassembling)

- Put seal tape to the fitting threads.
- Be careful not to cause damage to the O-ring.
- Install all the elbows with the angle **"A"** and **"B"**.

Tightening torque	Adapter and elbow	48 to 54 N·m 4.9 to 5.5 kgf·m 35 to 40 lbf·ft
	Fitting	39 to 60 N·m 4.0 to 6.1 kgf·m 29 to 44 lbf·ft

(1) **A1** Port (Adapter and Fitting)
(2) **P** Port (Elbow)
(3) **B1** Port (Adapter and Fitting)
(4) **B2** Port (Adapter and Fitting)
(5) **PB** Port (Elbow)
(6) **A2** Port (Adapter and Fitting)
(7) Dust Cap

A: 1.4 rad (80 °)
B: 1.4 rad (80 °)

9Y1211014FLS0012US0

Disassembling Control Valve

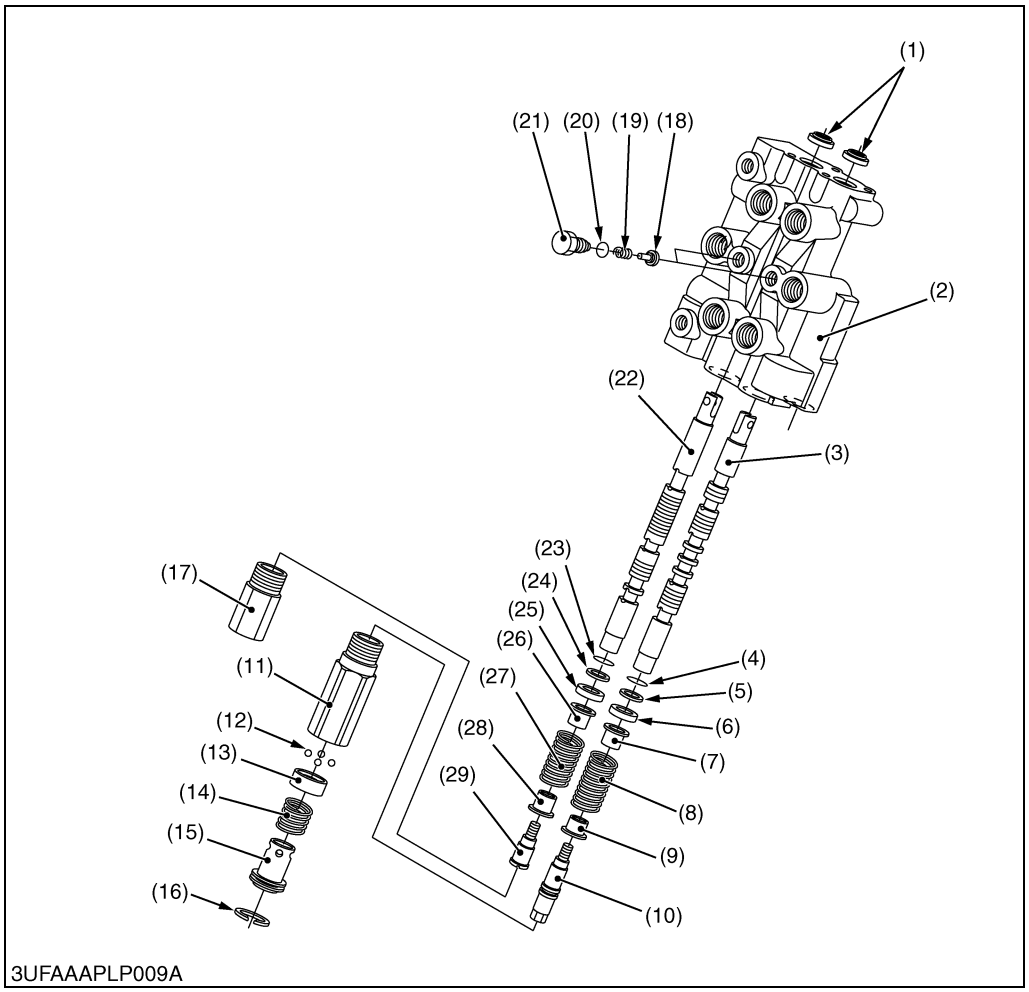

(1) Dust Seal
(2) Valve Body
(3) Spool for Boom
(4) O-ring
(5) Backup Ring
(6) Collar
(7) Spring Holder 1
(8) Spring
(9) Spring Holder 2
(10) Detent Bolt 1
(11) Plug
(12) Ball
(13) Detent Ring
(14) Detent Spring
(15) Stopper
(16) Ring
(17) Plug
(18) Check Valve
(19) Spring
(20) O-ring
(21) Plug
(22) Spool for Bucket
(23) O-ring
(24) Backup Ring
(25) Collar
(26) Spring Holder 1
(27) Spring
(28) Spring Holder 2
(29) Bolt

■ **Boom Control Section and Bucket Control Section**

1. Remove the plug (21) and pull out the spring (19) and load check valve (18).
2. Remove the plug (11), (17) from valve body (2).
3. Remove the ring (16) and pull out the stopper (15), detent spring (14), detent ring (13), and ball (12).
4. Pull out the spool (3), (22) with other component parts from valve body (2).

9Y1211014FLS0013US0

(3) Bucket

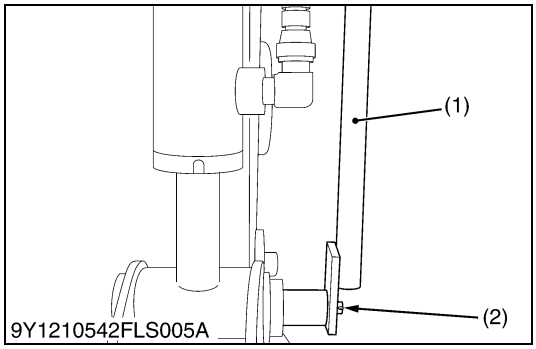

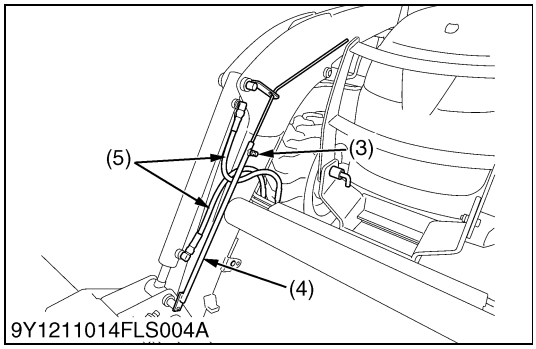

Indicator Assembly (If equipped)

1. Remove the split pin (2) and remove the level indicator assembly (1).

(When reassembling)

- Depending on the front attachment, loosen the level rod rock bolt (3) and readjust the level rod (4) length.
- Make sure to place the level indicator outside hoses (5) damage to the hoses will occur.

(1) Indicator Assembly
(2) Split Pin
(3) Level Rod Rock Bolt
(4) Level Rod
(5) Hose

9Y1211014FLS0014US0

[A] LA525FL (Rigid Type)

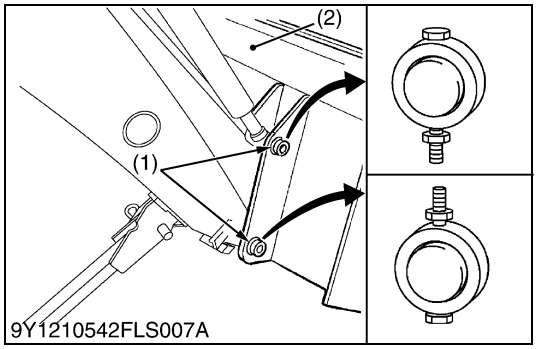

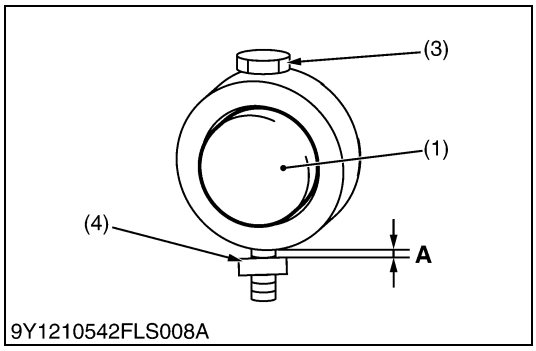

Bucket

1. Remove the pins (1) and remove the bucket (2).

(When reassembling)

- When fixing the pin with the bolt (3) and nut (4), do not tighten the nut (4) completely.
  The clearance **"A"** between the boss and the nut (4) should be 2 to 3 mm (0.08 to 0.12 in.).

(1) Pin
(2) Bucket
(3) Bolt
(4) Nut

A : Clearance
2 to 3 mm (0.08 to 0.12 in.)

9Y1211014FLS0015US0

[B] LA525 (If Equipped) and LA765 (Quick Attach Type)

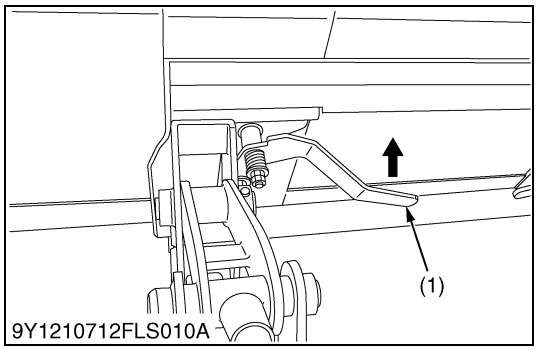

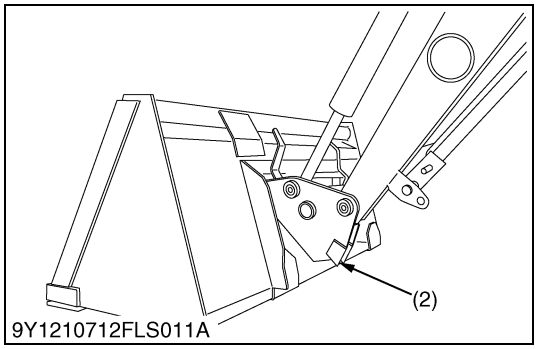

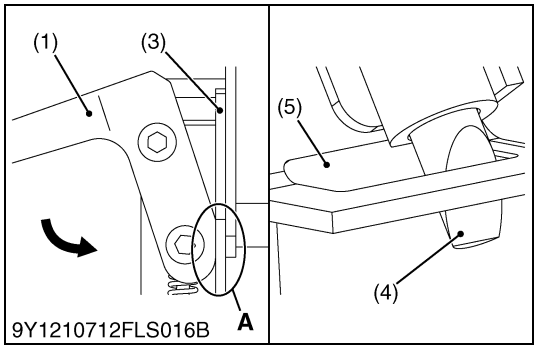

Bucket

1. Lower the implement to ground level with the implement slightly in the rolled back position. Stop the engine and set the parking brake.
2. Pull the quick attach coupler handles (1) to the unlatched position to release the latching pins.
3. At the tractor operator's seat, start the engine and slowly move the loader control lever to the **"DUMP"** position until the implement is pushed away slightly from the quick attach coupler.
4. Lower the loader boom so that the quick attach coupler mounting plate clears the implement saddle.
5. Back away from the implement slowly.
6. If an implement is not going to the be attached to the quick attach coupler immediately, push the handles of the quick attach coupler to the locked position to prevent damage to the handle assembly.

(When attaching attachments)

DANGER

To avoid serious personal injury or death:

- **Use of a non-Kubota attachment that does not comply with ISO 24410 (SAE standard of J2513) or the improper positioning of handle(s) or non-protrusion of pin(s) may result in detachment of the attachment or deformation, causing loss of performance, personal injury or death.**

CAUTION

To avoid personal injury or machine damage:

- **Lift the boom only enough to latch the attachment.**
  The attachment could swing off the quick attach coupler.

DANGER

To avoid serious personal injury or death:

- **The following engagement points are critical.**
  - **a) The lock pins of the quick attach coupler have to go into and through the pin slots of the attachment on both sides.**
    It is critical that the pins are in good condition and without visible signs of wear or damage and that the operator align the loader quick attach coupler with the attachment to allow the pins to go through the pin slots.
  - **b) Both handles have to be pushed down until the handles contact the ear plates near the points where the pin bolt goes through the handle "A".**
  - **c) Do not operate the tractor or attachment unless all of the above conditions are made.**

CAUTION

To avoid personal injury or machine damage:

- **Never operate or transport attachments which are not attached completely.**
- **Always replace damaged hardware immediately.**

(1) Quick Attach Coupler Handle
(2) Quick Attach Coupler Frame
(3) Ear Plate
(4) Lock Pin
(5) Pin Slot

A: The handle contacts the ear plate at the points.

9Y1211014FLS0016US0

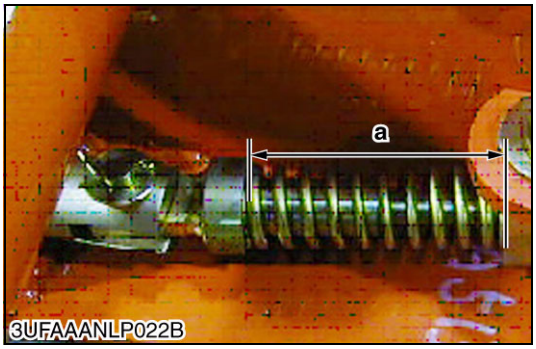

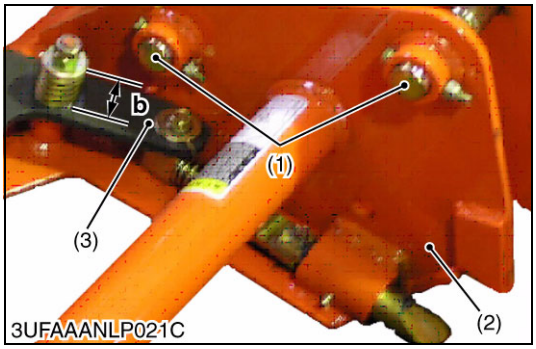

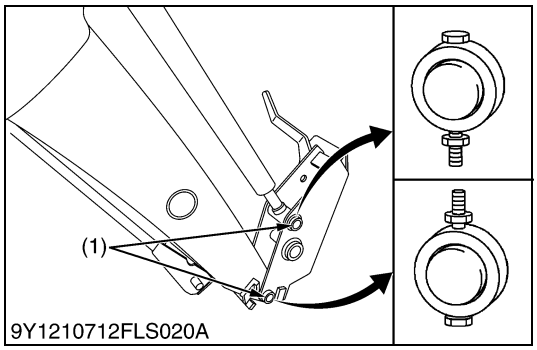

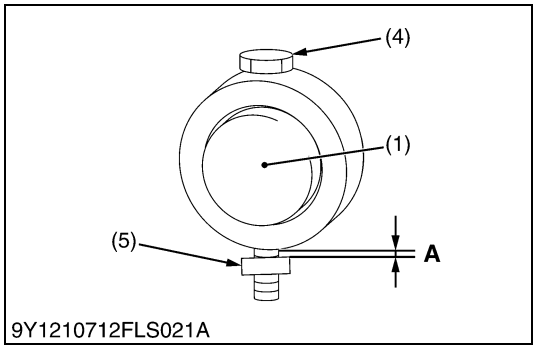

Quick Attach Coupler Frame

1. Remove the pins (1) and remove the quick attach coupler frame (2).

DANGER

- **If you install or sell aftermarket implements to the customer, these implements must meet the ISO 24410 (SAE standard of J2513). Failure to meet this standard could result in injury or death.**

(When reassembling)

CAUTION

To avoid personal injury:

- **Do not operate or mount loader without quick attach installed to loader. Damage may occur to bucket cylinders without these conditions being set.**

1. Attach the quick attach coupler frame to the boom and bucket links as shown.

IMPORTANT

- **Install M6 bolt and nut as shown in the figure to prevent damage to the bolt threads.**
- **When fixing the pin with the bolt and nut, do not tighten the nut completely.**
  The clearance between the boss and the nut should be 2 to 3 mm (0.08 to 0.12 in.).

(Reference)

Length **"a"** of spring	Reference	71 mm 2.8 in.
Length **"b"** of spring	Reference	35 mm 1.4 in.

(1) Pin
(2) Quick Attach Coupler Frame
(3) Quick Attach Coupler Handle
(4) Bolt
(5) Nut
A: 2 to 3 mm (0.08 to 0.12 in.)

9Y1211014FLS0017US0

(4) Boom and Hydraulic Cylinder

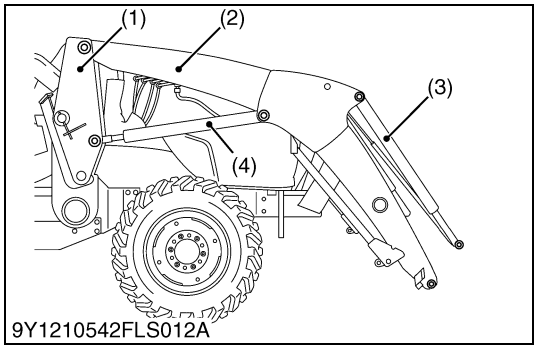

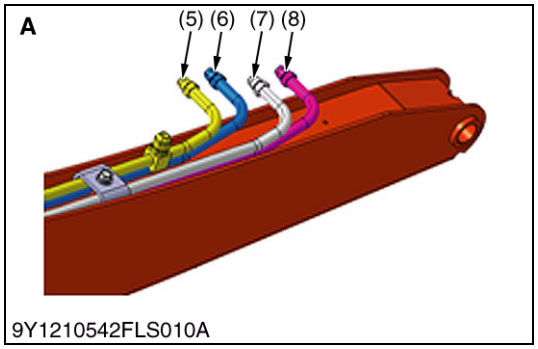

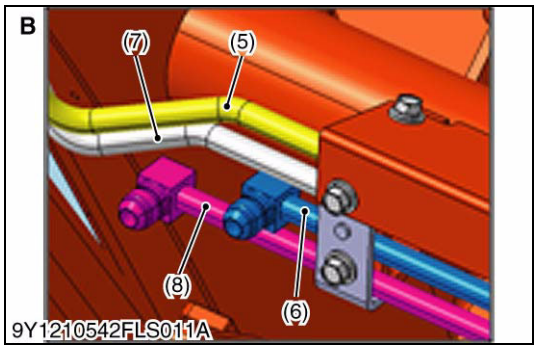

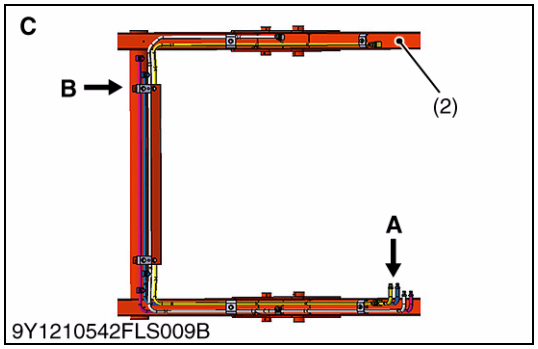

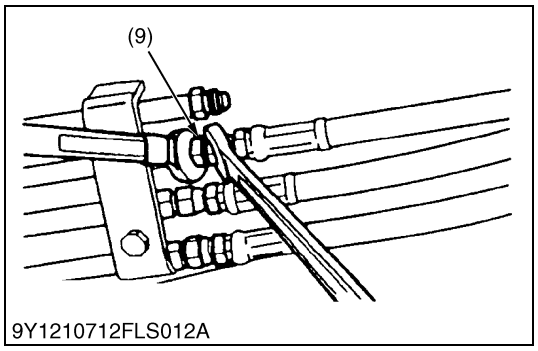

Boom and Hydraulic Cylinders

1. Disconnect the hydraulic hoses from the hydraulic cylinders (3), (4).
2. Remove the pins and remove the hydraulic cylinders (3), (4).
3. Disconnect the hydraulic hoses from the hydraulic tubes on the boom (2).
4. Remove the pins and remove the boom (2) from the side frame (1).
5. Remove the hydraulic tubes from the boom (2).

(When reassembling)

- Assemble the hydraulic tubes (5), (6), (7), (8) to the boom as shown in figure.

■ **NOTE**

- **To attach the hydraulic hose with tube fitting, use two wrenches. Hold the fitting with a wrench, turn the hose with another wrench to prevent damage at welded area.**

(1) Side Frame
(2) Boom
(3) Bucket Cylinder
(4) Boom Cylinder
(5) Hydraulic Tube with Yellow Mark
(6) Hydraulic Tube with Blue Mark
(7) Hydraulic Tube with White Mark
(8) Hydraulic Tube with Red Mark
(9) Tube Fitting

C: Bottom View

9Y1211014FLS0018US0

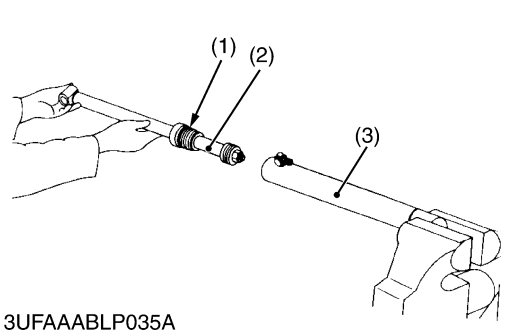

3UFAAABLP035A

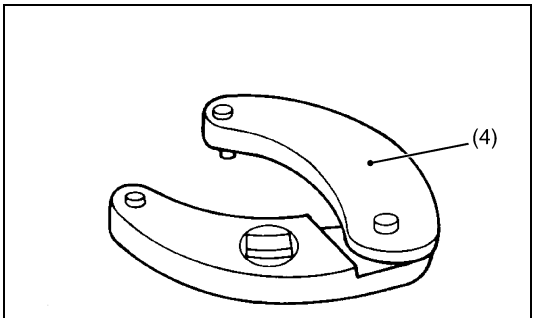

3UFAAABLP036A

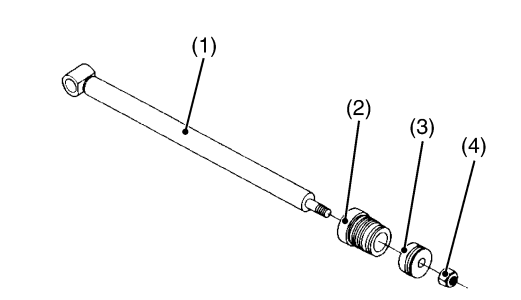

3UFAAABLP037A

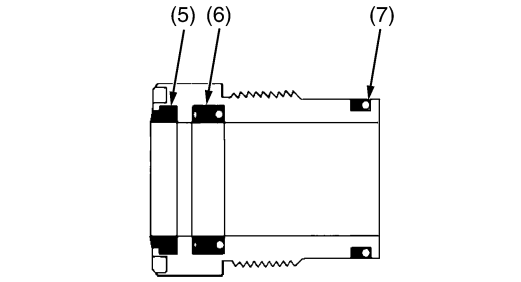

3UFAAABLP038A

Piston Rod Assembly

1. Drain hydraulic oil from the cylinder, and hold the tube end of the cylinder in a vise.
2. Remove the cylinder head (1) with the adjustable gland nut wrench (4).
3. Pull out the piston rod assembly (2) from the cylinder tube (3).

(When reassembling)

- Visually examine the cylinder tube for signs of scoring or damage.
- Put the piston rod assembly to the cylinder tube. Be careful not to damage the piston seal on the piston.
- Install the cylinder head to the cylinder tube. Be careful not to damage the O-ring on the cylinder head.

Tightening torque	Cylinder head	200 to 230 N·m 20.4 to 23.5 kgf·m 145 to 169 lbf·ft

(1) Cylinder Head
(2) Piston Rod Assembly
(3) Cylinder Tube
(4) Adjustable Gland Nut Wrench

9Y1211014FLS0019US0

Cylinder Head, Piston and Nut

1. Hold the rod end in a vise.
2. Remove the nut (4), and remove the piston (3) and cylinder head (2) from the piston rod (1).

(When reassembling)

- Visually examine all parts for signs of scoring or damage.
- Put the piston rod to the cylinder head. Be careful not to damage the wiper seal (5) and oil seal (6).

Tightening torque	Boom and bucket cylinder piston mounting nut	LA525	150 to 180 N·m 15.3 to 18.3 kgf·m 111 to 132 lbf·ft
		LA765	200 to 230 N·m 20.4 to 23.5 kgf·m 147 to 170 lbf·ft

(1) Piston Rod
(2) Cylinder Head
(3) Piston
(4) Nut
(5) Wiper Seal
(6) Oil Seal
(7) O-ring

9Y1211014FLS0020US0

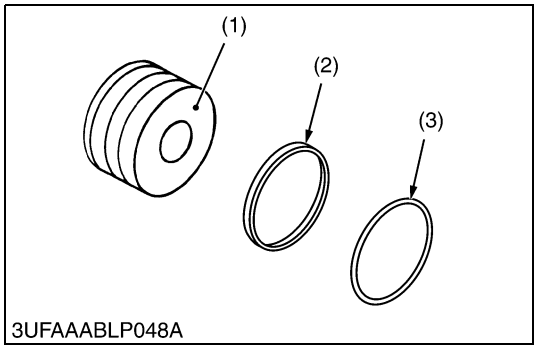

3UFAAABLP048A

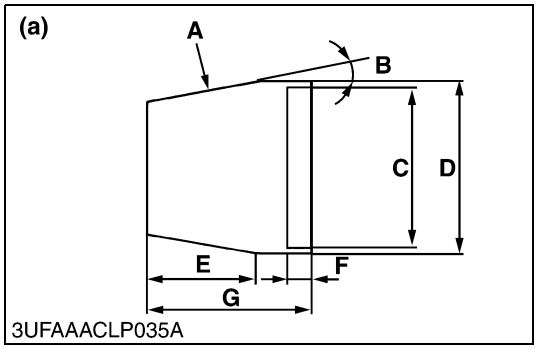

3UFAAACLP035A

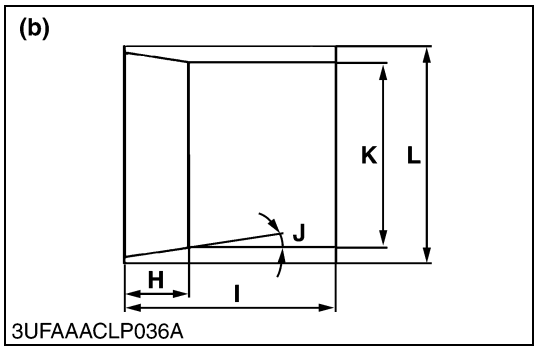

3UFAAACLP036A

Piston Seal and O-ring

1. Remove the piston seal (2) and expander (3) from the piston (1).

■ **IMPORTANT**

- **When installing the expander (3) and piston seal (2) to the piston (1), use the slide jig and correcting jig as shown in the figure.**

[LA525]

	Boom and Bucket
A	80 µm (0.0031 in.)
B	0.157 rad (9 °)
C	45.18 mm dia. (1.78 in. dia.)
D	46.18 mm dia. (1.82 in. dia.)
E	42.0 mm (1.65 in.)
F	10.0 mm (0.4 in.)
G	58.5 mm (2.30 in.)
H	14.0 mm (0.55 in.)
I	35.0 mm (1.38 in.)
J	0.122 rad (7 °)
K	45.2 mm dia. (1.78 in. dia.)
L	53.9 mm dia. (2.12 in. dia.)

[LA765]

	Boom and Bucket
A	80 µm (0.0031 in.)
B	0.157 rad (9 °)
C	50.18 mm dia. (1.976 in. dia.)
D	51.18 mm dia. (2.015 in. dia.)
E	42.0 mm (1.65 in.)
F	10.0 mm (0.4 in.)
G	58.5 mm (2.30 in.)
H	14.0 mm (0.55 in.)
I	35.0 mm (1.38 in.)
J	0.122 rad (7 °)
K	50.2 mm dia. (1.976 in. dia.)
L	58.9 mm dia. (2.32 in. dia.)

(1) Piston
(2) Piston Seal
(3) Expander

(a) Slide Jig
(b) Correcting Jig

9Y1211014FLS0021US0

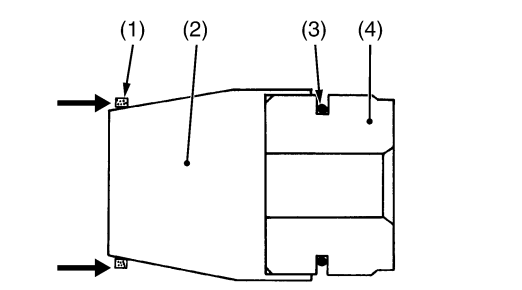

3UFAAABLP039A

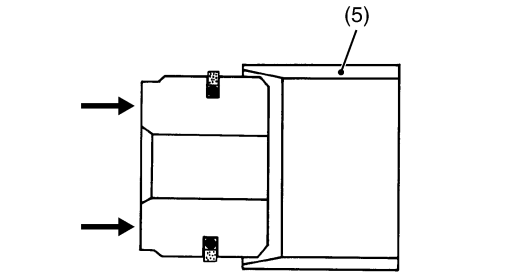

3UFAAABLP040A

Installing Expander and Piston Seal

1. Set the slide jig (2) on the piston (4).
2. Install the expander (3) on the piston with the slide jig.
3. Install the piston seal (1) over the expander with the slide jig.
4. Compress the piston seal to the correct size by installing the piston into the correcting jig (5).

■ **NOTE**

- **Do not turn (roll) the piston seal as you install it.**

(1) Piston Seal
(2) Slide Jig
(3) Expander
(4) Piston
(5) Correcting Jig

9Y1211014FLS0022US0

(5) Side Frame, Main Frame and Others (LA525)

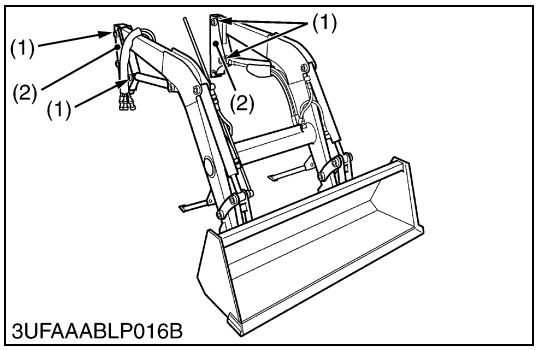

Side Frame

1. Remove the loader assembly from loader main frame (See page 1-S13.)
2. Remove the pins (1) and remove the side frames (2) from the boom.

(1) Pin
(2) Side Frame

9Y1211014FLS0023US0

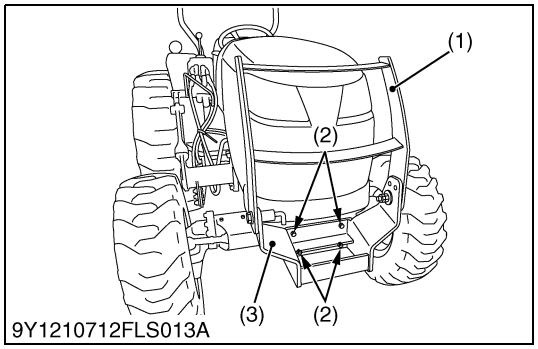

Front Guard

1. Remove the pivot bolts (7), unlock the front guard lever.
2. Remove the upper front guard (1).
3. Remove the front guard mounting bolts (2) and then remove the lower front guard (3) and front bumper (4) together from the front axle frame(5).

(When reassembling)

- Assemble the pivot bolts (7), plain whashers (6) and plate splings (8) as shown in the figure.
- Make sure the plate springs (8) are in the specified direction as shown in the figure.
- Set the space "**A**" to the specified calue.

Tightening torque	Front guard mounting bolt	124 to 147 N·m 12.6 to 15.0 kgf·m 91.2 to 108 lbf·ft

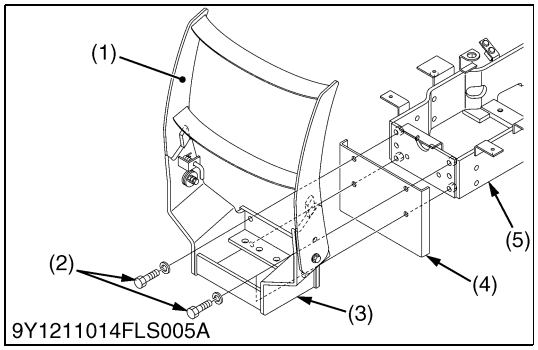

(1) Upper Front Guard
(2) Front Guard Mounting Bolt (M14)
(3) Lower Front Guard
(4) Front Bumper
(5) Front Axle Frame
(6) M20 Plain Washer (Large)
(7) Pivot Bolt
(8) M20 Plate Spring
(9) M20 Hex. Nut

A: 12 to 13 mm (0.47 to 0.51 in.)

9Y1211014FLS0024US0

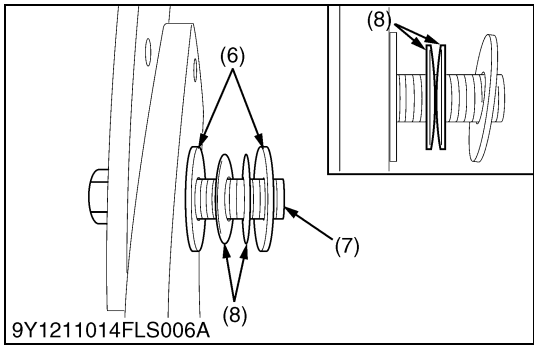

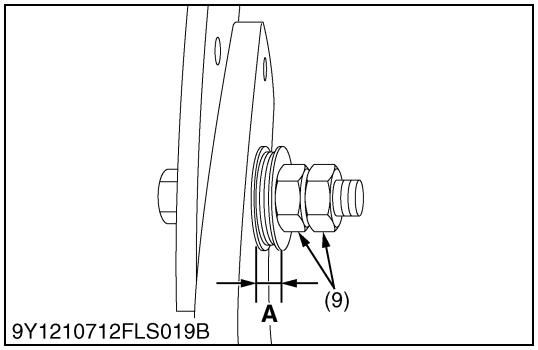

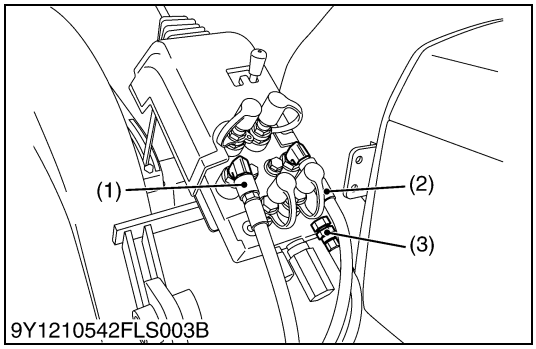

9Y1210542FLS003B

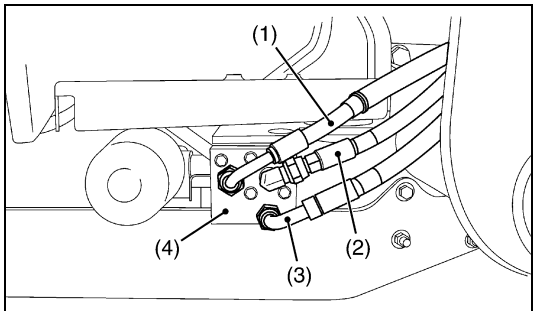

9Y1210542FLS014A

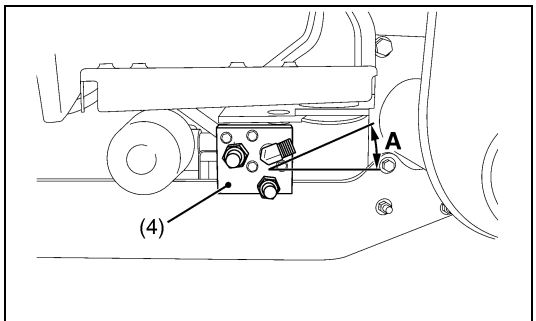

9Y1210542FLS015A

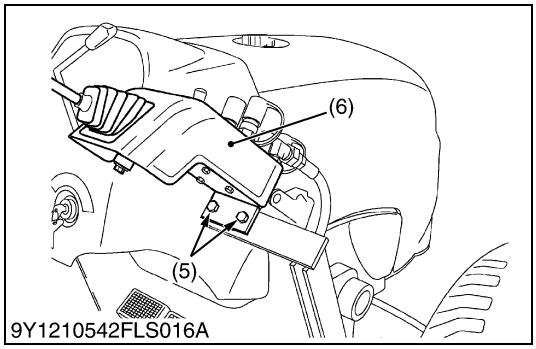

9Y1210542FLS016A

Hydraulic Hoses and Control Valve

1. Remove the hydraulic hoses (1), (2), (3).
2. Remove the valve stay mounting bolts and nuts and remove the control valve (6).

(When reassembling)

- Hoses pre-installed on the control valve assembly are not securely tightened to ease installation of hoses to hydraulic block. Be sure to securely tighten all hose fittings after installing.
- Turn the hose fittings so the hoses clear the tractor and tractor parts.
- Clamp three hoses and sleeve in the middle with plastic tie.

(1) Hydraulic Hose (Power Beyond Line)
(2) Hydraulic Hose (Pump Line)
(3) Hydraulic Hose (Tank Line)
(4) Hydraulic Block
(5) Control Valve Stay Mounting Bolt and Nut (M12)
(6) Control Valve

A : 0.44 rad (25 °)

9Y1211014FLS0025US0

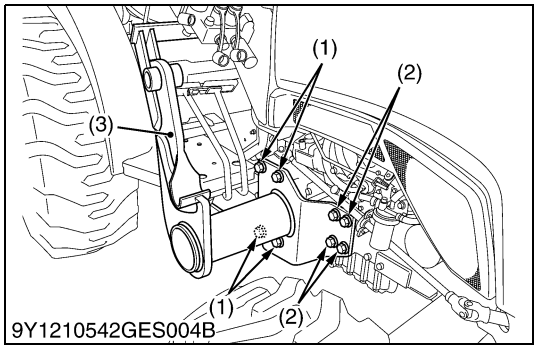

Main Frame

1. Support the main frame (3) by hoist to prevent falling during disassembling.
2. Remove the main frame mounting bolts (1), (2) and separate the main frame (3).

(When reassembling)

1. Pre-install main frame bolts (2) while hoisting to prevent falling.
2. Tighten the correct torque of main frame bolts (1), (2).

■ **NOTE**

- **Do not firmly tighten any bolts until most components are attached onto the tractor.**

Tightening torque	Main frame mounting bolt (M16)	226 N·m 23.0 kgf·m 166 lbf·ft

(1) Mounting Bolt with Spring Washer and Plain Washer
(2) Mounting Bolt with Spring Washer
(3) Main Frame

9Y1211014FLS0026US0

(6) Side Frame, Main Frame and Others (LA765)

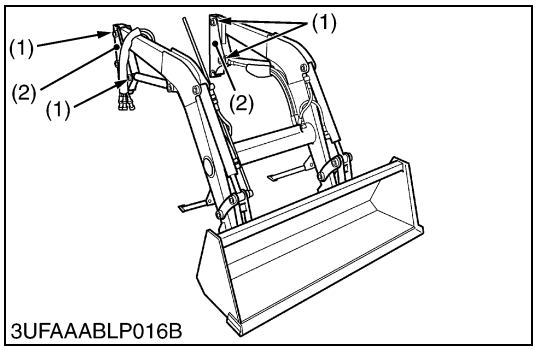

Side Frame

1. Remove the loader assembly from loader main frame (See page 1-S13.)
2. Remove the pins (1) and remove the side frames (2) from the boom.

(1) Pin
(2) Side Frame

9Y1211014FLS0023US0

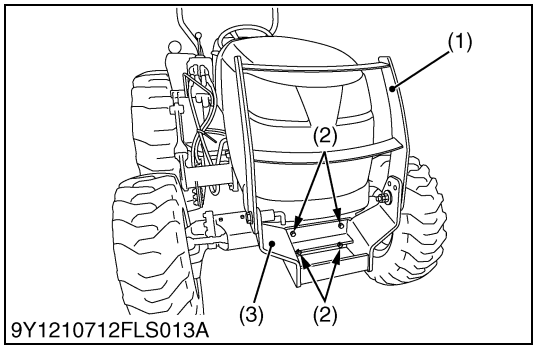

Front Guard

1. Remove the pivot bolts (5), unlock the front guard lever.
2. Remove the upper front guard (1).
3. Remove the front guard mounting bolt (2) and remove the lower front guard (3) from front axle frame.

(When reassembling)

- Assemble the pivot bolts (5), Plain washers (4) and plate springs (6) as shown in the figure.
- Make sure the plate springs (6) are in the specified direction as shown in the figure.
- Set the space **"A"** to the specified value.

Tightening torque	Front guard mounting bolt and nut	124 to 147 N·m 12.6 to 15.0 kgf·m 91.2 to 108 lbf·ft

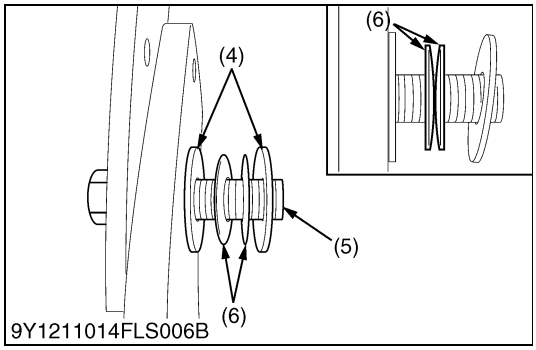

(1) Upper Front Guard
(2) Front Guard Mounting Bolt (M14)
(3) Lower Front Guard
(4) M20 Plain Washer (Large)
(5) Pivot Bolt
(6) M20 Plate Spring
(7) M20 Hex. Nut

A: 12 to 13 mm (0.47 to 0.51 in.)

9Y1211014FLS0027US0

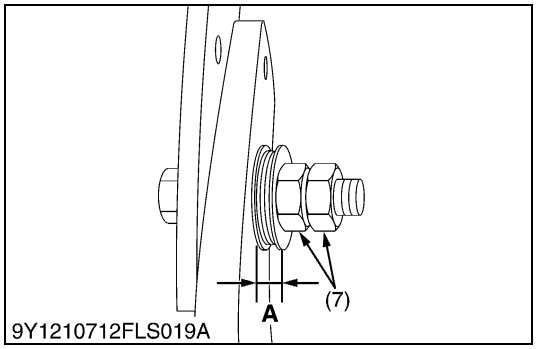

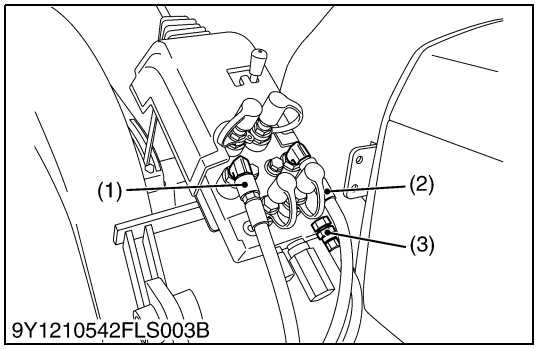

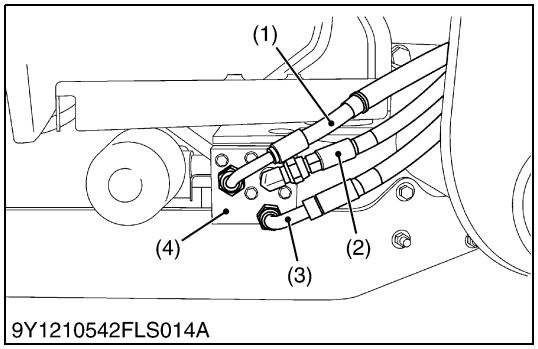

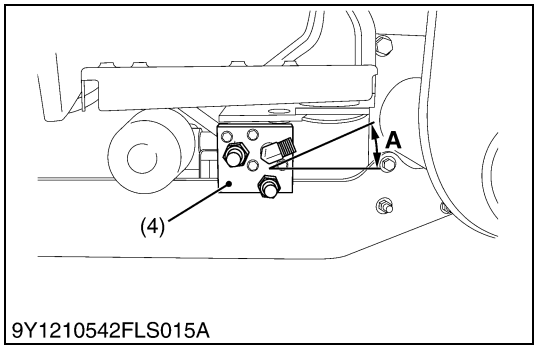

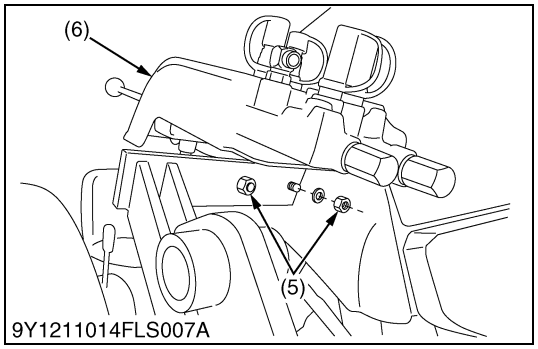

Hydraulic Hoses and Control Valve

1. Remove the hydraulic hoses (1), (2), (3).
2. Remove the valve stay mounting bolts and nuts and remove the control valve (6).

(When reassembling)

- Connect the hoses temporary to the control valve assembly to connect hoses easily to hydraulic block. Be sure to securely tighten all hose fittings after installing.
- Turn the hose fittings so the hoses clear the tractor and tractor parts.
- Tighten three hoses and sleeve in the middle with plastic tie.

(1) Hydraulic Hose (Power Beyond Line)
(2) Hydraulic Hose (Pump Line)
(3) Hydraulic Hose (Tank Line)
(4) Hydraulic Block
(5) Control Valve Stay Mounting Bolt and Nut (M12)
(6) Control Valve

A: 0.44 rad (25 °)

9Y1211014FLS0028US0

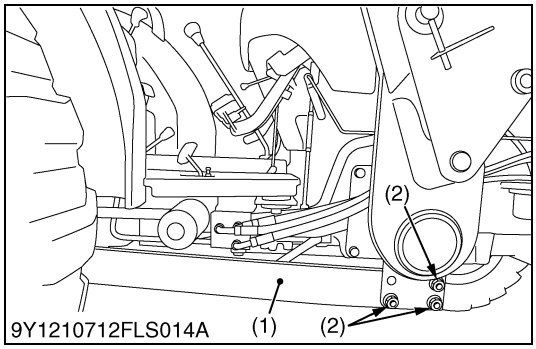

9Y1210712FLS014A

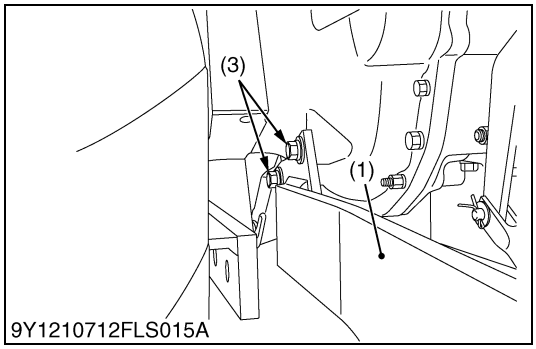

9Y1210712FLS015A

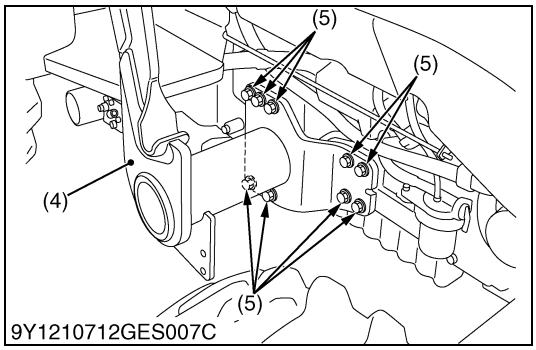

9Y1210712GES007C

Sub Frame and Main Frame

1. Lift the main frame (4) by hoist to prevent falling during disassembling.
2. Remove the sub frame mounting bolts (2), (3) and nuts, and remove the sub frame (1).
3. Remove the main frame mounting bolts (5) and remove the main frame (4).

(When reassembling)

■ **NOTE**

- **Do not firmly tighten any bolts and nuts until most components are attached onto the tractor.**

Tightening torque	Sub frame mounting bolt and nut	M16	226 N·m 23.0 kgf·m 166 lbf·ft
		M12	90.2 N·m 9.20 kgf·m 66.5 lbf·ft
	Main frame mounting bolt	M16	226 N·m 23.0 kgf·m 166 lbf·ft

(1) Sub Frame
(2) Sub Frame Mounting Bolt (M16)
(3) Sub Frame Mounting Bolt (M12)
(4) Main Frame
(5) Main Frame Mounting Bolt

9Y1211014FLS0029US0

[3] SERVICING

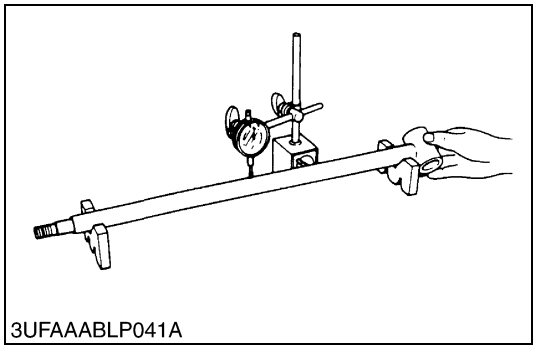
3UFAAABLP041A

Piston Rod Bend

1. Set the piston rod on V blocks.
2. Set a dial indicator on the center of the rod.
3. Turn the piston rod and read the dial indicator.
4. If the measurement is more than the allowable limit, replace it.

Piston rod bend	Allowable limit	0.25 mm 0.0098 in.

9Y1211014FLS0030US0

https://truckmanualshub.com/

Editor : Farm Machinery International Service Department
Address : 64, Ishizu-Kitamachi, Sakai-Ku, Sakai-City, Osaka, 590-0823, Japan
Phone : +81-72-241-1129
Fax : +81-72-245-2484
E-mail : kbt_g.ag-sv@kubota.com

Printed in Japan 2017. 06, S, EI, EI, engusa Code No.9Y111-10142
2014. 02, S, EI, EI, engusa

KUBOTA Corporation