https://truckmanualshub.com/

Roadranger® More time on the road®

Service Manual

Fuller Heavy-Duty FR/FRO Transmissions

TRSM2400

January 2010

FR-11210B
FR-12210B
FR-13210B
FR-14210B
FR-15210B
FR-9210B
FRF-11210B
FRF-12210B
FRF-13210B
FRF-14210B
FRF-15210B
FRF-9210B
FRO-11210B
FRO-11210C
FRO-12210B
FRO-12210C
FRO-13210B
FRO-13210C
FRO-14210B
FRO-14210C
FRO-15210B
FRO-15210C
FRO-16210B
FRO-16210C
FRO-17210C
FRO-18210C
FROF-11210B
FROF-11210C
FROF-12210B
FROF-12210C
FROF-13210B
FROF-13210C
FROF-14210B
FROF-14210C
FROF-15210B
FROF-15210C
FROF-16210B
FROF-16210C

https://truckmanualshub.com/

Warnings and Precautions

WARNING

Before starting a vehicle always be seated in the driver's seat, place the transmission in neutral, set the parking brakes and disengage the clutch.

Before working on a vehicle place the transmission in neutral, set the parking brakes and block the wheels.

Before towing the vehicle place the transmission in neutral, and lift the rear wheels off the ground, remove the axle shafts, or disconnect the driveline to avoid damage to the transmission during towing.

The description and specifications contained in this service publication are current at the time of printing.

Eaton Corporation reserves the right to discontinue or modify its models and/or procedures and to change specifications at any time without notice.

Any reference to brand name in this publication is made as an example of the types of tools and materials recommended for use and should not be considered an endorsement. Equivalents may be used.

This symbol is used throughout this manual to call attention to procedures where carelessness or failure to follow specific instructions may result in personal injury and/or component damage.

Departure from the instructions, choice of tools, materials and recommended parts mentioned in this publication may jeopardize the personal safety of the service technican or vehicle operator.

WARNING

Failure to follow indicated procedures creates a high risk of personal injury to the service technician.

CAUTION

Failure to follow indicated procedures may cause component damage or malfunction.

Note: Additional service information not covered in the service procedures.

Tip: Helpful removal and installation procedures to aid in the service of this unit.

Always use genuine Eaton replacement parts.

https://truckmanualshub.com/

Table of Contents

General Information

Purpose and Scope of Manual 1
Serial Tag Information and Model Nomenclature 5
Lubrication Specifications 8
Oil Leak Inspection Process 10
Transmission Operation 11
Tool Specifications 15
Torque Specifications 19
Power Flow Diagrams 21
Air System Troubleshooting 31
General Troubleshooting Chart 42
Air System Overview 45
Timing Procedures 60

In-Vehicle Service Procedures

How to Disassemble the Roadranger Valve 62
How to Assemble the Roadranger Valve 64
How to Remove Compression Type Fittings 66
How to Install Compression Type Fittings 67
How to Remove Push-To-Connect Type Fittings 68
How to Install Push-To-Connect Type Fittings 69
How to Remove a Roadranger Valve 70
How to Install a Roadranger Valve 71
How to Remove the Gear Shift Lever/Remote Shift Control 72
How to Install the Gear Shift Lever/Remote Shift Control 73
How to Adjust the Remote Shift Control (LRC Type) . 74
How to Remove the Detent Spring 76
How to Install the Detent Spring 77
Neutral Switch Operation and Testing 78
How to Remove the Neutral Switch 79
How to Install the Neutral Switch 80
Reverse Switch Operation and Testing 81
How to Remove the Reverse Switch 82
How to Install the Reverse Switch 83
How to Install the Shift Bar Housing 84
How to Remove the Shift Bar Housing 85
Ho to Remove the Oil Seal Mechanical/Magnetic Speedometer 86
How to Install the Oil Seal Mechanical/Magnetic Speedometer 88
How to Remove the Auxiliary Section in Chassis 90
How to Install the Auxiliary Section in Chassis 92
How to Disassemble the Integral Oil Cooler 96
How to Assemble the Integral Oil Cooler 98
How to Remove the Air Module 99
How to Install the Air Module 101

Transmission Overhaul Procedures-Bench Service

How to Disassemble the Gear Shift Lever 102
How to Assemble the Gear Shift Lever 104
How to Remove the Shift Bar Housing 106
How to Install the Shift Bar Housing 107
How to Disassemble the Shift Bar Housing 108
How to Disassemble the Range Cylinder 111
How Assemble the Range Cylinder 112
How to Assemble the Shift Bar Housing 114
How to Remove the Input Shaft Assembly (without main case disassembly) 118
How to Install the Input Shaft Assembly (without main case disassembly) 120
How to Remove the Auxiliary Section 122
How to Disassemble the Auxiliary Section 124
How to Disassemble the Range Yoke 127
How to Disassemble the Output Shaft 128
How to Disassemble the Synchronizer Assembly 129
How to Assemble the Synchronizer Assembly 130
How to Remove the Clutch Housing 132
How to Assemble the Output Shaft 133
How to Assemble the Range Yoke 135
How to Disassemble the Auxiliary Countershaft 136
How to Remove the Auxiliary Countershaft Bearing Races 137
How to Install the Auxiliary Countershaft Bearing Races 138
How to Assemble the Auxiliary Countershaft 139
How to Remove the Auxiliary Drive Gear Assembly 140
How to Disassemble the Upper and Lower Reverse Idler Gear Assembly 141
How to Remove the Upper and Lower Countershaft Bearings 144
How to Remove the Mainshaft Assembly 146
How to Remove the Countershaft Assemblies 149
How to Disassemble the Countershaft Assemblies 151
How to Remove the Input Shaft and Main Drive Gear 153
How to Prepare the Main Case for Reassembly 155
How to Disassemble the Mainshaft Assembly 156
How to Assemble the Mainshaft Assembly with Non-Selective (Non-Adjustable) Tolerance Washers 158
How to Install the Mainshaft Assembly 161
How to Assemble the Countershaft Assemblies 163
How to Assemble the Lower Reverse Idler Gear Assembly 165
How to Install Countershaft Assemblies 167

https://truckmanualshub.com/

Table of Contents

How to Install the Lower Countershaft Bearings 168
How to Install the Input Shaft and Main
Drive Gear 170
How to Install the Input Bearing Cover 172
How to Install the Upper Countershaft Bearings 173
How to Install the Upper Reverse Idler
Gear Assembly 175
How to Install the Auxiliary Drive Gear Assembly 177
How to Install the Clutch Housing 178
How to Remove the Oil Pump 180
How to Install the Oil Pump 181
How to Install the Oil Seal 182
How to Assemble the Auxiliary Section 183
How to Install the Auxiliary Section 187
Shim Procedure without a Shim Tool for
Tapered Bearings 189

https://truckmanualshub.com/

Purpose and Scope of Manual

This manual is designed to provide information necessary to service and repair the Eaton Fuller transmissions listed on the front.

How to use this Manual

The service procedures have been divided into two sections: In-Vehicle Service Procedures and Transmission Overhaul Procedures—Bench Service. In-Vehicle Service Procedures contain procedures that can be performed while the transmission is still installed in the vehicle. Transmission Overhaul Procedures contain procedures that are performed after the transmission has been removed from the vehicle.

The procedure sections are laid out with a general heading at the top outside edge of each page followed by more specific headings and the procedures. To find the information you need in these sections, first go to the section that contains the procedure you need. Then look at the heading at the top and outside edge of each page until you find the one that contains the procedure you need.

Transmission Overhaul Procedures follow the general steps for complete disassembly and then assembly of the transmission.

Note: In some instances the transmission appearance may be different from the illustrations, but the procedure is the same.

Disassemble Precautions

It is assumed in the detailed assembly instructions that the lubricant has been drained from the transmission, the necessary linkage and vehicle air lines disconnected and the transmission has been removed from vehicle chassis. Removal of the gear shift lever housing assembly (or remote control assembly) is included in the detailed instructions (How to Remove the Gear Shift Lever). This assembly MUST be detached from the shift bar housing before the transmission can be removed.

Follow closely each procedure in the detailed instructions, make use of the text, illustrations, and photographs provided.

Assemblies

- When disassembling the various assemblies, such as the mainshaft, countershafts, and shift bar housing, lay all parts on a clean bench in the same sequence as removed. This procedure will simplify assembly and reduce the possibility of losing parts.

Bearings

- Carefully wash and lubricate all usable bearings as removed and protectively wrap until ready for use. Remove bearings planned to be reused with pullers designed for this purpose.

Cleanliness

- Provide a clean place to work. It is important that no dirt or foreign material enters the unit during repairs. Dirt is an abrasive and can damage bearings. It is always a good practice to clean the outside of the unit before starting the planned disassembly.

Input Shaft

- The input shaft can be removed from the transmission without removing the countershafts, mainshaft, or main drive gear. Special procedures are required and provided in this manual.

Snap Rings

- Remove snap rings with pliers designed for this purpose. Snap rings removed in this manner can be reused, if they are not sprung or loose.

https://truckmanualshub.com/

When Using Tools to Move Parts

- Always apply force to shafts, housings, etc., with restraint. Movement of some parts is restricted. Never apply force to driven parts after they stop solidly. The use of soft hammers, soft bars, and mauls for all disassembly work is recommended.

Inspection Precautions

Before assembling the transmission, check each part carefully for abnormal or excessive wear and damage to determine reuse or replacement. When replacement is necessary, use only genuine Eaton® Fuller® Transmission parts to assure continued performance and extended life from your unit.

Since the cost of a new part is generally a small fraction of the total cost of downtime and labor, avoid reusing a questionable part which could lead to additional repairs and expense soon after assembly. To aid in determining the reuse or replacement of any transmission part, consideration should also be given to the unit's history, mileage, application, etc.

Recommended inspection procedures are provided in the following checklist.

Bearings

- Wash all bearings in clean solvent. Check balls, rollers, and raceways for pitting, discoloration, and spalled areas. Replace bearings that are pitted, discolored, spalled, or damaged during disassembly.
- Lubricate bearings that are not pitted, discolored, or spalled and check for axial and radial clearances.
- Replace bearings with excessive clearances.
- Check bearing fit. Bearing inner races should be tight to shaft; outer races slightly tight to slightly loose in case bore. If the bearing spins freely in the bore the case should be replaced.

Bearing Covers

- Check covers for wear from thrust of adjacent bearing. Replace covers damaged from thrust of bearing outer race.
- Check cover bores for wear. Replace those worn or oversized.

Clutch Release Parts

- Check clutch release parts. Replace yokes worn at cam surfaces and bearing carrier worn at contact pads.
- Check pedal shafts. Replace those worn at bushing surfaces.

Gears

- Check gear teeth for frosting and pitting. Frosting of gear teeth faces presents no threat of transmission failure. Often in continued operation of the unit, frosted gears "heal" and do not progress to the pitting stage. In most cases, gears with light to moderate pitted teeth have considerable gear life remaining and can be reused, but gears in the advanced stage of pitting should be replaced.
- Check for gears with clutching teeth abnormally worn, tapered, or reduced in length from clashing during shifting. Replace gears found in any of these conditions.
- Check axial clearance of gears.

Gear Shift Lever Housing Assembly

- Check spring tension on shift lever. Replace tension spring if lever moves too freely.
- If housing is disassembled, check gear shift lever bottom end and shift finger assembly for wear. Replace both gears if excessively worn.

https://truckmanualshub.com/

Gray Iron Parts

- Check all gray iron parts for cracks and breaks. Replace parts found to be damaged.

Oil Return Threads and Seals

- Check oil return threads on the input shaft. If return action of threads has been destroyed, replace the input shaft.
- Check oil seal in rear bearing cover. If sealing action of lip has been destroyed, replace seal.

O-Rings

- Check all O-rings for cracks or distortion. Replace if worn.

Reverse Idler Gear Assemblies

- Check for excessive wear from action of roller bearings.

Shift Bar Housing Assembly

- Check for wear on shift yokes and block at pads and lever slot. Replace excessively worn parts.
- Check yokes for correct alignment. Replace sprung yokes.
- If housing has been disassembled, check shift shaft and all related parts for wear.

Sliding Clutches

- Check all shift yokes and yoke slots in sliding clutches for extreme wear or discoloration from heat.
- Check engaging teeth of sliding clutches for partial engagement pattern.

Splines

- Check splines on all shafts for abnormal wear. If sliding clutch gears, companion flange, or clutch hub has wear marks in the spline sides, replace the specific shaft effected.

Synchronizer Assembly

- Check synchronizer for burrs, uneven and excessive wear at contact surface, and metal particles.
- Check blocker pins for excessive wear or looseness.
- Check synchronizer contact surfaces on the synchronizer cups for wear.

Washers

- Check surfaces of all washers. Washers scored or reduced in thickness should be replaced.

Assembly Precautions

Make sure that case interiors and housings are clean. It is important that dirt and other foreign materials are kept out of the transmission during assembly. Dirt is an abrasive and can damage polished surfaces of bearings and washers. Use certain precautions, as listed below, during assembly.

Bearings

- Use a flange-end bearing driver for bearing installation. These special drivers apply equal force to both bearing races, preventing damage to balls/rollers and races while maintaining correct bearing alignment with bore and shaft. Avoid using a tubular or sleeve-type driver, whenever possible, as force is applied to only one of the bearing races.

https://truckmanualshub.com/

Introduction

Capscrews

- To prevent oil leakage and loosening, use Eaton Fuller sealant #71205 on all capscrews.

Gaskets

- Use new gaskets throughout the transmission as it is being rebuilt. Make sure all gaskets are installed. An omission of any gasket can result in oil leakage or misalignment of bearing covers.

Initial Lubrication

- Coat all limit washers and shaft splines with Lubricant during assembly to prevent scoring and galling of such parts.

O-Rings

- Lubricate all O-rings with silicon lubricant.

Universal Joint Companion Flange or Yoke

- Pull the companion flange or yoke tightly into place with the output shaft nut, using 450-500 lb. ft. of torque. Make sure the speedometer drive gear or a replacement spacer of the same width has been installed. Failure to pull the companion flange or yoke tightly into place can result in damage to the mainshaft rear bearing.

⚠ IMPORTANT

See the appropriate Illustrated Parts Lists (specified by model series) to ensure that proper parts are used during assembly of the transmission.

https://truckmanualshub.com/

Serial Tag Information and Model Nomenclature

Transmission model designation and other transmission identification information are stamped on the serial tag. To identify the transmission model and serial number, locate the tag on the transmission and then locate the numbers as shown. Figure 1-1 below shows the tag which is located on the transmission.

When calling for service assistance or parts, have the model and serial numbers handy

Do not remove or destroy the transmission identification tag!

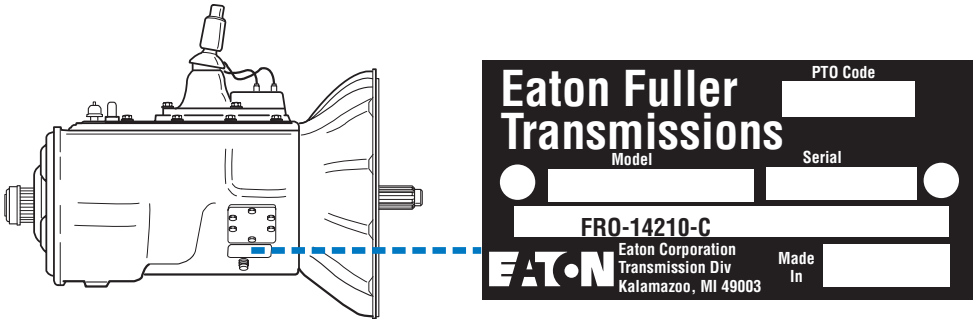

Fig 1-1

Transmission Tag and Location

Model Number
The model number gives basic information about the transmission and is explained below. Use this number when calling for service assistance or replacement parts.

F R - 1 4 2 1 0 C

Eaton Fuller Model Designation Prefix
See options below:

Prefix	Definition
FR	Fuller Roadranger Twin Countershaft
FRF	w/ Forward Shift Bar Housing
FRO	w/ Overdrive
FROF	w/ Overdrive and Forward Shift Bar Housing

Ratio Set

Forward Speeds

2 = Helical Auxilary Gearing and "Multi-Mesh" Front Gearing

This (x) 100 = Nominal Torque Capacity

Serial Number
The serial number is the sequential identification number of the transmission. Before calling for service assistance, write the number down as it may be needed.

Bill of material or Customer number
This number may be located below the model and serial numbers. It is a reference number used by Eaton®.

https://truckmanualshub.com/

Model Options

Torque Rating
The torque rating of the transmission specified in the model number is the input torque capacity in lb. ft.. Various torque ratings are available. For more information, call the Roadranger Help Desk at 1-800-826-HELP (4357).

Two types of shift bar housings are available for this transmission. Both are described and shown below.

Shift Bar housings
Standard: The standard shift bar housing has a gear shift lever opening that is located toward the rear of the transmission. The housing is shown in figure 1-2.

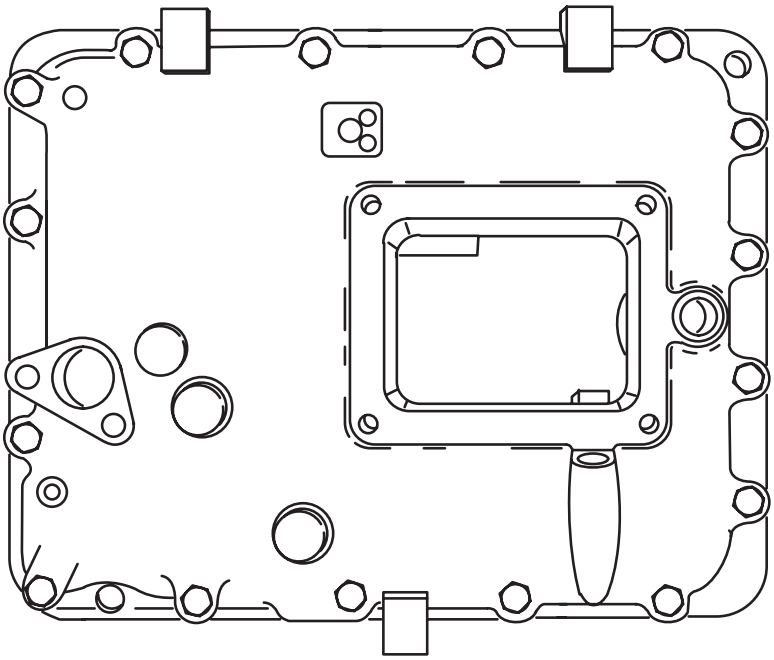

Fig 1-2

https://truckmanualshub.com/

Forward Opening: The forward opening shift bar housing has a gear shift lever opening located three inches closer to the front of the transmission than the standard opening. This forward design allows greater flexibility in mounting the transmission and in indicated by an “F” in the model number. The housing is shown in figure1-3.

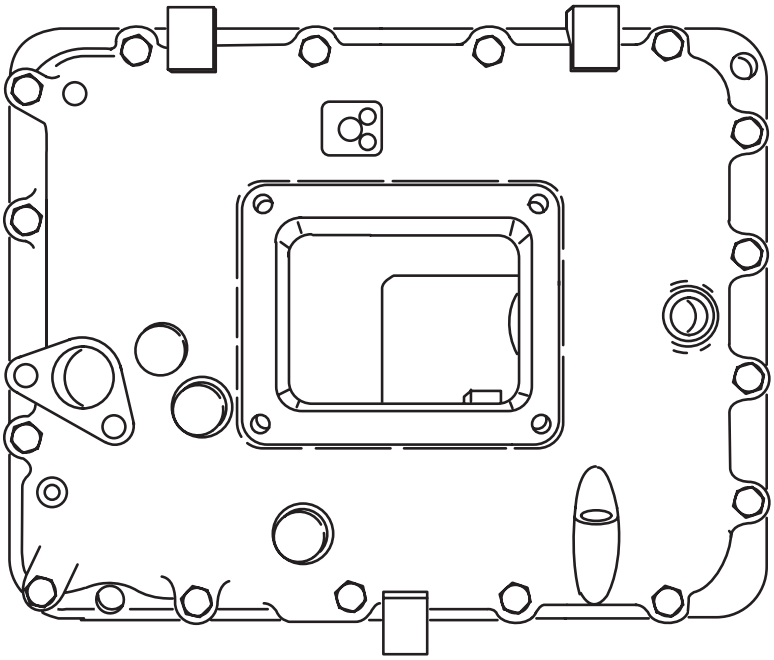

Fig 1-3

Lubrication Pumps
Two types of lubrication pumps are available for use on this transmission and are described below:

PTO Driven: A PTO driven pump is externally mounted on the 6 or 8 bolt PTO openings and driven off the PTO gear.

Auxiliary Countershaft: An auxiliary countershaft pump is mounted on the rear of the transmission and driven off the auxiliary countershaft.

Power Take Off (PTO) Usage
PTO’s can be mounted in the following ways:

6 or 8 Bolt: The 6 or 8 bolt openings are standard with the transmission. The PTO is mounted to the opening and driven from the PTO gear on the front countershaft.

Thru-Shaft: The thru-shaft PTO mounts on the rear of the transmission. It requires a special auxiliary housing and main case countershaft with internal splines.

https://truckmanualshub.com/

Lubrication

Lubrication Specifications

Note: For a list of Eaton Approved Synthetic Lubricants, see TCMT-0021 or call 1-800-826-HELP (4357).

Note: The use of lubricants not meeting these requirements will affect warranty coverage.

Note: Additives and friction modifiers must not be introduced. Never mix engine oils and gear oils in the same transmission.

IMPORTANT

Transmission filters should be changed during regular lube intervals. Inspection of the transmission filter should be conducted during preventive maintenance checks for damage or corrosion. Replace as necessary.

Buy from a reputable dealer

For a complete list of approved and reputable dealers, write to: Eaton Corporation, Worldwide Marketing Services, P.O. Box 4013, Kalamazoo, MI 49003

Transmission Operating Angles

If the transmission operating angle is more than 12 degrees, improper lubrication will occur. The operating angle is the transmission mounting angle in the chassis plus the percent of upgrade (expressed in degrees). For operating angles over 12 degrees, the transmission must be equipped with an oil pump or cooler kit to insure proper lubrication.

Operating Temperatures with Oil Coolers

The transmission must not be operated consistently at temperatures above 250° F. Operation at temperatures above 250°F [121°C] causes loaded gear tooth temperatures to exceed 350°F [177°C] which will ultimately destroy the heat treatment of the gears. If the elevated temperature is associated with an unusual operating condition that will reoccur, a cooler should be added, or the capacity of the existing cooling system increased.
The following conditions in any combination can cause operating temperatures of over 250° F [121°C]:

- Operating consistently at slow speed.
- High ambient temperatures.
- Restricted air flow around transmission.
- Use of engine retarder.
- High horsepower operation.

Note: Transmission coolers must be used to reduce the operating temperatures when the above conditions are encountered.

Oil Cooler Chart

Table 4

Transmission Oil Coolers are:
Recommended
• With engines of 350 H.P. and above.
Required
• With engines 399 H.P. and above and GCW's over 90,000 lbs.
• With engines 399 H.P. and above and 1400 lb. ft. or greater torque.
• With engines 1500 lb. ft. and above

https://truckmanualshub.com/

Table 4

Transmission Oil Coolers are:
18-speed AutoShift transmissions require use of an Eaton supplied oil-to-water cooler or approved equivalent.
• With engines 450 H.P. and above.

https://truckmanualshub.com/

Oil Leak Inspection Process

Inspect for Oil Leak

Determine if it is a Weep or a Leak

Weep: Stained, damp, no drips, light oil film, dirt adhered to the contaminated area.

Leak: Extremely wet or dripping of oil in the contaminated area.

Gasket

1. Clean suspected oil weep area with a clean dry cloth or mild soluble degreaser.

2. Ensure lube is to proper level.

3. Notify the customer that it is only a weep and it is not considered to be detrimental to the life of the transmission.

4. Repair is complete.

Rear Seal

1. Do not repair: Rear seal is designed to allow minimal seepage (refer to Roadranger TCSM-0912 Seal Maintance Guide).

2. Ensure lube is to proper level.

Leak

Step 1

1. Determine the origin of the leak path.
2. If origin of leak is obvious skip to Step 3.
3. If the origin of the oil leak is not obvious then use either of the two following steps to determine the oil leak:

Note: Do not use a high pressure spray washer to clean the area. Use of a high pressure spray may force contamination into the area of concern and temporarily disrupt the leak path.

i. Clean area with a clean dry cloth or mild soluble degreaser and fill the transmission to the proper lube level.

OR

ii. Clean the area as noted above and insert tracer dye into the transmission lube and fill transmission to proper lube level.

Step 2

Operate vehicle to normal transmission operating temperature and inspect the area for oil leak(s) visually or if tracer dye was introduced use an UVL (Ultraviolet Light) to detect the tracer dye's point of origin.
Note: When inspecting for the origin of the leak(s) make sure the assumed leak area is not being contaminated by a source either forward or above the identified area such as the engine, shift tower, shift bar housing, top mounted oil cooler, etc...

Step 3

Once the origin of the leak is identified, repair the oil leak using proper repair procedures from the designated model service manual.

Step 4

After the repair is completed, verify the leak is repaired and operate the vehicle to normal transmission operating temperature.
Inspect repaired area to ensure oil leak has been eliminated. If the leak(s) still occurs, repeat steps or contact the Roadranger Call Center at 1-800-826-4357.

https://truckmanualshub.com/

Transmission Operation

Transmission Operation

This Eaton® Fuller® Roadranger® transmission model contains ten forward speeds and two and reverse speeds. The gear shift lever mechanically engages and disengages five forward gears and one reverse gear in the transmission front section. The range lever on the shift knob allows the operator to control an air shifted auxiliary section to provide a low and high “range”. The five forward gears selected in low range are used again in high range to provide the remaining 5 progressive forward gear ratios.

Once the highest shift lever position (5th gear) is obtained in low range, the operator preselects the range shift lever for high range. The range shift occurs in neutral as the shift lever is moved from 5th gear position to 6th gear position.

When downshifting, the operator preselects the range lever for low range and the range shift occurs automatically as the shift lever is moved to the next gear position. Refer to the illustrations in the “Power Flow” portion of this section.

Shift Patterns

A Shift pattern decal that explains how to properly shift the transmission should be in your vehicle. The decal is shown in Figure 2-1. If it has been lost, a replacement may be obtained from any Eaton® parts distributor.

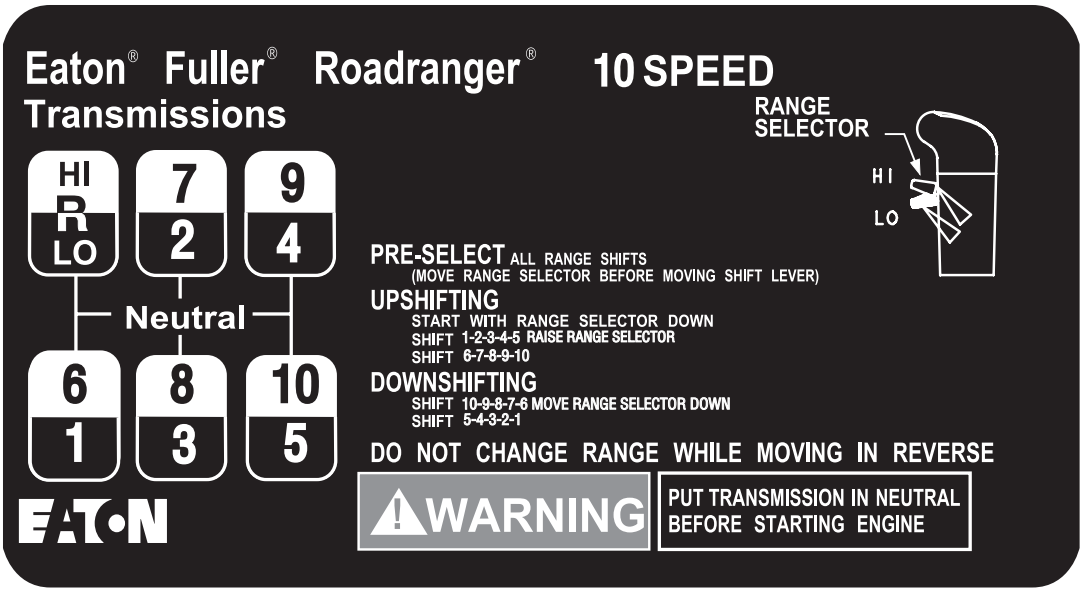

Figure 2-1 Shift Pattern Decal

https://truckmanualshub.com/

Operating Instructions

Initial Start - Up

WARNING

Before starting a vehicle always be seated in the driver's seat, move the shift lever to neutral, and set the parking brakes.

CAUTION

Before moving a vehicle, make sure you understand the shift pattern configuration.

1. Make sure the shift lever is in neutral and the parking brakes are set.
2. Turn on the key switch, and start the engine.
3. Allow the vehicle air pressure to build to the correct level. Refer to your "Operator and Service Manual" supplied with the truck.
4. Apply the service brakes.
5. Release the parking brakes on the vehicle.
6. Make sure the Range Selector is down in the low range position as shown below in Figure 2-2.

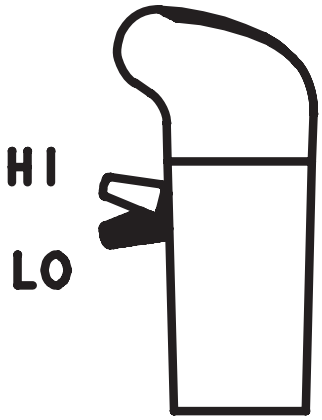

Figure 2-2

7. Depress the clutch pedal to the floor.
8. Move the shift lever to the desired initial gear.
9. Slowly release the clutch pedal and apply the accelerator.

https://truckmanualshub.com/

Upshifting

CAUTION: Never move the Range Selector with the shift lever in neutral while the vehicle is moving.

1. Move the shift lever, double-clutching, to the next desired gear position in low range.

Range shift - low to high Range (5th to 6th)

2. When in last gear position for low range and ready for the next upshift, pull up the Range Selector and move the shift lever, double-clutching, to the next higher speed position according to your shift pattern. As the shift lever passes through neutral, the transmission will automatically shift from low to high range.

Note: If after attempting a range shift to high, the transmission remains in neutral with the shift lever in gear, the range synchronizer protection device may deactivated. Move the shift lever into neutral to allow the range shift to complete, and then move the shift lever back into gear.

3. Continue upshifting, double-clutching, to the next desired gear position in high range

Downshifting

1. Move the shift lever, double-clutching, to the next desired gear position in high range

Range shift from High Range to Low Range (6th to 5th)

2. While in 6th and ready for the next downshift, preselect low range, and push the Range Selector down.
3. Move the shift lever, double-clutching, to the next desired gear position in low range. As the shift lever passes through neutral, the transmission automatically shifts from high range to low range.
4. Continue downshifting, double-clutching, to the next desired gear position in low range

Double - Clutching Procedure

1. Depress the pedal to disengage the clutch.
2. Move the shift lever to neutral.
3. Release the pedal to engage the clutch.*
   a. Upshifts-decelerate engine until engine RPM and road speed match.
   b. Downshifts-accelerate engine until engine RPM and road speed match.
4. Quickly depress the pedal to disengage the clutch and move the shift lever to the next gear speed position.
5. Release the pedal to engage the clutch.

Note: * By engaging the clutch with the shift lever in the neutral position, the operator is able to control the mainshaft gear RPM since it is regulated by engine RPM. This procedure allows the operator to speed up or slow down the mainshaft gearing to properly match the desired gear speed and output shaft speed.

https://truckmanualshub.com/

Additional Operating Information

Preselect
IMPORTANT: Always preselect all range shifts when upshifting or downshifting. Preselection requires that the Range Selector is moved to the needed position before starting the lever shift.

Preselected range shifts are completed automatically as the lever is moved through neutral and into the next gear. Preselecting all range shifts prevents damage to the transmission and provides for smoother shifts.

SynchroSaver™
The transmission contains a range synchronizer protection device to prevent damage to the high range synchronizer. If the shift lever engages a front section gear prior to completion of the air shift into high range, the range synchronizer remains in neutral, preventing damage to the range synchronizer. If this neutral condition occurs, the operator must shift the lever to neutral and then back into gear to complete the range shift.

Clutch Brake (Used with pull-type clutches)
The Clutch Brake is applied by fully depressing the clutch pedal to the floor board. When applied, the brake slows down and can stop the transmission front box gearing. It is a disc-type brake incorporated into the clutch and transmission drive gear assemblies. Never use the Clutch Brake when upshifting or downshifting. Use **only** for initial gear engagement when the vehicle is standing still.

Countershaft Brake (Used with push-type clutches)
The control button is mounted on the shift lever just below the shift knob. To operate the brake, disengage the clutch, press down the control button, and shift into 1st or reverse. This is an air operated mechanical brake which slows down the transmission gearing by forcing a piston against the countershaft PTO gear.

Note: Never use the Countershaft Brake when upshifting or downshifting. Use only for initial gear engagement when the vehicle is standing still.

Driver Instruction Booklet

Complete operation instruction can be found in the Drive Instruction Booklet TRDR-0515.

https://truckmanualshub.com/

Tool Specifications

Some repair procedures pictured in this manual show the use of specialized tools. Their actual use is recommended as they make transmission repair easier, faster, and prevent costly damage to critical parts.

For the most part, ordinary mechanic's tools such as socket wrenches, screwdrivers, etc., and other standard shop items such as a press, mauls and soft bars are the only tools needed to successfully disassemble and reassemble any Eaton®Fuller® transmission.

The following tables list and describe the typical tools required to properly service this model transmission above and beyond the necessary basic wrenches, sockets, screwdrivers, and prybars.

General Tools

The following tools are available from several tool manufacturers such as Snap-On, Mac, Craftsman, OTC, and many others.

Table 5 General Tools

TOOL	PURPOSE
0 - 100 lb. ft. 1/2" drive Torque Wrench	General torquing of fasteners (Typically 15-80 lb. ft.)
0 - 600 lb. ft. 3/4" or 1" drive Torque Wrench	Torquing of output nut to 500 lb. ft.
0 - 50lb. in. 3/8" drive Torque Wrench	General torquing of fasteners
0 - 30lb. in. 1/4" drive Torque Wrench	Torquing of capscrews to 7 lb. in. during auxiliary countershaft bearing endplay setting procedure
70 MM or 2 2/4" Socket - Standard Depth	To remove the output yoke nut
Large Brass Drift	Used to protect shafts and bearings during removal
Large Dead Blow Hammer or Maul	To provide force for shaft and bearing removal
Snap Ring Pliers - Large Standard External	To remove the snap rings at the auxiliary drive gear, input shaft bearing, and countershaft bearings
Feeler Gauges	To set mainshaft washer endplay and auxiliary tapered bearing endplay
Rolling Head (Crow's Foot) Prybar	To remove the auxiliary drive gear bearing
(2) Air Pressure Gauges 0-100 PSI (0-1034 kPa)	To troubleshoot and verify correct operation of air system
Universal Bushing Driver	To remove and install clutch housing bushings. Bushing OD = 1.125", ID = 1.000"

https://truckmanualshub.com/

Tools

The following special tools are designed for this Eaton®Fuller® transmission. The addresses and phone numbers of the tool suppliers are listed after the table. This list is provided as a convenience to our customers. These tools are manufactured by independent companies with no relationship to Eaton®Fuller®. Eaton®Fuller® does not warrant the fit or function of the listed tools. To obtain the tools, contact the tool supplier directly.

REF. NO.	TOOL	PURPOSE	G & W TOOL NO.	GREAT LAKES TOOL NO.	OTC TOOL NO.
T1	Output Yoke Puller	May be required to remove a rusted output yoke.	SP-450		7075
T2	Auxiliary Section Hanger	To support, or hang, the auxiliary section in the horizontal position.	G-40	T-125	5061
T3	Auxiliary Countershaft Support and Shim Tool	To hold the auxiliary countershafts in position while installing the auxiliary section in the horizontal position. Also to simplify the checking and setting of the auxiliary countershaft bearing endplay.	G-250 (can also use G-251)	T-311	5062
T4	Shift Lever Spring Installation Tool (Tension Spring Driver)	To install the shift tower tension spring.	G-116	T-170	
T5	Slide Hammer	To remove the output seal and reverse idler shafts. Requires 1/2"-13 threads. (Optional, idler shaft can be driven out from front.)	G-70 (with g-247D for Rev. Idler removal)	T-150 (with T-151 metric adapter)	1155 Slide Hammer / 8007 1/2" -13 Adapter
T6	Bearing Puller	To remove front section countershaft bearings.	G-246	T-2	7070A Kit
T7	Bearing Driver	To install front section countershaft bearings	G-230	T-101 Kit or T-120 with T-120A adapter	
T8	Bearing Driver	To install the front countershaft rear bearings	G-230	T-101 Kit	
T9	Countershaft Support Tools (2)	To support and locate the front section countershafts during bearing removal and installation.	G-54	T-132	7109
T10	Input Bearing Driver	To install input bearing on input shaft.	G-35	T-120	5066 (2" shaft)
T11	Bearing Puller	To remove the auxiliary countershaft tapered bearings.	G-247 or G-247A		1123 / 927
T12	Bearing Driver	To install the auxiliary countershaft tapered bearings.	G-230	T-101 Kit	
T13	Output Seal Removal Tool	To remove the output seal in chassis. Can use slide hammer.			Use 27315 hook with 1155 slide hammer

* Tool numbers are referenced in the service procedures.

https://truckmanualshub.com/

REF. NO.	TOOL	PURPOSE	G & W TOOL NO.	GREAT LAKES TOOL NO.	OTC TOOL NO.
T14	Auxiliary Section Removal Adapter Plate	To attach transmission jack to auxiliary section for auxiliary section removal in chassis.	G-115		49611 (Used with OTC transmission jack P/N 5019.)
T15	Mainshaft Hook	To assist in lifting of mainshaft from front section.	G-225	T-165	
T16	Input Bearing Puller	To remove input bearing.	G-38	T-3	7070A Kit
T17	Bearing Race Puller	To remove the auxiliary countershaft tapered bearing outer races.	G-247B (used with G-70 slide hammer)	T-157 with T-150	7136 puller attached to 1155 slide hammer
T18	Bearing Race Installer	To install the auxiliary countershaft tapered bearing outer races.	G-247C (used with G-230)	T-101 Kit	27524/27530 discs used with 27488 handle and 10020 screw.
* Tool numbers are referenced in the service procedures.					

Table 7 Shop Equipment

20 Ton capacity press	To press countershaft gears from countershaft.

Special Tools Manufacturers

Below are the addresses and phone numbers of the companies that make tools specifically for Eaton® Fuller® transmissions.

G & W Tool Company
907 S. Dewey Ave
Wagoner, OK 74467
800-247-5882
www.gwtoolco.com

Great Lakes Tool
8530 M-89
Richland, MI 49083
800-877-9618
269-629-9628
www.greatlakestools.com

O.T.C.
655 Eisenhower Dr.
Owatonna, MN 55060-1171
800-533-6127

https://truckmanualshub.com/

Eaton Aftermarket Parts

The following tools are available through Eaton Aftermarket Parts. To obtain any of the tools listed, contact your local Eaton parts distributor.

TOOL	PURPOSE	EATON PART NUMBER
5/32" Air Line Release Tool	To remove 5/32" air lines from push-to-connect fittings.	P/N 4301157 included in kit K-2394.
Air Line Cutting Tool	To cut plastic air lines smoothly and squarely.	P/N 4301158 included in kit K-2394.
Output Seal Driver	To install output seal.	For 7 series: Eaton P/N 5564501 driver. For 9 series: Use Eaton P/N 5564509 adapter with 5564501 driver. Both parts included in Complete Eaton Seal Kit P/N K-3651.
Output Seal Slinger Driver	To install output seal slinger.	For 7 series: Eaton P/N 71223. For 9 series: Eaton P/N 4303829.

https://truckmanualshub.com/

Torque Specifications

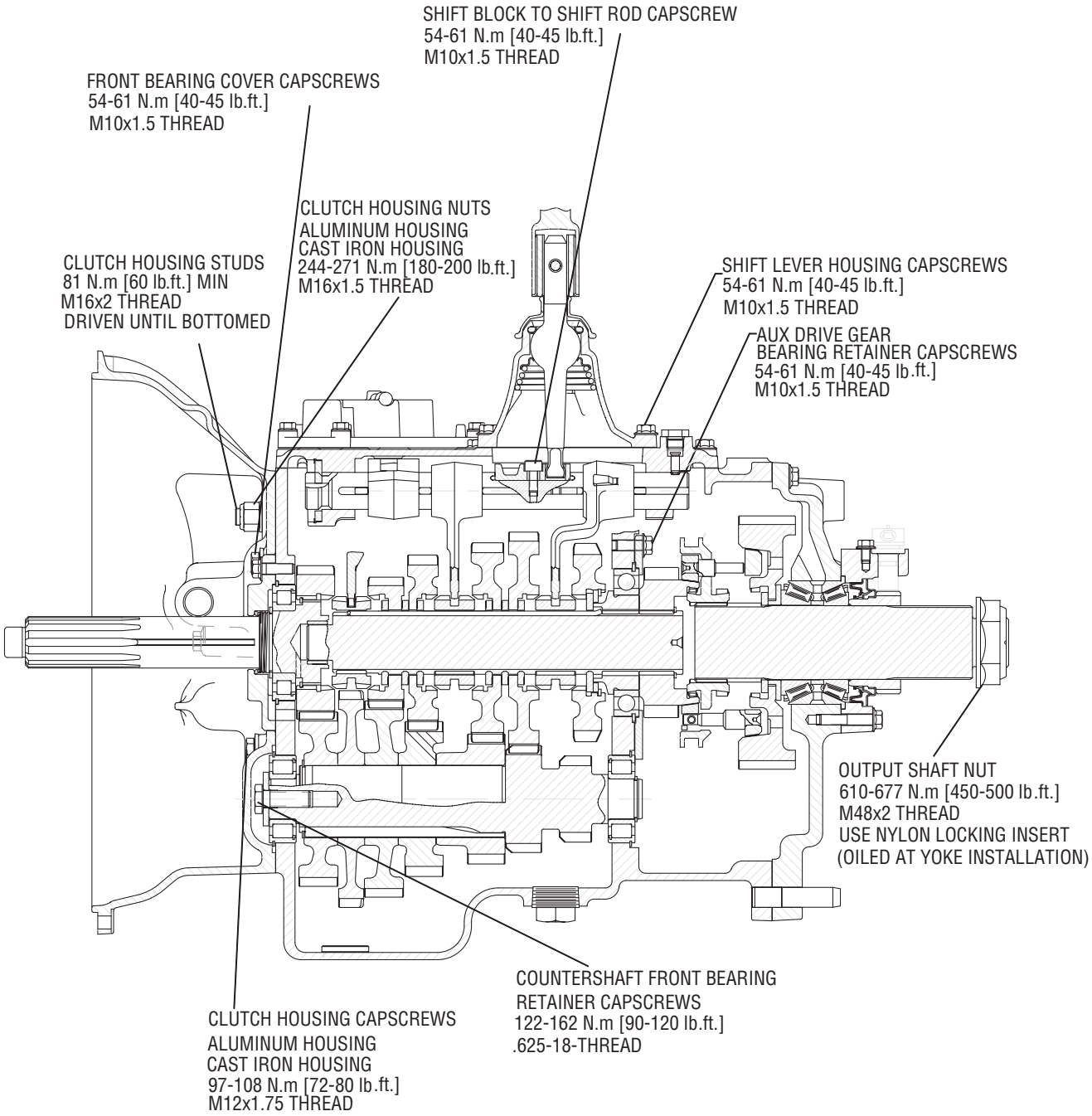

https://truckmanualshub.com/

PIPE THREAD TORQUE SPECIFICATIONS. UNLESS OTHERWISE SPECIFIED:

PIPE THREAD SIZE	HYDRAULIC LINE SEALANT
.0625 - 27	6.8-9.5 N.m [60-84 lb.in]
.125 - 27	9.5-13.6 N.m [84-120 lb.in]
.250 - 18	20.3-27.1 N.m [180-240 lb.in]
.375 - 18	33.9-47.5 N.m [300-420 lb.in]

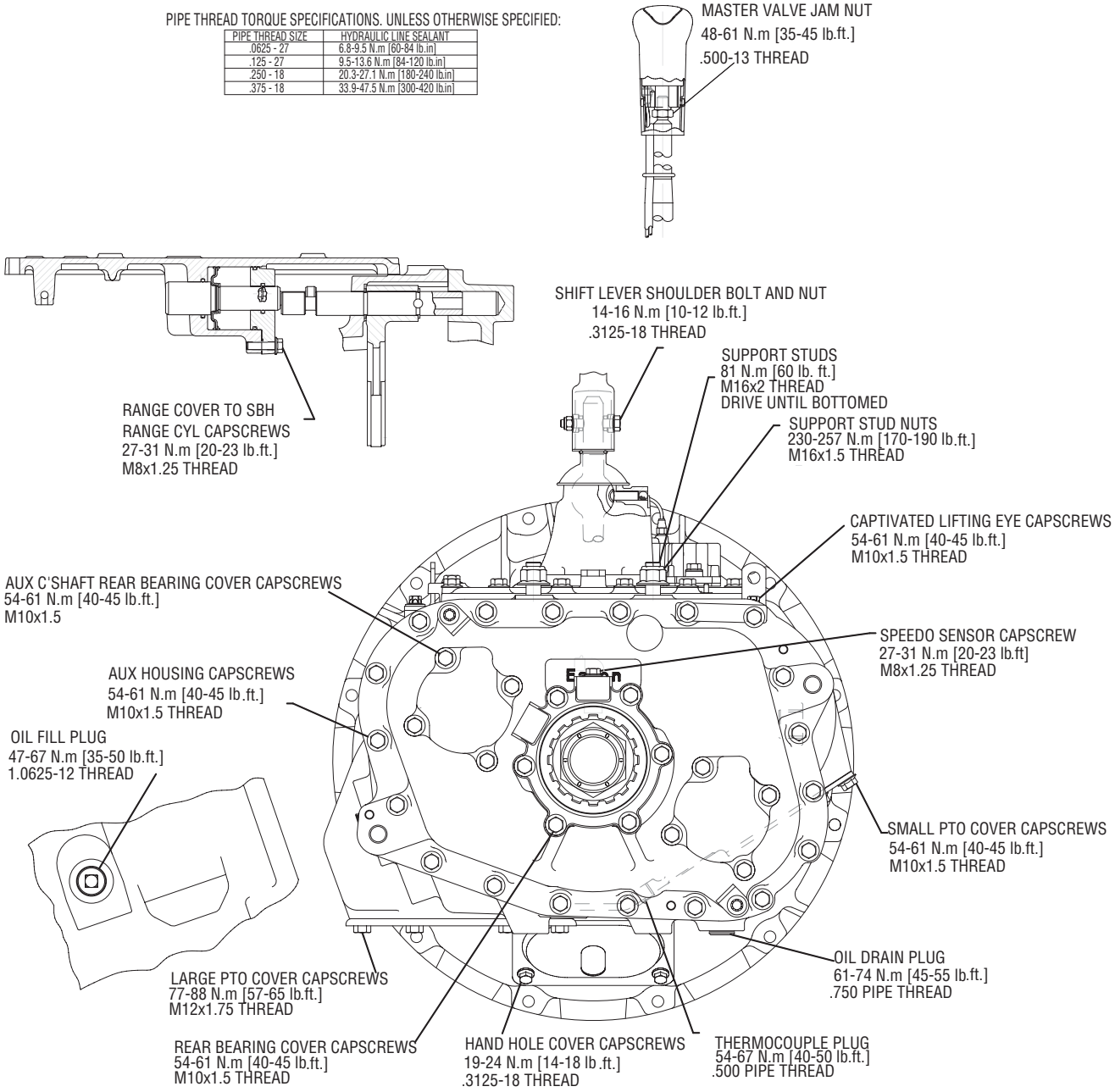

https://truckmanualshub.com/

Power Flow Diagrams

An understanding of the engine's power flow through a transmission in each particular gear will assist the technician in troubleshooting and servicing a transmission.

The Eaton Fuller Roadranger transmission can be thought of as two separate "transmissions" combined into one unit. The first "transmission" or front section contains six gear sets which are shifted with the gear shift lever. The second "transmission" called the auxiliary section, contains two gear sets and is shifted with air pressure.

Note: This transmission is referred to as a constant mesh type transmission. When in operation, all gears are turning even though only some of them are transferring power.

Figure 2-3 below shows the transmission with the main components called out. Note that the transmission is in the neutral position because the sliding clutches are all in their center positions and not engaged is any gears.

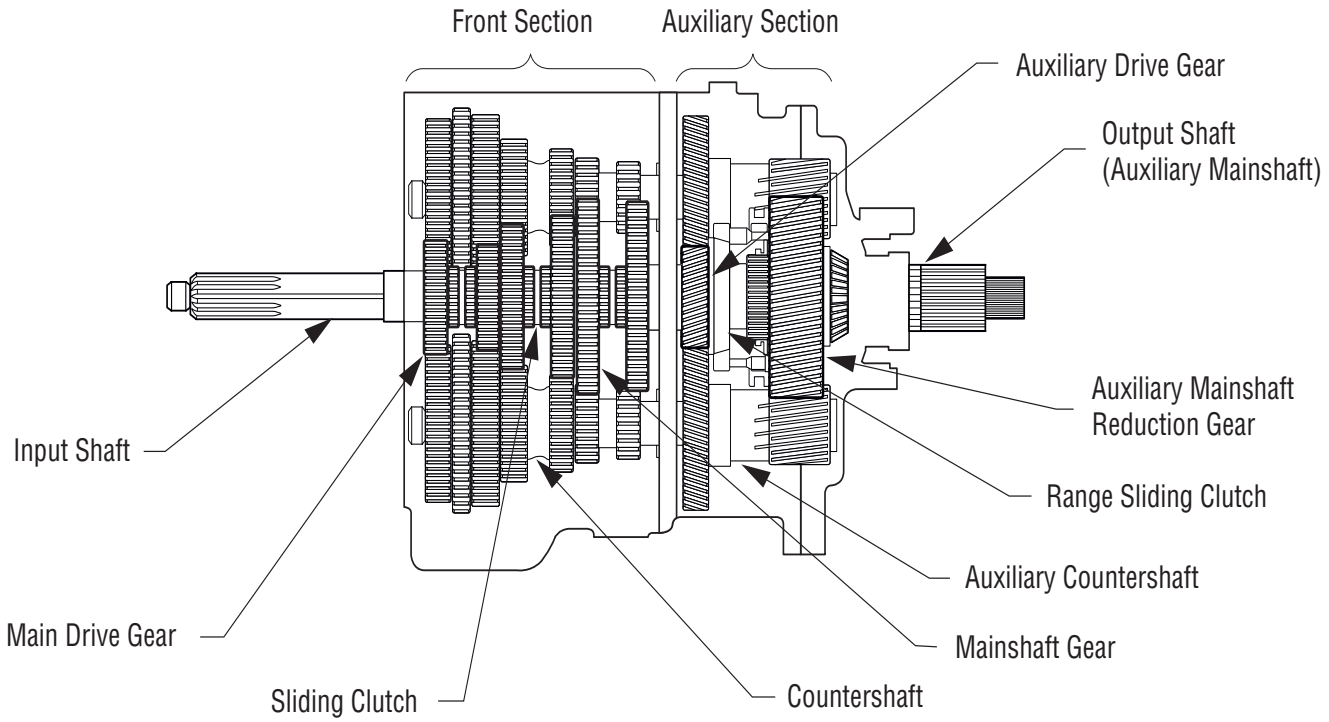

Figure 2-3. Transmission Components Important for Understanding Power Flow

https://truckmanualshub.com/

Front Section Power Flow

Note: The heavy lines in Figure 2-4 outline the power flow description below. For help in understanding the transmission components, refer to Figure 2-3.

1. Power (torque) from the vehicle's engine is transferred to the transmission's input shaft.
2. The input shaft rotates the main drive gear through internal splines in the hub of the gear.
3. The main drive gear meshes with both countershaft driven gears and the torque is split between both countershafts.
4. Because the countershaft gears are in constant mesh with the mainshaft gears, all the front section gearing rotates. However, only the engaged mainshaft gear will have torque. External clutching teeth on the sliding clutch will engage internal clutching teeth on the selected mainshaft gear. Torque will now be provided from both opposing countershaft gears, into the engaged mainshaft gear, and through the sliding clutch to the front section mainshaft.
5. The rear of the front section mainshaft is spined into the auxiliary drive gear and torque is now delivered to the auxiliary section.

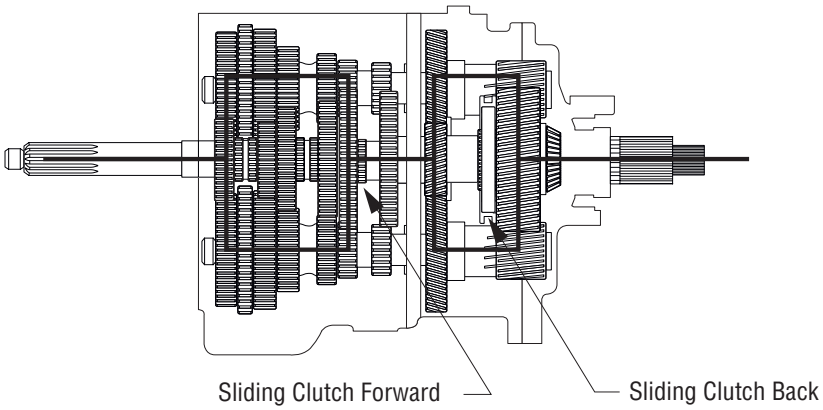

Figure 2-4 Front Section Torque (1st Gear)

https://truckmanualshub.com/

Front Section Power Flow - Direct gear

In direct gear (5th/10th for FR model, 4th/9th for FRO model), the front sliding clutch is moved forward and engages into the back of the main drive gear. Torque will flow from the input shaft to the main drive gear, main drive gear to sliding clutch, sliding clutch straight into the front section mainshaft which delivers the torque to the auxiliary drive gear.

Note: All countershaft and mainshaft gears will rotate, but the gears will not be loaded.

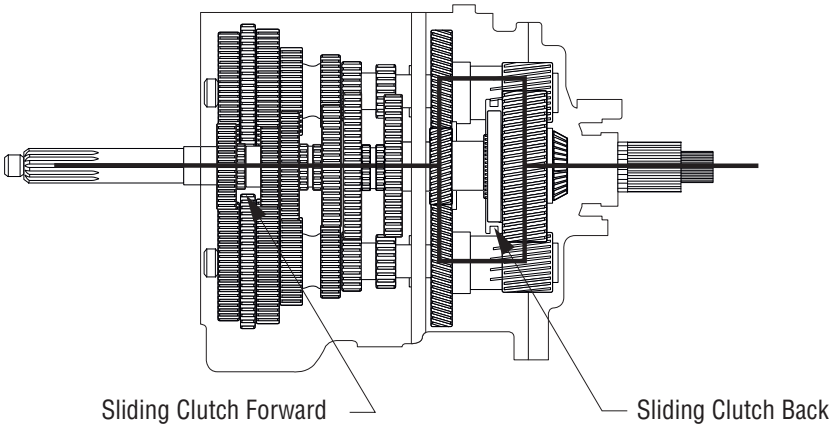

Figure 2-5 5th Gear FR, 4th Gear FRO

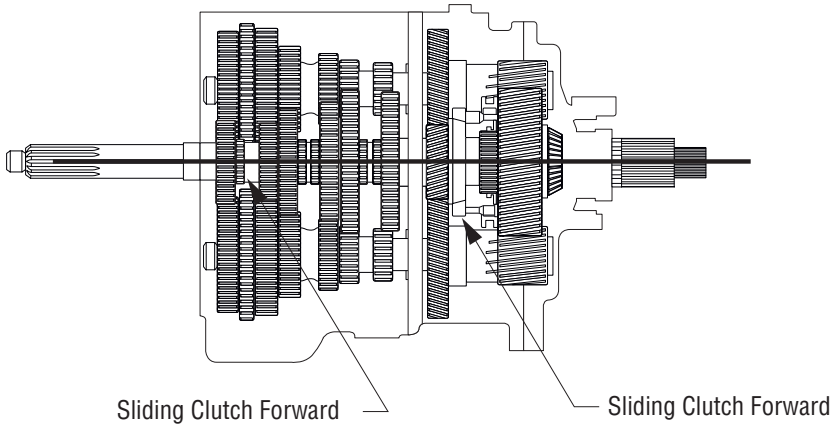

Figure 2-6 10th Gear FR, 9th Gear FRO

https://truckmanualshub.com/

Front Section Power Flow - Reverse Gear

Torque will flow from the countershafts to the reverse idler gears. Torque will then flow from the reverse idler gears to the mainshaft reverse gear. Torque will now travel through the mainshaft reverse gear, the sliding clutch in the reverse position and then to the mainshaft and auxiliary drive gear.

Note: The idler gears cause the reversal of rotation.

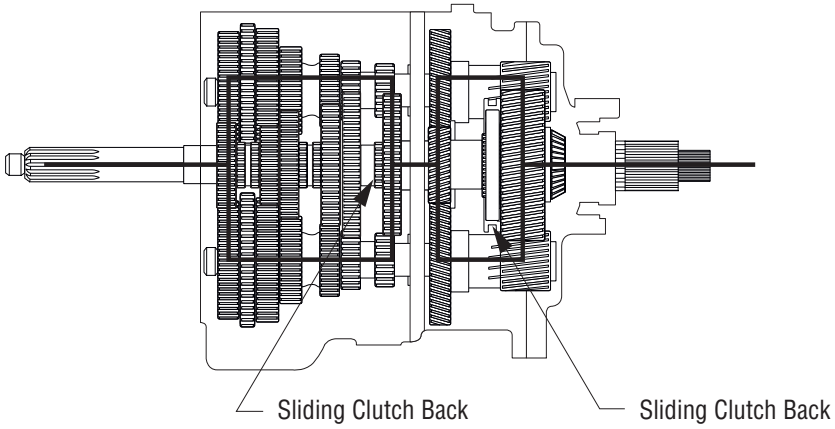

Figure 2-7 Reverse Gear - Low Range

https://truckmanualshub.com/

Auxiliary Section Power Flow - Low Range

The auxiliary drive gear transfers torque to both auxiliary countershafts.

If the auxiliary section is in low range, the range sliding clutch is rearward and engaged into the auxiliary mainshaft reduction gear. Torque will flow from the auxiliary countershafts, into the auxiliary mainshaft reduction gear, through the range sliding clutch and then into the output shaft (auxiliary mainshaft).

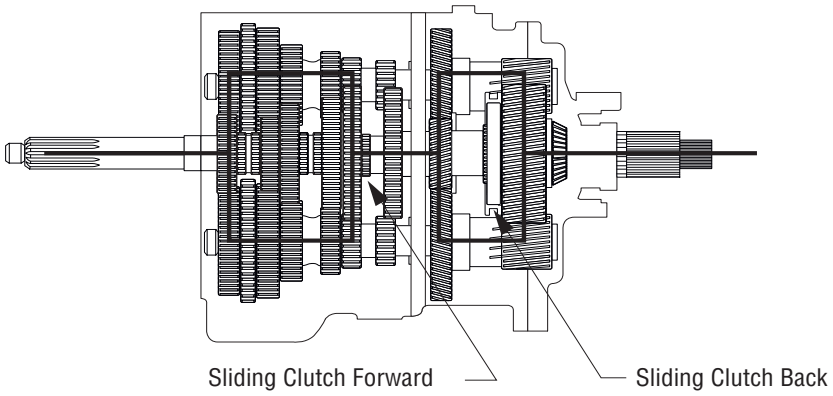

Figure 2-8 Low Range (Sliding Clutch Back)

https://truckmanualshub.com/

Auxiliary Section Power Flow - High Range

If the auxillairy section is in high range, the range sliding clutch is forward and engaged into the back of the auxiliary drive gear. Torque will flow from the auxillairy drive gear to the range sliding clutch. Because the range sliding clutch has internal splines which connect to the output shaft, torque will flow straight through the auxiliary section.

Note: The auxiliary gearing will still turn, but the gears will not be loaded.

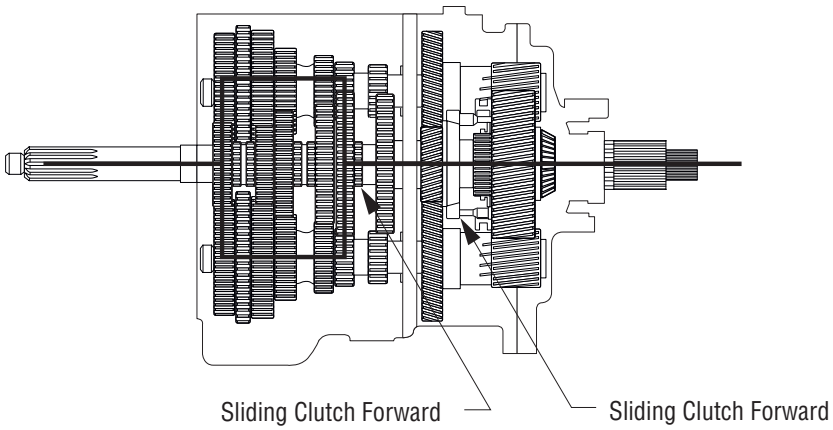

Figure 2-9 High Range Selected (Sliding Clutch Forward)

https://truckmanualshub.com/

FR/FRO-1X210

1st Gear

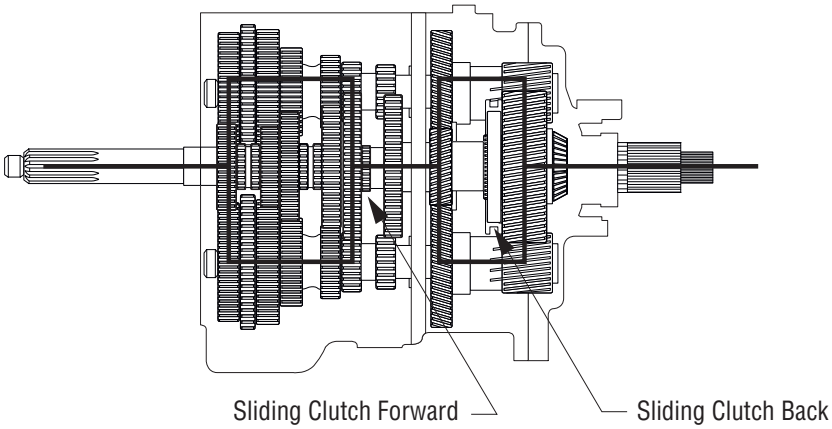

2nd Gear

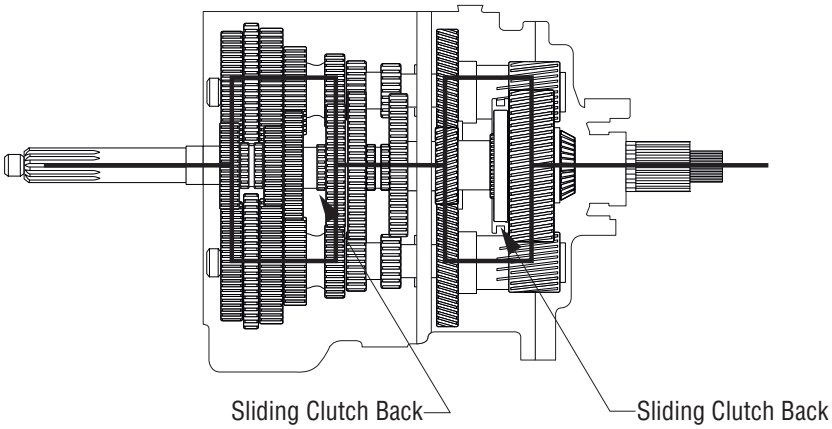

3rd Gear

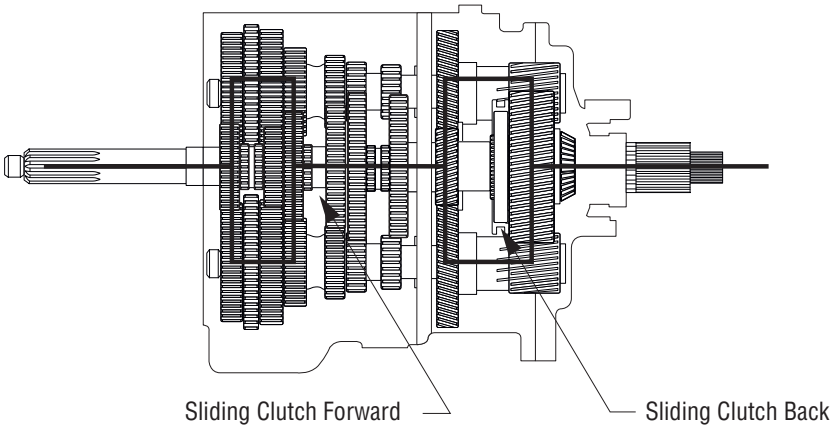

https://truckmanualshub.com/

4th Gear-FR/Direct Drive Transmission

5th Gear- FRO/Overdrive Transmission

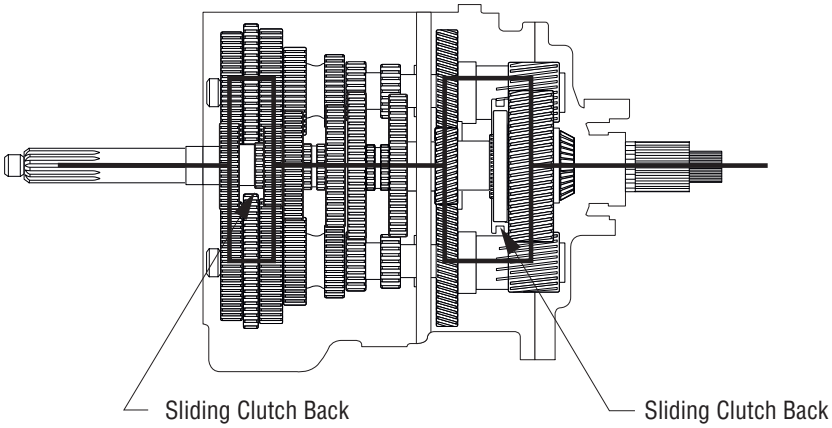

5th Gear- FR/Direct Drive Transmission

4th Gear FRO/Overdrive Transmission

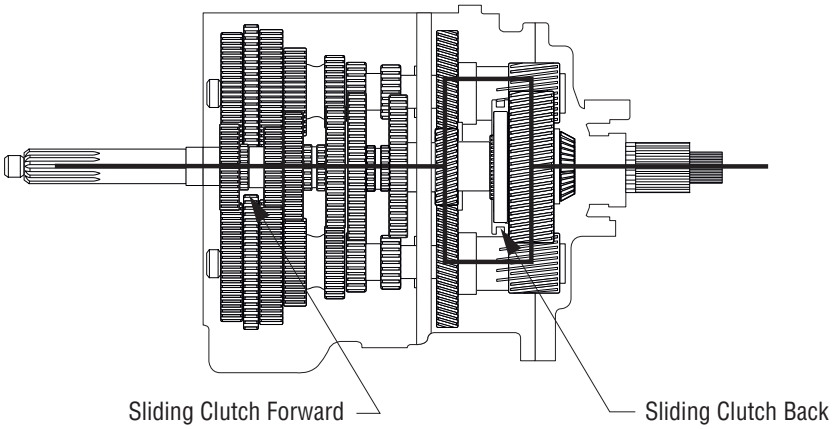

6th Gear

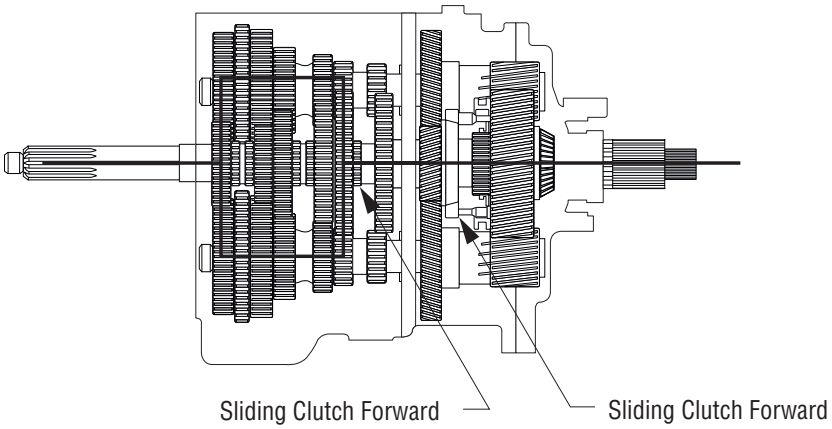

https://truckmanualshub.com/

7th Gear

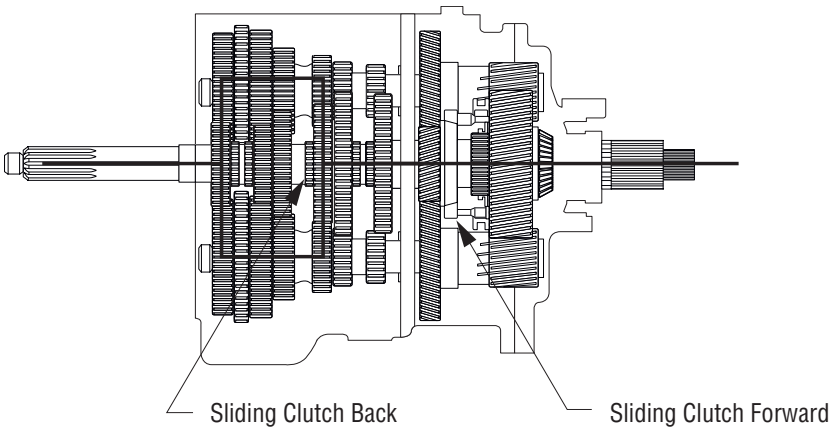

8th Gear

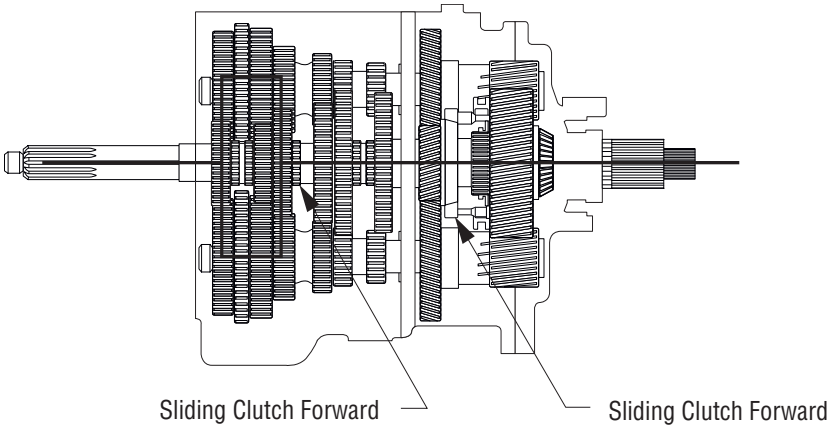

9th Gear-FR/Direct Drive Transmission

10th Gear-FRO/Overdrive Transmission

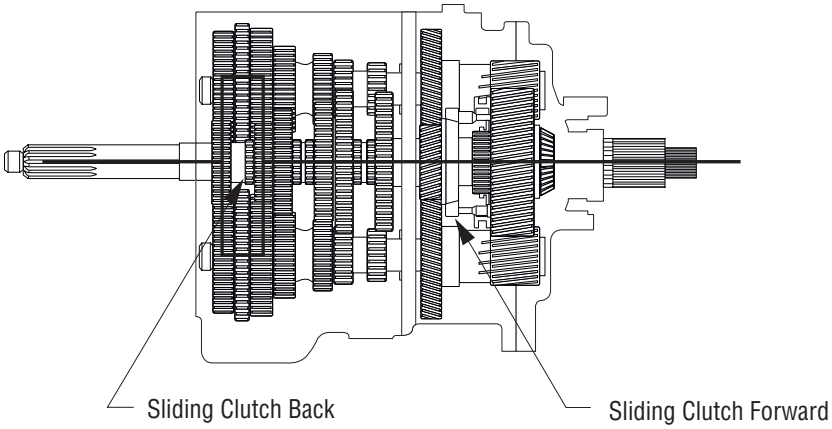

https://truckmanualshub.com/

10thGear-FR/Direct Drive Transmission

9th Gear-FRO/Overdrive Transmission

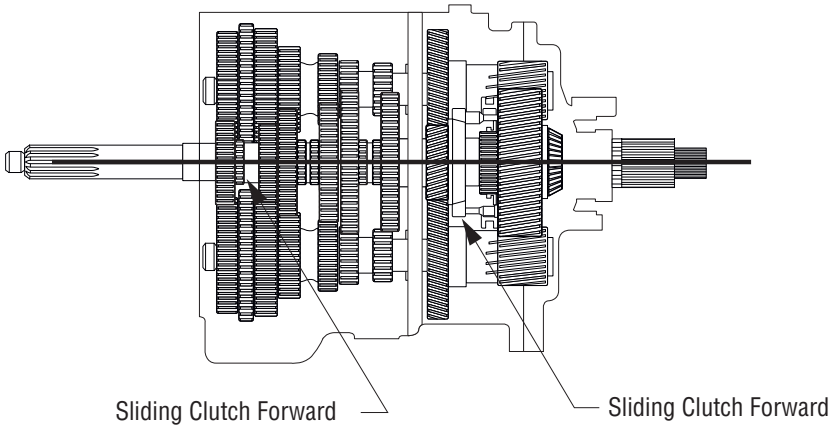

https://truckmanualshub.com/

Air System Troubleshooting

The symptoms listed below are covered on the following pages. Before beginning any of those troubleshooting procedures, place the transmission in neutral and move the range selection lever from low to high. Listen for any constant air leak from the shift knob, air module base (exhaust), or transmission breather. If a constant leak is heard, go to that particular leak troubleshooting procedure first.

If you do not see the symptom you need to correct, refer to the General Troubleshooting chart.

Symptom

- Air Leak from Air Module Base (Exhaust Leak)
- No or Slow Range Shift into High (Shift into low range is good)
- No or Slow Range Shift into Low (Shift into high range is good)
- Constant Air Leak from Shift Knob
- Range Shifts in Gear
- Air Leak from Transmission Breather or Transmission Case is Pressurized

Note: Use the air system troubleshooting procedures for part replacement only if the symptom can be duplicated. If the problem is intermittent, parts that are not defective could be replaced.

Note: During all testing, the vehicle air pressure must be greater than 90 PSI (620 kPa). If during testing the pressure falls below 90 PSI (620 kPa), make sure the transmission is in neutral, start the engine and let the pressure build to governor cutoff. After the pressure reaches the governor cutoff, continue testing. The pressure is critical if the vehicle is equipped with a vehicle air system Pressure Protection Valve that would shut off the air supply to certain air circuits if the system pressure dropped below a preset level.

Note: A 0-150 PSI (0-1034 kPa) air gauge with a 1/16" male pipe thread fitting attachment is required for some of the test procedures.

Note: Regulated air pressure is 75 to 85 PSI (517 - 586 kPa).

⚠ WARNING

Prior to removing the air module, exhaust the air from it. Failure to exhaust the air module may result in personal injury or damage to parts from the sudden release of air.

Use care when removing the test port pipe plugs. If air pressure is present on the plug, it can become a projectile during removal. When removing the “L” plug or “H” plug, pressure can be shut off by selecting the opposite range mode. If removing the “F” plug, exhaust the air to the module inlet.

https://truckmanualshub.com/

Air System Symptom - Air leak from Module Base (Exhaust)

Short bursts of air leakage from the module base (exhaust) are normal as the range system is shifted. The module base is defined as both the interface of the module cover and module base and the extreme underside of the module. Leakage is a problem when it is audible and constant. Air leakage from the module base may result from either a defective air module or a defective range piston. The following procedure will identify the defective component.

Test Procedure:

1. Check for air leakage from the module base (exhaust) in each of the four following conditions. (Make sure the range is shifted when the shift lever is shifted into neutral.)

a. Range selection lever in Low and shift lever in neutral.

b. Range selection lever in Low and shift lever in gear.

c. Range selection lever in High and shift lever in neutral.

d. Range selection lever in High and shift lever in gear.

Record the findings (constant leak or no leak) in the following table.

	Range Selector in LOW	Range Selector in HIGH
Lever in Neutral		
Lever in Gear		

2. If the information you recorded at step 1 matches one of the following tables, replace the air module. If your table does not match either of the tables, it will be necessary to isolate and test the air module separately, continue to step 3.

	Range Selector in LOW	Range Selector in HIGH
Lever in Neutral	No Leak	Constant Leak
Lever in Gear	No Leak	Constant Leak

	Range Selector in LOW	Range Selector in HIGH
Lever in Neutral	Constant Leak	Constant Leak
Lever in Gear	Constant Leak	Constant Leak

⚠ WARNING

Failure to exhaust the air pressure may cause personal injury or damage to parts.

3. Exhaust the air pressure from the air module. To do so, the vehicle's air tanks may need to be exhausted.

4. Leaving all air lines connected to the module, remove the four capscrews attaching the air module to the shift bar housing. Lift the air module and tilt it to gain access to the two air holes at the underside on the rear capscrew location. Do not damage or lose the two o-rings used to seal the holes.

5. Block off the air ports on the underside of the module. Use a piece of gasket material or rubber material to seal the bottom of the module as shown in Figure 4-4 "Air System Nomenclature".

6. Repressurize the air module with an inlet supply pressure of over 90 PSI (620 kPa). To repressurize the air module, the vehicle may need to be started and air pressure allowed to build up.

https://truckmanualshub.com/

7. Check for air leakage in both high and low range. If air continues to leak constantly from the exhaust, the air module is defective. If air does not leak, a range cylinder piston or piston seal failure has occurred. Remove the shift bar housing to gain access to the range shift cylinder.

Air System Symptom - No or Slow Range Shift into High (Shift into Low Range is Good)

This transmission contains a SynchroSaver feature to protect the high range synchronizer. When high range is selected and a front section gear is engaged, air pressure is supplied to both sides of the range piston, which reduces synchronizer force. Therefore, if the driver engages a front section gear before the high range synchronizer engages, the high range synchronizer will remain in neutral. When a front section gear engages before the synchronizer shift completes, the driver must shift the lever back to neutral to allow the high range synchronizer to complete its shift. Once the range shift is complete, the driver can complete the front section shift.

If the high range synchronizer hangs up or is slow to synchronize, the front section may engage first. The driver complaint will be that the transmission “neutralizes” on a shift to high range. If this condition occurs, perform the following test of the air system to eliminate the air system as the source of the problem. If the air system performs properly, then the problem is internal to the transmission range synchronizer system.

Note: The driver must preselect all range shifts.

Note: If a capscrew or stud is installed too far into the right side (air module side) rear support hole, the fastener can extend too far into the transmission. The fastener may contact the range yoke and bind the range synchronizer assembly during the range shift.

Test Procedure

1. Check the shift knob operation.

On the shift knob, remove the screws holding the plastic skirt. Slide the skirt down and out of the way. Move the range selection lever up into high range. Disconnect the black line connected to the “P” port on the knob.

Question	Result	What to do next
Does air come out of the “P” port on the knob	Yes	Repair or replace the knob
	No	Reconnect the air line to the knob, and continue to the next step.

2. Test the regulator pressure. (Regulator pressure should be between 75 and 85 PSI (517-586 kPa))

Reconnect the “P” line at the shift knob. Locate the two small pipe plugs on the rear of the air module. One is labeled “H” the other “L”. (See figure 4-1 “Air System Nomenclature”). Install a 0-150 PSI (0-1034 kPa) air gauge in the port marked “H.”

Note: Prior to removing the pipe plug, turn off the air flow by flipping the range selector down into the low range position. The transmission must be in neutral.

Move the range selector up to the high range position and record the pressure on the gauge. Match the pressure to one of those on the chart on the next page, and follow the corresponding instructions.

Question	Result	What to do Next
What is the air pressure at the “H” port?	75-85 PSI (517-586 kPa) (to specification)	Continue to the next step

https://truckmanualshub.com/

Question	Result	What to do Next
	Less than 75 PSI (517 kPa)	Warning: The pipe plug to be removed in this procedure is pressurized and could be expelled with great force. To prevent personal injury or damage to parts, exhaust the air module before removing the plug, and repressurize the air module after installing the gauge. On the top of the air module, remove the test port pipe plug for filtered vehicle air. (Marked “F” as shown in figure 4-1.) Install the test gauge in the “F” port, and check the pressure. If the pressure is less than 90 PSI (620 kPa), repair the vehicle air system to achieve full vehicle air pressure at the air module inlet, and repeat the test. If the pressures greater than 90 PSI (620 kPa) and no external air leaks were detected from the air module, shift knob, or transmission, replace the air module.
	Greater than 85 PSI (586 kPA)	Replace the air module

3. Check the spool valve function.

With the shift lever in neutral, move the range selector from low to high several times. Answer the question on the chart below, and follow the instructions corresponding to the result.

Question	Result	What to do Next
Does the gauge rapidly go from 75-85 PSI (517-586 kPa) in High to 0 PSI in Low?	Yes	Air system performs properly. Go to step 5.
	No	Continue to the next step

4. Isolate and test the air module. Refer to Figure 4-4 “Air System Nomenclature” to see an example of an isolated air module.

WARNING

Failure to exhaust the air module may cause personal injury or damage to parts due to the rapid release of air.

Exhaust the air pressure from the air module. To do so, the vehicle air tanks may need to be exhausted. Remove the four capscrews attaching the air module to the shift bar housing. Lift the air module and tilt it to gain access to the two air holes at the underside at the rear capscrew location. Do not damage or lose the two O-rings used to seal the holes. Block off the air ports on the underside of the module. Repressurize the air module with an inlet supply pressure of over 90 PSI (620 kPa). To repressurize the air module, the vehicle may need to be started and the air pressure allowed to build. With the shift lever in neutral and the gauge still in the “H” test port, move the range selection lever from high to low (down) position.

Answer the question on the chart below, and follow the instructions corresponding to the result.

Question	Result	What to do Next
Does the gauge rapidly go from 75-85 PSI (517-586 kPa) in High to) PSI in Low?	Yes	Continue to the next step.
	No	Replace the air module.

https://truckmanualshub.com/

5. Install the air module, and remove the range alignment lock cover (Figure 4-3 “Air System Nomenclature”). Then move the range selection lever from the low to high (up) position. If range now shifts properly, inspect and correct the source of binding between lock cover and range yoke bar. NOTE: To prevent binding, range alignment lock cover capscrews must be tightened when transmission is in Low Range. If the transmission does not shift properly, continue to Step 6.

6. Remove the auxiliary section and inspect the range synchronizer, range yoke, range yoke bar, range yoke snap ring, range sliding clutch, and mating gears for excessive wear, binding, or damage. Repair as necessary. If these components do not need repair, continue to Step 7.

7. Remove the shift bar housing and inspect the range piston, piston bar, and cylinder for excessive wear, binding, or damage. Repair as necessary.

https://truckmanualshub.com/

Air System Symptom - No or Slow Range Shift into low (Shift into High is Good)

Test Procedure:
1. Check the shift knob operation.

On the shift knob, remove the two screws holding the plastic skirt. Slide the skirt down and out of the way. Move the range selector up into high range. Disconnect the black line connected to the “P” port on the knob. Move the range selector down into low. Answer the question on the chart below and follow the instructions corresponding to the result.

Question	Result	What to do Next
Does air come out of the “P” port on the knob?	Yes	Go to Step 3
	No	Reconnect the air line to the knob, and continue to the next step.

2. Check the air supply to the shift knob.

Disconnect the red line from the “S” port on the shift knob. Answer the question on the chart below and follow the instructions corresponding to the result.

Question	Result	What to do Next
Is air coming out of the red line?	Yes	Repair or replace the shift knob
	No	Loosen the air fitting for the line that supplies vehicle air to the module inlet. If no air is available here, repair the vehicle air to the air module. If air is available at the inlet, check the red line going from the air module to the shift knob for obstructions or damage. If the line is clear, replace the air module.

3. Check the black line for obstruction.

Reconnect the black line at the shift knob. At the air module, disconnect the black air line from the “P” port. Answer the question on the chart below and follow the instructions corresponding to the result.

Question	Result	What to do Next
Is air available on the line when the range selector is in the Low position?	Yes	Continue to next step
	No	Repair the black line for damage or obstruction.

4. Check the regulator pressure.

Reconnect the “P” line at the air module. Locate the two small pipe plugs on the rear of the air module. One is labeled “H,” and the other is labeled “L”. (See Figure 4-1 “Air System Nomenclature”). Install a 0-150 PSI (0-1034 kPa) air gauge in the port marked “L”.

Note: Prior to removing the pipe plug, turn off the air flow by placing the range selector up into the high range position. The transmission must be in neutral.

https://truckmanualshub.com/

Move the range selector down to the low position and record the pressure on the gauge. Match the air pressure to one of those described on the chart on the next page, and follow the corresponding instructions.

Question	Result	What to do Next
What is the air pressure at the “L” port?	75-85 PSI (517-586 kPa) (To specification.)	Continue to the next step.
	Less than 75 PSI (517 kPa)	Warning: The pipe plug to be removed in this procedure is pressurized and could be expelled with great force. To prevent personal injury or damage to parts, exhaust the air module before removing the plug, and repressurize the air module after installing the gauge On the top or the air module, remove the test port pipe plug for filtered vehicle air. (Marked “F” as shown in figure 4-1 “Air System Nomenclature”) Install the test gauge in the “F” port, and check the pressure. If the pressure is less than 90 PSI (620 kPa), repair the vehicle air system to achieve full vehicle air pressure at the module inlet, and repeat the test. If the pressure is greater than 90 PSI (620spa) and no external air leaks were detected form the air module, shift knob, or transmission, replace the air module.
	Greater than 85 PSI (586 kPa)	Replace the air module.

5. Check the spool valve function.

With the shift lever in neutral, move the range select from low to high several times. Answer the question on the chart below and follow the instructions corresponding to the result.

Question	Result	What to do Next
Does the gauge rapidly go from 75-85PSI (517-586 kPa) in Low to 0 PSI in High	Yes	Air system performs properly. Go to step 7.
	No	Continue to the next step.

6. Isolate the air module from the transmission. Refer to Figure 4-4 “Air System Nomenclature” to see an example of an isolated air module.

WARNING

Failure to exhaust the air module may cause personal injury or damage to parts due to the rapid release of air.

Exhaust the air pressure from the air module. To do so, you may have to exhaust the vehicle air. Remove the four capscrews attaching the air module to the shift bar housing. Lift the air module and tilt it to gain access to the two air holes on the underside at the rear capscrew location. Do not lose or damage the two small O-rings that seal the holes. Block off the air ports at the underside of the module. Repressurize the air module with an inlet supply pressure of over 90 PSI (620 kPa). To repressurize the air module, the vehicle may have to be started and the air pressure allowed to build. With the shift lever in neutral and the gauge still in the “L” test port, move the range selector from low to high (up) position.

https://truckmanualshub.com/

Air System Troubleshooting

Answer the question on the chart below, and follow the corresponding instructions.

Question	Result	What to do Next
Does the gauge rapidly go from 75-85PSI (517-586 kPa) in Low to 0 PSI in High	Yes	Continue to next step.
	No	Replace the air module.

7. Install the air module, and remove range alignment lock cover (Figure 4-4 “Air System Nomenclature”). Then move the range selector from low to high (up) position. If range now shifts properly, inspect and correct source of binding between lock cover and range yoke bar. NOTE: To prevent binding, range alignment lock cover capscrew must be tighten when transmission is in Low Range. If transmission does not shift properly, continue to Step 8.

8. Remove the auxiliary section, and inspect range synchronizer, range yoke, range yoke bar, range yoke snap rings, range sliding clutch, and mating gears for excessive wear, binding, or damage. Repair as necessary. If these components do not need repair, continue to step 9.

9. Remove shift bar housing and inspect range piston, piston bar, and cylinder for excessive wear, binding, or damage. Repair as necessary.

https://truckmanualshub.com/

Air System Symptom - Constant Air Leak from Shift Knob

In normal operation, a burst of air will be exhausted from the shift knob when moving the range selector from low to high range.

If a constant air leak is detected, first check for a leaking fitting. If the leak occurs when both high and low range are selected and the leak is from the exhaust “E” port on the shift knob. Repair or replace the shift knob.

If the leak only occurs in high range, check for reversed hook up of “P” and “S” air lines. If the air lines are connected properly, repair or replace the shift knob.

https://truckmanualshub.com/

Air System Symptom - Range Shift While Transmission is in Gear

The interlock mechanism allows the driver to move the range selection lever while still in gear (preselect). The range will then shift when the shift lever moves into neutral. If the driver preselects a range shift and the shift occurs while the shift lever is in gear, a problem is present.

Test Procedure:

WARNING

Failure to exhaust the air module may cause personal injury or damage to parts due to the rapid release of air.

1. Exhaust air pressure from the air module. To do so, the vehicle air may need to be exhausted.

2. Remove the four capscrews attaching the air module to the shift bar housing. Lift the air module and tilt it to gain access to the module interlock finger. Do not lose or damage the two O-rings at the rear mounting capscrew.

3. Inspect the module interlock finger for excessive wear. Replace, if necessary.

4. Shine a bright light into the hole the interlock finger engages. Inspect the chamfer on the shift shaft for excessive wear. To inspect the chamfer, the transmission may need to be shifted into gear so both the forward and rearward chamfers are visible. If the chamfer is excessively worn, remove the shift bar housing, disassemble, and replace the worn parts.

5. If the shift shaft is not excessively worn, replace the air module.

https://truckmanualshub.com/

Air System Symptom - Air Leak From Breather or Case is Pressurized

If the air leak occurs when the transmission is in high range, the problem is with the range cylinder in the transmission. Remove the shift bar housing, and disassemble and inspect the range cylinder for worn or missing o-rings. Also, inspect the shift bar housing for cracks or porosity.

If the leak only occurs when the transmission is shifted to low range, the air module may be leaking into the transmission at the interlock finger location. Prior to removing the shift bar housing, perform the following test to determine the problem.

Test Procedure:

⚠ WARNING

Failure to exhaust the air module may cause personal injury or damage to parts due to the rapid release of air.

Exhaust the air pressure from the air module. To do so, the vehicle air may need to be exhausted. Remove the four capscrews attaching the air module to the shift bar housing. Lift the air module and tilt it to gain access to the two air holes at the underside at the rear capscrew location. Do not lose or damage the two small o-rings near the rear capscrew location. Block off the air ports on the underside of the module (Figure 4-4 “Air System Nomenclature”). Repressurize the air module with an inlet supply pressure of over 90 PSI (620 kPa). Repressurizing the air module may require starting the vehicle and allowing the air pressure to build. Shift the transmission into low range. Answer the question on the chart below, and follow the instructions corresponding to the result.

Question	Result	What to do Next
Can any air leakage be detected at the module interlock finger	Yes	Replace the air module
	No	Air leak is at the range cylinder. Remove the shift bar housing, and disassemble and inspect the range cylinder for worn or missing o-rings. Also inspect the shift bar housing for cracks or porosity.

https://truckmanualshub.com/

General Troubleshooting Chart

The chart on the following pages contains some of the most common problems that may occur with this transmission along with the most common causes and solutions.

Complaint	Cause	Corrective Action
Noise - Growl / Rumble	Torsional Vibration. [Noise may be most pronounced when transmission is in a “float” (low torque) condition. May also be confined to a particular vehicle speed.]	Check driveline angles for proper u-joint working angles. Check driveline for out of balance or damage. Check u-joints for proper phasing. Check clutch assembly for broken damper springs. Check for inadequate clutch disc damping.
	Transmission bearing or gear failure. [Noise may be most pronounced under hard pull or coast (high torque).]	Check transmission oil for excessive metal particles.
Noise - Growl / Rumble at Idle (Idle Gear Rattle)	Excess engine torsional vibration at idle.	Check for low engine RPM. Check for uneven engine cylinder performance. Check for proper clutch damper operation.
Noise - High Pitched Whine	Gear Noise. Isolate as to axle or transmission noise. If transmission, isolate to specific gear or gears.	Check for worn or defective shift lever isolator. Check for direct cab or bracket contact with transmission (“grounding”). Check for proper driveline u-joint working angles. Check for damaged or worn gearing.

https://truckmanualshub.com/

General Troubleshooting Chart (cont)

Complaint	Cause	What to do next
Hard Lever Shifting (Shift lever is hard to gear into or out of gear)	Master clutch dragging.	Check master clutch for proper disengagement. Check master clutch for proper adjustment (both release bearing travel and clutch brake height).
	Shift linkage problem. (Remote shifter)	Check shift linkage or cables for proper adjustment, binding, lubrication, or wear.
	Shift bar housing problem.	Check shift bar housing components for binding, wear, or damage.
	Transmission mainshaft problem.	Check mainshaft for twist. Check sliding clutches for binding, damage, or excessive wear.
	Driver technique.	Driver not familiar or skilled with proper double-clutching technique. Driver contacting the clutch brake during shifts.
Shift Lever Jumpout (Shift lever comes out of gear on rough roads)	Loose or worn engine mounts.	Check engine mounts for damage, wear, or excessive looseness.
	Shift lever problem.	Check shift lever floor boot for binding or stretching. Check shift lever isolator for excessive looseness or wear. Check for excessive offset or overhang on the shift lever. Check for extra equipment or extra weight added to shift lever or knob.
	Worn or broke detent spring or mechanism.	Check for broken detent spring. Check for excessive wear on the detent key of detent plunger. Replace detent spring with heavier spring or add additional spring.

https://truckmanualshub.com/

General Troubleshooting Chart (cont)

Complaint	Cause	Corrective Action
Shift Lever Slipout (Transmission comes out of gear under torque)	Internal transmission problem.	Check for excessively worn or damaged sliding clutches or shift yokes.
Transmission goes to neutral (Shift lever doesn't move)	Low air pressure.	Check air regulator pressure.
	Internal transmission problem.	Check for excessively worn or damaged range sliding clutch or yoke.
No range shift or slow range shift (Also see Air System Troubleshooting)	Transmission air system problem.	Preform air system troubleshooting procedure. Check for proper air signal from master valve. Check air module test ports for proper air delivery.
	Range cylinder problem.	Check for failed or damaged range piston, piston bar, or cylinder. Check for failed or loose range piston snap ring.
	Range yoke assembly problem.	Check for failed or damaged range yoke. Check for failed or loose range yoke snap rings. Check for excessively long fastener installed in rear support hole. Check for binding between range yoke bar and range alignment lock cover.
	Range synchronizer problem.	Check for failed or damaged range synchronizer, sliding clutch, or mating gear. Check for excessively worn range synchronizer friction material.
Grinding Noise on Range Shift	Driver not preselecting range shift.	Instruct driver to preselect range shifts.
	Range synchronizer worn or defective.	Check range synchronizer and mating parts for excessive wear or damage.

https://truckmanualshub.com/

Air System Overview

The range shift air system uses pressurized air to allow the operator to shift the auxiliary section between low range and high range. The operator controls this shift with a switch on the shift knob.

The range shift air system components are described below in figure 2-10, which shows the transmission with the air system components labeled.

Shift knob (Master Control Valve)
Located in the shift knob, the master control valve is an operator controlled switch. When the range selector is in the down position, low range is selected. When the range selector is in the up position, high range is selected.

Air Module
Located on the top of the transmission, this module contains an air filter, and air pressure regulator, a spool valve, and an interlock mechanism. Depending on the position on the range selector, the air module directs air flow to the low range or high range side of the range piston to complete a range shift

The Range Shift Interlock feature of the air module allows the driver to preselect range shifts (place the range selector in the up or down position) while the transmission is still in gear. The system interlock will prevent the range shift until the shift lever and transmission are in neutral. The range shift will complete as the shift lever passes through neutral, This feature prevents transmission damage and smooths shifting. The air module interlock operation is described in greater detail later in this section.

Figure 2-10 Transmission Air System Components

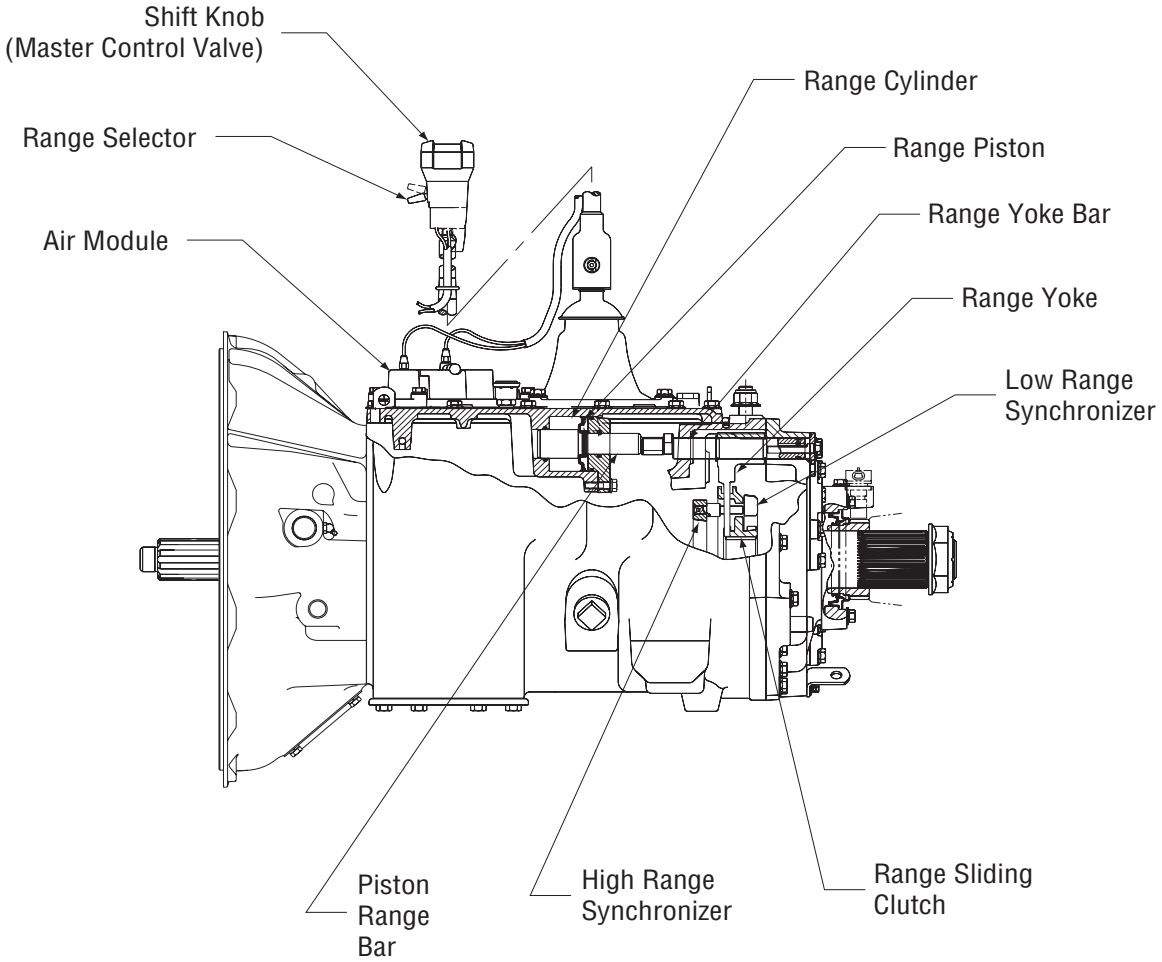

https://truckmanualshub.com/

Range Cylinder and Piston
The range cylinder is located on the underside of the shift bar housing. It contains the range piston and bar assembly. The range piston and bar assembly is connected with the range yoke bar to move the range sliding clutch back and forth. Depending on the position of the range selector, pressurized air is supplied to the front or back of the range piston to shift the auxiliary section into low or high range.

Range Bar and Yoke
Located in the transmission auxiliary section, the range yoke bar and yoke move the range sliding clutch to low or high range. The range yoke bar extends into the main case where it is connected with the range piston bar. The range yoke is positioned in the slot of the range sliding clutch. When the range cylinder moves the range bar and yoke, the yoke moves the sliding clutch into the high or low range position.

Range Sliding Clutch and Synchronizer
The range sliding clutch and synchronizer are located on the auxiliary mainshaft (output shaft). The range sliding clutch connects the auxiliary mainshaft to either the auxiliary drive gear (in high range) or the auxiliary reduction gear (in low range). The synchronizer allows the sliding clutch to move into gear without grinding.

https://truckmanualshub.com/

Air Module Part Nomenclature

Figure 2-11 shows the air module with its components labeled. Refer to this figure as necessary while reading about the air system.

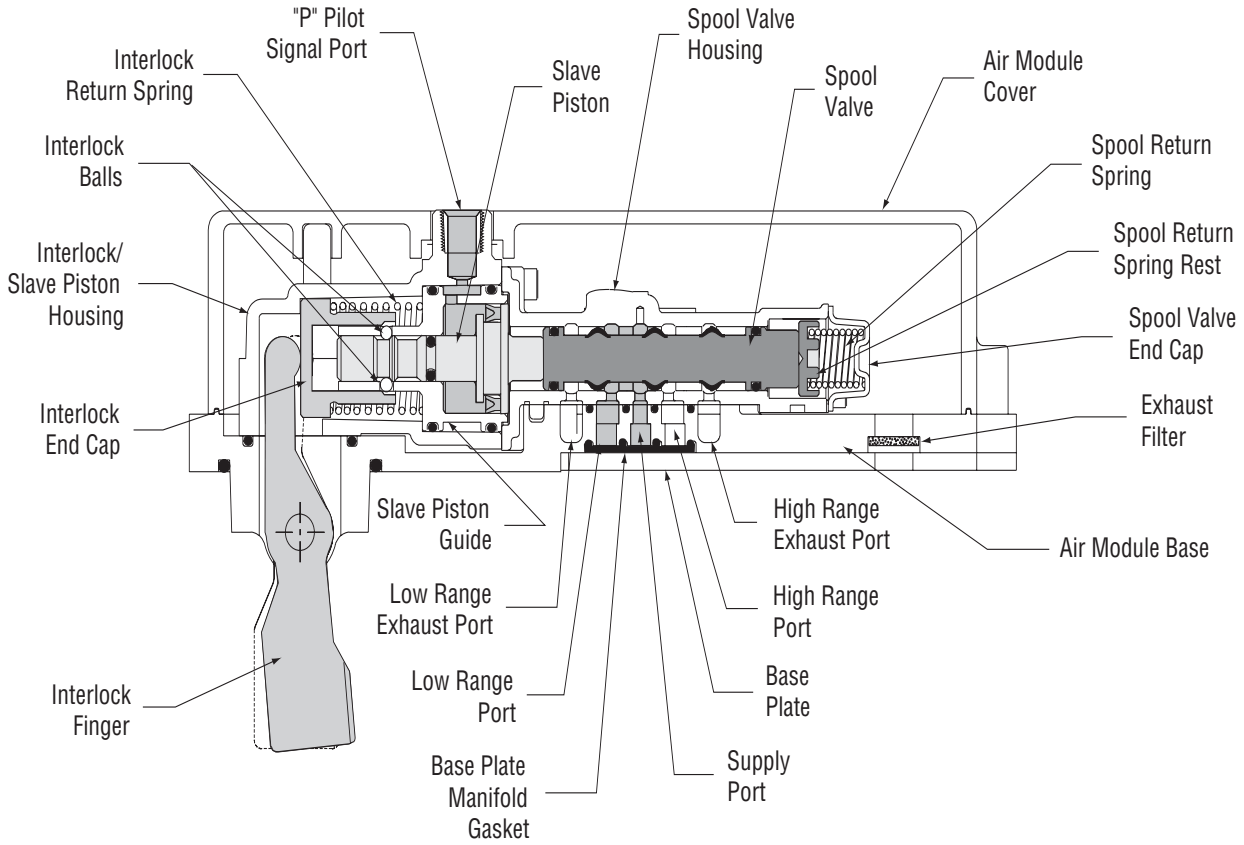

Figure 2-11 Air Module Part Nomenclature

https://truckmanualshub.com/

Air Module Interlock

Purpose
The air module interlock allows the range to shift only when the transmission is in neutral. The interlock prevents a range shift when a front section gear is engaged.

This feature allows the driver to preselect the range shift (move the range selector on the shift knob) while a front section gear is still engaged. The range shift will start and finish as the shift lever is moved through neutral. The range shift must occur with the front section in neutral to prevent damage to the range synchronizers.

Interlock Construction
The air module interlock finger extends out of the bottom of the air module and through a hole in the shift bar housing where it contacts the shift shaft. The interlock return spring continuously forces the interlock finger against the shift shaft.

The shift shaft contains a groove that corresponds with the neutral shift position. The groove provides clearance so that the interlock finger and interlock end cap can move to the relaxed position when the transmission front section is in neutral.

Four interlock balls are contained in four separate holes in the slave piston guide. The slave piston end of the interlock end cap contains a relief that provides clearance for the interlock balls.

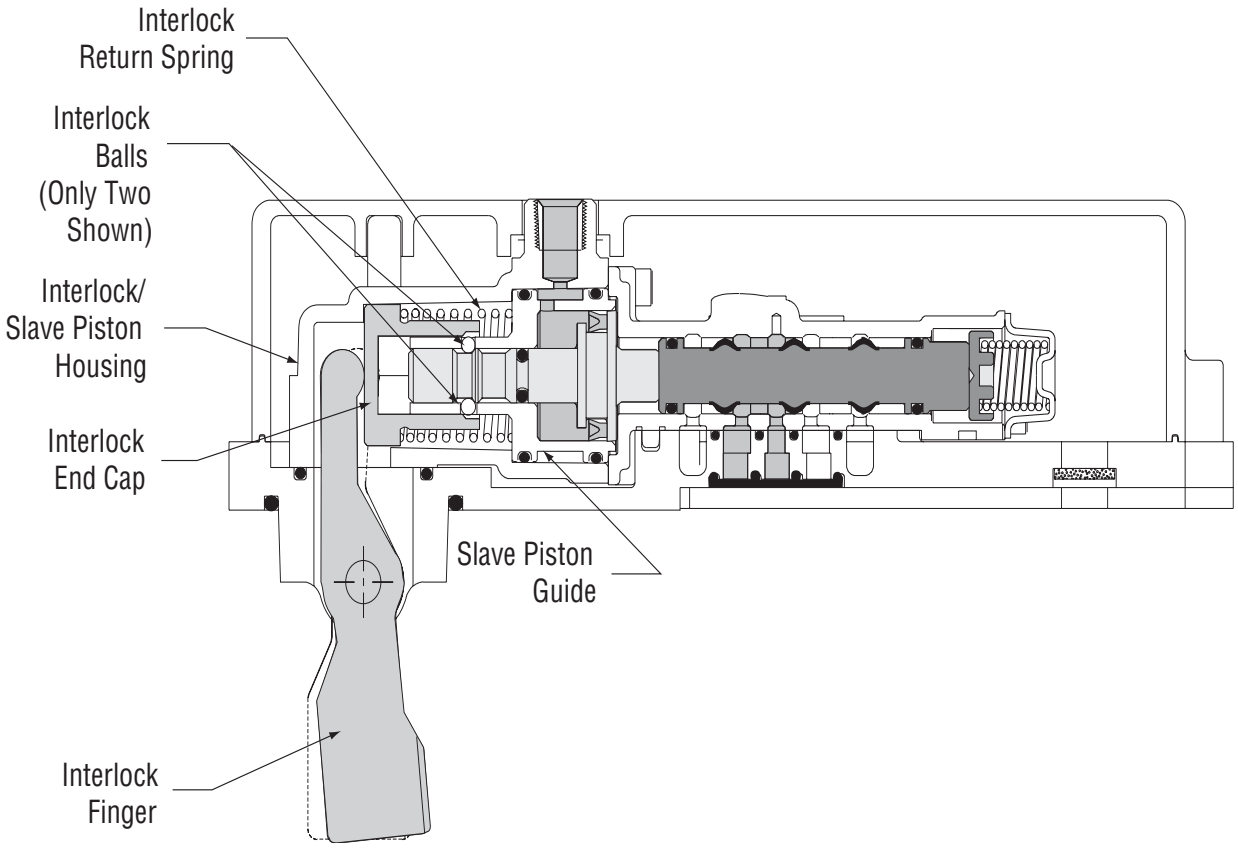

Figure 2-12 Air Module Interlock Components

https://truckmanualshub.com/

Interlock Operation

When the transmission front section is shifted into gear, the shift shaft is moved either forward of rearward. When the shift shaft moves, the interlock finger rides up a ramp and out of the shift shaft neutral notch. The interlock finger pivots into the air module and forces the interlock end cap to the right, compressing the interlock return spring. The four interlock balls are forced down into their respective holes. In this position, the interlock balls drop into a groove on the slave piston and prevent fore and aft movement of the slave piston. This effectively locks the slave piston and spool valve in position. Figure 2-13 shows the positioning of the air module interlock components when the shift lever is in gear.

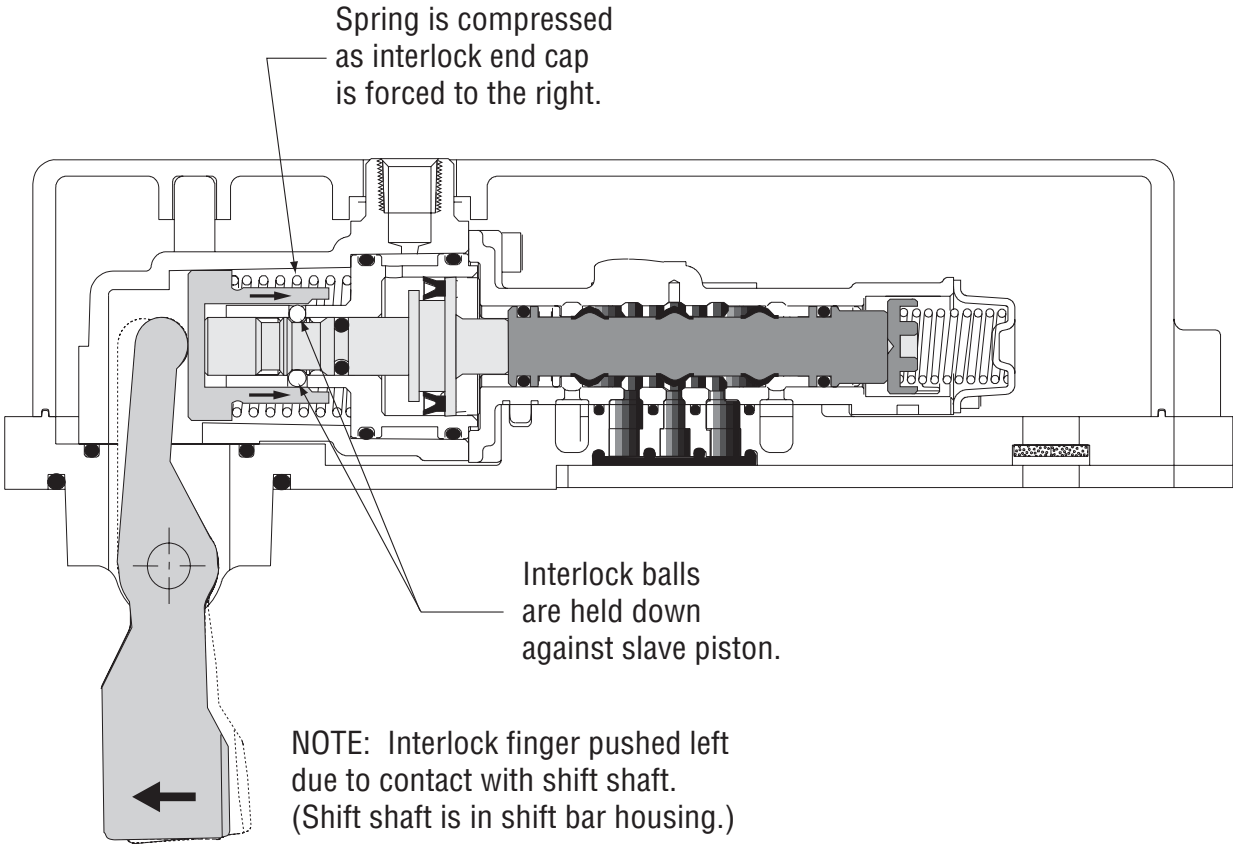

Figure 2-13 Interlock with Shift Lever in Gear

https://truckmanualshub.com/

When the transmission is shifted to neutral, the interlock return spring forces the interlock end cap to the left as the interlock finger pivots into the neutral notch on the shift shaft. The interlock balls can now move up out of the groove on the slave piston and the slave piston can move freely. Figure 2-14 shows the positioning of the air module interlock components when the shift lever is in neutral.

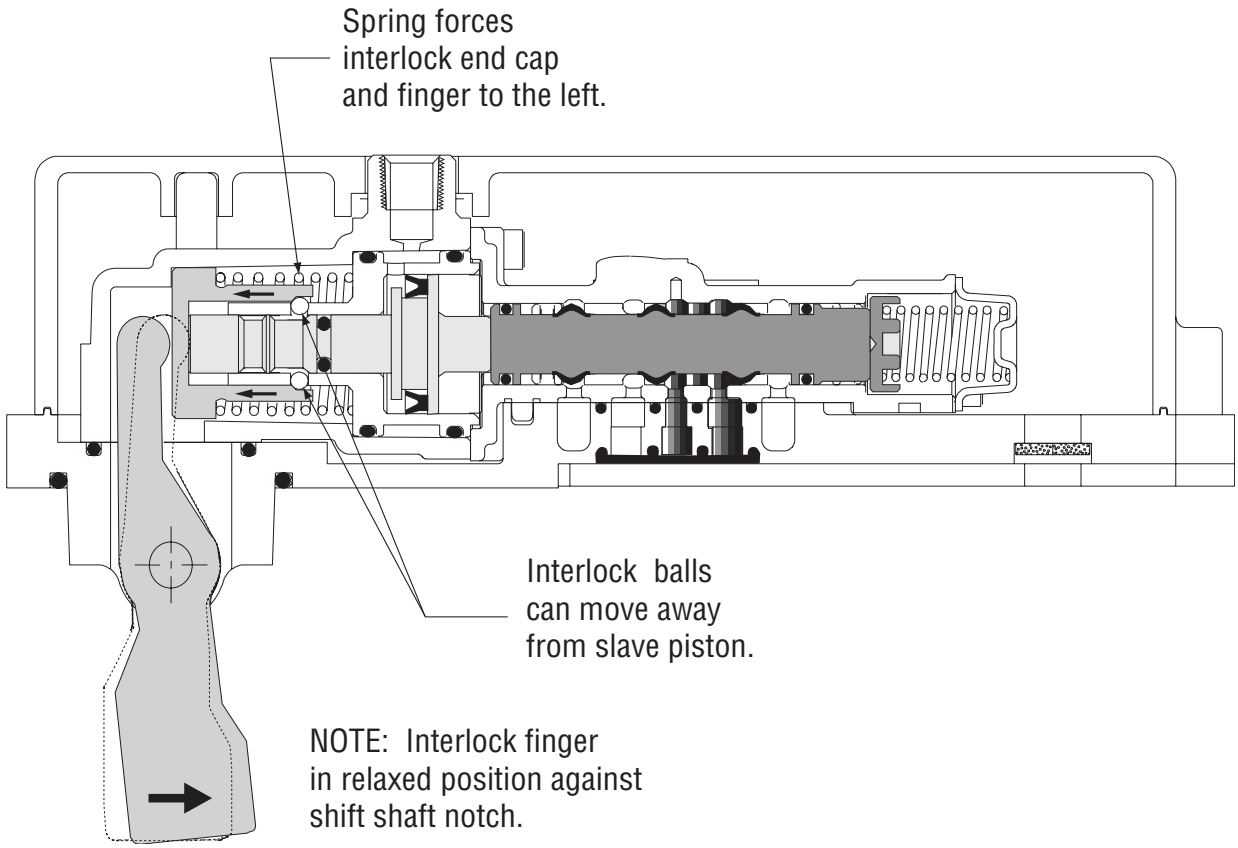

Figure 2-14 Interlock with Shift Lever in Neutral

https://truckmanualshub.com/

Air System Air Flow

Supply Air Flow

Vehicle air is supplied to the air module inlet at the vehicle air pressure of 90-130 PSI (620-896 kPa). The air passes through the inlet filter inside the air module and goes to a pressure regulator, which regulates the air pressure to 80 PSI (551kPa). Through internal passages of the air module, the regulated air is available at the “S” supply port on the air module cover and the supply port on the shift knob master valve through 1/8” or 5/32” plastic air line. Figure 2-14 shows the supply air flow through the air module.

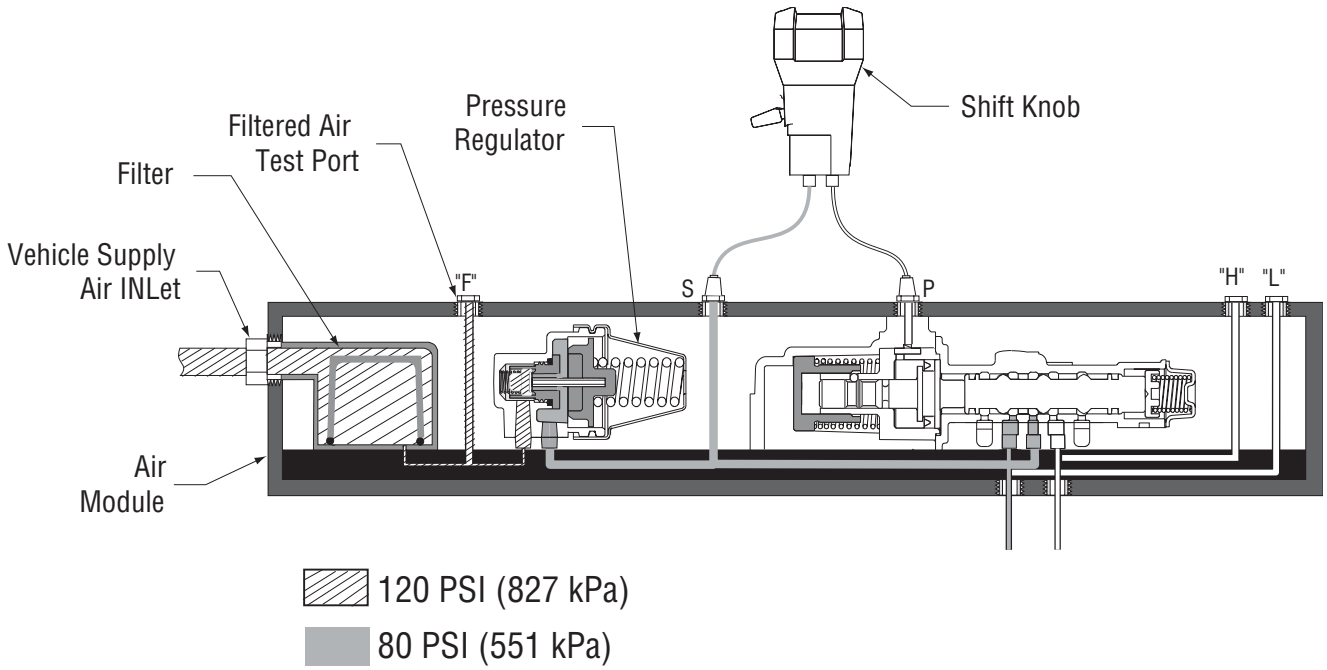

Figure 2-14 Supply Air Flow

https://truckmanualshub.com/

Low Range Air Flow

When low range is selected, supply air will flow through the air module spool valve to the low range port. Air flows through the low range passages in the air module and exits the module near the rear attaching capscrew. After exiting the air module, the air flows into a passage in the shift bar housing and is supplied to the front side of the range cylinder piston. The range piston, yoke, and sliding clutch move rearward to shift the auxiliary into low range. Figure 2-15 shows the low range air flow through the air module.

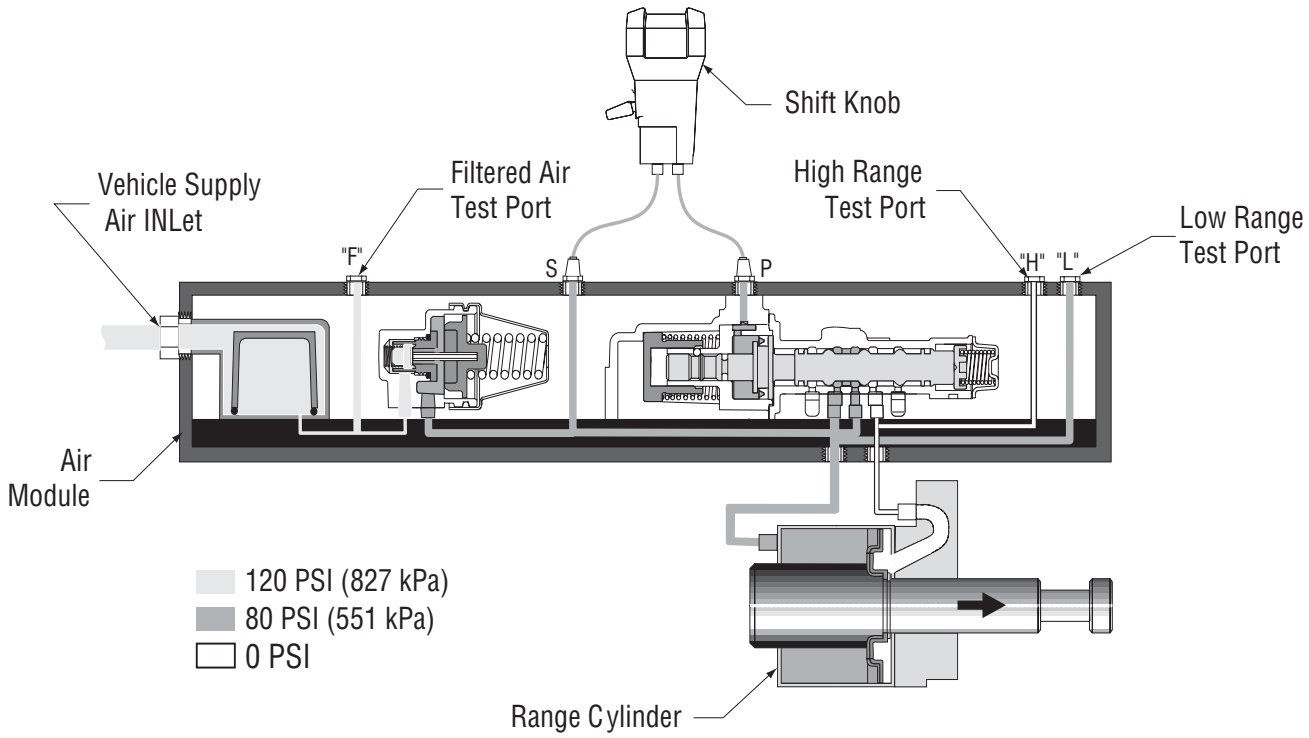

Figure 2-15 Low Range Air Flow

https://truckmanualshub.com/

High Range Air Flow

When high range is selected, supply air will flow through the air module spool valve to the high range port. Air flows through the high range passages in the air module and exits the module near the rear attaching capscrews. After exiting the air module, the air flows into a passage in the shift bar housing and is supplied to the back side of the range cylinder piston. The range piston, yoke, and sliding clutch move forward to shift the auxiliary into high range. Figure 2-16 shows the high range air flow through the air module.

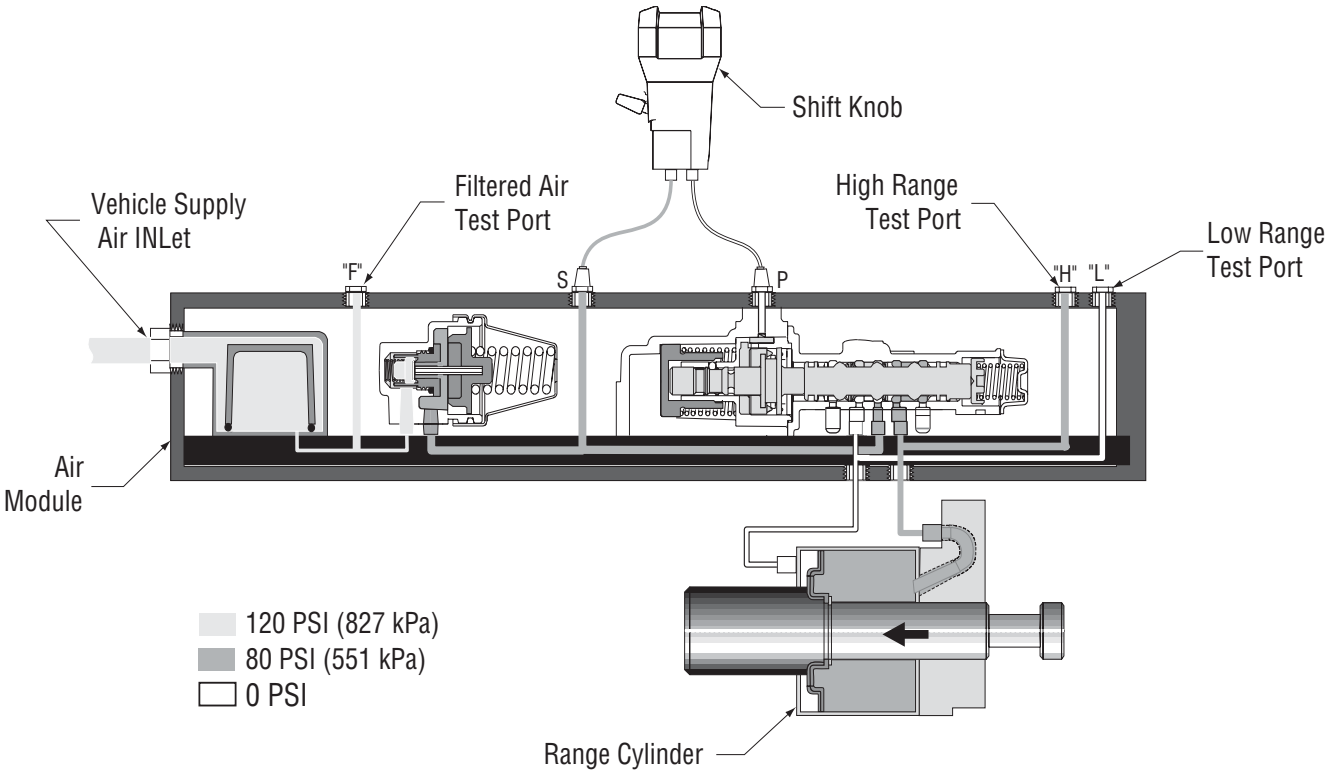

Figure 2-16 High Range Air Flow

https://truckmanualshub.com/

Air Module Operation

Low Range - Shift Lever in Neutral

When the range lever on the shift knob is placed in the down (low range) position, air flows through the master control valve and back to the air module through 5/32” air line. This signal air will enter the air module at the “P” port where it will enter the slave piston chamber. With the shift lever in neutral, the air pressure will move the slave piston and spool valve to the full right position as shown in figure 2-17, and the spool return spring will be compressed. At this point, the supply port will be connected with the low range port, and the high range port will be exhausted. Pressurized air will move the range piston, bars, range yoke, and range sliding clutch to the low range position.

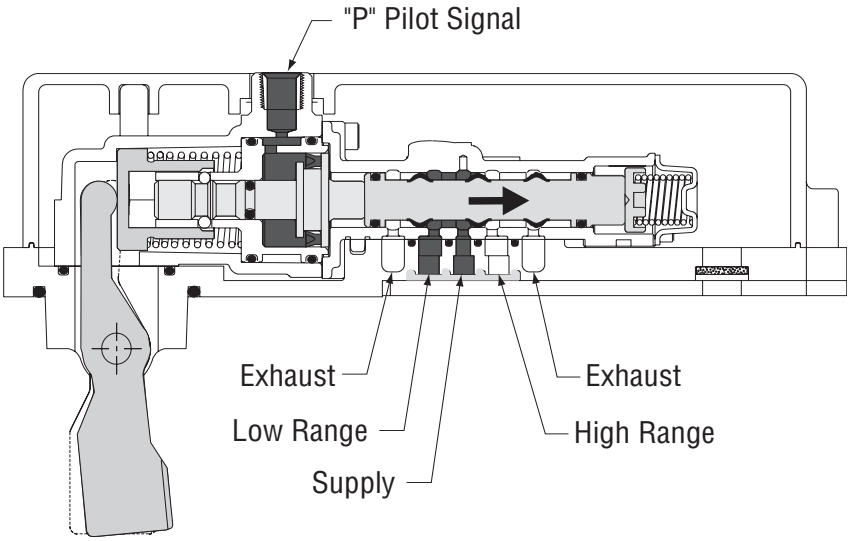

Figure 2-17 Air Flow for Low Range with Shift Lever in Neutral

Low Range - Shift Lever in Gear

When the transmission is shifted into gear, the interlock mechanism will shift to the right as shown in Figure 2-18, locking the slave piston and spool valve into position. Air flow through the air module is not affected.

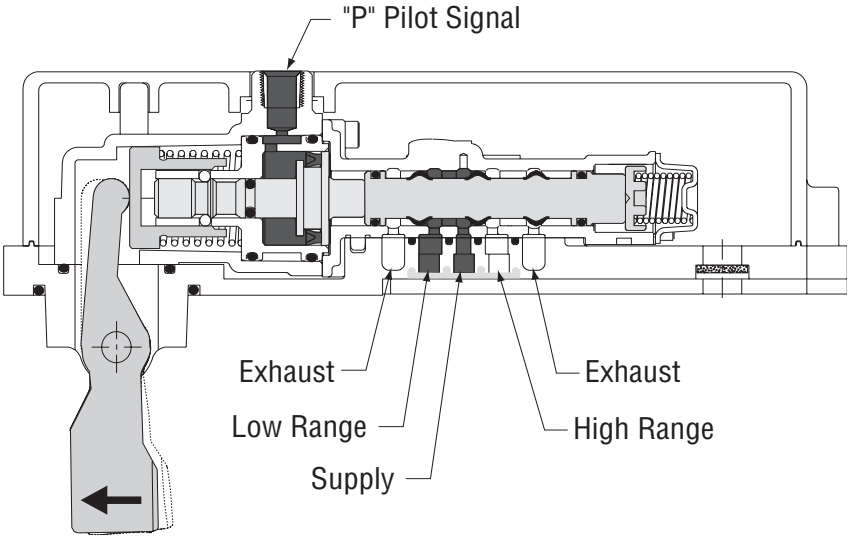

Figure 2-18 Air Flow for Low Range with Shift Lever in Gear

https://truckmanualshub.com/

Low Range - Shift Lever in Gear, High Range Preselected

With the shift lever still in gear, the driver will preselect high range by switching the range lever on the shift knob to the up position. When the range lever is in the up position, the air supply is shut off to the “P” port. The “P” air line will be exhausted at the shift knob. The spool valve and slave piston will not move due to the interlock mechanism and the transmission being in gear. Figure 2-19 shows the air flow with high range preselected.

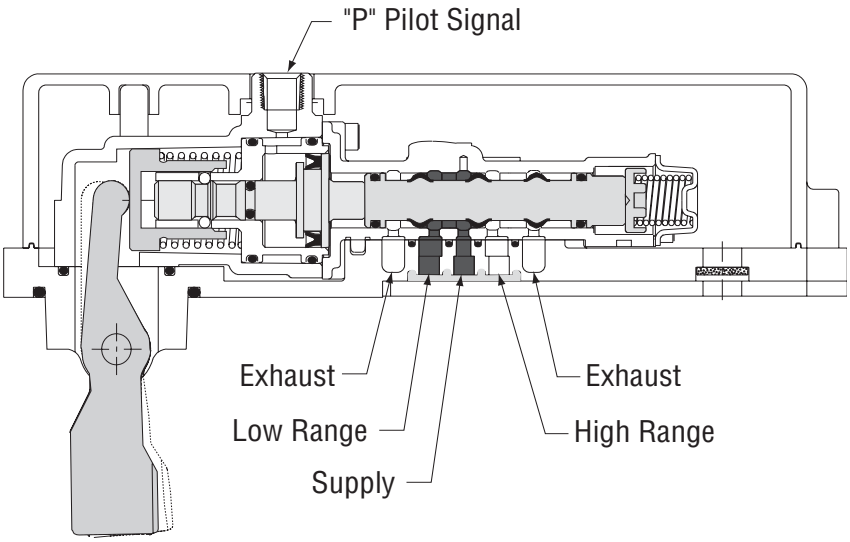

Figure 2-19 Air Flow for Low Range with high Range Preselected

High Range - Shift Lever in Neutral

With high range preselected, the interlock mechanism will release as soon as the shift lever is moved to neutral. The spool return spring will move the spool valve and the slave piston to the full left position. Supply air will be provided to the high range port. The low range port will be exhausted. Pressurized air will move the range piston, bars, range yoke, and range sliding clutch to the high range position. Figure 2-20 shows the air flow with high range selected and the shift lever in neutral.

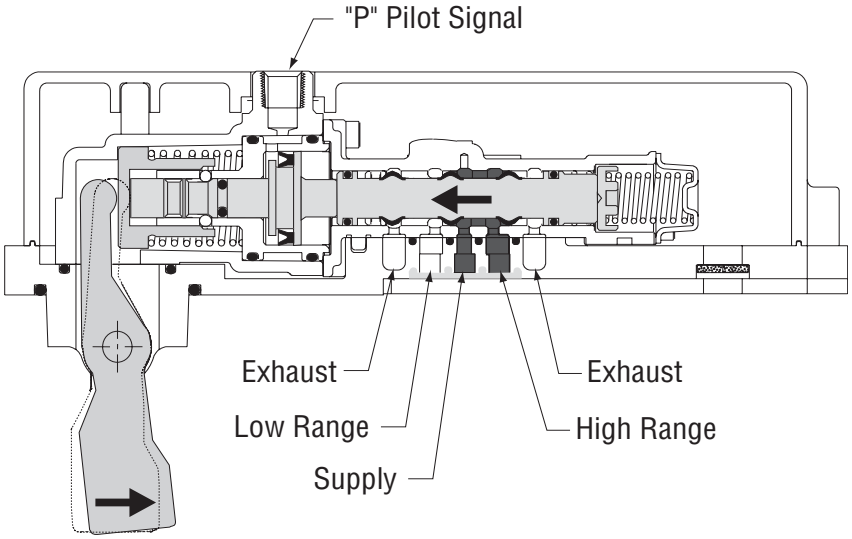

Figure 2-20 Air Flow for High Range with Shift Lever in Neutral

https://truckmanualshub.com/

High Range - Shift Lever in Gear

When the shift lever is moved into gear, the interlock finger moves the interlock end cap to the right, which activates the interlock mechanism. It also moves the slave piston and spool valve partially to the right. The partial travel of the spool valve exposes the low range port to pressurized air from the supply port. Supply air is available to both the low and high range ports, and both exhaust ports are sealed. Equal air pressure is available on both sides of the range cylinder piston. Because the high range side of the piston has more available surface area than the low range side, the range remains in high range. Figure 2-21 shows the air flow with high range selected and the shift lever in gear.

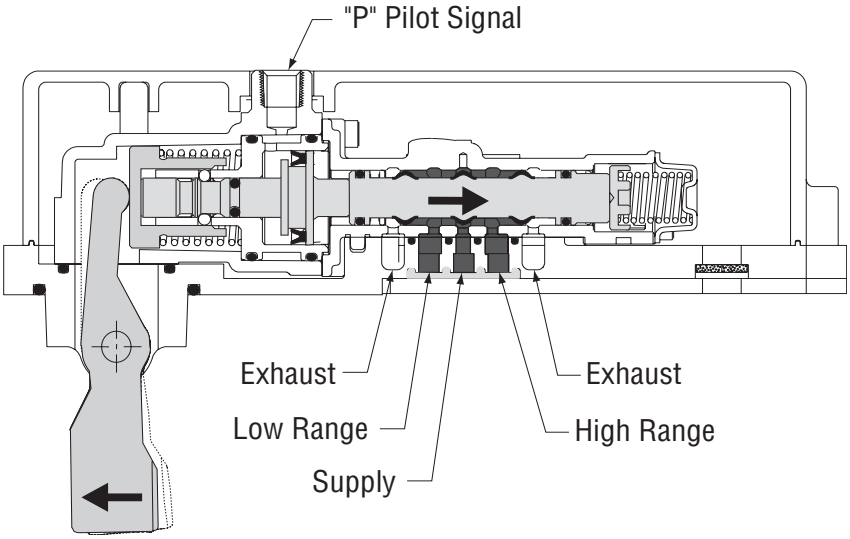

Figure 2-21 Air Flow for High Range with Shift Lever in Gear

https://truckmanualshub.com/

SynchroSaver Operation

For the range synchronizer to properly preform a range shift, the front section of the transmission must be in neutral. The range shift occurs after being properly preselected and while the driver moves the shift lever through neutral to the next gear

Because the range synchronizer can be damaged if the driver engages the front section while the range synchronizer attempts to synchronizer for high range, a range synchronizer protection feature (SynchroSaver) is incorporated in this design.

The SynchroSaver™ feature protects the synchronizer by decreasing the force the synchronizer applies to the auxiliary drive gear when the front section is engaged in gear.

When high range is selected and the transmission is in neutral, air pressure is available on the high range side of the piston and no air pressure is available on the low range side of the piston. The air pressure creates maximum force on the range piston, range yoke, and high range synchronizer to provide a fast and efficient shift into high range.

When the transmission is in gear, air pressure is supplied to both the high range and low range side of the range piston to equalize the air pressure on both sides. however, the high range side of the piston has a slightly larger surface area than the low range side; therefore, some force (much reduced from in neutral) is still trying to shift the transmission to high range. The reduced force will prevent extensive damage to the high range synchronizer.

https://truckmanualshub.com/

Air System Nomenclature

Figures 4-1 through 4-3 below show the air module, shift knob, and range alignment lock cover (earlier models) with their components labeled. These are the primary components used during troubleshooting. If necessary, refer to these figures while troubleshooting the air system.

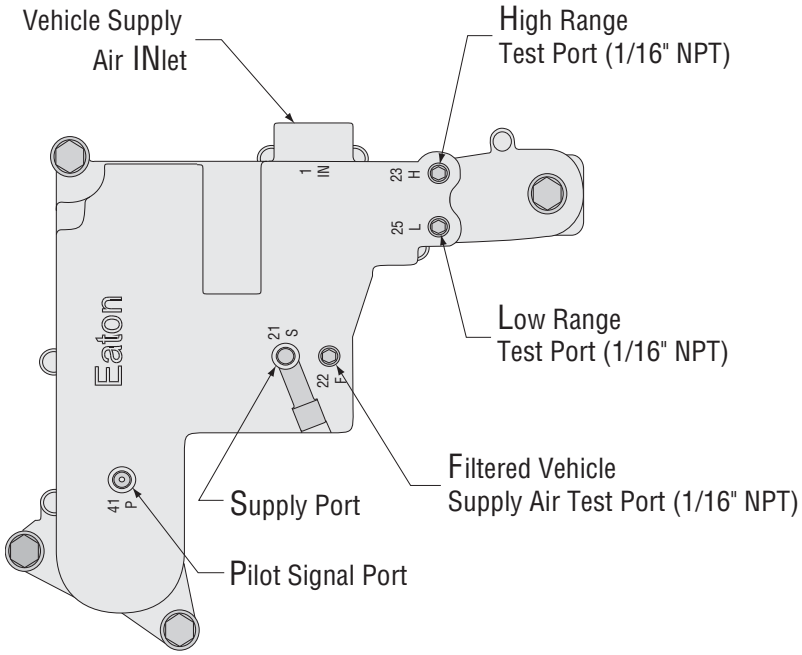

Figure 4-1 Air Module Ports

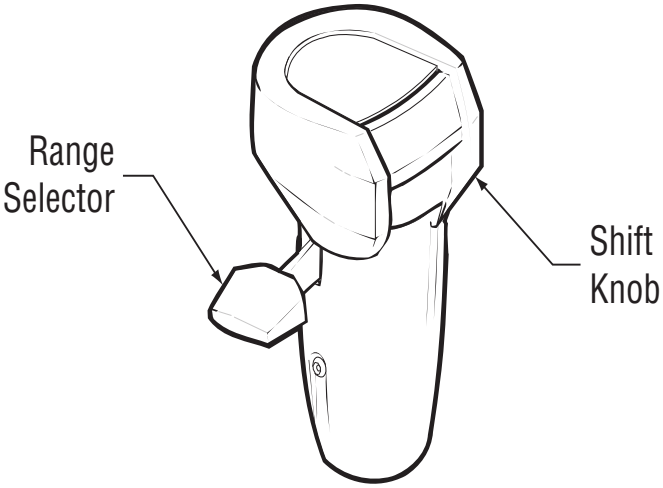

Figure 4-2 Shift Knob Components

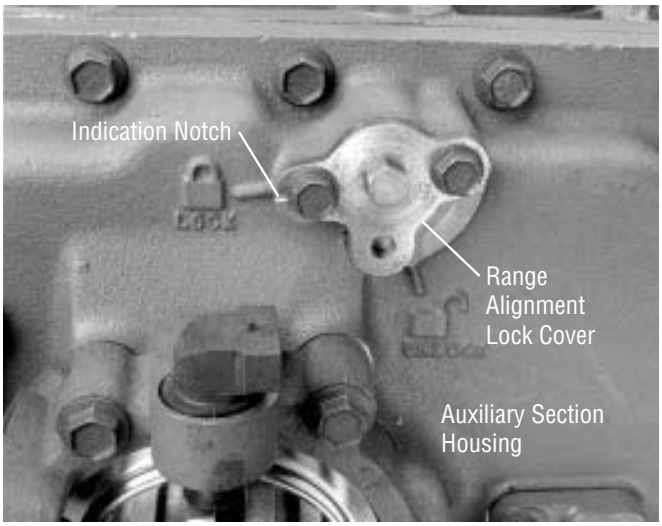

Figure 4-3 Range Alignment Lock Cover

https://truckmanualshub.com/

Figure 4-4 below shows how to isolate the air module. If necessary, refer to this figure when isolating the air module.

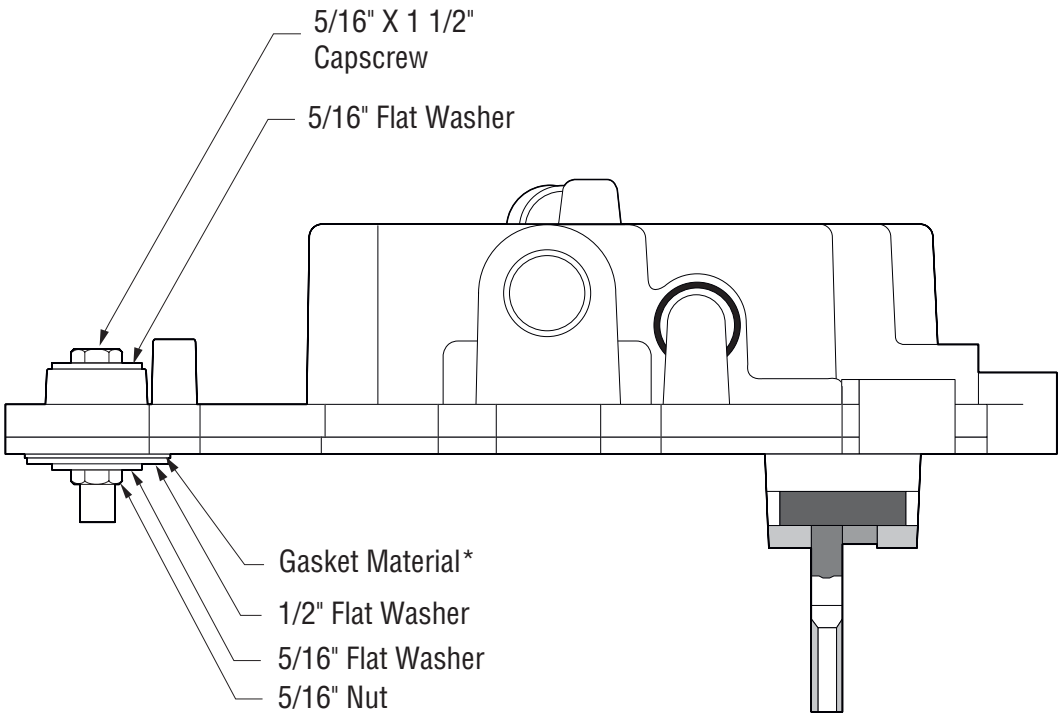

* Gasket material must be used to seal the two holes in the bottom of air module.

Figure 4-4 Air Module Isolation

The table below shows which air lines connect to which ports on the shift knob and air module. If necessary, refer to this table when connecting the air lines.

Port on Knob	Port on Air Module	Air Line Color (Typical)
S	S	Red
P	P	Black

https://truckmanualshub.com/

Timing Procedures

Special Instructions

It is essential that both countershaft assemblies of the front and auxiliary sections are "timed." This assures proper tooth contact is made between mainshaft gears seeking to center on the mainshaft during torque transfer and mating countershaft gears that distribute the load evenly. If not properly timed, serious damage to the transmission is likely to result from unequal tooth contact causing the mainshaft gears to climb out of equilibrium.

Timing is a simple procedure of marking the appropriate teeth of a gear set prior to installation and placing them in proper mesh while in the transmission. In the front section, it is necessary to time only the drive gear set. And depending on the model, only the LO range, deep reduction, or splitter gear set is timed in the auxiliary section.

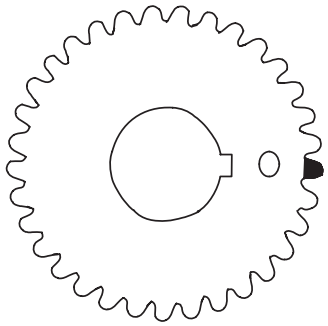

Procedure - Front Section

1. **Marking countershaft drive gear teeth:** Prior to placing each countershaft assembly into the case, clearly mark the tooth located directly over the drive gear keyway as shown. This tooth is stamped with an "O" to aid identification.

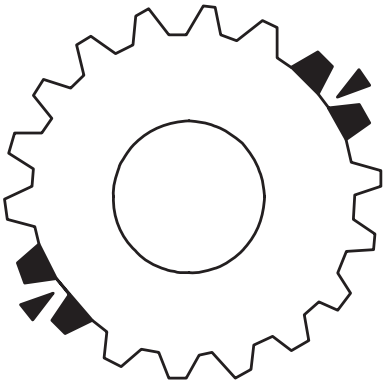

2. **Marking main drive gear teeth**: Mark any two adjacent teeth on the main drive gear.

   Mark the two adjacent teeth located directly opposite the first set marked on the main drive gear. As shown to the left, there should be an equal number of unmarked gear teeth on each side between the marked sets.

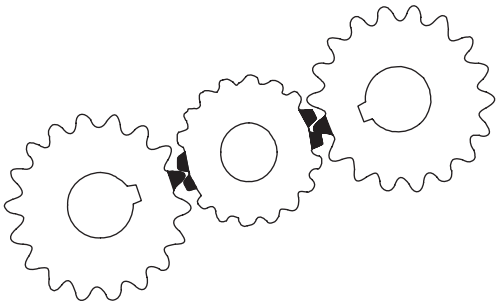

3. **Meshing marked countershaft drive gear teeth with marked main drive gear teeth:** After placing the mainshaft assembly into the case, the countershaft bearings are installed to complete installation of the countershaft assemblies.

   When installing the bearings on the left countershaft, mesh the countershaft drive gear marked tooth with either set of main drive gear two marked teeth.

   Repeat the procedure when installing the bearings on the right countershaft, make use of the remaining set of main drive gear two marked teeth to time assembly.

https://truckmanualshub.com/

Procedure - Auxiliary Section

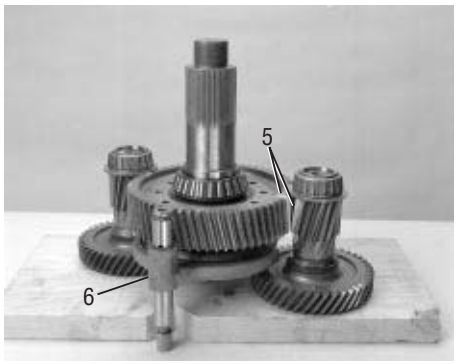

4. **Marking the helical auxiliary countershafts:** Mark any two teeth on the LO range gear. Then mark two teeth located directly opposite the first marked.

   Prior to placing each auxiliary countershaft assembly into housing, mark the tooth on each auxiliary countershaft assembly LO range gear stamped with the two "O"s. Repeat the procedure on each auxiliary countershaft reduction gear.

   Follow the assembly procedures in the "Auxiliary Section".

https://truckmanualshub.com/

How to Disassemble the Roadranger Valve

Special Instructions

None

Special Tools

- Typical service tools

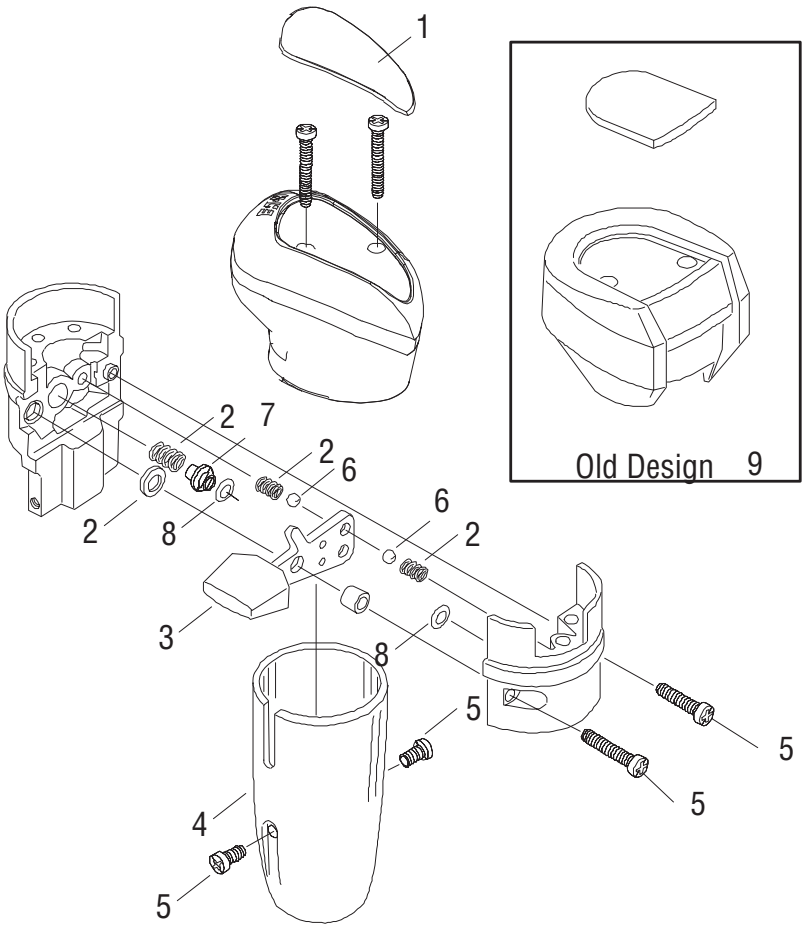

Component Nomenclature and Auxiliary Countershaft Sectional View

1. Medallion
2. Spring
3. Lever
4. Cover
5. Screw
6. Ball 5/32”
7. Retainer
8. O-Ring
9. Old Style Shift Knob

https://truckmanualshub.com/

Procedure -

1. Remove the two screws holding the bottom cover to the valve and slide the cover down the gearshift lever to expose air line fittings. Disconnect the air lines.

2. Loosen the jam nut and turn the Roadranger valve from the gear shift lever.

3. Pry the medallion from the recess in the top cover.

4. Turn out the two screws to remove the top cover from the valve housing.

5. Turn out the two screws in the side of the valve housing to separate the housing.

6. Remove the range selection lever from the left housing along with the position balls and guide.

7. If necessary, remove the spring and O-ring from the bores in the left housing.

8. If necessary, remove the springs, O-ring and sleeve from the bores in the right housing.

https://truckmanualshub.com/

How to Assemble the Roadranger Valve

Special Instructions

None

Special Tools

- Typical service tools

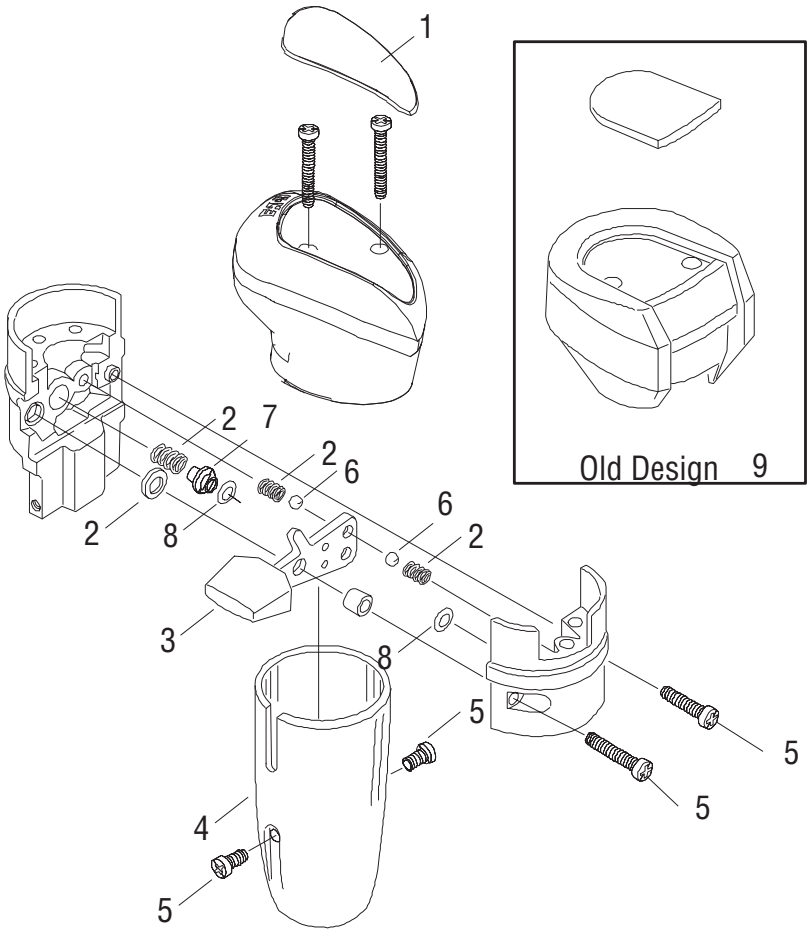

Component Nomenclature and Auxiliary Countershaft Sectional View

1. Medallion
2. Spring
3. Lever
4. Cover
5. Screw
6. Ball 5/32”
7. Retainer
8. O-Ring
9. Old Style Shift Knob

https://truckmanualshub.com/

Procedure -

1. Refer to the drawing for proper reassembly. Use a very small amount of silicone lubricant on the O-rings to avoid clogging the ports. A small amount of grease on the position springs and balls will help to hold them in place during reassembly.

2. Reinstall Roadranger valve on gear shift lever and tighten the jam nut.

3. Attach the air lines and reinstall the bottom cover.

https://truckmanualshub.com/

How to Remove Compression Type Fittings

Special Instructions

WARNING

A sudden release of air pressure can cause personal injury or damage to equipment. To prevent injury or equipment damage, exhaust the vehicle air tanks

CAUTION

Small air lines are available in 1/8" or 5/32" sizes. Make sure 1/8" air lines are used with 1/8" fittings and 5/32" air lines are used with 5/32" fittings. Mixing sizes can cause air leaks or damage to fittings.

Before removing the air lines and hoses, label or record their location.

Special Tools

- Typical service tools

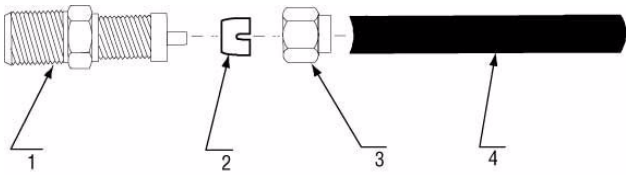

1. Connector
2. Collet
3. Nut
4. Air Line

Procedure -

1. Exhaust the vehicle air tanks before continuing.
2. Loosen the nut on the fitting, and slide it back out of the way.
3. Pull the air line and attached collet from the fitting.
4. Inspect the fitting, air line, collet, and nut for damage or wear. Replace as necessary.

https://truckmanualshub.com/

How to Install Compression Type Fittings

Special Instructions

WARNING

A sudden release of air pressure can cause personal injury or damage to equipment. To prevent injury or equipment damage, exhaust the vehicle air tanks

CAUTION

Small air lines are available in 1/8" or 5/32" sizes. Make sure 1/8" air lines are used with 1/8" fittings and 5/32" air lines are used with 5/32" fittings. Mixing sizes can cause air leaks or damage to fittings.

Special Tools

- Typical service tools

Procedure -

1. Check the threads of the fitting for thread sealant. If no sealant is present, apply Eaton® Fuller® thread sealant #71205 or equivalent.

2. Install the fitting.

   Note: Do not overtighten the nut. Overtightening can compress the collet too much and cause an air line restriction.

3. Install the air line, collet, and nut. If installing a new fitting, place the collet in the fitting and loosely install the nut. (Do not tighten the nut yet.) Insert the air line through the nut and into the collet. Tighten the nut as usual.

4. Enable the vehicle air system. Allow the air tanks to pressurize, and check for leaks. Repair as necessary.

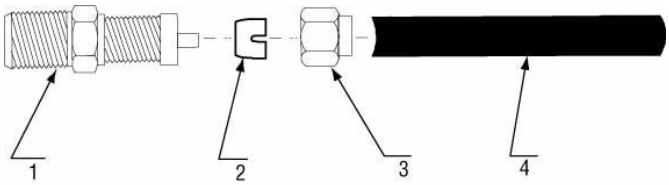

1. Connector
2. Collet
3. Nut
4. Air Line

https://truckmanualshub.com/

How to Remove Push-To-Connect Type Fittings

Special Instructions

WARNING

A sudden release of air pressure can injure you or damage equipment. To prevent injury or equipment damage, exhaust the vehicle air tanks.

CAUTION

Make sure only 5/32” air lines are used with push-to-connect fittings. Using sizes other than 5/32” can cause air leaks or damage to fittings.

Special Tools

- Air Line Release Tool
- Cutting Tool

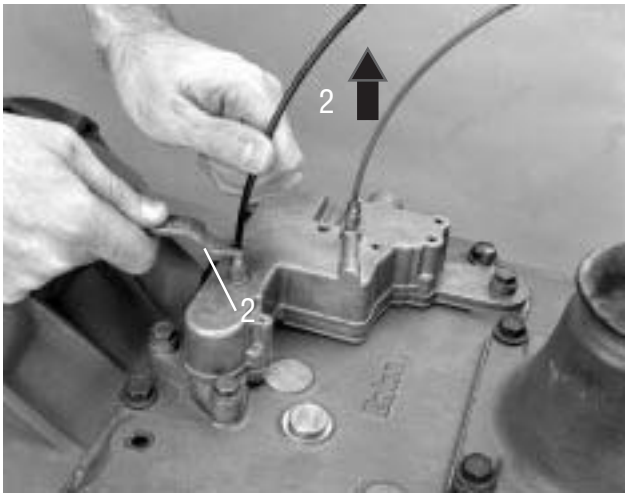

Procedure -

1. Exhaust the vehicle air tanks before continuing.
2. Use the air line release tool from kit K-2394 to press the release sleeve down while pulling the air line from the fitting as shown at right.
3. Inspect the fitting for damage or wear. Remove and replace as necessary.

https://truckmanualshub.com/

How to Install Push-To-Connect Type Fittings

Special Instructions

None

Special Tools

- Air Line Cutting Tool

Procedure -

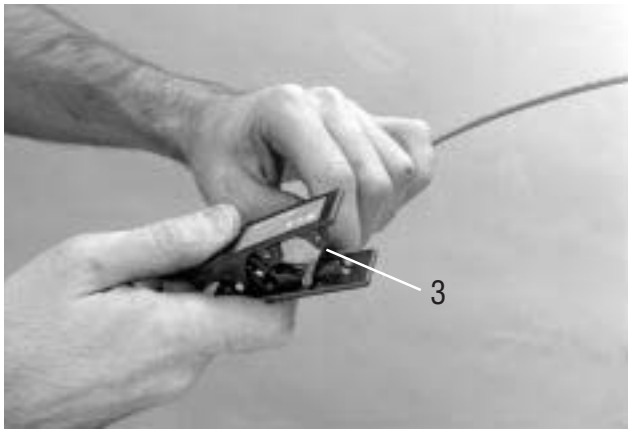

1. Check the threads of the fitting for thread sealant. If no sealant is present, apply Eaton®Fuller® thread sealant #71205 or equivalent.

2. Install the fitting.

3. Inspect the air line for burrs or deformed areas. Trim the air line if necessary using a sharp razor blade or the air line cutting tool from kit K-2394. The cut must be smooth and square. If the tubing end is deformed or burred, the internal O-ring in the fitting will be damaged when the air line is inserted.

4. Push the air line into the fitting. It should insert approximately 3/4”. If it does not insert far enough or is difficult to insert, the fitting may be damaged and should be replaced. After inserting, give the air line a slight tug to make sure the line stays in place. If line does not stay in place, replace the fitting.

5. Enable the vehicle air system. Allow the air tanks to pressurize, and check for leaks.

https://truckmanualshub.com/

How to Remove a Roadranger Valve

Special Instructions

WARNING

A sudden release of air pressure can injure you or damage equipment. To prevent injury or equipment damage, the vehicle air tanks must be exhausted.

Special Tools

- Typical service tools

Procedure -

1. From the Roadranger valve cover, remove the two (2) mounting screws.
2. Slide the Roadranger valve cover down.

3. From the air fittings, disconnect the air lines.

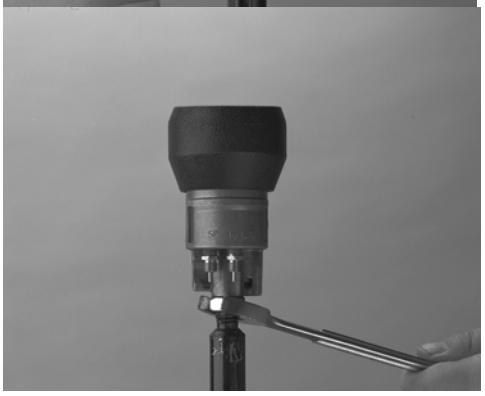

4. From the Roadranger base, loosen the jam nut. Rotate the Roadranger valve until the valve is removed.
5. Inspect the parts: nut, valve cover, air lines, sheathing, and O-rings from the lever shaft.
6. In the Roadranger valve, inspect the air fittings, and remove if damaged.

https://truckmanualshub.com/

How to Install a Roadranger Valve

Special Instructions

To position the Roadranger valve, the range lever must be to the front or the splitter button to the left when facing forward.

Special Tools

- Typical service tools

Procedure -

1. Make sure the nut, valve cover, air lines, sheathing, and O-rings are in position on the lever shaft.
2. If previously removed, replace the air fittings and torque to 84-120 lb. in.
3. Place the Roadranger valve on the lever shaft and rotate so the range selector faces the vehicle front.
4. From the Roadranger valve bottom, tighten the jam nut to 35-45 lb. ft. of torque.

5. Connect the air lines to the air fittings.

6. Slide the cover into position on the Roadranger valve.
7. Install the Roadranger valve cover mounting screws.

   Note: Make sure the air lines are seated fully.

https://truckmanualshub.com/

How to Remove the Gear Shift Lever/Remote Shift Control

Special Instructions

The air lines must be disconnected from the transmission or from the Roadranger valve.

Different detent springs are available to increase or decrease shifting effort. Note and record specific locations for specific springs. In some cases, a stiffer spring is installed in the top rail position.

Remote control housings are removed the same way as gear shift levers.

Special Tools

- Typical service tools

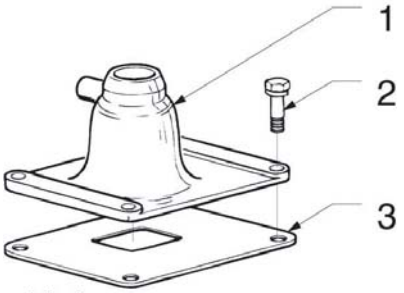

1. Housing
2. Capscrew
3. Gasket

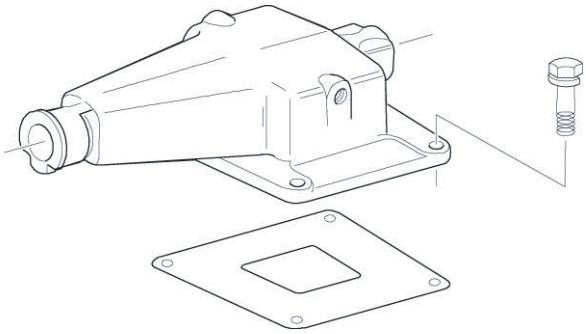

Procedure -

1. From the gear shift lever base/shift control housing, remove the four (4) retaining capscrews.

2. To break the gasket seal, lightly jar the gear shift/shift control housing.

3. Remove the gear shift lever housing.

   ⚠ CAUTION

   Make sure the detent springs do not fall into the transmission.

4. Remove detent springs as needed.

5. Remove the gasket and clean the area the replacement gasket will contact.

https://truckmanualshub.com/

How to Install the Gear Shift Lever/Remote Shift Control

Special Instructions

Remote control housings are installed the same way as gear shift levers.

For standard and forward shift bar housings, make sure the detent springs and balls are in the shift bar housing top bores.

Make sure the shift block and yoke notches are aligned in the neutral position.

Special Tools

- Typical service tools

Procedure -

1. Thoroughly clean mounting surface.
2. Position a new gear shift lever/shift control housing gasket on the gear shift lever mounting surface.
3. Install the detent springs.

4. Install the shift lever/shift control housing. Make sure the tip (finger) of the gear shift lever fits into the slots in the shift block.

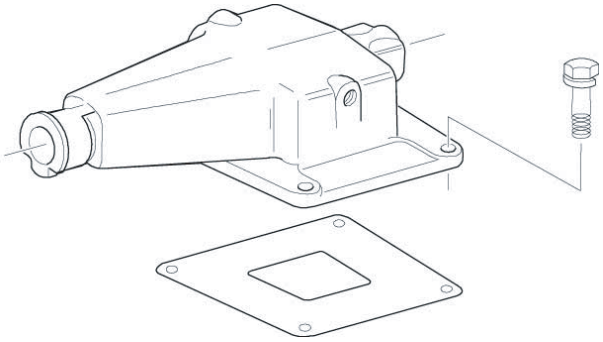

5. Apply Eaton/Fuller Sealant #71205 or equivalent to the retaining capscrews.
6. Install the retaining capscrews, tighten to 35-45 lbs.ft. of torque.

   Note: Make sure the capscrews are properly torqued.

   Note: Make sure you can shift the transmission.

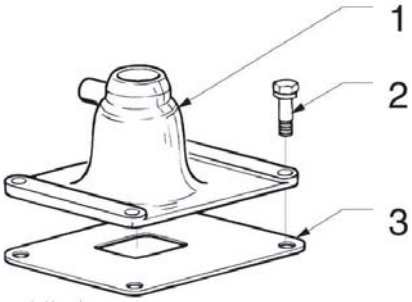

1. Housing
2. Capscrew
3. Gasket

https://truckmanualshub.com/

How to Adjust the Remote Shift Control (LRC Type)

Special Instructions

The following is a typical adjustment procedure for an LRC type slave control. It is recommended that the OEM Chassis Service Manual be consulted first.

Special Tools

- Typical service tools

Figure A

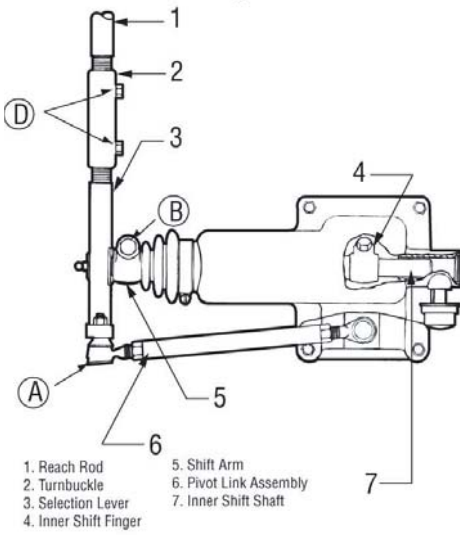

Procedure -

1. Move the gear shift lever forward or backward to the neutral position.

2. Move the gear shift lever sideways, toward reverse, until you feel resistance from the reverse plunger spring. DO NOT shift to reverse. The shift finger must remain in this position while you are making all the adjustments.

3. Remove the cotter pin, castle nut and ball joint A (see figure A) from the selection lever. Do not remove the ball joint from the pivot link.

4. Loosen the capscrew B (see figure A) and remove the shift arm from the inner shift shaft. Do not disconnect the selection lever from the shift arm.

Figure B

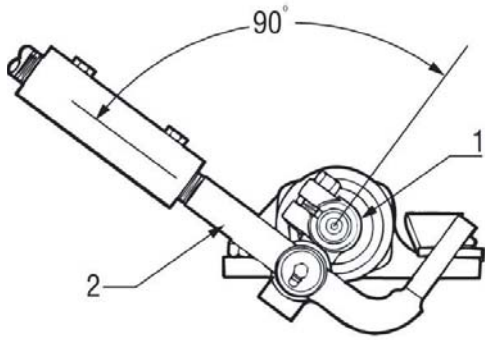

1. Selection Lever
2. Shift Arm

5. Turn the shift arm until it is at a right angle (90°) to the selection lever as viewed from the side (see figure B).

   Note: Ideally, the shift arm should be adjusted 90° to the selection lever as described, but in some chassis configurations it may be necessary to index the shift arm in the vertical position. Indexing the shift lever is done to prevent shift lever jump out. This type of adjustment will cause an unequal amount of gear shift lever travel between neutral and a forward lever position as compared to neutral and a rearward lever position.

https://truckmanualshub.com/

6. Install the shift arm on the splines of the inner shift shaft. You may have to move the shift arm 4° or 5° to align the splines of the two parts. Disregard any movement of the gear shift lever at this point. The gear shift lever will be adjusted later.

7. Tighten the capscrew B (see figure A) on the shift arm.

8. Connect the pivot link assembly ball joint to the selection lever. Secure it with the castle nut and cotter pin.

9. Loosen the jam nuts C (see figure C) on the pivot link.

10. Check to be sure the inner shift finger is still in place.

11. Rotate the pivot link until the curved end of the selection lever is parallel with the shift arm as viewed from the rear (see figure C).

12. Tighten the pivot link jam nuts C (see figure C).

13. Loosen both capscrews on the turnbuckle D (see figure A).

14. Check to be sure inner shift finger is still in place.

15. Rotate the turnbuckle to obtain the proper forward-backward neutral position of the gear shift lever in the cab.

16. Tighten one turnbuckle D capscrew (see figure A).

17. Move the gear shift lever to the desired position.

18. Turn the second turnbuckle D capscrew.

19. Check for linkage obstructions in all gear positions.

Figure C

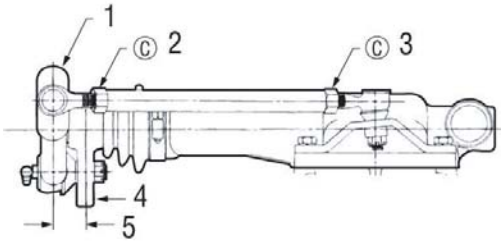

1. Selection Lever
2. (L.H. Thread)
3. (R.H. Thread)
4. Shift Arm
5. Parallel

https://truckmanualshub.com/

How to Remove the Detent Spring

Special Instructions

None

Special Tools

- Typical service tools

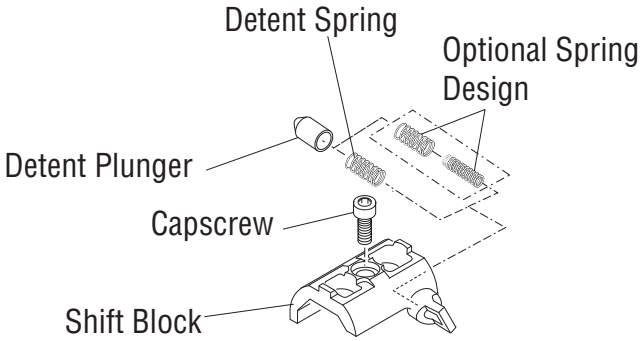

Procedure -

1. Remove the shift lever or remote shift control according to the “Shift Lever/Remote Shift Control Removal” instructions in this section.

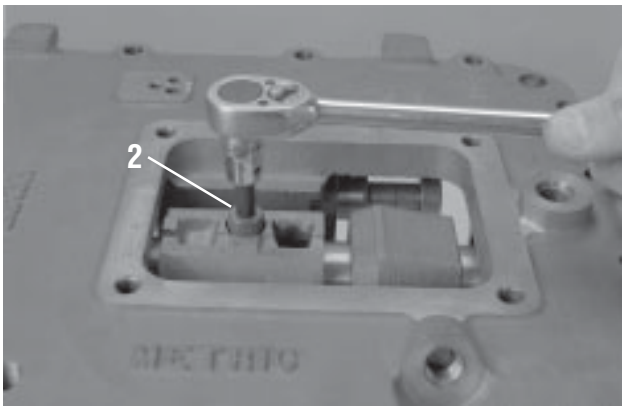

2. Remove the shift block socket head capscrew using an 8 mm or 5/16” hex driver.

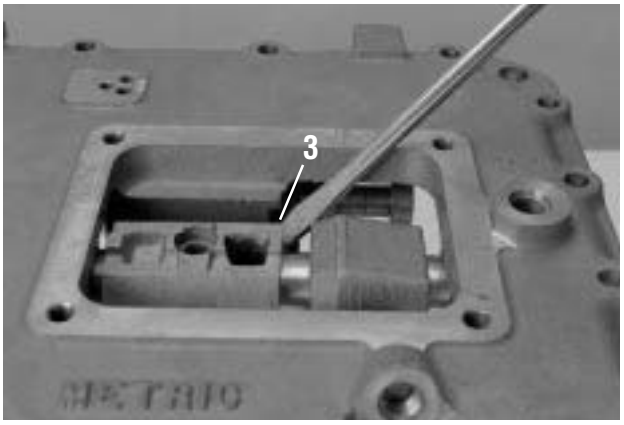

3. Gently pry the shift block loose, and lift it straight up to prevent the detent plunger and spring from falling into the transmission case.

4. Remove the detent plunger and spring(s).

   Note: Some transmissions may have two springs to increase the detent force.

https://truckmanualshub.com/

How to Install the Detent Spring

Special Instructions

None

Special Tools

- Torque Wrench 50 lb. ft. Capacity

Procedure -

1. Place the detent spring(s) and detent plunger in the shift block.

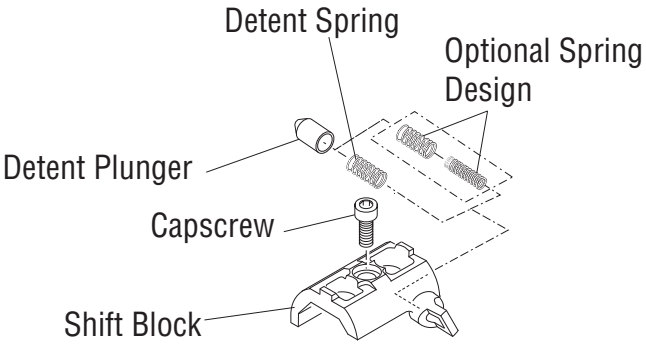

2. Place the shift block on the shift shaft using the following procedure.
   a. Tilt the shift block so the plunger faces slightly upward.
   b. Place the plunger in the center of the detent notch, and press the detent plunger in to compress the detent springs.
   c. While the springs are compressed, roll the shift block into place on the shift shaft. If the shift shaft has been moved or otherwise disturbed, it may be necessary to slide the shift shaft fore or aft to properly install the shift block.

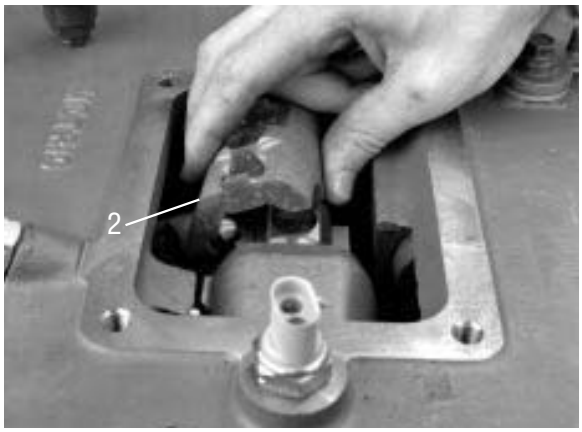

3. Install the socket head capscrew to secure the shift block. Apply Thread Sealant/Adhesive and Torque the screw to 40-45 lb. ft. (54-61 N•m)

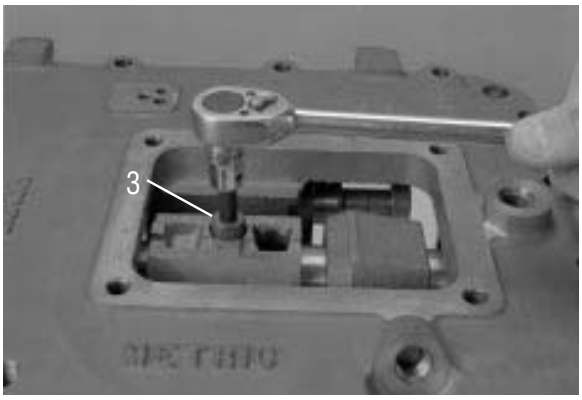

4. Install the shift lever or remote shift control according to the “Shift Lever/ Remote Shift Control Installation” instructions in this section.

https://truckmanualshub.com/

Neutral Switch Operation and Testing

Special Instructions

The neutral switch is a normally closed switch. An electrical current flows through it when the transmission shifter is in the center neutral position. When the transmission shifter is in gear or a side neutral position, the switch is open and no current flows through it.

Special Tools

- Ohm Meter

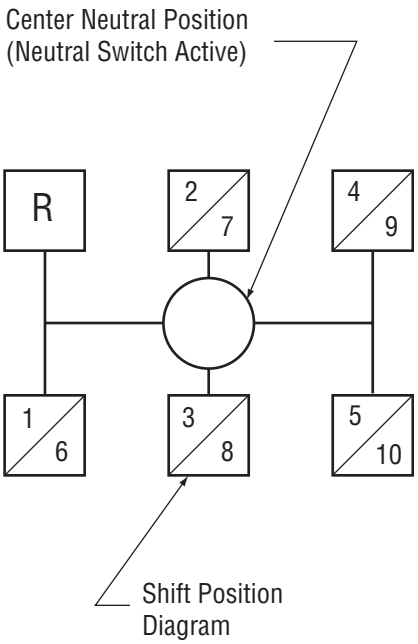

Procedure -

1. Disconnect the wiring from the switch by lifting the connector locking tab and pulling the connector out of the switch.

2. Connect an ohm meter to check for continuity or a small reading.

3. Place the transmission shift lever in the center neutral position. The ohm meter should register continuity or a small reading. If it does, go to the next step. If it does not, remove the switch and replace it according to the removal instructions below.

4. Shift the transmission into all gear positions. The ohm meter should read open or infinity. If it does not, remove the switch, recheck it for continuity, and replace it as necessary. Also, check for the presence of the neutral switch pin.

https://truckmanualshub.com/

How to Remove the Neutral Switch

Special Instructions

If the ohm meter responds as indicated in the test procedure, do not perform this procedure as the switch is in good working condition.

Special Tools

- Typical service tools

Procedure -

1. Remove the switch using a 22 mm or 7/8” deep well socket or box end wrench.

2. Check for the presence of the neutral pin in the bore under the switch.

3. While watching the neutral pin, move the transmission in and out of gear. The pin should raise up when the transmission is in gear and lower when the transmission is in neutral. If the pin does not operate properly, remove the pin with a magnet and check it for wear. Also, remove the shift bar housing and check the shift shaft for wear.

4. Remove the pin from the bore with a magnet and check it for excessive wear. If it is worn, replace it.

5. If the pin is present and not worn, replace the switch with a new one.

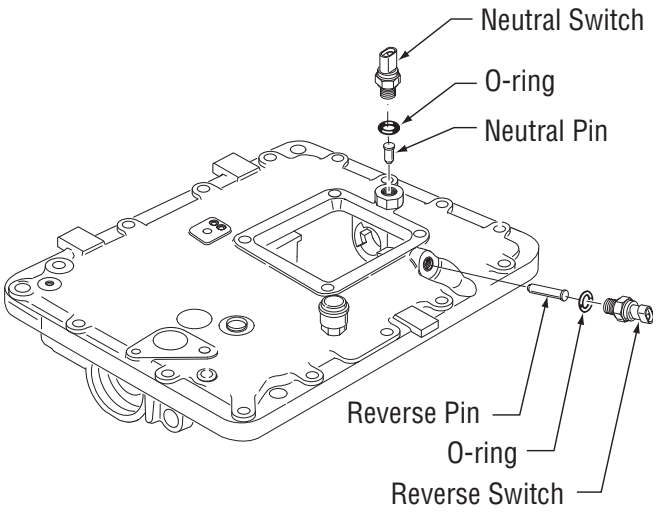

https://truckmanualshub.com/

How to Install the Neutral Switch

Special Instructions

None

Special Tools

- Torque Wrench 25 lb. ft. Capacity

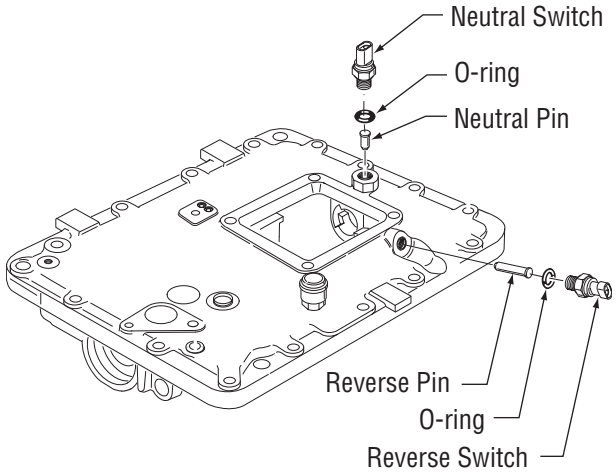

Procedure -

1. Insert the neutral pin in the neutral switch bore. (The neutral pin is shorter than the reverse pin).
2. Lubricate the O-ring on the switch.
3. Install the neutral switch. Tighten it to 15-20 lb. ft. (20-27 N•m) of torque.
4. Connect the wiring connector to the switch, making sure the locking tab engages properly.

https://truckmanualshub.com/

Reverse Switch Operation and Testing

Special Instructions

The reverse switch is a normally open ball switch. When the transmission is shifted into reverse, a ramp on the reverse shift yoke contacts and raises a pin. The pin depresses the ball on the switch, which closes the switch contact, allowing current to flow through the switch and light up the vehicle's backup lights.

Special Tools

- Ohm Meter

Procedure -

1. Disconnect the wiring from the switch by lifting the connector locking tab and pulling the connector out of the switch.

2. Connect an ohm meter to test for continuity.

3. Place the transmission shift lever in any position except reverse. If the switch is working properly, the ohm meter should read open or infinity. If it is not, remove the switch and recheck it for continuity. Replace it as necessary.

4. Place the transmission shift lever in the reverse position. If the switch is working properly, the ohm meter should register continuity, or a small reading. If it does not, remove the switch and recheck it for continuity. Replace it as necessary. Also, check for the presence of the reverse pin.

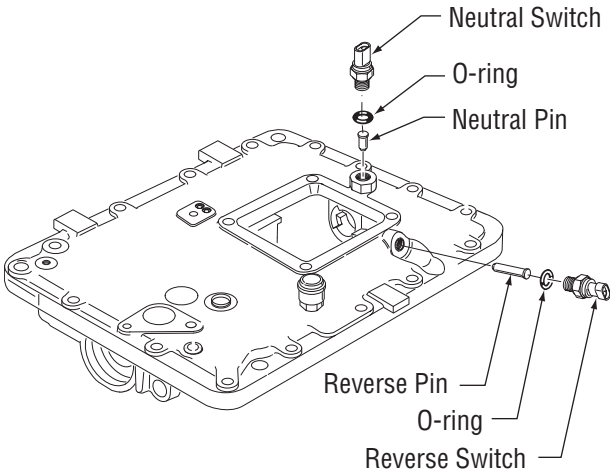

https://truckmanualshub.com/

How to Remove the Reverse Switch

Special Instructions

If the ohm meter responds as indicated in the test procedure, do not perform this procedure as the switch is in good working condition.

Special Tools

- Typical service tools

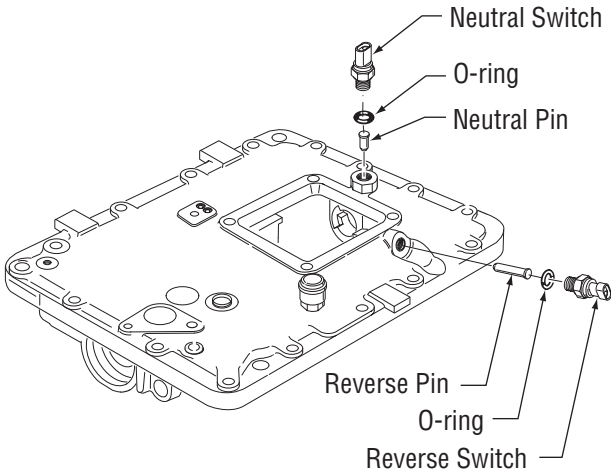

Procedure -

1. Remove the switch using a 22 mm or 7/8” deep well socket or box end wrench.
2. Check for the presence of the reverse pin in the bore under the switch.
3. While watching the reverse pin, move the transmission shifter between the reverse position and any gear. The pin should raise when the transmission is shifted to reverse and lower when the transmission is in neutral. If the pin does not raise and lower, inspect it to see if something is causing it to stick, and inspect it for wear. Also, remove the shift tower and check for wear on the reverse yoke ramp. This ramp can be seen through the shifter opening.
4. Remove the pin from the bore with a magnet and check it for excessive wear. If it is worn, replace it.
5. If the pin is present and not worn, replace the switch with a new one.

https://truckmanualshub.com/

How to Install the Reverse Switch

Special Instructions

None

Special Tools

- Torque Wrench 25 lb. ft. Capacity

Procedure -

1. Insert the reverse pin in the reverse switch bore. (The reverse pin is longer than the neutral pin.)
2. Lubricate the O-ring on the switch.
3. Install the reverse switch. Tighten it to 15-20 lb. ft. (20-27 N•m) of torque.
4. Connect the wiring connector, making sure the locking tab engages properly.

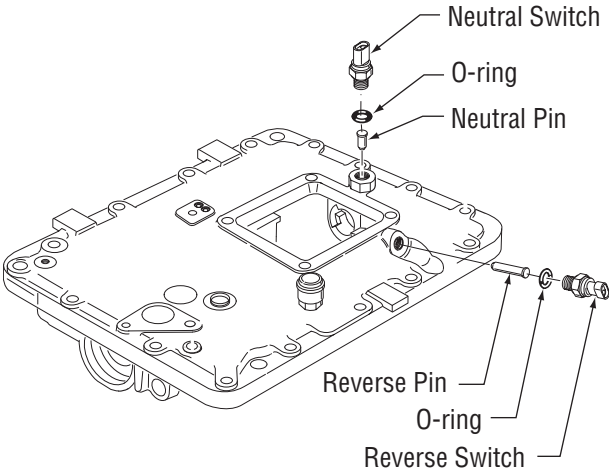

https://truckmanualshub.com/

How to Install the Shift Bar Housing

Special Instructions

None

Special Tools

- Torque Wrench 50 lb. ft. capacity

Procedure -

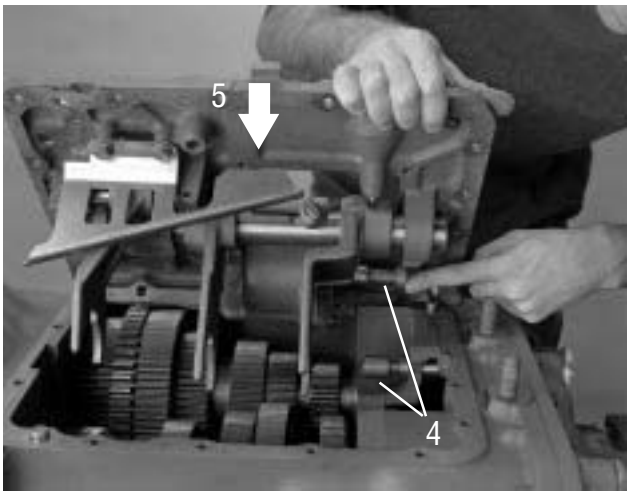

1. Clean the gasket mounting surface of the main case and shift bar housing, and place a new gasket on the main case.

2. Place the shift bar housing shift shaft in the Neutral position so the yokes will be positioned to fit over the mainshaft sliding clutches.

3. In the main case of the transmission, place the mainshaft sliding clutches in their neutral positions.

4. If the auxiliary section is in place, slide the range piston bar forward or rearward to align the notch in the piston bar with the notch in the range yoke bar.

5. With all parts properly aligned, lower the shift bar housing straight down into position. Position can be verified thru shift tower opening.

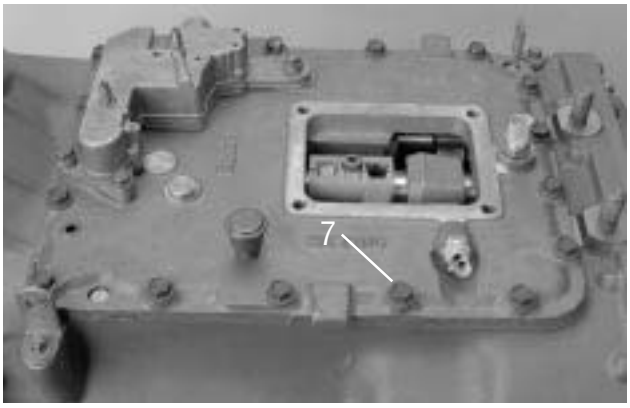

6. Apply Eaton® Fuller® thread sealant #71205 or equivalent to the retaining capscrews.

7. Install the 16 retaining capscrews. Tighten the screws in sequence per numbers on shift bar housing to 40-45 lb. ft. (54-61 N•m) of torque.

https://truckmanualshub.com/

How to Remove the Shift Bar Housing

Special Instructions

The air module does not have to be removed in order to remove the shift bar housing.

Special Tools

- Typical service tools

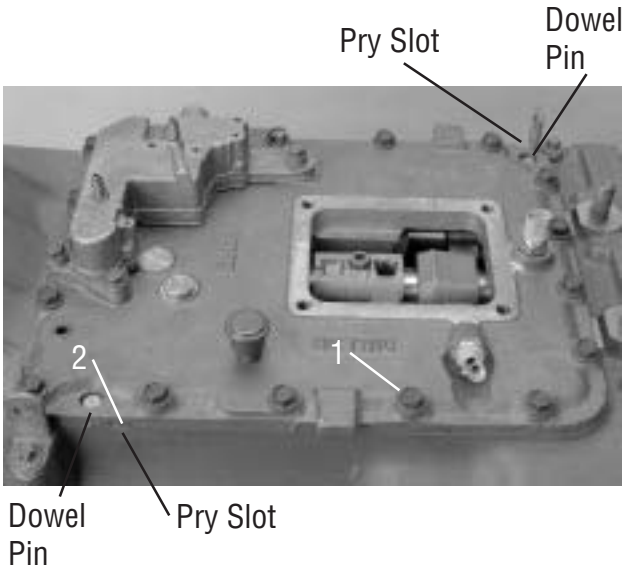

Procedure -

1. From the shift bar housing rim, remove the 16 retaining capscrews.
2. Insert a screw driver into the pry slots near the dowel pins and pry the housing off the dowel pins.

   TIP: Light upward hammering on the three tabs may help loosen the shift bar housing. Do not hammer excessively as the housing may crack.
3. Lift the shift bar housing straight off the transmission case and set it on a bench.
4. Remove the gasket, and clean all mounting surfaces of gasket material.

https://truckmanualshub.com/

How to Remove the Oil Seal Mechanical/Magnetic Speedometer

Special Instructions

Prior to replacing the seal, carefully inspect the transmission to make sure the oil leakage is coming from the seal. Pay particular attention to the gasketed surfaces of the rear bearing cover, rear countershaft bearing covers, and shift bar housing.

For additional Information on rear seal service, refer to the "Seal Maintenance Guide" TCSM-0912.

Special Tools

- Output Yoke Puller T1

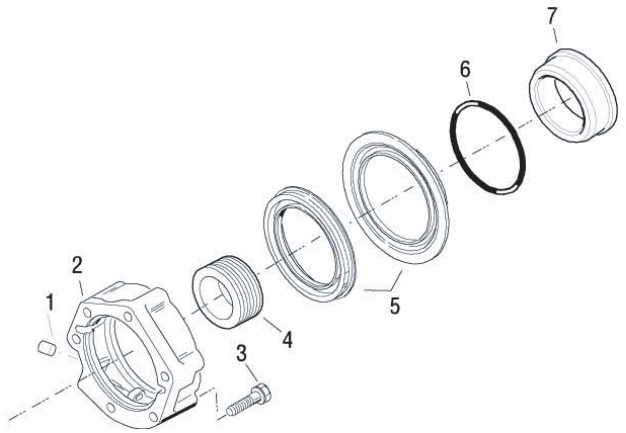

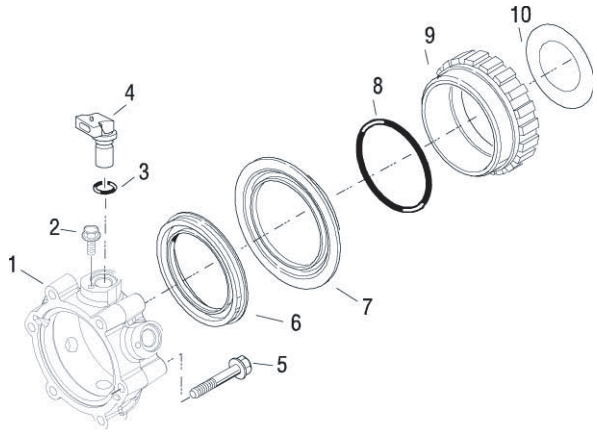

1. Bushing
2. Rear Bearing Cover Assembly
3. Capscrew
4. Speedometer Drive Gear
5. Oil Seal with Slinger
6. O-Ring
7. Speedometer Spacer Assembly

1. Rear Bearing Cover
2. Sensor Retaining Capscrew
3. O-Ring
4. Speedometer Sensor
5. Capscrew
6. Oil Seal
7. Slinger
8. O-Ring
9. Speedometer Spacer Assembly
10. Slinger

https://truckmanualshub.com/

Procedure -

1. Disconnect the driveshaft and U-joint from the output yoke according to the OEM or driveshaft manufacturer's instructions.

2. Shift the transmission into 1st gear or low gear or use a yoke holding tool to prevent the output yoke from turning when you loosen the output yoke nut.

3. Remove the output yoke nut using a 70 mm or 2 3/4" socket.

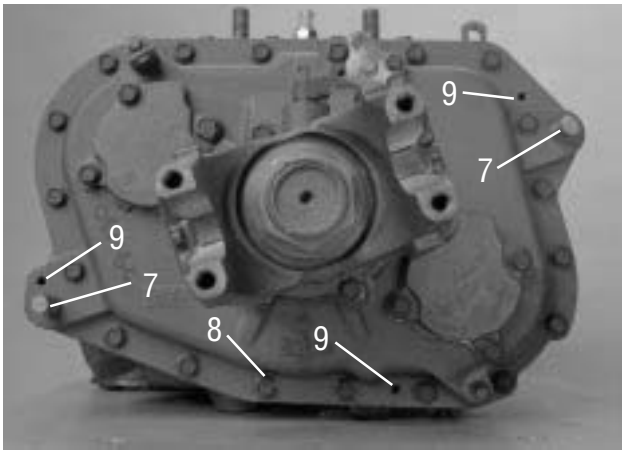

4. Remove the output yoke. Use an output yoke puller (Tool ref. ID T1).
   a. For Magnetic Speedometers:

      Remove the speedometer sensors from the rear bearing cover

      TIP: If the sensor is a thread in type, note the number of threads exposed so that the sensor can be reinstalled to the same depth. If the sensor is a push in type, remove the hold down capscrew and pull the sensor out of the bore.

      Remove the speedometer rotor/seal sleeve and the O-ring.

   b. For Mechanical Speedometers:

      Remove the seal sleeve and O-ring

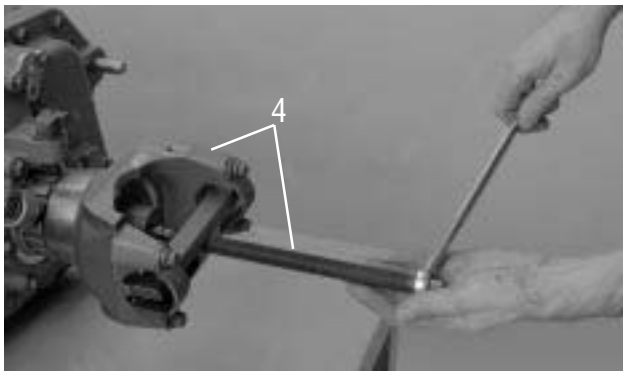

5. For transmissions with magnetic speedometers, pry the seal out as shown using a large screwdriver or prybar in the metal groove of the seal. For transmissions with mechanical speedometers, use a slide hammer with a hook attachment to remove the seal.

   Note: The seal will be damaged during removal and must be replaced.

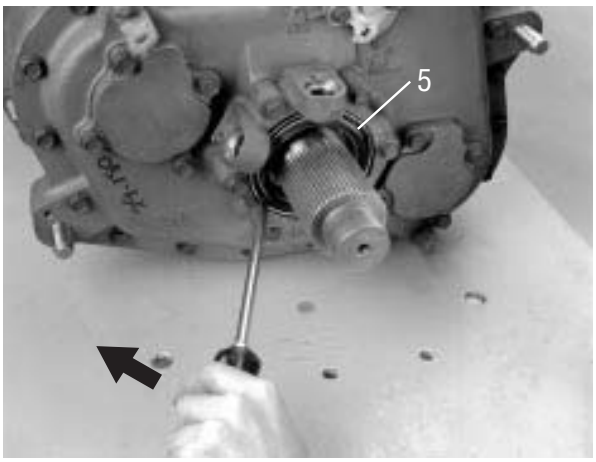

6. Remove seal slinger from the speedometer rotor/seal sleeve using a brass drift and hammer.Remove seal slinger from the speedometer rotor/seal sleeve using a brass drift and hammer.

7. Inspect all parts of the oil seal according to the instructions in the "General Service Practices" section of the manual.

https://truckmanualshub.com/

How to Install the Oil Seal Mechanical/Magnetic Speedometer

Special Instructions

To prevent oil leaks, do not touch the seal lip, and make sure the seal driver is clean.

Special Tools

- Seal Driver Eaton K-2413
- Torque Wrench 500 lb. ft. capacity

Procedure -

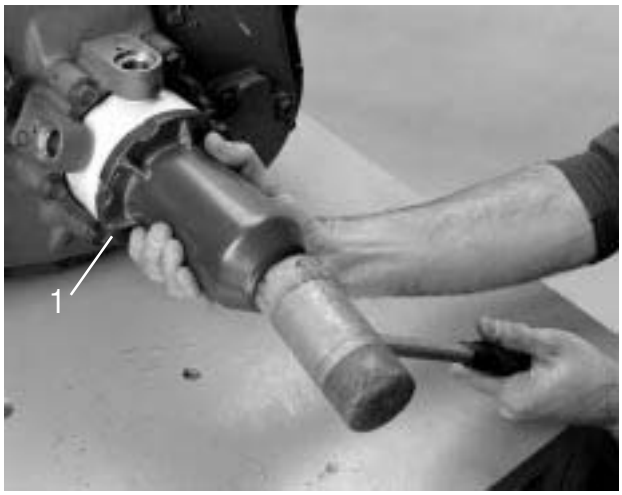

1. Place a seal on the oil seal driver (Eaton # K-2413), and drive the new seal into the rear bearing cover. The seal is fully installed when the flange on the seal is flush with the shoulder in the bore.

2. Install the new slinger on speedometer rotor/seal sleeve using a slinger driver.

https://truckmanualshub.com/

3. If previously removed, install the O-ring over the output shaft.

   ⚠ CAUTION

   To avoid creating oil leaks, make sure the speedometer rotor/seal sleeve is free from contaminants.

4. Install the speedometer rotor/seal sleeve over the output shaft, and install the speedometer sensors.

5. Install the output yoke over the output shaft. The yoke should slide on and stop before contacting the speedometer rotor. As the output shaft nut is installed, the output yoke will contact the speedometer rotor.

6. Inspect the output shaft nut for damage and wear. If the nylon locking material is damaged or excessively worn, use a new output nut.

   Note: The nylon locking material must be in good condition so that nut does not loosen when the vehicle is in use.

7. Lightly oil the output shaft threads and the output nut threads, and install the nut. Torque the nut to 450-500 lb. ft. (610-677 N•m).

8. Connect the driveshaft and U-joint according to the OEM or driveshaft manufacturer's instructions.

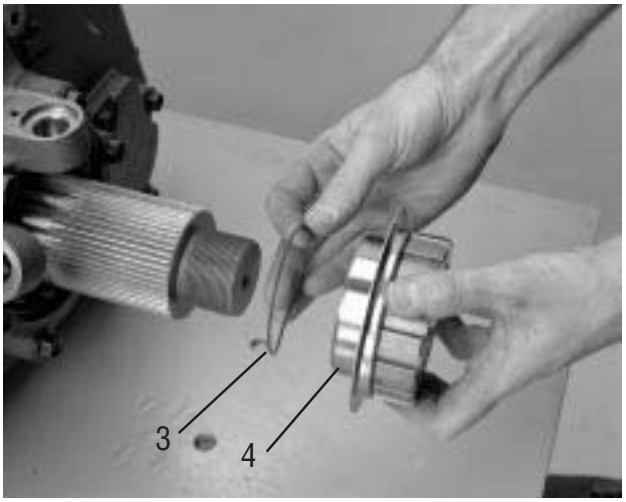

https://truckmanualshub.com/

How to Remove the Auxiliary Section in Chassis

Special Instructions

The following procedure covers the removal of the auxiliary section with the transmission remaining in the chassis. If the transmission has been removed, refer to “Auxiliary Section Removal (Bench Procedure)” for removal procedures.

CAUTION: The lock cover was removed on new units, so the shiftbar needs to be removed to unlock the range cylinder and remove the auxiliary section.

Special Tools

- Floor Jack
- M10 x 1.5 tap
- Mounting Plate T19 (see Table 6)

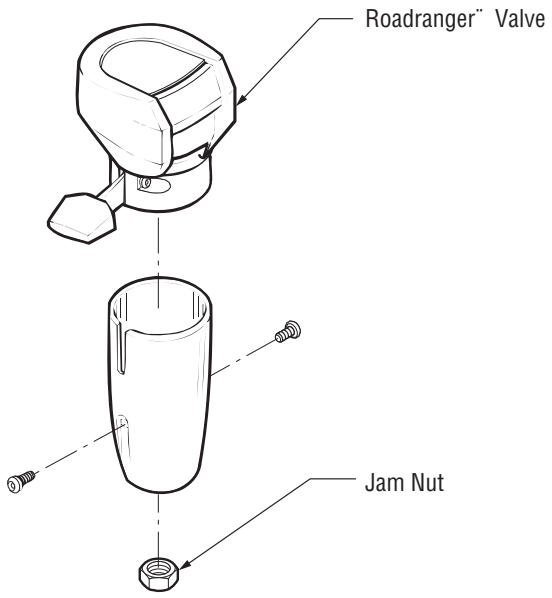

Procedure -

1. Place the range selector on the shift knob in the down position to shift the transmission into low range. Removing the auxiliary section when the transmission is in Low Range will aid in reassembly.

2. Drain the transmission oil.

3. Disconnect the driveshaft and U-joint from the output yoke.

4. If the auxiliary section is to be disassembled, remove the output nut using a 70 mm or 2 3/4” socket. To prevent the output shaft from rotating while removing the nut, shift the transmission to 1st gear or use a yoke holding tool.

   ⚠ WARNING

   If the shift bar housing is still installed, you MUST perform steps 5 and 6 if the lock cover is present. New designs no longer use the lock cover and the shiftbar housing must be removed for auxiliary section removal.

5. Remove the capscrews from the range bar lock cover, and rotate the lock cover counterclockwise until the notch on the cover lines up with the unlock symbol.

   Note: The left is the old style cover and the right is the new style cover.

   Note: If the system still contains air pressure, greater force is required to turn the lock cover.

6. Insert the right capscrew to secure the cover in the unlock position.

https://truckmanualshub.com/

Note: This step unlocks the range yoke bar in the auxiliary from the range piston bar in the shift bar housing.

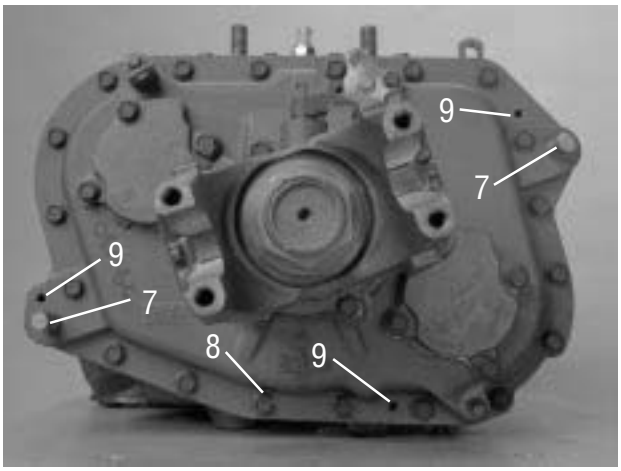

7. Drive the two dowel pins forward, and remove them.

8. Remove 18 of the 19 capscrews that secure the auxiliary section to the main section. Leave one capscrew to secure the housing until it is ready to be removed.

   Note: Capscrews are different lengths. Note their locations for reassembly purposes.

9. Clean and oil the three threaded pusher holes in the auxiliary section flange. To clean them, thread an M10x1.5 tap into each hole to remove paint, rust, and other debris.

WARNING

Use the proper equipment with safety chains attached to remove the auxiliary section. The auxiliary section can slide rearward and could fall, causing you serious injury and/or damage to the auxiliary section.

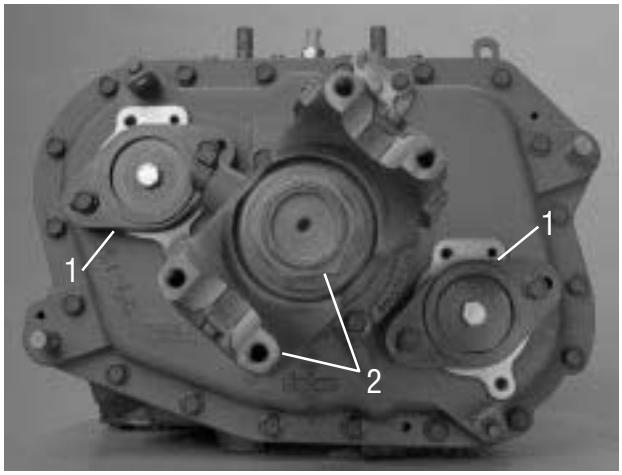

10. Attach the chain and lifting device to the auxiliary section hanger, or attach the support jack to the auxiliary section. (Tool ref. ID T19).

    Remove the rear bearing covers and install the Auxiliary countershaft shim/retaining plates T3.

11. Thread capscrews into each of the three previously cleaned pusher holes in the auxiliary section flange. Run the capscrews in evenly to break the gasket seal and move the auxiliary housing rearward approximately 1/4." After breaking the gasket seal, remove the pusher screws.

CAUTION

The weight of the auxiliary section must be supported during removal to avoid damage to the range yoke bar.

12. Support the weight of the auxiliary section with the lifting device or support jack and move the auxiliary section rearward until it is free from the front section of the transmission.

https://truckmanualshub.com/

How to Install the Auxiliary Section in Chassis

Special Instructions

⚠ CAUTION

The lock cover was removed on new units, so the shiftbar housing must remain off during auxiliary assembly to attach the range cylinder.

Special Tools

- Floor Jack
- Torque Wrench 500 lb. ft. capacity
- Torque Wrench 100 lb. ft. capacity
- Mounting Plate (tool ref. ID T19)
- Auxiliary countershaft support tools T3

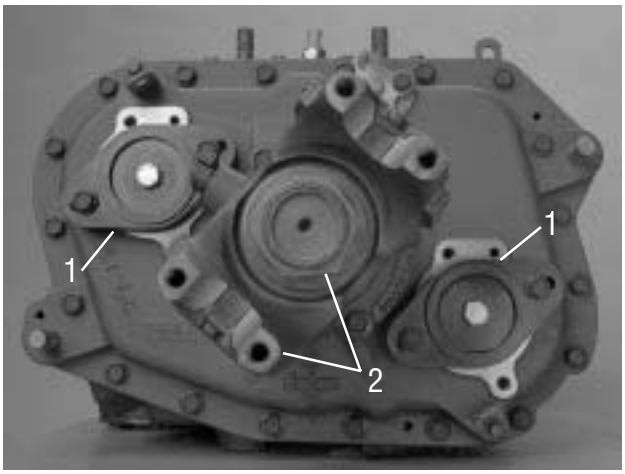

Procedure -

1. Install the countershaft support tools (Tool ref. ID T3) on the auxiliary section countershafts to center and hold the countershafts in position.

2. Install the output yoke over the output shaft. The yoke should slide on and stop before contacting the speedometer rotor. As the output shaft nut is installed, the output yoke will contact the speedometer rotor.

   Note: To prevent the output shaft from rotating while installing the nut, place a clean shop rag in the gear mesh or use a yoke holding tool.

   Note: Due to chassis interference, it may not be possible to install the yoke at this step. However, the output shaft must be drawn fully into position to prevent it from sagging when the auxiliary section is installed in the chassis. If the chassis causes interference, the yoke can be temporarily installed to draw up the output shaft and then removed before the auxiliary section is installed.

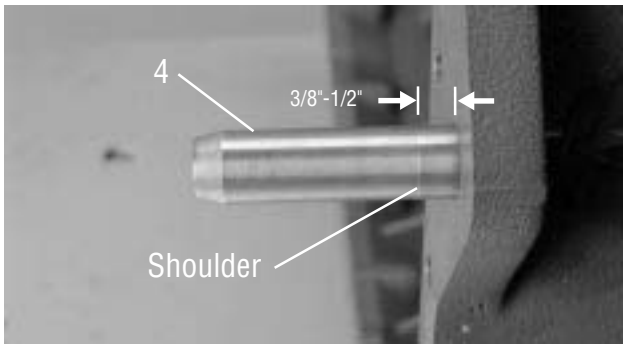

3. Use crocus cloth or a wire wheel to clean rust and paint from the dowel pins before installing them.

   ⚠ CAUTION

   If the dowel pins are not installed in the main case to the proper depth in step 4, the auxiliary section will not properly align with the main case and bearing or synchronizer failure may occur.

4. Install the dowel pins into the main case so that 3/8”-1/2” of the shoulder is exposed.

https://truckmanualshub.com/

5. Clean all rust and paint from the dowel pin holes in the auxiliary section housing, and lightly grease the dowel pins on the main case and the dowel pin holes on the auxiliary section housing.

6. Make sure the auxiliary section is in low range. If not, use one or two large screwdrivers or prybars to apply even rearward pressure to the range sliding clutch to move it into the Low Range position.

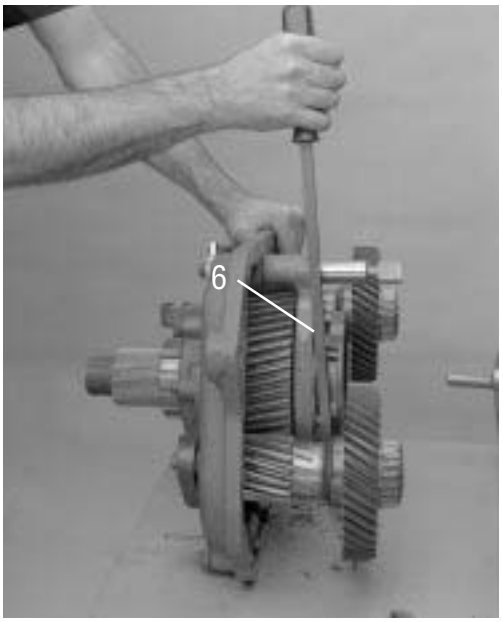

7. Make sure the range bar lock cover is in the unlock position. If not, rotate it counterclockwise until the notch on the cover is aligned with the unlock symbol, and secure it in that position.

   ⚠ CAUTION

   The lock cover has been removed on newer models, so the shiftbar housing needs to remain removed until the range cylinder and auxiliary section are assembled.

   Note: Old style auxiliary cover on the left and new style cover on the right.

8. Position the gasket onto the main case mounting surface.

9. Mount the auxiliary section on the lifting device or jack. (Tool ref. ID T19).

10. Tighten the center capscrew on the countershaft support tools to draw the countershafts into a level position. Do not overtighten the capscrews. The output yoke and shaft must be able to rotate.

11. Position the auxiliary section in line with the main case, and perform the following steps:

    a. Insert the range yoke bar into the bore.

    b. Mesh the countershafts with the auxiliary drive gear. Rotate the output yoke and shaft slightly to help the gears mesh.

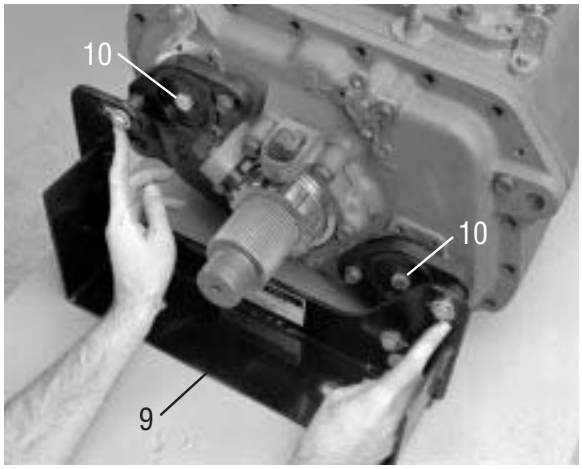

https://truckmanualshub.com/

⚠ CAUTION

The auxiliary section should slide into place fairly easily. DO NOT force it on or pull it into place with the capscrews. Excessive force may damage the transmission. If excessive force is necessary, the gearing is likely out of time. Remove the auxiliary section, tighten the countershaft support tools, and try again.

12. While rotating the output shaft, slide the auxiliary section forward as far as it can go.

13. Apply Eaton®Fuller® thread sealant #71205 or equivalent to the capscrew threads.

14. Install the 19 retaining capscrews to secure the auxiliary section to the main case. Torque the capscrews to 40-45 lb. ft. (54-61 N•m).

15. Remove the capscrew securing the range bar lock cover in the unlock position, and remove the lock cover. Check the O-ring on the inside of the cover to be sure it is in position, and look for signs of wear or damage. Replace it if necessary. Apply Eaton®Fuller® thread sealant #71205 or equivalent to the capscrews used to secure the cover.

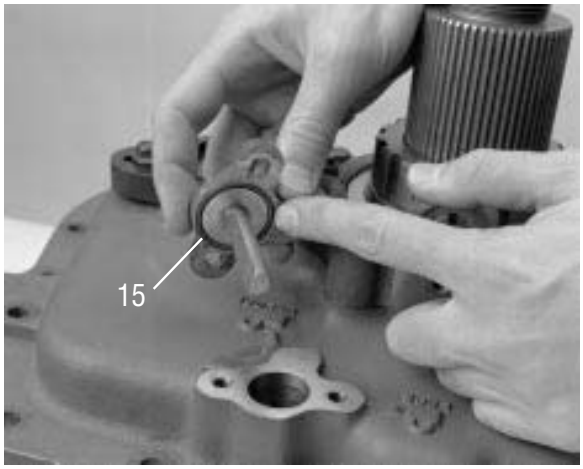

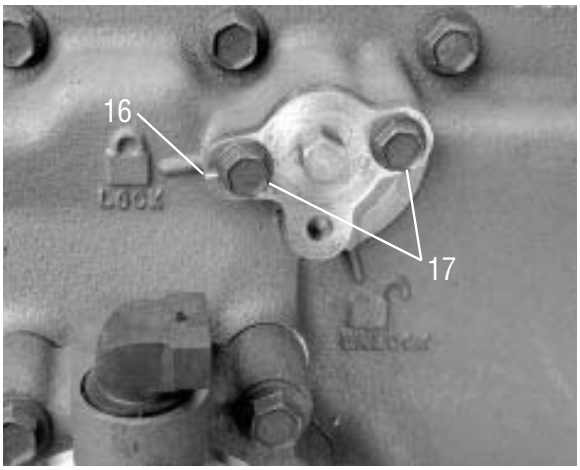

16. Install the range bar lock cover, and rotate it clockwise until the notch on the cover aligns with the lock symbol.

    Note: The cover should rotate fairly easily. If it does not rotate, the range piston bar and the range yoke bar may not be in the same range position (low range). Move the range lever from low to high and back to low, while rotating the lock cover.

17. Secure the cover in the locked position with the capscrews, and torque them to 20-23 lb. ft. (27-31 N•m).

    Note: To properly align the lock cover the transmission must be in Low Range prior to tightening the capscrews.

https://truckmanualshub.com/

18. If the countershaft, countershaft bearings, or auxiliary housing have been replaced, or if the countershafts, bearings, or shims were not marked and reassembled in the same location, the bearing endplay must be checked and set by shimming. Shim the countershaft bearings using the shim procedure in Transmission Overhaul Procedure-Bench Service.

19. If shimming is not required, remove the support tools, and install the original shim in the proper location, new gasket and countershaft bearing cover. Secure the bearing covers with the capscrews. Tighten the capscrews to 40-45 lb. ft. (54-61 N•m)

20. Connect the driveshaft and U-joint, and refill the transmission with the recommended lubricant. For lubrication instructions refer to the Lubrication section of this manual.

https://truckmanualshub.com/

How to Disassemble the Integral Oil Cooler

Special Instructions

None

Special Tools

- Typical service tools

Procedure -

1. Remove capscrews retaining the internal cooler cover.

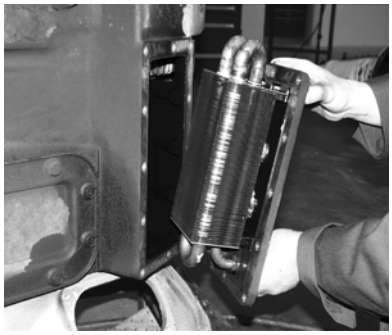

2. Remove the cooler cover taking care not to damage the steel beaded gasket.

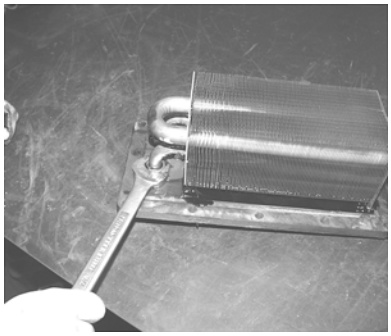

3. Loosen the cooler fittings from the cooler cover plate.

https://truckmanualshub.com/

4. Remove the capscrews retaining the rear of the cooler to the cover plate.

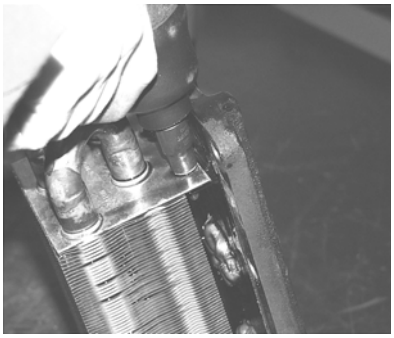

https://truckmanualshub.com/

How to Assemble the Integral Oil Cooler

Special Instructions

None

Special Tools

- Typical service tools

Procedure -

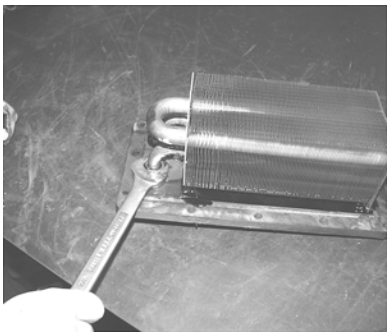

1. Thoroughly clean the gasket surface of the transmission case and cover plate. Be sure the cooler fitting threads and flare seat are free of dirt and debris.

2. Install cooler to cover plate and tighten cooler fittings to 75 lb. ft. (102 Nm).

3. Install capscrews to rear of cooler and tighten to 9-10 lb. ft. (12-14 Nm).

4. Install cooler cover plate gasket and cover plate. Install capscrews and tighten to 40-45 lb. ft. (54-61 Nm).

https://truckmanualshub.com/

How to Remove the Air Module

Special Instructions

WARNING

A sudden release of air pressure can cause personal injury or damage to equipment. To prevent injury or equipment damage, exhaust the vehicle air system or shut off the air supply to the transmission before removing the air module.

Note: For air line removal and replacement instructions, refer to the “Air Line and Fitting” portion of In-Vehicle Service Procedures.

Special Tools

- Typical service tools

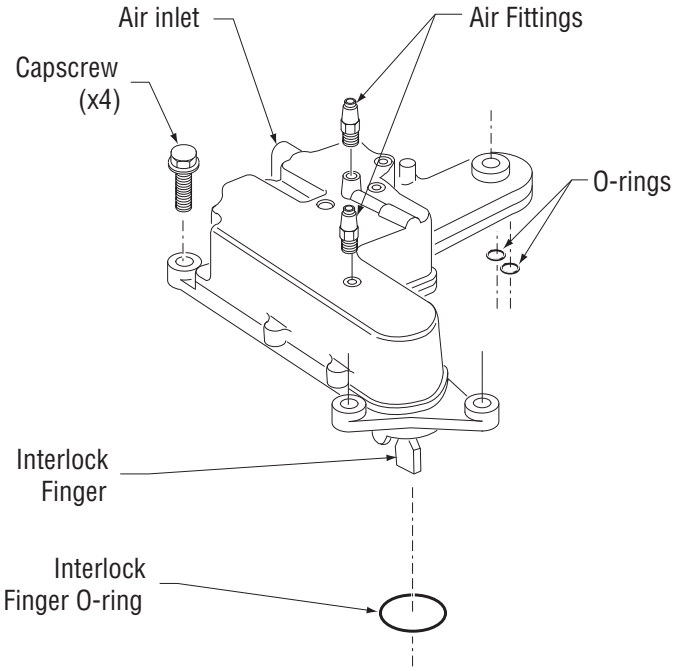

Procedure -

1. Disconnect the supply air line from the Inlet port of the air module.
2. Tag the two air lines connected to the ports on the top of the air module with location information, and remove them.
3. From the air module, remove the four (4) capscrews, and lift the module from the shift bar housing.

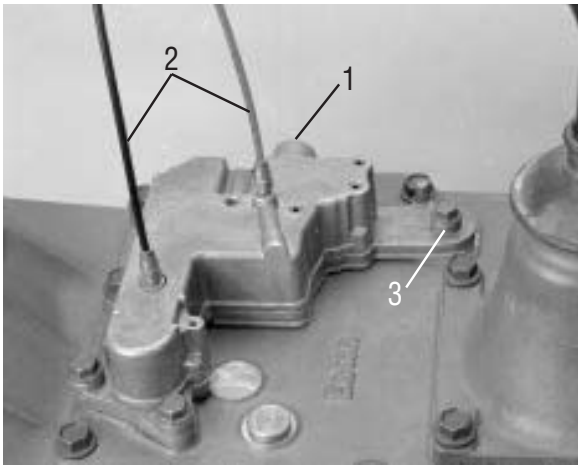

https://truckmanualshub.com/

4. From the air module interlock finger, remove the O-ring, and inspect if for damage or wear. Replace it if necessary.

5. From the two small recesses in the shift bar housing top, remove the two (2) O-rings and inspect them for damage or wear. Replace them if necessary.

   Note: The O-rings may stick to the bottom of the air module.

https://truckmanualshub.com/

How to Install the Air Module

Special Instructions

None

Special Tools

- Torque Wrench 25 lb. ft. Capacity

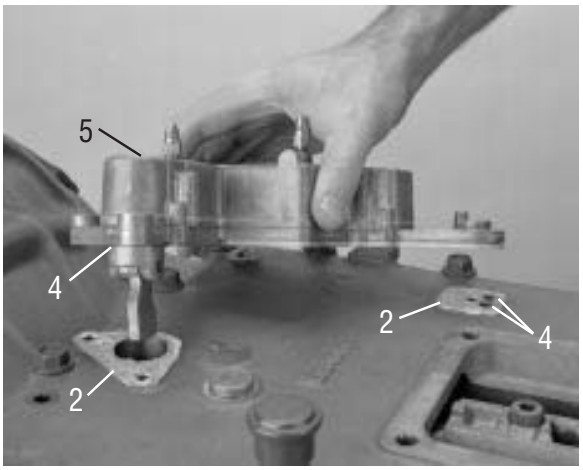

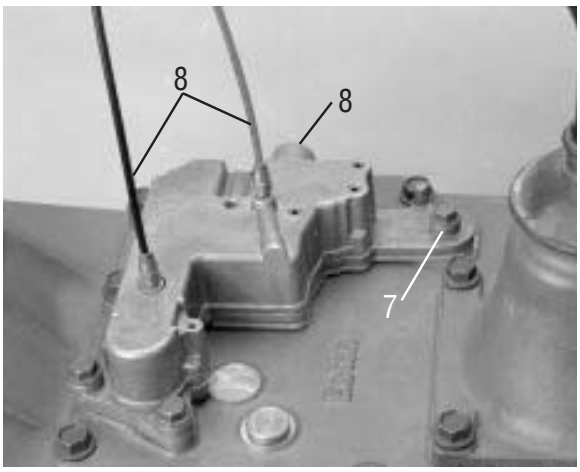

Procedure -

1. Clean all rust, paint, or other debris from the air module mounting surfaces of the shift bar housing.

2. To help prevent corrosion between the aluminum air module and the cast iron shift bar housing, apply a light film of high temperature grease to the air module mounting surfaces of the shift bar housing.

3. Lightly apply Eaton®Fuller® silicone lubricant #71206 or equivalent to all O-rings so a film covers the entire surface of each O-ring.

4. Install the large O-ring on the air module interlock finger boss, and position the two (2) small O-rings in the recesses in the shift bar housing.

5. Position the air module on the shift bar housing.

6. Apply Eaton®Fuller® thread sealant #71205 or equivalent to the four (4) retaining capscrews.

7. Install the four (4) retaining capscrews, and tighten them to 20-23 lb. ft. (27-31 N•m) of torque.

8. Reconnect the air lines to the Inlet port and the other ports on the top of the air module.

9. Return air to the system, and check for leaks.

https://truckmanualshub.com/

How to Disassemble the Gear Shift Lever

Special Instructions

If total disassembly is needed, the Roadranger valve, must be removed first.

Release the spring one coil at a time.

Special Tools

- Vise with brass jaws or wood blocks

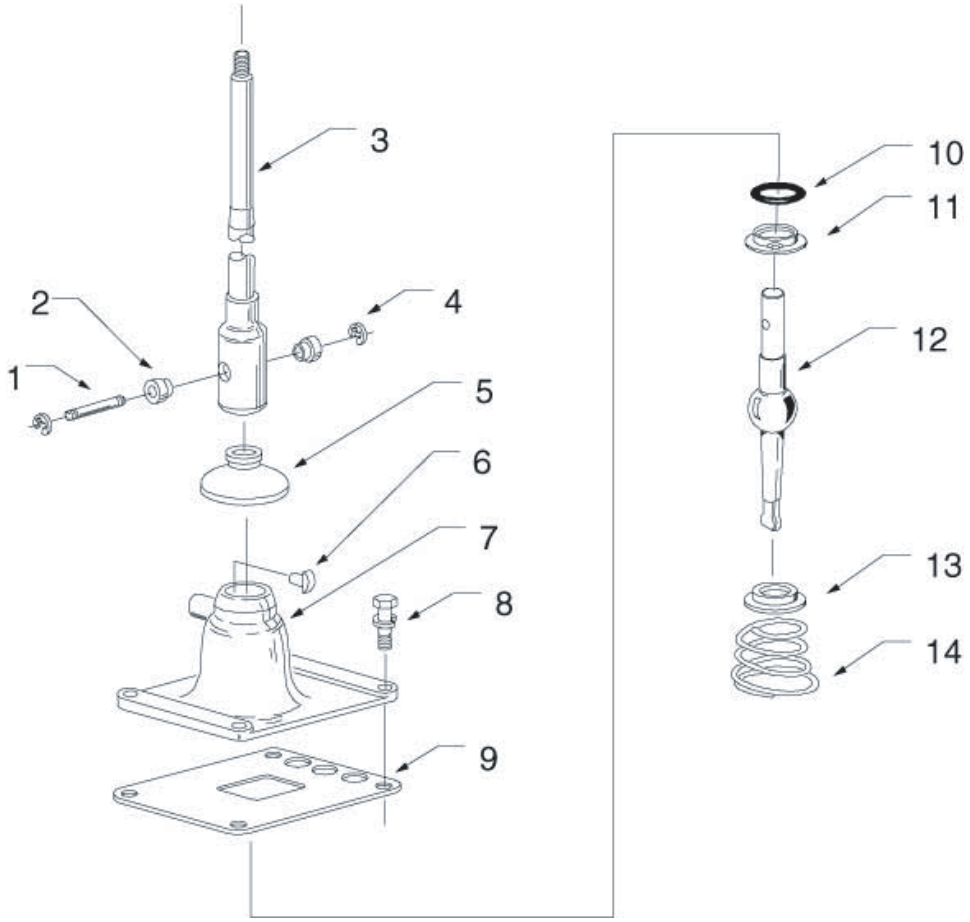

1. Pin
2. Bushing
3. Upper Lever
4. Snap Ring
5. Rubber Boot
6. Spade Pin
7. Housing
8. Capscrew
9. Gasket
10. O-Ring
11. Washer
12. Lower Lever
13. Stepped Washer
14. Tension Spring

https://truckmanualshub.com/

Procedure -

1. On a non-isolated shift lever, remove the Roadranger valve using the “How to Remove the Roadranger valve” instructions in In-Vehicle Service Procedures. If the shift lever is equipped with a lever isolator, remove the snap ring, bushing, and cross pin to disconnect and remove the upper lever.

2. Slide the rubber boot up and off the shift lever shaft.

3. With housing bottom facing up, secure the assembly in a vise.

4. Use large screwdriver to twist between the spring and housing, forcing the spring from under the housing lugs one coil at a time.

5. From inside the housing tower, remove the tension spring, washer, and gear shift lever.

6. In models so equipped, from the housing bore, remove the nut and washer.

7. From the housing tower spade pin bore, remove and inspect the spade pin, discard if damaged.

8. From the housing tower inside groove, inspect the O-ring, discard if damaged.

https://truckmanualshub.com/

How to Assemble the Gear Shift Lever

Special Instructions

Inspect tension spring and washer for wear.

Apply Eaton rust preventative lubricant #71212 or equivalent to the shift lever pivot ball. A rust preventative lubricant film should cover all surfaces between and including the pivot ball.

Seat the tension spring one coil at a time.

Special Tools

- Vise with brass jaws or wood blocks
- Item T4: Tension Spring Driver (see Table 6)

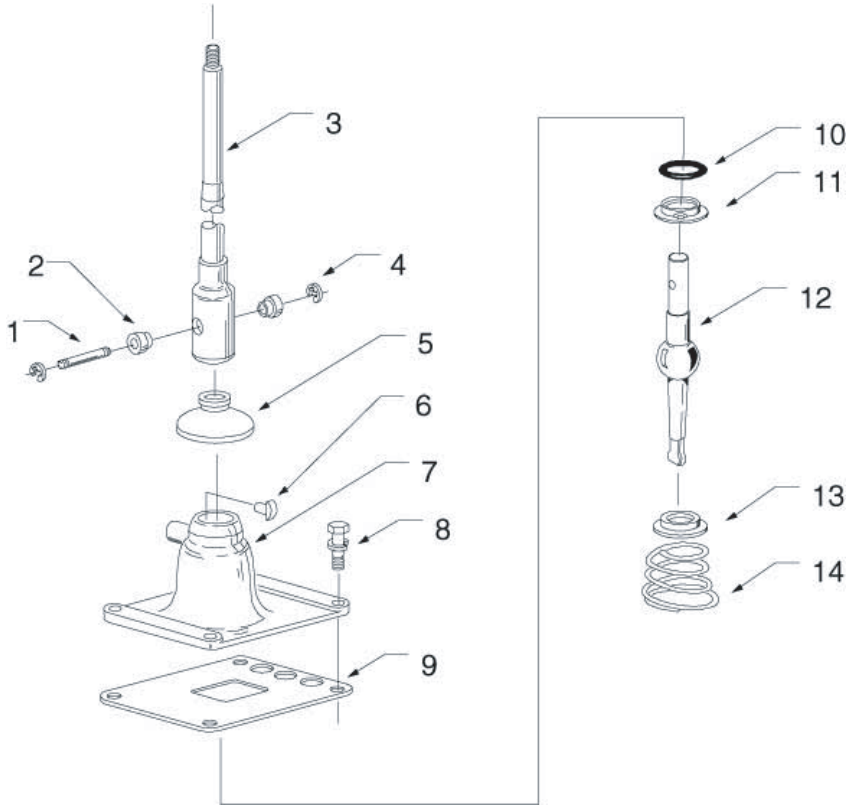

1. Pin
2. Bushing
3. Upper Lever
4. Snap Ring
5. Rubber Boot
6. Spade Pin
7. Housing
8. Capscrew
9. Gasket
10. O-Ring
11. Washer
12. Lower Lever
13. Stepped Washer
14. Tension Spring

https://truckmanualshub.com/

Procedure -

1. With housing bottom facing up, secure the assembly in a vise.

2. If the spade pin is damaged, replace and install the spade pin, in housing tower bore.

3. In models so equipped, install the nut and washer in the housing bore.

4. If the O-ring is damaged, replace; lubricate the O-ring with Eaton/Fuller lubricant #71206 or equivalent. Install the O-ring in the housing tower inside groove.

5. Align the lever ball slot with the spade pin and position the gear shift lever in the housing tower.

6. With dished-side up, install the washer over the ball.

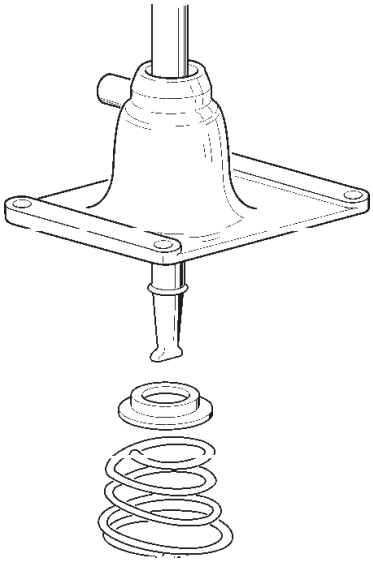

7. Use a tension spring driver T4 to install the tension spring under the housing lugs.

8. Remove the assembly from the vise.

9. Install a rubber boot over the gear shift lever and against the housing.

   Note: Make sure the gear shift lever can move.

https://truckmanualshub.com/

How to Remove the Shift Bar Housing

Special Instructions

The air module does not have to be removed in order to remove the shift bar housing.

Special Tools

- Typical service tools

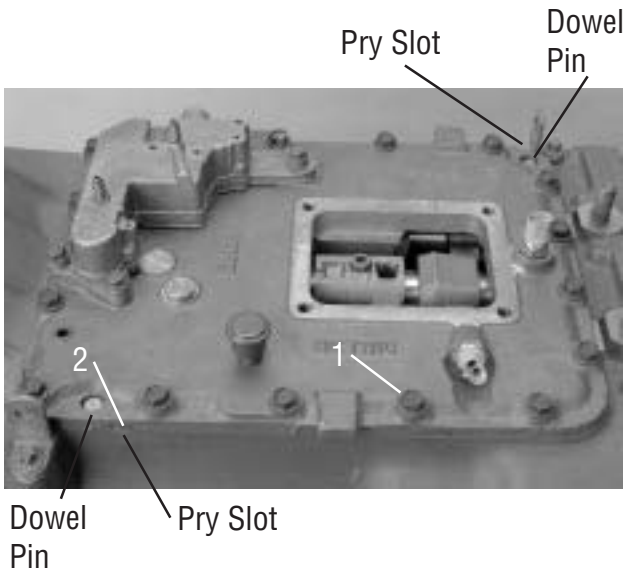

Procedure -

1. From the shift bar housing rim, remove the 16 retaining capscrews.
2. Insert a screw driver into the pry slots near the dowel pins and pry the housing off the dowel pins.

   TIP: Light upward hammering on the three tabs may help loosen the shift bar housing. Do not hammer excessively as the housing may crack.
3. Lift the shift bar housing straight off the transmission case and set it on a bench.
4. Remove the gasket, and clean all mounting surfaces of gasket material.

https://truckmanualshub.com/

How to Install the Shift Bar Housing

Special Instructions

None

Special Tools

- Torque Wrench 50 lb. ft. capacity

Procedure -

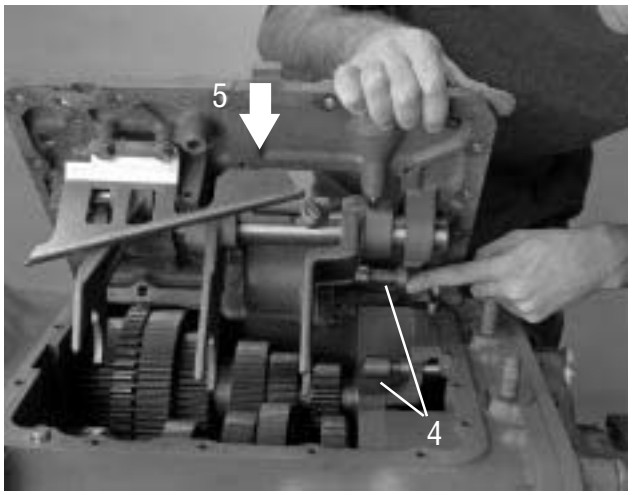

1. Clean the gasket mounting surface of the main case and shift bar housing, and place a new gasket on the main case.

2. Place the shift bar housing shift shaft in the Neutral position so the yokes will be positioned to fit over the mainshaft sliding clutches.

3. In the main case of the transmission, place the mainshaft sliding clutches in their neutral positions.

4. If the auxiliary section is in place, slide the range piston bar forward or rearward to align the notch in the piston bar with the notch in the range yoke bar.

5. With all parts properly aligned, lower the shift bar housing straight down into position. Position can be verified thru shift tower opening.

6. Apply Eaton® Fuller® thread sealant #71205 or equivalent to the retaining capscrews.

7. Install the 16 retaining capscrews. Tighten the screws in sequence per numbers on shift bar housing to 40-45 lb. ft. (54-61 N•m) of torque.

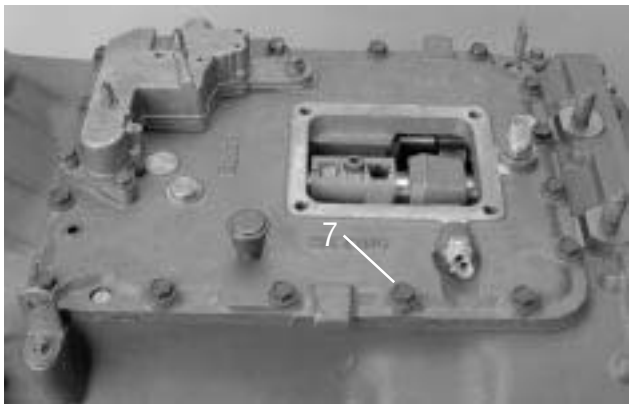

https://truckmanualshub.com/

How to Disassemble the Shift Bar Housing

Special Instructions

During disassembly, lay all parts on a clean bench in order of removal to facilitate assembly.

Special Tools

- Typical service tools

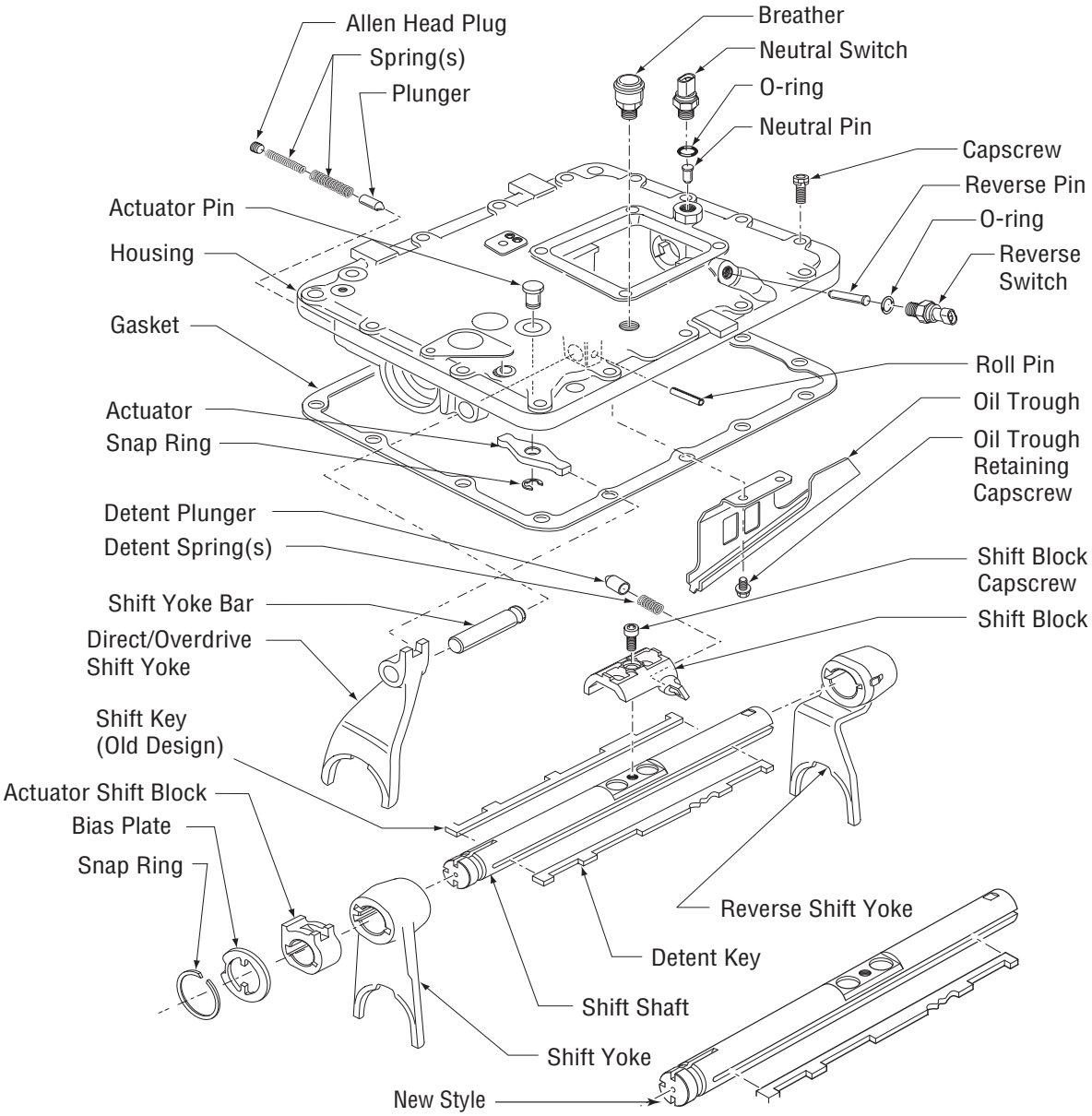

https://truckmanualshub.com/

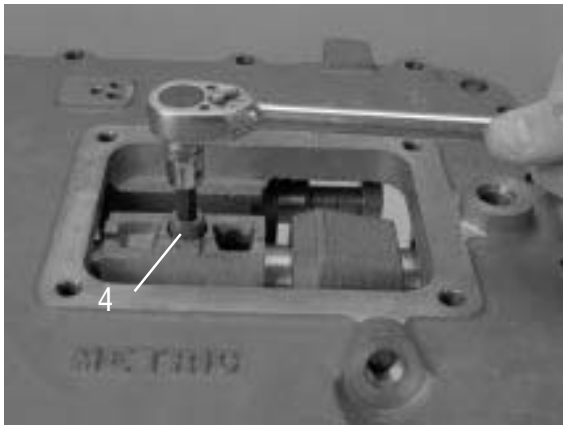

Procedure -

1. If present, remove the air module according to the “Air Module Removal” instructions in this section.

2. If present, remove the reverse and neutral switches according to the instructions in In-Vehicle Service Procedures.

3. If present, remove the breather.

4. Remove the socket head capscrew holding the shift block to the shift shaft using an 8 mm or 5/16” hex driver.

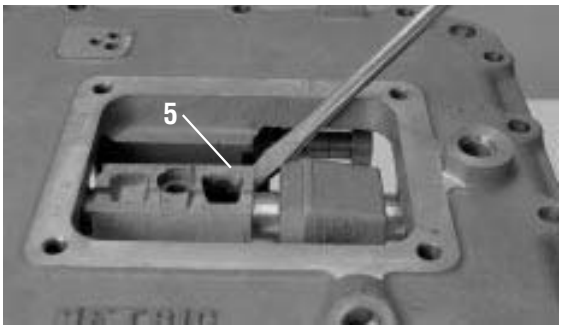

5. Lightly pry upward on the shift block, and remove it.

   Note: The detent plunger and spring may fall out of the shift block when it is removed. Also, the shift block may contain two springs.

6. Lay the shift bar housing on a bench with the bottom facing upward.

7. If necessary, remove the two oil trough retaining capscrews, and remove the oil trough.

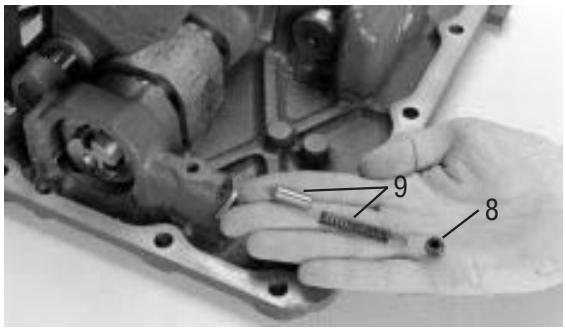

8. Remove the Allen head plug from the boss at the front of the shift bar housing.

   Note: The front of the shift bar housing is indicated by the word FRONT cast into the housing itself.

9. Remove the spring(s) and plunger located behind the Allen head plug removed in step 8. Tip the housing to its side so the plunger and spring(s) slide out. Note the color and position of the spring(s).

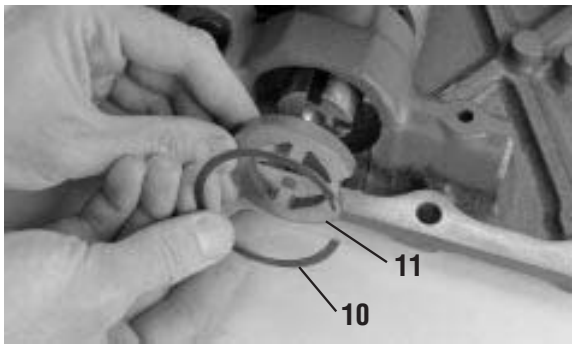

10. At the front of the shift bar housing, remove the snap ring from the support boss.

11. From the front of the shift shaft, remove the bias plate.

https://truckmanualshub.com/

12. Push or pull the shift shaft through the boss at the front of the shift bar housing to remove it from the shift bar housing.

13. Remove the shift key, detent key, and shift yokes.

    Note: The new style shift bar housing has the shift key built into the shift bar.

    Note: Steps 14 through 16 are for overdrive models only.

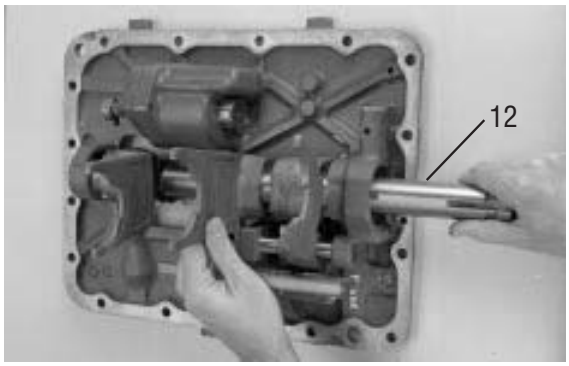

14. Use a pin punch and hammer to drive out the roll pin securing the direct/overdrive shift yoke.

15. Remove the yoke bar and direct/overdrive shift yoke.

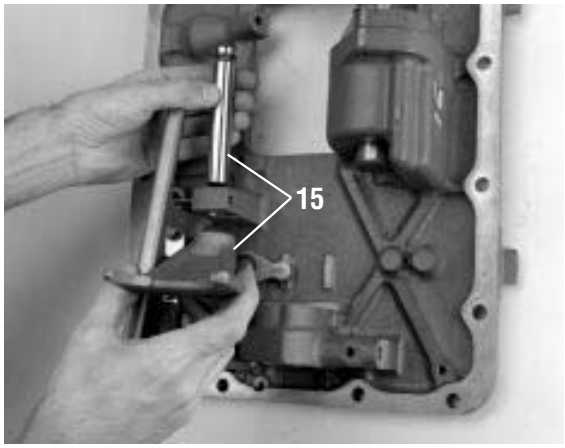

16. From the yoke actuator pin, remove the snap ring and actuator.

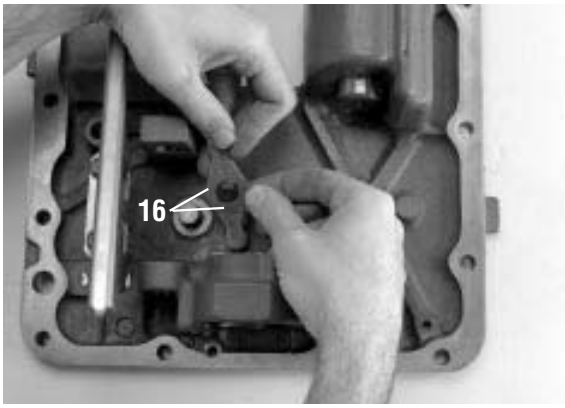

https://truckmanualshub.com/

How to Disassemble the Range Cylinder

Special Instructions

CAUTION

Do not overstretch the snap ring in step 4. If it is overstretched, it must be replaced.

Special Tools

- Typical service tools

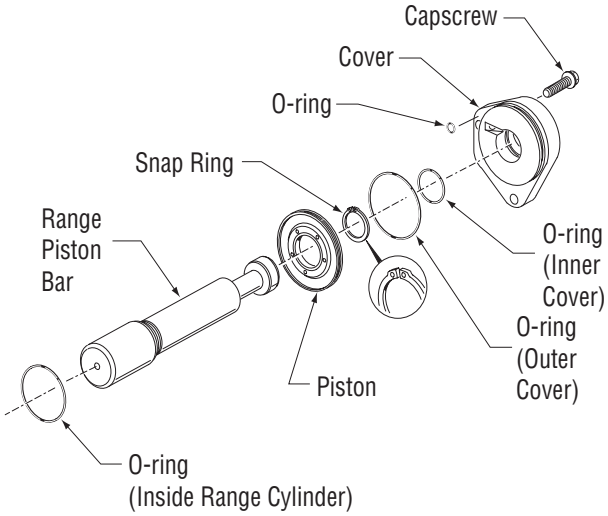

Procedure -

1. If not previously removed, remove the shift bar housing.
2. Remove the two (2) capscrews on the range cylinder cover.
3. Using a soft bar, tap the piston bar rearward to remove the range cylinder cover and piston assembly from the cylinder.
4. Remove the range piston snap ring and range piston from the piston bar.

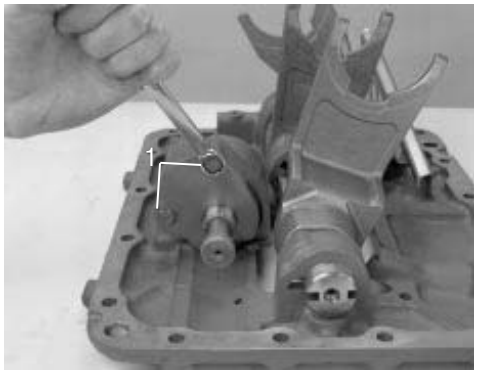

5. Remove the three (3) O-rings on the cylinder cover and the single O-ring inside the range cylinder.

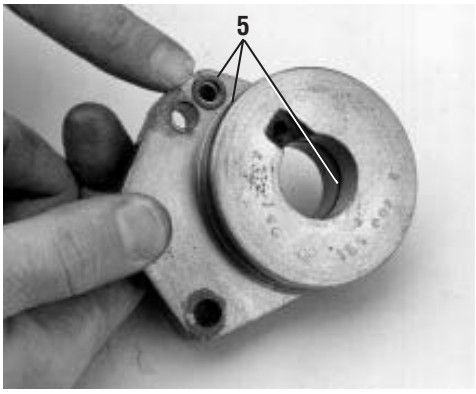

https://truckmanualshub.com/

How Assemble the Range Cylinder

Special Instructions

If the snap ring fits loosely in its groove, it is overstretched and must be replaced.

Special Tools

- Torque Wrench 50 lb. ft. capacity

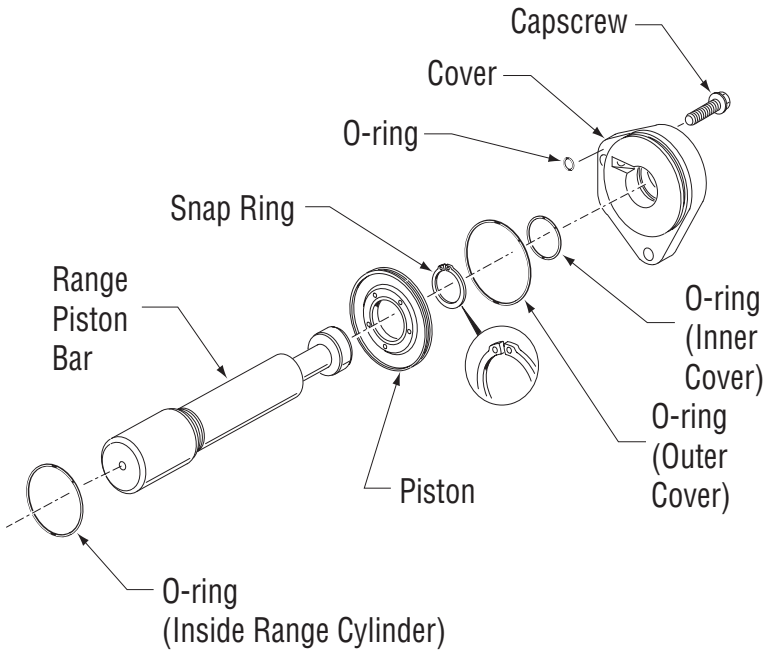

Procedure -

1. To prevent rusting, lightly lubricate the cylinder bores and piston bar with a light oil.
2. Place the range cylinder piston on the piston bar with the rubber coated side facing the shoulder on the bar. The piston is properly installed when the snap ring groove is exposed.
3. Install the snap ring on the piston bar, using care to avoid overstretching the snap ring.
4. Apply Eaton®Fuller® silicone lubricant #71206 or equivalent to the range piston lip surface and to the four (4) O-rings.
5. Install the proper O-ring in the groove in the range cylinder.
6. Install the range piston assembly in the range cylinder.

https://truckmanualshub.com/

7. Install the proper O-ring in the groove on the inside of the range cylinder cover, and install the largest O-ring in the groove on the outside of the range cylinder cover.

8. Place the smallest O-ring in the recess in the cover, and install the cover.

9. Apply Eaton®Fuller® thread sealant #71205 or equivalent to the retaining capscrews, and install the two (2) capscrews on the range cover. Tighten the capscrews to 20-23 lb. ft. (27-31 N•m) of torque.

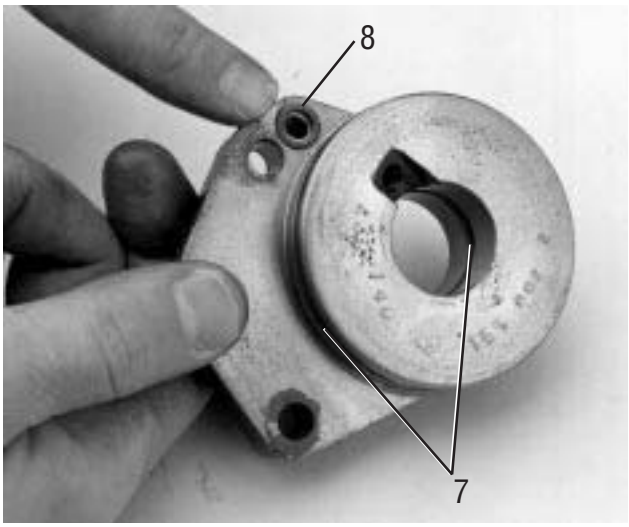

https://truckmanualshub.com/

How to Assemble the Shift Bar Housing

Special Instructions

Steps 1 for overdrive models only.

Special Tools

- Torque Wrench 50 lb. ft. capacity

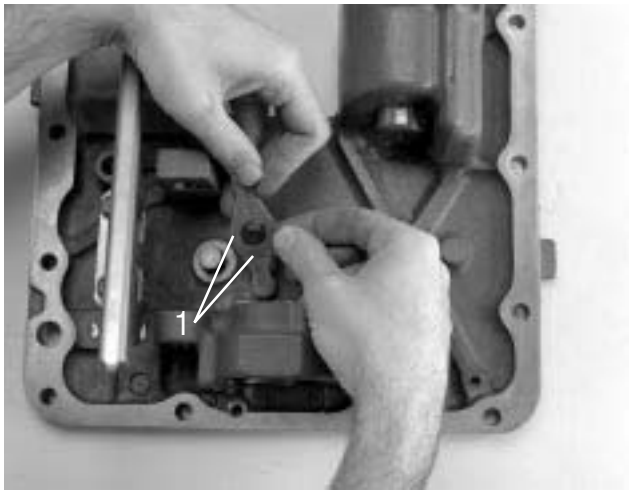

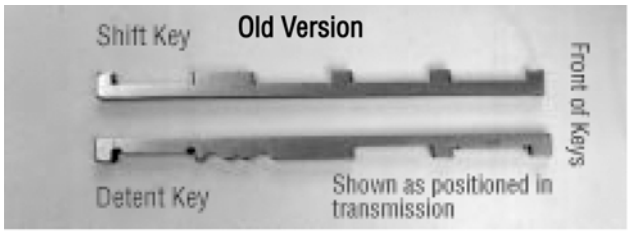

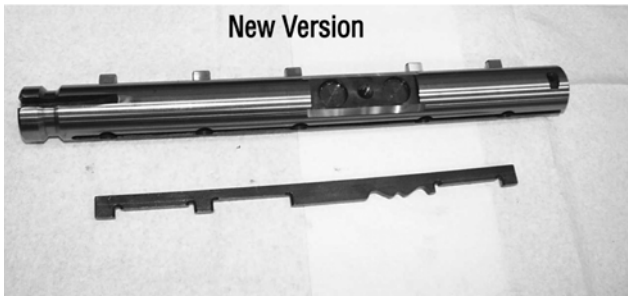

Procedure -

1. Install the actuator arm over the pivot pin, and secure it with the snap ring.

   Note: On overdrive models, if the direct/overdrive yoke was not previously removed, install the oil trough and temporarily tie the yoke to the trough to prevent the yoke from falling toward the shift shaft and interfering with assembly.

2. Position the housing with the bottom facing upward and the front of the housing (marked FRONT) toward you.

3. To aid assembly, lightly oil the inside of the shift yokes, overdrive shift block, shift key, detent key, shift key, and the inside of the shift shaft bores on the shift bar housing.

   Note: The shift key is part of the shift bar on newer models. The two housings have different parts, which requires a complete shiftbar housing, shiftbar and shift key if anything

4. Position the shift yokes (and actuator shift block for overdrive models) in the approximate position in the shift bar housing that they will be in when the shift shaft is installed. Make sure the yokes are installed with the word FRONT facing the front of the shift bar housing.

https://truckmanualshub.com/

5. Install the detent key (it has rounded, protruding notches) from the front of the shift bar housing. Install the key with the word FRONT facing the front of the shift bar housing. To install the key, slide it down the left side of the shift shaft bore and through each shift yoke (and Actuator shift block). One of the rectangular notches should fit in each yoke (and the shift block). The key fits between the front and rear bores of the shift bar housing. The three notches face away from the centerline of the bore.

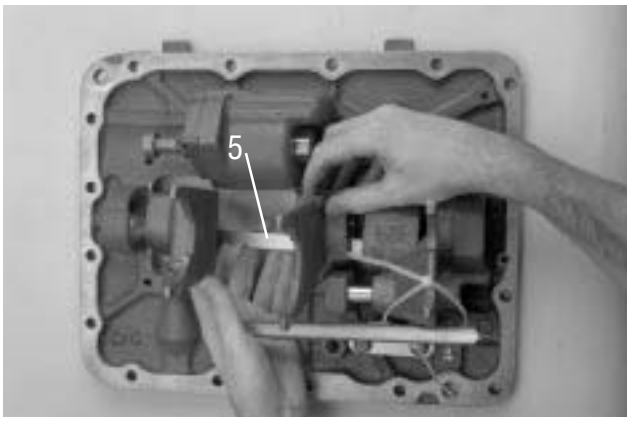

⚠ CAUTION

Do not hammer or force the shift shaft into position. The shift bar housing components will be damaged. When all the components are in the proper positions, the shift shaft will slide in easily.Try to keep the shift yokes in the neutral position when installing the detent key.

6. Starting at the front of the shift bar housing, slide the shift shaft into position, making sure the capscrew hole in the shift shaft faces downward. Use one hand to hold and position the detent key and yokes and the other to insert the shift shaft. The detent key fits in the groove on the shift shaft.

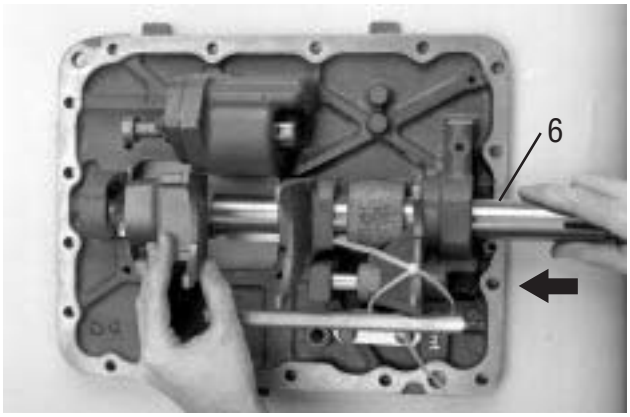

7. Newer models have the shift key built into the shift bar. Installation procedures are the same except with the exception of installing a separate shift key.

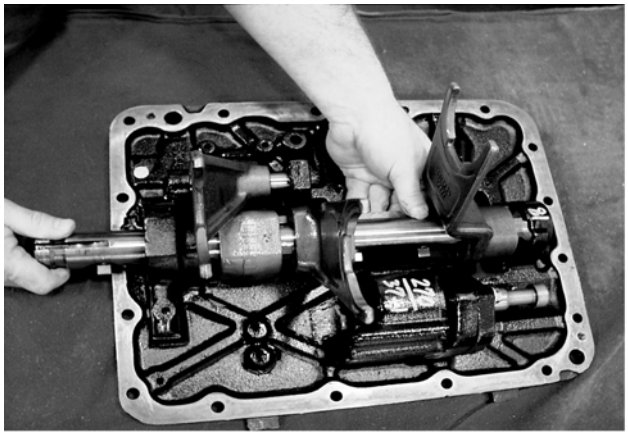

⚠ CAUTION

A new shift bar housing and shift bar are required if either part is being replaced with the new updated version.

Note: Do not allow the detent key to slide rearward into the shift bar housing bore. It should butt against the boss.

8. If necessary, reposition the shift shaft yokes (and actuator shift block) in the Neutral position by aligning the detent key notches with the yokes (and actuator shift block).

https://truckmanualshub.com/

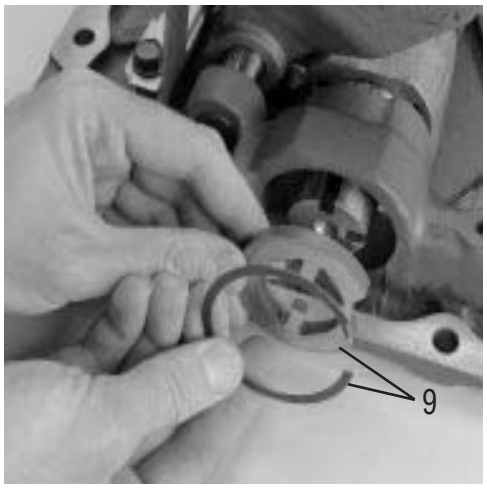

9. On the shift bar front, install the bias plate and snap ring. To properly install the bias plate and snap ring, the shift shaft or shift key (depending on housing type) may need to be pushed rearward. Install with letters facing out

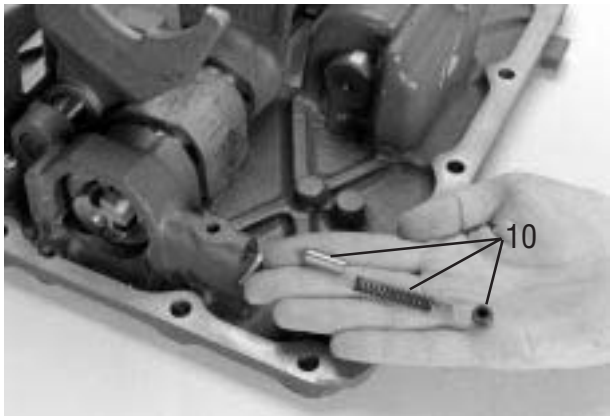

10. Apply Eaton®Fuller® thread sealant #71205 or equivalent to the Allen head plug threads, and install the bias plunger, bias spring(s), and Allen head plug. Torque the Allen head plug to 84-120 lb. in. (9.5-13.6 N•m).

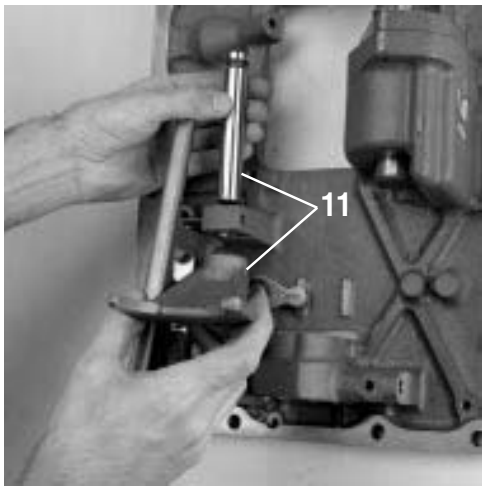

11. If previously removed, position the direct/overdrive shift yoke and yoke bar in the shift bar housing.

12. Install the yoke bar roll pin, and drive it into place.

13. If previously removed, position the oil trough, and install the oil trough retaining capscrews. Torque the capscrews to 20-23 lb. ft. (27-31 N•m).

14. Turn the shift bar housing over so the shift block can be installed.

15. Place the detent spring(s) and detent plunger in the shift block.

https://truckmanualshub.com/

16. Place the shift block on the shift shaft using the following procedure:
    a. Tilt the shift block so the plunger faces slightly upward.
    b. Place the plunger in the center of the detent notch, and press the plunger in to compress the spring(s).
    c. While the spring(s) are compressed, roll the shift block into place on the shift shaft.

    Note: The shift shaft and shift key may (depending on housing type) require repositioning to allow the shift block to fit into place.

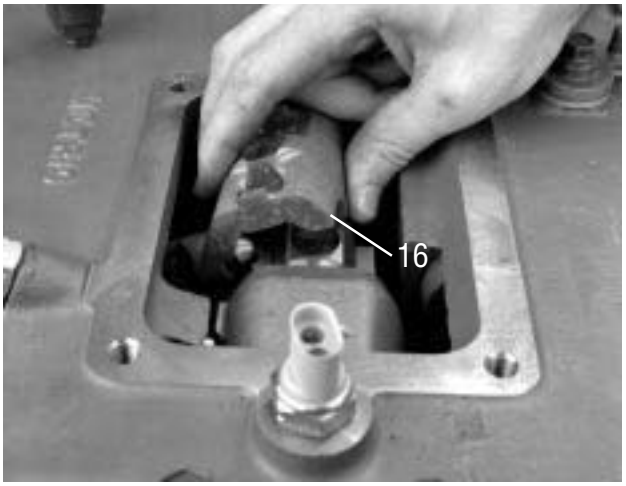

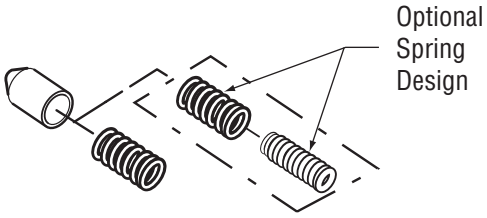

17. Apply Eaton Fuller thread sealant #71205 or equivalent to the capscrew. Install the shift block capscrew. Torque the screw to 40-45 lb. ft. (54-61 N•m).

18. Install the following components: reverse pin and switch, neutral pin and switch, breather, and air module.

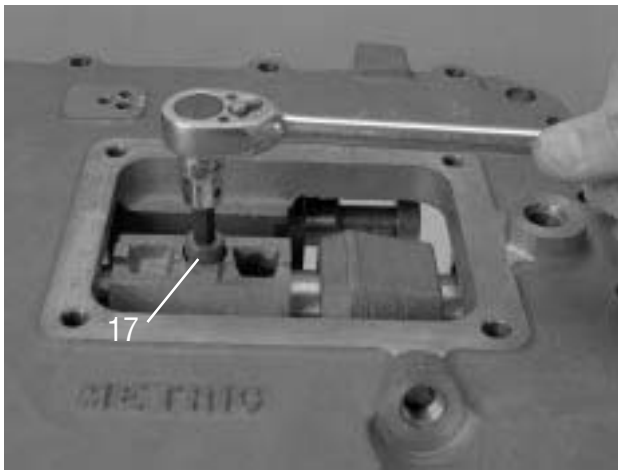

https://truckmanualshub.com/

How to Remove the Input Shaft Assembly (without main case disassembly)

Special Instructions

None

Special Tools

- See Tool Information (see Table 6)
- Item T16: Bearing puller
- Soft bar and maul

Procedure -

1. From the front bearing cover, remove the six (6) retaining capscrews and cover. Remove any remaining gasket material from the case and cover.

2. If present, remove and discard the rubber seal ring on the input shaft. The ring is used only to seal the transmission during shipment.

3. From the input shaft groove, remove the bearing retaining snap ring.

https://truckmanualshub.com/

4. Use a soft bar and maul to drive the input shaft toward the case rear as far as possible. Pull the input shaft forward.

5. Install the bearing puller tool and remove the input bearing from the case and input shaft or use pry bars or screwdrivers to complete removal of the bearing.

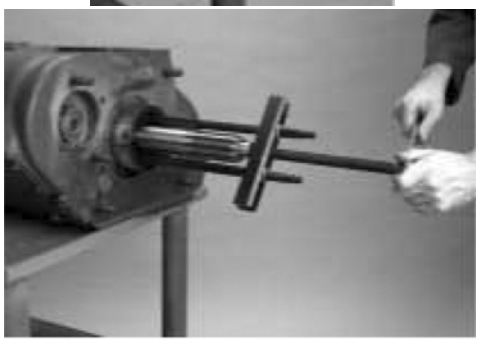

6. Remove the drive gear internal snap ring.

7. Pull the input shaft forward and out of the drive gear.

8. Inspect the bushing in the input shaft pocket, replace if damaged.

https://truckmanualshub.com/

How to Install the Input Shaft Assembly (without main case disassembly)

Special Instructions

None

Special Tools

- See Tool Information (see Table 6)
- Item T12: Input bearing driver
- Toolmaker's dye

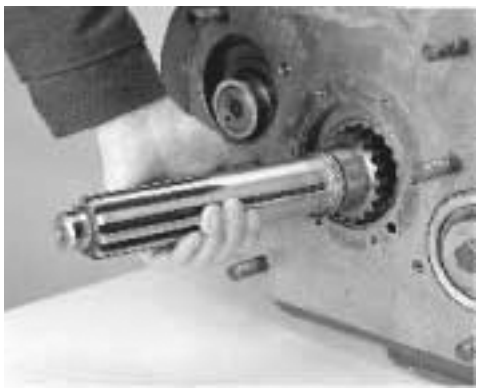

Procedure -

1. If necessary, install the bushing in the back of the input shaft.

2. From the front, engage the input shaft spline teeth into the main drive gear.

   Note: The current design input shaft spline teeth have noticeable clearance to the main drive gear internal spline teeth. This is normal.

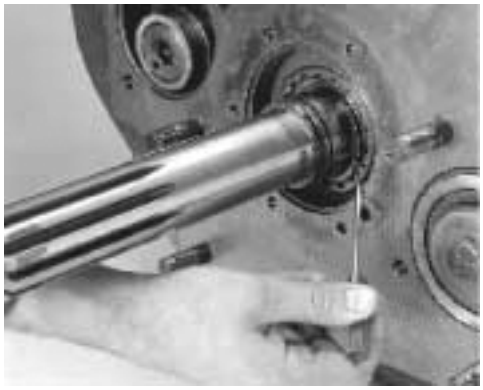

3. Install the snap ring in the main drive gear inside groove.

4. With the bearing external snap ring to the outside, position the bearing on the input shaft.

https://truckmanualshub.com/

5. Install the input shaft bearing over the input shaft. Use a flanged-end bearing driver which contacts both the bearing inner race and outer race. Drive the bearing until it contacts the front case.

6. Install the input shaft retaining snap ring.

   Note: Do not replace the small rubber lip seal. It is used only to prevent leakage during shipping.

7. Install the front bearing cover and torque the six capscrews to specifications.

https://truckmanualshub.com/

How to Remove the Auxiliary Section

Special Instructions

None

Special Tools

- Output Yoke Puller T1 (see Table 6)
- Auxiliary Section hanger T2 (see Table 6)
- Auxiliary countershaft support plates T3

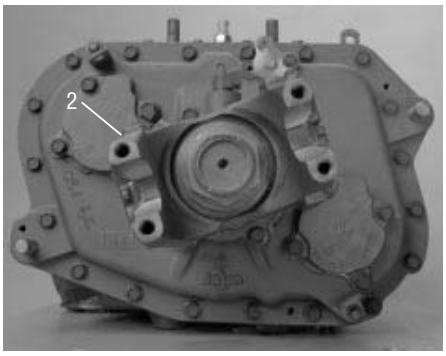

Procedure -

1. If not previously removed, remove the shift bar housing according to the “Shift Bar Housing Removal” instructions in this section.

2. If not previously removed, remove the output yoke according to the following instructions:.

   a. Remove the output nut using a 70 mm or 2 3/4” socket.

Note: To prevent the output shaft and yoke from rotating while removing the nut, shift the transmission into two gears or use a yoke holding tool.

   b. Remove the output yoke. Use the output yoke puller (Tool ref. ID T1).

IMPORTANT

If the shift bar housing is still installed, the following two steps must be performed before removing the auxiliary section.

This only applies to units with the lock cover. New units don’t contain the cover and require removal of the shiftbar housing to remove the auxiliary section.

3. Remove the two capscrews from the range bar lock cover (only applies if it’s the old style cover).

   Note: Left is old style and right is the new style.

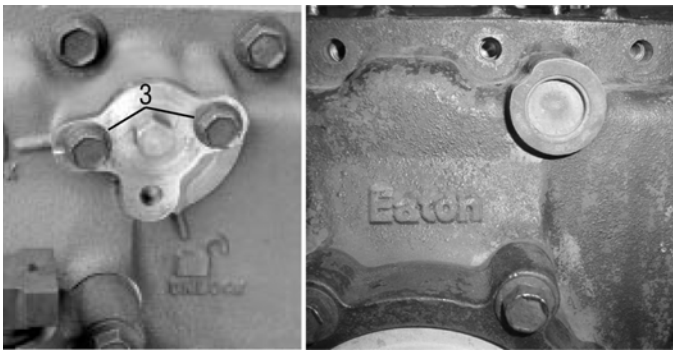

https://truckmanualshub.com/

4. Rotate the lock cover counterclockwise until the indication notch lines up with the unlock symbol, and secure the cover in position by inserting one of the capscrews into the right-side hole.

   Note: The dowel pins may have to be driven forward and removed to assist in the removal of the auxiliary section.

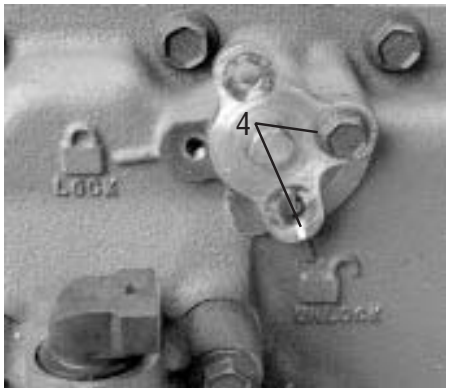

5. Remove the auxiliary countershaft covers and install the support plates T3.

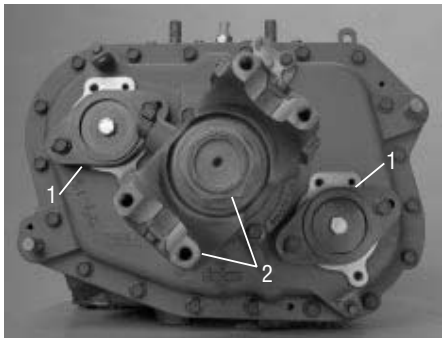

6. Remove the 19 capscrews securing the auxiliary section to the main case.

7. Run an M10x1.5 tap into the three threaded pusher holes in the auxiliary section flange to clean paint, rust, and other debris from the holes. Oil the holes.

8. Thread three (3) capscrews evenly into the three pusher holes on the auxiliary section flange to break the gasket seal.

9. Continue threading the capscrews in until the housing is moved rearward 1/4," and then remove the pusher screws.

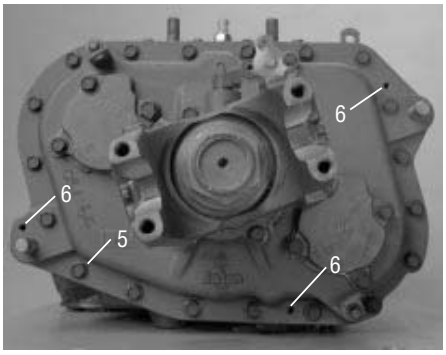

10. Install an auxiliary section hanger bracket on the top of the auxiliary section, and attach a chain to the hanger bracket. (Tool ref. ID T2)

11. Using the chain to support the weight of the auxiliary section, move the auxiliary section rearward until it is free of the main case.

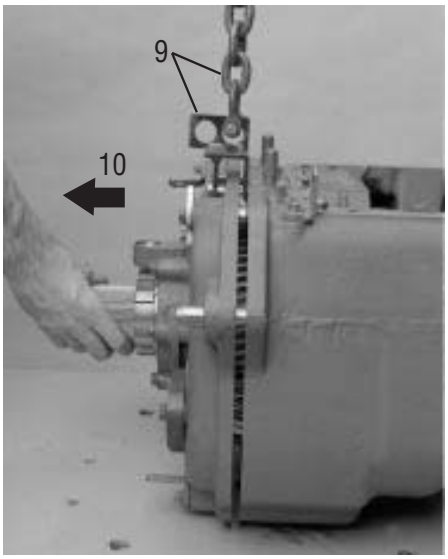

https://truckmanualshub.com/

How to Disassemble the Auxiliary Section

Special Instructions

None

Special Tools

- Typical service tools

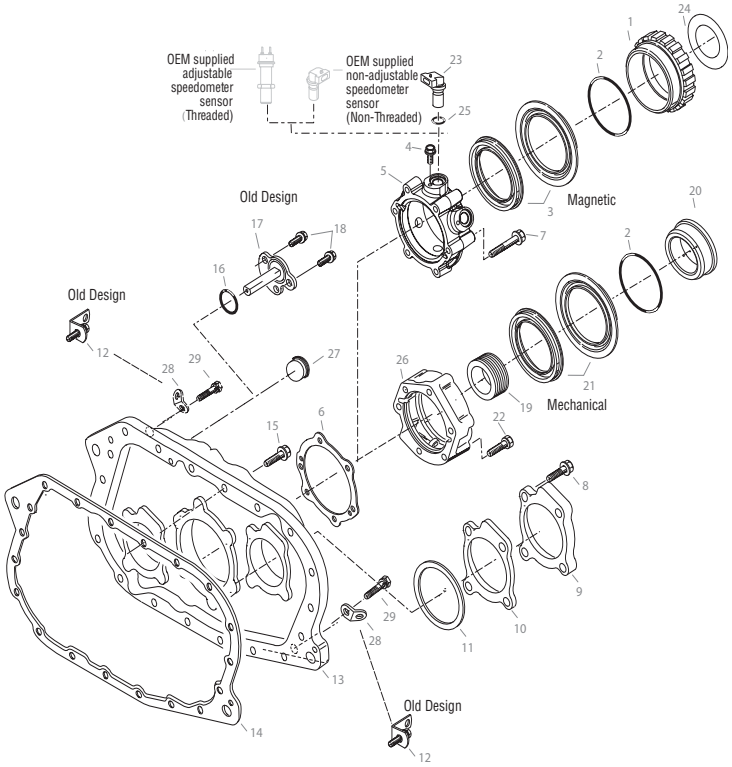

1. Speedometer Rotor Assembly
2. O-Ring
3. Oil Seal Kit
4. Capscrew
5. Rear Bearing Cover Assembly
6. Gasket
7. Capscrew
8. Capscrew
9. Cover
10 Gasket
11. Shim Kit
12. Lifting Eye Kit
13. Rear Housing Assembly
14. Gasket
15. Capscrew
16. O-Ring
17. Range Bar Cover Assembly
18. Screw
19. Speedometer Drive Gear
20. Speedometer Spacer Assembly
21. Oil Seal with Slinger
22. Screw
23. Speedometer Sensor Kit
24. Slinger
25. O-Ring
26. Rear Bearing Cover Assembly
27. Plug Retaining Kit
28. Lifting Kit
29. Capscrew

https://truckmanualshub.com/

Procedure -

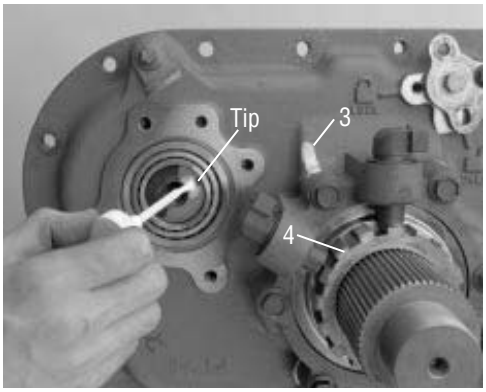

1. Mount the auxiliary section in a vise with brass jaw protectors. (The jaw protectors will prevent damage to the auxiliary section flange.)

   Note: If the auxiliary countershafts, countershaft bearings, bearing races, bearing shims, auxiliary section housing, and main case will be reused, remove one of the countershaft bearing covers and mark the parts as upper shaft or lower shaft. Then if the countershafts are reassembled with all parts in their original positions, the original shims can be reused, and re-shimming will not be required.

2. If not previously removed, remove the output yoke nut and output yoke. To remove the nut, use a large air impact wrench or a breaker bar and a 70 mm or 2 3/4” socket. To prevent the output shaft from turning, place a shop rag in the gear mesh or use a yoke holding tool. Use a yoke puller (Tool ref. ID T1) to remove the yoke.

3. Mark the output bearing cover and the rear of the housing in such a way that you will know what position to install the bearing cover later. The cover can be installed in two opposite positions.

4. Remove the speedometer rotor/seal sleeve.

5. Remove the O-ring from the output shaft.

   ⚠ WARNING

   As you move the output shaft forward, the auxiliary counter shafts may fall out of the auxiliary section housing causing personal injury or damage to the countershafts.

6. Using a maul, move the output shaft forward far enough to remove the auxiliary countershafts.

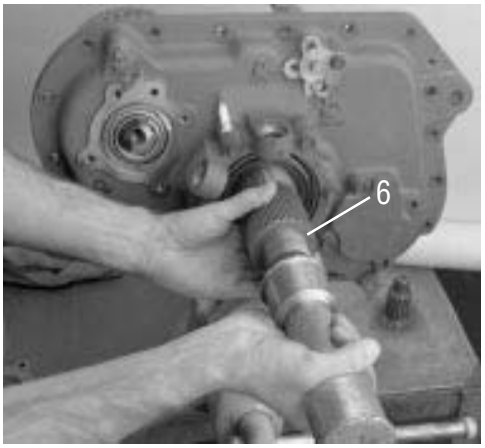

7. Remove the range synchronizer assembly and range yoke assembly from the output shaft.

8. Continue moving the output shaft assembly forward until it is free of the auxiliary section housing.

9. Remove the four (4) capscrews from each of the auxiliary housing countershaft rear bearing covers.

10. From each auxiliary countershaft, remove the auxiliary countershaft rear bearing cover, gasket, and shim.

11. Remove the auxiliary countershaft bearing races.

https://truckmanualshub.com/

12. From the auxiliary housing back, remove the capscrews securing the lock cover.

13. Remove the lock cover and remove the O-ring from the cover.

14. From the auxiliary housing rear, remove the output bearing retaining capscrews and cover.

15. To remove the output seal, drive the seal out the rear of the output bearing cover with a hammer and drift.

16. Remove the output bearing and bearing cup.

https://truckmanualshub.com/

How to Disassemble the Range Yoke

Special Instructions

None

Special Tools

- Typical service tools

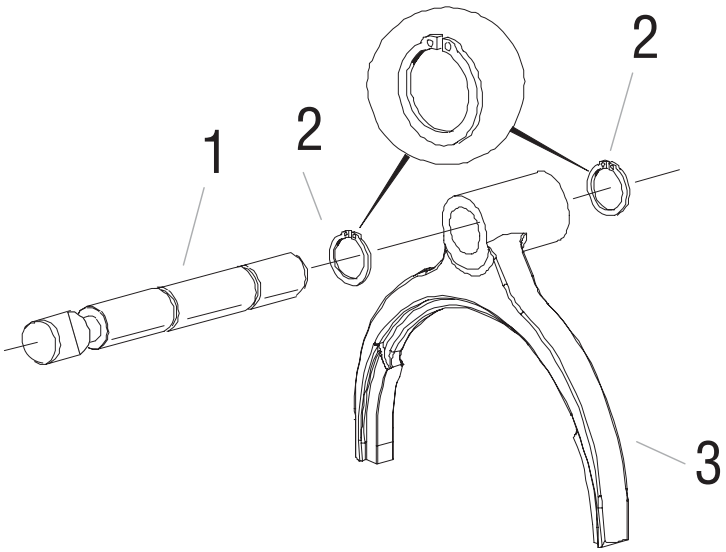

1. Yoke Bar
2. Snap-Ring
3. Range Yoke

Procedure -

1. Remove the range bar O-ring.

2. Remove the range bar pin.

3. Remove one of the range yoke snap rings, using care to avoid overstretching the snap ring.

4. Remove the range yoke from the range yoke bar.

https://truckmanualshub.com/

How to Disassemble the Output Shaft

Special Instructions

None

Special Tools

- Press

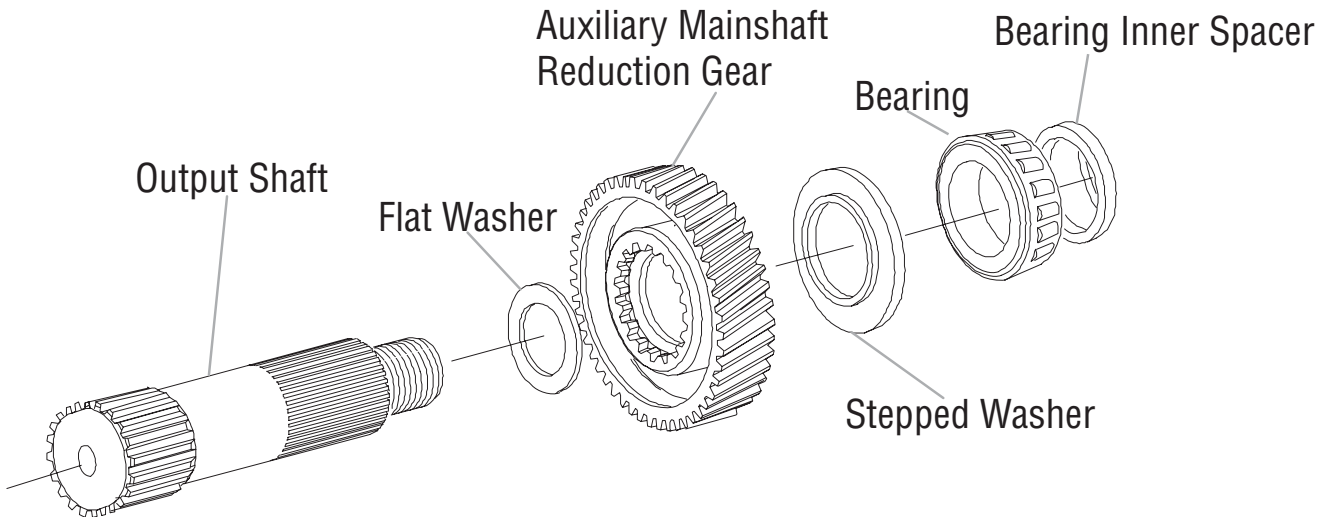

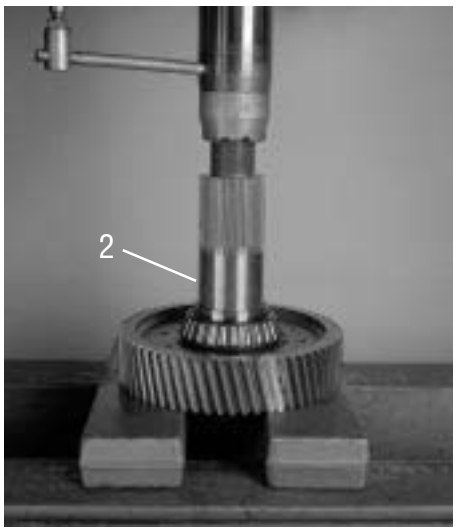

Procedure -

1. From the output shaft, remove the output bearing inner spacer.
2. Using the output shaft assembly gear front face as a base, press the output shaft through the bearing and gear.

https://truckmanualshub.com/

How to Disassemble the Synchronizer Assembly

Special Instructions

Place the synchronizer assembly on a clean, flat surface. Cover the synchronizer assembly with a shop rag to prevent losing the three (3) springs under pressure from the HI range synchronizer pin locations.

Special Tools

- Typical service tools

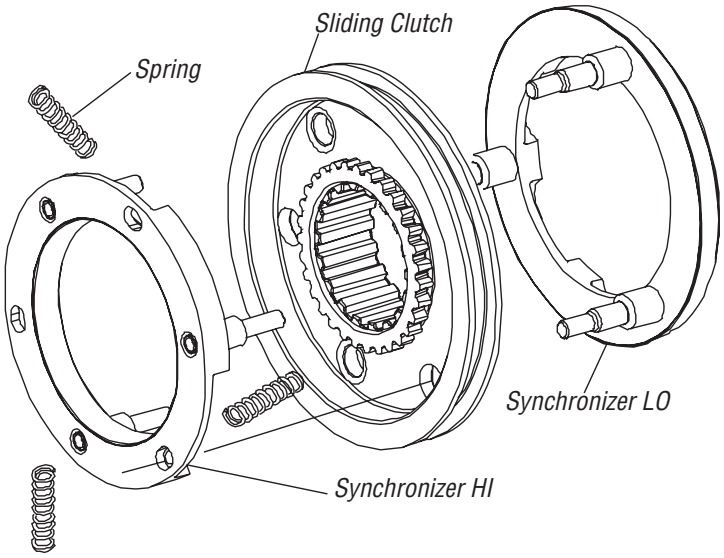

Procedure -

1. Place the larger LO range synchronizer ring on the bench.
2. Cover the synchronizer with a shop rag to contain the springs.
3. Grab both sides of the HI range synchronizer and pull.

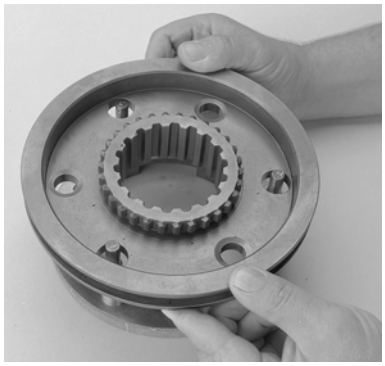

4. From the synchronizer ring LO range pins, remove the sliding clutch.

https://truckmanualshub.com/

How to Assemble the Synchronizer Assembly

Special Instructions

Assembly should be done on a clean, flat surface slightly lower than your waist.

Pins on the LO range synchronizer must line up with the chamfered holes on the sliding clutch bottom.

When compressing the HI range synchronizer springs cover with a shop rag. In the event compression is not achieved the first time, this prevents the springs from leaving the bench area.

Special Tools

- Typical service tools

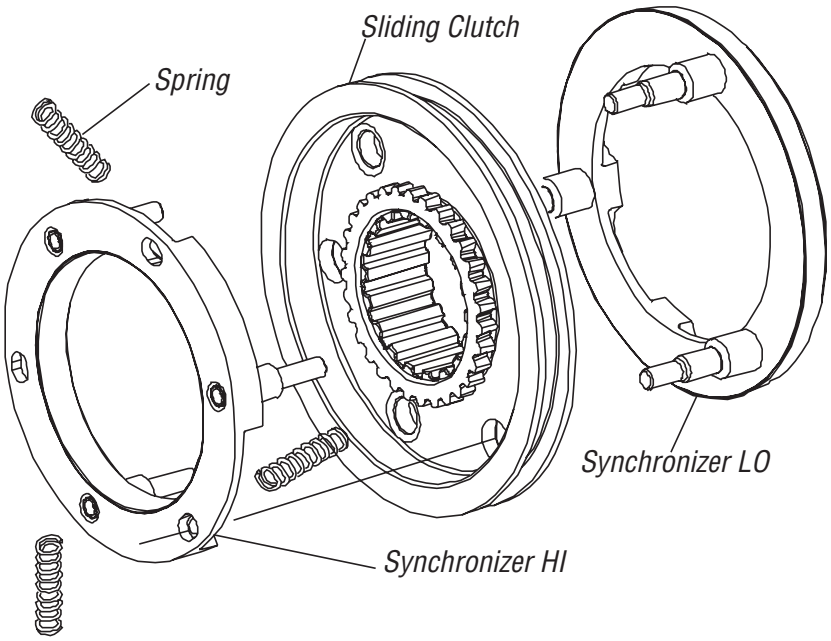

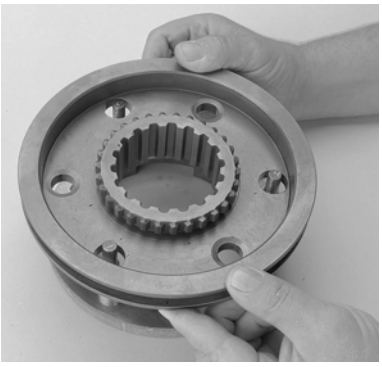

Procedure -

1. On the bench place the larger LO range synchronizer ring face down with pins up.

2. With the sliding clutch recessed side up, place the sliding clutch on the LO range synchronizer pins.

https://truckmanualshub.com/

3. In the HI range synchronizer bores, install the three (3) springs.

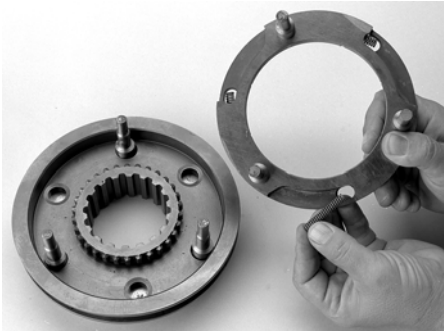

4. Place the HI range synchronizer ring over the LO range synchronizer ring. Rotate the HI range synchronizer until the springs are seated against the pins.

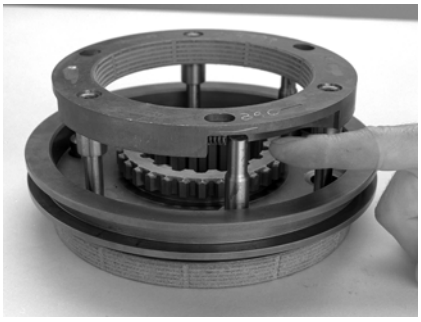

5. Cover the assembly with a shop rag.

6. Apply downward pressure to the HI range synchronizer ring while twisting counterclockwise. This compresses the springs to fully seat HI range on the LO range synchronizer. This should be done with a rapid twist and push motion.

   Note: Make sure there are three springs and they are fully compressed.

   Note: Make sure you can move the sliding clutch from HI to LO range and back.

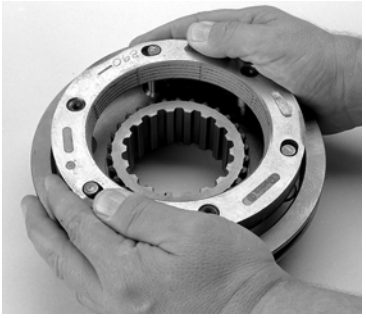

https://truckmanualshub.com/

How to Remove the Clutch Housing

Special Instructions

None

Special Tools

- Typical service tools

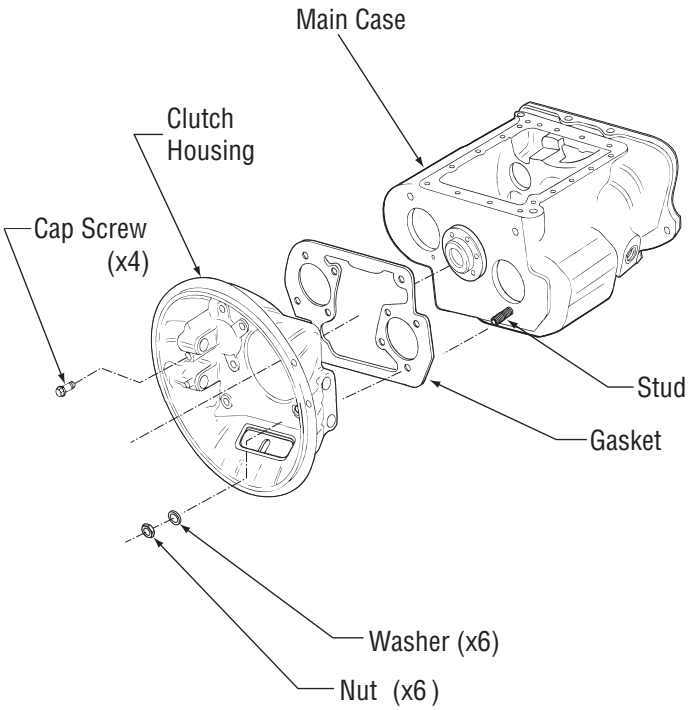

Procedure -

1. From inside the clutch housing, remove the six (6) nuts and washers.
2. From inside the clutch housing, remove the four (4) cap-screws.
3. Jar the clutch housing with a soft mallet to break the gasket seal.
4. Pull the clutch housing from the studs and transmission case.
5. Remove the gasket and clean the gasket mounting surfaces on the clutch housing and main case.

https://truckmanualshub.com/

How to Assemble the Output Shaft

Special Instructions

The output shaft is the same as the auxiliary main shaft. For the purpose of this manual, it will always be referred to as the output shaft.

Special Tools

- Bearing Heater
- T18 Output Bearing Driver

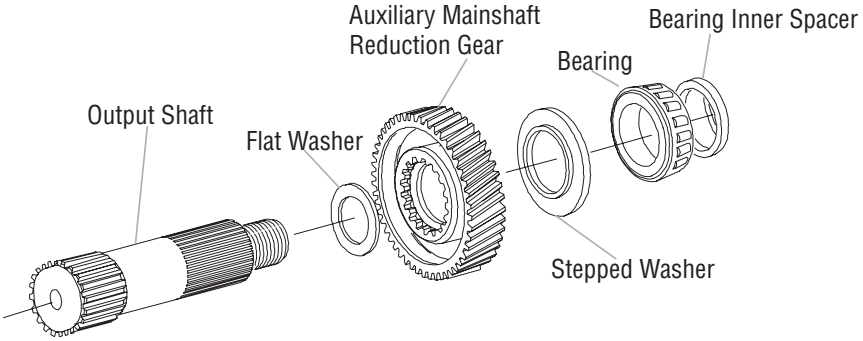

Procedure -

1. Use toolmaker's dye and mark one tooth on the auxiliary mainshaft reduction gear. Repeat the procedure for the tooth directly opposite the first one marked.

2. Stand the output shaft on a flat surface with the threaded end up.

3. Slide the flat washer onto the output shaft.

4. With the auxiliary mainshaft reduction gear clutching teeth down, slide the gear onto the output shaft.

5. With the smooth side up, slide the stepped washer onto the output shaft and against the reduction gear.

   ⚠ CAUTION

   Output bearing assemblies are matched sets. DO NOT mix bearing parts from one assembly with a different bearing assembly or the bearings will be damaged.

   If using heat to install the bearings, do not heat bearings above 275°F (136°C) or they will be damaged.

6. With tapered side up, use heat or an appropriate driver to install the output shaft bearing cone (with the long rollers) tightly against the stepped washer. (Tool ref. ID T18)

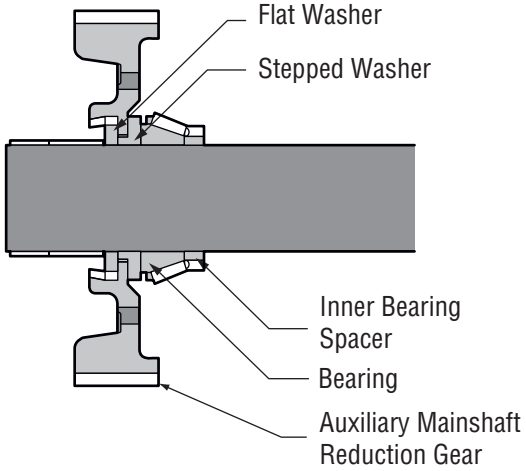

https://truckmanualshub.com/

7. Place the bearing inner spacer on the output shaft.

https://truckmanualshub.com/

How to Assemble the Range Yoke

Special Instructions

None

Special Tools

- Typical service tools

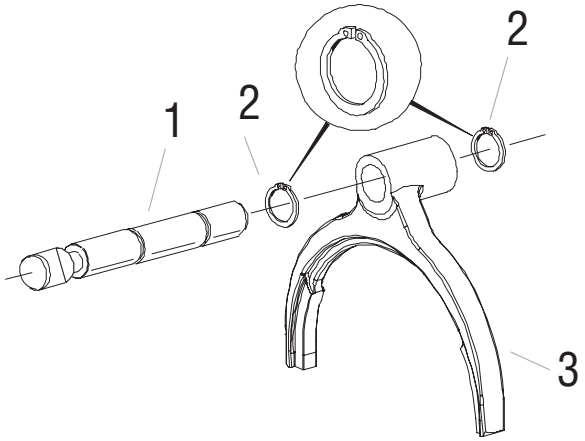

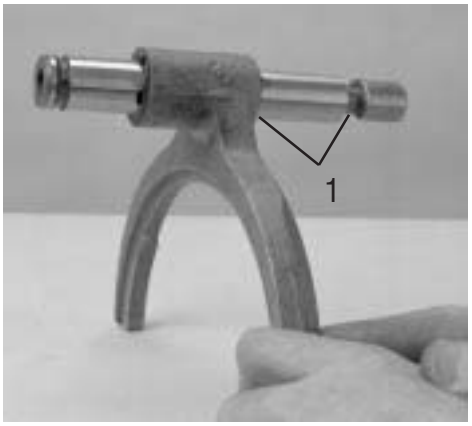

Procedure -

1. Install the range yoke on the range yoke bar. The flat side of the range yoke should be toward the notched end of the range yoke bar.
2. Install the range yoke snap rings in the grooves on each side of the range yoke. Make sure the snap rings fit tightly and are not overstretched. If they are loose, replace them.
3. Install the round pin in the range yoke bar.
4. Install the range yoke bar O-ring in its groove to hold the pin in place.

https://truckmanualshub.com/

How to Disassemble the Auxiliary Countershaft

Special Instructions

⚠ CAUTION

Do not use a puller against the flat washer on the rear of the countershaft when removing the bearing. The washer will break.

Bearing removal will likely damage the bearings. If the bearings are damaged in any way upon removal, do not reuse them.

Special Tools

- Bearing Splitter
- Bearing Puller T14 (see Table 6)

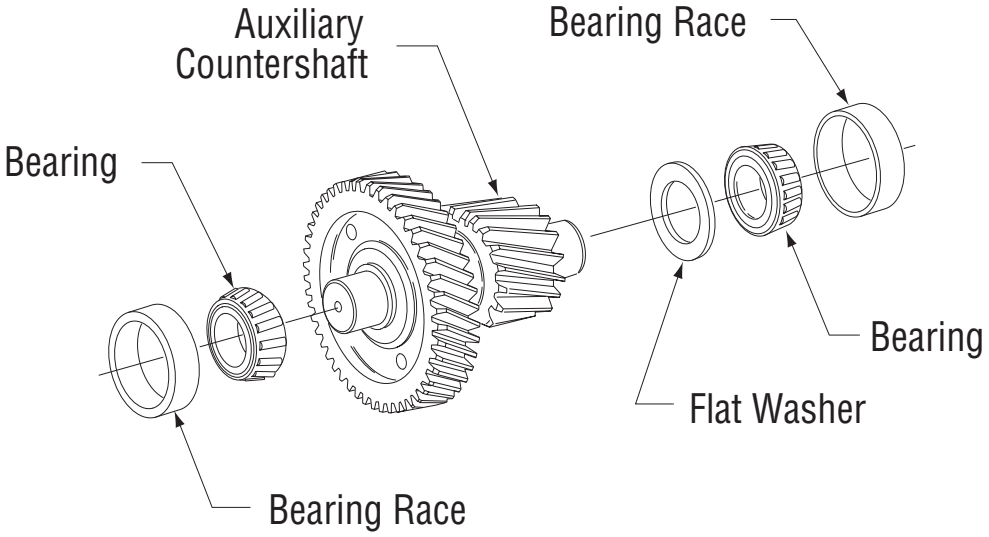

Procedure -

1. Use a bearing puller (Tool ref. ID T14) to remove the bearings. It may be necessary to cut and remove the steel cage and rollers from the bearings to allow a bearing puller to fit correctly.

https://truckmanualshub.com/

How to Remove the Auxiliary Countershaft Bearing Races

Special Instructions

None

Special Tools

- Bearing Race Puller T16 (see Table 6)

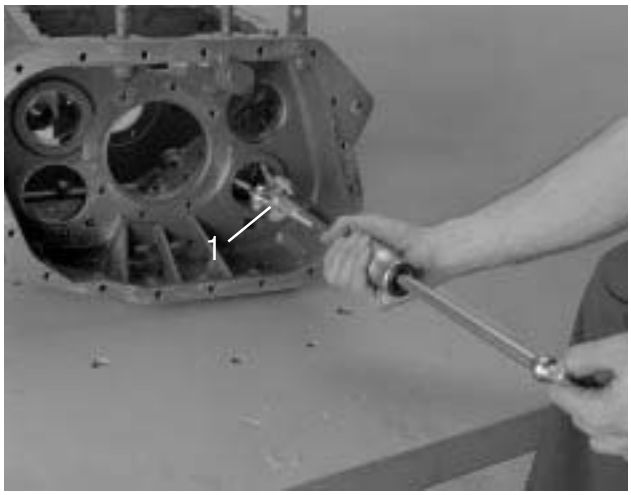

Procedure -

1. Attach a bearing race puller (Tool ref. ID T16) as shown.
2. Pull the bearing races from the main case.

https://truckmanualshub.com/

How to Install the Auxiliary Countershaft Bearing Races

Special Instructions

None

Special Tools

- Typical service tools
- Bearing Driver T17 (see Table 6)

Procedure -

1. Using a bearing race driver (Tool ref. ID T17), install the auxiliary countershaft bearing races into their respective bores from the rear of the main case.

   Note: The bearing races have a slip fit in their respective bores. They should slide or rotate easily into the case bore if they are not cocked.

https://truckmanualshub.com/

How to Assemble the Auxiliary Countershaft

Special Instructions

None

Special Tools

- Bearing Driver T15 (see Table 6)

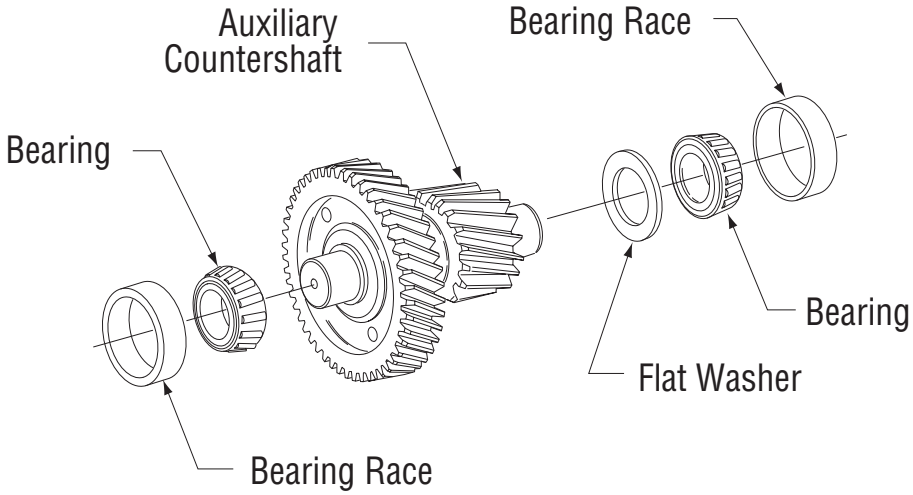

Procedure -

1. Install a washer on the rear of the countershaft.

2. Using a bearing driver (Tool ref. ID T15), drive a new bearing onto the rear of the countershaft. Make sure the driver contacts the inner race only.

3. Using a bearing driver (Tool ref. ID T15), drive a new bearing onto the front of the countershaft.

https://truckmanualshub.com/

How to Remove the Auxiliary Drive Gear Assembly

Special Instructions

None

Special Tools

- Typical service tools

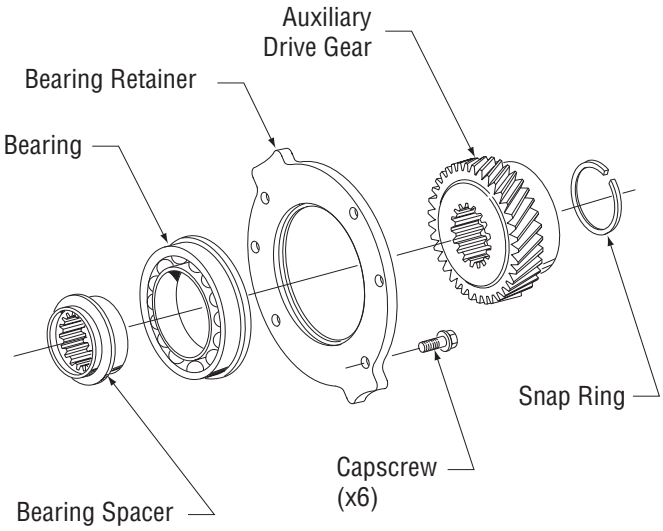

Procedure -

1. Remove the snap ring at the rear of the mainshaft.
2. Slide the auxiliary drive gear off the mainshaft.
3. Remove the six (6) auxiliary bearing retainer ring capscrews and bearing retainer ring.

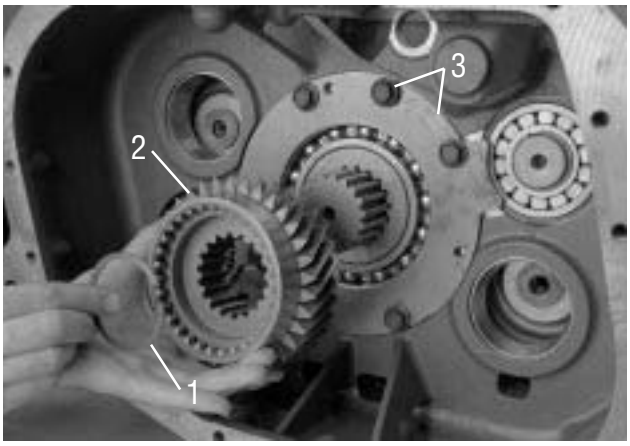

https://truckmanualshub.com/

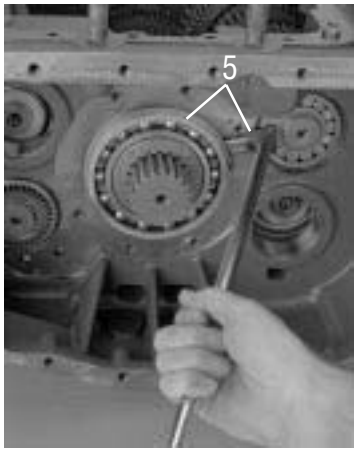

4. Insert a large screwdriver into the front section gearing. Use the screwdriver to slide the mainshaft and mainshaft rear bearing rearward.

5. Use a rolling head prybar (crow's foot) to work the mainshaft rear bearing out of the bore.

6. If the bearing must be replaced, press the inner spacer from the auxiliary bearing.

https://truckmanualshub.com/

How to Disassemble the Upper and Lower Reverse Idler Gear Assembly

Special Instructions

The new reverse idler shaft uses a snap-ring on the front in place of the capscrew.

Lower reverse idler gear removal is the same, but the mainshaft and countershafts must be removed.

Special Tools

- Slide Hammer T5 (see Table 6)

Previous Design

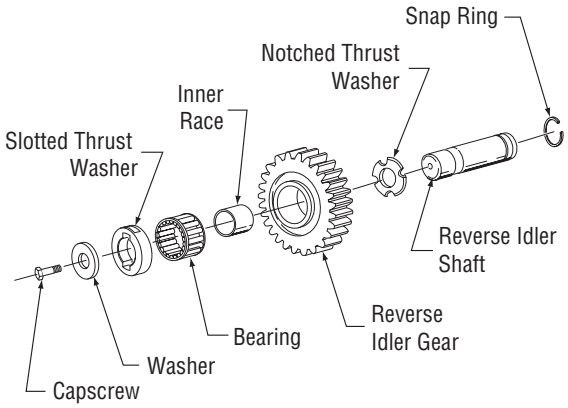

Current Design

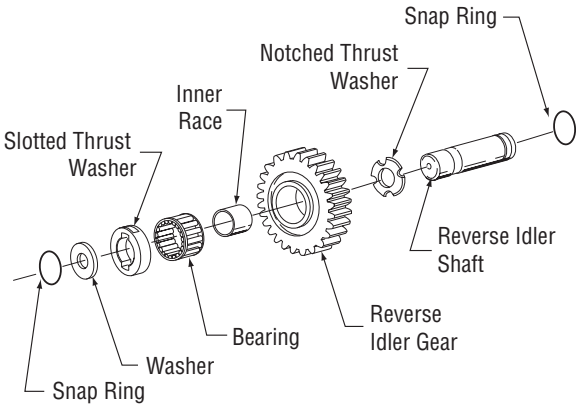

Procedure -

1. Remove the capscrew (or nut) on the front of the reverse idler shaft.

   Note: If idler shaft spins, place a large screwdriver between reverse idler boss to keep shaft from spinning.

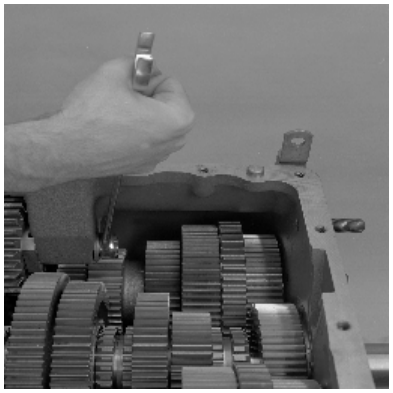

2. (On new design idler shafts remove the snap ring).

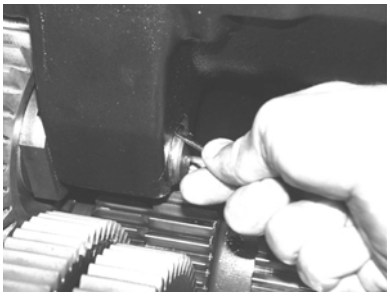

https://truckmanualshub.com/

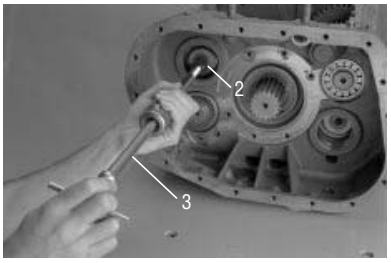

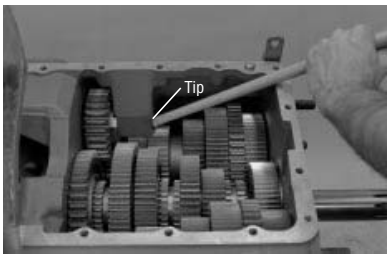

3. Thread a slide hammer puller (Tool ref. ID T5) into the rear of the reverse idler shaft. The threads are M12x1.75.

   Note: Not all shafts styles had threads.

4. Using the slide hammer, remove the reverse idler shaft.

   Note: If a slide hammer is not available, the reverse idler can be driven out as shown in the photo.

   Note: While removing the reverse idler shaft, the lube spacer and washer can drop to the transmission case bottom.

   Note: If desired, the upper reverse idler gear can be removed without removing the mainshaft. To do so, remove the snap ring from the mainshaft reverse gear, and move the mainshaft reverse gear forward.

https://truckmanualshub.com/

How to Remove the Upper and Lower Countershaft Bearings

Special Instructions

The following instructions are used to remove the upper and lower countershaft bearings. To remove the mainshaft assembly, only the upper countershaft bearings need to be removed.

Performing the following instructions will damage the bearings and should be not be done unless bearing replacement is planned.

The bearing inner race remains pressed on the countershaft after removal of the front bearings.

Special Tools

- Soft bar and maul
- Item T8: Countershaft Pusher
- Item T9: Bearing Puller

Procedure -

1. To keep the mainshaft pilot from falling out of the input shaft pocket, temporarily install the auxiliary drive gear on the mainshaft.

2. From each countershaft rear groove, remove the snap ring.

3. Remove the bearing retainer bolts on the front countershaft and install the countershaft pusher T8 assembly to the studs on the front of the case. Push the countershaft back until it stops.

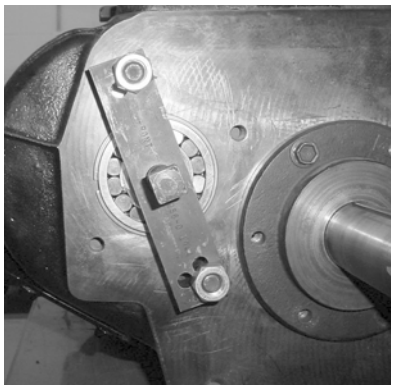

https://truckmanualshub.com/

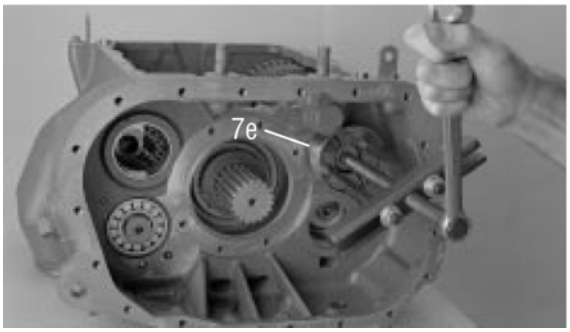

4. Use a bearing puller to remove the rear bearing from the countershaft.

   ⚠ CAUTION

   Damage will likely occur to this bearing during removal. It is strongly recommended that this bearing is discarded.

5. Remove tool T8 from front of countershaft.

6. Return to the case rear, and drive each countershaft forward as far as possible. This exposes the external snap ring.

7. Use the appropriate bearing puller T9 to remove the countershaft front bearings.

https://truckmanualshub.com/

How to Remove the Mainshaft Assembly

Special Instructions

If transmission service will be limited to removal of the mainshaft, the input shaft does not need to be removed, but it must be moved forward to provide enough clearance to remove the mainshaft.

Special Tools

- Item T8: Countershaft Pusher
- Item T9: Bearing Puller
- Mainshaft Hook Tool T20 (see Table)

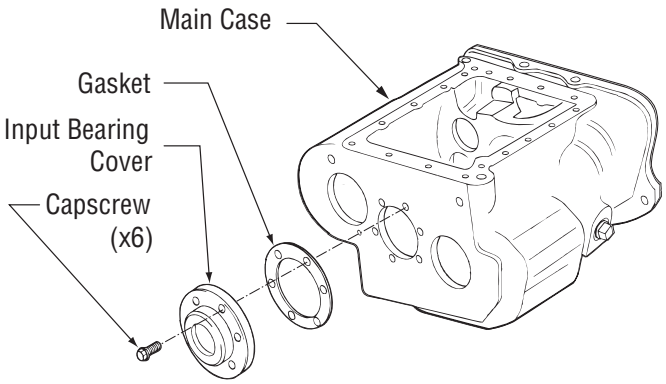

Procedure -

1. Remove the six (6) capscrews retaining the input bearing cover, and remove the cover as shown in the explode view.

2. Grasp the input shaft and pull it forward until the main drive gear contacts the case wall.

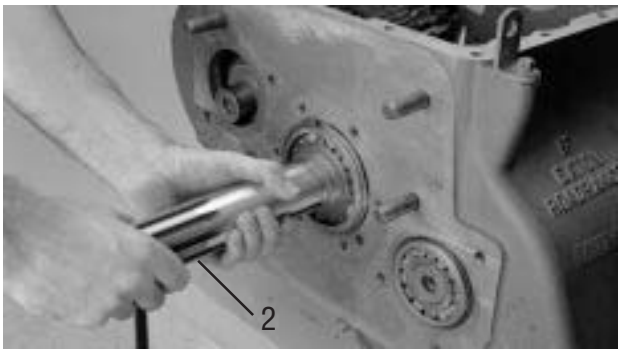

3. From the mainshaft, remove the reverse gear retaining snap ring.

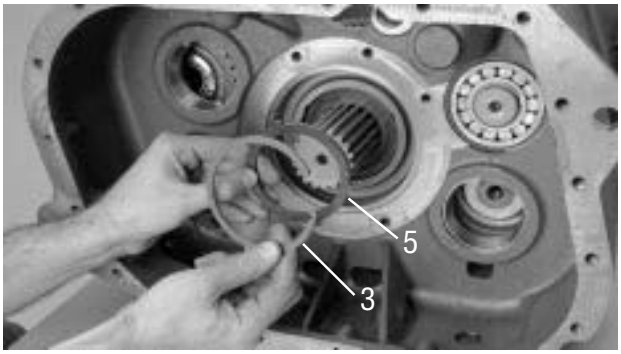

https://truckmanualshub.com/

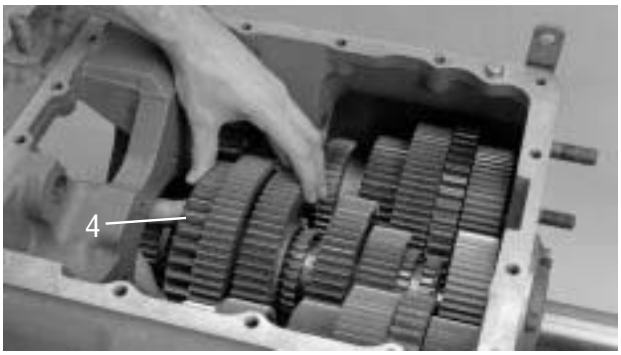

4. Rotate the mainshaft reverse gear to engage the sliding clutch, and then move the gear forward over the sliding clutch to a position flush with the next gear on the mainshaft.

5. From the mainshaft, remove the tanged washer.

6. Lift out and remove the upper reverse idler gear.

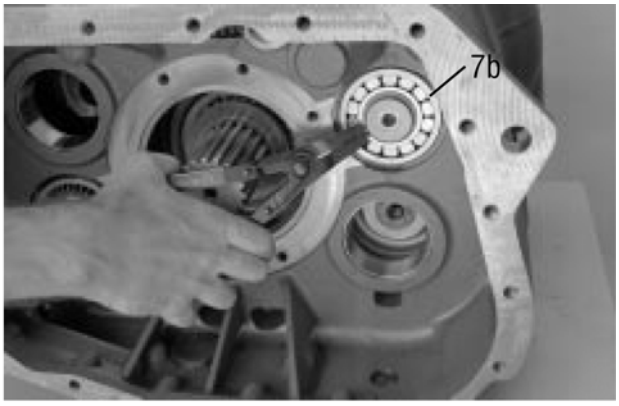

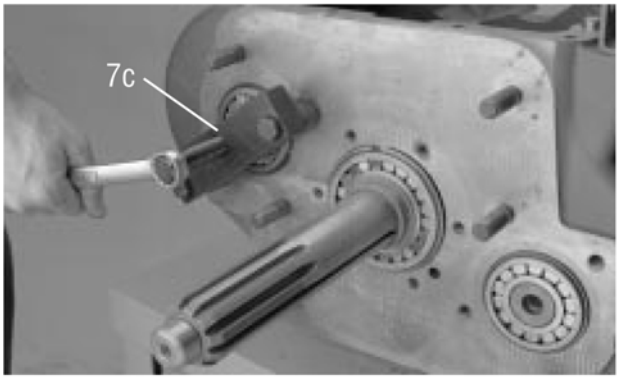

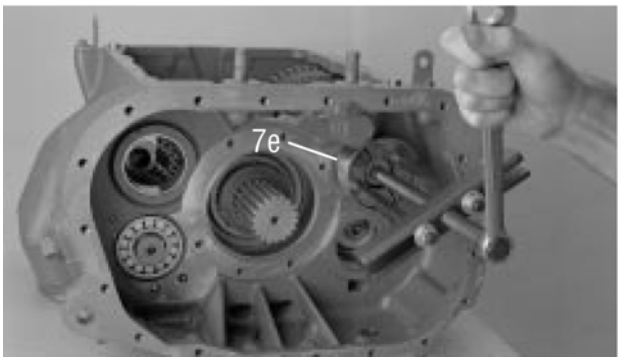

7. Remove the countershaft front and rear bearings using the following procedure:

   a. Grasp the mainshaft and pull rearward until the reverse gear is against the case wall.

   b. Remove the snap rings from the rear of the countershaft.

Note: To prevent part damage, Eaton® recommends using a hand tool to operate the bearing removal tool in step c. rather than an air powered tool.

   c. Install the bearing pusher tool on the front countershaft bearing (Tool ref. ID T8) in the main case as shown. Use the tool to push the countershaft rearward through the front bearing. Move the countershaft slowly, and stop when resistance is felt.

   d. If necessary, repeat steps a. through c. with the lower countershaft.

Note: The lower countershaft does not need to be removed to remove the mainshaft.

   e. Remove the lower tool T8 from the front countershaft.

   f. Attach the bearing puller (Tool ref. ID T9) to the upper countershaft rear bearing as shown, and remove the bearing.

   g. If the front of the countershaft is still in the front bearing, drive the countershaft forward to expose the front bearing snap ring. Then use the bearing puller (Tool ref. ID T9) to remove the bearing.

   h. If necessary, repeat this procedure for the lower countershaft bearings.

https://truckmanualshub.com/

8. Insert a large screwdriver between the main drive gear and the upper countershaft driven gear to hold the countershaft to the side and away from the mainshaft.

9. Make sure the mainshaft reverse gear is moved forward and held against the next gear (1st speed gear).

10. Position the mainshaft hook tool (Tool ref. ID T20) or rope around the mainshaft.

    Note: Keep the upper countershaft forward against the case front wall.

11. Pull the mainshaft to the rear to free the pilot from the input shaft pocket.

    ⚠ WARNING

    Be careful when removing the mainshaft assembly. The sliding clutch on the front and the reverse gear on the back can slip off the shaft.

12. Tilt the mainshaft front up and lift the assembly from the case.

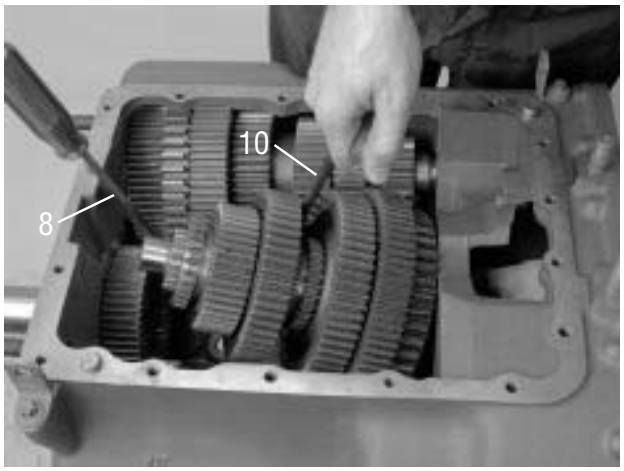

https://truckmanualshub.com/

How to Remove the Countershaft Assemblies

Special Instructions

Except for the PTO gears, the upper and lower countershaft assemblies are the same. Mark the countershafts as UPPER or LOWER as you remove them.

The mainshaft and main drive gear must be removed before removing the countershaft assemblies.

Special Tools

- Soft bar and maul
- Item T8: Countershaft Pusher
- Item T9: Bearing Puller

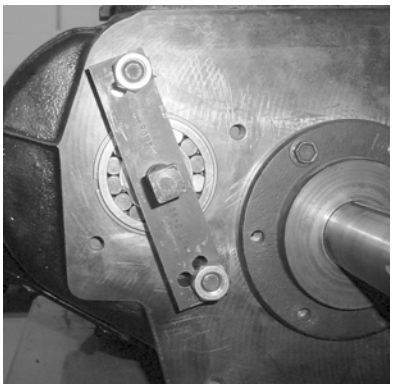

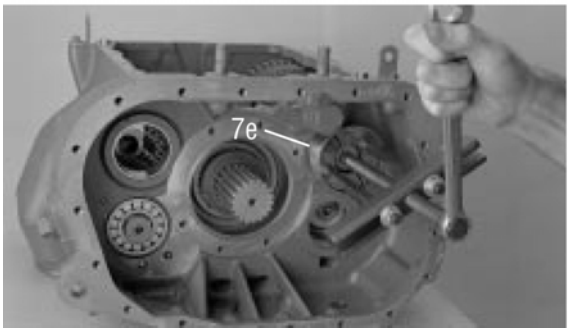

Procedure -

1. To keep the mainshaft pilot from falling out of the input shaft pocket, temporarily install the auxiliary drive gear on the mainshaft.

2. From each countershaft rear groove, remove the snap ring.

3. Remove bearing retainer bolts on front countershaft and install the counershaft pusher assembly Tool T8 to the studs on the front of the maincase. Push the countershaft back until it stops.

4. Use a bearing puller to remove the rear bearing from the countershaft.

CAUTION

Damage will likely occur to this bearing during removal. It is strongly recommended that this bearing is discarded.

https://truckmanualshub.com/

5. Remove tool T8 from the front countershaft.

6. Return to the case rear, and drive each countershaft forward as far as possible. This exposes the external snap ring.

7. Use the appropriate bearing puller T9 to remove the countershaft front bearings.

8. Move the upper countershaft to the rear until the front bearing journal clears the front case bore.

9. Swing the front of the countershaft to the center of the case, and lift out the countershaft assembly.

   Note: A large hook or piece of rope may help support the countershaft.

   Note: Follow the same procedure for lower countershaft removal.

https://truckmanualshub.com/

How to Disassemble the Countershaft Assemblies

Special Instructions

As you disassemble the countershafts, mark each part as belonging to the upper or lower countershafts, making sure the shaft position is marked correctly. Due to available options, some shafts may be position specific.

Special Tools

- Press

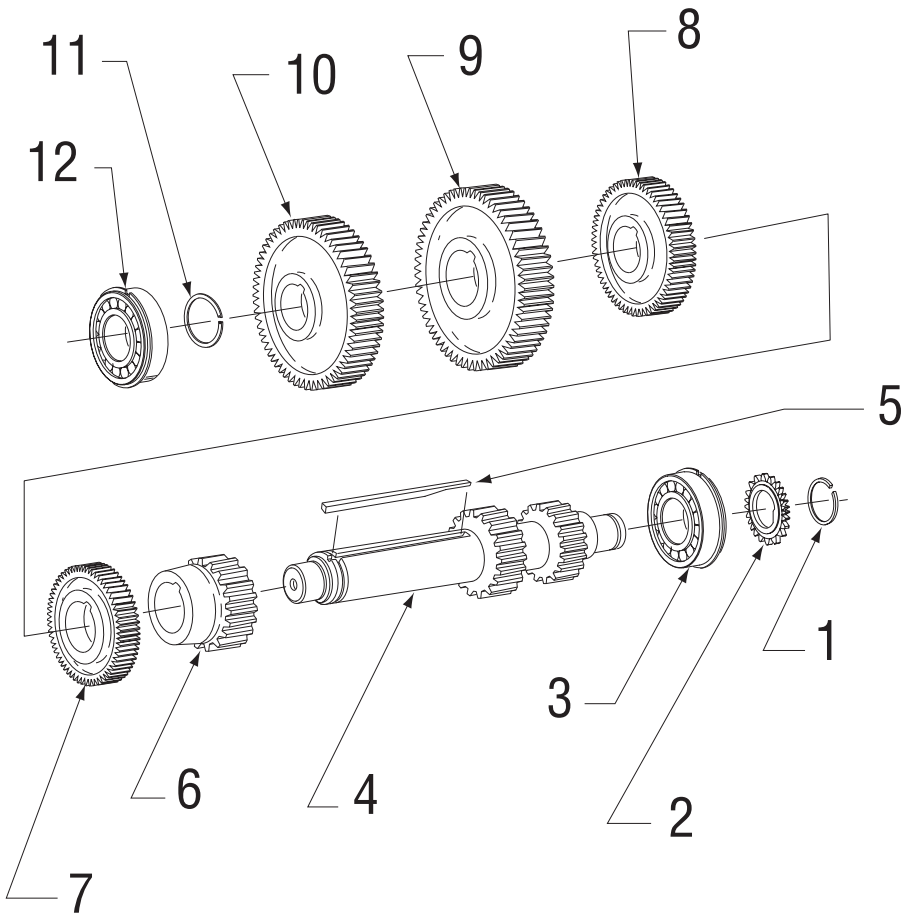

1. Snap Ring
2. Oil Pump Drive Gear
3. Rear Bearing
4. Countershaft
5. Key
6. Second Gear
7. Third Gear
8. Overdrive/or 4th Gear
9. PTO Gear
10. Drive Gear
11. Snap Ring
12. Front Bearing

https://truckmanualshub.com/

Procedure -

1. Remove the snap ring from the front of the countershaft.

   ⚠ CAUTION

   Never use the PTO gear as a pressing base. Due to its narrow width, it may break.

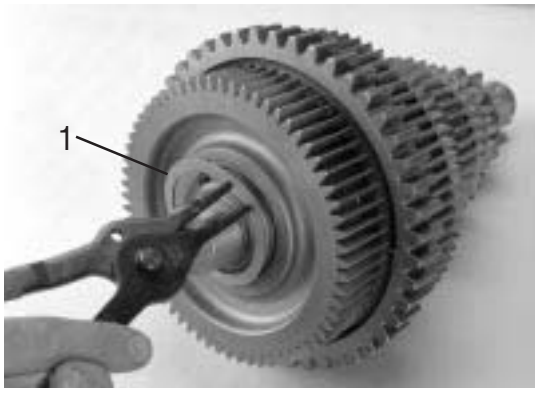

2. Place the countershaft assembly in a press as shown. With the rear face of 4th or Overdrive gear from the front as a base, press this gear, the drive gear, and the PTO gear from the countershaft.

3. Reposition the countershaft in the press as shown. Using the rear face of 2nd speed gear as a base, press 3rd speed gear and 2nd speed gear from each countershaft.

4. Inspect the key. Remove and replace it if it is damaged.

https://truckmanualshub.com/

How to Remove the Input Shaft and Main Drive Gear

Special Instructions

If you only need to remove the mainshaft, you do not need to remove the input shaft.

Special Tools

- Typical service tools
- Bearing Puller T16 (see Table 6)

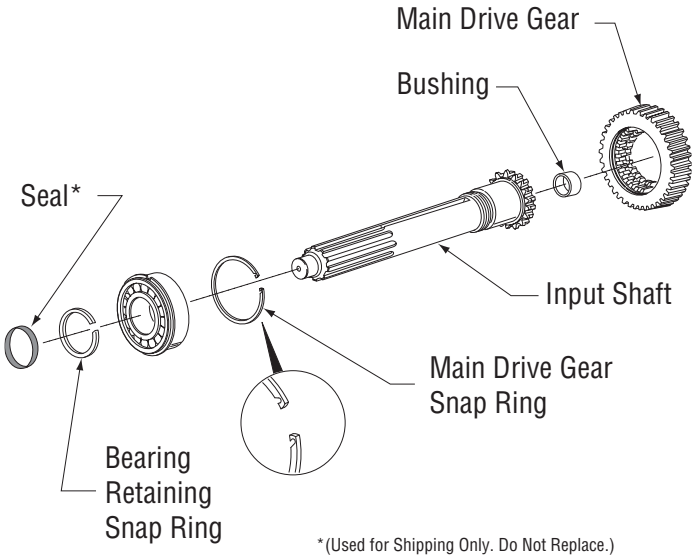

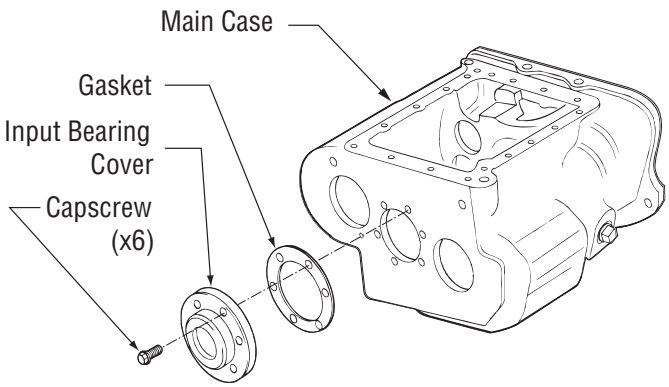

Procedure -

1. If not previously removed, remove the six (6) retaining capscrews from the input bearing cover, and remove the cover.
2. Remove the input bearing cover gasket and clean the gasket mounting surfaces on the cover and the main case.
3. If present, remove and discard the rubber seal ring on the input shaft. The ring is used only to seal the transmission during shipment.
4. From the input shaft groove, remove the input bearing retaining snap ring.
5. With a soft mallet, move the input shaft slightly rearward (approximately 1/16”) until resistance is felt.

https://truckmanualshub.com/

6. Grasp the input shaft and wiggle it. Pull it forward to move the input bearing forward to expose the snap ring on the outside of the input bearing.

   Note: The input shaft can be removed from the front of the case. Removal of the mainshaft is not required.

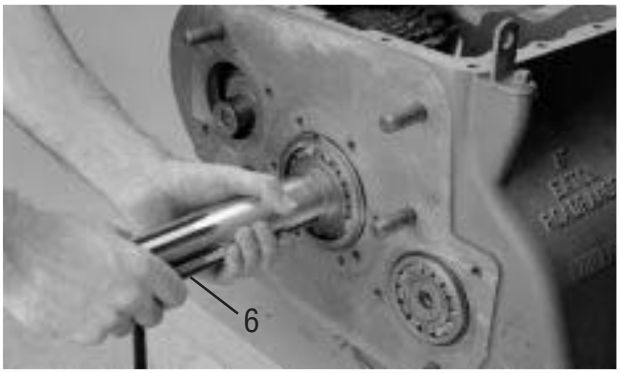

7. Install the bearing puller tool (Tool ref. ID T16) as shown and remove the input bearing from the case and input shaft.

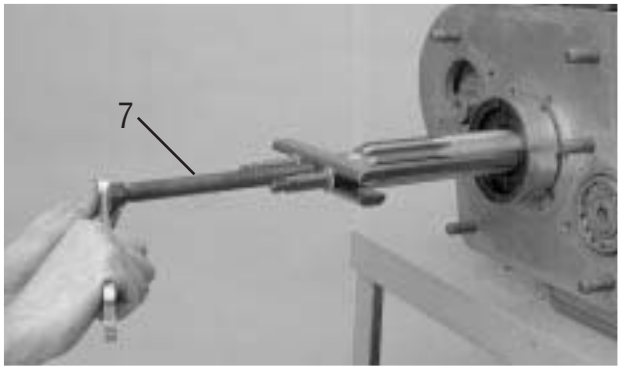

8. Remove the snap ring on the inside of the main drive gear.
9. Pull the input shaft forward and out of the main drive gear.
10. From inside the case, remove the main drive gear.

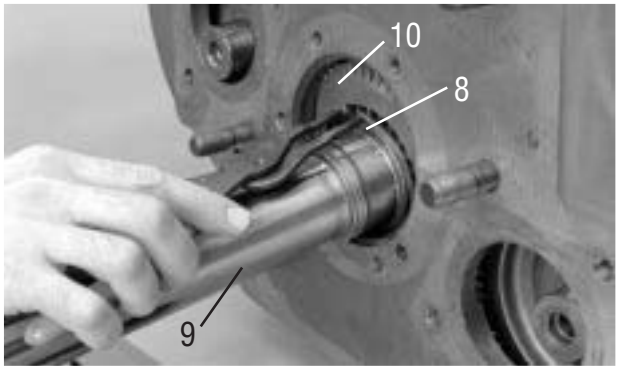

https://truckmanualshub.com/

How to Prepare the Main Case for Reassembly

Verify that the three magnetic discs are firmly attached to the bottom of the main case. If they are not firmly attached, apply 3M scotch grip or equivalent adhesive to the bottom of the discs and attach them to the main case.

If necessary, replace any damaged or worn clutch housing or rear support studs. Apply Eaton®Fuller® thread sealant #71205 or equivalent to any replacement studs before installing them.

⚠ CAUTION

Confirm that the rear support stud or capscrew does not protrude past the case housing into the transmission. If it protrudes, it could contact the range yoke and disrupt shifting between low and high range.

https://truckmanualshub.com/

How to Disassemble the Mainshaft Assembly

Special Instructions

Lay all parts on a clean bench in order of removal to facilitate assembly.

Special Tools

- Typical service tools

Procedure -

1. Lay the mainshaft on its side, and from the front, remove the 4th (or overdrive) and 5th sliding clutch.

2. Place the mainshaft in a vertical position, pilot end down.
3. Remove snap ring (if applicable).

4. Remove key, washer, and reverse gear. Mark keyway location.

   Note: When removing washer and reverse gear, note their orientation. Keep the washer with the reverse gear.

5. Remove the 1st and reverse sliding clutch.

https://truckmanualshub.com/

6. Remove the washer and 1st gear.
7. Remove the washer and 2nd gear.

8. Remove the washer and sliding clutch.
9. Remove the washer and 3rd gear.
10. Remove the washer.

11. Remove the 4th or overdrive gear.
12. Remove the washer.

https://truckmanualshub.com/

How to Assemble the Mainshaft Assembly with Non-Selective (Non-Adjustable) Tolerance Washers

Special Instructions

The proper mainshaft key must always be used with the proper design mainshaft washers. If necessary, refer to the parts manual for your specific model to confirm the proper parts.

Previous design levels can be updated to the current design.

Note: Any keyway on mainshaft may be used for mainshaft key location.

Special Tools

- A piece of 5/32" plastic air line, 1" long
- Vise with brass jaws

Procedure -

1. With mainshaft pilot-end down, secure the mainshaft in a vise equipped with brass jaws or wood blocks. Mark one keyway for reference to aid in assembly.

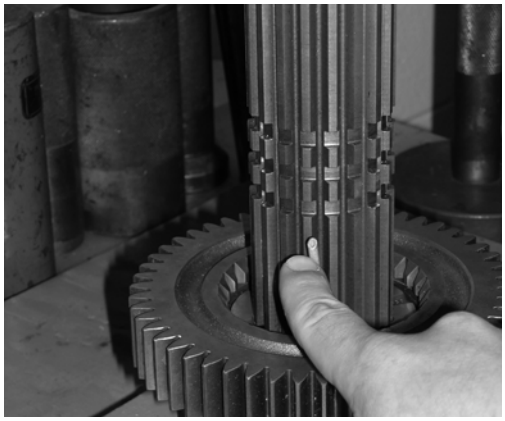

2. With mainshaft pilot-end down, install washer. Rotate the washer until the washer splines and mainshaft splines align.
3. Start at the mainshaft bottom and install a plastic line from the bottom in the marked keyway to lock the washer in place.

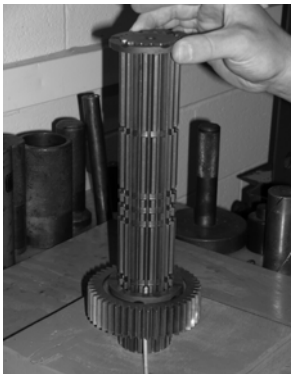

4. With clutching teeth down, position the direct/overdrive gear on the mainshaft. Refer to the illustrated parts list for correct gear.
5. Install a washer. Rotate the washer until the washer splines and mainshaft splines align. Push the plastic line up to lock the washer on the mainshaft.

https://truckmanualshub.com/

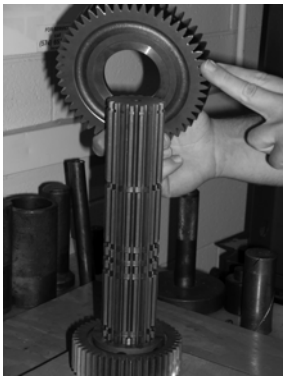

6. With clutching teeth up and against the spacer, install the 3rd gear.

7. Position the washer against the gear. Rotate the washer until the washer splines and mainshaft splines align. Push up the plastic line to lock the washer in place.

8. With the missing internal splines aligned with the plastic line, install the proper sliding clutch.

9. Position the next washer in the next available groove. Rotate the washer until the washer splines and mainshaft splines align.

10. With clutching teeth down, position the 2nd gear on the mainshaft.

11. Position the washer against the gear. Rotate the washer until the washer splines and mainshaft splines align. Push the plastic line up to lock the washer on the mainshaft.

12. With clutching teeth up, install 1st gear on the shaft against previously installed gear.

https://truckmanualshub.com/

13. Position the washer against the gear. Rotate the washer until the washer splines and mainshaft splines align. Push the air line up to lock the washer on the mainshaft.

14. With the missing internal splines aligned with the plastic line, install the 1st/reverse sliding clutch.

15. From the rear, install the reverse gear over the sliding clutch teeth with snapring groove facing up.

16. Install the reverse gear washer in the last groove.

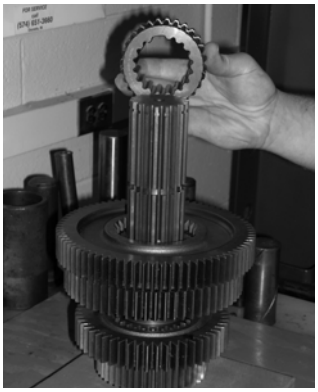

17. From the mainshaft rear, install the mainshaft key with raised end pointed up and facing out into the spline with the plastic line. Pull the plastic line from the spline while installing the key.

18. Remove the mainshaft from the vise and lay on its side.

19. Install the front sliding clutch into position.

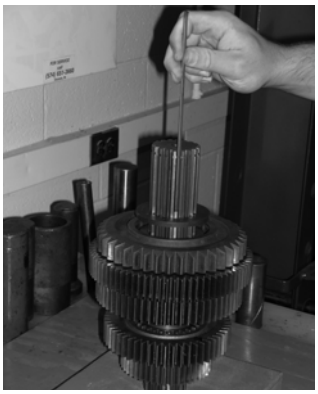

https://truckmanualshub.com/

How to Install the Mainshaft Assembly

Special Instructions

None

Special Tools

- Main Shaft Hook Tool T20 (see Table 6)

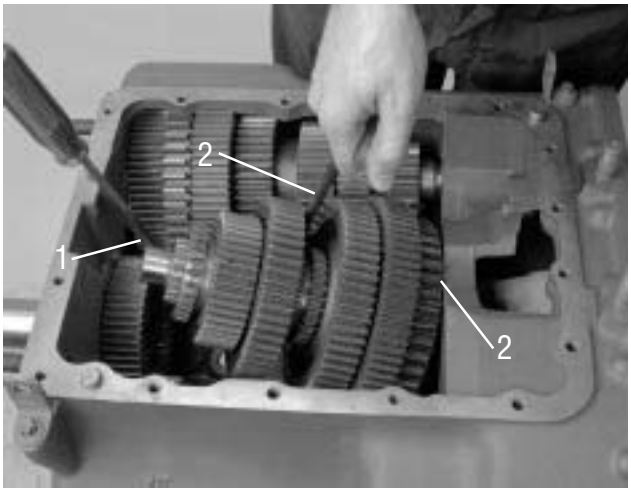

Procedure -

1. Move the countershaft forward as far as possible and block it to the side by inserting a large screwdriver or prybar between the main drive gear and the countershaft.

   Note: Make sure the input shaft is pulled forward before positioning the mainshaft.

2. Hold the reverse gear against the next gear, and lower the mainshaft assembly into position while guiding the shaft rear through the case bore. A mainshaft hook (Tool ref. ID T20) or piece of rope can be used to hold on to the mainshaft.

3. Move the mainshaft forward to position the mainshaft pilot end into the rear of the input shaft.

4. Install the reverse idler bearing and inner race into the reverse idler gear, and place the gear in its approximate location. Rest it against the case wall, but do not install the reverse idler shaft yet.

5. Slide the mainshaft reverse gear rearward.

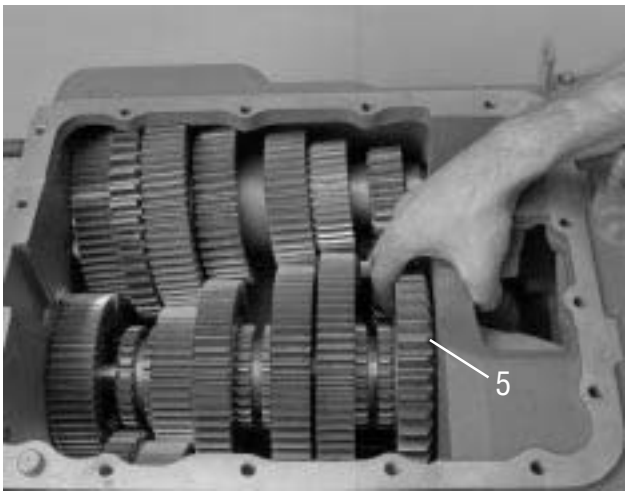

https://truckmanualshub.com/

6. Install the tanged washer into the reverse gear.

7. Install the snap ring into the reverse gear.

8. If previously removed, press the inner spacer into the mainshaft rear bearing.

9. Slide the mainshaft rear bearing and splined spacer over the mainshaft, and seat the bearing with a soft hammer or maul. You may need to lift the rear of the mainshaft slightly to be able to fit the bearing into the case bore.

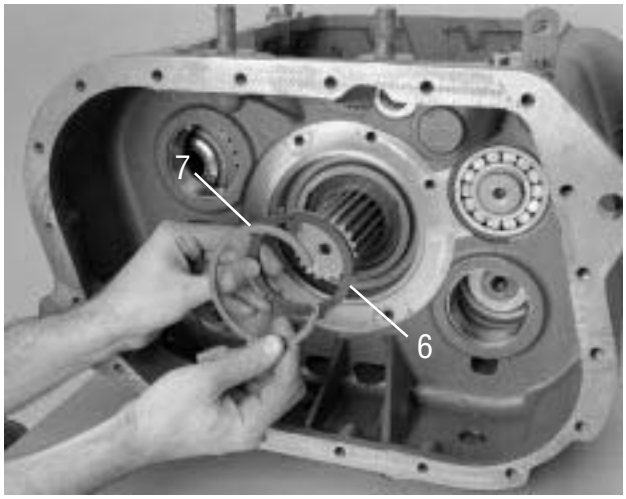

https://truckmanualshub.com/

How to Assemble the Countershaft Assemblies

Special Instructions

Determine if the countershaft is the upper or lower countershaft, and mark it if necessary. The lower countershaft has a larger 47 tooth PTO gear, and if the transmission has an oil pump, the rear of the shaft will be extended to support the oil pump drive gear.

Special Tools

- Press

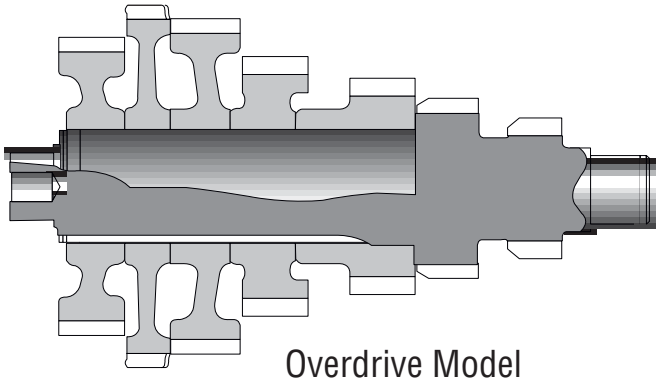

Overdrive Model Configuration

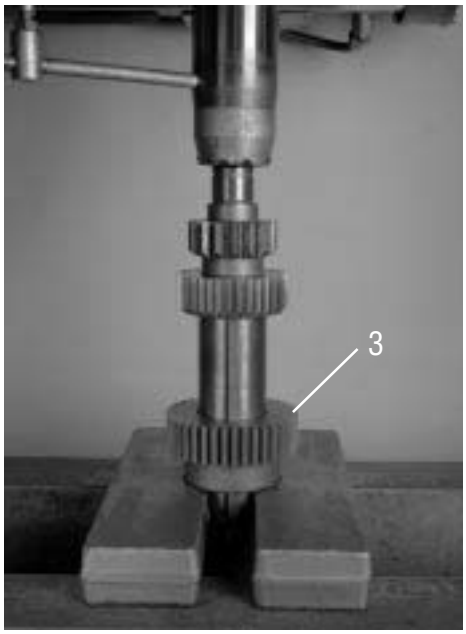

Procedure -

1. If previously removed, install the key in the countershaft keyway.

2. To ease assembly, lightly lubricate the shaft and inside diameter of each gear.

   Note: Refer to the countershaft cross section while reassembling the countershaft and gears. If assembled correctly, the countershaft will have the same shape as that shown in the cross section.

3. Install the 2nd speed gear (smallest gear). To install it, align the gear keyway with the countershaft key as shown, and press the gear on the countershaft as shown.

4. Install the 3rd speed gear (next smallest gear). To install it, align the gear keyway with the countershaft key, and press the gear on the countershaft.

https://truckmanualshub.com/

5. Perform one of the two following steps:
   a. For overdrive transmissions, select the largest diameter gear, place it over the shaft, and press it into place.
   b. For direct drive transmissions, Install the 4th speed gear (next smallest gear). To install it, align the gear keyway with the countershaft key, long hub to countershaft front, and press the gear on the countershaft.

6. Install the PTO gear. This gear is identified by the rounded teeth on one side. To install the PTO gear, align the gear keyway with the countershaft key, rounded teeth facing up (shaft rear), and press the gear on the countershaft.

7. Install the countershaft drive gear. This gear is identified by the tooth marked with an “0.” To install the drive gear, align the gear keyway with the countershaft key, “0” to the front, and press the gear on the countershaft.

   ⚠ CAUTION

   DO NOT try to install the countershaft in the transmission if you cannot install the snap ring.

8. Install the countershaft drive gear retaining snap ring in the groove on the shaft front. If the snap ring groove is not fully exposed, either the gears are not oriented properly or not seated properly. The countershaft may have to be disassembled partly or fully to correct the problem.

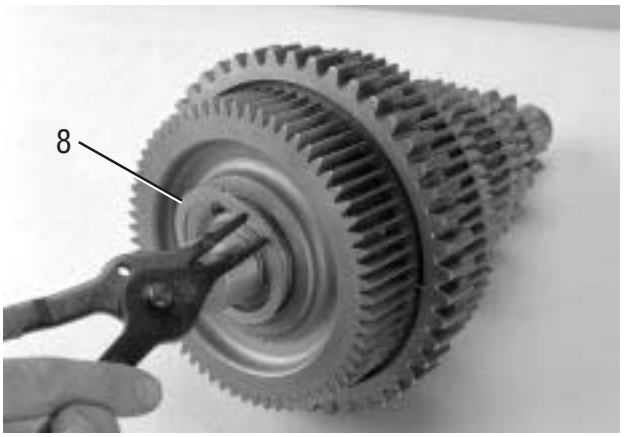

9. For timing purposes, use a highly visible toolmakers die to mark the tooth with an “0” or the tooth lined up with the keyway.

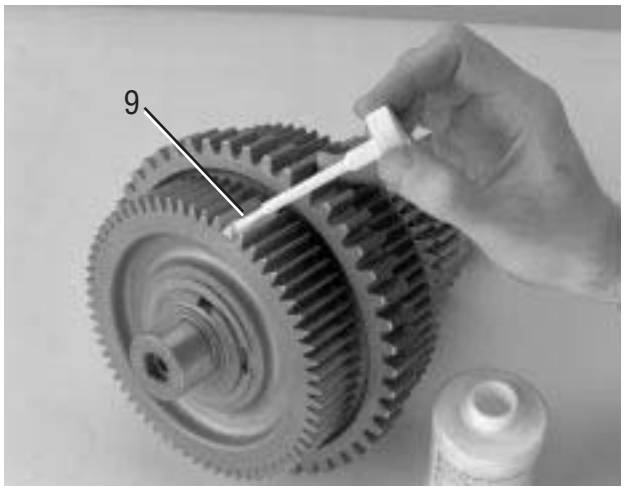

https://truckmanualshub.com/

How to Assemble the Lower Reverse Idler Gear Assembly

Special Instructions

The new reverse idler shaft uses a snap ring in place of the capscrew.

Special Tools

- Torque Wrench 100 lb. ft. capacity

Previous Design

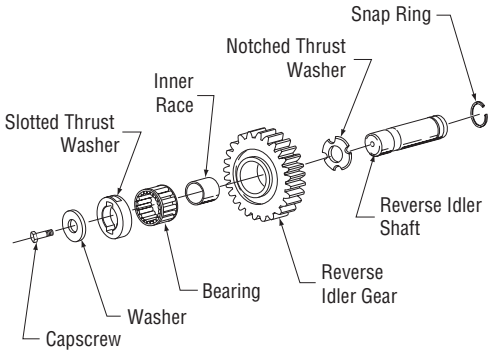

Current Design

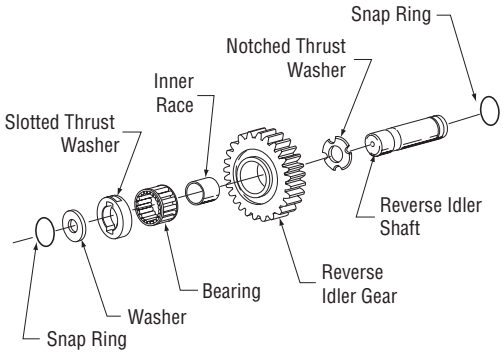

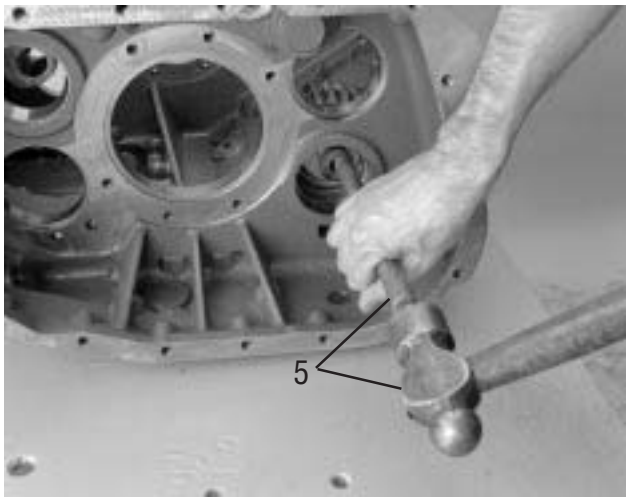

Procedure -

1. Position the reverse idler bearing and inner race into the reverse idler gear.

2. Hold the reverse idler gear and flat thrust washer in place in the main case, and insert the idler shaft, threaded end to the front, through the rear case bore and into the gear. Do not insert the reverse idler shaft into the main case support boss yet.

3. Position the slotted thrust washer in front of the gear with a slot facing up. Note the word FRONT on the slotted washer, and make sure it faces the front of the transmission. Continue to feed the idler shaft forward through this washer and into the hole in the case boss.

4. Slide the reverse idler shaft into the support boss bore, and with a soft bar and driver, drive the reverse idler shaft fully into position.

5. Secure the shaft in position according to one of the procedures below:

https://truckmanualshub.com/

Note: For Nut Fastener Design: Inspect the nylon locking insert in the nut, and replace the nut if it is excessively worn. After inspecting and/or replacing the nut, install the nut and washer on shaft front. Tighten the nut to 67-75 lb. ft. (90 to 101 N•m) of torque.

Note: For Capscrew Fastener Design: Apply Eaton®Fuller® thread sealant #71205 or equivalent to the capscrew threads, and install the capscrew and washer. Tighten the capscrew to 67-75 lb. ft. (90 to 101 N•m) of torque.

Note: For Snap-ring design: Install the washer and snap ring on idler shaft using socket. Place snap-ring over front of reverse idler shaft seal, snapping into place by using a large socket. Tap lightly into place.

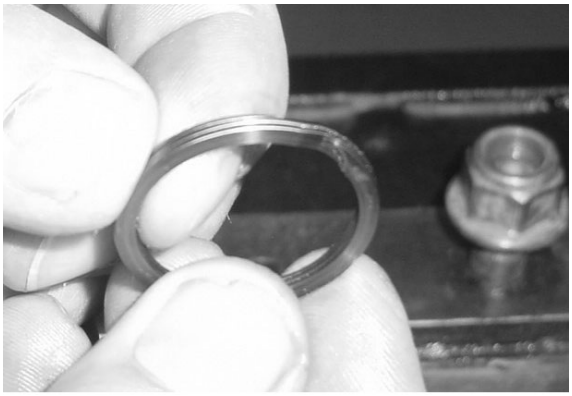

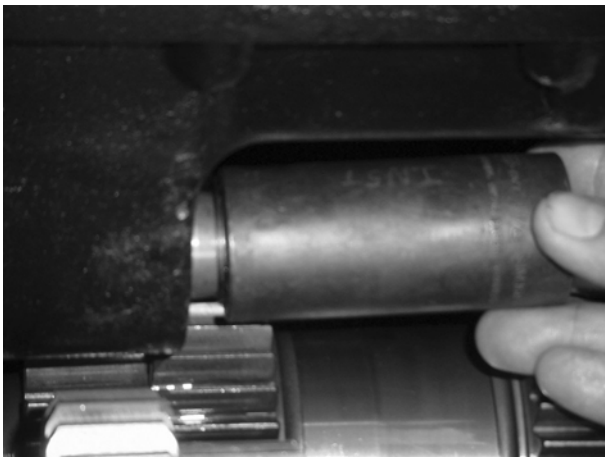

https://truckmanualshub.com/

How to Install Countershaft Assemblies

Special Instructions

Make sure the countershaft assemblies have been marked for proper position, 47- tooth PTO gear in the lower position.

Prior to installing the countershafts, the lower reverse idler gear assembly should be installed. In addition, if the transmission is equipped with an internal oil pump, this should also be installed.

Special Tools

- Toolmaker's dye

Procedure -

1. On the drive gear of each countershaft assembly, mark the tooth aligned with the gear keyway and stamped with an "O" for easy identification. A highly visible color of toolmaker's dye is recommended for making timing marks.

   Note: Prior to installing the countershafts, the lower reverse idler gear assembly should be installed. In addition, if the transmission is equipped with an internal oil pump, this should also be installed.

2. Place the lower, 47-tooth PTO gear countershaft, into the main case with the shaft seated in the lower countershaft case bores.

   Note: Use a large hook or piece of rope to support the countershaft if necessary.

3. Place the upper countershaft (with the 45 tooth PTO gear) into the main case with the shaft seated in the upper countershaft case bores.

https://truckmanualshub.com/

How to Install the Lower Countershaft Bearings

Special Instructions

⚠ CAUTION

To install the bearing in step 4, the bearing driver must bear on both the inner and outer race of the bearing. If the bearing driver contacts only one race, the bearing will be damaged.

Special Tools

- Countershaft Support Tool T11
- Bearing Driver T10

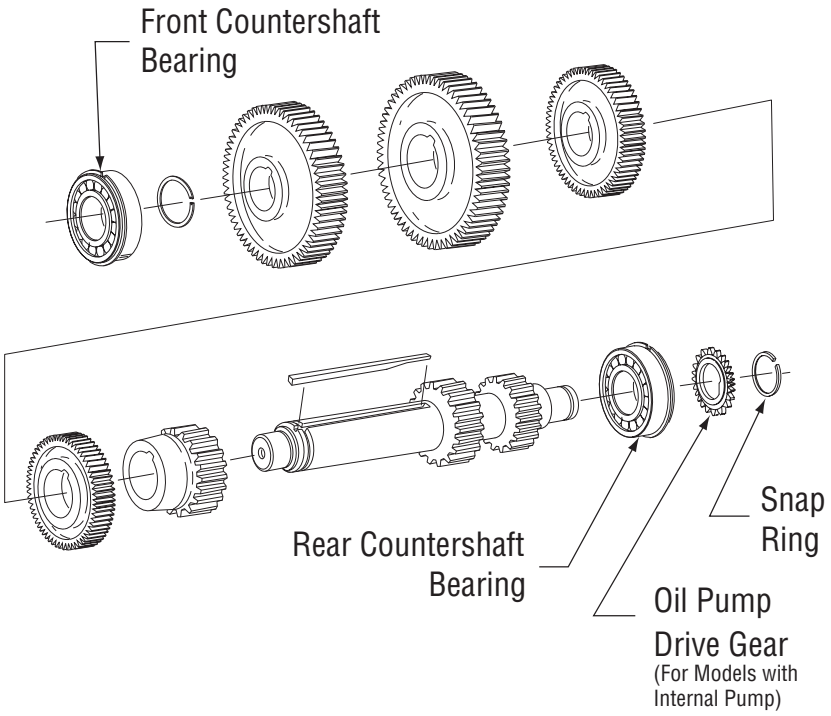

Procedure -

1. Place a countershaft support (Tool ref. ID T11) under the lower countershaft in the front case bore.

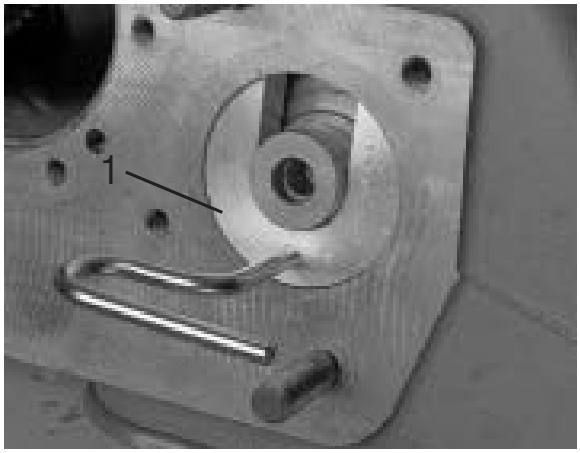

https://truckmanualshub.com/

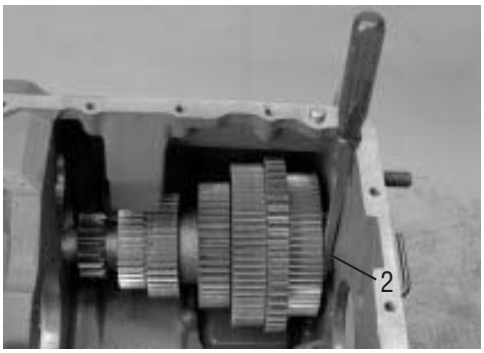

2. Place a large screwdriver or prybar at the front of the countershaft between the case wall and countershaft to space the countershaft rearward approximately 1/4” (6 mm).

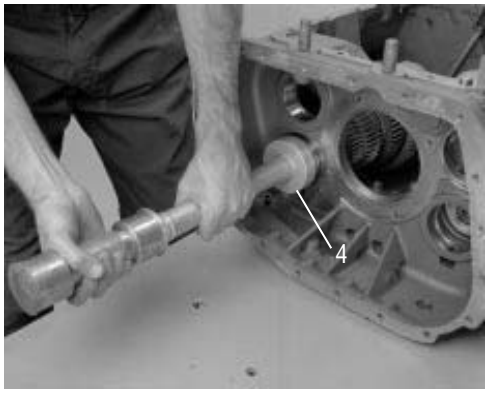

3. Place the bearing over the rear of the countershaft. It doesn’t matter which bearing you choose. The front and rear bearings are identical.

4. Place a flanged-end bearing driver (Tool ref. ID T10) over the bearing, and drive the bearing over the countershaft and into the case bore. When the bearing is fully seated, no gap should be visible between the bearing and the shaft. If the bearing is not fully seated, the snap ring to be installed at step 6 will not fit.

5. If used, install the oil pump drive gear.

6. In the countershaft rear groove, install the rear snap ring.

7. Remove the screwdriver or prybar.

8. If necessary, tap the countershaft forward to seat the rear bearing snap ring in its bore.

9. Temporarily install the mainshaft rear bearing retainer using two or more capscrews. The cover prevents the countershaft from moving rearward when the front bearing is installed.

10. Remove the countershaft support tool and place the front bearing on the front of the countershaft.

11. Place a flanged-end bearing driver (Tool ref. ID T10) over the bearing, and drive the bearing until the inner race is flush with the front of the countershaft.

12. Remove the mainshaft rear bearing retainer.

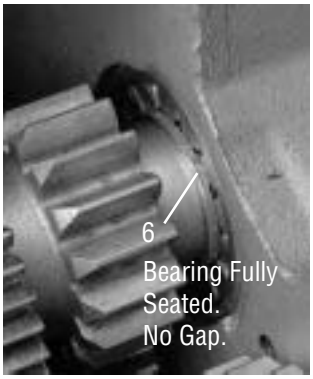

https://truckmanualshub.com/

How to Install the Input Shaft and Main Drive Gear

Special Instructions

None

Special Tools

- Bearing Driver T12 (see Table 6
- Toolmaker's Die

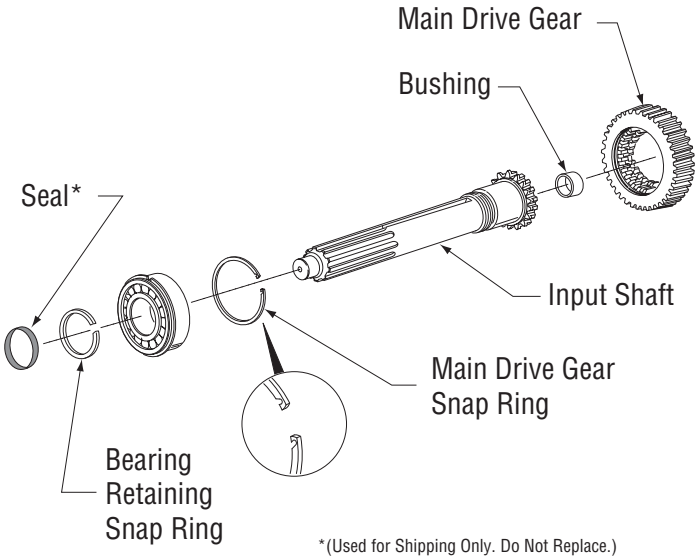

Procedure -

1. Use a highly visible toolmaker's dye and mark the main drive gear for timing purposes. To mark the gear, paint the toolmaker's die on any two adjacent teeth, and then paint the two adjacent teeth directly opposite the first two teeth.

2. If necessary, install the bushing in the back of the input shaft.

3. From inside the case, position and hold the main drive gear in its approximate position.

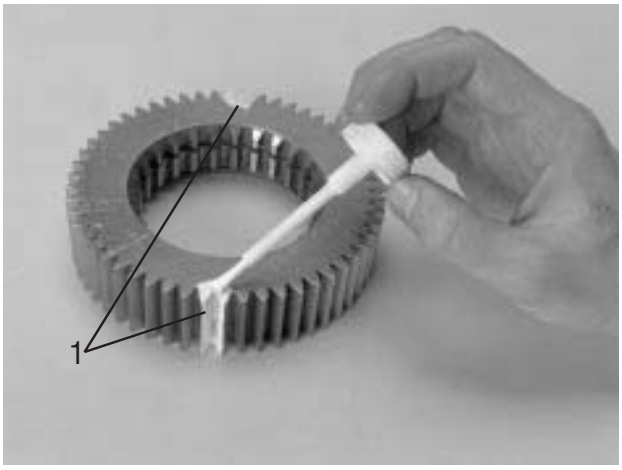

https://truckmanualshub.com/

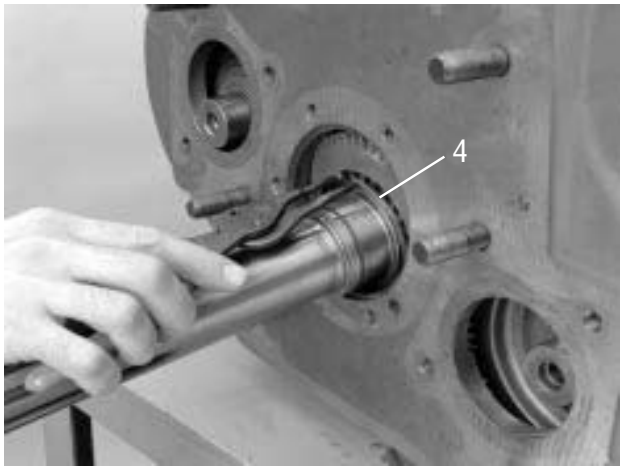

4. From the front, slide the input shaft into the main drive gear, and install the snap ring to trap the shaft in the gear.

   Note: You may notice backlash between the external spline teeth of the input shaft and the internal spline teeth of the main drive gear. The backlash is normal.

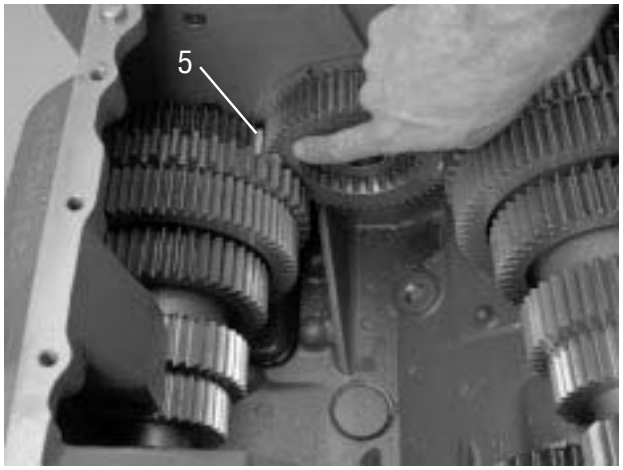

5. Inside the case, mesh the marked tooth on the lower countershaft drive gear with either set of marked teeth on the main drive gear.

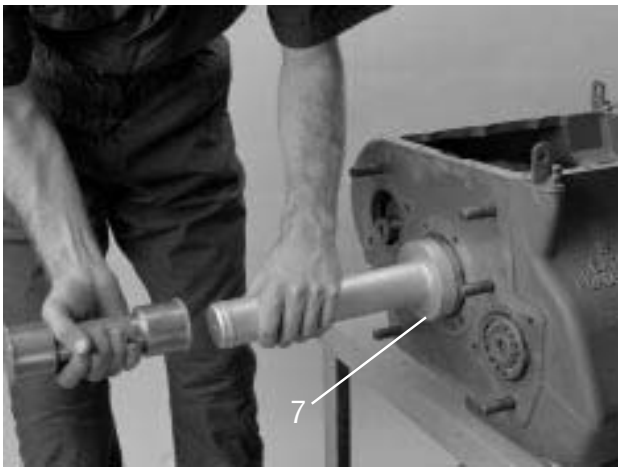

6. While holding the main drive gear in the proper position and in time with the lower countershaft, slide the input bearing over the input shaft and start it into its bore. Use the proper bearing driver (Tool ref. ID T12) to drive it into position until the snap ring bottoms on the case.

   Note: The input bearing is not fully installed at this point.

7. Temporarily install the input bearing cover with two or more capscrews.

8. From inside the main case, drive the input shaft forward until it is fully seated.

9. Remove the input bearing cover, and install the input bearing retaining snap ring.

   Note: Do not replace the small rubber lip seal. It is used only to prevent leakage during shipping.

10. Do not reinstall the input bearing cover at this time. Instead, pull the input shaft and bearing forward to allow for mainshaft installation.

https://truckmanualshub.com/

How to Install the Input Bearing Cover

Special Instructions

None

Special Tools

- Torque Wrench 50 lb. ft. capacity

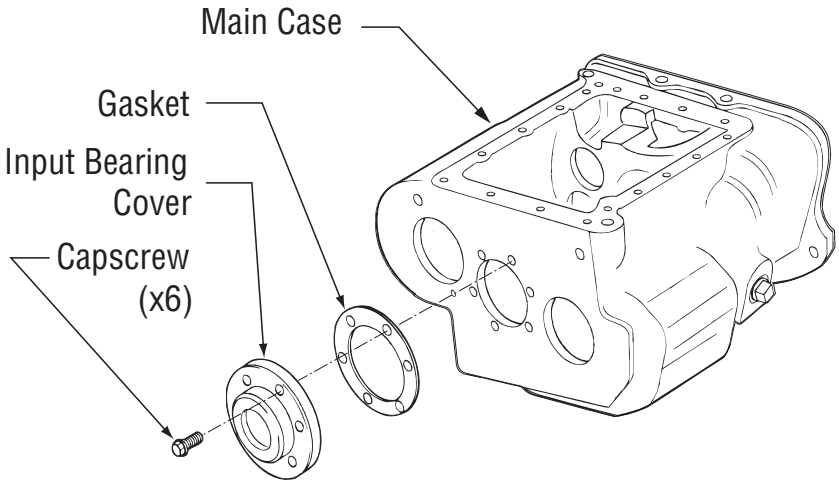

Procedure -

1. Tap the input shaft and bearing rearward to seat the bearing snap ring against the case.

2. Slide a new gasket and the input bearing cover over the input shaft. Make sure the oil return hole in the cover and gasket is aligned with the hole in the front of the case.

3. Apply Eaton®Fuller® thread sealant #71205 or equivalent to the capscrew threads, and install the six (6) capscrews. Torque the capscrews to 40-45 lb. ft. (54-61 N•m).

https://truckmanualshub.com/

How to Install the Upper Countershaft Bearings

Special Instructions

None

Special Tools

- Countershaft Support Tool T11
- Bearing Driver T10

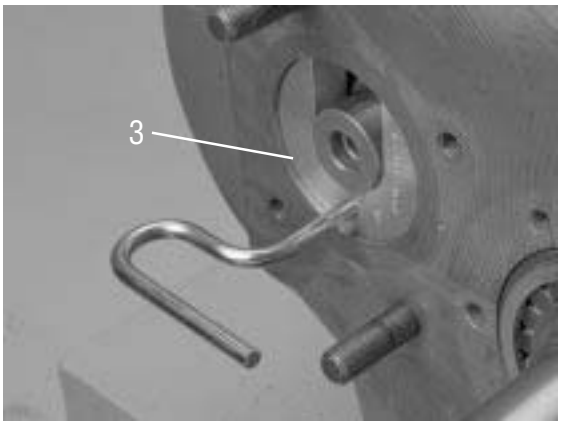

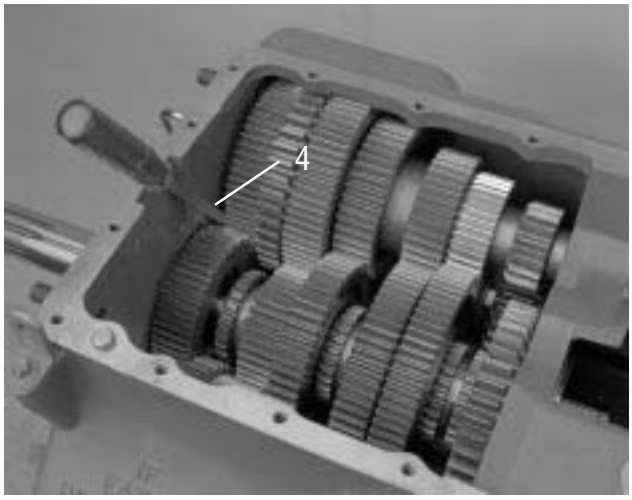

Procedure -

1. Make sure the lower countershaft and main drive gear timing marks are aligned.

2. Mesh the marked tooth of the upper countershaft with the two remaining marked teeth of the main drive gear.

3. Support and center the front of the countershaft by placing a support tool (Tool ref. ID T11) in the front bore as shown.

4. Place a large screwdriver or prybar at the front of the countershaft between the case wall and countershaft to space the countershaft rearward approximately 1/4” (6 mm).

5. Place a bearing over the rear of the countershaft. It doesn’t matter which bearing is chosen. The front and rear bearings are identical.

⚠ CAUTION

The bearing driver must bear on both the inner and outer race of the bearing. If the bearing driver contacts only one race, the bearing will be damaged.

https://truckmanualshub.com/

6. Place a flanged-end bearing driver (Tool ref. ID T10) over the countershaft rear bearing, and drive the bearing into the case bore. The countershaft may need to be lifted slightly to start the bearing into the bore. When the bearing is fully seated, no gap should be visible between the bearing and the shaft. If the bearing is not fully seated, the snap ring to be installed at step 7 will not fit.

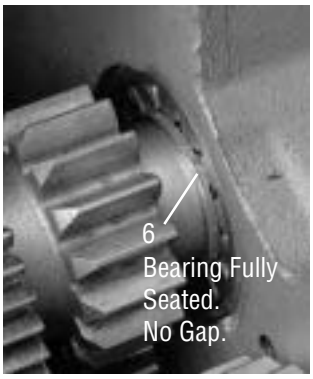

7. In the countershaft rear groove, install the rear snap ring.

8. Remove the screwdriver or prybar.

9. If necessary, tap the countershaft forward to seat the rear bearing in its bore.

10. Install the mainshaft rear bearing retainer. To install the bearing retainer, apply Eaton®Fuller® thread sealant #71205 or equivalent to the capscrews, and install them in the bearing retainer. Torque the screws to 40-45 lb-ft (54-61 N•m)

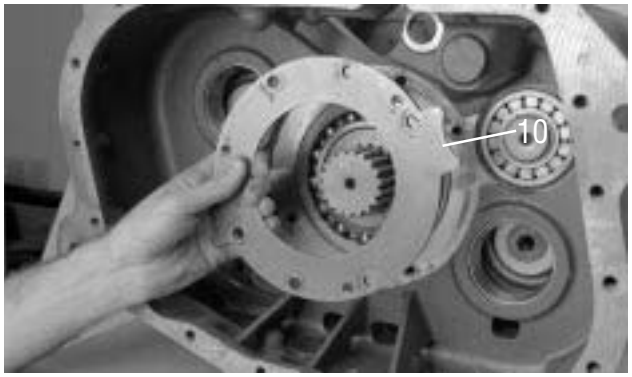

11. Remove the timing block and place the remaining bearing on the front of the countershaft.

12. Place a flanged-end bearing driver (Tool ref. ID T10) over the bearing, and drive the bearing over the countershaft until the inner race is flush with the end of the countershaft.

https://truckmanualshub.com/

How to Install the Upper Reverse Idler Gear Assembly

Special Instructions

The installation procedure is the same as that for the lower reverse idler shaft.

The new reverse idler shaft uses a snap-ring in place of the capscrew.

Previous Design

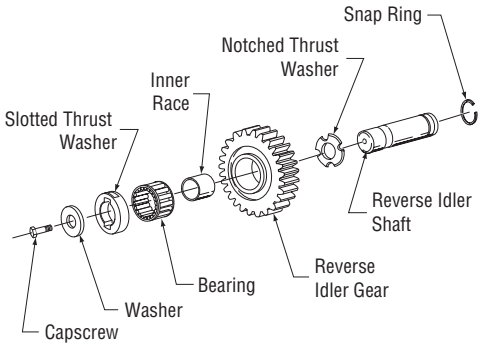

Current Design

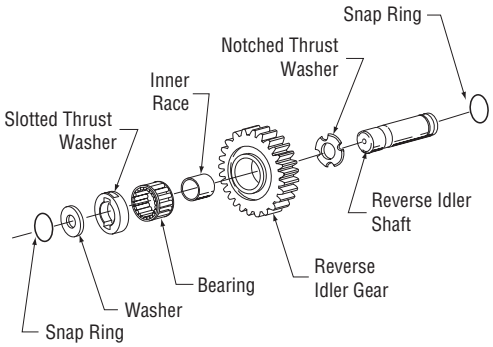

Special Tools

- Typical service tools

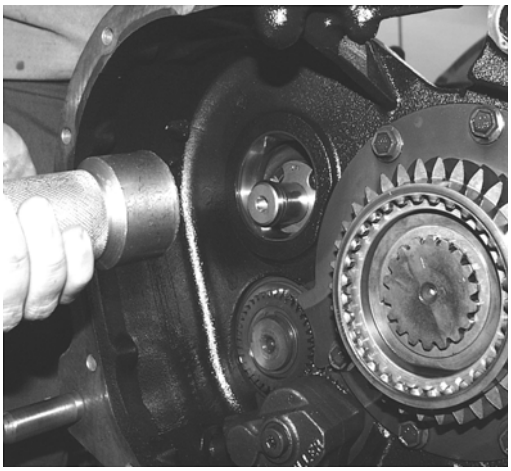

Procedure -

1. Lift the mainshaft reverse gear to allow the reverse idler gear to drop into mesh and into the proper position.
2. Place and hold the idler flat thrust washer at the back of the gear.
3. While holding the gear and washer in position, feed the reverse idler shaft through the flat thrust washer and gear.
4. Position the slotted thrust washer in front of the reverse idler gear with one of the slots facing up, and continue to feed the idler shaft forward. Make sure the word FRONT faces the front of the main case.
5. With a soft bar and driver, drive the reverse idler shaft fully into position.
6. Secure the shaft in position according to one of the procedures below:

https://truckmanualshub.com/

Note: For Nut Fastener Design: Inspect the nylon locking insert in the nut, and replace the nut if it is excessively worn. After inspecting and/or replacing the nut, install the nut and washer on shaft front. Tighten the nut to 67-75 lb. ft. (90-101 N•m) of torque.

Note: For Capscrew Fastener Design: Apply Eaton®Fuller® thread sealant #71205 or equivalent to the capscrew threads, and install the capscrew and washer. Torque the capscrews to 67-75 lb. ft. (90-101 N•m).

Note: For Snap-ring design: Install the washer and snap ring on idler shaft using socket. Place snap-ring over front of reverse idler shaft seal, snapping into place by using a large socket. Tap lightly into place.

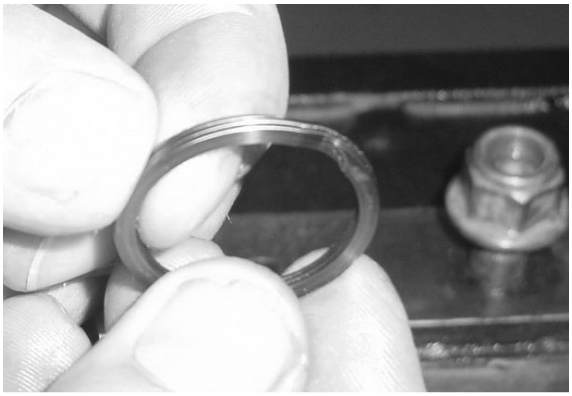

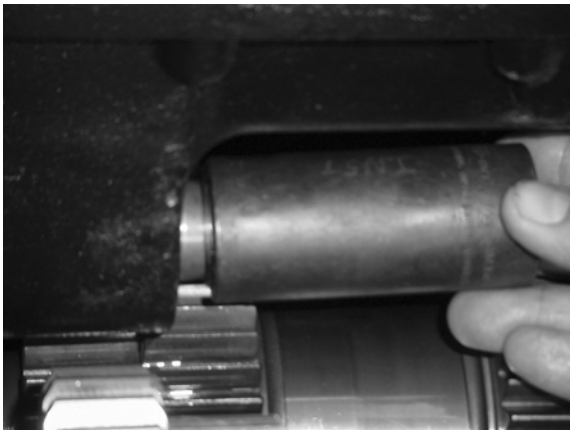

https://truckmanualshub.com/

How to Install the Auxiliary Drive Gear Assembly

Special Instructions

None

Special Tools

- Typical service tools

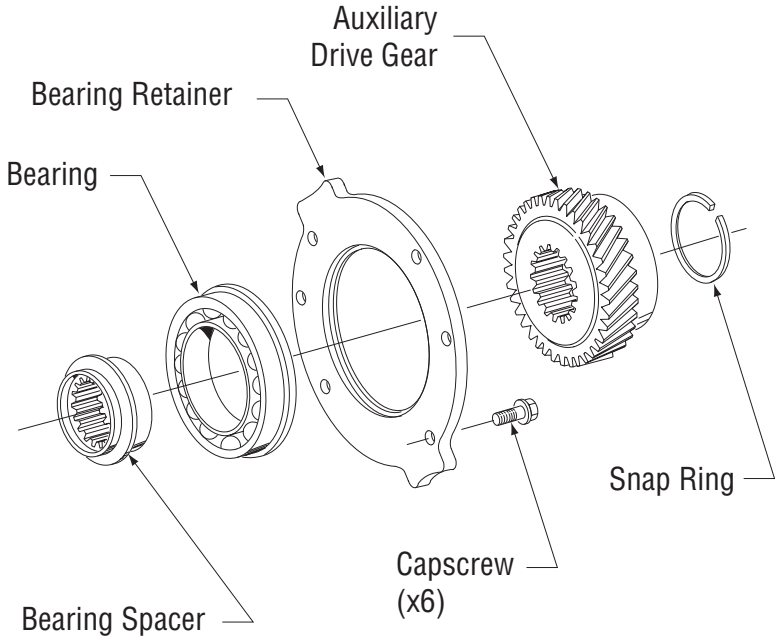

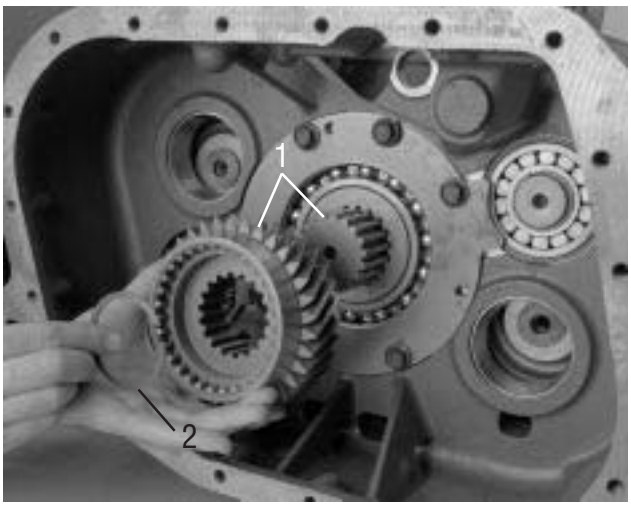

Procedure -

1. Install the auxiliary drive gear over the mainshaft splines.
2. Install the auxiliary drive gear retaining snap ring in the mainshaft snap ring groove. If necessary, slide the mainshaft rearward to fully expose the groove.

https://truckmanualshub.com/

How to Install the Clutch Housing

Special Instructions

The procedure is the same for aluminum or cast iron housings.

⚠ CAUTION

If you replace the clutch housing, DO NOT replace it with one machined before January 1, 1995. It will not have the proper countershaft bearing relief machined into the countershaft bearing pockets and could cause interference between the countershaft bearings and clutch housing.

Special Tools

- Typical service tools

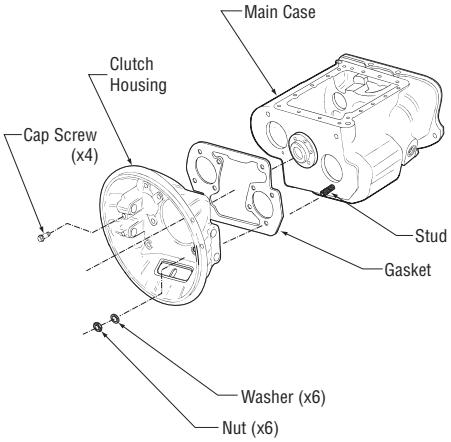

Procedure -

1. Position a new gasket on the housing mounting surface.

   Note: The input bearing cover must be installed before you install the clutch housing.

2. Install the clutch housing on the six (6) studs on the main case, piloting it on the front input bearing cover.

   Note: Cast iron clutch housings use split-type lockwashers. Aluminum clutch housings use a flat washer with the nut and star-type lockwashers with the capscrews.

3. Install the nuts with washers or lockwashers on the studs, tighten to 180-200 lb. ft. (244-271 N•m) of torque.

4. Apply Eaton®Fuller® thread sealant #71205 to the capscrews and install them with lockwashers. Tighten the capscrews to 72-80 lb. ft. (97-108 N•m) of torque.

https://truckmanualshub.com/

Note: The torque value is the same for aluminum or cast iron housings.

https://truckmanualshub.com/

How to Remove the Oil Pump

Special Instructions

None

Special Tools

- Typical service tools

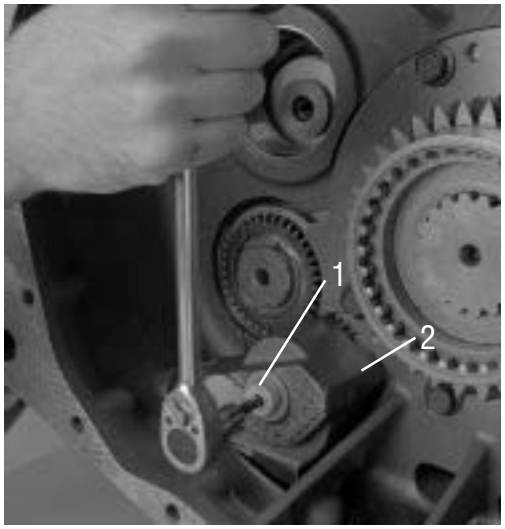

Procedure -

1. Use a 6 mm allen socket driver to remove the single socket head shoulder bolt.
2. Remove the oil pump.
3. If necessary, remove the pump drive gear by removing the countershaft rear snap ring.

https://truckmanualshub.com/

How to Install the Oil Pump

Special Instructions

Overtightening the attaching bolt could bind up the pump.

Special Tools

- Torque Wrench 25 lb. ft. capacity

Procedure -

1. From the rear of the transmission, position the oil pump into place.

2. Install the socket head shoulder bolt to secure the pump in place.

   ⚠ CAUTION

   Overtightening the bolt could bind up the pump.

3. With a 6 mm socket head driver, torque the bolt to 20-23 lb. ft. (27-31 N•m).

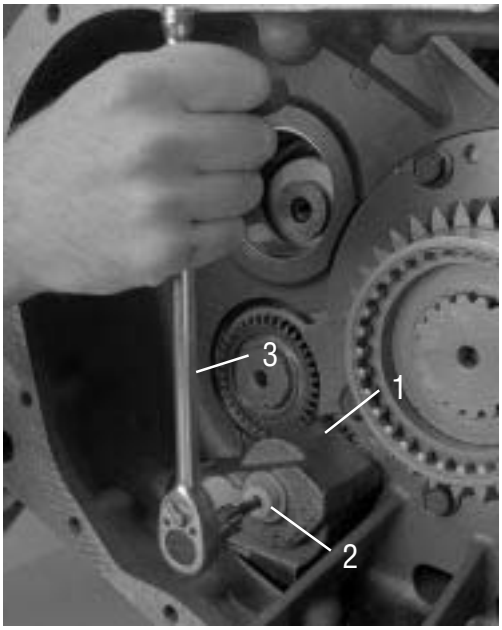

https://truckmanualshub.com/

How to Install the Oil Seal

Special Instructions

None

Special Tools

- Seal Driver Eaton K-2413
- Slinger Driver

Procedure -

1. Install the seal into the rear bearing cover using seal driver (Eaton P/N K-2413) with adapter. The seal is fully installed when the flange on the seal is flush with the shoulder in the bore.

2. Install a new slinger on the seal sleeve or output yoke using a slinger driver.

https://truckmanualshub.com/

How to Assemble the Auxiliary Section

Special Instructions

To aid in reassembling the auxiliary section, use a fixture that will hold the countershafts in the proper positions. The dimensions of the fixture are shown in the illustration. The fixture is constructed from a 2”x12”x24” piece of wood.

Special Tools

- Countershaft Retaining Straps T3

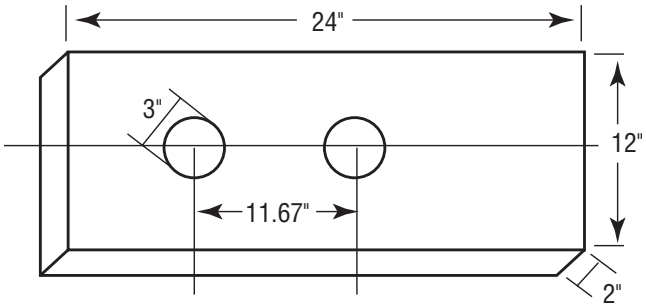

Procedure -

1. For timing purposes, identify and mark with toolmaker’s dye the two teeth on each countershaft that are identified with an “0”.

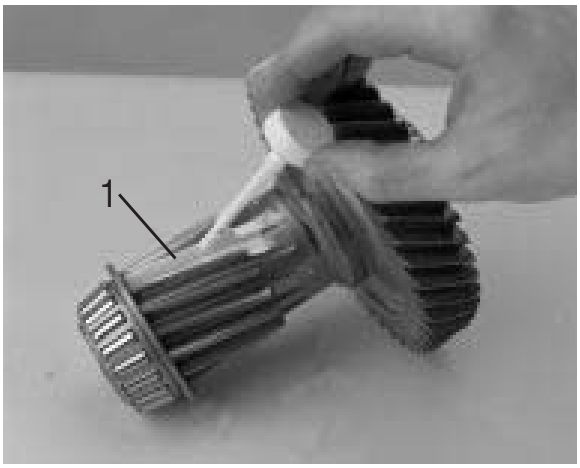

2. Place the countershafts in the fixture (or on a clean, flat surface if you don’t have a fixture) with the marked teeth turned to the middle of the fixture.

3. Position a 2” high spacer, such as a socket, between the countershafts. (If a fixture is not used, a 3” spacer is required.)

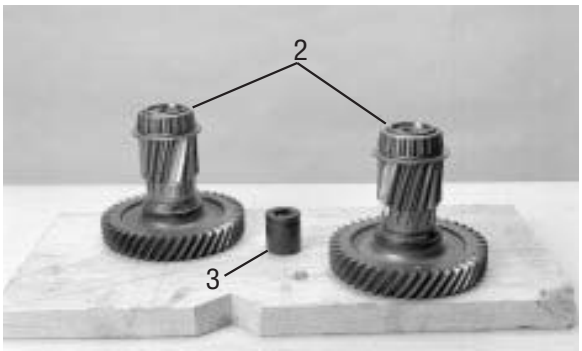

https://truckmanualshub.com/

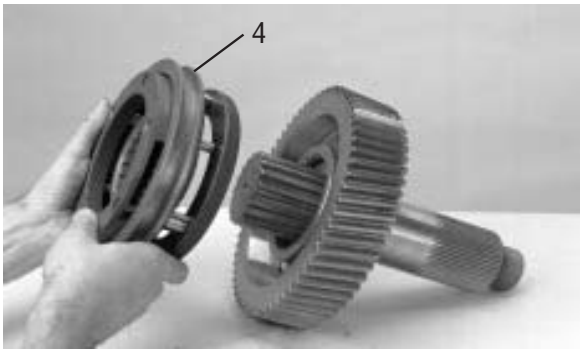

4. Install the synchronizer assembly on the output shaft. The low range synchronizer ring (side with external friction material) must be facing the auxiliary mainshaft reduction gear.

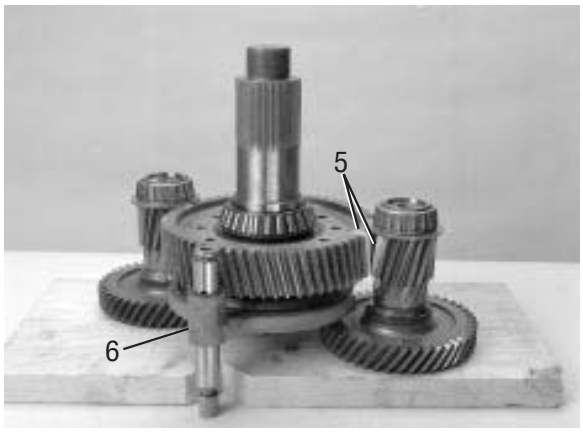

5. Match the timing marks on the auxiliary mainshaft reduction gear with the timing marks on the countershafts. The output shaft will rest on the spacer.

6. With the round hole in the range yoke bar facing up, slide the range yoke assembly into the groove on the range synchronizer.

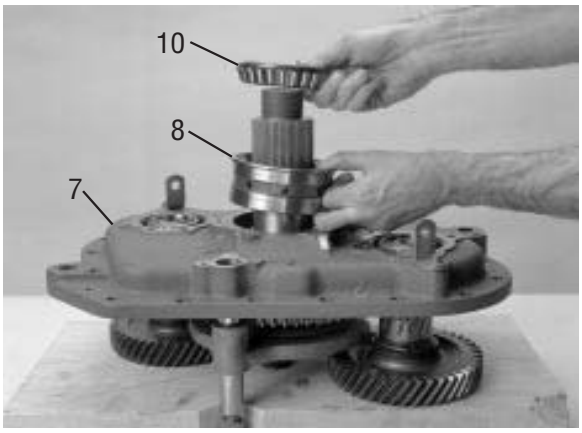

7. Lightly oil the bearing bores on the auxiliary housing, and place the auxiliary housing over the countershaft assemblies and the output shaft assembly.

8. Install the output shaft bearing race in the housing bore.

9. Make sure the output shaft bearing inner spacer is on the output shaft. (The spacer should have been installed when the output shaft components were assembled.)

10. Heat the rear output bearing cone (or use an appropriate driver) and install the outer bearing cone, tapered side down, on the shaft.

https://truckmanualshub.com/

11. Install a new gasket.

12. Using the marks made during disassembly as a guide, install the rear bearing cover in the same position as when removed.

    Note: The rear bearing cover can be installed in two positions opposite each other. If the rear bearing cover is not installed in the same position in which it was removed, the speedometer cable may not reach the speedometer after the transmission is installed in the vehicle. If the speedometer cannot be connected, the auxiliary bearing cover must be removed and reassembled properly.

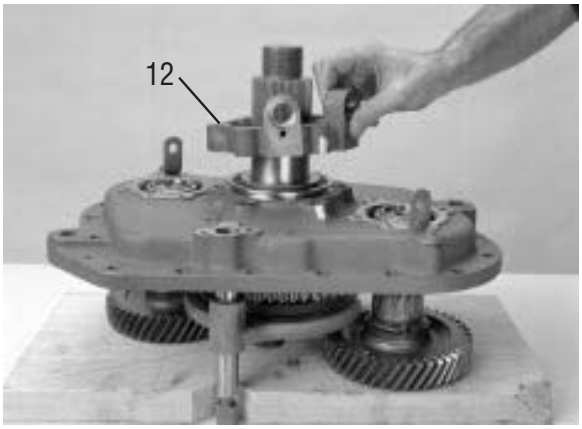

13. Apply Eaton®Fuller® Sealant #71205 or equivalent to the six (6) rear bearing cover retaining capscrews and install them. Tighten the capscrews to 40-45 lb. ft. (54-61 N•m) of torque.

14. Insert the countershaft bearing races in their bores.

    Note: If the original parts are being reused and installed in their original locations, the shims can also be installed at this time.

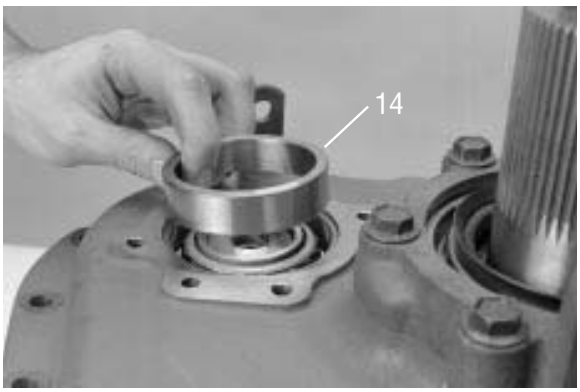

15. If shimming will be required, temporarily install the auxiliary countershaft shim and support tools (Tool ref. ID T3). Final installation and shimming of the countershafts will be done after the auxiliary section is installed on the front section.

    Note: If shimming will not be required, the auxiliary countershaft bearing covers can be installed at this time. However, the shim tools will help prevent the countershafts from dropping excessively when the auxiliary section is installed.

16. If desired, secure the auxiliary section in a vise with brass jaw protectors.

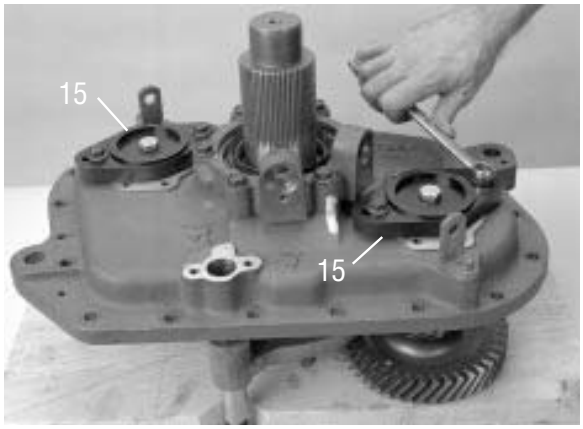

https://truckmanualshub.com/

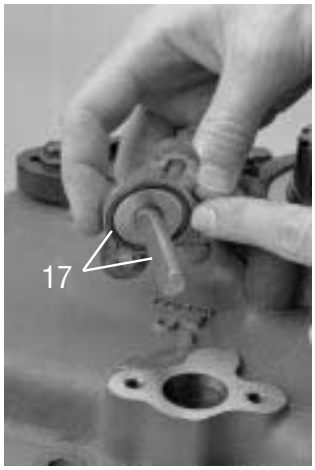

17. On the auxiliary housing back, install the range alignment lock cover and O-ring. Rotate the cover to the unlock position, and secure the cover in place with a capscrew.

⚠ CAUTION

New units don't contain the lock cover, so the shift bar housing must remain off until the auxiliary section and range cylinder are assembled.

18. Install the O-ring over the output shaft, and insert it against the output bearing.

19. Install the speedometer rotor/seal sleeve.

20. Install the output yoke over the output shaft. The yoke should slide on and stop before contacting the speedometer rotor. As the output shaft nut is installed, the output yoke will contact the speedometer rotor.

21. Inspect the output nut for damage and wear. If the nylon locking material is damaged or excessively worn, use a new output nut.

    Note: The nylon locking material must be in good condition to prevent the nut from loosening during operation.

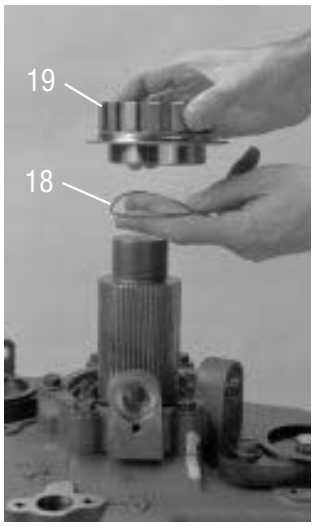

22. Lightly oil the output shaft threads and the output nut threads and install the nut. Torque the nut to 450-500 lb. ft. (610-677 N•m).

https://truckmanualshub.com/

How to Install the Auxiliary Section

Special Instructions

Use crocus cloth to clean the dowel pins and dowel pin holes of all paint and corrosion. Apply a light coating of grease to the dowel pin holes.

Special Tools

- Lifting Device
- Auxiliary Section Hanger Bracket T2 (see Table 6)
- Torque Wrench 50 lb. ft. capacity
- Torque Wrench 500 lb. ft. capacity
- Auxiliary Countershaft Support Plates T3

Procedure -

1. If not previously installed, install the output yoke (or flange) and the output nut. The yoke should slide on and stop before contacting the speedometer rotor. As the output shaft nut is installed, the output yoke will contact the speedometer rotor. Torque the output nut to 450-500 lb. ft. (610-677 N•m).

2. Install the dowel pins to the proper depth. (3/8” to 1/2” of the shoulder on the pins must be visible.)

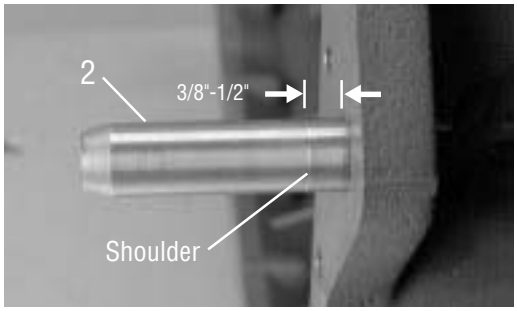

3. Make sure the auxiliary section is in **low** gear. If it is not, use one or two large screwdrivers or prybars to apply even rearward pressure to move the range sliding clutch back into the low gear position.

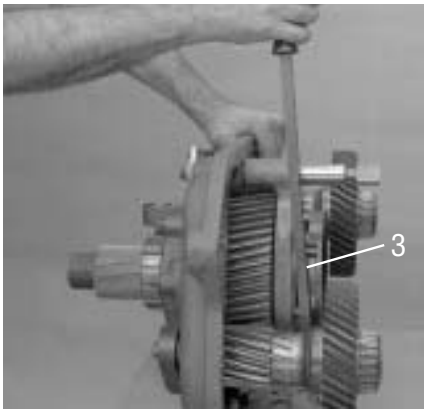

4. Make sure the Auxiliary Countershaft plates are installed.

5. If the shift bar housing is installed, make sure the range bar lock cover is rotated counterclockwise into the unlock position.

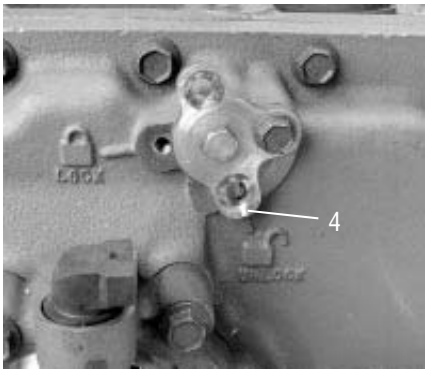

⚠ CAUTION

New units have removed the lock cover, so the shiftbar housing must remain off until the range cylinder and auxiliary sections are assembled.

https://truckmanualshub.com/

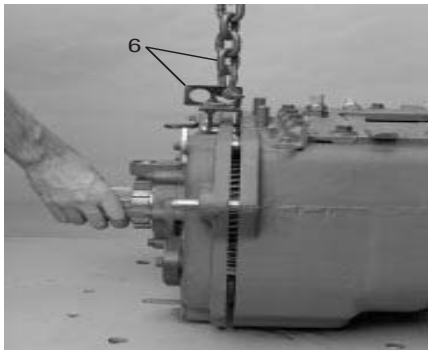

6. Position the gasket on the main case mounting surface.

7. Attach the auxiliary section hanger bracket to the top of the auxiliary section, and attach the chain of the lifting device to the bracket. (Tool ref. ID T2)

8. Allow the lifting device to support the weight of the auxiliary section, and position the auxiliary section on the two dowel pins. Slide the auxiliary section forward.

   Note: The range yoke bar must slide into the bore in the main case.

   Note: To help the auxiliary countershafts mesh with the auxiliary drive gear, rotate the output yoke to turn the gearing.

   Note: If the auxiliary countershafts drop excessively, the auxiliary countershaft shim tools (Tool ref. ID T3) can be used to support the countershafts.

   Note: The auxiliary section can be assembled to the transmission with the transmission in the vertical position.

9. Remove the auxiliary section hanger bracket.

   ⚠ CAUTION

   Do not force or pull the auxiliary section into position with capscrews when sliding it into place. It should slide into place fairly easily. If excessive force is necessary, the countershafts are drooping or the gearing is not in proper mesh, remove the auxiliary section and try again.

10. Slide the auxiliary section fully into position.

11. Apply Eaton®Fuller® thread sealant #71205 to the capscrew threads, and install the 19 capscrews. Torque them to 40-45 lb. ft. (54-61 N•m)

12. Remove the capscrew securing the range bar lock cover in the unlock position and rotate the cover to the lock position. Insert the two capscrews to secure the lock cover in position. Torque them to 20-23 lb. ft. (27-31 N•m).

    Note: To properly align the lock cover, the auxiliary section must be in low range when the capscrews are tightened.

13. Remove the auxiliary countershaft rear bearing covers, and shim the countershafts using the procedure on the following page.

https://truckmanualshub.com/

Shim Procedure without a Shim Tool for Tapered Bearings

Special Instructions

The shim procedure can be done in the horizontal or vertical position. The procedure is done the same.

⚠ CAUTION

Use genuine Eaton® replacement gaskets for the auxiliary housing and countershaft bearing cover. Do not omit the gaskets. Bearing endplay is influenced by the compressed thickness of the gasket (.011-.012" or .28-.30 mm.

The bearing endplay must be checked and adjusted any time a countershaft, bearing, or housing is replaced. If, during reassembly, the same countershaft, bearings, housing, and shims are reused and kept in the same location, it is not necessary to reset bearing endplay.

The following procedure is used to adjust the endplay for the auxiliary countershaft tapered bearings. By correctly following this procedure, each countershaft will have .001"-.005" (.03-.12 mm) endplay.

Shims must be aligned properly or else the rear bearing cover may be damaged when final torque is applied.

Procedure -

1. The auxiliary countershaft bearing covers or countershaft straps and shims should be removed. Make sure all old gasket material is cleaned from the gasket mounting surfaces on the countershaft bearing covers and the auxiliary housing.

2. Verify that the auxiliary section is in gear. When the output shaft is rotated, the countershafts must also rotate. If not shift the auxiliary into gear by applying shop air to the high range air port on range cylinder to shift into gear.

3. Make sure a 0.100 countershaft rear bearing shim is installed. Be sure the countershaft rear bearing races are seated in the bearing bores.

4. Install two (2) clean 3/8 " x 1" capscrews without washers directly across from each other in each bearing cover. Tapped holes in auxiliary case must be free of thread adhesive.

5. Evenly tighten the capscrews to 7 Lb·in of torque. Do not install the countershaft rear bearing cover gasket. The gap between the bearing cover and the housing surface should be even from side to side.

   Note: 7 Lb·in is slightly more than finger tight. Do not overtighten the capscrews. If the capscrews are too tight, the bearing cover will become distorted.

https://truckmanualshub.com/

6. Rotate the output shaft 4 times clockwise and 4 times counterclockwise. The rotation will seat and align the rollers in each tapered bearing. Re-torque the capscrews to 7 Lb·in. If the countershafts do not rotate, the range sliding clutch or deep reduction sliding clutch is in neutral. Apply shop compressed air to shift cylinders to shift the sliding clutches into gear.

7. Use a feeler gauge, as close to each capscrew location as possible, and measure the gap between the countershaft rear bearing cover and the auxiliary housing gasket surface. Measure and record the gap at two capscrew locations.

8. Average the two feeler gauge measurements by adding the measurements together and dividing by 2 as shown in Example.

Shim Chart

Gap 1 = .060 ; Gap 2 = .050
Total Gap = .060 + .050 = .110
Average = 110/2 = .055
Select yellow shim as indicated in the shim chart at the end of this selection.

9. Locate the feeler gauge average measurement in the shim chart to determine the required shim and color code.

   Note: The oil pump shim is used when an auxiliary oil pump or PTO is mounted on the countershaft. The oil pump shims have a smaller outside diameter.

10. Remove the countershaft rear bearing cover and gauging shim.

11. Place the selected shim on the rear countershaft bearing race.

12. Position a new gasket on countershaft rear bearing cover mounting surface.

13. Position the countershaft rear bearing cover over the new gasket.

14. Apply Eaton® Fuller® thread sealant #71205 or equivalent to the auxiliary countershaft rear bearing cover capscrews and auxiliary countershaft rear bearing cover.

https://truckmanualshub.com/

15. Install the auxiliary countershaft rear bearing cover and secure it with the capscrews. Make sure the shim is in the proper location and is not pinched between the cover and the housing. Tighten the capscrews to 40-45 Lb·ft (54-61 Nm).

    Note: Use a thick grease to hold the shim in position when installing the cover.

16. Repeat this procedure for the remaining countershaft.

    Note: Make sure capscrews are properly torqued.

    Note: Make sure the input shaft rotates.

Shim Table

Feeler Gauge Average Gap	Shim Thickness	Standard Shim Part Number	Oil Pump Shim Part Number	Color Code
.072-.075	.033-.034	4302345	4302346	Gold
.69-.0715	.036-.037	21452	21472	Red
.066-.0685	.039-.040	21453	21473	Pink
.063-.0655	.042-.043	21454	21474	Brown
.060-.0625	.045-.046	21455	21475	Tan
.057-.0595	.048-.049	21456	21476	Orange
.054-.0565	.051-.052	21457	21477	Yellow
.051-.0535	.054-.055	21458	21478	Green
.048-.0505	.057-.058	21459	21479	Light Blue
.045-.0475	.060-.061	21460	21480	Lavender
.042-.0445	.063-.064	21461	21481	White
.039-.0415	.066-.067	21684	21686	Black
.036-.0385	.069-.070	21685	21687	Silver

https://truckmanualshub.com/

Copyright Eaton Corporation and Dana Limited, 2009. Eaton and Dana hereby grant their customers, vendors, or distributors permission to freely copy, reproduce and/or distribute this document in printed format. It may be copied only in its entirety without any changes or modifications. THIS INFORMATION IS NOT INTENDED FOR SALE OR RESALE, AND THIS NOTICE MUST REMAIN ON ALL COPIES.

National Institute for AUTOMOTIVE SERVICE EXCELLENCE

Roadranger®

DANA | EATON

For spec'ing or service assistance, call 1-800-826-HELP (4357) or visit our web site at: www.roadranger.com. In Mexico, call 001-800-826-4357.

Roadranger: Eaton, Dana and other trusted partners providing the best products and services in the industry, ensuring more time on the road.

©2009 Eaton Corporation · All rights reserved.
Printed in USA

Eaton Corporation • Truck Components Operations • P.O. Box 4013 • Kalamazoo, MI 49003 • U.S.A. • www.roadranger.com