https://truckmanualshub.com/

WEBM003400

SHOP MANUAL

SK714-5
SK815-5

SKID - STEER LOADER

SERIAL NUMBER

SK714-5 37AF00004 and up

SK815-5 37BF00006 and up

KOMATSU

Utility

https://truckmanualshub.com/

CONTENTS

Page

10 STRUCTURE AND FUNCTION 10-1

20 TESTING AND ADJUSTING 20-1

30 DISASSEMBLY AND ASSEMBLY 30-1

40 MAINTENANCE STANDARD 40-1

https://truckmanualshub.com/

The affected pages are indicated by the use of the following marks. It is requested that necessary actions be taken to these pages according to table below.

Mark	Indication	Action required
❍	Page to be newly	Add
●	Page to be replaced	Replace
( )	Page to be delete	Discard

Pages having no marks are those previously revised or made additions.

LIST OF REVISED PAGES

Mark	Page	Time of revision	Mark	Page	Time of revision	Mark	Page	Time of revision	Mark	Page	Time of revision	Mark	Page	Time of revision
	00-1			10-17			10-58			10-99			20-32	
	00-2			10-18			10-59			10-100			20-34	
	00-2-1			10-19			10-60			10-101			20-35	
	00-2-2			10-20			10-61			10-102			20-36	
	00-3			10-21			10-62			10-103			20-37	
	00-4			10-22			10-63			10-104				
	00-5			10-23			10-64			10-105			30-1	
	00-6			10-24			10-65			10-106			30-2	
	00-7			10-25			10-66						30-3	
	00-8			10-26			10-67			20-1			30-4	
	00-9			10-27			10-68			20-2			30-5	
	00-10			10-28			10-69			20-3			30-6	
	00-11			10-29			10-70			20-4			30-7	
	00-12			10-30			10-71			20-5			30-8	
	00-13			10-31			10-72			20-6			30-9	
	00-14			10-32			10-73			20-7			30-10	
	00-15			10-33			10-74			20-8			30-11	
	00-16			10-34			10-75			20-9			30-12	
	00-17			10-35			10-76			20-10			30-13	
	00-18			10-36			10-77			20-11			30-14	
	00-19			10-37			10-78			20-12			30-15	
	00-20			10-38			10-79			20-13			30-16	
	00-21			10-39			10-80			20-14			30-17	
	00-22			10-40			10-81			20-15			30-18	
				10-41			10-82			20-16			30-19	
	10-1			10-42			10-83			20-17			30-20	
	10-2			10-43			10-84			20-18			30-21	
	10-3			10-44			10-85			20-19			30-22	
	10-4			10-45			10-86			20-20			30-23	
	10-5			10-46			10-87			20-21			30-24	
	10-6			10-47			10-88			20-22			30-25	
	10-7			10-48			10-89			20-23			30-26	
	10-8			10-49			10-90			20-24			30-27	
	10-9			10-50			10-91			20-25			30-28	
	10-10			10-51			10-92			20-26			30-29	
	10-11			10-52			10-93			20-27			30-30	
	10-12			10-53			10-94			20-28			30-31	
	10-13			10-54			10-95			20-29			30-32	
	10-14			10-55			10-96			20-30			30-33	
	10-15			10-56			10-97			20-31			30-34	
	10-16			10-57			10-98			20-32			30-35	

https://truckmanualshub.com/

Mark	Page	Time of revision	Mark	Page	Time of revision	Mark	Page	Time of revision	Mark	Page	Time of revision	Mark	Page	Time of revision
	30-36													
	30-37													
	30-38													
	30-39													
	30-40													
	30-41													
	30-42													
	30-43													
	30-44													
	30-45													
	30-46													
	30-47													
	30-48													
	30-49													
	30-50													
	30-51													
	30-52													
	30-53													
	30-54													
	40-1													
	40-2													
	40-3													
	40-4													
	40-5													
	40-6													
	40-7													
	40-8													
	40-9													
	40-10													
	40-11													
	40-12													
	40-13													
	40-14													
	40-15													
	40-16													
	40-17													
	40-18													
	40-19													
	40-20													
	40-21													
	40-22													

https://truckmanualshub.com/

IMPORTANT SAFETY NOTICE

Proper service and repair is extremely important for the safe operation of your machine.
The service and repair techniques recommended by Komatsu Utility and describe in this manual are both effective and safe methods of operation. Some of these operations require the use of tools specially designed by Komatsu Utility for the purpose.
To prevent injury to workers, the symbols and are used to mark safety precautions in this manual. The cautions accompanying these symbols should always be carefully followed. If any danger arises or may possibly arise, first consider safety, and take necessary steps to face.

SAFETY

GENERAL PRECAUTIONS

Mistakes in operation extremely dangerous.
Read all the Operation and Maintenance Manual carefully BEFORE operating the machine.

1. Before carrying out any greasing or repairs, read all the precautions written on the decals which are suck on the machine.
2. When carrying out any operation, always wear safety shoes and helmet. Do not wear loose work clothes, or clothes with buttons missing.
   - Always wear safety glasses when hitting parts with a hammer.
   - Always wear safety glasses when grinding parts with a grinder, etc.
3. If welding repairs are needed, always have a trained, experienced welder carry out the work. When carrying out welding work, always wear welding gloves, apron, glasses, cap and other clothes suited for welding work.
4. When carrying out any operation with two or more workers, always agree on the operating procedure before starting. Always inform your fellow workers before starting any step of the operation. Before starting work, hang UNDER REPAIR signs on the controls in the operator's compartment.
5. Keep all tools in good condition and learn the correct way to use them.
6. Decide a place in the repair workshop to keep tools and removed parts. Always keep the tools and parts in their correct places. Always keep the work area clean and make sure that there is no dirt or oil on the floor.
   Smoke only in the areas provided for smoking. Never smoke while working.

PREPARATIONS FOR WORK

7. Before adding or making any repairs, park the machine on hard, level ground, and block the wheels to prevent the machine from moving.
8. Before starting work, lower outrigger, bucket or any other work equipment to the ground. If this is not possible, use blocks to prevent the work equipment from falling down. In addition, be sure to lock all the control levers and hang warning sign on them.
9. When disassembling or assembling, support the machine with blocks, jacks or stands before starting work.
10. Remove all mud and oil from the steps or other places used to get on and off the machine. Always use the handrails, ladders or steps when getting on or off the machine.
    Never jump on or off the machine.
    If it is impossible to use the handrails, ladders or steps, use a stand to provide safe footing.

PRECAUTIONS DURING WORK

11. When removing the oil filler cap, drain plug or hydraulic pressure measuring plugs, loosen them slowly to prevent the oil from spurting out.
    Before disconnecting or removing components of the hydraulic circuit and engine cooling circuit, first remove the pressure completely from the circuit.
12. The water and oil in the circuits are not hot when the engine in stopped, so be careful not to get burned. Wait for the oil water to cool before carrying out any work on the cooling water circuits.
13. Before starting work, remove the leads from the battery. Always remove the lead from the negative (–) terminal first.

https://truckmanualshub.com/

14. When raising heavy components, use a hoist or crane. Check that the wire rope, chains and hooks are free from damage.
    Always use lifting equipment which has ample capacity. Install the lifting equipment at the correct places.
    Use a hoist or crane and operate slowly to prevent the component from hitting any other part.
    Do not work with any part still raised by the hoist or crane.
15. When removing covers which are under internal pressure or under pressure from a spring, always leave two bolts in position on opposite sides. Slowly release the pressure, then slowly loosen the bolts to remove.
16. When removing components, be careful not to break or damage the wiring.
    Damage wiring may cause electrical fires.
17. When removing piping, stop the fuel or oil from spilling out. If any fuel or oil drips on to the floor, wipe it up immediately.
    Fuel or oil on the floor can cause you to slip, or can even start fires.
18. As a general rule, do not use gasoline to wash parts. In particular, use only the minimum of gasoline when washing electrical parts.
19. Be sure to assemble all parts again in their original places. Replace any damage parts with new parts. When installing hoses and wires, be sure that they will not be damaged by contact with other parts when the machine is being operated.
20. When installing high pressure hoses, make sure that they are not twisted. Damaged tubes are dangerous, so be extremely careful when installing tubes for high pressure circuits. Also, check that connecting parts are correctly tightened.
21. When assembling or installing parts, always use specified tightening torques.
    When installing the parts which vibrate violently or rotate at high speed, be particulary careful to check that they are correctly installed.
22. When aligning two holes, never insert your fingers or hand.
23. When measuring hydraulic pressure, check that the measuring tool is correctly assembled before taking any measurement.
24. Take sure when removing or installing wheels.

https://truckmanualshub.com/

FOREWORD

This shop manual has been prepared as an aid to improve the quality of repairs by giving the operator an accurate understanding of the product and by showing him the correct way to perform repairs and make judgements. Make sure you understand the contents of this manual and use it to full effect at every opportunity.

This shop manual mainly contains the necessary technical information for operations performed in a service workshop.

The manual is divided into chapters on each main group of components; these chapters are further divided into the following sections.

STRUCTURE AND FUNCTION

This section explains the structure and function of each component. It serves not only to give an understanding of the structure, but also serves as reference material for troubleshooting.

TESTING AND ADJUSTING

This sections explains checks to be made before and after performing repairs, as well as adjustments to be made at completion of the checks and repairs.

Troubleshooting charts correlating «Problems» to «Causes» are also included in this section.

DISASSEMBLY AND ASSEMBLY

This section explains the order to be followed when removing, installing, disassembling or assembling each component, as well as precautions to be taken for these operations.

MAINTENANCE STANDARD

This section gives the judgement standards when inspecting disassembled parts.

NOTE

The specifications contained in this shop manual are subject to change at any time and without any notice.
Contact your Komatsu Utility distributor for the latest information.

https://truckmanualshub.com/

HOW TO READ THE SHOP MANUAL

VOLUMES

Shop manual are issued as a guide to carry out repairs. These various volumes are designed to avoid duplicating the same information.

DISTRIBUTION AND UPDATING

Any additions, amendments or other changes will be sent to Komatsu Utility distributors.
Get the most up-to-date information before you start any work.

FILING METHOD

1. See the page number on the bottom of the page. File the pages in correct order.
2. Following examples show you how to read the page number.
   Example:

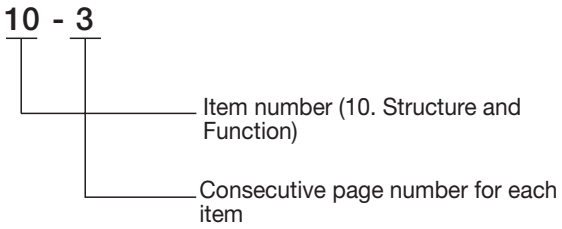

3. Additional pages: additional pages are indicated by a hyphen (–) and number after the page number. Fle as in the example.
   Example:

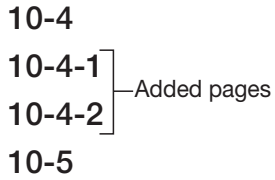

REVISED EDITION MARK

(① ② ③ ....)

When a manual is revised, an edition mark is recorded on the bottom outside corner of the pages.

REVISIONS

Revised pages are shown on the LIST OF REVISED PAGES between the title page and SAFETY page.

SYMBOLS

In order to make the shop manual greatly chelpful, important points about safety and quality are marked with the following symbols.

Symbol	Item	Remarks
	Safety	Special safety precautions are necessary when performing the work.
		Extra special safety precautions are necessary when performing the work because it is under internal pressure.
★	Caution	Special technical precautions or other precautions for preserving standards are necessary when performing the work.
kg	Weight	Weight of parts or systems. Caution necessary when selecting hoisting wire, or when working posture is important, etc.
Nm	Tightening torque	Parts that require special attention for the tightening torque during assembly.
	Coat	Parts to be coated with adhesives and lubricants etc.
	Oil, water	Places where oil, water or fuel must be added, and their quantity.
	Drain	Places where oil or water must be drained, and quantity to be drained.

https://truckmanualshub.com/

HOISTING INSTRUCTIONS

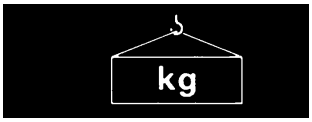

> ⚠ Heavy parts (25 kg or more) must be lifted with a hoist etc. In the **Disassembly and Assembly** section, every part weighing 25 kg or more is clearly indicated with the symbol kg

1. If a part cannot be smoothly removed from the machine by hoisting, the following checks should be made:
   - Check for removal of all bolts fastening the part to the relative parts.
   - Check for any part causing interference with the part to be removed.

2. Wire ropes

1) Use adequate ropes depending on the weight of parts to be hoisted, referring to the table below:

WIRE ROPES
(Standard «S» or «Z» twist ropes without galvanizing)

Rope diameter (mm)	Allowable load (tons)
10.0	1.0
11.2	1.4
12.5	1.6
14.0	2.2
16.0	2.8
18.0	3.6
20.0	4.4
22.4	5.6
30.0	10.0
40.0	18.0
50.0	28.0
60.0	40.0

The allowable load value is estimated to be one-sixth or one-seventh of the breaking strength of the rope used.

2) Sling wire ropes from the middle portion of the hook. Slinging near the edge of the hook may cause the rope to slip off the hook during hoisting, and a serious accident can result.

Hooks have maximum strength at the middle portion.

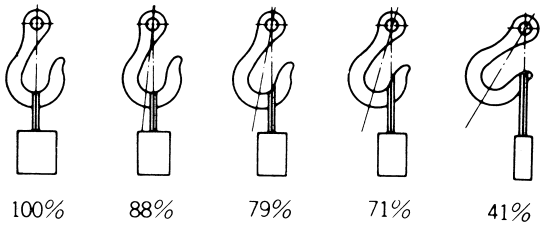

3) Do not sling a heavy load with one rope alone, but sling with two or more ropes symmetrically wound on to the load.

⚠ Slinging with one rope may cause turning of the load during hoisting, untwisting of the rope, or slipping of the rope from its original winding position on the load, which can cause dangerous accidents.

4) Do not sling a heavy load with ropes forming a wide hanging angle from the hook.
When hoisting a load with two or more ropes, the force subjected to each rope will increase with the hanging angles.
The table below shows the variation of allowable load (kg) when hoisting is made with two ropes, each of which is allowed to sling up to 1000 kg vertically, at various handing angles.
When two ropes sling a load vertically, up to 2000 kg of total weight can be suspended.
This weight becomes 1000 kg when two ropes make a 120° hanging angle.
On the other hand, two ropes are subjected to an excessive force as large as 4000 kg if they sling a 2000 kg load at a lifting angle of 150°.

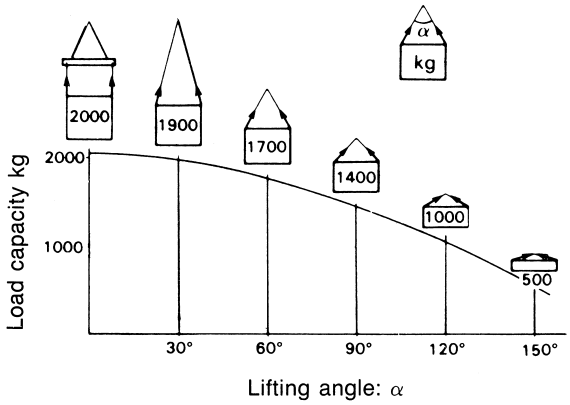

https://truckmanualshub.com/

STANDARD TIGHTENING TORQUE

The following charts give the standard tightening torques of bolts and nuts.
Exceptions are given in section of «**Disassembly and Assembly**».

1. STANDARD TIGHTENING TORQUE OF BOLTS AND NUT

Thread diameter of bolts (mm)	Pitch of bolts (mm)	Width across flat (mm)		8.8		10.9	
		S	S	kgm	Nm	kgm	Nm
6	1	10	8	0.96±0.1	9.5±1	1.3±0.15	13.5±1.5
8	1.25	13	6	2.3±0.2	23±2	3.2±0.3	32.2±3.5
10	1.5	17	8	4.6±0.5	45±4.9	6.5±0.6	63±6.5
12	1.75	19	10	7.8±0.8	77±8	11±1	108±11
14	2	22	12	12.5±1	122±13	17.5±2	172±18
16	2	24	14	19.5±2	191±21	27±3	268±29
18	2.5	27	14	27±3	262±28	37±4	366±36
20	2.5	30	17	38±4	372±40	53±6	524±57
22	2.5	32	17	52±6	511±57	73±8	719±80
24	3	36	19	66±7	644±70	92±10	905±98
27	3	41	19	96±10	945±100	135±15	1329±140
30	3.5	46	22	131±14	1287±140	184±20	1810±190
33	3.5	50	24	177±20	1740±200	250±27	2455±270
36	4	55	27	230±25	2250±250	320±35	3150±350
39	4	60	—	295±33	2900±330	410±45	4050±450

This torque table does not apply to bolts or nuts which have to fasten nylon or other parts non-ferrous metal washer.

★ **Nm (newton meter): 1 Nm = 0.102 kgm**

https://truckmanualshub.com/

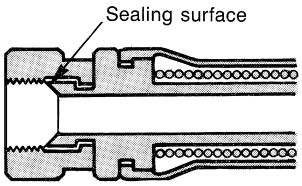

2. TIGHTENING TORQUE FOR NUTS OF FLARED

Use these torques for nut part of flared.

Thread diameter of nut part (mm)	Width across flats of nut part (mm)	TIGHTENING TORQUE	
		kgm	Nm
1/2” - 20	17	2.6±0.5	25.5±4.9
9/16” - 18	17	4±0.5	39.2±4.9
3/4” - 16	22	6.7±2	65.7±19.6
7/8” - 14	27	8±2	78.5±19.6
1.1/16 - 12	32	9.7±3	95.15±29.4
1.5/16 - 12	38	17±3	166.7±29.4
1.5/8 - 12	50	20±5	196.2±49
22	27	8±2	78.5±19.6
33	41	20±5	196.2±49

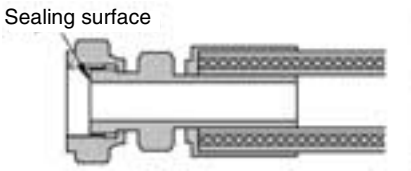

Thread diameter of nut part (mm)	Width across flats of nut part (mm)	TIGHTENING TORQUE	
		kgm	Nm
9/16” - 18	17	2.3–2.5	23–25
11/16” - 16	22	3.4–3.9	33–38
13/16” - 16	24	5.2–5.8	51–57
1” - 14	30	8.2–9.2	80–90
1.3/16 - 12	36	12.2–13.3	120–130
1.7/16 - 12	41	15.3–17.3	150–170
1.11/16 - 12	50	18.4–20.4	180–200
2” - 12	57	20.4–24.4	200–240

https://truckmanualshub.com/

COATING MATERIALS

The recommended coating materials prescribed in Komatsu Utility Shop Manuals are listed below:

Nomenclature	Code	Applications
Adhesives	Bostik 99	Used to apply rubber pads, rubber gaskets and cork plugs.
	Loctite 406	Used to apply resin, rubber, metallic and non-metallic parts when a fast, strong seal is needed.
	Loctite 222	Used for low resistance locking of screws, check nuts and adjustment nuts.
	Loctite 242	To prevent the loosening of bolts, nuts and plugs and the leakage of oil. Used for medium resistance locking of screws and nuts of every type, and for locking keys and bearings.
	Loctite 262	Used for high resistant of threaded parts that can be removed with normal tools.
	Loctite 270	Used for high resistant locking and for sealing threaded parts, bolts and stud bolts.
	Loctite 542	Used for sealing the union threads for hydraulic tubes.
	Loctite 573	Used for sealing rather exact plane surfaces when the option of possible future dismantling is required.
	Loctite 601	Used for high resistant locking of mechanical components that can be removed only after heating
	Loctite 675	Used to lock cylindrical couplings and for the permanent locking of threaded parts, and also to lock shafts to bearings, gears, pulleys, pins, bushings, etc.
Gasket sealant	Loctite 542	Used by itself to seal grease fittings, tapered screw fittings and tapered screw fittings in hydraulic circuits of less than 50 mm in diameter.
	Loctite 510	Used by itself on mounting flat surface (Clearance between surfaces within 0.2 mm)
	Loctite 518	Used by itself on mounting flat surface (Clearance between surfaces within 0.5 mm
Antifriction compound (Lubricant including Molybdenum disulfide)	Litio EP MS2 NLGI 2	Applied to bearings and taper shaft to facilitate press-fitting and to prevent sticking, burning or rusting.
Grease (Lithium grease)	Litio EP NLGI 2	Applied to bearings, sliding parts and oil seals for lubrication, rust prevention and facilitation of assembling work.
Vaseline	—	Used for protecting battery electrode terminals from corrosion

https://truckmanualshub.com/

In the wiring diagrams various colour and symbols are employed to indicate the thickness of wires.
This wire code table will help you understand WIRING DIAGRAMS.
Example: R–N 1.5 indicates a cable having a nominal number 1.5 and red coating with black stripe.

CLASSIFICATION BY THICKNESS

Nominal number	Copper wire			Cable O.D. (mm)	Current rating (A)
	Number strands	Ø of strands (mm)	Cross section (mm)		
0.5	16	0.20	0.35	1.55	3.5
1	14	0.30	0.99	2.80	11
1.5	21	0.30	1.48	3.35	14
2.5	35	0.30	2.47	3.80	20
4	56	0.30	3.95	4.60	28
6	84	0.30	5.93	5.20	37

CLASSIFICATION BY COLOUR AND CODE

	Primary	Auxiliary									
Code	A	A–B	A/B	A–G	–	A–N	A/N	A–R		A–V	A/V
Colour	Light Blue	Light Blue – White		Light Blue–Yellow		Light Blue–Black		Light Blue–Red		Light Blue–Green	
Code	B	B–G	–	B–N	B/N	B–R	B/R	–	–	–	–
Colour	White	White–Yellow		White–Black		White–Red		–		–	
Code	C	C–B	C/B	C–L	–	C–N	C/N	–	–	–	–
Colour	Orange	Orange–White		Orange–Blue		Orange–Black		–		–	
Code	G	G–N	G/N	–	G/R	–	–	–	–	–	–
Colour	Yellow	Yellow–Black		Yellow–Red		–		–		–	
Code	H	H–L	–	H–N	–	H–R	H/R	–	–	–	–
Colour	Grey	Grey–Blue		Grey–Black		Grey–Red		–		–	
Code	L	–	L/B	L–G	L/G	L–N	L/N	L–R	L/R	–	–
Colour	Blue	Blue–White		Blue–Yellow		Blue–Black		Blue–Red		–	
Code	M	M–B	M/B	M–N	–	M–V	–	–	–	–	–
Colour	Brown	Brown–White		Brown–Black		Brown–Green		–		–	
Code	N	–	–	–	–	–	–	–	–	–	–
Colour	Black	–		–		–		–		–	
Code	R	R–G	–	R–N	R/N	R–V	–	–	–	–	–
Colour	Red	Red–Yellow		Red–Black		Red–Green		–		–	
Code	S	S–G	–	S–N	S/N	–	–	–	–	–	–
Colour	Pink	Pink–Yellow		Pink–Black		–		–		–	
Code	V	V–B	V/B	V–N	V/N	–	–	–	–	–	–
Colour	Green	Green–White		Green–Black		–		–		–	
Code	Z	Z–B	–	Z–N	Z/N	–	–	–	–	–	–
Colour	Violet	Violet–White		Violet–Black		–		–		–	

COMPOSITION OF THE COLOURS

The coloration of two-colour wires is indicated by the composition of the symbol listed.
Example: G–V = Yellow-Green with longitudinal colouring
G/V = Yellow-Green with transversal colouring

https://truckmanualshub.com/

WEIGHT TABLE

⚠ This weight table is a guide for use when transporting or handling components.

Unit: kg

Machine model	SK714-5	SK815-5
Engine assembly - Muffler - Exhaust pipe	200	200
Radiator	22	22
Hydraulic oil tank (without oil)	21.5	21.5
Engine hood	14.5	14.5
Cabin (without seat)	215	215
Seat:		
• standard	10	10
• witj suspension	16	16
Engine-pump group	278–285	283–290
Piston pump:		
• standard	78	82
• High-Flow	84	88
Wheel, assy. (standard)	43	44
Control valve:		
• 3-spool (standard)	19	19
• 4-spool (High-Flow)	21.5	21.5
Work equipment (without bucket)		
• Arm	280	295
• Work equipment support	49	49
• Bucket (L=1460 mm)	159	171,5
• Tilt cylinder	17,3	16,8
• Dump cylinder	12	12

https://truckmanualshub.com/

TABLE OF OIL AND COOLANT QUANTITIES

RESERVOIR	KIND OF FLUID	AMBIENT TEMPERATURE (−30 −20 −10 0 10 20 30 40 50°C)	CAPACITY (ℓ) Specified	CAPACITY (ℓ) Refill
Engine oil pan	OIL • API CD	SAE 10W SAE 30 SAE 40 SAE 10W-30 SAE 5W-30	8	8
Hydraulic system and hydrostatic trasmissione	OIL • API CD	SAE 10W SAE 5W-30	38	27
Hydraulic circuit with biodegradable oil			38	27
Final transmission case (ea.)	OIL • API CD	SAE 10W-30	15.5	15.5
Fuel tank	DIESEL OIL	✻ ASTM D975 N.2	53	–
Engine cooling system	WATER + ANTIFREEZE		9	–
	PERMANENT COOLANT		9	–

✻ **ASTM D975 N.**

IMPORTANT:

(1) When the diesel oil sulphur content is less then 0.5%, change the engine oil according to the periodic maintenance intervals indicated in the operation and maintenance manual. In the diesel oil sulphur content exceeds 0.5% change the engine oil according to the following table:

Sulphur content	Engine oil change interval
from 0.5 to 1.0%	1/2 of regular interval
over 1.0%	1/4 of regular interval

(2) When starting the engine at temperatures below 0 °C, use engine oil SAE 10W, 20W-20 and 10W-30, even if during the day the temperature increases by 10 °C.

(3) Use engine oil with CD classification; if oil with CD classification is used, reduce the engine oil change interval by a half.

(4) Use original products, which have characteristics specifically formulated and approved for the engine, the hydraulic circuit of equipment and for reductions.

First filling quantity:

total quantity of oil, including the oil for the components and pipes.

Oil change quantity:

quantity of oil necessary to fill the system or unit during the normal inspection and maintenance operations.

ASTM: American Society of Testing and Materials

SAE: Society of Automotive Engineers

API: American Petroleum Institute

https://truckmanualshub.com/

PAGE INTENTIONALLY LEFT BLANK

https://truckmanualshub.com/

CONVERSION TABLE

METHOD OF USING THE CONVERSION TABLE

The conversion table in this section is provided to enable simple conversion of figures.
For details of the method of using the conversion table, see the example given below.

EXAMPLE

- Method of using the conversion table to convert from millimeters to inches.

1. Convert 55 mm into inches.

1 - Locate the number 50 in the vertical column at the left side, take this as Ⓐ, then drow a horizontal line from Ⓐ.

2 - Locate the number 5 in the row across the top, take this as , then draw a perpendicular line down from Ⓑ.

3 - Take the point where the two lines cross as Ⓒ. This point Ⓒ gives the value when converting from millimeters to inches. Therefore, 55 mm =2.165 in.

2. Convert 550 mm into inches

1 - The number 550 does not appear in the table, so divide by 10 (move the decimal point one place to the left) to convert it to 55 mm.

2 - Carry out the same procedure as above to convert 55 mm to 2.165 in.

3 - The original value (550 mm) was divided by 10, so multiply 2.165 in. by 10 (move the decimal point one place to the right) to return to the original value. This gives 550 mm = 21.65 in.

From millimeters to inches

Ⓑ

1 mm = 0.03937 in.

	0	1	2	3	4	5	6	7	8	9
0	0	0.039	0.079	0.118	0.157	0.197	0.236	0.276	0.315	0.354
10	0.394	0.433	0.472	0.512	0.551	0.591	0.630	0.669	0.709	0.748
20	0.787	0.827	0.866	0.906	0.945	0.984	1.024	1.063	1.102	1.142
30	1.181	1.220	1.260	1.299	1.339	1.378	1.417	1.457	1.496	1.536
40	1.575	1.614	1.654	1.693	1.732	1.772	1.811	1.850	1.890	1.929
50	1.969	2.008	2.047	2.087	2.126	Ⓒ 2.165	2.205	2.244	2.283	2.323
60	2.362	2.402	2.441	2.480	2.520	2.559	2.598	2.638	2.677	2.717
70	2.756	2.795	2.835	2.874	2.913	2.953	2.992	3.032	3.071	3.110
80	3.150	3.189	3.228	3.268	3.307	3.346	3.386	3.425	3.465	3.504
90	3.543	3.583	3.622	3.661	3.701	3.740	3.780	3.819	3.858	3.898

Ⓐ

https://truckmanualshub.com/

From mm to in.

1 mm = 0.03937 in.

	0	1	2	3	4	5	6	7	8	9
0	0	0.039	0.079	0.118	0.157	0.197	0.236	0.276	0.315	0.354
10	0.394	0.433	0.472	0.512	0.551	0.591	0.630	0.669	0.709	0.748
20	0.787	0.827	0.866	0.906	0.945	0.984	1.024	1.063	1.102	1.142
30	1.181	1.220	1.260	1.299	1.339	1.378	1.417	1.457	1.496	1.536
40	1.575	1.614	1.654	1.693	1.732	1.772	1.811	1.850	1.890	1.929
50	1.969	2.008	2.047	2.087	2.126	2.165	2.205	2.244	2.283	2.323
60	2.362	2.402	2.441	2.480	2.520	2.559	2.598	2.638	2.677	2.717
70	2.756	2.795	2.835	2.874	2.913	2.953	2.992	3.032	3.071	3.110
80	3.150	3.189	3.228	3.268	3.307	3.346	3.386	3.425	3.465	3.504
90	3.543	3.583	3.622	3.661	3.701	3.740	3.780	3.819	3.858	3.898

From kg to lb.

1 kg = 2.2046 lb.

	0	1	2	3	4	5	6	7	8	9
0	0	2.20	4.41	6.61	8.82	11.02	13.23	15.43	17.64	19.84
10	22.05	24.25	26.46	28.66	30.86	33.07	35.27	37.48	39.68	41.89
20	44.09	46.30	48.50	50.71	51.91	55.12	57.32	59.53	61.73	63.93
30	66.14	68.34	70.55	72.75	74.96	77.16	79.37	81.57	83.78	85.98
40	88.18	90.39	92.59	94.80	97.00	99.21	101.41	103.62	105.82	108.03
50	110.23	112.44	114.64	116.85	119.05	121.24	123.46	125.66	127.87	130.07
60	132.28	134.48	136.69	138.89	141.10	143.30	145.51	147.71	149.91	152.12
70	154.32	156.53	158.73	160.94	163.14	165.35	167.55	169.76	171.96	174.17
80	176.37	178.57	180.78	182.98	185.19	187.39	189.60	191.80	194.01	196.21
90	198.42	200.62	202.83	205.03	207.24	209.44	211.64	213.85	216.05	218.26

https://truckmanualshub.com/

From liter to U.S. Gall.

1 ℓ = 0.2642 U.S. Gall.

	0	1	2	3	4	5	6	7	8	9
0	0	0.264	0.528	0.793	1.057	1.321	1.585	1.849	2.113	2.378
10	2.642	2.906	3.170	3.434	3.698	3.963	4.227	4.491	4.755	5.019
20	5.283	5.548	5.812	6.076	6.340	6.604	6.869	7.133	7.397	7.661
30	7.925	8.189	8.454	8.718	8.982	9.246	9.510	9.774	10.039	10.303
40	10.567	10.831	11.095	11.359	11.624	11.888	12.152	12.416	12.680	12.944
50	13.209	13.473	13.737	14.001	14.265	14.529	14.795	15.058	15.322	15.586
60	15.850	16.115	16.379	16.643	16.907	17.171	17.435	17.700	17.964	18.228
70	18.492	18.756	19.020	19.285	19.549	19.813	20.077	20.341	20.605	20.870
80	21.134	21.398	21.662	21.926	22.190	22.455	22.719	22.983	23.247	23.511
90	23.775	24.040	24.304	24.568	24.832	25.096	25.361	25.625	25.889	26.153

From liter to U.K. Gall.

1 ℓ = 0.21997 U.K. Gall.

	0	1	2	3	4	5	6	7	8	9
0	0	0.220	0.440	0.660	0.880	1.100	1.320	1.540	1.760	1.980
10	2.200	2.420	2.640	2.860	3.080	3.300	3.520	3.740	3.950	4.179
20	4.399	4.619	4.839	5.059	5.279	5.499	5.719	5.939	6.159	6.379
30	6.599	6.819	7.039	7.259	7.479	7.969	7.919	8.139	8.359	8.579
40	8.799	9.019	9.239	9.459	9.679	9.899	10.119	10.339	10.559	10.778
50	10.998	11.281	11.438	11.658	11.878	12.098	12.318	12.528	12.758	12.978
60	13.198	13.418	13.638	13.858	14.078	14.298	14.518	14.738	14.958	15.178
70	15.398	15.618	15.838	16.058	16.278	16.498	16.718	16.938	17.158	17.378
80	17.598	17.818	18.037	12.257	18.477	18.697	18.917	19.137	19.357	19.577
90	19.797	20.017	20.237	20.457	20.677	20.897	21.117	21.337	21.557	21.777

https://truckmanualshub.com/

From Nm to lb.ft.

1 Nm = 0.737 lb.ft.

	0	1	2	3	4	5	6	7	8	9
0	0	0.737	1.474	2.211	2.948	3.685	4.422	5.159	5.896	6.633
10	7.370	8.107	8.844	9.581	10.318	11.055	11.792	12.529	13.266	14.003
20	14.740	15.477	16.214	16.951	17.688	18.425	19.162	19.899	20.636	21.373
30	22.110	22.847	23.584	24.321	25.058	25.795	26.532	27.269	28.006	28.743
40	29.480	30.217	30.954	31.691	32.428	33.165	33.902	34.639	35.376	36.113
50	36.850	37.587	38.324	39.061	39.798	40.535	41.272	42.009	42.746	43.483
60	44.220	44.957	45.694	46.431	47.168	47.905	48.642	49.379	50.116	50.853
70	51.590	52.327	53.064	53.801	54.538	55.275	56.012	56.749	57.486	58.223
80	58.960	59.697	60.434	61.171	61.908	82.645	63.382	64.119	64.856	65.593
90	66.330	67.067	67.804	68.541	69.278	70.015	70.752	71.489	72.226	72.963
100	73.700	74.437	75.174	75.911	76.648	77.385	78.122	78.859	79.596	80.333
110	81.070	81.807	82.544	83.281	84.018	84.755	85.492	86.229	86.966	87.703
120	88.440	89.177	89.914	90.651	91.388	92.125	92.862	93.599	94.336	95.073
130	95.810	96.547	97.284	98.021	98.758	99.495	100.232	100.969	101.706	102.443
140	103.180	103.917	104.654	105.391	106.128	106.865	107.602	108.339	109.076	109.813
150	110.550	111.287	112.024	112.761	113.498	114.235	114.972	115.709	116.446	117.183
160	117.920	118.657	119.394	120.131	120.868	121.605	122.342	123.079	123.816	124.553
170	125.290	126.027	126.764	127.501	128.238	128.975	129.712	130.449	131.186	131.923
180	132.660	133.397	134.134	134.871	135.608	136.345	137.082	137.819	138.556	139.293
190	140.030	140.767	141.504	142.241	142.978	143.715	144.452	145.189	145.926	146.663

https://truckmanualshub.com/

From Nm to kgm

1 Nm = 0.102 kgm

	0	1	2	3	4	5	6	7	8	9
0	0	0.102	0.204	0.306	0.408	0.510	0.612	0.714	0.816	0.918
10	1.020	1.222	1.224	1.326	1.428	1.530	1.632	1.734	1.836	1.938
20	2.040	2.142	2.244	2.346	2.448	2.550	2.652	2.754	2.856	2.958
30	3.060	3.162	3.264	3.366	3.468	3.570	3.672	3.774	3.876	3.978
40	4.080	4.182	4.284	4.386	4.488	4.590	4.692	4.794	4.896	4.998
50	5.100	5.202	5.304	5.406	5.508	5.610	5.712	5.814	5.916	6.018
60	6.120	6.222	6.324	6.426	6.528	6.630	6.732	6.834	6.936	7.038
70	7.140	7.242	7.344	7.446	7.548	7.650	7.752	7.854	7.956	8.058
80	8.160	8.262	8.364	8.466	8.568	8.670	8.772	8.874	8.976	9.078
90	9.180	9.282	9.384	9.486	9.588	9.690	9.792	9.894	9.996	10.098
100	10.200	10.302	10.404	10.506	10.608	10.710	10.812	10.914	11.016	11.118
110	11.220	11.322	11.424	11.526	11.628	11.730	11.832	11.934	12.036	12.138
120	12.240	12.342	12.444	12.546	12.648	12.750	12.852	12.954	13.056	13.158
130	13.260	13.362	13.464	13.566	13.668	13.770	13.872	13.974	14.076	14.178
140	14.280	14.382	14.484	14.586	14.688	14.790	14.892	14.994	15.096	15.198
150	15.300	15.402	15.504	15.606	15.708	15.810	15.912	16.014	16.116	16.218
160	16.320	16.422	16.524	16.626	16.728	16.830	16.932	17.034	17.136	17.238
170	17.340	17.442	17.544	17.646	17.748	17.850	17.952	18.054	18.156	18.258
180	18.360	18.462	18.564	18.666	18.768	18.870	18.972	19.074	19.176	19.278
190	19.380	19.482	19.584	19.686	19.788	19.890	19.992	20.094	20.196	20.298

https://truckmanualshub.com/

From kgm to lb.ft.

1 kgm = 7.233 lb.ft.

	0	1	2	3	4	5	6	7	8	9
0	0	7.2	14.5	21.7	28.9	36.2	43.4	50.6	57.9	65.1
10	72.3	79.6	86.8	94.0	101.3	108.5	115.7	123.0	130.2	137.4
20	144.7	151.9	159.1	166.4	173.6	180.8	188.1	195.3	202.5	209.8
30	217.0	224.2	231.5	238.7	245.9	253.2	260.4	267.6	274.9	282.1
40	289.3	296.6	303.8	311.0	318.3	325.5	332.7	340.0	347.2	354.4
50	361.7	368.9	376.1	383.4	390.6	397.8	405.1	412.3	419.5	426.8
60	434.0	441.2	448.5	455.7	462.9	470.2	477.4	484.6	491.8	499.1
70	506.3	513.5	520.8	528.0	535.2	542.5	549.7	556.9	564.2	571.4
80	578.6	585.9	593.1	600.3	607.6	614.8	622.0	629.3	636.5	643.7
90	651.0	658.2	665.4	672.2	679.9	687.1	694.4	701.6	708.8	716.1
100	723.3	730.5	737.8	745.0	752.2	759.5	766.7	773.9	781.2	788.4
110	795.6	802.9	810.1	817.3	824.6	831.8	839.0	846.3	853.5	860.7
120	868.0	875.2	882.4	889.7	896.9	904.1	911.4	918.6	925.8	933.1
130	940.3	947.5	954.8	962.0	969.2	876.5	983.7	990.9	998.2	1005.4
140	1012.6	1019.9	1027.1	1034.3	1041.5	1048.8	1056.0	1063.2	1070.5	1077.7
150	1084.9	1092.2	1099.4	1106.6	1113.9	1121.1	1128.3	1135.6	1142.8	1150.0
160	1157.3	1164.5	1171.7	1179.0	1186.2	1193.4	1200.7	1207.9	1215.1	1222.4
170	1129.6	1236.8	1244.1	1251.3	1258.5	1265.8	1273.0	1280.1	1287.5	1294.7
180	1301.9	1309.2	1316.4	1323.6	1330.9	1338.1	1345.3	1352.6	1359.8	1367.0
190	1374.3	1381.5	1388.7	1396.0	1403.2	1410.4	1417.7	1424.9	1432.1	1439.4

https://truckmanualshub.com/

From bar to psi (lb/in^2)

1 bar = 14.503 psi

	0	1	2	3	4	5	6	7	8	9
0	0	14.5	29.0	43.5	58.0	72.5	87.0	101.5	116.0	130.5
10	145.0	159.5	174.0	188.5	203.0	217.5	232.0	246.5	261.0	275.6
20	290.0	304.6	319.1	333.6	348.1	362.6	377.1	391.6	406.1	420.6
30	435.1	449.6	464.1	478.6	493.1	507.6	522.1	536.6	551.1	565.6
40	580.1	594.6	609.1	623.6	638.1	652.6	667.1	681.6	696.1	710.6
50	725.1	739.6	754.1	768.6	783.2	797.7	812.2	826.7	841.2	855.7
60	870.2	884.7	899.2	913.7	928.2	942.7	957.2	971.7	986.2	1000.7
70	1015.2	1029.7	1044.2	1058.7	1073.2	1087.7	1102.2	1116.7	1131.2	1145.7
80	1160.2	1174.7	1189.2	1203.7	1218.2	1232.7	1247.2	1261.8	1276.3	1290.8
90	1305.3	1319.8	1334.3	1348.8	1363.3	1377.8	1392.3	1406.8	1421.3	1435.8
100	1450.3	1464.8	1479.3	1493.8	1508.3	1522.8	1537.3	1551.8	1566.3	1580.8
110	1595.3	1609.8	1624.3	1638.8	1653.3	1667.8	1682.3	1696.8	1711.3	1725.8
120	1740.4	1754.9	1769.4	1783.9	1798.4	1812.9	1827.4	1841.9	1856.4	1870.8
130	1885.4	1899.9	1914.4	1928.9	1943.4	1957.9	1972.4	1986.9	2001.4	2015.9
140	2030.4	2044.9	2059.4	2073.9	2088.4	2102.9	1217.4	2131.9	2146.4	2160.9
150	2175.4	2189.9	2204.4	2218.9	2233.5	2248.0	2262.5	2277.0	2291.5	2306.0
160	2320.5	2335.0	2349.5	2364.0	2378.5	2393.0	2407.5	2422.0	2436.5	2451.0
170	2465.5	2480.0	2494.5	2509.0	2523.5	2538.0	2552.5	2567.0	2581.5	2596.0
180	2610.5	2625.0	2639.5	2654.0	2668.5	2683.0	2697.7	2712.1	2726.6	2641.1
190	2755.6	2770.0	2784.6	2799.1	2813.6	2828.1	2842.6	2857.1	2871.6	2886.1
200	2900.6	2915.1	2929.6	2944.1	2958.6	2973.1	2987.6	3002.1	3016.6	3031.1
210	3045.6	3060.1	3074.6	3089.1	3103.6	3118.1	3132.6	3147.1	3161.6	3176.1
220	3190.7	3205.2	3219.7	3234.2	3248.7	3263.2	3277.7	3192.2	3306.7	3321.2
230	3335.7	3350.2	3364.7	3379.2	3393.7	3408.2	3422.7	3437.2	3451.7	3466.2
240	3480.7	3495.2	3509.7	3524.2	3538.7	3553.2	3567.7	3582.2	3596.7	3611.2

https://truckmanualshub.com/

TEMPERATURE

Fahrenheit-Centigrade conversion; a simple way to convert a Fahrenheit temperature reading into a Centigrade temperature reading or vice versa is to enter the accompanying table in the center or boldface column of figures.
These figures refer to the temperature in either Fahrenheit or Centigrade degrees.
If it is desired to convert from Fahrenheit to Centigrade degrees, consider the center column as a table of Fahrenheit temperatures and read the corresponding Centigrade temperature in the column at the left.
If it is desired to convert from Centigrade to Fahrenheit degrees, consider the center column as a table of Centigrade values and read the corresponding Fahrenheit temperature on the right.

1 °C = 33.8°F

°C		°F	°C		°F	°C		°F	°C		°F
–40.4	**–40**	–40.0	–11.7	**11**	51.8	7.8	**46**	144.8	27.2	**81**	117.8
–37.2	**–35**	–31.0	–11.1	**12**	53.6	8.3	**47**	116.6	27.8	**82**	179.6
–34.4	**–30**	–22.0	–10.6	**13**	55.4	8.9	**48**	118.4	28.3	**83**	181.4
–31.7	**–25**	–13.0	–10.0	**14**	57.2	9.4	**49**	120.2	28.9	**84**	183.2
–28.9	**–20**	–4.0	–9.4	**15**	59.0	10.0	**50**	122.0	29.4	**85**	185.0
–28.3	**–19**	–2.2	–8.9	**16**	60.8	10.6	**51**	123.8	30.0	**86**	186.8
–27.8	**–18**	–0.4	–8.3	**17**	62.6	11.1	**52**	125.6	30.6	**87**	188.6
–27.2	**–17**	1.4	–7.8	**18**	64.4	11.7	**53**	127.4	31.1	**88**	190.4
–26.7	**–16**	3.2	–7.2	**19**	66.2	12.2	**54**	129.2	31.7	**89**	192.2
–26.1	**–15**	5.0	–6.7	**20**	68.0	12.8	**55**	131.0	32.2	**90**	194.0
–25.6	**–14**	6.8	–6.1	**21**	69.8	13.3	**56**	132.8	32.8	**91**	195.8
–25.0	**–13**	8.6	–5.6	**22**	71.6	13.9	**57**	134.6	33.3	**92**	197.6
–24.4	**–12**	10.4	–5.0	**23**	73.4	14.4	**58**	136.4	33.9	**93**	199.4
–23.9	**–11**	12.2	–4.4	**24**	75.2	15.0	**59**	138.2	34.4	**94**	201.2
–23.3	**–10**	14.0	–3.9	**25**	77.0	15.6	**60**	140.0	35.0	**95**	203.0
–22.8	**–9**	15.8	–3.3	**26**	78.8	16.1	**61**	141.8	35.6	**96**	204.8
–22.2	**–8**	17.6	–2.8	**27**	80.6	16.7	**62**	143.6	36.1	**97**	206.6
–21.7	**–7**	19.4	–2.2	**28**	72.4	17.2	**63**	145.4	36.7	**98**	208.4
–21.1	**–6**	21.2	–1.7	**29**	84.2	17.8	**64**	147.2	37.2	**99**	210.2
–20.6	**–5**	23.0	–1.1	**30**	86.0	18.3	**65**	149.0	37.8	**100**	212.0
–20.0	**–4**	24.8	–0.6	**31**	87.8	18.9	**66**	150.8	40.6	**105**	221.0
–19.4	**–3**	26.6	0.0	**32**	89.6	19.4	**67**	152.6	43.3	**110**	230.0
–18.9	**–2**	28.4	0.6	**33**	91.4	20.0	**68**	154.4	46.1	**115**	239.0
–18.3	**–1**	30.2	1.1	**34**	93.2	20.6	**69**	156.2	48.9	**120**	248.0
–17.8	**0**	32.0	1.7	**35**	95.0	21.1	**70**	158.0	51.7	**125**	257.0
–17.2	**1**	33.8	2.2	**36**	96.8	21.7	**71**	159.8	54.4	**130**	266.0
–16.7	**2**	35.6	2.8	**37**	98.6	22.2	**72**	161.6	57.2	**135**	275.0
–16.1	**3**	37.4	3.3	**38**	100.4	22.8	**73**	163.4	60.0	**140**	284.0
–15.6	**4**	39.2	3.9	**39**	102.2	23.3	**74**	165.2	62.7	**145**	2930
–15.0	**5**	41.0	4.4	**40**	104.0	23.9	**75**	167.0	65.6	**150**	302.0
–14.4	**6**	42.8	5.0	**41**	105.8	24.4	**76**	168.8	68.3	**155**	311.0
–13.9	**7**	44.6	5.6	**42**	107.6	25.0	**77**	170.6	71.1	**160**	320.0
–13.3	**8**	46.4	6.1	**43**	109.4	25.6	**78**	172.4	73.9	**165**	329.0
–12.8	**9**	48.2	6.7	**44**	111.2	26.1	**79**	174.2	76.7	**170**	338.0
–12.2	**10**	50.0	7.2	**45**	113.0	26.7	**80**	176.0	79.4	**175**	347.0

https://truckmanualshub.com/

GROUP 10

https://truckmanualshub.com/

https://truckmanualshub.com/

10 STRUCTURE AND FUNCTION

P.T.O. 2
Power train 3
Transmission 4
Final drive 6
Hydraulic circuit SK714-5 (Standard) 13
Hydraulic circuit SK714-5 (Road homologation)..... 14
Hydraulic circuit SK815-5 (Standard) 15
Hydraulic circuit SK815-5 (Road homologation)..... 16
Hydraulic pump..... 17
Control valve (3-Spool)..... 36
Control valve (4-Spool)..... 39
CLSS 43
Solenoid valve 51
Accumulator..... 53
Pattern change valve (Optional).....54
R.H. PPC Valve (Standard).....58
R.H. PPC Valve (Pattern Change) (Optional) 62
L.H. PPC Valve (Standard) 66
L.H. PPC VALVE (Pattern Change) (Optional) 70
Cylinders 74
Electrical diagram (Engine line).....75
Electrical diagram (Frame line standard) 79
Electrical diagram (Frame line optional) 83
Electrical diagram (Cabin line standard) 87
Electrical diagram (Cabin line optional).....93
Electrical diagram (Top-cabin light line standard) ..101
Electrical diagram (Top-cabin light line omologation) . 103
Electrical diagram (Top-cabin light line optional)....105

https://truckmanualshub.com/

P.T.O.

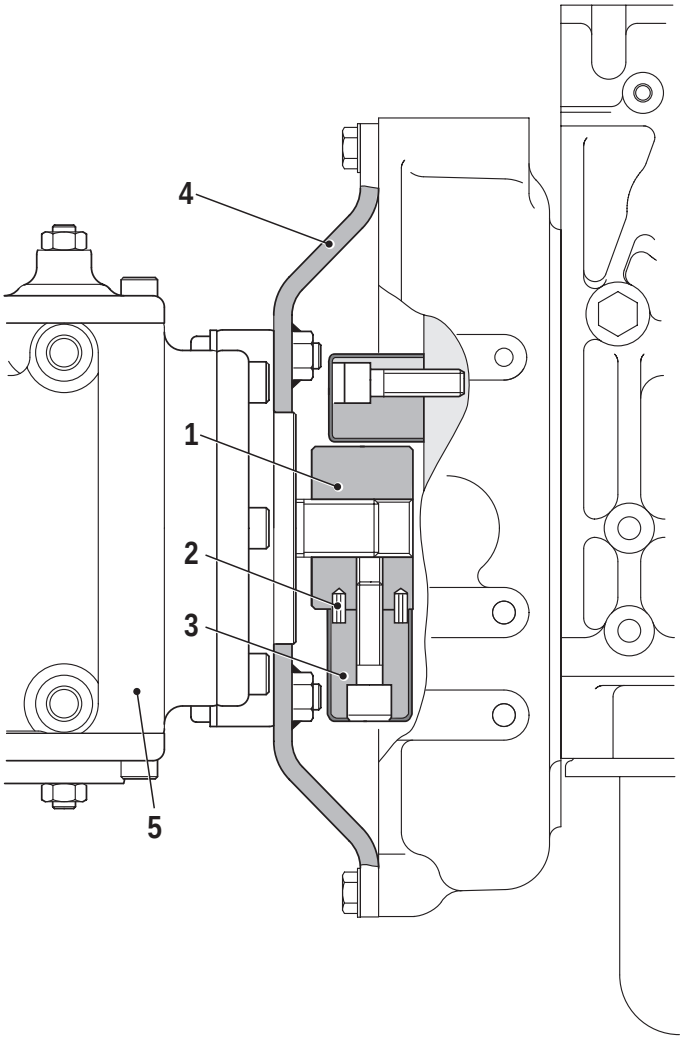

RKS01090

1. Joint
2. Spring pin
3. Dumper
4. Flywheel cover
5. Hydraulic pump

https://truckmanualshub.com/

POWER TRAIN

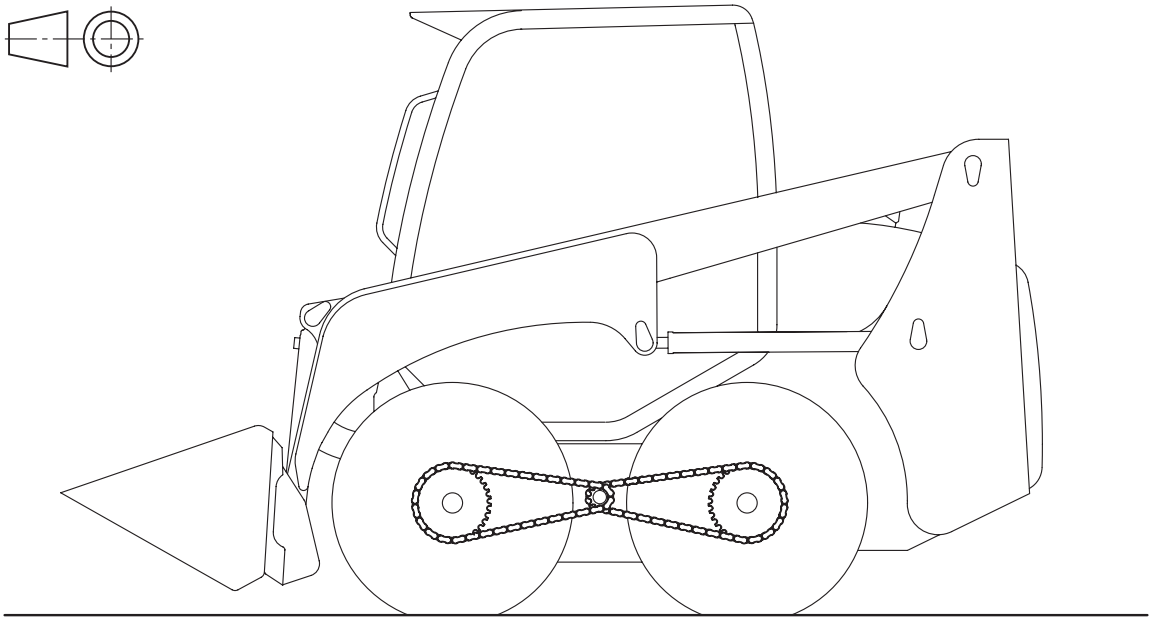

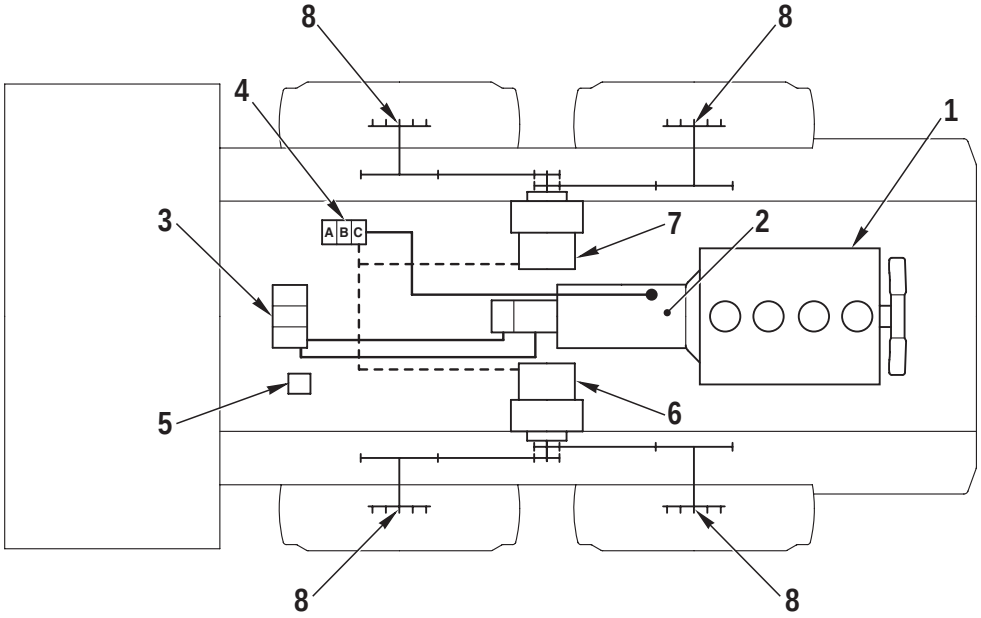

1. Engine
2. Hydraulic pump
3. Control valve
4. Solenoid valve
   4a. Servocontrol
   4b. Speed increment
   4c. Parking brake
5. High-flow solenoid valve
6. L.H. final drive
7. R.H. final drive
8. Axle

https://truckmanualshub.com/

TRANSMISSION

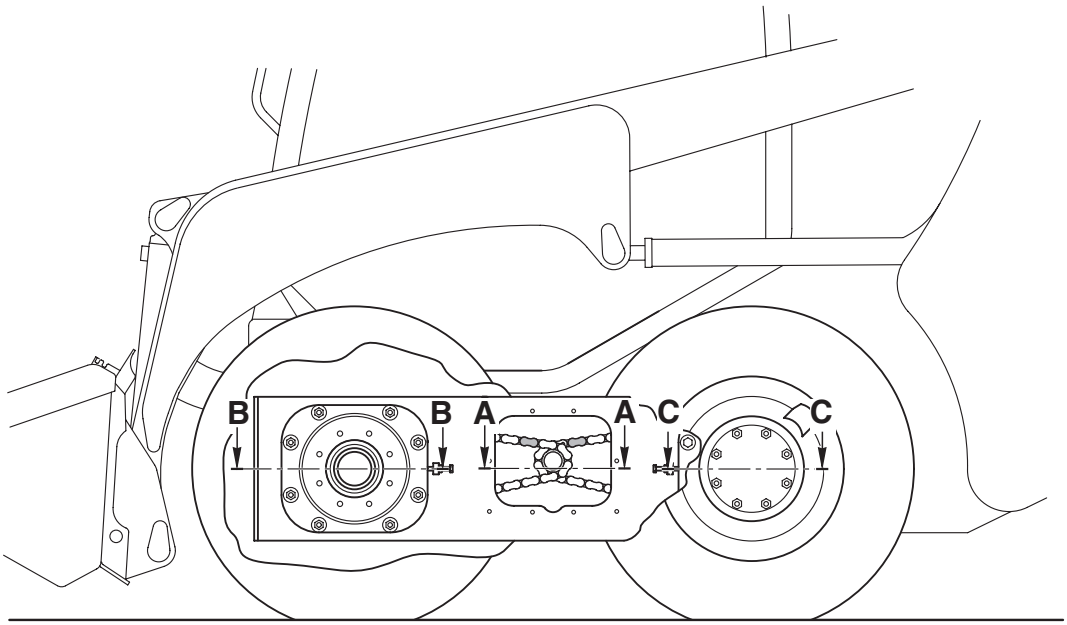

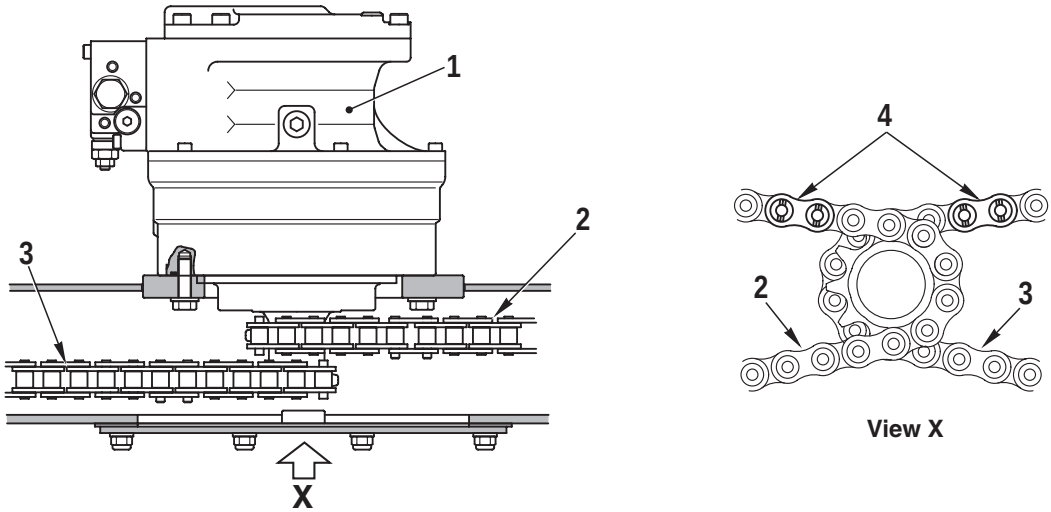

1. L.H. final drive
2. Front trasmission chain
3. Rear trasmission chain
4. Master link

https://truckmanualshub.com/

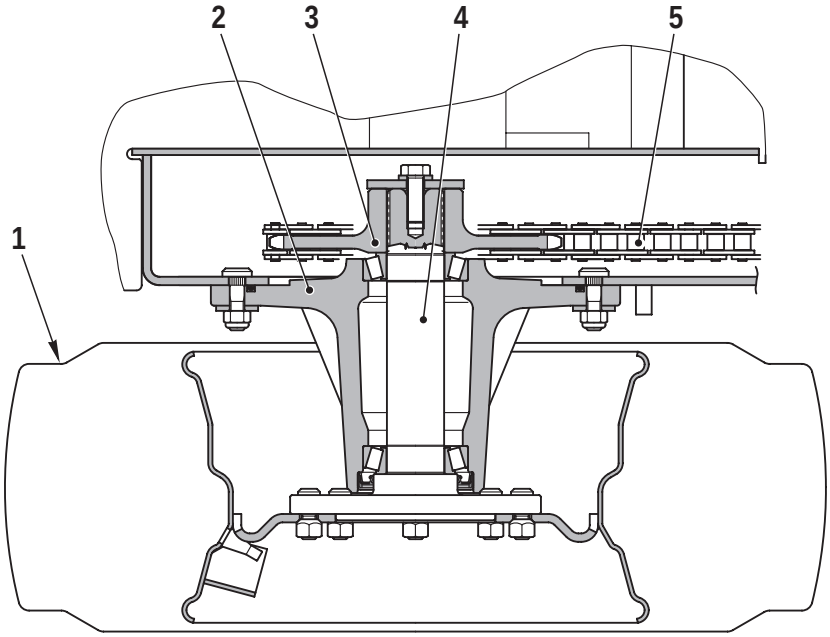

Section B - B

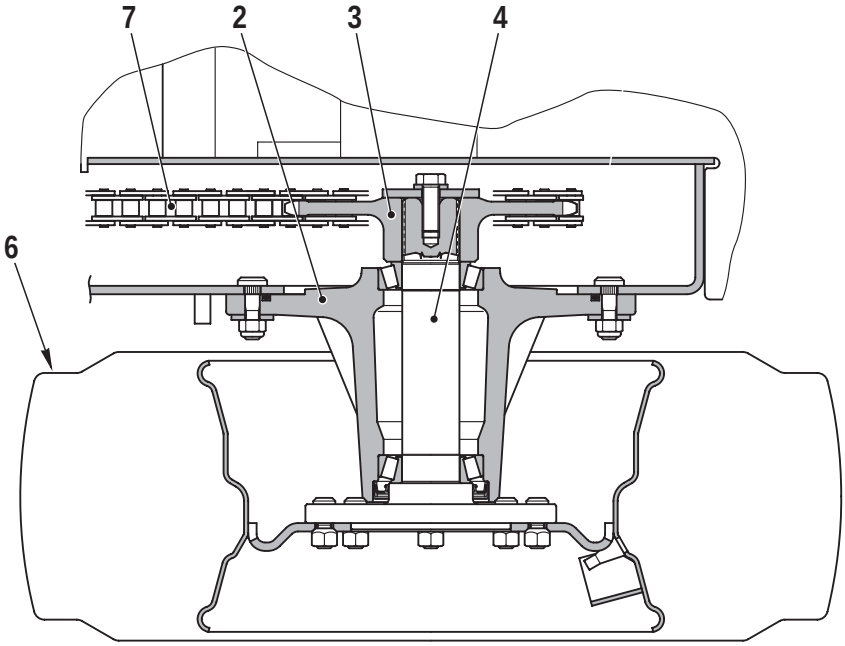

Section C -C

RKS01010

1. Front wheel
2. Axle housing
3. Sprocket
4. Shaft
5. Front trasmission chain
6. Rear wheel
7. Rear trasmission chain

https://truckmanualshub.com/

FINAL DRIVE

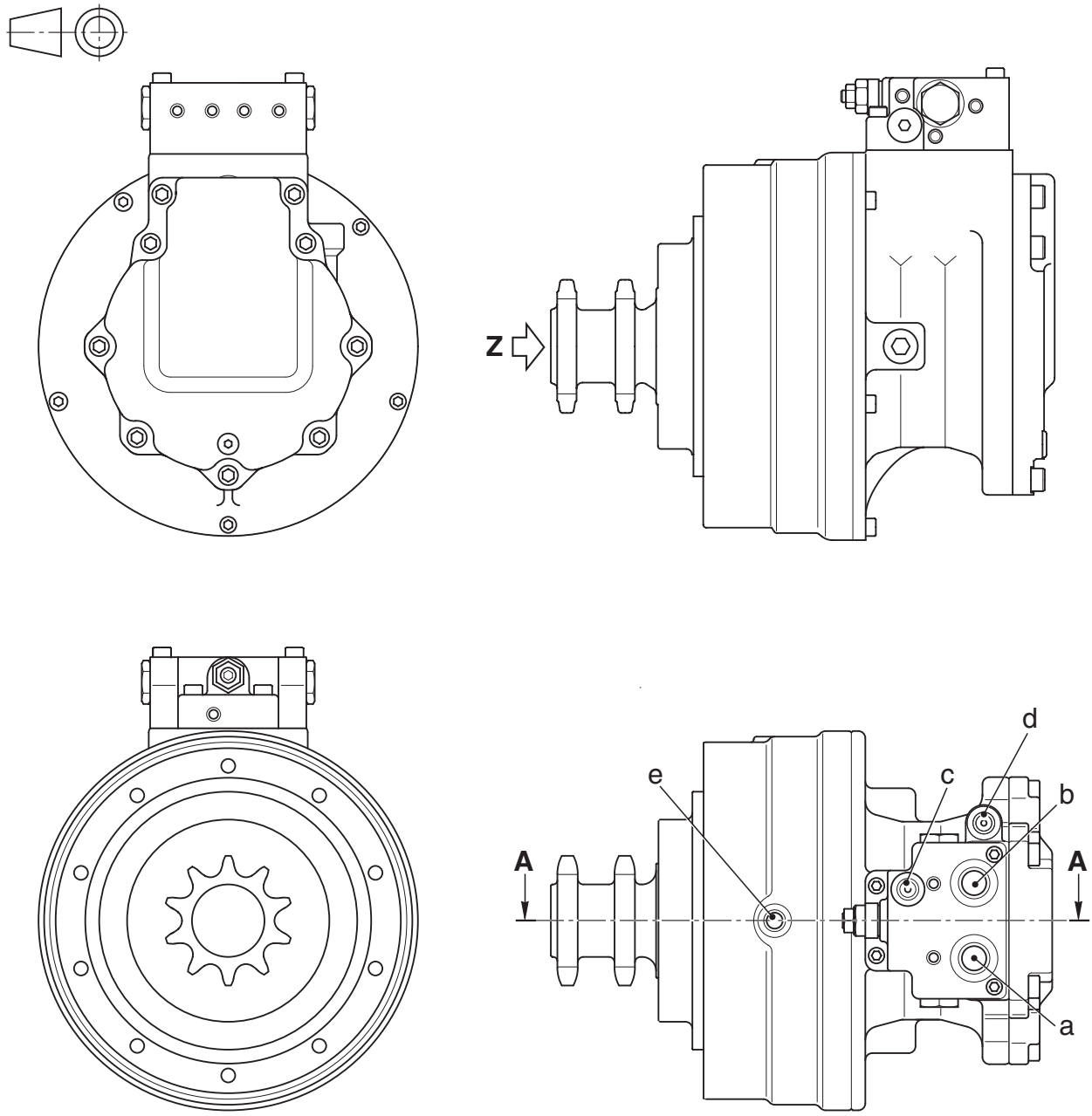

L.H. FINAL DRIVE

a. A Port – To hydraulic pump (PA2 port)
b. B Port – To hydraulic pump (PB2 port)
c. PP1 Port – From solenoid valve group ST1(A Port) (2nd speed)
d. PP2 Port – From solenoid valve group ST1 (C Port) (parking brake)
e. DR Port – To hydraulic tank

R.H. FINAL DRIVE

a. A Port – To hydraulic pump (PB1 port)
b. B Port – To hydraulic pump (PA1 port)
c. PP1 Port – From solenoid valve group ST1(A Port) (2nd speed)
d. PP2 Port – From solenoid valve group ST1 (C Port) (parking brake)
e. DR Port – To hydraulic tank

https://truckmanualshub.com/

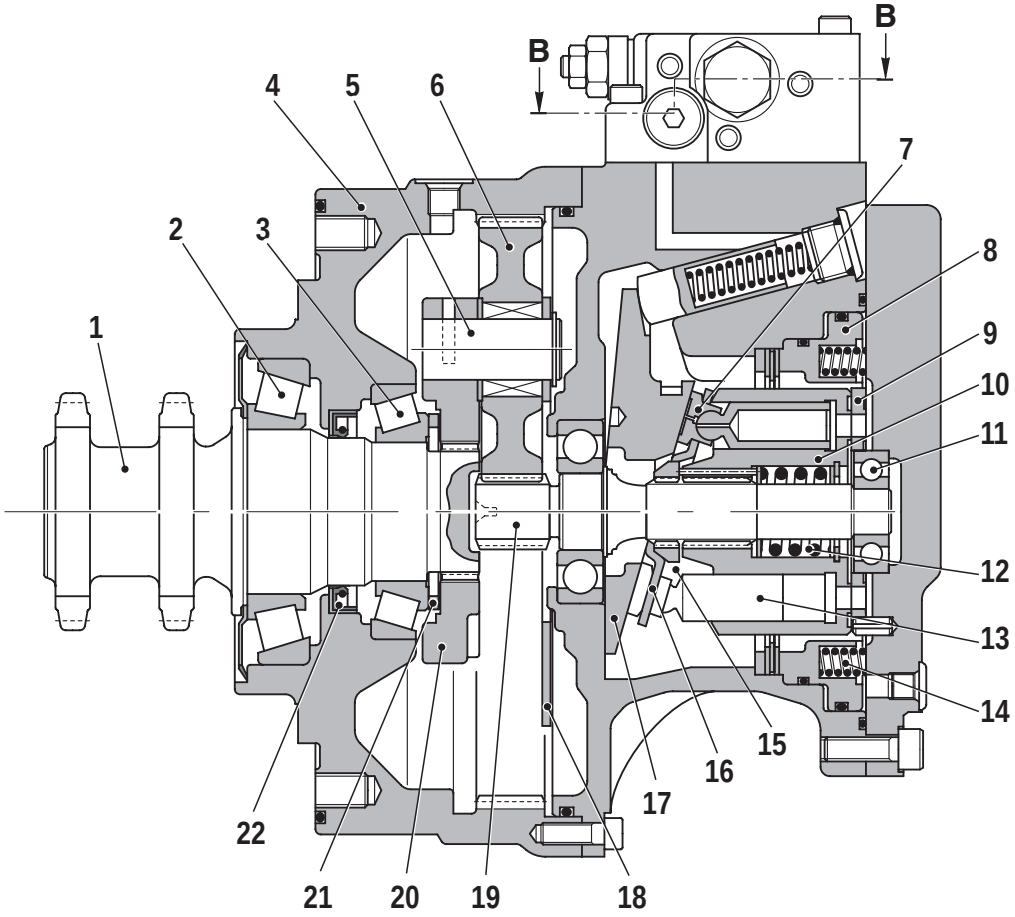

Section A - A

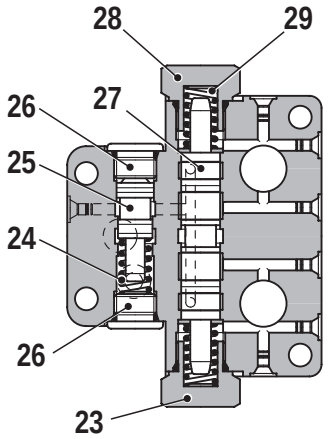

Section B - B

RKS01031

1. Shaft
2. Bearing
3. Bearing
4. Body
5. Pin
6. Gear
7. Shoe
8. Brake piston
9. Plate
10. Cylinder block
11. Bearing
12. Spring
13. Piston
14. Brake spring
15. Bushing
16. Retainer plate
17. Swash plate
18. Plate
19. Shaft
20. Flange
21. Collar
22. Gasket
23. Plug
24. Spring
25. Spool
26. Plug
27. Spool
28. Plug
29. Spring

https://truckmanualshub.com/

DESCRIPTION

The final drive motor consists of:

1. 2-speed hydraulic motor
2. Selector valve
3. Reduction gearing

1. HYDRAULIC MOTOR

Function

The hydraulic motor is of the axial piston type, and converts hydraulic energy supplied by the pump into rotary motion.

Operation

The hydraulic oil arriving from the selector valve is sent on to the valve plate (1). When the oil is sent to port **"A"** of the valve, it flows into the corresponding port on the cylinder block (2) and presses against the pistons (3).
This pressure is converted into rotary motion by a swash plate (4) and hence transmitted to the shaft (5). The shaft and the cylinder block have been integrated into one piece by means of splined toothing.
The return oil is sent to the pump through port **"B"**.
Rotation in the opposite direction is achieved by sending the oil to port **"B"** instead of to port **"A"**..

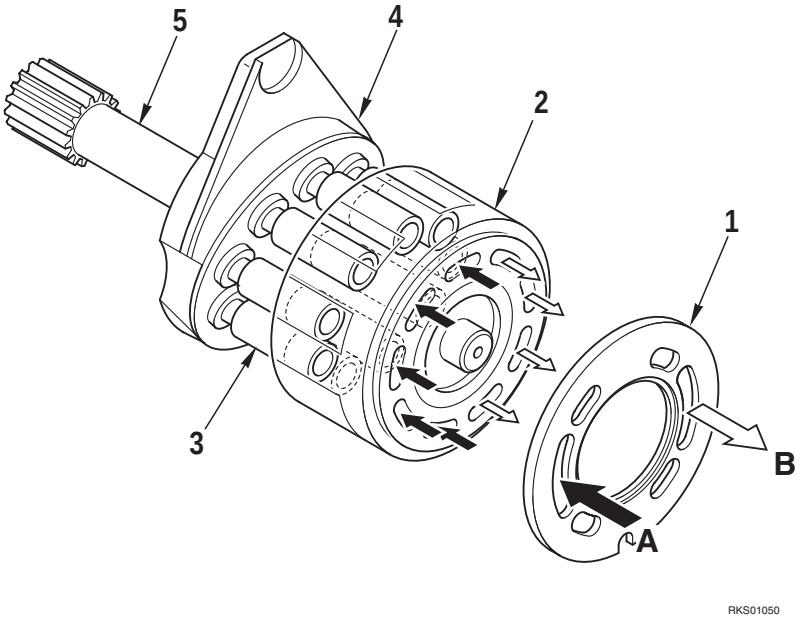

Varying the displacement

The swash plate (4), which has two surfaces **"A"** and **"B"** on the side opposite the sliding side for the shoes (6), is supported by two bearings (7) attached to the body of the motor (8).
The position of the bearings is eccentric with respect to the axis of the shaft and when running at low speed the surface **"A"** remains in contact with the body of the motor through the pressure exerted by the pistons (3) and by the force of a spring (9) mounted in the cylinder block (2).
The angle of the swash plate is α.
When an increase in speed is demanded, the oil is sent under pressure to the command piston (10). The command piston (10) moves to the left (←) until the surface **"B"** makes contact with the housing and the angle of the swash plate becomes β (the displacement of the motor is reduced).

https://truckmanualshub.com/

.

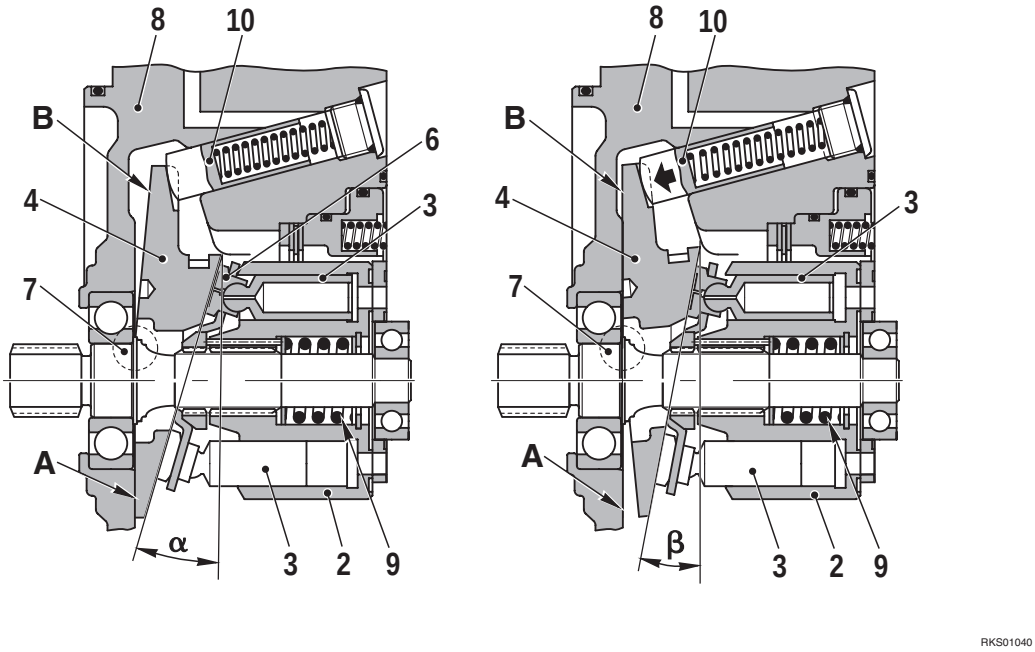

Brake

The hydraulic motor is equipped with a negative brake.

- When the motor is at a standstill, or when the operator applies the brake, the braking piston (1) is pushed to the left (←) by the force of the springs (2).
  The friction disk (3), which has been integrated with the cylinder block by means of semicircular grooves, is compressed between steel disks (4) and (5), which are integrated with the housing, and is thus blocked. The drive shaft (6) can therefore no longer turn.
- When the motor is running and the operator disengages the brake, oil is sent under pressure to the chamber **"A"**. The force exerted by the oil is greater than the force of the springs (2) and the piston (1) is therefore pushed to the right (→) thus releasing the friction disk (3) and permitting rotation of the cylinder block (7) (and also of the drive shaft).

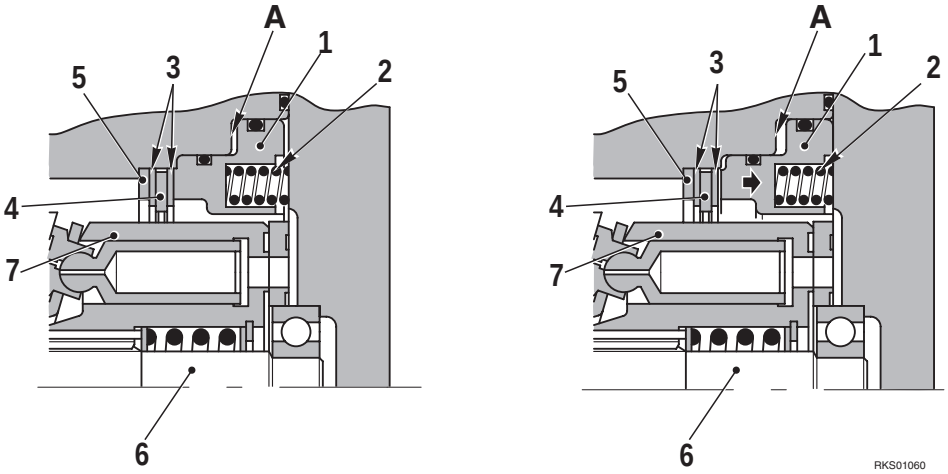

https://truckmanualshub.com/

2. FLUSHING RELIEF VALVE

When the oil is sent under pressure to the **"A"** port, the oil that activated the motor returns to the pump through the **"B"** port.

The pressurised oil sent to the **"A"** port is also introduced into the chamber **"C"**. It now pushes the selector valve (1) to the right (→). This opens communication between the **"B"** port and the oil gallery **"D",** which is connected to the over-pressure limitation valve (2).

If the pressure present at port **"B"** exceeds the calibration value of the overpressure limitation valve (2), this valve will open and discharge the excess oil into the reduction gears.

The valve also functions in the same way when the pressurised oil is sent to the **"B"** port. The only difference is that the selector valve moves to the left (←), and the oil gallery **"D"** communicates with the **"A"** port.

.

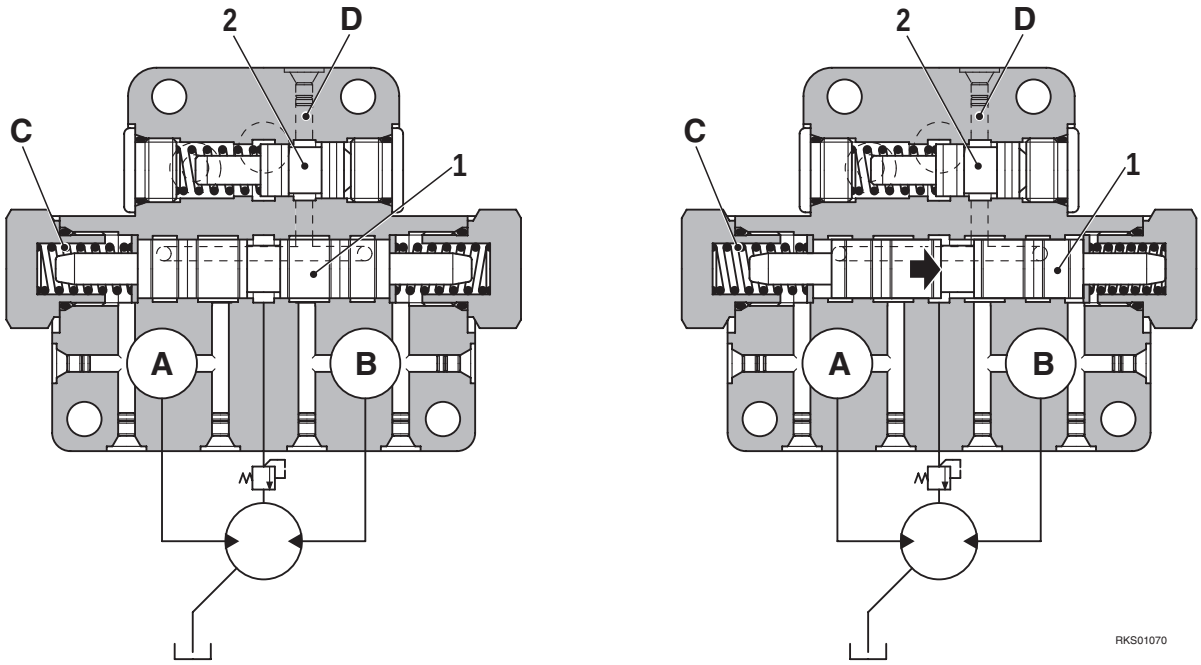

https://truckmanualshub.com/

3. REDUCTION GEARING

Function

This final drive motor is equipped with a one-stage epicycloidal reduction gear that converts the high rotation speed and low torque of the hydraulic motor into low speed and high torque at the swing pinion.

Operating principle

The rotary movement of the output shaft of the motor is transmitted to the gear (s1) and hence to the bevel gears (b1) which are integrated with the planetary gear (1).
Since the gear (a1) is fixed with respect to the output shaft of the hydraulic motor, the planetary gear is obliged to turn, moving with it the output shaft (2) of the reduction gearing (connected to the planetary gear by means of grooved toothing).
The reduction ratio of the rotation speed is described by the formula:

R= Zs1/(Zs1+Za1)

Zs1= number of sun gear teeth

Za1= number of ring gear teeth

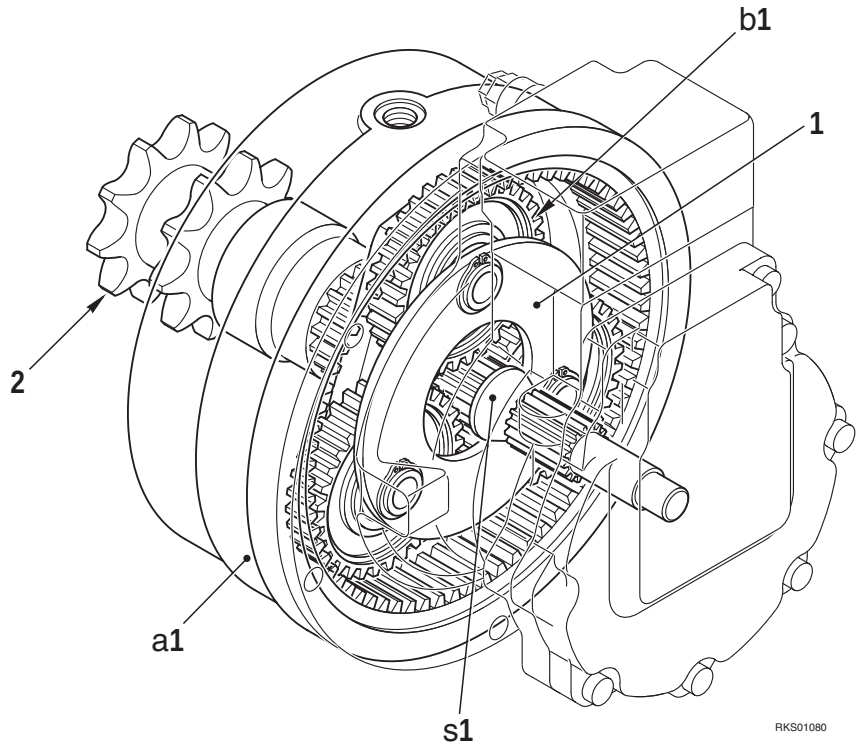

https://truckmanualshub.com/

PAGE INTENTIONALLY LEFT BLANK

https://truckmanualshub.com/

HYDRAULIC CIRCUIT SK714-5 (STANDARD)

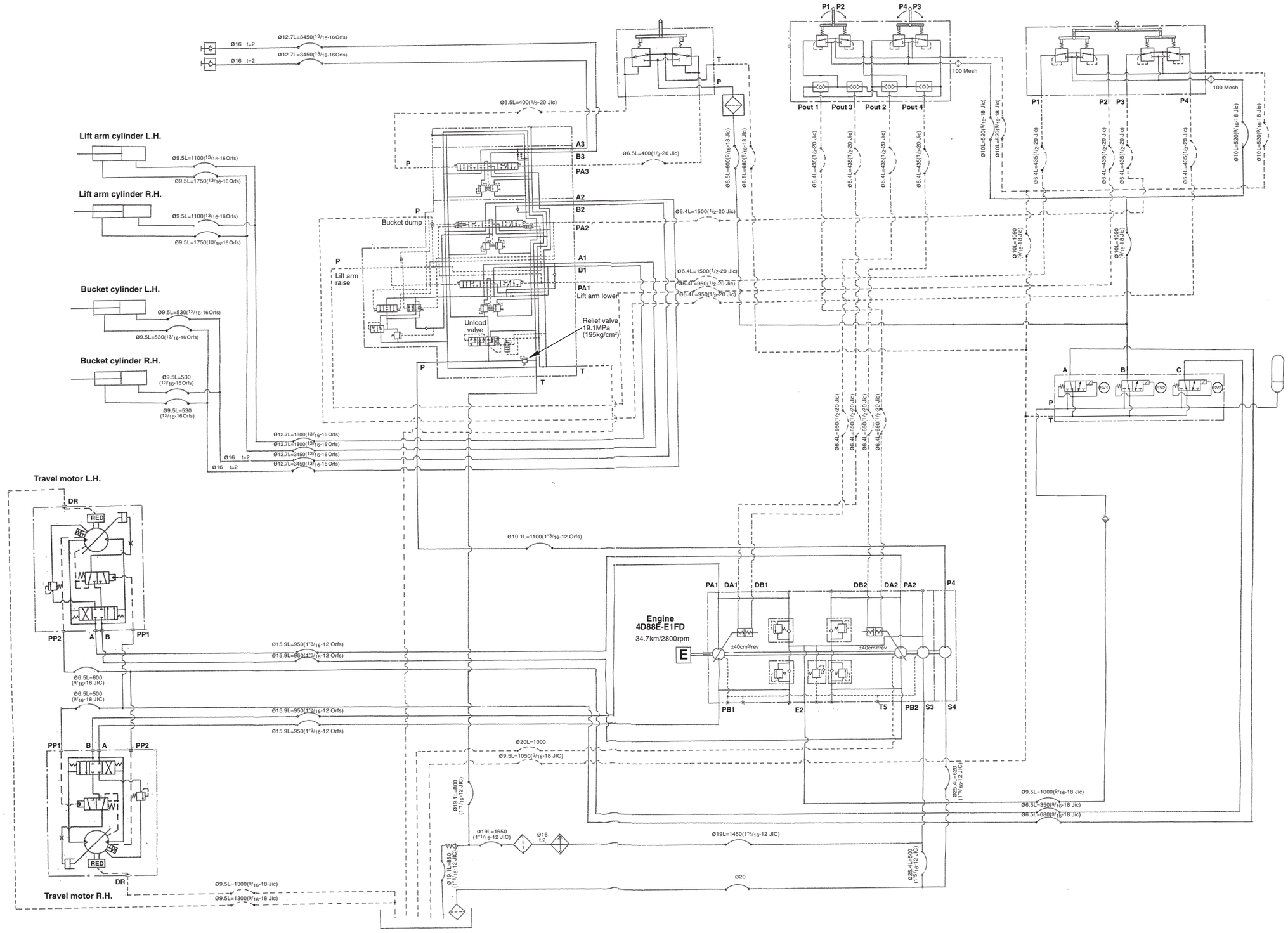

https://truckmanualshub.com/

HYDRAULIC CIRCUIT SK714-5 (ROAD HOMOLOGATION)

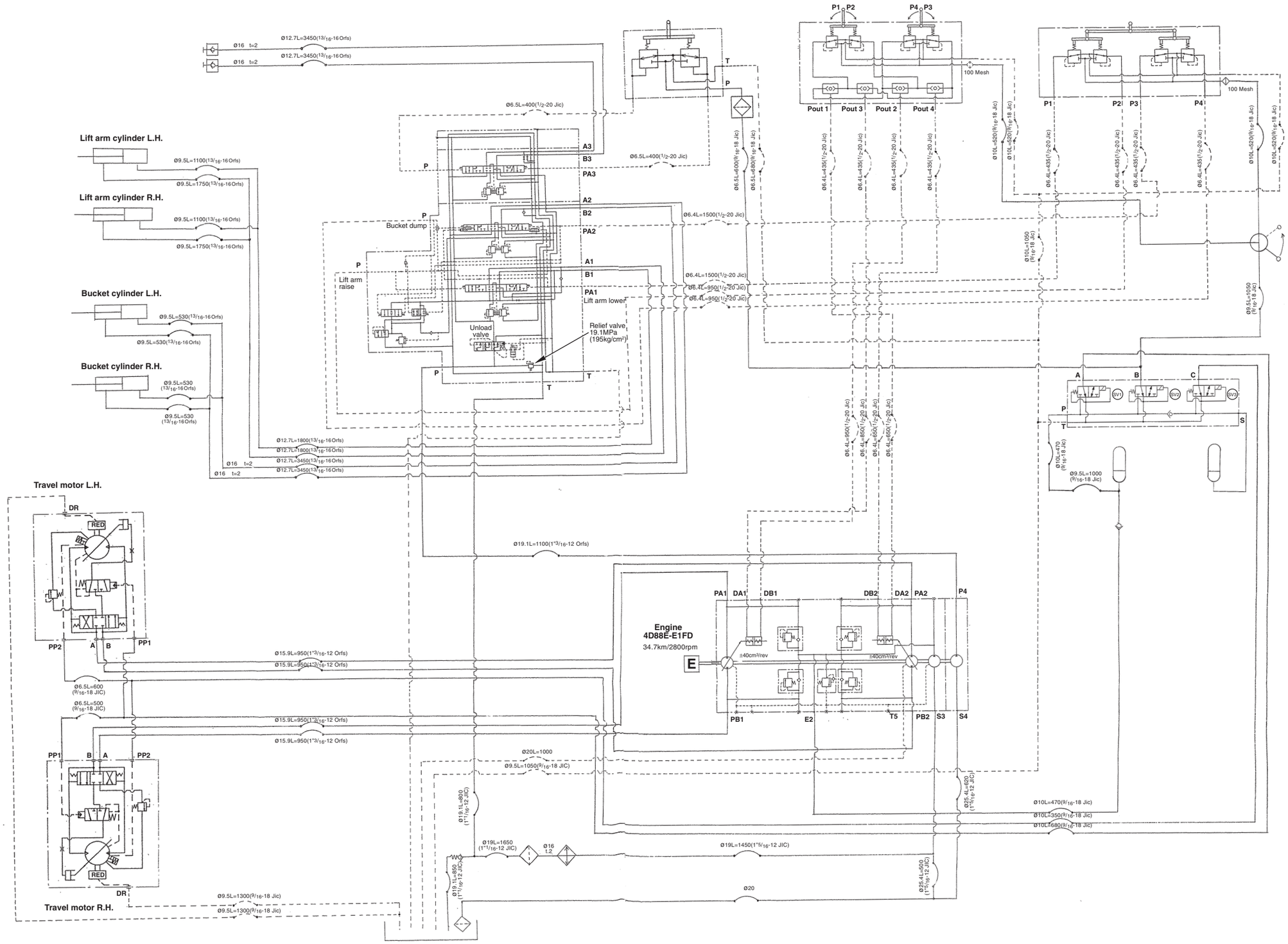

https://truckmanualshub.com/

HYDRAULIC CIRCUIT SK815-5 (STANDARD)

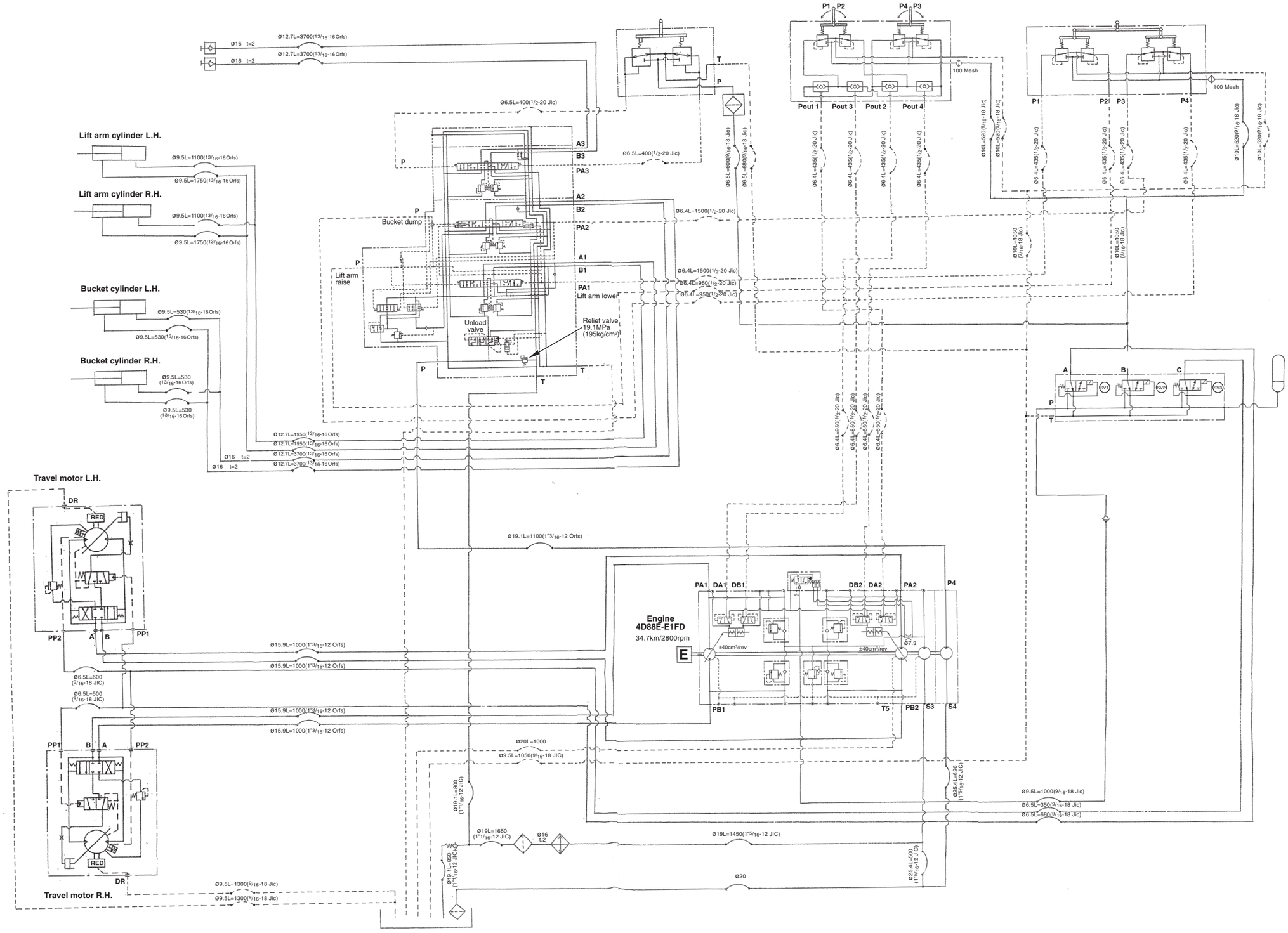

https://truckmanualshub.com/

HYDRAULIC CIRCUIT SK815-5 (ROAD HOMOLOGATION)

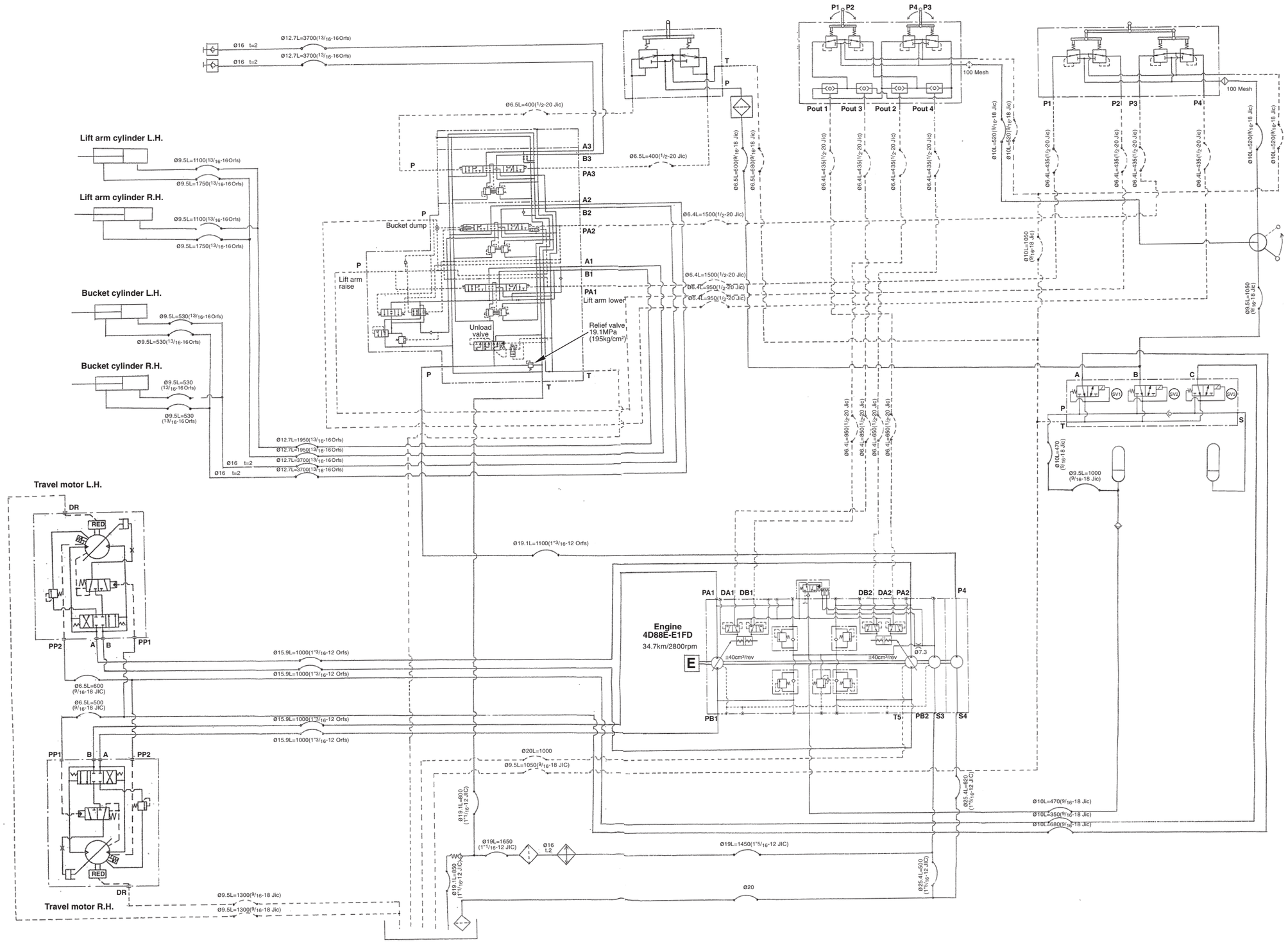

https://truckmanualshub.com/

HYDRAULIC PUMP

HST PUMP LPV40 + 40 (SK714-5 STANDARD FLOW)

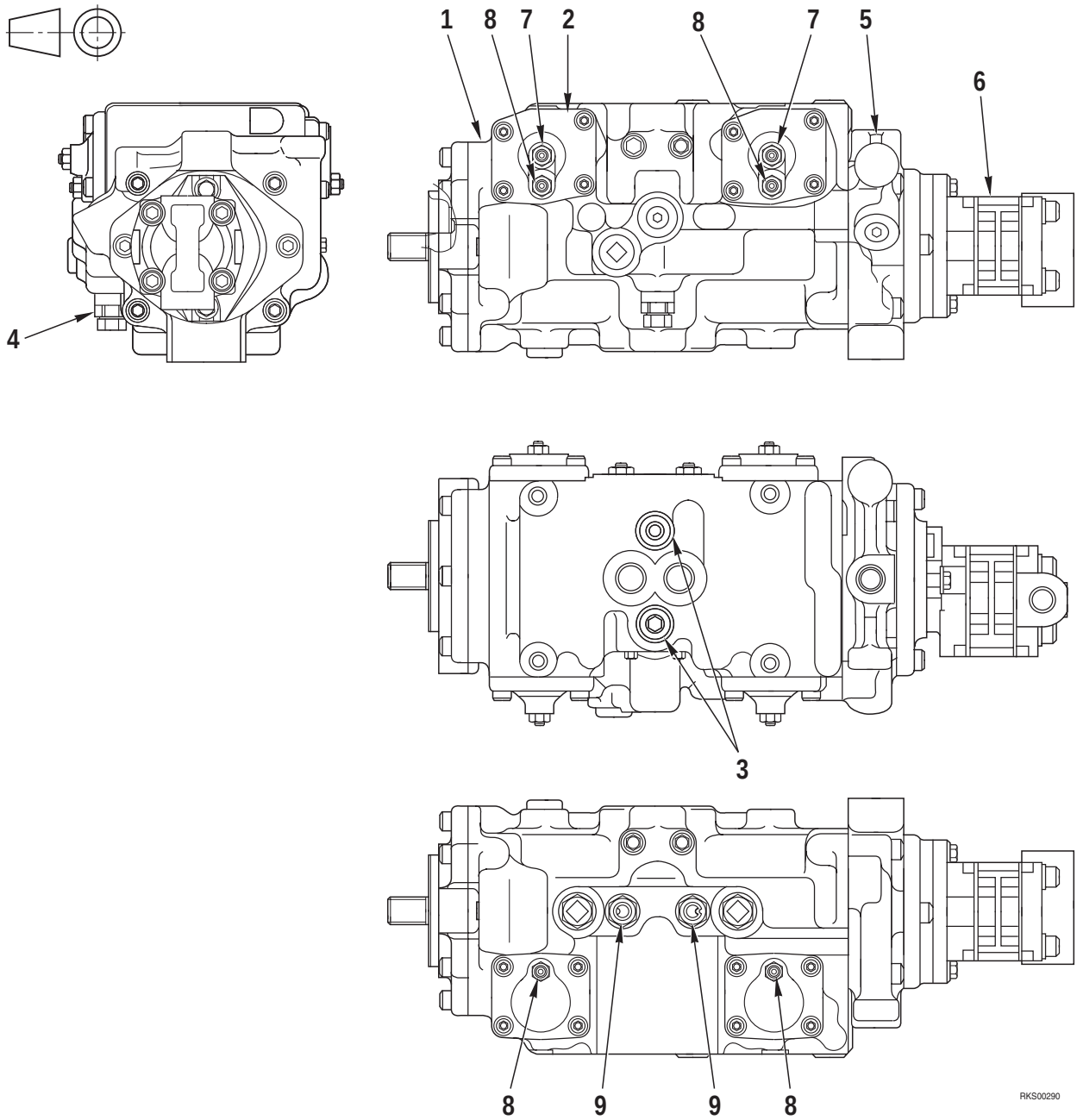

1. Piston pump
2. Control piston
3. Suction safety valve
4. Charge safety valve
5. Charge pump
6. Work equipment pump
7. Adjustment screw (Neutral position)
8. Adjustment screw (Max. displacement
9. Adjustment screw (Pump power control)

STRUCTURE

This pump is composed of variable swash plate type tandem piston pumps (1), control pistons (2), suction safety valves (3), charge safety valve (4), charge pump (5), work equipment gear pump (6), and adjustment screws (7), (8), (9).

https://truckmanualshub.com/

HST PUMP LPV40 + 40 (SK714-5 HIGH FLOW)

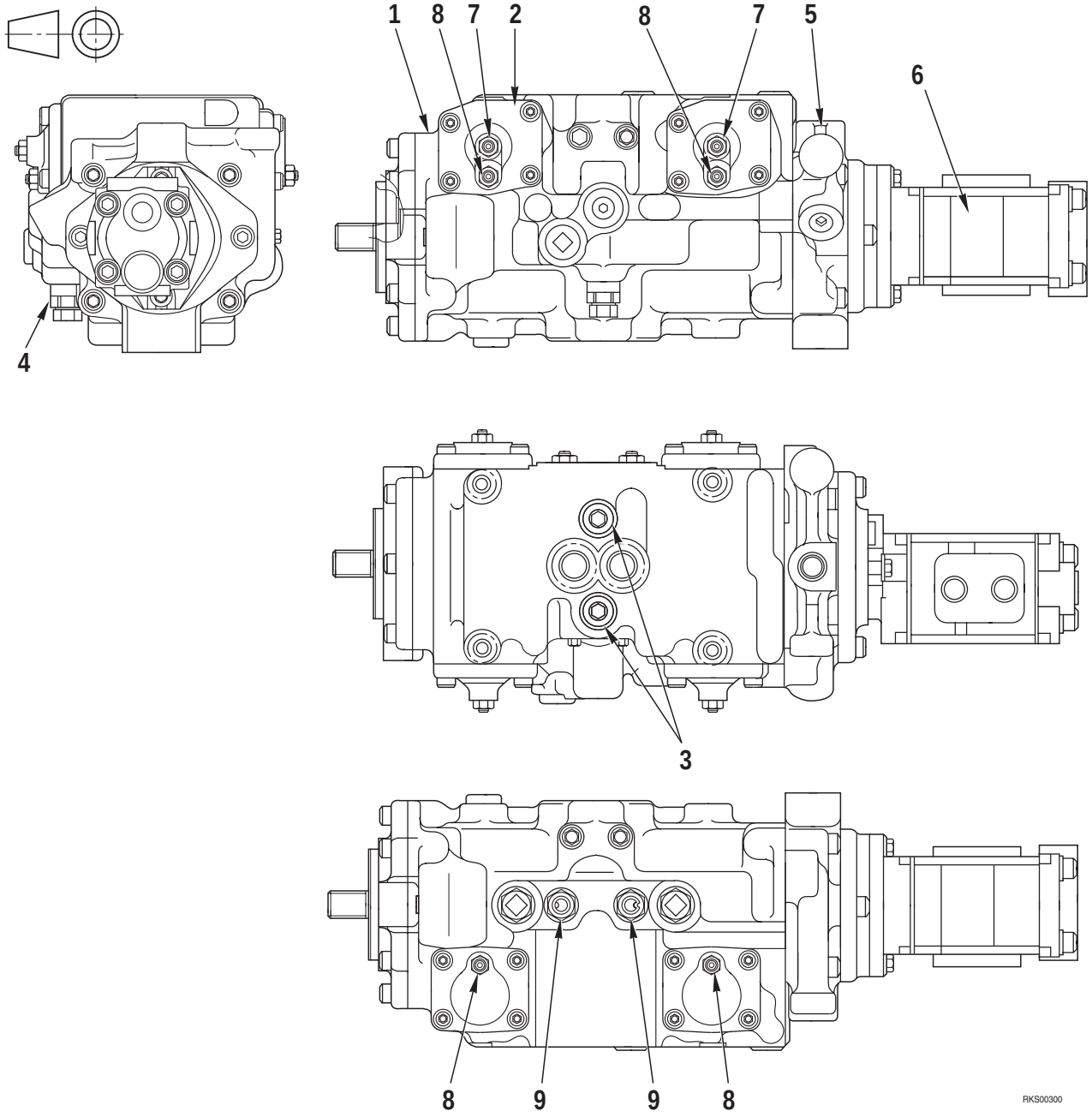

1. Piston pump
2. Control piston
3. Suction safety valve
4. Charge safety valve
5. Charge pump
6. Work equipment pump
7. Adjustment screw (Neutral position)
8. Adjustment screw (Max. displacement
9. Adjustment screw (Pump power control)

STRUCTURE

This pump is composed of variable swash plate type tandem piston pumps (1), control pistons (2), suction safety valves (3), charge safety valve (4), charge pump (5), work equipment gear pump (6), and adjustment screws (7), (8), (9).

https://truckmanualshub.com/

HST PUMP LPV40 + 40 (SK815-5 STANDARD FLOW)

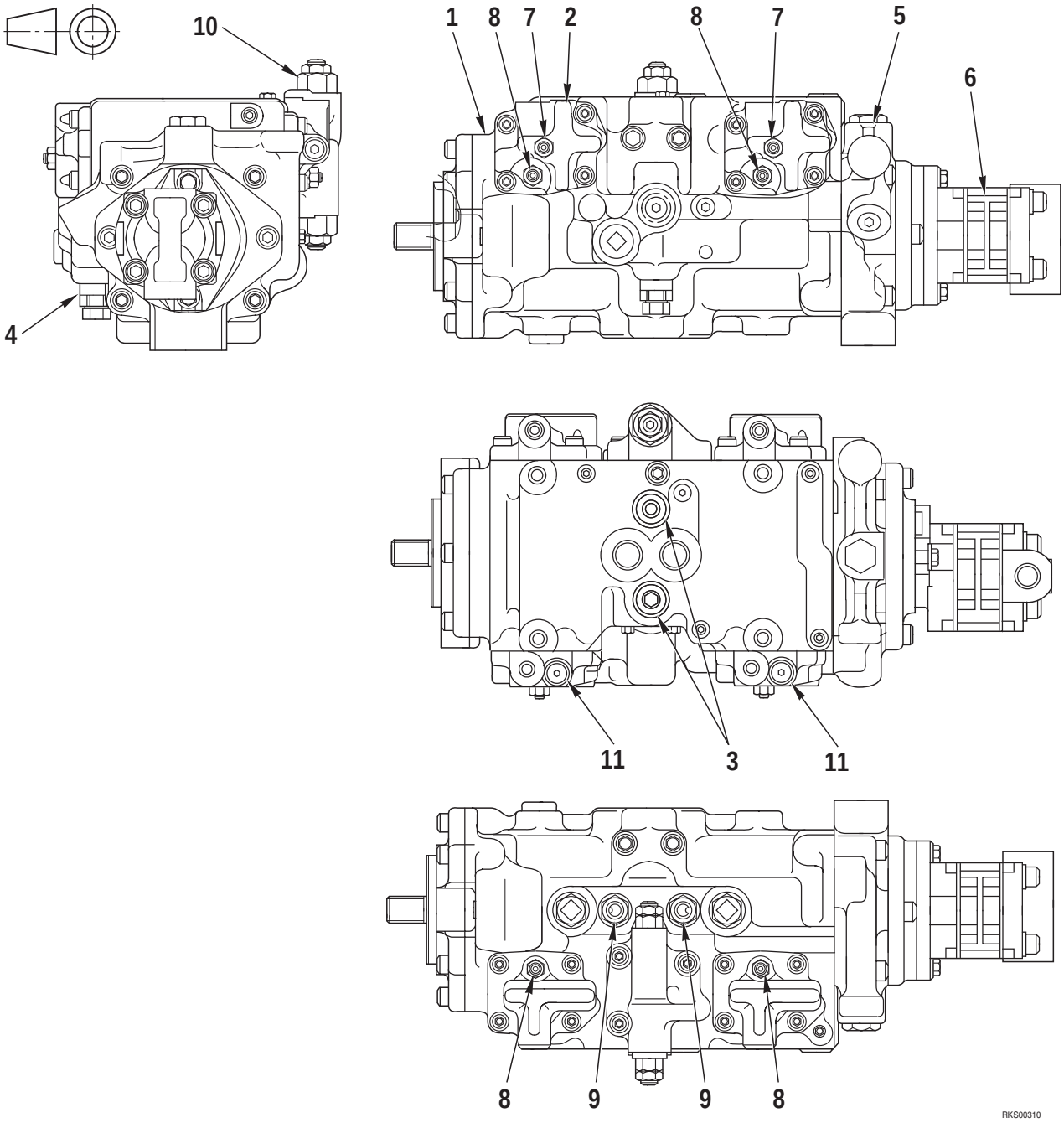

1. Piston pump
2. Control piston
3. Suction safety valve
4. Charge safety valve
5. Charge pump
6. Work equipment pump
7. Adjustment screw (Neutral position)
8. Adjustment screw (Max. displacement
9. Adjustment screw (Pump power control)
10. AS valve
11. Shuttle valve

STRUCTURE

This pump is composed of variable swash plate type tandem piston pumps (1), control pistons (2), suction safety valves (3), charge safety valves (4), charge pump (5), work equipment gear pump (6), and adjustment screws (7), (8), (9), AS valve (10), and shuttle valves (11).

https://truckmanualshub.com/

HST PUMP LPV40 + 40 (SK815-5 HIGH FLOW)

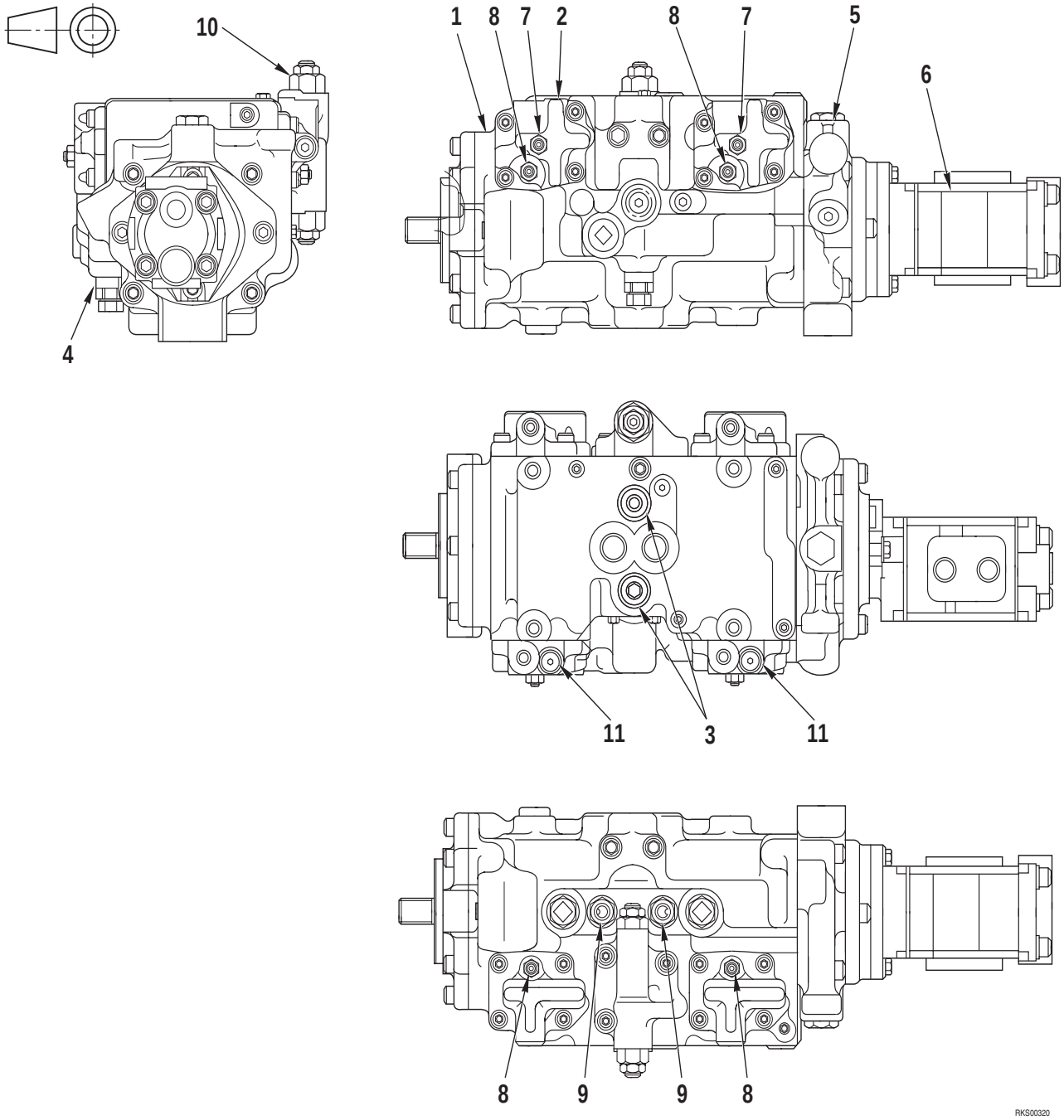

1. Piston pump
2. Control piston
3. Suction safety valve
4. Charge safety valve
5. Charge pump
6. Work equipment pump
7. Adjustment screw (Neutral position)
8. Adjustment screw (Max. displacement)
9. Adjustment screw (Pump power control)
10. AS valve
11. Shuttle valve

STRUCTURE

This pump is composed of variable swash plate type tandem piston pumps (1), control pistons (2), suction safety valves (3), charge safety valve (4), charge pump (5), work equipment gear pumps (6), and adjustment screws (7), (8), (9), AS valve (10), and shuttle valves (11).

https://truckmanualshub.com/

SK815-5 (STANDARD FLOW AND HIGH FLOW)
SK714-5

FUNCTION

- The rotation and torque transmitted to the pump shaft is converted into hydraulic energy, and pressurized oil is discharged according to the load.
- It is possible to change the discharge amount by changing the swash plate angle (plus, zero and minus)

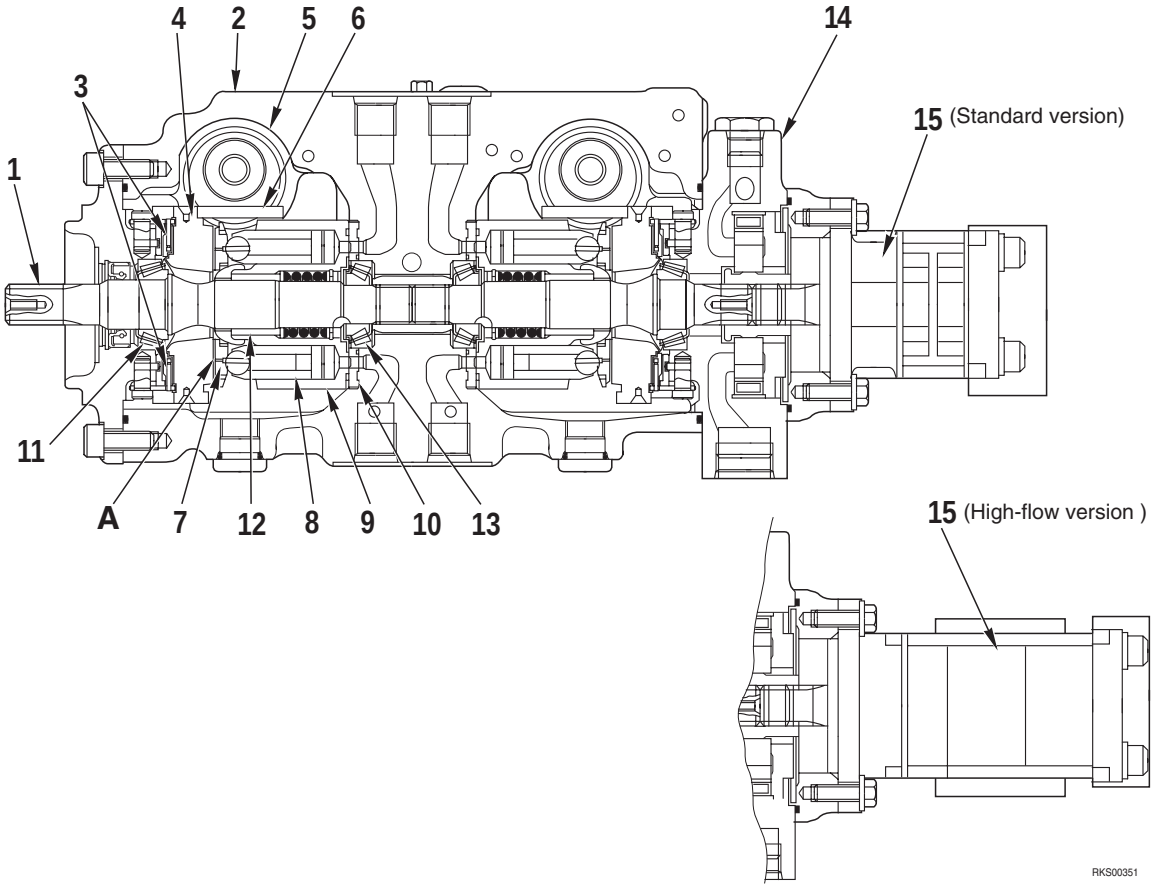

1. Shaft
2. Case
3. Cradle bearing
4. Rocker cam
5. Control piston
6. Slider
7. Shoe
8. Piston
9. Cylinder block
10. Valve plate
11. Main bearing
12. Spline
13. Sub bearing
14. Charge pump
15. Work equipment pump

STRUCTURE

- Cylinder block (9) is supported to shaft (1) by a spline (12), and shaft (1) is supported by the front and rear bearings (11), (13). The tip of piston (8) is a concave ball, and shoe (7) is caulked to it to form one unit. Piston (8) and shoe (7) form a spherical bearing.
- Rocker cam (4) has flat surface **A**, and shoe (7) is always pressed against this surface while sliding in a circular movement.
  There is a cradle bearing (3) between cradle and rocker cam (4) which is secured to the case.
  Rocker cam (4) sways on cradle bearing.
- Piston (8) carries out relative movement in the axial direction inside each cylinder chamber of cylinder block (9).
- The cylinder block seals the pressurized oil to valve plate (10) and carries out relative rotation. This surface is designed so that the oil pressure balance is maintained at a suitable level. The oil inside each cylinder chamber of cylinder block (9) is sucked in and discharged through valve palte (10).

https://truckmanualshub.com/

OPERATION

1. Operation of pump

- Cylinder block (9) rotates together with shaft (1), and shoe (7) slides on flat surface **A**.
  When this happens, rocker cam (4) moves along cylindrical surface **B**, so angle α between center line **X** of rocker cam (4) and the axial direction of cylinder block (9) changes. (Angle α is called the swash plate angle).

  i) Center line **X** of rocker cam (4) maintains swash plate angle α in relation to the axial direction of cylinder block (9), and flat surface **A** moves as a cam in relation to shoe (7).
  In this way, piston (8) slides on the inside of cylinder block (9), so a difference between volumes **E** and **F** is created inside cylinder block (9). The suction and discharge is carried out by this difference **F-E**.
  In other words, when cylinder block (9) rotates and the volume of chamber **F** becomes smaller, the oil is discharged during that stroke. On the other hand, the volume of chamber **E** becomes larger, and as the volume becomes bigger, the oil is sucked in (Fig. 1).

  ii) If center line **X** of rocker cam (4) is in line with the axial direction of cylinder block (9) (swash plate angle = 0), the difference between volumes **E'** and **F'** inside cylinder block (9) becomes 0, so the pump does not carry out any suction or discharge of oil (Fig. 2).

  iii) Center line **X** of rocker cam (4) maintains swash plate angle α in relation to the axial direction of cylinder block (9), and flat surface **A** moves as a cam in relation to shoe (7).
  In this way, piston (8) slides on the inside of cylinder block (9), so a difference between volumes **E"** and **F"** is created inside cylinder block (9).
  The suction and discharge is carried out by this difference **E"-F"**. In other words, when cylinder block (9) rotates and the volume of chamber **E"** becomes smaller, the oil is discharged during that stroke. On the other hand, the volume of chamber **F"** becomes larger, and as the volume becomes bigger, the oil is sucked in.
  If the direction of swash plate angle is changed, the relation between discharge and suction of port PA, PB reverse (Fig. 3).

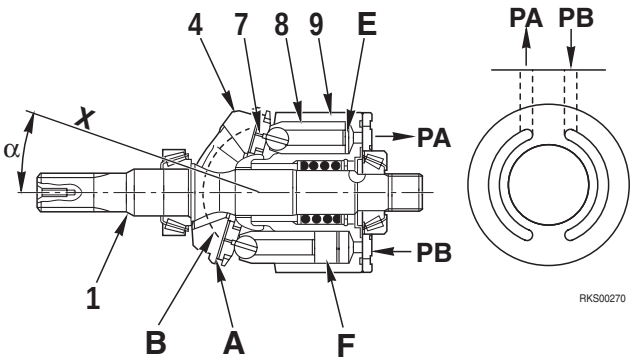

Fig. 1

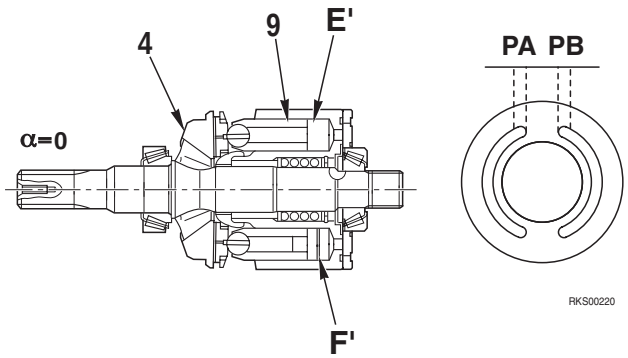

Fig. 2

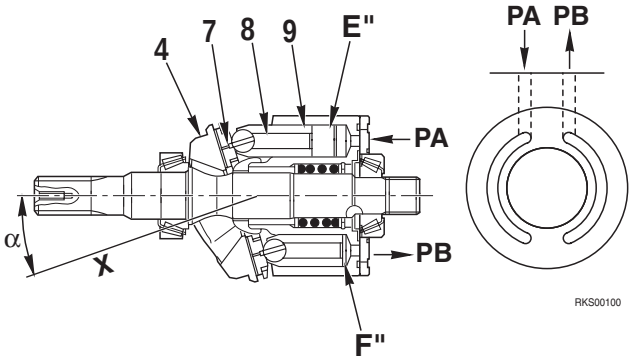

Fig. 3

https://truckmanualshub.com/

2. Control of discharge amount

- If swash plate angle α becomes larger, the difference between volumes **E** and **F** becomes larger and discharge amount **Q** increases.
- Swash plate angle α is changed by control piston (5).
- Control piston (5) moves in a reciprocal movement ( ) according to the signal pressure from pilot line (PPC and AS valves). This straight line movement is transmitted through slider (6) to rocker cam (4), which is supported by the cylindrical surface to cradle, slides in a rotating movement in direction ( ).
- On this pump, maximum swash plate angle is ±15.8°..

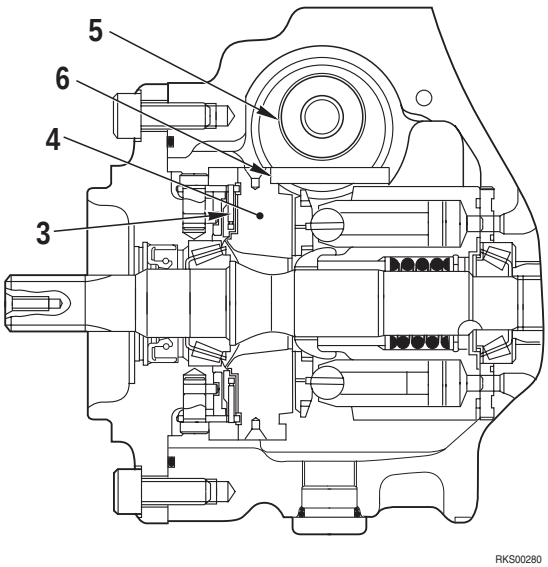

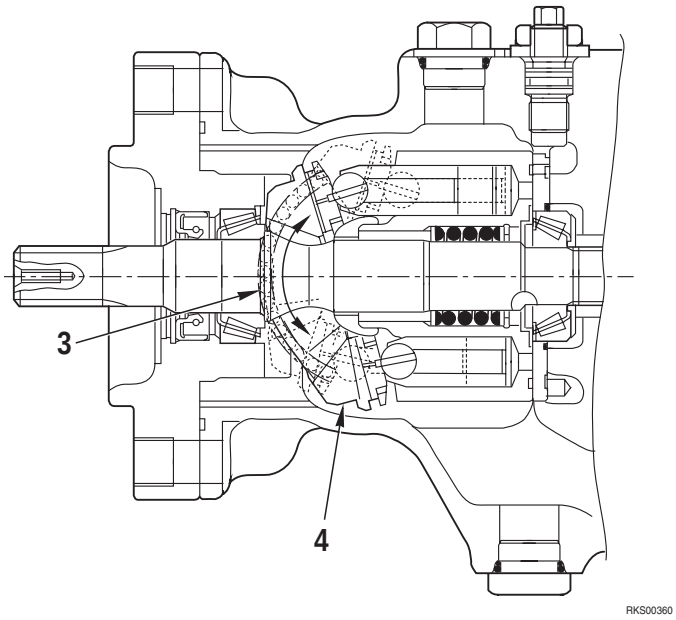

- Screw **A** restricts to the maximum stroke of control piston (i.e. maximum displacement of each pump). When screw **A** is tightened, maximum displacement decreases, and when screw **A** is loosened, maximum displacement increase. This screw should be adjusted when the machine doesn't travel straight or machine maximum speed is little bit wrong.
- Screw **B** is the fine adjuster of neutral position of control piston (5). That adjust prevent machine from creep.

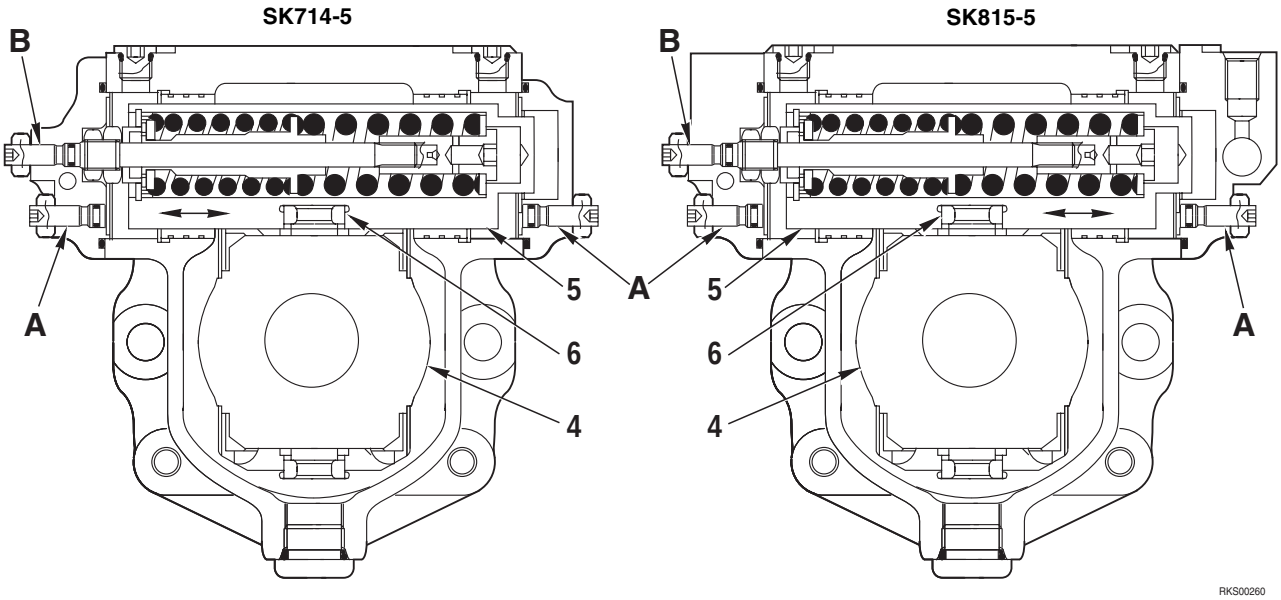

https://truckmanualshub.com/

Function of the control piston (on non-induction of pilot signal)

- There are no pressure, so control piston (5) doesn't move and main pump is on neutral condition.

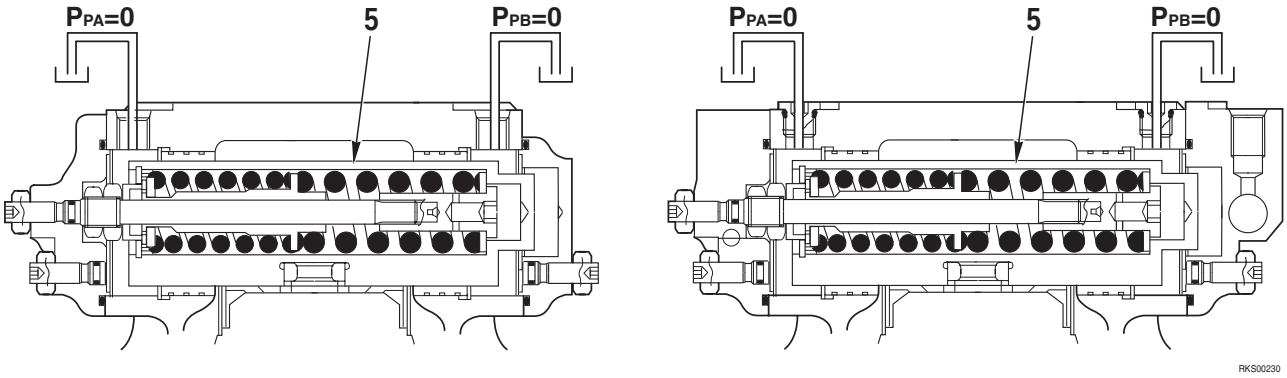

Function of the control piston (on induction of pilot signal)

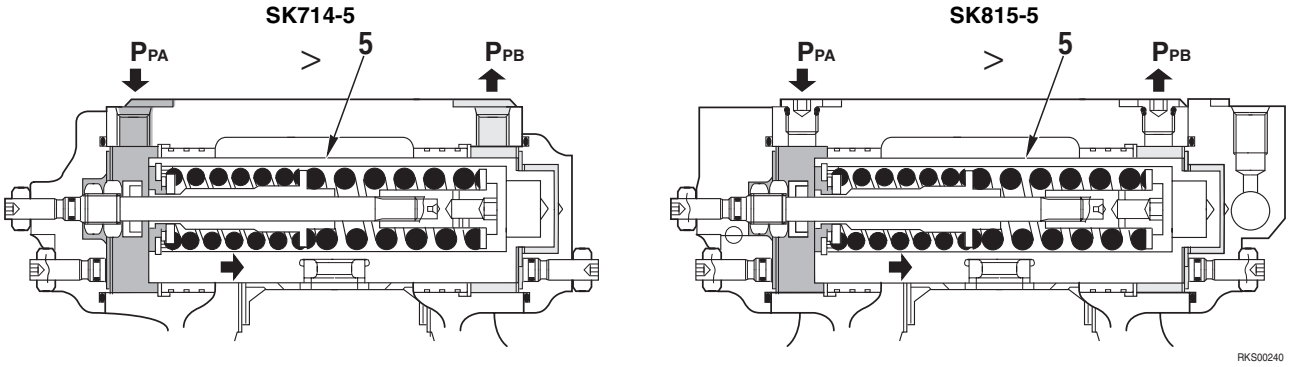

- When pressurized oil which has the pressure PPA, PPB (PPA>PPB) is led from pilot line (PPC or AS valve), control piston (5) moves the ( ) direction. Control piston (5) moves the balanced position by spring force and pressure PPA, PPB.
- If the relation of pressure dimension of PPA, PPB is reversed (i.e. PPA<PPB), control piston moves reversal direction.
- On SK714-5, AS valve is not installed, so pressurized oil from PPC valve is directly inducted to control piston.
- On SK815-5, AS valve is installed and lower pressure between AS valve output pressure and PPC pressure is selected by shuttle valve and inducted to control piston (see topic "shuttle valve").

https://truckmanualshub.com/

SUCTION SAFETY VALVE

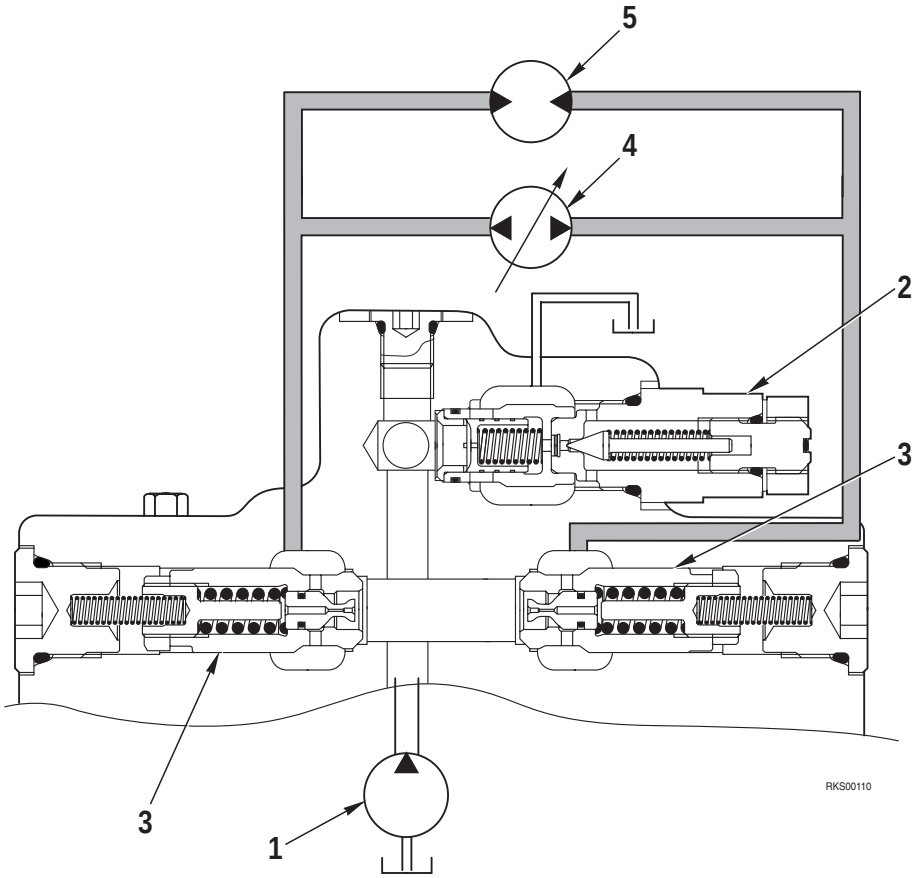

1. Charge pump
2. Charge safety valve
3. Suction safety valve
   3A. Valve
   3B. Rod
   3C. Sleeve
   3D. Spring
   3E. Spring
   3F. Plug
4. Piston pump
5. Travel motor

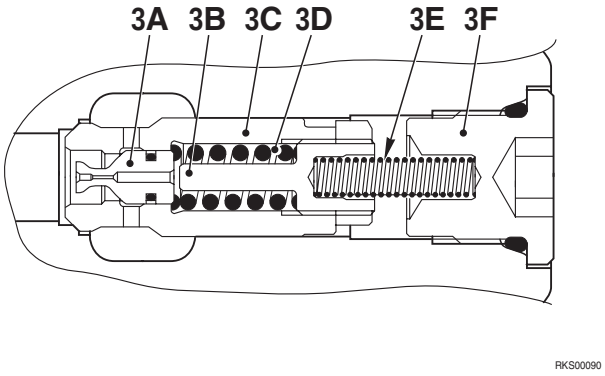

FUNCTION

There are two suction safety valves installed to each HST pump, and they have the following functions:

1) **High pressure safety valve**
   The valve restricts the maximum pressure inside the HST circuit in order to protect the HST circuit.

2) **Suction safety valve**
   The valve ensures the flow of the charge oil to the closed HST circuit and prevents the charge oil from flowing into the pump high pressure side (delivery side).

https://truckmanualshub.com/

Actuation when acting as high pressure relief valve (Valve at piston pump delivery side)

Port **A** is connected to the piston pump circuit and port **B** is connected to the charge circuit. The pressurized oil fills port **C** through drill hole **a** of piston (**3A**). The pressurized oil at high pressure port **A** fills port **D** through groove **b** between body and valve. Poppet (**3A**) is in tight contact with valve seat (**3C**).

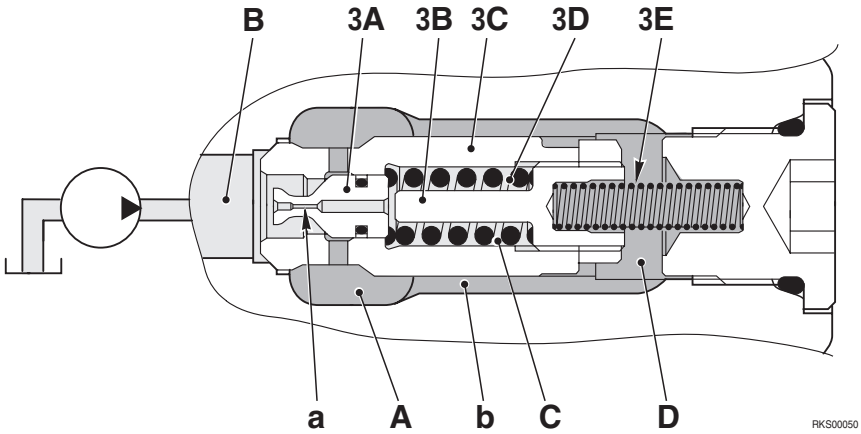

- If abnormal pressure is generated in the circuit and the oil pressure at ports **A** and **D** reaches to the pressure set by spring (**3D**), poppet (**3A**) is pushed to → direction, and oil at port **A** is relieved to port **B** to reduce the oil pressure at port **A**.

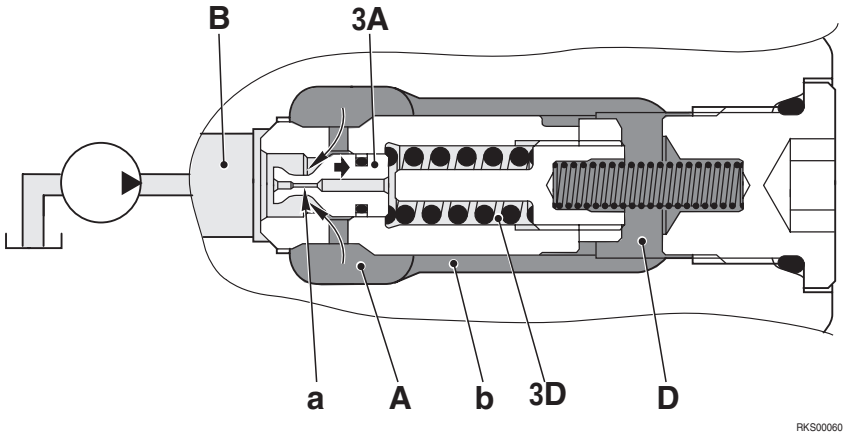

https://truckmanualshub.com/

Operation when acting as suction safety valve

1) **When HST pump delivery is 0**.
   The HST circuit is closed, and the charge oil does not flow into the HST circuit. Therefore the charge pressurized oil from the charge pump (1) all passes the charge safety valve (2) and is drained to the pump case.

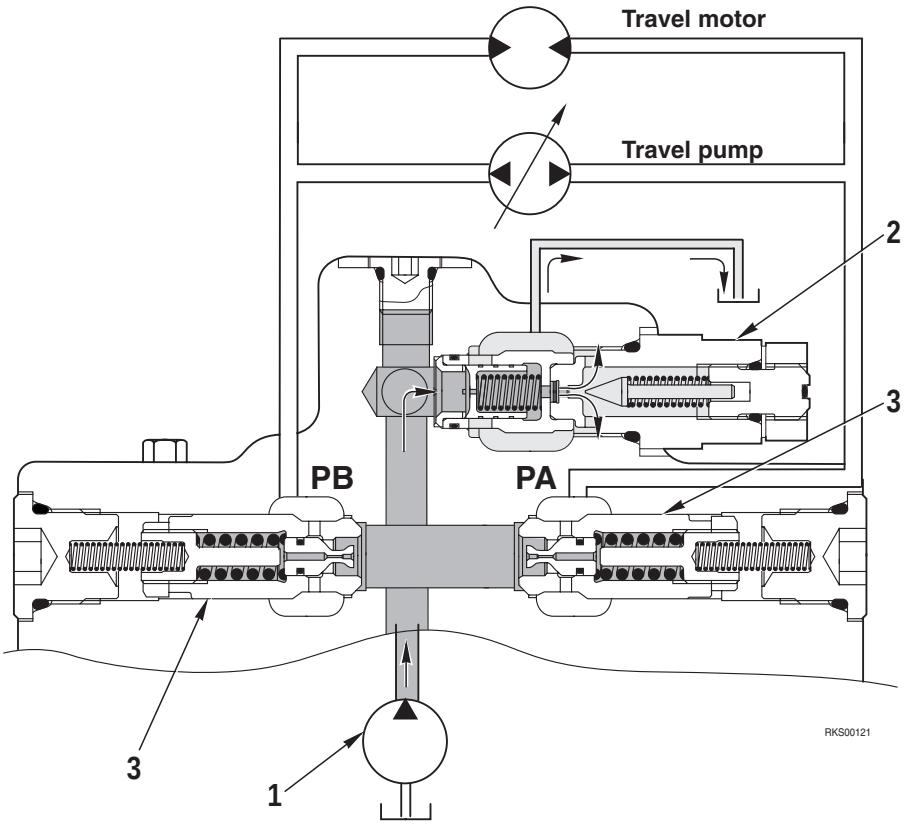

https://truckmanualshub.com/

2. When HST pump discharges from port PA

1) Valve at the piston pump delivery side.

When the pressure oil is discharged from port **PA** of the HST pump (4), port **PA** becomes the high pressure side. This pressure oil at port **PA** flow into port **D** through the groove **b**.

When this happen, sleeve (**3C**) is pushed to ← direction, because of the difference in area (**A1**>**A2**). Therefore the pressure oil from charge pump is prevented from flowing into HST pump.

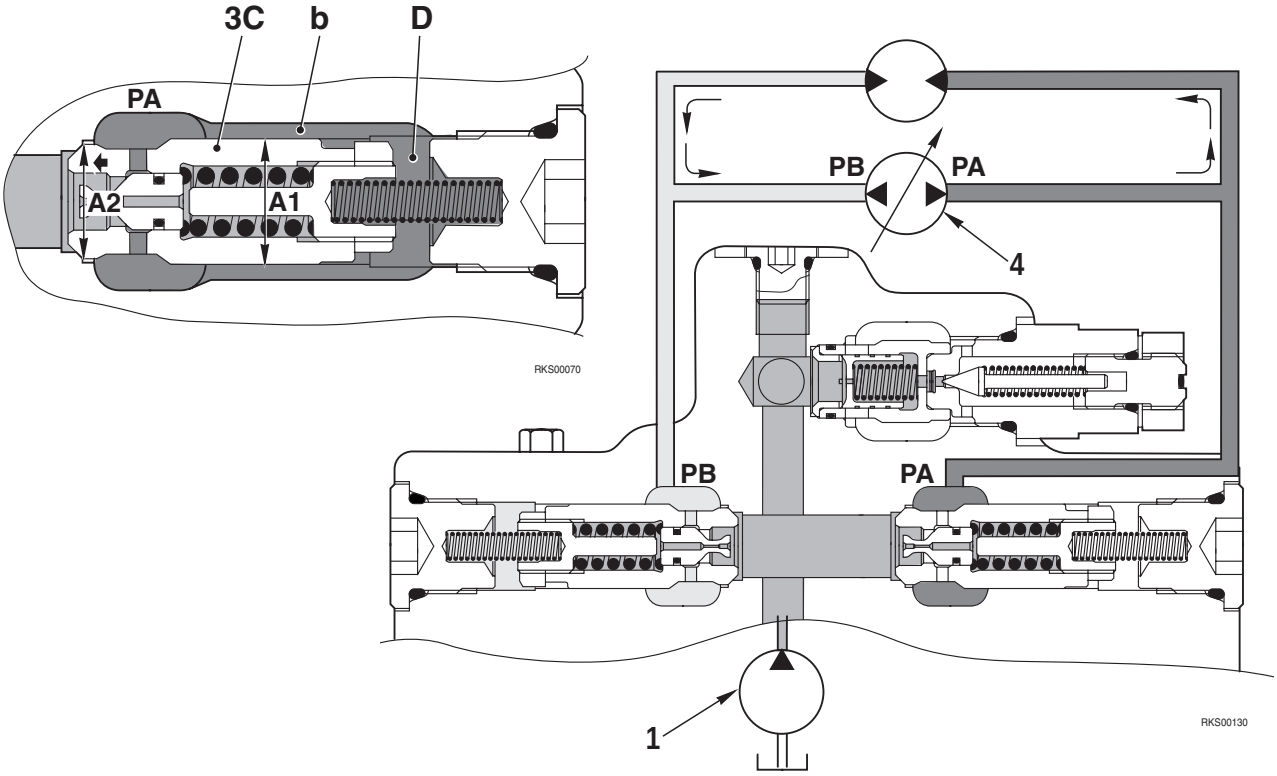

2) Valve at piston pump suction side

Port **PB** is at low pressure because port **PB** is suction side.

And sleeve (**3C**) is pushed to → direction to open body seat portion because of the difference in area (**A1**>**A2**). In this way, the charge pressure oil at port **B** flows into port **PB** through this clearance to charge to the HST circuit..

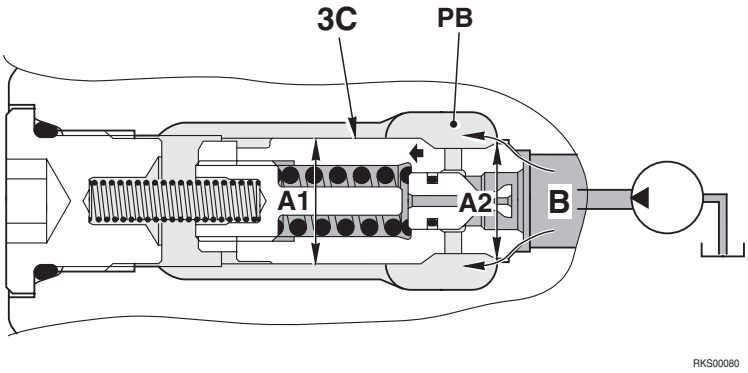

https://truckmanualshub.com/

CHARGE SAFETY VALVE

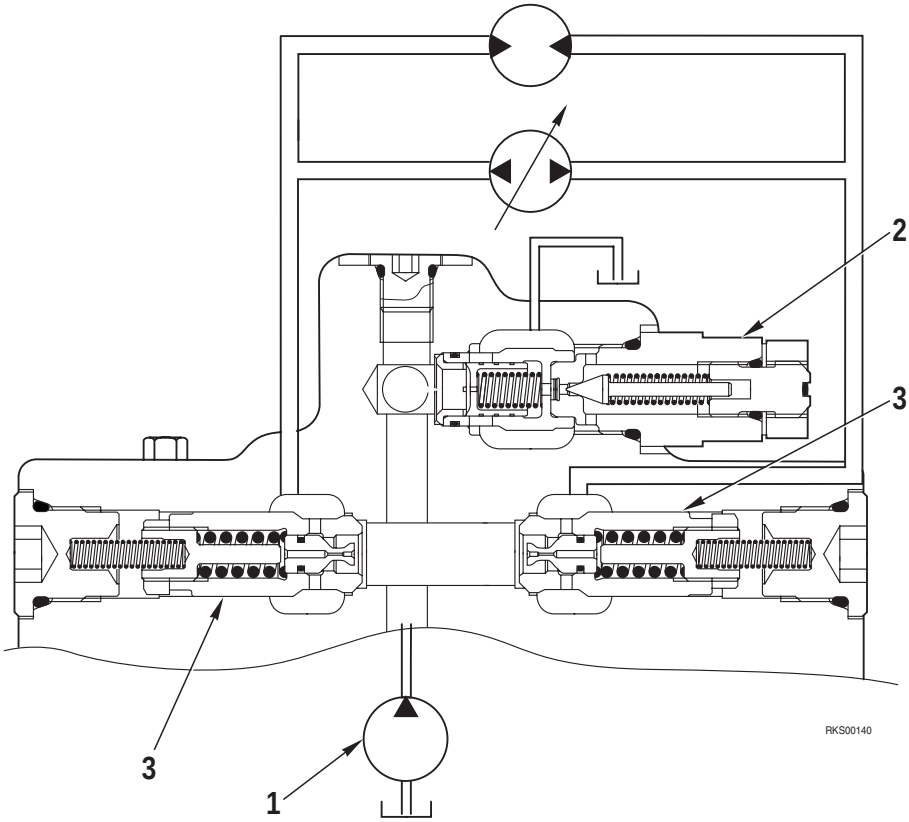

1. Charge pump
2. Charge safety valve
   - 2A. Valve
   - 2B. Spring
   - 2C. Valve seat
   - 2D. Poppet
   - 2E. Spring
   - 2F. Adjustment screw
3. Suction safety valve

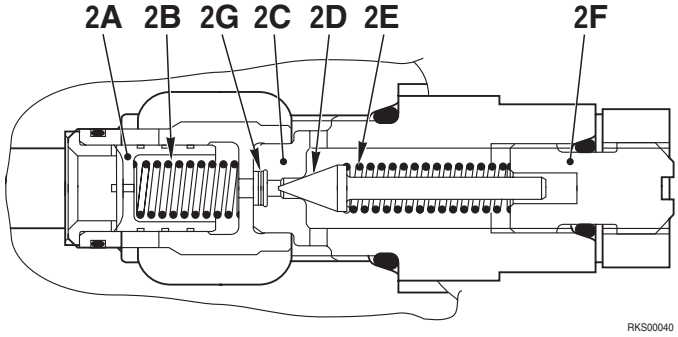

FUNCTION

There is the charge safety valve installed to the HST pump.
The charge safety valve restricts the maximum pressure inside the charge circuit in order to protect the charge circuit.

https://truckmanualshub.com/

FUNCTION

- Port **A** is connected to the charge circuit.
  Port **B** is connected to the tank drain circuit.
  The pressurized oil fills port **C** through orifice **a** in valve (**2A**).
  Poppet (**2D**) is in tight contact with valve seat (**2C**)

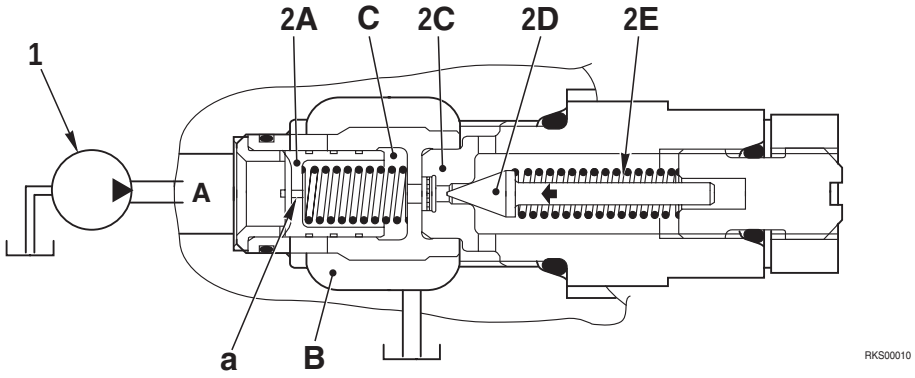

- If abnormal pressure is generated in the circuit or the shuttle valve of **HST** motor is at neutral and the oil pressure at ports **A** and **C** reaches the pressure set by spring (**2E**), poppet (**2D**) is pushed to → direction, and oil at **C** is relieved to port **B** and pressure of the oil at **C** reduce.

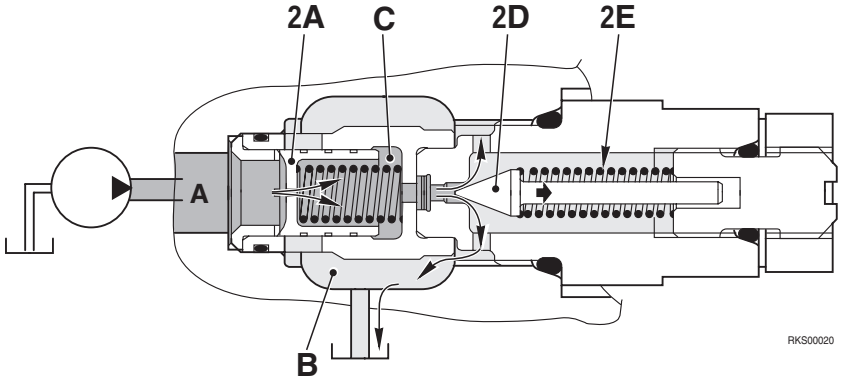

- When the pressure of the oil at port **C** goes down, a differential pressure is occured between ports **A** and **C** because of orifice **a** in valve (**2A**).
  Valve (**2A**) is pushed to → direction by oil pressure at port **A**, and oil at port **A** is relieved to port **B**.
  In this way, the pressure in the charge circuit is prevented from going any higher.

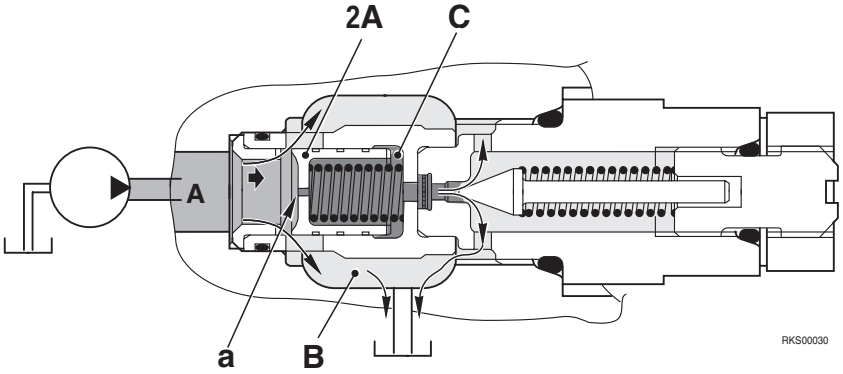

https://truckmanualshub.com/

CHARGE PUMP

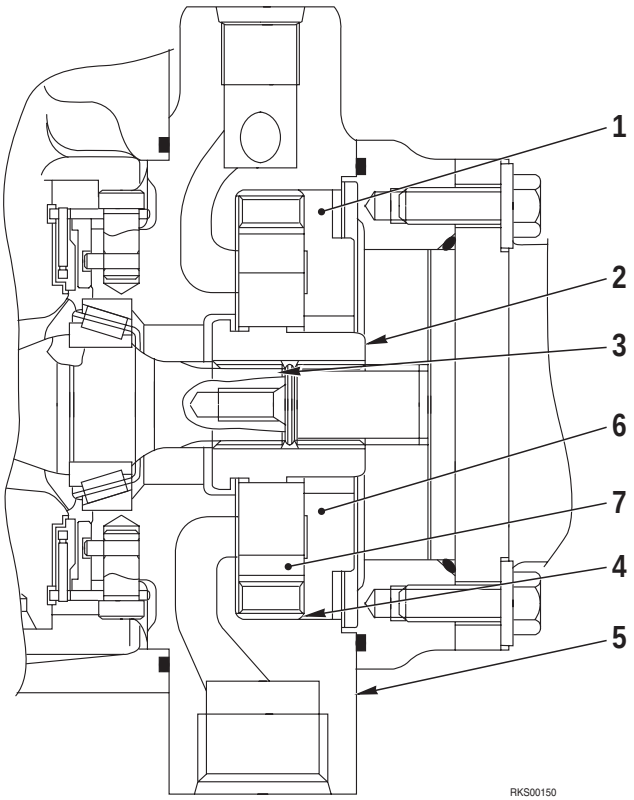

1. Slide plate
2. Coupling
3. Shaft
4. Outer ring
5. Case
6. Inner roter
7. Outer roter

FUNCTION

- HST charge pump is built-in the HST pump and driven with HST pump at the same time.
- Discharged oil is delivered to AS valve and charge safety valve. (AS valve is only installed SK815-5).
- Charge pump sucks oil from hydraulic tank.

SPECIFICATIONS

- Type: trochoid pump
- Theoletical delivery: 25 cm^3/rev

https://truckmanualshub.com/

FUNCTION

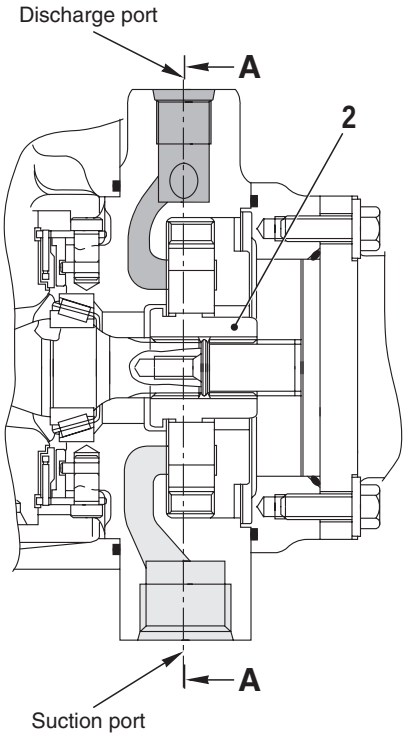

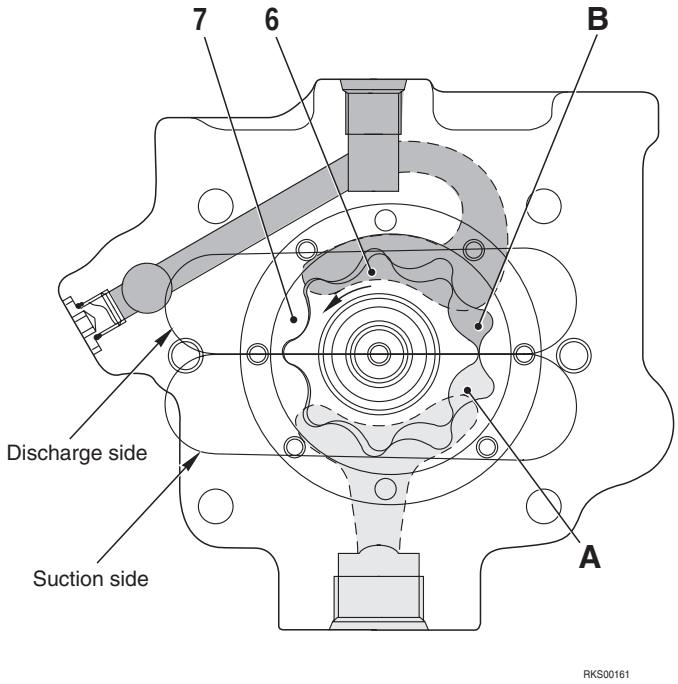

- Charge pump is connected to HST pump shaft by coupling (2), so inner roter (6) and outer roter (7) rotate.
- When inner roter (6) and outer roter (7) rotate, capacity of **A** increase and oil is sucked, and capacity of **B** decrease and oil discharge.

https://truckmanualshub.com/

ANTI ENGINE-STALL CONTROL VALVE (AS VALVE)

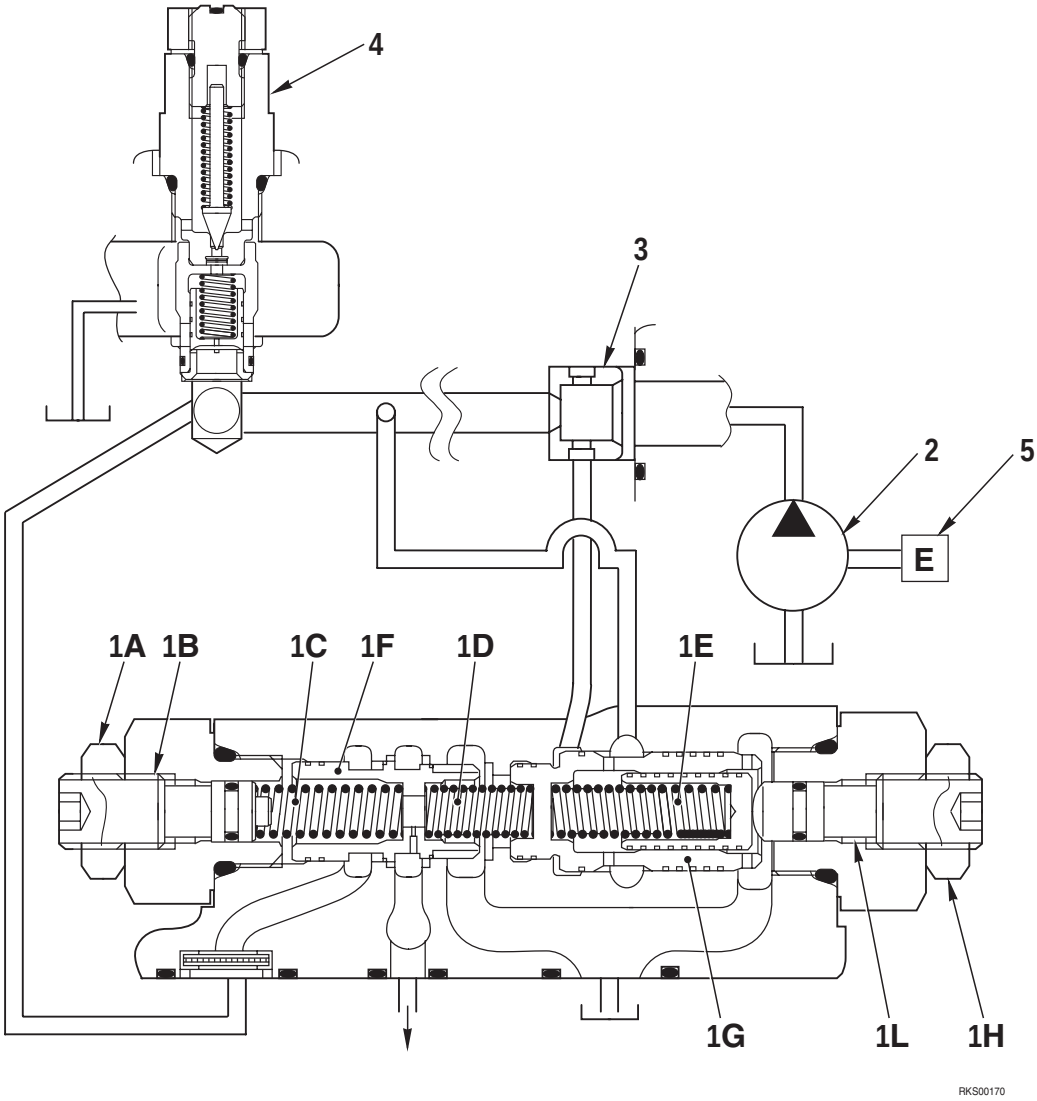

1. AS valve
   - 1A. Nut
   - 1B. Screw
   - 1C. Spring
   - 1D. Spring
   - 1E. Spring
   - 1F. Valve
   - 1G. Valve
   - 1H. Nut
   - 1L. Screw
2. Charge pump
3. Orifice
4. Charge safety valve
5. Engine

FUNCTION

- The AS valve is attached on the main piston pump. It reduces pressure for pump swash plate control from charge circuit.
- The AS valve outputs pressure correspond with engine revolution.

https://truckmanualshub.com/

OPERATION

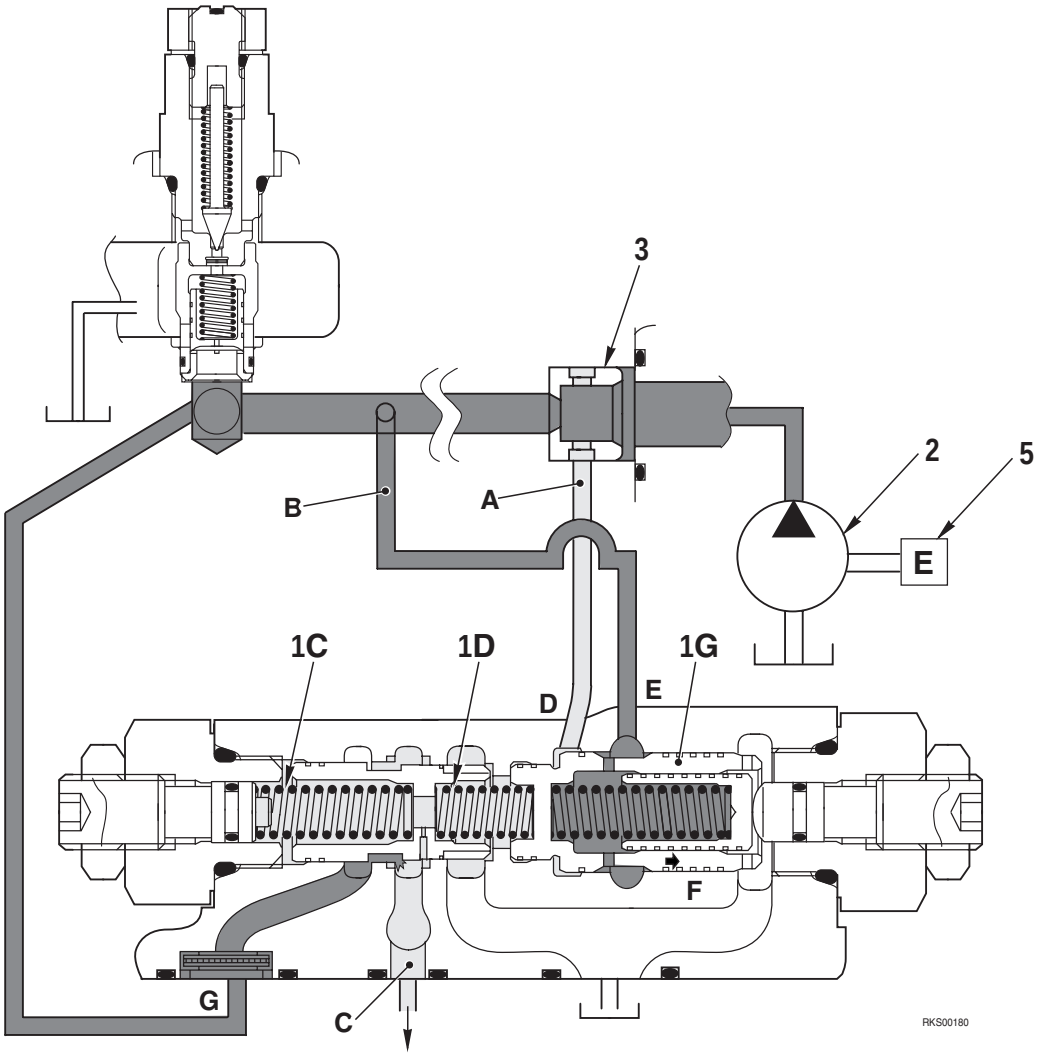

- The oil from the charge pump (2) that rotates with the engine flows through a orifice (3) that is installed in the main piston pump. And the oil always flows to pump charge circuit.
- Charge pump (2) is fixed capacity pump, so that discharge flow is proportionate to engine rotation speed. With the oil from the charge pump (2) passed through the orifice, differential pressure is generated at port **A** and port **B**. This differential pressure actuates the differential pressure sensing valve (**1G**) and makes hydraulic force **F**.
- By the hydraulic force **F**, the differential pressure sensing valve (**1G**) is moved → direction.
  That makes a change of spring (**1D**) load.
  In port **C**, the AS valve output pressure that is balanced with spring (**1C**) and (**1D**) load is generated by reducing from charge pressure of port **G**.
  So the AS valve outputs pressure correspond with charge flow that is changed by engine (5) revolution.

https://truckmanualshub.com/

SHUTTLE VALVE

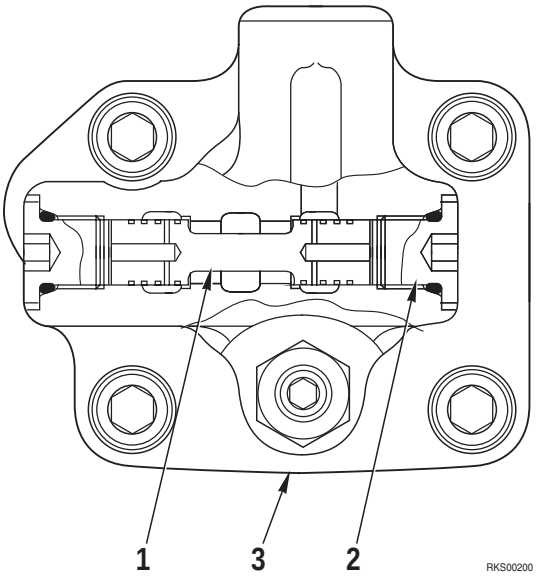

1. Valve
2. Plug
3. Cover

FUNCTION

- The shuttle valves are installed in covers of pump swash plate control pistons. They select lower pressure either travel PPC pressure or AS valve pressure, and output to pump swash plate control pressure.

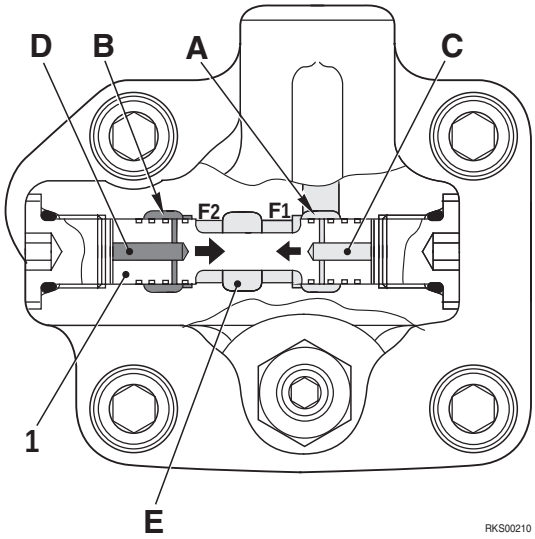

OPERATION

- Port **C** is connected to port **A** (Travel PPC pressure inlet port). And hydraulic force **F1** by travel PPC pressure actuates the valve (1).
- And port **D** is connected to port **B** (AS pressure inlet port). Hydraulic force **F2** by AS valve pressure actuates the valve (1).
- By the hydraulic force **F1** and **F2**, the shuttle valve selects lower pressure either PPC pressure or AS valve pressure. It outputs lower pressure of them from port **E** to control pump swash plate.

https://truckmanualshub.com/

CONTROL VALVE (3-SPOOL)

SK714-5 – SK815-5 STANDARD

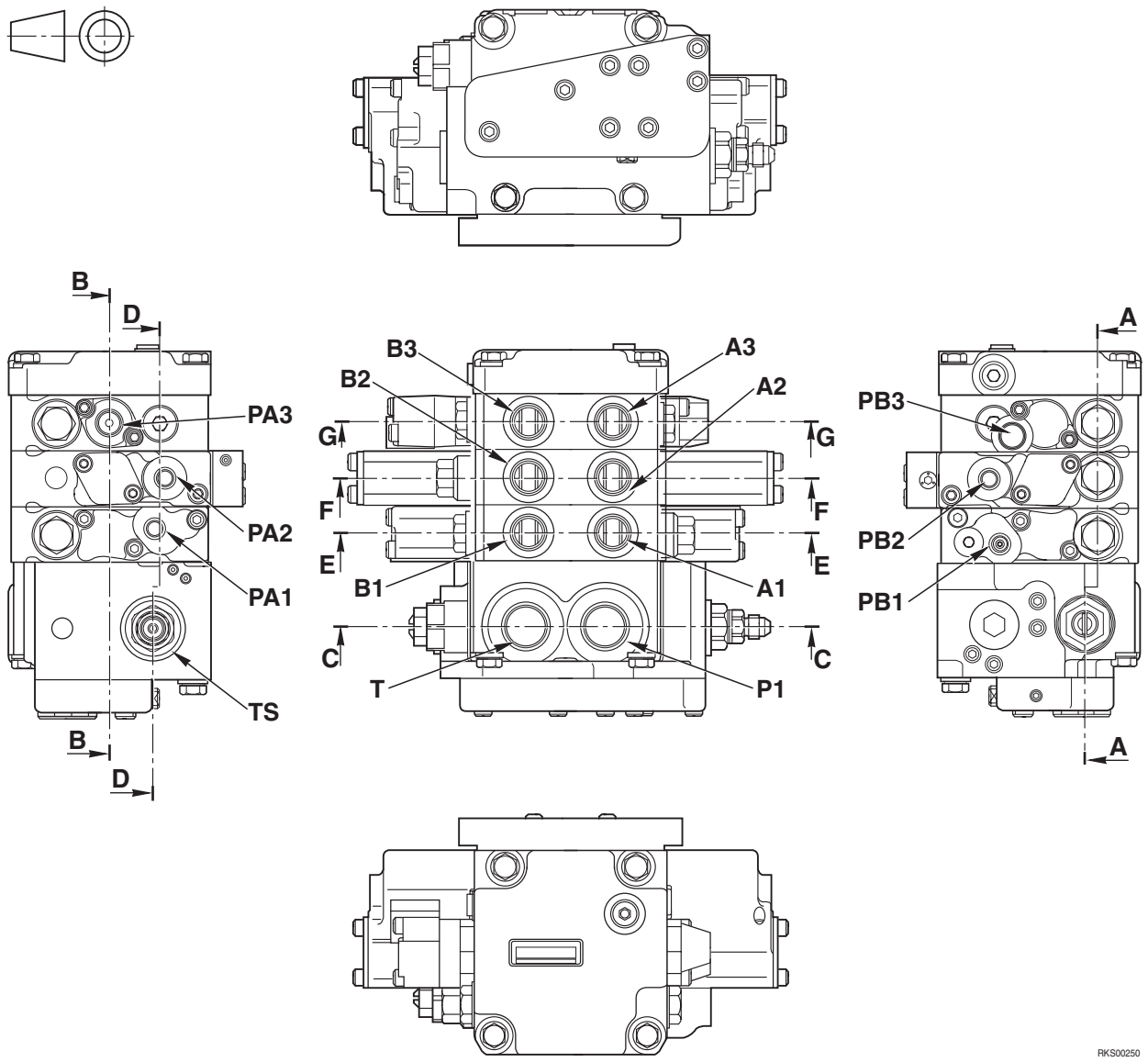

P1: from gear pump
T: to tank
Ts: to tank
A1: to lift arm cylinder (head side)
A2: to bucket cylinder (head side)
A3: to attachment port
B1: to lift arm cylinder (bottom side)
B2: to bucket cylinder (bottom side)
B3: to attachment port

https://truckmanualshub.com/

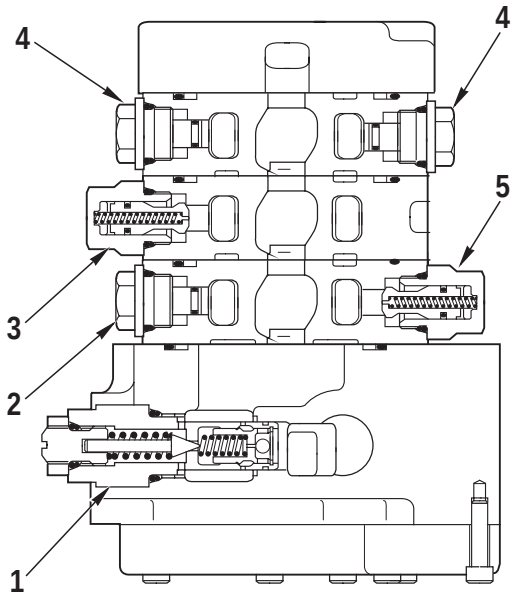

Section A - A

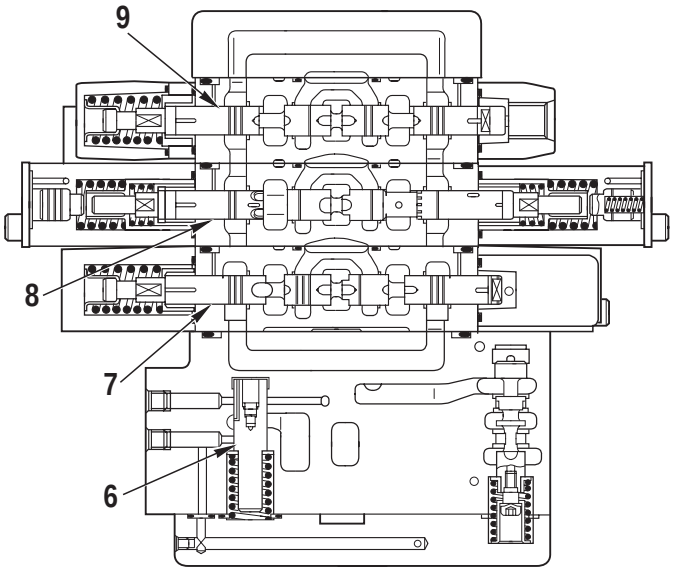

Section B- B

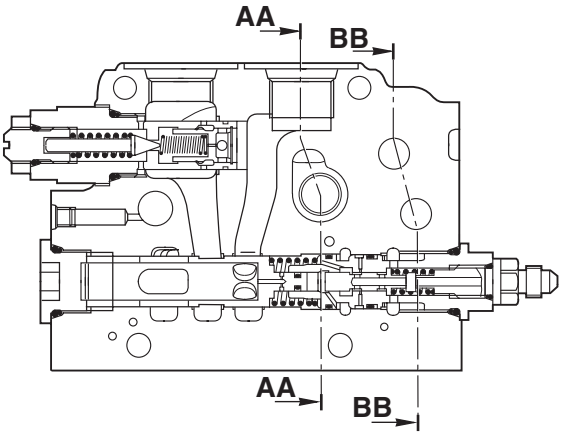

Section C - C

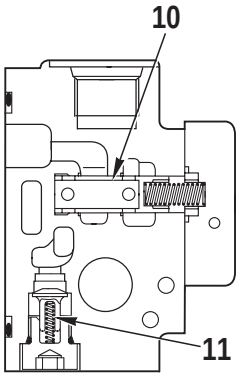

Section AA-AA

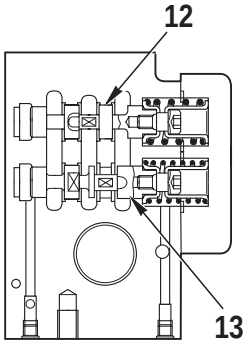

Section BB-BB

RKS00521

1. Main relief valve
2. Stop plug (lift arm bottom side)
3. Suction valve (bucket bottom side)
4. Stop plug for individual relief valve
5. Suction valve (lift arm head side)
6. Series - parallel circuit switching valve
7. Spool (lift arm)
8. Spool (bucket)
9. Spool (attachment)
10. Flow divider
11. Check valve (circulating circuit)
12. Combination circulating valve
13. Leveling circulating valve

https://truckmanualshub.com/

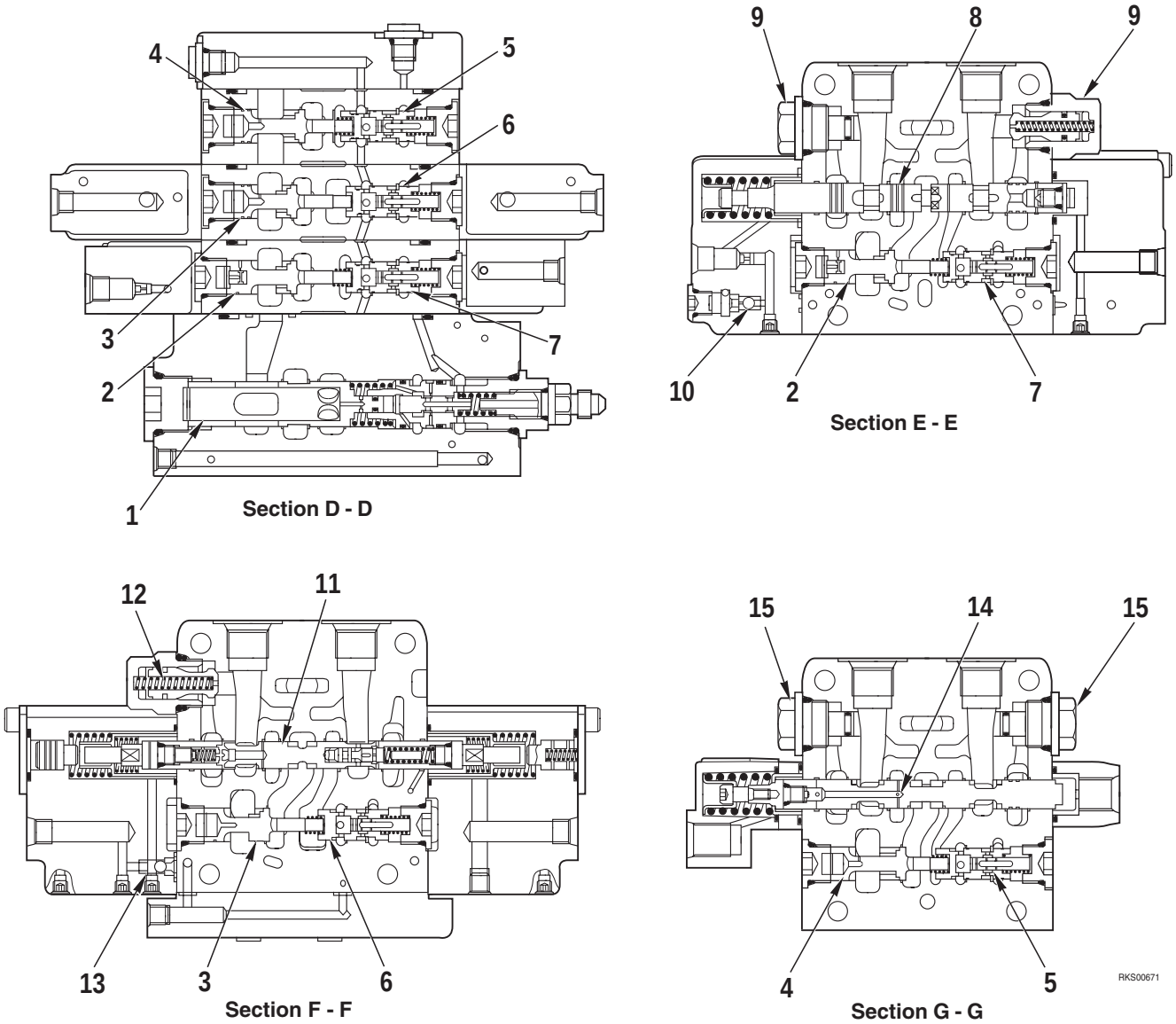

1. Unload valve
2. Pressure compensation valve **F** (lift arm)
3. Pressure compensation valve **F** (bucket)
4. Pressure compensation valve **F** (attachment)
5. Pressure compensation valve **R** (attachment)
6. Pressure compensation valve **R** (bucket)
7. Pressure compensation valve **R** (lift arm)
8. Spool (lift arm)
9. Suction valve
10. Shuttle valve
11. Spool (bucket)
12. Suction valve
13. Shuttle valve
14. Spool (attachment)
15. Stop plug for individual relief valve

★ **F**: Flow control valve
R: Pressure reducing valve

https://truckmanualshub.com/

CONTROL VALVE (4-SPOOL)

SK815-5 SUPER HIGH-FLOW

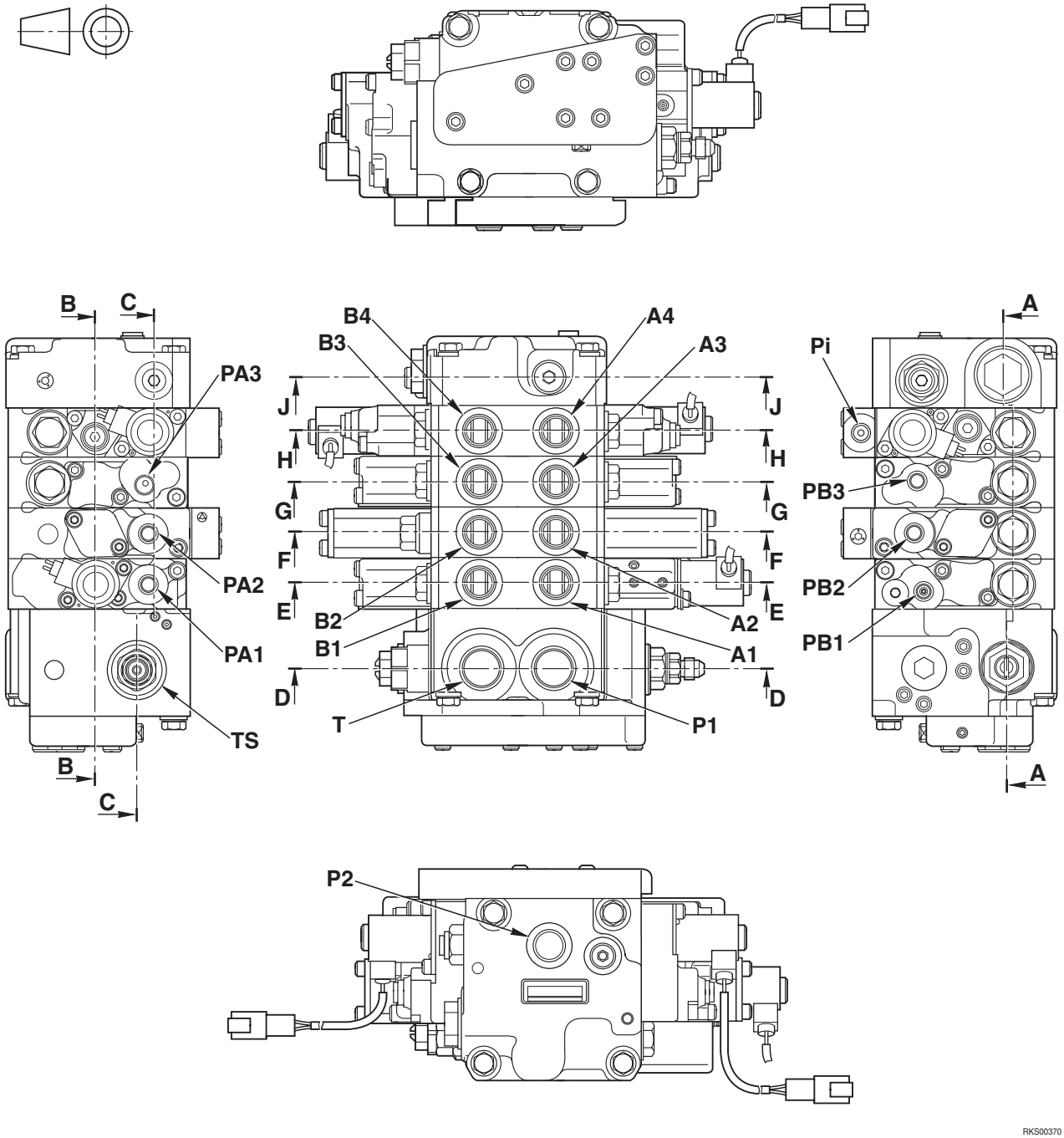

P1. from gear pump
P2: from gear pump
T: to tank
Ts: to tank
Pi2: From solenoid valve group ST2 (S port)
A1: to lift arm cylinder (head side)
A2: to bucket cylinder (head side)
A3: to attachment port
A4: to High - Flow port
B1: to lift arm cylinder (bottom side)
B2: to bucket cylinder (bottom side)
B3: to attachment port
B4: to High-Flow attachment port

https://truckmanualshub.com/

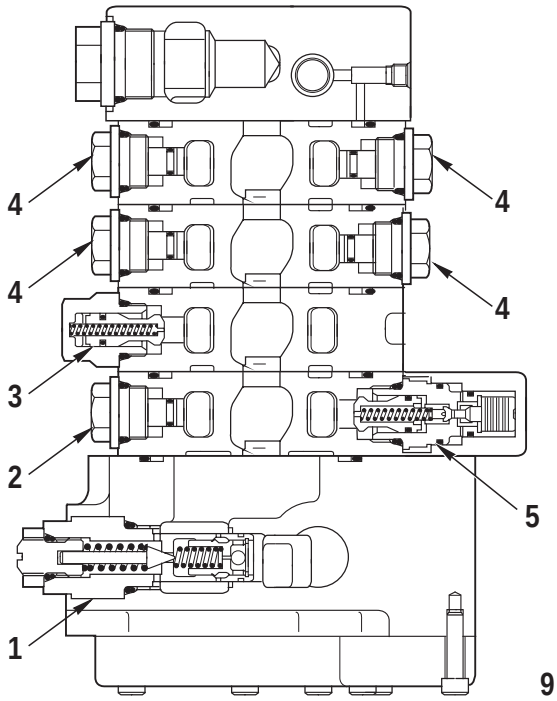

Section A - A

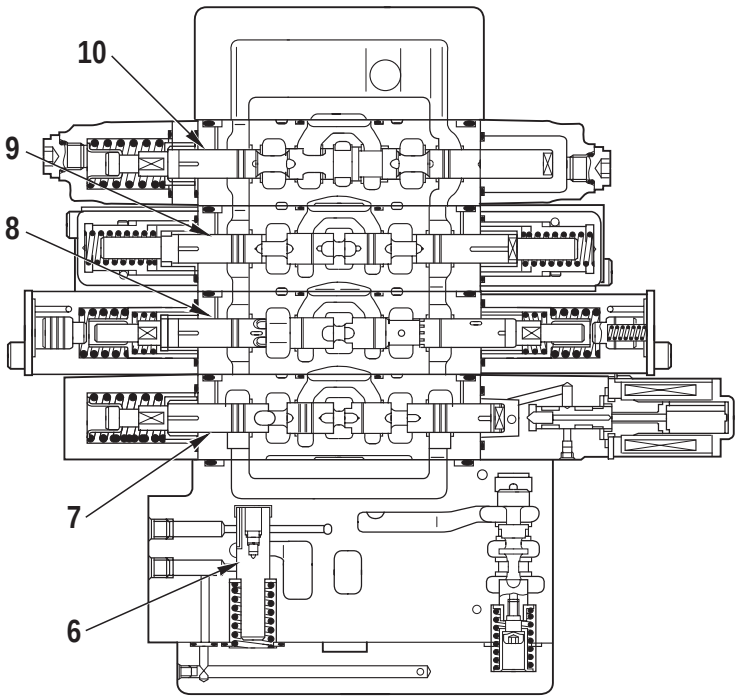

Section B - B

RKS00382

1. Main relief valve
2. Stop plug (lift arm bottom side)
3. Suction valve (bucket bottom side)
4. Stop plug for individual relief valve
5. Float valve
6. Series - parallel circuit switching valve
7. Spool (lift arm)
8. Spool (bucket)
9. Spool (attachment)
10. Spool (High-Flow)

https://truckmanualshub.com/

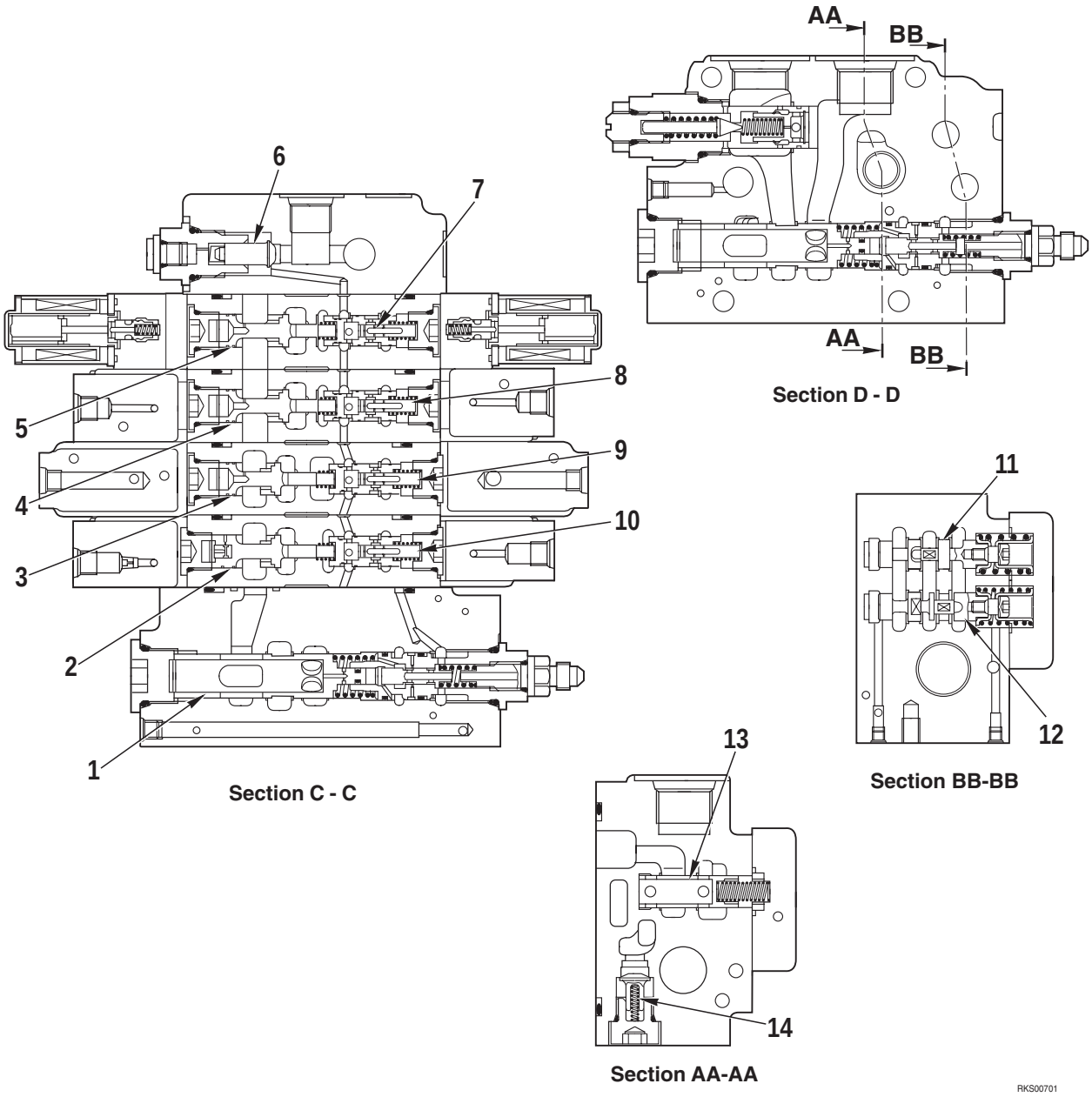

1. Unload valve
2. Pressure compensation valve **F** (lift arm)
3. Pressure compensation valve **F** (bucket)
4. Pressure compensation valve **F** (attachment)
5. Pressure compensation valve **F** (High Flow)
6. Check valve (for High - Flow joining circuit)
7. Pressure compensation valve **R** (High Flow)
8. Pressure compensation vavle **R** (attachment)
9. Pressure compensation valve **R** (bucket)
10. Pressure compensation valve **R** (lift arm)
11. Combination circulating valve
12. Leveling circulating valve
13. Flow-divider
14. Check valve (circulating circuit)

★ **F**: Flow control valve
R: Pressure reducing valve

https://truckmanualshub.com/

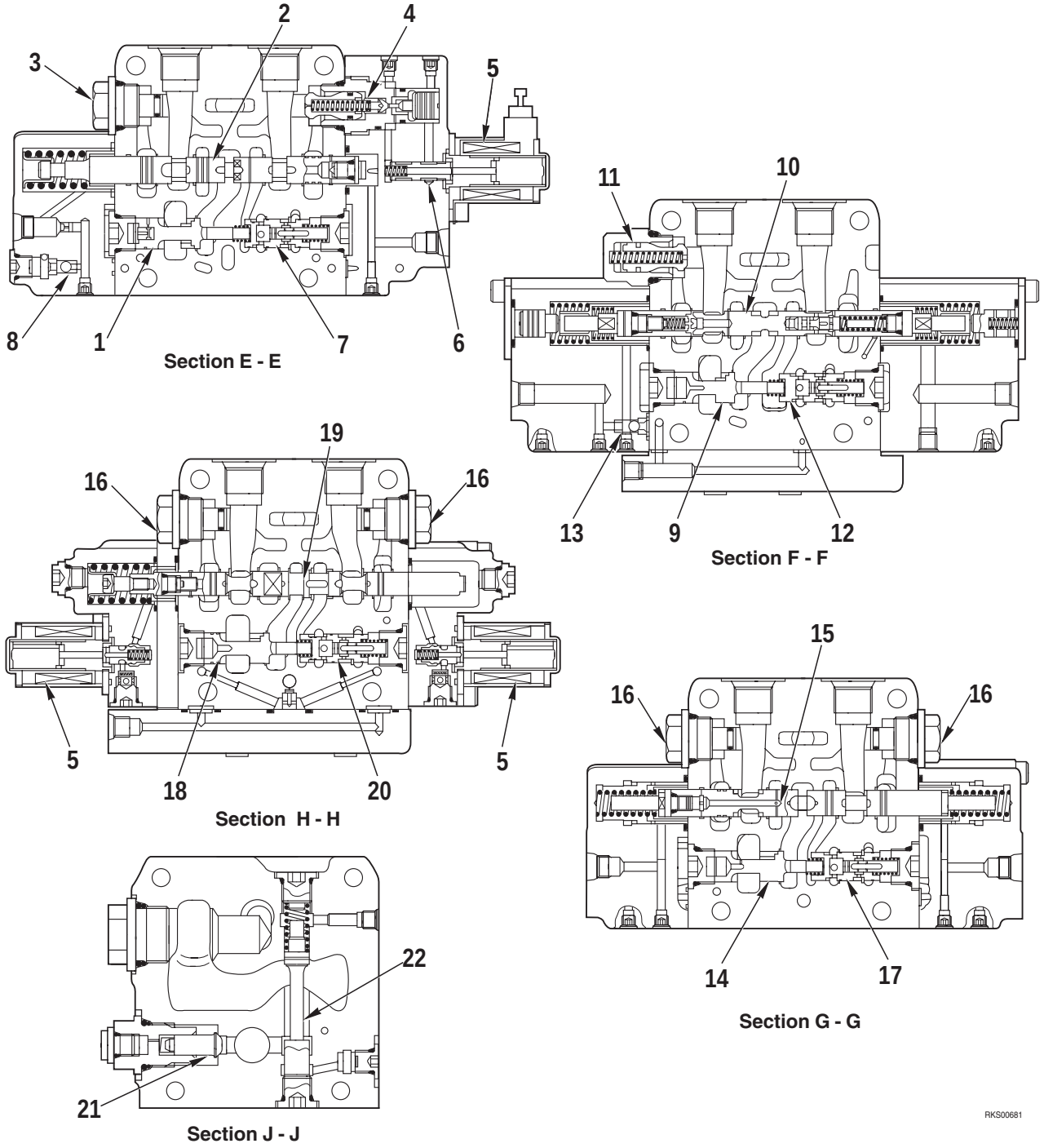

1. Pressure compensation valve **F** (lift arm)
2. Spool (lift arm)
3. Stop plug
4. Float valve
5. On - off solenoid
6. Spool (float)
7. Pressure compensation valve **F** (lift arm)
8. Shuttle valve
9. Pressure compensation valve **R** (bucket)
10. Spool (bucket)
11. Suction valve
12. Pressure compensation valve **R** (bucket)
13. Shuttle valve
14. Pressure compensation valve **F** (attachment)
15. Spool (attachment)
16. Stop plug for individual relief valve
17. Pressure compensation valve **R** (attachment)
18. Pressure compensation valve **F** (High Flow)
19. Spool (High - Flow)
20. Pressure compensation valve **R** (High Flow)
21. Check valve (High - Flow joining circuit)
22. Spool (High Flow joining)

★ **F**: Flow control valve
R: Pressure reducing valve

https://truckmanualshub.com/

CLSS

1. OUTLINE

Features

- CLSS stands for Closed center Load Sensing System, and has the followings characteristics.
  1 - Controlability, not influenced by load.
  2 - Controllable digging force at fine control range.
  3 - Easy simultaneous operation by spool opening proportional flow dividing function.

2. PRESSURE COMPENSATION CONTROL

A valve (pressure compensation valve) is installed to the inlet port side of the control valve to balance the load.
When there is compound operation of the actuators, this valve acts to make pressure difference Δ**P** constant for the upstream flow (inlet port) and downstream flow (outlet port) of the notch of each spool.
In this way, the flow of oil from the pump is divided in proportion to area of opening S1 and S2 of each valve.

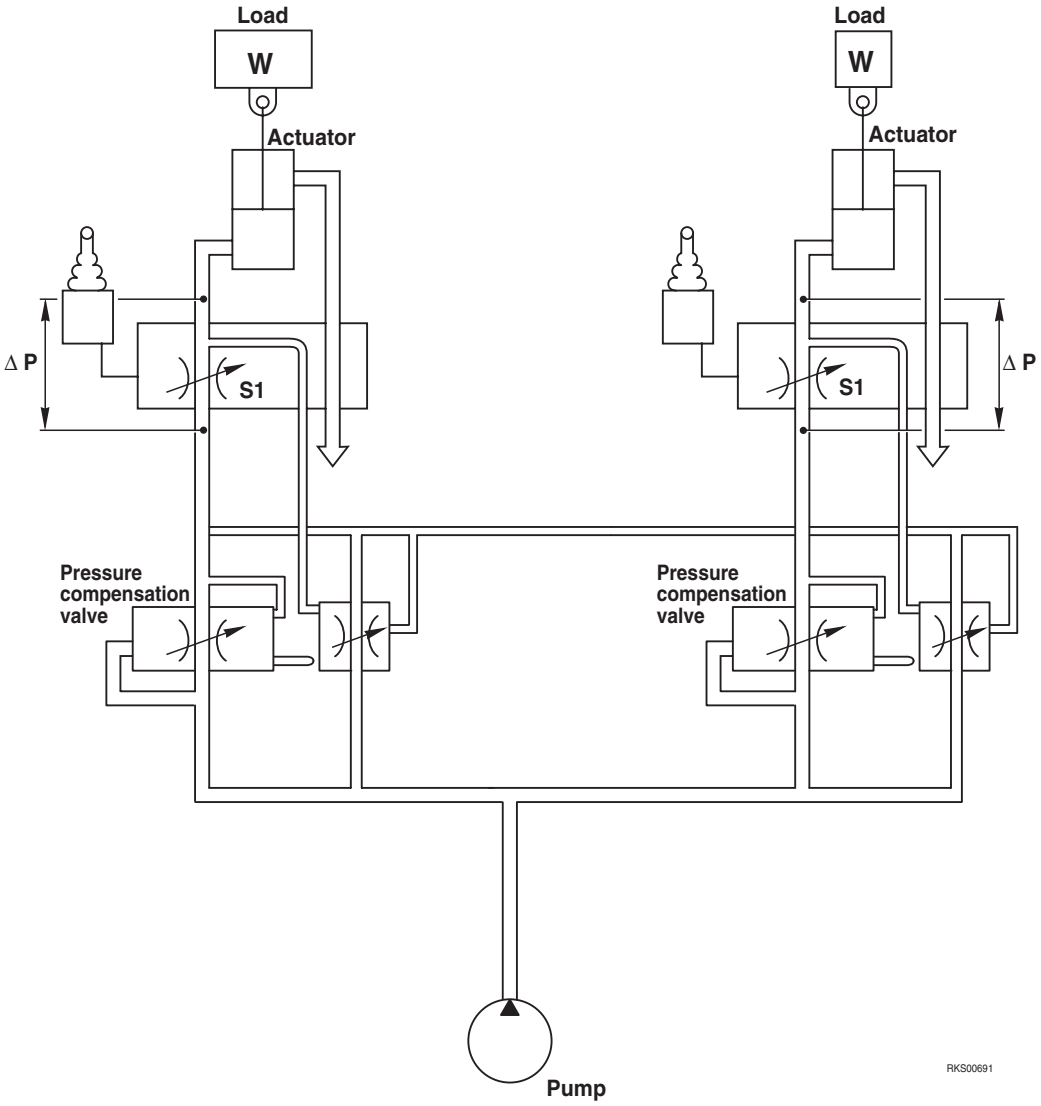

https://truckmanualshub.com/

3. OPERATION FOR EACH FUNCTION AND VALVE

Features

- The small capacity gear pump keeps high speed movement because lift arm and the bucket circuit are connected in a series circuit.
- The control valve has built in self leveling function.
- If loading pressure of bucket becomes beyond a certain value, the lift arm and the bucket circuits automatically change to parallel circuit to keep strong digging force.
- The lift arm, attachment and High-flow section are connected in a parallel circuit and it has pressure compensationing function each section.
- During individual operations, attachment High-flow keep individual demand flow rate.
  However during compound operations, they are divided in the proportion of 1 to 9 and keep High-flow section flow rate. (SK815-5 has only Super-flow specification.)

Hydraulic circuit diagram and names of valves

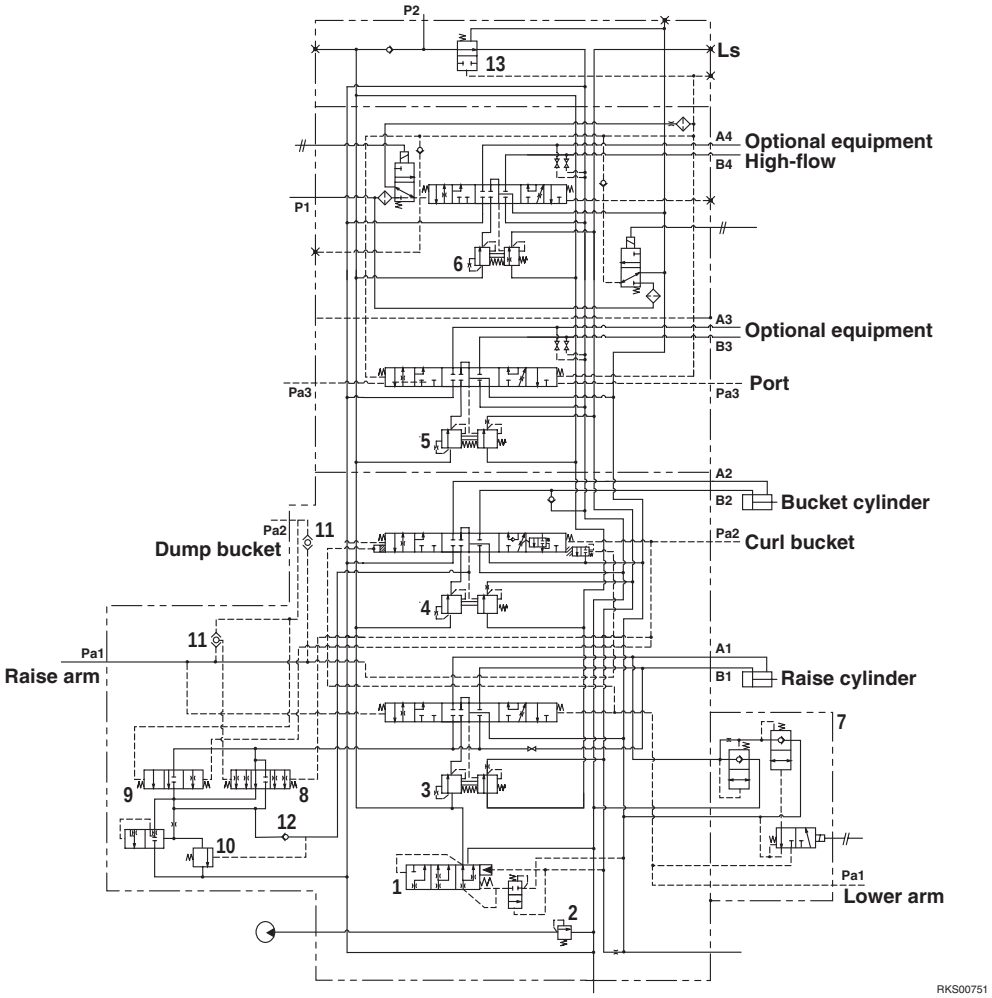

1. Unload valve
2. Main relief valve
3. Pressure compensation valve (lift arm)
4. Pressure compensation valve (bucket)
5. Pressure compensation valve (attachment)
6. Pressure compensation valve (High - Flow)
7. Float valve
8. Leveling circulating valve
9. Combination circulating valve
10. Flow divider
11. Shuttle valve
12. Check valve (circulating circuit)
13. High - Flow joining spool

https://truckmanualshub.com/

3.1 SERIES CIRCUIT

Function

- Return flow rate from the lift arm is recirculated to the bucket.

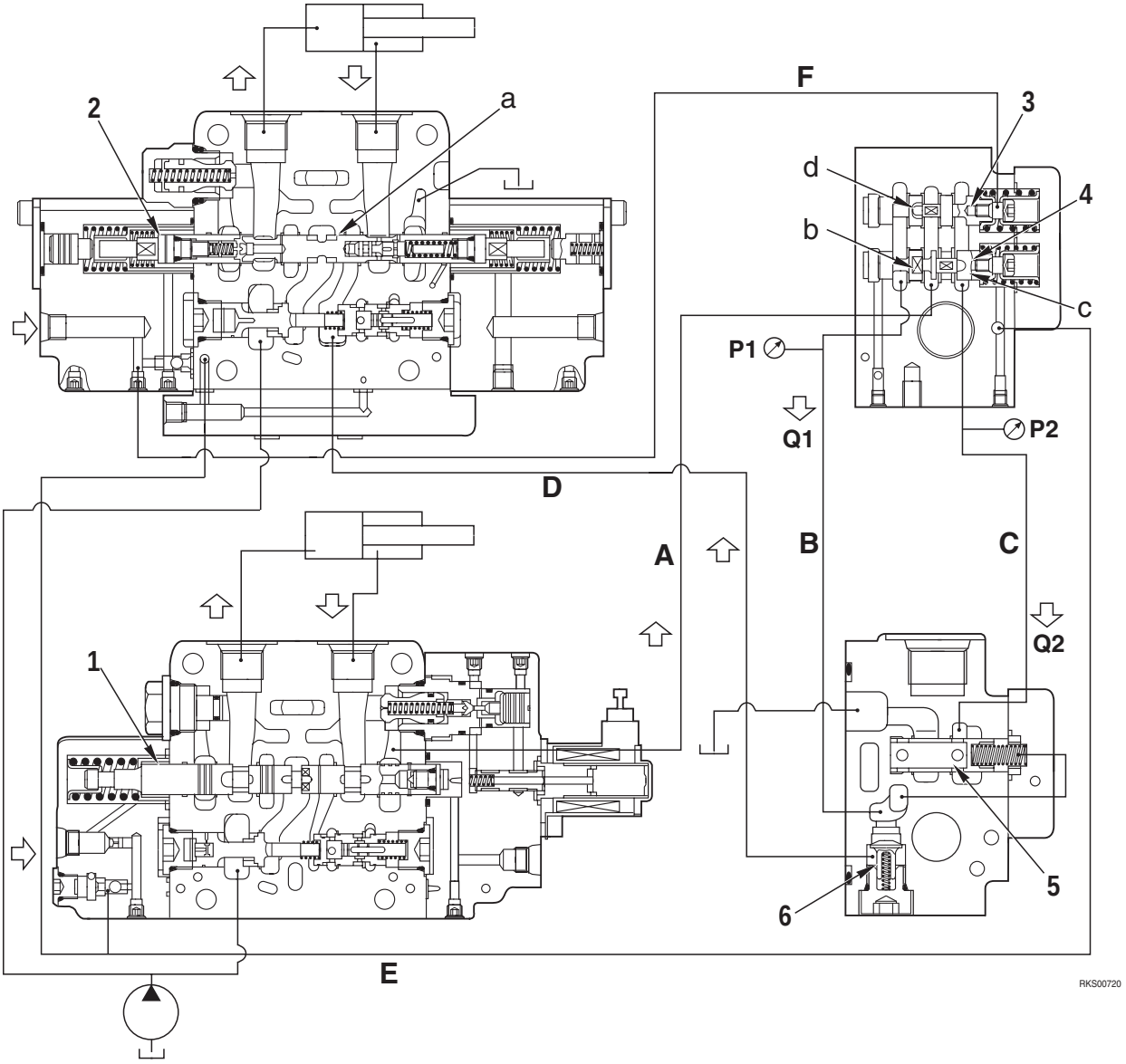

Operation

When the lift arm raise and the bucket dump are operated at the same time.

- The lift arm spool (1) strokes fully and the bucket spool (2) stokes by half.
- When this happens, notch (**a**) doesn't open, so all flow rate from pump supplies to the lift arm raise.
- The lift arm and the bucket **PPC** pressure are sent by passage **E** and **F**.
  Then the leveling circulating valve (3) and the combination circulating valve (4) stroke fully.
- Return flow rate from the lift arm cylinder passes through passage **A**.
  Then it is divided to passage **B** and **C**, by the leveling circulating valve (4) and the combination circulating valve (3).
- When this happens, the flow divider (5) is operated as **P1=P2**, so flow rate (**Q1**, **Q2**) is divided to passage **B** and **C** in proportion to the area of opening of notch (**b**) and (**c**) as below expression.
  Q1:Q2= (notch (**b**) + notch (**d**)): notch (**C**)
  Q1= flow rate flows to **B**, **Q2**= flow rate flows to **C**
- **Q1** passes through the check valve (6) and then supplies to the bucket cylinder.

https://truckmanualshub.com/

3.2 SELF LEVELING FUNCTION

Function

- When the only lever of the lift arm raise is operated, the lift arm raise and the bucket dump are worked.
  When this happens, the work equipment can raise with constant bucket bottom angle. (Only the lift arm raise)..

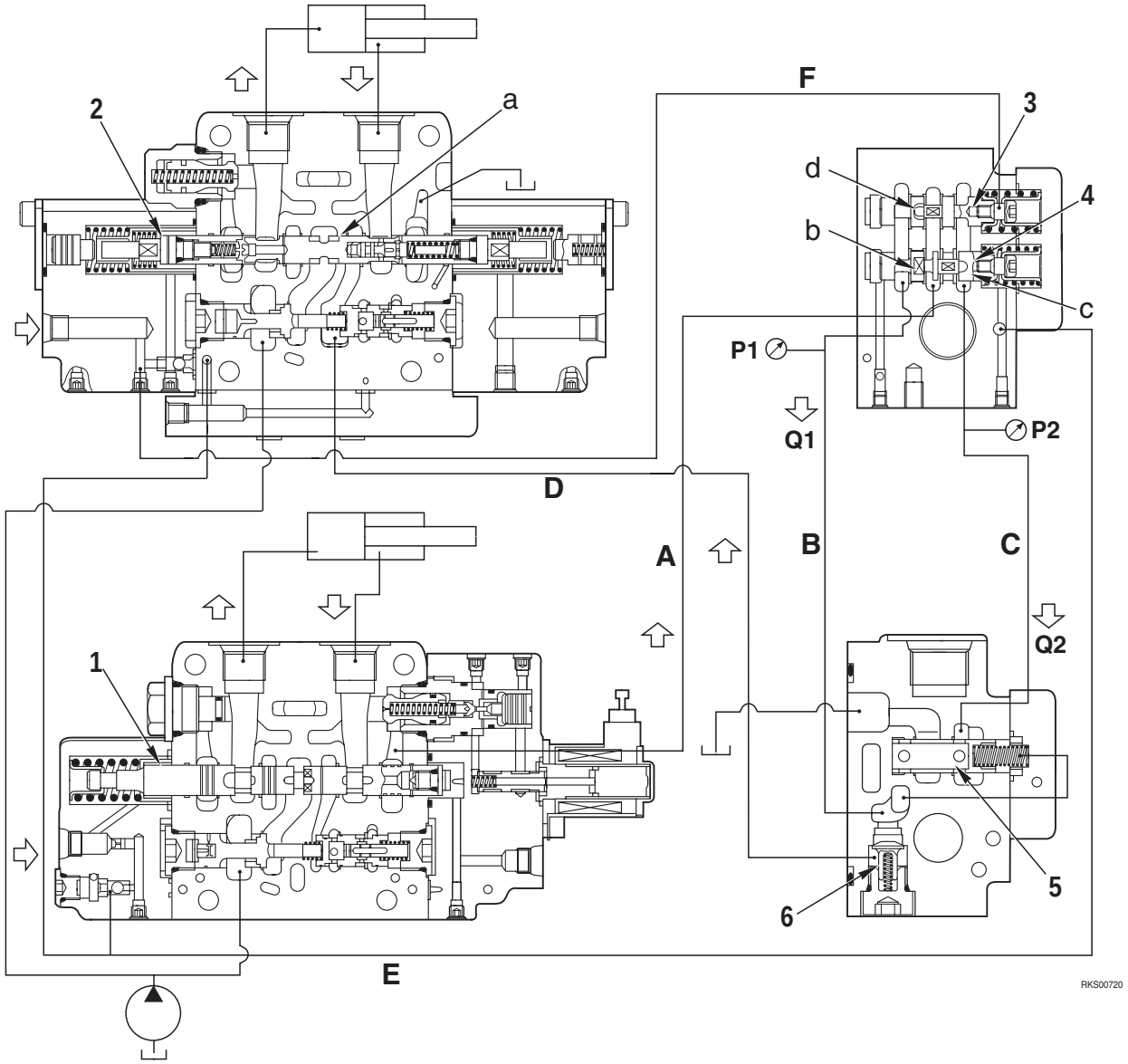

Operation

When the lift arm raise is operated individually.

- The lift arm spool (1) strokes fully and the bucket spool strokes by half.
- When this happens, notch (**a**) doesn't open, so all flow rate from pump supplies to the lift arm raise.
- The lift arm raise **PPC** pressure is sent by passage **E**.
  Then the leveling circulating valve strokes fully.
- Return flow rate from the lift arm cylinder passes through passage **A**.
  Then it is divided to passage **B** and **C**, by the leveling circulating valve (3).
- When this happens, the flow divider (5) is operated as **P1=P2**, so flow rate (**Q1**, **Q2**) is divided to **B** and **C** in prportion to the area of opening of notch (**b**) and (**c**) as below expression.
  Q1:Q2= notch (**b**):notch (**C**)
- **Q1** passes through the check valve (6) and then supplies to the bucket cylinder.

https://truckmanualshub.com/

3.3 THE FUNCTION TO SWITCH SERIES CIRCUIT TO PARALLEL CIRCUIT

Function

- (1) Low bucket load: Series circuit
- (2) High bucket load: Parallel circuit
- Depend on bucket load, a circuit can change automatically as above.
  Then the machine gets high speed and strong digging power.

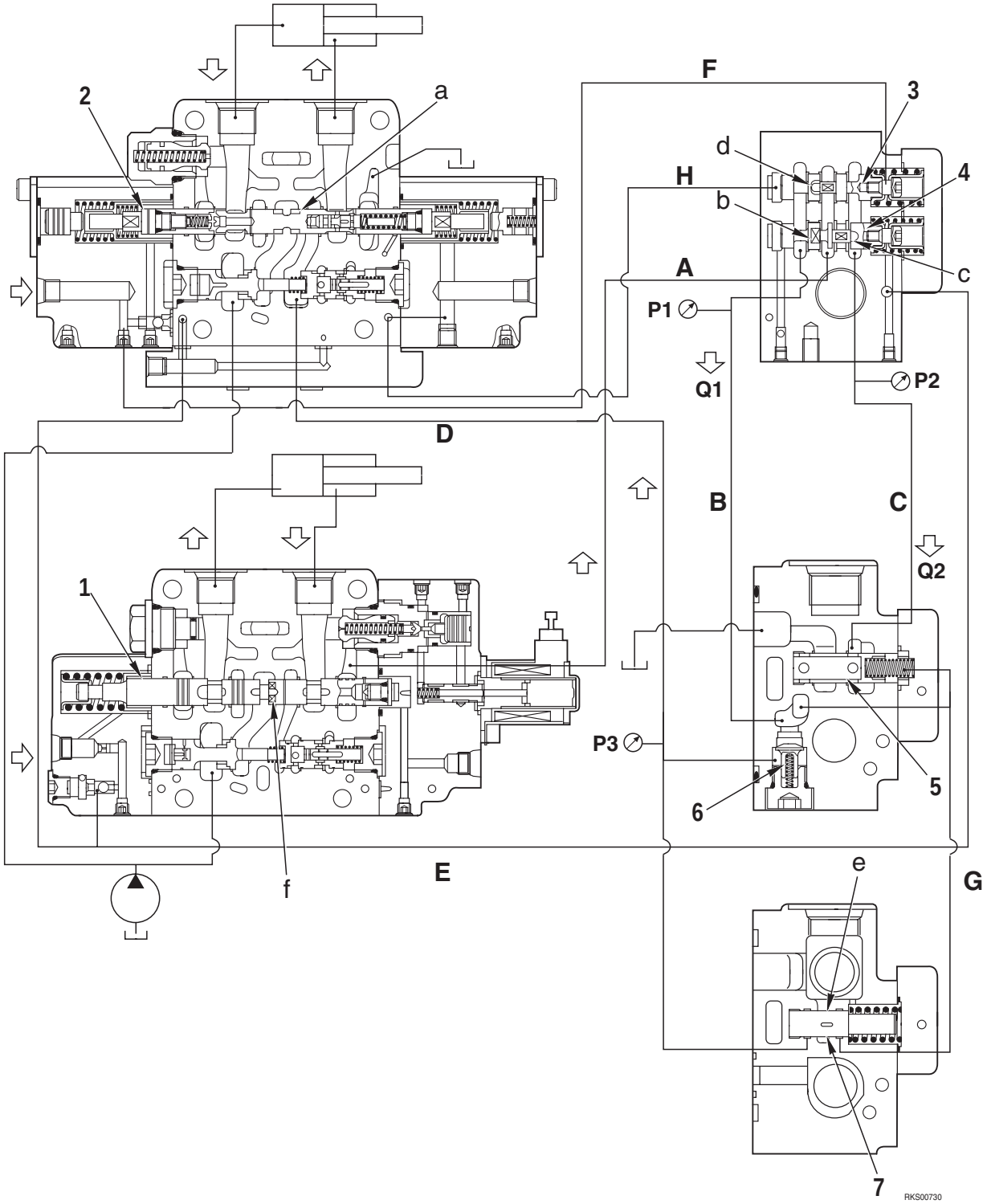

https://truckmanualshub.com/

Operation

When the lift arm raise and the bucket digging are operated at the same time.

- The lift arm spool (1) and the bucket spool (2) stroke fully.
- When this happens, the bucket digging **PPC** pressure is sent by passage **H**.
  Then the combination circulating valve (3) strokes fully to the right and also the lift arm raise **PPC** pressure is sent by passage **E**.
  Then the leveling circulating valve (4) strokes fully to the left.
- Return flow rate from the lift arm cylinder passes through passage **A**.
  Then it is divided to passage **B** and **C**, by the leveling circulating valve (4) and the combination circulating valve (3).
- When this happens, the flow divider (5) is operated as **P1=P2**, so flow rate (**Q1**, **Q2**) is divided to passage **B** and **C** in proportion to the area of opening as below expression.
  Q1:Q2= (notch (**b**) + notch (**d**)): notch (**C**)
  Q1= flow rate flows to **B**
  Q2=flow rate flows to **C**
- If the bucket load becomes beyond a certain valve by influences of digging, the series-parallel switching valve (7) strokes to the right.
  Then it passes thorough passage **G** by opening notch (**e**).
  And then the spring chamber of flow divider (5) is connected to tank.
- As a result, flow divider strokes fully to the right, and **P2=T**
  Return flow rate from the lift arm is connected with tank totally, and **Q1**=0L/min.
- When this happens, notch (**f**) of the lift arm spool and notch (**a**) of the bucket spool open, so the lift arm and the bucket become parallel circuit (**CLSS**).
  And flow rate of the lift arm raise (**Q3**) and teh bucket digging flow rate are divided as below expression.
  Q3:Q4= notch (**f**): notch (**a**)

https://truckmanualshub.com/

3.4 PRESSURE COMPENSATION VALVE

Function

- During compound operations, if the load pressure becomes lower than the other actuator and the oil flow tries to increase, compensation is received. (When this happens, the other actuator being used for compund operation (right side) is at a higher load than the actuator on this side (left side)).

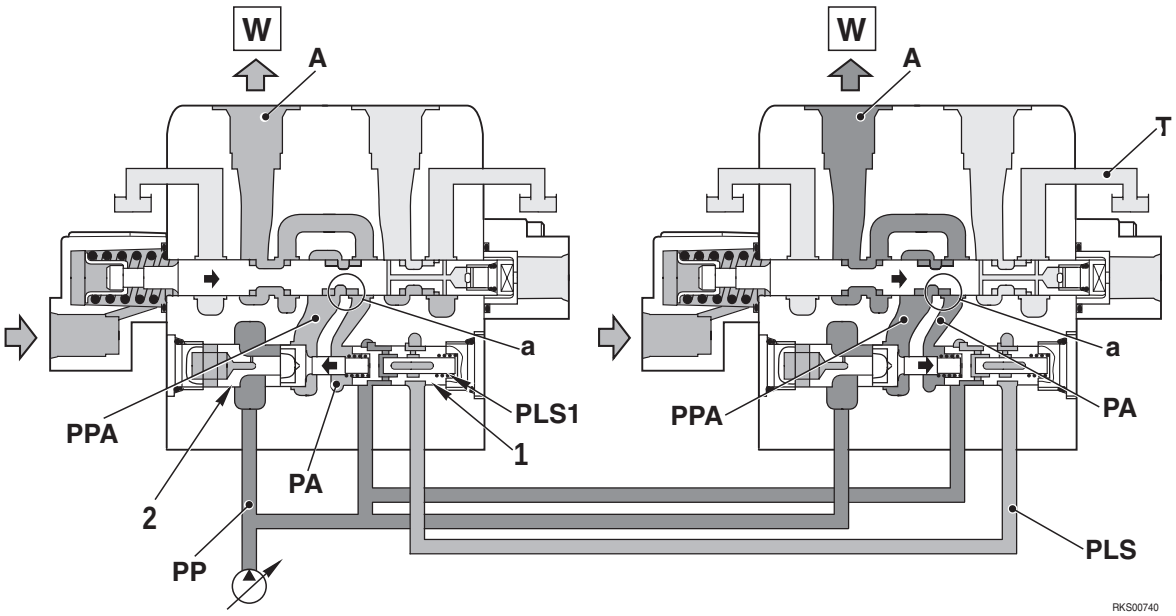

Operation

- If the load pressure of the other actuator (right side) becomes higher during compound operations, the oil flow in actuator circuit **A** on this side (left side) tries to increase.
- If this happens, the **LS** pressure **PLS** of the other actuator acts on spring chamber **PLS1**, and reducing valve (1) and flow control valve (2) are pushed to the left in the direction of the arrow.
- Flow control valve (2) throttles the area of opening between pump circuit **PP** and spool upstream **PPA**, and pressure loss is generated between **PP** and **PPA**.
- Flow control valve (2) and reducing valve (1) are balanced in position where the difference in pressure between **PLS** and **PA** acting on both ends of reducing valve (2) and the pressure loss between **PP** and **PPA** on both sides of flow control valve (2) are the same.
- In this way, the pressure difference between upstream pressure **PPA** and down stream pressure **PA** of both spools used during compund operations is the same, so the pump flow is divided in prioportion to the area of opening of notch **a** of each spool.

https://truckmanualshub.com/

3.5 DIVIDING FUNCTION (1:9) (Only Super-Flow specification for SK815-5)

Function

1 When each section is operated individually
Attachment: 60L/min
High-Flow attachment: 100L/min

2 When standard attachment and high flow attachment are operated at the same time
1:9=attachment: High-Flow

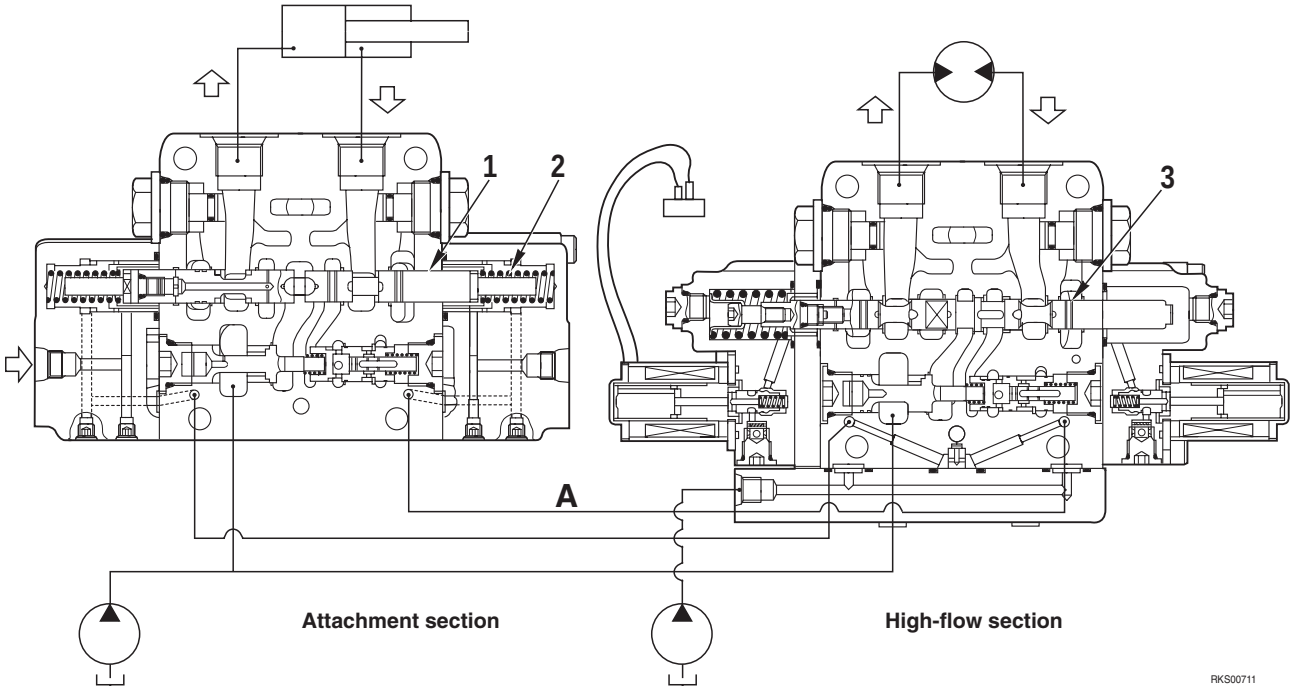

Operation

1 When each section is operated individually

- Attachment spool (1) and High-Flow spool (3) stroke fully and individually, therefore they keep demand flow rate individually.
  Attachment: 60L/min
  High-Flow: 100L/min

2 When attachment and High-Flow are operated at the same time.

- High-Flow attachment **PPC** pressure passes through passage **A**, is sent to retainer (2) and makes retainer (2) stroke to the left.
- When this happens, attachment spool (1) can stroke by half.
- As a result, flow rate of attachment and High-Flow are divided as below expression.
  Attachment: High-Flow= 1:9
- Therefore flow rate of high flow is kept.

https://truckmanualshub.com/

SOLENOID VALVE

SOLENOID VALVE GROUP ST1

(SERVOCONTROL - PARKING BRAKE - 2nd SPEED)

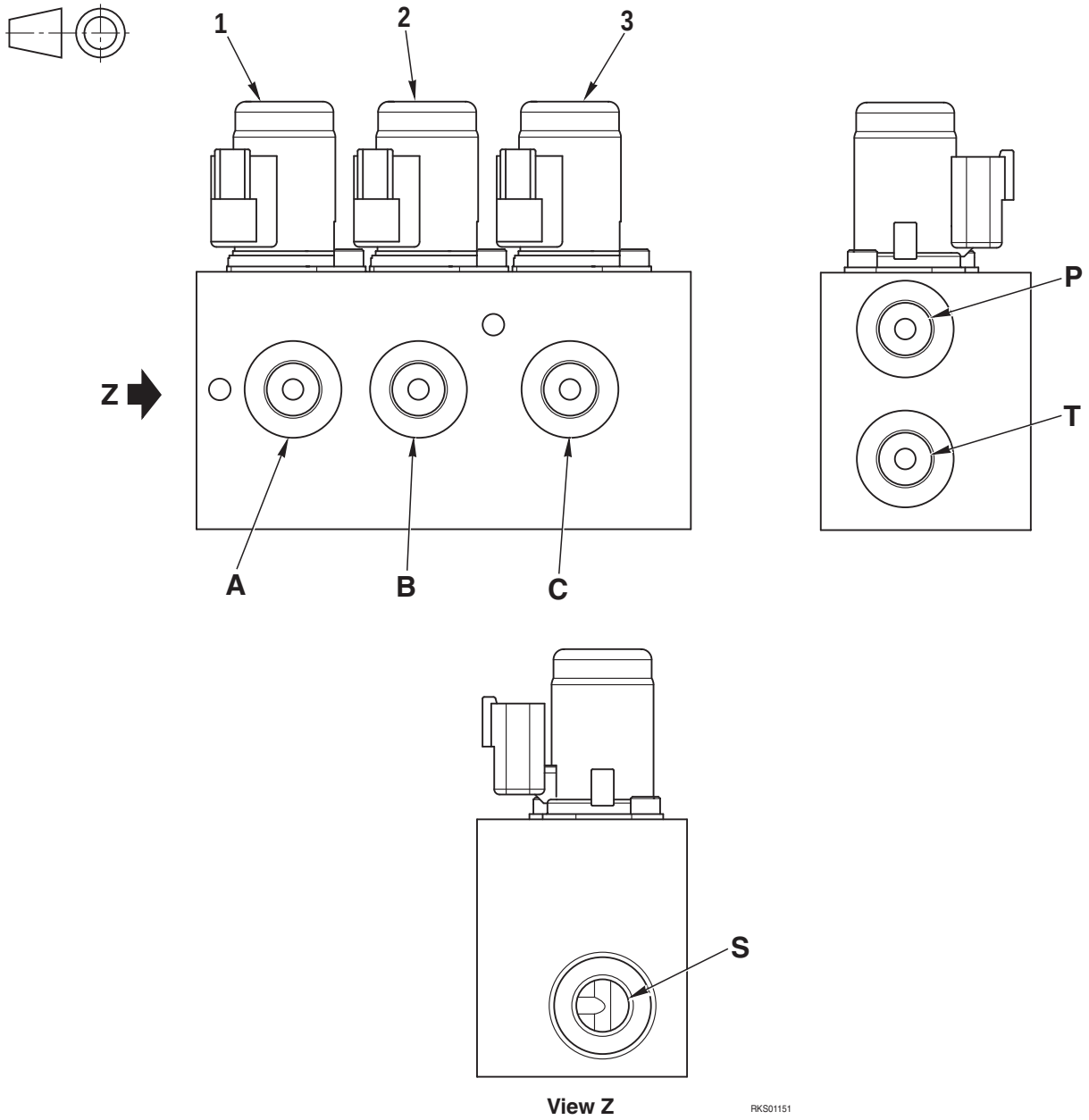

FUNCTION

1. 2nd speed
2. Servocontrol
3. Parking brake

A Port	–	To travel motors (PP1 port)
B Port	–	To PPC valve
C Port	–	To travel motors (PP2 port)
P Port	–	From hydraulic pump (E1 port)
T Port	–	To hydraulic tank
S Port	–	To accumulator

https://truckmanualshub.com/

SOLENOID VALVE ST2

HIGH-FLOW CONTROL

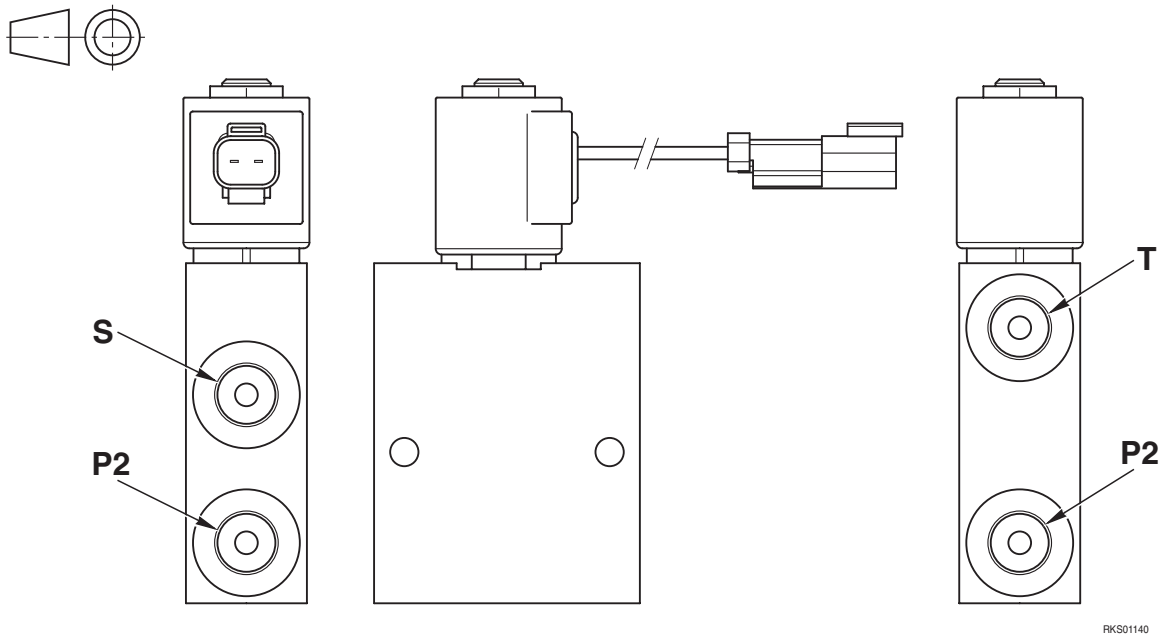

T Port – To hydraulic tank
P1 Port – From control valve (PA3 port)
P2 Port – From control valve (PB3 port)
S Port – To control valve (Pi2 port)

https://truckmanualshub.com/

ACCUMULATOR

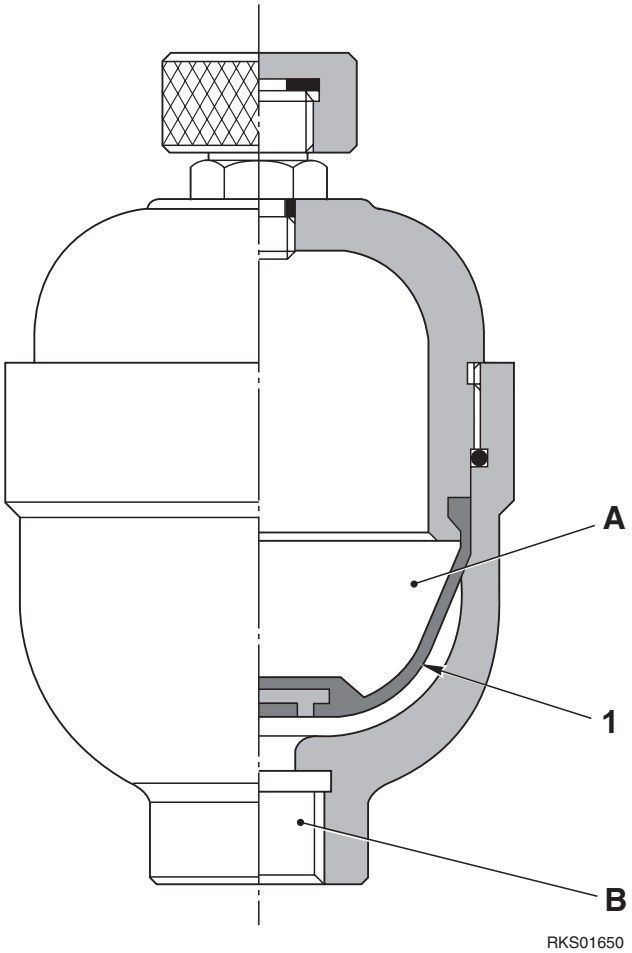

TECHNICAL DATA

Servocontrol feed unit

- Nominal volume: 0.35 ℓ
- Pre-loading: 8 bar
- Working pressure: 25 – 27 bar

FUNCTION

- An elastic rubber bag (1) containing nitrogen is fitted inside the accumulator to maintain oil pressure in the circuit to which the accumulator is connected.

OPERATION

- When the engine is running the chamber **A** of the rubber bag (1) (containing nitrogen) is compressed by oil under pressure coming from line **B**.
- If the oil under in line **B** falls below the maximum calibration pressure (even after intensive use), the rubber bag (1) will expand due to pressure from the nitrogen it.

https://truckmanualshub.com/

PATTERN CHANGE VALVE (OPTIONAL)

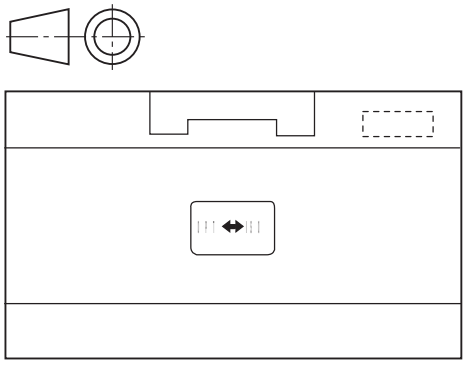

View Z

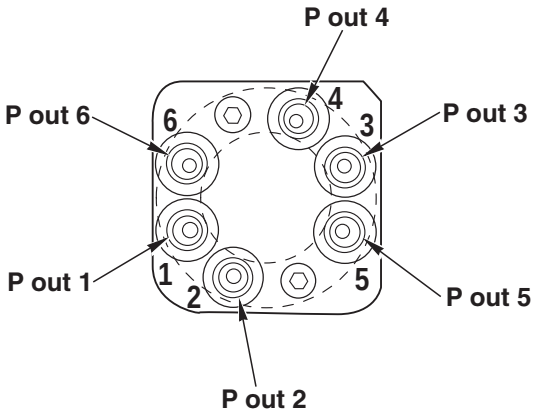

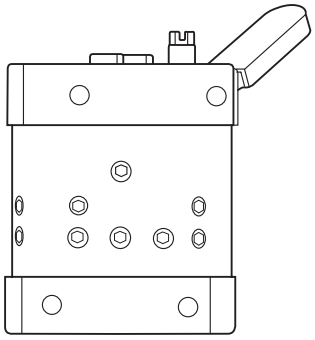

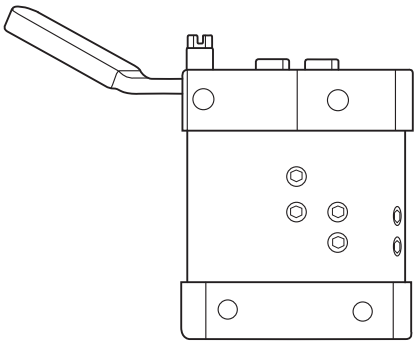

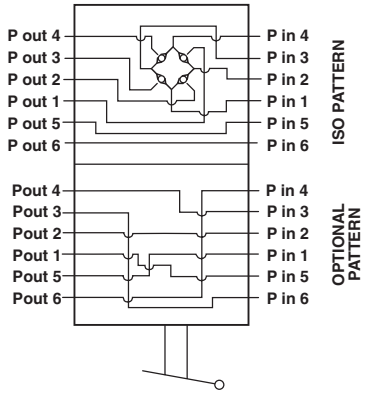

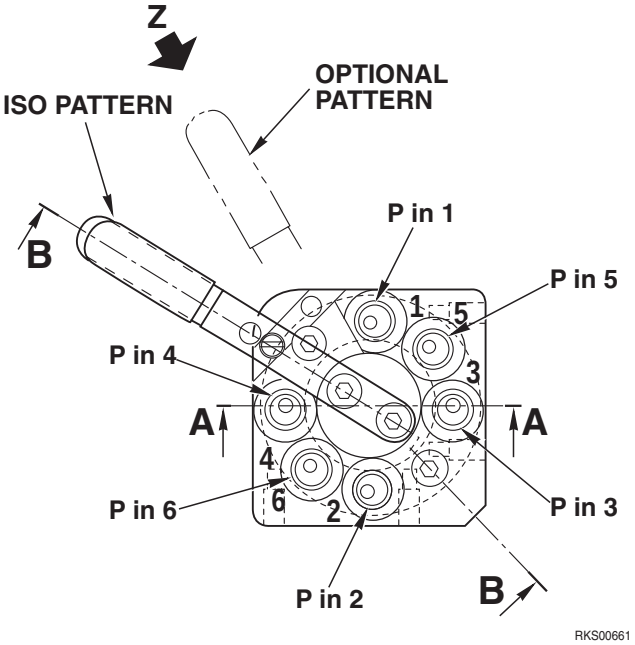

Pin 1.	From L.H. PPC valve (P4 port)	Pout 1.	To hydraulic pump (DA1 port)
Pin 2.	From L.H. PPC valve (P1 port)	Pout 2.	To hydraulic pump (DA2 port)
Pin 3.	From L.H. PPC valve (P3 port)	Pout 3.	To hydraulic pump (DB1 port)
Pin 4.	From L.H. PPC valve (P2 port)	Pout 4.	To hydraulic pump (DB2 port)
Pin 5.	From R.H. PPC valve (P1 port)	Pout 5.	To control valve (PA1 port)
Pin 6.	From R.H. PPC valve (P2 port)	Pout 6.	To control valve (PB1 port)

https://truckmanualshub.com/

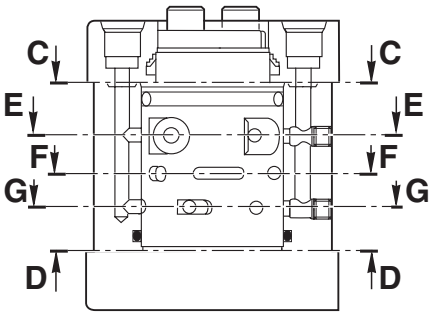

Section A - A

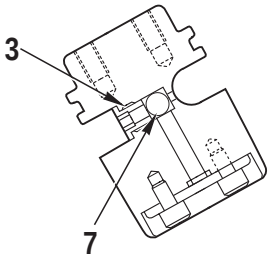

Section H - H

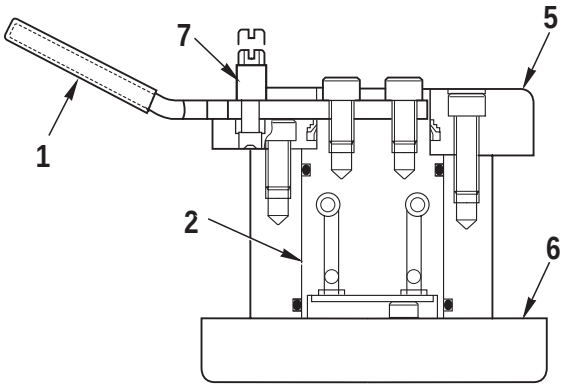

Section B - B

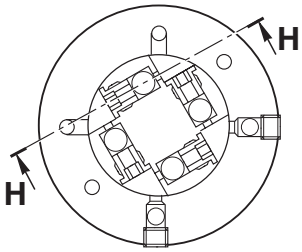

Section E - E

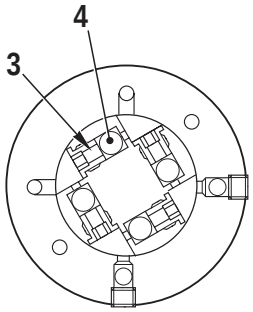

Section E - E

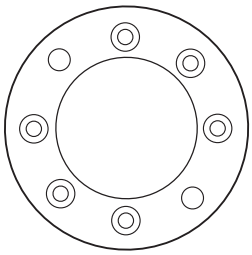

Section C - C

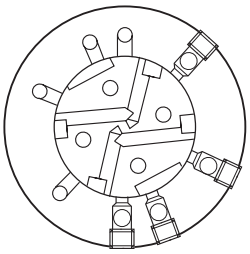

Section F - F

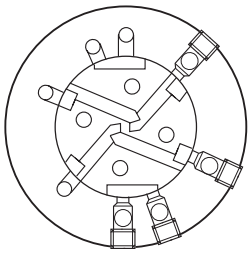

Section F - F

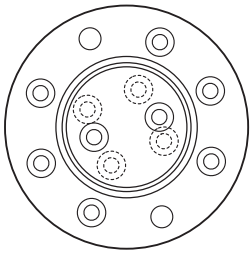

Section D - D

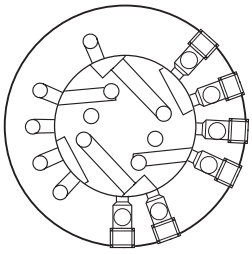

Section G - G

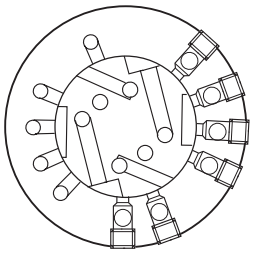

Section G - G

RKS00651

1. Lever
2. Rotor
3. Valce seat
4. Ball
5. Upper cover
6. Lower cover
7. Pin lock

https://truckmanualshub.com/

OPERATION

PATTERN ISO

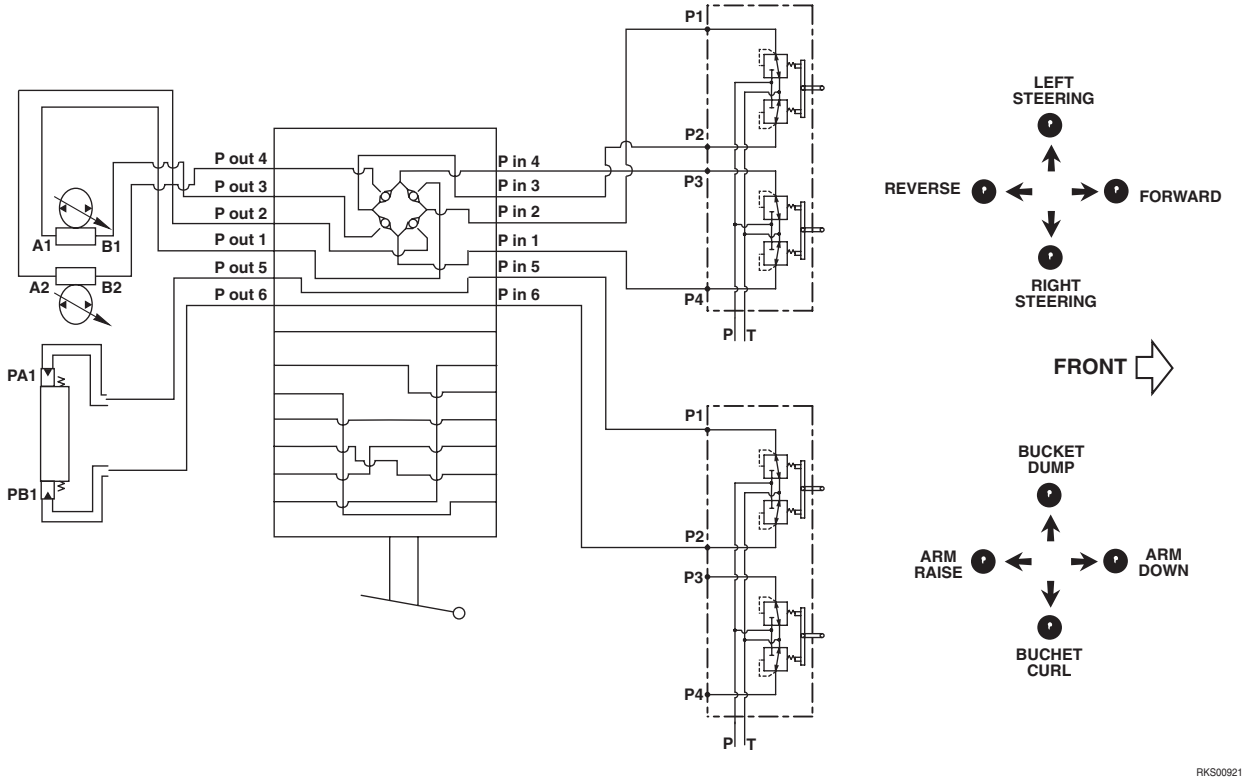

PATTERN OPTIONAL

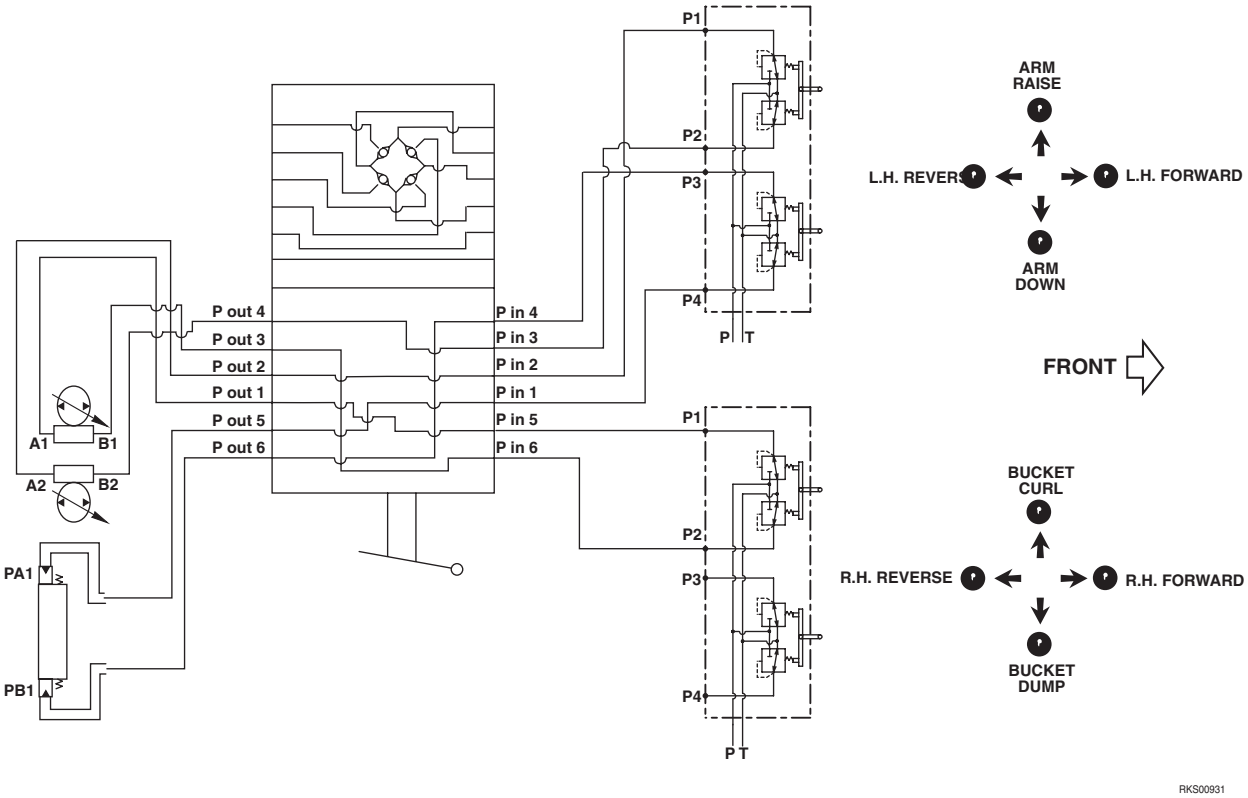

https://truckmanualshub.com/

PAGE INTENTIONALLY LEFT BLANK

https://truckmanualshub.com/

R.H. PPC VALVE (STANDARD)

EQUIPMENT CONTROL

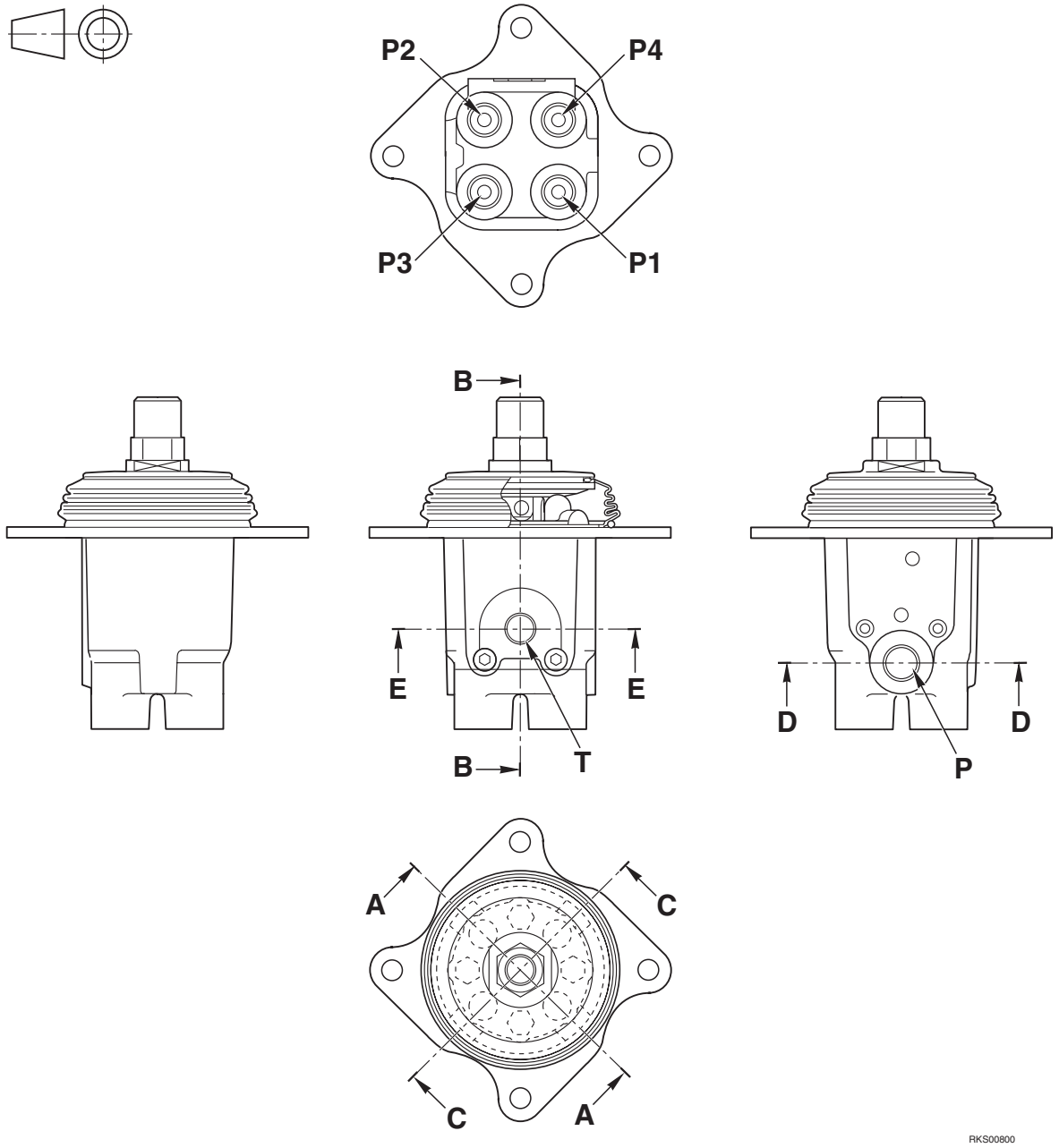

P1 port	-	To control valve (PA1 port)
P2 port	-	To control valve (PB1 port)
P3 port	-	To control valve (PA2 port)
P4 port	-	To control valve (PB2 port)
P port	-	From solenoid valve group ST1 (B port)
T port	-	To hydraulic tank

FUNCTION

P1	Lower arm
P2	Raise arm
P3	Curl bucket
P4	Dump bucket

https://truckmanualshub.com/

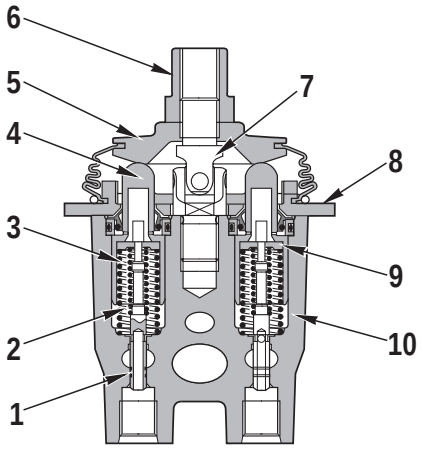

Section A - A

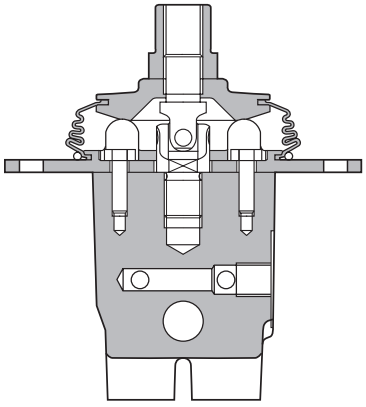

Section B - B

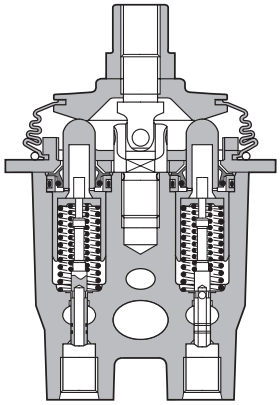

Section C - C

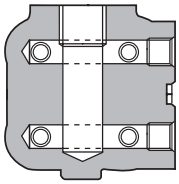

Section D - D

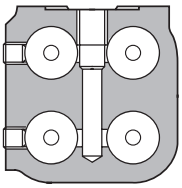

Section E - E

RKS00811

1. Spool
2. Metering spring
3. Centering spring
4. Piston
5. Disc
6. Nut
7. Joint
8. Cover
9. Stopper
10. Body

https://truckmanualshub.com/

FUNCTION

1. **NEUTRAL**
   Ports **P1** and **P2** of the PPC valve are connected to drain chamber **D** through fine control hole **f** in spool (1). (Fig. 1)

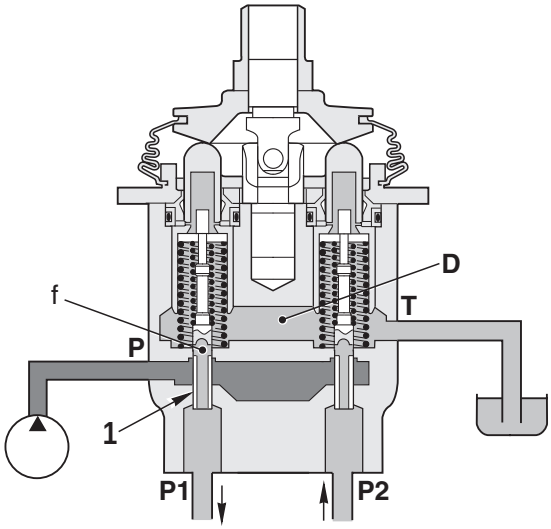

Fig. 1

2. **During fine control (NEUTRAL → fine control)**

- When piston (4) starts to be pushed by disc (5), retainer (9) is pushed; spool (1) is also pushed by metering spring (2), and moves down.
  When this happens, fine control hole **f** is shut off from drain chamber **D**, and at almost the same time, it is connected to pump pressure chamber **PP**, so pilot pressure oil from the control pump passes through fine control hole **f** and goes to port **P1**.
  When the pressure at port **P1** becomes higher, spool (1) is pushed back and fine control hole **f** is shut off from pump pressure chamber **PP**.
  At almost the same time, it is connected to drain chamber **D** to release the pressure at port **P1**.
  When this happens, spool (1) moves up or down so that the force of metering spring (2) is balanced with the pressure at port **P1**. The relationship in the position of spool (1) and body (10) (fine control hole **f** is at a point midway between drain hole **D** and pump pressure chamber **PP**) does not change even if the pressure at port P1 becomes max.
  Therefore, metering spring (2) is compressed proportionally to the amount of movement of the control lever, so the pressure at port **P1** also rises in proportion to the travel of the control lever. (Fig. 2)

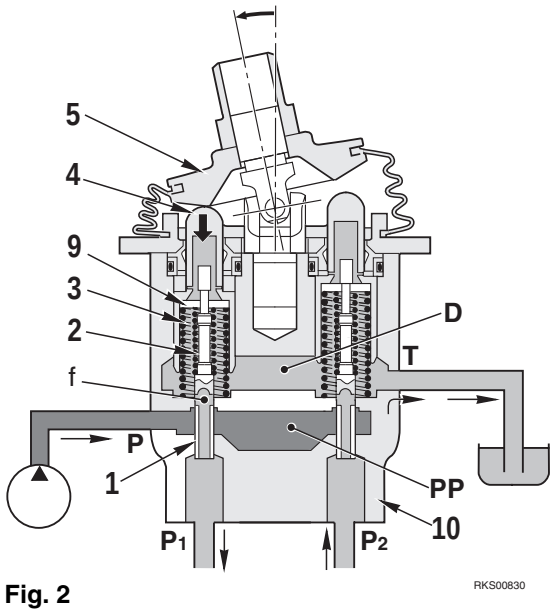

Fig. 2

https://truckmanualshub.com/

3. **During fine control (when the lever is returned) (fine control → neutral)**
   When disc (5) starts to be returned, spool (1) is pushed up by the force of centering spring (3) and the pressure at port **P1**.
   When this happens, fine control hole **f** is connected to drain chamber **D** and the pressure oil at port **P1** is released.
   If the pressure at port **P1** drops too far, spool (1) is pushed down by metering spring (2), and fine control hole **f** is shut off from drain chamber **D**.
   At almost the same time, it is connected to pump pressure chamber **PP**, and the pump pressure is supplied until the pressure at port **P1** recovers to a pressure that corresponds to the lever position. (Fig. 3).

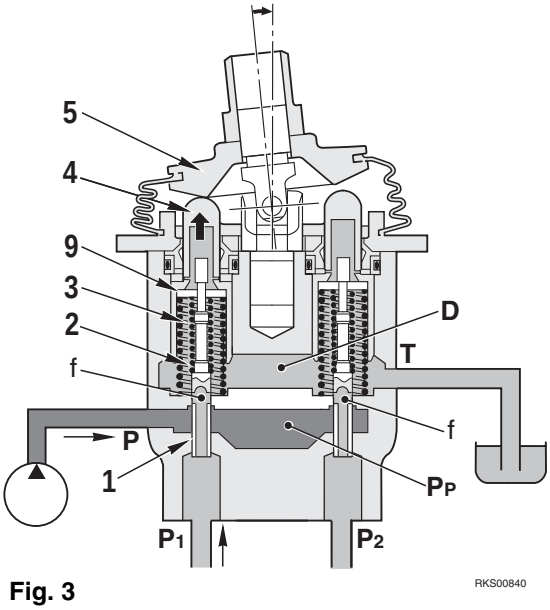

Fig. 3

https://truckmanualshub.com/

R.H. PPC VALVE (PATTERN CHANGE) (OPTIONAL)

EQUIPMENT AND TRAVEL CONTROL

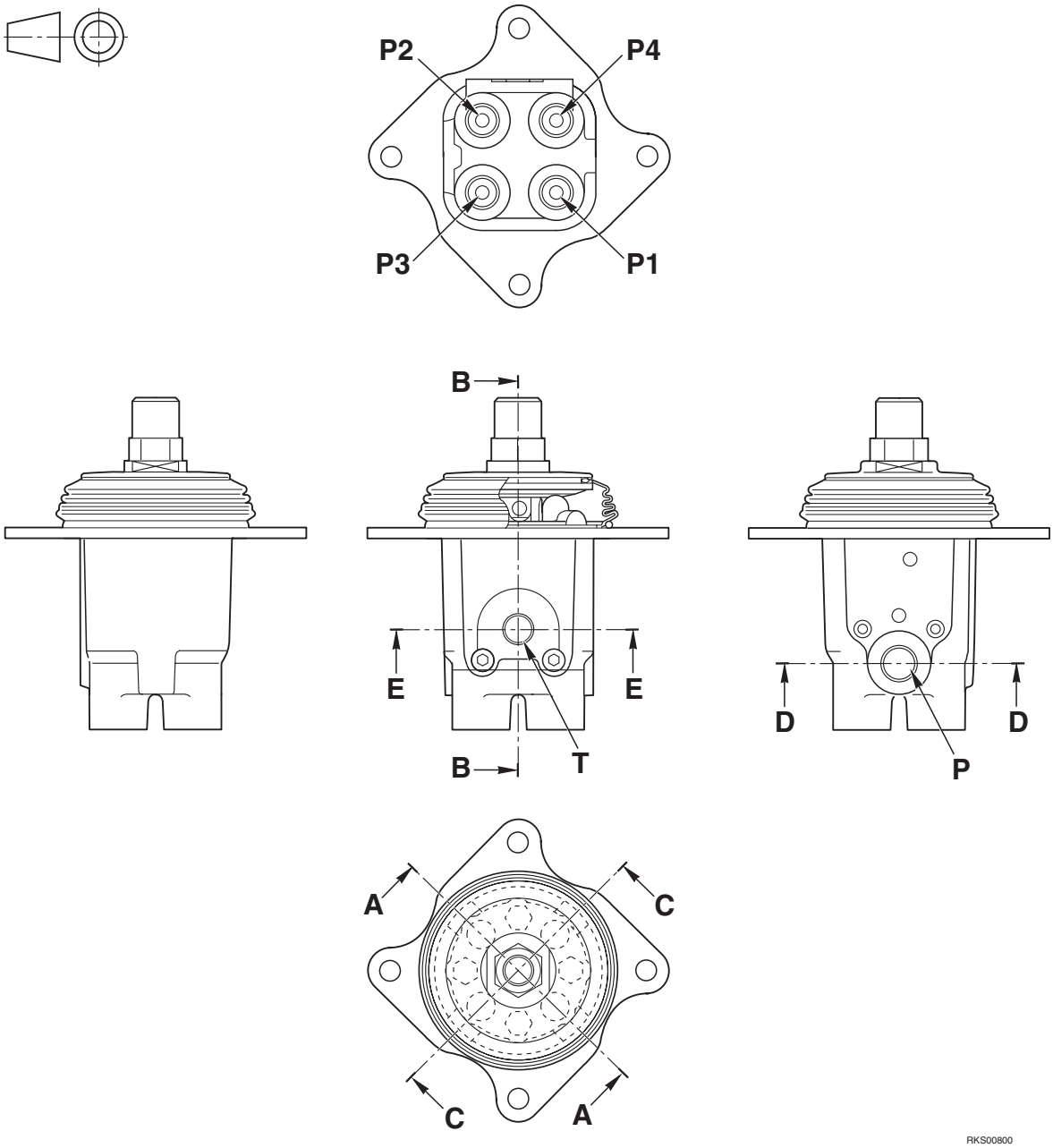

Attacco P1- To pattern change valve (Pin 5 port)
Attacco P2- To pattern change valve (Pin 6 port)
P3 port - To control valve (PA2 port)
P4 port - To control valve (PB2 port)
P port - From solenoid valve group ST1 (B port)
T port - To hydraulic tank

FUNCTION

ISO PATTERN:
P1 Lower arm
P2 Raise arm
P3 Curl bucket
P4 Dump bucket

OPTIONAL PATTERN:
P1 R.H. travel forward
P2 R.H. travel reverse
P3 Curl bucket
P4 Dump bucket

https://truckmanualshub.com/

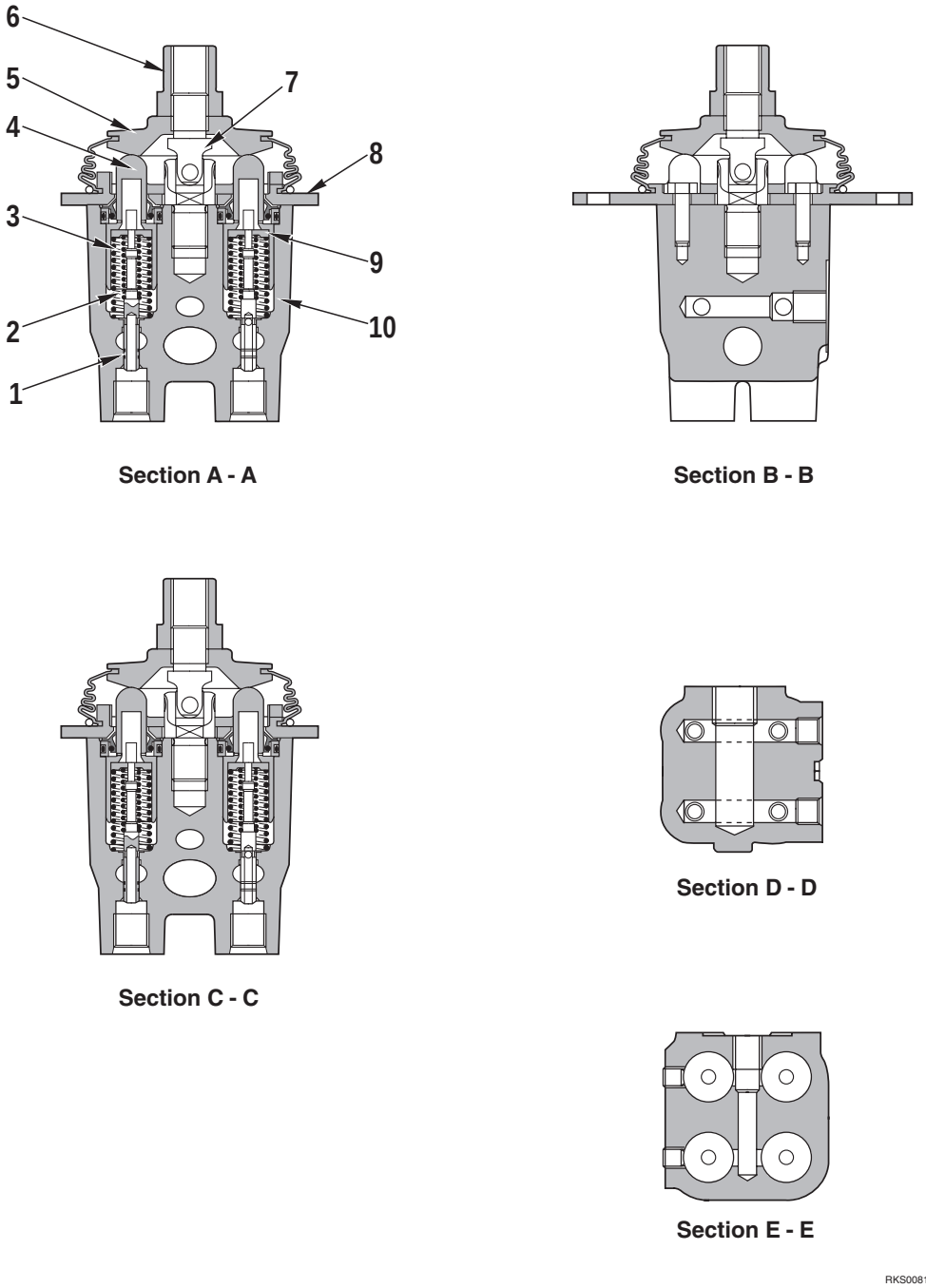

1. Spool
2. Metering spring
3. Centering spring
4. Piston
5. Disc
6. Nut
7. Joint
8. Cover
9. Stopper
10. Body

https://truckmanualshub.com/

FUNCTION

1. **NEUTRAL**
   Ports **P1** and **P2** of the PPC valve are connected to drain chamber **D** through fine control hole **f** in spool (1). (Fig. 1)

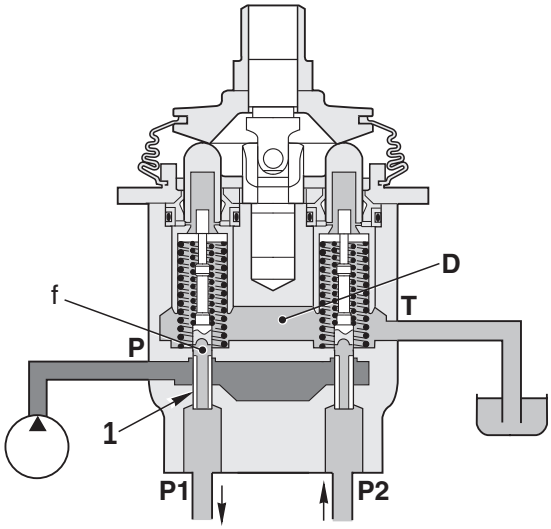

Fig. 1

2. **During fine control (NEUTRAL → fine control)**

- When piston (4) starts to be pushed by disc (5), retainer (9) is pushed; spool (1) is also pushed by metering spring (2), and moves down.
  When this happens, fine control hole **f** is shut off from drain chamber **D**, and at almost the same time, it is connected to pump pressure chamber **PP**, so pilot pressure oil from the control pump passes through fine control hole **f** and goes to port **P1**.
  When the pressure at port **P1** becomes higher, spool (1) is pushed back and fine control hole **f** is shut off from pump pressure chamber **PP**.
  At almost the same time, it is connected to drain chamber **D** to release the pressure at port **P1**.
  When this happens, spool (1) moves up or down so that the force of metering spring (2) is balanced with the pressure at port **P1**. The relationship in the position of spool (1) and body (10) (fine control hole **f** is at a point midway between drain hole **D** and pump pressure chamber **PP**) does not change even if the pressure at port P1 becomes max.
  Therefore, metering spring (2) is compressed proportionally to the amount of movement of the control lever, so the pressure at port **P1** also rises in proportion to the travel of the control lever. (Fig. 2)

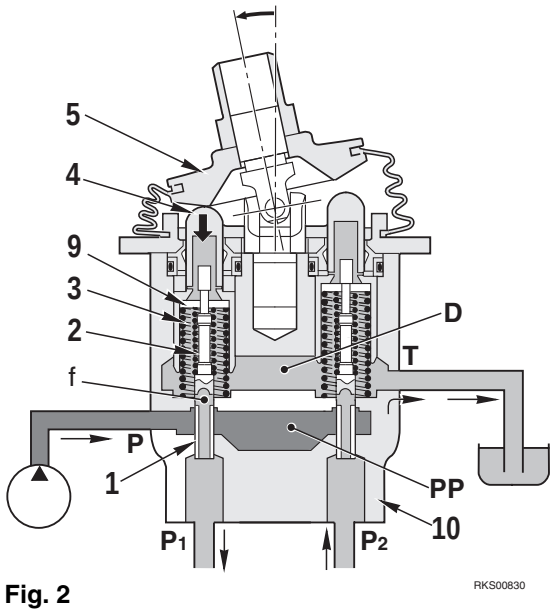

Fig. 2

https://truckmanualshub.com/

3. **During fine control (when the lever is returned) (fine control → neutral)**
   When disc (5) starts to be returned, spool (1) is pushed up by the force of centering spring (3) and the pressure at port **P1**.
   When this happens, fine control hole **f** is connected to drain chamber **D** and the pressure oil at port **P1** is released.
   If the pressure at port **P1** drops too far, spool (1) is pushed down by metering spring (2), and fine control hole **f** is shut off from drain chamber **D**.
   At almost the same time, it is connected to pump pressure chamber **PP**, and the pump pressure is supplied until the pressure at port **P1** recovers to a pressure that corresponds to the lever position. (Fig. 3).

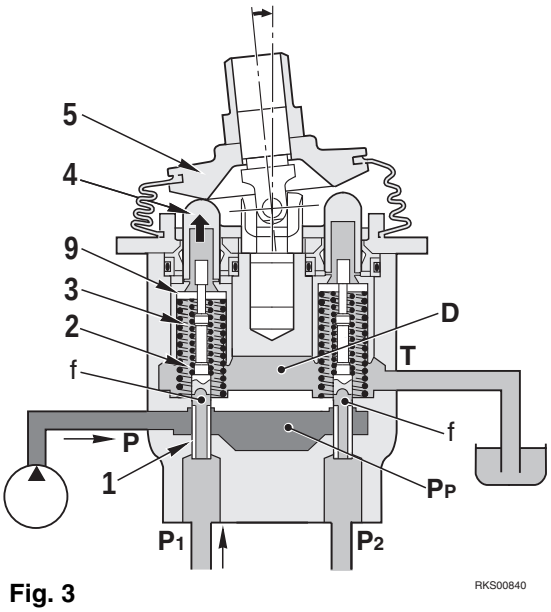

Fig. 3

https://truckmanualshub.com/

L.H. PPC VALVE (STANDARD)

TRAVEL CONTROL

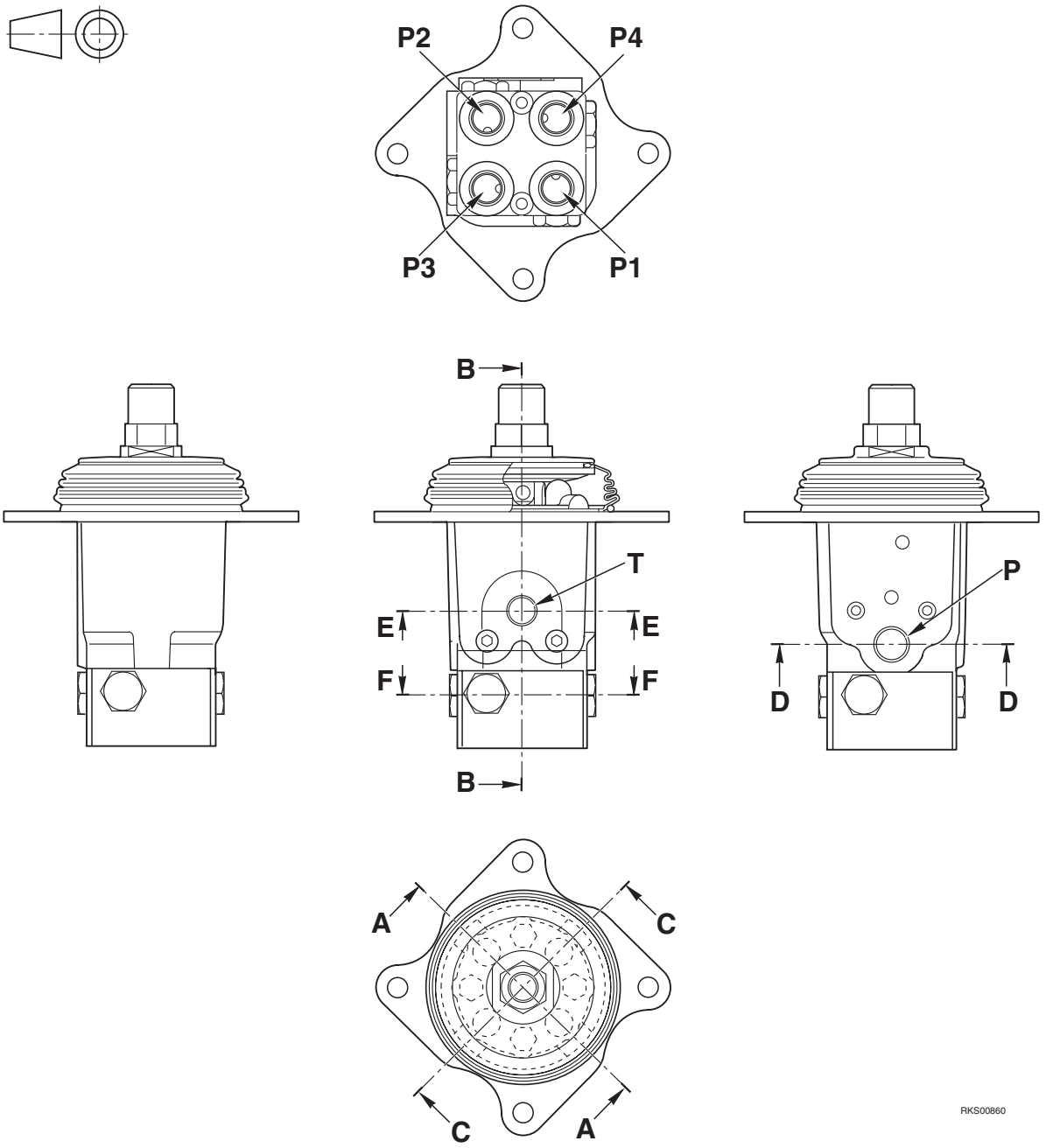

P1 port	-	To hydraulic pump (DA2 port)
P2 port	-	To hydraulic pump (DB2 port)
P3 port	-	To hydraulic pump (DA1 port)
P4 port	-	To hydraulic pump (DB1 port)
P port	-	From solenoid valve group ST1
T port	-	To hydraulic tank

FUNCTION

P1 L.H. travel forward
P2 L.H. travel reverse
P3 R.H. travel forward
P4 R.H. travel reverse
★ When acting control lever, two ports are pressurized contemporarily (i.e.: travel forward pressurize P1 and P3 ports).

https://truckmanualshub.com/

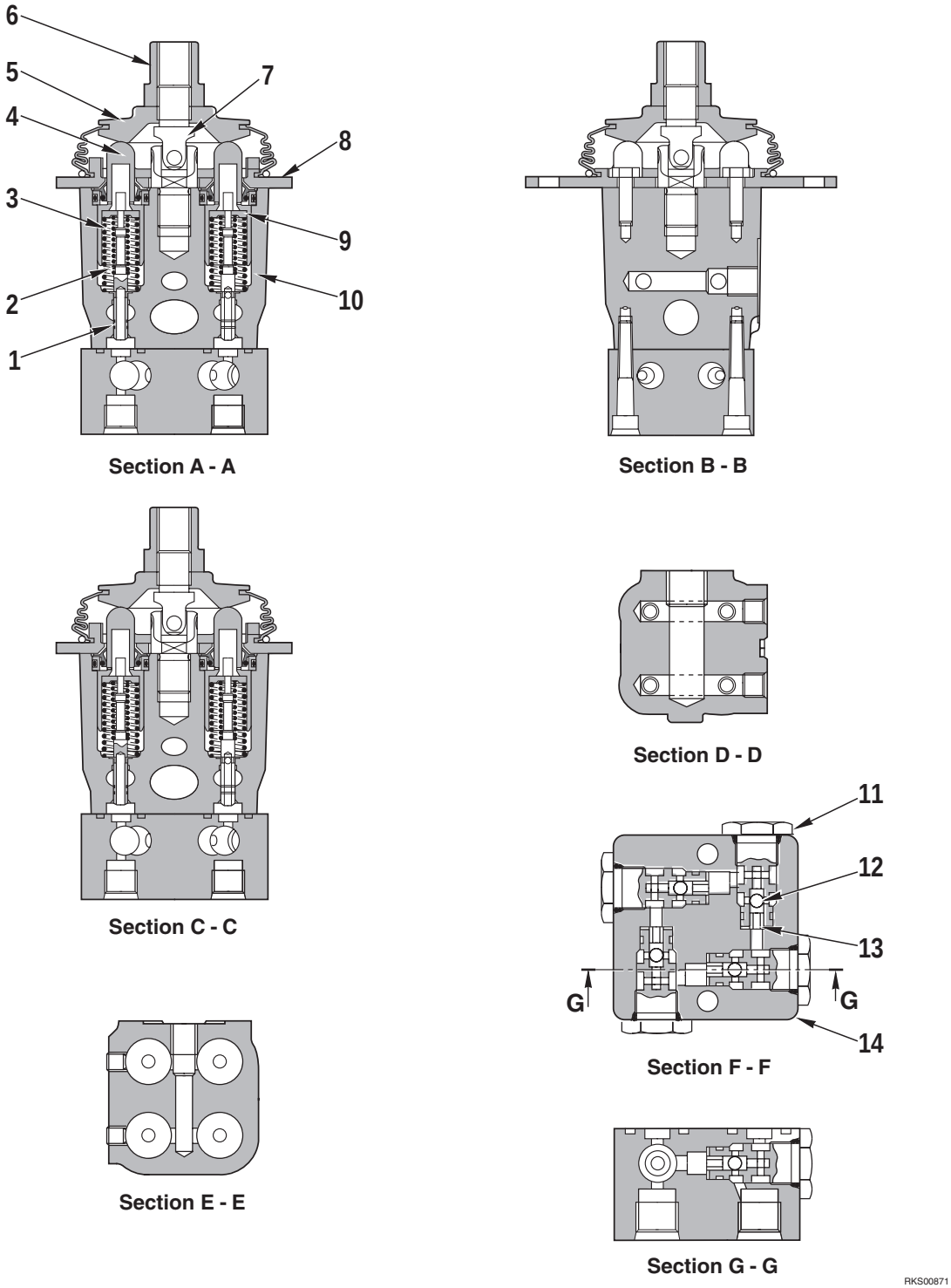

1. Spool
2. Metering spring
3. Centering spring
4. Piston
5. Disc
6. Nut
7. Joint
8. Cover
9. Stopper
10. Body
11. Plug
12. Ball
13. Seat
14. Body (for shuttle valve)

https://truckmanualshub.com/

FUNCTION

1. **NEUTRAL**
   Ports **P1** and **P2** of the PPC valve are connected to drain chamber **D** through fine control hole **f** in spool (1). (Fig. 1)

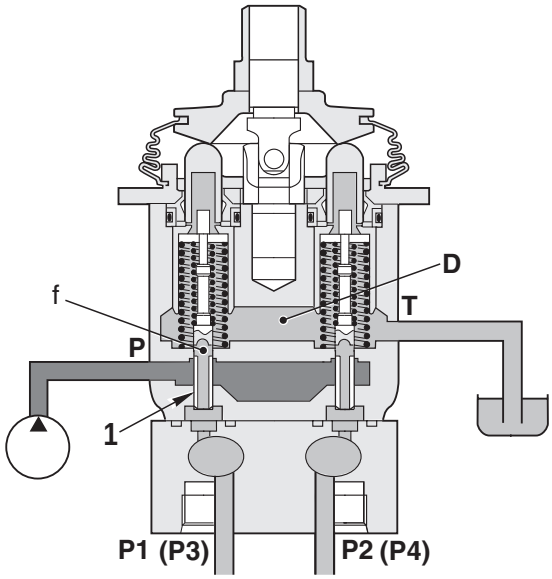

Fig. 1

2. **During fine control (NEUTRAL → fine control)**

- When piston (4) starts to be pushed by disc (5), retainer (9) is pushed; spool (1) is also pushed by metering spring (2), and moves down.
  When this happens, fine control hole **f** is shut off from drain chamber **D**, and at almost the same time, it is connected to pump pressure chamber **PP**, so pilot pressure oil from the control pump passes through fine control hole **f** and goes from port **P1**.
  When the pressure at port **P1** becomes higher, spool (1) is pushed back and fine control hole **f** is shut off from pump pressure chamber **PP**.
  At almost the same time, it is connected to drain chamber **D** to release the pressure at port **P1**.
  When this happens, spool (1) moves up or down so that the force of metering spring (2) is balanced with the pressure at port **P1**. The relationship in the position of spool (1) and body (10) (fine control hole **f** is at a point midway between drain hole **D** and pump pressure chamber **PP**) does not change even if the pressure at port P1 becomaes max.
  Therefore, metering spring (2) is compressed proportionally to the amount of movement of the control lever, so the pressure at port **P1** also rises in proportion to the travel of the control lever. (Fig. 2)

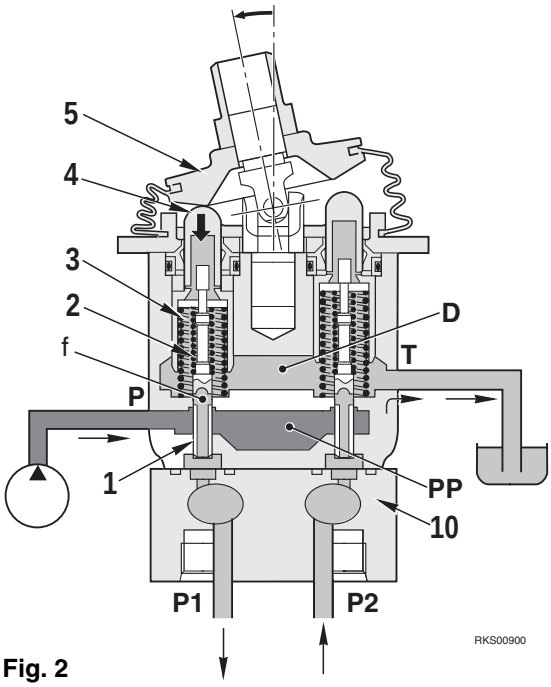

Fig. 2

https://truckmanualshub.com/

3. During fine control (when the lever is returned) (fine control → neutral)

When disc (5) starts to be returned, spool (1) is pushed up by the force of centering spring (3) and the pressure at port **P1**.

When this happens, fine control hole **f** is connected to drain chamber **D** and the pressure oil at port **P1** is released.

If the pressure at port **P1** drops too far, spool (1) is pushed down by metering spring (2), and fine control hole **f** is shut off from drain chamber **D**.

At almost the same time, it is connected to pump pressure chamber **PP**, and the pump pressure is supplied until the pressure at port **P1** recovers to a pressure that corresponds to the lever position. (Fig. 3).

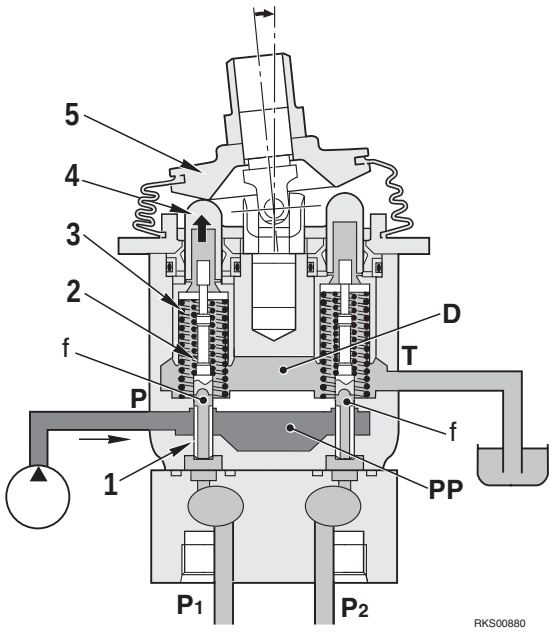

Fig. 3

https://truckmanualshub.com/

L.H. PPC VALVE - PATTERN CHANGE (OPTIONAL)

WORK EQUIPMENT AND TRAVEL CONTROL

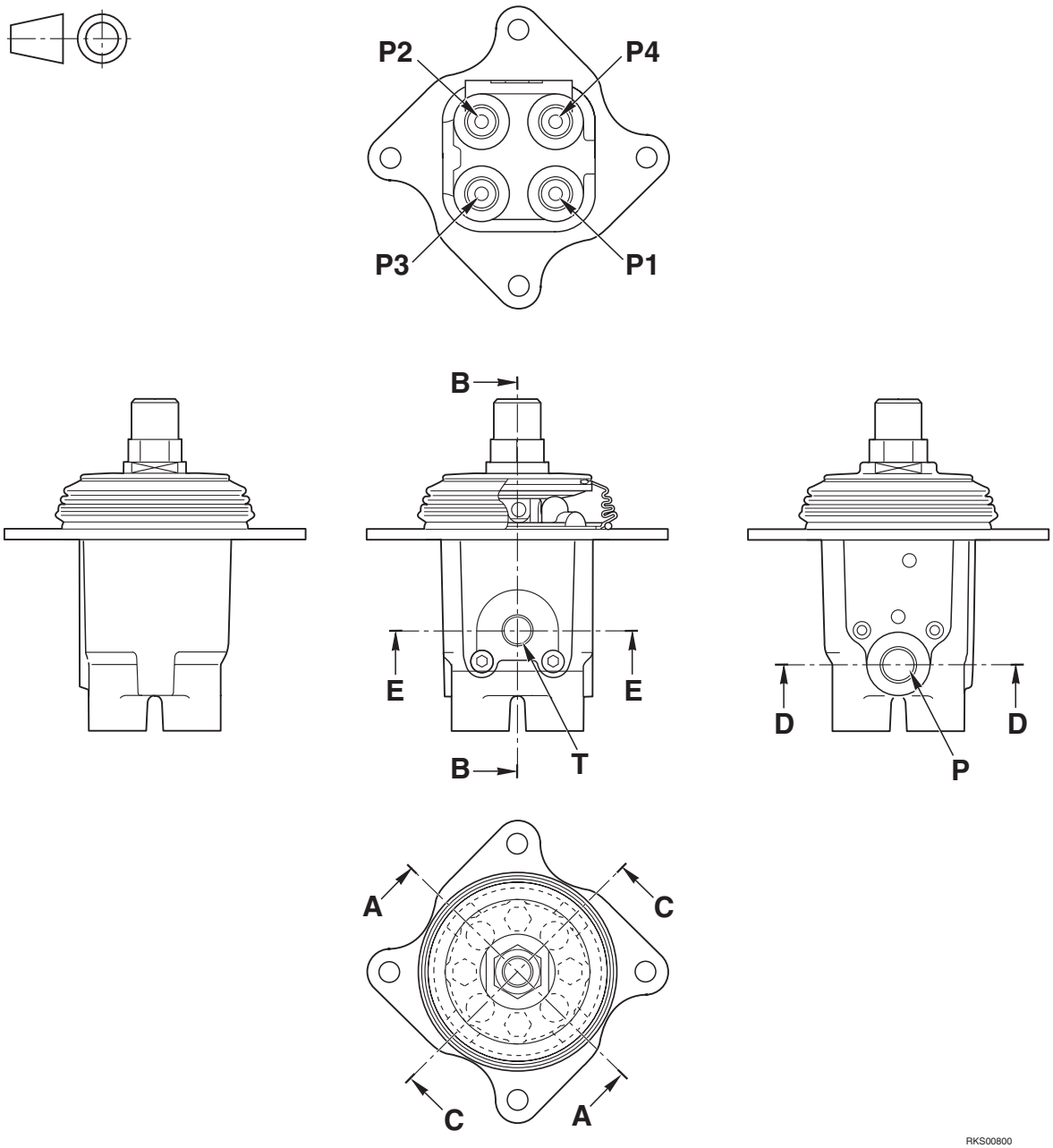

P1 port	-	To pattern change valve (Pin 1 port)
P2 port	-	To pattern change valve (Pin 2 port)
P3 port	-	To pattern change valve (Pin 3 port)
P4 port	-	To pattern change valve (Pin 4 port)
P port	-	From solenoid valve group ST1
T port	-	To hydraulic tank

FUNCTION

ISO PATTERN:	P1	Travel forward
	P2	Travel reverse
	P3	L.H. travel
	P4	R.H. travel
OPTIONAL PATTERN:	P1	L.H. travel forward
	P2	L.H. travel reverse
	P3	Raise arm
	P4	Lower arm

https://truckmanualshub.com/

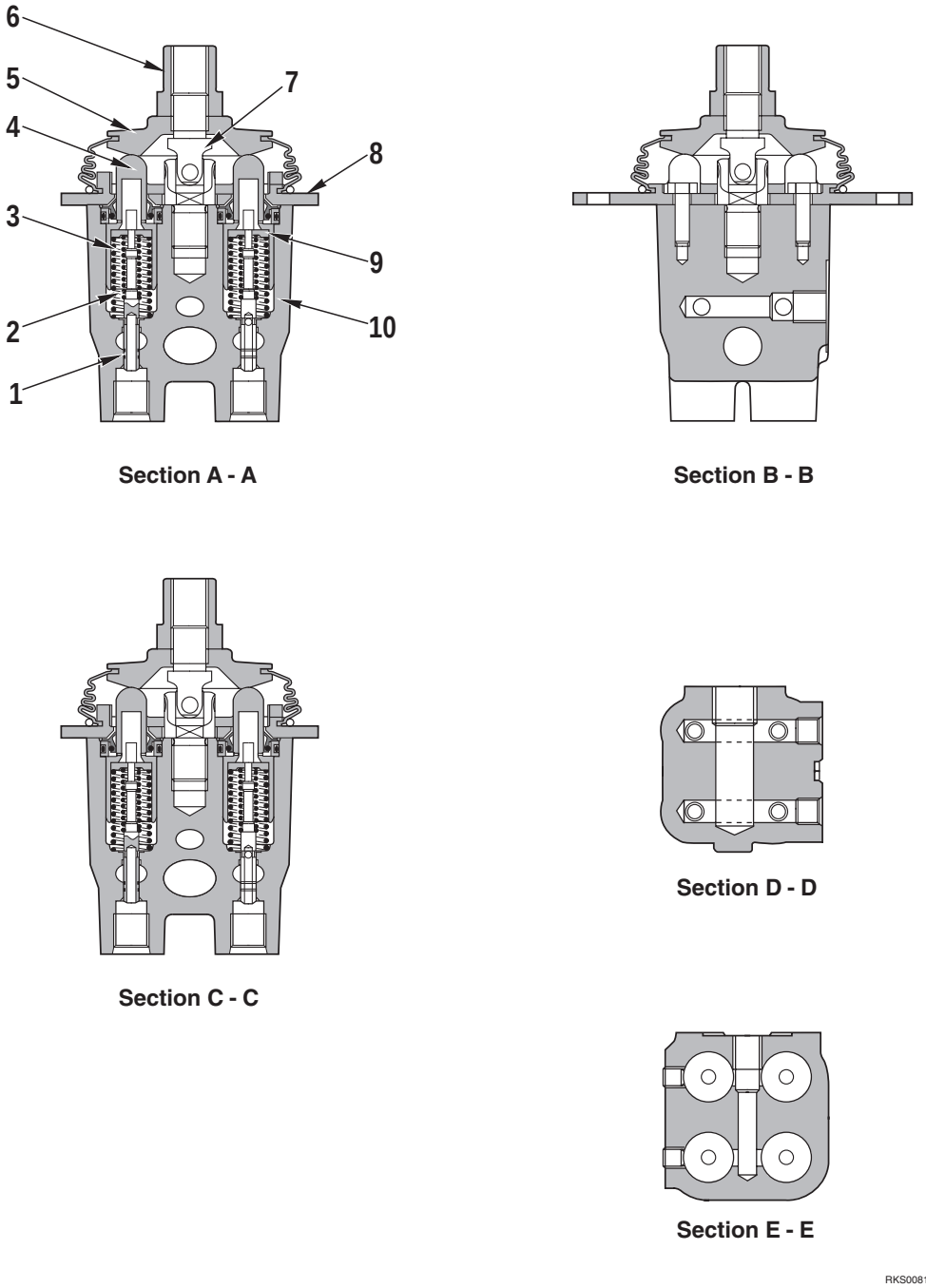

1. Spool
2. Metering spring
3. Centering spring
4. Piston
5. Disc
6. Nut
7. Joint
8. Cover
9. Stopper
10. Body

https://truckmanualshub.com/

FUNCTION

1. **NEUTRAL**
   Ports **P1** and **P2** of the PPC valve are connected to drain chamber **D** through fine control hole **f** in spool (1). (Fig. 1).

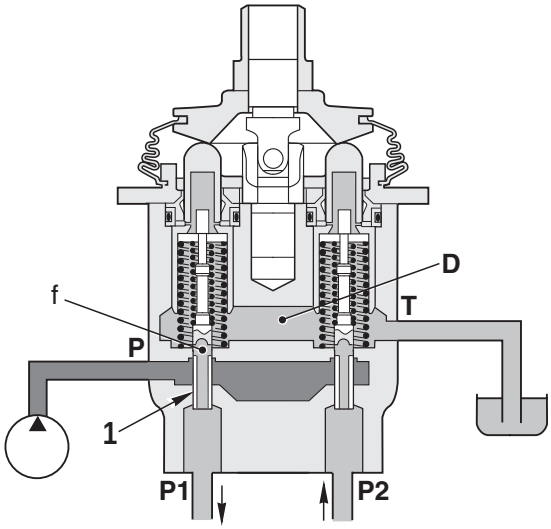

Fig. 1

2. **During fine control (NEUTRAL → fine control)**

- When piston (4) starts to be pushed by disc (5), retainer (9) is pushed; spool (1) is also pushed by metering spring (2), and moves down.
  When this happens, fine control hole **f** is shut off from drain chamber **D**, and at almost the same time, it is connected to pump pressure chamber **PP**, so pilot pressure oil from the control pump passes through fine control hole **f** and goes from port **P1**.
  When the pressure at port **P1** becomes higher, spool (1) is pushed back and fine control hole **f** is shut off from pump pressure chamber **PP**.
  At almost the same time, it is connected to drain chamber **D** to release the pressure at port **P1**.
  When this happens, spool (1) moves up or down so that the force of metering spring (2) is balanced with the pressure at port **P1**. The relationship in the position of spool (1) and body (10) (fine control hole **f** is at a point midway between drain hole **D** and pump pressure chamber **PP**) does not change even if the pressure at port P1 becomaes max.
  Therefore, metering spring (2) is compressed proportionally to the amount of movement of the control lever, so the pressure at port **P1** also rises in proportion to the travel of the control lever. (Fig. 2)

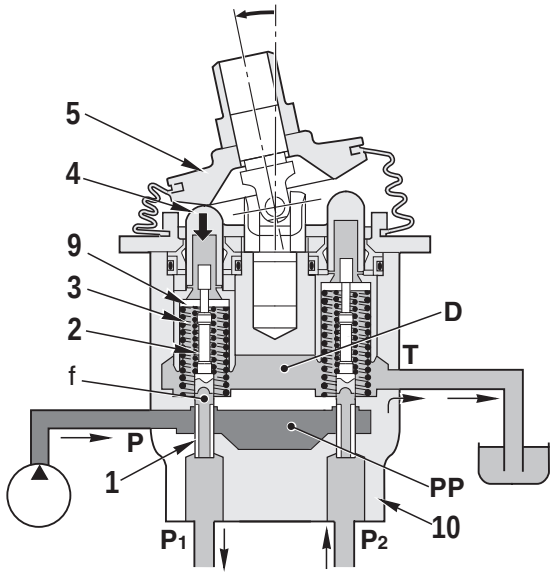

Fig. 2

https://truckmanualshub.com/

3. **During fine control (when the lever is returned) (fine control → neutral)**
   When disc (5) starts to be returned, spool (1) is pushed up by the force of centering spring (3) and the pressure at port **P1**.
   When this happens, fine control hole **f** is connected to drain chamber **D** and the pressure oil at port **P1** is released.
   If the pressure at port **P1** drops too far, spool (1) is pushed down by metering spring (2), and fine control hole **f** is shut off from drain chamber **D**.
   At almost the same time, it is connected to pump pressure chamber **PP**, and the pump pressure is supplied until the pressure at port **P1** recovers to a pressure that corresponds to the lever position. (Fig. 3).

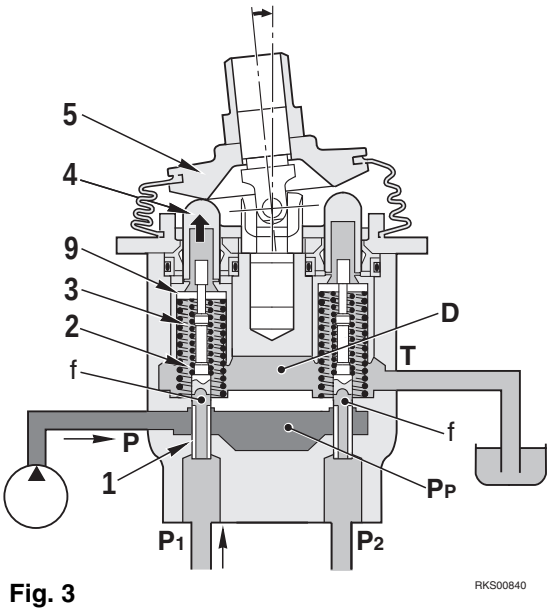

Fig. 3

https://truckmanualshub.com/

CYLINDERS

BUCKET RAISE

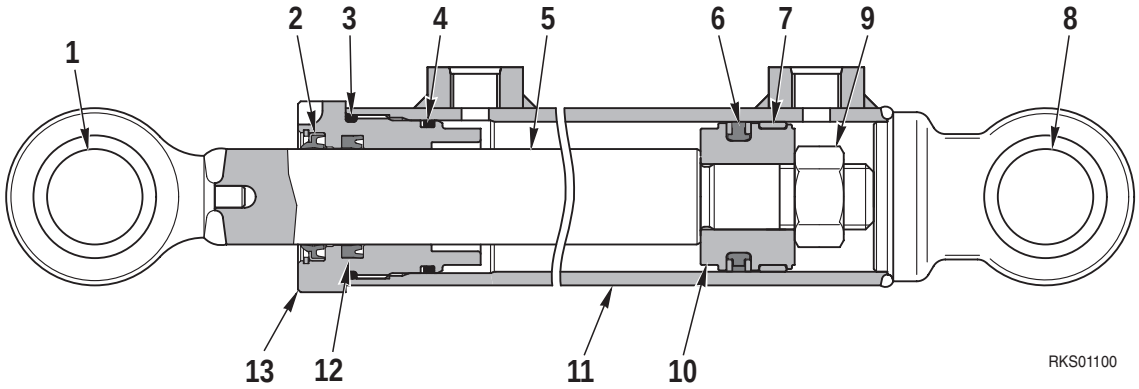

BUCKET TILT

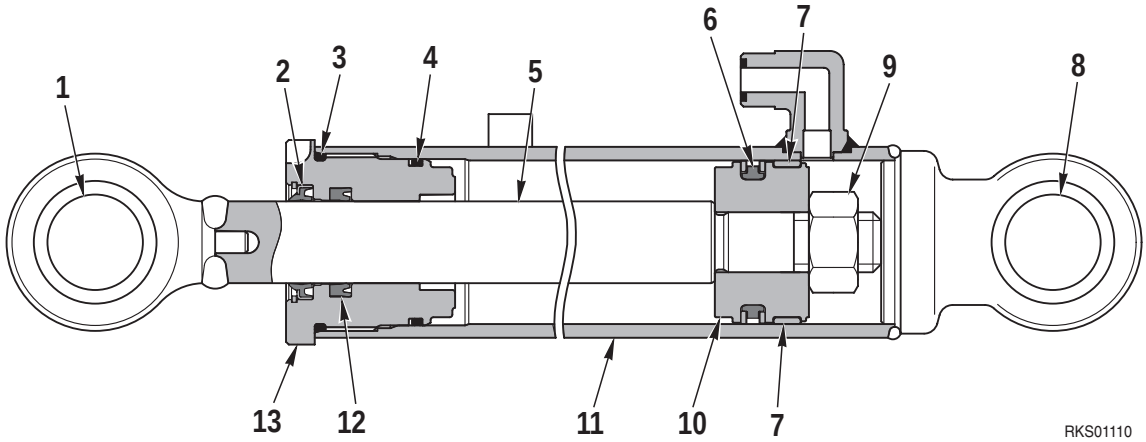

1. Bushing
2. Dust
3. Gasket
4. Gasket
5. Rod
6. Gasket
7. Ring
8. Bushing
9. Nut
10. Piston
11. Cilinder
12. Gasket
13. Head

Unit: mm

Cilinder	Ø Rod	Ø Piston	Piston stroke	Max. cylinder length	Min. cylinder length	Key size
Bucket raise	35	55	678	1616	938	32
Bucket tilt	30	60	357	970	613	32

https://truckmanualshub.com/

ELECTRICAL DIAGRAM (ENGINE LINE) (1/4)

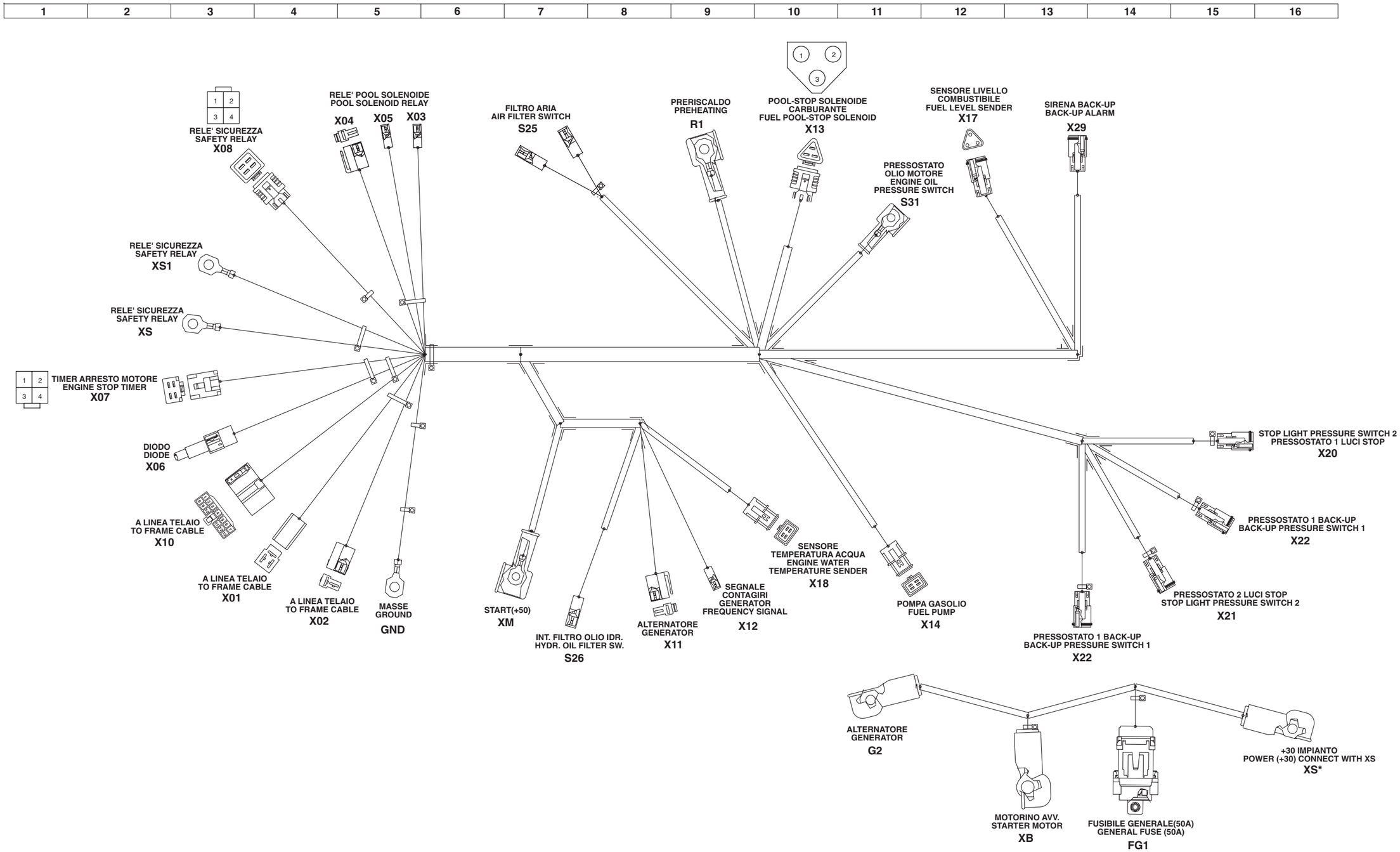

https://truckmanualshub.com/

ELECTRICAL DIAGRAM (ENGINE LINE) (2/4)

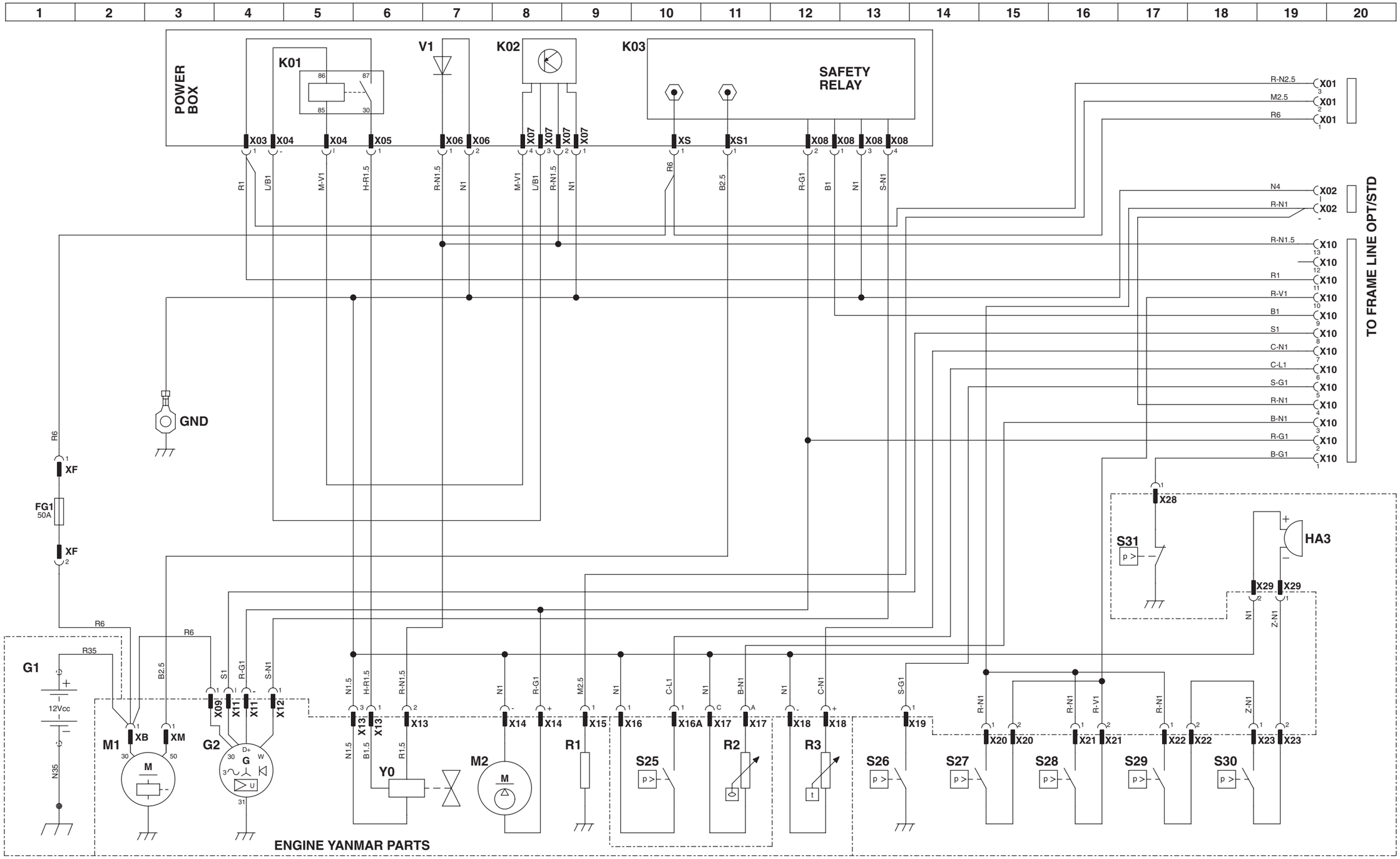

https://truckmanualshub.com/

ELECTRICAL DIAGRAM (ENGINE LINE) (3/4)

1	2	3	4	5	6	7	8	9	10

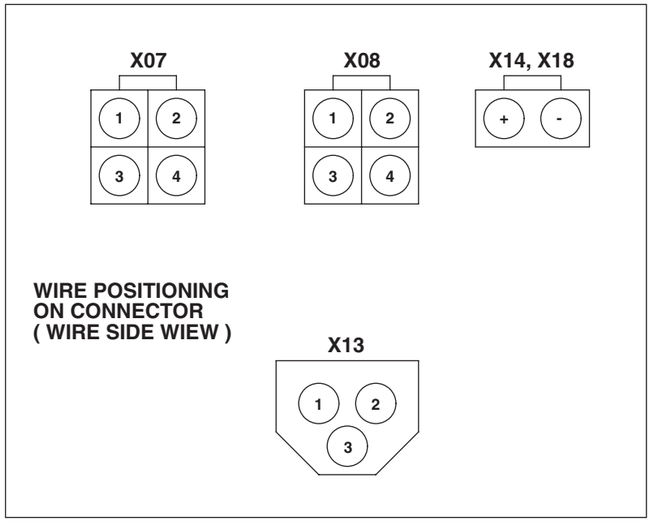

COLORI FILI

A	AZZURRO
B	BIANCO
C	ARANCIONE
G	GIALLO
H	GRIGIO
L	BLU
M	MARRONE
N	NERO
R	ROSSO
S	ROSA
V	VERDE
Z	VIOLA

ESEMPIO:
G/V → GIALLO/VERDE (MARCATURA TRASVERSALE)

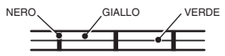

G-V → GIALLO-VERDE (COLORI LONGITUDINALI)

WIRING COLOURS

A	LIGHTBLUE
B	WHITE
C	ORANGE
G	YELLOW
H	GRAY
L	BLUE
M	BROWN
N	BLACK
R	RED
S	PINK
V	GREEN
Z	VIOLET

EXAMPLE:
G/V → YELLOW/GREEN (TRANSVERSE MARKED)

G-V → YELLOW-GREEN (LONGITUDINAL COLOURS)

RKS00430

https://truckmanualshub.com/

ELECTRICAL DIAGRAM (ENGINE LINE) (4/4)

COMPONENTS

G1 - Battery 80Ah
G2 - Generator
GND - C6 ground terminal
HA3 - Back up alarm
K01 - Pull solenoid relay
K02 - Pull solenoid timer
K03 - Safety relay
M1 - Starter motor
M2 - Fuel pump
R1 - Preheating starter
R2 - Fuel level sender
R3 - Engine water temperature sender
S25 - Air filter blocked switch
S26 - Hydraulic oil filter blocked switch
S27 - Stop lights pressure switch
S28 - Stop lights pressure switch
S29 - Back-up alarm pressure switch
S30 - Back-up alarm pressure switch
S31 - Engine oil min. pressure switch
V1 - Diode
Y0 - Stop fuel solenoid valve

CONNECTORS

X01 - Frame line 3 way connector
X02 - Ground 2 way connector
X03 - Pool solenoid relay 1 way connector
X04 - Pool solenoid relay 2 way 90° connector
X05 - Pool solenoid relay 1 way connector
X06 - By-pass diode 2 way connector
X07 - Pool solenoid timer 4 way connector
X08 - Safety relay 4 way connector
X09 - C5 generator terminal
X10 - Frame line mark 13 way connector
X11 - Generator 2 way connector
X12 - Generator frequency signal 1 way connector
X13 - Fuel pool-stop solenoid 3 way connector solenoid 3 way connector
X14 - Fuel pump 2 way connector
X15 - Preheating start C6 terminal
X16 - Air filter blocked switch 1 way connector
X16A - Air filter blocked switch 1 way connector
X17 - Fuel level sender 3 way connector
X18 - Engine water temperature sender 2 way connector
X19 - Idraulic oil filter blocked switch C5 terminal
X20 - Stop light pressure 1 switch 2 way connector
X21 - Stop light pressure 2 switch 2 way connector
X22 - Back-up pressure 1 switch 2 way connector
X23 - Back-up pressure 2 switch 2 way connector
X28 - Engine min. pressure switch C5 terminal
X29 - Back up alarm 2 way connector
XB - C8 start motor terminal
XF - General fuse 2 way connector
XM - C5 start motor terminal
XS - C6 safety relay terminal
XS1 - C6 safety relay terminal

FUSES

FG1 - General fuse 50A

https://truckmanualshub.com/

ELECTRICAL DIAGRAM (FRAME LINE STANDARD) (1/3)

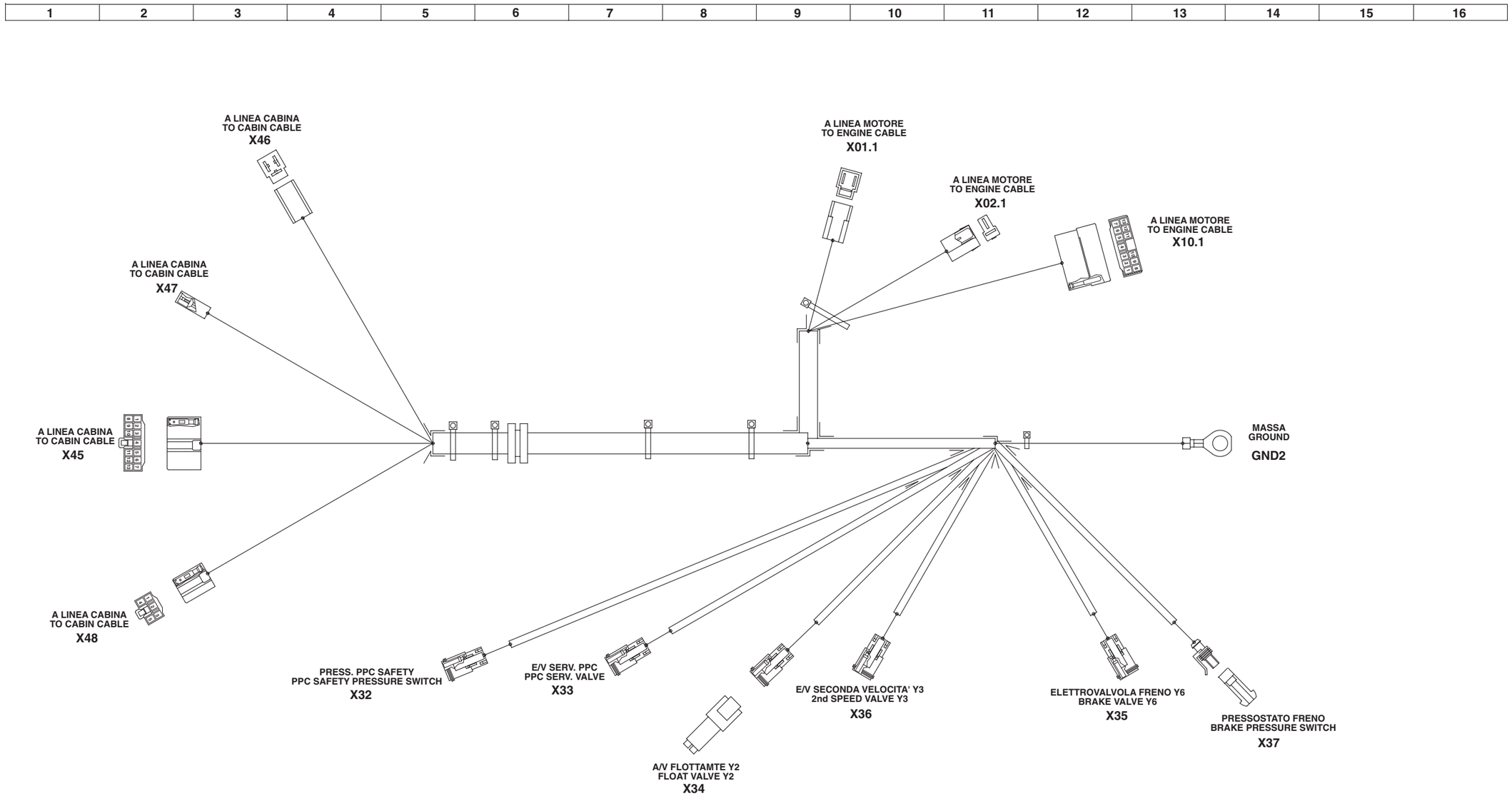

https://truckmanualshub.com/

ELECTRICAL DIAGRAM (FRAME LINE STANDARD) (2/3)

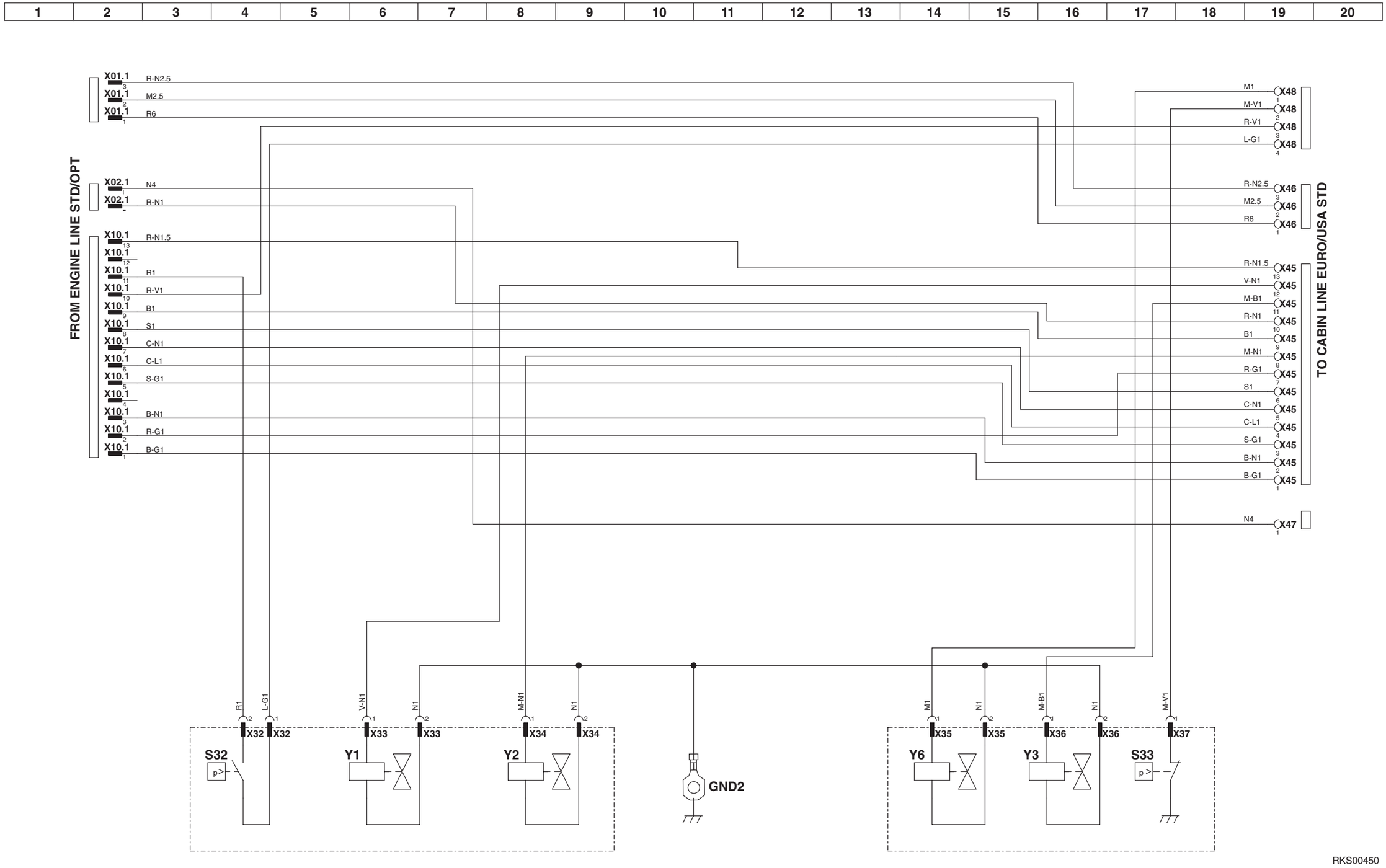

https://truckmanualshub.com/

ELECTRICAL DIAGRAM (FRAME LINE STANDARD) (3/3)

COMPONENTS

GND2 -C8 ground terminal
S32 - PPC safety pressure switch
S33 - Brake valve pressure switch
Y1 - PPC valve
Y2 - Float valve
Y3 - Second speed valve
Y6 - Brake valve

CONNECTORS

X01.1 -Engine line 3 way connector
X02.1 -Engine line ground 2 way connector
X10.1 -Engine line 13 way connector
X32 - PPC safety pressure switch 2 way connector
X33 - PPC valve 2 way connector
X34 - Float valve 2 way connector
X35 - Brake valve 2 way connector
X36 - Second speed valve 2 way connector
X37 - Brake pressure switch 1 way connector
X45 - Cabin line 13 way connector
X46 - Cabin line 3 way connector
X47 - Ground 1 way connector
X48 - Cabin line 5 way connector

https://truckmanualshub.com/

PAGE INTENTIONALLY LEFT BLANK

https://truckmanualshub.com/

ELECTRICAL DIAGRAM (FRAME LINE OPTIONAL) (1/3)

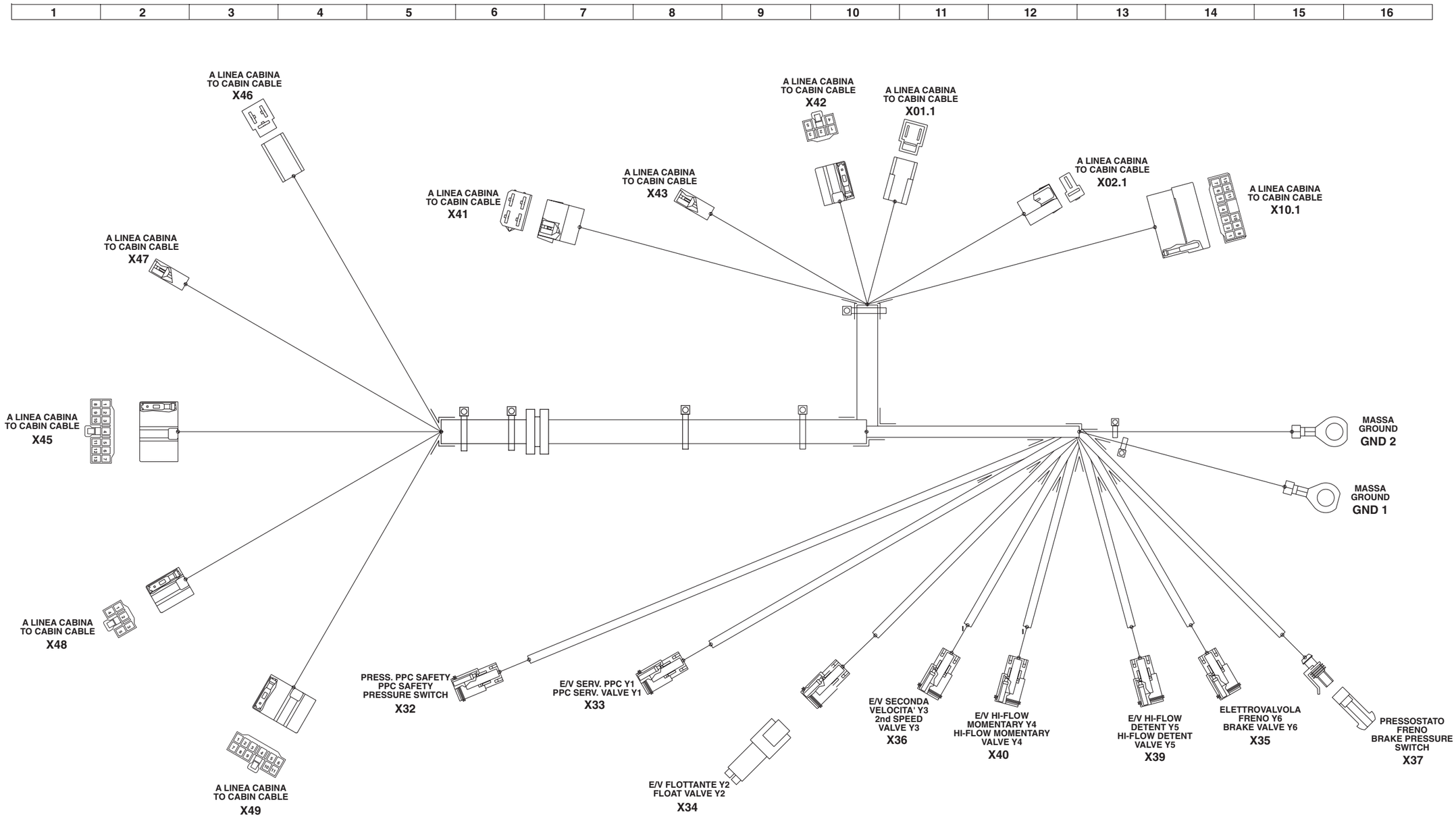

https://truckmanualshub.com/

ELECTRICAL DIAGRAM (FRAME LINE OPTIONAL) (2/3)

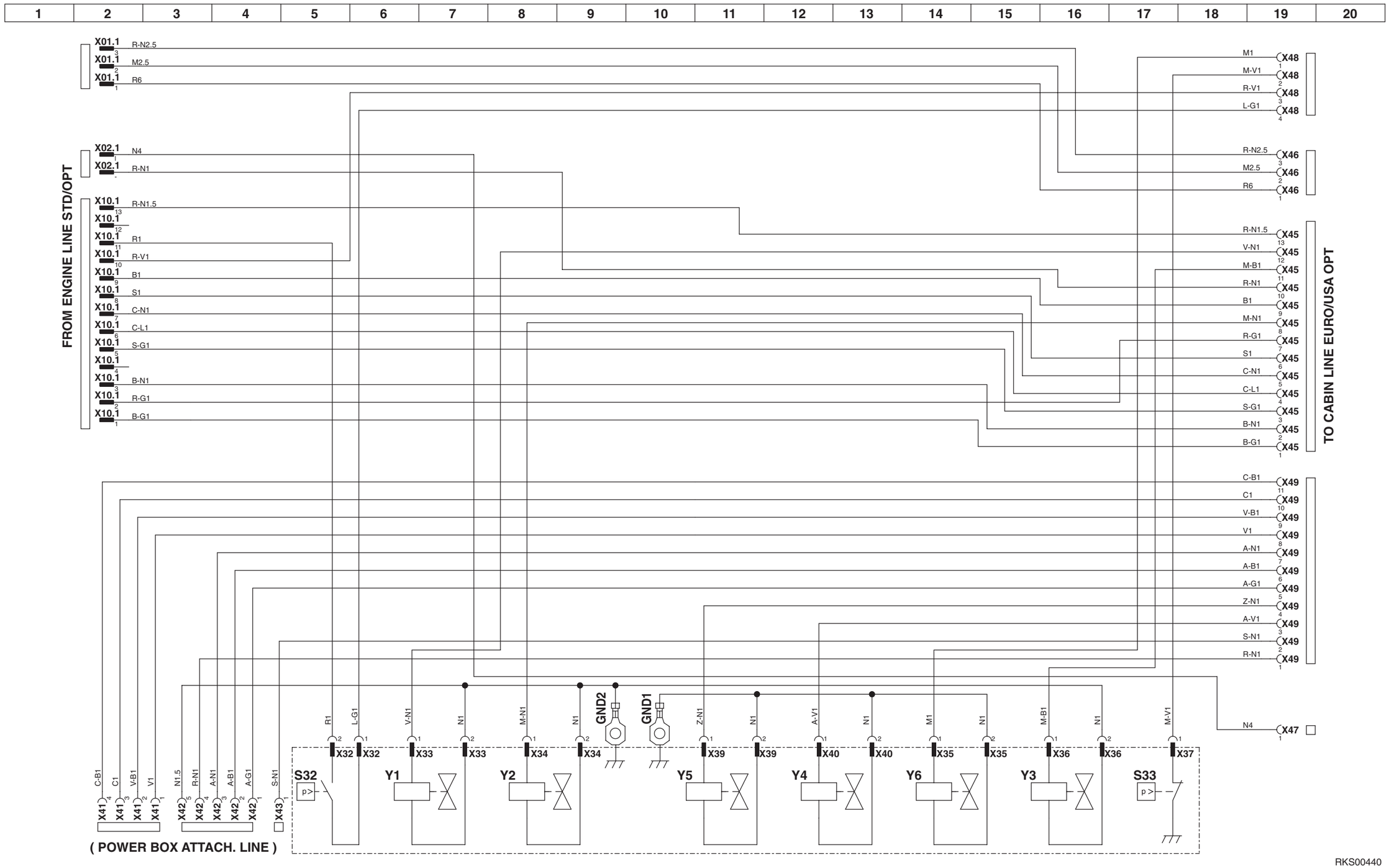

https://truckmanualshub.com/

ELECTRICAL DIAGRAM (FRAME LINE OPTIONAL) (3/3)

COMPONENT

GND1-GND2 -C8 ground terminal
S32 - PPC safety pressure switch
S33 - Brake valve pressure switch
Y1 - PPC valve
Y2 - Float valve
Y3 - Second speed valve
Y4 - Reverse hi-flow momentary valve
Y5 - Super flow detent valve
Y6 - Brake valve

CONNECTORS

X01.1 -Engine line 3 way connector
X02.1 -Engine line ground 2 way connector
X10.1 -Engine line 13 way connector
X32 - PPC safety pressure switch 2 way connector
X33 - PPC valve 2 way connector
X34 - Float valve 2 way connector
X35 - Brake valve 2 way connector
X36 - Second speed valve 2 way connector
X37 - Brake pressure switch 1 way connector
X39 - High flow detent valve 2 way connector
X40 - High flow momentary valve 2 way connector
X41 - Stabilizer 5 way connector
X42 - Attachement 5 way connector
X43 - ENPI valve 1 way connector
X45 - Cabin line 13 way connector
X46 - Cabin line 3 way connector
X47 - Ground cabin line 1 way connector
X48 - Cabin line 5 way connector
X49 - Cabin line 11 way connector

https://truckmanualshub.com/

PAGE INTENTIONALLY LEFT BLANK

https://truckmanualshub.com/

ELECTRICAL DIAGRAM (CABIN LINE STANDARD) (1/5)

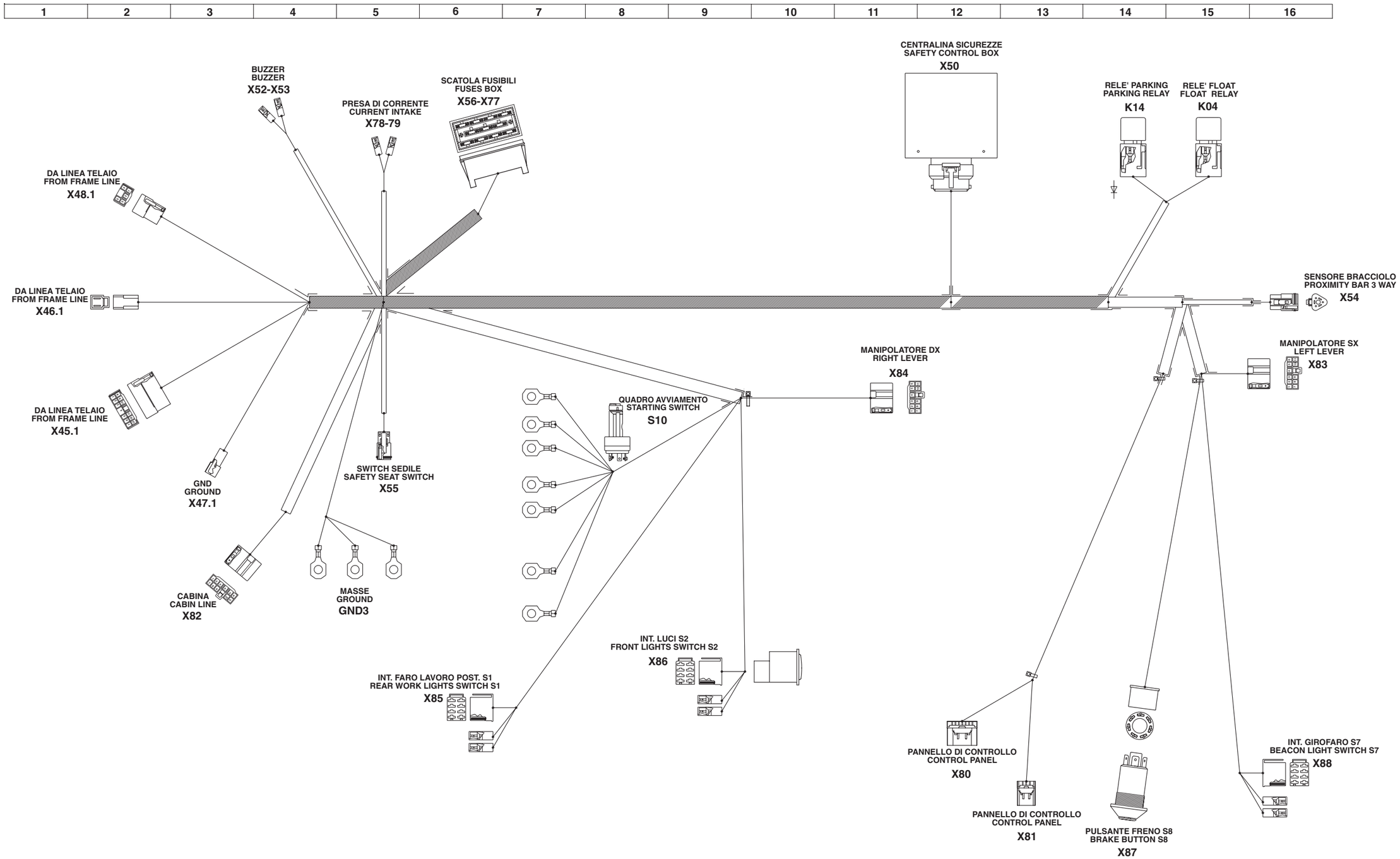

https://truckmanualshub.com/

ELECTRICAL DIAGRAM (CABIN LINE STANDARD) (2/5)

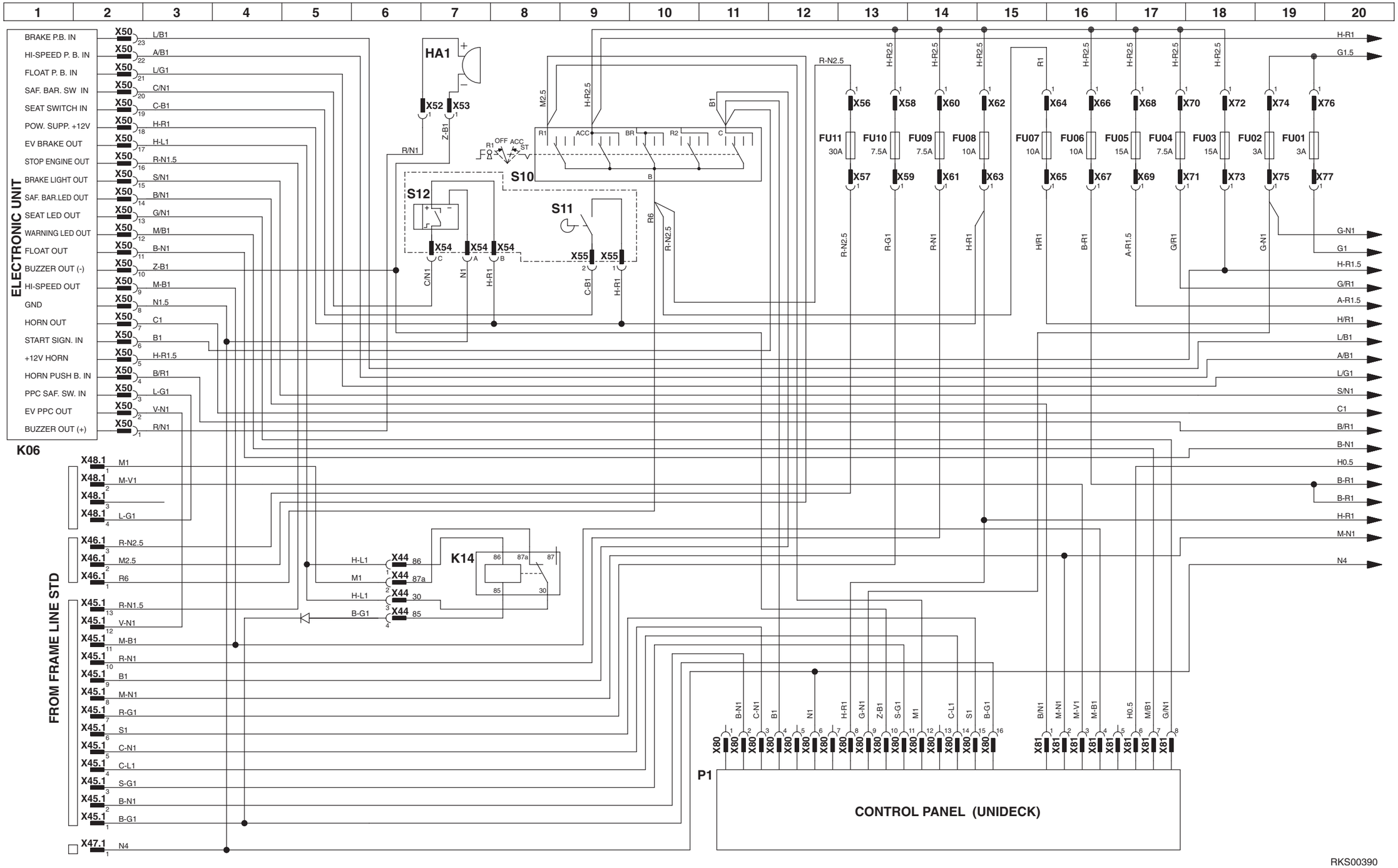

https://truckmanualshub.com/

ELECTRICAL DIAGRAM (CABIN LINE STANDARD) (3/5)

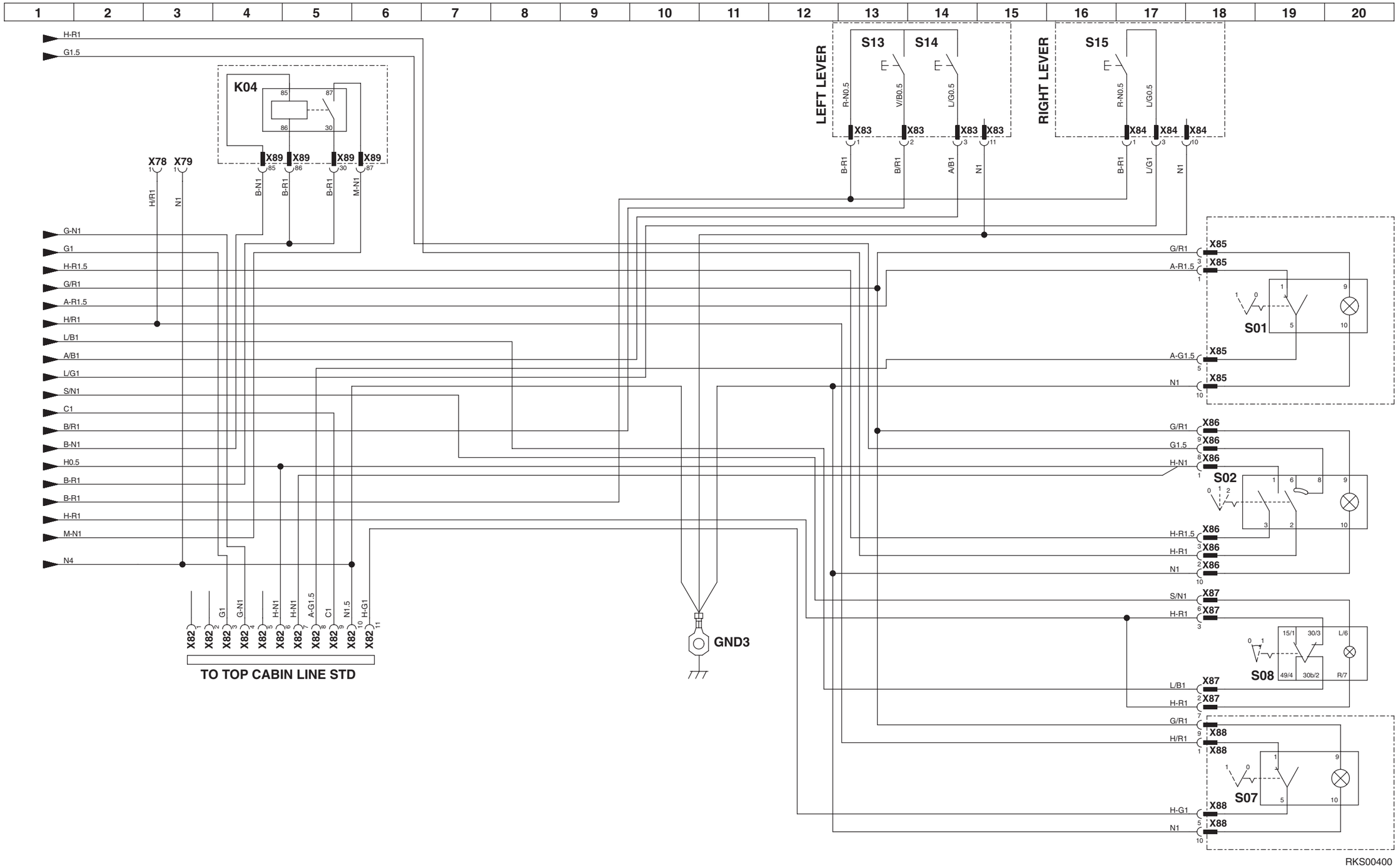

https://truckmanualshub.com/

ELECTRICAL DIAGRAM (CABIN LINE STANDARD) (4/5)

1	2	3	4	5	6	7	8	9	10	11	12	13	14	15	16	17	18	19	20

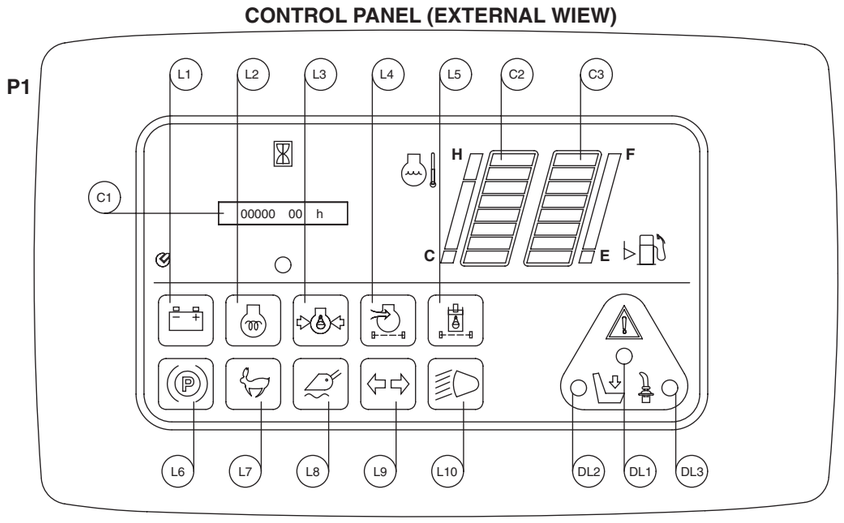

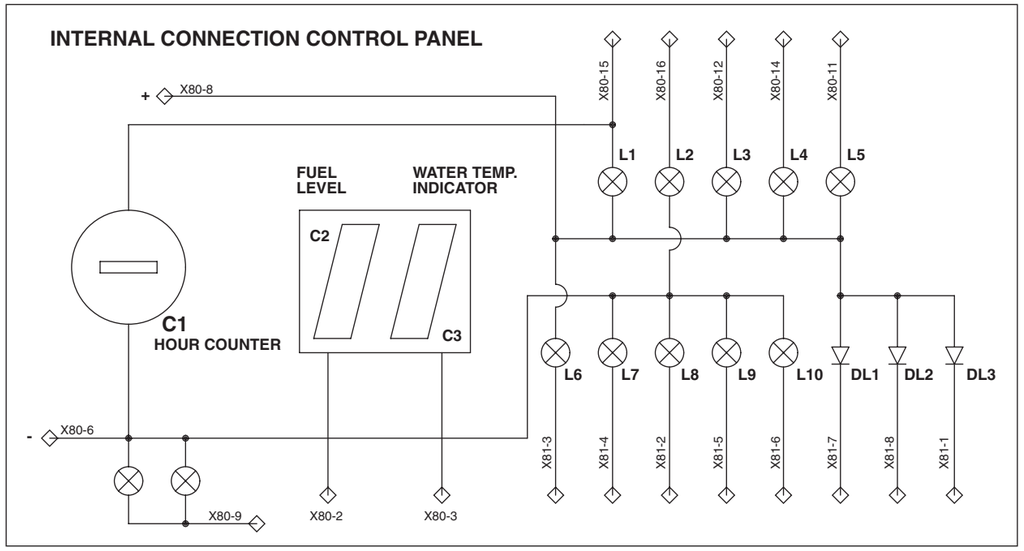

POS.	PIN	FUNCTION	SIGNAL	WIRE COLOUR	POS.	PIN	FUNCTION	SIGNAL	WIRE COLOUR
	X80-1					X80-9	INTERNAL LIGHTS (+ LUCI)	POSITIVE	G-N1
C2	X80-2	FUEL LEVEL INDICATOR	ohm	B-N1		X80-10	BUZZER	NEGATIVE	Z-B1
C3	X80-3	WATER TEMPERAT. INDICATOR	ohm	C-N1	L5	X80-11	HYDRAULIC OIL FILTER LAMP	NEGATIVE	S-G1
+50	X80-4	START SIGNAL	+50	B1	L2	X80-12	PREHEATING LAMP	POSITIVE	M1
GND	X80-5	GROUND	GND			X80-13			
GND	X80-6	GROUND	GND	N1	L4	X80-14	AIR FILTER LAMP	NEGATIVE	C-L1
	X80-7				L1	X80-15	GENERATOR LAMP	NEGATIVE	S1
+15	X80-8	POWER SUPPLY (+12V)	+15	H-R1	L3	X80-16	ENGINE OIL PRESSURE LAMP	NEGATIVE	B-G1

POS.	PIN	FUNCTION	SIGNAL	WIRE COLOUR	POS.	PIN	FUNCTION	SIGNAL	WIRE COLOUR
DL3	X81-1	SAFETY BAR OPEN LED	NEGATIVE	B/N1	L9	X81-5	DIRECTION LAMP	POSITIVE	L-N1
L8	X81-2	FLOAT LAMP	POSITIVE	M-N1	L10	X81-6	LOW BEAM LAMP	POSITIVE	H0.5
L6	X81-3	PARKING BRAKE LAMP	NEGATIVE	M-V1	DL1	X81-7	WARNING LED	NEGATIVE	M/B1
L7	X81-4	SECOND SPEED LAMP	POSITIVE	M-B1	DL2	X81-8	SEAT LED	NEGATIVE	G/N1

RKS00410

https://truckmanualshub.com/

ELECTRICAL DIAGRAM (CABIN LINE STANDARD) (5/5)

COMPONENT

GND3 -C6 ground terminal
HA1 - Warning buzzer
K04 - Float relay
K06 - Electronic unit
K14 - Brake relay
P1 - Control panel
S01 - Rear work lights switch
S02 - Panel lights and low beam lights switch
S07 - Beacon light switch
S08 - Brake and PPC push button
S10 - Starting switch
S11 - Safety seat switch
S12 - Bar PNP safety sensor
S13 - Horn push button
S14 - Second speed push button
S15 - Float push button

CONNECTORS

X44 - Brake relay connector
X45.1 -From frame line 13 way connector
X46.1 -From frame line 3 way connector
X47.1 -From frame line1 way ground connector
X48.1 -From frame line 5 way connector
X50 - Electronic unit 23 way connector
X52 - Buzzer 1 way connector
X53 - Buzzer 1 way connector
X54 - Proximity bar 3 way connector
X55 - Safety seat switch 3 way connector
X56 - Fuse 1 way connector
X57 - Fuse 1 way connector
X58 - Fuse 1 way connector
X59 - Fuse 1 way connector
X60 - Fuse 1 way connector
X61 - Fuse 1 way connector
X62 - Fuse 1 way connector
X63 - Fuse 1 way connector
X64 - Fuse 1 way connector
X65 - Fuse 1 way connector
X66 - Fuse 1 way connector
X67 - Fuse 1 way connector
X68 - Fuse 1 way connector
X69 - Fuse 1 way connector
X70 - Fuse 1 way connector
X71 - Fuse 1 way connector
X72 - Fuse 1 way connector
X73 - Fuse 1 way connector
X74 - Fuse 1 way connector
X75 - Fuse 1 way connector
X76 - Fuse 1 way connector
X77 - Fuse 1 way connector
X78 - Current intake 1 way connector
X79 - Current intake 1 way connector
X80 - Control panel 16 way connector
X81 - Control panel 8 way connector
X82 - Lights line 11 way connector
X83 - Sx lever 11 way connector
X85 - Rear work lights SWF switch
X86 - Panel and front lights SWF switch connector
X87 - PPC enable push button connector
X88 - Beacon light switch connector
X89 - Float relay connector

FUSES

FU01 -Fuse 3A left side lights
FU02 -Fuse 3A control panel lights
FU03 -Fuse 15A horn, front work lights
FU04 -Fuse 7.5A switch lights
FU05 -Fuse 15A rear work light
FU06 -Fuse 10A lever switch power supply, float
FU07 -Fuse 10A current intake 12V, beacon light
FU08 -Fuse 10A control panel, electronic unit, fuel shut off, safety bar proximity, seat safety switch, brake switch
FU09 -Fuse 7.5A back-up alarm
FU10 -Fuse 7.5A fuel pump, safety engine relay, generator
FU11 -Fuse 30A pull solenoid, PPC safety pressure switch

https://truckmanualshub.com/

PAGE INTENTIONALLY LEFT BLANK

https://truckmanualshub.com/

ELECTRICAL DIAGRAM (CABIN LINE OPTIONAL) (1/7)

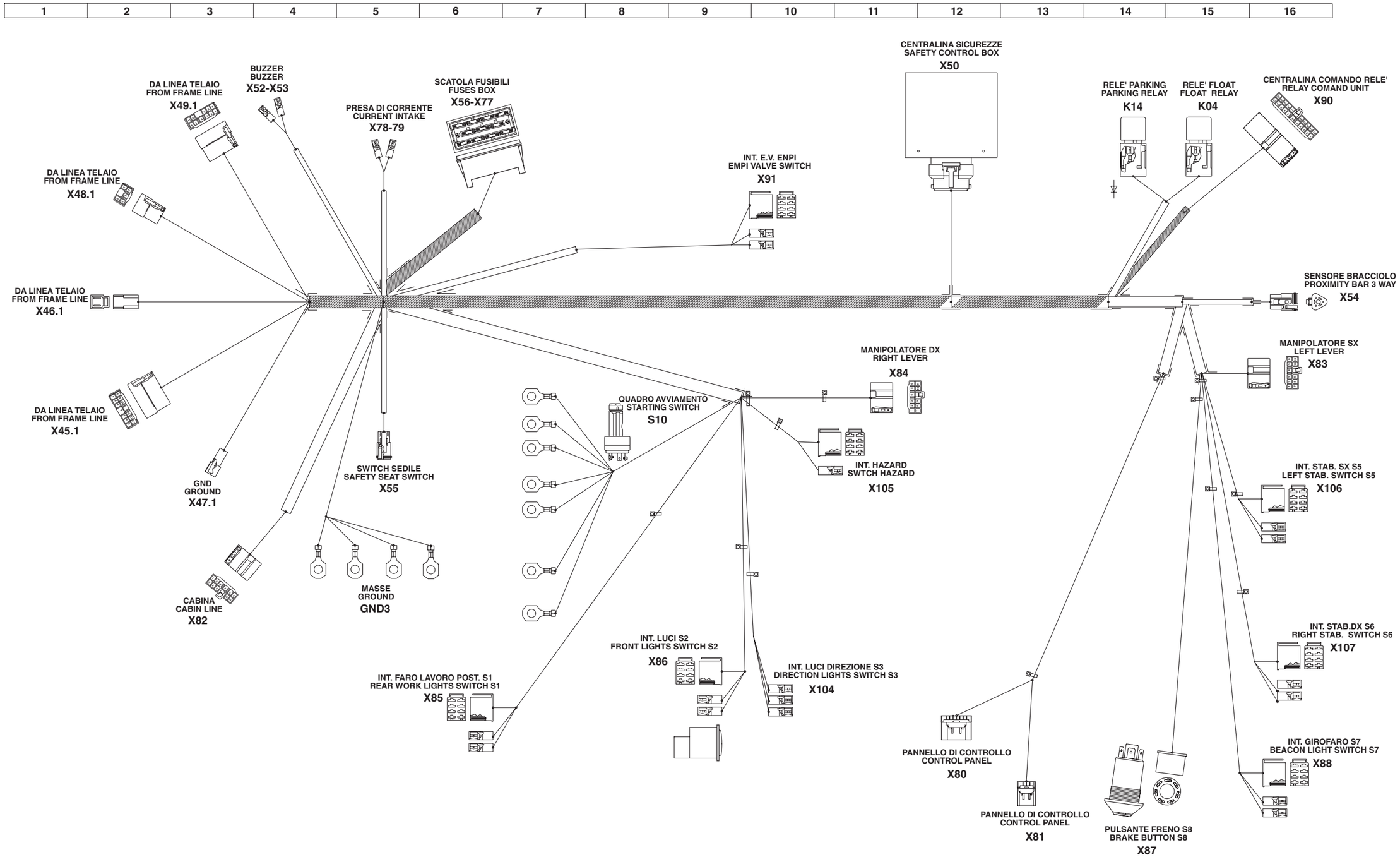

https://truckmanualshub.com/

ELECTRICAL DIAGRAM (CABIN LINE OPTIONAL) (2/7)

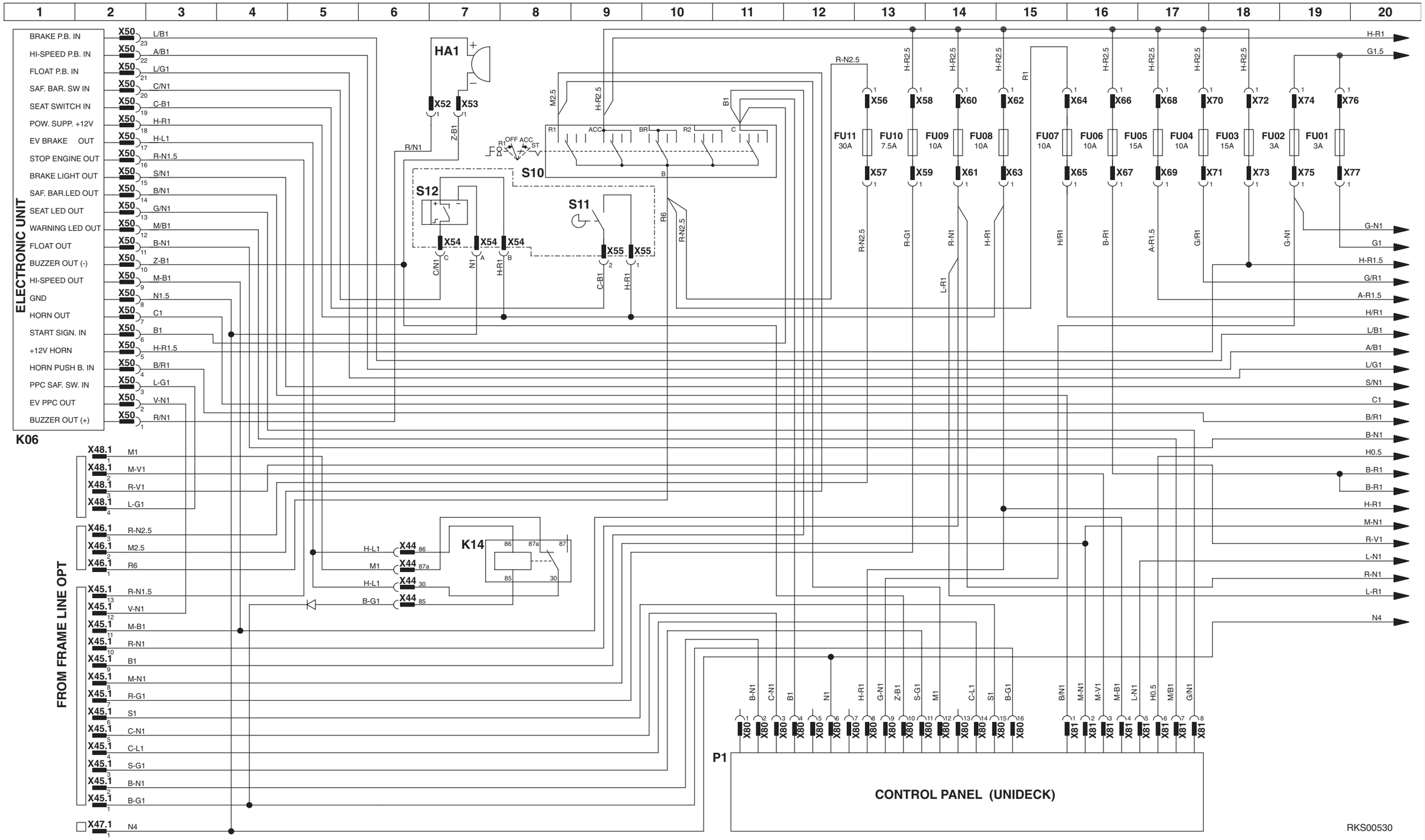

https://truckmanualshub.com/

ELECTRICAL DIAGRAM (CABIN LINE OPTIONAL) (3/7)

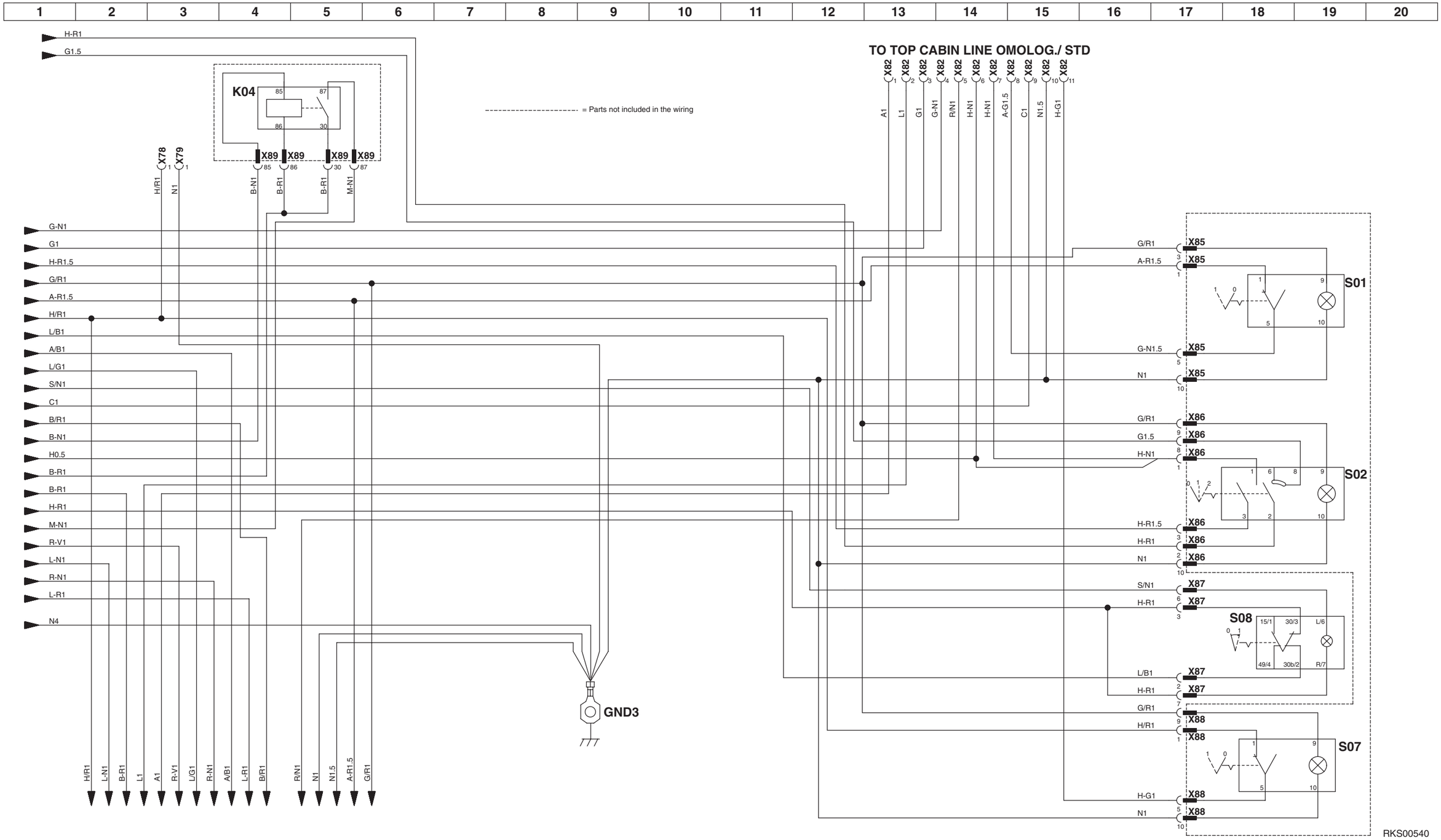

https://truckmanualshub.com/

ELECTRICAL DIAGRAM (CABIN LINE OPTIONAL) (4/7)

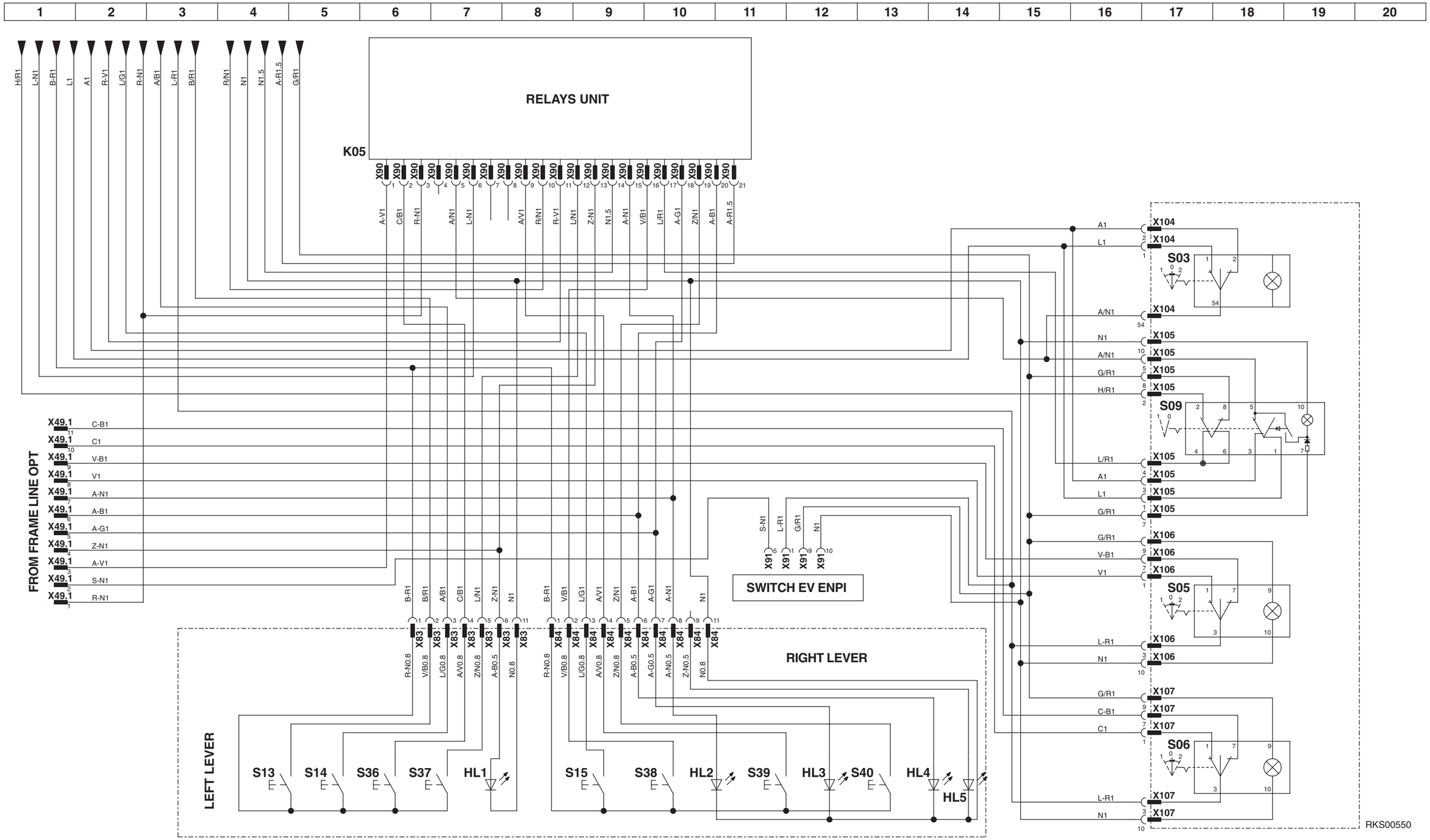

https://truckmanualshub.com/

ELECTRICAL DIAGRAM (CABIN LINE OPTIONAL) (5/7)

1	2	3	4	5	6	7	8	9	10	11	12	13	14	15	16	17	18	19	20

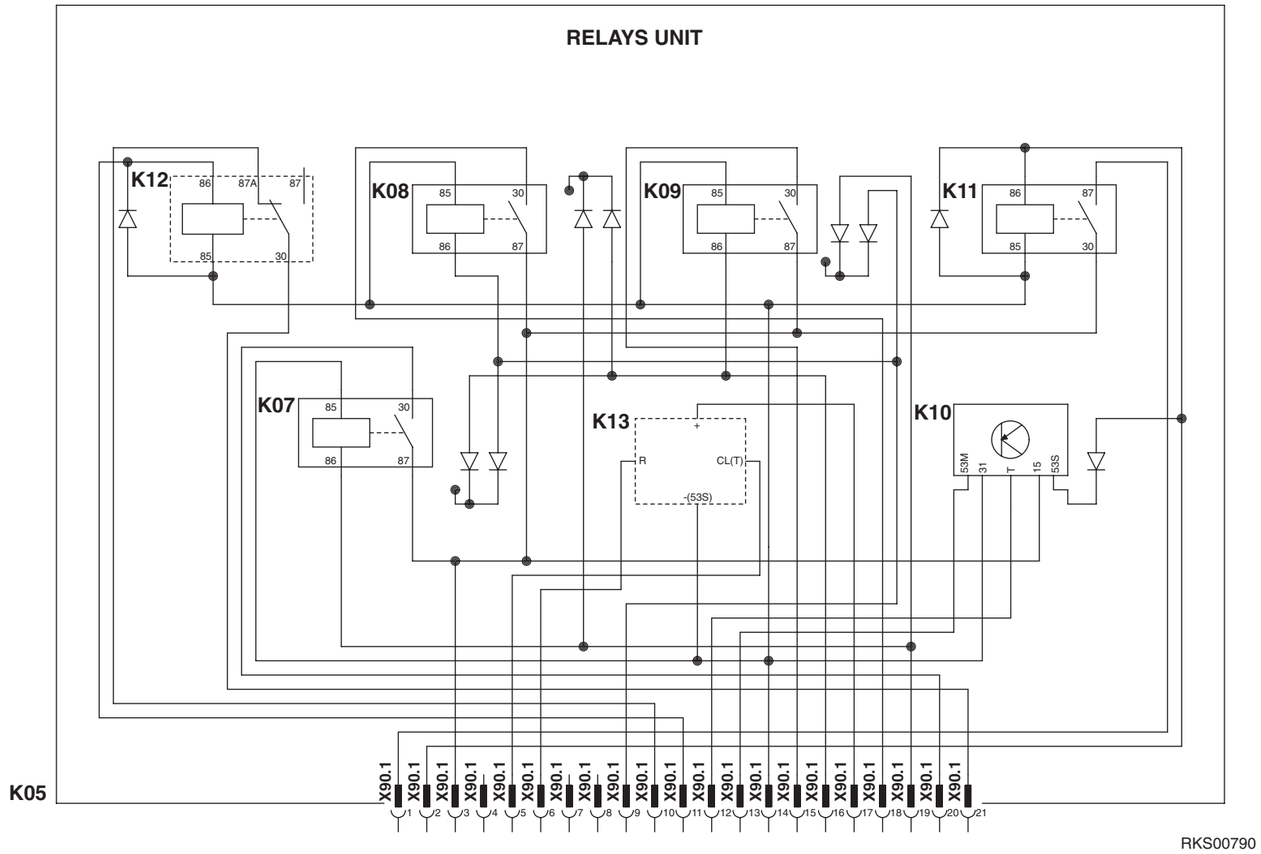

https://truckmanualshub.com/

ELECTRICAL DIAGRAM (CABIN LINE OPTIONAL) (6/7)

1	2	3	4	5	6	7	8	9	10	11	12	13	14	15	16	17	18	19	20

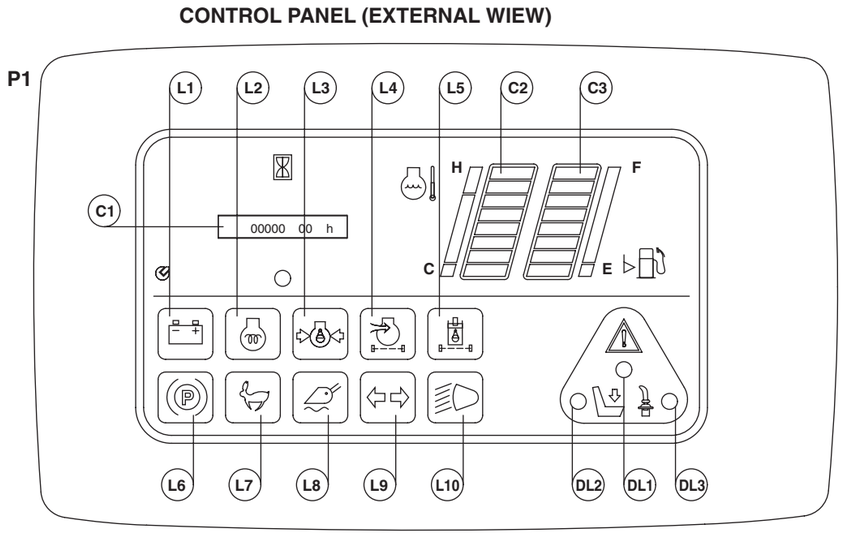

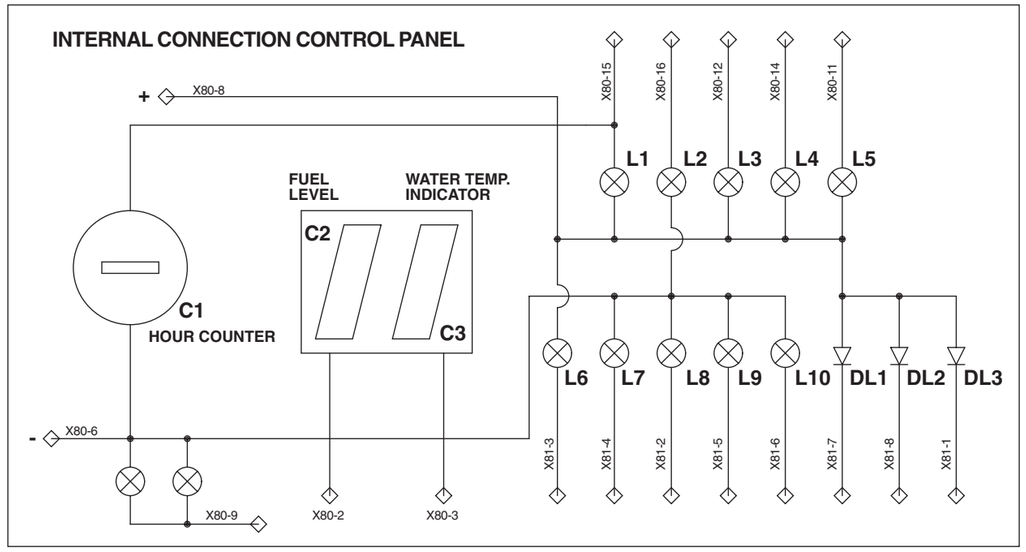

POS.	PIN	FUNCTION	SIGNAL	WIRE COLOUR	POS.	PIN	FUNCTION	SIGNAL	WIRE COLOUR
	X80-1					X80-9	INTERNAL LIGHTS (+ LUCI)	POSITIVE	G-N1
C2	X80-2	FUEL LEVEL INDICATOR	ohm	B-N1		X80-10	BUZZER	NEGATIVE	Z-B1
C3	X80-3	WATER TEMPERAT. INDICATOR	ohm	C-N1	L5	X80-11	HYDRAULIC OIL FILTER LAMP	NEGATIVE	S-G1
+50	X80-4	START SIGNAL	+50	B1	L2	X80-12	PREHEATING LAMP	POSITIVE	M1
GND	X80-5	GROUND	GND			X80-13			
GND	X80-6	GROUND	GND	N1	L4	X80-14	AIR FILTER LAMP	NEGATIVE	C-L1
	X80-7				L1	X80-15	GENERATOR LAMP	NEGATIVE	S1
+15	X80-8	POWER SUPPLY (+12V)	+15	H-R1	L3	X80-16	ENGINE OIL PRESSURE LAMP	NEGATIVE	B-G1

POS.	PIN	FUNCTION	SIGNAL	WIRE COLOUR	POS.	PIN	FUNCTION	SIGNAL	WIRE COLOUR
DL3	X81-1	SAFETY BAR OPEN LED	NEGATIVE	B/N1	L9	X81-5	DIRECTION LAMP	POSITIVE	L-N1
L8	X81-2	FLOAT LAMP	POSITIVE	M-N1	L10	X81-6	LOW BEAM LAMP	POSITIVE	H0.5
L6	X81-3	PARKING BRAKE LAMP	NEGATIVE	M-V1	DL1	X81-7	WARNING LED	NEGATIVE	M/B1
L7	X81-4	SECOND SPEED LAMP	POSITIVE	M-B1	DL2	X81-8	SEAT LED	NEGATIVE	G/N1

RKS00600

https://truckmanualshub.com/

ELECTRICAL DIAGRAM (CABIN LINE OPTIONAL) (7/7)

COMPONENT

GND3 -C6 ground terminal
HA1 - Warning buzzer
HL1 - Super-flow led diode
HL2 - “C” way led diode
HL3 - “A” way led diode
HL4 - “B” way led diode
HL5 - Optional led diode
K04 - Float relay
K05 - Relays box (without relays)
K06 - Elettronic unit
K07 - “B” way relay
K08 - “A” way relay
K09 - “C” way relay
K10 - Super-flow detent step by step relay
K11 - Reverse hi-flow momentary relay
K12 - Stop lights relay
K13 - Flasher unit
K14 - Brake relay
P1 - Control panel
S01 - Rear work lights switch
S02 - Panel lights and low beam lights switch
S03 - Direction lights switch
S05 - Up-down left stabilizer button
S06 - Up-down right stabilizer button
S07 - Beacon light switch
S08 - Brake switch
S09 - Hazard switch
S10 - Starting switch
S11 - Safety seat switch
S12 - Bar PNP safety sensor
S13 - Horn push button
S14 - Second speed push button
S15 - Float push button
S36 - Reverse hi-flow momentary push button
S37 - Super-flow detent push button
S38 - “C” way push button
S39 - “A” way push button
S40 - “B” way push button

CONNECTORS

X44 - Parking brake relay connector
X45.1 -From frame line mark 13 way connector
X46.1 -From frame line 3 way connector
X47.1 -Ground 1 way connector
X48.1 -From frame line mark 5 way connector
X49.1 -From frame line mark 11 way connector
X50 - Safety control box 23 way connector
X52 - Buzzer 1 way connector
X53 - Buzzer 1 way connector
X54 - Proximity bar 3 way connector
X55 - Safety seat switch 3 way connector
X56-X57-X58-X59-X60 -Fuse 1 way connector
X61-X62-X63-X64-X65 -Fuse 1 way connector
X66-X67-X68-X69-X70 -Fuse 1 way connector
X71-X72-X73-X74-X75 -Fuse 1 way connector
X76-X77 -Fuse 1 way connector
X78-X79 -Current intake 1 way connector
X80 - Control panel 16 way connector
X81 - Control panel 8 way connector
X82 - Lights line 11 way connector
X83 - Left lever mark 11 way connector
X84 - Right lever mark 11 way connector
X85 - Rear work lights SWF switch
X86 - Panel and front lights SWF switch connector
X87 - Brake push button connector
X88 - Beacon light switch connector
X89 - Float relay connector
X90 - Relays box 21 way connector
X91 - Enpi valve SWF connector
X104 -Direction lights switch connector
X105 -SWF hazard connector
X106 -Stabilizer push button connector
X107 -Stabilizer push button connector

FUSES

FU01 -Fuse 3A left side lights, plate light
FU02 -Fuse 3A control panel lights, right side lights
FU03 -Fuse 15A horn, low beam or front work lights
FU04 -Fuse 10A switch lights, direction lights
FU05 -Fuse 15A rear work light, stop light
FU06 -Fuse 10A lever switch power supply, float
FU07 -Fuse 10A current intake 12V, hazard, beacon light
FU08 -Fuse 10A control panel, electronic unit, fuel shut off, safety bar proximity, seat safety switch, brake switch
FU09 -Fuse 10A back-up alarm, attachement 3 way, hi-flow, stabilizer, enpi valve
FU10 -Fuse 7.5A fuel pump, safety engine relay, generator
FU11 -Fuse 30A pull solenoid, PPC safety pressure switch

https://truckmanualshub.com/

PAGE INTENTIONALLY LEFT BLANK

https://truckmanualshub.com/

ELECTRICAL DIAGRAM (TOP-CABIN LIGHT LINE STANDARD) (1/2)

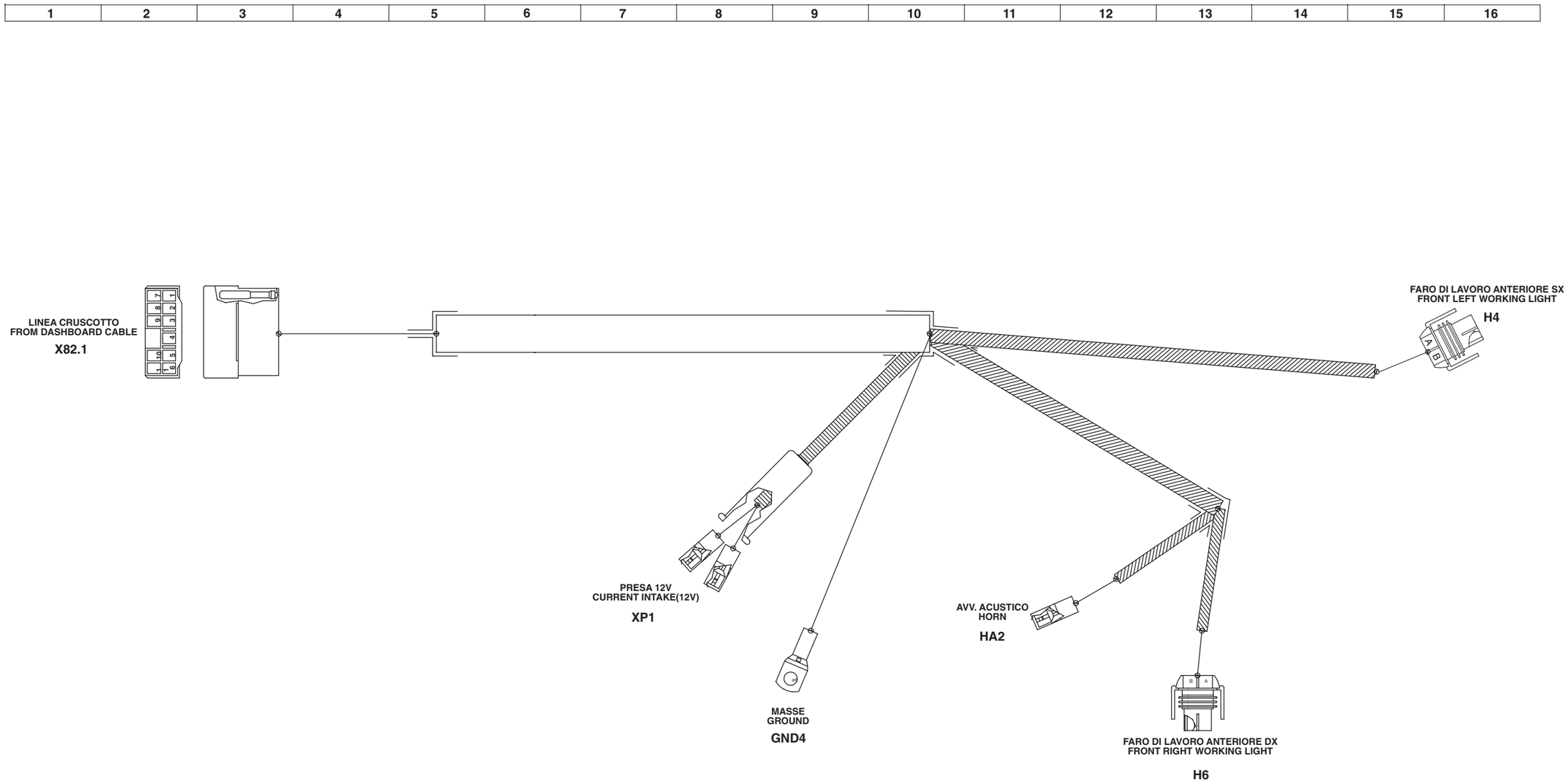

https://truckmanualshub.com/

ELECTRICAL DIAGRAM (TOP-CABIN LIGHT LINE STANDARD) (2/2)

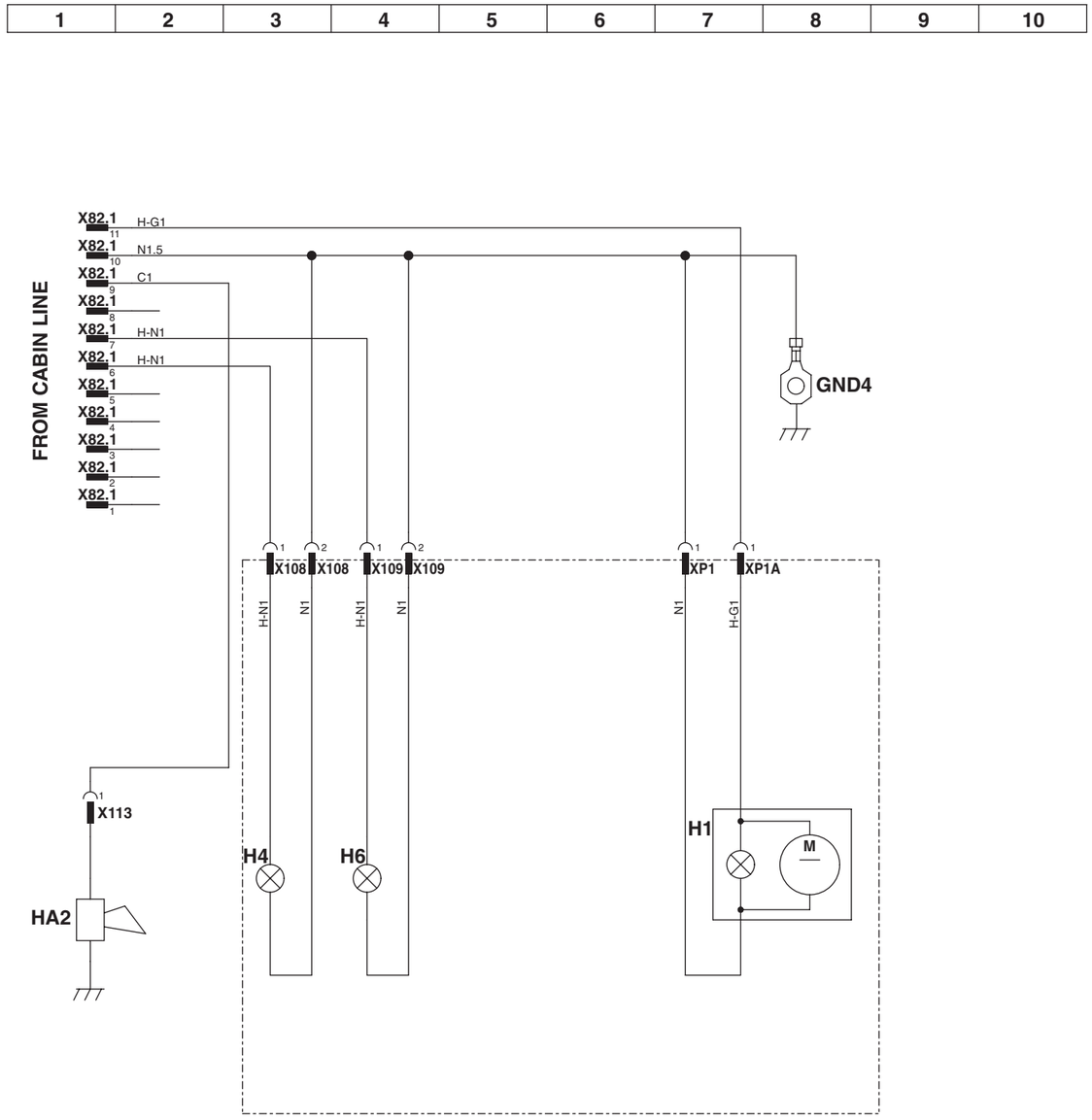

RKS00500

COMPONENTS

GND4 -C6 ground terminal
H1 - Beacon light
H4 - Left front work lamp
H6 - Right front work lamp
HA2 - Horn

CONNECTORS

X82.1 -From cabin line 11 way connector
X108 -Left front light 2 way connector
X109 -Right front light 2 way connector
X113 -Horn 1 way connector
XP1, XP1A -12V socket, beacon light 1 way connector

https://truckmanualshub.com/

ELECTRICAL DIAGRAM (TOP-CABIN LIGHT LINE OMOLOGATION) (1/2)

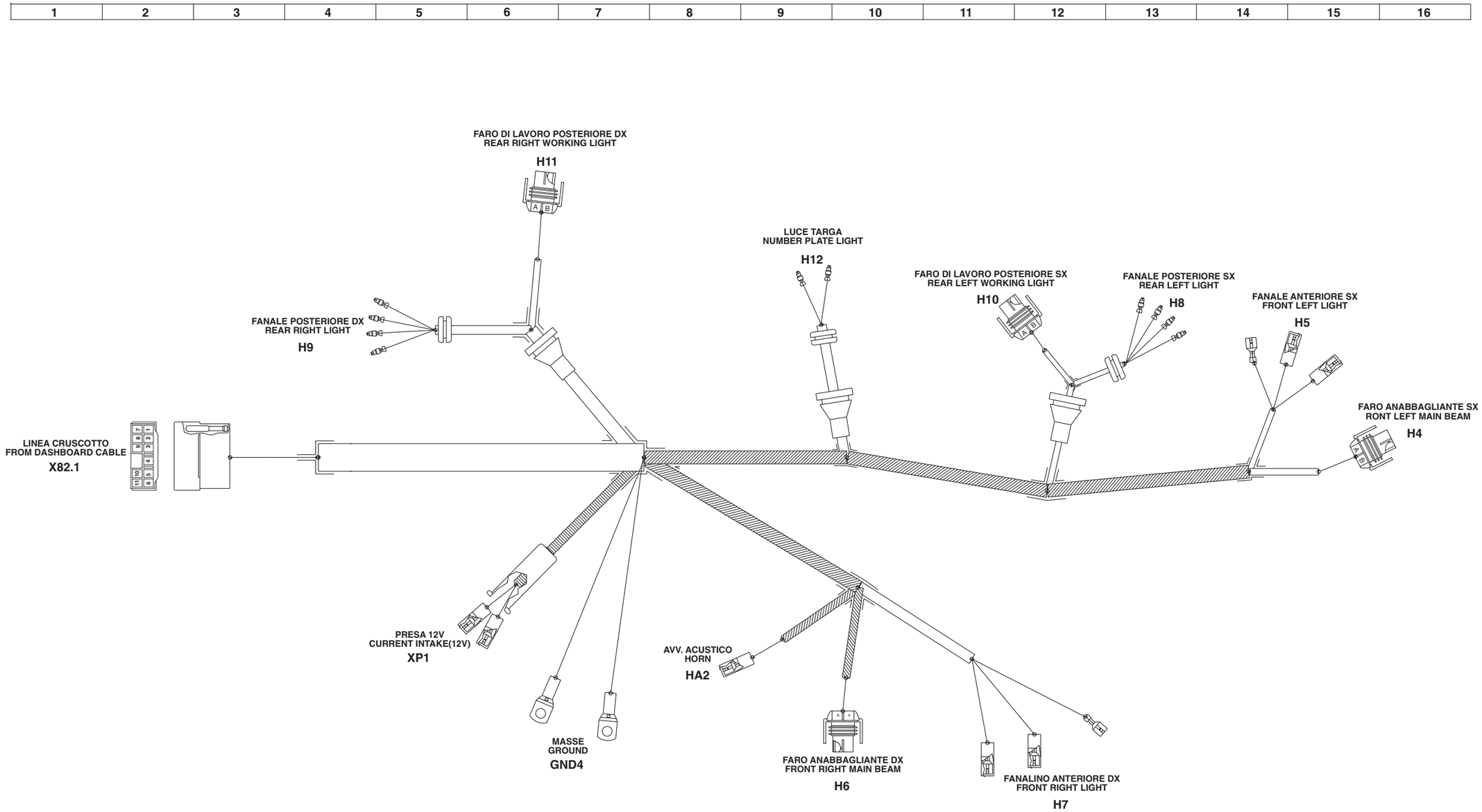

https://truckmanualshub.com/

ELECTRICAL DIAGRAM (TOP-CABIN LIGHT LINE OMOLOGATION) (2/2)

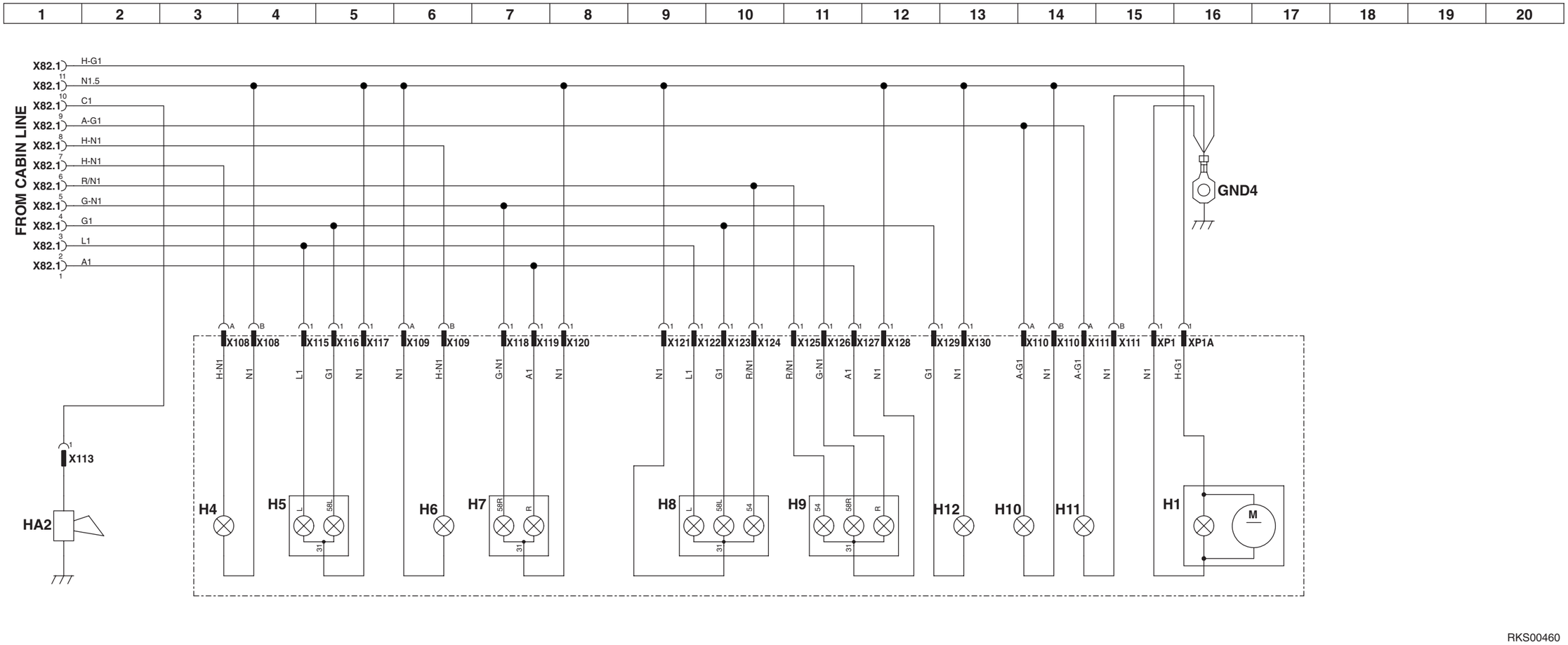

COMPONENTS

H1 - Beacon light
H4 - Left low beam
H5 - Left traffic light
H6 - Right low beam
H7 - Right traffic light
H8 - Left rear lamp
H9 - Right rear lamp
H10 - Left rear work light
H11 - Right rear work light
HA2 - Horn

CONNECTORS

X82.1 -11 way connector
X108-X109 -Front low beam 2 way connector
X110-X111 -Rear work lights 2 way connector
X115-X116-X117 -Front traffic lights 1 way connector
X118-X119-X120 -Front traffic lights 1 way connector
X121-X122-X123-X124 -Rear traffic lights 1 way connector
X125-X126-X127-X128 -Rear traffic lights 1 way connector

https://truckmanualshub.com/

ELECTRICAL DIAGRAM (TOP-CABIN LIGHT LINE OPTIONAL) (1/2)

1	2	3	4	5	6	7	8	9	10	11	12	13	14	15	16	17	18	19	20

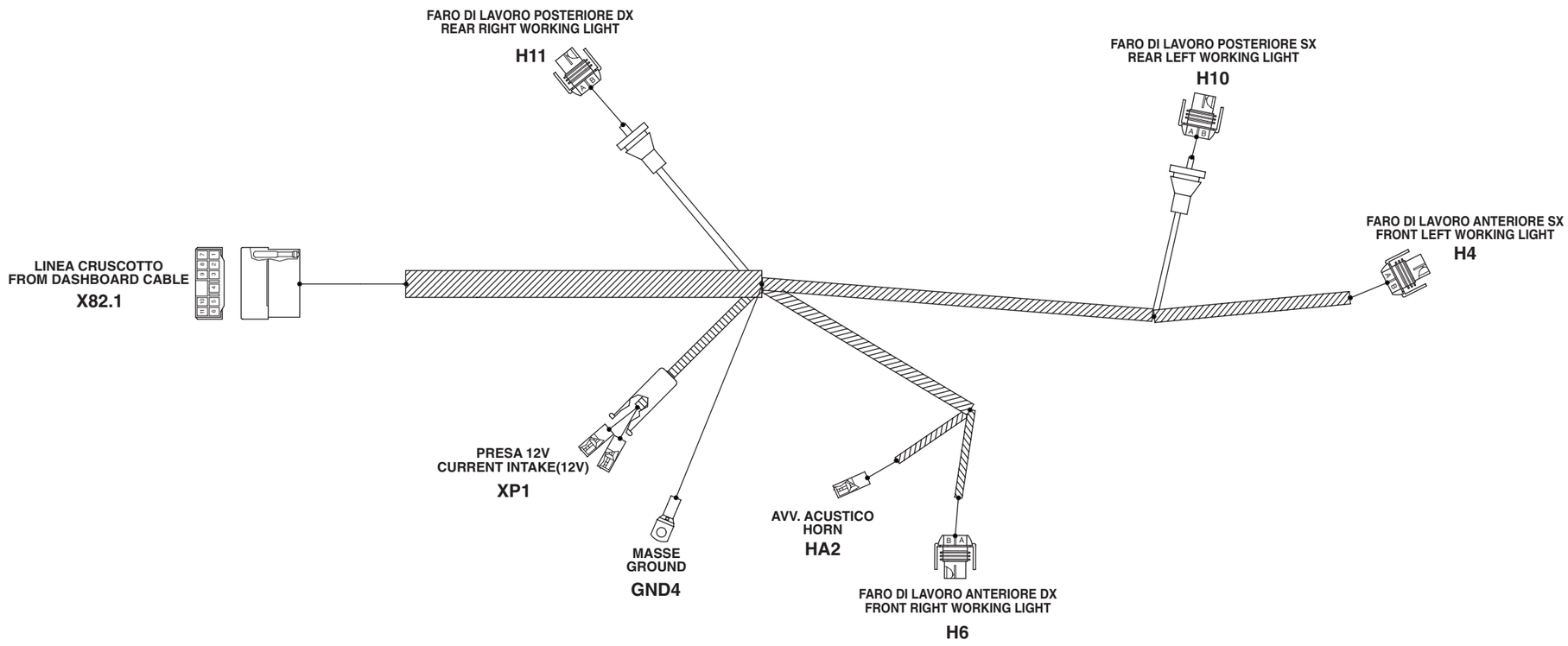

https://truckmanualshub.com/

ELECTRICAL DIAGRAM (TOP-CABIN LIGHT LINE OPTIONAL) (2/2)

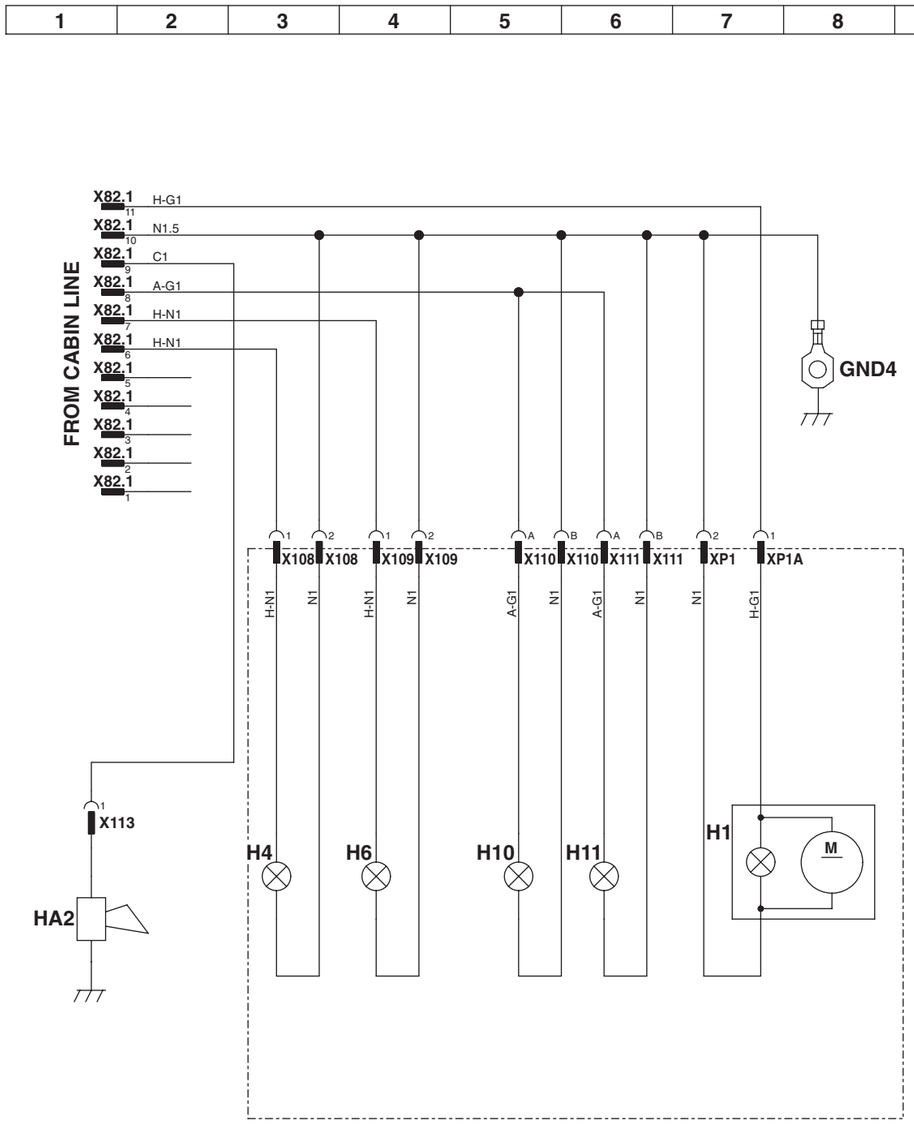

RKS00480

COMPONENTS

GND4 -C6 ground terminal
H1 - Beacon light
H4 - Left front work lamp
H6 - Right front work lamp
H10 - Left rear work lamp
H11 - Right rear work lamp
HA2 - Horn

CONNECTORS

X82.1 -From cabin line 11 way connector
X108 -Left front light 2 way connector
X109 -Right front light 2 way connector
X110 -Left rear work lights 2 way connector
X111 -Right rear work lights 2 way connector
X113 -Horn 1 way connector
XP1, XP1A -12V socket, beacon light 1 way connector

https://truckmanualshub.com/

GROUP 20

https://truckmanualshub.com/

https://truckmanualshub.com/

20 TESTING AND ADJUSTMENTS

Normal or standard technical data 2
Special tools 14
Checking the engine speed 15
Adjustment of valve clearance 16
Measurement of the compression pressure 17
Control and adjustment of the fan belt tension 18
Control and adjustment of the injection timing 19
Checking engine oil pressure 21
Adjusting the stroke of the accelerator cables 22
Adjustment of the ppc valve clearances 23
Adjusting the position of the servo-control engagement safety sensor 24
Testing and adjustment of gearing chain tension 25
Control and regulation of the pressures in the hydraulic circuits 26
Testing the hydraulic pump 27
Valve calibration 28
Checking the travel deviation 30
Control valve 32
Control and regulation of the servo-control power supply 33
Elimination of residual pressures - pressurisation of the tank 35
Bleeding air from the hydraulic circuits 36

⚠ When carrying out controls, adjustments or analyses for troubleshooting, park the machine on firm, level ground. Apply all the machine safety devices and use blocks to prevent any machine movement.

⚠ When more than one person is engaged in the work, use the prescribed notices that indicate that the machine is undergoing maintenance. Do not allow any unauthorised persons to remain in the vicinity.

⚠ When checking the level of the cooling liquid, wait until this liquid has cooled. If the radiator cap is removed while the liquid is still hot and under pressure, it may cause severe burns.

⚠ Take great care not to get entangled in moving parts (fan, alternator belt or any of the rotating elements).

https://truckmanualshub.com/

NORMAL OR STANDARD TECHNICAL DATA

FOR ENGINE

Machine model			SK714-5	
Engine			4D88E-E1FD	
Check item	Test conditions	Unit	Standard value	Permissible value
Engine speed	High idling Low idling Set speed	rpm	2975 1100 –	2925–3025 1050–1150 –
Exhaust gas colour	Sudden acceleration At high idling speed	Bosch index	–	–
Valve clearance	Intake valve (20°C) Exhaust valve (20°C)	mm mm	0.20 0.20	0.15–0.25 0.15–0.25
Compression pressure (SAE30 oil)	Oil temperature 40–60 °C (Engine speed)	kg/cm² (rpm)	35±1 (250)	28±1 (250)
Blow - by pressure (oil SAE30)	Water temperature in operating range At high idling speed	mm H_2O	–	–
Engine oil pressure	Max. idling (in cold state) At set speed At low idling	kg/cm² kg/cm²	– 3.3–4.8	–
Oil temperature	Entire speed range	°C	Max. 120	Max. 120
Fuel injection timing	B.T.D.C.	degrees	12	11–13
Fan belt tension	Deflection when pressed with finge force of approx. 10 kg	mm	10	10–15

https://truckmanualshub.com/

FOR ENGINE

SK815-5					
4D88E-E1FD					
Standard value	Permissible value				
2975 1100 –	2925–3025 1050–1150 –				
–	–				
0.20 0.20	0.15–0.25 0.15–0.25				
35±1 (250)	28±1 (250)				
–	–				
– 3.3–4.8	– –				
Max. 120	Max. 120				
12	11–13				
10	10–15				

https://truckmanualshub.com/

FOR MACHINE

Machine model					SK714-5	
Classification	Check item	Test conditions		Unit	Standard value	Permissible value
Stroke of levers and pedals	Travel forward	• Engine stopped. • At centre of lever knob • Reading at end of travel • Equipment on the ground 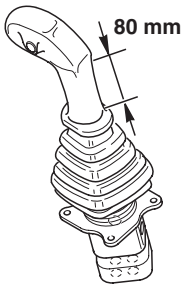	Neutral → Forward	mm	65	58.5–71.5
	Travel reverse		Neutral → Reverse		65	58.5–71.5
	R.H. travel		Neutral → Right		65	58.5–71.5
	L.H. travel		Neutral → Left		65	58.5–71.5
	Raise arm		Neutral → Raise		65	58.5–71.5
	Lower arm		Neutral → Lower		65	58.5–71.5
	Dump bucket		Neutral → Dump		65	58.5–71.5
	Curled bucket		Neutral → Curled		65	58.5–71.5
	Attachment pedal		Neutral → Right		20	15–25
			Neutral → Left			
	Travel speed lever		Min. → Max.		105	100–110
	Accelerator pedal		Min. → Max.		40	30–50
Operating force for control of levers and pedals	Travel forward	• Engine speed: min. • Oil temperature: 45–55 °C • Instrument coupling at centre of control lever knob • Instrument coupling on outside edge (for pedal control)		mm	2.0	1.8–2.2
	Travel reverse				2.0	1.8–2.2
	R.H. travel				2.0	1.8–2.2
	L.H. travel				2.0	1.8–2.2
	Raise arm				1.8	1.5–2.1
	Lower arm				1.8	1.5–2.1
	Dump bucket				1.8	1.5–2.1
	Curled bucket				1.8	1.5–2.1
	Attachment pedal		Right		5.0	4.0–6.0
			Left		5.0	4.0–6.0
	Travel speed lever				7.5	5.0–10

https://truckmanualshub.com/

FOR MACHINE

SK815-5					
Standard value	Permissible value				
65	58.5–71.5				
65	58.5–71.5				
65	58.5–71.5				
65	58.5–71.5				
65	58.5–71.5				
65	58.5–71.5				
65	58.5–71.5				
65	58.5–71.5				
20	15–25				
110	105–115				
40	37–43				
2.0	1.8–2.2				
2.0	1.8–2.2				
2.0	1.8–2.2				
2.0	1.8–2.2				
1.8	1.5–2.1				
1.8	1.5–2.1				
1.8	1.5–2.1				
1.8	1.5–2.1				
5.0	4.0–6.0				
5.0	4.0–6.0				
7.5	5.0–10				

https://truckmanualshub.com/

FOR MACHINE

Machine model				SK714-5	
Classification	Check item	Test conditions	Unit	Standard value	Permissible value
Hydraulic pressure	Control valve	• Engine speed: 2800 rpm • Oil temperature: 45–55 °C	bar	191	181–191
	Travel motors			309	260–316
	Servocontrol			26	25–28
	AS Valve	• Macchina sollevata da terra • Oil temperature: 45–55 °C • Travel levers: forward Low idling		–	–
		Set speed		–	–
	Unloading valve	• Engine speed: max. • Oil temperature: 45–55 °C • Travel levers: at neutral		–	–
Pilot system and secondary circuit pressures	Pilot system travel forward (start-up) ✻	• Engine speed: 1800±50 rpm • Oil temperature: 45–55 °C • Machine raised from the ground ✻ Pressure of wheels start rotation	bar	5.5	4.0–7.0
	Pilot system travel (maximum)			14.46	13.7–15.2
	Pilot system travel reverse (start-up) ✻			5.5	4.0–7.0
	Pilot system travel reverse (maximum)			14.46	13.7–15.2
	Pilot system travel to right or left (start-up) ✻			5.5	4.0–7.0
	Pilot system travel to right or left (maximum)			14.46	13.7–15.2
	Pilot system with parking brake disengaged			15	15–22
Engine speed (with load)	With travel pump	• Engine speed: max. • Oil temperature: 45–55 °C • Travel lever: at full stroke • Parking brake: applied	rpm	2800	2800–2950
	With travel and equipment pumps	• Engine speed: max. • Oil temperature: 45–55 °C • Travel lever: at full stroke • Parking brake: applied • Raise: at end of stroke		2180	2180–2450

https://truckmanualshub.com/

FOR MACHINE

SK815-5					
Standard value	Permissible value				
191	181–191				
309	274–316				
26	25–29.5				
12.7					
15.2					
5.5	4.0–7.0				
14.46	13.7–15.2				
5.5	4.0–7.0				
14.46	13.7–15.2				
5.5	4.0–7.0				
14.46	13.7–15.2				
15	15–22				
2800	2800–2950				
2400	2250–2500				

https://truckmanualshub.com/

FOR MACHINE

Machine model					SK714-5	
Classification	Check item		Test conditions	Unit	Standard value	Permissible value
Hydraulic drift of work equipment	Front bucket	Total work equipment (Downward movement of tips of bucket teeth)	Measuring posture 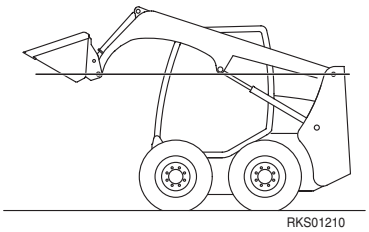 RKS01210 • In this position, measure extension or retraction of each cylinder, and any leakages occurring when a load is applied to the tips of the bucket teeth. • Horizontal and level ground • Bucket: rated load: SK714-5: 650 kg SK815-5: 700 kg • Engine: switched off • Oil temperature: 45—55 °C • Take measurements as soon as the engine stops • Measure the variations every 5 minutes and check the total variation after 15 mins.	mm	Max. 250	Max. 375
		Raising cylinder (Retraction)			Max. 21	Max. 30
		Bucket cylinder (Retraction)			Max. 15	Max. 22

https://truckmanualshub.com/

FOR MACHINE

SK815-5					
Standard value	Permissible value				
Max. 250	Max. 275				
Max. 21	Max. 30				
Max. 15	Max. 22				

https://truckmanualshub.com/

FOR MACHINE

Machine model						SK714-5	
Classification		Check item	Test conditions		Unit	Standard value	Permissible value
Work equipment speed	Standard	Arm Arm on the ground ↕ Cylinder fully extended	Measuring posture 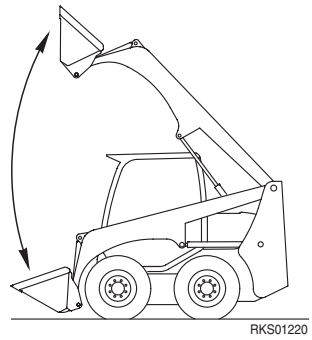 RKS01220 • Engine speed: max. • Oil temperature: 45–55 °C	Raise	sec.	3.2	2.9–3.8
				Lower		2.0	1.8–2.4
		Bucket Cylinder fully extended ↕ Cylinder fully retracted	Measuring posture 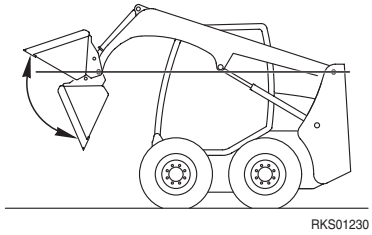 RKS01230 • Engine speed: max. • Oil temperature: 45–55 °C	Dump		2.0	1.8–2.4
				Curl		2.2	2.0–2.6
	Pattern change version (optional)	Arm Arm on the ground ↕ Cylinder fully extended	Measuring posture 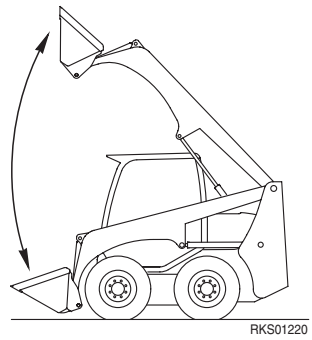 RKS01220 • Engine speed: max. • Oil temperature: 45–55 °C	Raise		3.4	3.1–4.0
				Lower		2.2	2.0–2.6
		Bucket Cylinder fully extended ↕ Cylinder fully retracted	Measuring posture 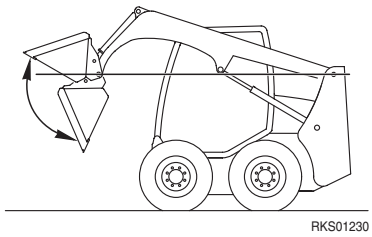 RKS01230 • Engine speed: max. • Oil temperature: 45–55 °C	Dump		2.2	2.0–2.6
				Curl		2.4	2.2–2.9

https://truckmanualshub.com/

FOR MACHINE

SK815-5					
Standard value	Permissible value				
3.2	2.9–3.8				
2.0	1.8–2.4				
2.0	1.8–2.4				
2.2	2.0–2.6				
3.4	3.1–4.0				
2.2	2.0–2.6				
2.2	2.0–2.6				
2.4	2.2–2.9				

https://truckmanualshub.com/

FOR MACHINE

Machine model					SK714-5	
Classification	Check item	Test conditions		Unit	Standard value	Permissible value
Travel	Wheel swing (without load)	Measuring posture 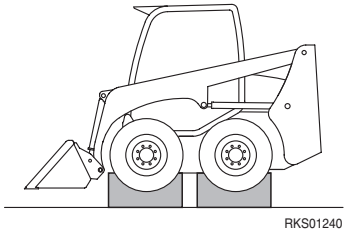 • Engine speed: max. • Oil temperature: 45–55 °C • Machine raised from grouns	Normal	rpm	76	68–84
			With invrement		118	106–130
	Travel speed	Measuring posture 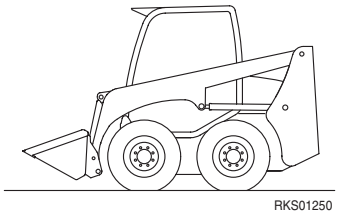 • Travel for 25 meters and then check on the time needed for cover 25 meters.	Normal	km/h	10.5	9.5–11.6
			With increment		16.0	14.4–17.6
	Travel deviation	Measuring posture 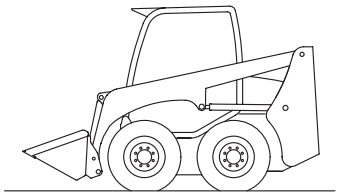 • Engine speed: max. • Oil temperature: 45–55 °C • Travel 20 metres on flat ground and measure the deviation. • Check all the direction ★ The surface must be firm and horizontal. 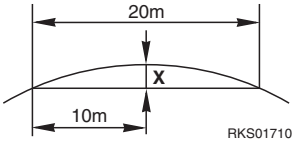 ( ): Value with speed increment		mm	Max. 250 (Max. 250)	Max. 375 (Max. 375)

https://truckmanualshub.com/

FOR MACHINE

SK815-5					
Standard value	Permissible value				
76	68–84				
118	106–130				
10.5	9.5–11.6				
16.0	14.4–17.6				
Max. 250 (Max. 250)	Max. 375 (Max. 375)				

https://truckmanualshub.com/

SPECIAL TOOLS

Measurement check points	Symbol		Code	Name	Q.ty	Remarks
Engine speed	A	1	Commercially available	Multi-scale tachometer	1	20 - 4000 rpm
		2	ATR800060	Stroboscopic tachometer	1	6 - 30000 rpm
Valve clearance	B	1	Commercially available	Feeler gauge	1	–
Compression pressure	C	1	ATR800280	Compression gauge	1	Kit Yanmar TOL-97190080
		2		Adapter	1	
Engine oil pressure	D	1	Commercially available	Pressure adapter	1	Thread 1/8”
		2	Commercially available	Compression gauge	1	Scale 10 bar
Hydraulic pressure	E	1	Commercially available	Compression gauge	2	Scale 60 bar
		2	Commercially available	Compression gauge	1	Scale 400 bar
					1	Scale 600 bar
		3	Commercially available	Compression gauge	1	Scale 10 bar
		4	ATR800200	Servocontrol kit (Differential pressure)	1	0–1000 bar
		5	Commercially available	Pressure adapter	1	Thread M10

https://truckmanualshub.com/

CHECKING THE ENGINE SPEED

When checking the engine rpm , always be very careful not to touch parts that reach high temperatures and not to get entangled in rotating elements.

★ Check the engine speed after the following conditions have been reached:

- Temperature of engine cooling water: 68–80 °C.
- Oil temperature: 45–55 °C.

1 - Mount and connect the tachometer **A1**.

★ If the stroboscopic tachometer **A2** is used, remove plug (1).

2 - Start the engine and check:

- Low idling without load (accelerator lever in “minimum” position).
- High idling without load (accelerator lever in “maximum” position).

★ Low idling: 1100±50 rpm

★ High idling: 2975±50 rpm

★ If the minimum and maximum speeds do not fall within permissible limits when the engine is without load, check the position locks of the accelerator lever, and the sheathing of the accelerator well, before carrying out any tests under load.
(See «ADJUSTMENT OF THE ACCELERATOR LEVER»).

- Engine rpm with the pumps under load.

★ **Only for Pattern Change version.**
Check that the Pattern change valve is in “ISO” mode.

★ Max. speed with parking brake inserted and travel lever at full stroke (forward): 2800–2950 rpm

★ Max. speed with parking brake inserted, travel lever at full stroke (forward) and raising arm at the end of stroke:
SK714-5: 2180–2450 rpm
SK815-5: 2250–2500 rpm

★ If engine efficiency does not fall within permissible limits, have the engine checked by an authorised workshop.

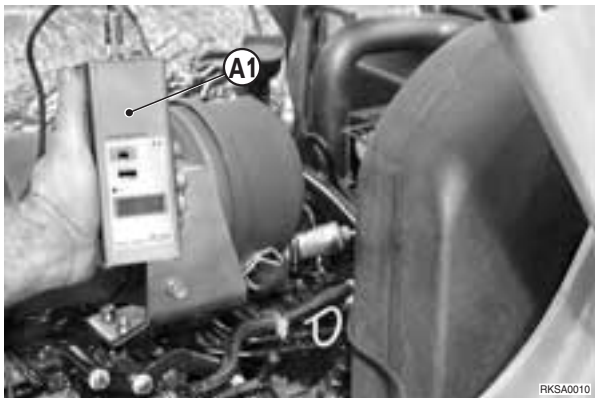

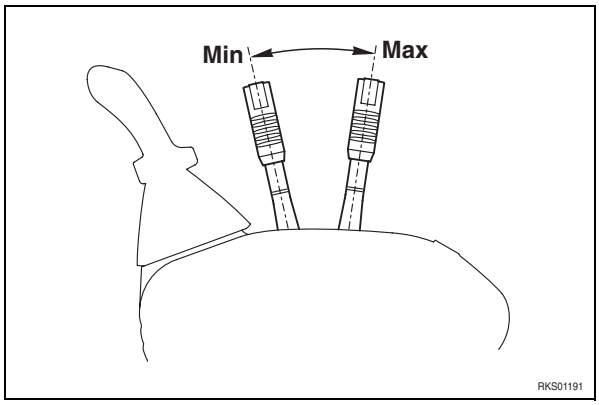

https://truckmanualshub.com/

ADJUSTMENT OF VALVE CLEARANCE

★ Adjust the clearance between valve and rockers to the following values:

Unit: mm

With engine cold	Suction valves	Exhaust valves
	0.20	0.20

1 - Remove the intake filter and the valve cover.

2 - Turn the drive shaft in the normal direction of rotation until the line (1) marked as no. 1 on the flywheel is in alignment with the reference notch (2) on the flywheel housing.

★ If the cylinder is in a compression stroke, the valves do not move when the drive shaft is rotated slightly. If the valves do move, rotate the drive shaft by one turn and realign the reference marks (1) and (2).

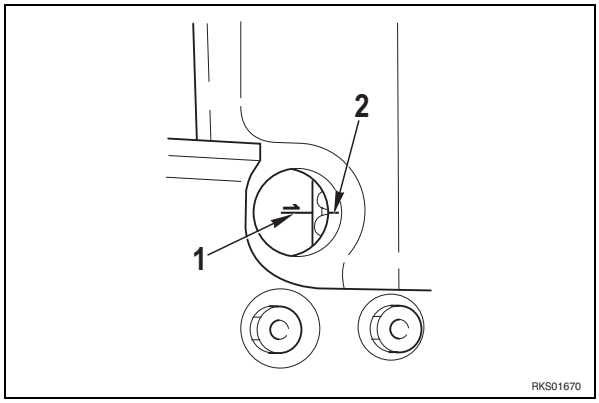

3 - Loosen the lock nut (3) and unscrew the adjustment screw (4) by approximately 1 turn.

★ Check that the valve cap (5) is lying flat on the valve stem and that there is no lop-sided wear.

1 - If the valve caps (5) are damaged, replace them with new ones.

2 - Make sure that the valve caps fit perfectly and are lying flat on the valve stem.

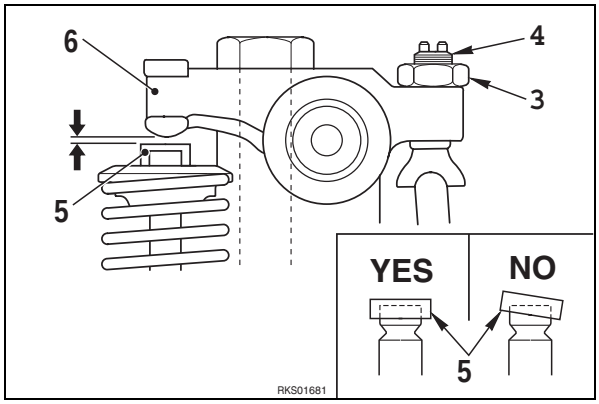

4 - Insert the feeler gauge **B1** between the rocker (6) and the valve cap (5).
Rotate the adjusting screw (4) until it rubs against the feeler gauge **B1**.
Secure this position with the nut (3).

Nm Lock nut: 25.5±2.5 Nm

★ After locking the nut (3), check the valve clearance again.

5 - After adjusting the No. 1 cylinder, rotate the drive shaft 180° each time and adjust the valve clearance of the other cylinders according to the ignition sequence.

★ Ignition sequence: 1 - 3 - 4 - 2.

Assembly of the valve cover

1 - Check the condition of the gasket (7) of the valve cover (8), and the O-rings (9). Thoroughly clean the contact surface on the cylinder heads.

2 - Replace the valve cover (8) and mount the O-rings (9) and the lock nuts (10).

Nm Lock nuts for cover: 25±3 Nm

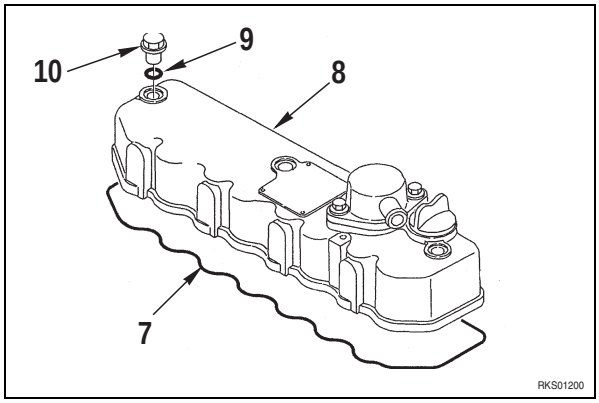

https://truckmanualshub.com/

MEASUREMENT OF THE COMPRESSION PRESSURE

While measuring the compression, take care not to get entangled in the cooling fan, the alternator belt, or in other rotating parts.
Check all cylinders.

★ Test conditions:
- Engine: at working temperature.
- Olio idraulico: 45–55°C.
- Battery: fully charged.
- Valve clearance: adjusted
  (See «ADJUSTMENT OF VALVE CLEARANCE»).

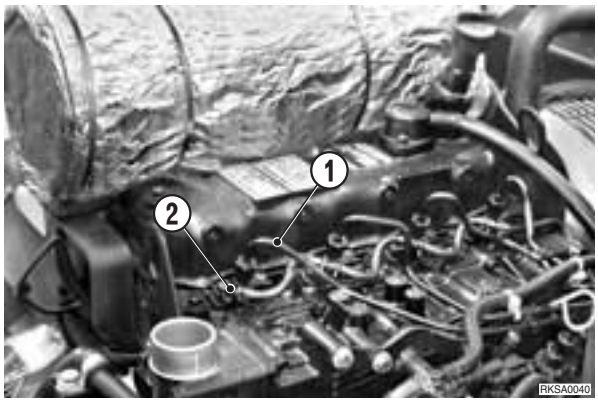

1 - Remove air filter with support.

2 - Disconnect the high-pressure tube (1).

3 - Remove the nozzle holder (2) of the cylinder to be checked.

4 - Disconnect the connector (3) of the engine-stopping solenoid and close the fuel cock (4).

5 - Turn the engine over a few times, using the starting motor.

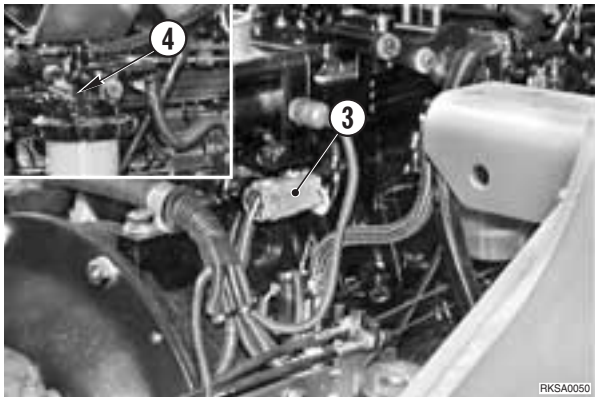

6 - Mount the adapter **C2** and connect the test pressure gauge **C1**.
  ★ Check that the seal is mounted in the adapter, and that it is undamaged.

7 - Turn the engine using the starting motor and read the compression value.
  ★ Read the compression value when the pressure gauge has stabilised.
  ★ While reading the compression, also check the engine rpm using the tachometer **A1** or **A2**. If the speed does not correspond with the control value, check it against the diagram.
  ★ Compression value:
  Normal: 35±1 kg/cm² at 250 rpm
  Minimum permissible: 26±1 kg/cm² at 250 rpm
  ★ Maximum difference between the cylinders:
  2–3 kg/cm²

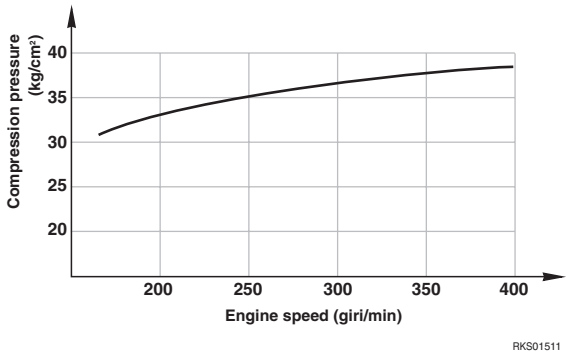

8 - After the reading, re-assemble the nozzle holder (2), and reconnect the high- pressure tube (1) and the connector (3).

Nm Nut that secures the nozzle: 7.84±0.98 Nm

Nm High-pressure coupling: 31.85±2.45 Nm

https://truckmanualshub.com/

CONTROL AND ADJUSTMENT OF THE FAN BELT TENSION

1. Checking the tension

1 - Depress the belt (1) at the centre of the section between the alternator (2) and the pulley (3) that drives the water pump. Check the flexion.
At a pressure of 10 kg (98 N) the flexion should be 10–15 mm. If this value is not found, adjust the belt tension.
★ With a new belt the flexion should be 7–9 mm.

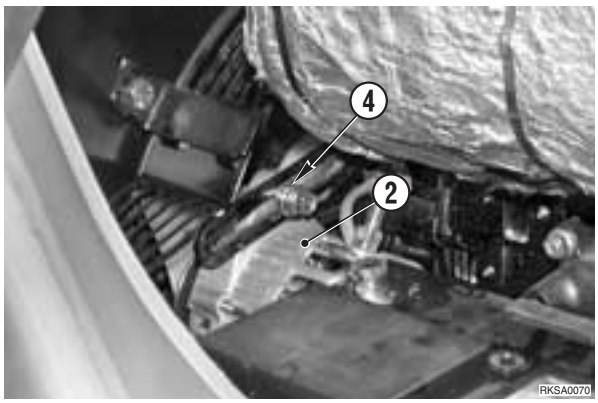

2. Adjusting the belt tension

1 - Loosen the screws (4) that secure the alternator (2)

2 - Rotate the alternator (2) to give the belt (1) the correct tension and tighten the screw (4).

3 - Check the belt (1) tension.
★ If the belt has been replaced with a new one, check the tension again after about 20 hours of operation.

Nm Screw: 25–32 Nm

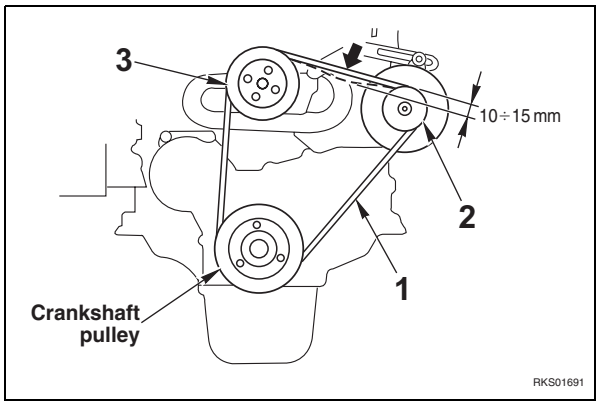

https://truckmanualshub.com/

CONTROL AND ADJUSTMENT OF THE INJECTION TIMING

★ Check the injection timing of the No.1 cylinder by means of the No.1 union of the injection pump.
★ The cylinders are numbered 1-2-3-4 counting from the flywheel side.
★ The spark advance notches of 0°-10°-15°-20°; are also marked on the flywheel. In order to read the intermediate values, sub-divide the sections between the two marks into equal lengths.

1 - Remove the cap (1) of the flywheel casing.

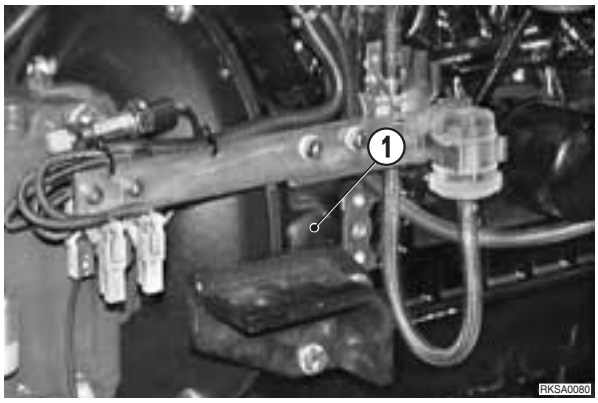

2 - Pass a screwdriver between the teeth and rotate the flywheel in a counter-clockwise direction (as seen from the flywheel side) until the 1/4 notch of the flywheel is aligned with the notch (2) marked inside the hole in the casing.
  ★ In this position, the piston of the No. 1 cylinder is at the top dead centre (B.T.D.C.). Check that the cylinder is in a compression stroke, i.e. that both valves are closed.
  ★ Once the B.T.D.C. has been ascertained, rotate the drive shaft in a clockwise direction (seen from the flywheel side) for about 25 teeth.

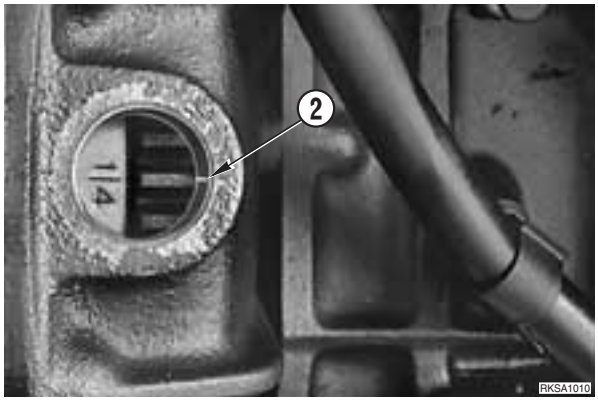

3 - Take off the clamp (3) and disconnect all the fuel delivery tubes (4) from the injection pump (5).

4 - Rotate the flywheel slowly in a counter-clockwise direction (seen from the flywheel side), checking carefully the level of the fuel in the No. 1 union of the injection pump. Stop the rotation when the fuel level starts to rise.

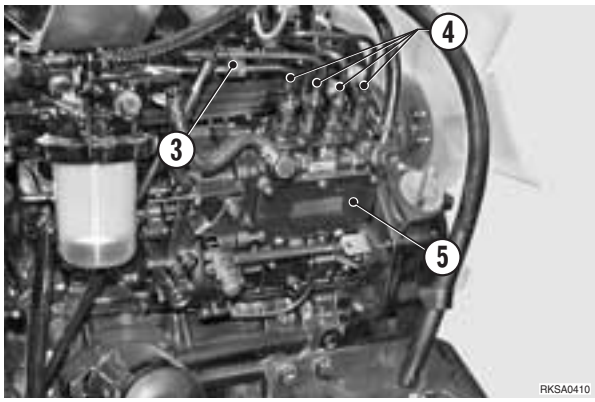

5 - Check the position of the notches at 15° and 10° that appear in the hole in the casing and, in function of the position, establish the true fuel injection timing.
  ★ In order to determine the degrees of intermediate fuel injection timing, sub-divide the space between 10° and 15°.
  ★ Normal fuel injection timing: 12±1°

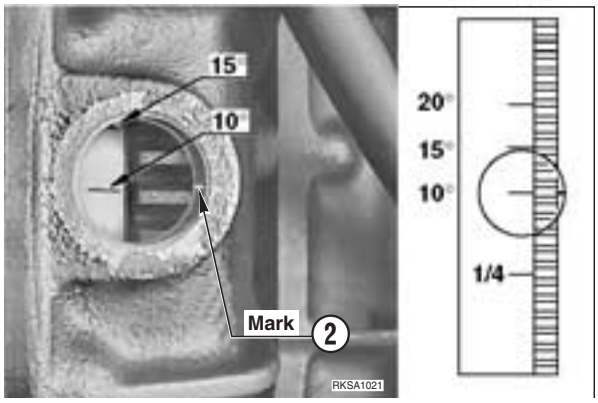

https://truckmanualshub.com/

6 - Rotate the injection pump (5) towards the outside or towards the motor, after having loosened the pump (6) retaining nuts.
- To BRING FORWARD the injection, rotate the pump (5) towards the outside.
- To DELAY the injection rotate the pump (5) towards the cylinder block.

★ Check the extent of the movement on the scale (7).

7 - Lock the nuts (6) that fasten the pump to its block.

Nm Pump fastening nuts: 25–35 Nm

★ After adjustment of the fuel injection timing:

8 - Connect the fuel delivery tubes (4) to the pump and replace the clamp (3).

Nm Delivery tube couplings: 31.85±2.45 Nm

9 - Bleed any air from the fuel circuit.

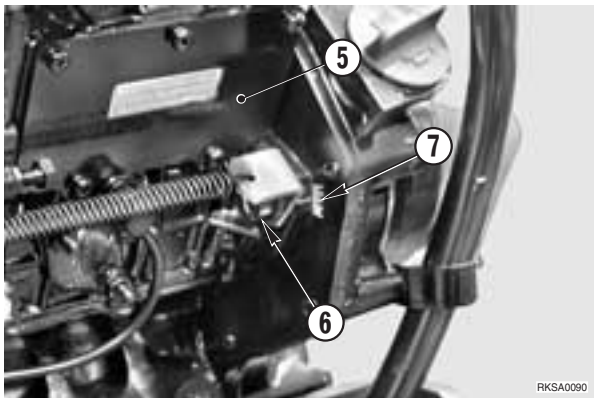

https://truckmanualshub.com/

CHECKING ENGINE OIL PRESSURE

⚠ When measuring the engine oil pressure, take great care not to touch high-temperature parts, or to become entangled in rotating elements.

★ Check pressure with the engine at working temperature.

★ Low and high idling within permissible limits.

1 - Start the engine and wait for it to reach working temperature.
   ★ Working temperature:
   Coolant liquid: 90°C
   Engine oil: 110°C

2 - Stop the engine and remove the oil pressure sensor (1).

3 - Mount the adapter **D1** and connect the pressure gauge **D2**.

4 - Start the engine and check the oil pressure at low idling (accelerator lever in low idling position) and at high idling ((accelerator lever in high idling position).
   ★ Low idling pressure: min 1 kg/cm^2
   ★ High idling pressure: 3.3 - 4.8 kg/cm^2

5 - Remove the adapter **D1** and install the oil pressure sensor (1).

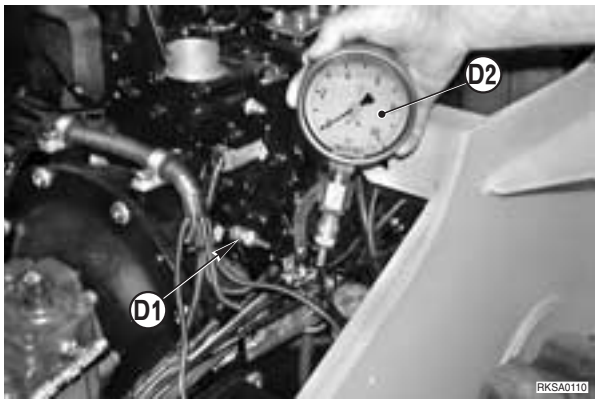

https://truckmanualshub.com/

ADJUSTING THE STROKE OF THE ACCELERATOR CABLES

★ Conditions for the adjustment:
- Engine: stopped
- Working equipment: resting on the ground
- Cab: raised

★ If the protective sheaths need to be substituted, block the lever (or pedal) side of the sheaths in an intermediate position before carrying out the adjustment.

1 - Place the accelerator command lever (1) in low idling position.

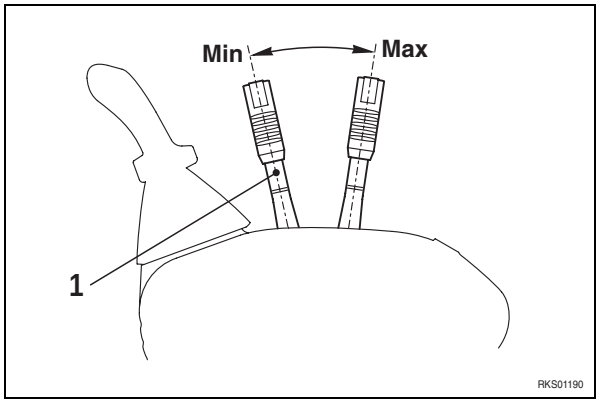

2 - Temporarily block the protective sheath (2) in an intermediate position and block the retainer (3) at approx. 1 mm from the injection pump lever (4).

3 - Put the accelerator command lever (1) into the high idling position.

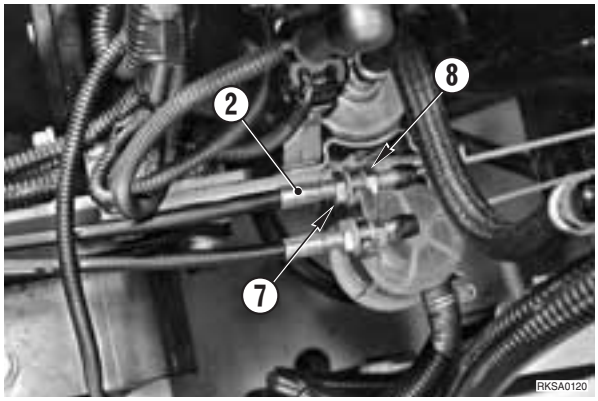

4 - Use the nuts (7) and (8) to reset the position of the injection pump lever (5) to approx. 0.5 mm from the high idling adjustment screw (6).

5 - Bring the accelerator command lever back to the low idling position and check that the retainer (3) has sufficient clearance.

6 - Repeat the same procedure for the accelerator pedal cable.

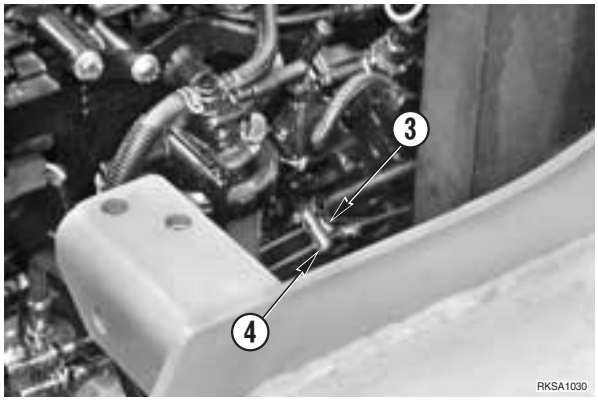

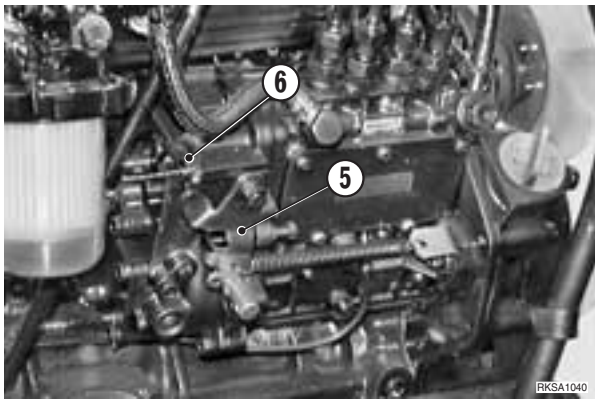

https://truckmanualshub.com/

ADJUSTMENT OF THE PPC VALVE CLEARANCES

The clearance of the PPC valve (hand and foot) levers is adjusted as follows.

Lower the working equipment to the ground and stop the engine.
Turn the ignition key to the **I** position and move the command levers in all directions in order to release all pressure in the hydraulic circuits.
Return the ignition key to the **O** (OFF) position and remove it.
Slowly loosen the oil-tank refuelling cap to eliminate residual pressure.

1 - Remove cap (1).

2 - Loosen the nut (2) that retains the disc (3).

3 - Tighten the disc (3) until it makes light contact with the 4 push-rods (4).

★ During this adjustment, take care not to activate any of the push-rods (4) individually.

4 - Secure this position by tightening the retaining nut (2) to the specific torque.

Nm Retaining nut: 113±15 Nm

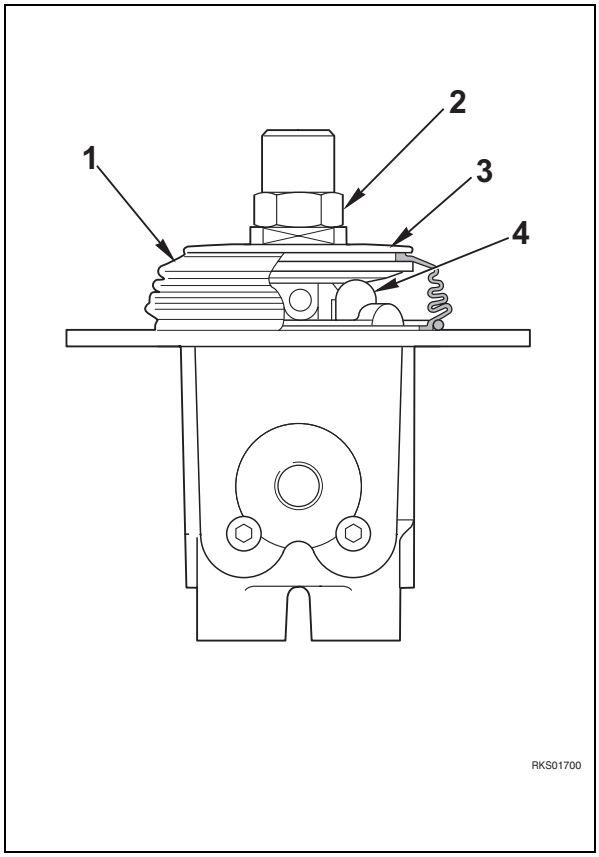

https://truckmanualshub.com/

ADJUSTING THE POSITION OF THE SERVO-CONTROL ENGAGEMENT SAFETY SENSOR

Lower the working equipment to the ground, stop the engine and remove starter key.

1 - Lower the LH safety bar (1) and adjust the position of the sensor (2) by loosening and tightening the adjustment nuts (3).

★ Distance between safety bar and sensor: 1 mm

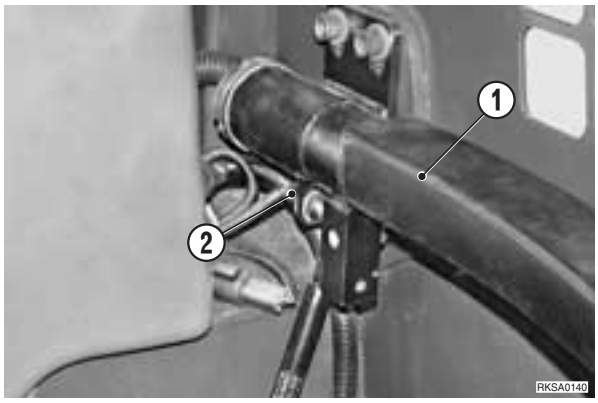

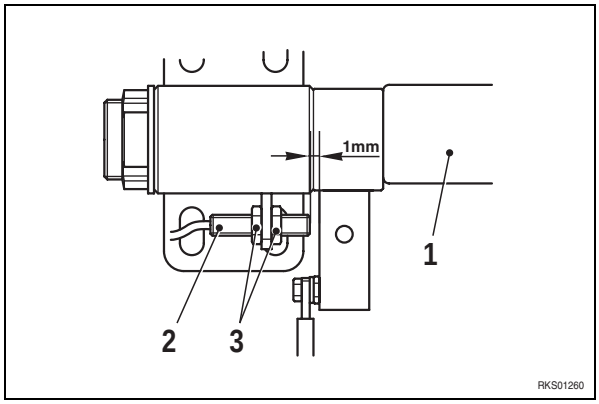

https://truckmanualshub.com/

TESTING AND ADJUSTMENT OF GEARING CHAIN TENSION

1. Test

★ Test conditions:
- Machine: raised from the ground
- Working equipment: in road-driving position

★ Check all the wheels.

1 - Position an appropriate indicator to correspond with the outside edge of the tire rim and make a notch "**A**" close to the indicator.

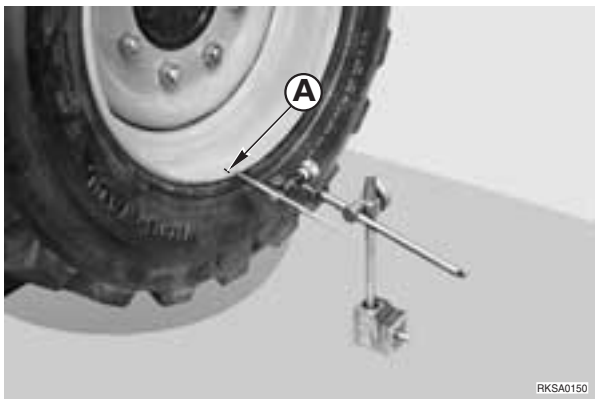

2 - Rotate the tire by hand in both directions and check that the displacement of the notch remains within permissible limits.

★ Standard displacement: 2–6 mm
Permissible value: 10 mm

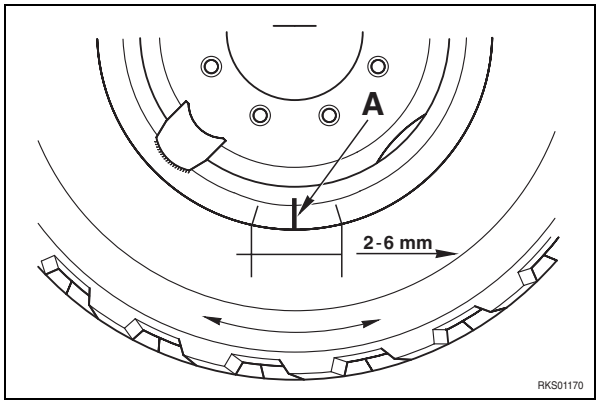

2. Adjustment

★ For greater clarity, the photo opposite shows the adjustment operations with the tire removed.
It is not necessary to remove the tires for this adjustment.

1 - Screw a screw **A** (M10x50, fully threaded) into the hole provided on the frame until it makes firm contact with the wheel hub.

2 - Loosen the retaining screws (1) of the wheel hub until it can move.

3 - Gradually tighten the screw **A** until correct tension has been restored to the chain.

4 - Tighten the nuts (1).

Nm Nuts: 200 Nm

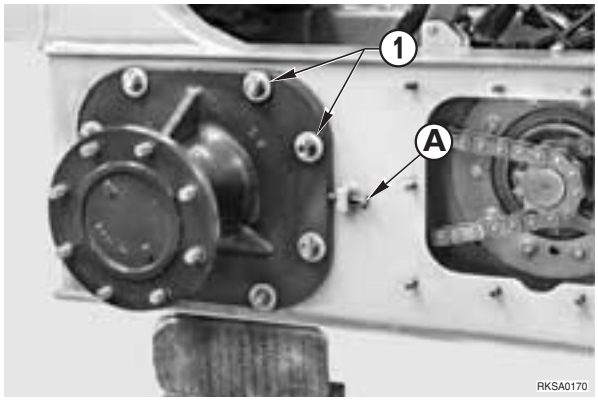

https://truckmanualshub.com/

CONTROL AND REGULATION OF THE PRESSURES IN THE HYDRAULIC CIRCUITS

★ Test conditions:

- Engine: at working temperature.
- MIN and MAX. engine speeds: within permissible limits.
- Oil temperature: 45–55 °C.

Before removing the plugs in order to measure the pressures, release the residual pressures in the circuits (see «ELIMINATION OF THE RESIDUAL PRESSURES IN THE CIRCUITS AND IN THE TANK») and place the safety engagement levers into their locked positions.

After having connected the pressure gauges, pressurise the tank. For details, see «PRESSURISATION OF THE TANK».

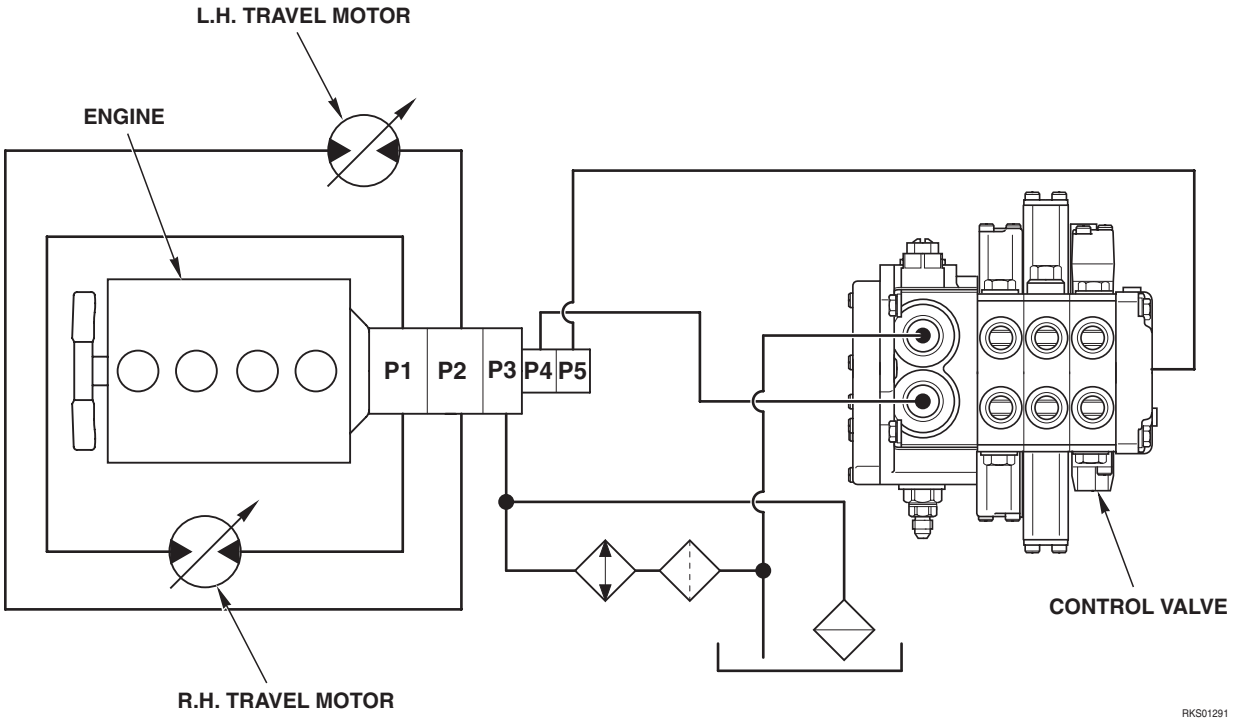

- The control valve consists of the spools that command:

Command	Ports
Arm (Lower - Raise)	A1 - B1
Bucket (Dump - Curled)	A2 - B2
Equipment (R.H. - L.H.)	A3 - B3

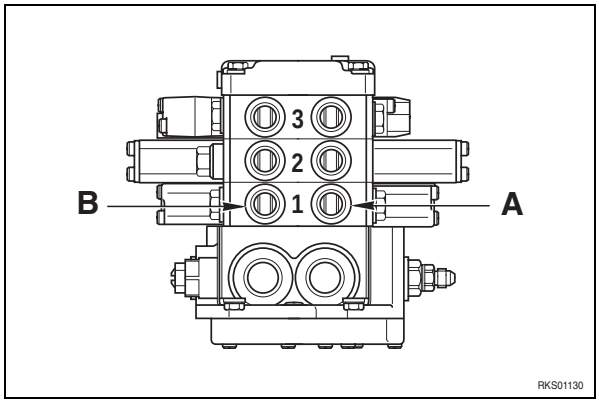

https://truckmanualshub.com/

TESTING THE HYDRAULIC PUMP

1. Check the working pressure of the travel circuit HST charge valve

★ Test conditions:
- Engine: high idling
- Hydraulic oil temperature: 45–55 °C.
- Safety bar: raised

⚠ Do not activate the travel lever.

1 - Remove the plugs (1) and (2) and mount the two pressure adapters **E5**.

2 - Connect two pressure gauges **E1** (60 bar), start the engine and accelerate to high idling.

3 - Check that the pressure remains within permissible limits.
★ Use the lower of the two pressure values taken.
★ Normal pressure: 25–29.5 bar

4 - Remove the pressure adapters and tighten the plugs (1) and (2).

Nm Plugs: 19.6–27.4 Nm

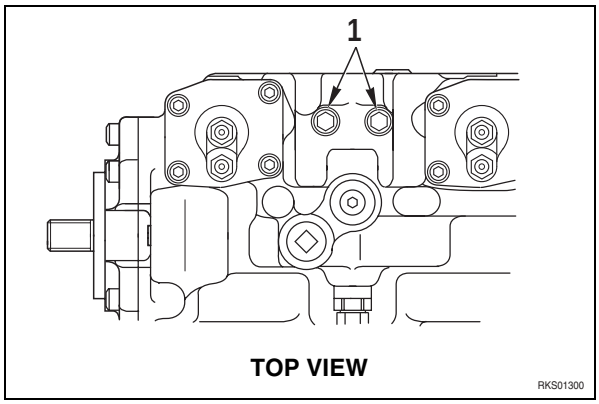

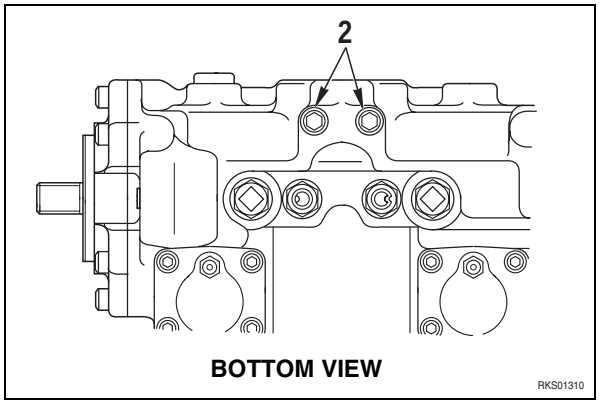

2. Check the working pressure of the AS valve (Only for SK815-5)

★ Test conditions:
- Engine: high idling
- Hydraulic oil temperature: 45–55 °C.
- Safety bar: lowered
- Machine: raised from the ground

1 - Remove the plug (1) and mount a pressure adapter **E5.**

2 - Connect a pressure gauge **E1** (60 bar) and start the engine at low idling (1100 rpm).

3 - Push the travel lever full stroke for forward travel and read the pressure.
★ Normal value: 12.7±0.5 bar

4 - Repeat the reading with the engine at working speed (2800 ± 30 rpm).
★ Normal value: 15.2±0.5 bar

5 - Remove the pressure adapter and tighten the plug (1).

Nm Plugs: 19.8–27.4 Nm

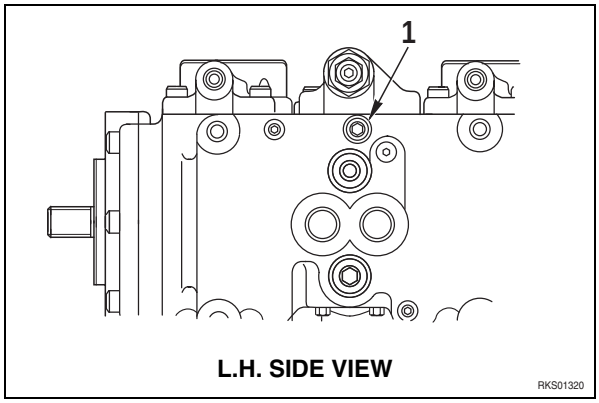

https://truckmanualshub.com/

VALVE CALIBRATION

1. HST valve calibration

1 - Loosen the nut (1), taking care not to move the adjustment screw (2).

2 - Adjust the working pressure of the HST valve, proceeding as follows:

- To INCREASE pressure, turn the screw (2) in a CLOCKWISE direction.
- To REDUCE pressure, turn the screw (2) in a COUNTER-CLOCKWISE direction.

★ One complete turn of the screw (2) varies the pressure by 15.5 bar.

3 - Tighten the nut (1) and check that the working pressure remains within permissible limits.

Nm Nut: 58.8–78.5 Nm

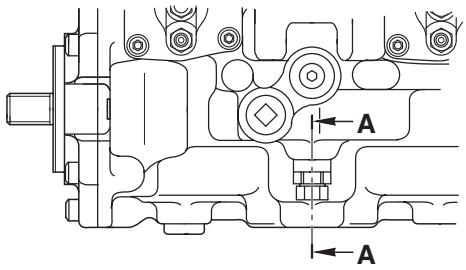

TOP VIEW

RKS01330

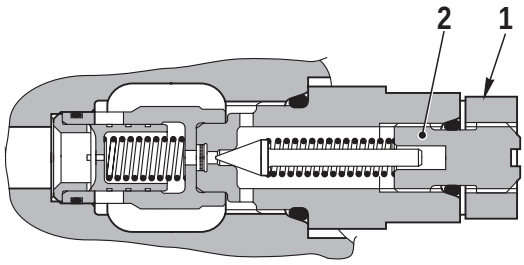

Section A - A

RKS01340

2. AS valve calibration (only for SK815-5)

- **Pressure adjustment at low idling**

1 - Loosen the nut (1), and adjust the working pressure of the AS valve (with the engine at low idling), proceeding as follows:

- To INCREASE pressure, turn the screw (2) in a CLOCKWISE direction.
- To REDUCE pressure, turn the screw (2) in a COUNTER-CLOCKWISE direction.

★ One complete turn of the screw (2) varies the pressure by 3.37 bar.

3 - Tighten the nut (1) and check that the working pressure remains within permissible limits.

Nm Nut: 34.3–58.8 Nm

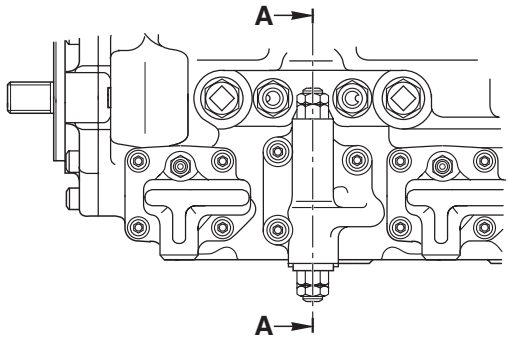

RKS01350

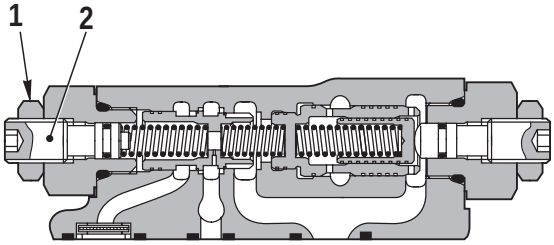

Section A - A

RKS01360

https://truckmanualshub.com/

- **Pressure adjustment at working pressure**

1 - Loosen the nut (3),. and adjust the working pressure of the AS valve (with the engine at working pressure), proceeding as follows:
   - To INCREASE pressure, turn the screw (4) in a CLOCKWISE direction.
   - To REDUCE pressure, turn the screw (4) in a COUNTER-CLOCKWISE direction.
   - ★ One complete turn of the screw (4) varies the pressure by 1.96 bar.

3 - Tighten the nut (3) and check that the working pressure remains within permissible limits.

Nut: 34.3–58.8 Nm

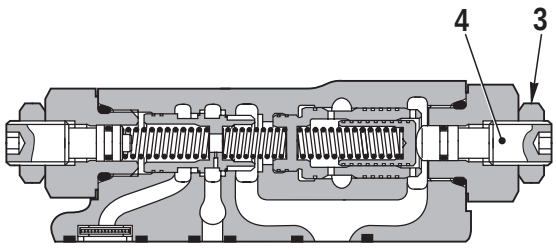

Section A - A

RKS01361

https://truckmanualshub.com/

CHECKING THE TRAVEL DEVIATION

★ Test conditions:
- Engine: at working temperature
- Hydraulic oil temperature: 45–55 °C.

★ Drive the machine onto solid, level ground.

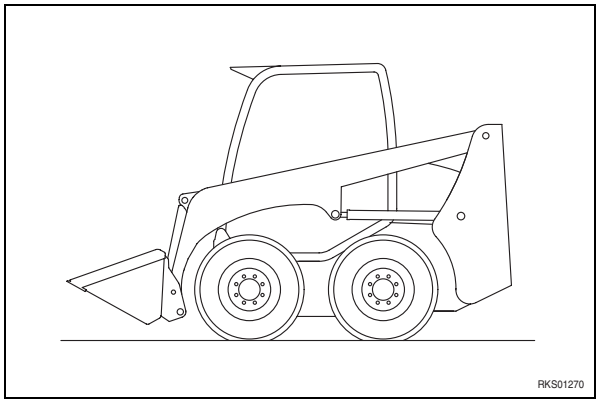

1. Checking the deviation

1 - Position the boom and bucket in their travelling positions.
  ★ Boom lowered and bucket fully curled.

2 - Bring the engine up to maximum rpm.

3 - Push the travel lever to full stroke forwards

4 - Travel for 10 metres, then measure the deviation of the machine over the next 20 metres.

5 - Check the deviation also in reverse gear and while accelerating in both directions.

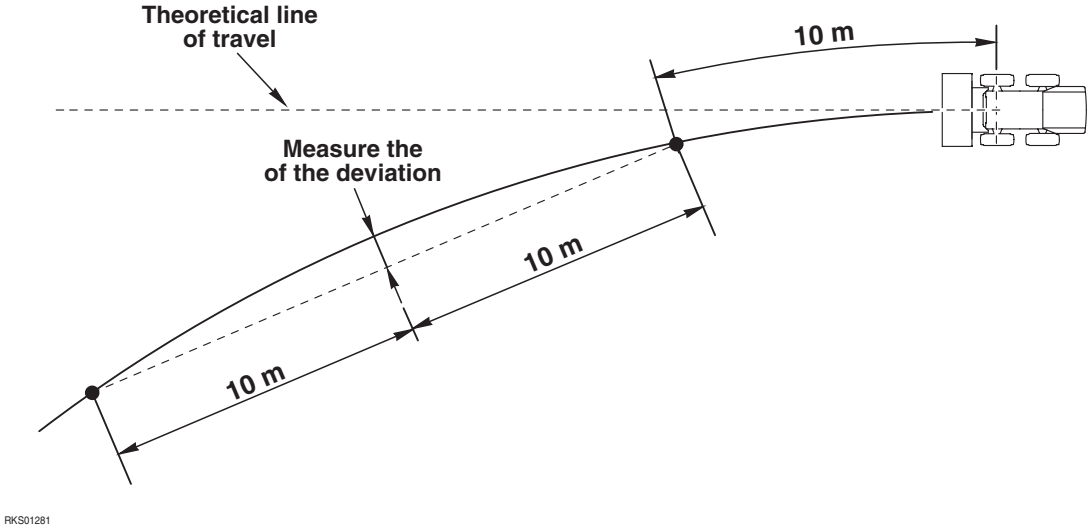

https://truckmanualshub.com/

2. Adjusting the deviation

1 - Select the adjustment screw to be re-set:

Travel	Deviation	Screw
Forwards	Left	A1
Forwards	Right	A2
Reverse	Left	B1
Reverse	Right	B2

2 - Loosen the nut (1) and tighten the screw (2).

★ A 60° turn of the screw (2) will reduce the deviation by about 500 mm.

3 - Tighten the nut (1).

Nm Nut: 26.5–32.4 Nm

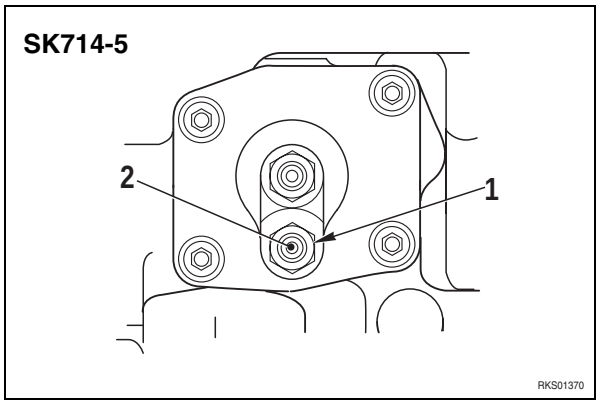

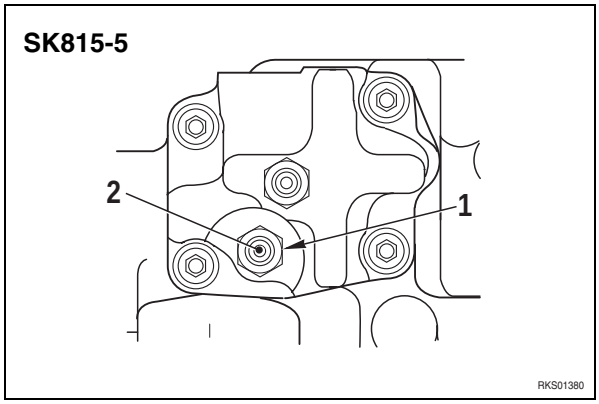

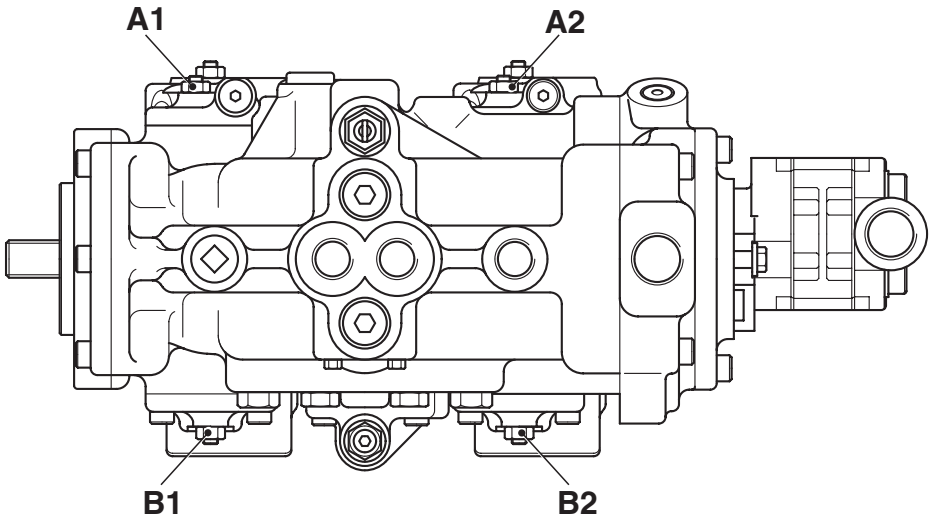

RKS01390

https://truckmanualshub.com/

CONTROL VALVE

1. Control of operating pressure (unloading valve)

1 - Remove the plug (1) and mount a pressure adapter.

2 - Connect a pressure gauge **E3** (10 bar).

3 - Start the engine and bring it up to high idling with all levers in neutral position.

4 - Check the pressure.

★ Normal pressure: 4.8 bar

tTake care do not operate the equipment levers.

The unloading valve cannot be re-adjusted. If the pressure differs from the normal value the valve must be substituted.

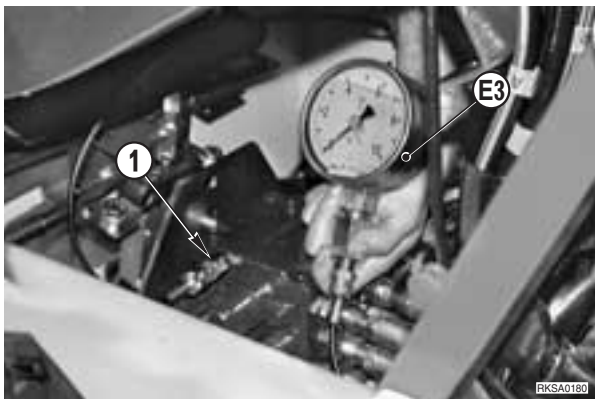

2. Control the operating pressures of the working equipment

1 - Remove the plug (1) and mount a pressure adapter.

2 - Connect a pressure gauge **E2** (400 bar or 600 bar).

3 - Start the engine and bring it up to high idling.

4 - Check the pressure for each movement with the command lever at the end of its stroke and with the pressure stabilised.

To check the pressure of the working equipment, push the piston to the end of its stroke.

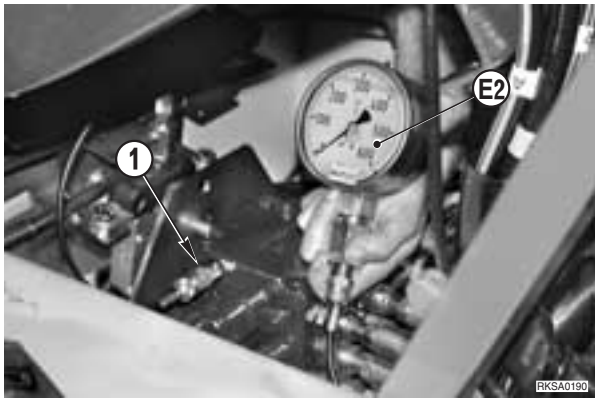

Valve adjustment

★ The unloading valve cannot be re-adjusted, only substituted.

1. Adjustment of the main relief valve

If the pressures measured for the working equipment and machine travel do not fall within normal values, adjust the main relief valve (1) as follows:

1 - Loosen the lock nut (2) and rotate the adjusting screw (3).

- To INCREASE pressure, turn in a CLOCKWISE direction.
- To DECREASE pressure, turn in a COUNTER-CLOCKWISE direction.

★ Each turn of the adjusting screw (3) varies the pressure by about 55 bar.

2 - Lock the nut (2).

Nm Nut: 69±10 Nm

★ After adjustment, check the adjustment of the main relief valve with the same procedures as used for the measurements.

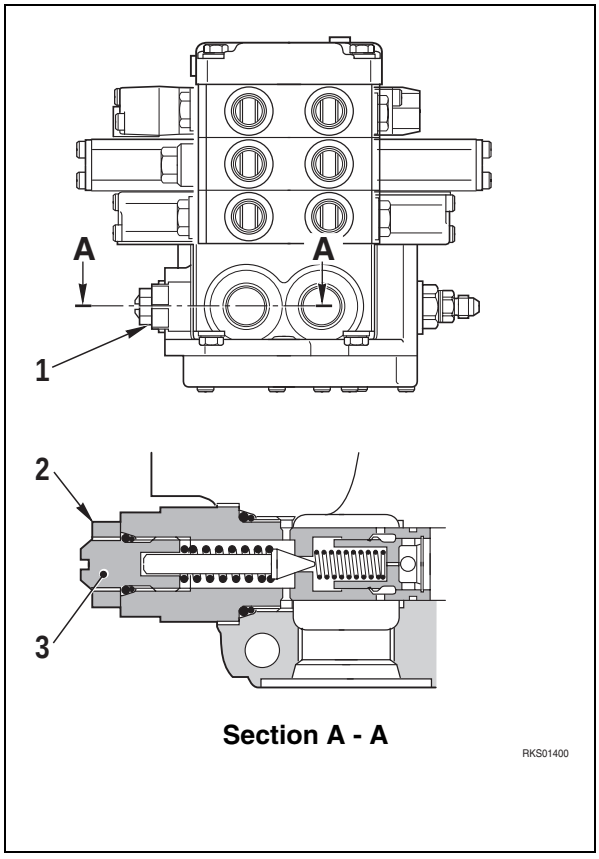

https://truckmanualshub.com/

CONTROL AND REGULATION OF THE SERVO-CONTROL POWER SUPPLY

★ Test conditions:
- Engine: at working temperature.
- Oil temperature: 45–55 °C.

Before removing the cap to measure the pressure, release the residual pressures from the circuits (See «ELIMINATION OF RESIDUAL PRESSURES OF THE CIRCUIT AND THE TANK») and put the safety device engagement levers into their locked position.

After connecting the pressure gauge, pressurise the tank. For details see «PRESSURISATION OF THE TANK».

1. Checking the pressure of the servo-controls

1 - Disconnetc the delivery pipe (1) and install a tee and a adapter; riconnect the pipe (1).

2 - Connect the pressure gauge **E1** (60 bar)

3 - Start the engine and bring it up to 2800 rpm with all leers in neutral position.

4 - Lower the safety bars and check the pressure.
★ Normal pressure: 25–28 bar

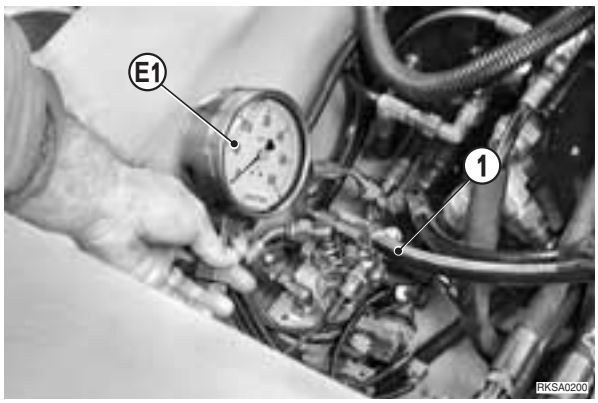

2. Test the pressure of the travel pilot system

★ Test conditions:
- Machine raised from the ground.

1 - Disconnect the pipe (1) of the actuator to be tested, mount a union tee and a pressure adapter, and then reconnect the pipe (1).

★ During travel in one direction, two actuators are nevertheless activated.
Always check both pressures:

Action	Action involved			
	DA1	DA2	DB1	DB2
FORWARD	❍	❍		
REVERSE			❍	❍
RIGHT		❍	❍	
LEFT	❍			❍

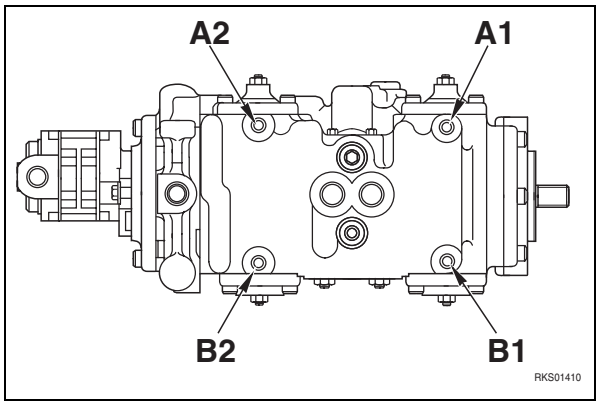

https://truckmanualshub.com/

2 - Connect a pressure gauge **E1** (60 bar)

3 - Lower the cab and sit in the driving seat.

4 - Start the engine and bring it up to working speed of 2800 rpm with all the levers in neutral position.

5 - Lower the safety bar, slowly activate the travel lever in the direction of the test to be performed, and then check the following conditions:

- Pressure as the wheels start to turn
- Pressure with the levers at full stroke

★ Normal pressures:
- when the wheels start to turn: 4.0–7.0 bar
- with levers at full stroke: 13.7–15.2 bar

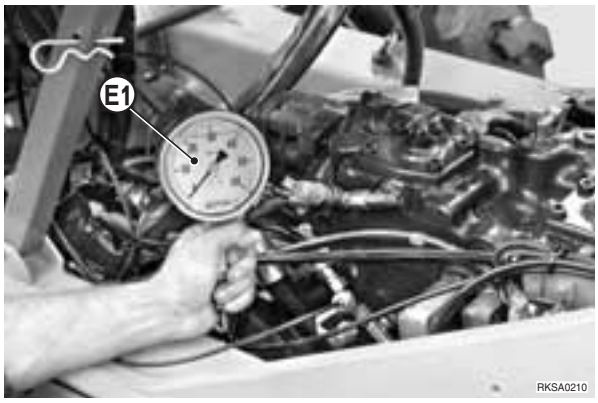

https://truckmanualshub.com/

ELIMINATION OF RESIDUAL PRESSURES - PRESSURISATION OF THE TANK

1. Elimination of pressures from the hydraulic circuits.

1 - Rest the working equipment on the ground and stop the engine.

2 - Turn the ignition key to the position **I** and, with safety bars lower, move the command lever in all directions to release all pressure in the main hydraulic circuits and the servo-controls .

3 - Return the ignition key to the position **O** (OFF) and remove it.

2. Elimination of pressure in the tank

The hydraulic oil tank is of the sealed and pressurised type.
When tubes are to be removed or disconnected for controls or repairs, or when caps are removed, tank pressure must be eliminated using the following method:

1 - Rest the working equipment on the ground and stop the engine.

2 - Slowly loosen the oil-refuelling cap (1) in order to release residual pressure.

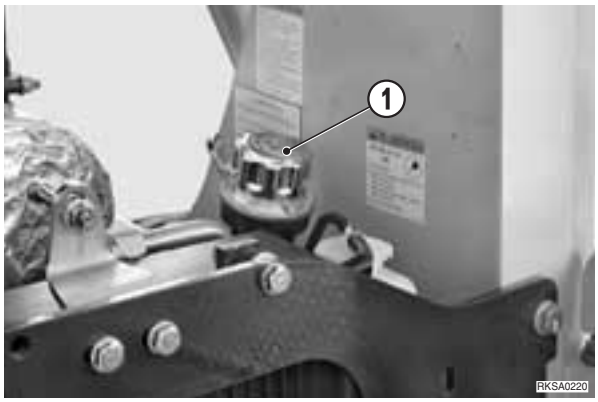

3. Pressurising the tank

★ This operation should be performed every time the oil-refuelling cap is moved for removal of the tubes or other hydraulic equipment.

1 - Start the engine and position the machine as in the figure.

2 - Stop the engine, loosen the tank cap (1) and then close it again.
★ This operation lets air into the tank when the level of the remaining oil is at minimum.

3 - Start the engine and lower the working equipment to the ground.

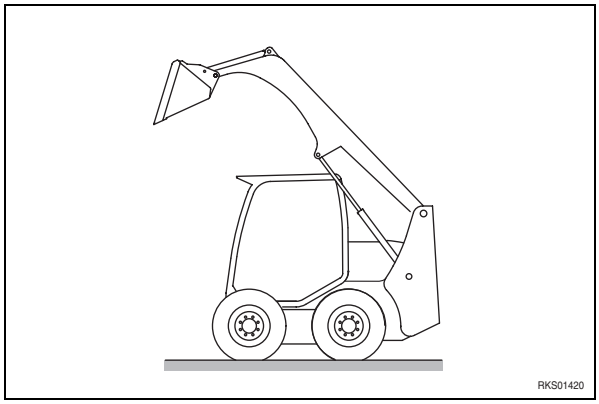

https://truckmanualshub.com/

BLEEDING AIR FROM THE HYDRAULIC CIRCUITS

Sequence of operations or procedures for bleeding the air

	Procedures for bleeding ai				
	1	2	3	4	5
	Bleeding air from pumps	Starting engine	Bleeding air from cylinders	Pressurising tank	Starting tasks
• Substitution of hydraulic oil • Cleaning tank filter	❍ →	→ ❍ →	→ ❍ →	→ ❍ →	→ ❍
• Substitution filter	❍ →	→ ❍ →	→	→ ❍ →	→ ❍
• Repair - substitution pump • Removal of suction tube	❍ →	→ ❍ →	→ ❍ →	→ ❍ →	→ ❍
• Substitution - repair control valve		❍ →	→ ❍ →	→ ❍ →	→ ❍
• Repair-Substitution cylinders • Removal of cylinders tube		❍ →	→ ❍ →	→ ❍ →	→ ❍
• Repair - substitution travel motor • Removal of tubes from travel motor		❍ →	→	→ ❍ →	→ ❍

1. Bleeding air from the pump

1 - Loosen and remove the cap (1) from the pump body (2).

2 - Pour hydraulic oil through the hole until the entire casing is full.

3 - Replace the cap (1).

★ After filling the casing, start the engine and allow it to run at low idling for about 10 minutes before proceding to bleed the air from the circuits.

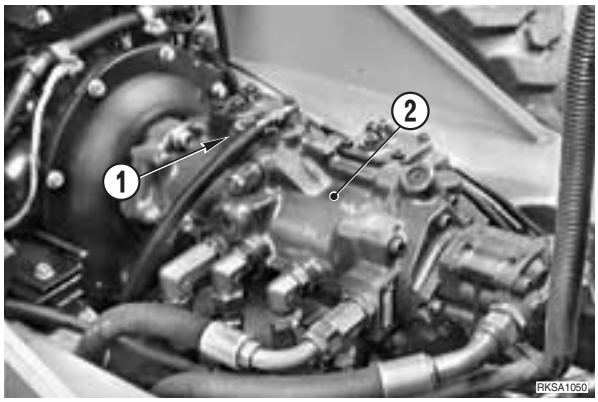

https://truckmanualshub.com/

2. Bleeding air from the cylinders

1 - Start the engine and let it run at low idling for about 5 minutes.

2 - Lower and raise the boom 4-5 times.

★ Lower and raise the piston of the boom up to about 100 mm of the end of its stroke.
Every care must be taken to avoid pressurising the circuits.

3 - Bring the engine up to high idling and repeat the operations described in point 2. Return the engine to low idling and pout the piston through its entire stroke until it reaches max. pressure in both directions.

4 - Repeat the operation (starting from point 2) for bucket cylinder.

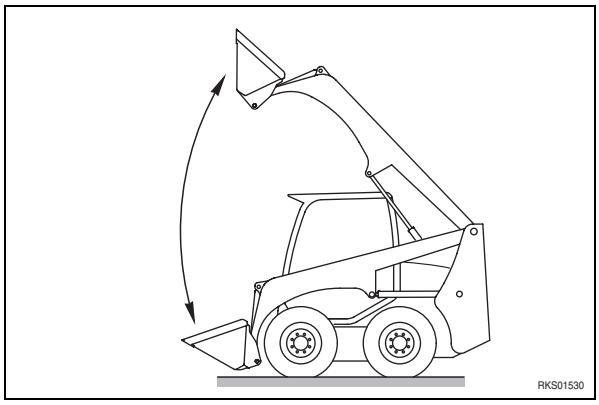

3. Bleeding air from any optional equipment

★ This method must be used for all the optional working equipment, unless otherwise indicated.

1 - Each time an item of optional working equipment is installed, operate the equipment repeatedly, with the engine at low idling, until all air has been completely eliminated.

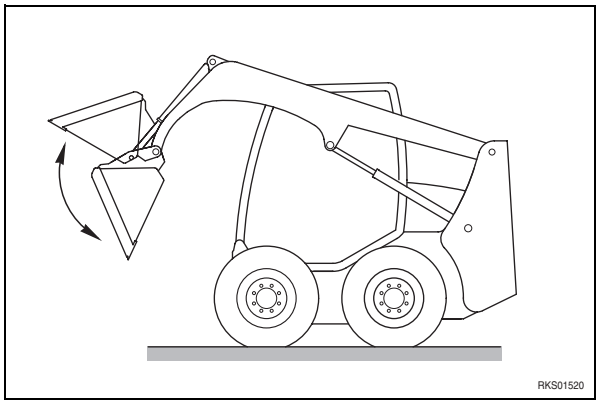

https://truckmanualshub.com/

https://truckmanualshub.com/

GROUP 30

https://truckmanualshub.com/

https://truckmanualshub.com/

30 REMOVAL AND INSTALLATION

HOW TO READ THE MANUAL 3
PRECAUTIONS TO BE TAKEN WHILE WORKING . 4
CAB
Tilting 5
Lowering 7
BATTERY
Removal and installation 8
STARTING MOTOR
Removal and installation 9
ALTERNATOR
Removal and installation 10
MUFFLER
Removal and installation 11
NOZZLE HOLDER
Removal and installation 12
INJECTION PUMP
Removal 13
Installation 15
CYLINDER HEAD
Removal 16
Installation 17
COOLANT LIQUID PUMP
Removal and installation 18
RADIATOR GROUP
Removal 19
Installation 20
FUEL TANK
Removal and installation 21
CAB
Removal 22
Installation 24
ENGINE-PUMP GROUP
Removal 25
Installation 27
HYDRAULIC PUMP
Removal 28
Installation 30
GEAR PUMP
Removal and installation 31
ENGINE-PUMP COUPLING
Removal and installation 32
CONTROL VALVE
Removal and installation 33
PPC VALVES
Removal and installation 34
HUB WHEEL
Removal 35
Installation 36
Disassembly 37
Assembly 38
FINAL DRIVE
Removal 39
Installation 40
RAISING CYLINDER
Removal and installation 41
BUCKET CYLINDER
Removal 42
Installation 43
WORK EQUIPMENT CYLINDERS
Disassembly 44
Assembly 46
WORKING EQUIPMENT
Removal 50
Installation 51
WORKING EQUIPMENT SUPPORT FRAME
Removal and installation 52

https://truckmanualshub.com/

PAGE INTENTIONALLY LEFT BLANK

https://truckmanualshub.com/

HOW TO READ THE MANUAL

1. Removal and Installation of the groups

(1) The procedures and information needed to carry out the work of removing or Installing units or groups are given in the removal procedure. The sequence of operations is not repeated in the installation procedure.

(2) Information needed for installation is marked with the symbol ※1 ; The same symbol is repeated at the end of each removal procedure for the same item, to indicate to which installation item it refers.

(Example)
REMOVAL GROUP ●●● : ..... Title of operation

⚠: ..... Safety precautions to be followed when carrying out the operation.

1 - Remove XXXX (1): ..... Step in removal procedure.
★:..... Technique or important point to remember when removing XXXX (1)

2 - ▲ ▲ ▲ (2): ..... ※1 This sign means that information is given for the installation procedure

3 - Remove ■ ■ ■ (3):
..... ℓ: ..... Recovery of oil or water, and the quantity to be recovered.

INSTALLATION GROUP ●●● : ..... Title of operation

- To install, reverse removal procedure.

※1 : ..... Technique to be used for installation
★:..... Technique or important point to remember when removing ▲ ▲ ▲ (2)

- Addition of water or oil: ..... Step in removal procedure

★:..... Point to remember when adding water or oil.

2. To the precautions to be taken during the removal or installation of the groups, must be added the specific «PRECAUTIONS TO BE TAKEN DURING THE OPERATIONS».
Always make sure that these precautions are taken.

3. List of special tools

(1) For details of the descriptions, codes and quantities of each tool (**A1**; **A2** etc.) mentioned in the operational procedures, see the list «SPECIAL TOOLS» supplied in this section.

4. List of the tightening torques and weights, and the quantities oil, liquids or grease needed to fill tanks and containers

(1) In the operating procedures, you will find the symbols Nm, kg, , ; In the following order, these represent the values of «TIGHTENING TORQUES», «WEIGHT OF PARTS OR GROUPS», «QUANTITIES OF OIL OR LIQUIDS TO BE INTRODUCED», «SCREW LOCKING MATERIAL, SEALANTS AND LUBRICATION», «LUBRICATING GREASE».

NOTE
If no symbol is indicated, the values to be used are those given in the introductory sections of this manual.

https://truckmanualshub.com/

PRECAUTIONS TO BE TAKEN WHILE WORKING

★ When dismantling or installing a part, always take the following general precautions.

1. Precautions for removal operations

- If not otherwise indicated, lower the work equipment until it rests on the ground.
- If the coolant liquid contains an anti-freeze substance, follow the instructions given for drainage.
- After having removed flanges and tubes, insert plugs to prevent impurities from entering.
- Before removing a cylinder, fully retract the piston and tie it with wire.
- Use a sufficiently large container to collect the oil.
- Before removing a part from the machine, check the alignment reference marks which show the correct installation position. If necessary add further marks to avoid incorrect installation.
- While dismantling the connectors, always grasp them firmly to avoid undue strain on the wiring.
- If necessary, attach markers to the wires and tubes to avoid muddling them up during installation.
- Check the number and height of the adjustments to a given clearance and store them in a safe place.
- When raising the machine or some parts of it, use adequate equipment for the weight of the part concerned.
- When using screws or eyebolts to remove items of the machinery, screw them alternately, and as deeply as they will go.
- Before removing a piece, clean the surrounding area and, after removal, cover the area to prevent dirt or dust from gaining entrance.

2. Precautions to be taken during installation

- Tighten nuts and screws with the specified tightening torques.
- Install the flexible hoses, taking care not to entangle or twist them.
- Bend the cotter pins and stops in such a way as to secure them.
- When coating the threads with adhesives, clean the piece to remove oil and grease, then apply just enough adhesive to cover the threading in a uniform manner.
- When applying a liquid sealant, clean the surface involved, remove residual oil and grease, check that there are no dents or dirt, then apply the liquid sealant in a uniform manner.
- Clean all the parts, remove dirt, rust, burrs, or dents.
- Apply a film of engine oil over all the moving parts.
- Apply a film of anti-friction grease (Litio EP MS2 NLGI 2) over all surfaces assembled with pressure, to avoid sticking
- After having mounted the snap-rings, check that they are firmly positioned in their seatings.
- When installing electrical system jacks, remove any oil, dust or water that may have penetrated into them, then connect them firmly.
- If using eyebolts, check that they are not distorted, screw them in fully, and then align the eye with the hoisting hook.
- Mount the flanges in a uniform manner, and tighten the screws in criss-cross sequence, to avoid excessive pull on one side only.

3. Precautions to be taken on completion of removal and installation operations.

- If the coolant liquid has been drained away, close the drainage plug and add new liquid up to normal level. Start the engine to circulate the liquid throughout the cooling system and then top up the level once more.
- When the hydraulic equipment has been dismantled, add engine oil to the indicated level. Start up the engine to circulate the oil in the hydraulic circuits, and then top up to the indicated level.
- If hoses or hydraulic equipment, such as hydraulic cylinders, pumps, motors, solenoid valves and valves, are removed for repairs or substitution, bleed air from the hydraulic circuits after having re-assembled the machine.

★ For details, see «20. TESTING AND ADJUSTMENTS».

- After having re-assembled cylinder joints or cylinders, or work equipment articulations, lubricate thoroughly.

https://truckmanualshub.com/

TILTING THE CAB

1 - Completely raise the working equipment and secure them in their safety positions.

2 - Loosen the four screws (1) and remove the foot-rest (2).

★ Only if the engine or the complete pump are to be removed

3 - Remove the engine hood. (For details see “REMOVAL OF THE ENGINE HOOD”).

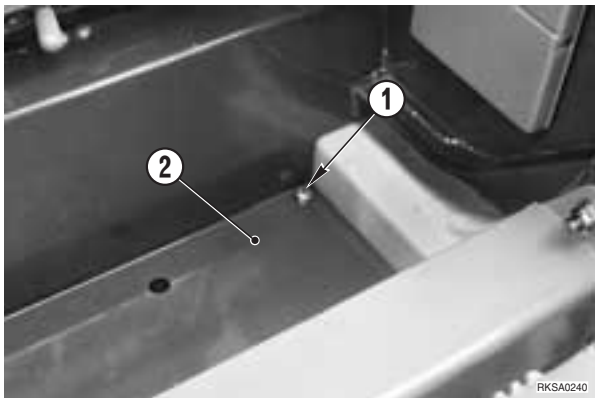

4 - Loosen the screws (3) (two to each side) and raise the cab as far as the safety cables allow.

※ 1

5 - Insert the safety pin (4).

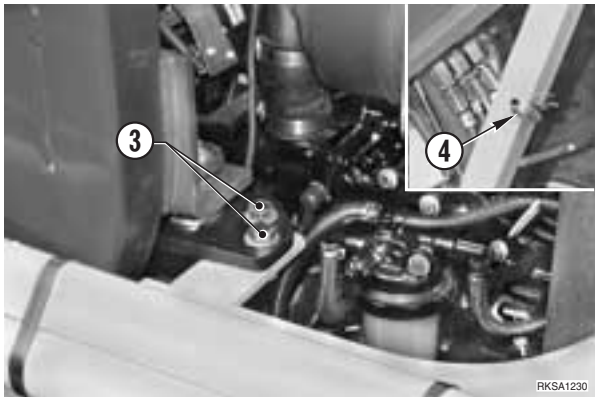

★ **If the engine or pump are to be removed, proceed as follows.**

6 - Disconnect the four pipes (5) on the RH side, the two servo-control supply-pipes (6), and the four pipes (7) on the LH side.

★ To disconnect the pipes, remove the retainer (8), push the pipe (5) completely inside the union (9) and extract the pipe (5).

※ 2

★ Mark the tubes to avoid exchanging them during reassembly.

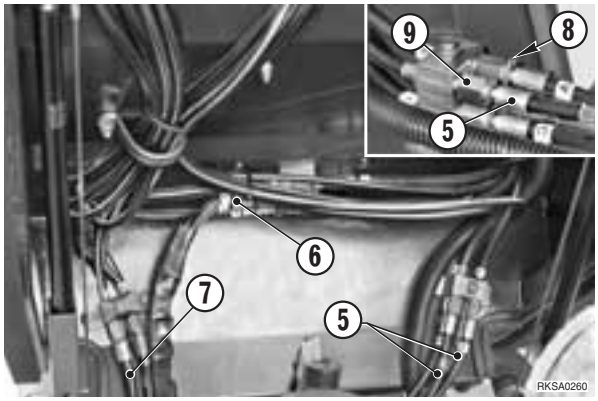

7 - Disconnect, the cable (11) of the accelerator command lever from the engine (10).

https://truckmanualshub.com/

8 - Attach the cab (12) to some hoisting tackle.

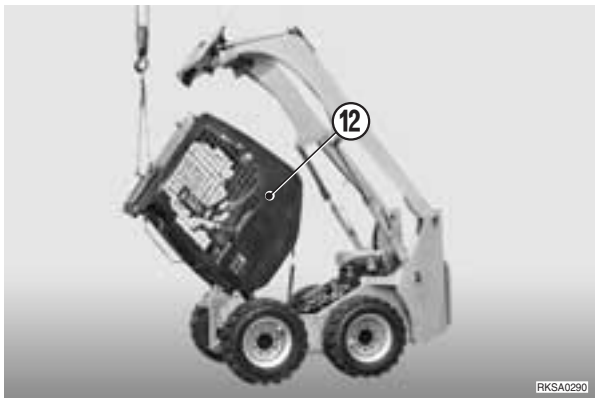

9 - Remove the safety cotter pin (13) and the washers (14).

10 - Remove the safety cotter pin.

11 - Push the cab (12) gently towards its “at rest” position to relieve the tension on the safety cables (15), and disconnect them from the pins (16).

⚠ Apply a slight tension to the hoisting-tackle chains to prevent the cab from moving unexpectedly.

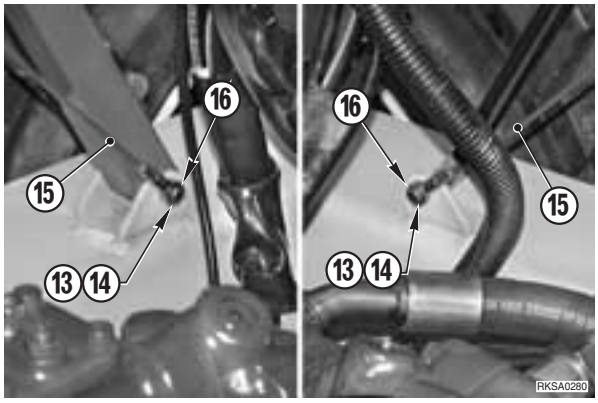

12 - Tilt the cab (12) slowly until the distance between the centres of the dumper fixing hooks (17) is 1100 mm.

★ The distance of 1100 mm corresponds to the maximum stretch of the dumper hooks.

13 - Remove the pins (16) of the dumper fixing hooks (17).

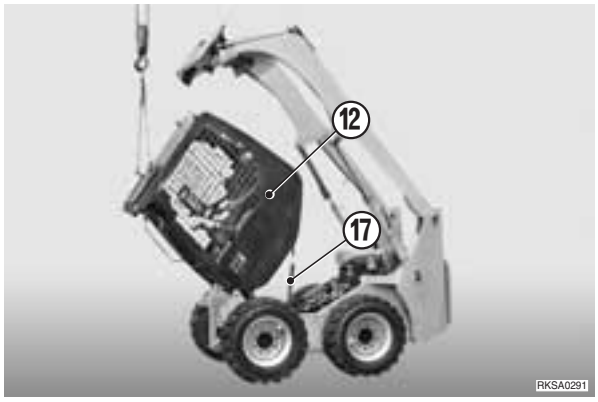

14 - Position a stand **“A”**, about 1200 mm high, and tilt the cab (12) until it is resting on the stand.

★ Make sure that the connecting cables between the cab and the engine are not being strained.

https://truckmanualshub.com/

LOWERING THE CAB

- To lower the cab back into position, reverse the tilting procedure.

1

Nm Screws: 110 Nm

2

- Connect the pipes by pushing them fully home in their seatings.
  Check correct connection by trying to extract them.

3

- Adjust the stroke of the accelerator lever cable. ((For details, see «20. TESTING AND ADJUSTMENTS»).

https://truckmanualshub.com/

REMOVAL OF THE BATTERY

1 - Disconnect the negative cable (–) (1) and the positive cable (+) (2) from the battery (3) in that sequence.

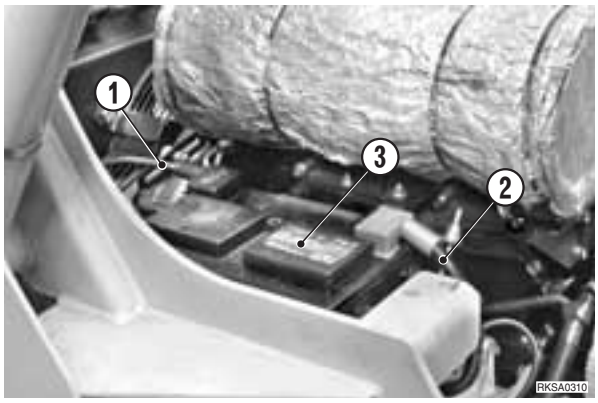

2 - Loosen the nuts (4) that secure the battery clamp (5) a release the tie-rods (6) of the battery support.

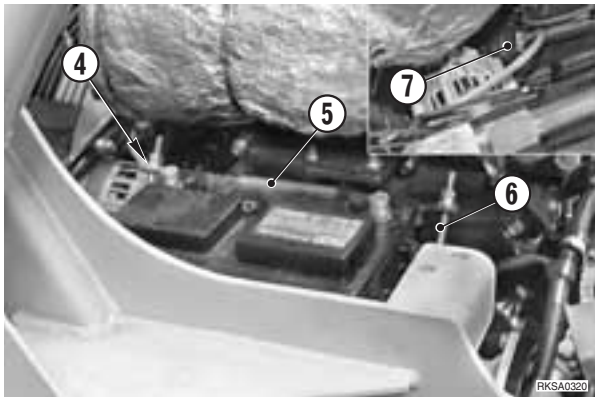

3 - Tilt the battery clamp (5) towards the front of the machine and lift out the battery.

★ Disconnect the temperature sensor connector (7) from the battery clamp (5).

INSTALLATION OF THE BATTERY

- To replace, reverse removal procedure.

https://truckmanualshub.com/

REMOVAL OF THE STARTING MOTOR

1 - Tilt the cab and secure it in its safety position.

2 - Remove the battery (1).
(For details, see «REMOVAL OF THE BATTERY»).

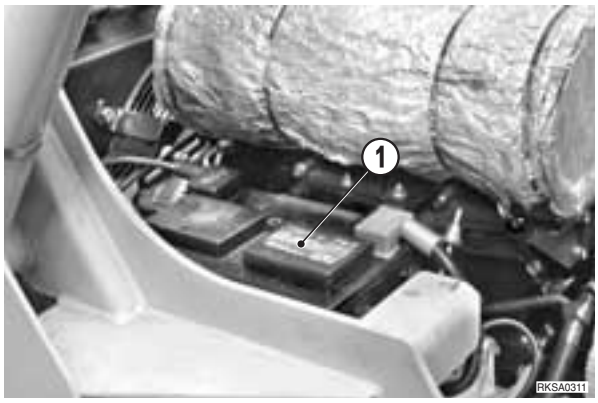

3 - Disconnect the cables (2) and (3).

4 - Loosen the screws (4) and take out the starting motor (5).
. 1

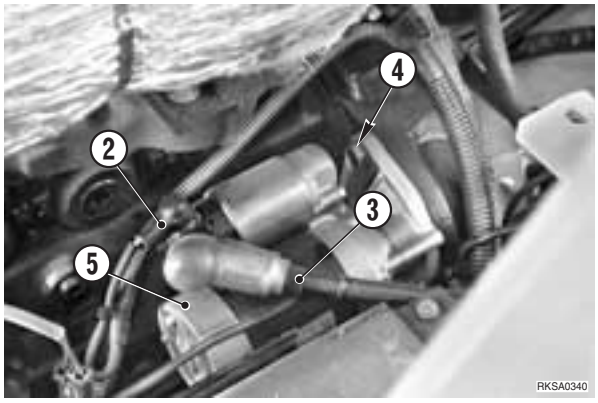

INSTALLATION OF THE STARTING MOTOR

- To install, reverse removal procedure.

1

Nm Screws: 78.4–98 Nm

https://truckmanualshub.com/

REMOVAL OF THE ALTERNATOR

1 - Remove the battery.
(For details, see «REMOVAL OF THE BATTERY»).

2 - Tilt the cab.
(For details, see «TILTING THE CAB»).

3 - Disconnect the cable (1) and the connectors (2) and (3)

4 - Loosen the screws (4) and (5) to leave the alternator free to turn.

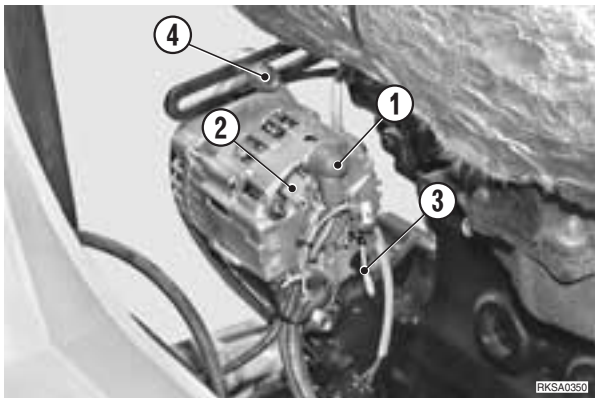

5 - Free the pulley (6) from the fan-belt and take out the alternator (7). ※ 1

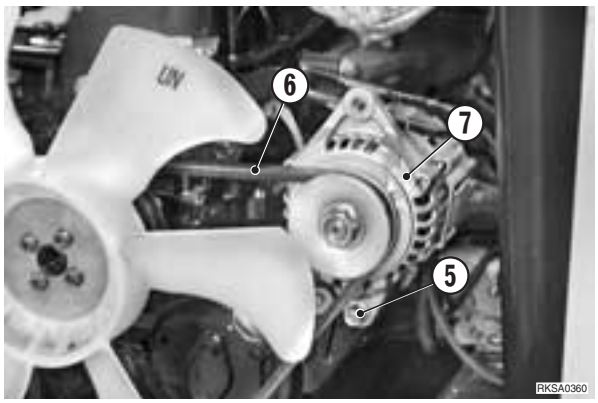

INSTALLATION OF THE ALTERNATOR

- To install, reverse removal procedure.

※ 1

★ Adjust the tension of the fan-belt.
(For details, see «20. TESTING AND ADJUSTMENTS – Adjustment of the fan-belt tension»).

https://truckmanualshub.com/

REMOVAL OF THE MUFFLER

1 - Loosen the screws (1) of muffler support (2) and remove it.

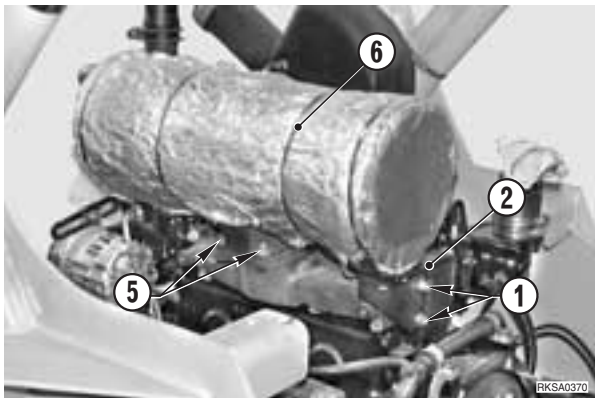

2 - Loosen the screws (3) of muffler support (4) and remove it.

3 - Loosen nut (5) and remove muffler (6).

★ A new seal (7) should be fitted each time the muffler is removed.

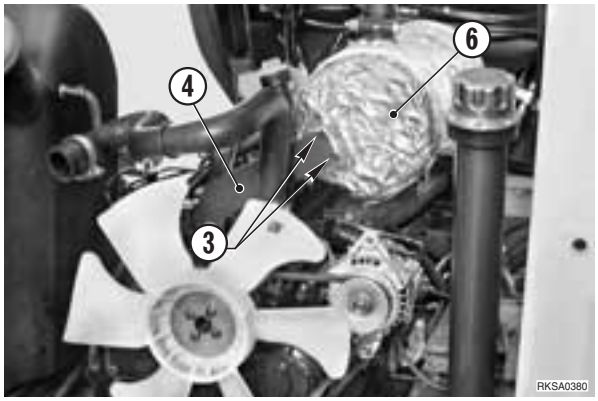

INSTALLATION OF THE MUFFLER

- To install, reverse removal procedure.

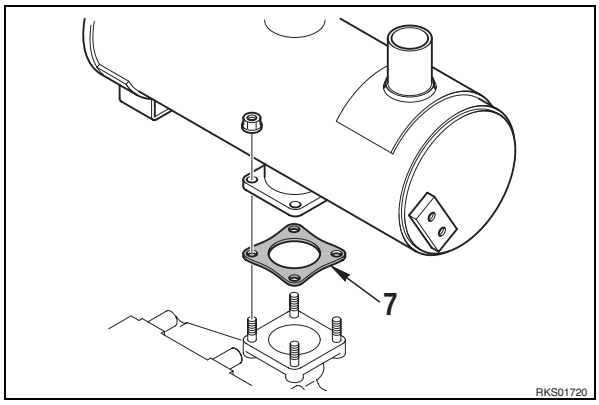

https://truckmanualshub.com/

REMOVAL OF THE NOZZLE HOLDER

1 - Remove the suction filter (1) and the supporting bracket (2).

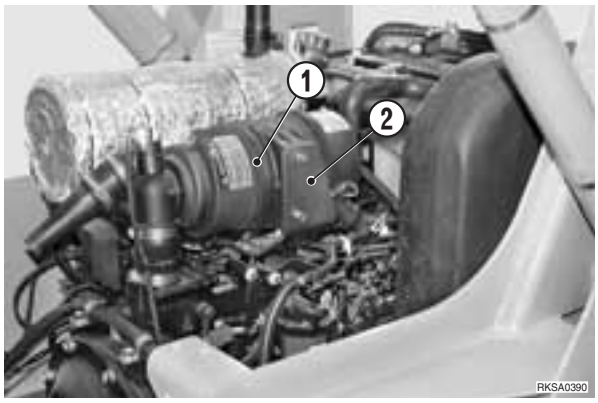

2 - Remove the high-pressure pipes (3) and the fuel return tubes (4). ※1

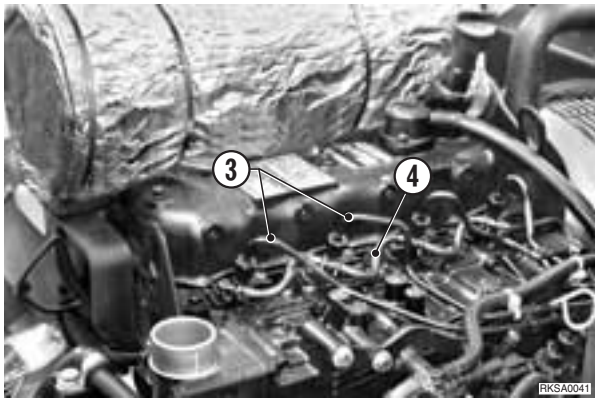

3 - Loosen nuts (5) and remove clips (6). ※2
4 - Remove the complete injection nozzles (7).

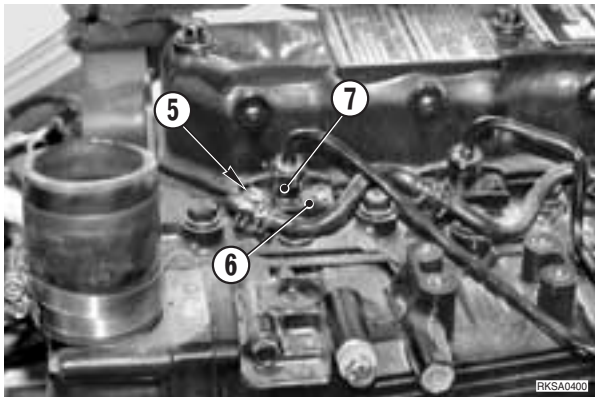

INSTALLATION OF THE NOZZLE HOLDER

- To install, reverse the removal procedure.

※1

Nm High-pressure pipe union: 31.85±2.45 Nm

※2

Nm Nuts: 78.4±0.98 Nm

https://truckmanualshub.com/

REMOVAL OF INJECTION PUMP

1 - Disconnect the negative terminal cable (–) from the battery.

2 - Close the cock of separator to prevent fuel leakage.

1 - Remove radiator group.
(For details, see «REMOVAL OF THE RADIATOR»).

2 - Disconnect connector (1) and accelerator cable (2).

※ 1

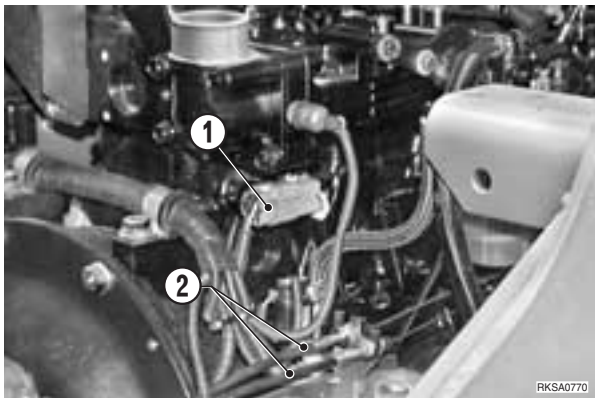

3 - Remove the air filter (3).
(For details, see «REMOVAL OF AIR FILTER»).

4 - Disconnect from head cylinder the fuel filter support (4) with level oil rod.

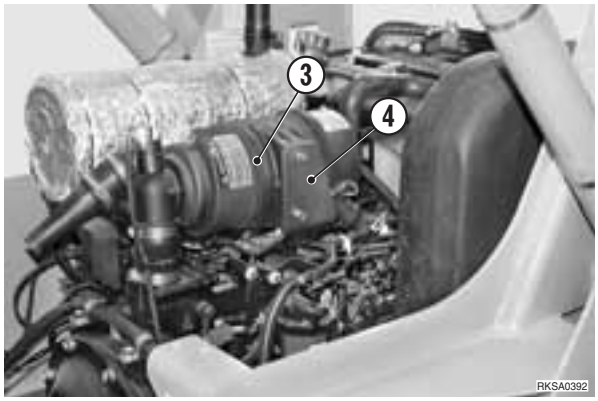

5 - Disconnect from injection pump (5) fuel feeding pipes (6) and return pipes (7).

6 - Disconnect injection pump (5) lubricating pipe (8).

7 - Disconnect high pressure pipes (9) from injection pump (5).

※ 2

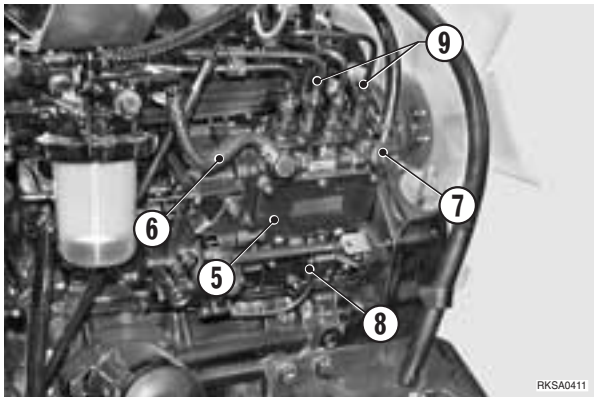

8 - Remove fan (10) and cover (11).

※ 3

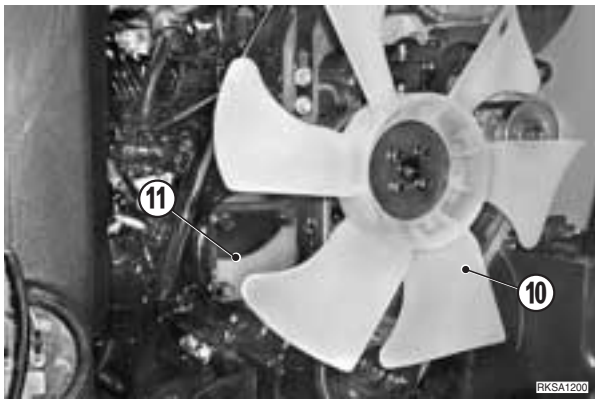

https://truckmanualshub.com/

9 - Loosen and remove nut (12) and lock washer (13) of pump driving gear.

※ 4

★ Be careful not let nut (12) and lock washer drop in the housing.

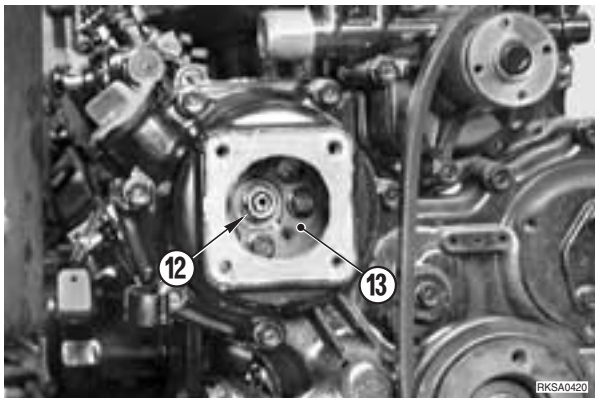

10 - Remove pump (5) driving gear (13).

★ Before removing pump driving gear, mark position compared to idling gear.

★ For removal, use a puller (X1) and tighten its screws (X2) directly in the gear (13).

★ During removal be careful not let key drop (14) in the housing.

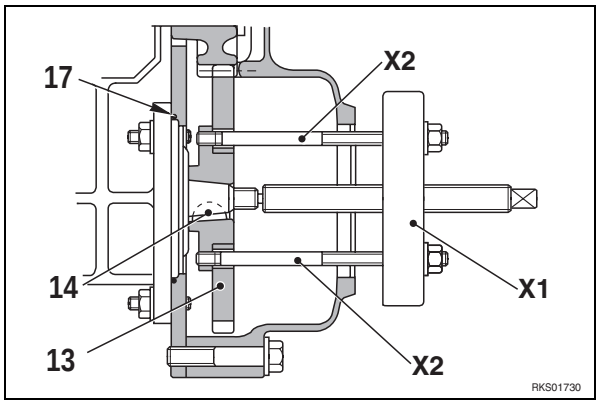

11 - Disconnect spring (15), loosen nuts (16) (No. 3) and remove injection pump (5) with O-rings (17).

※ 5

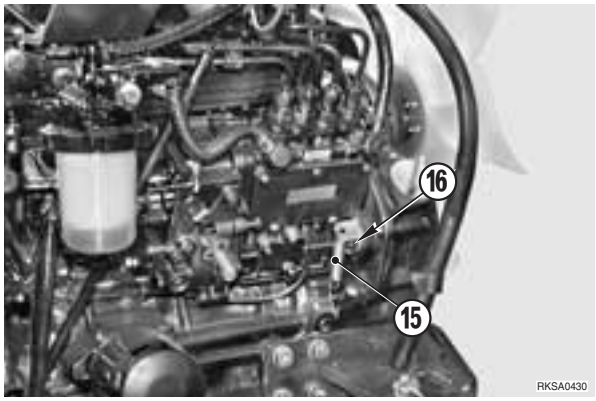

https://truckmanualshub.com/

INSTALLATION OF INJECTIONPUMP

- To install, reverse the removal procedure.

※ 1

★ Check accelerator stroke lever.
(For details, see «20. CONTROLS AND ADJUSTMENTS»).

※ 2

★ Nm Feed and return pipes: 31.85±2.45 Nm

※ 3

Cover surface: liquid gasket

Nm Screw: 44.1–53.9 Nm

※ 4

★ Align marks among gears before to install pump and nut.

Nm Nut: 6 - 7 kgm

※ 5

Nm Pump lock nuts: 2.3±2.9 kgm

★ Check fuel injection timing.
(For details, see «20. CONTROLS AND ADJUSTMENTS»).

https://truckmanualshub.com/

REMOVAL OF THE CYLINDER HEAD

⚠ \Disconnect the negative terminal cable (–) from the battery.

★ Drain the engine coolant.

※ 1

Coolant: max. 9 ℓ

1 - Remove the water coolant pump.
(For details, see «REMOVAL OF WATER COOLANT PUMP»).

2 - Remove filter (1) and bracket (2).

3 - Remove the muffler (3).
(For details, see «REMOVAL OF MUFFLER»).

4 - Disconnect from head the filter support (4) with oil level rod.

5 - Remove nozzle holder (5).
(For details, see «REMOVAL OF THE NOZZLE HOLDER»).

6 - Remove the valves cover (6). ※ 2

7 - Disconnect the pre-heater cable (7).

8 - Remove the rocker-arm shaft (8). ※ 3

★ Loosen the lock nuts and unscrew the valve tappets by 2-3 turns.

※ 4

9 - Take out the rocker-arm control rods (9).

10 - Take out the screws (10) in the sequence indicated and remove the complete cylinder head (11). ※ 5

★ The cylinder head gasket (12) must be substituted every time it is dismantled.

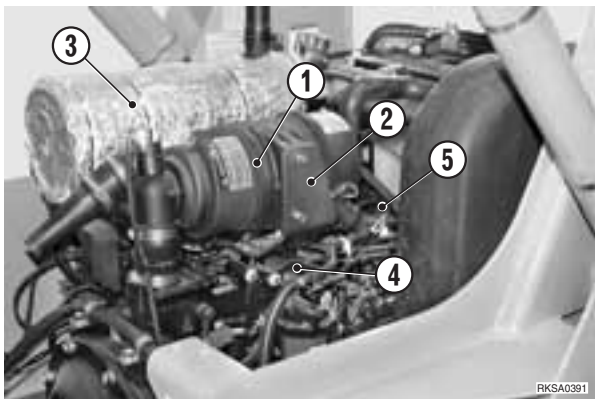

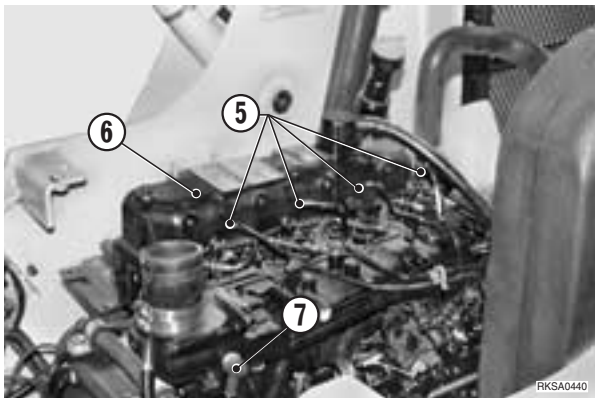

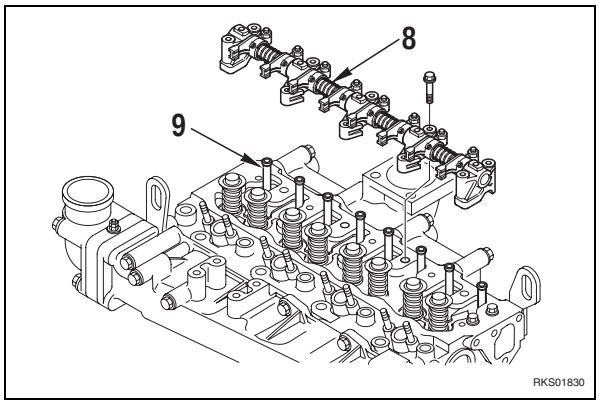

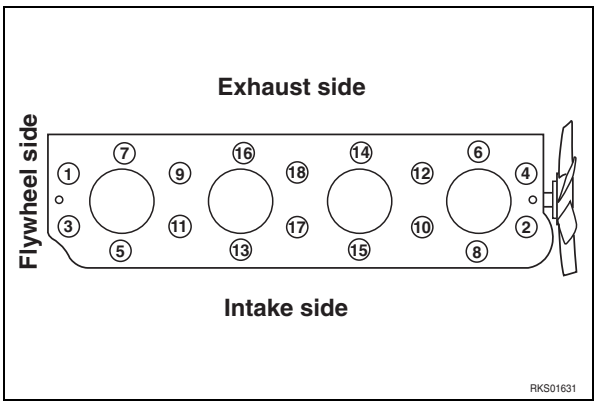

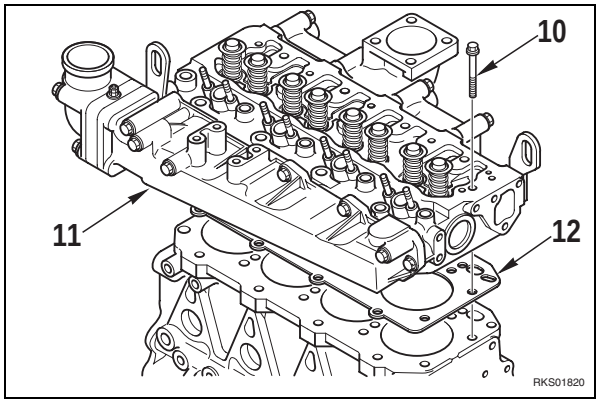

https://truckmanualshub.com/

INSTALLATION OF THE CYLINDER HEAD

- To install, reverse the removal procedure.

※ 1

1 - Fill up the cooling circuit.

Coolant: approx. 9 ℓ

2 - Start the engine to circulate the liquid through all circuits. Stop the engine and check the level.

3 - Pressurize the hydraulic tank and bleed air from the hydraulic circuits.
(For details, see «20. CONTROLS AND ADJUSTMENTS»).

※ 2

Nut: 20–23 kgm

※ 3

Screw: 2.3–2.8 kgm

※ 4

★ Adjust valve clearance. (For details, see «20. CONTROLS AND ADJUSTMENTS - Adjusting valve clearance»).

※ 5

★ Raise the cylinder head, keeping it horizontal, and place it on the gasket without shifting anything.

★ Lubricate the screw-threadings with engine oil.

★ Tighten the screws in the sequence indicated. (See figure).

Screw: 88.2±2.94 Nm

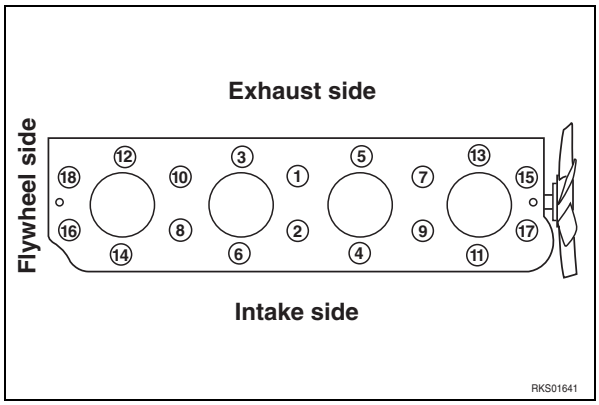

https://truckmanualshub.com/

REMOVAL OF THE COOLANT LIQUID PUMP

⚠ Disconnect the cable from the negative (–) battery terminal.

★ Drain the engine coolant liquid.

※ 1

Engine coolant liquid: max. 9 ℓ

1 - Remove the radiator group (1). (For details, see «REMOVAL OF THE RADIATOR GROUP»).

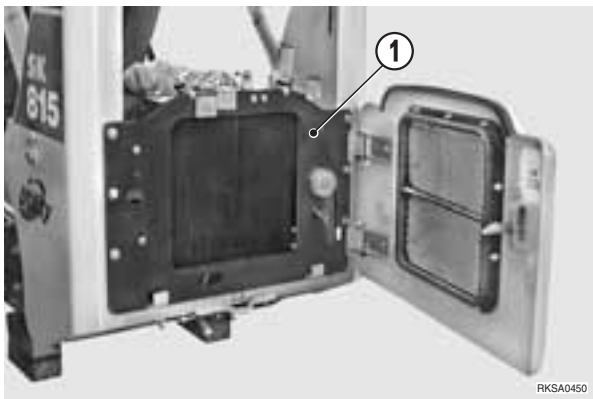

2 - Loosen the screws (2), remove the fan (3) and the spacer (4).
Loosen the alternator drive belt and disengage the circulation pump pulley.

※ 2

3 - Loosen the screws (5) and remove the complete pump (6), the seal (7), and the O-ring (8).

※ 3

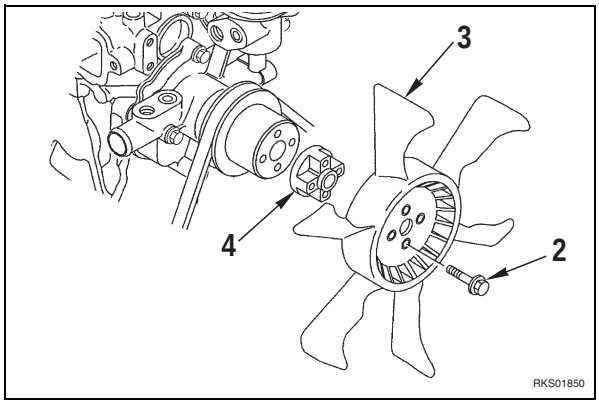

INSTALLATION OF THE COOLANT LIQUID PUMP

- To install, reverse removal procedure.

※ 1

1 - Fill up the coolant liquid circuit.

2 - Start the engine to circulate the liquid and oil in all circuits. Stop the engine and check the levels.

3 - Pressurise the tank and bleed the air from all circuits. (For details, see «20. TESTING AND ADJUSTMENTS»).

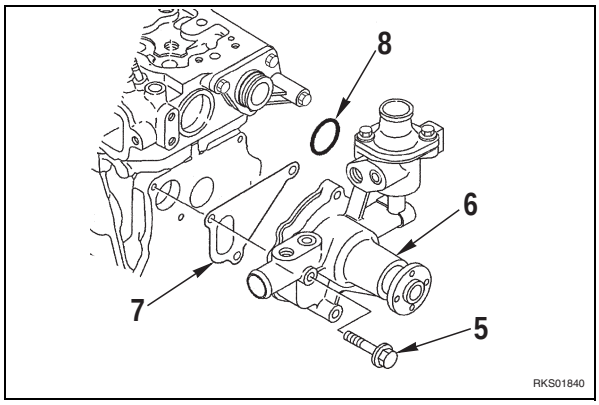

※ 2

★ Adjust the belt tension. (For details, see «20. TESTING AND ADJUSTMENTS – Testing and adjustment of the fan-belt »).

Nm Fan screws: 10–1.2 kgm

※ 3

★ A new seal (7) and new O-ring (8) must be fitted each time the pump is removed.

Nm Pump screws: 2.3–2.9 kgm

https://truckmanualshub.com/

REMOVAL OF THE RADIATOR GROUP

Completely raise the working equipment and tilt the cab. (For details, see «TILTING THE CAB»).

★ Drain the hydraulic oil. 1

Hydraulic oil: max. 39 ℓ

★ Drain the coolant liquid:

Coolant liquid: max. 9 ℓ

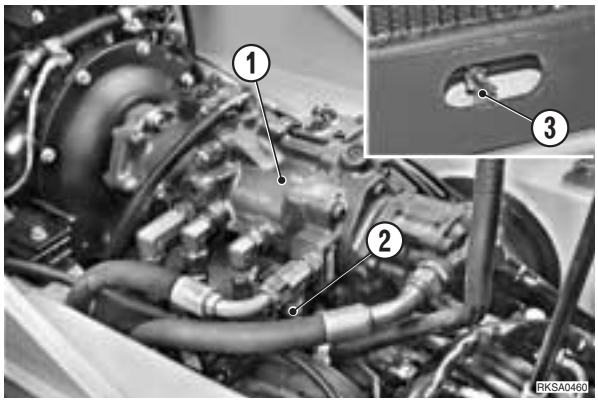

1 - Disconnect the hose (2) from the pump (1).

2 - Disconnect the coolant liquid drainage pipe (3) from the radiator.

3 - Disconnect the cable (4) of the hydraulic-oil clogging-sensor filter.

4 - Loosen the clamp (5) and disconnect the coolant liquid delivery pipe (6).

5 - Disconnect the coolant liquid return pipe (7)

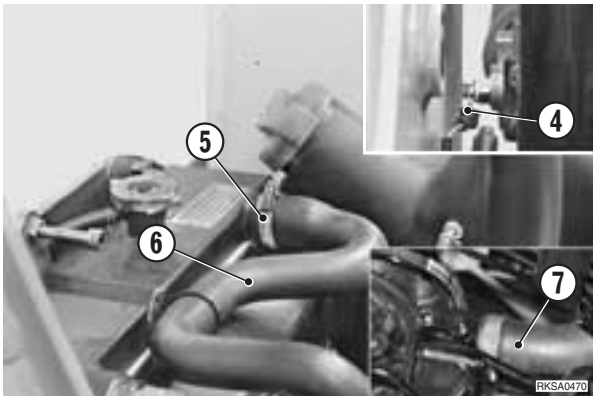

6 - Attach the radiator group (8) to some hoisting tackle and apply a slight tension to the cables.

kg Radiator-oil cooler group: .62 kg

7 - Loosen the screws (9), raise the radiator group (8) until the lower supports can be released, and move it a little way away from the frame. 2

8 - Disconnect the reversing siren connector (10).

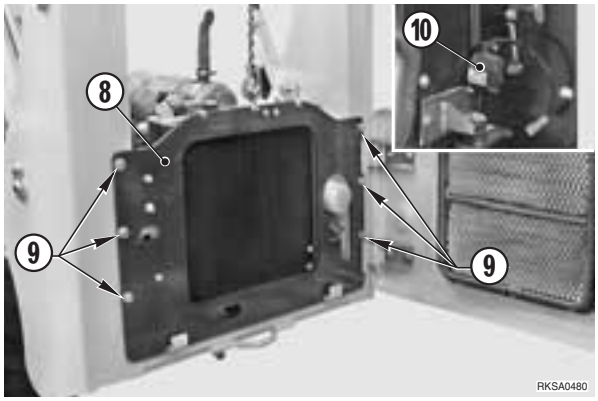

9 - Disconnect the pipes (11) and (12) and remove the complete group (8).

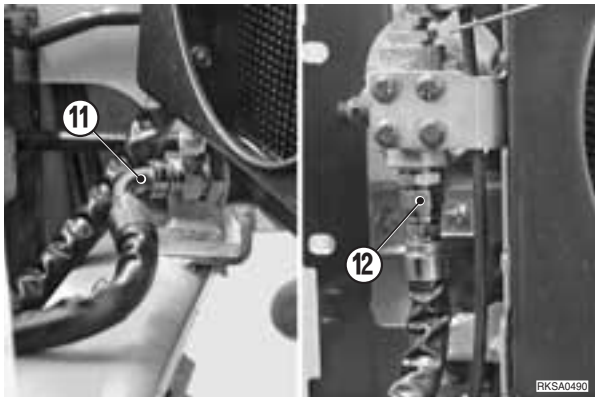

https://truckmanualshub.com/

INSTALLATION OF THE RADIATOR GROUP

- To install, reverse removal procedure.

※ 1

1 - Fill up the hydraulic oil to maximum level.

Hydraulic oil: approx. 27 ℓ

2 - Fill up the coolant liquid circuit to maximum level.

Coolant liquid: approx. 9 ℓ

3 - Start the engine to circulate the oil and the coolant, and check that there are no leaks.

4 - Stop the engine, check the levels and, if necessary, top them up.

※ 2

Nm Screws: 190 Nm

5 - Pressurise the tank and bleed the air from all circuits. (For details, see «20. TESTING AND ADJUSTMENTS»).

https://truckmanualshub.com/

REMOVAL OF THE FUEL TANK

★ Drain the fuel.

Fuel: max 38 ℓ

1 - Remove the screws (1) and loosen the screws (2), leaving them in place.

※ 1

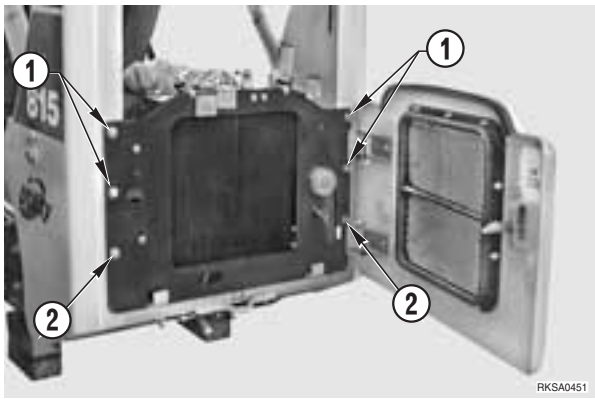

2 - Disconnect the delivery (5) and return (6) pipes from the prefilter (3) and the filter (4).

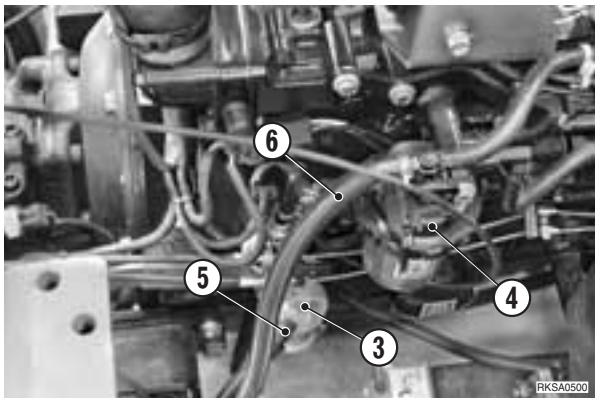

3 - Slightly loosen the nuts (7) that secure the tank.

※ 2

4 - Loosen the screws (8) that secure the bracket (9).

5 - Raise the tank (10) and move it towards the front of the machine.

6 - Disconnect the level sensor connector (11).

7 - Remove the complete tank.

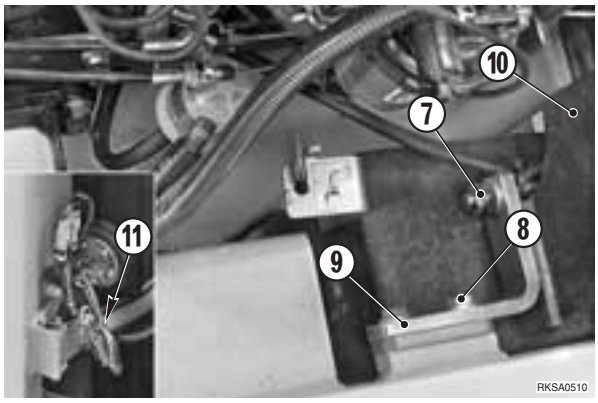

INSTALLATION OF THE FUEL TANK

★ To install, reverse removal procedure.

※ 1

Nm Screws: 190 Nm

※ 2

- Tighten the nuts by hand until the tank is tight against the frame.

Nm Nut: 6 Nm

https://truckmanualshub.com/

REMOVAL OF THE CAB

1 - Remove the complete working equipment.
(For details, see «REMOVAL OF THE WORKING EQUIPMENT»).

2 - Loosen the nuts (1) and tilt the rear panel (2) towards the front of the machine.

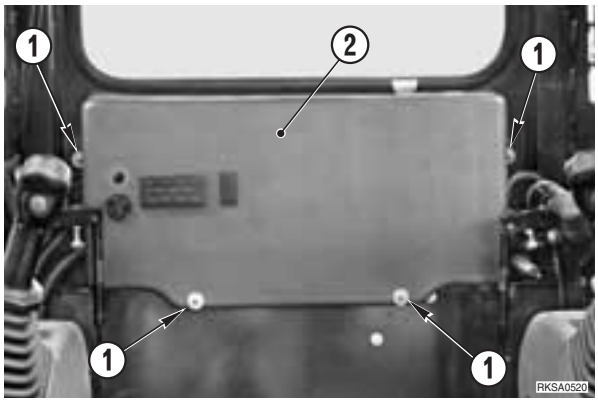

3 - Disconnect the connectors (3) from the cab cabling (4) and release the engine cabling (5) from its retaining clamps.

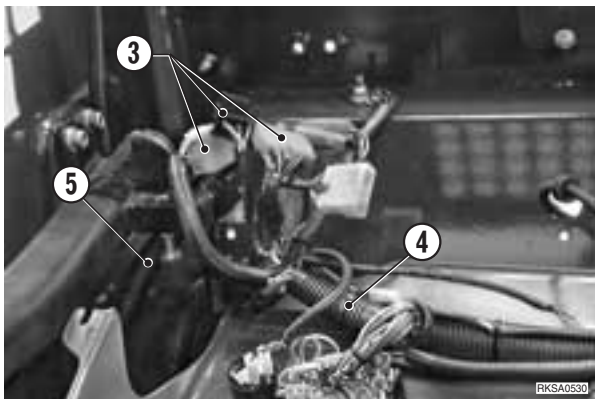

4 - Tilt the cab. (For details, see «TILTING THE CAB»).

5 - Disconnect the four pipes (6) on the RH side, the two servo-control feed-pipes (7) and the four pipes (8) on the LH side.

★ To disconnect the pipes, remove the retainer (9) push the pipe (6) completely inside the union (10) and extract the pipe (6).

1

★ Mark the tubes to avoid exchanging them during re-assembly.

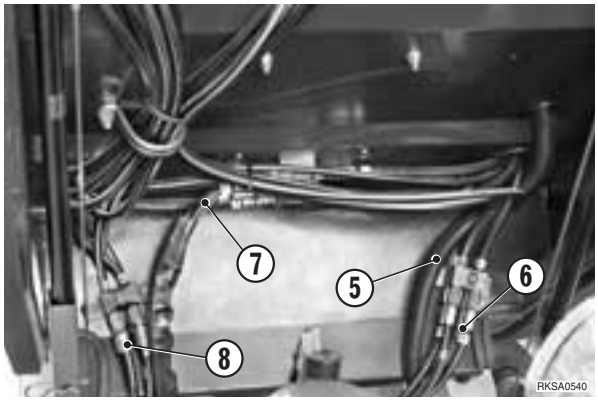

6 - Pull out the cab cabling (5).

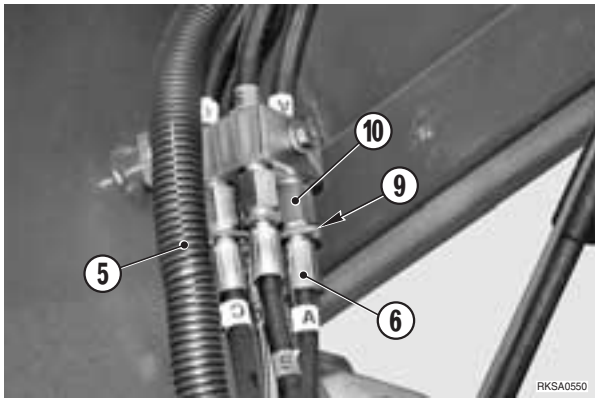

https://truckmanualshub.com/

7 - Disconnect the accelerator command lever cable (12) from the engine (11).

2

8 - Connect the cab (13) to some hoisting tackle.

9 - Remove the safety cotter pins (14) and the washers (15).

10 - Push the cab (13) slightly towards its “at rest” position to relieve the strain on the safety cables (16), and disconnect the cables from the pins (17).

Apply a slight tension to the chains of the hoisting tackle to prevent the cab from swinging about unexpectedly.

11 - Tilt the cab (13) slowly until the distance between the centres of the dumper fixing hooks is 1100 mm..

★ The distance of 1100 mm corresponds to the maximum stretch of the dumper hooks.

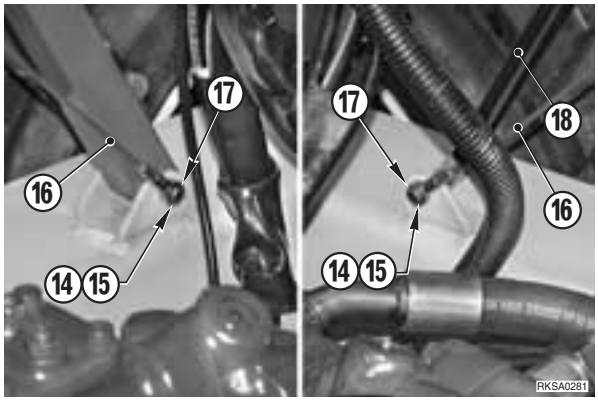

12 - Remove the pins (17) from the dumper fixing hooks (18).

13 - Loosen the nuts (19) and remove the screws (20) and washers (21).

14 - Remove the complete cab (13).

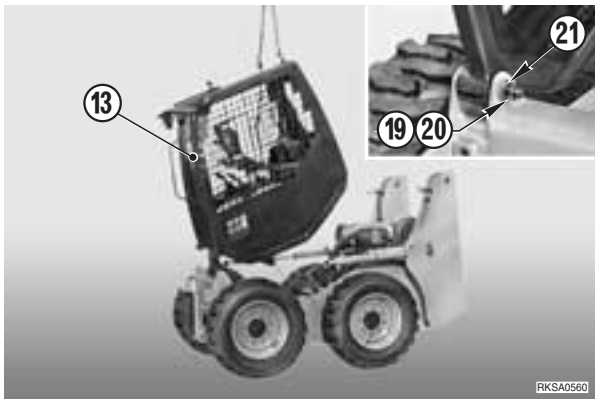

https://truckmanualshub.com/

INSTALLATION OF THE CAB

★ To install, reverse removal procedure.

※ 1

- Mount the nuts (1) on the hoses and connect the pipes by pushing them fully home in their seatings. Check the correct connection by trying to extract them.

※ 2

- Adjust the stroke of the accelerator lever cable. ((For details, see «20. TESTING AND ADJUSTMENTS»).

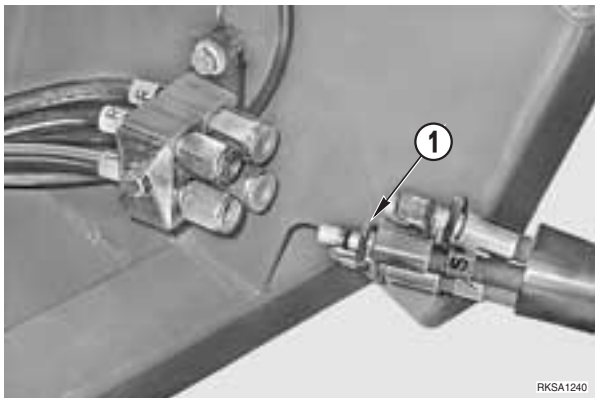

https://truckmanualshub.com/

REMOVAL OF THE ENGINE-PUMP GROUP

1 - Tilt the cab until it is resting on a support. (For details, see «TILTING THE CAB»).

※ 1

2 - Remove the battery.
(For details, see «REMOVING THE BATTERY»).

★ Drain the engine coolant liquid.

Liquid: max. 9 ℓ

★ Drain the hydraulic oil.

※ 2

Oil: max. 39 ℓ

★ Drain the fuel.

Fuel: max. 38 ℓ

3 - Remove the radiator group. (For details, see «REMOVING THE RADIATOR GROUP»).

4 - Remove the cover of the control unit (1) and disconnect the connectors (2), (3) and (4) that connect the control unit (1) to the frame wiring harness (5).

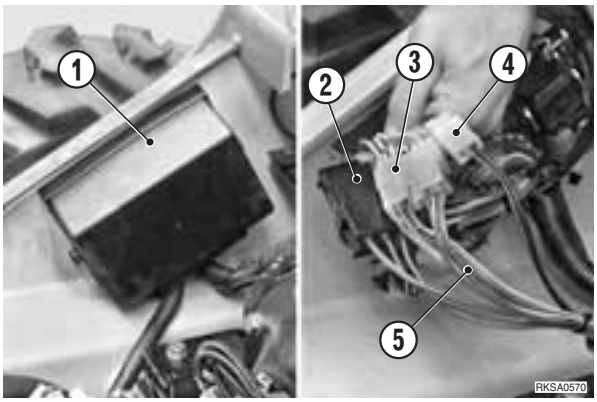

5 - Loosen the nuts (6) and disconnect the control unit from the frame.

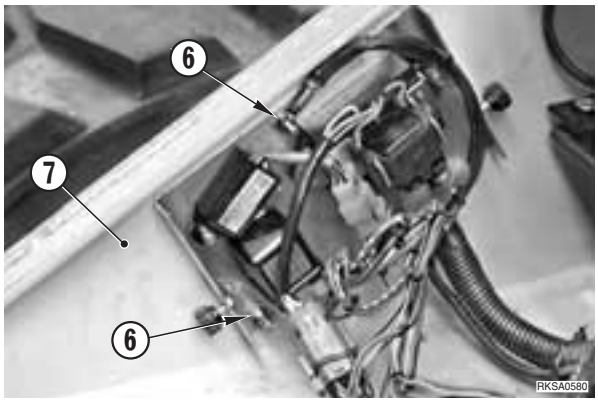

6 - Disconnect the fuel level sensor connector (8).

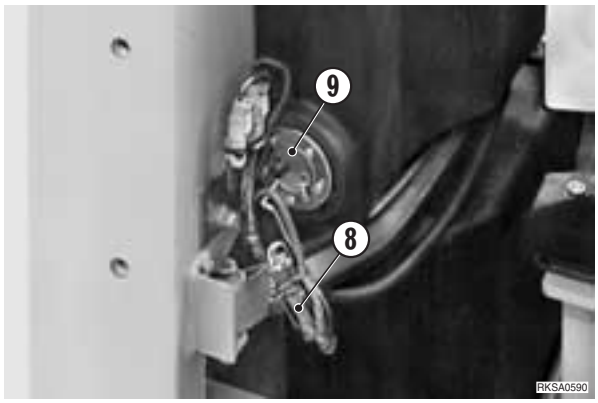

https://truckmanualshub.com/

7 - Disconnect the servo-control pressure sensor connectors (10) and disconnect the support (11) from the engine (12).

8 - Disconnect the accelerator pedal cable (13) from the engine (12).

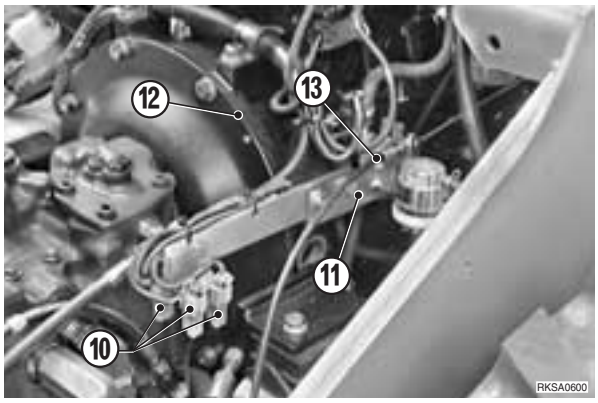

9 - Disconnect the delivery (16) and return (17) pipes from the prefilter (14) and the filter (15).

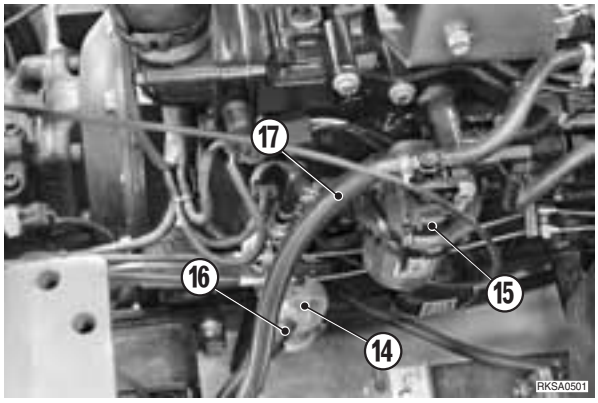

10 - Disconnect the pipes (19), (20) and (21) from the pump (18).

★ Mark the tubes to avoid exchanging them during reassembly.

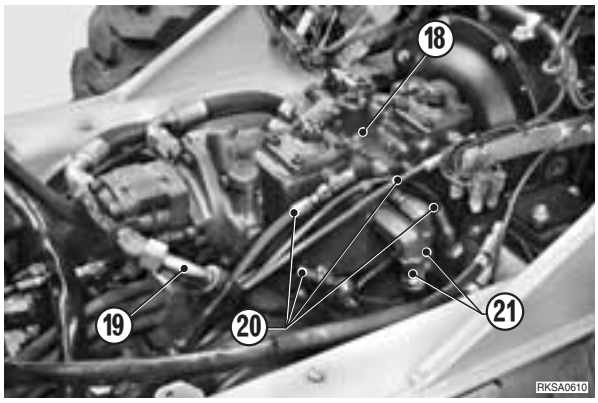

11 - Disconnect the pipes (22), (23), (24), and (25) from the pump.

★ Mark the tubes to avoid exchanging them during reassembly.

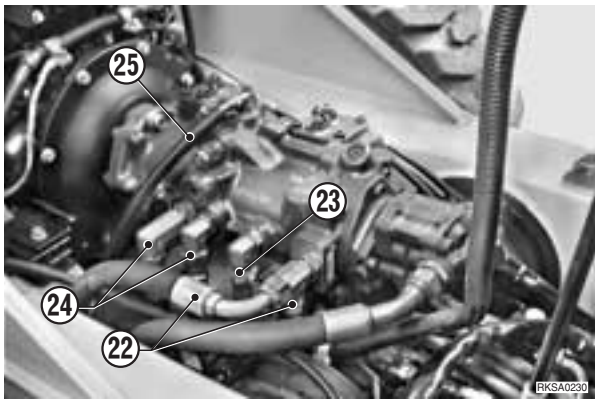

https://truckmanualshub.com/

12 - Attach the engine-pump group to some hoisting tackle and apply a slight tension to the cables.

13 - Loosen the four nuts (26) that secure the engine and remove the complete group.

※ 3

kg Engine-pump group: 290 kg

INSTALLATION OF THE ENGINE-PUMP GROUP

- To install, reverse removal procedure..

※ 1

★ Adjust the stroke of the accelerator cables. (For details, see «20. TESTING AND ADJUSTMENTS»).

※ 2

1 - Fill the hydraulic oil tank up to maximum level.

⚠ While filling the tank, bleed the air from the pump. (For details, see «20. TESTING AND ADJUSTMENTS»).

Hydraulic oil required: approx. 33 ℓ

2 - Fill the coolant liquid circuit up to maximum level.

Coolant liquid: approx. 8 ℓ

3 - Fill the fuel tank and bleed the air from the system. (For details, see «20. TESTING AND ADJUSTMENTS»).

Fuel: max. 51.5 ℓ

4 - Start the engine to circulate the oil and coolant liquid and check that there are no leaks.

5 - Stop the engine, check the levels and, if necessary, top them up.

6 - Bleed the air from the hydraulic circuits and pressurise the tank. (For details, see «20. TESTING AND ADJUSTMENTS»).

※ 3

Nm Engine nuts: 80 Nm

https://truckmanualshub.com/

REMOVAL OF THE COMPLETE HYDRAULIC PUMP

⚠ Fully raise the working equipment and tilt the cab.
(For details, see TILTING THE CAB»).

★ Drain the hydraulic oil.

Hydraulic oil: max:. 39 ℓ

1 - Disconnect the pipes (2), (3) and (4) from the pump (1).
★ Mark the tubes to avoid exchanging them during re-assembly.

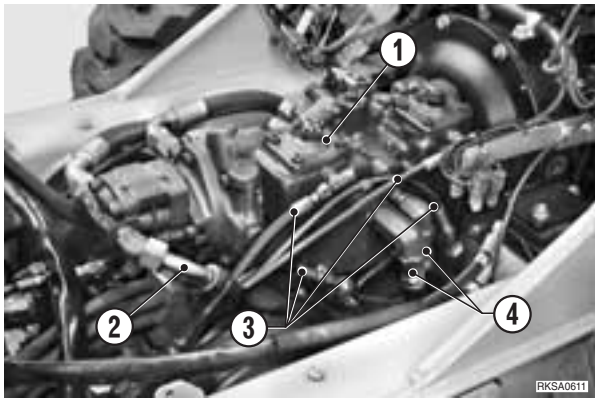

2 - Disconnect the pipes (5), (6), (7), and (8) from the pump.
★ Mark the tubes to avoid exchanging them during re-assembly.

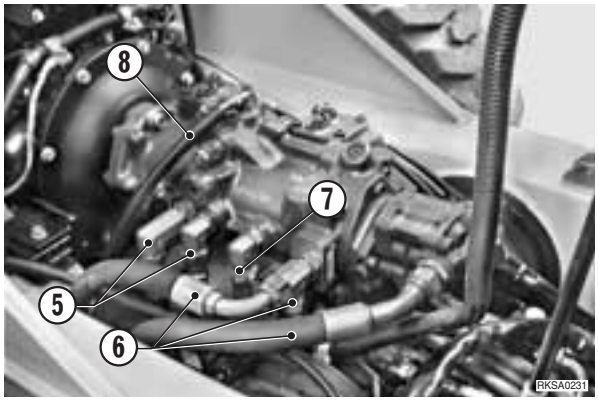

3 - Disconnect the servo-control pressure sensor connectors (9) and disconnect the support (10) from the engine.

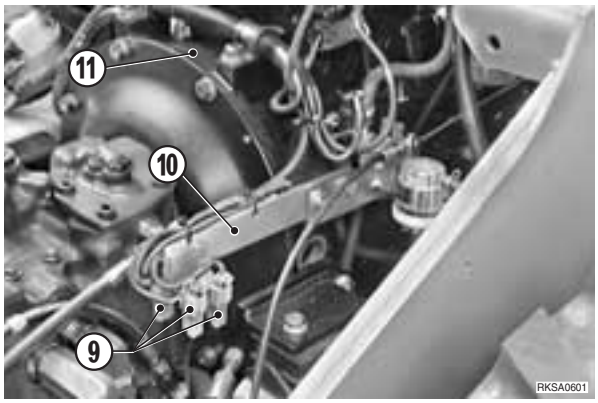

https://truckmanualshub.com/

4 - Attach the pump to some hoisting tackle and apply a slight tension to the cables.

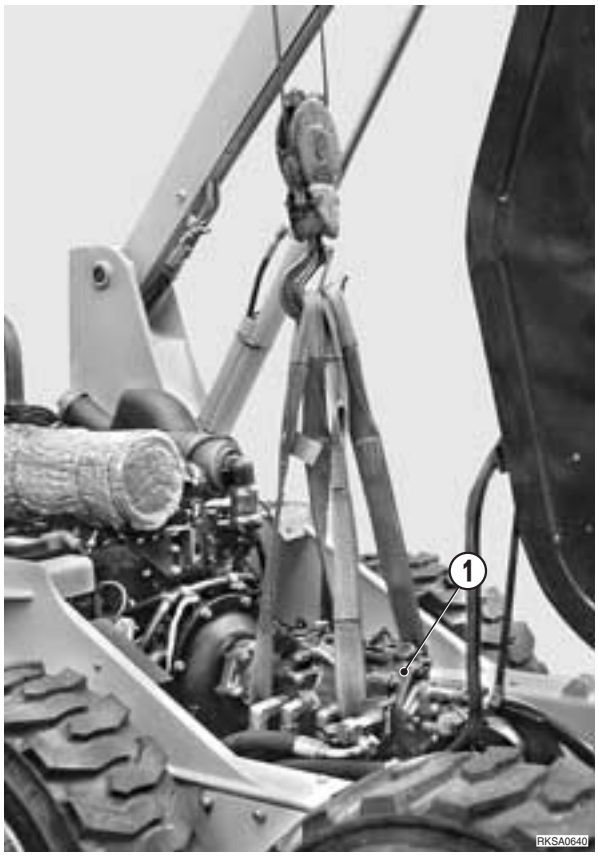

5 - Loosen the eight screws (12) and remove the pump (1) complete with the flange (13).

※ 1

kg Pump: 88 kg

6 - Loosen the screws (14) and disconnect the pump (1) from the flange (13).

※ 2

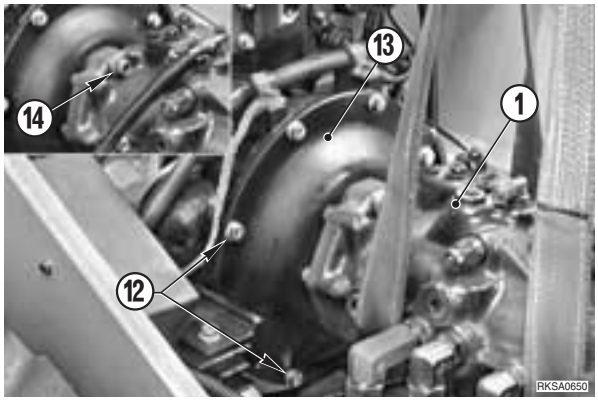

https://truckmanualshub.com/

INSTALLATION OF THE HYDRAULIC PUMP

- To install, reverse removal procedure.

1

Nm Flange screws: 80 Nm

Flange screws: Loctite 262

Pump shaft: Litio EP MS2 NLGI 2

2

Nm Pump screws: 195 Nm

Pump screws: Loctite 262

1 - Fill the tank up to maximum level.

Hydraulic oil: max. 39 ℓ

Bleed the air from the pump.
(For details, see «20. TESTING AND ADJUSTMENTS»).

2 - Start the engine to circulate the oil and check that there are no leaks.

3 - Stop the engine, check the levels and, if necessary, top them up.

4 - Bleed the air from the hydraulic circuits and pressurise the tank.
(For details, see «20. TESTING AND ADJUSTMENTS»).

https://truckmanualshub.com/

REMOVAL OF THE GEAR PUMP

Fully raise the working equipment and tilt the cab. (For details, see «TILTING THE CAB»).

★ Drain the hydraulic oil

Hydraulic oil: max.. 39 ℓ

1 - Disconnect from the pump (1) the suction pipe (2) and the pipe (3) (one for the normal version, two for the HIGHFLOW version.

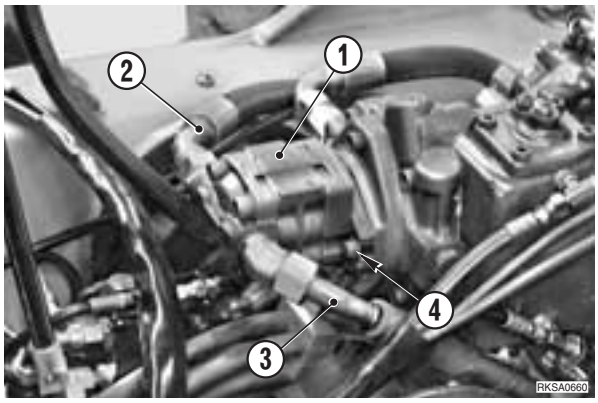

2 - Loosen the two screws (4) and remove the pump (1) complete with the O-ring (5).

1

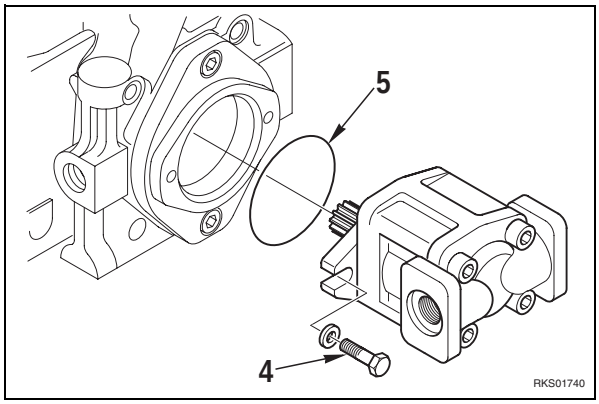

INSTALLATION OF THE GEAR PUMP

★ To install, reverse removal procedure.

1

Nm Screws: 59÷74 Nm

https://truckmanualshub.com/

REMOVAL OF ENGINE-PUMP COUPLING

⚠ Fully raise the working equipment and tilt the cab. (For details, see «TILTING THE CAB»).

1 - Remove the pump. (For details, see «REMOVAL OF THE PUMP»).

2 - Take out the screws (1) and remove the coupling (2). ※ 1

★ Replace screws (1) every dismantling.

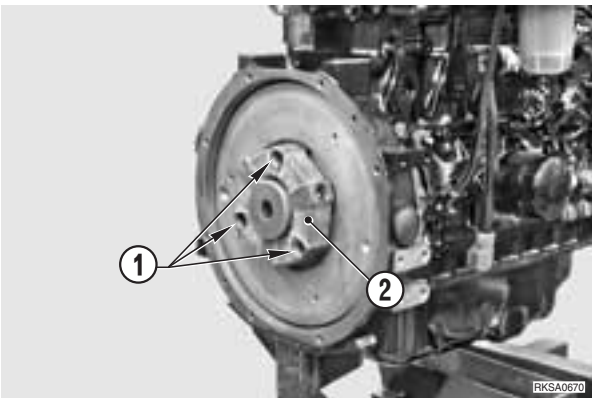

INSTALLATION OF THE ENGINE-PUMP COUPLING

- To install, reverse the removal procedure.

※ 1

Nm Coupling screws: 80 Nm

https://truckmanualshub.com/

REMOVAL OF THE CONTROL VALVE

Fully raise the working equipment and tilt the cab. (For details, see «TILTING THE CAB»).

Release residual pressures from all circuits and from the tank. (For details, see «20. TESTING AND ADJUSTMENTS»).

★ Drain the hydraulic oil.

Hydraulic oil: max.. 39 ℓ

1 - Disconnect from the control valve (1) the servo-control pipes (2), the delivery pipes to the actuators, and the delivery and return pipes (3).

★ Mark the tubes to avoid exchanging them during reassembly.

2 - Loosen the three screws (4) and remove the control valve (1).

1

Control valve: max. 21.5 kg

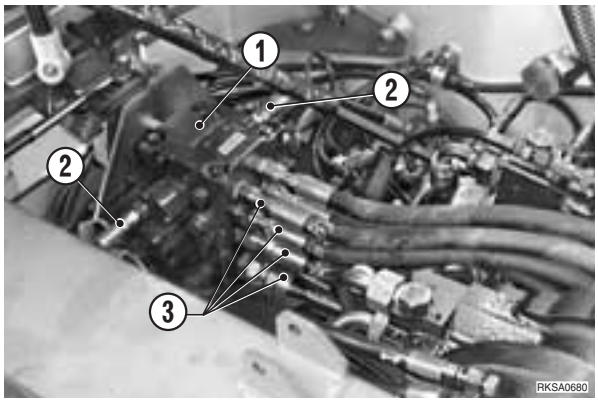

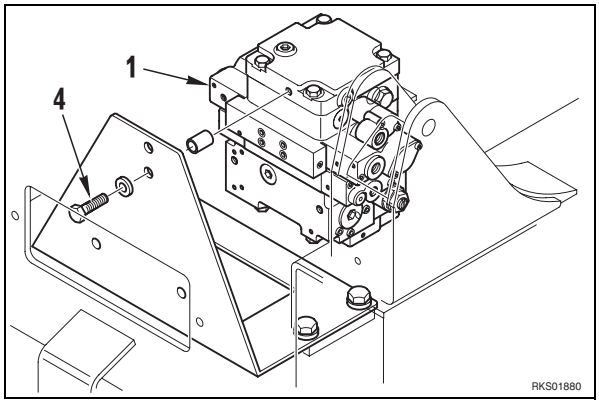

INSTALLATION OF THE CONTROL VALVE

★ To install, reverse removal procedure.

1

Control valve screws: 35 Nm

1 - Fill the hydraulic oil tank up to maximum level.

Hydraulic oil: max. 39 ℓ

2 - Start the engine at low idling to circulate the oil throughout the system.

3 - Pressurise the tank and bleed the air from all circuits. (For details, see «20. TESTING AND ADJUSTMENTS»).

https://truckmanualshub.com/

REMOVAL OF THE PPC VALVES

Lower the working equipment until it is resting on the ground, stop the engine and remove the ignition key.

Release residual pressures from all circuits and from the tank. (For details, see «20. TESTING AND ADJUSTMENTS»).

1 - Raise the switch-box cover (1) disconnect the connectors (2) and remove the cover (1).

2 - Disconnect the protective sleeve (3).
★ Take care not to damage the frame (4).

3 - Loosen the four screws (5) and remove the casing (6).

4 - Take out the three screws (7) and disconnect the PPC valve (8) from the support (9).

5 - Disconnect the six pipes (10) from the PPC valve and plug the tubes to prevent entry of impurities.
★ Check the marks on the tubes to avoid exchanging them during re-assembly.

1

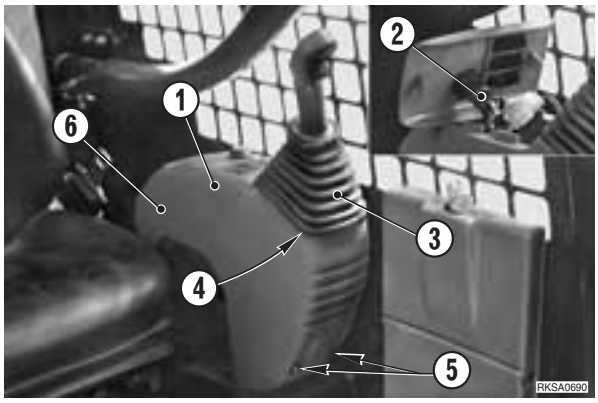

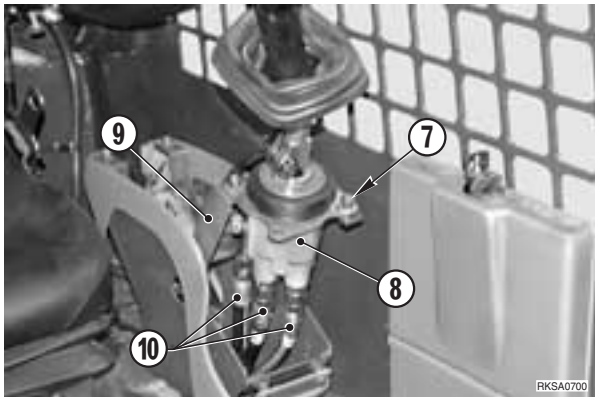

INSTALLATION OF THE PPC VALVES

- To install, reverse removal procedure.

1
★ Check very carefully the positions for the pipe connections.

LEFT-HAND PPC VALVE

Position					
P	T	P1	P2	P3	P4
M White	S White	A Yellow	R Yellow	L Blue	R Blue

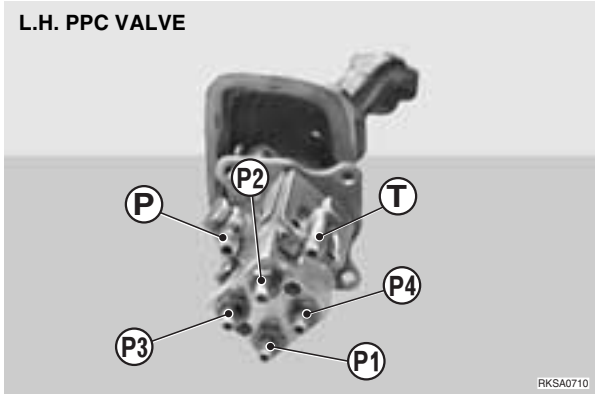

RIGHT-HAND PPC VALVE

Posizione					
P	T	P1	P2	P3	P4
M White	S White	D Red	S Red	C Yellow	A Yellow

If the union pieces are dismantled from the PPC valves, make sure that a union with a filter is mounted at the P inlet.

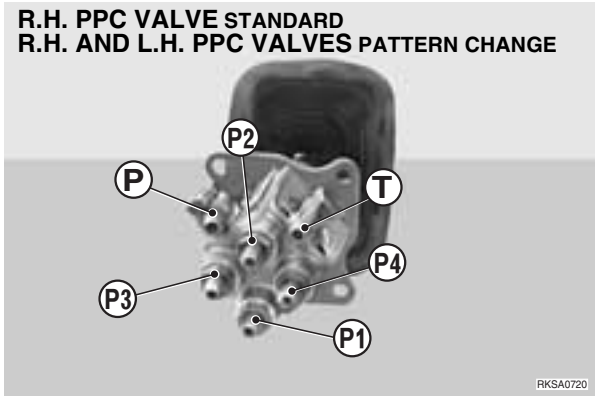

https://truckmanualshub.com/

REMOVAL OF THE HUB WHEEL

1 - Place the machine on blocks that are high enough to raise the wheels from the ground, and fully raise the working equipment.

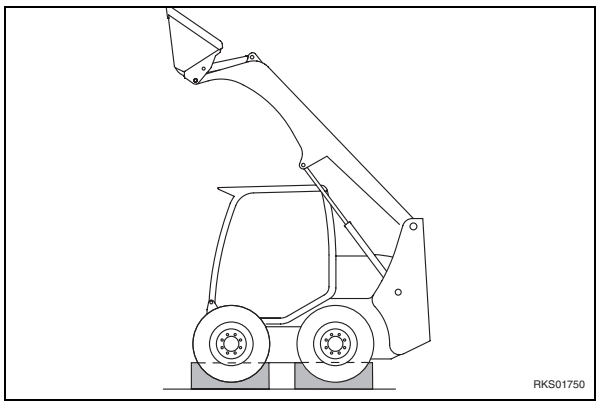

2 - 2 – Loosen the nuts (1) and take off the tire (2).

※ 1

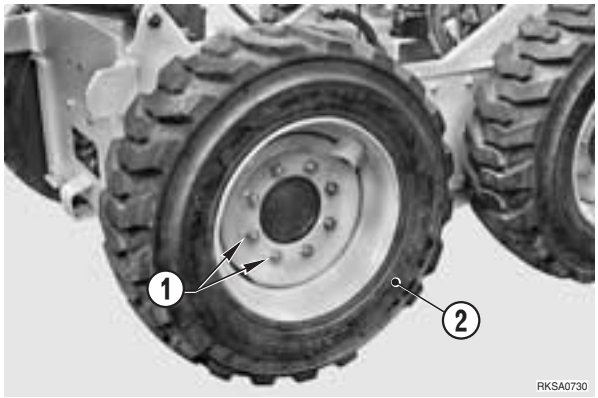

3 - Loosen the drainage plug (3) in order to drain the chain-gearing lubrication oil.

Gear-box oil: max. 14.4 ℓ

★ To facilitate oil drainage, remove the vent plug (4).

4 - Loosen the nuts (5) and take off the cover (6).

※ 2

★ Check the condition of the seal (7) and install a new one if necessary.

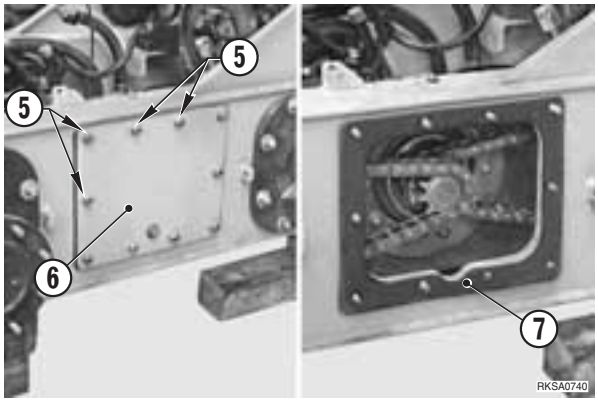

https://truckmanualshub.com/

5 - Start the engine and allow the pinion (8) to turn slowly until the master links (9) are both positioned on the upper section of the chain.

6 - Remove the pins (10) and pull out the master link (9). ※ 3

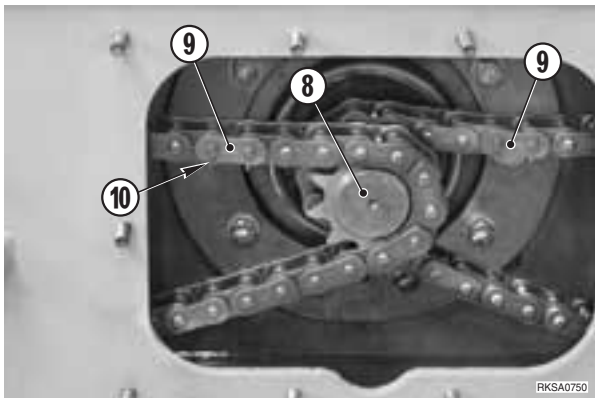

7 - Turn the wheel hub (11) to release it from the chain.

8 - Attach the complete hub (11) to some hoisting tackle and apply a slight tension to the cables.

9 - Loosen the nuts (12) and remove the hub (11). ※ 4

★ Check the condition of the O-ring and put in a new one if necessary.

kg Hub: 55 kg

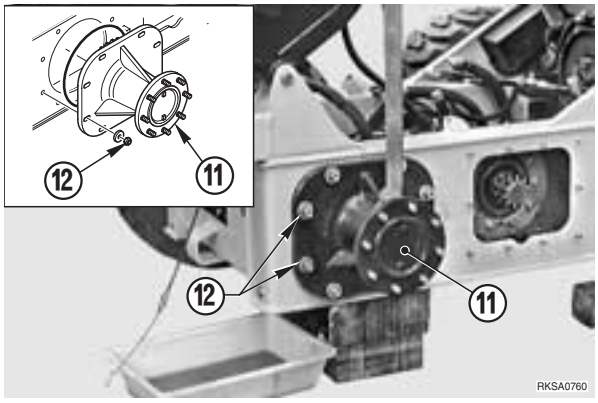

INSTALLATION OF THE WHEEL HUB

- To install, reverse removal procedure.

※ 1

Nm Nuts: 186 Nm

※ 2

Nm Nuts: 29 Nm

※ 3

★ Make sure that the master link is in the correct position with respect to the pinion.

1 - Adjust the tension of the chains.
(For details, see «20. TESTING AND ADJUSTMENTS»).

2 - Fill the oil up to maximum level.

※ 4

Nm Nuts: 235 Nm

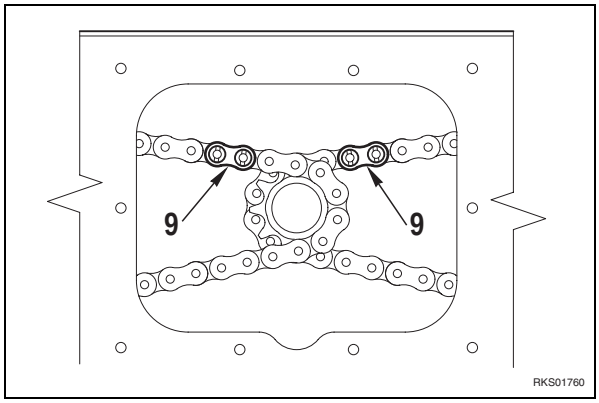

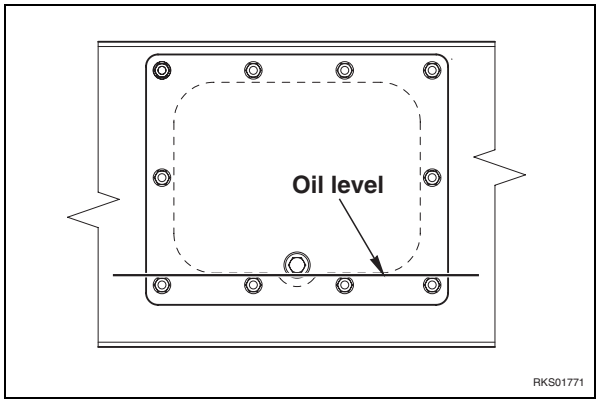

https://truckmanualshub.com/

DISMANTLING THE WHEEL HUB

1 - Remove the wheel hub (1).
(For details, see “REMOVAL OF THE WHEEL HUB”)..

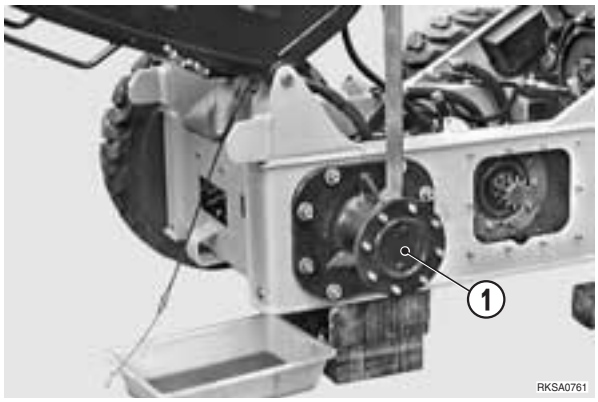

2 - Place the wheel hub (1) in a vice and loosen the screws (2).

※ 1

3 - Remove the disk (3) and the shims (4).

★ Make a note of the number and positions of the shims (4).

※ 2

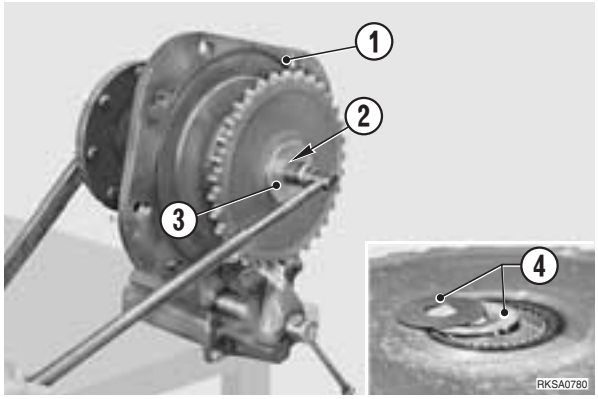

4 - Remove the ring bevel gear (5).

★ Make a note of which way the ring bevel gear (5) is facing with respect to the hub (1).

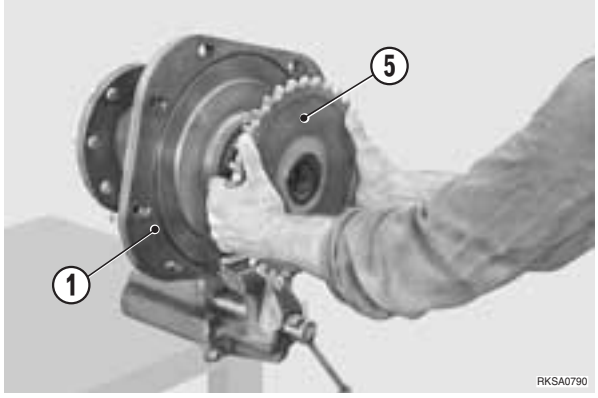

5 - Position the wheel hub (1) beneath a press and slowly extract the axle shaft (6) until it is released from the inner ring (7).

★ Place the wheel hub (1) on two supports **“A”**, about 520 mm high.

6 - Remove the inner ring (7).

7 - Proceed with the extraction of the axle shaft (6) until it is released from the bearing (8).

※ 3

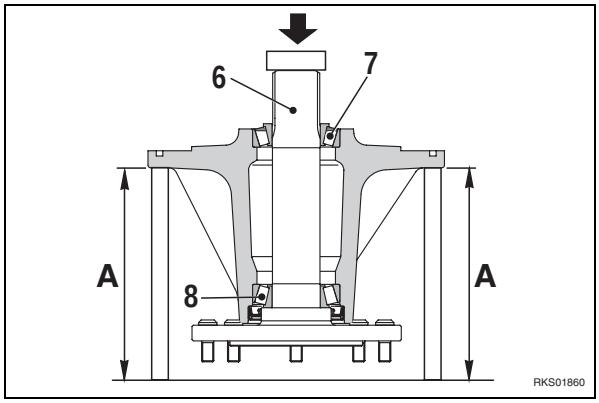

https://truckmanualshub.com/

8 - Place the hub (1) in a vice and extract the seal ring (9).
★ Mount a new seal ring (9) each time the hub is dismantled.

※ 4

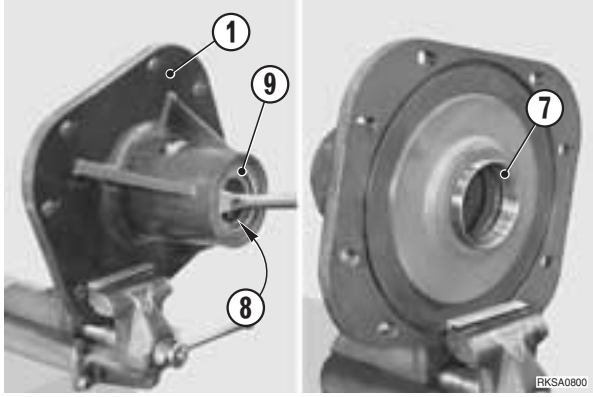

9 - Extract the outer rings (7) and (8).

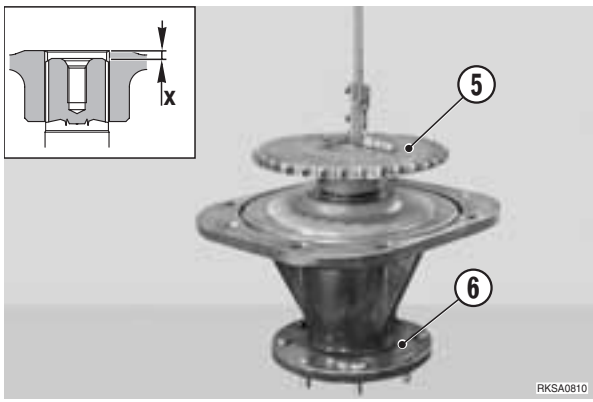

ASSEMBLY OF THE HUB WHEEL

- To install, reverse removal procedure.

※ 1

Nm Screw: 294 Nm

※ 2

1 - Take the existing measurement **"X"** between the axle shaft (6) and the ring bevel gear (5).

2 - Calculate the thickness of shim that should be inserted between the disc (3) and the ring bevel gear (5) using the following formula:

$$Z = X - S$$

S = the shim pack
X = the measurement taken
Z = residual clearance (0.05÷0.125)

For example: clearance measured **X** = 0.570
Addition of two shims of 0.2 and one of 0.1

3 - Check that the measurement **X** lies within the permissible limits.

※ 3

★ Grease the bearings (7) and (8).

Bearings: Litio EP NLGI 2

※ 4

★ Grease the lip of the seal ring (9).

Seal ring: Litio EP NLGI 2

https://truckmanualshub.com/

REMOVAL OF THE FINAL DRIVE

1 - Disconnect the gearing chains (1) from the final drive (2). (For details, see “REMOVAL OF WHEEL HUB”).

2 - Remove the complete hydraulic pump. (For details, see “REMOVAL OF HYDRAULIC PUMP”).

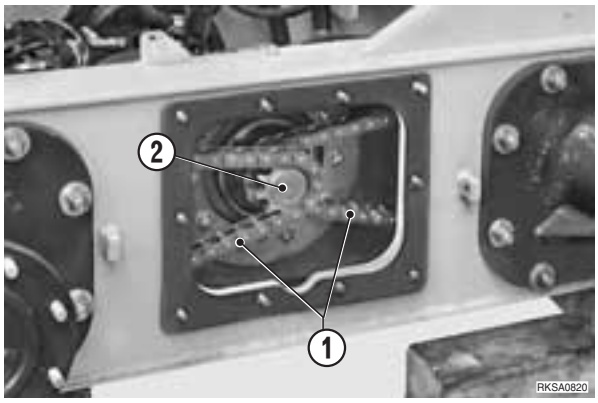

3 - Disconnect from the final drive (2) the supply pipes (3), the speed increment pipe (4) and the drainage pipe (5).

★ Plug the tubes to prevent entry of impurities.

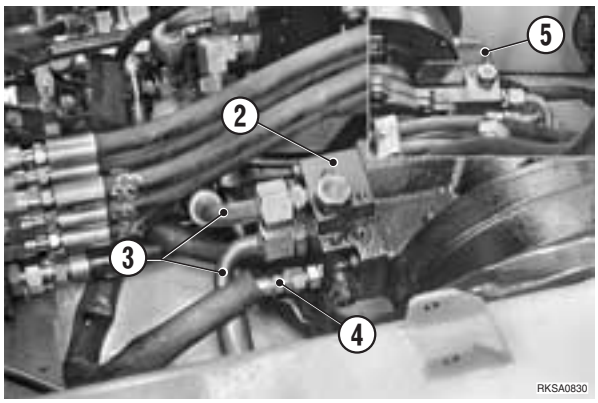

4 - Attach the final drive (2) to some hoisting tackle and apply a slight tension to the ropes.

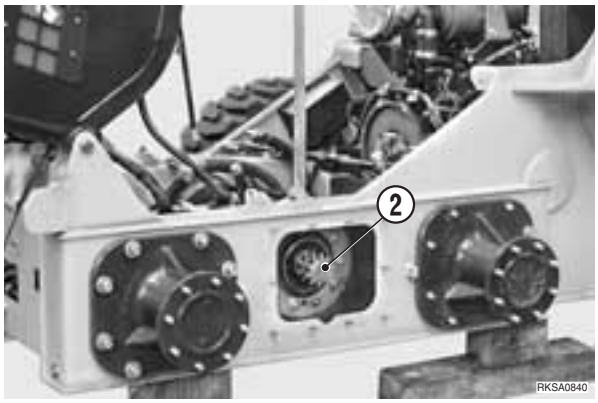

5 - Loosen the 10 screws (6) and take out the complete final drive (2).

★ Check the condition of the O-ring (7) and substitute a new one if necessary.

kg Final drive: 54 kg

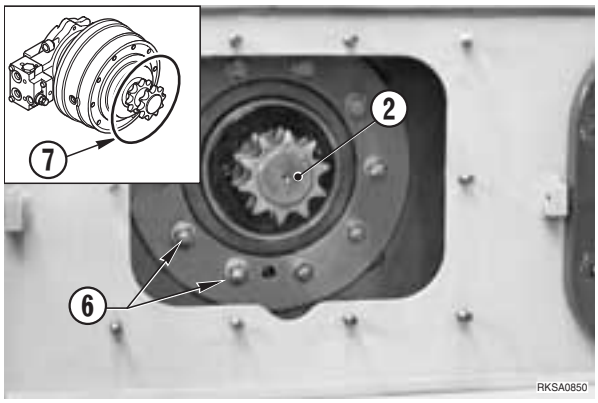

https://truckmanualshub.com/

INSTALLATION OF THE FINAL DRIVE

- To install, reverse removal procedure.

1

★ Grease the O-ring.

O-ring: Litio EP NLGI 2

Nm Screws: 120 Nm

Screws: Loctite 270

https://truckmanualshub.com/

REMOVAL OF THE RAISING CYLINDER

Lower the working equipment until it is resting on the ground.

Release residual pressures from all circuits.
(For details, see «20. TESTING AND ADJUSTMENTS»).

1 - Loosen the screw (1) and remove the pin (2).
1 2

★ **Only for the RH cylinder**
Disconnect the safety rod (3) from the boom (4).

2 - Loosen the clamps (5) and remove the protection (6).

3 - Disconnect the pipe (7).
★ Plug the tube (7) and the union to prevent entry of impurities.

4 - Disconnect the pipe (8).
★ Plug the tube (8) and the union to prevent entry of impurities.

5 - Loosen the screw (9) and remove the pin (10).
1 2

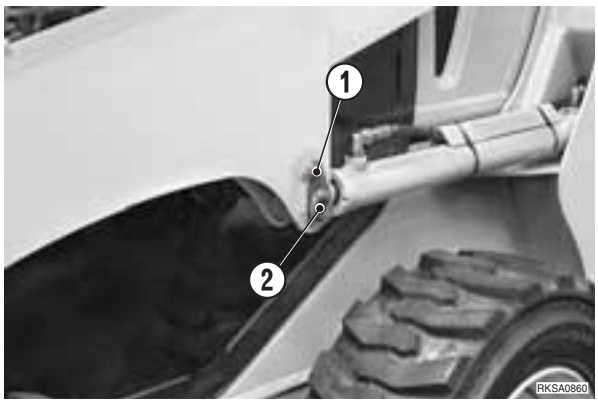

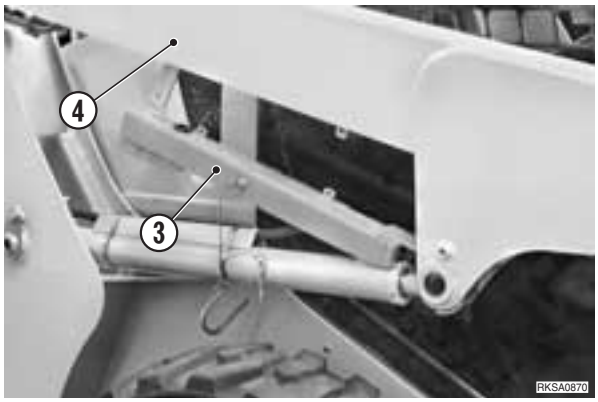

INSTALLATION OF THE RAISING CYLINDER

- To install, reverse removal procedure.

1

Inside the bushings: Litio EP MS2 NLGI 2

Nm Pin screws: 49 Nm

2

When aligning the positions between the hole and the pin, run the engine at low idling.
Do not insert fingers into the holes to check alignment.

1 - Start the engine and bleed the air from the cylinder. (For details, see «20. TESTING AND ADJUSTMENTS»).
★ After bleeding the air, check the level of oil in the tank.

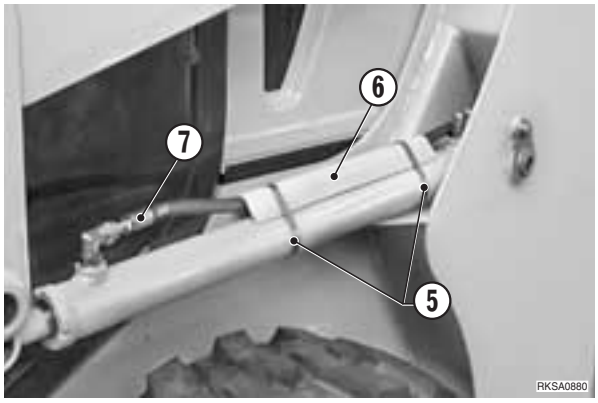

https://truckmanualshub.com/

REMOVAL OF THE BUCKET CYLINDER

⚠ Lower the working equipment and rest the equipment support frame on the ground.

1 - Remove the pin (1) and fully retract the piston rod (2).
※ 1 ※ 2

★ Check and make a note of the position of the adjustments to a given clearance.

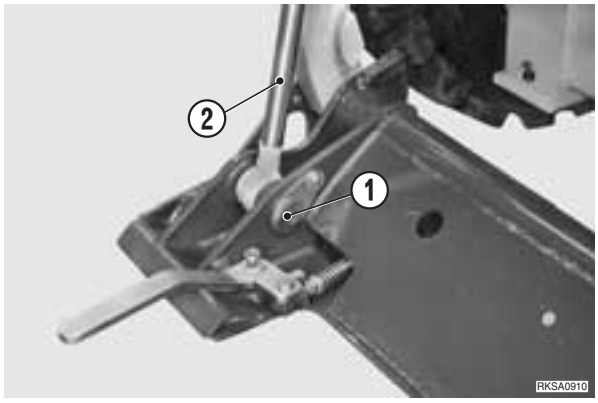

2 - Disconnect the pipes (4) and (5) from the cylinder (3).

★ Plug the tubes to prevent entry of impurities.

★ Mark the tubes to avoid exchanging them during reassembly.

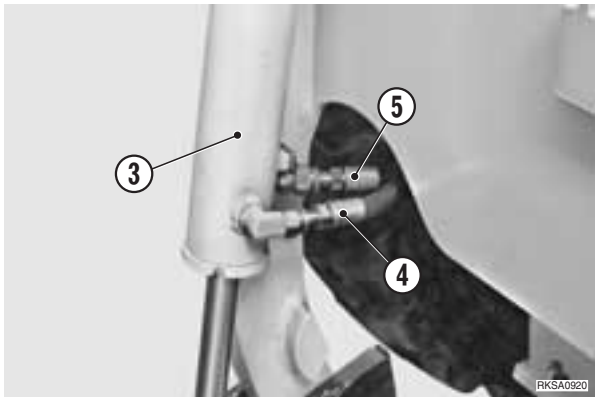

3 - Remove the pin (6) and take away the cylinder (3).
※ 1 ※ 3

★ Check and make a note of the position of the adjustments to a given clearance.

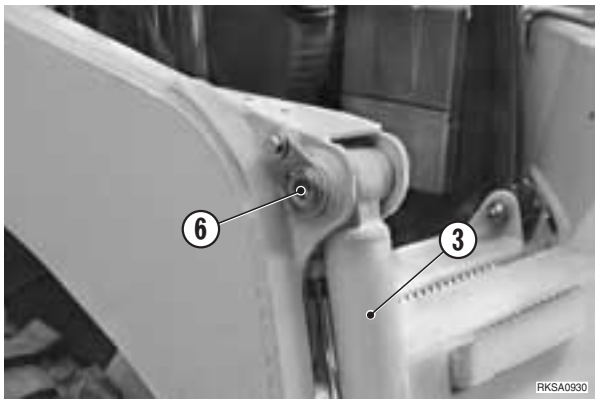

https://truckmanualshub.com/

INSTALLATION OF THE BUCKET CYLINDER

- To install, reverse removal procedure.

※ 1

When aligning the positions between the hole and the pin, do not insert fingers into the holes to check alignment.

Inside the bushings: Litio EP MS2 NLGI 2

Nm Pin screws: 49 Nm

※ 2

★ Insert the removed shims and, if necessary, add more until the residual clearance is about 1 mm.

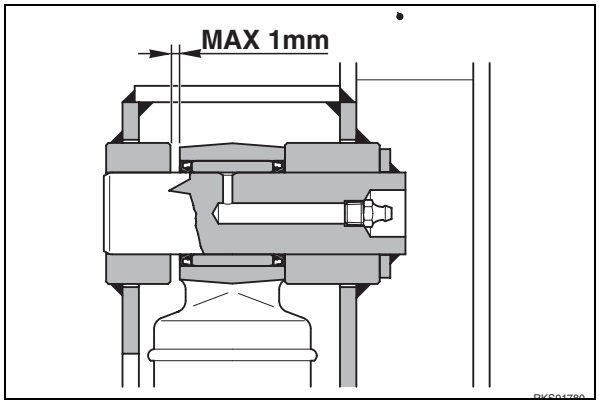

※ 3

★ Insert the removed shims and, if necessary, add more until the residual clearance is about 1 mm.

1 - Start the engine and bleed the air from the cylinder. (For details, see «20. TESTING AND ADJUSTMENTS»).

★ After bleeding the air, check the level of oil in the tank

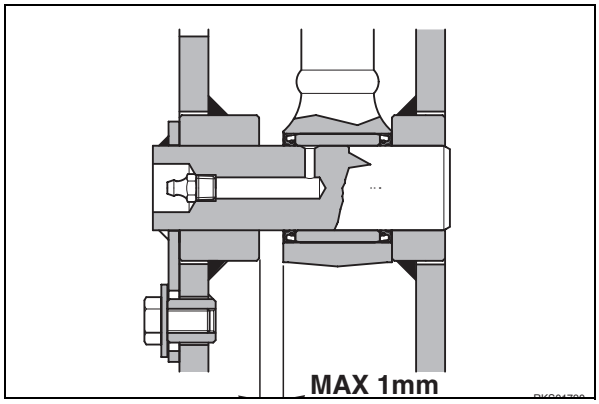

https://truckmanualshub.com/

DISASSEMBLY OF THE WORK EQUIPMENT CYLINDERS

1 - Take off the guard rings (1) from both sides of the cylinder and from the piston rod.
★ Make sure that the tube unions are not plugged.

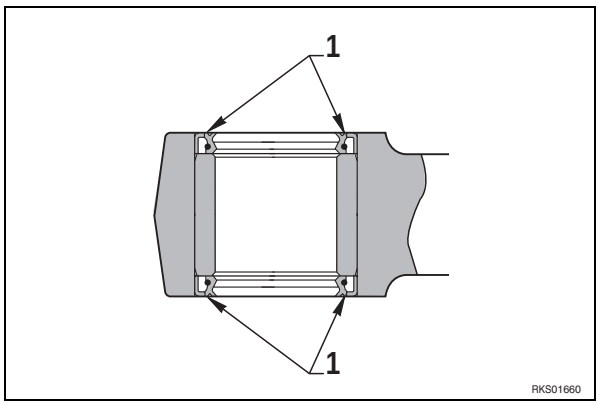

2 - Place the cylinder (2) on the apparatus **A**. Engage the cylinder in the tools **B**, having the same bushing diameter.

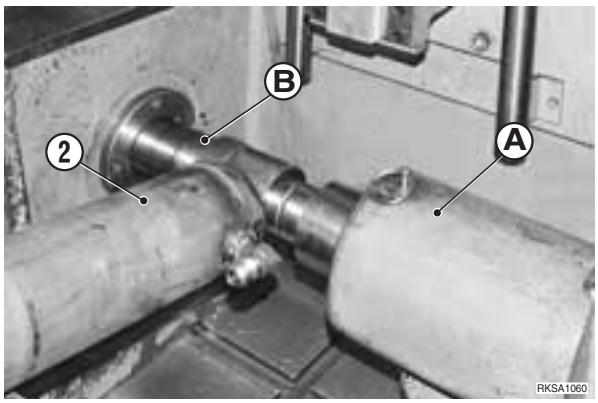

3 - Attach the special wrench **C** (adjusted to fit the cylinder) to the head (3) and apply the dynamometric tool **D**.

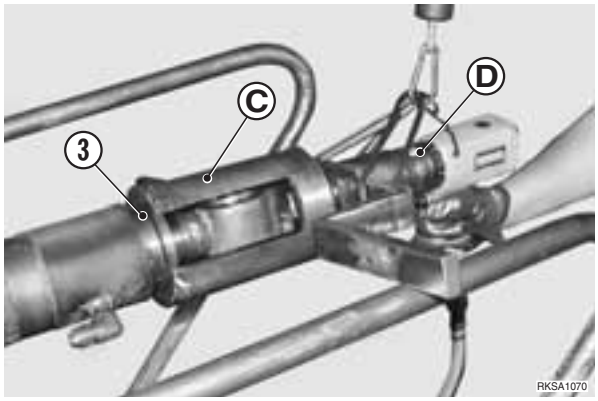

4 - Unscrew the head (3) and extract it completely from the cylinder (2).

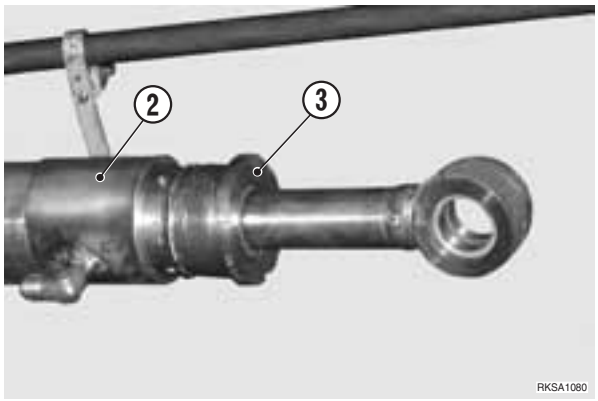

https://truckmanualshub.com/

5 - Raise the cylinder and hook the piston rod to the mobile group of the tool **A**.

6 - Extract the piston rod group (4) from the cylinder.

7 - Remove the cylinder (2) and the piston rod group.

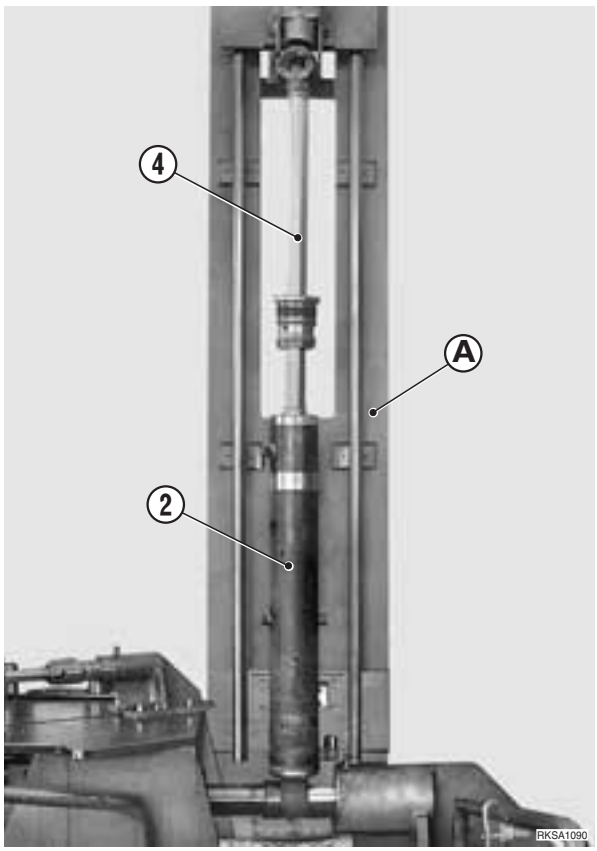

8 - Lock the complete piston rod (4) onto the apparatus **A**.

9 - Attach the socket wrench **E** to the lock nut (5) of the piston (6) and, using the dynamometric tool with a multiplier **D**, remove the nut.

★ Socket wrench measurement: 32 mm

10 - Take all the groups to pieces and remove all the seals, guard rings and guide rings.

⚠ The seals, guard rings, and guide rings cannot be used again.

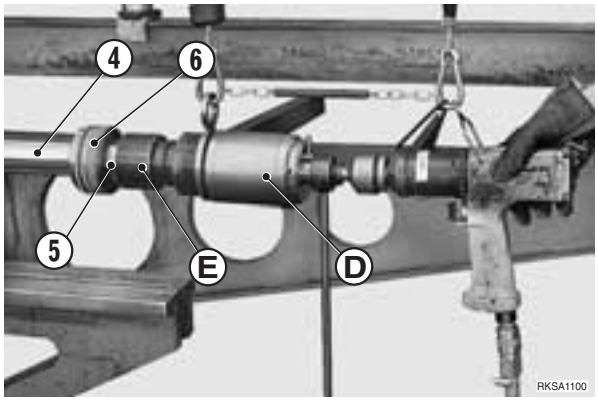

https://truckmanualshub.com/

ASSEMBLY OF THE WORK EQUIPMENT CYLINDERS

★ Take great care not to damage the seal and the sliding surfaces.

★ Prepare each individual component before commencing the final assembly.

1. Assembly of the cylinder head

1 - Position the guard ring (7) and, using a press and the push rod **F**, press it home in the head (3).
★ Check the orientation carefully.

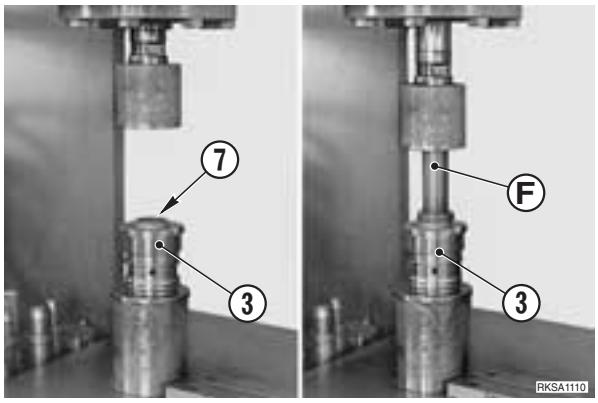

2 - Mount the snap ring (8).

3 - Using the tool **G**, mount the lip-seal (9).
★ Check that the lips face into the cylinder.

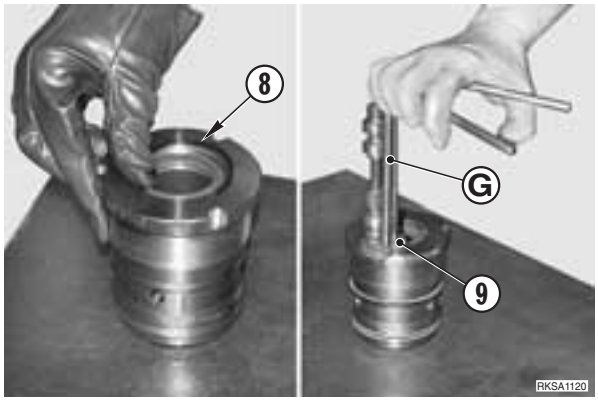

4 - Mount the O-ring (10), the anti-extrusion ring (11) and the O-ring (12) onto the cylinder head (3).

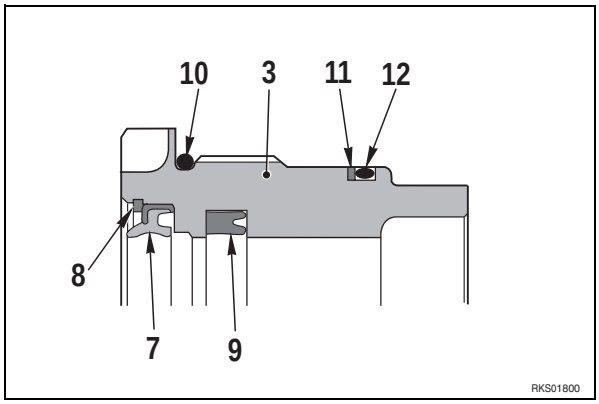

https://truckmanualshub.com/

2. Piston assembly

1 - Using the tool **H**, mount the piston seal. Mount in sequence the rubber ring (13), the outer seal (14) and the anti-extrusion rings (15).

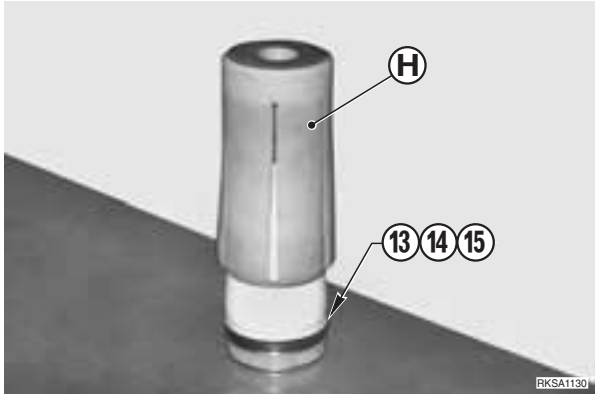

2 - Mount the guide ring (16).

3 - Calibrate the diameter of the gasket (14) of the piston (6), mounting the group beneath the press and using the calibrating ring **J** adapted to fit the piston diameter.

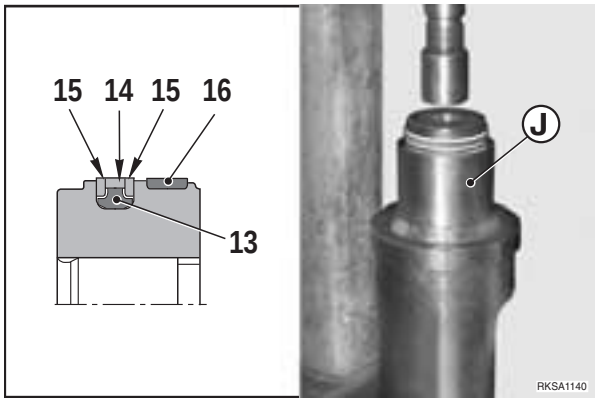

3. Piston rod group assembly

1 - Using a press and the tool **B** adapted to the diameter, insert the bushing (17) into the piston rod (4).

2 - Insert the support **K** beneath the piston rod.

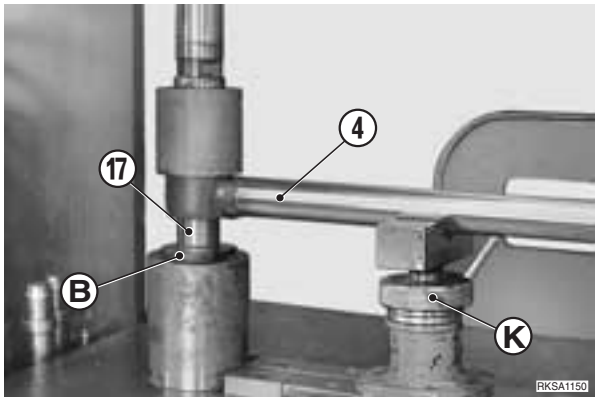

3 - Mount the pilot boss **L** adapted to the diameter onto the extremity of the piston rod.

4 - Slide the head (3) onto the piston rod (4).

5 - Remove the pilot boss **L** from the extremity of the piston rod.

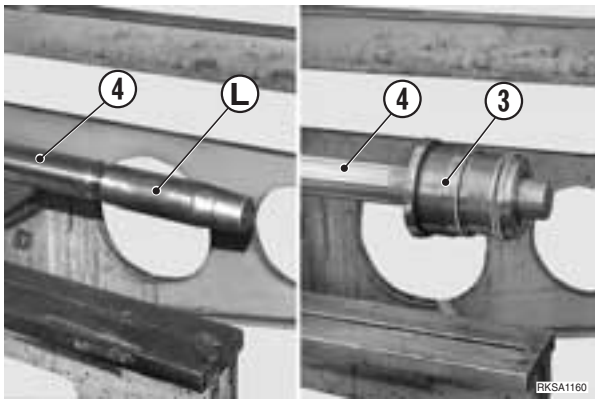

https://truckmanualshub.com/

6 - Mount the complete piston (6).

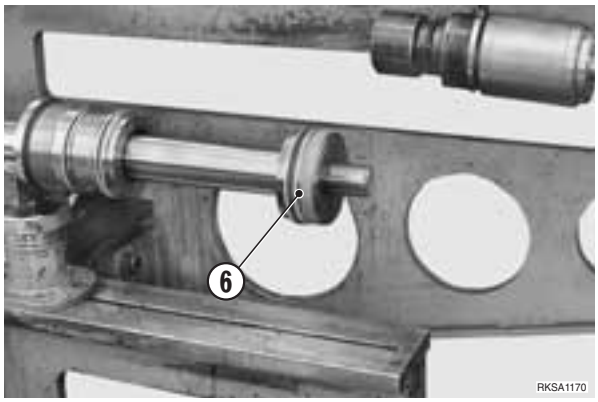

7 - Mount the nut (5) that secures the piston and tighten it with the socket wrench **E** and the dynamometric tool with a multiplier **D**.

Nut: Loctite 262

Nut: Raising cylinder: 422±42 Nm
Bucket cylinder: 343±34 Nm

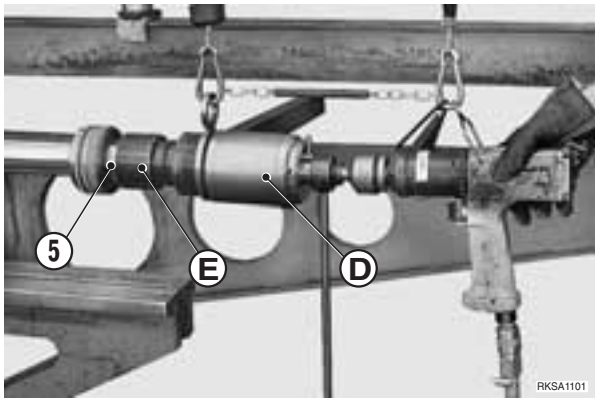

4. Cylinder assembly

1 - Mount the tools **A** onto the apparatus **B**.

2 - Position the bushing (20) and mount it onto the cylinder (2).

★ Leave the cylinder in position, ready for the next assembly operation.

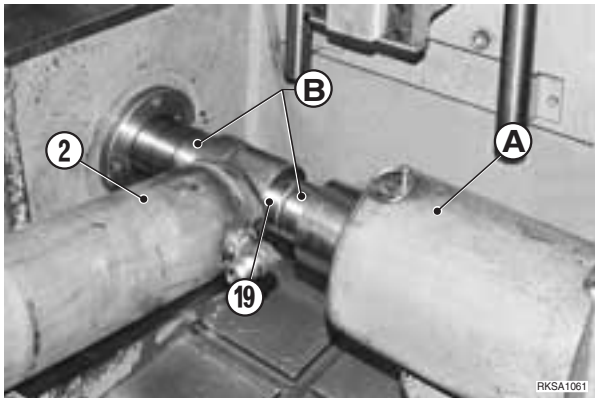

3 - Lubricate the threading and the first part of the cylinder (2).

Cylinder: Litio EP NLGI 2

4 - Mount the two halves of the tool **M**, adapted to the diameter, onto the mouthpiece of the cylinder (2).

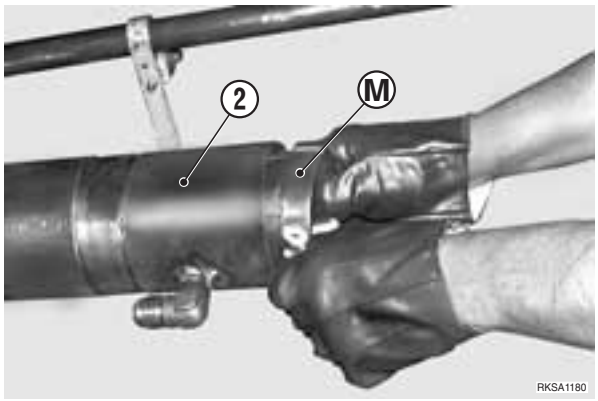

https://truckmanualshub.com/

5 - Mount the piston rod group (4) onto the tool **A** and raise the mobile part up to the end of its stroke.

6 - Put the cylinder (2) into a vertical position and guide the piston into the tool **M**.

7 - Lower the apparatus supporting the piston rod (4) in order to insert the piston into the cylinder liner (2).

8 - Remove the tool **M** from the cylinder and then lower the apparatus **A** even further, until the head (3) and the piston rod approach the cylinder.

9 - Place the cylinder (2) in position for screwing in the head (3).

10 - Insert the head into the cylinder and screw it in by hand for a few turns.

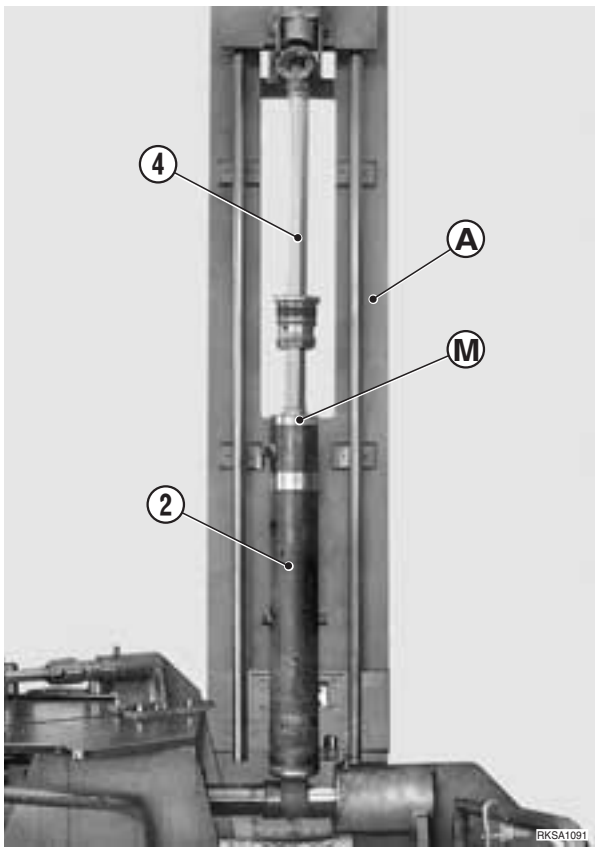

11 - Attach the special wrench **C** to the dynamometric tool **D** and screw the head (3) fully home.

Nm Head:
- Raising cylinder: 412±41 Nm
- Bucket cylinder: 441±44 Nm

12 - Mount the guard rings (1) on both sides of the cylinder and the piston rod.

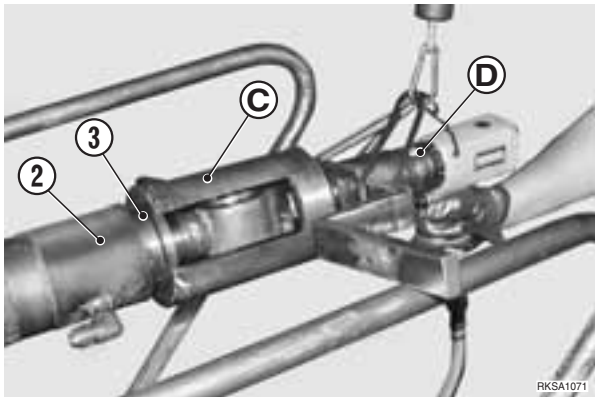

https://truckmanualshub.com/

REMOVAL OF THE COMPLETE WORKING EQUIPMENT

Lower the working equipment until it is resting on the ground.

Release any residual hydraulic pressures. (For details, see «20. TESTING AND ADJUSTMENTS»).

1 - Loosen the screws (1) and remove the pins (2) and (3). 1

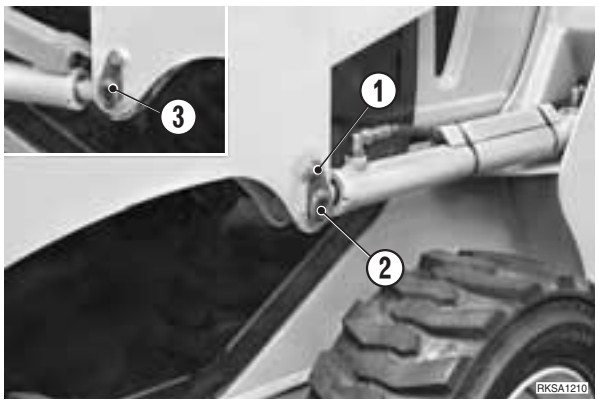

★ **Only for the RH cylinder.**
Disconnect the safety rod (4) from the boom (5).

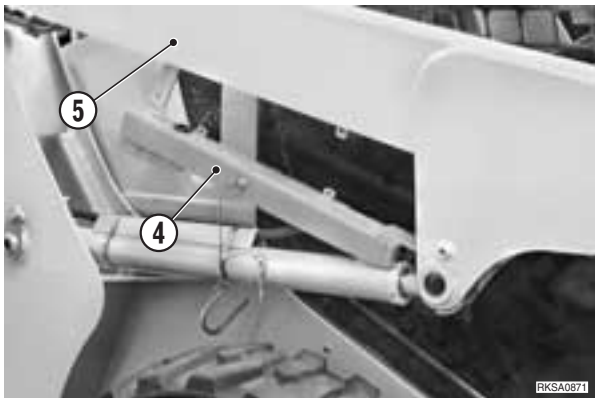

Only for the HIGH-FLOW version

2 - Disconnect the electrical outlet (6) and its wiring from the boom (5).

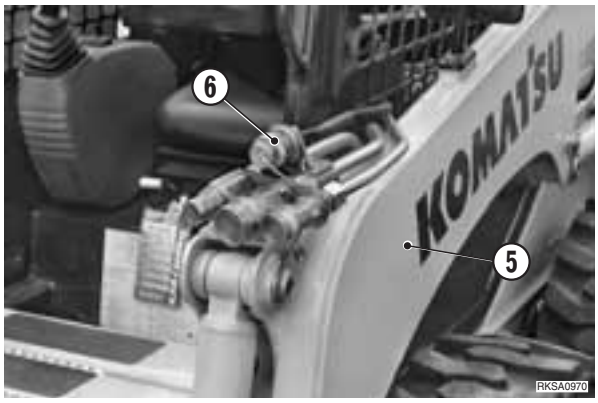

3 - Attach the complete boom to some hoisting tackle and raise it until the hoses (7) connected to the frame become easily accessible.

https://truckmanualshub.com/

4 - Disconnect the hoses (7) and (8).
★ Mark the tubes to avoid exchanging them during re-assembly.

5 - Remove the pins (9) and (10) and remove the working equipment.

※1 ※2

★ Check and make a note of the positions of the adjustments to a given clearance.

kg Working equipment: approx. 470 kg

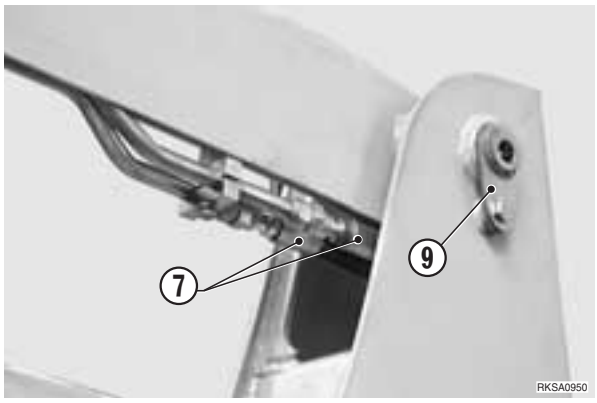

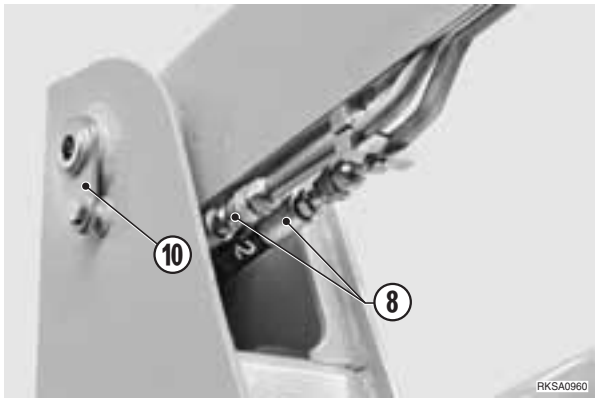

INSTALLATION OF THE COMPLETE WORKING EQUIPMENT

- To install, reverse removal procedure.

※1

When aligning the positions between the hole and the pin, run the engine at low idling.
Do not insert fingers into the holes to check alignment.

Inside the bushings: Litio EP MS2 NLGI 2

※2

★ Insert shims between the boom and the frame until the residual clearance is less than 1 mm.

1 - Start the engine to circulate the oil, and bleed the air from the circuits.
★ After bleeding the air, stop the engine and check the level of oil in the tank.

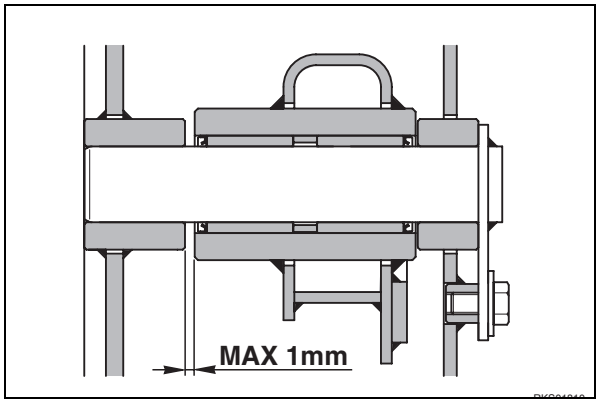

https://truckmanualshub.com/

REMOVAL OF THE WORKING EQUIPMENT SUPPORT FRAME

1 - Lower the working equipment until the supporting frame is lying flat on some blocks «**A**».

2 - Remove the pins (1) and retract the cylinder piston rods (2).
Check and make a note of the positions of the adjustments to a given clearance. ※1 ※2

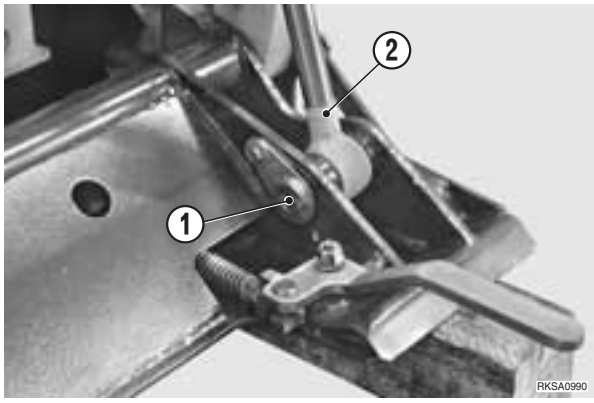

3 - Remove the pins (3) and take off the complete working equipment support frame (4). ※3

kg Equipment support frame: 57 kg

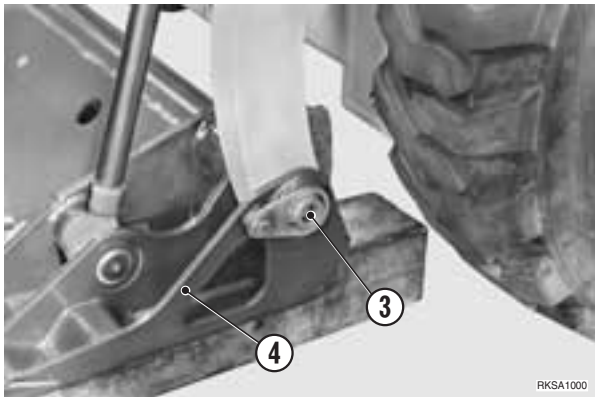

INSTALLATION OF THE WORKING EQUIPMENT SUPPORT FRAME

- To install, reverse removal procedure.

※1

★ Insert the removed shims and if necessary add more until the residual clearance is less than 3 mm.

※2

⚠ When aligning the positions between the hole and the pin, run the engine at low idling.
ATTENTION! Do not insert fingers into the holes to check alignment.

Inside the bushings: Litio EP MS2 NLGI 2

https://truckmanualshub.com/

GROUP 40

https://truckmanualshub.com/

https://truckmanualshub.com/

40 STANDARD MAINTENANCE

P.T.O. 2
Transmission 3
Final drive 4
Hydraulic pump..... 5
Control valve..... 8
R.H. PPC valve..... 14
L.H. PPC valve 15
Pattern change valve (Optional) 17
Cylinders..... 18
Working equipment..... 20

https://truckmanualshub.com/

P.T.O.

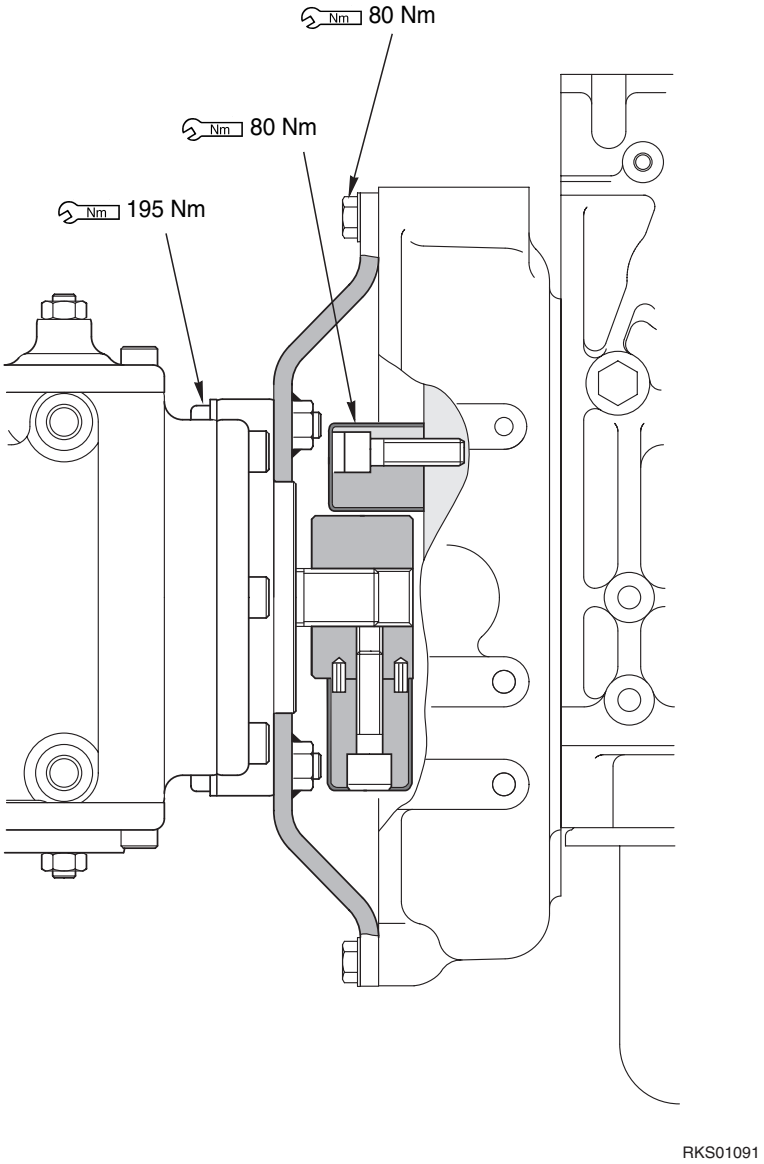

https://truckmanualshub.com/

TRANSMISSION

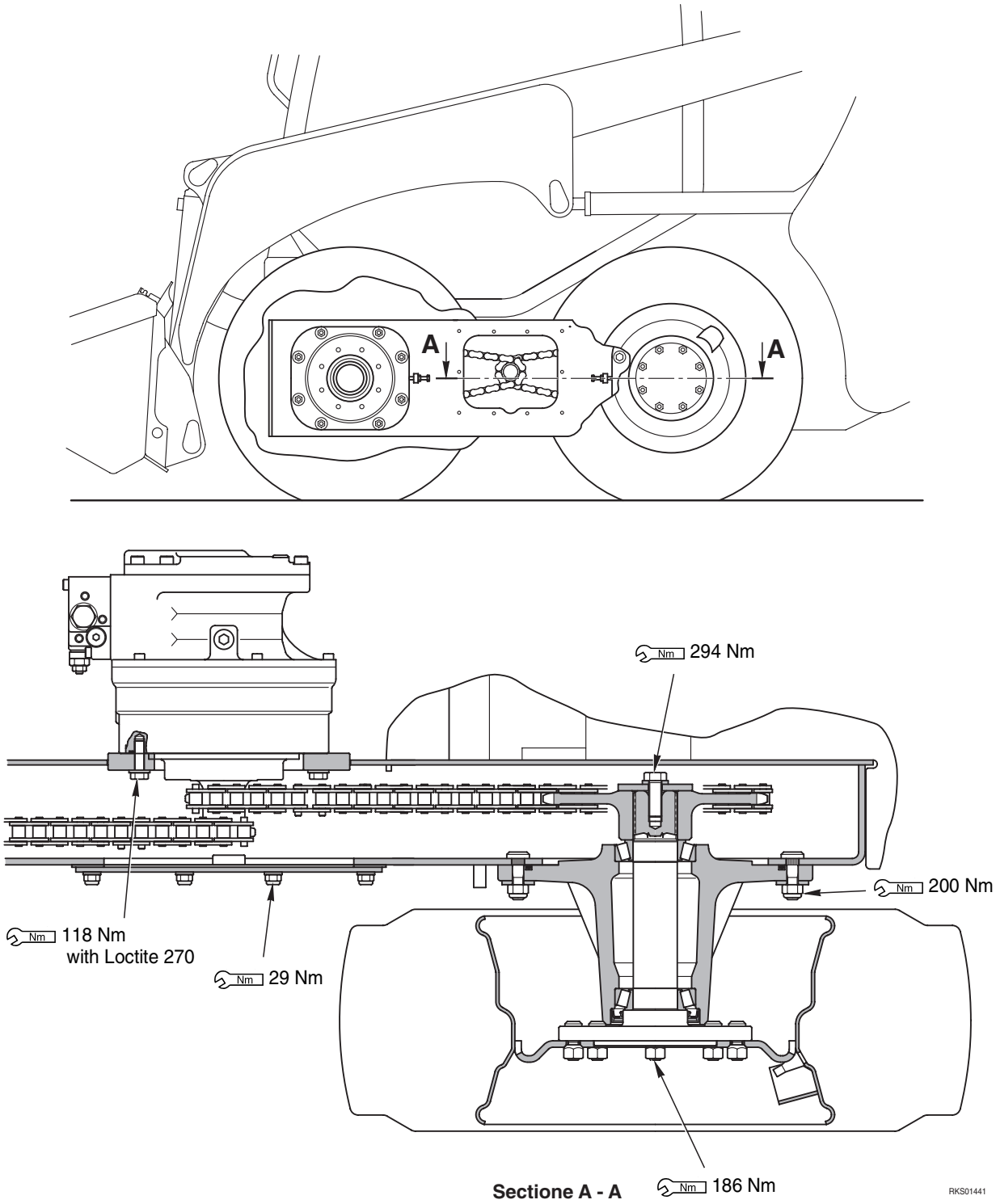

https://truckmanualshub.com/

FINAL DRIVE

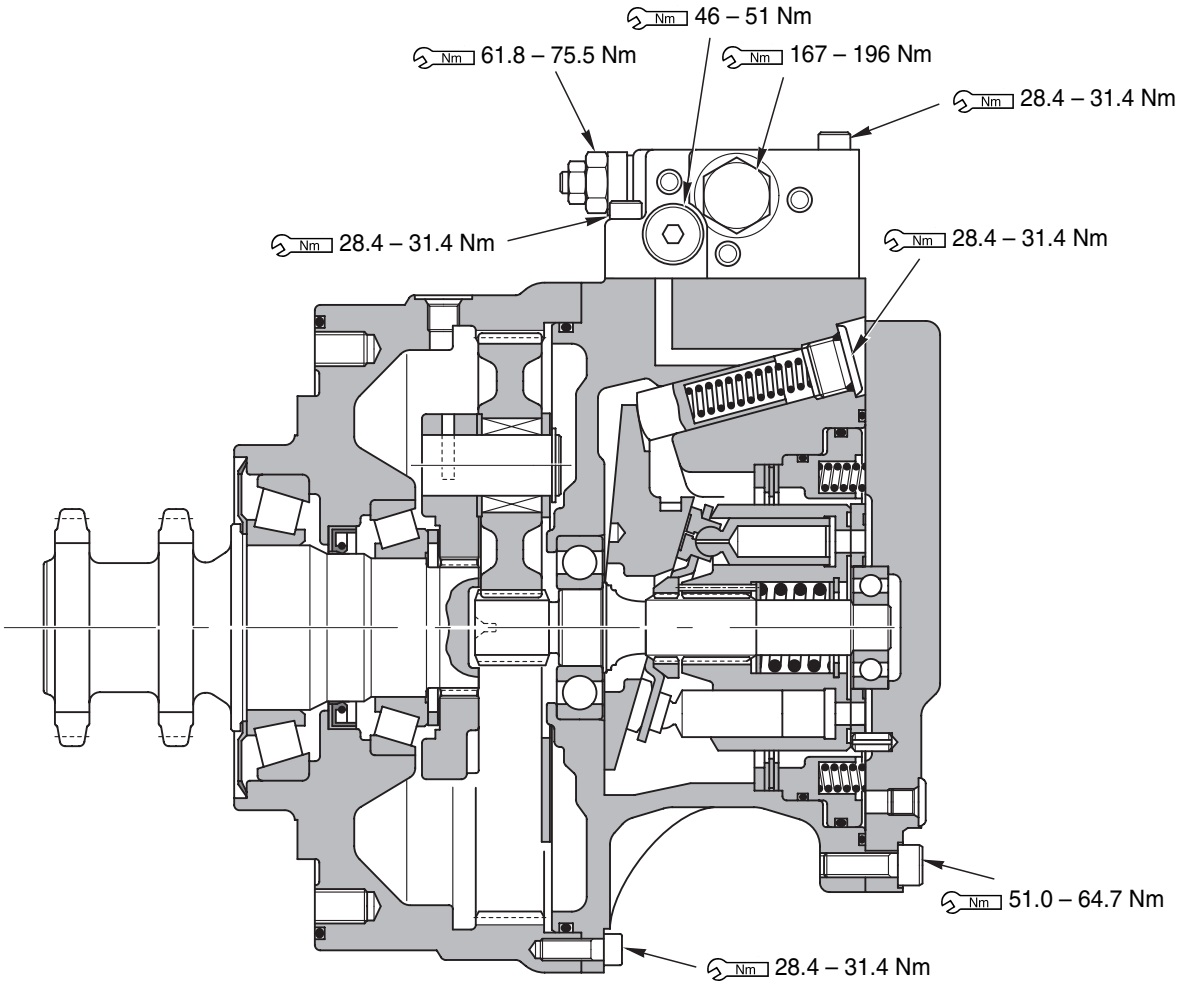

RKS01480

https://truckmanualshub.com/

HYDRAULIC PUMP

SK714-5

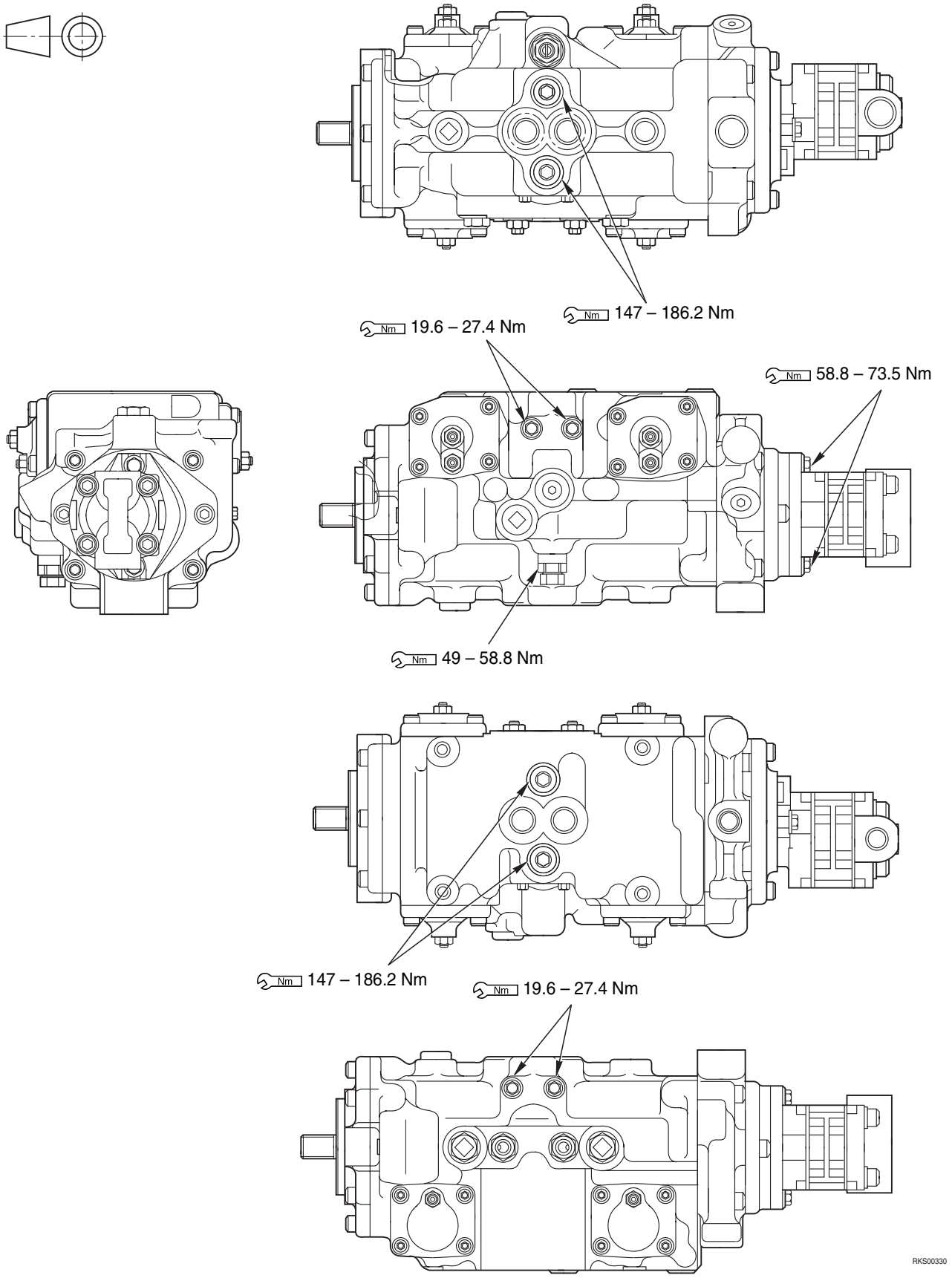

https://truckmanualshub.com/

SK815-5

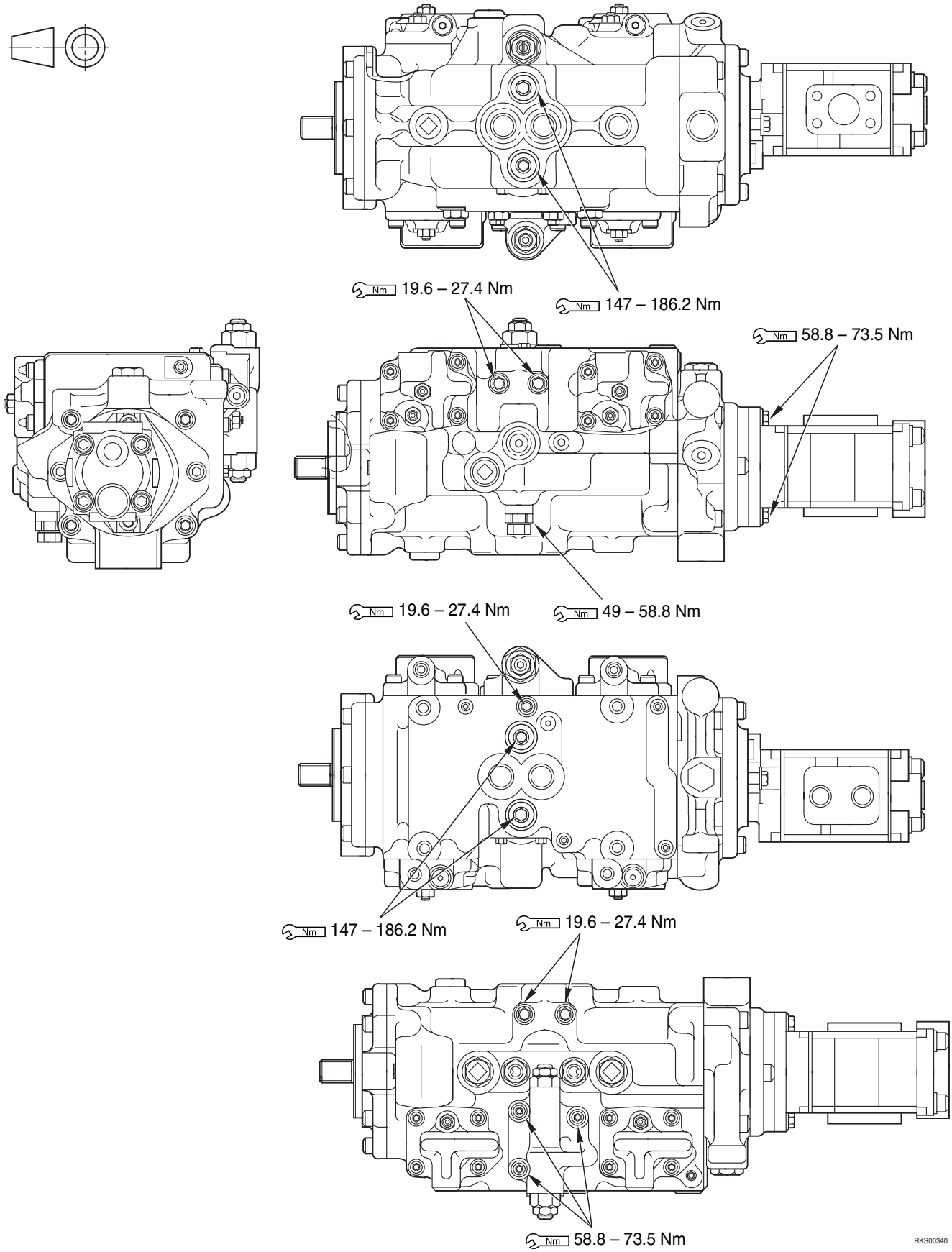

https://truckmanualshub.com/

AS VALVE

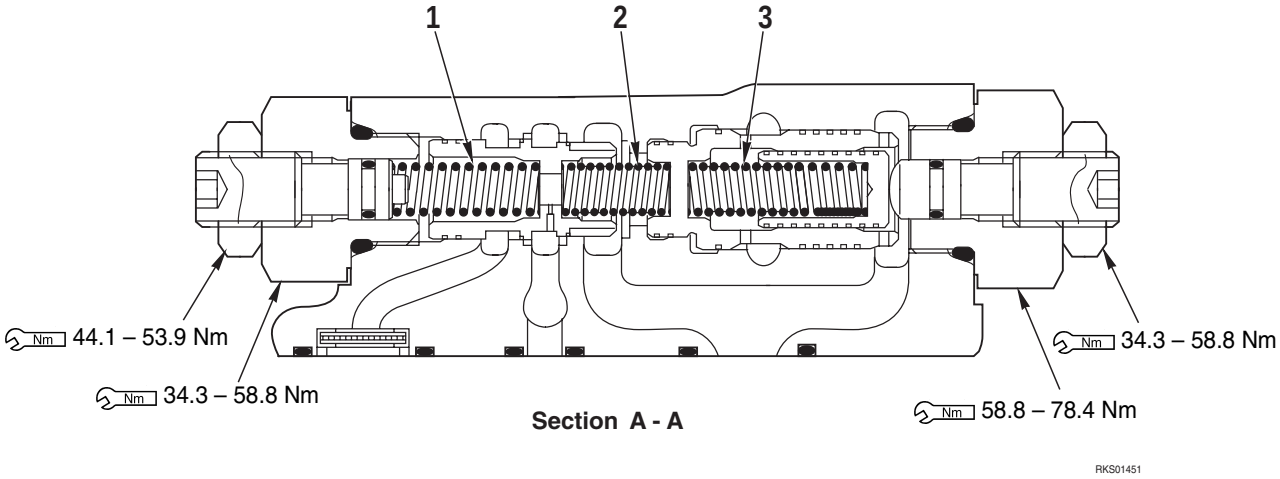

Unit: mm

N°	Check item	Criteria					Remedy
		Standard size			Repair limit		
		Free length	Installed length	Installed load	Free length	Installed load	
1	Spring	38.1	30	52 N	–	41.1 N	Replace
2	Spring	25.9	23	16.7 N	–	13.7 N	
3	Spring	40.2	34.5	73.5 N	–	58.8 N	

https://truckmanualshub.com/

CONTROL VALVE

SK815-5 (SUPER HIGH-FLOW VERSION)

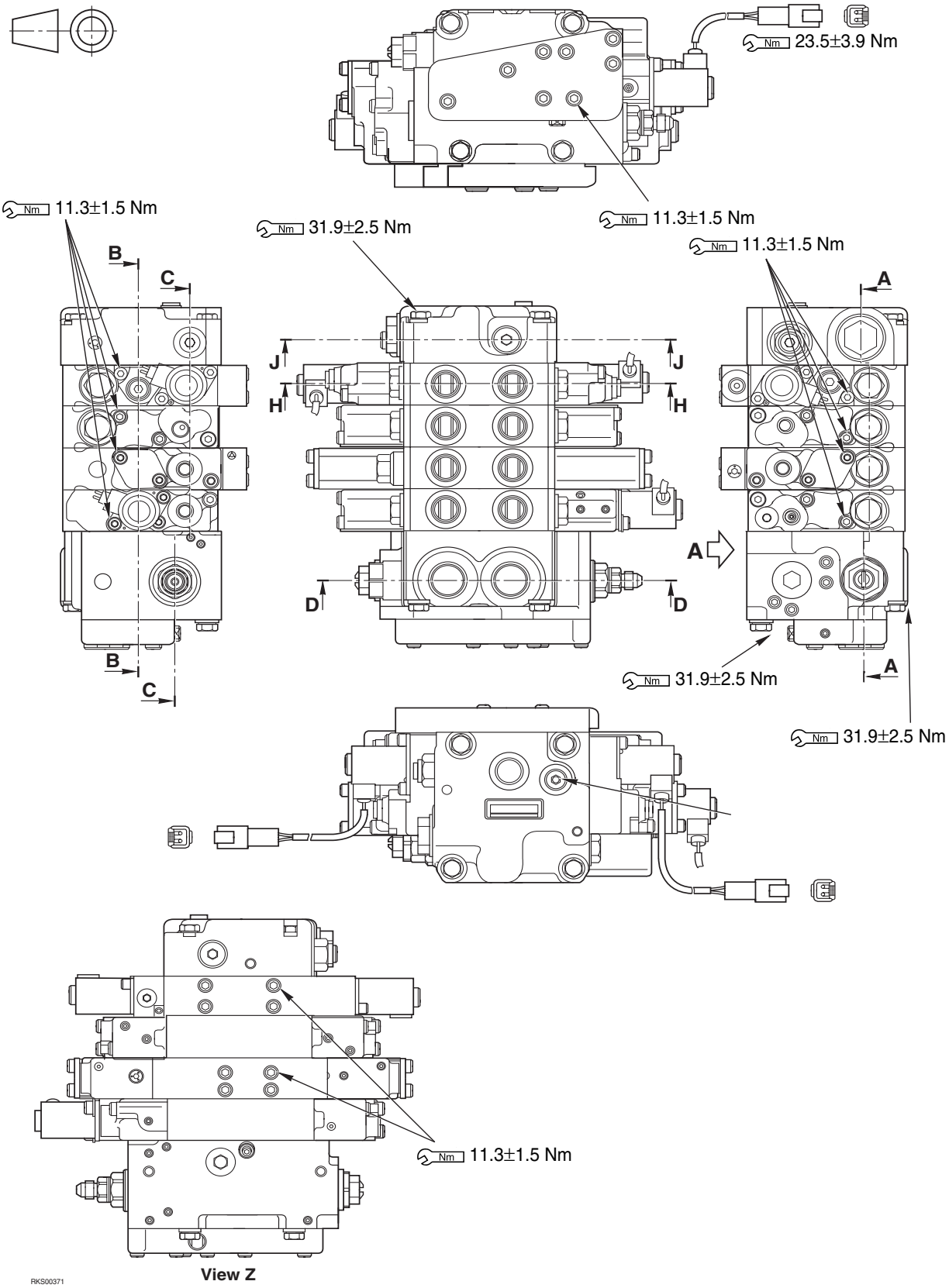

https://truckmanualshub.com/

SK714-5 / SK815-5 (STANDARD)

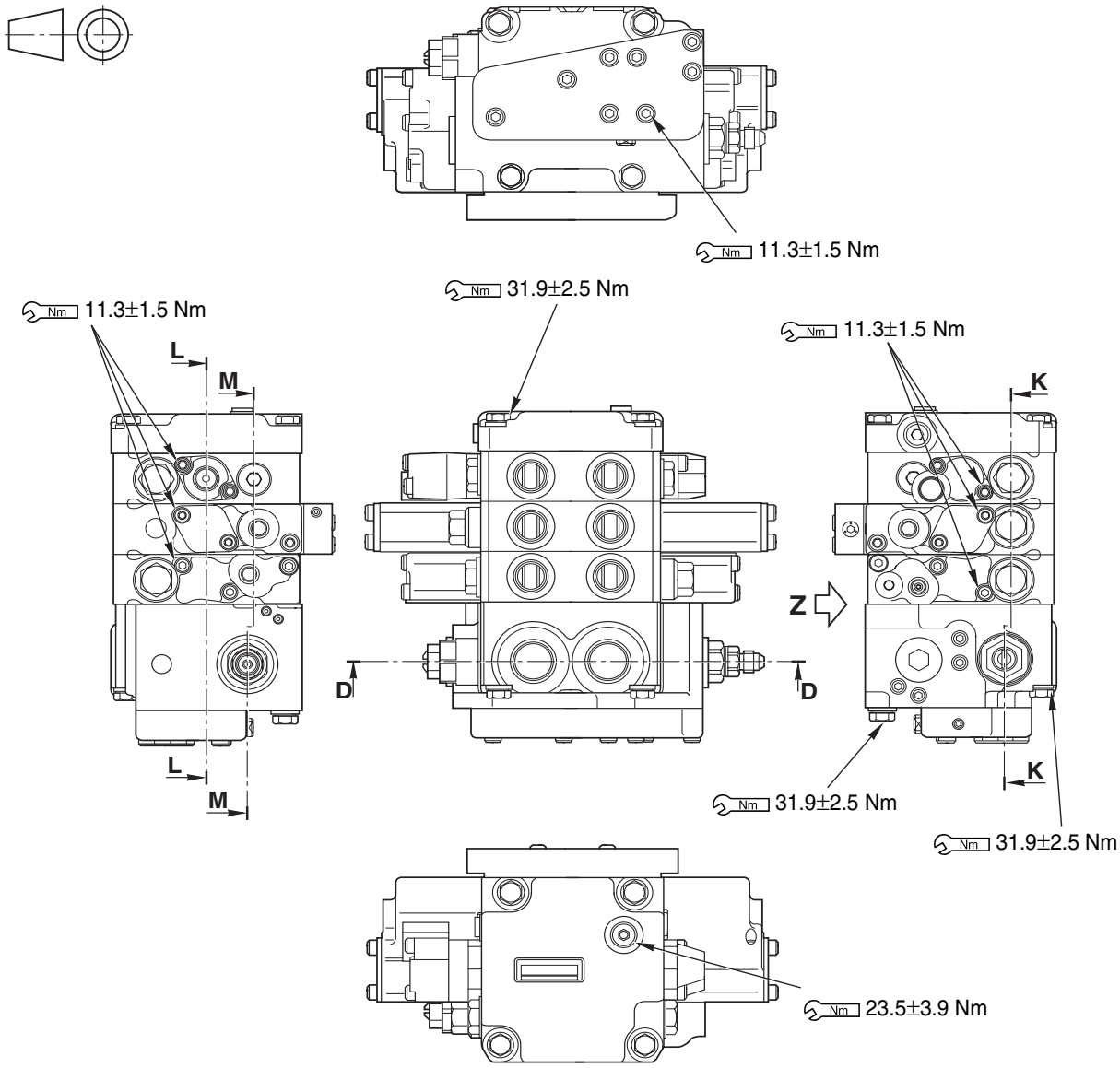

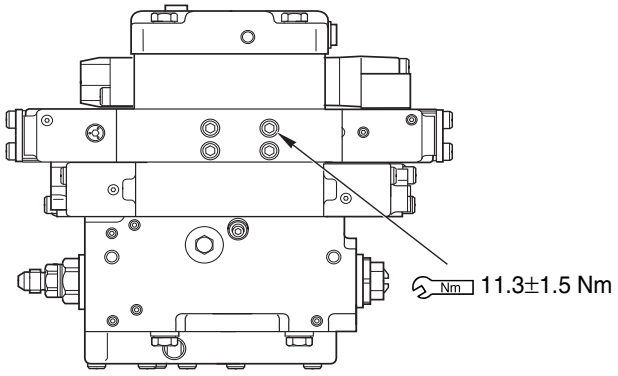

View Z

RKS00251

https://truckmanualshub.com/

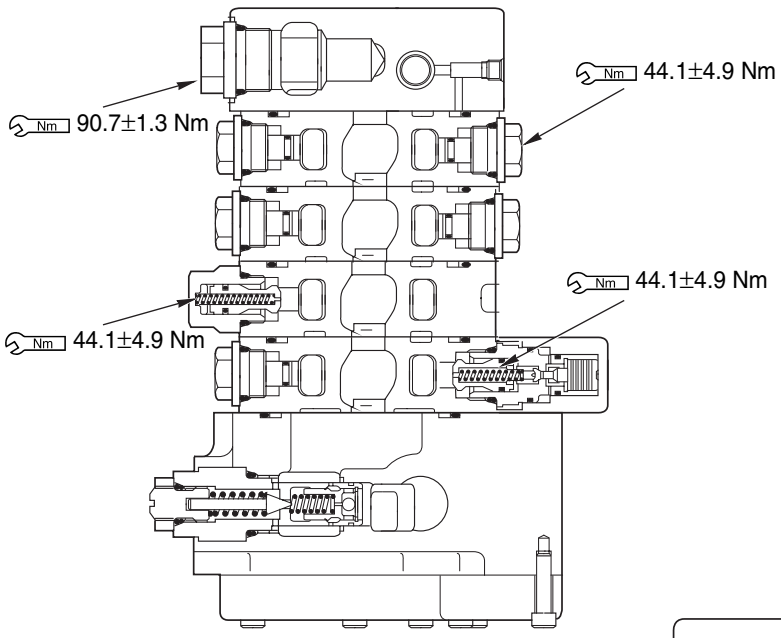

Section A - A

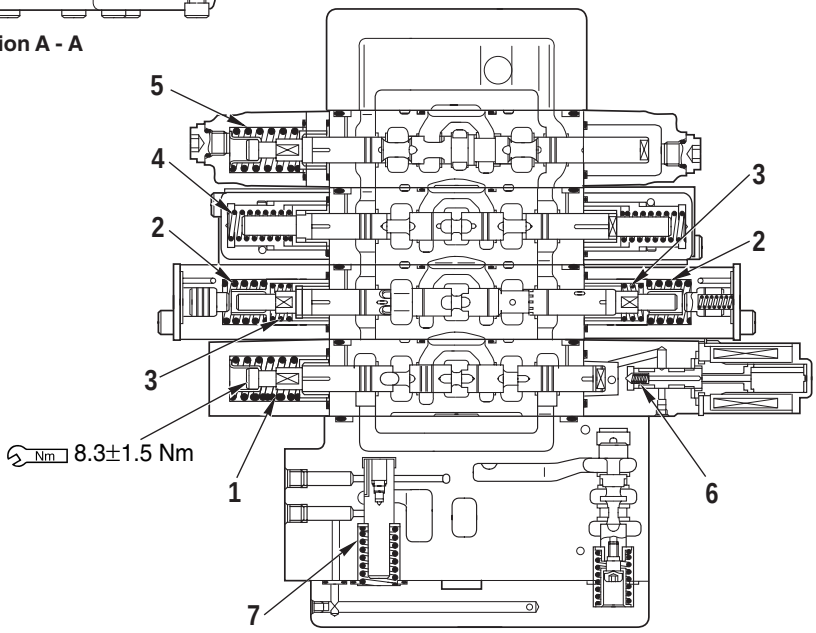

Section B - B

RKS00383

Unit: mm

N°	Check item	Criteria					Remedy
		Detail			Permitted value		
		Free heigh (outside Ø)	Installed length	Installed load	Free heigh	Installed load	
1	Spool return spring (lift arm)	28.8x17.1	26.8	38.2 N	–	30.6 N	Change springs. If there are damage or deformation
2	Spool return spring (bucket)	26.3x17.7	18.5	176.5 N	–	141.1N	
3	Spool return spring (bucket)	21.6x14.8	10	38.7 N	–	31.0 N	
4	Spool return spring (ATT)	28x11.5	24.5	137.3 N	–	109.8 N	
5	Spool return spring (High-Flow)	29x17.6	25.5	131.4 N	–	105.1 N	
6	Spool return spring (float)	14.7x4.4	9.5	4.9 N	–	3.9 N	
7	Spring of series - parallel circuit switching valve	38.3x15.2	24	161.8 N	–	129.5 N	

https://truckmanualshub.com/

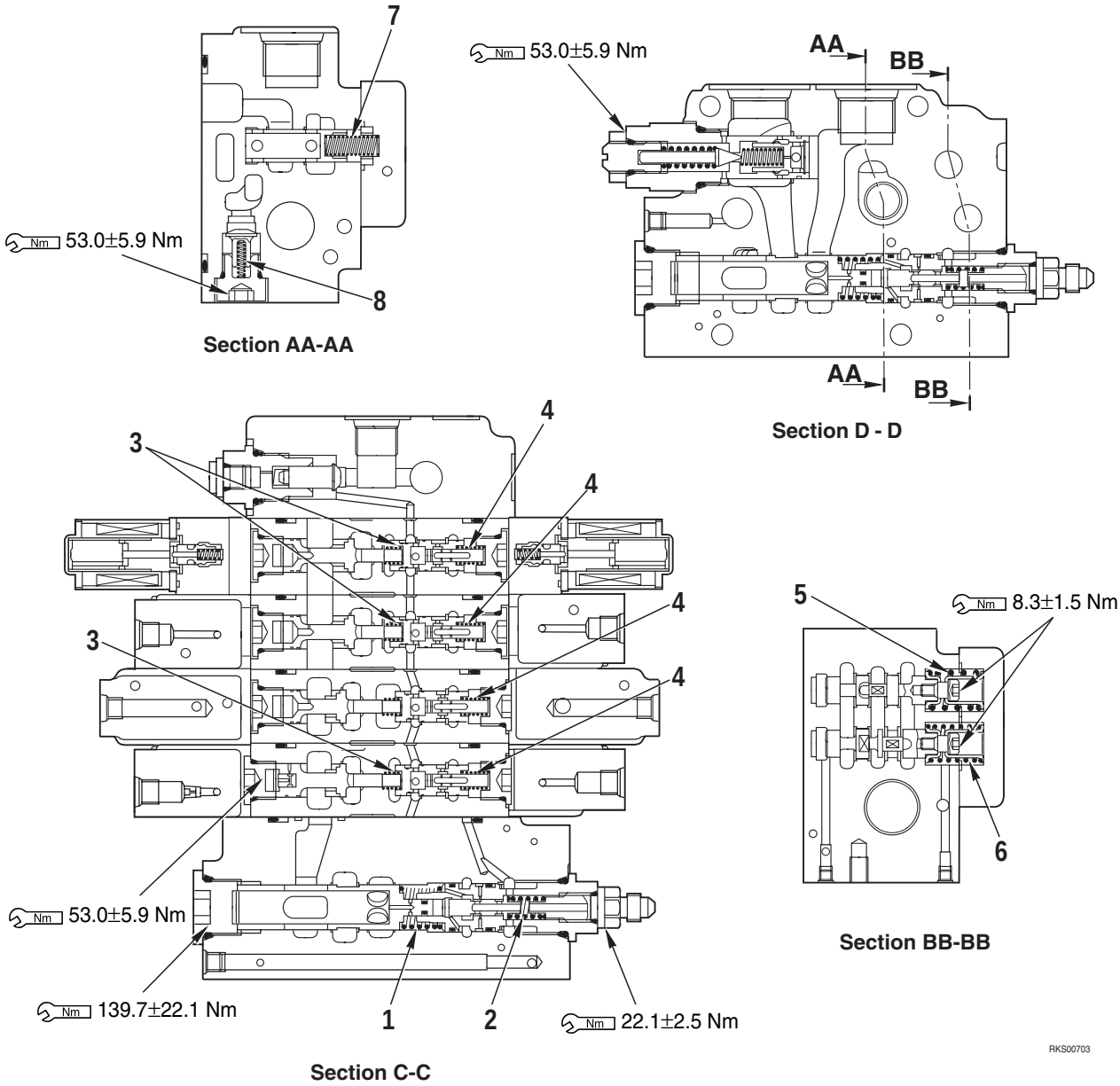

Unit: mm

N°	Check item	Criteria					Remedy
		Detail			Permitted value		
		Free heigh (outside Ø)	Installed length	Installed load	Free heigh	Installed load	
1	Spring of unload valve	23.9x18.2	18	74.0 N	–	59.2 N	Change springs. If there are damage or deformation
2	Spring of unload valve	18.7x9.3	16	3.4 N	–	2.7 N	
3	Spring of pressure compensation valve	15.4x6	13	2.5 N	–	2.0 N	
4	Spring of pressure compensation valve	20x8.4	12	6.9 N	–	5.5 N	
5	Spring of combination circulating valve	37.5x16.6	22.5	177.5 N	–	142.0 N	
6	Spring of leveling circulating valve	37.5x15.4	22.5	66.7 N	–	53.4 N	
7	Spring of flow divider	30.2x9.4	23	2.9 N	–	2.4 N	
8	Spring of check valve	18.5x3.8	15.5	1.1 N	–	0.9 N	

https://truckmanualshub.com/

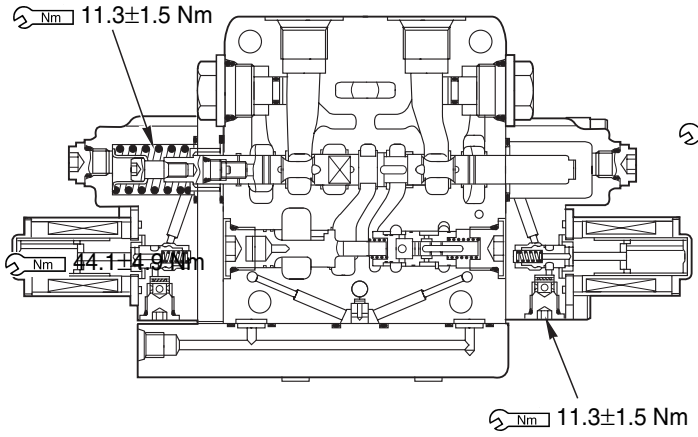

Section H - H

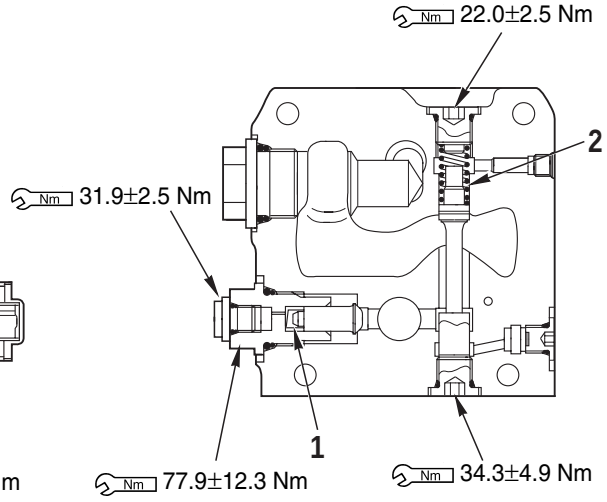

Section J - J

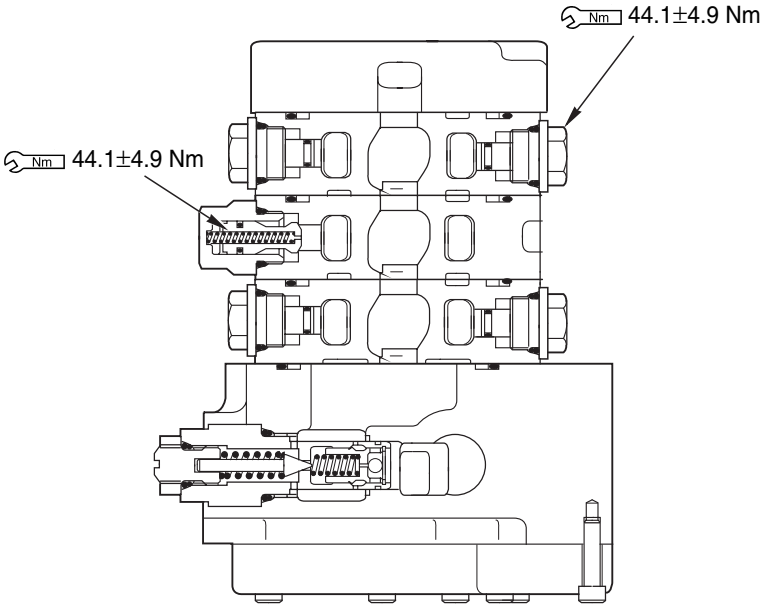

Section K - K

RKS00761

Unit: mm

N°	Check item	Criteria					Remedy
		Detail			Permitted value		
		Free heigh (outside Ø)	Installed length	Installed load	Free heigh	Installed load	
1	Spring of check valve	13x6.5	9.5	2.0 N	–	1.6 N	Change springs. If there are damage or deformation
2	Spool return spring (High-Flow joining circuit)	25.7x11.1	22	66.7 N	–	53.4 N	

https://truckmanualshub.com/

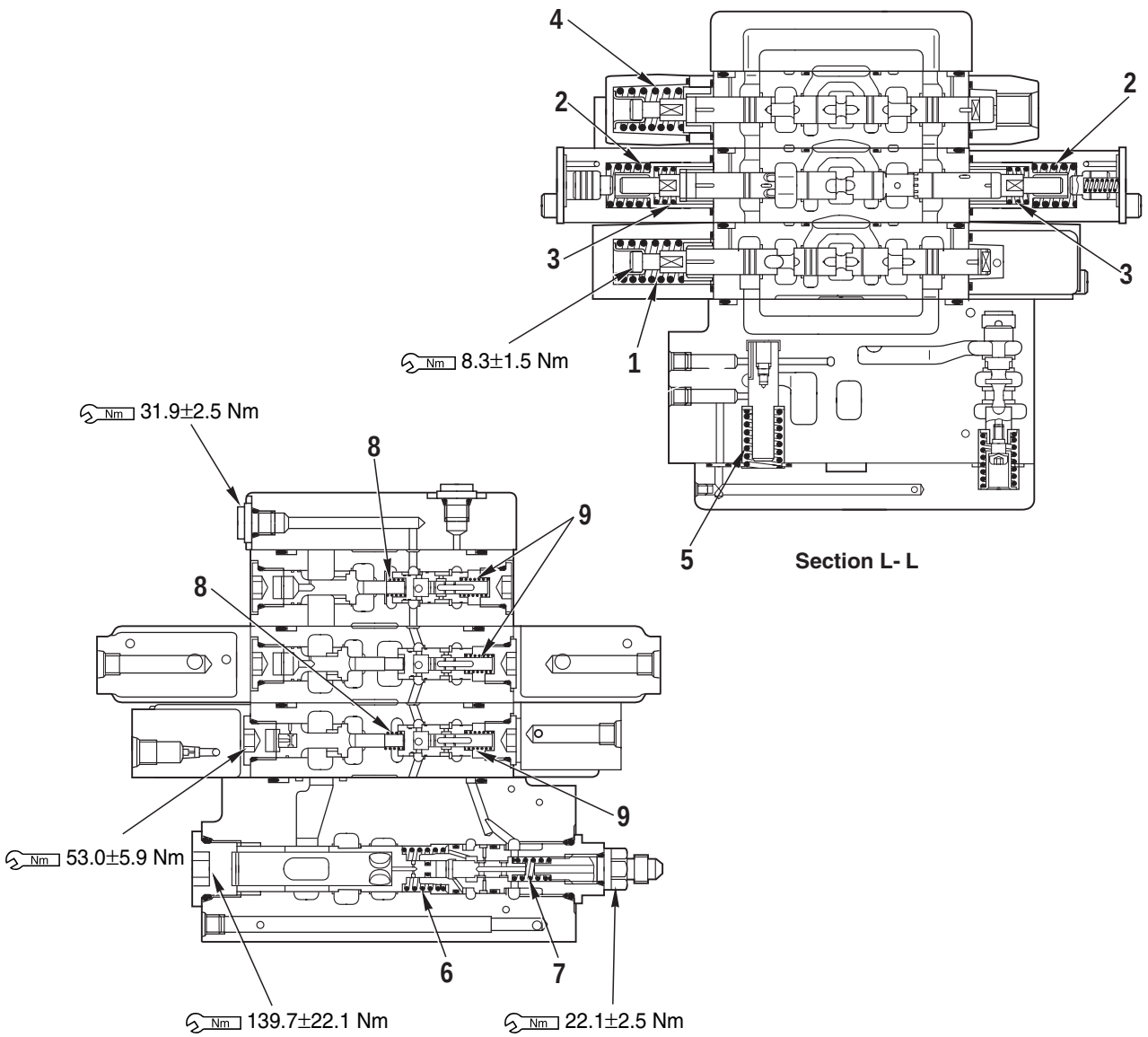

RKS00781

Unit: mm

N°	Check item	Criteria					Remedy
		Detail			Permitted value		
		Free heigh (outside Ø)	Installed length	Installed load	Free heigh	Installed load	
1	Spool return spring (lift arm)	28.8x17.1	26.8	38.2 N	–	30.6 N	Change springs. If there are damage or deformation
2	Spool return spring (bucket)	26.3x17.7	18.5	176.5 N	–	141.2 N	
3	Spool return spring (bucket)	21.6x14.8	10	38.7 N	–	31.0 N	
4	Spool return spring (ATT)	29x17.5	25	180.4 N	–	144.4 N	
5	Spring of series - parallel circuit switching valve	38.3x15.2	24	161.8 N	–	129.5 N	
6	Spring of unload valve	32.9x18.2	18	74.0 N	–	59.2 N	
7	Spring of unload valve	18.7x9.3	16	3.4 N	–	2.7 N	
8	Spring of pressure compensation valve	15.4x6	13	2.5 N	–	2.0 N	
9	Spring of pressure compensation valve	20x8.4	12	6.9 N	–	5.5 N	

https://truckmanualshub.com/

R.H. PPC VALVE

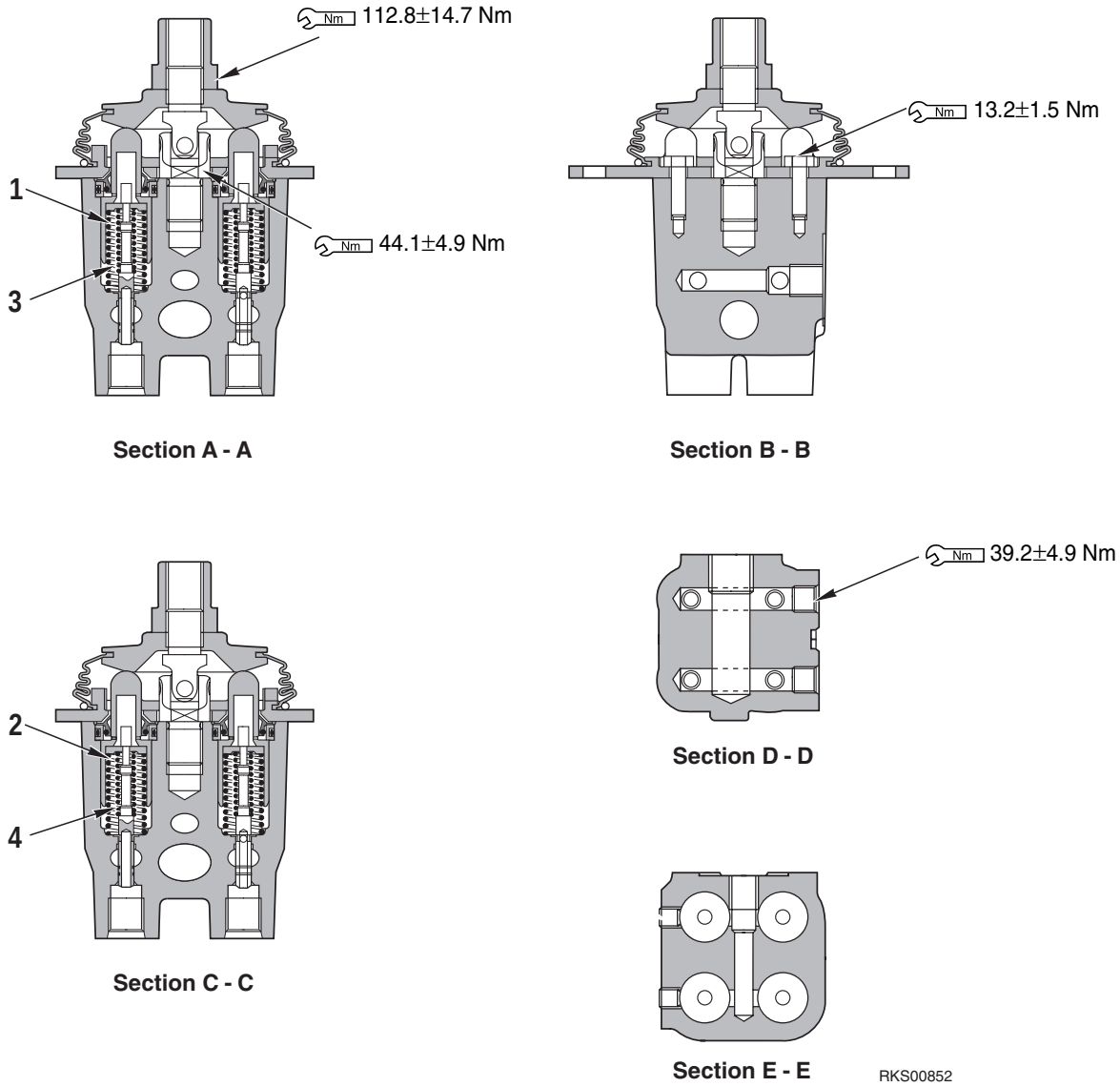

Unit: mm

N°	Check item	Criteria					Remedy
		Standard size			Repair limit		
		Free installed x Øe	Installed length	Installed load	Free length	Installed load	
1	Centering spring (for P3 and P4)	42.4x15.5	34	9.8 N	–	9.2 N	Replace springs. If there are damage or deformation
2	Centering spring (for P1 and P2)	36.6x15.5	34	17.6 N	–	16.5 N	
3	Metering spring (for P3 and P4)	32.7x8.2	25.6	40.8 N	–	39.4 N	
4	Metering spring (for P1 and P2)	26.2x8.2	25.3	5.3 N	–	4.3 N	

https://truckmanualshub.com/

L.H. PPC VALVE

STANDARD

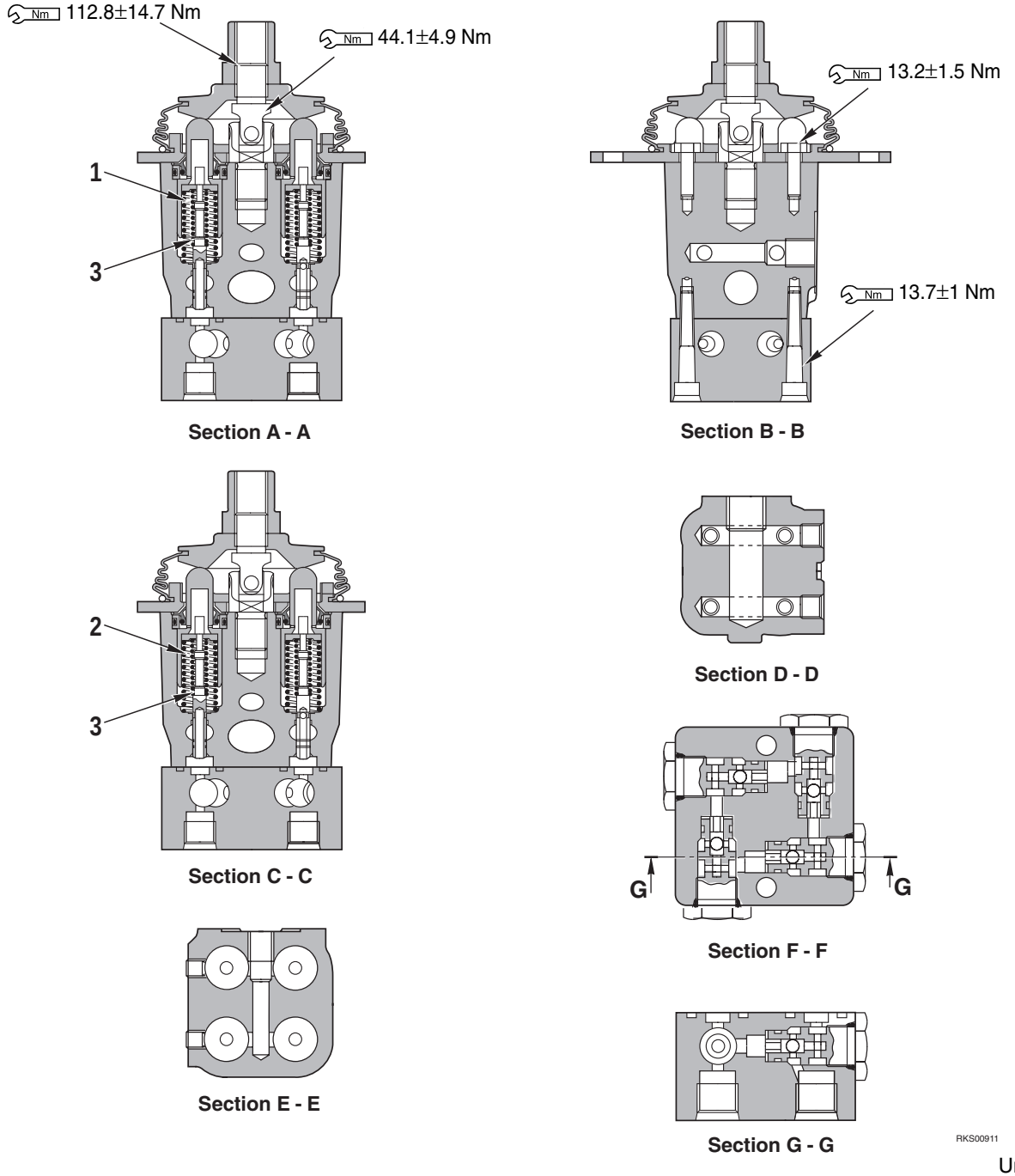

Unit: mm

N°	Check item	Criteria					Remedy
		Standard size			Repair limit		
		Free installed x Øe	Installed length	Installed load	Free length	Installed load	
1	Centering spring (for Pout3 and Pout4)	35.5x15.5	34	9.8 N	–	9.2 N	Replace springs. If there are damage or deformation
2	Centering spring (for Pout1 and Pout2)	26.2x15.5	34	17.6 N	–	16.5 N	
3	Metering spring (for P3 and P4)	32.7x8.2	25.3	5.3 N	–	52.4 N	

https://truckmanualshub.com/

L.H. PPC VALVE

PATTERN CHANGE (OPTIONAL)

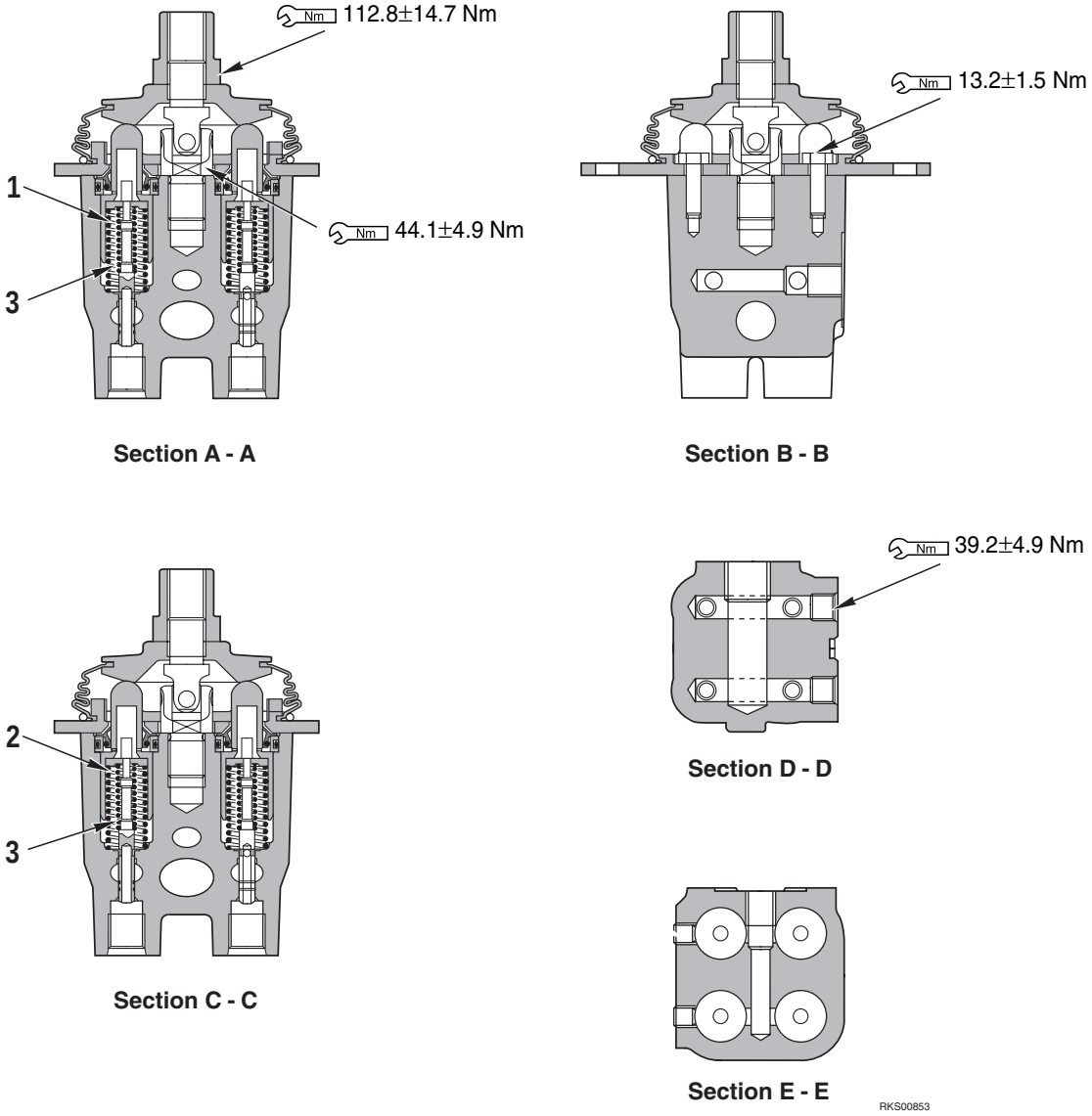

Unit: mm

N°	Check item	Criteria					Remedy
		Standard size			Repair limit		
		Free installed x Øe	Installed length	Installed load	Free length	Installed load	
1	Centering spring (for Pout3 and Pout4)	35.5x15.5	34	9.8 N	–	9.2 N	Replace springs. If there are damage or deformation
2	Centering spring (for Pout1 and Pout2)	36.6x15.5	34	17.6 N	–	16.5 N	
3	Metering spring (for P3 and P4)	26.2x8.2	25.3	5.3 N	–	52.4 N	

https://truckmanualshub.com/

PATTERN CHANGE VALVE (OPTIONAL)

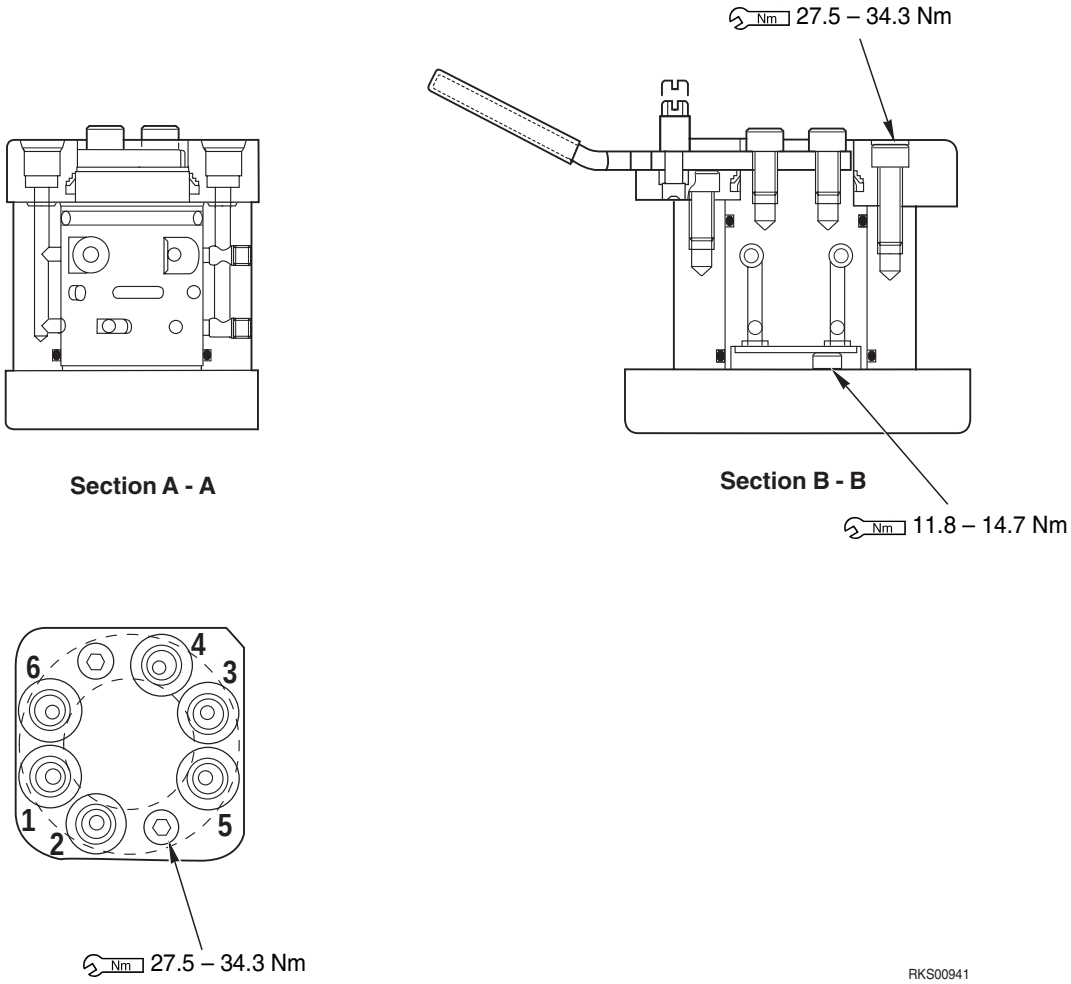

https://truckmanualshub.com/

CYLINDERS

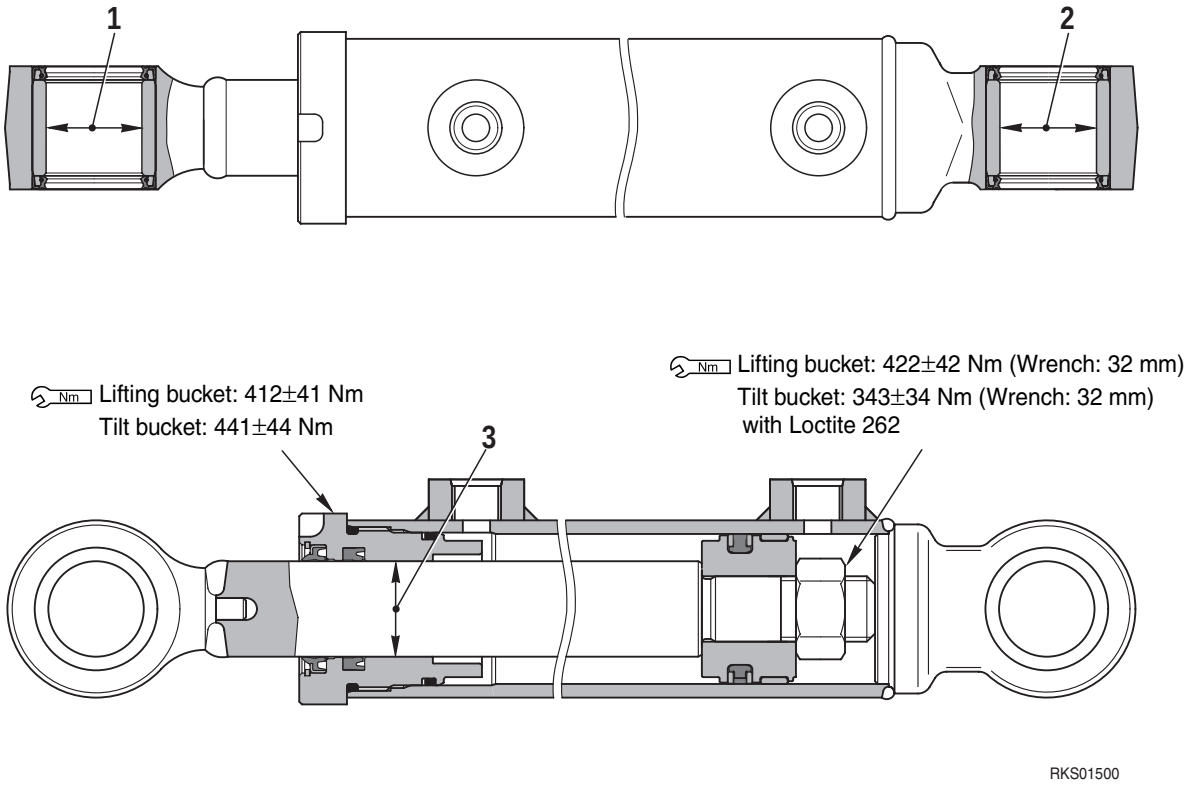

Unit: mm

N°	Check item	Cylinder	Criteria					Remedy
			Standard size	Tolerance		Minimum clearance	Clearance limit	
				Shaft	Hole			
1	Tolerance between bushing and piston rod mounting pin	Lifting bucket	35	–0.01 –0.05	+ 0.072 + 0.134	0.082– 0.184	1.0	Replace bushing
		Tilt bucket	35	–0.01 –0.05	+ 0.072 + 0.134	0.082– 0.184	1.0	
2	Tolerance between bushing and cylinder mounting pin	Lifting bucket	35	–0.01 –0.05	+ 0.072 + 0.134	0.082– 0.184	1.0	
		Tilt bucket	35	–0.01 –0.05	+ 0.072 + 0.134	0.082– 0.184	1.0	
3	Tolerance between piston rod and cylinder head	Lifting bucket	35	–0.025 –0.087	+ 0.039 + 0	0.025– 0.126	0.426	Replace head
		Tilt bucket	30	–0.020 –0.072	+ 0.033 + 0	0.020– 0.105	0.426	

https://truckmanualshub.com/

PAGE INTENTIONALLY LEFT BLANK

https://truckmanualshub.com/

WORKING EQUIPMENT

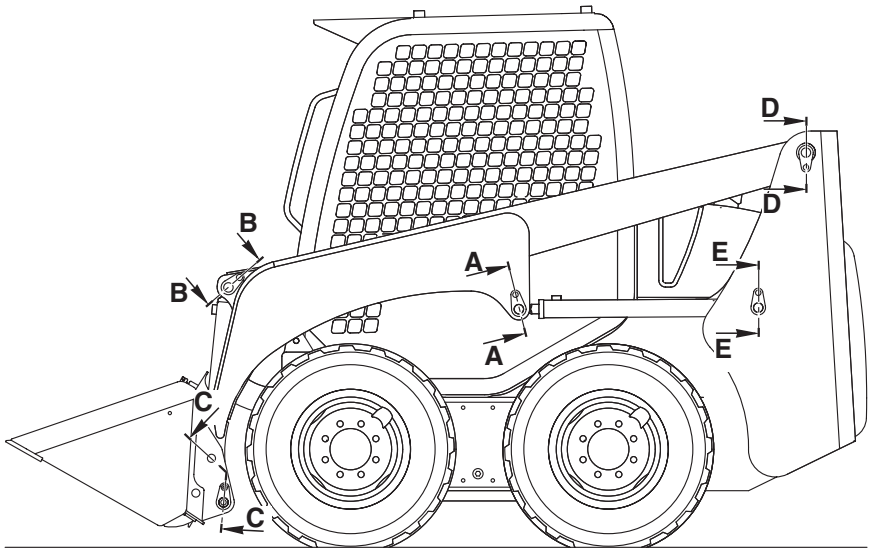

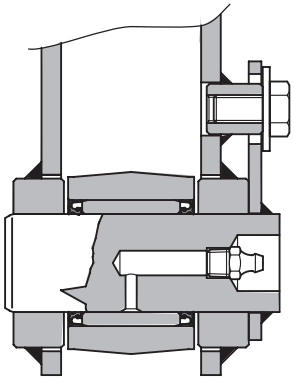

Section A - A

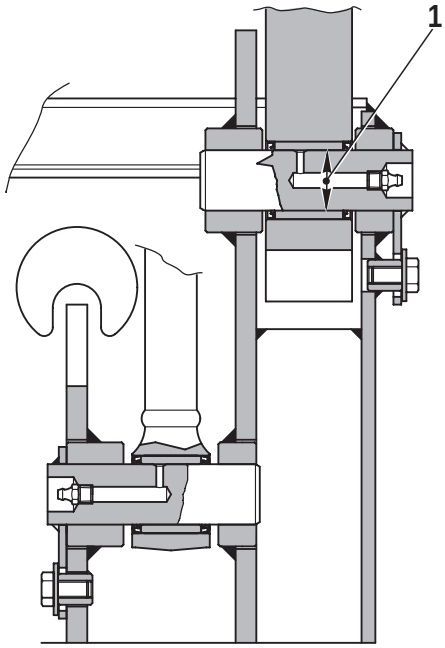

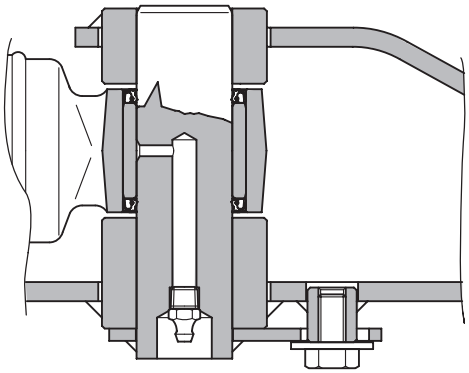

Section B - B

Section C - C

RKS01121

https://truckmanualshub.com/

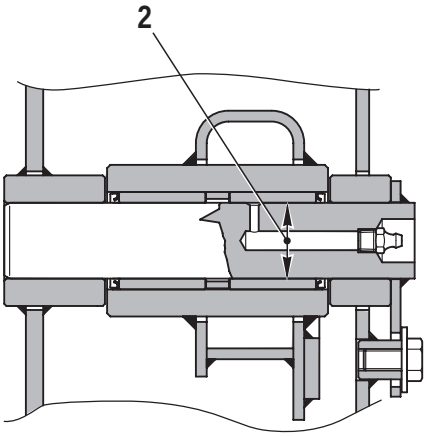

Section D - D

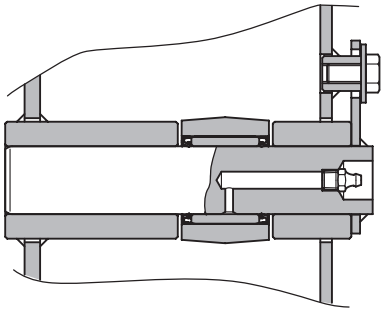

Section E- E

RKS01161

Unit: mm

N°	Check item	Criteria					Remedy
		Standard size	Tolerance		Minimum clearance	Clearance limit	
			Shaft	Hole			
1	Clearance between bushing and mounting pin of arm and support frame	35	–0.01 –0.05	+ 0.072 + 0.134	0.082– 0.184	1.0	Replace bushing
2	Clearance between bushing and mounting pin of arm	35	–0.01 –0.05	+ 0.072 + 0.134	0.082– 0.184	1.0	

https://truckmanualshub.com/