https://truckmanualshub.com/

GOLDONI SERIES

Aster

operation and maintenance (en)

https://truckmanualshub.com/

https://truckmanualshub.com/

Tecnologia per passione.

Sede Legale e Stabilimento **GOLDONI S.p.A.**
Indirizzo: Via Canale, 3
41012 Migliarina di Carpi
Modena, Italy
Telefono: +39 0522 640 111
Fax: +39 0522 699 002
Internet: www.goldoni.com

Aster 35
Aster 40
Aster 45

https://truckmanualshub.com/

https://truckmanualshub.com/

TABLE OF CONTENTS

Introduction 9
After sales assistance 9
SAFETY 10
How to read the manual 10
Safety regulations 11
Safety decals 14
Information about tractor noise levels 15
Standard symbols 16
Ecology 17
IDENTIFICATION OF THE MACHINE AND COMPONENTS 18
Machine identification 19
Decals 19
Punch marks on chassis 19
Metal plate 20
Identification of the components 21
Engine 21
Safety frame 21
Cab 21
Towing attachment 21
WORK STATION 22
Controls 22
Controls in front part 22
Controls on RH side 22
Controls on LH side 23
Seat controls 23
Instruments 24
Multi-function dashboard 24
Ignition switch 25
Light switch 25
Hazard light switch 25
Lights 26
Lights (with cab) 26
Revolving beacon (optional) 26
7-pin trailer socket 27
Battery 28
Safety frame (roll-bar or ROPS) 29
Cab 30
Versions 30
Heating and ventilating 30
Air conditioning 31

https://truckmanualshub.com/

Cab air filter 32
Cab air filter with activated carbon (optional) 32
Switches 32
Cab and safety frame approval 33
Safety belts (where applicable) 33
Tool box 33
OPERATING INSTRUCTIONS 34
How to start and stop the machine 34
How to start the engine 34
How to start the machine 35
How to stop the machine 35
How to stop the engine 35
How to move off 36
Main clutch 36
Gearbox 36
Four wheel drive 38
Rear diff lock 39
Power take-off 39
Rear power take-off (PTO) 39
Three-point hitch 42
Third point link 42
Adjustable rod (pair) 43
Side stabilizer (pair) 43
Universal joint 43
Rear power lift 44
Controlled position 44
Draft control 44
Floating mode 44
Mixed draft and position mode adjustment 45
Regulating lift rate and sensitivity 45
Towing attachments (optional) 46
Front tow hook (optional) 46
“Category B” tow hook (optional) 46
“EEC Category” tow hook (optional) 46
Ballast (optional) 47
Front ballast (optional) 47
Rear ballast (optional) 47
Wheel ballasting by filling the tyres with fluid. 48
Wheels 49
Steering angle 49
Front wheel toe-in 49
Track widths 50
Wheel bolt torque values 50
Transmission ratio 50
Tyres 51
How to tow the tractor 51
Transporting the tractor 52

https://truckmanualshub.com/

MAINTENANCE 53

Routine maintenance guide: 53
How to open the bonnet 54
Engine assembly 54
- Engine 54
- Fuel tank 55
- Dry air filter 56
- Cooling system 57

Transmission assembly 58
- Gearbox housing, rear differential, power lift 58
- Mod.35-40 front axle 60
- Mod.45 front axle 61
- Main clutch 62
- Rear power take-off clutch 63
- Rear differential lock 64
- Final drive lever 64
- Brakes 65

Electrical system 66
- Battery 66
- Headlights 67
- Fuses 68
- Engine air filter clogging sensor 69
- Bodywork 69
- Air conditioning system 70

TECHNICAL SPECIFICATIONS 71

General specifications 71
Dimensions and weights 72
Speeds 73
Recommended lubricants 74

https://truckmanualshub.com/

https://truckmanualshub.com/

Introduction

The confidence you have shown in our company by choosing equipment carrying our trademark will be amply repaid by the excellent service it will give you over the years.

Correct use and normal routine maintenance will generously rewarded in performance, output and savings.

After sales assistance

Our Assistance and Parts Division provides original spares and specialized personnel to service our tractors. This is the only Assistance Service authorized to provide under warranty service and assistance in conjunction with our network of AUTHORIZED dealers.
The use of Original Spares guarantees unchanging machine performance down the years and gives owners the right of UNDER WARRANTY service for the prescribed period.

Attention: check to make sure your tractor has its identification tag. This is essential when ordering spares from our Assistance Centres.

00007895-0

Warranty and spares

Engine: conditions and terms established by the manufacturer.
Tractor: within the terms laid down by our Certificate of Warranty.

To order spares: Visit our Assistance and Spares Centres bringing your machine identification tag or with following information: tractor model, Series and Number as stamped on the Serial Plate.

https://truckmanualshub.com/

SAFETY

How to read the manual

This manual is your operation and maintenance guide. You are advised to strictly comply with the instructions herein and to consider the manual as an integral part of the product: it must be kept near the machine and consigned to all future users.
The illustrations, descriptions and specifications given in this Manual are not binding on the manufacturer who, while main taining the main specifications, reserves the right to make any and all changes, at any time, in compliance with technical or commercial requirements without prior notice and without obligation to make such changes to previously manufactured equipment.

Consult the specific manuals for the safe operation and maintenance instructions about those parts of the machine manufactured by third parties.

All indications as to the “front”, “rear”, “right” and “left” parts of the machine refer to the operator seated on the machine.

Certain sections of this manual containing information of particular importance in relation to safety or operation, are highlighted in the following way:

IMPORTANT
The information is given with the intention of preventing damage to the machine or causing damage.

WARNING
Failure to comply with the instructions could cause personal injuries or harm third parties.

DANGER
Failure to comply with the instructions could lead to serious danger and serious personal injuries or harm to third parties.

https://truckmanualshub.com/

Safety regulations

There is no substitute for prudence to make your work safer and to prevent accidents The following cautions are important for all users of our achines.
Failure to follow the regulations given below exonerates our firm from all civil and penal responsibility.

Do not tamper with the machine and its equipment in any way.

Before starting the engine make sure that the gear shift and the PTO are in neutral.

Let out the clutch gradually to prevent the machine from jumping the clutch.

Do not go downhill with the clutch disengaged or the gear shift in neutral. Use the engine to brake the machine. If you find you are using the brake a lot when going downhill, put the machine into a lower gear.

Follow the traffic code when on-road driving.

o not service, repair or make any kind of adjustment to the tractor or to equipment coupled to it without having first turned off the engine, removed the ignition key and lowered the equipment to the ground.

Always park the tractor so that the utmost in stability is guaranteed by engaging a gear and applying the parking brake. On gradients engage 1st gear uphill and reverse downhill. For greater safety use a chock. Engage front wheel drive if the tractor has it.

https://truckmanualshub.com/

Check to make sure that all revolving parts on the machines (PTO, Cardan couplings, pulleys etc) are fully guarded. Do not wear clothing which could be pulled into the machine's or the equipment's moving parts.	
Do not run the engine in an enclosed area: the engine exhaust is poisonous.	
Do not leave the machine with engine running near flammable substances.	
Before driving the machine, check to be sure that there are no bystanders or animals in its working range.	
Do not leave the driving seat with the engine running and/or the key in the ignition.	
Whenever the PTO is in use, the drive shaft must be covered by the special guard.	
From time to time, with the engine shut off, wheel and roll bar fixing nuts and screws.	
After any maintenance work, grease and remove the grease from the engine to eliminate the risk of a fire.	

https://truckmanualshub.com/

Keep hands and other parts of the body away from holes or leaks in the hydraulic system. The hydrualic fluid from the leak is under pressure and can cause serious injury.	
To not carry any other equipment on the machine apart from that supplied with it. Do not carry passengers in addition t o the driver.	
Do not use the differential lock near or in curves and avoid using it in fast gears or with engine running at high rpm.	
Do not get on or off the machine while it is moving.	
Avoid tight steering angles when towed implements are mounted and the drive shaft is under strain since the coupling could be damaged.	
Do not use the 3-point linkage on the lift as a hitch.	
Regulate the hitch in its lowest possible positions to prevent the machine from rearing.	
During transhipments with equipment coupled on the 3-point linkage, tension the chains and keep the lift raised.	

https://truckmanualshub.com/

The operator must check if **every part of the tractor** and, especially the **safety devices,** are in good working condition and perform to specs. They should be kept in perform working condition. If you note any defects or malfunctioning, fix or repair them in good time. If necessary contact your nearest Assistance Centre. Failure to observe these instructions will release the manufacturer from all liability.

Safety decals

Safety decals have been affixed to various parts of the machine. They indicate potential dangers.
The decals must be kept clean and legible. If damaged, they must be replaced.

Some of the machine components can be equipped with the manufacturer's specific safety decals.

Information about tractor noise levels

This Chart, which provides the noise values produced by the tractors described in the Guide to Maintenance and Use, has been prepared in order to satisfy the requirements of Law Decree No. 277 dated 15/08/1991.
Bearing in mind the impossibility of the manufacturer to foresee the normal working conditions in which the agricultural tractor will be operated, the noise levels have been defined in accordance with the methods and conditions described in Attachment 8 of Presidential Decree No. 212 dated 10/02/1981. This conforms to Directive 77/311/CEE concerning noise levels at the ears of the driver of wheeled agricultural tractors.

TRACTORS with SAFETY BARS				
Model	**Type**	**Type Approval N°**	**Maximum noise level at the driver's seat dB (A)**	
			Article I	**Article II**
Aster 35	TX1A -TX1B	e1*2001/3*0239*00		83
Aster 40	TX3A -TX3B	e1*2001/3*0239*00		83
Aster 45	TX5A	e1*2001/3*0239*00		83
Milenio 35C	TX1A -TX1B	e1*2001/3*0239*00		83
Milenio 40C	TX3A -TX3B	e1*2001/3*0239*00		83
Milenio 45C	TX5A	e1*2001/3*0239*00		83
TRACTORS with CAB				
Aster 35	TX2A - TX2B	e1*2001/3*0239*00		84
Aster 40	TX4A - TX4B	e1*2001/3*0239*00		85
Aster 45	TX6A	e1*2001/3*0239*00		86
Milenio 35C	TX2A - TX2B	e1*2001/3*0239*00		84
Milenio 40C	TX4A - TX4B	e1*2001/3*0239*00		85
Milenio 45C	TX6A	e1*2001/3*0239*00		86

WARNING TO THE USER

Remember that the agricultural tractor may be employed in different ways, and may be connected to an infinite number of implements. In order to ensure that drivers are protected against risks deriving from exposure to noise, the entire tractor-implement group must be considered.

Bearing in mind the above-mentioned noise levels and the consequent health risk, the user must adopt the appropriate precautionary measures, as described in Article IV of Law Decree No. 277 dated 15/08/1991.

Standard symbols

Standard symbols have been used to ensure the machine is used in the best way.

	Warning		Hydraulic circuit filter		Driving beam
	Environment		Oil		Dipped beam
	Recycling		Transmission		Field light
	Legislation		Differential lock		Parking light
	Information		Power take-off		Side lights
	Instructions		Power take-off rotation		Hazard lights
	Check		Clutch		Indicator light
	Clean with compressed		Parking brake		Turn indicator
	Adjustment		Four-wheel drive		Trailer turn indicator
	Lubrication		Guard lowered		Horn
	Greasing		Forward direction		Battery charger
	Change oil		Low speeds		Safety belts
	Work hours		Normal speeds		Blocked
	Fuel level		Fast speeds		Clockwise rotation
	Fuel filter	N	Idle		Counter-clockwise rotation
	Engine preheating		Direction reverser		Air ventilation
	Engine air filter		Rotational accelerator		Air heating
	Engine oil pressure		Linear accelerator		Air conditioning
	Engine oil filter		Power lift		Windscreen wiper
	Engine coolant		Power lift – Up		Windscreen wiper and window washer
	Air valve		Power lift – Down		Rear window wiper
	Hydraulic circuit		Power lift – Floating mode		Rear window wiper and window washer

Ecology

It is of fundamental importance to safeguard the environment. Incorrect waste disposal can alter the environment and the ecological system.

Do not discard fluids like fuels, lubricants, coolants or other, in the environment.

Do not use food or dink containers, which could lead to mistakes, to drain off fluids like fuels, lubricants, coolants or other.

Do not dispose of parts of the cooling system (such as radiators, fluids, tanks, etc.) in the environment.

Contact an authorized organization or ask your dealer for advice about how to recycle or dispose of waste products in the correct way.

https://truckmanualshub.com/

IDENTIFICATION OF THE MACHINE AND COMPONENTS

https://truckmanualshub.com/

Machine identification

The machine is identified in three different ways:

A with decals
B punch marks on chassis
C with a metal plate

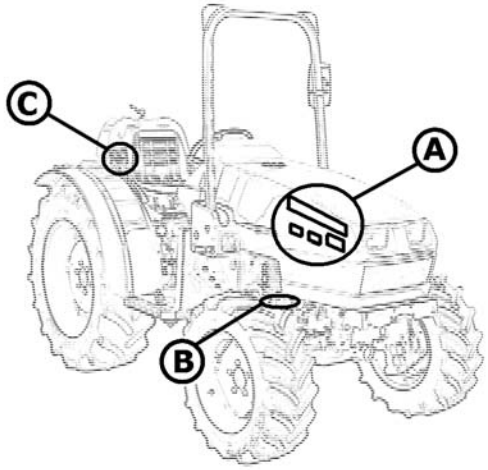

D0001A-0

Decals

The decals affixed to the bonnet indicate:

A Make
B Series
C Model
D Version

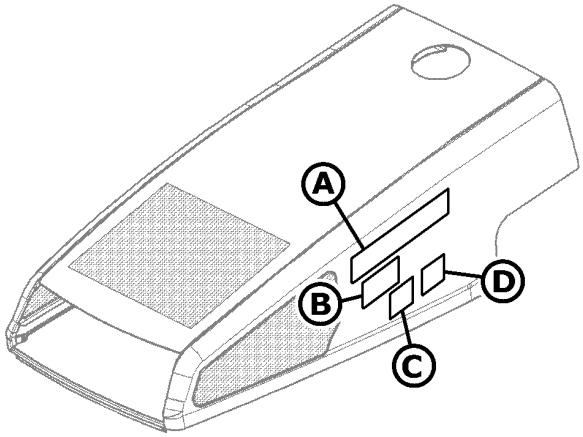

D0002A-0

Punch marks on chassis

A Manufacturer's code
B Production series
C Type of machine
D Identification number (serial number)

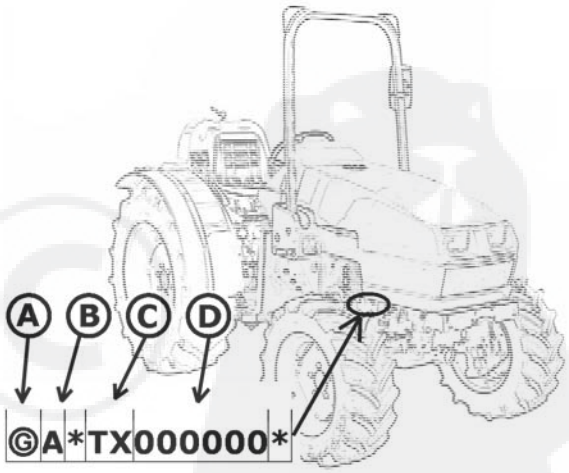

D0001B-0

Metal plate

The metal plate gives the following information:

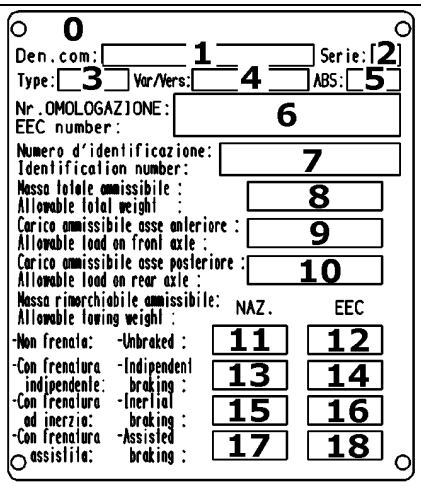

00041042A-0

0 Manufacturer's name and address
1 Commercial denomination
2 Production series
3 Type of machine
4 Variant
5 ABC coefficient
6 Approval number
7 **Identification number (serial number)**
8 Total permissible weight (KG)
9 Permissible load on front axle (KG)
10 Permissible load on rear axle (KG)
11 Non-braked permissible towed weight (in Italy) (KG)
12 Non-braked permissible towed weight (European) (KG)
13 Permissible towed weight with independent braking (in Italy) (KG)
14 Permissible towed weight with independent braking (European) (KG)
15 Permissible towed weight with overrunning braking (in Italy) (KG)
16 Permissible towed weight with overrunning braking (European) (KG)
17 Permissible towed weight with power braking (in Italy) (KG)
18 Permissible towed weight with power braking (European) (KG)

Identification of the components

The machine consists of a series of main components which are each identified by a metal data plate and/or by punch marks.

Engine

Metal data plate and punched code number.
See engine's operation and maintenance manual.

Safety frame

- Decal with the Type of safety frame.
- Punched code number on the safety frame itself.

D0001C-0

Cab

Metal data plate on cab:
A Manufacturer
B Type
C Serial number (chassis number)

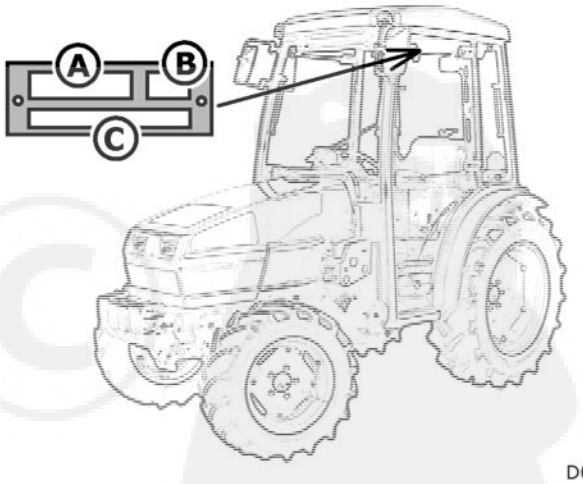

D0049A-0

Towing attachment

Code punched on device:
- Make
- Type of device

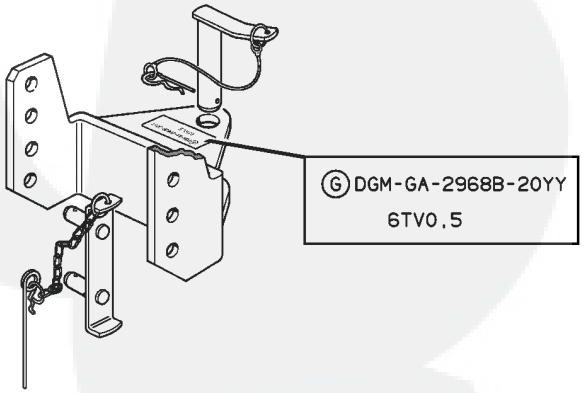

D0050A-0

WORK STATION

Controls

Controls in front part

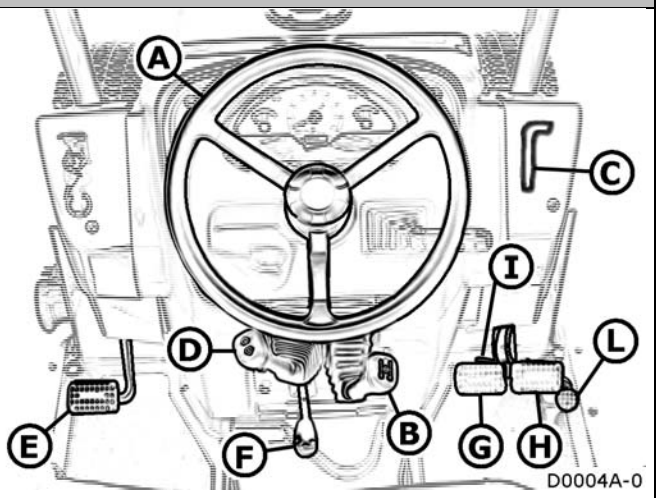

- A Steering wheel
- B Gearshift lever: speed selection (1-2-N-3-4)
- C Hand throttle
- D Reverse shuttle lever: for selecting forward, reverse speeds
- E Clutch pedal
- F Rear PTO clutch lever
- G LH brake pedal
- H RH brake pedal
- I Brake pedal latch
- L Accelerator pedal

Controls on RH side

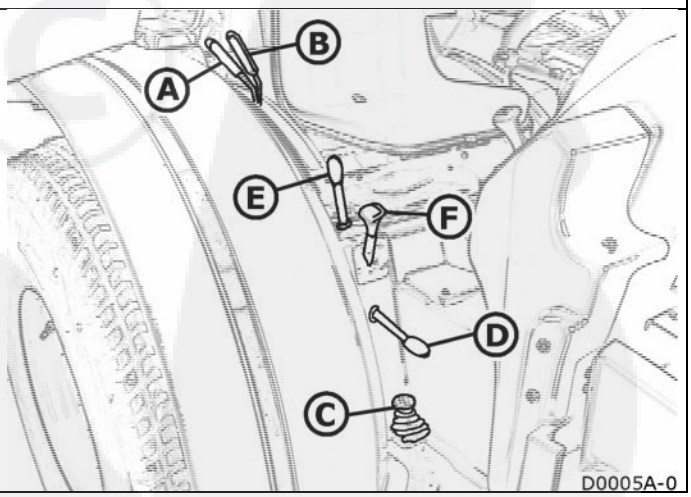

- A Lever for regulating the position of the rear power lift
- B Lever for adjusting the rear power lift's draft
- C Diff lock pedal
- D Lever for selecting the independent or synchronized rear PTO
- E Rear supplementary spool valve lever
- F Final drive lever: selects Low, Standard, High speeds and Reverse speeds

Controls on LH side

A Parking brake lever

B 4 WD lever

C Synchronized rear PTO engaging lever

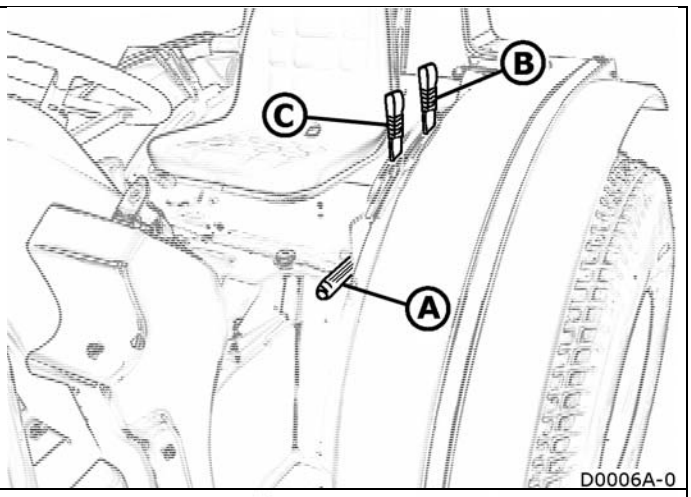

Seat controls

A Distance of seat from controls

B Adjustment of seat springs

C Seat height adjustment

D Adjustment of springs

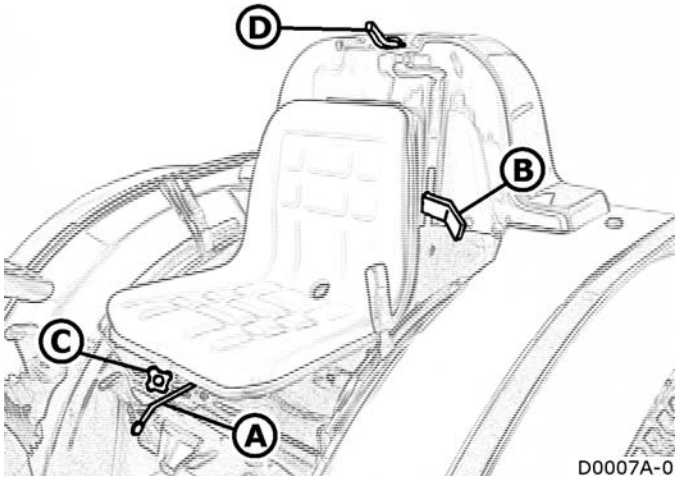

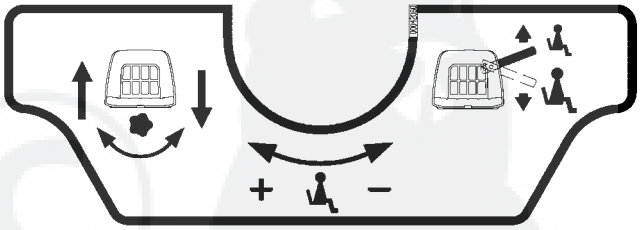

00042060-0

Instruments

Multi-function dashboard

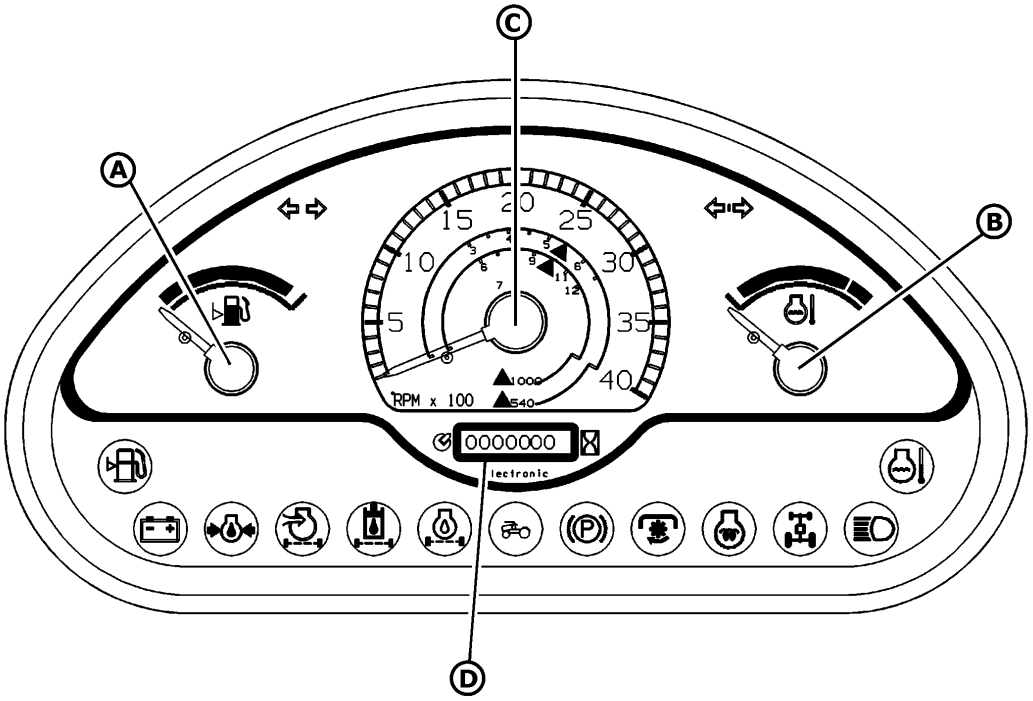

A	Fuel level gauge		Parking brake engaged indicator – red
B	Engine coolant temperature gauge		PTO clutch disengaged indicator – red
C	Engine and PTO speed indicator		Engine coolant temperature indicator – red
D	Hour counter		Fuel reserve indicator – yellow
	Battery charge indicator – red		Engine preheating indicator – yellow
	Low engine oil pressure indicator – red		Front drive engaged indicator – yellow
	Clogged engine air filter indicator - red		Tractor turn indicators – green warning light
	Clogged oil filter indicator – red		Trailer turn indicators – green warning light
	Engine oil level indicator – red		Driving beams – blue warning light
	Safety frame lowered indicator - red		

Ignition switch

D0009A-0

Engine preheating position

STOP No circuits powered. Key can be removed. Turn the key to this position to switch off the engine.

1 Operating position. Various users powered. Indicators and monitoring instruments operative.

2 Engine starts.

Light switch

Light operation:

0 Lights off

Side lights on

Dipped beams

Push: Driving beams

Turn indicator:

Forwards: lh turn indication

Back: rh turn indication

Horn:

Push

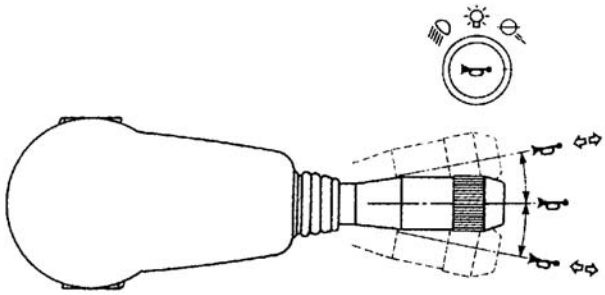

D0010-0

Hazard light switch

Flashes all the turn indicators intermittently at the same time.

Lights

A Headlight in dipped/driving positions
B Front turn indicator
C Front side light
D Rear side light
E Rear turn indicator
F Rear brake light
G License plate light

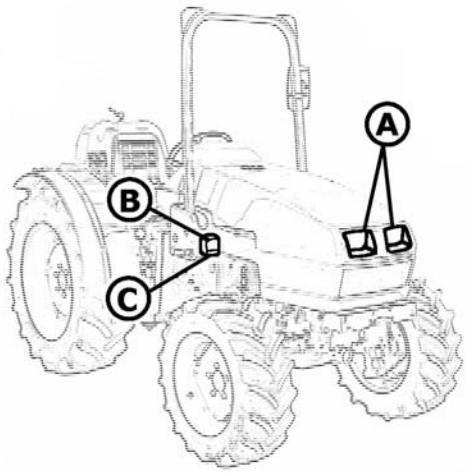

D0001D-0

The vehicle's lights must comply with the Highway Code in force in the relative country of use for driving on public thoroughfares.

Use of driving beams is governed by the Highway Code in force in the country of use.

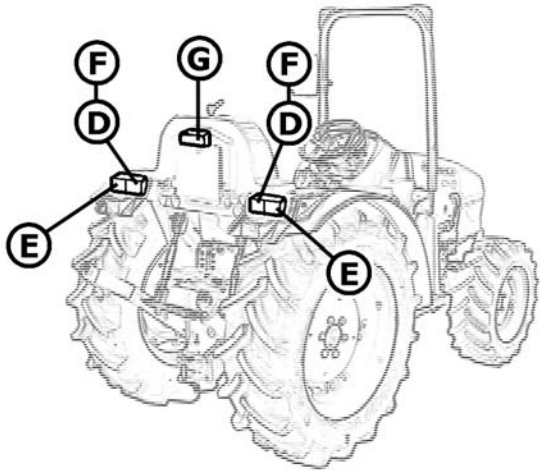

D0051A-0

Lights (with cab)

Front field light
Rear field light

Revolving beacon (optional)

The revolving beacon is switched on with button A

Its use is governed by the laws in force in the country of use.

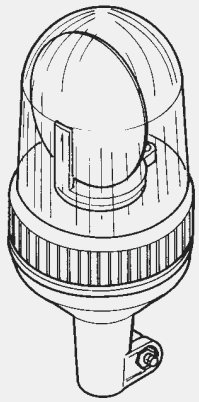

D0052-0

7-pin trailer socket

This socket is used to connect lights, turn indicators and other electrical devices for a trailer or implement.

Supplementary lights must be used if an implement obscures the turn indicators or other lights at the rear of the machine.

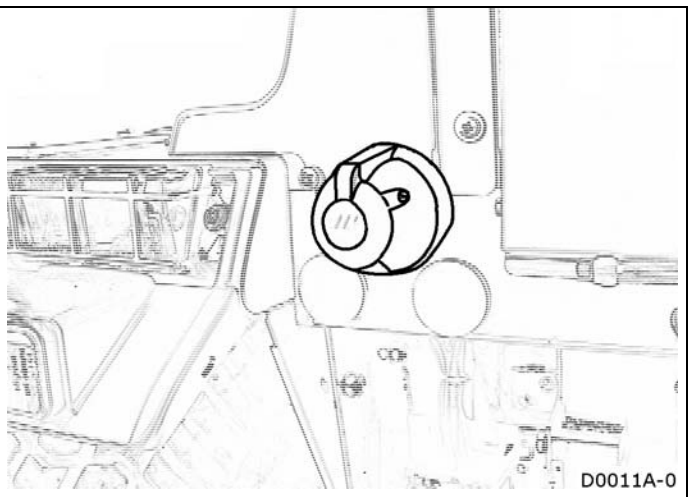

Terminal functions:

A	Lh turn indicator
B	Vacant
C	Ground
D	Rh turn indicator
E	Rh rear light
F	Brake lights
G	Lh rear light

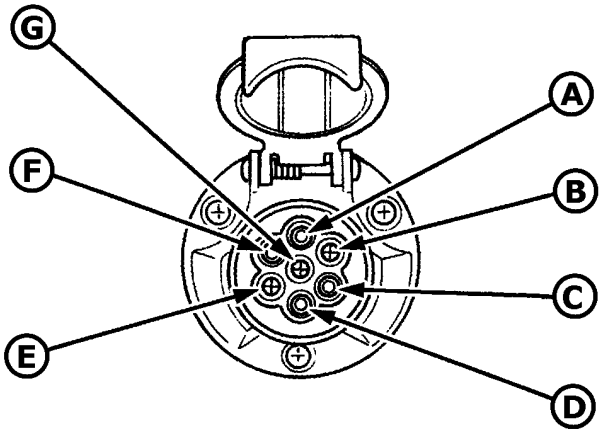

Battery

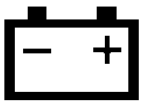

Symbols:

Protect the eyes

Read the instructions

Keep well out of children's reach

Dangerous corrosive acid

Avoid naked flames and sparks

Danger of explosion

WARNING: The battery may be equipped with the manufacturer's instructions for safe use and maintenance. Read these instructions and contact specialized personnel if you have any doubts.

https://truckmanualshub.com/

Safety frame (roll-bar or ROPS)

The machine is equipped with a folding safety frame. Always keep the safety frame mounted in its correct vertical position when you are working. It is absolutely forbidden to modify the structural components of this type of construction by welding on additional parts, drilling holes, grinding, etc. Failure to comply with these recommendations could impair the rigidity of the frame itself.
The safety frame is subjected to considerable stress if the tractor tips over. If this happens, the structural components must be replaced if they have been bent, deformed or damaged in some other way.

When in the horizontal position, the safety frame will provide no protection if the tractor tips up. When working in these conditions, it is of the utmost importance for the operator to pay the greatest attention when manoeuvring the machine.

Raise the safety frame again as soon as the machine is able to operate in normal conditions.

To lower the safety frame, on both sides:

- turn the pin through 90° and remove it
- lower the safety frame
- insert the pin into the second housing and turn it through 90°

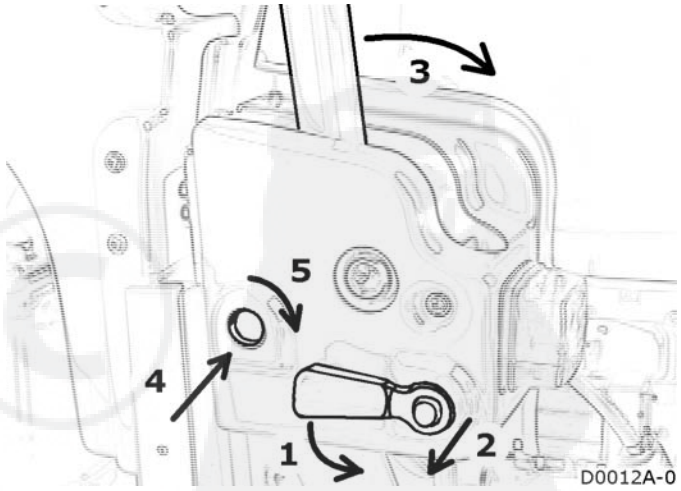

https://truckmanualshub.com/

Cab

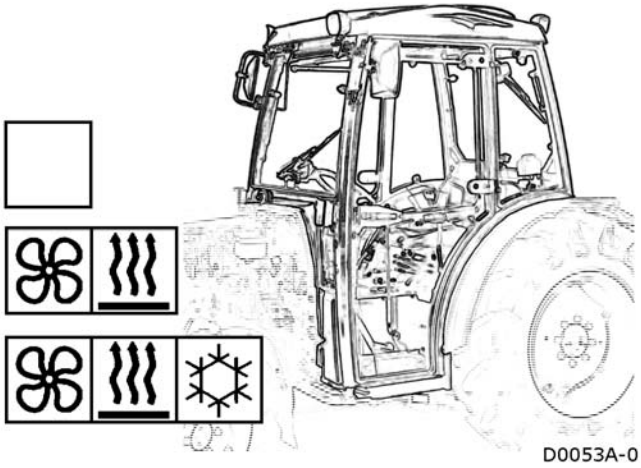

- **Always shut the doors before moving off with the tractor.**
- **Keep the windows clean to ensure good visibility.**
- **The cab is approved as a safety structure. It is therefore absolutely forbidden to tamper with it, modify or add extra equipment and/or supports.**

Versions

The machine can be equipped with a cab in three different versions:

- Cab without ventilation (Basic version)
- Cab with heating function (Top Calda)
- Cab with heating and air conditioning (Top Fredda)

Accessories: activated carbon filter and revolving beacon.

Heating and ventilating

The ventilation function is operated by means of the control A. Direct the air flow by positioning front vents.

The air can be drawn from the outside or from inside the cab by means of rear vents:

- vents closed: the air is drawn from the outside through the filter.
- vents open: most of the air is drawn from the inside through the vents themselves.

The heating function is operated by means of control D (a =open; c = closed). Vary the ventilation speed by means of control A.

Air conditioning

The air conditioning system allows you to obtain fresh, dehumidified air or hot dehumidified air.

- **Never tamper with the air conditioning system: always contact specialized personnel.**
- **Keep naked flames and heat sources well away from the air conditioning system.**
- **Never loosen unions and/or tamper with pipes: the system is pressurized.**
- **The refrigerant can freeze the skin and eyes.**

Starting and stopping the engine

Make sure that the air conditioner and fan are off before starting the engine.
Always turn off the air conditioner and fan before stopping the engine.

Operation

To operate the air conditioning system:

1) stop the heating function by means of knob C (set to position C)
2) use knob A to turn on the ventilation
3) use knob L to turn on the cooling function.

If the fan on the cab roof fails to start within one minute once the system has been turned on, turn it off and check the fuses. Failure of the rear fan to operate will raise the pressure of the gas in the air conditioner's circuit and could block the system.

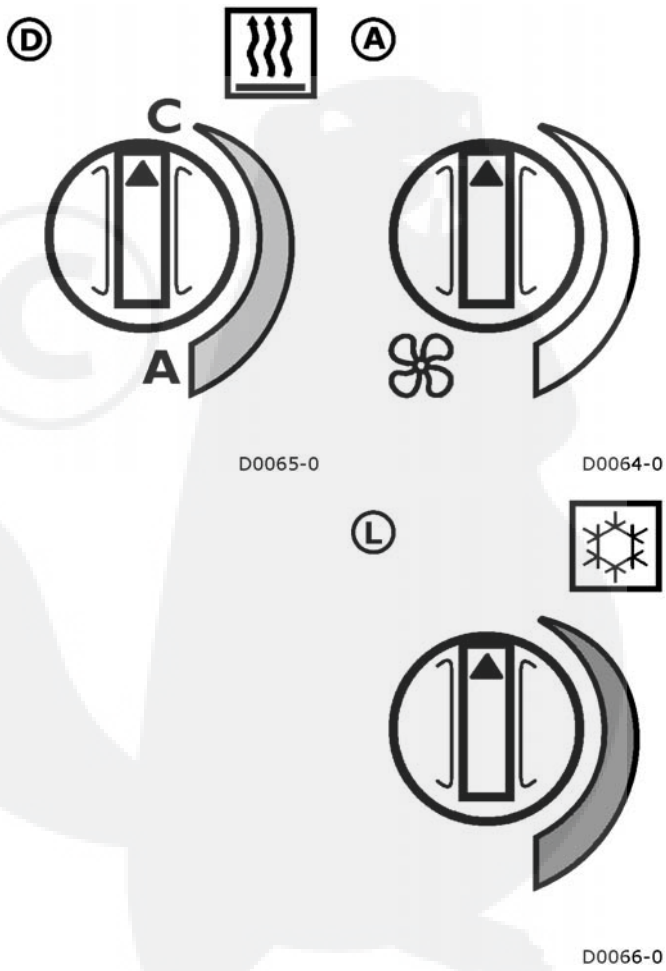

Technical specifications:

Refrigerant fluid: R134a
Quantity: 0.8 kg

Cab air filter

Warning: the cab air filter has not been designed to retain harmful substances! Comply with the instructions provided by the manufacturer of the substance used.

The air that enters the cab is always subjected to a filtering treatment. The filter is installed in the top front part of the cab.

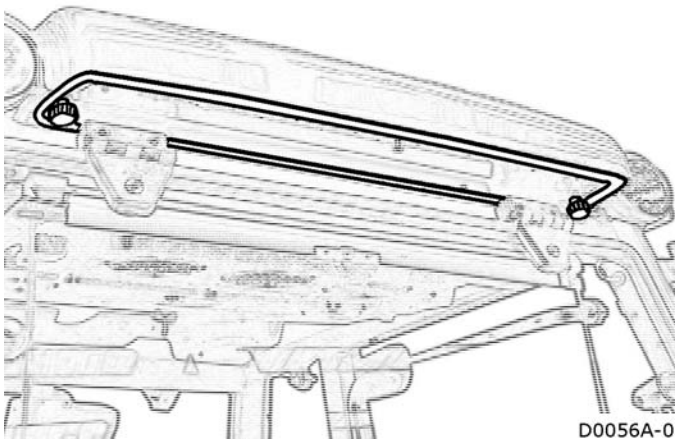

Cab air filter with activated carbon (optional)

Comply with the use and maintenance instructions supplied with the filter.

Warning: use of the cab air filter with activated carbon does not relieve the operators from wearing recommended personal protective equipment to safeguard against the harmfulness of the individual substances used.

Switches

The cab switches are installed in the ceiling of the cab itself, on the right-hand side. They are used for the following functions (some of which are optional):

- Front field lights
- Front and rear window wipers and washers.
- Revolving beacon
- Rear field lights
- \- Ceiling light
- **1- 0** Rear window wiper

Accessories

Sun shade

Installed on the front window. To unwind, pull on the handgrip situated in the center of the shade; to rewind, use the red button on the right-hand side of the winder.

Pre-engineering for stereo system

Installed in the rear cab interior. Includes 2 housings for loudspeakers

Document pocket

https://truckmanualshub.com/

Cab and safety frame approval

(Optional)

- For Italy

If the cab and roll bar are installed after the purchase of the tractor, the customer should ask our Sales Division for the corresponding Approval documents.
With these documents and the registration book and/or Log Book, the customer should go to his local Ministry of Transport Licencing Office. This office will update or replace the registration book/Log Book.

- For other countries

If the cab or roll bar are installed after the purchase of the tractor, the owner should refer to the national approval agencies to have the tractor's registration or log book brought up to date.

Safety belts (where applicable)

Wear the safety belts when you use the machine with the safety frame (roll-bar or ROPS) to reduce the risk of accidents if the tractor tips up.

Do not wear the seat belt if you use the machine with the roll-bar in the horizontal position.

D0057-0

Tool box

The machine has a tool box which can be accessed by turning the knob.

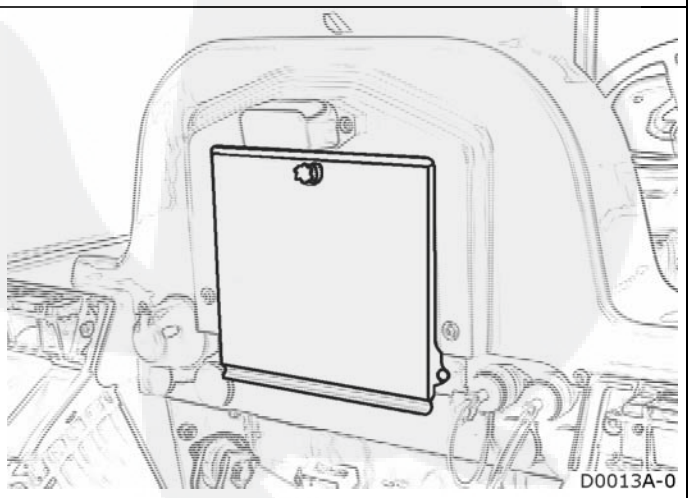

D0013A-0

https://truckmanualshub.com/

OPERATING INSTRUCTIONS

How to start and stop the machine

How to start the engine

Consult the engine's operation and maintenance manual.

Before starting the engine:

Apply the parking brake

Move the **final drive** lever to the neutral position

Move the lever used to select the independent or synchronized rear PTO to the neutral position.

Move the lever used to select the PTO speed to the neutral position

Move the hand throttle lever halfway along its travel

Depress the clutch pedal

Ignition switch:

Insert the key and turn it as described below:

D0009A-0

Glow plug preheating. Keep the key in this position for 8-10 seconds.

STOP No circuit powered

1 Instruments and warning lights on (operating position).

2 Engine starts.

After the engine has started:

- Release the key. It will automatically return to the operating position.
- Release the clutch pedal.
- Check the warning lights and instruments.

https://truckmanualshub.com/

How to start the machine

Before starting the machine, make sure you become familiar with its main controls: brakes, transmission, PTO, diff lock and how to stop the engine.

Make sure that the brakes are efficient before moving off.

- Depress the clutch pedal.
- Select the transmission ratio (consult the Gearbox chapter).
- Disengage the parking brake.
- Gradually release the clutch pedal.
- Gradually accelerate the engine.

How to stop the machine

- Allow the engine to idle.
- Depress the clutch pedal.
- Stop the machine
- Move the **final drive** lever to the idle position.
- Apply the parking brake.

How to stop the engine

- Turn the ignition key to position 0.
- Remove the key and put it away in a safe place.

WARNING: The steering action of the power steering system will be reduced if the engine accidentally stops. Depress the main brake to allow the machine to come to a full stop.

https://truckmanualshub.com/

How to move off

Main clutch

Transmits drive from the engine to the transmission.
Pedal up = clutch engaged (drive is transmitted)
Pedal down = clutch disengaged (drive not transmitted)
Make gradual engagements and disengagements.

Remove your foot from the clutch pedal when not required.

lengthy clutch disengagements could wear out the thrust bearing.

NEVER attempt to drive up or down slopes with the clutch disengaged.

Gearbox

The machine's transmission comprises a gearbox, final drive and synchronized reverse shuttle, each controlled by its own lever.

The speed at which you drive the machine must be chosen to suit:

- the work required
- the implement used
- the type of ground

Information about the ground speeds is given in the "technical specifications" section.

Gearshift lever

(1-2-N-3-4)

The lever can be moved in four positions (plus neutral):
1 = first speed gear
2 = second speed gear
N = neutral
3 = third speed gear
4 = fourth speed gear

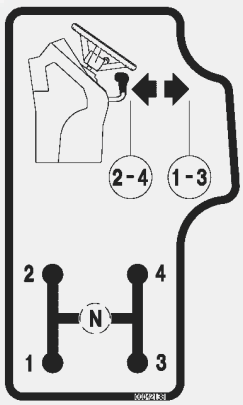

00042138-0

The speed gear selections are synchronized.
To change gear:

- disengage the main clutch
- select the required position.

Final drive lever

The lever can be moved in four positions (plus neutral):

- Standard speeds (Man)
- Low speeds (Tortoise)
- High speeds (Hare)
- Reverse speeds (REV)

Selection is not synchronized.

To select the required range:

- stop the machine
- disengage the main clutch
- select the required range

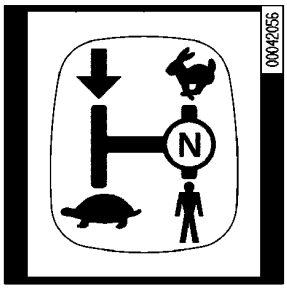

00042056-0

Reverse shuttle lever

The lever has two positions (plus neutral):

- forward
- reverse

Selection is synchronized.

Even though selection is synchronized, proceed as described below to select the forward or reverse speeds:

- stop the machine
- disengage the main clutch
- select the forward or reverse speed.

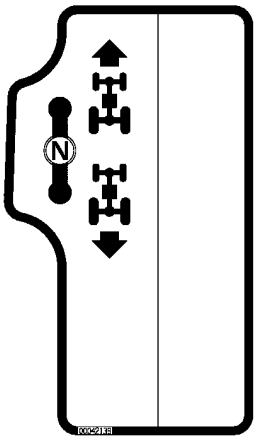

00042139A-0

Four wheel drive

The tractor is the four wheel drive type (front and rear). Four wheel drive is recommended for ploughing jobs or if one of the two driving wheels possess insufficient grip owing to muddy, rugged or slippery ground.

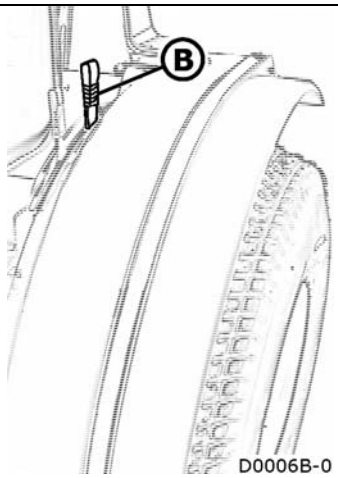

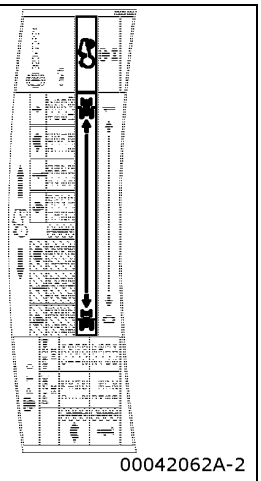

Do not use four wheel drive on roads as the tyres will quickly wear out.

The four wheel drive is engaged mechanically with lever B:

four wheel drive engaged

four wheel drive disengaged

An indicator light will come on to show that four wheel drive has been engaged.

Rear diff lock

The tractor is equipped with a rear diff lock which should be used for ploughing work or if one of the two driving wheels possesses insufficient grip owing to muddy, rugged or slippery ground.

The diff lock is controlled mechanically with pedal C. It is disengaged by releasing the pedal.

To get the most out of the device, engage the differential lock before the wheels begin to slip. Do not engage the lock while one wheel is already slipping.

Only use the diff lock with the low and standard speed gears and after having previously slowed the engine rate.

Do not use the diff lock near or round bends.

If the diff lock fails to release, reduce the engine rate, stop the machine and release it by moving the steering wheel.

Power take-off

Rear power take-off (PTO)

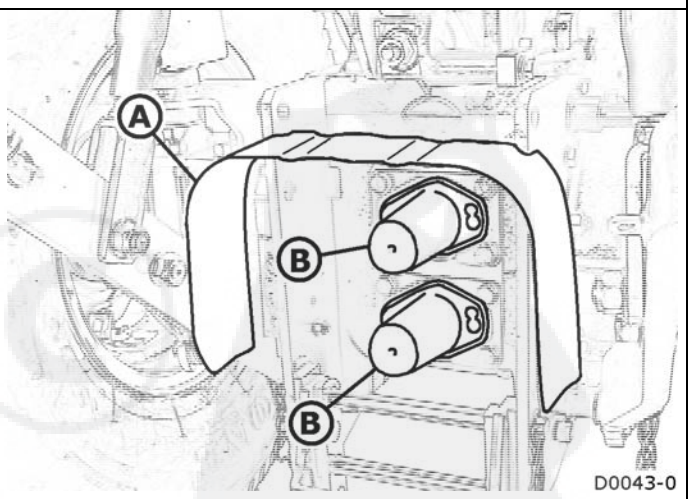

The tractor has two shafts for the rear power take-off (PTO):

- INDEPENDENT power take-off
- SYNCHRONIZED power take-off

Do not remove or damage protective plate A

Cover the PTO shaft with guard B when not used.

INDEPENDENT power take-off

- Rotation directly connected to the engine.
- Upper shaft.
- Consult the technical specifications section for further details.

The independent PTO is selected mechanically with lever D

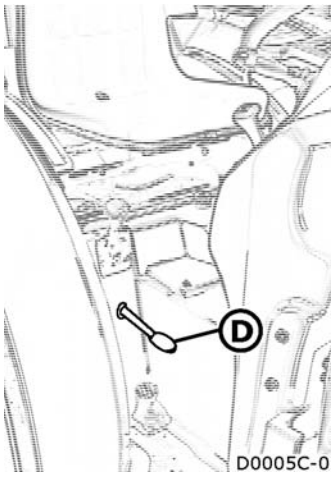

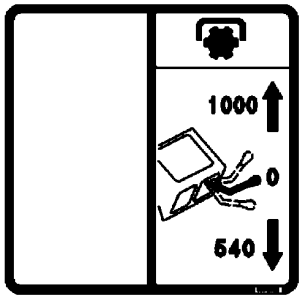

00042098A-1

The PTO is engaged mechanically by pulling guard A and raising clutch lever B.

The PTO is disengaged by pulling guard A and lowering lever B.

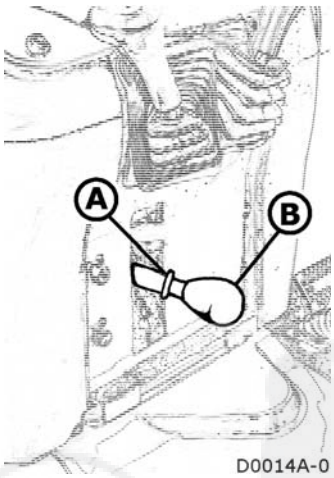

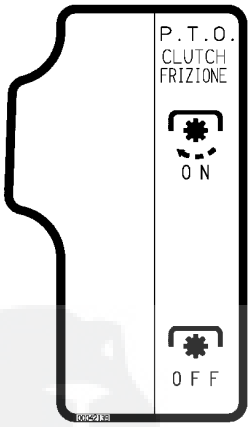

00042139B-0

SYNCHRONIZED power take-off

- Rotation proportional to the tractor's ground speed
- Lower shaft
- Consult the technical specifications section for further details.

The synchronized PTO is selected mechanically by moving lever C to the position with symbol 1

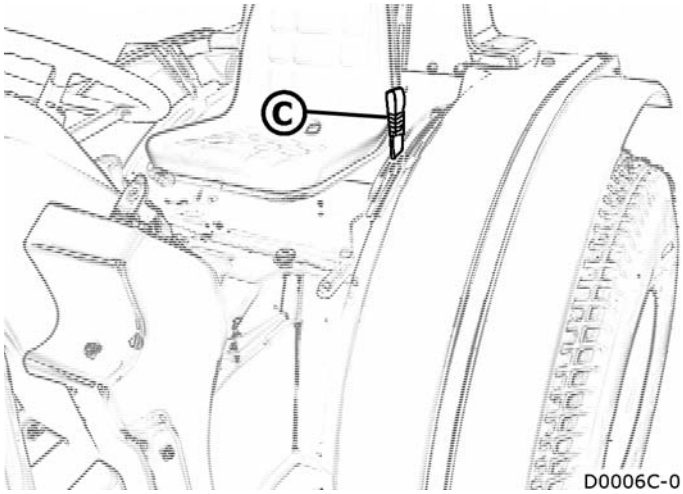

The synchronized PTO is disengaged by means of clutch pedal E

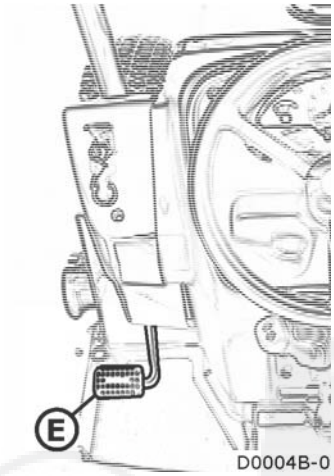

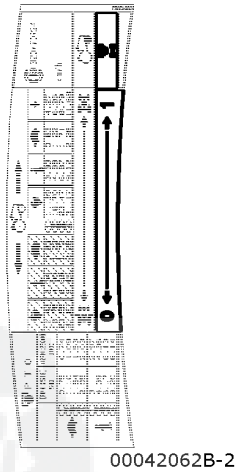

Three-point hitch

The tractor is equipped with a three-point hitch. To ensure that this system operates correctly, make sure that the size and weight of the implement used correspond to the specifications of the power lift and hitch itself.
Consult the technical specifications section for further details.

Components:

A Third point link
B Adjustable rod (pair)
C Side stabilizer (pair)
D Power lift's lower link (pair)
E Spring

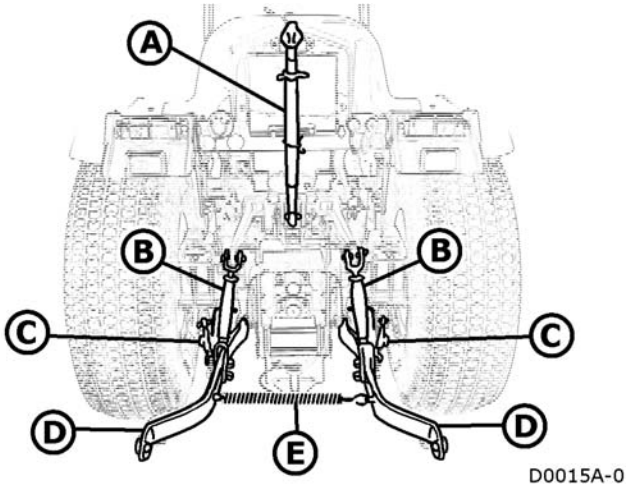

ALWAYS switch off the engine before hitching or adjusting the three-point hitch in any way.

The third point coupling must NOT be used for towing implements.

Lower the implement connected to the three-point hitch to the ground before getting off the tractor.

Third point link

Coupling

The third point coupling has 3 holes to make it easier to hitch the implement and slant it at the correct angle. It also establishes the sensitivity of the draft control function which must be selected to suit the type of implement used:

A Top hole: less sensitivity; suitable for implements that create a lot of tractive effort.
B Central hole: medium sensitivity.
C Bottom hole: greater sensitivity; suitable for light implements.

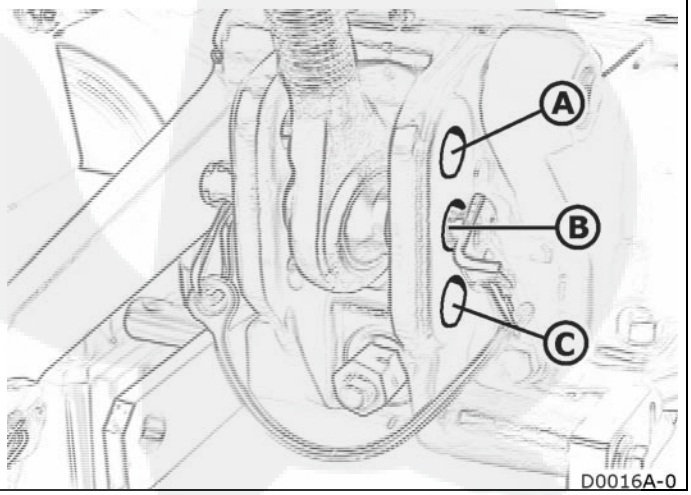

Adjustment

Adjust the length of the link to suit the implement's coupling angle in relation to the ground.

https://truckmanualshub.com/

Adjustable rod (pair)

The rod can be adjusted so as to level and align the lower links to suit the implement used and the type of work required.

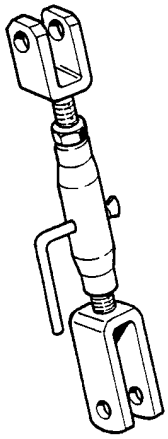

D0017-0

Side stabilizer (pair)

The stabilizers must be adjusted to limit the side swing of the power lift's lower links:

5-6 cm swing

for ploughs, rotary harrows, etc.

Min. swing

for leveling blades, hoeing attachments, etc.

0 swing

for transporting implements that are not working.

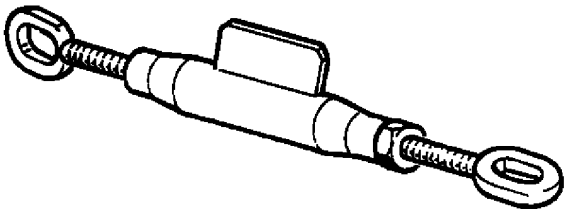

D0018-0

Universal joint

Consult the specific manual for the safe operation and maintenance instructions concerning certain parts of the machine manufactured by third parties.

https://truckmanualshub.com/

Rear power lift

The following operating conditions can be applied:

- Controlled position
- Controlled draught
- Floating mode
- Combined mode

Controlled position

Ideal for jobs that required constant implement position (drills, scraper, hitched manure spreader, etc.).

- Move lever B fully forwards.
- Use lever A, to raise and lower the lift. Lift raising is proportionate to lever movement.

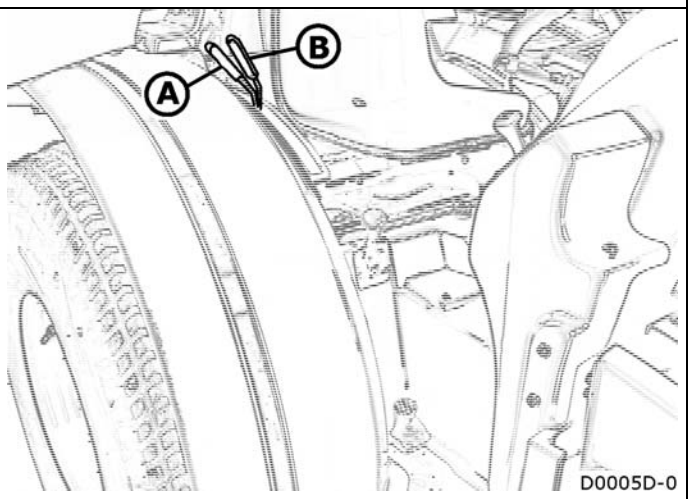

Draft control

This is used to keep the lugging power the tractor must provide constantly under control without overloading the engine and keeping slippage within very low limits (ploughs, cultivators, etc.).

- Move lever A fully forwards.
- Use lever B to adjust the required amount of draft.
- Use lever A to raise and lower the power lift.

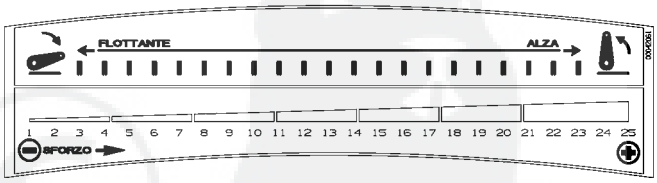

Floating mode

Ideal when you want to leave the implement free to follow the contour of the ground (cultivators, ridgers, scrapers, etc.).

- Move lever B all the way back.
- Use lever A to raise and lower the lift.

Mixed draft and position mode adjustment

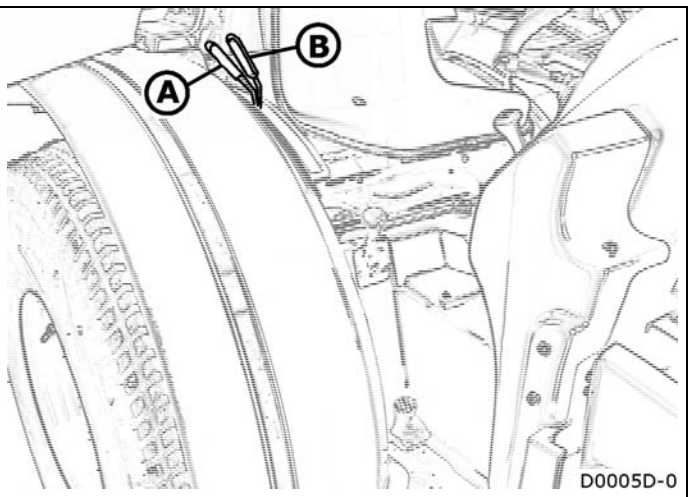

This operating mode is ideal for jobs carried out in draft control mode on irregular ground when the implement is liable to dig too deeply into the soil.
Dig the implement into the ground down to the desired depth as described for the draft control mode.
Once the required depth has been reached, gradually move lever A back towards the end of travel point until the lift links begin to slightly raise.
The power lift will operate in the draft control mode but will stop the implement from digging too deeply into the soil if it encounters softer ground. This prevents the tillage work from becoming irregular.
Only use lever A to raise and dig in the implement.

Regulating lift rate and sensitivity

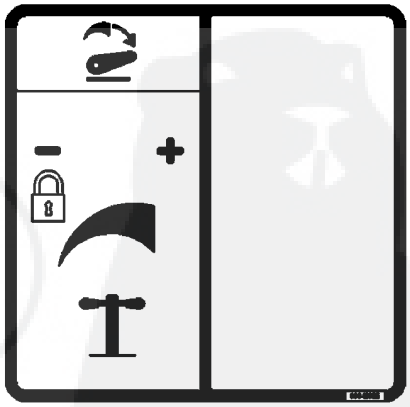

Slacken off completely regulating screw, to lock the implement in its raised position. This is a safety device when implements are transported on road.

Screw out this regulator to increase lift lowering speed.

3-point hitch sensitivity can be further increases by attaching it to one of the lower tractor hitch holes.

https://truckmanualshub.com/

Towing attachments (optional)

Choose the towing attachment to suit the type of trailer or implement towed, in compliance with the current laws in force.

Ease of driving the tractor also depends on correct use and height adjustment of the towing attachment.

WARNING: The tractor could tip up if the towing attachment is set in the highest position.

Keep the drawbar as horizontal as possible when four-wheel drive is used.

Front tow hook (optional)

The tractor can be equipped with a front tow hook for emergency manoeuvres with the trailer or for towing the actual tractor itself.

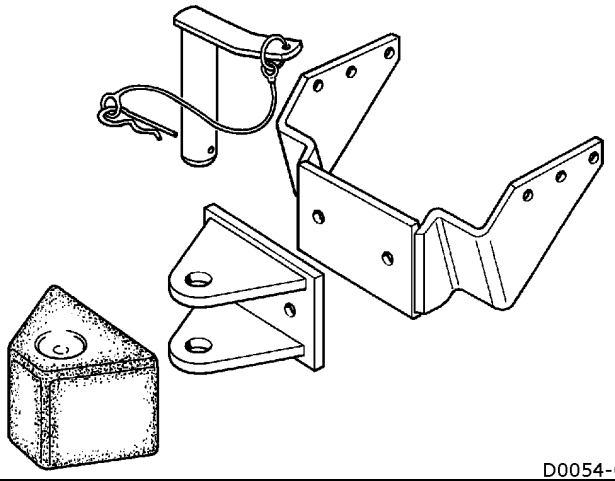

D0054-0

“Category B” tow hook (optional)

The tractor can be equipped with a rear tow hook of the “CUNA CAT. B” type for towing trailers with one or two axles.
To adjust the height of the tow hook:

- remove the pins
- position the hook as shown in the figure
- fix the pins in place

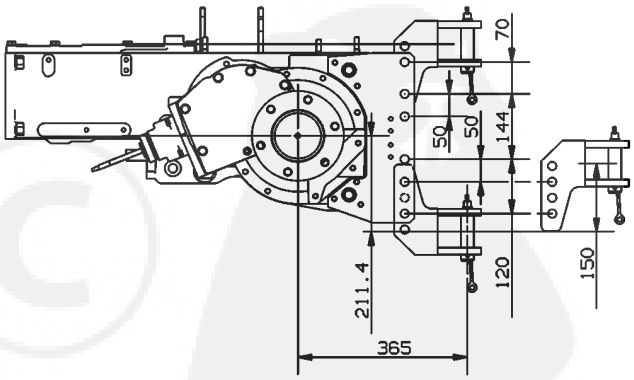

D0019-0

“EEC Category” tow hook (optional)

The tractor can be equipped with the “EEC” type of rear tow hook for towing trailers with one or two axles.
To adjust the height of the hook:

- remove the pins
- position the hook as shown in figure
- fix the pins in place

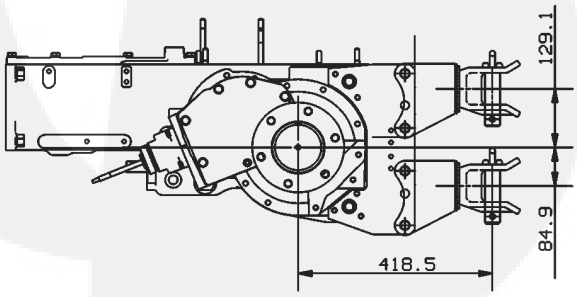

D0020-0

https://truckmanualshub.com/

Ballast (optional)

If very heavy implements are hitched to the tractor, the longitudinal stability of this latter may be impaired. This can be corrected by using one of the various types of ballast available as optionals.

WARNING: when you determine the type of ballast to use, make sure that you do not exceed the following limits between the implement and the ballast itself:

- the permissible load on the front axle (KG)
- the permissible load on the rear axle (KG)

The values are given on the tractor's metal data plate.

Front ballast (optional)

The front ballast consists of cast iron plates.
The plates have handles so that they can be assembled and disassembled.
The ballast is fixed in place with blade A connected with screw B, which must be tightened to a 5 Kgm (49 Nm) torque value.

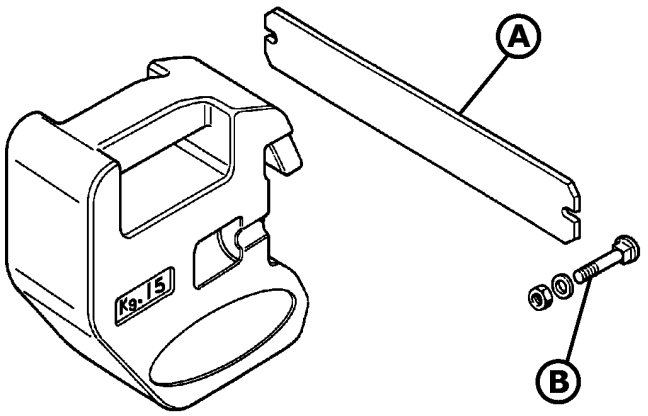

D0021-0

Rear ballast (optional)

The rear ballast consists of cast iron discs fixed to the wheels.
The ballast is fixed in place with screw A, which must be tightened to a 14 Kgm (137 Nm) torque value.

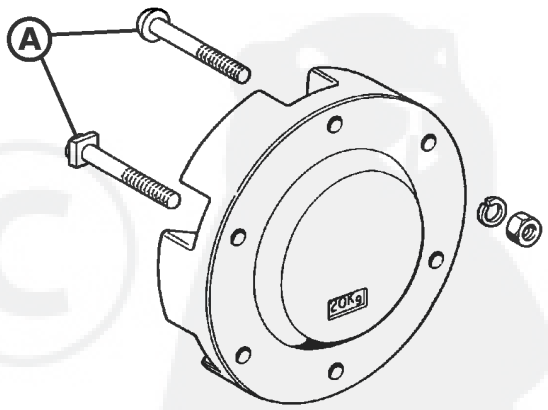

D0022-0

https://truckmanualshub.com/

Wheel ballasting by filling the tyres with fluid.

The driving wheels are ballasted by pouring water into the tyres.

Note: it is preferable to use tyres with inner tubes.

Note: if tubeless tyres are used, ask your dealer how to lubricate the disc correctly so as to prevent it from rusting.

Note: use water with an antifreeze solution in cold weather (manufacturers recommend neutral calcium chloride -$CaCl_2$-).

How to pour in the water:

- position the valve at the top
- unscrew the mobile valve union
- pour in the water with a common water hose
- stop filling every so often, so as to allow the air to escape
- stop filling altogether when water spills from the valve.
- the water should fill 75% of the tyre.
- tighten the mobile valve union.
- inflate the tyre to the normal operating pressure.

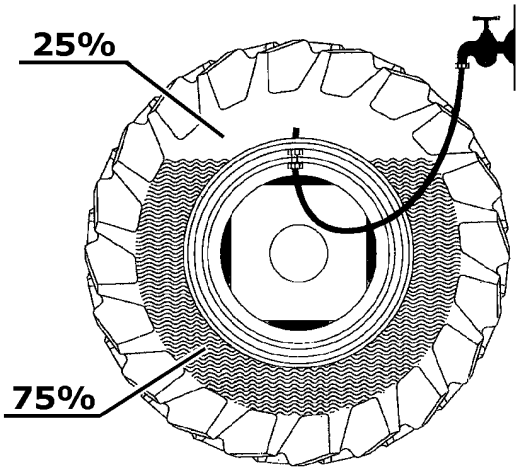

D0023-0

How to drain out the water:

- position the valve at the bottom.
- unscrew the mobile valve union.
- allow the water to drain out.
- finish emptying the tyre by means of a union with a pipe (draw pipe).
- inflate the tyre with air until all the water has been drained out.
- tighten the mobile valve union.
- inflate the tyre to the normal operating pressure.

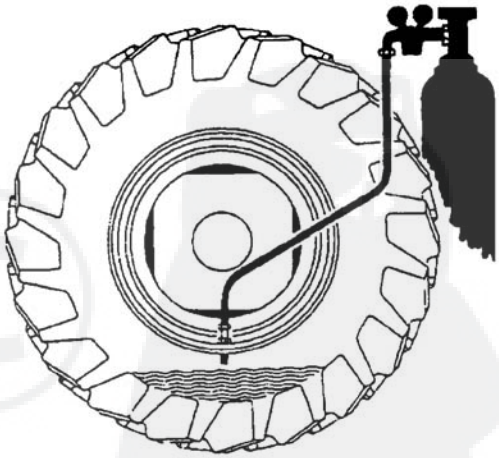

D0024-0

Wheels

Steering angle

The front wheels may interfere with the body of the machine when the track width is changed.
To prevent contact, the maximum steering angle can be regulated with the two limiters on the front axle:

- raise the front axle by jacking up the wheels.
- unscrew the two check nuts A.
- work on the two screws B.
- adjust the steering angle by taking the axle swing into account.
- tighten the two check nuts A.

Note: the steering angle must be the same on both sides.

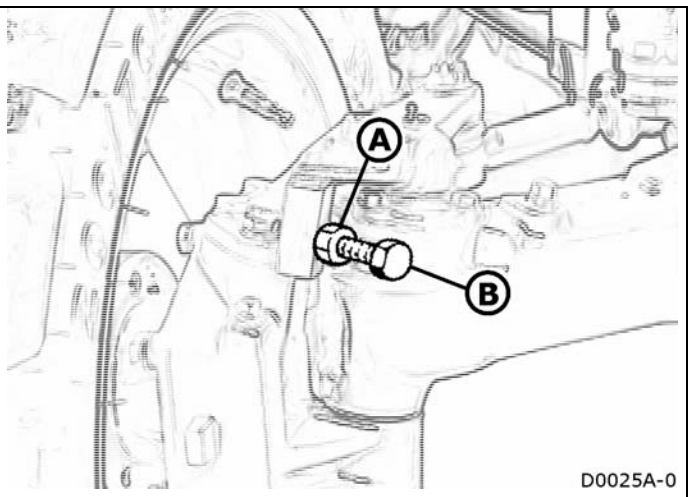

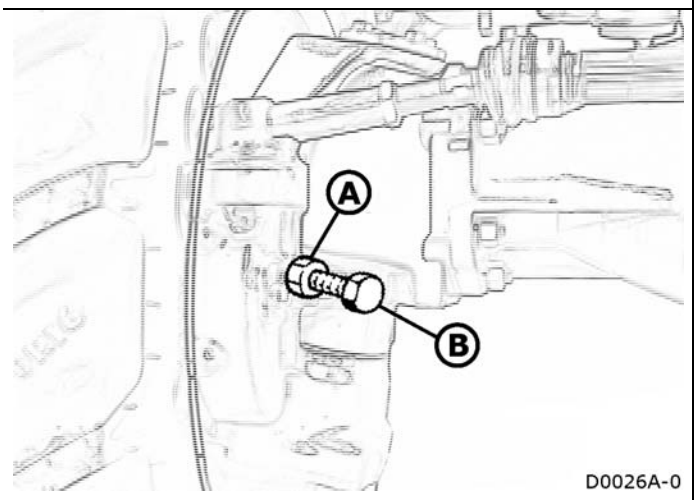

Front wheel toe-in

Measure the distance from wheel disc to wheel disc on the front and rear sides on a level with the front axle. Distance A must differ no more than 1.5 mm from distance B.

Proceed as described below to adjust the toe-in:

- loosen nut B.
- unscrew or tighten threaded bar A.
- tighten screw B (M18x1.5) with a 34 Kgm (334 Nm) driving torque.

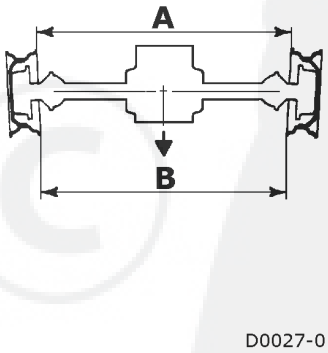

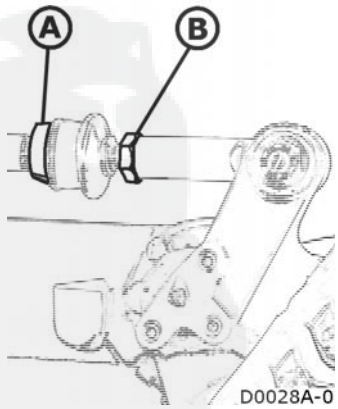

Track widths

The tractor can be equipped with adjustable, reversible wheel discs that allow the track width to be changed.

Whenever the wheels are reversed, check to make sure that the arrows indicating the turning direction on the tyre are pointing in the correct direction.

The overall width of the tractor is governed by laws when the tractor is driven on the roads: comply with the laws in force in the country of use.

WARNING: When disassembling the tyres:

- **Take the greatest care**
- **Use tools and equipment that set the tractor in safe conditions**
- **Use tools to lift heavy wheels.**

Wheel bolt torque values

A The driving torque to fix the flange to the disc is:

Ø 12” = 10Kgm (98Nm)

Ø 15”/16” = 15Kgm (147Nm)

Ø 18”/20”/24” = 25Kgm (245Nm)

B The driving torque to fix the wheel disc to the hub is:
Front (M14X1.5) = 15Kgm (147Nm)
Rear (M16X1.5) = 22Kgm (215Nm)

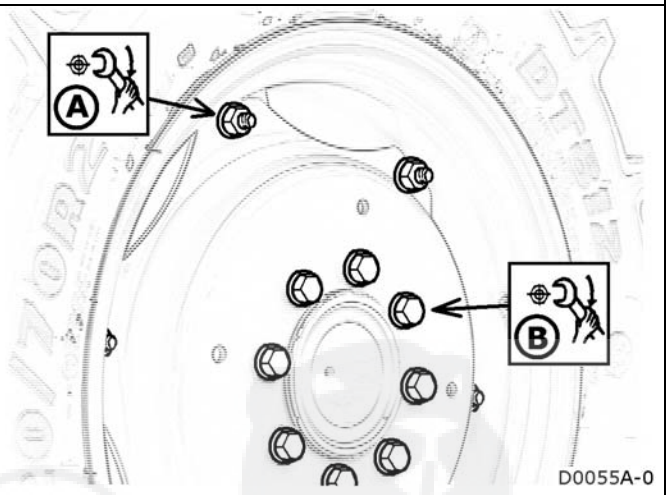

Transmission ratio

The ratio between the tip speed of the front and rear wheels must be accurately determined so that the front wheels are in advance. failing this, the tyres will be subjected to excessive wear.
Ask your dealer for advice when you change the size of tyres.

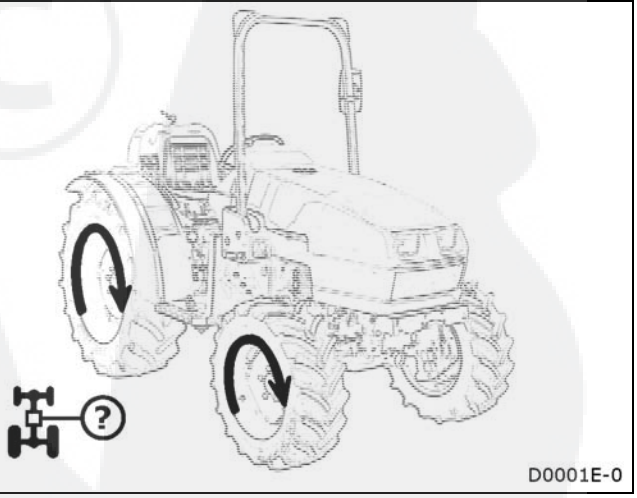

https://truckmanualshub.com/

Tyres

Absolutely avoid:
- **improper use**
- **overloading (even localized)**
- **unsuitable pressures**
- **unsuitable rim and tyre matches**

Tyre life and performance depends on use of the correct operating pressure: if the pressure is too low, the tyre will quickly wear out while an excessive pressure will reduce the lugging power and make the wheels more liable to slip.

A correct tyre pressure depends on various factors:
- the operating conditions
- the tractor load
- the tractor model
- the tyre make
- the tyre size

You are therefore advised to consult your dealer or the tyre manufacturer.

The values given below are only approximate as they depend on the conditions described above:

FRONT:	REAR:
2.4 bar	1.6 bar

WARNING: the tyres must only be changed by competent persons in possession of the necessary equipment and technical know-how.

How to tow the tractor

Only use normal towing attachments (tow bar or hook) for towing both the tractors (towing and towed).
Only use a safe, strong chain or special rope to connect the two tractors together.

NOTE:
- The tractor must only be towed for short distances and never on the public highways.
- Never drive faster than 10 kph when towing.
- An operator must remain seated in the towed tractor.

Transporting the tractor

The best way to move a tractor that has broken down is to transport it on the platform of a truck or trailer.

Fix the tractor to the platform by means of the couplings on this latter and using the tow hook (front and rear) as a connection point.

Do not fix the chains to the drive shaft, steering cylinders or other components that could be damaged by the chains themselves.

MAINTENANCE

Warning! Check the levels:

- Before using the machine
- With the machine at a standstill and the engine off (for at least the past hour).
- On a flat surface.

Routine maintenance guide:

This table briefly outlines the routine maintenance jobs. Consult the following pages for more details about routine maintenance or information about the variable servicing work required.

	Hours of service		Cleaning with compressed air		Greasing
	Check		Adjust		Change oil
	Clean		Lubricate		Replace

		8	50	150	300	400	800	x	Notes:
	Engine	Consult the engine's operation and maintenance manual							
	Fuel tank								
	Dry air filter								
	Cooling circuit								Change fluid every 2 years; FIAT PARAFLU 11 (Mod.35,40 7 l.; Mod.45 8.5 l.)
	Gearbox housing, rear differential, power lift								AGIP SUPER TRACTOR UNIVERSAL SAE 15W/40 (20 kg)
	Front axle mod.35-40								AGIP SUPER TRACTOR UNIVERSAL SAE 15W/40 (2.5 kg)
	Front axle mod.45								AGIP Rotra MP SAE 80W/90 (3.5 kg)
	Rear diff lock								Change fluid every 2 years; AGIP ATF II D
	Final drive lever								AGIP GREASE LP2
	Brakes								Change fluid every 2 years; AGIP ATF II D
	Battery								

https://truckmanualshub.com/

How to open the bonnet

Pull the knob

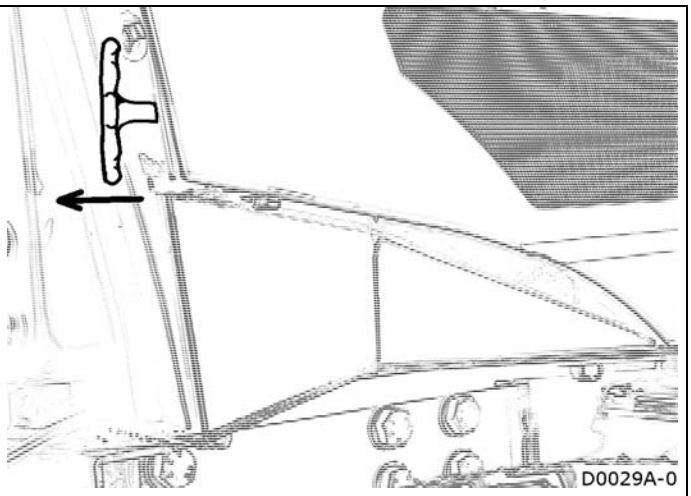

Engine assembly

Engine

Consult the specific manual for the safety notes and operation and maintenance instructions for certain of the components manufactured by other companies.

Fuel tank

Do not dispose of fluids like fuels, lubricants, coolants and various other liquids, in the environment.

Check **8**

Check:

- to make sure that there is sufficient fuel for the whole job.
- to make sure that there are no dents or abrasions on the tank.

Clean **8**

Clean the zone surrounding the tank plug.

Top up level **8**

Use good quality fuel with the technical specifications described in the engine's operation and maintenance manual.

WARNING: top up the fuel level when the engine is off and not overheated. Do not smoke near fuel or when the tank is being filled.

Replace

Replace the fuel plug with a genuine spare if it is missing or damaged. Replace the tank with a genuine spare if it has been damaged by scratches, abrasions or dents.

Dry air filter

WARNING: Stop the engine and wait until it has cooled down before proceeding with any servicing operations.

Clean **50**

Clean drain valve A when required, or at least once a week.

Clean the filter whenever the warning light comes on or when necessary, after evaluating the environmental conditions in which the machine works (dusty, dry, etc.). Proceed as described below:

- release and remove the cover.
- remove the external filter.
- blow a jet of compressed air (maximum pressure 3 BAR) from the inside towards the outside.
- fit the filter back into its housing.
- close with the cover, with the drain valve in the lowest position.

DO NOT remove the internal safety filter (it must neither be cleaned nor damaged).

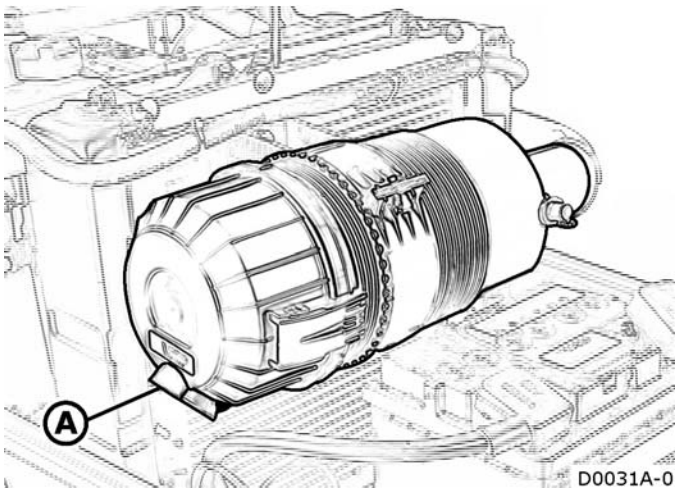

Replace **300**

Replace the external filter when required, or at least after every 300 h service.
Replace the internal safety filter when required, or at least once a year.

Cooling system

WARNING: Stop the engine and wait until it has cooled down before proceeding with any servicing operations.

Never open the radiator's expansion tank whilst the engine is hot since the cooling fluid could cause burns as it is under pressure and very hot.

WARNING: Do not dispose of fluids such as fuels, lubricants, coolants and other various liquids, in the environment.

Check — 8

- Check the level of the cooling fluid.
- Make sure that the radiator guard is clean.
- Check the belt tension (see engine's operation and maintenance manual)
- Every so often, check to make sure that all the pipe clamps are well tightened.

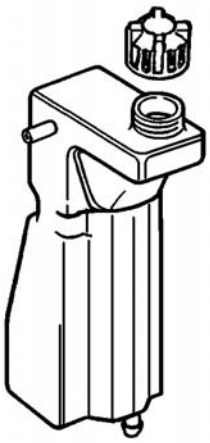

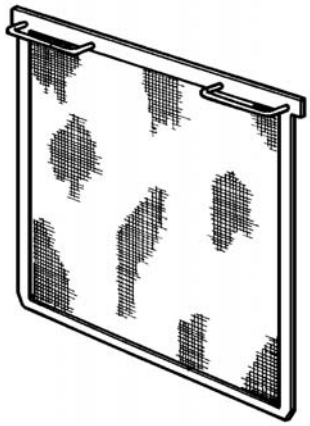

Clean — 50

Clean the radiator guard when necessary, or at least once a week:

- Remove the guard from its housing.
- Use compressed air.

Top up level

Top up the level of the cooling fluid when required:

- Remove the plug from the reservoir.
- It is advisable to use FIAT PARAFLU 11 fluid.
- It is also advisable to use antifreeze solutions, complying with the specifications given on the relative package.
- Screw the plug back on and tighten it fully.

Change

Change the cooling fluid every two years:

- Unscrew the plug at the top of the radiator.
- Unscrew the plug at the bottom of the radiator.
- Empty the circuit.

Capacity of the circuit: consult the technical specifications section.

Transmission assembly

Gearbox housing, rear differential, power lift

These parts of the tractor use the same oil as the transmission.

WARNING: Do not dispose of fluids such as fuels, lubricants, coolants and other various liquids, in the environment.

Check 50

Check the oil level by means of the dipstick (MIN-MAX)

If necessary, top up with oil of the recommended type.

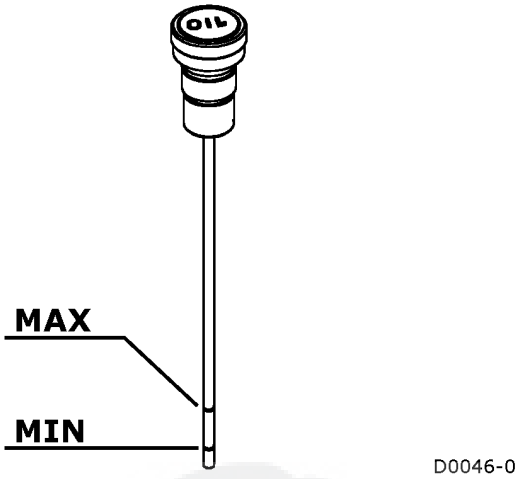

Clean

Keep the following parts clean:

- the oil bleeder plug on top of the power lift housing, under the seat.
- the zone surrounding the plug with the dipstick.

Clean 400

Clean the transmission oil filter:
- after the first 50 hours service
- whenever the oil is changed
- after every 400 hours service
- when the red clogged oil filter indicator light comes on

To clean the filter:
- unscrew the bolts that fix the cover
- remove the filter
- wash with gasoline or diesel fuel
- dry with compressed air
- fit the cover back on and close it.

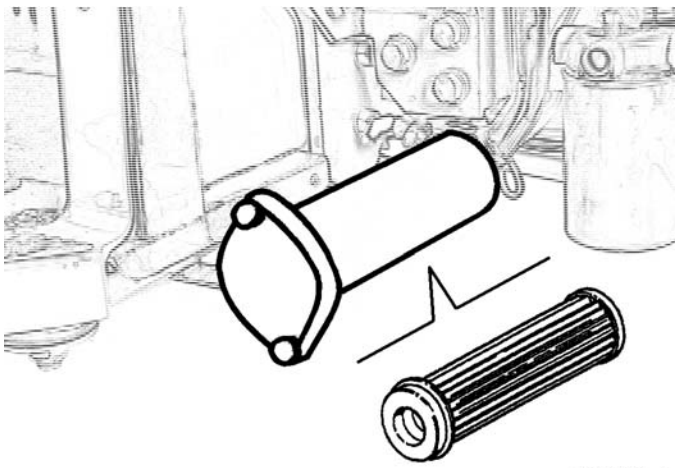

D0034A-0

Top up level

Check the oil level by means of the dipstick (MIN-MAX)

If necessary, top up with oil of the recommended type.

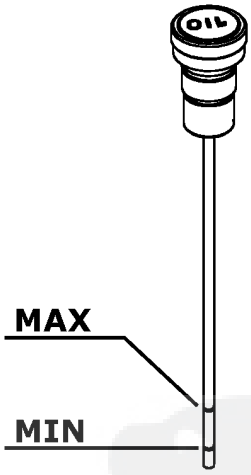

D0046-0

Change 800

Change the transmission oil with 20 kg of new oil.

The recommended type of oil is
AGIP SUPER TRACTOR UNIVERSAL SAE 15W/40

Oil draining: plug A
Oil filling: plug with dipstick (MIN-MAX)

Allow the oil to settle before checking the new level.
Change the transmission oil filter as necessary.

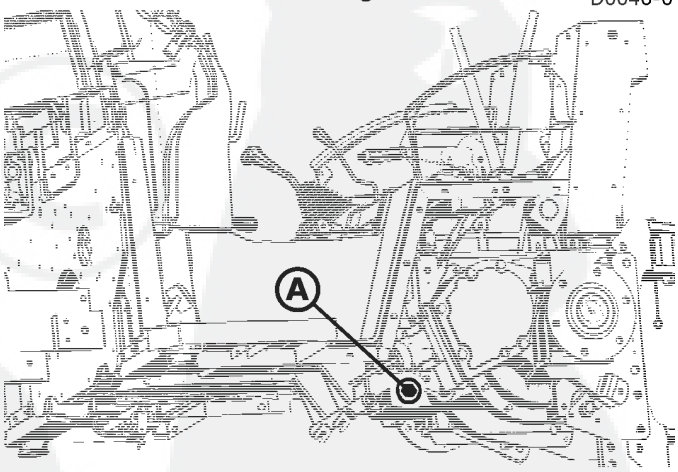

D0035A-0

Mod.35-40 front axle

WARNING: Do not dispose of fluids such as fuels, lubricants, coolants and other various liquids, in the environment.

Check and Top up — 50

Check the oil level with the dipstick (MIN-MAX)
If necessary, top up with oil of the recommended type.

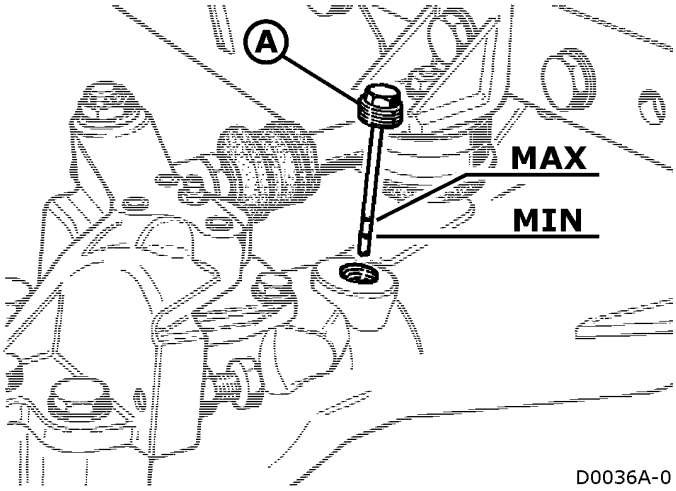

Clean

Keep the following part clean:

- the zone surrounding the plug with dipstick.

Greasing — 50

Grease the following parts:
A front axle pivot pin (2 lubricators).
B the hub kingpins
(2 lubricators: right and left)
It is advisable to use
AGIP GREASE LP2

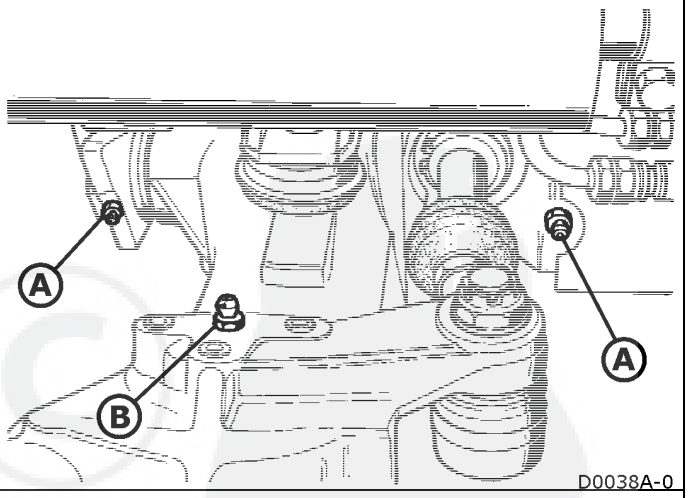

Change — 800

Change the transmission oil with 2.5 kg of new oil. The recommended oil is
AGIP SUPER TRACTOR UNIVERSAL SAE 15W/40

Oil draining: plug B
It is advisable to unscrew the plugs on the hubs to allow the oil to drain out more easily.
Oil filling: plug A (MIN-MAX)
Allow the oil to settle before checking the new level.

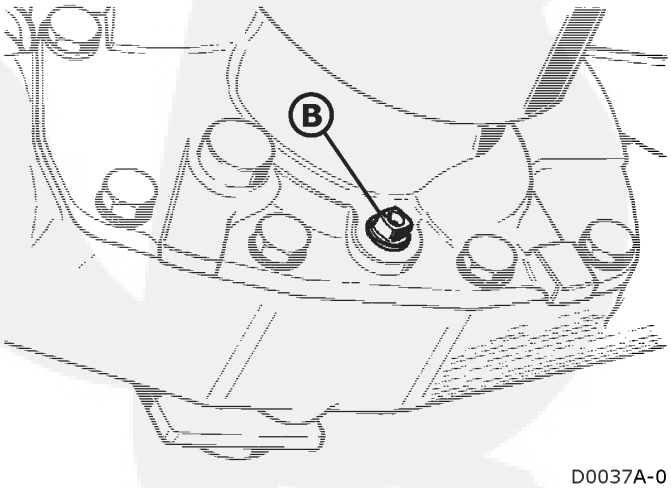

Mod.45 front axle

WARNING: Do not dispose of fluids such as fuels, lubricants, coolants and other various liquids, in the environment.

Check and Top up — 50

Check the oil level through plug **A**

If necessary, top up with oil of the recommended type.

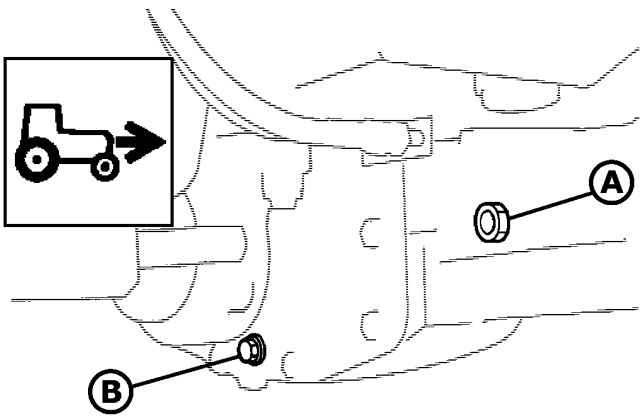

D0039A-0

Clean

Keep the following part clean:

- the zone surrounding plug A.

Greasing — 50

Grease:

- the front axle pivot pin (2 lubricators).

It is advisable to use
AGIP GREASE LP2

Change — 800

Change the transmission oil with 3.5 kg of new oil.

The recommended oil is
Agip Rotra MP SAE 80W/90

Oil draining: plugs B and D

It is advisable to unscrew plugs C on the hubs to allow the oil to drain out more easily.

Oil filling: plug A

Allow the oil to settle before checking the new level.

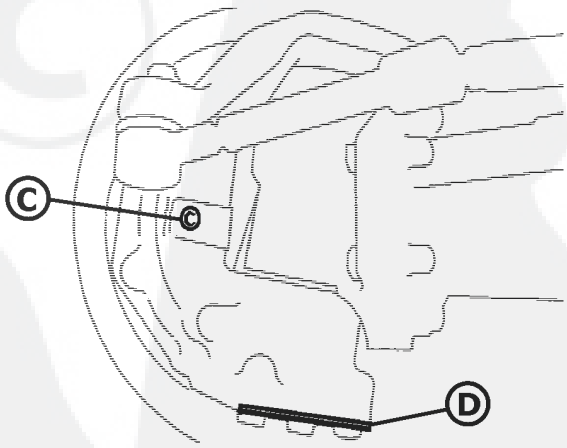

D0040A-0

Main clutch

Check

Periodically check the idle travel of the control pedal.

A = 20mm

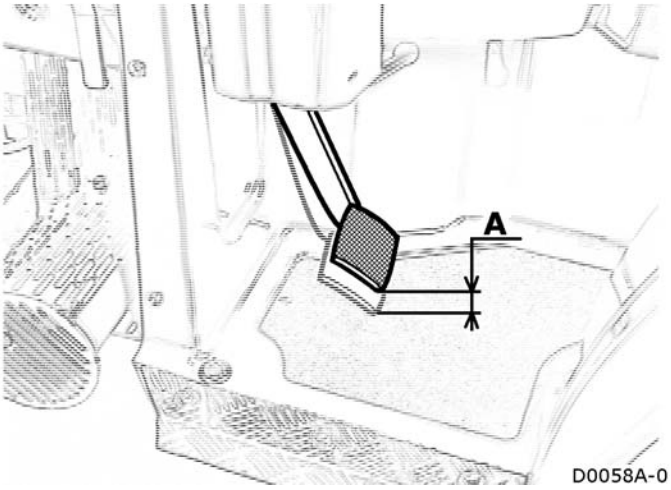

Adjust

To adjust the pedal's travel:

- loosen the check nut
- operate the adjuster
- tighten the check nut
- check the idle travel.

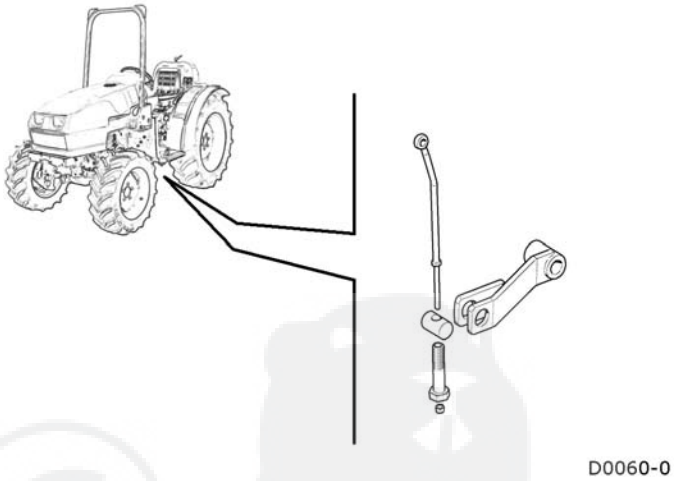

Replace

If necessary, have the clutch assembly replaced by an authorized workshop. Only use a genuine spare.

Rear power take-off clutch

Check

Periodically check the idle travel of the control pedal.

A = 20mm

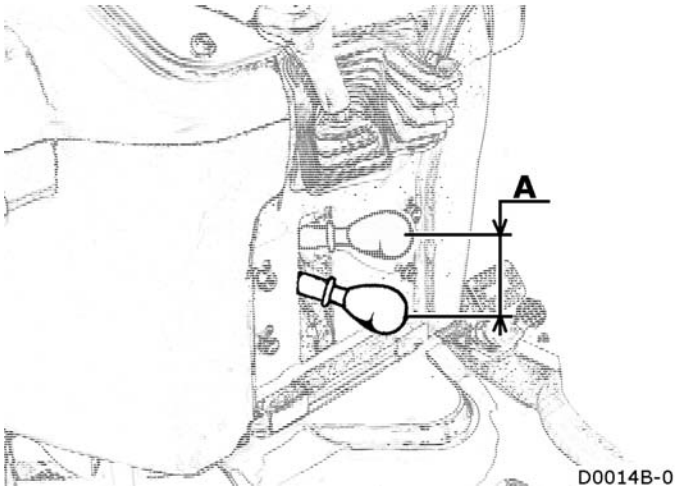

Adjust

To adjust the pedal's travel:

- loosen the check nut
- operate the adjuster
- tighten the check nut
- check the idle travel.

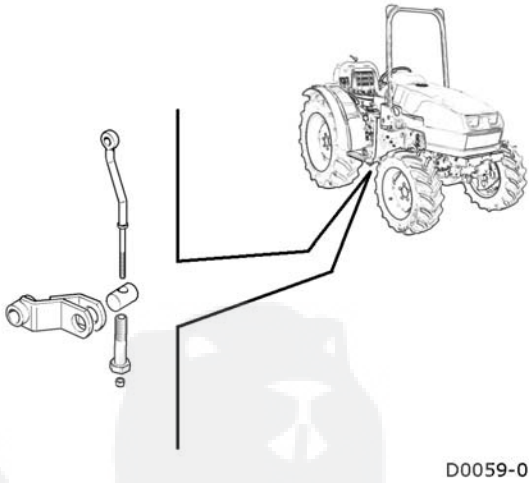

Replace

If necessary, have the clutch assembly replaced by an authorized workshop. Only use a genuine spare.

https://truckmanualshub.com/

Rear differential lock

The differential lock is controlled mechanically by means of a pedal that operates a hydraulic cylinder.

WARNING: Do not dispose of fluids such as fuels, lubricants, coolants and other various liquids, in the environment.

Check **150**

Check the level of the hydraulic oil in the tank.

The tank must be three-quarters full.

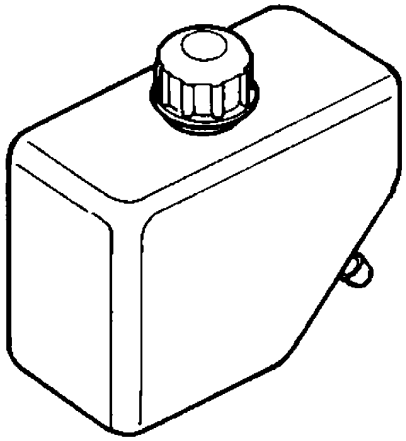

D0042-0

Top up level

If necessary, top up the level in the tank.

Recommended oil AGIP ATF II D

Change **X**

The oil in the hydraulic circuit must be changed every 2 years.
Recommended oil AGIP ATF II D

Final drive lever

Greasing **50**

Grease the final drive lever.

Recommended grease
AGIP GREASE LP2

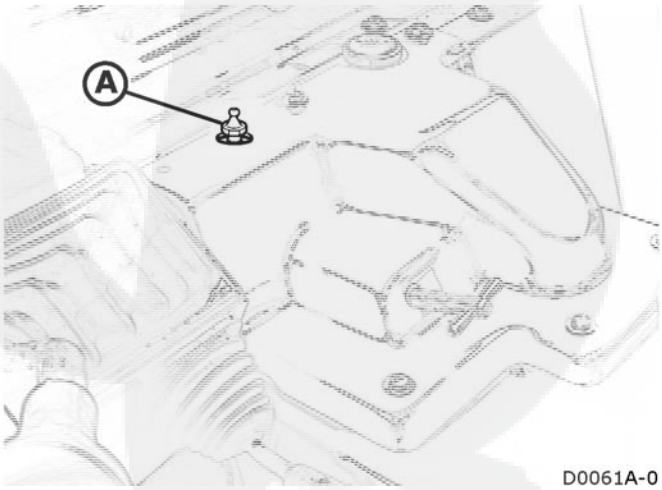

D0061A-0

https://truckmanualshub.com/

Brakes

The braking system is controlled mechanically by means of two pedals that operate two hydraulic cylinders.

WARNING: Do not dispose of fluids such as fuels, lubricants, coolants and other various liquids, in the environment.

Check **150**

Check the level of hydraulic oil in the reservoir.

The reservoir must be three-quarters full.

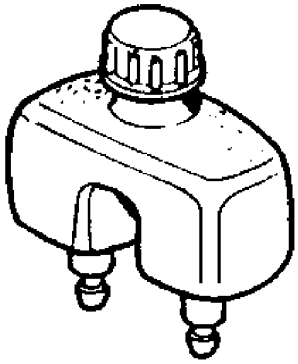

D0041-0

Adjust

Adjust the brakes if brake pedal travel becomes excessive or when one of the wheels brakes in a different way.

IMPORTANT: Only your dealer or specialized personnel may adjust the braking system.

Top up level

Top up the level in the reservoir when necessary.
Recommended oil
AGIP ATF II D

Change **X**

The oil in the hydraulic circuit must be changed every 2 years.
Recommended oil
AGIP ATF II D

Electrical system

WARNING: Always disconnect the battery's ground cable (negative pole with the "-" symbol) before working on the electrical system.

Battery

WARNING: Work on the battery requires particular care: the electrolyte is corrosive and the gases released are inflammable.

DISPOSAL*:* Exhausted batteries must be consigned to authorized disposal centers. Do not dispose of batteries in the environment or in normal urban waste bins.

Check 50

Make sure that the battery is firmly fixed to the tractor.

Clean

Keep the battery clean with a damp, antistatic cloth.
Keep the battery poles and cable terminals clean.

Greasing

Lightly grease the poles and terminals when necessary.
Use Vaseline-based grease, not normal grease.

Top up level

This type of battery cannot be topped up.

WARNING: DO NOT OPEN THE BATTERY

Idle periods

If the tractor is not used for a long period of time:

- charge the battery as indicated by the manufacturer.
- disconnect both the cables.
- store the battery in a cool, dry, well ventilated place.

Replace

If the battery must be replaced, make sure the new one possesses identical technical specifications (the values are given on the actual battery itself).

Headlights

If the tractor must be driven on the public highways, the headlights must comply with the Highway Code regulations in force in the country of use.

Adjust

Consult specialized personnel in possession of the specific tools required in order to have the headlights adjusted correctly.

Replace

Replace burnt-out light bulbs with others if identical technical characteristics (see indications on the bulbs themselves).
Consult specialized personnel if in doubt.

https://truckmanualshub.com/

Fuses

The electrical system is protected by fuses against short circuits or abnormal power draw.

The tractor has a main fuse. This fuse protects the entire electrical system.

Replace

Replace burnt-out fuses with others possessing identical technical specifications (the relative indications are given on the fuses themselves).
Consult specialized personnel if in doubt.

Fuse functions:

N°	A	Function
A	20A	Power socket power supply
B	15A	Horn power supply
C	5A	Rh front side light Lh rear side light 7-pin socket
D	5A	Lh front side light License plate light Rh rear side light 7-pin socket
E	5A	Brake light power supply Four-wheel drive switch PTO switch Multi-function dashboard
F	10A	Fuel pump motor Motor stop coil
G	7.5A	Lh dipped beam
H	7.5A	Rh dipped beam
I	10A	7-pin socket power supply
L	10A	+15 power supply Hazard light switch
M	10A	+30 power supply Hazard light switch
N	15A	Rh driving beam Lh driving beam

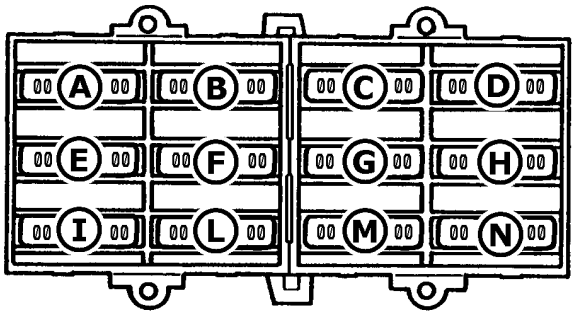

D0047-0

Main fuse

50 A	General protection of electrical system

Engine air filter clogging sensor

Check

Check to make sure that the engine air filter clogging sensor is in the right position. If servicing is required, make sure that the sensor is assembled correctly and protected against adverse weather conditions as indicated in the figure.
It is essential for cable A, that connects to the electrical system of the machine, to be routed through the lower part of the sensor.
If the protection is positioned incorrectly, this could cause serious damage to the engine's air intake circuit.

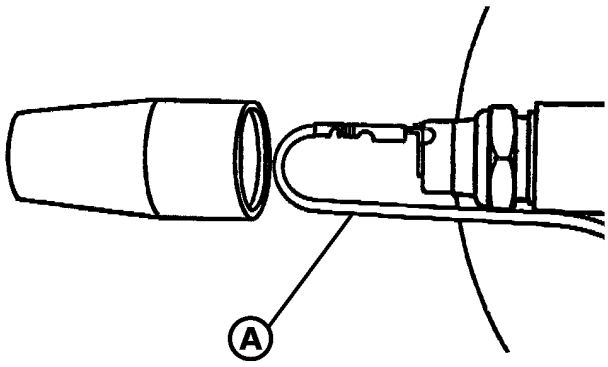

D0044A-0

Bodywork

WARNING: If you use jets of pressurized water for cleaning, direct the jet well away from:

- **tyres**
- **hydraulic pipes**
- **radiator**
- **electrical components**
- **soundproofing seals**

and other components that could be damaged by the pressure of the water.

WARNING: Do not dispose of fluids such as fuels, lubricants, coolants and other various liquids, in the environment.

Check

Periodically check the condition of the bodywork. Abrasions and deep scoring must be repaired by specialized personnel to ensure long life. Make sure that water does not remain in hidden parts of the bodywork.

Clean

Clean the bodywork with a normal solution of water and a specific shampoo:

- when needed if the tractor is used in a normal environment.
- frequently if it is used in places near the sea.
- immediately after using organic substances or chemicals.

Air conditioning system

WARNING: Never tamper with the air conditioning system: always contact specialized personnel.

WARNING: Keep naked flames and heat sources well away from the air conditioning system.

WARNING: Never loosen unions and/or tamper with pipes: the system is pressurized. The refrigerant can freeze the skin and eyes.

WARNING: Do not dispose of fluids such as fuels, lubricants, coolants and other various liquids, in the environment.

Check

Periodically check:
- the condition of the pipes and unions.
- that the pulley and compressor screws are well tightened.
- the tension of the compressor belt.

Have the following parts checked annually by specialized personnel:
- compressor oil level
- tightness of the system (using special tools)

Clean

Clean the following components with compressed air when required, or at least once a week:
- the cab radiator's side ventilation grilles
- the cab radiator / fan compartment

They are installed on the top part of the roof.

You are advised to contact an Authorized Assistance Center if there is a great deal of dirt inside the radiator.

Adjust

Adjust the tension of the compressor belt when required.

TECHNICAL SPECIFICATIONS

General specifications			35	40	45
Engine	Make		Lombardini		
	Model		LDW1503	LDW1603	LDW2204
	Power rating	kW (CV)	24 (33)	27 (36)	32 (44)
	Other data		See engine's operation and maintenance manual		
	Tank capacity (reserve)	l	40 (5)	40 (5)	40 (5)
	Cooling system	l	7	7	8.5
Transmission	N° speed gears		12 + 4 reverse + 12 with reverse shuttle		
	Type of clutch		Dry		
	Diameter		9"		
	Reverse shuttle		Synchronized		
	Speed	kph	30		
Steering system	Steering angle		55°		
Power take-off	Independent rear PTO		540 rpm (with 2518 rpm engine rate) 1000 rpm (with 2500 rpm engine rate)		
	Optional		2000 rpm (with 2500 rpm engine rate)		
	Shaft profile		1" 3/8 ASAE with 6 splines		
	Rotation direction		clockwise		
	Rear Synchronized with engine		counter-clockwise		
	Shaft profile		1" 1/8 ASAE with 6 splines		
	Ratio of synchronized PTO rev. / wheel turn		21.83		
Rear power lift	Lifting capacity	kg	1400		
	Three-point hitch		Class 1		
Optional front power lift	Lifting capacity	kg	800		
	Three-point hitch		Class 1N		
Hydraulic circuit	Pump capacity	l / min.	33		

Dimensions and weights

			35	40	45
A	Min-max length	mm	2485 -2560		2575 - 2650
N/M	Min-max width	mm	1060 -1600		1060 - 1600
F	Min-max height to chassis	mm	1825 -1900		1825 - 1900
Q	Min-max height to cab	mm	2140 - 2230		2140 - 2230
K	Min-max height to seat	mm	975 - 1050		975 - 1050
H	Min-max ground clearance	mm	250 - 330		250 - 330
C	Wheelbase	mm	1620		1685
P	Min-max front track	mm	900 - 1200		900 - 1200
L	Min-max rear track	mm	860 - 1270		860 - 1270
	Minimum turning radius with brakes	m	2.8		3
	Weight with safety frame	kg	1380		1450
	Weight with cab	kg	1480		1550
	Front ballast	kg	15 x 5		

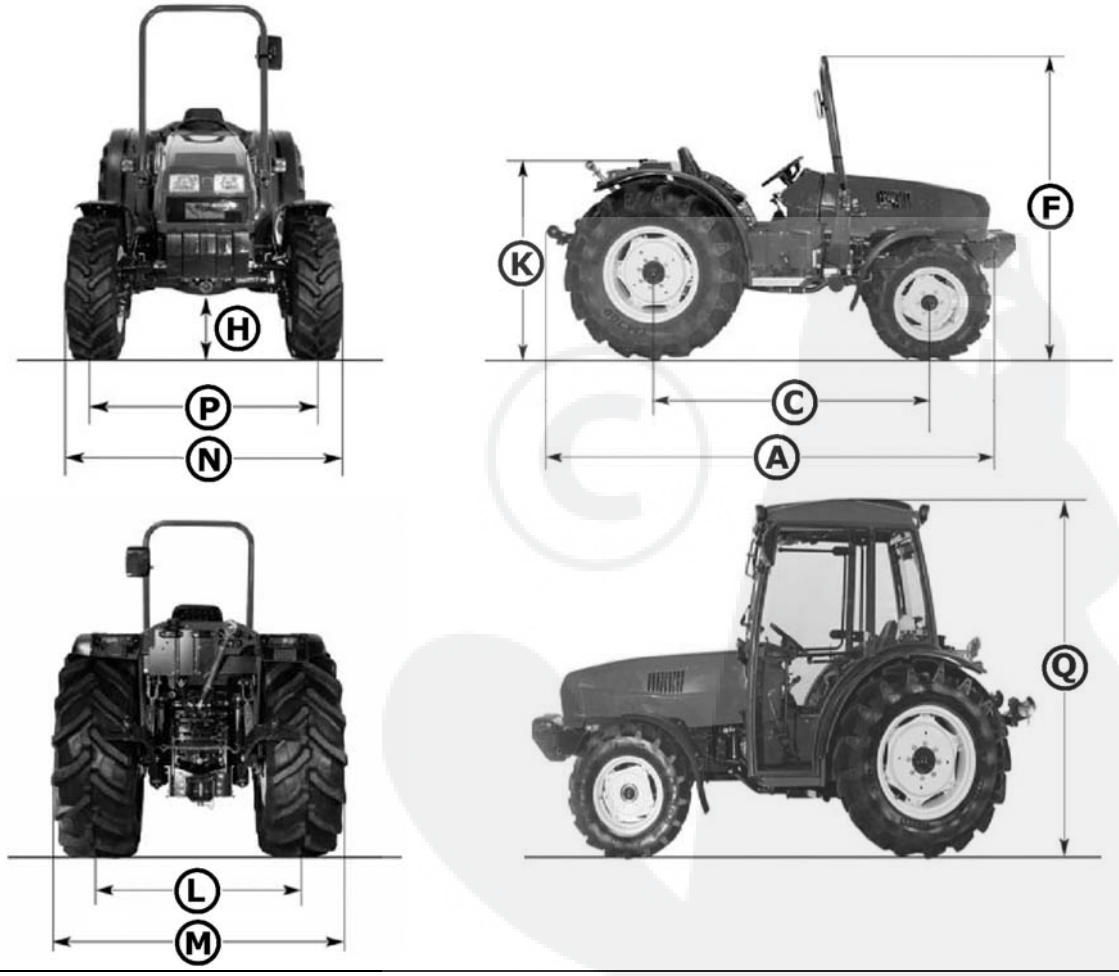

https://truckmanualshub.com/

Speeds

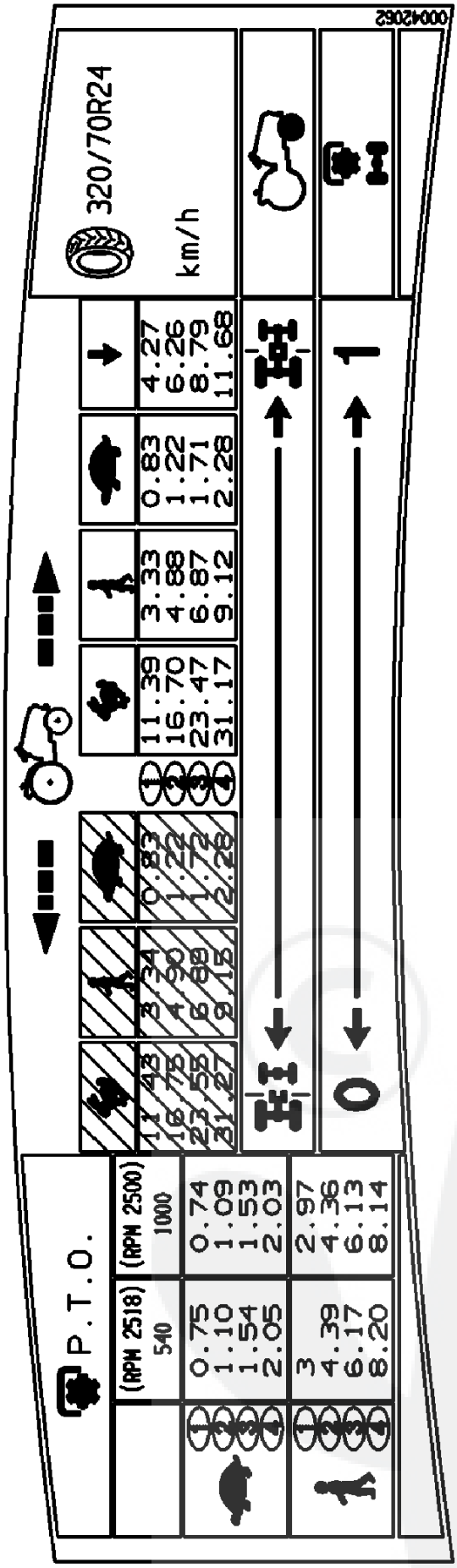

00042062-2

Recommended lubricants

Comply with the following specifications if other lubricant makes are used:

Agip ATF II D Oil Viscosity at 40° C (mm2/s) ..... 34 Viscosity at 100° C (mm2/s) ..... 7 Viscosity at -40° C (mPa.s)..... 45000 Viscosity index..... 183 V.A. flash point (°C)..... 200 Pour point (°C)..... -42 Colour……red Volume mass at 15 °C (kg/l)..... 0.865	**JD:**	**Standard:**
Agip Supertractor oil **Universal SAE 15W/40** Viscosity at 40° C (mm2/s) ..... 100 Viscosity at 100° C (mm2/s) ..... 13.6 Viscosity at -15° C (mPa.s)..... 3300 Viscosity index..... 135 Flash point V.A. (°C)..... 220 Pour point (°C)..... -27 Absolute gravity at 15 °C (Kg/l) ... 0.884	**JD:**	**Standard:**
Agip Rotra MP SAE 80W/90 oil Viscosity at 40° C (mm2/s) ..... 144 Viscosity to 100° C (mm2/s) ..... 15 Viscosity at -26° C (mPa.s)..... 110000 Viscosity index..... 104 Flash point V.A. (°C)..... 210 Pour point (°C)..... -27 Absolute gravity at 15 °C (Kg/l) ... 0.900	**JD:**	**Standard:**
Agip GR LP 2 grease NLGI consistency ..... 2 Worked penetration (dmm)..... 280 Dropping point ASTM (°C)..... 182 Timken OK Load (lbs)..... 50 Basic oil viscosity at 40°C (mm2/s) 160	**JD:**	**Standard:**

https://truckmanualshub.com/

https://truckmanualshub.com/

Published by the TECHNICAL PUBLICATIONS OFFICE
Serial N° 06380979 / 2th Edition

Printed in Italy