https://truckmanualshub.com/

LOADOLL II
Operators Manual

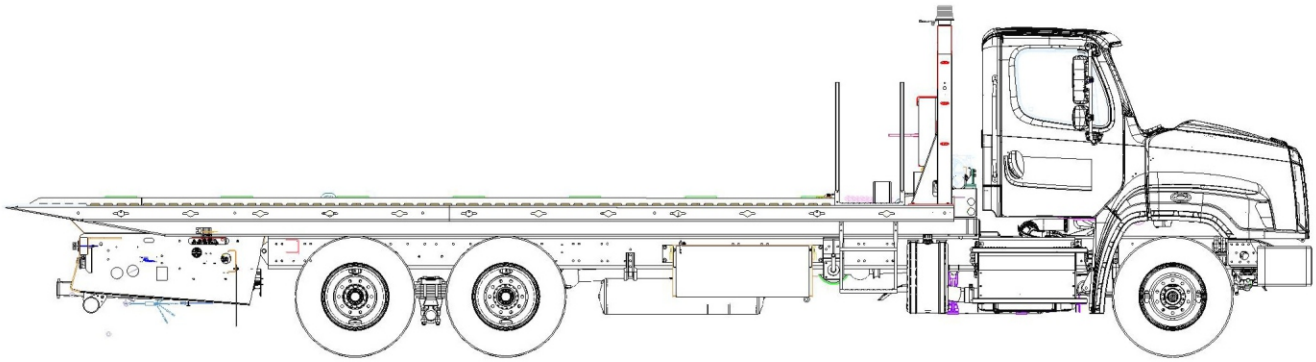

LANDOLL CORPORATION
1900 North Street
Marysville, Kansas 66508
(785) 562-5381
800-428-5655 ~ WWW.LANDOLL.COM

F-1036-0519 **05/2019 to Present**

https://truckmanualshub.com/

https://truckmanualshub.com/

TABLE OF CONTENTS

DESCRIPTION	PAGE NO.
INTRODUCTION	1-1
STANDARD SPECIFICATIONS	2-1
OPERATING INSTRUCTIONS	3-1
Bed Tilt Control	3-1
Free Spool Clutch Operation	3-3
Winch Controls	3-4
Bed Slide Control	3-5
Basic Hitch Controls(Option)	3-5
Special Hitch Control(Option)	3-5
Power Take-off(PTO)	3-5
Bed Loading	3-6
Bed Unloading	3-7
Load Placement	3-7
Securing Loads to Bed	3-7
Hitch Operation(Option)	3-8
Remote Control (Option)	3-10
Cold Weather Operation	3-11
Hot Weather Operation	3-11
MAINTENANCE and LUBRICATION	4-1
Maintenance Schedule	4-3
Maintenance Procedures	4-3
Frame and Deck	4-4
Hydraulic System	4-4
Electrical System	4-5
TROUBLE SHOOTING GUIDE	5-1

https://truckmanualshub.com/

SAFETY PRECAUTIONS

THIS IS THE SAFETY ALERT SYMBOL. IT IS USED TO ALERT YOU TO POTENTIAL INJURY HAZARDS. OBEY ALL SAFETY MESSAGES THAT FOLLOW THIS SYMBOL TO AVOID POSSIBLE INJURY OR DEATH.

⚠DANGER — **DANGER INDICATES AN IMMINENTLY HAZARDOUS SITUATION WHICH, IF NOT AVOIDED, WILL RESULT IN DEATH OR SERIOUS INJURY.**

⚠WARNING — **WARNING INDICATES A POTENTIALLY HAZARDOUS SITUATION WHICH, IF NOT AVOIDED, COULD RESULT IN DEATH OR SERIOUS INJURY.**

⚠CAUTION — **CAUTION INDICATES A POTENTIALLY HAZARDOUS SITUATION WHICH, IF NOT AVOIDED, MAY RESULT IN MINOR OR MODERATE INJURY.**

CAUTION — **<u>CAUTION USED WITHOUT THE SAFETY ALERT SYMBOL</u> INDICATES A POTENTIALLY HAZARDOUS SITUATION WHICH, IF NOT AVOIDED, MAY RESULT IN PROPERTY DAMAGE.**

https://truckmanualshub.com/

Chapter 1

Introduction and Safety Information

Introduction

This manual provides operating, servicing, and maintenance instructions for Two Ton Loadoll with Steel Bed, manufactured by Landoll Corporation, Marysville, Kansas 66508.

CHAPTER 1 gives basic instructions on the use of this manual and understanding the safety statements.

CHAPTER 2 gives product specifications for the trailer, including measurements and component specifications. A Standard Bolt Torque Table is provided to give guidelines for bolt torques to be used when servicing this product.

CHAPTER 3 gives instructions for the proper operation of the equipment.

CHAPTER 4 gives general maintenance procedures, a maintenance schedule, and a lubrication schedule. Improper maintenance will void your warranty.

IF YOU HAVE ANY QUESTIONS CONTACT:
LANDOLL CORPORATION
1900 NORTH STREET
MARYSVILLE, KANSAS 66508

PHONE # (785) 562-5381 or (800) 428-5655
OR
FAX # (888) 527-3909

CHAPTER 5 is a troubleshooting guide to aid in diagnosing and solving problems with the trailer.

PARTS MANUAL is a separate manual showing the various assemblies, subassemblies, and systems. Refer to that manual when ordering Landoll replacement parts. Order parts from your Landoll dealer.

WARRANTY The Warranty Registration form is included with the product documents. Fill it out and mail it within 15 days of purchase.
NOTE: IMPROPER ASSEMBLY, MODIFICATION, OR MAINTENANCE OF YOUR LANDOLL MACHINE CAN VOID YOUR WARRANTY.

COMMENTS Address comments or questions regarding this publication to:

LANDOLL CORPORATION
1900 NORTH STREET
MARYSVILLE, KANSAS 66508
ATTENTION: PUBLICATIONS -DEPT. 55

https://truckmanualshub.com/

https://truckmanualshub.com/

STANDARD SPECIFICATIONS 2

BED LENGTH.....24', 25-1/2' or 28'

DECK MATERIAL.....STEEL

LOAD ANGLE..... 14° ± 2° DEPENDING ON TRUCK

BED WIDTH..... 102"

BED CAPACITY..... 20,000#

HITCH CAPACITY..... (SEE FOLLOWING)

VERTICAL LOADING,

HITCH NOT EXTENDED BACK……4000#

HITCH EXTENDED BACK 1 FOOT……..3000#

HITCH EXTENDED BACK 2 FEET…….. 2000#

HITCH EXTENDED BACK 3 FEET (full extension)……...1500#

HORIZONTAL LOADING UP TO TOWING (not extended back) 16,000 GVWR UNIT

HITCH EXTENDED BACK 1 FOOT……..16,000 GVWR UNIT

HITCH EXTENDED BACK 2 FEET…… 13,000 GVWR UNIT

HITCH EXTENDED BACK 3 FEET……..10,000 GVWR UNIT

CHAIN DRIVE CONTINOUS POWER LOAD
SYSTEM.....12,000#

WINCH WARN …….. 20,000#

HYDRAULIC RESERVOIR CAPACITY..... 25 GAL.

HYDRAULIC SYSTEM (reservoir, components, and plumbing)..... 33 GAL. for 22' Model
38 GAL. for 25-1/2' Model
42 GAL. for 28' Model

https://truckmanualshub.com/

LANDOLL CORPORATION
GENERAL TORQUE SPECIFICATIONS (REV. 4/97)

THIS CHART PROVIDES TIGHTENING TORQUES FOR GENERAL PURPOSE APPLICATIONS WHEN SPECIAL TORQUES ARE NOT SPECIFIED ON PROCESS OR DRAWING.
ASSEMBLY TORQUES APPLY TO PLATED NUTS AND CAPSCREWS ASSEMBLED WITHOUT SUPPLEMENTAL LUBRICATION (AS RECEIVED CONDITION). THEY DO NOT APPLY IF SPECIAL GRAPHITE MOLY-DISULFIDE OR OTHER EXTREME PRESSURE LUBRICANTS ARE USED.
WHEN FASTENERS ARE DRY (SOLVENT CLEANED), ADD 33% TO AS RECEIVED CONDITION TORQUE.
BOLT HEAD IDENTIFICATION MARKS INDICATE GRADE AND MAY VARY FROM MANUFACTURER TO MANUFACTURER.
THICK NUTS MUST BE USED ON GRADE 8 CAPSCREWS.
USE VALUE IN [ ] IF USING PREVAILING TORQUE NUTS.
TORQUE IS SPECIFIED IN FOOT POUNDS

UNC Size	SAE Grade 2		SAE Grade 5		SAE Grade 8		UNF Size	SAE Grade 2		SAE Grade 5		SAE Grade 8	
1/4-20	4	[5]	6	[7]	9	[11]	1/4-28	5	[6]	7	[9]	10	[12]
5/16-18	8	[10]	13	[16]	18	[22]	5/16-24	9	[11]	14	[17]	20	[25]
3/8-16	15	[19]	23	[29]	35	[43]	3/8-24	17	[21]	25	[31]	35	[44]
7/16-14	24	[30]	35	[43]	55	[62]	7/16-20	27	[34]	40	[50]	60	[75]
1/2-13	35	[43]	55	[62]	80	[100]	1/2-20	40	[50]	65	[81]	90	[112]
9/16-12	55	[62]	80	[100]	110	[137]	9/16-18	60	[75]	90	[112]	130	[162]
5/8-11	75	[94]	110	[137]	170	[212]	5/8-18	85	[106]	130	[162]	180	[225]
3/4-10	130	[162]	200	[250]	280	[350]	3/4-16	150	[188]	220	[275]	320	[400]
7/8-9	125	[156]	320	[400]	460	[575]	7/8-14	140	[175]	360	[450]	500	[625]
1-8	190	[237]	408	[506]	680	[850]	1-14	210	[263]	540	[675]	760	[950]
1-1/8-7	270	[337]	600	[750]	960	[1200]	1-1/8-12	300	[375]	660	[825]	1080	[1350]
1-1/4-7	380	[475]	840	[1050]	1426	[1782]	1-1/4-12	420	[525]	920	[1150]	1500	[1875]
1-3/8-6	490	[612]	110	[1375]	1780	[2225]	1-3/8-12	560	[700]	1260	[1575]	2010	[2512]
1/1-2-6	650	[812]	1460	[1825]	2360	[2950]	1/1-2-12	730	[912]	1640	[2050]	2660	[3325]

METRIC

COARSE THREAD METRIC CLASS 10.9 FASTENERS AND CLASS 10.0 NUTS AND THROUGH HARDENED FLAT WASHERS, PHOSPHATE COATED, ROCKWELL “C” 38-45.
USE VALUE IN [ ] IF USING PREVAILING TORQUE NUTS.

Nominal Thread Diameter mm	Standard Torque				Nominal Thread Diameter mm	Standard Torque			
	Newton-Meters		Foot-Pounds			Newton-Meters		Foot-Pounds	
6	10	[14]	7	[10]	20	385	[450]	290	[335]
7	16	[22]	12	[16]	24	670	[775]	500	[625]
8	23	[32]	17	[24]	27	980	[1105]	730	[825]
10	46	[60]	34	[47]	30	1330	[1470]	990	[1090]
12	80	[101]	60	[75]	33	1790	[1950]	1340	[1450]
14	125	[155]	90	[115]	36	2325	[2515]	1730	[1870]
16	200	[240]	150	[180]	39	3010	[3210]	2240	[2380]
18	275	[330]	205	[245]					

Table 2-1 General Torque Specifications

https://truckmanualshub.com/

LANDOLL CORPORATION
HYDRAULIC FITTING TORQUE SPECIFICATIONS
37° JIC, ORS, & ORB (REV. 10/97)

THIS CHART PROVIDES TIGHTENING TORQUES FOR HYDRAULIC FITTING APPLICATIONS WHEN SPECIAL TORQUES ARE NOT SPECIFIED ON PROCESS OR DRAWING.
ASSEMBLY TORQUES APPLY TO PLATED CARBON STEEL AND STAINLESS STEEL FITTINGS ASSEMBLED WITHOUT SUPPLEMENTAL LUBRICATION (AS RECEIVED CONDITION). THEY DO NOT APPLY IF SPECIAL GRAPHITE MOLY-DISULFIDE OR OTHER EXTREME PRESSURE LUBRICANTS ARE USED.
BRASS FITTINGS AND ADAPTERS - 65% OF THE TORQUE VALUE FOR STEEL. STAINLESS STEEL, ALUMINUM AND MONEL - THREADS ARE TO BE LUBRICATED.
TORQUE IS SPECIFIED IN FOOT POUNDS

PARKER BRAND FITTINGS

Dash Size	37 Degree JIC	O-Ring (ORS)	O-Ring Boss (ORB)
-4	11-13	15-17	13-15
-5	14-16	—	21-23
-6	20-22	34-36	25-29
-8	43-47	58-62	40-44
-10	55-65	100-110	57.5-62.5
-12	80-90	134-146	75-85
-16	115-125	202-218	109-121
-20	160-180	248-272	213-237
-24	185-215	303-327	238-262
-32	250-290	—	310-340

LANDOLL CORPORATION
HYDRAULIC FITTING TORQUE SPECIFICATIONS
37° JIC, ORS & ORB (REV. 10/97)

THIS CHART PROVIDES TIGHTENING TORQUES FOR HYDRAULIC FITTING APPLICATIONS WHEN SPECIAL TORQUES ARE NOT SPECIFIED ON PROCESS OR DRAWING.
ASSEMBLY TORQUES APPLY TO PLATED CARBON STEEL AND STAINLESS STEEL FITTINGS ASSEMBLED WITHOUT SUPPLEMENTAL LUBRICATION (AS RECEIVED CONDITION). THEY DO NOT APPLY IF SPECIAL GRAPHITE MOLY-DISULFIDE OR OTHER EXTREME PRESSURE LUBRICANTS ARE USED.
BRASS FITTINGS AND ADAPTERS - 65% OF THE TORQUE VALUE FOR STEEL.
TORQUE IS SPECIFIED IN FOOT POUNDS.

AEROQUIP BRAND FITTINGS

Dash Size	37 Degree JIC	O-Ring (ORS)	O-Ring Boss (ORB)
-4	11-12	10-12	14-16
-5	15-16	—	18-20
-6	18-20	18-20	24-26
-8	38-42	32-35	50-60
-10	57-62	46-50	72-80
-12	79-87	65-70	125-135
-14	—	—	160-180
-16	108-113	92-100	200-220
-20	127-133	125-140	210-280
-24	158-167	150-165	270-360
-32	245-258	—	—

Table 2-2 Hydraulic Fitting Torque Specifications

Table provided for general use.

NOTES:

https://truckmanualshub.com/

OPERATING INSTRUCTIONS 3

This section supplies information for operation of the carrier. It describes and locates controls and gives general operation procedures. Read all instructions, warnings, cautions and danger notes before attempting to operate the carrier. Operators must have proper training before operating the carrier.

Do not operate your Loadoll until a complete inspection has been performed. A defect may cause personal injury, damage to your Loadoll, or time consuming down time. Operation of your Loadoll is easy, efficient, and dependable if installation was done properly. The engine must be running and the PTO engaged before any controls will become functional. Some units require turning on the clearance lights to get power to the remote hydraulic control.

⚠ WARNING

DO NOT OPERATE THE LOADOLL WITH ANY KNOWN FAULT THAT MIGHT ENDANGER THE OCCUPANTS, NEARBY WORKERS, OTHER TRAFFIC, THE LOAD, OR THE EQUIPMENT.

⚠ WARNING

DO NOT OPERATE THE LOADOLL UNTIL YOU HAVE READ THE OPERATOR'S MANUAL AND COMPLETELY UNDERSTAND THE PROPER USE AND FUNCTION OF ALL CONTROLS. IMPROPER USE CAN CAUSE PERSONAL INJURY, DAMAGE TO YOUR SEMI-TRAILER AND CARGO, AND CAUSE TIME CONSUMING BREAKDOWNS.

⚠ DANGER

SERIOUS INJURY OR DEATH MAY RESULT IF A PERSON IS UNDER, IN FRONT OF, OR BEHIND: THE BED, SUBFRAME,REAR BUMPER, OR CHASSIS AT ANY TIME DURING OPERATION OF THE LOADOLL. THE SUBFRAME CAN SWING UP AND THE BED CAN TRAVEL BACK 108 INCHES FOR 22' BEDS AND 117' INCHES FOR 28' BEDS ANY OBJECT IN THE SAME AREAS MAY BE DAMAGED,OR CAUSE DAMAGE TO THE LOADOLL.

3-1 BED TILT CONTROL

The **Bed Tilt Control** is the first control located closest to the front of the truck. It is designated on the decal as **TRUCK (See Figure 3-1)**.

Operating the control as shown on decal will prepare the Loadoll for loading position.

Operate the control shown on decal causes the Loadoll to move from loading position to transport position. Do not tilt the unit up until the bed is slid back far enough for the bed to clear the nylatron hold-down blocks located behind the truck cab. When tilting down, the subframe must be tilted all the way down before the bed is all the way forward. The bed must be back far enough to clear the nylatron blocks when tilting down so the bed does not rest on top of the nylatron blocks.

https://truckmanualshub.com/

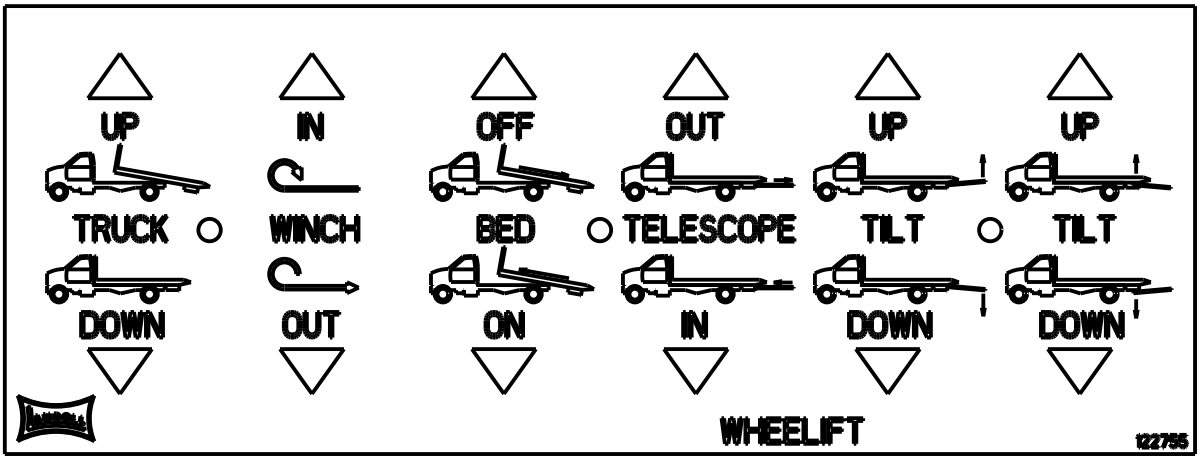

Figure 3-1 Decal for Control Operation

https://truckmanualshub.com/

⚠ CAUTION

DO NOT HANDLE THE WINCH CABLE OR CHAIN WHEN THE WINCH OR GEARBOX IS IN THE ENGAGE POSITION. HANDS OR CLOTHING COULD GET CAUGHT IN CABLE AND CAUSING SERIOUS PERSONAL INJURY.

⚠ DANGER

1. THE WINCH OR CHAIN DRIVE IS NOT DESIGNED OR INTENDED TO BE USED FOR LIFTING OR MOVING PEOPLE. USING IT THIS WAY CAN CAUSE SERIOUS INJURY OR DEATH.
2. MAKE CERTAIN THE WINCH CABLE SPOOL CLUTCH IS SET TO ENGAGE AND CLUTCH IS FULLY ENGAGE BEFORE LOAD TENSION IS APPLIED TO WINCH CABLE. NEVER ATTEMPT TO DISENGAGE THE WINCH CABLE SPOOL WHEN THE CABLE IS UNDER TENSION. LOSS OF LOAD CONTROL, PROPERTY DAMAGE, INJURY OR DEATH CAN RESULT.
3. FAILURE TO LEAVE AT LEAST FIVE WINCH CABLE WRAPS ON THE WINCH CABLE SPOOL COULD ALLOW THE CABLE TO COME OFF THE SPOOL, RESULTING IN SERIOUS PERSONAL INJURY OR DEATH.

FREE SPOOL CLUTCH OPERATION (WARN WINCH)

Warn Series XL winches are equipped with air operated free spool clutch.

1. The air free spool clutch is operated by application of air pressure to the fitting supplied on the winch gearbox housing. Follow decal instructions for winch engage and disengage. The fitting is designed to accept 1/4” rigid plastic tubing.

   a. To release the clutch (free spool operation), apply 50-120 psi air pressure to the air fitting by pulling out on the air valve knob.

   b. To engage the clutch (winch operation), remove all air pressure (0 psi) from the air fitting by pushing in on the air vlave knob.

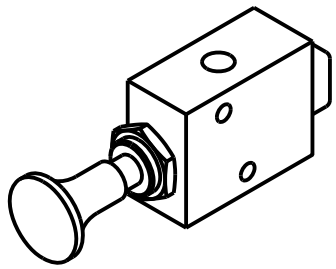

Located behind truck rear axles by Hydraulic Control Panel.

WINCH FREE SPOOL
PUSH IN - WINCH ENGAGE
PULL OUT - WINCH DISENGAGE
135184

Figure 3-2 Free Spool

https://truckmanualshub.com/

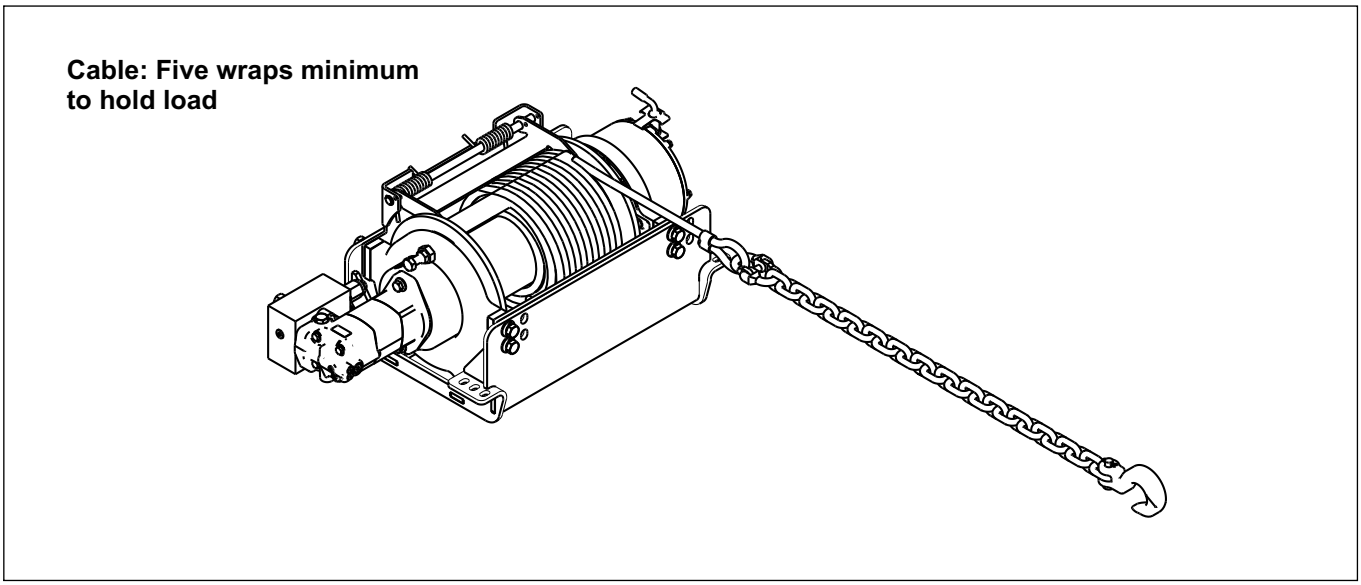

Figure 3- 3 Warn Winch 20,000#

3-2.1 The 20,000# Warn Winch Free Spool Clutch is air operated.

DISENGAGE In this position, the winch is disengaged. This allows the spool to "free-wheel". **This is only used when there is no load on the winch cable**. This feature allows the cable to be pulled out fairly fast and does not require operating the hydraulic system.

ENGAGE In this position, the winch is engaged. Cable may be "power" spooled on or off the winch spool. The winch is now controlled by the Winch Hydraulic Lever.

⚠ CAUTION

A MINIMUM OF 5 WRAPS OF CABLE MUST BE LEFT ON THE WINCH DRUM (SEE FIGURE 3-3).

3-3.2 The **HYDRAULIC WINCH CONTROL LEVER** is the second lever from the front of the truck it is labeled WINCH on the decal. **(See Figure 3-1).** This control reels the winch cable IN in the IN position and OUT in the OUT position.

IN In this position, the winch reels the winch cable in.

NEUTRAL This is the neutral position. This position has some holding power, but cannot be relied upon to hold a load during transport.

OUT In this position, the winch reels the winch cable out.

https://truckmanualshub.com/

3-3 BED SLIDE CONTROL

The **BED SLIDE CONTROL** is the third control from the front of the truck. It is designated on the decal as **BED (See Figure 3-1)**. Operating the control as shown on decal slides the bed OFF the subframe. Pulling the control OUT slides the bed back ON to the subframe.

3-4 HITCH CONTROLS (OPTION)

The Hitch Telescope Control Option is the fourth lever from the front of the truck. It is labeled TELESCOPE on the decal. **(See Figure 3-1)**. This control extends the hitch out to the rear or retracts hitch per the decal. **(See Figure 3-1).**

3-5 HITCH TILT AND FRAME STABILIZER (OPTION)

The Hitch Tilt and Frame Stabilizer is the fifth lever from the front of the truck if the unit has these options.
This control tilts the Hitch/Stabilizer up or down per the decal. **(See Figure 3-1).**

3-6 POWER TAKE-OFF (PTO)

3-6.1 The PTO control is located in the chassis cab. When the PTO is engaged, engine powers a high pressure hydraulic pump, thus providing power to the hydraulic controls.

IMPORTANT

MOST TRUCK TRANSMISSIONS MUST BE IN NEUTRAL AND PARK BRAKE APPLIED WHEN OPERATING THE PTO. FOLLOW INSTRUCTIONS PROVIDED BY PTO MANUFACTURER.

IMPORTANT

NEVER TRANSPORT WITH THE PTO CONTROL ENGAGED. EXTENSIVE DAMAGE MAY RESULT TO THE CHASSIS TRANSMISSION, PTO UNIT, HYDRAULIC PUMP, AND OTHER COMPONENTS.

https://truckmanualshub.com/

3-7 BED LOADING

3-7.1 Back the Loadoll up to the item to be retrieved. Align the Loadoll so that the bed is in line with the item to be loaded. Back your unit about 10 feet (120 inches) from the item to be retrieved. This will allow room to Tilt and Slide the bed back.

3-7.2 Shift the transmission to neutral and set parking brake securely.

3-7.3 Shift the PTO in gear. Follow PTO manufacturer's instructions.

3-7.4 The throttle control is to be set at 1000 engine R.P.M when the PTO is engaged.

IMPORTANT

DO NOT EXCEED 1500 ENGINE R.P.M. WITH THE PTO ENGAGED. PUMP AND HYDRAULIC SYSTEM COMPONENTS WILL BE ADVERSELY AFFECTED BY HIGHER R.P.M.'S.

3-7.5 Most units have the optional remote control that can be used to control the first three hydraulic controls. Some units require the clearance lights to be turned on to provide power to the remote. Other units provide power to the remote when the PTO is engaged. If the remote does not operate after PTO is engaged, turn the clearance lights on. Slide bed back enough so that bed comes out of bed hold downs using the bed slide (bed) controls.

3-7.6 Tilt the bed up using the **BED TILT (TRUCK)** controls to about 10 degree angle.**(See Section 3-1 for proper operation of the control).**

3-7.7 Slide the bed back using the **BED SLIDE (BED)** control until the bed is slid all the way back. **(See Section 3-2 for proper operation of the control).**

3-7.8 Tilt the bed until the bed touches the ground.

3-7.9 If the unit has the Hydraulic Stabilizer, tilt the stabilizer down until the stabilizer is firmly in contact with the ground. Units without the hydraulic stabilizer should have the stabilizer feet set at the correct height to hit the ground when the subframe is tilted to the load position.

3-7.10 Load the bed. Use the winch or chain drive to pull the load onto the bed. **(See Section 3-3 for proper operation of the control).**

⚠ DANGER

SERIOUS INJURY OR DEATH MAY RESULT IF A PERSON IS UNDER OR IN THE PATH OF ITEM(S) BEING LOADED, UNLOADED, OR SECURED. ANY OBJECT IN THE SAME AREAS MAY BE DAMAGED, OR CAUSE DAMAGE TO THE LOADOLL.

3-7.11 Anchor the front, sides, and back of the load to the bed key hole slots per Cargo Securement Regulations.

IMPORTANT

NEVER RELY ON THE WINCH CABLE OR CHAIN DRIVE TO TIE DOWN A LOAD.

3-7.12 Slide the bed forward only until the load is centered over the rear axle.

3-7.13 Tilt the bed down to the level, transport position. Slide the bed all the way forward now, disengage PTO.

3-7.14 Check all tie-downs securing the load before transporting.

https://truckmanualshub.com/

3-8 BED UNLOADING

3-8.1 Locate the Loadoll on a level, solid surface in an open area.

3-8.2 Shift the Loadoll transmission to neutral and set parking brake securely.

3-8.3 Shift the PTO into gear.

3-8.4 Throttle should adjust to 1000 RPM when PTO is engaged.

IMPORTANT

DO NOT EXCEED 1500 ENGINE R.P.M. WITH THE PTO ENGAGED. PUMP AND HYDRAULIC SYSTEM COMPONENTS WILL BE ADVERSELY AFFECTED BY HIGHER R.P.M.'S.

3-8.5 Slide bed back enough so the bed comes out of bed hold-downs using the bed slide (bed) controls **(See Section 3-3 for proper operation of the control).** Continue sliding bed back until load is centered over the rear axles of truck.

3-8.6 If the unit has the Hydraulic Stabilizer, tilt the stabilizer down to same location as was used to load the bed.

3-8.7 Tilt the bed up until the Stabilizer feet or Hydraulic Stabilizer firmly contact the ground.

3-8.8 Slide the bed back until the bed or load touches the ground.

3-8.9 Secure the winch cable or chain drive to the load, and remove any cable or chain slack.

3-8.10 Remove all securing chains.

3-8.11 If the load is a vehicle, shift the loaded vehicles' transmission to neutral, and release parking brake.

3-8.12 Operate the winch or chain drive to allow the load to be removed from the bed of the Loadoll.

3-8.13 After load is off and clear of the bed, secure the unloaded item from moving by blocking it or setting the parking brake.

3-8.14 Remove winch line and secure in stowing position. This would entail anchoring to any bed load anchor location and removing any slack in the cable.

IMPORTANT

DO NOT ANCHOR THE WINCH CABLE TO THE REAR BUMPER OR THE HITCH.

3-8.15 Slide the bed to the halfway forward position.

3-8.16 Tilt the bed fully down to the transport (level) position.

3-8.17 Slide the bed to the full forward position.

3-8.18 If the load is a container, Steps 3-8.1 through 3-8.9 will be the same.

3-8.19 If the container is over hanging the bed the rear of the container will be touching the ground. If the container is not over hanging the bed, use the Chain Drive Pusher to push the container back to overhang bed by 16". Raise the stabilizer up enough to clear the ground. Pull the truck forward, until the container is slid off the bed far enough to clear the bed.

3-8.20 Repeat steps 15 thru 17.

3-9 LOAD PLACEMENT

3-9.1 In most situations, the load is to be placed as far forward on the bed as possible. If your load is confined to a small area (such as crated item at the weight limit), position so 10% of the load transfers to the front axle, and 90% of the load on the rear axle.

Containers usually overhang the rear of the bed 16" so they are easier to remove from bed unless it overloads the truck axles by doing so.

3-10 SECURING LOADS TO BED

3-10.1 All vehicles, machinery, crated goods, or loose parts must be securely tied down to the bed of the Loadoll. Key holes are provided in front and rear of the bed to anchor chain.

3-10.2 The front sides and rear of the load must be secured to the front and to the rear of the bed. Do not rely on the winch to secure the load to the bed per Cargo Securement Regulations.

3-10.3 Do not allow any slack in the hold down chains. Slack will allow load to shift. A shifting load will create sufficient momentum to break chains. Remove chain slack by using chain boomers, or other slack adjusters designed to be used for securing loads.

https://truckmanualshub.com/

3-11 HITCH OPERATION (OPTION)

This section is intended to provide safe, efficient operating instructions for the Loadoll Hitch. Read all instructions carefully before operating the hitch. Safety precautions are included to alert you to possible hazardous conditions. Be sure to read and understand all instructions completely before operating the hitch.

⚠ DANGER

NEVER ATTEMPT TO CARRY MORE THAN SPECIFIED OF LOAD LIMITS ON THE HITCH. ALWAYS MAINTAIN AT LEAST FIFTY PERCENT (OR ONE HALF) OF THE TRUCK'S ORIGINAL FRONT AXLE WEIGHT WHEN THE HITCH IS LOADED. FAILURE TO MAINTAIN THE PROPER WEIGHT RATIO OR ATTEMPTING TO CARRY MORE THAN 3,000 POUNDS ON THE HITCH MAY RESULT IN LOSS OF CONTROL OF THE VEHICLE RESULTING IN DAMAGE TO THE LOADOLL, THE HITCH, AND/OR THE TOWED VEHICLE. SERIOUS PERSONAL INJURY OR DEATH MAY ALSO RESULT IF LOSS OF CONTROL OVER THE LOADOLL IS EXPERIENCED.

⚠ DANGER

NEVER CRAWL UNDER THE TRUCK OR TOWED VEHICLE DURING HITCH OPERATIONS. NEVER CRAWL UNDER THE HITCH AT ANY TIME. FAILURE TO COMPLY MAY RESULT IN SERIOUS PERSONAL INJURY OR DEATH.

⚠ WARNING

NEVER STAND BETWEEN THE TRUCK AND THE TOWED VEHICLE. STANDING BETWEEN THE TRUCK AND THE TOWED VEHICLE MAY RESULT IN SERIOUS PERSONAL INJURY.

3-11.1 Vehicle Towing

a. Back the Loadoll to directly in front of the vehicle to be towed, leaving a minimum of 6 feet between the two vehicles. Set the parking brake on the truck.

b. Set the Hitch to Towing Position.

IMPORTANT

THE TRUCK BED SHOULD REMAIN IN THE FORWARD POSITION FOR THE ENTIRE HITCH OPERATION.

c. Adjust the Hitch Up or Down or Out to mate with the towed vehicle.

d. Make proper connections to the towed vehicle.

e. Do not exceed the towing limits listed on the standard specifications page at the front of this manual.

f. Connect breakaway cables and electrical connections as required.

g. Adjust Hitch Height so the towed vehicle is level.

https://truckmanualshub.com/

⚠ CAUTION

UNEVEN ROADS, DIPS, BUMPS, AND RAMPS SHOULD BE AVOIDED WHEN EVER POSSIBLE. NEVER EXCEED TEN MILES PER HOUR WHEN ONE OF THESE, OR SIMILAR OBSTACLES MUST BE ENCOUNTERED. PROCEED SLOWLY WHILE STOPPING OCCASIONALLY TO CHECK THE POSITION OF THE TOWED VEHICLE. IT MAY BE NECESSARY TO RAISE OR LOWER THE HITCH SLIGHTLY TO CLEAR ONE OF THESE TYPE OBSTACLES. FAILURE TO EXERCISE THESE CAUTIONS WHEN ENCOUNTERING THESE TYPES OF OBSTACLES MAY RESULT IN LOSS OF THE TOWED VEHICLE FROM THE HITCH RESULTING IN DAMAGE TO THE HITCH AND/OR THE TOWED VEHICLE.

h. Check to make sure the towed vehicle is ready to be towed, such as lifting support jacks and removing wheel chocks.

i. Retract the hitch as much as possible leaving enough clearance between the truck and the towed vehicle that the towed vehicle will not interfere with the trucks cornering capabilities.

j. Attach safety chains from the towed vehicle to Loadoll.

3-11.2 Vehicle Disconnection

a. Locate the towed vehicle in an open, level area. Apply the Loadoll's parking brakes. Disconnect safety chains and place back in storage compartment. Remove breakaway and electrical connections.

b. Lower jack and/or other supports required when vehicle is to be disconnected.

IMPORTANT

THE BED OF THE LOADOLL SHOULD REMAIN IN THE FULLY FORWARD POSITION FOR THE ENTIRE HITCH OPERATION.

c. Chock the wheels of the towed vehicle so it will not roll.

d. Lower the hitch so the towed vehicle is supported by the support jacks.

e. Move the hitch in or out to relieve any pressure from the hitch.

f. Disconnect hitch.

g. Adjust hitch so it clears when Loadoll is pulled ahead.

h. Move the Loadoll forward if there is not enough room to lift the hitch.

i. Raise the hitch to a horizontal position, making sure that the rear lights of the Loadoll are not obstructed.

j. Retract the hitch all the way and make sure the Loadoll is ready to go down the road.

k. Some hitches need to have the end rotated forward before the Loadoll can be tilted to the ground so the hitch does not hit the ground.

https://truckmanualshub.com/

Remote Control (Option)

1. A wireless six function radio remote control is available **(See Figure 3-4.)**
2. The wireless radio remote has six momentary push button switches that operate the functions as labeled on the hand held remote.

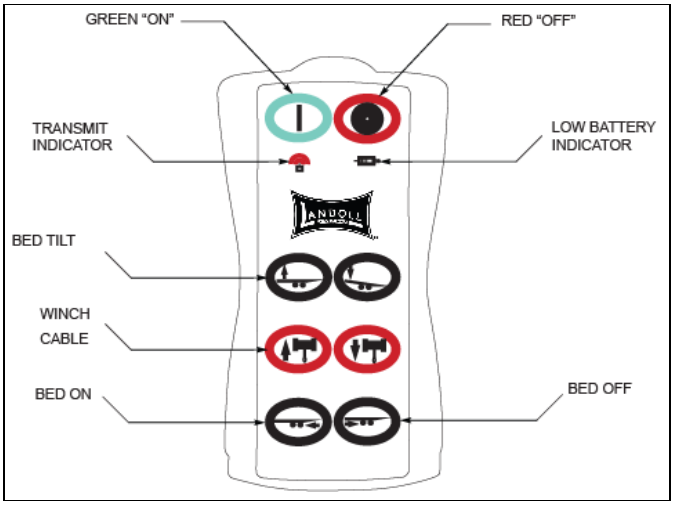

Figure 3-4: Remote Control Transmitter

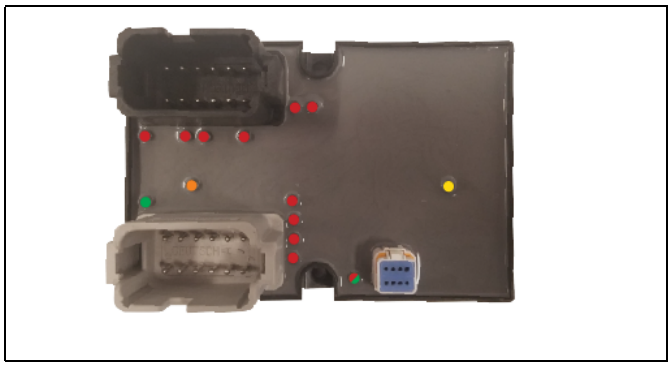

Table 3-5: LED Indicator Lights

3. TO OPERATE THE REMOTE:
   a. Press and hold the POWER button for at least 2 seconds and release.
   b. The are multiple LEDs on the back of the sealed body on the transmitter. Each LED corresponds to a proper function or a fault.
4. SYNCHRONIZING TRANSMITTER TO RECEIVER
   a. Power cycle the receiver OFF and then ON.
   b. On the Transmitter press and hold the Red OFF button. At the same time, press and hold the Green ON button for approximately 10 seconds.
   c. The synchronizing sequence must be done within 10 seconds or the process will need repeated.
   d. The wireless activity LED indicator should flash Orange 3 (three) times for a successful pair.
   e. A hard reset can be performed on the transmitter by holding the Red OFF button for 15 seconds. This will clear the connection between the receiver and transmitter.

Figure 3-6: Deutsch A and B Pin locations

https://truckmanualshub.com/

COLD WEATHER OPERATION

3-12.1 Cold weather causes lubricants to congeal, insulation and rubber parts to become hard, which may lead to problems found in bearings,electrical systems,and air systems. Moisture attracted by warm parts can condense, collect and freeze to immobilize equipment.The vehicle operator must always be alert for indicators of cold weather malfunctions.

3-12.2 During any extended stop period, neither the service nor parking brake should be used as they canf reeze up. Use wheel chocks to secure the vehicle from moving.

3-12.3 Check all structural fasteners, air system fittings, gaskets, seals and bearings for looseness that can develop due to contraction with cold. Do not over-tighten.

3-12.4 Tire inflation de-creases when the temperature decreases.

3-12.5 Periodically check drain holes in the storage compartments.They must be open at all times to avoid moisture entrapment.

HOT WEATHER OPERATION

3-13.1 Hot weather operation can cause expansion of parts, resulting in tightening of bearings, fasteners, and moving parts. Failure of gaskets or seals can occur.

3-13.2 The vehicle should be parked in the shade if possible. Long exposure to the sun will shorten service life of rubber components (i.e., tires, light and hose grommets, hoses, etc.) and paint life.

3-13.3 Check tire pressure early in the day before beginning operations while the tire is cool. Put all valve stem caps back on after checking.

3-13.4 If the area is extremely humid, protect electrical terminals with ignition insulation spray. Coat paint and bare metal surfaces with an appropriate protective sealer.

Table provided for general use.

NOTES:

https://truckmanualshub.com/

MAINTENANCE AND LUBRICATION 4

This section contains instructions necessary for proper maintenance of the Loadoll. The Loadoll is designed for years of service with minimal maintenance. However, proper maintenance is important for durability and safe operation and is an owner/user responsibility.

⚠ DANGER

OPERATING THE VEHICLE WITH DEFECTIVE, BROKEN OR MISSING PARTS MAY RESULT IN SERIOUS INJURY OR DEATH; DAMAGE TO THE VEHICLE, ITS CARGO, OR PROPERTY IN ITS PATH.

⚠ DANGER

SERIOUS INJURY OR DEATH MAY RESULT IF A PERSON IS UNDER, IN FRONT OF, OR BEHIND: THE BED, SUBFRAME, REAR BUMPER, OR CHASSIS AT ANY TIME DURING OPERATION OF THE LOADOLL. THE SUBFRAME CAN SWING UP AND THE BED CAN TRAVEL BACK SEVERAL FEET. ANY OBJECT IN THE SAME AREAS MAY BE DAMAGED OR CAUSE DAMAGE TO THE LOADOLL.

IF MAINTENANCE IS REQUIRED IN ANY OF THESE AREAS, BLOCK BOTH ENDS OF THE SUBFRAME TO PREVENT IT FROM TILTING. SECURE THE BED FROM MOVING.

LUBE	SEASON	BRAND & PRODUCT (WEIGHT AND/OR TYPE)				
		EXXON	MOBIL	PHILLIPS 66	TEXACO	SHELL
1	ALL YEAR	NUTO H 32	DTE 24	Mega Flow HVI 32 SAE 5W-20	Rando HD 32	Tellus T 32
2	ALL YEAR	-----	-----	-----	-----	Aeroshell 64MS
3	ALL YEAR	-----	-----	76 Moly Low Temp Grease	-----	-----
4	SUMMER	-----	Mobilube HD SAE 85W-140	-----	-----	-----
	WINTER	-----	Mobilube 1 SHC SAE 75W-90	-----	-----	-----
5	ALL YEAR	Teresstic 32	DTE Light	Condor 32 or Magnus 32	Regal Oil R&O 32	Turbo T 32

Table 4-1: Lubrication Specifications

https://truckmanualshub.com/

4-1 MAINTENANCE SCHEDULE

Loadoll maintenance includes periodic inspection and lubrication. **Table 4-2, Maintenance Schedule**, lists the recommended maintenance and lubrication tasks by time interval and by accumulated mileage (use whichever occurs first).

4-1.1 Inspection

a. Inspect the vehicle and deck system periodically for damage or signs of pending failure. Damaged or broken parts must be repaired or replaced at once. Determine the cause of any binding or hydraulic leakage at once. Correct the problem before using the vehicle.

b. Use the Troubleshooting Guide to check for "SYMPTOMS" and "PROBLEMS" of any vehicle system not functioning correctly, or where wear, distortion, or breakage are found. Administer "REMEDY" according to the right-hand column of the Troubleshooting Guide.

4-1.2 Lubrication

Table 4-1 Details lubrication points and intervals, method of application, and lubricant required, and illustrates the location of each part to be lubricated. During inspections of the vehicle if lubricants are found to be fouled with dirt or sand, those parts should be cleaned with paint thinner, dried and relubricated immediately Dirt in a lubricant forms an abrasive compound that will wear parts rapidly.

⚠ WARNING

PAINT THINNER AND OTHER SOLVENTS ARE FLAMMABLE AND TOXIC TO EYES, SKIN, AND RESPIRATORY TRACT. AVOID SKIN AND EYE CONTACT. GOOD GENERAL VENTILATION IS NORMALLY ADEQUATE. KEEP AWAY FROM OPEN FLAMES OR OTHER COMBUSTIBLE ITEMS.

4-2 MAINTENANCE PROCEDURES

4-2.1 Tools and Equipment. Tools, equipment, and personnel normally found in a facility capable of making truck repairs will be adequate for maintenance of the vehicle. No other special tools or equipment should be necessary.

4-2.2 Standard Torque Values. Tables 2-1 and 2-2 lists torque values for standard hard ware and is intended as a guide for average applications involving typical stresses and mechanical surfaces. Values are based on the physical limitations of clean, plated, and lubricated hardware. In all cases, when an individual torque value is specified, it takes priority over values given in this table. Replace original fasteners with hardware of equal grade.

https://truckmanualshub.com/

NORMAL OPERATING SERVICE INTERVALS							
ITEM	1st 5 Hours or 50 Miles	Weekly or 500 Miles	Monthly or 2,000 Miles	6 Months or 12,000 Miles	Yearly or 25,000 Miles	LUBE #	NOTES
LIGHTS	I	I					
WIRING & CONNECTIONS	I		I				
FASTENERS	I,T		I				
CHAIN GEAR BOX CASE	I		I			2	
BED SLIDE PLASTIC STRIPS	I		I			5	
SUBFRAME PIVOTS	L		L			3	
SUBFRAME AND HITCH CYLINDER PINS	L			L		3	
WINCH CABLE ASSEMBLY	I	I	I,L			4	
HYDRAULIC OIL	I	I			R	1	
HYDRAULIC FILTER	R			R			
TIRE INFLATION & WEAR	I	I					
HOSES (Inspect & Replace as needed)	I		I		I,R		
WHEEL LUG NUTS	I,T		See Truck Owner's Manual for Service Intervals				

I - Inspect, R - Replace, T - Tighten/Adjust Torque, L - Lubricate, C - Clean

a. Perform at the time shown. Shorten service intervals when operating in severe or dirty conditions.

b. **See Table 2-1 and 2-2** for correct torque specifications.

c. **See Table 4-1** for recommended lubricant.

d. Inspect prior to and after each use.

e. Recommended lubrication for Warn 12K Winch Planetary Gear Case - Aeroshell 64MS

f. Recommended lubrication for Warn 20K & 30K Winch Planetary Gear Case - 76 Moly Low Temp Grease

Table 4-2: Maintenance Schedule

https://truckmanualshub.com/

4-2.3 Cleaning

a. Wash carrier to remove all accumulated dirt and grime.

b. Clean the sliding surfaces with solvent or mineral spirits every six months or more frequently if exposed to extreme dirt or weather conditions. The slide wear strips are impregnated with a special lubricant, however, additional lubrication may be required to prevent chattering or squealing. **See Lubrication Points and Specifications in Table 4-1**.

c. After disassembling any components, thoroughly clean dirt and old lubricant from all parts. Do not use a wire brush on any bearing parts or surfaces, use a stiff bristle brush. Do not use compressed air, or spin bearing parts when cleaning. These practices can throw solvents, dirt, or metal particles into your eyes. Dry clean parts with lint free, clean, soft, absorbent, cloth or paper. Wash and dry hands.

d. Inspect seals, seal wiping surfaces, bearing caps, and bearing cones for wear, pitting, chipping, or other damage.

e. Use Troubleshooting Guide to check for "**SYMPTOMS"** AND **"PROBLEMS"** of any carrier system not functioning correctly, or where wear distortion, or breakage can be found. Administer **"REMEDY"** according to right-hand column of Troubleshooting Guide **(See Section 5)**

4-3 FRAME AND DECK

4-3.1 Repairing Structural Defects

If any structural defect is found, the fault must be corrected before further use of the vehicle. To continue usage could endanger the vehicle, its load, personnel, traffic, and properties. Inspect the deck daily for broken or missing attachments. Replace any defective parts promptly.

4-4 HYDRAULIC SYSTEM

4-4.1 Check the hydraulic oil level weekly, or after any leakage. See **Table 4-1** for proper hydraulic oil.

4-4.2 Check the hydraulic oil level by sliding the deck back enough to gain access to the reservoir cap. Have the bed level with the chassis frame, and the hitch fully retracted. Shut off the engine. Proper oil level is 2" below top of oil reservoir. Filling to the top will result in overflow when the bed is slid forward.

4-4.3 If a cylinder seal leaks, disassemble the cylinder and determine the cause of the leak. Small scores caused by chips or contaminated fluid can usually be worked out with fine emery cloth to avoid re-occurring of the trouble. Any time a component is opened up, or whenever any seal replacement is necessary, it is advisable to thoroughly clean all components and replace all seals in that component. Seal kits are available from your Landoll dealer.

Table provided for general use.

NOTES:

https://truckmanualshub.com/

TROUBLESHOOTING GUIDE 5

Troubleshooting should be performed by a trained technician. Landoll Corporation is not responsible for equipment that is improperly maintained. Contact an authorized Landoll Service center for servicing.

5-1 ELECTRICAL

Most electrical system problems show up as a burned out light or fuse, or inoperative electrical component. Wiring, grounds, or components may be at fault. Locate the symptom in this section that best identifies your electrical problem. Check out each possible problem under that symptom. If the problem cannot be located, see an automotive electrical specialist.

SYMPTOM	PROBLEM: REMEDY
NO LIGHTS	**Fuse blown:** replace fuse. **Connection at plug-in:** tighten connection. **Broken or corroded wires:** replace wire. **Ground wire loose:** clean and tighten ground. **Light burned out:** replace light.
LIGHTS FLICKERING OR DIM	**Vibration:** locate source of vibration and repair. **Short circuit:** replace fuse and try all accessories. If fuse blows right away, locate short and repair. **Loose connection:** check lamp sockets and ground connections. **Intermittent short:** locate short and repair. **Improper voltage:** check voltage regulator output.
FUSE BLOW-OUT OR CIRCUIT BREAKER TRIPPING	**Vibration:** locate source of vibration and repair. **Short circuit:** replace fuse and try all accessories. If fuse blows right away, locate short and repair.
REMOTE CONTROL WINCH:	
DOES NOT OPERATE	**Fuse blown:** replace fuse. **Defective switch:** repair and replace. **Broken or corroded wires:** replace wire. **Ground wire loose or bad:** clean and tighten ground or replace. **No power to remote:** turn clearance lights on or turn PTO on.
OPERATES ONE WAY ONLY	**Incorrect wiring:** confirm proper wiring. **Defective switch:** repair and replace. **Broken or corroded wires:** replace wire.
OPERATES WRONG DIRECTION	**Wires reversed on solenoid:** reverse wires

https://truckmanualshub.com/

5-2 HYDRAULIC SYSTEM

Most hydraulic system failures follow the same pattern: a gradual or sudden loss of pressure or flow with a resulting loss of cylinder or motor power. Any one of the system's components may be at fault. By following step-by-step procedures, the trouble can be located in a short time.

SYMPTOM	PROBLEM: REMEDY
SYSTEM INOPERATIVE	**Not enough oil in system:** fill, check for leaks. **Wrong oil in system:** change oil, see specifications. **Filter dirty or clogged:** drain oil and replace filter. **Hydraulic lines dirty or collapsed:** clean or replace as necessary. **Air leaks in pump suction line:** repair or replace as necessary. **Worn or dirty pump:** clean, repair or replace. Check for contaminated oil. Drain and flush. **Badly worn components:** examine for internal leakage. Replace faulty components. Check for cause of wear. **Leakage:** check all components, and relief valve for proper settings. **Excessive load:** check unit specifications for load limits. **Slipping or broken pump drive:** repair or replace couplings. Check for alignment.
SYSTEM OPERATES ERRATICALLY	**Air in the system:** check suction side of system for leaks. Repair leaks. **Cold oil:** allow ample warm-up time. Use proper weight oil for operating temperature. **Dirty or damaged components:** clean or repair as needed. **Restriction in filters or lines:** clean and/or replace filter or lines. **Not enough oil in system:** fill and check for leaks.
SYSTEM OPERATES SLOWLY	**Oil viscosity too high, or "cold oil":** Allow oil to warm up before operating. **Low pump drive speed:** increase engine speed (check pump owners manual for specifications). **Low oil level:** check reservoir and add oil as necessary. **Air in system:** check suction side for leaks. Repair leaks. **Badly worn pump, valves, cylinder:** repair or replace faulty component(s) as necessary. **Restrictions in lines or filter:** clean and/or replace filter or lines. **Improper adjustments:** check orifices, relief valves, etc. Adjust as necessary. **Oil leaks:** tighten fittings. Replace seals, gaskets and damaged lines.
SYSTEM OPERATES TOO FAST	**Wrong size or incorrectly adjusted restrictor:** Replace or adjust as necessary. **Engine running too fast:** reduce engine speed.
OVER HEATING OF OIL IN SYSTEM	**Oil passing thru relief valve for excessive time:** Return control valve to neutral when not in use. **Incorrect, low, dirty oil:** use recomended oil. Fill reservoir with clean oil. Replace filter. **Engine running too fast:** reduce engine speed. **Excessive component internal leakage:** repair or replace component as necessary. **Restriction in filters or lines:** clean and/or replace filter or lines. **Insufficient heat radiation:** clean dirt and mud from reservoir and components. **Malfunctioning component:** repair or replace.

https://truckmanualshub.com/

SYMPTOM	PROBLEM: REMEDY
FOAMING OF OIL	**Incorrect, low, or dirty oil:** replace, clean or add oil as needed. **Water in oil:** replace oil **Air leaks:** check suction line and component seals for suction leaks. Replace defective parts.
NOISY PUMP	**Low, incorrect, foamy oil:** replace, clean, or add oil as needed. **Suction line plugged:** clean out obstruction or replace line. Flush system, replace filter. **Pump damaged:** repair or place.
LEAKY PUMP	**Damaged or worn shaft seal:** Replace seal and/or shaft and check for misalignment. **Loose or broken parts:** Tighten or replace.
CYLINDERS MOVE WITH CONTROL VALVE IN NEUTRAL POSITION	**Leaking cylinder seals or fittings:** Replace worn seals or fittings. **Control valve not centering when released:** Check linkage for binding and repair. **Valve damaged:** Repair or replace. **Counterbalance Valve Worn or Contaminated:** Clean out obstruction or replace valve.
CONTROL VALVE LEAKS	**Seals damaged or worn:** Replace.
CYLINDER LEAKS	**Seals worn or damaged:** Replace. **Rod damaged:** Replace. **Barrel damaged:** Replace.
CYLINDERS DO NOT FUNCTION, OR CREEP WITH PTO DISENGAGED	**Leaking fittings or cylinder seals:** Tighten loose fittings. Replace worn seals or fittings. **Counterbalance valve or o-ring leak:** Replace defective component.
SUBFRAME WILL NOT TILT	Some units have a proximity switch so the subframe does not tilt until the bed is slide back far enough, so that metal plate is not directly above the proximity switch. Slide bed back far enough so plate is not above switch. The proximity switch should have indicator light on when PTO is engaged. The PTO wire engages a relay that powers the proximity switch. The proximity switch needs to have between 1/32” to 1/4” clearance with the metal plate at rear of bed to work properly. The magnet in the proximity switch allows the switch to send a signal to the hydraulic dump valve to dump oil to the hydraulic tank so no pressure builds up to tilt subframe.

.

https://truckmanualshub.com/

5-4 HYDRAULIC PRESSURE TESTING

SET-UP: With the Loadoll unloaded, install a 0 to 3000 psi pressure gauge between the pump pressure hose and the valve “IN” port, using a “T” fitting and close pipe nipple.

TEST 1: Start the vehicle engine and operate the PTO. Do not run vehicle engine more than 1200 RPM. Check pressure without operating any function.

From 25 to 300 psi:	NORMAL
Greater than 300 psi:	Restriction in valve, filter, or plumbing.
Less than 25 psi:	Weak pump or restriction in pressure line.

NOTE: If STEP 1 indicates normal pressures, proceed to STEP 2. STEP 1 pressures must be normal for the following tests!

TEST 2: Run the bed forward to the transport position. Hold the valve in the “BED ON” position to cause hydraulic oil to go through the pressure relief valve. Read pressure, then return the control valve to neutral. Do the same test on the tilt cylinder, checking it while the bed is in the transport position.

From 1800 to 2500 psi:	NORMAL
Greater than 2500 psi:	Pressure relief valve is set too high.
	Pressure relief valve is malfunctioning.
Less than 1800 psi:	*Internal cylinder leak.
	** Pressure relief valve set too low.
	**Weak pump.

* This may be the problem if one cylinder is at the normal pressure and the other is at a lower pressure.

** This may be the problem if both cylinders show the same pressure.

TEST 3: Run the tilt cylinder until the bumper almost touches the ground. Return the cylinder to the transport position. Check pressures while the bed is tilting.

From 1000 to 2500 psi:	NORMAL
Greater than 2500 psi:	Restriction in return hoses or cylinder.
	Binding cylinder.
	Binding tilt mechanism.
Less than 1000 psi:	Weak pump.
	Pressure hose restriction
	Internal cylinder leak.

TEST 4: Slide the bed cylinder back and then forward. Check pressures while the bed is moving out. The following pressures are with the bed installed.

From 300 to 900 psi:	NORMAL
Greater than 900 psi:	Restriction in return hoses or cylinder.
	Binding cylinder.
	Binding slide mechanism.
Less than 300 psi:	Weak pump.
	Pressure hose restriction
	Internal cylinder leak.

TEST 5: Unhook the winch cable and lay it loosely on the bed. Operate the winch both directions. Check pressures while the winch is operating.

From 800 to 1200 psi:	NORMAL
Greater than 1200 psi:	Restriction in return hoses or winch motor.
	Binding winch motor.
	Binding winch gears or drum.
Less than 800 psi:	Weak pump.
	Pressure hose restriction
	Internal motor leak.

https://truckmanualshub.com/

5-5 MISCELLANEOUS PROBLEMS

BED CHATTERS OR SQUEALS WHEN SLIDING	**Rough slide tubes on subframe:** file or sand smooth and lubricate with dry silicone or other non dirt and grit collecting lubricant.
WORN NYLATRON SLIDES	When Nylatron wears enough that screws heads are rubbing on slide tubes, replace Nylatron slides.
PIVOT PINS	
EXCESSIVE WEAR	**Not lubricated:** grease pins at grease zerk. **Bent or broke subframe:** check for bows or cracks in sub-frame.
PREMATURE BREAKAGE	**Overweight loads and/or rough road conditions:** check weight limitations and adjust driving style to road conditions.
BED SLIDE STRIPS EXCESSIVE WEAR	**Lubricated with heavy grease:** remove grease and use dry silicone or other non dirt and grit collecting lubricant. **Rough slide tubes on subframe:** smooth tubes.
REMOTE WILL NOT COME ON	Some units require the clearance lights to be on to power the remote.

Table provided for general use.

NOTES:

https://truckmanualshub.com/

https://truckmanualshub.com/

Equipment from Landoll Corporation is built to exacting standards ensured by ISO 9001 registration at all Landoll manufacturing facilities.

Loadoll II
Operator's Manual

Re-Order Part Number
F-1036-0519

LANDOLL CORPORATION
1900 North Street
Marysville, Kansas 66508
(785) 562-5381
800-428-5655 ~ WWW.LANDOLL.COM

Copyright 2014. Landoll Corporation
"All rights reserved, including the right to reproduce this material or portions thereof in any form"