https://truckmanualshub.com/

SH 210-5
SH 210LC-5
SH 210LC-5LR

HYDRAULIC EXCAVATOR

PARTS MANUAL

Serial No.

210A5 - 1101~
210L5 - 1101~

SUMITOMO

WCL2005-0W

https://truckmanualshub.com/

https://truckmanualshub.com/

エリアマップ
AREA MAP

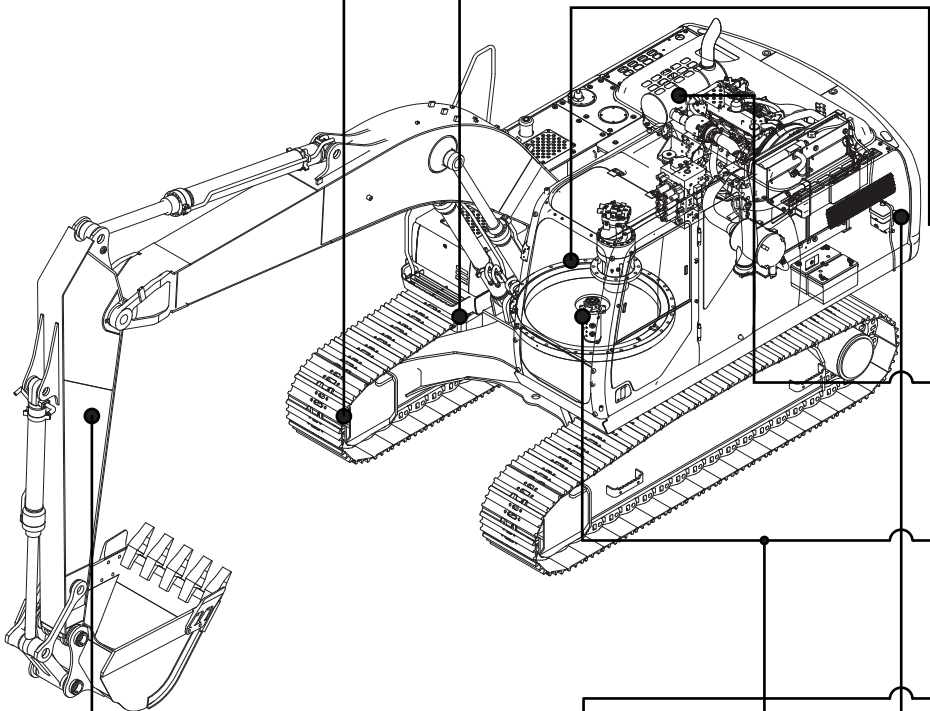

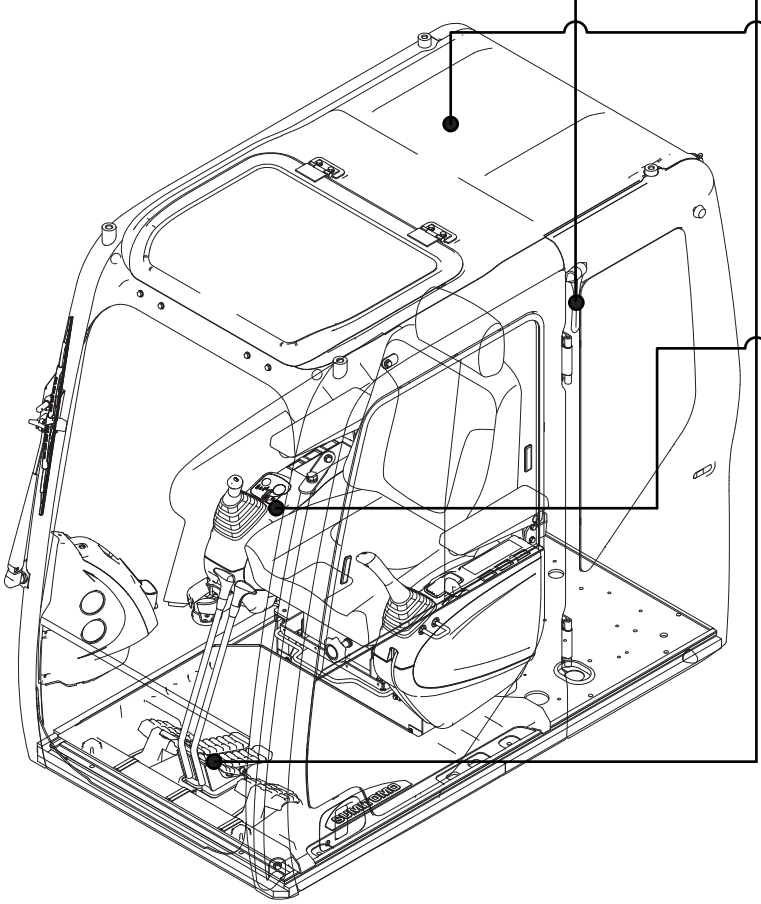

ロワー LOWERS	AREA DA (81)
センカイフレーム SWING FRAMES	AREA DB (82)
センカイソウチ REV.EQUIPMENT	AREA DC (82)
エンジン ENGINES	AREA DH (83)
コントロール・ライン CONTROLS & LINES	AREA DJ (84,85)
アタッチメント(クレーン・他) ATTACHMENTS (CR・etc)	AREA DM (90)
オペレータキャブ・ハウス OPERATOR'S CAB & HOUSE	AREA DN (90)
ザッピン・メイバン ACCESSORIES & NAME PLATES	AREA DP (92)
デンキヒン ELECTRIC PARTS	AREA DR (91)
アタッチメント(バックホー) ATTACHMENTS (BACKHOE)	AREA DV (86)
インナーパーツ INNER PARTS	AREA ZA (95)
パーツインデックス PARTS INDEX	INDEX

https://truckmanualshub.com/

https://truckmanualshub.com/

HYDRAULIC EXCAVATOR

PARTS MANUAL

[MAIN PARTS]

DA (81)
DB (82)
DC (82)
DH (83)
DJ (84,85)
DM (90)
DN (90)
DP (92)
DR (91)
DV (86)
INDEX

book No. Rev
WCLA 200A51BH 002
SH210-5,SH210LC-5
WCLA 200A51LR 001
SH210LC-5LR

https://truckmanualshub.com/

Preface (For main parts)

- This parts manual contains the service main parts used in the hydraulic excavator.
  Refer to the “Engine parts manual” issued separately for the engine service parts.
- The reference to “right-hand” and “left-hand” in the manual is defined by the operator sitting in the position for proper operation when the track idler is located front.
- Use “Sumitomo's parts” in the Sumitomo's hydraulic excavator, which are of high quality and best suited to the products.

I. How to order the parts.

1. When ordering, specify clearly “Machine model, Machine serial No., Part No., Part name and Quantity required”.
   It will be convenient to you, if you enter your Machine model, Machine serial No., Machine delivered year, month and date to the form shown below beforehand.

Machine model (This is shown in the Name plate provided in the operator's cab)	Machine Serial No. (This is shown in the Name plate provided in the operator's cab)	Year, Month and Date of delivery
		Year: Month: Date:

2. Supply term of the service parts.
   The term of the service part supply is ten (10) years after the discontinuation of the production for the machine model.
   But, even in the production period, it may happen to set the new delivery term in some cases. When any service parts be required for the machine after the model production term is expired and be ordered, we will accept the order subject to the delivery term and price required to the part production.

II. Notes.

1. As the illustrations provided in this manual are for reference only since the position・shape of the respective part are shown in proper relation to each other without any hindrance for placing order, refrain from using them only with this manual for the maintenance work of the excavator.
2. Changes to the product may make it necessary to revise or add pages to this manual, for which announcement will be followed.
3. The parts described in this manual will be changed (including changes in the option), or deleted ,without any prior notice.

https://truckmanualshub.com/

III. Abbreviation of part names.

◆ Following abbreviations are used for the part name in this manual:

LH : Left side

RH : Right side

T : Thickness

ASSY : Complete assembly part

S/A : Subassembly part

OPT : Option

HYD : Hydraulic

SPL : Special product

REV : Swing related part

PRESS : Pressure

ATT : Attachment

iv. How to read the part manual.

◆ CONTENTS are described in the below summary:

Item	Explanation	Position
MODEL	Shows the entered machine model name.	Upper center of the page
BOOK NO.	Shows the kind of the book.	Upper center of the page
SERIAL NO.	Shows the first serial No. of each machine model .	Upper center of the page
AREA	Shows the first classification of the item described in the part manual.	Top of the CONTENTS
NAME	Shows the name of the part page.	2nd column of the CONTENTS page
PART PAGE CODE	Shows the classification number given to each item.	Center column of the CONTENTS page
PPC EDITION NO.	Shows the number of the edition made for the part page.	Right side in the PART PAGE CODE column
SERIAL NO.	Shows the machine serial number to which the part page code is applied.	Right of the PART PAGE CODE column
CHANGE	Mark ∗ is given to the change made after the previous edition was issued.	Right of the SERIAL NO. column

https://truckmanualshub.com/

◆ Part page is entered in the following way:

[(DA ～ DV) Part pages]

Item	Explanatory	Position
PPC NAME	Shows the name of the part page.	Left side in the upper frame of the page.
PPC CODE	Shows the classified No. given to each item.	Right side top in the upper frame of the page.
PPC EDITION NO.	Shows the number of the edition of the part page.	Right in the PPC Code.
ITEM	This is the reference number showing each part in the part page. Part which constructs assembly is shown with the [ ] on the illustration	1st column of the list.
COMPO (COMPOSITION)	Shows the part level and whether it has the component parts or not. (Number: Showing the level) (A: having the components part(s)). Sample of description: ITEM COMPO PART NO. 1 1 KAA1234 (Single part) 2 1A KAA5678 (containing component parts) 3 2 KNA9012 (Component part in a just prior line) 4 1 KNH3456 (Single part)	2nd column of the list.
PART NO.	Shows the part number.	3rd column of the list.
PART NAME	Shows the name of the part. For the each part abbreviation, refer to the parts abbreviation table.	4th・5th column of the list.
Q'TY	Showing the quantity of the part needed to the assembly of one set of the machine. AR = As required.	6th column of the list.
インナー (Inner)	Mark ＊ given in this column shows that it has the component(inner) part page code.	7th column of the list.

https://truckmanualshub.com/

<table>
<tr><td>SERIAL NO.</td><td>Serial No. of the whole part page is entered on the right upper.
Serial No. each part is entered in the serial number column in the part page code.</td><td>Right of the outside in the upper frame of the page .
8th column of the list.</td></tr>
<tr><td>ICA
(INTERCHANGEABILITY</td><td>Interchangeability between the part in the part No. column and that in the replaceable part column is shown with the symbols as shown below:
Meaning of the symbols;
Part entered in the left side
= Part entered in the part No. column.
Interchangeable part (Replaceable part)
<table>
<tr><th>MARK</th><th>ICA (INTERCHANGEABILITY)</th></tr>
<tr><td>=</td><td>Same parts.
Part No. is “substitute ‘A’ part ‘B’ ”.</td></tr>
<tr><td><</td><td>Substitute A parts ‘B’ for A part ‘A’.
Substitute A part ‘A’ for A part ‘B’.</td></tr>
<tr><td>/</td><td>Substitute A part ‘A’ for A part ‘B’.
Not substitute A part ‘B’ for A part ‘A’.</td></tr>
<tr><td>X</td><td>Not substitute A part ‘B’ for A part ‘A’.
Not substitute A part ‘A’ for A part ‘B’.</td></tr>
</table></td><td>9th column of the list.</td></tr>
<tr><td>REPLACEABLE PART</td><td>Shows the replaceable part for the part in the Part name column.
(Interchangeability is shown in the column of the ICA.)</td><td>10th (Right side) column of the list.</td></tr>
</table>

Note : Since the page number of the illustration is arranged to match with that of the list in the part page, the illustration or the list may be shown several times accordingly.

: Positions 14 through 17 of PIN number are shown at the column of SERIAL NO in the each parts pages.

PIN(Product Identification Numbering system : ISO10261)

https://truckmanualshub.com/

目 次 CONTENTS

OPT=ｵﾌﾟｼｮﾝ(OPTION)

エリア AREA	NAME	ﾊﾟｰﾂﾍﾟｰｼﾞｺｰﾄﾞ PARTS PAGE CODE	適用号機 SERIAL NO.	変更 CHANGE	ﾍﾟｰｼﾞ番号 PAGE NO
DA: ﾛﾜｰ	LOWERS				
ｼｭ-(ｸﾞﾛｰｻ600ｼｰﾙｲﾘ) M	GROUSER SHOE 600 SEAL M	DA0207L0011-00 001	210A5 1101-		1
ｼｭ-(ｸﾞﾛｰｻ600ｼｰﾙｲﾘ) M	GROUSER SHOE 600 SEAL M	DA0219L0010-00 002	210L5 1101-		3
ｼｭ-(ｸﾞﾛｰｻ600ｼｰﾙｲﾘ) ﾊﾟｯﾄﾀｲｵｳ	GROUSER SHOE 600 SEAL	DA0219L0012-00 001	OPT210A5 1101-		5
ｼｭ-(ｸﾞﾛｰｻ700ｼｰﾙｲﾘ) M	GROUSER SHOE 700 SEAL M	DA0221L0004-00 004	OPT210L5 1101-	*	7
ｼｭ-(ｸﾞﾛｰｻ700ｼｰﾙｲﾘ) M	GROUSER SHOE 700 SEAL M	DA0221L0006-00 003	OPT210A5 1101-	*	9
ｼｭ-(ｸﾞﾛｰｻ800ｼｰﾙｲﾘ) M	GROUSER SHOE 800 SEAL M	DA02A5L0004-00 004	OPT210L5 1101-	*	11
ｼｭ-(ｸﾞﾛｰｻ800ｼｰﾙｲﾘ) M	GROUSER SHOE 800 SEAL M	DA02A5L0006-00 003	OPT210A5 1101-	*	13
ｶﾊﾞｰ;ﾛﾜｰｱﾝﾀﾞ	LOWER UNDER COVER	DA0301L0012-00 001	210A5 1101-	*	15
			210L5 1101-	*	
ｶﾞｰﾄﾞ;ｾﾝﾀ	CENTER GUARD	DA0501L0006-00 001	210A5 1101-	*	17
			210L5 1101-	*	
ｶﾞｰﾄﾞ;ﾄﾗｯｸ(ﾄﾘﾌﾟﾙ)	TRACK GUARD(TRIPLE)	DA3805L0003-00 001	OPT210A5 1101-	*	19
			210L5 1101-	*	
ｼﾞｮｲﾝﾄ;ｾﾝﾀ	CENTER JOINT	DA8901L0028-00 002	210A5 1101-	*	21
			210L5 1101-	*	
ｽﾌﾟﾘﾝｸﾞ;ﾘｺｲﾙ (SH200-5)	RECOIL SPRING	DA9401L0027-00 001	210A5 1101-	*	23
			210L5 1101-	*	
ｿｳﾁ;ｿｳｺｳ	TRACTION EQUIPMENT	DAA801L0021-00 001	210A5 1101-	*	25
			210L5 1101-	*	
ﾌﾚｰﾑ;ﾛﾜｰ	LOWER FRAME	DAE901L0071-00 001	210A5 1101-	*	27
ﾌﾚｰﾑ;ﾛﾜｰ	LOWER FRAME	DAE901L0072-00 001	210L5 1101-	*	29
ﾗｲﾝ;ｿｳｺｳﾓｰﾀ	TRACTION MOTOR LINE	DAK301L0004-00 002	210A5 1101-		33
ﾗｲﾝ;ｿｳｺｳﾓｰﾀ SH200LC-3	TRACTION MOTOR LINE	DAK301L0007-00 001	210L5 1101-		35
ﾛｰﾗ;ｱｯﾊﾟ	UPPER ROLLER	DAN401L0014-00 002	210A5 1101-	*	37
			210L5 1101-	*	
ﾛｰﾗ;ﾃｲｸｱｯﾌﾟ	TAKE-UP ROLLER	DAN701L0004-00 004	210A5 1101-	*	39
			210L5 1101-	*	
ﾛｰﾗ;ﾛﾜｰ	LOWER ROLLER	DAP201L0021-00 001	210A5 1101-		41
ﾛｰﾗ;ﾛﾜｰ	LOWER ROLLER	DAP201L0022-00 001	210L5 1101-		43
DB: ｾﾝｶｲﾌﾚｰﾑ･ﾌﾟﾗｯﾄﾎｰﾑ･ｶｳﾝﾀｳｴｲﾄ	SWING FRAMES & PLATFORMS				
ｶｳﾝﾀｳｴｲﾄ SH200-5	COUNTER WEIGHT	DB0199L0088-00 001	210A5 1101-	*	45
			210L5 1101-	*	
ｶｳﾝﾀｳｴｲﾄ SH200-5	COUNTER WEIGHT	DB0199L0112-00 001	OPT210A5 1346-	*	49
			OPT210L5 1233-	*	
ｶﾊﾞｰ;ｱｯﾊﾟｱﾝﾀﾞ LBX/CASE	UPPER UNDER COVER	DB0201L0055-00 000	210A5 1101-		51
			210L5 1101-		
BRG;ﾀｰﾝﾃｰﾌﾞﾙ LBX/CASE	TURN TABLE BEARING	DB1001L0023-00 001	210A5 1101-		53
			210L5 1101-		
ﾌﾚｰﾑ;ｾﾝｶｲ SH200-5	REVOLVING FRAME	DBA201L0088-00 001	210A5 1101-		55
			210L5 1101-		
DC: ﾘﾊﾞｰｽｼｬﾌﾄ･ｸﾗｯﾁ	REV.SHAFTS & CLUTCH				
ｿｳﾁ;ｾﾝｶｲ	REVOLVING EQUIPMENT	DC4501L0047-00 000	210A5 1101-1227		57
			210L5 1101-1172		
ｿｳﾁ;ｾﾝｶｲ SH200-5	REVOLVING EQUIPMENT	DC4501L0059-00 000	210A5 1228-	*	61
			210L5 1173-	*	
DH: ｴﾝｼﾞﾝ･ﾊﾟﾜｰﾕﾆｯﾄ	ENGINES & POWER UNITS				
ｴﾝｼﾞﾝ(ｲｽｽﾞ) SH210-5	ENGINE(ISUZU)	DH0101L0051-00 002	210A5 1101-	*	65
			210L5 1101-	*	
ﾏﾌﾗ(ﾋｮｳｼﾞｭﾝ) SH200-5	MUFFLER(STANDARD)	DH0201L0031-00 002	210A5 1101-	*	69
			210L5 1101-	*	
ﾗｼﾞｴﾀ(ﾋｮｳｼﾞｭﾝ) SH200-5	RADIATOR(STANDARD)	DH0301L0031-00 004	210A5 1101-	*	71
			210L5 1101-	*	
ｸﾘｰﾅ;ｴｱ(Wｴﾚﾒﾝﾄ) SH200-5	AIR CLEANER(W ELEMENT)	DH0602L0031-00 001	210A5 1101-		75

SH210-5 BACKHOE

目 次 CONTENTS

OPT=ｵﾌﾟｼｮﾝ(OPTION)

ｴﾘｱ AREA	NAME	ﾊﾟｰﾂﾍﾟｰｼﾞｺｰﾄﾞ PARTS PAGE CODE		適用号機 SERIAL NO.	変更 CHANGE	ﾍﾟｰｼﾞ番号 PAGE NO
ｸﾘｰﾅ;ｴｱ(Wｴﾚﾒﾝﾄ) SH200-5	AIR CLEANER(W ELEMENT)	DH0602L0031-00	001	210L5 1101-		75
ｸﾘｰﾅ;ｴｱ(Wｴﾚﾒﾝﾄ) ﾌﾟﾚｸﾘｰﾅﾂｷ	AIR CLEANER(W ELEMENT)	DH0602L0032-00	002	OPT210A5 1101-	*	77
				OPT210L5 1101-	*	
ﾀﾝｸ;ﾌｭｰｴﾙ	FUEL TANK	DH8101L0022-00	002	210A5 1101-	*	79
				210L5 1101-	*	
ﾗｲﾝ;ﾌｭｰｴﾙ SH200-5	FUEL LINE	DHE001L0044-00	003	210A5 1101-	*	81
				210L5 1101-	*	
DJ: ｺﾝﾄﾛｰﾙ･ﾕｱﾂﾗｲﾝ	CONTROLS & HYD. LINES					
ｺﾝﾄﾛｰﾙ;ｻｰﾋﾞｽﾊﾞﾙﾌﾞ (R)	SERVICE VALVE CONTROL (R)	DJ5801L0012-00	000	OPT210A5 1101-		85
				OPT210L5 1101-		
ｺﾝﾄﾛｰﾙ;ｻｰﾋﾞｽﾊﾞﾙﾌﾞ (L)	SERVICE VALVE CONTROL (L)	DJ5801L0013-00	000	OPT210A5 1101-		87
				OPT210L5 1101-		
ｺﾝﾄﾛｰﾙ;ｼﾞｮｲｽﾃｲﾂｸ	JOYSTICK CONTROL	DJ6201L0059-00	004	210A5 1101-1705	*	89
				210L5 1101-1362	*	
ｺﾝﾄﾛｰﾙ;ｼﾞｮｲｽﾃｲﾂｸ	JOYSTICK CONTROL	DJ6201L0063-00	002	210A5 1706-	*	91
				210L5 1363-	*	
ﾗｲﾝ;ﾄﾞﾚﾝ SH200-5	DRAIN LINE	DJAH01L0107-00	001	210A5 1101-		93
				210L5 1101-		
ﾗｲﾝ;ﾊﾞｹｯﾄ&ｱｰﾑ SH200-5	BUCKET & ARM LINE	DJAQ01L0029-00	000	210A5 1101-1779		95
				210L5 1101-1392		
ﾗｲﾝ;ﾊﾞｹｯﾄ&ｱｰﾑ SH200-5	BUCKET & ARM LINE	DJAQ01L0041-00	000	210A5 1780-	*	97
				210L5 1393-	*	
ﾗｲﾝ;ﾊﾟｲﾛｯﾄｱﾂﾘﾖｸ&ﾘﾀｰﾝ	PILOT PRESS.& RETURN LINE	DJBC01L0126-00	000	210A5 1101-		99
				210L5 1101-		
ﾗｲﾝ;ﾌﾞｰﾑ SH200-5	BOOM LINE	DJBV01L0039-00	000	210A5 1101-		105
				210L5 1101-		
ﾀﾝｸ;ｻﾝﾌﾟ SH200-5	SUMP TANK	DJE701L0030-00	002	210A5 1101-	*	107
				210L5 1101-	*	
ﾗｲﾝ;ﾘﾀｰﾝ&ｵｲﾙｸｰﾗ SH200-5	RETURN & OIL COOLER LINE	DJEE01L0064-00	002	210A5 1101-	*	111
				210L5 1101-	*	
ﾊﾞﾙﾌﾞ;ｺﾝﾄﾛｰﾙ (STD)	CONTROL VALVE (STD)	DJG201L0073-00	003	210A5 1101-	*	113
				210L5 1101-	*	
ﾊﾞﾙﾌﾞ;ｺﾝﾄﾛｰﾙ (2ND)	CONTROL VALVE(2ND)	DJG201L0074-00	003	OPT210A5 1101-	*	115
				OPT210L5 1101-	*	
ﾊﾞﾙﾌﾞ;ｻｰﾋﾞｽ ﾎﾟｰﾄﾘﾘｰﾌ	SERVICE VALVE	DJG301L0001-00	000	OPT210A5 1101-		119
				OPT210L5 1101-		
ﾗｲﾝ;ﾊﾟｲﾛｯﾄｺﾝﾄﾛｰﾙ (STD)	PILOT CONTROL LINE(STD)	DJHC01L0093-00	003	210A5 1101-	*	121
				210L5 1101-	*	
ﾗｲﾝ;ﾊﾟｲﾛｯﾄｺﾝﾄﾛｰﾙ HBCV	PILOT CONTROL LINE(HBCV)	DJHC01L0101-00	000	OPT210A5 1101-		131
				OPT210L5 1101-		
ﾌﾟﾗｸﾞ ｸﾞﾙｰﾌﾟ STD	PLUG	DJK401L0288-00	002	210A5 1101-	*	135
				210L5 1101-	*	
ﾌﾟﾗｸﾞ ｸﾞﾙｰﾌﾟ ﾌﾞﾚｰｶ	PLUG	DJK401L0289-00	002	OPT210A5 1101-	*	137
				OPT210L5 1101-	*	
ﾌﾟﾗｸﾞ ｸﾞﾙｰﾌﾟ ﾍｲﾖｳ	PLUG	DJK401L0290-00	002	OPT210A5 1101-	*	139
				OPT210L5 1101-	*	
ﾌﾟﾗｸﾞ ｸﾞﾙｰﾌﾟ ﾍｲﾖｳ+ﾀﾞｲ2	PLUG	DJK401L0292-00	001	OPT210A5 1101-	*	143
				OPT210L5 1101-	*	
ﾌﾟﾗｸﾞ ｸﾞﾙｰﾌﾟ(ﾈﾝﾘｮｳﾀﾝｸ)	PLUG	DJK401L0295-00	000	210A5 1101-		145
				210L5 1101-		
ｶｲﾛ;ﾌﾞﾚｰｶ	SINGLE ACTING CIRCUIT	DJKX01L0052-00	001	OPT210A5 1101-		147
				OPT210L5 1101-		
ｶｲﾛ;ﾍｲﾖｳ	MULTI-PURPOSE CIRCUIT	DJKZ01L0069-00	001	OPT210A5 1101-		155
				OPT210L5 1101-		
ﾎﾟﾝﾌﾟ;ﾕｱﾂ	HYDRAULIC PUMP	DJL901L0069-00	002	210A5 1101-	*	161
				210L5 1101-	*	
ﾎﾟﾝﾌﾟ;ﾕｱﾂ ﾀﾞｲ2ﾖﾋﾞ	HYDRAULIC PUMP(2ND OPTION)	DJL901L0070-00	003	OPT210A5 1101-	*	163
				OPT210L5 1101-	*	
ｶｲﾛ;ﾀﾞｲ2ｵｳﾌｸ	SECOND W-ACTING CIRCUIT	DJLJ01L0022-00	000	OPT210A5 1101-		165
				OPT210L5 1101-		

https://truckmanualshub.com/

目 次 CONTENTS

OPT=ｵﾌﾟｼｮﾝ(OPTION)

エリア AREA	NAME	ﾊﾟｰﾂﾍﾟｰｼﾞｺｰﾄﾞ PARTS PAGE CODE	適用号機 SERIAL NO.	変更 CHANGE	ﾍﾟｰｼﾞ番号 PAGE NO
ﾏｯﾄ;ﾌﾛｱ (STD) SUMITOMO	FLOOR MAT	DJM101L0048-00 000	210A5 1101- 210L5 1101-		167
ﾏｯﾄ;ﾌﾛｱ (ﾖﾋﾞ1) SUMITOMO	FLOOR MAT	DJM101L0049-00 000	OPT210A5 1101- OPT210L5 1101-		169
ﾏｯﾄ;ﾌﾛｱ (ﾖﾋﾞ1+2) SUMITOMO	FLOOR MAT	DJM101L0050-00 000	OPT210A5 1101- OPT210L5 1101-		171
ﾗｲﾝ;ｱﾂﾘﾖｸ	PRESSURE LINE	DJP801L0039-00 001	210A5 1101- 210L5 1101-	* *	173
ﾗｲﾝ;ｻｸｼｮﾝ SH200-5	SUCTION LINE	DJW001L0059-00 001	210A5 1101- 210L5 1101-		175
ﾗｲﾝ;ｾﾝｶｲ SH200-5	SWING LINE	DJY601L0024-00 000	210A5 1101- 210L5 1101-		177
ﾗｲﾝ;ｿｳｺｳ SH200-5	TRACTION LINE	DJY901L0024-00 000	210A5 1101- 210L5 1101-		179
DN: ｵﾍﾟﾚｰﾀｷｬﾌﾞ･ﾊｳｽ･ｶﾊﾞｰ	OPERATOR'S CAB & HOUSE				
ｶﾞｰﾄﾞ;ｷｬﾌﾞ FOPS LEVEL2	CAB GUARD FOPS LEVEL2	DN0501L0005-00 000	OPT210A5 1101- OPT210L5 1101-		181
ｷｬﾌﾞ;ｵﾍﾟﾚｰﾀ (EXP)	OPERATOR'S CAB	DN4801L0083-00 007	210A5 1101- 210L5 1101-	* *	183
ｷｬﾌﾞ;ｵﾍﾟﾚｰﾀ (EXP ｸﾘｱﾊｯﾁ)	OPERATOR'S CAB	DN4801L0084-00 006	OPT210A5 1101- OPT210L5 1101-	* *	193
ﾊｳｽ ﾌﾟﾚｸﾘｰﾅﾂｷ	HOUSE	DN7301L0211-00 002	OPT210A5 1101- OPT210L5 1101-	* *	203
ﾊｳｽ ﾈｯﾁｼｮｳ	HOUSE	DN7301L0212-00 001	OPT210A5 1101- OPT210L5 1101-	* *	211
ﾊｳｽ ﾈｯﾁｼｮｳ ﾌﾟﾚｸﾘｰﾅﾂｷ	HOUSE	DN7301L0213-00 001	OPT210A5 1101- OPT210L5 1101-	* *	219
ﾊｳｽ SH200-5(JPN/EXP)	HOUSE	DN7301L0246-00 002	210A5 1101- 210L5 1101-		227
ﾎﾞｯｸｽ;ｺﾝｿｰﾙ & ｼｰﾄ	CONSOLE BOX	DN9901L0050-00 003	210A5 1101- 210L5 1101-	* *	235
ﾎﾞｯｸｽ;ｺﾝｿｰﾙ & ｼｰﾄ KAB ｽﾐﾄﾓｴｱｻｽ	CONSOLE BOX	DN9901L0052-00 005	OPT210A5 1101- OPT210L5 1101-	* *	245
ﾎﾞｯｸｽ;ｺﾝｿｰﾙ & ｼｰﾄ KAB ｽﾐﾄﾓ	CONSOLE BOX	DN9901L0058-00 004	OPT210A5 1101- OPT210L5 1101-	* *	253
ﾁｪｰﾝ;ﾄﾞｯｸﾞ	DOG CHAIN	DNB501L0002-00 001	210A5 1101- 210L5 1101-	* *	263
ﾘﾌﾚｸﾀ;ﾚｲﾝ	RAIN REFLECTOR	DNC701L0002-00 000	OPT210A5 1101- OPT210L5 1101-		265
DP: ｻﾞｯﾋﾟﾝ･ﾒｲﾊﾞﾝ	ACCESSORIES & NAME PLATES				
ﾄｿｳ SH210-5 EXPORT	PAINTING	DP0103L0222-00 002	210A5 1101-	*	267
ﾄｿｳ SH210LC-5 EXPORT	PAINTING	DP0103L0223-00 002	210L5 1101-	*	269
ﾒｲﾊﾞﾝ(ｴｲﾌﾞﾝ) EXPORT	NAME PLATE(ENGLISH)	DP0210L0141-00 001	210A5 1101- 210L5 1101-	* *	273
ﾐﾗｰ;ﾊﾞｯｸ ｶｲｶﾞｲ	REAR VIEW MIRROR	DP0701L0020-00 002	210A5 1101- 210L5 1101-	* *	277
ｷｯﾄ;ｽﾍﾟｱﾊﾟｰﾂ SH200/240-5 EXP	SPARE PARTS KIT	DP5501L0058-00 001	210A5 1101- 210L5 1101-	* *	279
ﾄﾞｳｸﾞ SH200-5 EXP	TOOLS	DPF001L0021-00 000	210A5 1101- 210L5 1101-		281
ﾒｲﾊﾞﾝ;ｿｳｻ ISO	OPE NAME PLATE	DPM801L0002-00 000	210A5 1101- 210L5 1101-		283
ﾒｲﾊﾞﾝ;ｿｳｻ ﾖﾋﾞ ｶｲｶﾞｲ	OPE NAME PLATE	DPM801L0005-00 000	OPT210A5 1101- OPT210L5 1101-		285
DR: ﾃﾞﾝｷﾋﾝ	ELECTRIC PARTS				
ｵﾝｷｮｳ(AM/FMﾗｼﾞｵ<H>) ｽﾃﾚｵ	AM/FM RADIO HIGH BAND	DR0103L0008-00 000	210A5 1101-		287

目 次 CONTENTS

OPT=ｵﾌﾟｼｮﾝ(OPTION)

ｴﾘｱ AREA	NAME	ﾊﾟｰﾂﾍﾟｰｼﾞｺｰﾄﾞ PARTS PAGE CODE		適用号機 SERIAL NO.	変更 CHANGE	ﾍﾟｰｼﾞ番号 PAGE NO
ｵﾝｷﾖｳ(AM/FMﾗｼﾞｵ<H>) ｽﾃﾚｵ	AM/FM RADIO HIGH BAND	DR0103L0008-00	000	210L5 1101-		287
ｸｳﾁﾖｳ(ｴｱｺﾝ) (ｷｬﾌﾞ)	AIR CONDITIONER (CAB)	DR0205L0043-00	006	210A5 1101-	*	289
				210L5 1101-	*	
ｸｳﾁﾖｳ(ｴｱｺﾝ) (ﾌﾚｰﾑ)	AIR CONDITIONER (FRAME)	DR0205L0044-00	003	210A5 1101-	*	295
				210L5 1101-	*	
ﾗｲﾄ;ﾜｰｷﾝｸﾞ (ｶｲｶﾞｲ)	WORKING LIGHT	DR1801L0020-00	000	210A5 1101-		299
				210L5 1101-		
ﾗｲﾄ;ﾜｰｷﾝｸﾞ ｷｬﾌﾞ EXP	WORKING LIGHT (UPPER CAB)	DR1801L0023-00	000	OPT210A5 1124-		301
				OPT210L5 1101-		
ｱﾗｰﾑ;ｿｳｺｳ	TRACTION ALARM	DR4301L0005-00	000	210A5 1101-		303
				210L5 1101-		
ｳｵｯｼｬ;ｳｲﾝﾄﾞ	WINDOW WASHER	DR5001L0020-00	001	210A5 1101-		305
				210L5 1101-		
ｺﾝﾄﾛｰﾗ	CONTROLLER	DR9901L0008-00	001	210A5 1101-1112		307
ｺﾝﾄﾛｰﾗ	CONTROLLER	DR9901L0009-00	002	210A5 1113-1613	*	309
				210L5 1101-1319	*	
ｺﾝﾄﾛｰﾗ	CONTROLLER	DR9901L0013-00	002	210A5 1614-	*	311
				210L5 1320-	*	
ｺﾝﾊﾞｰﾀ;DC-DC	DC-DC CONVERTER	DRA801L0007-00	000	OPT210A5 1101-		313
				OPT210L5 1101-		
ｽﾀﾝﾄﾞ;ﾘﾔ (ｸﾞﾚｰ)	STAND REAR	DRCB01L0001-00	001	210A5 1101-		315
				210L5 1101-		
ｽｲｯﾁ;ﾌﾟﾚｯｼｬ (ｲﾝｼﾞｹｰﾀ)	PRESS SWITCH	DRD701L0001-00	000	OPT210A5 1101-1123		317
				OPT210L5 1101-1116		
ｽｲｯﾁ;ﾌﾟﾚｯｼｬ (ｲﾝｼﾞｹｰﾀ)	PRESS SWITCH (INDICATOR)	DRD701L0004-00	001	OPT210A5 1124-		319
				OPT210L5 1117-		
ﾃﾞﾝｷﾋﾝ&ﾊｲｾﾝ (ｷｬﾌﾞ)JPN/EXP	ELEC.PARTS & WIRE HARNESS(CAB)	DRJ401L0204-00	005	210A5 1101-1123	*	321
				210L5 1101-1116	*	
ﾃﾞﾝｷﾋﾝ&ﾊｲｾﾝ (ﾌﾚｰﾑ)(JPN/EXP)	ELEC.PARTS & WIRE HARNESS(FRM)	DRJ401L0205-00	004	210A5 1101-	*	327
				210L5 1101-	*	
ﾃﾞﾝｷﾋﾝ&ﾊｲｾﾝ (ｷｬﾌﾞ) 210-5 EXP	ELEC.PARTS & WIRE HARNESS	DRJ401L0230-00	002	210A5 1124-1165	*	335
				210L5 1117-1159	*	
ﾃﾞﾝｷﾋﾝ&ﾊｲｾﾝ (ｷｬﾌﾞ) CHINA	ELEC.PARTS & WIRE HARNESS	DRJ401L0256-00	002	210A5 1166-	*	341
				210L5 1160-	*	
ﾊﾞｯﾃﾘ (130E41)	BATTERY	DRV001L0015-00	001	210A5 1101-	*	347
				210L5 1101-	*	
ﾌﾟﾗｸﾞ ｸﾞﾙｰﾌﾟ ｸﾚｰﾝﾅｼ	PLUG	DRX401L0001-00	001	210A5 1101-1123	*	349
				210L5 1101-1116	*	
ﾎｰﾝ(ﾃﾞﾝｷ)	HORN(ELECTRIC)	DRY003L0010-00	001	210A5 1101-	*	351
				210L5 1101-	*	
ﾎﾟﾝﾌﾟ;ﾌｭｰｴﾙﾌｨｰﾄﾞ	FUEL FEED PUMP	DRY701L0011-00	001	OPT210A5 1101-		353
				OPT210L5 1101-		
DV: ｱﾀｯﾁﾒﾝﾄ(ﾊﾞｯｸﾎｰ)	ATTACHMENTS (BACKHOE)					
ﾊﾞｹｯﾄ(0.50M3)	BUCKET(0.50M3)	DV0114L0005-00	002	OPT210A5 1101-	*	355
				OPT210L5 1101-	*	
ﾊﾞｹｯﾄ(0.80M3)	BUCKET(0.80M3)	DV0117L0004-00	002	210A5 1101-	*	357
				OPT210L5 1101-	*	
ﾊﾞｹｯﾄ(0.90M3)	BUCKET(0.90M3)	DV0118L0003-00	002	OPT210A5 1101-	*	359
				210L5 1101-	*	
ﾊﾞｹｯﾄ(1.00M3)	BUCKET(1.00M3)	DV0119L0004-00	002	OPT210A5 1101-	*	361
				OPT210L5 1101-	*	
ﾊﾞｹｯﾄ(1.10M3)	BUCKET(1.10M3)	DV0120L0004-00	002	OPT210A5 1101-	*	363
				OPT210L5 1101-	*	
ﾊﾞｹｯﾄ(ｼﾞｭｳｸﾂｻｸ0.80M3)	BUCKET(HEAVY DUTY0.80M3)	DV01A0L0002-00	002	OPT210A5 1101-	*	365
				OPT210L5 1101-	*	
ﾊﾞｹｯﾄ(ﾖｺﾋﾟﾝﾂｰｽ0.80M3)	BUCKET(LEVEL PIN 0.80M3)	DV01H7L0002-00	002	OPT210A5 2195-	*	369
ﾊﾞｹｯﾄ(ﾖｺﾋﾟﾝﾂｰｽ0.90M3)	BUCKET(LEVEL PIN 0.90M3)	DV01H8L0002-00	002	OPT210A5 2195-	*	371
ｱｰﾑ(ﾋｮｳｼﾞｭﾝ) (EM3)	ARM(STANDARD) (2.9M)	DV0201L0176-00	001	210A5 1101-	*	373
				210L5 1101-	*	
ｱｰﾑ(ﾋｮｳｼﾞｭﾝ) (EM3 01)	ARM(STANDARD) (2.9M)	DV0201L0177-00	002	OPT210A5 1101-	*	375

https://truckmanualshub.com/

目 次 CONTENTS

OPT=ｵﾌﾟｼｮﾝ(OPTION)

エリア AREA	NAME	ﾊﾟｰﾂﾍﾟｰｼﾞｺｰﾄﾞ PARTS PAGE CODE		適用号機 SERIAL NO.	変更 CHANGE	ﾍﾟｰｼﾞ番号 PAGE NO
ｱｰﾑ(ﾋﾖｳｼﾞｭﾝ) (EM3 01)	ARM(STANDARD) (2.9M)	DV0201L0177-00	002	OPT210A5 1101-	*	375
ｱｰﾑ(ﾋﾖｳｼﾞｭﾝ) (HD EM3 01)	ARM(STANDARD) (2.9M)	DV0201L0180-00	003	OPT210A5 1101-	*	377
				OPT210L5 1101-	*	
ｱｰﾑ(ﾋﾖｳｼﾞｭﾝ) (HD EM3 012)	ARM(STANDARD) (2.9M)	DV0201L0181-00	003	OPT210A5 1101-	*	379
				OPT210L5 1101-	*	
ｱｰﾑ(ｼﾖｰﾄ) (EM3 01)	ARM(SHORT) (2.4M)	DV0230L0103-00	002	OPT210A5 1101-	*	385
				OPT210L5 1101-	*	
ｱｰﾑ(ｼﾖｰﾄ) (EM3 012)	ARM(SHORT) (2.4M)	DV0230L0104-00	002	OPT210A5 1101-	*	387
				OPT210L5 1101-	*	
ｱｰﾑ(ｼﾖｰﾄ) (EM3)	ARM(SHORT) (2.4M)	DV0230L0120-00	001	OPT210A5 1101-	*	389
				OPT210L5 1101-	*	
ﾌﾞｰﾑ(ﾊﾞｯｸﾎｰ) (5.7M EMS)	BOOM(BACK-HOE)	DV0301L0131-00	002	210A5 1101-	*	391
				210L5 1101-	*	
ﾌﾞｰﾑ(ﾊﾞｯｸﾎｰ) (5.7M HD EMS)	BOOM(BACK-HOE)	DV0301L0132-00	002	OPT210A5 1101-	*	395
				OPT210L5 1101-	*	
ﾘﾝｹｰｼﾞ;ﾊﾞｹｯﾄ(ﾋﾖｳｼﾞｭﾝ) (EM3)	BUCKET LINKAGE(STANDARD)	DV0401L0033-00	000	210A5 1101-		403
				210L5 1101-		
ﾘﾝｹｰｼﾞ;ﾊﾞｹｯﾄ(ｷﾖｳｶｶﾞﾀ) (EM3)	BUCKET LINKAGE(BUILD-UP)	DV0402L0029-00	000	OPT210A5 1101-		407
				OPT210L5 1101-		
ﾗｲﾝ;ﾖﾋﾞ(ｻﾞﾂｷﾖｳ) (STD)	OPTION LINE(BAR BASE)	DV0601L0092-00	001	OPT210A5 1101-		409
				OPT210L5 1101-		
ﾗｲﾝ;ﾖﾋﾞ(ｻﾞﾂｷﾖｳ) (SHORT)	OPTION LINE(BAR BASE) (2.4M)	DV0601L0094-00	001	OPT210A5 1101-		411
				OPT210L5 1101-		
ﾗｲﾝ;ｱｰﾑｼﾘﾝﾀﾞ (EMS)	ARM CYLINDER LINE	DV4601L0144-00	001	210A5 1101-		419
				210L5 1101-		
ﾗｲﾝ;ｱｰﾑｼﾘﾝﾀﾞ (EMS HBCV)	ARM CYLINDER LINE	DV4601L0146-00	003	210A5 1101-	*	421
				OPT210L5 1101-	*	
ﾗｲﾝ;ｸﾞﾘｽ	GREASE LINE	DV5001L0041-00	001	210A5 1101-	*	429
				210L5 1101-	*	
ﾗｲﾝ;ﾊﾞｹｯﾄｼﾘﾝﾀﾞ (EMS STD)	BUCKET CYLINDER LINE	DV5601L0153-00	001	210A5 1101-	*	433
				210L5 1101-	*	
ﾗｲﾝ;ﾊﾞｹｯﾄｼﾘﾝﾀﾞ (EMS SHORT)	BUCKET CYLINDER LINE (2.4M)	DV5601L0155-00	001	OPT210A5 1101-	*	435
				OPT210L5 1101-	*	
ﾗｲﾝ;ﾌﾞｰﾑｼﾘﾝﾀﾞ (EMS)	BOOM CYLINDER LINE	DV6001L0087-00	000	210A5 1101-		441
				210L5 1101-		
ﾗｲﾝ;ﾌﾞｰﾑｼﾘﾝﾀﾞ (EMS HBCV)	BOOM CYLINDER LINE (EMS HBCV)	DV6001L0090-00	000	OPT210A5 1101-		443
				OPT210L5 1101-		
ﾗｲﾝ;ﾀﾞｲ2ﾖﾋﾞ (ｻﾞﾂｷﾖｳ STD)	SECOND OPTION LINE	DV7501L0047-00	003	OPT210A5 1101-	*	447
				OPT210L5 1101-	*	
ﾗｲﾝ;ﾀﾞｲ2ﾖﾋﾞ (ｻﾞﾂｷﾖｳ SHORT)	SECOND OPTION LINE (2.4M)	DV7501L0049-00	003	OPT210A5 1101-	*	449
				OPT210L5 1101-	*	
ｸﾗﾝﾌﾟ (2.9M)	CLAMP	DV9901L0029-00	001	210A5 1101-	*	453
				210L5 1101-	*	
ｸﾗﾝﾌﾟ (2.9M 01)	CLAMP	DV9901L0030-00	000	OPT210A5 1101-		455
				OPT210L5 1101-		
ｸﾗﾝﾌﾟ (2.9M 01 02)	CLAMP	DV9901L0031-00	000	OPT210A5 1101-1675		459
				OPT210L5 1101-1348		
ｸﾗﾝﾌﾟ (BOOM 012)	CLAMP	DV9901L0033-00	001	OPT210A5 1676-	*	463
				OPT210L5 1349-	*	
ｸﾗﾝﾌﾟ (STD ARM 012)	CLAMP (3.0M ARM)	DV9901L0035-00	000	OPT210A5 1676-	*	467
				OPT210L5 1349-	*	
ｸﾗﾝﾌﾟ (2.4M 01)	CLAMP	DV9901L0036-00	000	OPT210A5 1101-		469
				OPT210L5 1101-		
ｸﾗﾝﾌﾟ (012 HBCV)	CLAMP	DV9901L0038-00	000	OPT210A5 1101-1675		473
				OPT210L5 1101-1348		
ｸﾗﾝﾌﾟ (HBCV)	CLAMP	DV9901L0039-00	001	OPT210A5 1101-	*	477
				OPT210L5 1101-	*	
ｸﾗﾝﾌﾟ (2.9M HBCV 01)	CLAMP	DV9901L0040-00	000	OPT210A5 1101-		479
				OPT210L5 1101-		
ｸﾗﾝﾌﾟ (2.4M HBCV 01)	CLAMP	DV9901L0041-00	000	OPT210A5 1101-		483
				OPT210L5 1101-		
ｸﾗﾝﾌﾟ (SHORT ARM 012)	CLAMP (2.5M ARM)	DV9901L0057-00	000	OPT210A5 1676-	*	487

https://truckmanualshub.com/

目　次　CONTENTS

OPT=ｵﾌﾟｼｮﾝ(OPTION)

ｴﾘｱ AREA	NAME	ﾊﾟｰﾂﾍﾟｰｼﾞｺｰﾄﾞ PARTS PAGE CODE	適用号機 SERIAL NO.	変更 CHANGE	ﾍﾟｰｼﾞ番号 PAGE NO
ｸﾗﾝﾌﾟ (SHORT ARM 012)	CLAMP (2.5M ARM)	DV9901L0057-00 000	OPT210L5 1349-	*	487
ｸﾗﾝﾌﾟ (BOOM HBCV 012)	CLAMP	DV9901L0059-00 001	OPT210A5 1101-	*	489
			OPT210L5 1101-	*	

https://truckmanualshub.com/

目 次 CONTENTS

OPT=ｵﾌﾟｼｮﾝ(OPTION)

エリア AREA	NAME	ﾊﾟｰﾂﾍﾟｰｼﾞｺｰﾄﾞ PARTS PAGE CODE	適用号機 SERIAL NO.	変更 CHANGE	ﾍﾟｰｼﾞ番号 PAGE NO
DA: ﾛﾜｰ	LOWERS				
ｼｭｰ-(ｸﾞﾛｰｻ600ｼｰﾙｲﾘ) M	GROUSER SHOE 600 SEAL M	DA0219L0010-00 002	210L5 1101-		3
ｼｭｰ-(ｸﾞﾛｰｻ700ｼｰﾙｲﾘ) M	GROUSER SHOE 700 SEAL M	DA0221L0004-00 004	OPT210L5 1101-	*	7
ｼｭｰ-(ｸﾞﾛｰｻ800ｼｰﾙｲﾘ) M	GROUSER SHOE 800 SEAL M	DA02A5L0004-00 004	OPT210L5 1101-	*	11
ｶﾊﾞｰ;ﾛﾜｰｱﾝﾀﾞ	LOWER UNDER COVER	DA0301L0012-00 001	210L5 1101-	*	15
ｶﾞｰﾄﾞ;ｾﾝﾀ	CENTER GUARD	DA0501L0006-00 001	210L5 1101-	*	17
ｶﾞｰﾄﾞ;ﾄﾗｯｸ(ﾄﾘﾌﾟﾙ)	TRACK GUARD(TRIPLE)	DA3805L0003-00 001	OPT210L5 1101-	*	19
ｼﾞｮｲﾝﾄ;ｾﾝﾀ	CENTER JOINT	DA8901L0028-00 002	210L5 1101-	*	21
ｽﾌﾟﾘﾝｸﾞ;ﾘｺｲﾙ (SH200-5)	RECOIL SPRING	DA9401L0027-00 001	210L5 1101-	*	23
ｿｳﾁ;ｿｳｺｳ	TRACTION EQUIPMENT	DAA801L0021-00 001	210L5 1101-	*	25
ﾌﾚｰﾑ;ﾛﾜｰ SH200LC-5LR	LOWER FRAME SH200LC-5LR	DAE901L0084-00 001	210L5 1101-	*	31
ﾗｲﾝ;ｿｳｺｳﾓｰﾀ SH200LC-3	TRACTION MOTOR LINE	DAK301L0007-00 001	210L5 1101-		35
ﾛｰﾗ;ｱｯﾊﾟ	UPPER ROLLER	DAN401L0014-00 002	210L5 1101-	*	37
ﾛｰﾗ;ﾃｲｸｱｯﾌﾟ	TAKE-UP ROLLER	DAN701L0004-00 004	210L5 1101-	*	39
ﾛｰﾗ;ﾛﾜｰ	LOWER ROLLER	DAP201L0022-00 001	210L5 1101-		43
DB: ｾﾝｶｲﾌﾚｰﾑ･ﾌﾟﾗｯﾄﾎｰﾑ･ｶｳﾝﾀｳｴｲﾄ	SWING FRAMES & PLATFORMS				
ｶｳﾝﾀｳｴｲﾄ SH200-5LR	COUNTER WEIGHT	DB0199L0102-00 001	210L5 1101-	*	47
ｶﾊﾞｰ;ｱｯﾊﾟｱﾝﾀﾞ LBX/CASE	UPPER UNDER COVER	DB0201L0055-00 000	210L5 1101-		51
BRG;ﾀｰﾝﾃｰﾌﾞﾙ LBX/CASE	TURN TABLE BEARING	DB1001L0023-00 001	210L5 1101-		53
ﾌﾚｰﾑ;ｾﾝｶｲ SH200-5	REVOLVING FRAME	DBA201L0088-00 001	210L5 1101-		55
DC: ﾘﾊﾞｰｽｼｬﾌﾄ･ｸﾗｯﾁ	REV.SHAFTS & CLUTCH				
ｿｳﾁ;ｾﾝｶｲ SH200-5LR	REVOLVING EQUIPMENT	DC4501L0051-00 000	210L5 1101-		59
DH: ｴﾝｼﾞﾝ･ﾊﾟﾜｰﾕﾆｯﾄ	ENGINES & POWER UNITS				
ｴﾝｼﾞﾝ(ｲｽｽﾞ) SH210-5	ENGINE(ISUZU)	DH0101L0051-00 002	210L5 1101-	*	65
ﾏﾌﾗ(ﾋｮｳｼﾞｭﾝ) SH200-5	MUFFLER(STANDARD)	DH0201L0031-00 002	210L5 1101-	*	69
ﾗｼﾞｴﾀ(ﾋｮｳｼﾞｭﾝ) SH200-5	RADIATOR(STANDARD)	DH0301L0031-00 004	210L5 1101-	*	71
ｸﾘｰﾅ;ｴｱ(Wｴﾚﾒﾝﾄ) SH200-5	AIR CLEANER(W ELEMENT)	DH0602L0031-00 001	210L5 1101-		75
ｸﾘｰﾅ;ｴｱ(Wｴﾚﾒﾝﾄ) ﾌﾟﾚｸﾘｰﾅﾂｷ	AIR CLEANER(W ELEMENT)	DH0602L0032-00 002	OPT210L5 1101-	*	77
ﾀﾝｸ;ﾌｭｰｴﾙ	FUEL TANK	DH8101L0022-00 002	210L5 1101-	*	79
ﾗｲﾝ;ﾌｭｰｴﾙ SH200-5	FUEL LINE	DHE001L0044-00 003	210L5 1101-	*	81
DJ: ｺﾝﾄﾛｰﾙ･ﾕｱﾂﾗｲﾝ	CONTROLS & HYD. LINES				
ｺﾝﾄﾛｰﾙ;ｻｰﾋﾞｽﾊﾞﾙﾌﾞ (R)	SERVICE VALVE CONTROL (R)	DJ5801L0012-00 000	OPT210L5 1101-		85
ｺﾝﾄﾛｰﾙ;ｼﾞｮｲｽﾃｲﾂｸ	JOYSTICK CONTROL	DJ6201L0063-00 002	210L5 1101-	*	91
ﾗｲﾝ;ﾄﾞﾚﾝ SH200-5	DRAIN LINE	DJAH01L0107-00 001	210L5 1101-		93
ﾗｲﾝ;ﾊﾞｹｯﾄ&ｱｰﾑ SH200-5	BUCKET & ARM LINE	DJAQ01L0041-00 000	210L5 1101-	*	97
ﾗｲﾝ;ﾊﾟｲﾛｯﾄｱﾂﾘﾖｸ&ﾘﾀｰﾝ	PILOT PRESS.& RETURN LINE	DJBC01L0126-00 000	210L5 1101-		99
ﾗｲﾝ;ﾌﾞｰﾑ SH200-5	BOOM LINE	DJBV01L0039-00 000	210L5 1101-		105
ﾀﾝｸ;ｻﾝﾌﾟ SH200-5	SUMP TANK	DJE701L0030-00 002	210L5 1101-	*	107
ﾗｲﾝ;ﾘﾀｰﾝ&ｵｲﾙｸｰﾗ SH200-5	RETURN & OIL COOLER LINE	DJEE01L0064-00 002	210L5 1101-	*	111
ﾊﾞﾙﾌﾞ;ｺﾝﾄﾛｰﾙ SH200-5LR	CONTROL VALVE	DJG201L0082-00 002	210L5 1101-	*	117
ﾊﾞﾙﾌﾞ;ｻｰﾋﾞｽ ﾎﾟｰﾄﾘﾘｰﾌ	SERVICE VALVE	DJG301L0001-00 000	OPT210L5 1101-		119
ﾗｲﾝ;ﾊﾟｲﾛｯﾄｺﾝﾄﾛｰﾙ (STD)	PILOT CONTROL LINE(STD)	DJHC01L0093-00 003	210L5 1101-	*	121
ﾗｲﾝ;ﾊﾟｲﾛｯﾄｺﾝﾄﾛｰﾙ HBCV	PILOT CONTROL LINE(HBCV)	DJHC01L0101-00 000	OPT210L5 1101-		131
ﾗｲﾝ;ﾊﾟｲﾛｯﾄｺﾝﾄﾛｰﾙ (LR)	PILOT CONTROL LINE (LR)	DJHC01L0111-00 000	210L5 1101-		133
ﾌﾟﾗｸﾞ ｸﾞﾙｰﾌﾟ STD	PLUG	DJK401L0288-00 002	210L5 1101-	*	135
ﾌﾟﾗｸﾞ ｸﾞﾙｰﾌﾟ ｵｳﾌｸ	PLUG	DJK401L0291-00 002	OPT210L5 1101-	*	141
ﾌﾟﾗｸﾞ ｸﾞﾙｰﾌﾟ(ﾈﾝﾘｮｳﾀﾝｸ)	PLUG	DJK401L0295-00 000	210L5 1101-		145
ｶｲﾛ;ｵｳﾌｸ	DOUBLE ACTING CIRCUIT	DJKY01L0042-00 000	OPT210L5 1101-		151
ﾎﾟﾝﾌﾟ;ﾕｱﾂ	HYDRAULIC PUMP	DJL901L0069-00 002	210L5 1101-	*	161
ﾏｯﾄ;ﾌﾛｱ (STD) SUMITOMO	FLOOR MAT	DJM101L0048-00 000	210L5 1101-		167
ﾏｯﾄ;ﾌﾛｱ (ﾖﾋﾞ1) SUMITOMO	FLOOR MAT	DJM101L0049-00 000	OPT210L5 1101-		169
ﾗｲﾝ;ｱﾂﾘﾖｸ	PRESSURE LINE	DJP801L0039-00 001	210L5 1101-	*	173

https://truckmanualshub.com/

目 次 CONTENTS

OPT=ｵﾌﾟｼｮﾝ(OPTION)

エリア AREA	NAME	ﾊﾟｰﾂﾍﾟｰｼﾞｺｰﾄﾞ PARTS PAGE CODE	適用号機 SERIAL NO.	変更 CHANGE	ﾍﾟｰｼﾞ番号 PAGE NO
ﾗｲﾝ;ｻｸｼｮﾝ SH200-5	SUCTION LINE	DJW001L0059-00 001	210L5 1101-		175
ﾗｲﾝ;ｾﾝｶｲ SH200-5	SWING LINE	DJY601L0024-00 000	210L5 1101-		177
ﾗｲﾝ;ｿｳｺｳ SH200-5	TRACTION LINE	DJY901L0024-00 000	210L5 1101-		179
DN: ｵﾍﾟﾚｰﾀｷｬﾌﾞ・ﾊｳｽ・ｶﾊﾞｰ	OPERATOR'S CAB & HOUSE				
ｶﾞｰﾄﾞ;ｷｬﾌﾞ FOPS LEVEL2	CAB GUARD FOPS LEVEL2	DN0501L0005-00 000	210L5 1101-		181
ｷｬﾌﾞ;ｵﾍﾟﾚｰﾀ (EXP)	OPERATOR'S CAB	DN4801L0083-00 007	210L5 1101-	*	183
ｷｬﾌﾞ;ｵﾍﾟﾚｰﾀ (EXP ｸﾘｱﾊｯﾁ)	OPERATOR'S CAB	DN4801L0084-00 006	OPT210L5 1101-	*	193
ﾊｳｽ ﾌﾟﾚｸﾘｰﾅﾂｷ	HOUSE	DN7301L0211-00 002	OPT210L5 1101-	*	203
ﾊｳｽ ﾈｯﾁｼｮｳ	HOUSE	DN7301L0212-00 001	OPT210L5 1101-	*	211
ﾊｳｽ ﾈｯﾁｼｮｳ ﾌﾟﾚｸﾘｰﾅﾂｷ	HOUSE	DN7301L0213-00 001	OPT210L5 1101-	*	219
ﾊｳｽ SH200-5(JPN/EXP)	HOUSE	DN7301L0246-00 002	210L5 1101-		227
ﾎﾞｯｸｽ;ｺﾝｿｰﾙ & ｼｰﾄ	CONSOLE BOX	DN9901L0050-00 003	210L5 1101-	*	235
ﾎﾞｯｸｽ;ｺﾝｿｰﾙ & ｼｰﾄ KAB ｽﾐﾄﾓｴｱｻｽ	CONSOLE BOX	DN9901L0052-00 005	OPT210L5 1101-	*	245
ﾎﾞｯｸｽ;ｺﾝｿｰﾙ & ｼｰﾄ KAB ｽﾐﾄﾓ	CONSOLE BOX	DN9901L0058-00 004	OPT210L5 1101-	*	253
ﾁｪｰﾝ;ﾄﾞｯｸﾞ	DOG CHAIN	DNB501L0002-00 001	210L5 1101-	*	263
ﾘﾌﾚｸﾀ;ﾚｲﾝ	RAIN REFLECTOR	DNC701L0002-00 000	OPT210L5 1101-		265
DP: ｻﾞｯﾋﾟﾝ・ﾒｲﾊﾞﾝ	ACCESSORIES & NAME PLATES				
ﾄｿｳ 210-5LR EXPORT	PAINTING	DP0103L0224-00 002	210L5 1101-	*	271
ﾒｲﾊﾞﾝ(ｴｲﾌﾞﾝ) EXPORT	NAME PLATE(ENGLISH)	DP0210L0142-00 000	210L5 1101-		275
ﾐﾗｰ;ﾊﾞｯｸ ｶｲｶﾞｲ	REAR VIEW MIRROR	DP0701L0020-00 002	210L5 1101-	*	277
ｷｯﾄ;ｽﾍﾟｱﾊﾟｰﾂ SH200/240-5 EXP	SPARE PARTS KIT	DP5501L0058-00 001	210L5 1101-	*	279
ﾄﾞｳｸﾞ SH200-5 EXP	TOOLS	DPF001L0021-00 000	210L5 1101-		281
ﾒｲﾊﾞﾝ;ｿｳｻ ISO	OPE NAME PLATE	DPM801L0002-00 000	210L5 1101-		283
ﾒｲﾊﾞﾝ;ｿｳｻ ﾖﾋﾞ ｶｲｶﾞｲ	OPE NAME PLATE	DPM801L0005-00 000	OPT210L5 1101-		285
DR: ﾃﾞﾝｷﾋﾝ	ELECTRIC PARTS				
ｵﾝｷﾖｳ(AM/FMﾗｼﾞｵ<H>) ｽﾃﾚｵ	AM/FM RADIO HIGH BAND	DR0103L0008-00 000	210L5 1101-		287
ｸｳｷﾖｳ(ｴｱｺﾝ) (ｷｬﾌﾞ)	AIR CONDITIONER (CAB)	DR0205L0043-00 006	210L5 1101-	*	289
ｸｳｷﾖｳ(ｴｱｺﾝ) (ﾌﾚｰﾑ)	AIR CONDITIONER (FRAME)	DR0205L0044-00 003	210L5 1101-	*	295
ﾗｲﾄ;ﾜｰｷﾝｸﾞ (ｶｲｶﾞｲ)	WORKING LIGHT	DR1801L0020-00 000	210L5 1101-		299
ﾗｲﾄ;ﾜｰｷﾝｸﾞ ｷｬﾌﾞ EXP	WORKING LIGHT (UPPER CAB)	DR1801L0023-00 000	OPT210L5 1101-		301
ｱﾗｰﾑ;ｿｳｺｳ	TRACTION ALARM	DR4301L0005-00 000	210L5 1101-		303
ｳｵｯｼｬ;ｳｲﾝﾄﾞ	WINDOW WASHER	DR5001L0020-00 001	210L5 1101-		305
ｺﾝﾄﾛｰﾗ	CONTROLLER	DR9901L0013-00 002	210L5 1101-	*	311
ｺﾝﾊﾞｰﾀ;DC-DC	DC-DC CONVERTER	DRA801L0007-00 000	OPT210L5 1101-		313
ｽﾀﾝﾄﾞ;ﾘﾔ (ｸﾞﾚｰ)	STAND REAR	DRCB01L0001-00 001	210L5 1101-		315
ﾃﾞﾝｷﾋﾝ&ﾊｲｾﾝ (ﾌﾚｰﾑ)(JPN/EXP)	ELEC.PARTS & WIRE HARNESS(FRM)	DRJ401L0205-00 004	210L5 1101-	*	327
ﾃﾞﾝｷﾋﾝ&ﾊｲｾﾝ (ｷｬﾌﾞ) CHINA	ELEC.PARTS & WIRE HARNESS	DRJ401L0256-00 002	210L5 1101-	*	341
ﾊﾞｯﾃﾘ (130E41)	BATTERY	DRV001L0015-00 001	210L5 1101-	*	347
ﾎｰﾝ(ﾃﾞﾝｷ)	HORN(ELECTRIC)	DRY003L0010-00 001	210L5 1101-	*	351
ﾎﾟﾝﾌﾟ;ﾌｭｰｴﾙﾌｨｰﾄﾞ	FUEL FEED PUMP	DRY701L0011-00 001	OPT210L5 1101-		353
DV: ｱﾀｯﾁﾒﾝﾄ(ﾊﾞｯｸﾎｰ)	ATTACHMENTS (BACKHOE)				
ﾊﾞｹｯﾄ(0.37M3)	BUCKET(0.37M3)	DV01D5L0002-00 003	210L5 1101-	*	367
ｱｰﾑ(ﾁｮｳﾛﾝｸﾞ) (6.4M EM3)	ARM(SUPER LONG)	DV0220L0016-00 001	OPT210L5 1101-	*	381
ｱｰﾑ(ﾁｮｳﾛﾝｸﾞ) (EM3 01)	ARM(SUPER LONG)	DV0220L0017-00 001	OPT210L5 1101-	*	383
ﾌﾞｰﾑ(ﾛﾝｸﾞ) (8.7M EMS)	BOOM(LONG)	DV0350L0008-00 002	210L5 1101-	*	399
ﾌﾞｰﾑ(ﾛﾝｸﾞ) (EMS 01)	BOOM(LONG)	DV0350L0009-00 002	OPT210L5 1101-	*	401
ﾘﾝｹｰｼﾞ;ﾊﾞｹｯﾄ(ﾋｮｳｼﾞｭﾝ)	BUCKET LINKAGE(STANDARD)	DV0401L0038-00 000	210L5 1101-		405
ﾗｲﾝ;ﾖﾋﾞ(ｻﾞﾂｷﾖｳ)	OPTION LINE(BAR BASE)	DV0601L0106-00 001	OPT210L5 1101-	*	413
ｽﾃｰ;ﾕｿｳﾖｳ	TRANSPORT STAY	DV2401L0001-00 000	210L5 1101-		417
ﾗｲﾝ;ｱｰﾑｼﾘﾝﾀﾞ (EMS)	ARM CYLINDER LINE	DV4601L0161-00 001	210L5 1101-	*	423
ﾗｲﾝ;ｱｰﾑｼﾘﾝﾀﾞ (EMS HBCV)	ARM CYLINDER LINE	DV4601L0162-00 002	OPT210L5 1101-	*	425
ﾗｲﾝ;ｸﾞﾘｽ	GREASE LINE	DV5001L0046-00 000	210L5 1101-		431
ﾗｲﾝ;ﾊﾞｹｯﾄｼﾘﾝﾀﾞ (EMS)	BUCKET CYLINDER LINE	DV5601L0168-00 002	210L5 1101-	*	437
ﾗｲﾝ;ﾌﾞｰﾑｼﾘﾝﾀﾞ (EMS)	BOOM CYLINDER LINE	DV6001L0087-00 000	210L5 1101-		441

https://truckmanualshub.com/

目　次　CONTENTS

OPT=ｵﾌﾟｼｮﾝ(OPTION)

ｴﾘｱ AREA	NAME	ﾊﾟｰﾂﾍﾟｰｼﾞｺｰﾄﾞ PARTS PAGE CODE	適用号機 SERIAL NO.	変更 CHANGE	ﾍﾟｰｼﾞ番号 PAGE NO
ﾗｲﾝ;ﾌﾞｰﾑｼﾘﾝﾀﾞ (EMS HBCV)	BOOM CYLINDER LINE (EMS HBCV)	DV6001L0090-00 000	OPT 210L5 1101-		443
ｸﾗﾝﾌﾟ (LR)	CLAMP (LR)	DV9901L0072-00 000	210L5 1101-		493
ｸﾗﾝﾌﾟ (LR HBCV)	CLAMP (LR HBCV)	DV9901L0073-00 000	OPT 210L5 1101-		497
ｸﾗﾝﾌﾟ (LR 01 HBCV)	CLAMP	DV9901L0074-00 000	OPT 210L5 1101-		501
ｸﾗﾝﾌﾟ (LR 01)	CLAMP	DV9901L0075-00 000	OPT 210L5 1101-		505

https://truckmanualshub.com/

GROUSER SHOE 600 SEAL M	ｼｭｰ(ｸﾞﾛｰｻ600ｼｰﾙｲﾘ) M	DA0207L0011-00 001 1/2	000

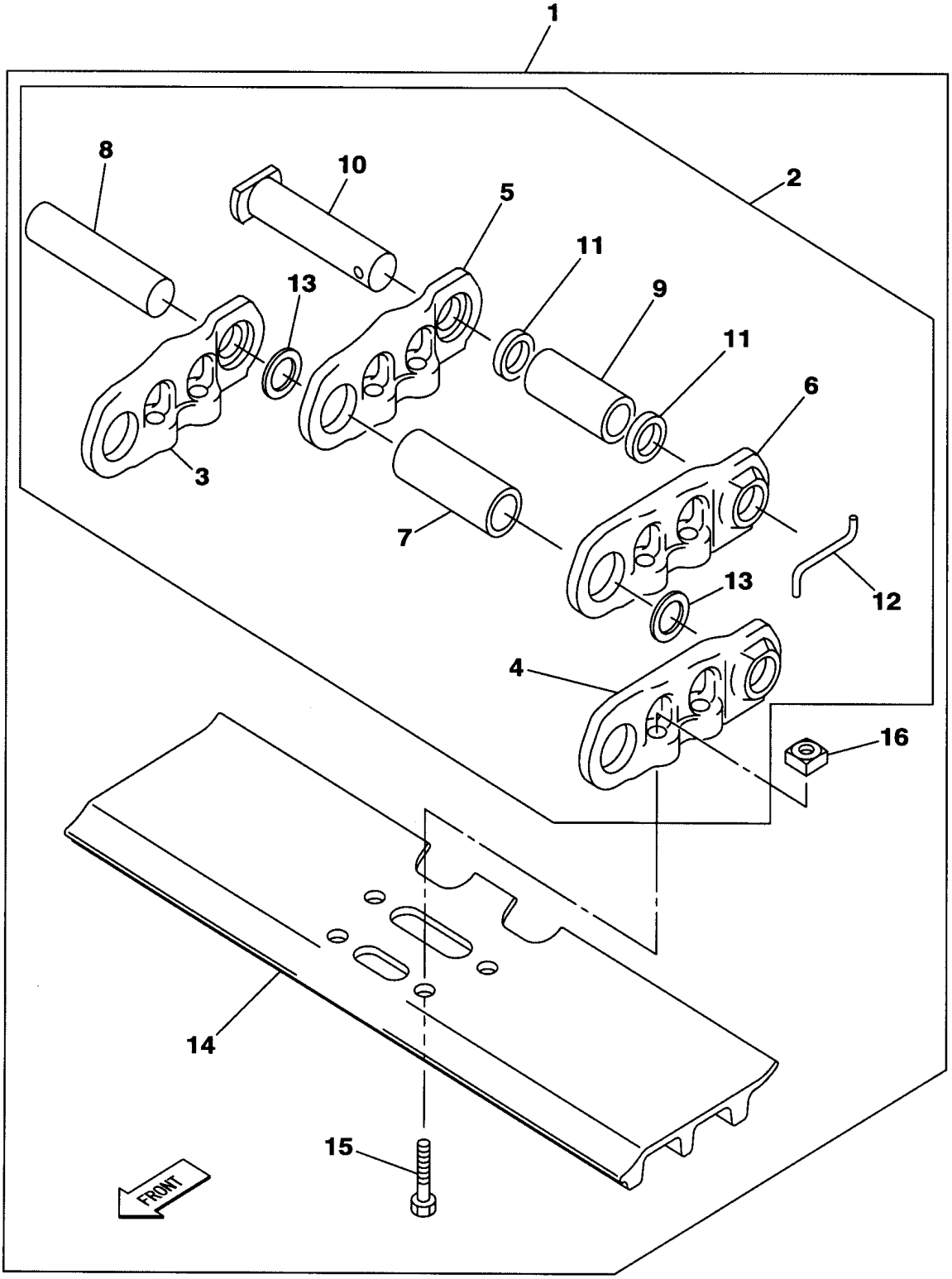

KGORA511-0

https://truckmanualshub.com/

210A5 1101ー

符号 ITEM	構成 COMPO	部品番号 PART NO.	部品名	PART NAME	個数 Q'TY	インナー	適用号機 SERIAL_NO.	互換 ICA	代替部品 REPLACEABLE PART
1	1A	KRA1834	ｼｭｰ;ｸﾞﾛｰｻ ｸﾐﾀﾃ 600 (	SHOE;GROUSER	2		210A5 NOT USED	<	KRA11330
2	2A	KRA1803	ﾘﾝｸ;ﾄﾗｯｸ ｸﾐﾀﾃ (M ｼｰﾙ	LINK;TRACK	2		210A5 NOT USED		
3	3	KRA1807	ﾘﾝｸ;ﾄﾗｯｸ R	LINK;TRACK	90		210A5 NOT USED		
4	3	KRA1808	ﾘﾝｸ;ﾄﾗｯｸ L	LINK;TRACK	90		210A5 NOT USED		
5	3	KRA1809	ﾘﾝｸ;ﾏｽﾀ R	LINK;MASTER	2		210A5 NOT USED		
6	3	KRA1810	ﾘﾝｸ;ﾏｽﾀ L	LINK;MASTER	2		210A5 NOT USED		
7	3	KRA1811	ﾌﾞｼｭ ﾄﾗｯｸ	BUSH;SPL	90		210A5 NOT USED		
8	3	KRA1567	ﾋﾟﾝ;ﾄﾗｯｸ	PIN;TRACK	90		210A5 NOT USED		
9	3	KRA1569	ﾌﾞｼｭ ﾏｽﾀ	BUSH;SPL	2		210A5 NOT USED		
10	3	KRA1041	ﾋﾟﾝ;ﾏｽﾀ	PIN;MASTER	2		210A5 NOT USED		
11	3	KRA1015	ｶﾗｰ	COLLAR;SPL	4		210A5 NOT USED		
12	3	KRA1072	ﾋﾟﾝ;S	PIN;S	2		210A5 NOT USED		
13	3	KRA1814	ｼｰﾙ;ﾀﾞｽﾄ	SEAL;DUST	180		210A5 NOT USED		
14	2	KLA0096	ｼｭｰ;ｸﾞﾛｰｻ 600	SHOE;GROUSER	92		210A5 NOT USED		
15	2	KRA1006	ﾎﾞﾙﾄ;ｼｭｰ	BOLT;SHOE	368		210A5 NOT USED		
16	2	KRA1007	ﾅｯﾄ;ｼｭｰ	NUT;SHOE	368		210A5 NOT USED		
1	1A	KRA11330	ｼｭｰ;ｸﾞﾛｰｻ ｸﾐﾀﾃ 600 M	SHOE;GROUSER	2				
2	2A	KRA11450	ﾘﾝｸ;ﾄﾗｯｸ ｸﾐﾀﾃ Mｼｰﾙ	LINK;TRACK	2				
3	3	KRA1807	ﾘﾝｸ;ﾄﾗｯｸ R	LINK;TRACK	90				
4	3	KRA1808	ﾘﾝｸ;ﾄﾗｯｸ L	LINK;TRACK	90				
5	3	KRA1809	ﾘﾝｸ;ﾏｽﾀ R	LINK;MASTER	2				
6	3	KRA1810	ﾘﾝｸ;ﾏｽﾀ L	LINK;MASTER	2				
7	3	KRA1811	ﾌﾞｼｭ ﾄﾗｯｸ	BUSH;SPL	90				
8	3	KRA11110	ﾋﾟﾝ;ﾄﾗｯｸ (ｺｳﾄﾞUPﾋﾝ)	PIN;TRACK	90				
9	3	KRA1569	ﾌﾞｼｭ ﾏｽﾀ	BUSH;SPL	2				
10	3	KRA1041	ﾋﾟﾝ;ﾏｽﾀ	PIN;MASTER	2				
11	3	KRA1015	ｶﾗｰ	COLLAR;SPL	4				
12	3	KRA1072	ﾋﾟﾝ;S	PIN;S	2				
13	3	KRA1814	ｼｰﾙ;ﾀﾞｽﾄ	SEAL;DUST	180				
14	2	KLA0096	ｼｭｰ;ｸﾞﾛｰｻ 600	SHOE;GROUSER	92				
15	2	KRA1006	ﾎﾞﾙﾄ;ｼｭｰ	BOLT;SHOE	368				
16	2	KRA1007	ﾅｯﾄ;ｼｭｰ	NUT;SHOE	368				

https://truckmanualshub.com/

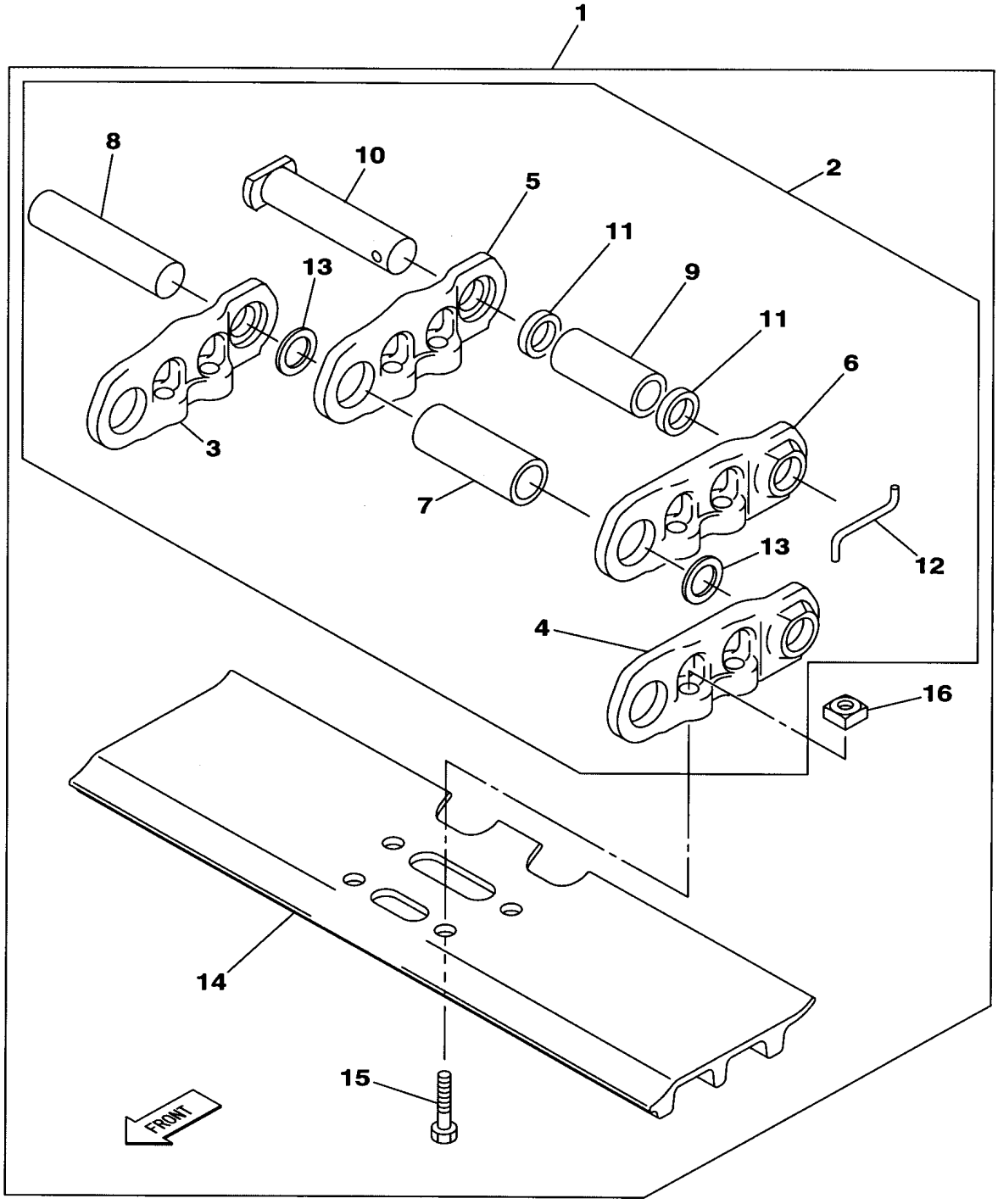

KGORA495-0

https://truckmanualshub.com/

210L5 1101－

符号 ITEM	構成 COMPO	部品番号 PART NO.	部品名	PART NAME	個数 Q'TY	ｲﾝﾅｰ	適用号機 SERIAL_NO.	互換 ICA	代替部品 REPLACEABLE PART
1	1A	KRA1797	ｼｭｰ;ｸﾞﾛｰｻ ｸﾐﾀﾃ 600 (	SHOE;GROUSER	2		210L5 NOT USED	<	KRA11370
2	2A	KRA1805	ﾘﾝｸ;ﾄﾗｯｸ ｸﾐﾀﾃ (M ｼｰﾙ	LINK;TRACK	2		210L5 NOT USED		
3	3	KRA1807	ﾘﾝｸ;ﾄﾗｯｸ R	LINK;TRACK	96		210L5 NOT USED		
4	3	KRA1808	ﾘﾝｸ;ﾄﾗｯｸ L	LINK;TRACK	96		210L5 NOT USED		
5	3	KRA1809	ﾘﾝｸ;ﾏｽﾀ R	LINK;MASTER	2		210L5 NOT USED		
6	3	KRA1810	ﾘﾝｸ;ﾏｽﾀ L	LINK;MASTER	2		210L5 NOT USED		
7	3	KRA1811	ﾌﾞｼｭ ﾄﾗｯｸ	BUSH;SPL	96		210L5 NOT USED		
8	3	KRA1812	ﾋﾟﾝ;ﾄﾗｯｸ	PIN;TRACK	96		210L5 NOT USED	=	KRA1567
8	3	KRA1567	ﾋﾟﾝ;ﾄﾗｯｸ	PIN;TRACK	96		210L5 NOT USED		
9	3	KRA1813	ﾌﾞｼｭ ﾏｽﾀ	BUSH;SPL	2		210L5 NOT USED	=	KRA1569
9	3	KRA1569	ﾌﾞｼｭ ﾏｽﾀ	BUSH;SPL	2		210L5 NOT USED		
10	3	KRA1041	ﾋﾟﾝ;ﾏｽﾀ	PIN;MASTER	2		210L5 NOT USED		
11	3	KRA1015	ｶﾗｰ	COLLAR;SPL	4		210L5 NOT USED		
12	3	KRA1072	ﾋﾟﾝ;S	PIN;S	2		210L5 NOT USED		
13	3	KRA1814	ｼｰﾙ;ﾀﾞｽﾄ	SEAL;DUST	192		210L5 NOT USED		
14	2	KRA1005	ｼｭｰ;ｸﾞﾛｰｻ 600	SHOE;GROUSER	98		210L5 NOT USED		
15	2	KRA1006	ﾎﾞﾙﾄ;ｼｭｰ	BOLT;SHOE	392		210L5 NOT USED		
16	2	KRA1007	ﾅｯﾄ;ｼｭｰ	NUT;SHOE	392		210L5 NOT USED		
1	1A	KRA11370	ｼｭｰ;ｸﾞﾛｰｻ ｸﾐﾀﾃ 600 M	SHOE;GROUSER	2				
2	2A	KRA11500	ﾘﾝｸ;ﾄﾗｯｸ ｸﾐﾀﾃ Mｼｰﾙ	LINK;TRACK	2				
3	3	KRA1807	ﾘﾝｸ;ﾄﾗｯｸ R	LINK;TRACK	96				
4	3	KRA1808	ﾘﾝｸ;ﾄﾗｯｸ L	LINK;TRACK	96				
5	3	KRA1809	ﾘﾝｸ;ﾏｽﾀ R	LINK;MASTER	2				
6	3	KRA1810	ﾘﾝｸ;ﾏｽﾀ L	LINK;MASTER	2				
7	3	KRA1811	ﾌﾞｼｭ ﾄﾗｯｸ	BUSH;SPL	96				
8	3	KRA11110	ﾋﾟﾝ;ﾄﾗｯｸ (ｺｳﾄﾞUPﾋﾝ)	PIN;TRACK	96				
9	3	KRA1569	ﾌﾞｼｭ ﾏｽﾀ	BUSH;SPL	2				
10	3	KRA1041	ﾋﾟﾝ;ﾏｽﾀ	PIN;MASTER	2				
11	3	KRA1015	ｶﾗｰ	COLLAR;SPL	4				
12	3	KRA1072	ﾋﾟﾝ;S	PIN;S	2				
13	3	KRA1814	ｼｰﾙ;ﾀﾞｽﾄ	SEAL;DUST	192				
14	2	KRA1005	ｼｭｰ;ｸﾞﾛｰｻ 600	SHOE;GROUSER	98				
15	2	KRA1006	ﾎﾞﾙﾄ;ｼｭｰ	BOLT;SHOE	392				
16	2	KRA1007	ﾅｯﾄ;ｼｭｰ	NUT;SHOE	392				

https://truckmanualshub.com/

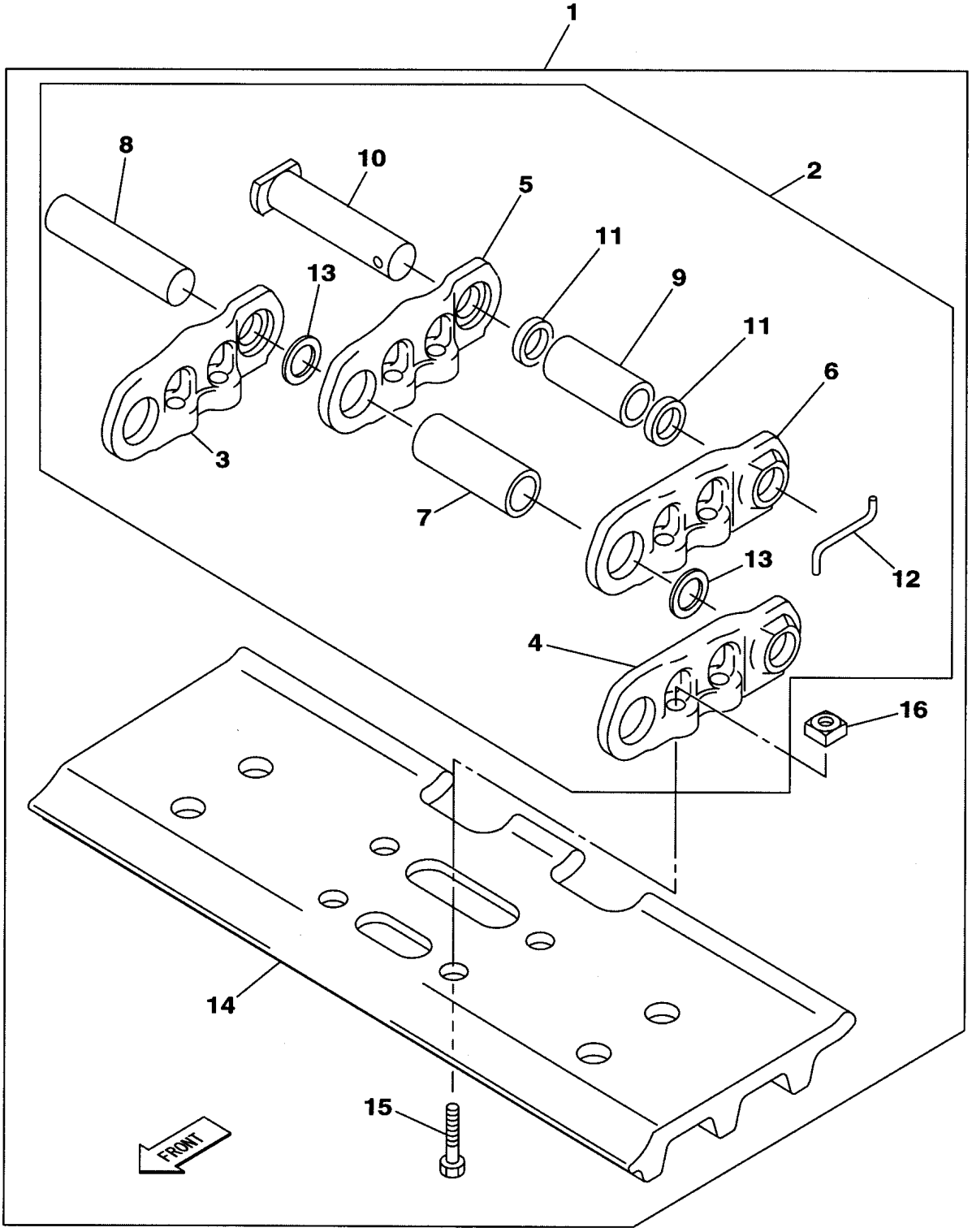

KG0RA487-0

https://truckmanualshub.com/

210A5 1101－

符号 ITEM	構成 COMPO	部品番号 PART NO.	部品名	PART NAME	個数 Q'TY	ｲﾝﾅｰ	適用号機 SERIAL_NO.	互換 ICA	代替部品 REPLACEABLE PART
1	1A	KRA1789	ｼｭｰ;ｸﾞﾛｰｻ ｸﾐﾀﾃ 600 (	SHOE;GROUSER	2		210A5 NOT USED	<	KRA11280
2	2A	KRA1803	ﾘﾝｸ;ﾄﾗｯｸ ｸﾐﾀﾃ (M ｼｰﾙ	LINK;TRACK	2		210A5 NOT USED		
3	3	KRA1807	ﾘﾝｸ;ﾄﾗｯｸ R	LINK;TRACK	90		210A5 NOT USED		
4	3	KRA1808	ﾘﾝｸ;ﾄﾗｯｸ L	LINK;TRACK	90		210A5 NOT USED		
5	3	KRA1809	ﾘﾝｸ;ﾏｽﾀ R	LINK;MASTER	2		210A5 NOT USED		
6	3	KRA1810	ﾘﾝｸ;ﾏｽﾀ L	LINK;MASTER	2		210A5 NOT USED		
7	3	KRA1811	ﾌﾞｼｭ ﾄﾗｯｸ	BUSH;SPL	90		210A5 NOT USED		
8	3	KRA1567	ﾋﾟﾝ;ﾄﾗｯｸ	PIN;TRACK	90		210A5 NOT USED		
9	3	KRA1569	ﾌﾞｼｭ ﾏｽﾀ	BUSH;SPL	2		210A5 NOT USED		
10	3	KRA1041	ﾋﾟﾝ;ﾏｽﾀ	PIN;MASTER	2		210A5 NOT USED		
11	3	KRA1015	ｶﾗｰ	COLLAR;SPL	4		210A5 NOT USED		
12	3	KRA1072	ﾋﾟﾝ;S	PIN;S	2		210A5 NOT USED		
13	3	KRA1814	ｼｰﾙ;ﾀﾞｽﾄ	SEAL;DUST	180		210A5 NOT USED		
14	2	KRA1400	ｼｭｰ;ｸﾞﾛｰｻ 600 (ｱﾅｱｷ)	SHOE;GROUSER	92		210A5 NOT USED		
15	2	KRA1006	ﾎﾞﾙﾄ;ｼｭｰ	BOLT;SHOE	368		210A5 NOT USED		
16	2	KRA1007	ﾅｯﾄ;ｼｭｰ	NUT;SHOE	368		210A5 NOT USED		
1	1A	KRA11280	ｼｭｰ;ｸﾞﾛｰｻ ｸﾐﾀﾃ 600 M	SHOE;GROUSER	2				
2	2A	KRA11450	ﾘﾝｸ;ﾄﾗｯｸ ｸﾐﾀﾃ Mｼｰﾙ	LINK;TRACK	2				
3	3	KRA1807	ﾘﾝｸ;ﾄﾗｯｸ R	LINK;TRACK	90				
4	3	KRA1808	ﾘﾝｸ;ﾄﾗｯｸ L	LINK;TRACK	90				
5	3	KRA1809	ﾘﾝｸ;ﾏｽﾀ R	LINK;MASTER	2				
6	3	KRA1810	ﾘﾝｸ;ﾏｽﾀ L	LINK;MASTER	2				
7	3	KRA1811	ﾌﾞｼｭ ﾄﾗｯｸ	BUSH;SPL	90				
8	3	KRA11110	ﾋﾟﾝ;ﾄﾗｯｸ (ｺｳﾄﾞUPﾋﾝ)	PIN;TRACK	90				
9	3	KRA1569	ﾌﾞｼｭ ﾏｽﾀ	BUSH;SPL	2				
10	3	KRA1041	ﾋﾟﾝ;ﾏｽﾀ	PIN;MASTER	2				
11	3	KRA1015	ｶﾗｰ	COLLAR;SPL	4				
12	3	KRA1072	ﾋﾟﾝ;S	PIN;S	2				
13	3	KRA1814	ｼｰﾙ;ﾀﾞｽﾄ	SEAL;DUST	180				
14	2	KRA1400	ｼｭｰ;ｸﾞﾛｰｻ 600 (ｱﾅｱｷ)	SHOE;GROUSER	92				
15	2	KRA1006	ﾎﾞﾙﾄ;ｼｭｰ	BOLT;SHOE	368				
16	2	KRA1007	ﾅｯﾄ;ｼｭｰ	NUT;SHOE	368				

https://truckmanualshub.com/

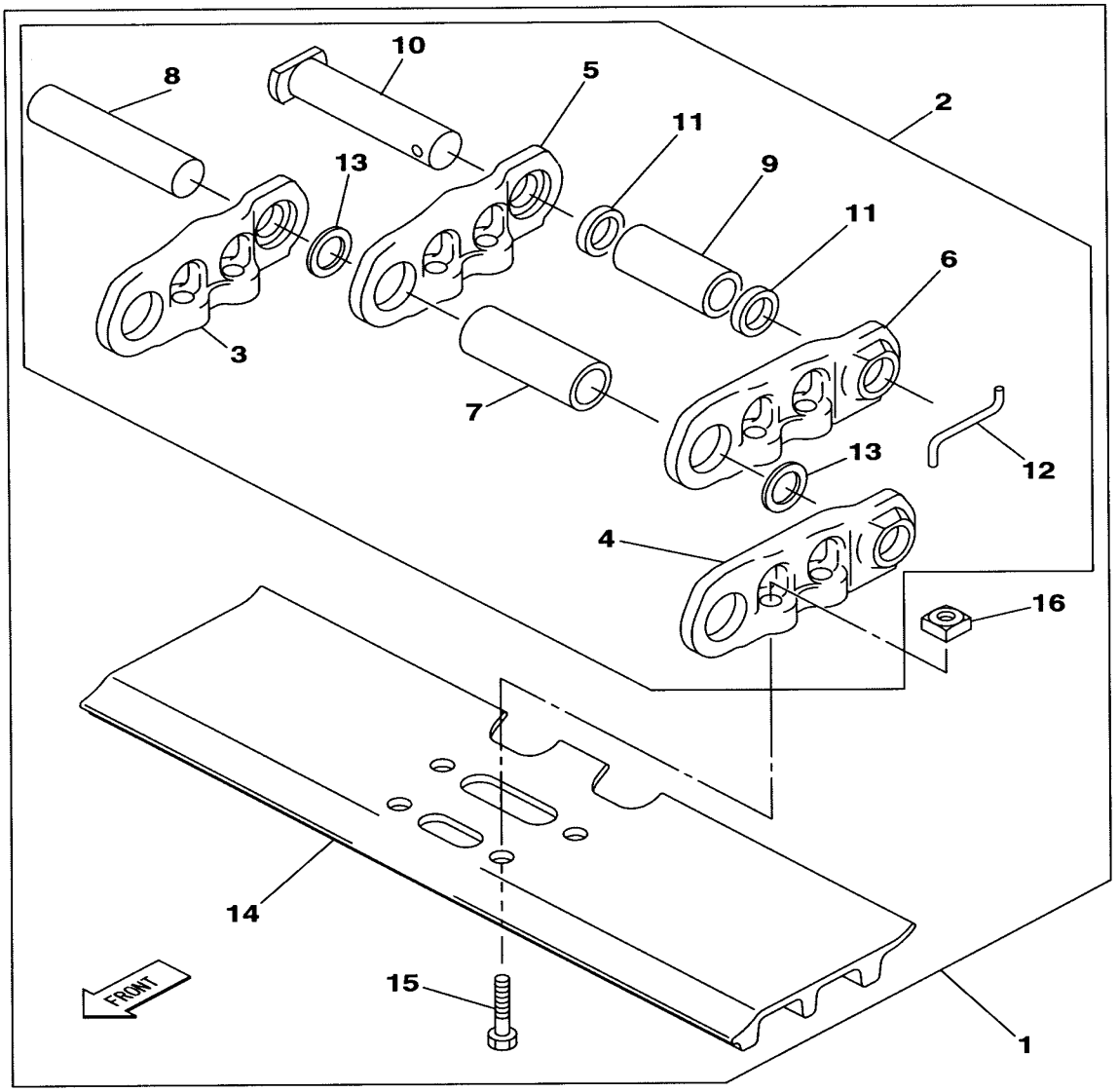

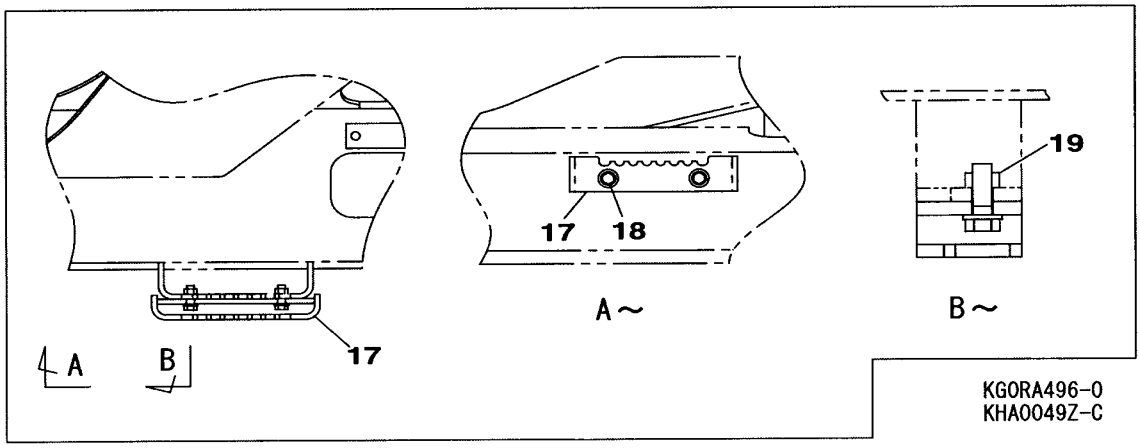

https://truckmanualshub.com/

210L5 1101－

符号 ITEM	構成 COMPO	部品番号 PART NO.	部品名	PART NAME	個数 Q'TY	ｲﾝﾅｰ	適用号機 SERIAL_NO.	互換 ICA	代替部品 REPLACEABLE PART
1	1A	KRA1798	ｼｭｰ;ｸﾞﾛｰｻ ｸﾐﾀﾃ 700 (	SHOE;GROUSER	2		210L5 NOT USED	<	KRA11380
2	2A	KRA1805	ﾘﾝｸ;ﾄﾗｯｸ ｸﾐﾀﾃ (M ｼｰﾙ	LINK;TRACK	2		210L5 NOT USED		
3	3	KRA1807	ﾘﾝｸ;ﾄﾗｯｸ R	LINK;TRACK	96		210L5 NOT USED		
4	3	KRA1808	ﾘﾝｸ;ﾄﾗｯｸ L	LINK;TRACK	96		210L5 NOT USED		
5	3	KRA1809	ﾘﾝｸ;ﾏｽﾀ R	LINK;MASTER	2		210L5 NOT USED		
6	3	KRA1810	ﾘﾝｸ;ﾏｽﾀ L	LINK;MASTER	2		210L5 NOT USED		
7	3	KRA1811	ﾌﾞｼｭ ﾄﾗｯｸ	BUSH;SPL	96		210L5 NOT USED		
8	3	KRA1812	ﾋﾟﾝ;ﾄﾗｯｸ	PIN;TRACK	96		210L5 NOT USED	=	KRA1567
8	3	KRA1567	ﾋﾟﾝ;ﾄﾗｯｸ	PIN;TRACK	96		210L5 NOT USED		
9	3	KRA1813	ﾌﾞｼｭ ﾏｽﾀ	BUSH;SPL	2		210L5 NOT USED	=	KRA1569
9	3	KRA1569	ﾌﾞｼｭ ﾏｽﾀ	BUSH;SPL	2		210L5 NOT USED		
10	3	KRA1041	ﾋﾟﾝ;ﾏｽﾀ	PIN;MASTER	2		210L5 NOT USED		
11	3	KRA1015	ｶﾗｰ	COLLAR;SPL	4		210L5 NOT USED		
12	3	KRA1072	ﾋﾟﾝ;S	PIN;S	2		210L5 NOT USED		
13	3	KRA1814	ｼｰﾙ;ﾀﾞｽﾄ	SEAL;DUST	192		210L5 NOT USED		
14	2	KBA0883	ｼｭｰ;ｸﾞﾛｰｻ 700	SHOE;GROUSER	98		210L5 NOT USED		
15	2	KRA1006	ﾎﾞﾙﾄ;ｼｭｰ	BOLT;SHOE	392		210L5 NOT USED		
16	2	KRA1007	ﾅｯﾄ;ｼｭｰ	NUT;SHOE	392		210L5 NOT USED		
1	1A	KRA11380	ｼｭｰ;ｸﾞﾛｰｻ ｸﾐﾀﾃ 700 M	SHOE;GROUSER	2				
2	2A	KRA11500	ﾘﾝｸ;ﾄﾗｯｸ ｸﾐﾀﾃ Mｼｰﾙ	LINK;TRACK	2				
3	3	KRA1807	ﾘﾝｸ;ﾄﾗｯｸ R	LINK;TRACK	96				
4	3	KRA1808	ﾘﾝｸ;ﾄﾗｯｸ L	LINK;TRACK	96				
5	3	KRA1809	ﾘﾝｸ;ﾏｽﾀ R	LINK;MASTER	2				
6	3	KRA1810	ﾘﾝｸ;ﾏｽﾀ L	LINK;MASTER	2				
7	3	KRA1811	ﾌﾞｼｭ ﾄﾗｯｸ	BUSH;SPL	96				
8	3	KRA11110	ﾋﾟﾝ;ﾄﾗｯｸ (ｺｳﾄﾞUPﾋﾝ)	PIN;TRACK	96				
9	3	KRA1569	ﾌﾞｼｭ ﾏｽﾀ	BUSH;SPL	2				
10	3	KRA1041	ﾋﾟﾝ;ﾏｽﾀ	PIN;MASTER	2				
11	3	KRA1015	ｶﾗｰ	COLLAR;SPL	4				
12	3	KRA1072	ﾋﾟﾝ;S	PIN;S	2				
13	3	KRA1814	ｼｰﾙ;ﾀﾞｽﾄ	SEAL;DUST	192				
14	2	KBA0883	ｼｭｰ;ｸﾞﾛｰｻ 700	SHOE;GROUSER	98				
15	2	KRA1006	ﾎﾞﾙﾄ;ｼｭｰ	BOLT;SHOE	392				
16	2	KRA1007	ﾅｯﾄ;ｼｭｰ	NUT;SHOE	392				
17	1	KHA0043	ｽﾃｯﾌﾟ (ﾊﾊﾞ50)	STEP	4				
18	1	105R016Y050R	ｾﾑｽB M16 X 50	BOLT;SEMS	8				
19	1	162R016VR	ｺｳﾘｷN M16	NUT;HIGH STRENGTH	8		210L5 1150-		

https://truckmanualshub.com/

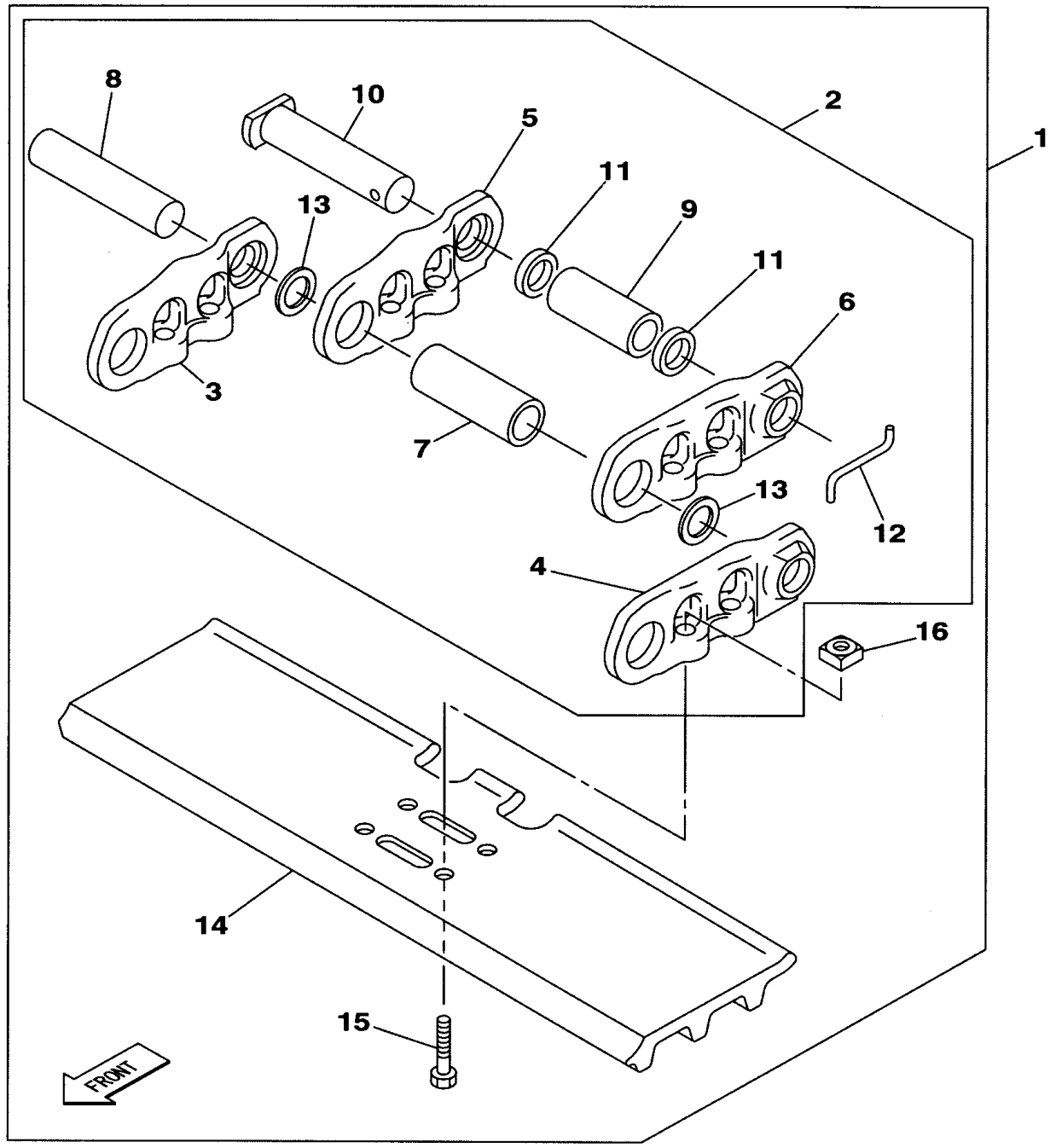

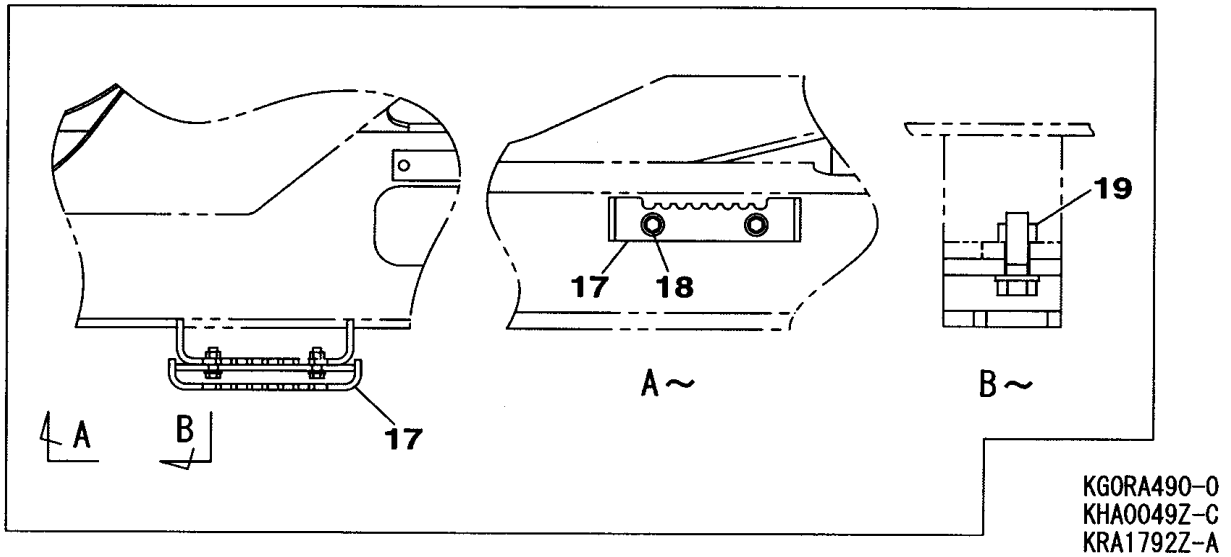

KG0RA490-0
KHA0049Z-C
KRA1792Z-A

https://truckmanualshub.com/

210A5 1101ー

符号 ITEM	構成 COMPO	部品番号 PART NO.	部品名	PART NAME	個数 Q'TY	ｲﾝﾅｰ	適用号機 SERIAL_NO.	互換 ICA	代替部品 REPLACEABLE PART
1	1A	KRA1792	ｼｭｰ;ｸﾞﾛｰｻ ｸﾐﾀﾃ 700 (	SHOE;GROUSER	2		210A5 NOT USED	<	KRA11310
2	2A	KRA1803	ﾘﾝｸ;ﾄﾗｯｸ ｸﾐﾀﾃ (M ｼｰﾙ	LINK;TRACK	2		210A5 NOT USED		
3	3	KRA1807	ﾘﾝｸ;ﾄﾗｯｸ R	LINK;TRACK	90		210A5 NOT USED		
4	3	KRA1808	ﾘﾝｸ;ﾄﾗｯｸ L	LINK;TRACK	90		210A5 NOT USED		
5	3	KRA1809	ﾘﾝｸ;ﾏｽﾀ R	LINK;MASTER	2		210A5 NOT USED		
6	3	KRA1810	ﾘﾝｸ;ﾏｽﾀ L	LINK;MASTER	2		210A5 NOT USED		
7	3	KRA1811	ﾌﾞｼｭ ﾄﾗｯｸ	BUSH;SPL	90		210A5 NOT USED		
8	3	KRA1567	ﾋﾟﾝ;ﾄﾗｯｸ	PIN;TRACK	90		210A5 NOT USED		
9	3	KRA1569	ﾌﾞｼｭ ﾏｽﾀ	BUSH;SPL	2		210A5 NOT USED		
10	3	KRA1041	ﾋﾟﾝ;ﾏｽﾀ	PIN;MASTER	2		210A5 NOT USED		
11	3	KRA1015	ｶﾗｰ	COLLAR;SPL	4		210A5 NOT USED		
12	3	KRA1072	ﾋﾟﾝ;S	PIN;S	2		210A5 NOT USED		
13	3	KRA1814	ｼｰﾙ;ﾀﾞｽﾄ	SEAL;DUST	180		210A5 NOT USED		
14	2	KBA0883	ｼｭｰ;ｸﾞﾛｰｻ 700	SHOE;GROUSER	92		210A5 NOT USED		
15	2	KRA1006	ﾎﾞﾙﾄ;ｼｭｰ	BOLT;SHOE	368		210A5 NOT USED		
16	2	KRA1007	ﾅｯﾄ;ｼｭｰ	NUT;SHOE	368		210A5 NOT USED		
1	1A	KRA11310	ｼｭｰ;ｸﾞﾛｰｻ ｸﾐﾀﾃ 700 M	SHOE;GROUSER	2				
2	2A	KRA11450	ﾘﾝｸ;ﾄﾗｯｸ ｸﾐﾀﾃ Mｼｰﾙ	LINK;TRACK	2				
3	3	KRA1807	ﾘﾝｸ;ﾄﾗｯｸ R	LINK;TRACK	90				
4	3	KRA1808	ﾘﾝｸ;ﾄﾗｯｸ L	LINK;TRACK	90				
5	3	KRA1809	ﾘﾝｸ;ﾏｽﾀ R	LINK;MASTER	2				
6	3	KRA1810	ﾘﾝｸ;ﾏｽﾀ L	LINK;MASTER	2				
7	3	KRA1811	ﾌﾞｼｭ ﾄﾗｯｸ	BUSH;SPL	90				
8	3	KRA11110	ﾋﾟﾝ;ﾄﾗｯｸ (ｺｳﾄﾞUPﾋﾝ)	PIN;TRACK	90				
9	3	KRA1569	ﾌﾞｼｭ ﾏｽﾀ	BUSH;SPL	2				
10	3	KRA1041	ﾋﾟﾝ;ﾏｽﾀ	PIN;MASTER	2				
11	3	KRA1015	ｶﾗｰ	COLLAR;SPL	4				
12	3	KRA1072	ﾋﾟﾝ;S	PIN;S	2				
13	3	KRA1814	ｼｰﾙ;ﾀﾞｽﾄ	SEAL;DUST	180				
14	2	KBA0883	ｼｭｰ;ｸﾞﾛｰｻ 700	SHOE;GROUSER	92				
15	2	KRA1006	ﾎﾞﾙﾄ;ｼｭｰ	BOLT;SHOE	368				
16	2	KRA1007	ﾅｯﾄ;ｼｭｰ	NUT;SHOE	368				
17	1	KHA0043	ｽﾃｯﾌﾟ (ﾊﾊﾞ50)	STEP	4				
18	1	105R016Y050R	ｾﾑｽB M16 X 50	BOLT;SEMS	8				
19	1	162R016VR	ｺｳﾘｷN M16	NUT;HIGH STRENGTH	8		210A5 1149-		

https://truckmanualshub.com/

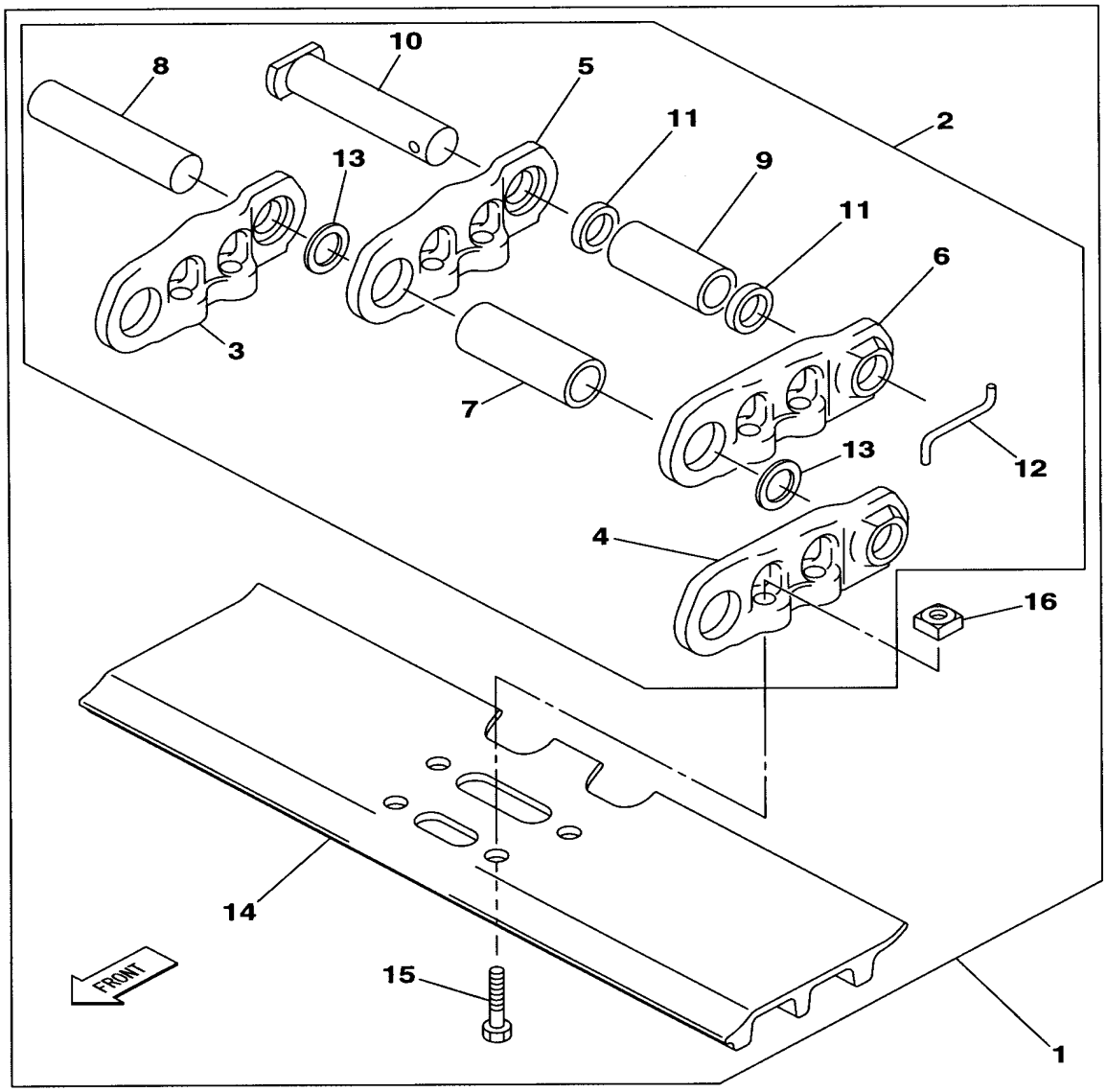

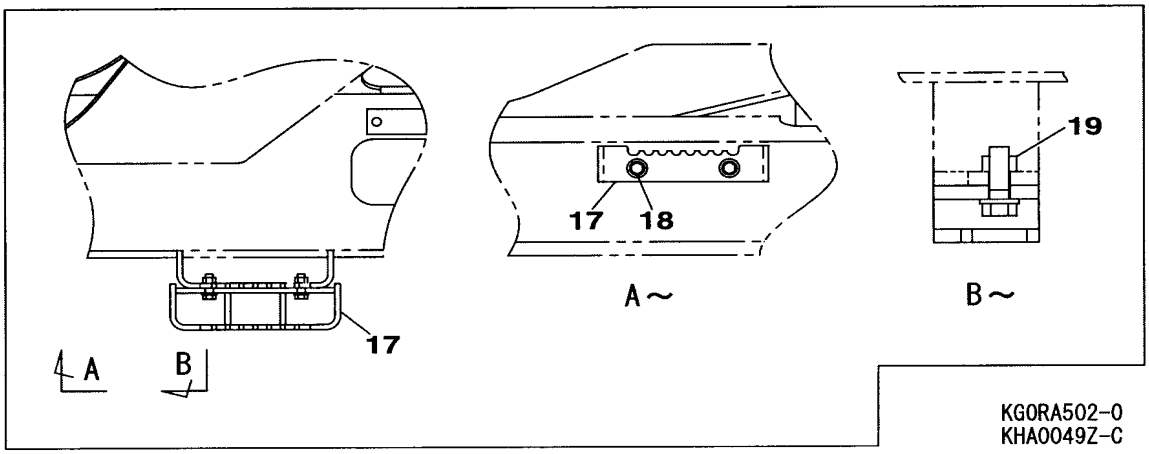

https://truckmanualshub.com/

210L5 1101－

符号 ITEM	構成 COMPO	部品番号 PART NO.	部品名	PART NAME	個数 Q'TY	ｲﾝﾅｰ	適用号機 SERIAL_NO.	互換 ICA	代替部品 REPLACEABLE PART
1	1A	KRA1833	ｼｭｰ;ｸﾞﾛｰｻ ｸﾐﾀﾃ 800 (	SHOE;GROUSER	2		210L5 NOT USED	<	KRA11390
2	2A	KRA1805	ﾘﾝｸ;ﾄﾗｯｸ ｸﾐﾀﾃ (M ｼｰﾙ	LINK;TRACK	2		210L5 NOT USED		
3	3	KRA1807	ﾘﾝｸ;ﾄﾗｯｸ R	LINK;TRACK	96		210L5 NOT USED		
4	3	KRA1808	ﾘﾝｸ;ﾄﾗｯｸ L	LINK;TRACK	96		210L5 NOT USED		
5	3	KRA1809	ﾘﾝｸ;ﾏｽﾀ R	LINK;MASTER	2		210L5 NOT USED		
6	3	KRA1810	ﾘﾝｸ;ﾏｽﾀ L	LINK;MASTER	2		210L5 NOT USED		
7	3	KRA1811	ﾌﾞｼｭ ﾄﾗｯｸ	BUSH;SPL	96		210L5 NOT USED		
8	3	KRA1812	ﾋﾟﾝ;ﾄﾗｯｸ	PIN;TRACK	96		210L5 NOT USED	=	KRA1567
8	3	KRA1567	ﾋﾟﾝ;ﾄﾗｯｸ	PIN;TRACK	96		210L5 NOT USED		
9	3	KRA1813	ﾌﾞｼｭ ﾏｽﾀ	BUSH;SPL	2		210L5 NOT USED	=	KRA1569
9	3	KRA1569	ﾌﾞｼｭ ﾏｽﾀ	BUSH;SPL	2		210L5 NOT USED		
10	3	KRA1041	ﾋﾟﾝ;ﾏｽﾀ	PIN;MASTER	2		210L5 NOT USED		
11	3	KRA1015	ｶﾗｰ	COLLAR;SPL	4		210L5 NOT USED		
12	3	KRA1072	ﾋﾟﾝ;S	PIN;S	2		210L5 NOT USED		
13	3	KRA1814	ｼｰﾙ;ﾀﾞｽﾄ	SEAL;DUST	192		210L5 NOT USED		
14	2	KBA0776	ｼｭｰ;ｸﾞﾛｰｻ 800	SHOE;GROUSER	98		210L5 NOT USED		
15	2	KRA1006	ﾎﾞﾙﾄ;ｼｭｰ	BOLT;SHOE	392		210L5 NOT USED		
16	2	KRA1007	ﾅｯﾄ;ｼｭｰ	NUT;SHOE	392		210L5 NOT USED		
1	1A	KRA11390	ｼｭｰ;ｸﾞﾛｰｻ ｸﾐﾀﾃ 800 M	SHOE;GROUSER	2				
2	2A	KRA11500	ﾘﾝｸ;ﾄﾗｯｸ ｸﾐﾀﾃ Mｼｰﾙ	LINK;TRACK	2				
3	3	KRA1807	ﾘﾝｸ;ﾄﾗｯｸ R	LINK;TRACK	96				
4	3	KRA1808	ﾘﾝｸ;ﾄﾗｯｸ L	LINK;TRACK	96				
5	3	KRA1809	ﾘﾝｸ;ﾏｽﾀ R	LINK;MASTER	2				
6	3	KRA1810	ﾘﾝｸ;ﾏｽﾀ L	LINK;MASTER	2				
7	3	KRA1811	ﾌﾞｼｭ ﾄﾗｯｸ	BUSH;SPL	96				
8	3	KRA11110	ﾋﾟﾝ;ﾄﾗｯｸ (ｺｳﾄﾞUPﾋﾝ)	PIN;TRACK	96				
9	3	KRA1569	ﾌﾞｼｭ ﾏｽﾀ	BUSH;SPL	2				
10	3	KRA1041	ﾋﾟﾝ;ﾏｽﾀ	PIN;MASTER	2				
11	3	KRA1015	ｶﾗｰ	COLLAR;SPL	4				
12	3	KRA1072	ﾋﾟﾝ;S	PIN;S	2				
13	3	KRA1814	ｼｰﾙ;ﾀﾞｽﾄ	SEAL;DUST	192				
14	2	KBA0776	ｼｭｰ;ｸﾞﾛｰｻ 800	SHOE;GROUSER	98				
15	2	KRA1006	ﾎﾞﾙﾄ;ｼｭｰ	BOLT;SHOE	392				
16	2	KRA1007	ﾅｯﾄ;ｼｭｰ	NUT;SHOE	392				
17	1	KHA0044	ｽﾃｯﾌﾟ (ﾊﾊﾞ100)	STEP	4				
18	1	105R016Y050R	ｾﾑｽB M16 X 50	BOLT;SEMS	8				
19	1	162R016VR	ｺｳﾘｷN M16	NUT;HIGH STRENGTH	8		210L5 1150-		

https://truckmanualshub.com/

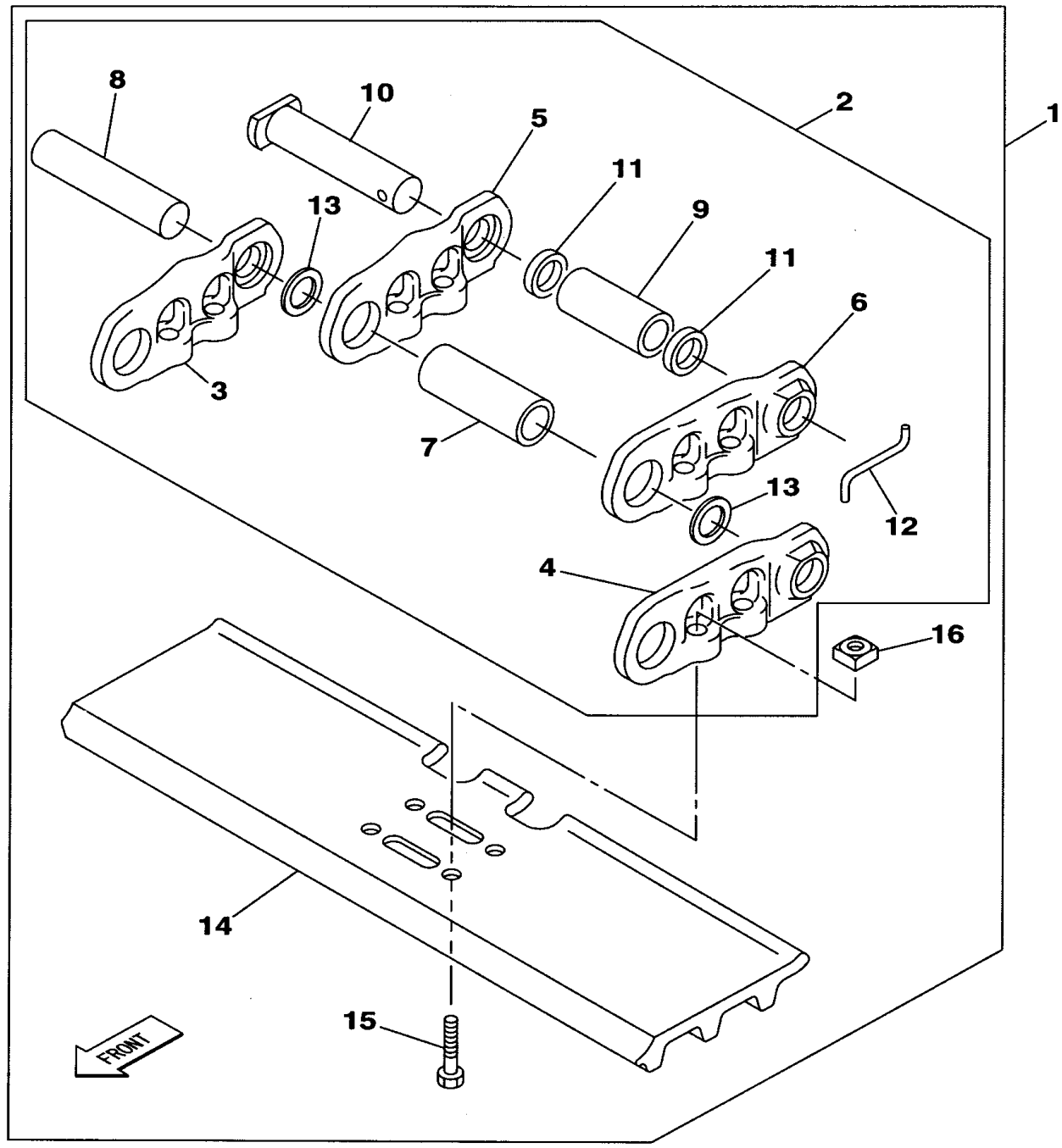

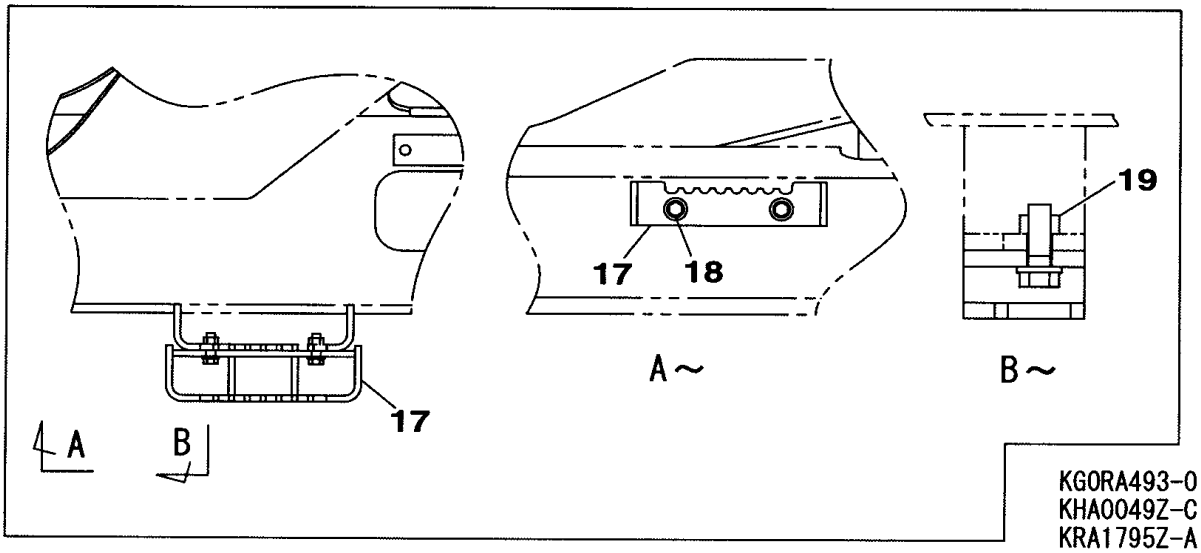

https://truckmanualshub.com/

210A5 1101－

符号 ITEM	構成 COMPO	部品番号 PART NO.	部品名	PART NAME	個数 Q'TY	ｲﾝﾅｰ	適用号機 SERIAL_NO.	互換 ICA	代替部品 REPLACEABLE PART
1	1A	KRA1795	ｼｭｰ;ｸﾞﾛｰｻ ｸﾐﾀﾃ 800 (	SHOE;GROUSER	2		210A5 NOT USED	<	KRA11320
2	2A	KRA1803	ﾘﾝｸ;ﾄﾗｯｸ ｸﾐﾀﾃ (M ｼｰﾙ	LINK;TRACK	2		210A5 NOT USED		
3	3	KRA1807	ﾘﾝｸ;ﾄﾗｯｸ R	LINK;TRACK	90		210A5 NOT USED		
4	3	KRA1808	ﾘﾝｸ;ﾄﾗｯｸ L	LINK;TRACK	90		210A5 NOT USED		
5	3	KRA1809	ﾘﾝｸ;ﾏｽﾀ R	LINK;MASTER	2		210A5 NOT USED		
6	3	KRA1810	ﾘﾝｸ;ﾏｽﾀ L	LINK;MASTER	2		210A5 NOT USED		
7	3	KRA1811	ﾌﾞｼｭ ﾄﾗｯｸ	BUSH;SPL	90		210A5 NOT USED		
8	3	KRA1567	ﾋﾟﾝ;ﾄﾗｯｸ	PIN;TRACK	90		210A5 NOT USED		
9	3	KRA1569	ﾌﾞｼｭ ﾏｽﾀ	BUSH;SPL	2		210A5 NOT USED		
10	3	KRA1041	ﾋﾟﾝ;ﾏｽﾀ	PIN;MASTER	2		210A5 NOT USED		
11	3	KRA1015	ｶﾗｰ	COLLAR;SPL	4		210A5 NOT USED		
12	3	KRA1072	ﾋﾟﾝ;S	PIN;S	2		210A5 NOT USED		
13	3	KRA1814	ｼｰﾙ;ﾀﾞｽﾄ	SEAL;DUST	180		210A5 NOT USED		
14	2	KBA0776	ｼｭｰ;ｸﾞﾛｰｻ 800	SHOE;GROUSER	92		210A5 NOT USED		
15	2	KRA1006	ﾎﾞﾙﾄ;ｼｭｰ	BOLT;SHOE	368		210A5 NOT USED		
16	2	KRA1007	ﾅｯﾄ;ｼｭｰ	NUT;SHOE	368		210A5 NOT USED		
1	1A	KRA11320	ｼｭｰ;ｸﾞﾛｰｻ ｸﾐﾀﾃ 800 M	SHOE;GROUSER	2				
2	2A	KRA11450	ﾘﾝｸ;ﾄﾗｯｸ ｸﾐﾀﾃ Mｼｰﾙ	LINK;TRACK	2				
3	3	KRA1807	ﾘﾝｸ;ﾄﾗｯｸ R	LINK;TRACK	90				
4	3	KRA1808	ﾘﾝｸ;ﾄﾗｯｸ L	LINK;TRACK	90				
5	3	KRA1809	ﾘﾝｸ;ﾏｽﾀ R	LINK;MASTER	2				
6	3	KRA1810	ﾘﾝｸ;ﾏｽﾀ L	LINK;MASTER	2				
7	3	KRA1811	ﾌﾞｼｭ ﾄﾗｯｸ	BUSH;SPL	90				
8	3	KRA11110	ﾋﾟﾝ;ﾄﾗｯｸ (ｺｳﾄﾞUPﾋﾝ)	PIN;TRACK	90				
9	3	KRA1569	ﾌﾞｼｭ ﾏｽﾀ	BUSH;SPL	2				
10	3	KRA1041	ﾋﾟﾝ;ﾏｽﾀ	PIN;MASTER	2				
11	3	KRA1015	ｶﾗｰ	COLLAR;SPL	4				
12	3	KRA1072	ﾋﾟﾝ;S	PIN;S	2				
13	3	KRA1814	ｼｰﾙ;ﾀﾞｽﾄ	SEAL;DUST	180				
14	2	KBA0776	ｼｭｰ;ｸﾞﾛｰｻ 800	SHOE;GROUSER	92				
15	2	KRA1006	ﾎﾞﾙﾄ;ｼｭｰ	BOLT;SHOE	368				
16	2	KRA1007	ﾅｯﾄ;ｼｭｰ	NUT;SHOE	368				
17	1	KHA0044	ｽﾃｯﾌﾟ (ﾊﾊﾞ100)	STEP	4				
18	1	105R016Y050R	ｾﾑｽB M16 X 50	BOLT;SEMS	8				
19	1	162R016VR	ｺｳﾘｷN M16	NUT;HIGH STRENGTH	8		210A5 1149-		

https://truckmanualshub.com/

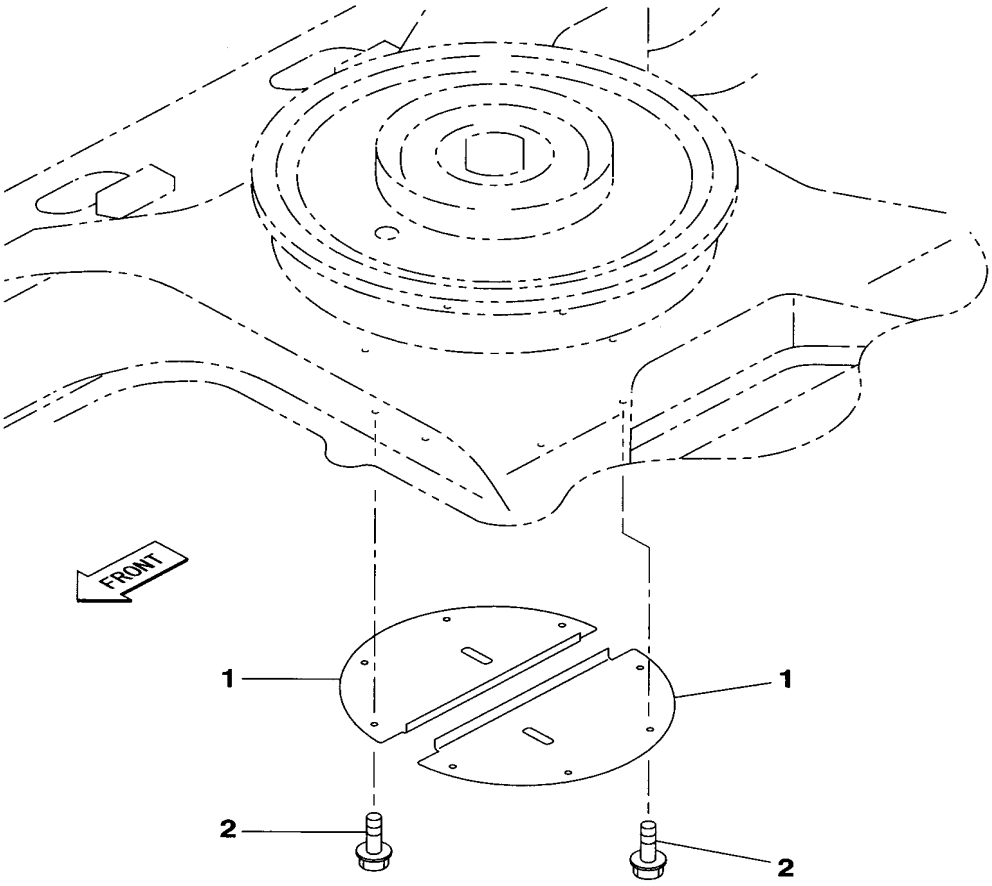

KGORA530-00
KRA10390-CZ

https://truckmanualshub.com/

210A5 1101－ 210L5 1101－

符号 ITEM	構成 COMPO	部品番号 PART NO.	部品名	PART NAME	個数 Q'TY	インナー	適用号機 SERIAL_NO.	互換 ICA	代替部品 REPLACEABLE PART
1	1	KRA10400	ｶﾊﾞｰ;ｱﾝﾀﾞ	COVER;UNDER	2				
2	1	105R012Y030R	ｾﾑｽB M12X 30	BOLT;SEMS	8		210A5 -1143 210L5 -1144	<	KHN1398
2	1	KHN1398	ﾎﾞﾙﾄ ﾄｸｼｭ ｻﾞｶﾞﾈ ｸﾐｺﾐ	BOLT;SPL	8		210A5 1144- 210L5 1145-		

https://truckmanualshub.com/

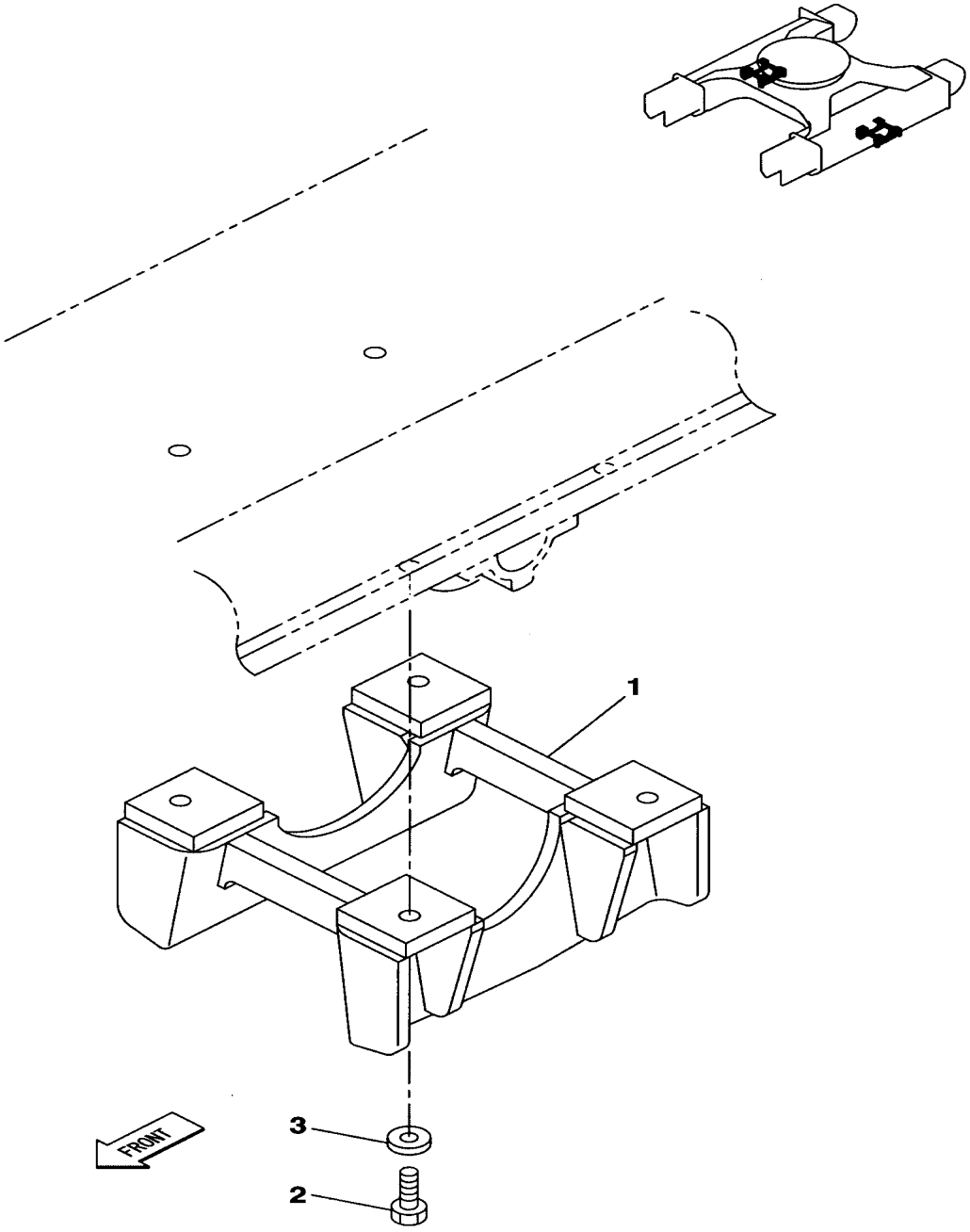

KGORA585-0
KRA12150-BZ

https://truckmanualshub.com/

210A5 1101－ 210L5 1101－

符号 ITEM	構成 COMPO	部品番号 PART NO.	部品名	PART NAME	個数 Q'TY	インナー	適用号機 SERIAL_NO.	互換 ICA	代替部品 REPLACEABLE PART
1	1	KRA12140	ｶﾞｰﾄﾞ ;ｾﾝﾀ	GUARD	2				
2	1	102R018Y060R	ｺｳﾘｷB M18X 60	BOLT;HIGH STRENGTH	8		210A5 -1159 210L5 -1154	<	105R018Y060R
2	1	105R018Y060R	ｾﾑｽB M18 X 60	BOLT;SEMS	8		210A5 1160- 210L5 1155-		
3	1	KHN1323	ｺｳﾘｷW 18 (ﾒｯｷ)	WASHER;HIGH STRENGTH	8		210A5 -1159 210L5 -1154		

https://truckmanualshub.com/

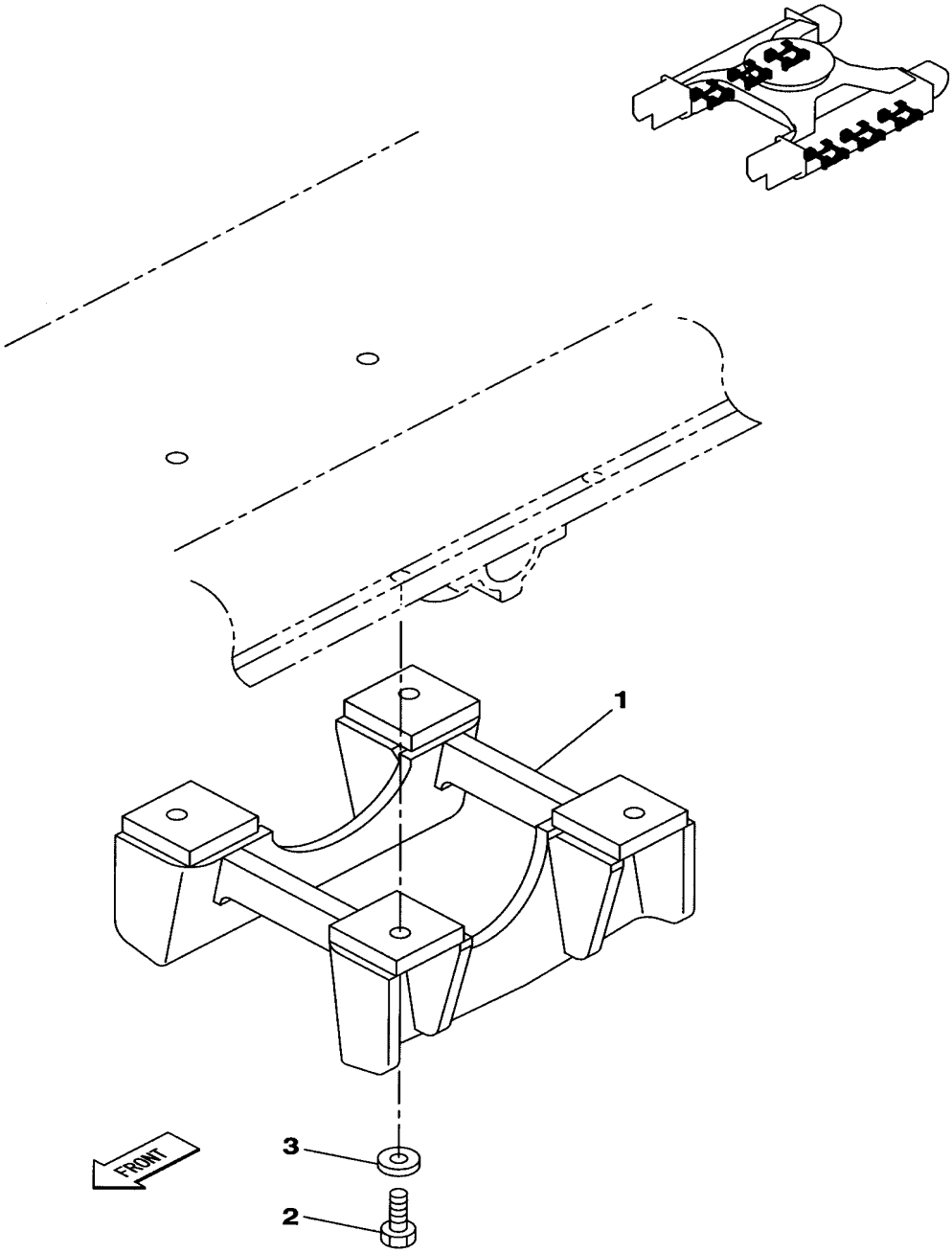

KG0RA586-0
KRA12160-CZ

https://truckmanualshub.com/

210A5 1101－ 210L5 1101－

符号 ITEM	構成 COMPO	部品番号 PART NO.	部品名	PART NAME	個数 Q'TY	インナー	適用号機 SERIAL_NO.	互換 ICA	代替部品 REPLACEABLE PART
1	1	KRA12140	ｶﾞｰﾄﾞ;ｾﾝﾀ	GUARD	6				
2	1	102R018Y060R	ｺｳﾘｷB M18X 60	BOLT;HIGH STRENGTH	24		210A5 -1159 210L5 -1154	<	105R018Y060R
2	1	105R018Y060R	ｾﾑｽB M18 X 60	BOLT;SEMS	24		210A5 1160- 210L5 1155-		
3	1	KHN1323	ｺｳﾘｷW 18 (ﾒｯｷ)	WASHER;HIGH STRENGTH	24		210A5 -1159 210L5 -1154		

https://truckmanualshub.com/

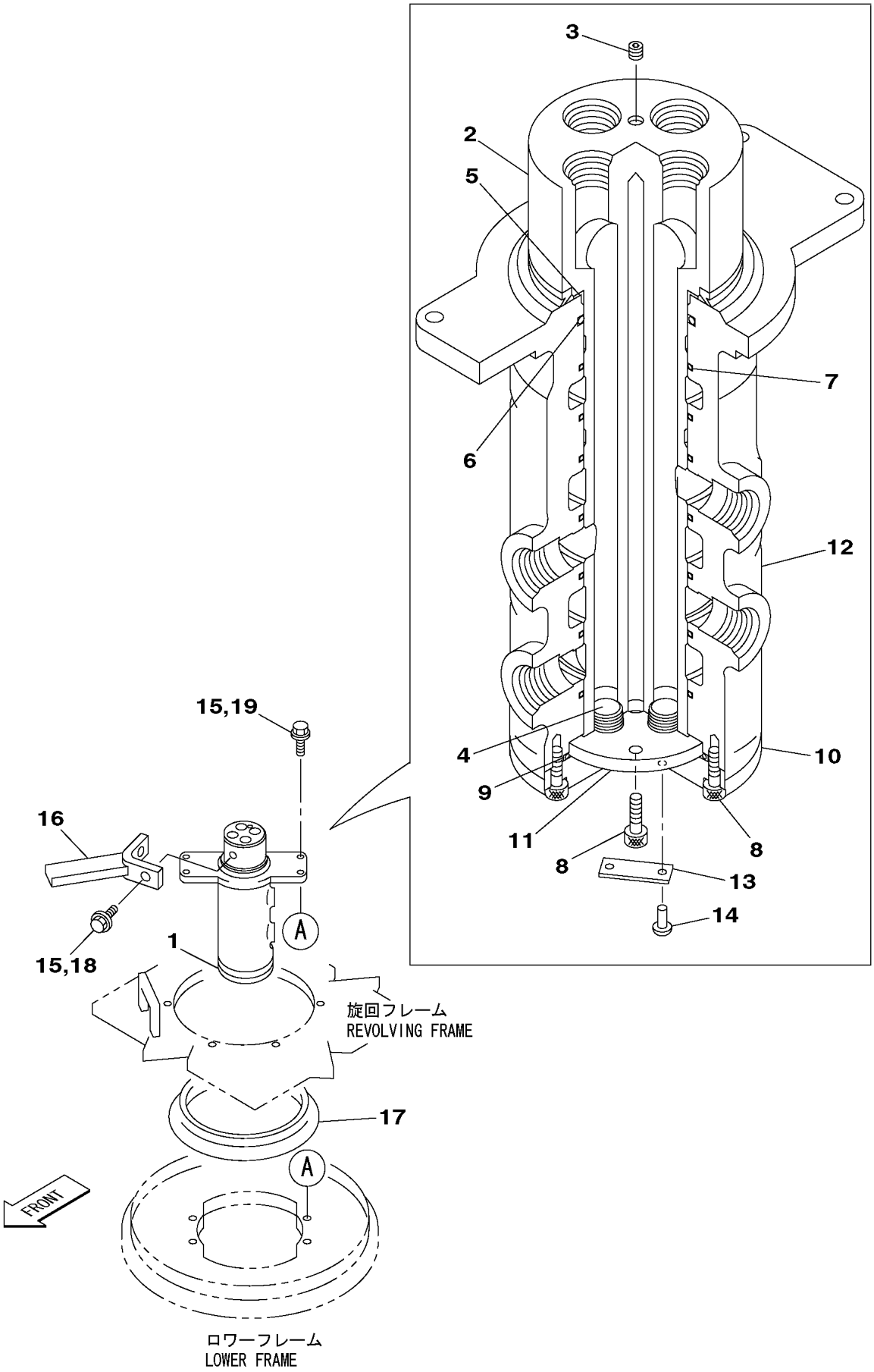

KGORA552-0
KRA11180-C

https://truckmanualshub.com/

210A5 1101－ 210L5 1101－

符号 ITEM	構成 COMPO	部品番号 PART NO.	部品名	PART NAME	個数 Q'TY	ｲﾝﾅｰ	適用号機 SERIAL_NO.	互換 ICA	代替部品 REPLACEABLE PART
1	1A	KRA11190	ｼﾞｮｲﾝﾄ;ｾﾝﾀ ｸﾐﾀﾃ	JOINT;CTR	1				
2	2A	KRA11200	ｱｸｽﾙ	AXLE	1				
3	3	KHJ0300	ﾌﾟﾗｸﾞ ｼｰﾙﾅｲﾛﾝ ﾂｷ 1/4	PLUG	1				
4	3	KHJ0303	ﾌﾟﾗｸﾞ ｼｰﾙﾅｲﾛﾝ ﾂｷ 3/4	PLUG	4				
5	2	KNJ0660	V-ﾘﾝｸﾞ	V-RING	1				
6	2	KRA0103	O-ﾘﾝｸﾞ 1B-P80	O-RING 1B P80	1		210A5 -1117 210L5 NOT USED		
6	2	KHA10130	O-ﾘﾝｸﾞ (HNBR) P80	O-RING	1		210A5 1118-		
7	2	KEA0337	ﾘﾝｸﾞ;ﾊﾟｯｷﾝ (ｷﾘｶｷﾂｷ)	RING;PACKING	7				
8	2	108R008Y025R	ﾛｯｶｸｱﾅB M 8X 25	BOLT;HEX SOC HD	8				
9	2	UCD0097	O-ﾘﾝｸﾞ	O-RING	1				
10	2	KRA1874	ｶﾊﾞｰ	COVER	1				
11	2	KRA10380	ﾌﾟﾚｰﾄ;ｽﾗｽﾄ	PLATE;THRUST	1				
12	2	KRA1872	ﾛｰﾀ	ROTOR	1				
13	2	KNJ0957	ﾒｲﾊﾞﾝ;ｼﾔﾒｲ	NAMEPLATE;CO.	1				
14	2	305-02S048N	ﾊﾟｰｶR NO 2X 4.8	SCREW;DRIVE	2				
15	1	105R012Y030R	ｾﾑｽB M12X 30	BOLT;SEMS	6		210A5 -2441 210L5 -1542		
16	1	KRA11210	ﾊﾞｰ;ﾛｯｸ	BAR;LOCK	1				
17	1	KRA11090	ﾘﾝｸﾞ;ｼｰﾙ	RING;SEAL	1				
18	1	105R012Y030R	ｾﾑｽB M12X 30	BOLT;SEMS	2		210A5 2442- 210L5 1543-		
19	1	105R012Y045R	ｾﾑｽB M12X 45	BOLT;SEMS	4		210A5 2442- 210L5 1543-		

https://truckmanualshub.com/

7 [8 ~ 15]

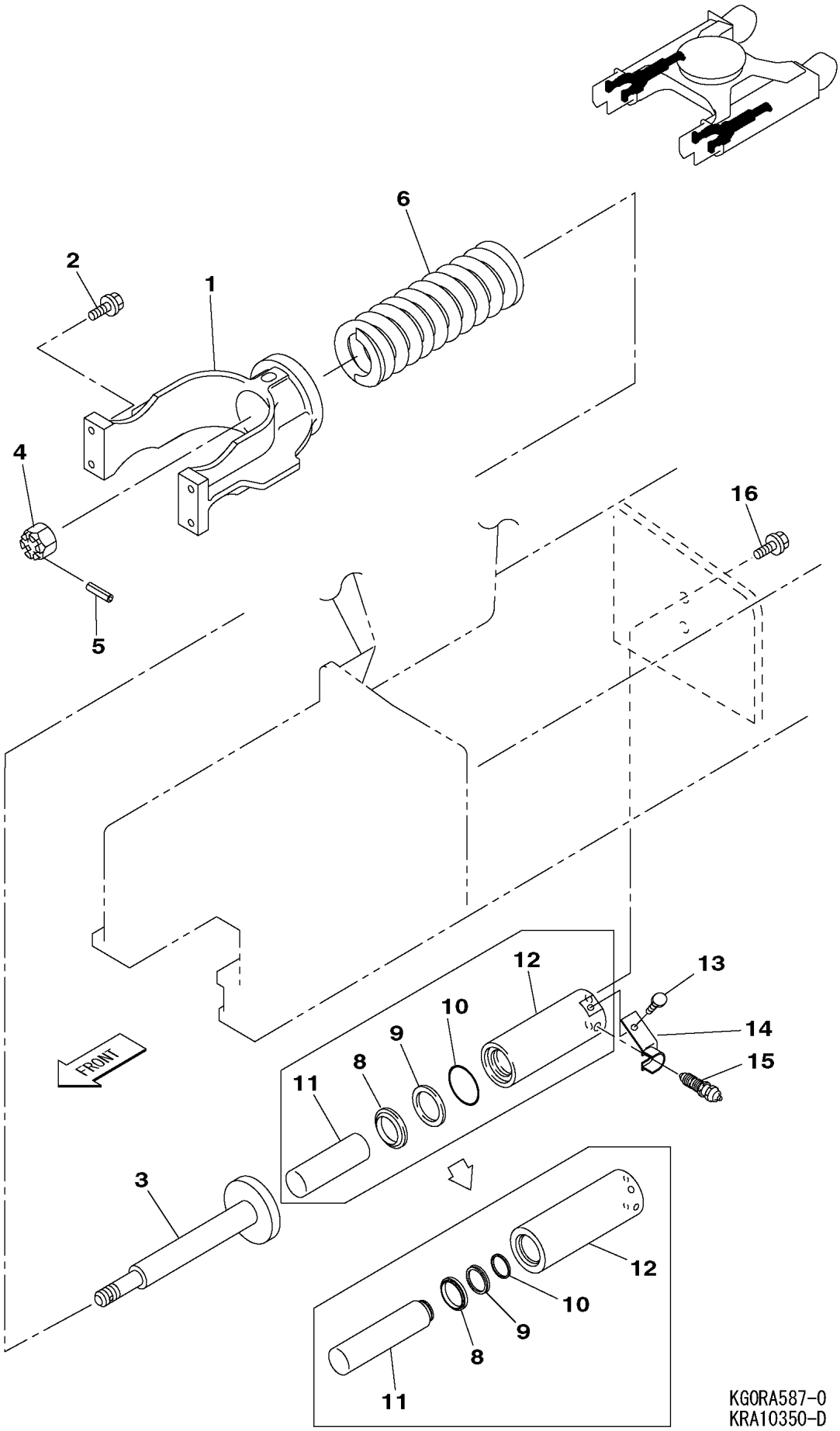

https://truckmanualshub.com/

210A5 1101－ 210L5 1101－

符号 ITEM	構成 COMPO	部品番号 PART NO.	部品名	PART NAME	個数 Q'TY	ｲﾝﾅｰ	適用号機 SERIAL_NO.	互換 ICA	代替部品 REPLACEABLE PART
1	1	KLA0152	ﾖｰｸ	YOKE	2				
2	1	105R016Y050R	ｾﾑｽB M16 X 50	BOLT;SEMS	8				
3	1	KRA1606	ﾛｯﾄﾞ;ﾈｼﾞﾂｷ	ROD;THREADED	2				
4	1	175R048HSN	ﾐｿﾞﾀｶN M48X2	NUT;CASTLE	2				
5	1	338W080Z080B	SPﾋﾟﾝ 8 X 80	PIN;SPRING	2				
6	1	KRA10170	ｽﾌﾟﾘﾝｸﾞ;ﾘｺｲﾙ	SPRING;RECOIL	2				
7	1	KBA1118	ｼﾘﾝﾀﾞ;ｸﾞﾘｽ ｸﾐﾀﾃ	CYL;GREASE	2		210A5 -1832 210L5 -1415	<	KRA12850
7	1A	KRA12850	ｼﾘﾝﾀﾞ;ｸﾞﾘｽ ｸﾐﾀﾃ	CYL;GREASE	2		210A5 1833- 210L5 1416-		
8	2	KMA0616	ｼｰﾙ;ﾀﾞｽﾄ	SEAL;DUST	2				
9	2	KHA10100	ﾘﾝｸﾞ;ﾊﾞｯｸｱｯﾌﾟ T3 P75	RING;BACK-UP	2		210A5 -1832 210L5 -1415		
9	2	KRA12860	ﾊﾟｯｷﾝ U	PACKING	2		210A5 1833- 210L5 1416-		
10	2	BRA0063	O-ﾘﾝｸﾞ 1B-P70	O-RING	2		210A5 -1832 210L5 -1415		
10	2	370A0550Z	ｼﾞｸﾄﾒﾜ 55	RING;SNAP	2		210A5 1833- 210L5 1416-		
11	2	KBA1119	ﾛｯﾄﾞ;ﾋﾟｽﾄﾝ	ROD;PISTON	2		210A5 -1832 210L5 -1415		
11	2	KRA12880	ﾛｯﾄﾞ;ﾋﾟｽﾄﾝ	ROD;PISTON	2		210A5 1833- 210L5 1416-		
12	2	KBA1120	ｼﾘﾝﾀﾞ;ｸﾞﾘｽ	CYL;GREASE	2		210A5 -1832 210L5 -1415		
12	2	KRA12890	ｼﾘﾝﾀﾞ;ｸﾞﾘｽ	CYL;GREASE	2		210A5 1833- 210L5 1416-		
13	2	105R010Y020R	ｾﾑｽB M10X 20	BOLT;SEMS	2				
14	2	KBA1121	ﾌﾞﾗｹｯﾄ	BRACKET	2				
15	2	KHA0026	ﾊﾞﾙﾌﾞ;ﾁｪｯｸ ｸﾐﾀﾃ	VALVE;CHECK	2				
16	1	105R016Y055R	ｾﾑｽB M16 X 55	BOLT;SEMS	4				

https://truckmanualshub.com/

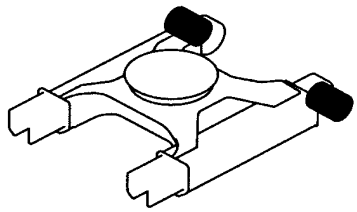

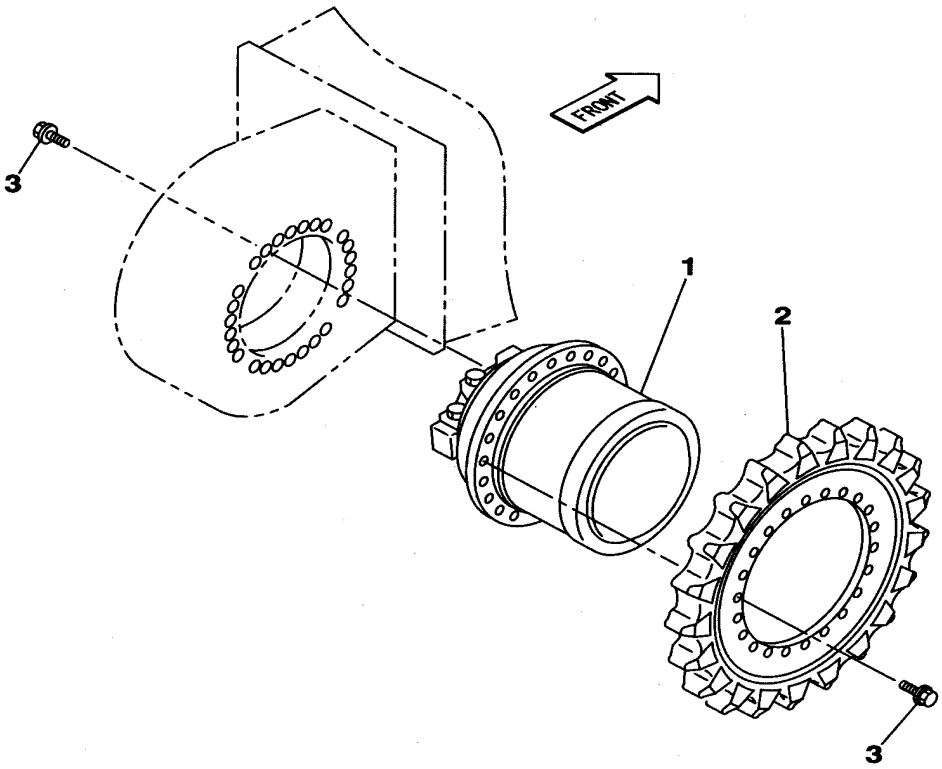

KGORA526-0
KRA10320-C

https://truckmanualshub.com/

210A5 1101－ 210L5 1101－

符号 ITEM	構成 COMPO	部品番号 PART NO.	部品名	PART NAME	個数 Q'TY	インナー	適用号機 SERIAL_NO.	互換 ICA	代替部品 REPLACEABLE PART
1	1	KRA10150	ﾓｰﾀ;ｿｳｺｳ ﾕﾆｯﾄ	MOTOR;TRACTION	2	*	210A5 -1647 210L5 -1339	<	KRA12910
1	1	KRA12910	ﾓｰﾀ;ｿｳｺｳ	MOTOR;TRACTION	2	*	210A5 1648- 210L5 1340-		
2	1	KRA10160	ｽﾌﾟﾛｹｯﾄ;ﾄﾞﾗｲﾌﾞ	SPROCKET	2		210A5 -1647 210L5 -1339	<	KRA12900
2	1	KRA12900	ｽﾌﾟﾛｹｯﾄ;ﾄﾞﾗｲﾌﾞ	SPROCKET	2		210A5 1648- 210L5 1340-		
3	1	105R016Y055R	ｾﾑｽB M16 X 55	BOLT;SEMS	100				

https://truckmanualshub.com/

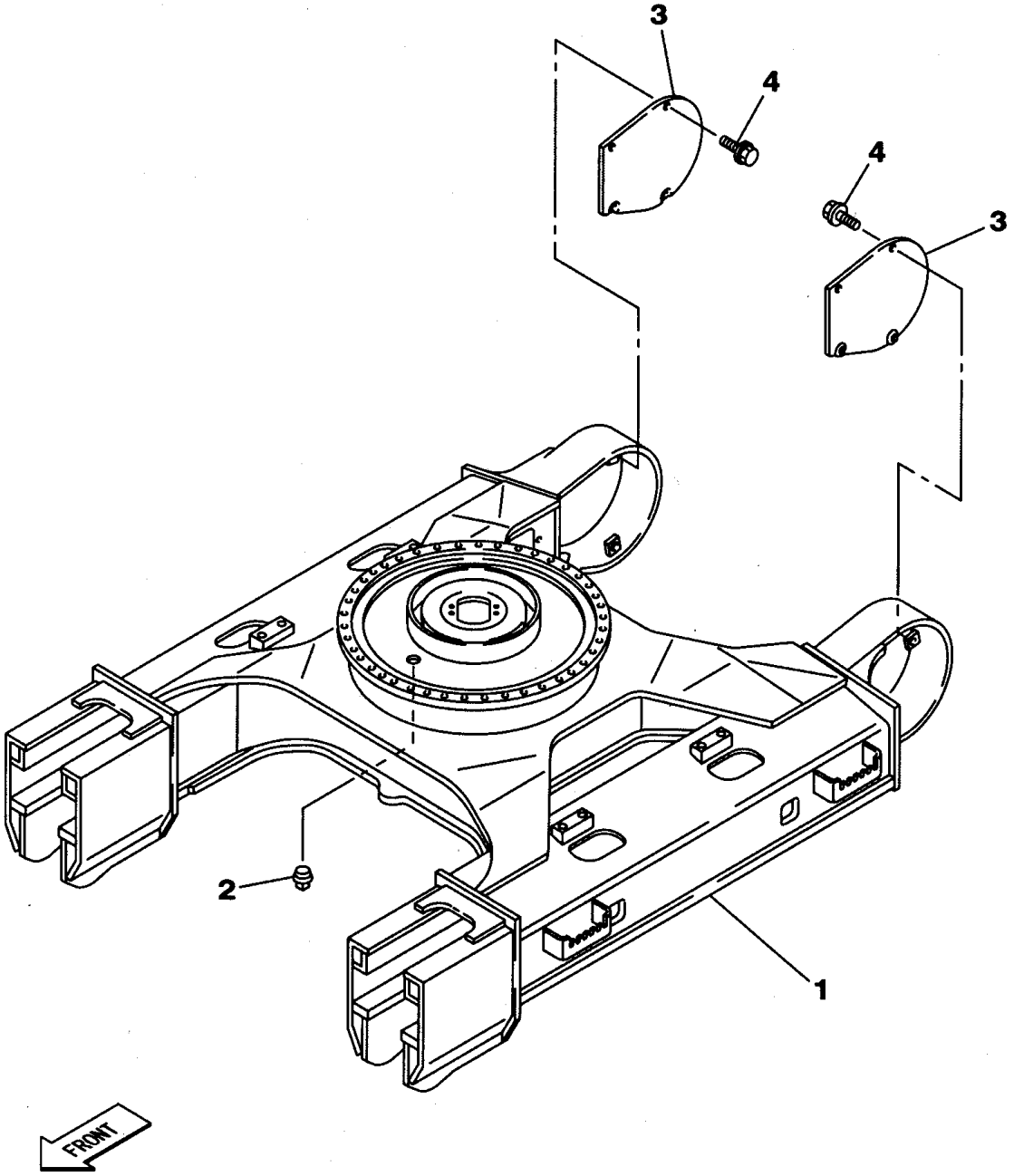

KG0RA551-0
KRA11120-C

https://truckmanualshub.com/

210A5 1101ー

符号 ITEM	構成 COMPO	部品番号 PART NO.	部品名	PART NAME	個数 Q'TY	ｲﾝﾅｰ	適用号機 SERIAL_NO.	互換 ICA	代替部品 REPLACEABLE PART
1	1	KRA11130	ﾌﾚｰﾑ;ﾛﾜｰ ﾖｳｾﾂｽﾞ	FRAME;LOWER	1				
2	1	M01X0831	ﾌﾟﾗｸﾞ P-1ﾂﾊﾞﾂｷ	PLUG	1				
3	1	KRA1553	ｶﾊﾞｰ;ﾓｰﾀ	COVER;MOTOR	2				
4	1	KHN1398	ﾎﾞﾙﾄ ﾄｸｼｭ ｻﾞｶﾞﾈ ｸﾐｺﾐ	BOLT;SPL	8				

https://truckmanualshub.com/

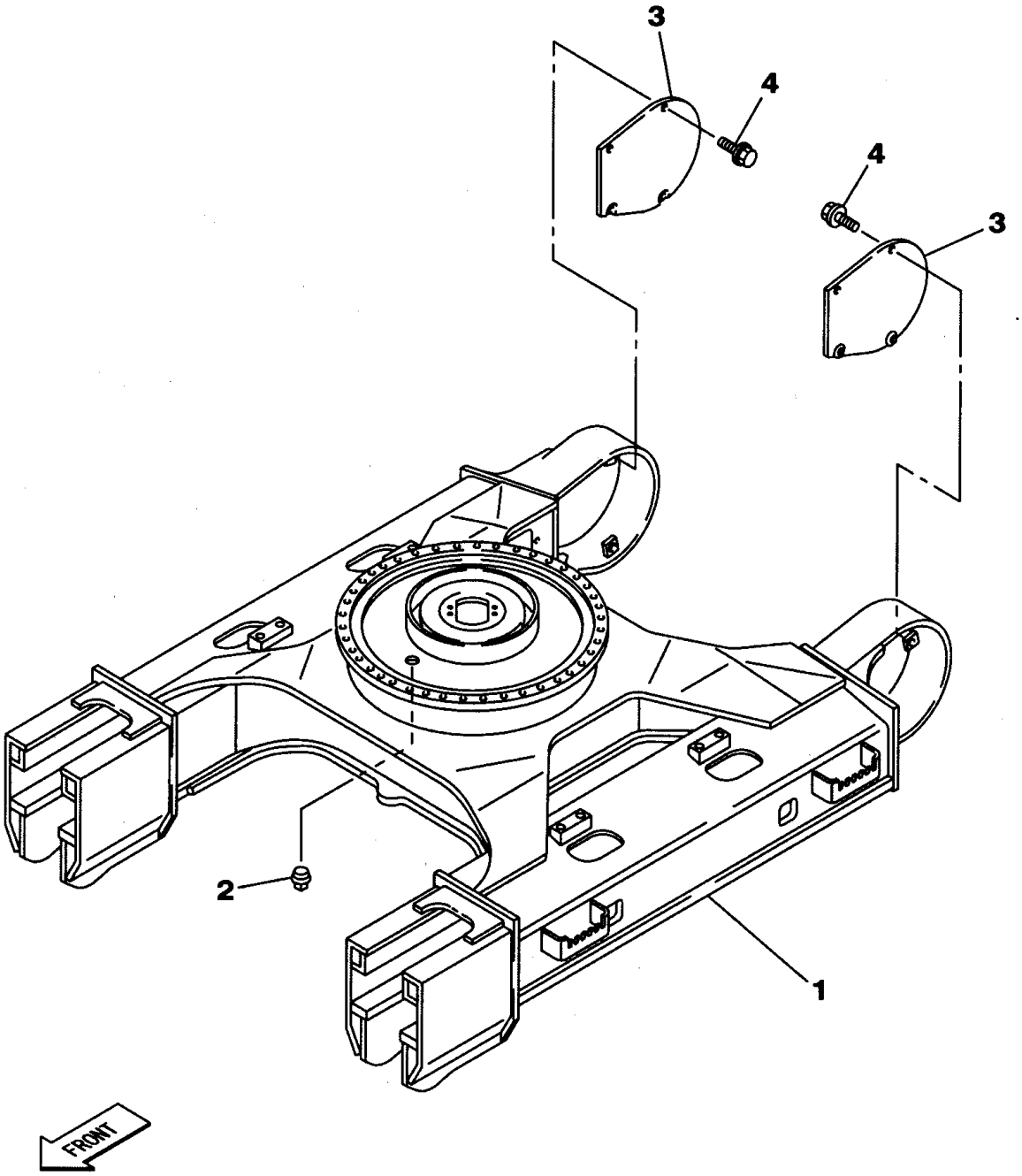

KGORA557-0
KRA11550-C

https://truckmanualshub.com/

210L5 1101ー

符号 ITEM	構成 COMPO	部品番号 PART NO.	部品名	PART NAME	個数 Q'TY	ｲﾝﾅｰ	適用号機 SERIAL_NO.	互換 ICA	代替部品 REPLACEABLE PART
1	1	KRA11560	ﾌﾚｰﾑ;ﾛﾜｰ ﾖｳｾﾂｽﾞ	FRAME;LOWER	1				
2	1	M01X0831	ﾌﾟﾗｸﾞ P-1ﾂﾊﾞﾂｷ	PLUG	1				
3	1	KRA1553	ｶﾊﾞｰ;ﾓｰﾀ	COVER;MOTOR	2				
4	1	KHN1398	ﾎﾞﾙﾄ ﾄｸｼｭ ｻﾞｶﾞﾈ ｸﾐｺﾐ	BOLT;SPL	8				

https://truckmanualshub.com/

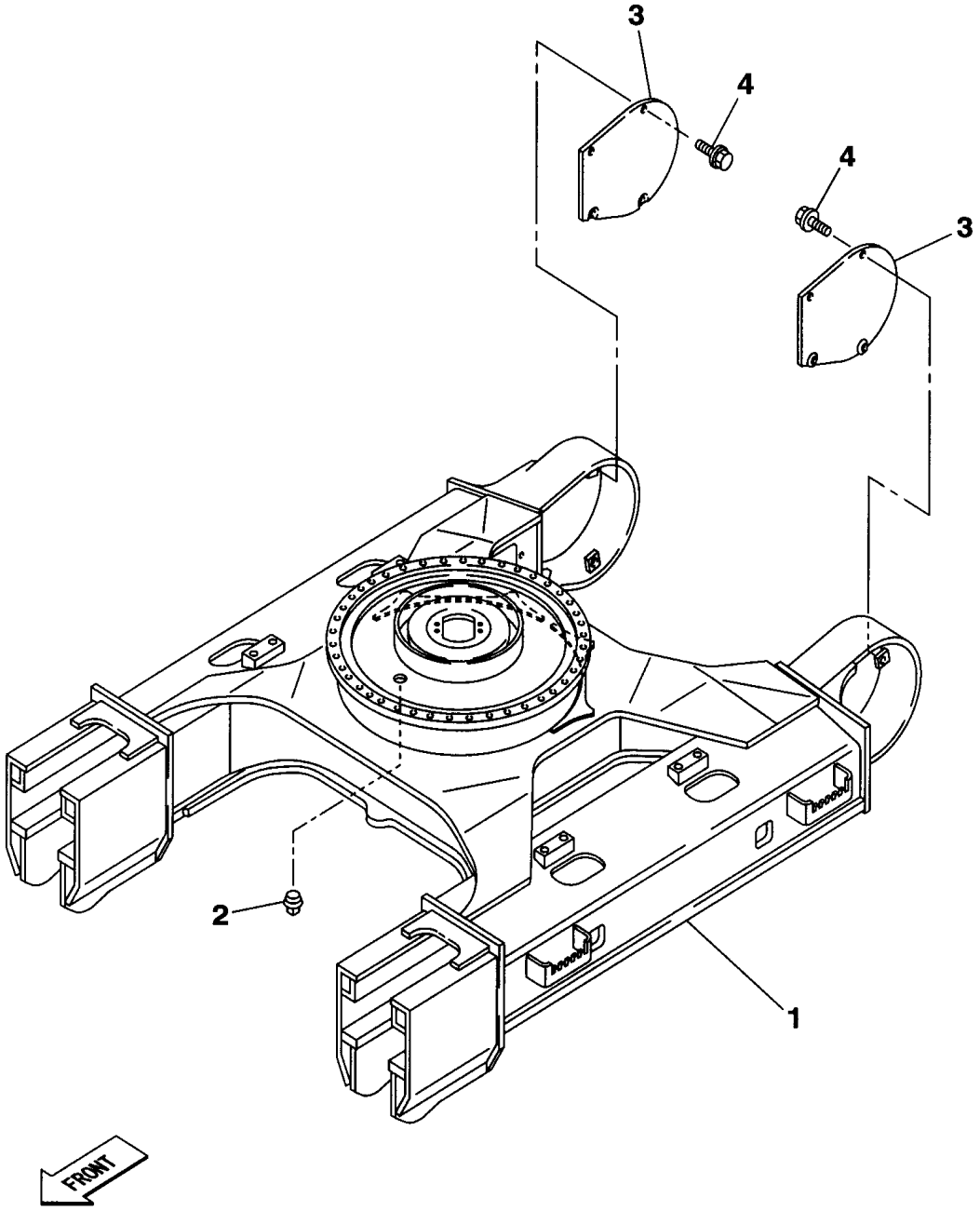

KGORA590-0
KRA11550-CZ

https://truckmanualshub.com/

210L5 1101ー

符号 ITEM	構成 COMPO	部品番号 PART NO.	部品名	PART NAME	個数 Q'TY	ｲﾝﾅｰ	適用号機 SERIAL_NO.	互換 ICA	代替部品 REPLACEABLE PART
1	1	KRA12260	ﾌﾚｰﾑ;ﾛﾜｰ ﾖｳｾﾂｽﾞ	FRAME;LOWER	1				
2	1	M01X0831	ﾌﾟﾗｸﾞ P-1ﾂﾊﾞﾂｷ	PLUG	1				
3	1	KRA1553	ｶﾊﾞｰ;ﾓｰﾀ	COVER;MOTOR	2				
4	1	KHN1398	ﾎﾞﾙﾄ ﾄｸｼｭ ｻﾞｶﾞﾈ ｸﾐｺﾐ	BOLT;SPL	8				

https://truckmanualshub.com/

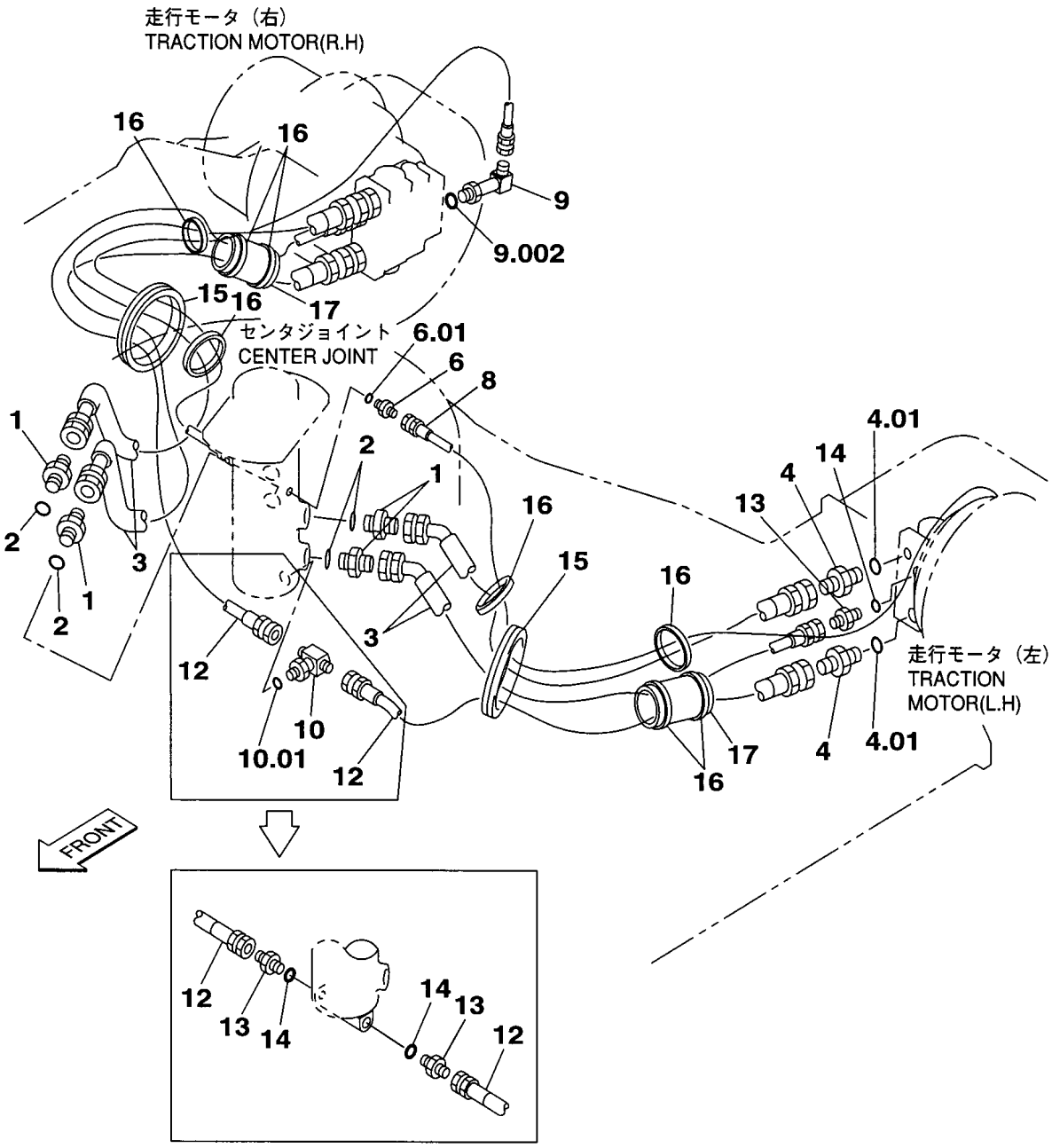

KG0RA404-0
KRA1415Z-D

https://truckmanualshub.com/

210A5 1101ー

符号 ITEM	構成 COMPO	部品番号 PART NO.	部品名	PART NAME	個数 Q'TY	ｲﾝﾅｰ	適用号機 SERIAL_NO.	互換 ICA	代替部品 REPLACEABLE PART
1	1A	KNJ0605	ｱﾀﾞﾌﾟﾀ;ﾎｰｽ HA208-06	ADAPTER;HOSE	4				
2	2	UBJ0158	O-ﾘﾝｸﾞ 1B-P24	O-RING	4				
3	1	KRA1416	ﾎｰｽ;ﾕｱﾂ	HOSE;HYD	4				
4	1A	KAJ2434	ｱﾀﾞﾌﾟﾀ;ﾎｰｽ G1XG3/4	ADAPTER;HOSE	4				
4.01	2	BHJ0795	O-ﾘﾝｸﾞ 1B P29	O-RING	4				
6	1A	KNJ0758	ｱﾀﾞﾌﾟﾀ;ﾎｰｽ HA208-02	ADAPTER;HOSE	2				
6.01	2	UEJ0360	O-ﾘﾝｸﾞ 1B-P11	O-RING	2				
8	1	KTJ0677	ﾎｰｽ;ﾅｲﾛﾝ 55-04X2450	HOSE;NYLON	2				
9	1A	KNA0709	ｴﾙﾎﾞ 90°ﾛﾝｸﾞ(ﾎｳｺｳﾁｮｳ	ELBOW	2		210A5 NOT USED	<	KHJ1178
9.002	2	UEJ0360	O-ﾘﾝｸﾞ 1B-P11	O-RING	2		210A5 NOT USED		
9	1	KHJ1178	ｴﾙﾎﾞ 90°ﾛﾝｸﾞ(ﾎｳｺｳﾁｮｳ	ELBOW	2				
10	1A	KHJ1024	ﾁｰ 2-G1/2(ｵｽ)XG1/2(	TEE	1		210A5 NOT USED		
10.01	2	UBJ0157	O-ﾘﾝｸﾞ 1B-P18	O-RING	1		210A5 NOT USED		
12	1	KRA0791	ﾎｰｽ;ﾕｱﾂ	HOSE;HYD	2				
13	1A	KNJ0604	ｱﾀﾞﾌﾟﾀ;ﾎｰｽ	ADAPTER;HOSE	2		210A5 NOT USED		
13	1A	KNJ0604	ｱﾀﾞﾌﾟﾀ;ﾎｰｽ	ADAPTER;HOSE	4				
14	2	UBJ0157	O-ﾘﾝｸﾞ 1B-P18	O-RING	4				
15	1	KRA1138	ｸｯｼｮﾝ;ﾗﾊﾞｰ 25X440	CUSHION;RUBBER	2				
16	1	KAR0017	ﾊﾞﾝﾄﾞ;ｿｸｾﾝ L=380	BAND;HARNESS	4		210A5 NOT USED	<	KAR0017
16	1	KAR0017	ﾊﾞﾝﾄﾞ;ｿｸｾﾝ L=380	BAND;HARNESS	8		210A5 NOT USED		
16	1	KAR0017	ﾊﾞﾝﾄﾞ;ｿｸｾﾝ L=380	BAND;HARNESS	4				
17	1	KAJ3331	ﾌﾟﾚｰﾄ;ﾗﾊﾞｰ	PLATE;RUBBER	2		210A5 NOT USED		

https://truckmanualshub.com/

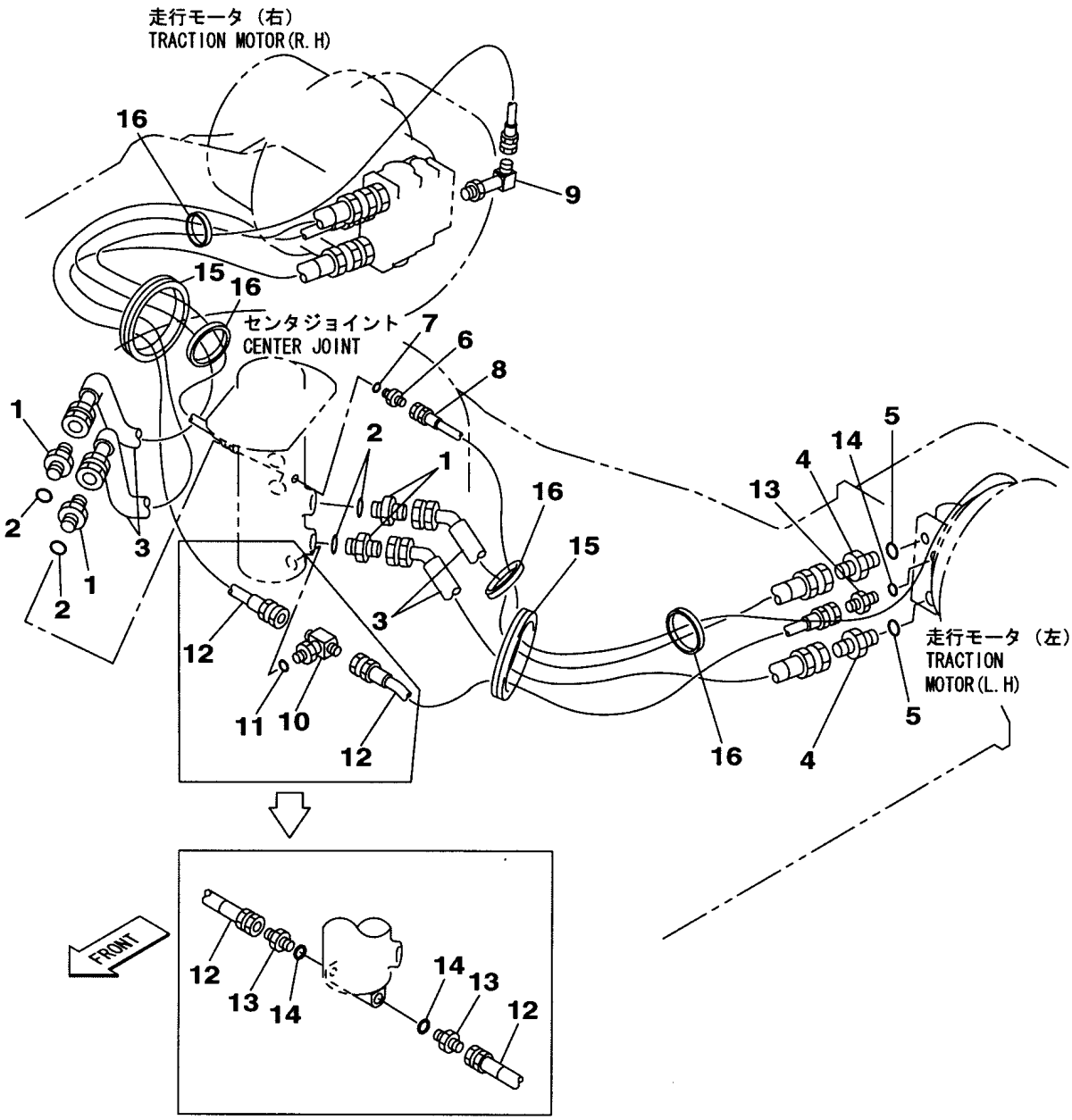

KGORA433-0
KRA1538Z-D

https://truckmanualshub.com/

210L5 1101ー

符号 ITEM	構成 COMPO	部品番号 PART NO.	部品名	PART NAME	個数 Q'TY	ｲﾝﾅｰ	適用号機 SERIAL_NO.	互換 ICA	代替部品 REPLACEABLE PART
1	1A	KNJ0605	ｱﾀﾞﾌﾟﾀ;ﾎｰｽ HA208-06	ADAPTER;HOSE	4				
2	2	UBJ0158	O-ﾘﾝｸﾞ 1B-P24	O-RING	4				
3	1	KRA1536	ﾎｰｽ;ﾕｱﾂ	HOSE;HYD	4				
4	1A	KAJ2434	ｱﾀﾞﾌﾟﾀ;ﾎｰｽ G1XG3/4	ADAPTER;HOSE	4				
5	2	BHJ0795	O-ﾘﾝｸﾞ 1B P29	O-RING	4				
6	1A	KNJ0758	ｱﾀﾞﾌﾟﾀ;ﾎｰｽ HA208-02	ADAPTER;HOSE	2				
7	2	UEJ0360	O-ﾘﾝｸﾞ 1B-P11	O-RING	2				
8	1	KTJ0809	ﾎｰｽ;ﾅｲﾛﾝ 55-04X2550	HOSE;NYLON	2		210L5 NOT USED	<	KSJ1135
8	1	KSJ1135	ﾎｰｽ;ﾅｲﾛﾝ 55-04X2700	HOSE;NYLON	2				
9	1	KHJ1178	ｴﾙﾎﾞ 90°ﾛﾝｸﾞ(ﾎｳｺｳﾁｮｳ	ELBOW	2				
10	1A	KHJ1024	ﾁｰ 2-G1/2(ｵｽ)XG1/2(	TEE	1		210L5 NOT USED		
11	2	UBJ0157	O-ﾘﾝｸﾞ 1B-P18	O-RING	1		210L5 NOT USED		
12	1	KRA0873	ﾎｰｽ;ﾕｱﾂ	HOSE;HYD	2				
13	1A	KNJ0604	ｱﾀﾞﾌﾟﾀ;ﾎｰｽ	ADAPTER;HOSE	2		210L5 NOT USED		
13	1A	KNJ0604	ｱﾀﾞﾌﾟﾀ;ﾎｰｽ	ADAPTER;HOSE	4				
14	2	UBJ0157	O-ﾘﾝｸﾞ 1B-P18	O-RING	4				
15	1	KRA1138	ｸｯｼｮﾝ;ﾗﾊﾞｰ 25X440	CUSHION;RUBBER	2				
16	1	KAR0017	ﾊﾞﾝﾄﾞ;ｿｸｾﾝ L=380	BAND;HARNESS	4				

https://truckmanualshub.com/

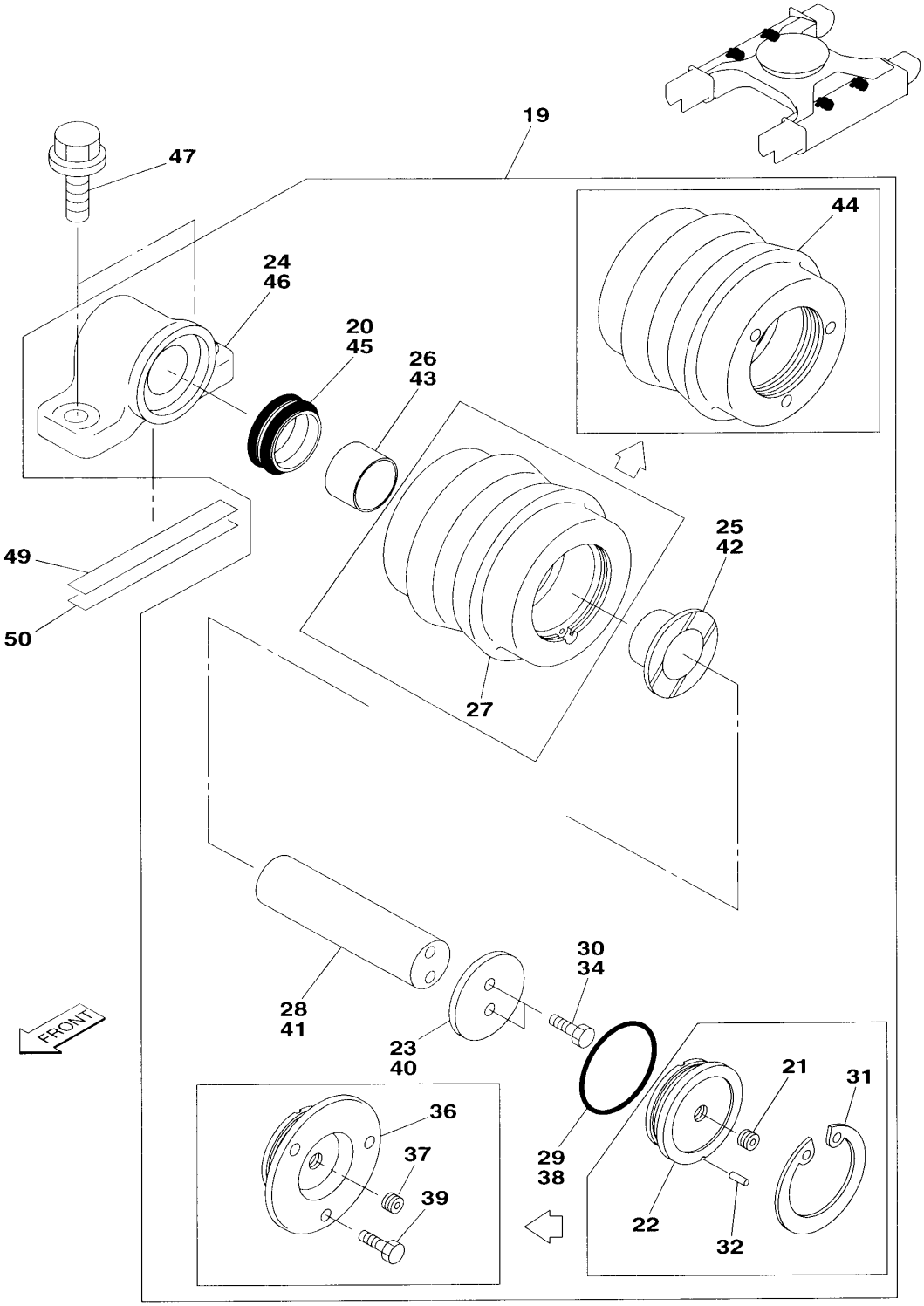

KG0RA326-1

https://truckmanualshub.com/

210A5 1101－ 210L5 1101－

符号 ITEM	構成 COMPO	部品番号 PART NO.	部品名	PART NAME	個数 Q'TY	インナー	適用号機 SERIAL_NO.	互換 ICA	代替部品 REPLACEABLE PART
19	1A	KRA1302	ﾛｰﾗ;ｷｬﾘﾔ ｸﾐﾀﾃ	ROLLER;CARRIER	4		210A5 NOT USED 210L5 NOT USED	<	KRA1717
20	2	KBA0783	ｼｰﾙ;ﾌﾛｰﾃｲﾝｸﾞ	SEAL;FLOATING	4		210A5 NOT USED 210L5 NOT USED		
21	2	KHJ0300	ﾌﾟﾗｸﾞ ｼｰﾙﾅｲﾛﾝ ﾂｷ 1/4	PLUG	4		210A5 NOT USED 210L5 NOT USED		
22	2	KRA1304	ｶﾊﾞｰ	COVER	4		210A5 NOT USED 210L5 NOT USED		
23	2	KRA1123	ﾌﾟﾚｰﾄ;ｽﾗｽﾄ	PLATE;THRUST	4		210A5 NOT USED 210L5 NOT USED		
24	2	KRA1305	ﾌﾞﾗｹｯﾄ	BRACKET	4		210A5 NOT USED 210L5 NOT USED		
25	2	KRA1248	ﾌﾞｼｭ;ﾏｷ	BUSH;FABRICATED	4		210A5 NOT USED 210L5 NOT USED		
26	2	KRA1249	ﾌﾞｼｭ;ﾏｷ	BUSH;FABRICATED	4		210A5 NOT USED 210L5 NOT USED		
27	2	KRA1303	ﾛｰﾗ;ｷｬﾘﾔ	ROLLER;CARRIER	4		210A5 NOT USED 210L5 NOT USED		
28	2	KRA1252	ｼｬﾌﾄ;ﾛｰﾗ	SHAFT;ROLLER	4		210A5 NOT USED 210L5 NOT USED		
29	2	UHA0049	O-ﾘﾝｸﾞ 1A-G70	O-RING	4		210A5 NOT USED 210L5 NOT USED		
30	2	102R010Y016N	ｺｳﾘｷB M10X 16	BOLT;HIGH STRENGTH	8		210A5 NOT USED 210L5 NOT USED		
31	2	380A0850Z	ｱﾅﾄﾒﾜ 85	RING;SNAP	4		210A5 NOT USED 210L5 NOT USED		
32	2	338W030Z012B	SPﾋﾟﾝ 3 X 12	PIN;SPRING	4		210A5 NOT USED 210L5 NOT USED		
19	1A	KRA1717	ﾛｰﾗ;ｷｬﾘﾔ ｸﾐﾀﾃ (ﾎﾞﾙﾄﾄ	ROLLER;CARRIER	4				
34	2	102R010Y016N	ｺｳﾘｷB M10X 16	BOLT;HIGH STRENGTH	8				
36	2	KRA1719	ｶﾊﾞｰ (ﾎﾞﾙﾄﾄﾒ)	COVER	4				
37	2	KHJ0300	ﾌﾟﾗｸﾞ ｼｰﾙﾅｲﾛﾝ ﾂｷ 1/4	PLUG	4				
38	2	UHA0049	O-ﾘﾝｸﾞ 1A-G70	O-RING	4				
39	2	102R008Y025R	ｺｳﾘｷB M 8X 25	BOLT;HIGH STRENGTH	12				
40	2	KRA1123	ﾌﾟﾚｰﾄ;ｽﾗｽﾄ	PLATE;THRUST	4				
41	2	KRA1252	ｼｬﾌﾄ;ﾛｰﾗ	SHAFT;ROLLER	4				
42	2	KRA1248	ﾌﾞｼｭ;ﾏｷ	BUSH;FABRICATED	4				
43	2	KRA1249	ﾌﾞｼｭ;ﾏｷ	BUSH;FABRICATED	4				
44	2	KRA1718	ﾛｰﾗ;ｷｬﾘﾔ (ﾎﾞﾙﾄﾄﾒ)	ROLLER;CARRIER	4				
45	2	KBA0783	ｼｰﾙ;ﾌﾛｰﾃｲﾝｸﾞ	SEAL;FLOATING	4				
46	2	KRA1305	ﾌﾞﾗｹｯﾄ	BRACKET	4				
47	1	105R020Y050R	ｾﾑｽB M20 X 50	BOLT;SEMS	8				
49	1	KHA0003	ｼﾑ;ﾌﾟﾚｰﾄ	SHIM;PLATE	4 AR				
50	1	KHA0033	ｼﾑ;ﾌﾟﾚｰﾄ	SHIM;PLATE	4 AR				

https://truckmanualshub.com/

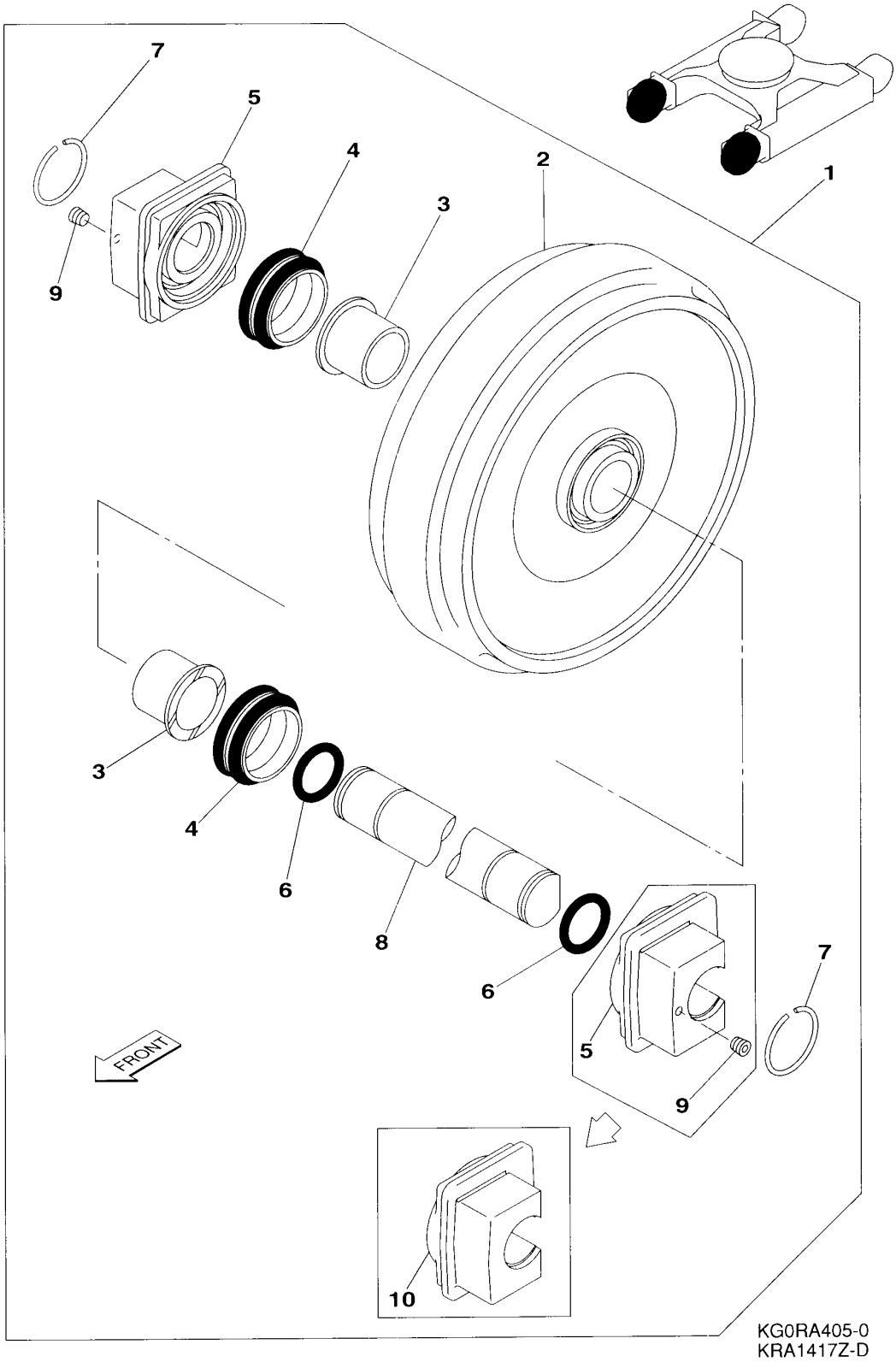

https://truckmanualshub.com/

210A5 1101－ 210L5 1101－

符号 ITEM	構成 COMPO	部品番号 PART NO.	部品名	PART NAME	個数 Q'TY	ｲﾝﾅｰ	適用号機 SERIAL_NO.	互換 ICA	代替部品 REPLACEABLE PART
1	1	KRA1432	ﾛｰﾗ;ﾃｲｸｱｯﾌﾟ ｸﾐﾀﾃ	ROLLER;TAKE-UP	2		210A5 NOT USED 210L5 NOT USED	<	KRA1767
1	1A	KRA1767	ﾛｰﾗ;ﾃｲｸｱｯﾌﾟ (ｷｮｳｶｶﾞﾀ	ROLLER;TAKE-UP	2				
2	2	KRA1433	ﾛｰﾗ;ﾃｲｸｱｯﾌﾟ	ROLLER;TAKE-UP	2		210A5 NOT USED 210L5 NOT USED		
2	2	KRA1768	ﾛｰﾗ;ﾃｲｸｱｯﾌﾟ (ｷｮｳｶｶﾞﾀ	ROLLER;TAKE-UP	2				
3	2	KRA1201	ﾌﾞｼｭ;ﾏｷ	BUSH;FABRICATED	4				
4	2	BLA2371	ｼｰﾙ;ﾌﾛｰﾃｲﾝｸﾞ	FLOATING SEAL	4				
5	2	KRA1200	ﾊﾌﾞ	HUB	4		210A5 NOT USED 210L5 NOT USED		
5	2	KRA1200	ﾊﾌﾞ	HUB	2				
6	2	BHA0863	O-ﾘﾝｸﾞ 1-A G60	O-RING	4				
7	2	KNA0180	ｸﾘｯﾌﾟ;ﾜｲﾔ 4X110	CLIP;WIRE	4				
8	2	KRA0988	ｼｬﾌﾄ;ﾛｰﾗ	SHAFT;ROLLER	2				
9	2	KHJ0300	ﾌﾟﾗｸﾞ ｼｰﾙﾅｲﾛﾝ ﾂｷ 1/4	PLUG	4		210A5 NOT USED 210L5 NOT USED		
9	2	KHJ0300	ﾌﾟﾗｸﾞ ｼｰﾙﾅｲﾛﾝ ﾂｷ 1/4	PLUG	2				
10	2	KRA1594	ﾊﾌﾞ (ﾌﾟﾗｸﾞﾅｼ)	HUB	2				

https://truckmanualshub.com/

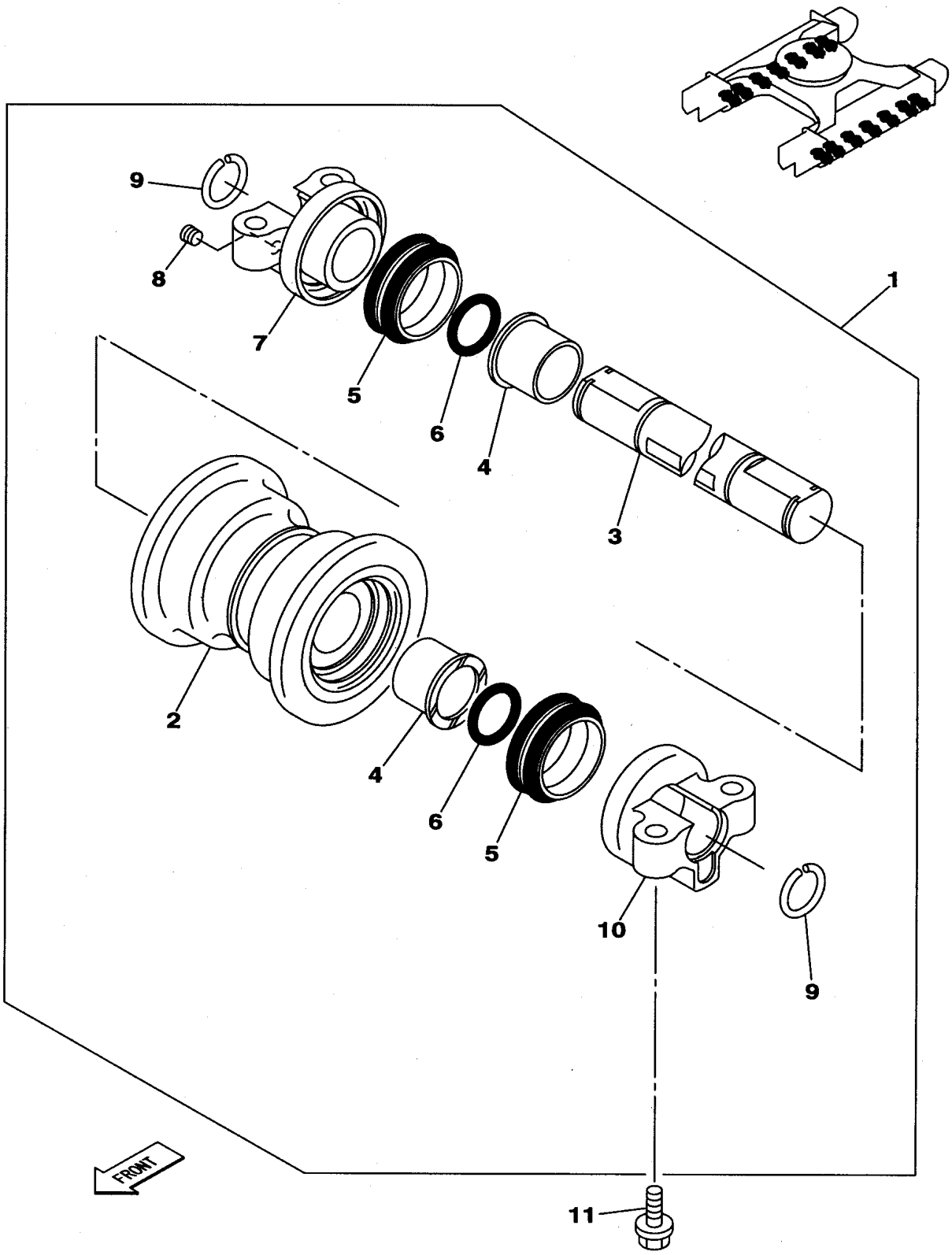

KGORA529-0
KRA10350-D

https://truckmanualshub.com/

210A5 1101ー

符号 ITEM	構成 COMPO	部品番号 PART NO.	部品名	PART NAME	個数 Q'TY	ｲﾝﾅｰ	適用号機 SERIAL_NO.	互換 ICA	代替部品 REPLACEABLE PART
1	1A	KRA10360	ﾛｰﾗ;ﾄﾗｯｸ ｸﾐﾀﾃ (ｶｺｳｱﾘ	ROLLER;TRACK	14				
2	2	KRA10370	ﾛｰﾗ;ﾄﾗｯｸ (ｿﾄ)(ﾄｳﾒﾝｶｺ	ROLLER;TRACK	14				
3	2	KRA11260	ｼｬﾌﾄ;ﾛｰﾗ	SHAFT;ROLLER	14		210A5 NOT USED		
3	2	KRA1195	ｼｬﾌﾄ;ﾛｰﾗ	SHAFT;ROLLER	14				
4	2	KRA1197	ﾌﾞｼｭ;ﾏｷ	BUSH;FABRICATED	28				
5	2	BHA1099	ｼｰﾙ;ﾌﾛｰﾃｲﾝｸﾞ FU-0900	SEAL;FLOATING	28				
6	2	BHA0863	O-ﾘﾝｸﾞ 1-A G60	O-RING	28				
7	2	KRA1196	ｶﾗｰ	COLLAR	14				
8	2	KHJ0300	ﾌﾟﾗｸﾞ ｼｰﾙﾅｲﾛﾝ ﾂｷ 1/4	PLUG	14				
9	2	KNA0180	ｸﾘｯﾌﾟ;ﾜｲﾔ 4X110	CLIP;WIRE	28				
10	2	KRA1595	ｶﾗｰ (ﾌﾟﾗｸﾞﾅｼ)	COLLAR	14				
11	1	105R018Y075R	ｾﾑｽB M18 X 75	BOLT;SEMS	56				

https://truckmanualshub.com/

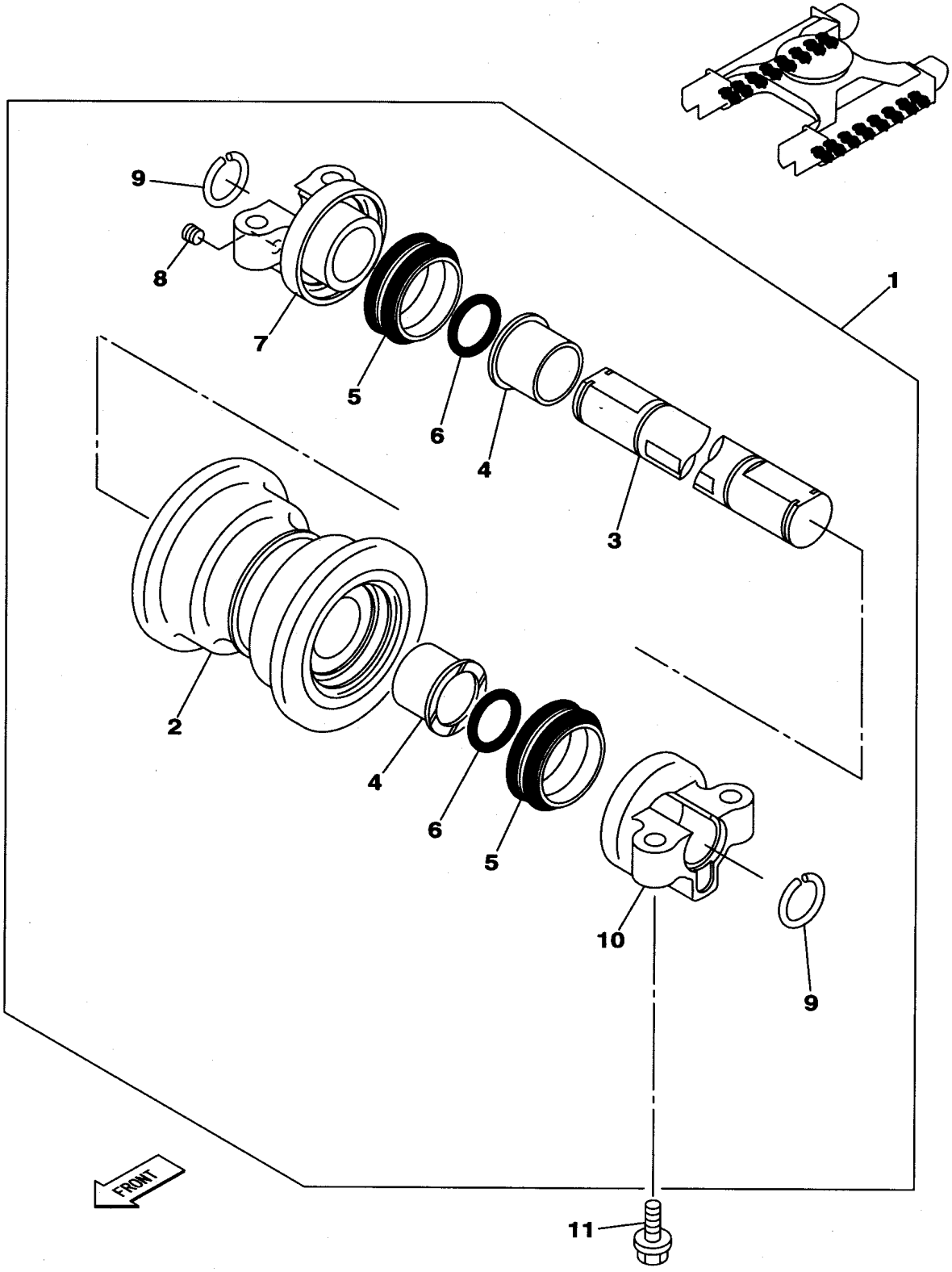

KGORA558-0
KRA11600-D

https://truckmanualshub.com/

210L5 1101ー

符号 ITEM	構成 COMPO	部品番号 PART NO.	部品名	PART NAME	個数 Q'TY	ｲﾝﾅｰ	適用号機 SERIAL_NO.	互換 ICA	代替部品 REPLACEABLE PART
1	1A	KRA10360	ﾛｰﾗ;ﾄﾗｯｸ ｸﾐﾀﾃ (ｶｺｳｱﾘ	ROLLER;TRACK	16				
2	2	KRA10370	ﾛｰﾗ;ﾄﾗｯｸ (ｿﾄ)(ﾄｳﾒﾝｶｺ	ROLLER;TRACK	16				
3	2	KRA11260	ｼﾔﾌﾄ;ﾛｰﾗ	SHAFT;ROLLER	16		210L5 NOT USED	<	KRA1195
3	2	KRA1195	ｼﾔﾌﾄ;ﾛｰﾗ	SHAFT;ROLLER	16				
4	2	KRA1197	ﾌﾞｼｭ;ﾏｷ	BUSH;FABRICATED	32				
5	2	BHA1099	ｼｰﾙ;ﾌﾛｰﾃｲﾝｸﾞ FU-0900	SEAL;FLOATING	32				
6	2	BHA0863	O-ﾘﾝｸﾞ 1-A G60	O-RING	32				
7	2	KRA1196	ｶﾗｰ	COLLAR	16				
8	2	KHJ0300	ﾌﾟﾗｸﾞ ｼｰﾙﾅｲﾛﾝ ﾂｷ 1/4	PLUG	16				
9	2	KNA0180	ｸﾘｯﾌﾟ;ﾜｲﾔ 4X110	CLIP;WIRE	32				
10	2	KRA1595	ｶﾗｰ (ﾌﾟﾗｸﾞﾅｼ)	COLLAR	16				
11	1	105R018Y075R	ｾﾑｽB M18 X 75	BOLT;SEMS	64				

https://truckmanualshub.com/

1 [2]

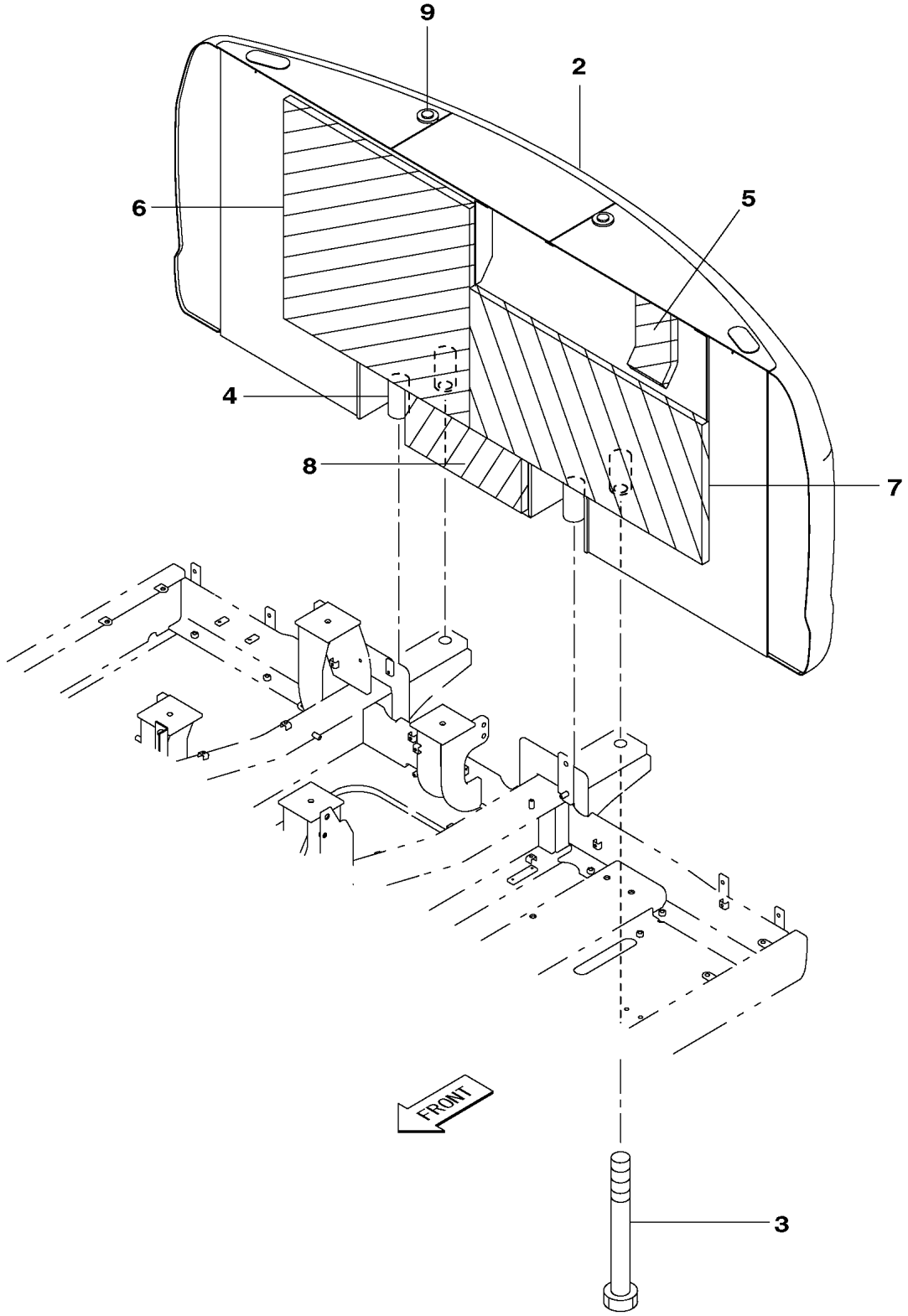

KGORB591-0
KRB12630-C

https://truckmanualshub.com/

210A5 1101－ 210L5 1101－

符号 ITEM	構成 COMPO	部品番号 PART NO.	部品名	PART NAME	個数 Q'TY	ｲﾝﾅｰ	適用号機 SERIAL_NO.	互換 ICA	代替部品 REPLACEABLE PART
1	1	KRB12620Y1	ｶｳﾝﾀｳｴｲﾄ SH200-5	CTWT	1		210A5 -2259 210L5 -1513	<	KRB17610Y1
1	1A	KRB17610Y1	ｶｳﾝﾀｳｴｲﾄ SH200-5	CTWT	1		210A5 2260- 210L5 1514-		
2	3	KRB12610	ﾌﾟﾚｰﾄ ｶｳﾝﾀｳｪｲﾄ	PLATE;SPL	1		210A5 -2259 210L5 -1513		
3	1	KHB10390	ﾎﾞﾙﾄ ﾄｸｼｭ (M33X250)	BOLT;SPL	4				
4	1	KRB10590	ｽﾍﾟｰｻ	SPACER	4				
5	1	KAB0804	ｲﾝｼｭﾚｰｼｮﾝ;ｱｺｰｽﾃｲｯｸ	INSULATION;ACOUSTIC	1				
6	1	KBB11670	ｲﾝｼｭﾚｰｼｮﾝ;ｱｺｰｽﾃｲｯｸ	INSULATION;ACOUSTIC	1				
7	1	KBB11680	ｲﾝｼｭﾚｰｼｮﾝ;ｱｺｰｽﾃｲｯｸ	INSULATION;ACOUSTIC	1				
8	1	KBB11690	ｲﾝｼｭﾚｰｼｮﾝ;ｱｺｰｽﾃｲｯｸ	INSULATION;ACOUSTIC	1				
9	1	KHB0031	ﾌﾟﾗｸﾞ;ﾗﾊﾞｰ	PLUG;RUBBER	2		210A5 -2259 210L5 -1513		
9	1	KHB0321	ﾌﾟﾗｸﾞ;ﾗﾊﾞｰ	PLUG;RUBBER	2		210A5 2260- 210L5 1514-		

https://truckmanualshub.com/

1 [2]

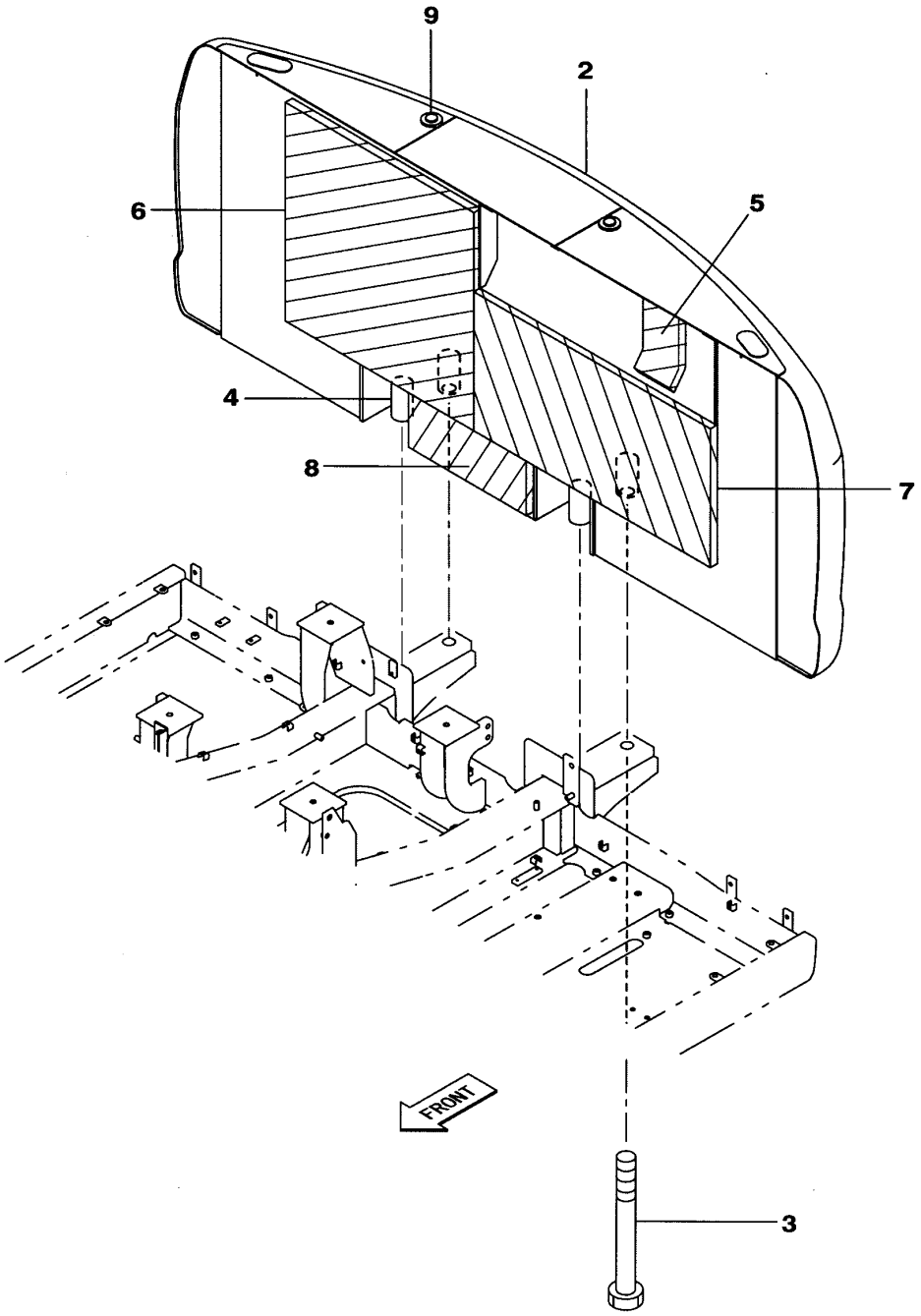

KGORB642-0
KRB12630-CZ

https://truckmanualshub.com/

210L5 1101－

符号 ITEM	構成 COMPO	部品番号 PART NO.	部品名	PART NAME	個数 Q'TY	ｲﾝﾅｰ	適用号機 SERIAL_NO.	互換 ICA	代替部品 REPLACEABLE PART
1	1	KRB15040Y1	ｶｳﾝﾀｳｴｲﾄ SH200-5LR	CTWT	1		210L5 -1513	<	KRB17740Y1
1	1A	KRB17740Y1	ｶｳﾝﾀｳｴｲﾄ SH200-5LR	CTWT	1		210L5 1514-		
2	3	KRB12610	ﾌﾟﾚｰﾄ ｶｳﾝﾀｳｪｲﾄ	PLATE;SPL	1		210L5 1129-1513		
3	1	KHB10390	ﾎﾞﾙﾄ ﾄｸｼｭ (M33X250)	BOLT;SPL	4				
4	1	KRB10590	ｽﾍﾟｰｻ	SPACER	4				
5	1	KAB0804	ｲﾝｼｭﾚｰｼｮﾝ;ｱｺｰｽﾃｲｯｸ	INSULATION;ACOUSTIC	1				
6	1	KBB11670	ｲﾝｼｭﾚｰｼｮﾝ;ｱｺｰｽﾃｲｯｸ	INSULATION;ACOUSTIC	1				
7	1	KBB11680	ｲﾝｼｭﾚｰｼｮﾝ;ｱｺｰｽﾃｲｯｸ	INSULATION;ACOUSTIC	1				
8	1	KBB11690	ｲﾝｼｭﾚｰｼｮﾝ;ｱｺｰｽﾃｲｯｸ	INSULATION;ACOUSTIC	1				
9	1	KHB0031	ﾌﾟﾗｸﾞ;ﾗﾊﾞｰ	PLUG;RUBBER	2		210L5 -1513		
9	1	KHB0321	ﾌﾟﾗｸﾞ;ﾗﾊﾞｰ	PLUG;RUBBER	2		210L5 1514-		

https://truckmanualshub.com/

1 [2]

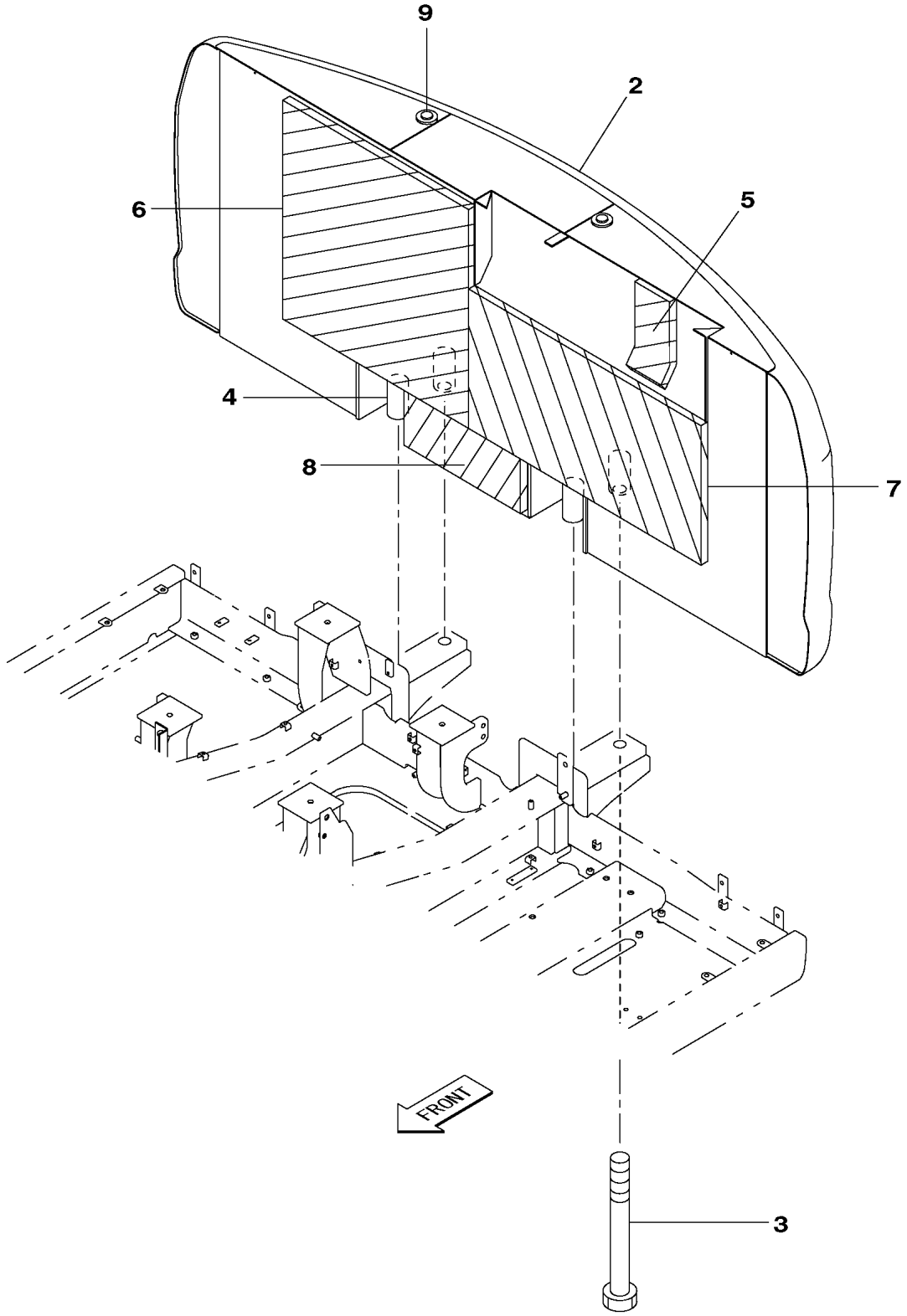

KGORB657-0
KRB12630-CZ

https://truckmanualshub.com/

210A5 1346－　　210L5 1233－

符号 ITEM	構成 COMPO	部品番号 PART NO.	部品名	PART NAME	個数 Q'TY	ｲﾝﾅｰ	適用号機 SERIAL_NO.	互換 ICA	代替部品 REPLACEABLE PART
1	1	KRB14350Y1	ｶｳﾝﾀｳｴｲﾄ SH200-5	CTWT	1		210A5 -2259 210L5 -1513	<	KRB17730Y1
1	1A	KRB17730Y1	ｶｳﾝﾀｳｴｲﾄ SH200-5	CTWT	1		210A5 2260- 210L5 1514-		
2	3	KRB12610	ﾌﾟﾚｰﾄ ｶｳﾝﾀｳｪｲﾄ	PLATE;SPL	1		210A5 -2259 210L5 -1513		
3	1	KHB10390	ﾎﾞﾙﾄ ﾄｸｼｭ (M33X250)	BOLT;SPL	4				
4	1	KRB10590	ｽﾍﾟｰｻ	SPACER	4				
5	1	KAB0804	ｲﾝｼｭﾚｰｼｮﾝ;ｱｺｰｽﾃｲｯｸ	INSULATION;ACOUSTIC	1				
6	1	KBB11670	ｲﾝｼｭﾚｰｼｮﾝ;ｱｺｰｽﾃｲｯｸ	INSULATION;ACOUSTIC	1				
7	1	KBB11680	ｲﾝｼｭﾚｰｼｮﾝ;ｱｺｰｽﾃｲｯｸ	INSULATION;ACOUSTIC	1				
8	1	KBB11690	ｲﾝｼｭﾚｰｼｮﾝ;ｱｺｰｽﾃｲｯｸ	INSULATION;ACOUSTIC	1				
9	1	KHB0031	ﾌﾟﾗｸﾞ;ﾗﾊﾞｰ	PLUG;RUBBER	2		210A5 -2259 210L5 -1513		
9	1	KHB0321	ﾌﾟﾗｸﾞ;ﾗﾊﾞｰ	PLUG;RUBBER	2		210A5 2260- 210L5 1514-		

https://truckmanualshub.com/

1 [2 ～ 11]

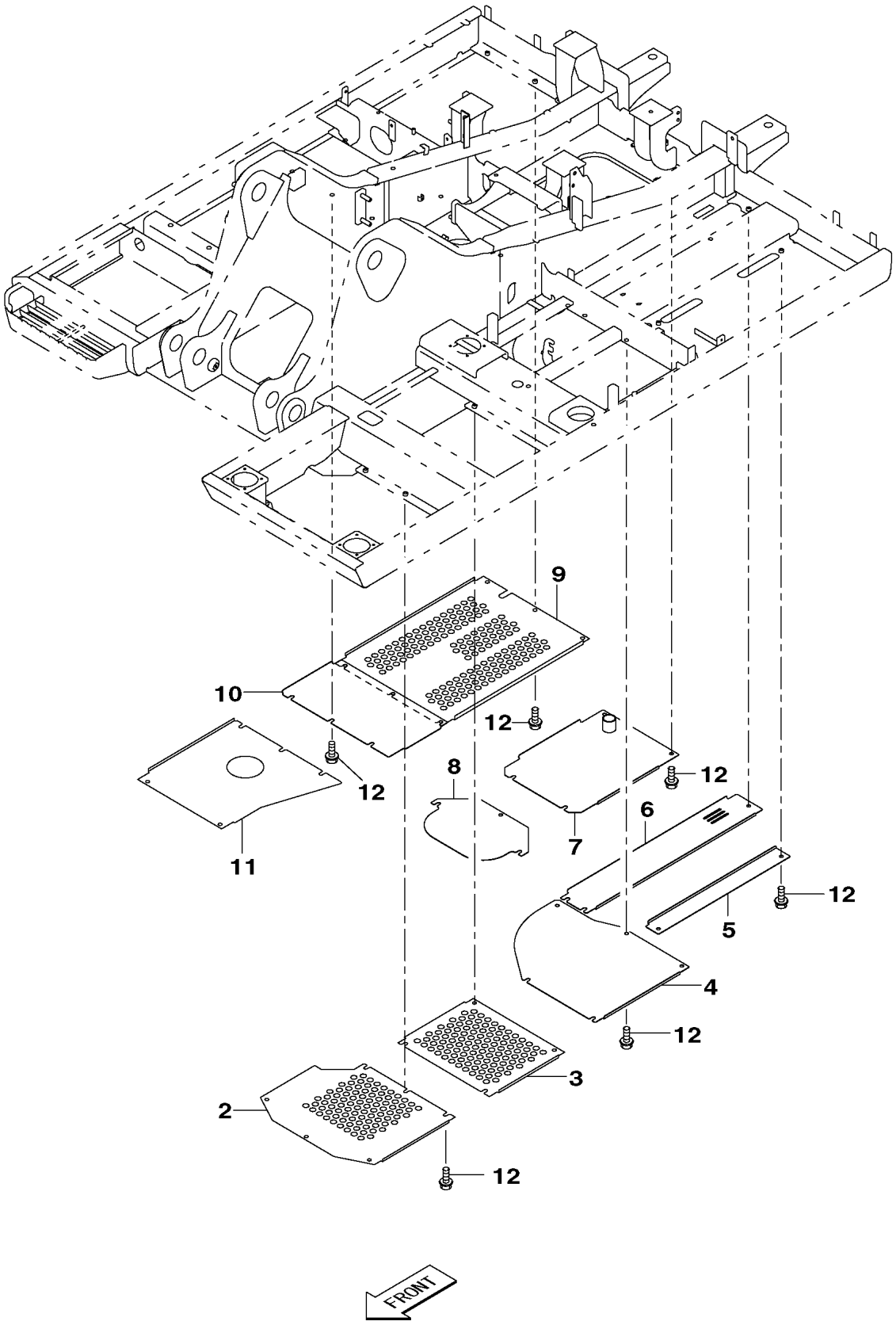

KG0RB600-0
KRB13160-D

https://truckmanualshub.com/

210A5 1101－ 210L5 1101－

符号 ITEM	構成 COMPO	部品番号 PART NO.	部品名	PART NAME	個数 Q'TY	インナー	適用号機 SERIAL_NO.	互換 ICA	代替部品 REPLACEABLE PART
1	1A	KRB13170	ｶﾊﾞｰ;ｱﾝﾀﾞ ｸﾞﾙｰﾌﾟ LBX	COVER;UNDER	1				
2	2	KRB14330	ｶﾊﾞｰ;ｱﾝﾀﾞ	COVER;UNDER	1				
3	2	KRB13110	ｶﾊﾞｰ;ｱﾝﾀﾞ	COVER;UNDER	1				
4	2	KRB10490	ｶﾊﾞｰ;ｱﾝﾀﾞ	COVER;UNDER	1				
5	2	KRB10500	ｶﾊﾞｰ;ｱﾝﾀﾞ	COVER;UNDER	1				
6	2	KRB13120	ｶﾊﾞｰ;ｱﾝﾀﾞ	COVER;UNDER	1				
7	2	KRB13130	ｶﾊﾞｰ;ｱﾝﾀﾞ	COVER;UNDER	1				
8	2	KRB10540	ｶﾊﾞｰ;ｱﾝﾀﾞ	COVER;UNDER	1				
9	2	KRB14340	ｶﾊﾞｰ;ｱﾝﾀﾞ	COVER;UNDER	1				
10	2	KRB10560	ｶﾊﾞｰ;ｱﾝﾀﾞ	COVER;UNDER	1				
11	2	KRB13150	ｶﾊﾞｰ;ｱﾝﾀﾞ LBX/CASE	COVER;UNDER	1				
12	1	KHN1398	ﾎﾞﾙﾄ ﾄｸｼｭ ｻﾞｶﾞﾈ ｸﾐｺﾐ	BOLT;SPL	41				

https://truckmanualshub.com/

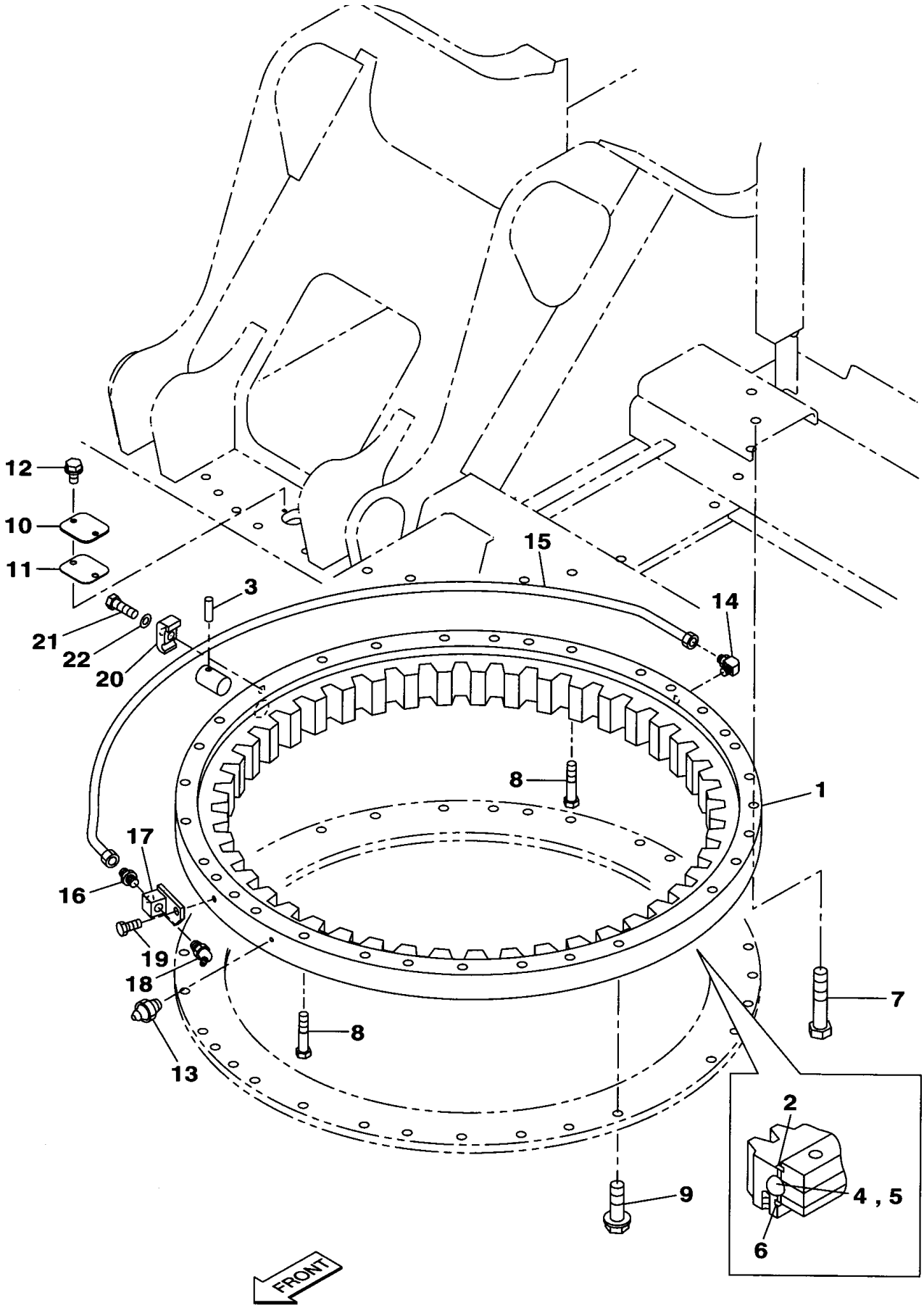

KG0RB607-0
KRB10710-CZ
KRC10060-DZ

https://truckmanualshub.com/

210A5 1101－　　210L5 1101－

符号 ITEM	構成 COMPO	部品番号 PART NO.	部品名	PART NAME	個数 Q'TY	ｲﾝﾅｰ	適用号機 SERIAL_NO.	互換 ICA	代替部品 REPLACEABLE PART
1	1A	KRB11710	BRG;ﾀｰﾝﾃｰﾌﾞﾙ ｸﾐﾀﾃ	BRG;TURNTABLE	1				
2	2A	KRB1273	ﾘﾝｸﾞ;ｼｰﾙ	RING;SEAL	1				
3	3	KRB0680	ﾋﾟﾝ ﾃｰﾊﾟ	PIN;SPL	1				
4	2	KRB0369	ﾎﾞｰﾙ;ﾍﾞｱﾘﾝｸﾞ (1 1/8I	BALL;BRG	120				
5	2	KRB1055	ｽﾍﾟｰｻ ﾅｲﾛﾝ	SPACER	120				
6	2	KRB1274	ﾘﾝｸﾞ;ｼｰﾙ	RING;SEAL	1				
7	1	102R020Y100R	ｺｳﾘｷB M20X100	BOLT;HIGH STRENGTH	29				
8	1	KRB1307	ﾎﾞﾙﾄ ﾄｸｼｭ (M20X100)	BOLT;SPL	2				
9	1	105R020Y065R	ｾﾑｽB M20 X 65	BOLT;SEMS	36				
10	1	KAB0604	ﾌﾟﾚｰﾄ;ｶﾊﾞｰ	PLATE;COVER	1				
11	1	KAB0623	ﾊﾟｯｷﾝ;ｺﾙｸ	PACKING;CORK	1				
12	1	105R010Y020R	ｾﾑｽB M10X 20	BOLT;SEMS	2				
13	1	M01X0812	ﾆｯﾌﾟﾙ;ｸﾞﾘｽ (A-R1/8)	NIPPLE;GREASE	1				
14	1	KMJ0985	ｴﾙﾎﾞ;ﾎﾞﾃﾞ KLN08-011N	ELBOW	1				
15	1	KRB10720	ﾊｲｶﾝｸﾐﾀﾃ	TUBE;ASSY	1				
16	1	KMJ0964	ｺﾈｸﾀ;ﾎﾞﾃﾞ KCT08-011N	CONNECTOR	1				
17	1	KRB10730	ﾏﾆﾎｰﾙﾄﾞ	MANIFOLD	1				
18	1	M01X0816	ﾆｯﾌﾟﾙ;ｸﾞﾘｽ (B-R1/8)	G-NIPPLE	1				
19	1	105R008Y016R	ｾﾑｽB M 8X 16	BOLT;SEMS	1				
20	1	KRV0551	ｸﾗﾝﾌﾟ	CLAMP	1				
21	1	102R008Y030R	ｺｳﾘｷB M 8X 30	BOLT;HIGH STRENGTH	1				
22	1	KAJ1500	ｺｳﾘｷW M8	WASHER;HIGH STRENGTH	1				

https://truckmanualshub.com/

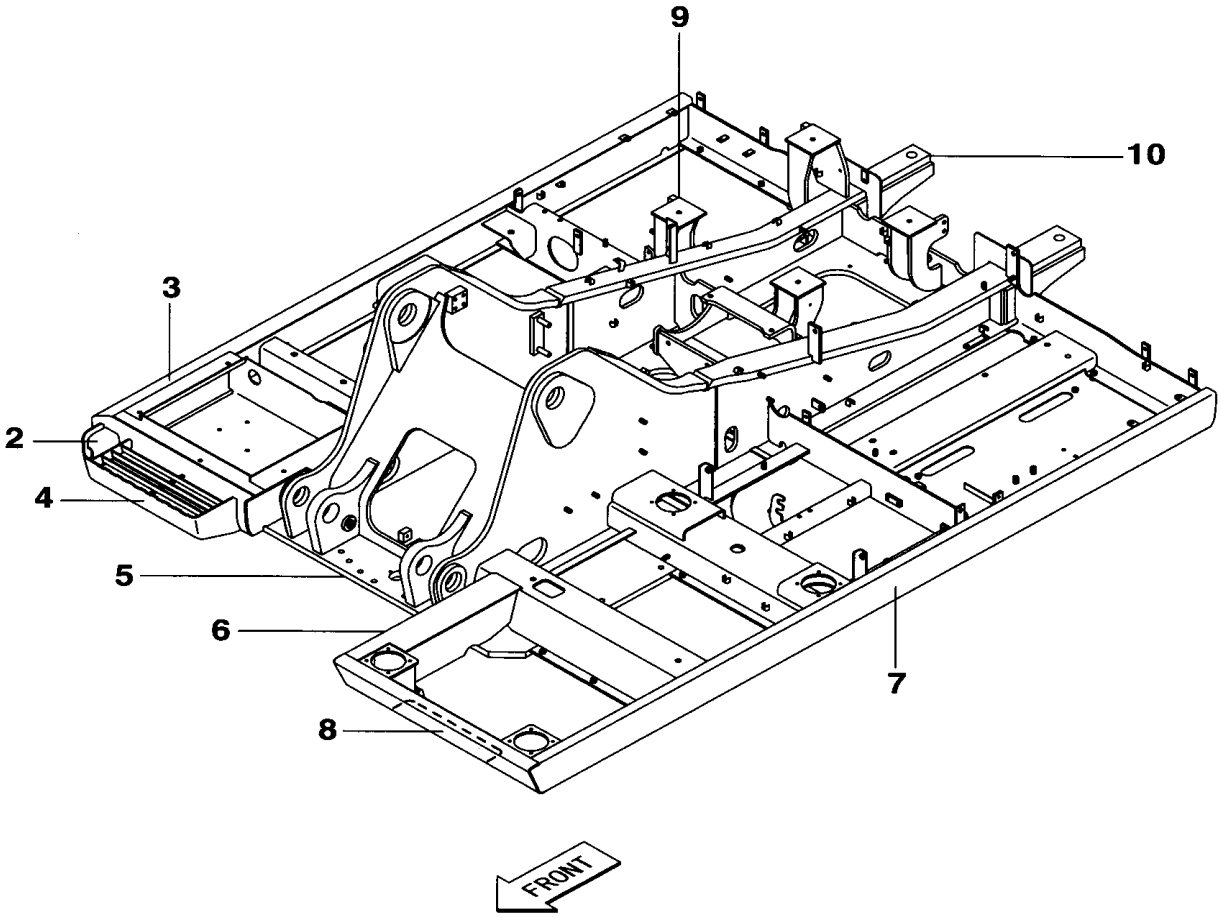

KGORB596-0

https://truckmanualshub.com/

210A5 1101－ 210L5 1101－

符号 ITEM	構成 COMPO	部品番号 PART NO.	部品名	PART NAME	個数 Q'TY	ｲﾝﾅｰ	適用号機 SERIAL_NO.	互換 ICA	代替部品 REPLACEABLE PART
1	1A	KRB12590	ﾌﾚｰﾑ;ｾﾝｶｲ/ﾖｳｾｯｽﾞ	FRAME;REV	1				
2	2A	KRB12710	ﾌﾟﾗｯﾄﾎｰﾑ (ﾐｷﾞ)	PLATFORM	1				
3	3	KRB10340	ﾌﾟﾚｰﾄ ﾌﾟﾗｯﾄﾎｰﾑ (R.H.	PLATE;SPL	1				
4	3	KRB13220	ｽﾃｯﾌﾟ (ﾌﾟﾗｯﾄﾎｰﾑ)	STEP	1				
5	2	KRB12600	ﾌﾚｰﾑ;ｾﾝｶｲ	FRAME;REV	1				
6	2A	KRB12720	ﾌﾟﾗｯﾄﾎｰﾑ (ﾋﾀﾞﾘ)	PLATFORM	1				
7	3	KRB12640	ﾌﾟﾚｰﾄ ﾌﾟﾗｯﾄﾎｰﾑ (L.H.	PLATE;SPL	1				
8	3	KRB12700	ﾌﾟﾚｰﾄ ﾌﾟﾗｯﾄﾎｰﾑ(ｷｬﾌﾞｼ	PLATE;SPL	1				
9	2	KRB10301	ﾌﾚｰﾑ;ｾﾝｶｲ ｴﾝｼﾞﾝﾏｳﾝﾄ	FRAME;REV	1				
10	2	KRB10291	ﾌﾚｰﾑ;ｴﾝｼﾞﾝ	FRAME;ENGINE	1				

https://truckmanualshub.com/

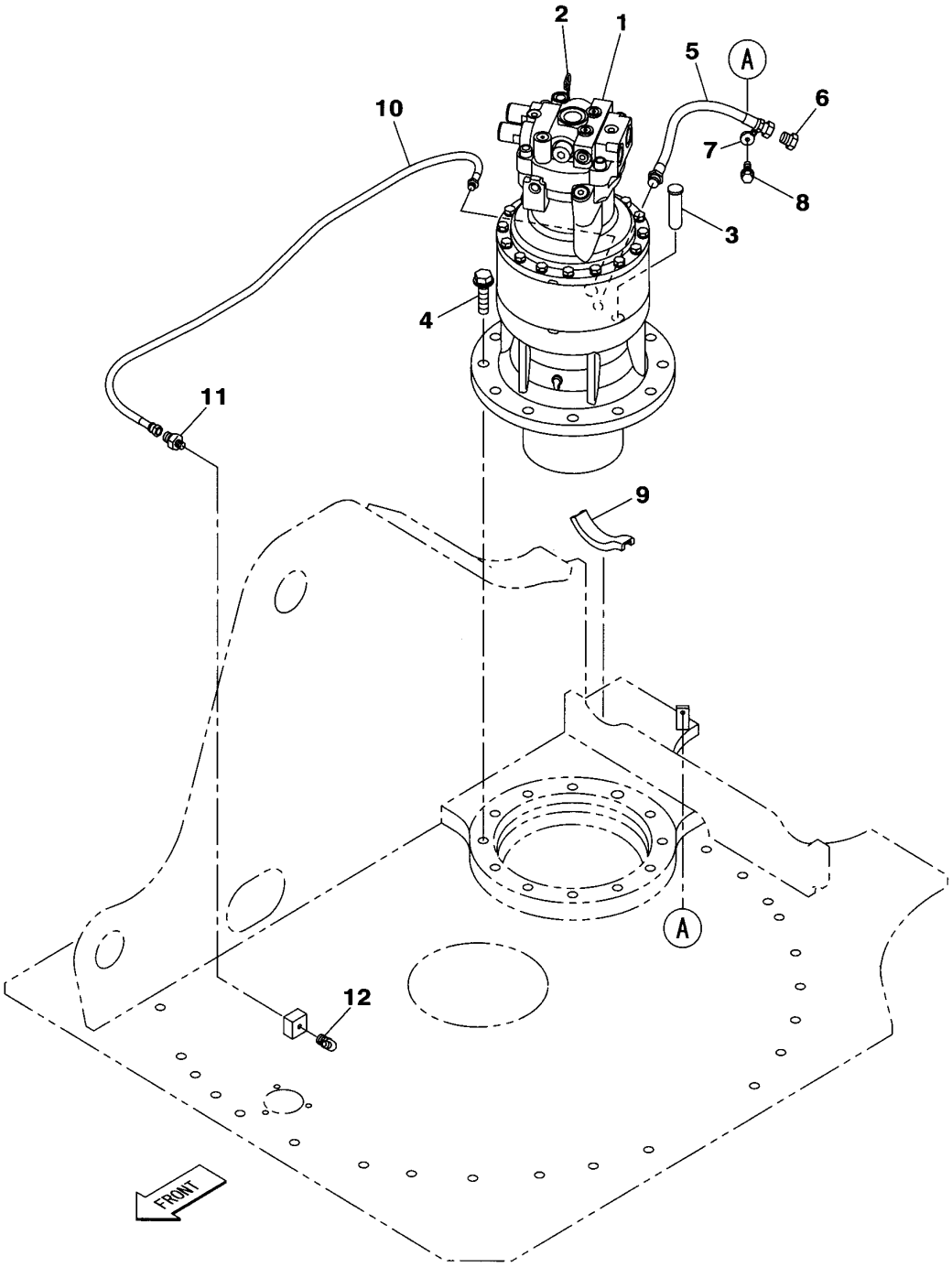

KG0RC240-0
KRC10060-DZ
KRC10100-DZ

https://truckmanualshub.com/

210A5 1101－1227 210L5 1101－1172

符号 ITEM	構成 COMPO	部品番号 PART NO.	部品名	PART NAME	個数 Q'TY	ｲﾝﾅｰ	適用号機 SERIAL_NO.	互換 ICA	代替部品 REPLACEABLE PART
1	1A	KRC10010	ﾓｰﾀ;ｾﾝｶｲ ｸﾐﾀﾃ	MOTOR;SWING	1	*			
2	2	KRC10030	ｹﾞｰｼﾞ;ｵｲﾙ	GAGE;OIL LEVEL	1				
3	1	KRC0105	ﾋﾟﾝ;ｱﾀﾏﾂｷ	PIN;HEADED	1				
4	1	105R020Y075R	ｾﾑｽB M20 X 75	BOLT;SEMS	11				
5	1	KRJ16100	ﾎｰｽ;ﾕｱﾂ 70-12X470 5+	HOSE;HYD	1				
6	1	KHP0578	ﾌﾟﾗｸﾞ PF1/2	PLUG	1				
7	1	KHR2584	ｸﾗﾝﾌﾟ ﾊﾞﾝﾄﾞﾂｷ(S)M8	CLAMP	1				
8	1	KHJ1215	ﾎﾞﾙﾄ ﾄｸｼｭ M8X25ｻﾞｶﾞﾈ	BOLT;SPL	1				
9	1	KAJ4772	ｸｯｼｮﾝ;ﾗﾊﾞｰ 19X150	CUSHION;RUBBER	1				
10	1	KHJ14930	ﾎｰｽ;ﾅｲﾛﾝ 70-6X1400 5	HOSE;NYLON	1				
11	1	KRJ4050	ｱﾀﾞﾌﾟﾀ;ﾎｰｽ	ADAPTER;HOSE	1				
12	1	M01X1800	ﾆｯﾌﾟﾙ;ｸﾞﾘｽ (C-R1/8)	NIPPLE;GREASE	1				

DC (82)

https://truckmanualshub.com/

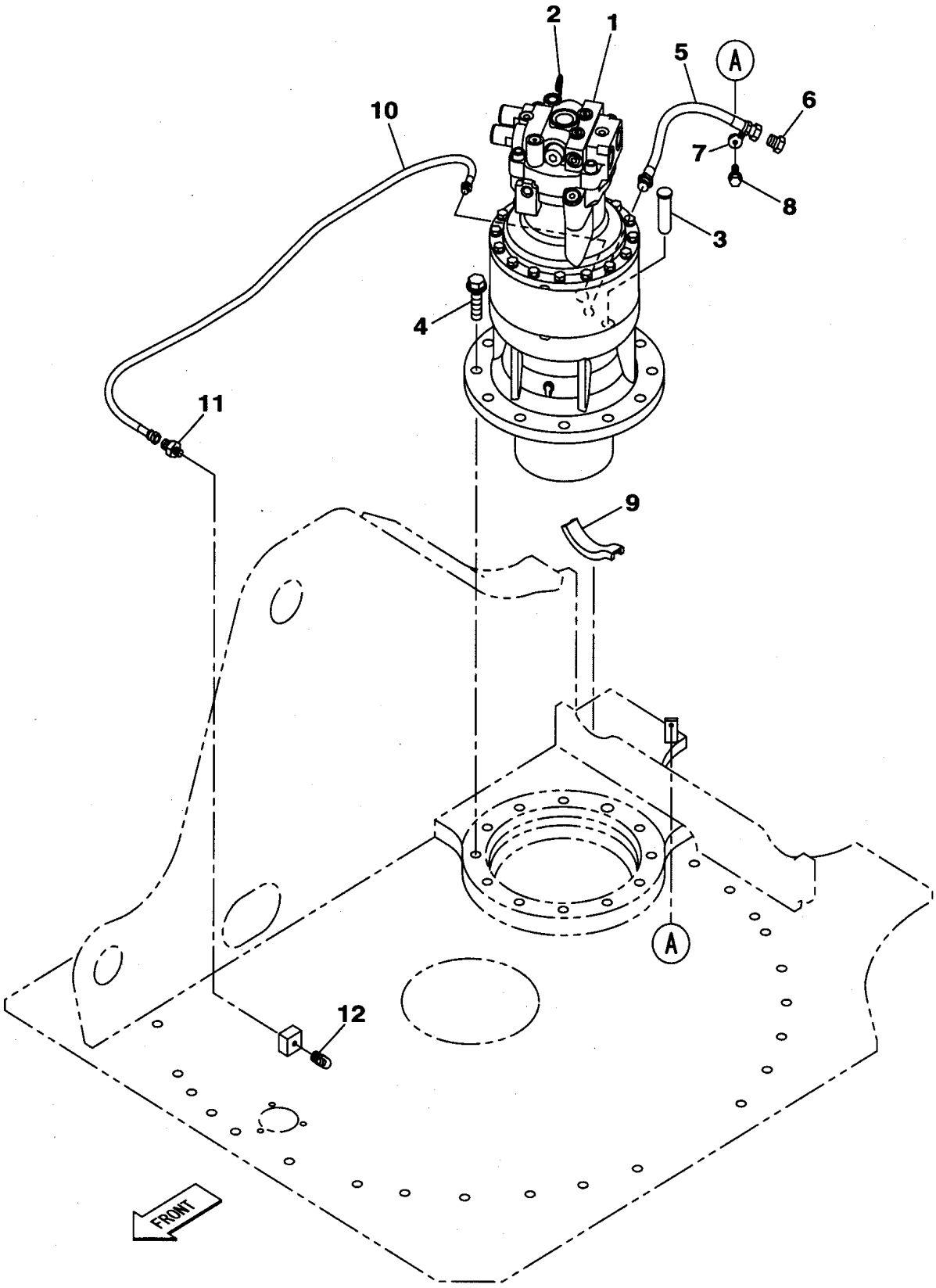

KG0RC243-0
KRC10060-DZ
KRC10100-DZ

https://truckmanualshub.com/

210L5 1101ー

符号 ITEM	構成 COMPO	部品番号 PART NO.	部品名	PART NAME	個数 Q'TY	ｲﾝﾅｰ	適用号機 SERIAL_NO.	互換 ICA	代替部品 REPLACEABLE PART
1	1A	KRC10130	ﾓｰﾀ;ｾﾝｶｲ ｸﾐﾀﾃ	MOTOR;SWING	1	*			
2	2	KRC10030	ｹﾞｰｼﾞ;ｵｲﾙ	GAGE;OIL LEVEL	1				
3	1	KRC0105	ﾋﾟﾝ;ｱﾀﾏﾂｷ	PIN;HEADED	1				
4	1	105R020Y075R	ｾﾑｽB M20 X 75	BOLT;SEMS	11				
5	1	KRJ16100	ﾎｰｽ;ﾕｱﾂ 70-12X470 5+	HOSE;HYD	1				
6	1	KHP0578	ﾌﾟﾗｸﾞ PF1/2	PLUG	1				
7	1	KHR2584	ｸﾗﾝﾌﾟ ﾊﾞﾝﾄﾞﾂｷ(S)M8	CLAMP	1				
8	1	KHJ1215	ﾎﾞﾙﾄ ﾄｸｼｭ M8X25ｻﾞｶﾞﾈ	BOLT;SPL	1				
9	1	KAJ4772	ｸｯｼｮﾝ;ﾗﾊﾞｰ 19X150	CUSHION;RUBBER	1				
10	1	KHJ14930	ﾎｰｽ;ﾅｲﾛﾝ 70-6X1400 5	HOSE;NYLON	1				
11	1	KRJ4050	ｱﾀﾞﾌﾟﾀ;ﾎｰｽ	ADAPTER;HOSE	1				
12	1	M01X1800	ﾆｯﾌﾟﾙ;ｸﾞﾘｽ (C-R1/8)	NIPPLE;GREASE	1				

https://truckmanualshub.com/

1 [2 ~ 35]
3 [4 ~ 35]

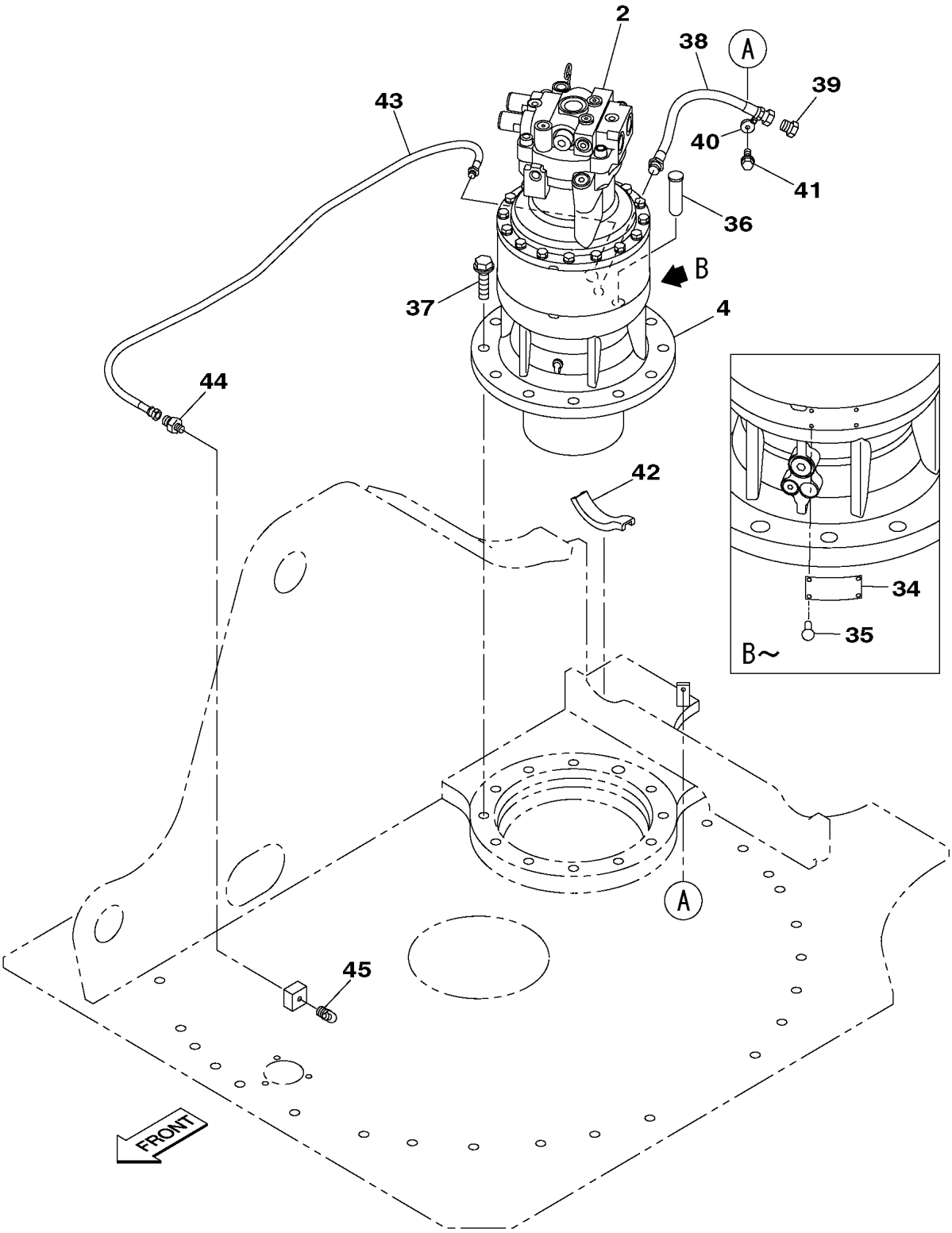

KG0RC246-0
KRC10060-DZ

https://truckmanualshub.com/

210A5 1228－ 210L5 1173－

符号 ITEM	構成 COMPO	部品番号 PART NO.	部品名	PART NAME	個数 Q'TY	ｲﾝﾅｰ	適用号機 SERIAL_NO.	互換 ICA	代替部品 REPLACEABLE PART
1	0A	KRC10200	ｹﾞﾝｿｸｷ;ｾﾝｶｲ ｸﾐｽﾞ	SWING REDUCTION GEAR	1				
2	1	KRC10190	ﾓｰﾀ;ｾﾝｶｲ	MOTOR;SWING	1	*			
3	1A	KRC10170	ｹﾞﾝｿｸｷ;ｾﾝｶｲ ｸﾐﾀﾃ	REDUCTION GEARS	1				
4	2A	KRC10160	ｹﾞﾝｿｸｷ ｾﾝｶｲ ｸﾐﾀﾃ	REDUCTION GEARS	1				
5	3	KRC0147	ｷﾞﾔ;ｻﾝ NO.1	GEAR;SUN	1				
6	3	KRC0154	ﾌﾟﾚｰﾄ;ｽﾗｽﾄ	PLATE;THRUST	1				
7	3	KRC0148	ｷﾞﾔ;ｻﾝ NO.2	GEAR;SUN	1				
8	3	KRC0151	ｷﾞﾔ;ﾘﾝｸﾞ	GEAR;RING	1				
9	3	KRC0155	ﾋﾟﾝ;ﾉｯｸ	PIN;KNOCK	4				
10	3	KRC10150	ｹｰｽ;ｷﾞﾔ	CASE;GEAR	1				
11	3	KRC0136	BRG;ﾛｰﾗ 22218	BRG;ROLLER	1				
12	3	KRC0138	ｼｰﾙ;ｵｲﾙ AP4063B0	SEAL;OIL	1				
13	3A	BRJ0190	ﾌﾟﾗｸﾞ ASSY PF1/2	PLUG	1				
14	4	UBJ0157	O-ﾘﾝｸﾞ 1B-P18	O-RING	1				
15	3	KRC0141	ﾜｲﾔ ﾄｸｼｭ B3.2	WIRE;SPL	1				
16	3	KRC0143	ｽﾍﾟｰｻ;ﾊﾟｲﾌﾟ	SPACER;PIPE	1				
17	3A	KHJ0363	ﾌﾟﾗｸﾞ G1/4	PLUG	1				
18	4	UEJ0360	O-ﾘﾝｸﾞ 1B-P11	O-RING	1				
19	3	KRC0137	BRG;ﾛｰﾗ 22320	BRG;ROLLER	1				
20	3	KRC0140	ﾜｲﾔ ﾄｸｼｭ B4.5	WIRE;SPL	1				
21	3	KRC0139	ｶﾊﾞｰ;ﾍﾞｱﾘﾝｸﾞ	COVER;BRG	1				
22	3	KRC0142	ｽﾍﾟｰｻ;ﾊﾟｲﾌﾟ	SPACER;PIPE	1				
23	3	KRC0135	ｼﾔﾌﾄ;ｷﾞﾔ	SHAFT;GEAR	1				
24	3	KHJ0299	ﾌﾟﾗｸﾞ ｼｰﾙﾅｲﾛﾝ ﾂｷ 1/8	PLUG	1				
25	3	KRC0145	ｷﾔﾘｱ;ﾌﾟﾗﾈﾀﾘ NO.2	CARRIER;PLANETARY	1				
26	3	338W100Z020B	SPﾋﾟﾝ 10 X 20	PIN;SPRING	3				
27	3	KRC0156	ﾌﾟﾚｰﾄ ｻｲﾄﾞ NO.1	PLATE	6				
28	3	KRC0150	ｷﾞﾔ;ﾌﾟﾗﾈﾀﾘ NO.2	GEAR;PLANETARY	3				
29	3	KRC0153	ﾋﾟﾝ ﾄｸｼｭ NO.2	PIN;SPL	3				
30	3	KRC0146	ｷﾔﾘｱ;ﾌﾟﾗﾈﾀﾘ NO.1	CARRIER;PLANETARY	1				
31	3	KRC0149	ｷﾞﾔ;ﾌﾟﾗﾈﾀﾘ NO.1	GEAR;PLANETARY	3				
32	3	KRC0152	ﾋﾟﾝ ﾄｸｼｭ NO.1	PIN;SPL	3				
33	3	KRC0163	ﾛｯｶｸｱﾅB M12X145	BOLT;HEX SOC HD	16				
34	2	KHP13360	ﾒｲﾊﾞﾝ ｹﾞﾝｿｸｷ	NAMEPLATE;SPL	1				
35	2	305-02S048N	ﾊﾟｰｶR NO 2X 4.8	SCREW;DRIVE	2				
36	1	KRC0105	ﾋﾟﾝ;ｱﾀﾏﾂｷ	PIN;HEADED	1				
37	1	105R020Y075R	ｾﾑｽB M20 X 75	BOLT;SEMS	11				
38	1	KRJ16100	ﾎｰｽ;ﾕｱﾂ 70-12X470 5+	HOSE;HYD	1				
39	1	KHP0578	ﾌﾟﾗｸﾞ PF1/2	PLUG	1				
40	1	KHR2584	ｸﾗﾝﾌﾟ ﾊﾞﾝﾄﾞﾂｷ(S)M8	CLAMP	1				
41	1	KHJ1215	ﾎﾞﾙﾄ ﾄｸｼｭ M8X25ｻﾞｶﾞﾈ	BOLT;SPL	1				
42	1	KAJ4772	ｸｯｼｮﾝ;ﾗﾊﾞｰ 19X150	CUSHION;RUBBER	1				
43	1	KHJ14930	ﾎｰｽ;ﾅｲﾛﾝ 70-6X1400 5	HOSE;NYLON	1				
44	1	KRJ4050	ｱﾀﾞﾌﾟﾀ;ﾎｰｽ	ADAPTER;HOSE	1				
45	1	M01X1800	ﾆｯﾌﾟﾙ;ｸﾞﾘｽ (C-R1/8)	NIPPLE;GREASE	1				

https://truckmanualshub.com/

1 [2 ~ 35]
3 [4 ~ 35]

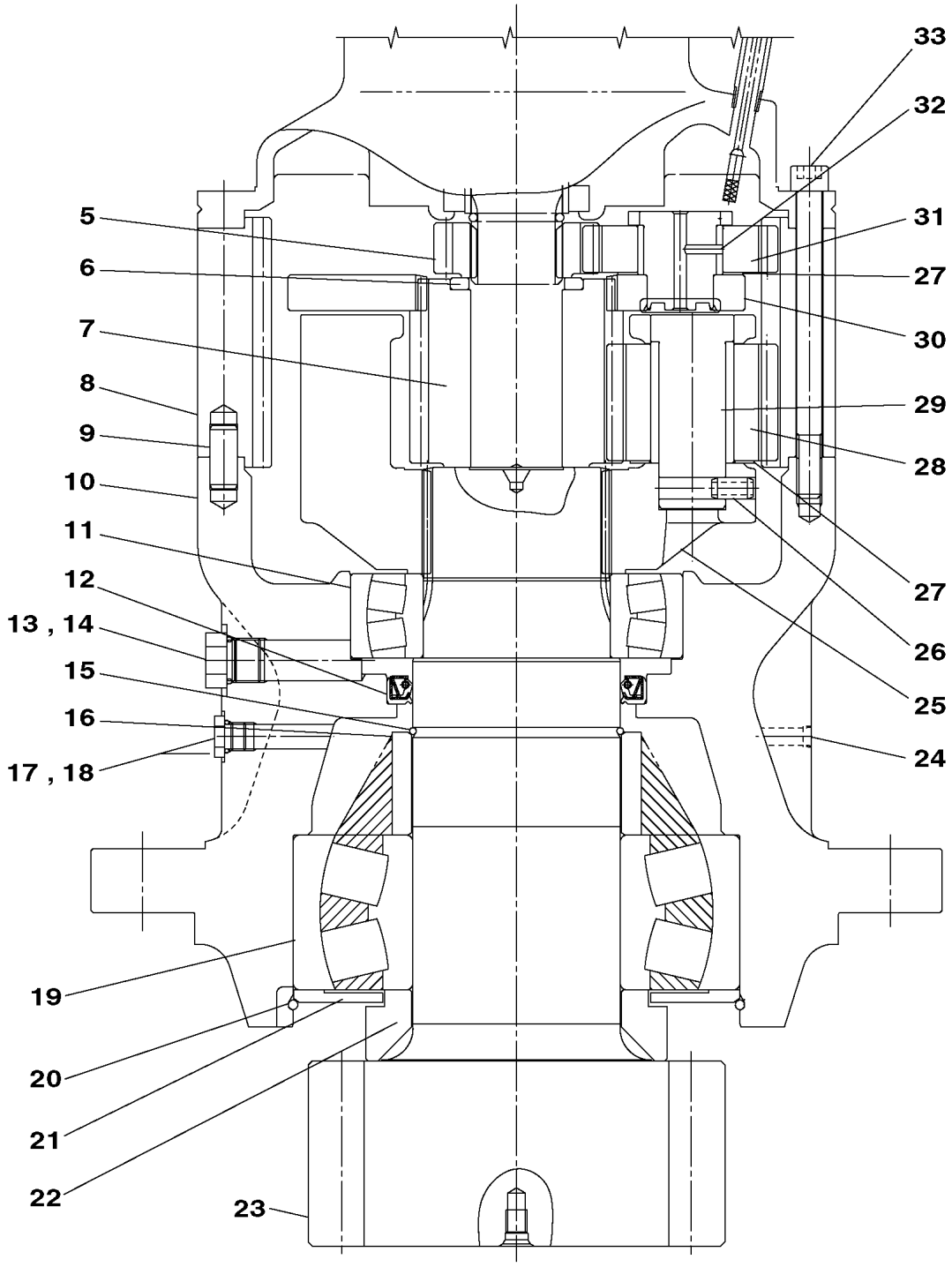

KGORC246-0
KRC10060-DZ

https://truckmanualshub.com/

https://truckmanualshub.com/

1 [2 ~ 13] 30 [31 , 32]

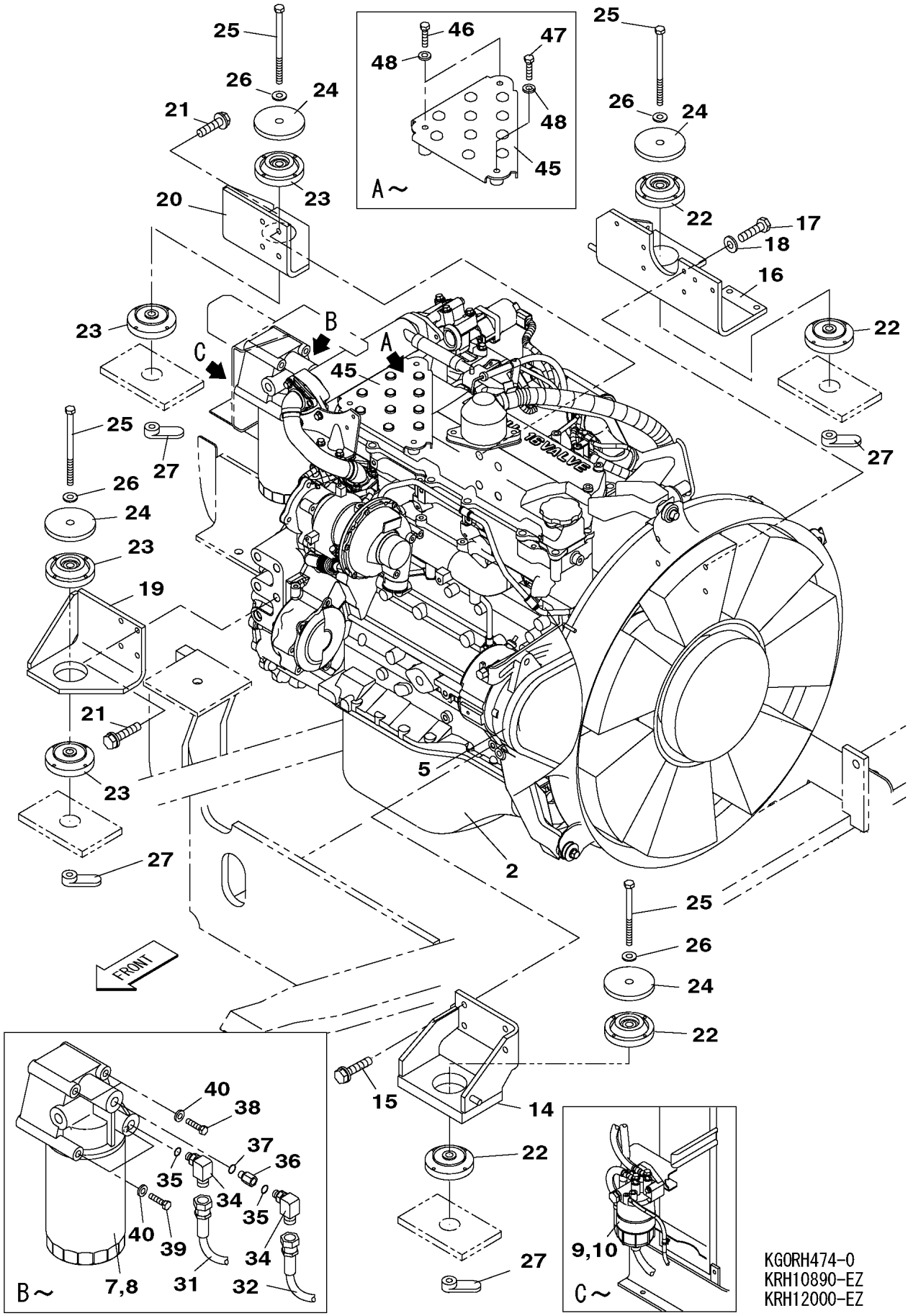

https://truckmanualshub.com/

210A5 1101－ 210L5 1101－

符号 ITEM	構成 COMPO	部品番号 PART NO.	部品名	PART NAME	個数 Q'TY	ｲﾝﾅｰ	適用号機 SERIAL_NO.	互換 ICA	代替部品 REPLACEABLE PART
1	1A	KRH11170	ｴﾝｼﾞﾝ;ﾃﾞｨｰｾﾞﾙ	ENGINE;DIESEL	1				
2	2	KRH10850	ｴﾝｼﾞﾝ;ﾃﾞｨｰｾﾞﾙ ﾎﾝﾀｲ	ENGINE;DIESEL	1				
3	2	KRH11130	ｺﾝﾄﾛｰﾗ ｴﾝｼﾞﾝ SH200-5	CONT;SPL	1		210A5 -1111 210L5 NOT USED	<	KRH11131
3	2	KRH11131	ｺﾝﾄﾛｰﾗ ｴﾝｼﾞﾝ SH200-5	CONT;SPL	1		210A5 1112-1256 210L5 -1188	<	KRH11132
3	2	KRH11132	ｺﾝﾄﾛｰﾗ ｴﾝｼﾞﾝ SH200-5	CONT;SPL	1		210A5 1257-1943 210L5 1189-1436		
3	2	KRH11133	ｺﾝﾄﾛｰﾗ ｴﾝｼﾞﾝ SH200-5	CONT;SPL	1		210A5 1944-2290 210L5 1437-1520		
3	2	KRH11134	ｺﾝﾄﾛｰﾗ ｴﾝｼﾞﾝ SH200-5	CONT;SPL	1		210A5 2291- 210L5 1521-		
4	2	KRH1024	ｶﾞｽｹｯﾄ;ｴｷｿﾞｰｽﾄ	GASKET;EXHAUST	1				
5	2	KRH10560	ﾍﾞﾙﾄ;ﾌｧﾝ	BELT;FAN	1				
6	2	KRH10740	ﾊｰﾈｽ;ﾜｲﾔ ｴﾝｼﾞﾝ	HARNESS;WIRE	1				
7	2	KHH10110	ﾌｨﾙﾀ;ｵｲﾙ ｴﾝｼﾞﾝ	FILTER;OIL	1				
8	2	KHH0533	ｴﾚﾒﾝﾄ;ｵｲﾙﾌｨﾙﾀ	ELEMENT;OIL FILTER	1				
9	2	KHH10120	ﾌｨﾙﾀ;ﾌｭｰｴﾙ	FILTER;FUEL	1			<	KHH10121
9	2	KHH10121	ﾌｨﾙﾀ;ﾌｭｰｴﾙ	FILTER;FUEL	1				
10	2	KHH0534	ｴﾚﾒﾝﾄ;ﾌｭｰｴﾙﾌｨﾙﾀ	ELEMENT;FUEL FILTER	1				
11	2	AEH0017	ﾘﾚｰ;ｾｲﾌﾃｲ	RELAY;SAFETY	1				
12	2	KHH0535	ｾﾝｻ ｷｭｳｷｵﾝﾄﾞ	SENSOR;SPL	1				
13	2	KHH0536	ｾﾝｻ ﾀｲｷｱﾂ	SENSOR;SPL	1				
14	1	KRH10990	ｻﾎﾟｰﾄ;ｴﾝｼﾞﾝ ﾌﾛﾝﾄ	SUPT;ENGINE	1				
15	1	105R010Y030R	ｾﾑｽB M10X 30	BOLT;SEMS	4				
16	1	KRH11000	ｻﾎﾟｰﾄ;ｴﾝｼﾞﾝ ﾌﾛﾝﾄ	SUPT;ENGINE	1				
17	1	102R010Y035R	ｺｳﾘｷB M10X 35	BOLT;HIGH STRENGTH	5				
18	1	KEH0114	ｺｳﾘｷW M10 ﾒﾂｷ	WASHER;HIGH STRENGTH	5				
19	1	KRH10130	ｻﾎﾟｰﾄ;ｴﾝｼﾞﾝ ﾘｱ	SUPT;ENGINE	1				
20	1	KRH10140	ｻﾎﾟｰﾄ;ｴﾝｼﾞﾝ ﾘｱ	SUPT;ENGINE	1				
21	1	105R016Y040R	ｾﾑｽB M16 X 40	BOLT;SEMS	8				
22	1	KRH10870	ﾎﾞｳｼﾝｺﾞﾑ	RUBBER;ELASTIC	4				
23	1	KRH10860	ﾎﾞｳｼﾝｺﾞﾑ	RUBBER;ELASTIC	4				
24	1	KRH10190	ﾌﾟﾚｰﾄ	PLATE	4				
25	1	102R016Y130R	ｺｳﾘｷB M16X130	BOLT;HIGH STRENGTH	4				
26	1	KHN0297	ｺｳﾘｷW 16 (ﾒﾂｷ)	WASHER;HIGH STRENGTH	4				
27	1	KRH1251	ﾅｯﾄ ﾄｸｼｭ	NUT;SPL	4				
28	1A	KNJ0605	ｱﾀﾞﾌﾟﾀ;ﾎｰｽ HA208-06	ADAPTER;HOSE	2				
29	2	UBJ0158	O-ﾘﾝｸﾞ 1B-P24	O-RING	2				
30	1A	KRH10950	ﾎｰｽ ｸﾐﾀﾃ (ﾘﾓｰﾄｵｲﾙﾌｨﾙ	HOSE SPL	1				
31	2	KRH11090	ﾎｰｽ;ﾕｱﾂ (L=1220)	HOSE;HYD	1				
32	2	KRH10330	ﾎｰｽ;ﾕｱﾂ (L=1350)	HOSE;HYD	1				
33	1	KBR0819	ﾁｭｰﾌﾞ;ｺﾙｹﾞｰﾄ 25X400	TUBE;CORRUGATED	2				
34	1A	KHJ0344	ｴﾙﾎﾞ HL204-060 G3/4	ELBOW	2				
35	2	UBJ0158	O-ﾘﾝｸﾞ 1B-P24	O-RING	2				
36	1A	KNJ0700	ｽﾀｯﾄﾞ	STUD	1				
37	2	UBJ0158	O-ﾘﾝｸﾞ 1B-P24	O-RING	1				
38	1	102R008Y110R	ｺｳﾘｷB M 8X 110	BOLT;HIGH STRENGTH	2				
39	1	KHH0515	ｺｳﾘｷB M8X140	BOLT;HIGH STRENGTH	2				
40	1	KAJ1500	ｺｳﾘｷW M8	WASHER;HIGH STRENGTH	4				
41	1	KRH10200	ｸﾗﾝﾌﾟ;ﾎｰｽ	CLAMP;HOSE	2				
42	1	KRH10210	ﾌﾟﾚｰﾄ	PLATE	1				
43	1	105R010Y030R	ｾﾑｽB M10X 30	BOLT;SEMS	2				
44	1	MMA1011	ｸｯｼｮﾝ;ﾗﾊﾞｰ 16X320	CUSHION;RUBBER	1				
45	1	KRH11050	ｽﾃｯﾌﾟ	STEP	1				
46	1	102R008Y070R	ｺｳﾘｷB M 8X 70	BOLT;HIGH STRENGTH	2				
47	1	102R008Y040R	ｺｳﾘｷB M 8X 40	BOLT;HIGH STRENGTH	1				
48	1	KAJ1500	ｺｳﾘｷW M8	WASHER;HIGH STRENGTH	3				

https://truckmanualshub.com/

1 [2 ~ 13] 30 [31 , 32]

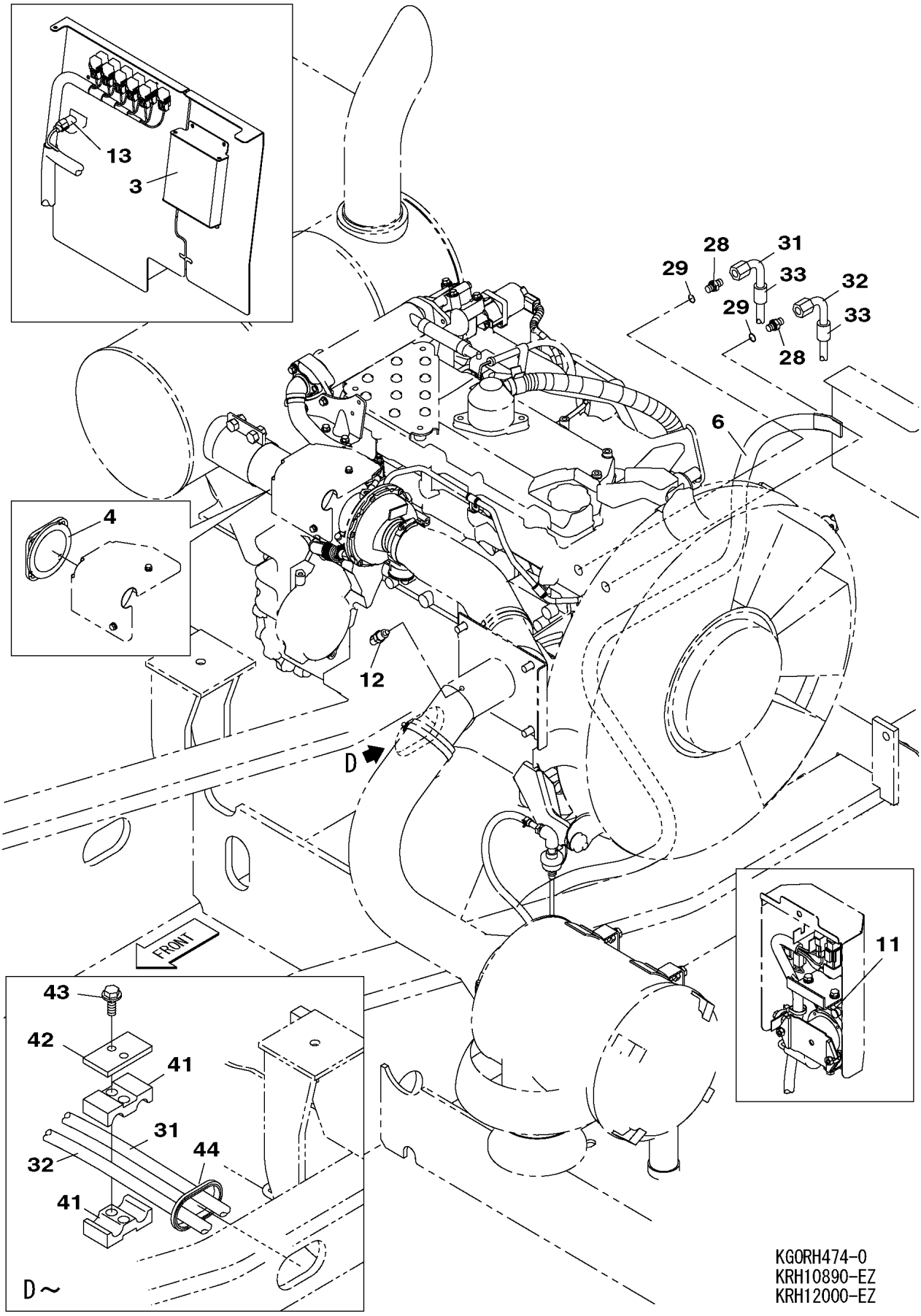

KG0RH474-0
KRH10890-EZ
KRH12000-EZ

https://truckmanualshub.com/

https://truckmanualshub.com/

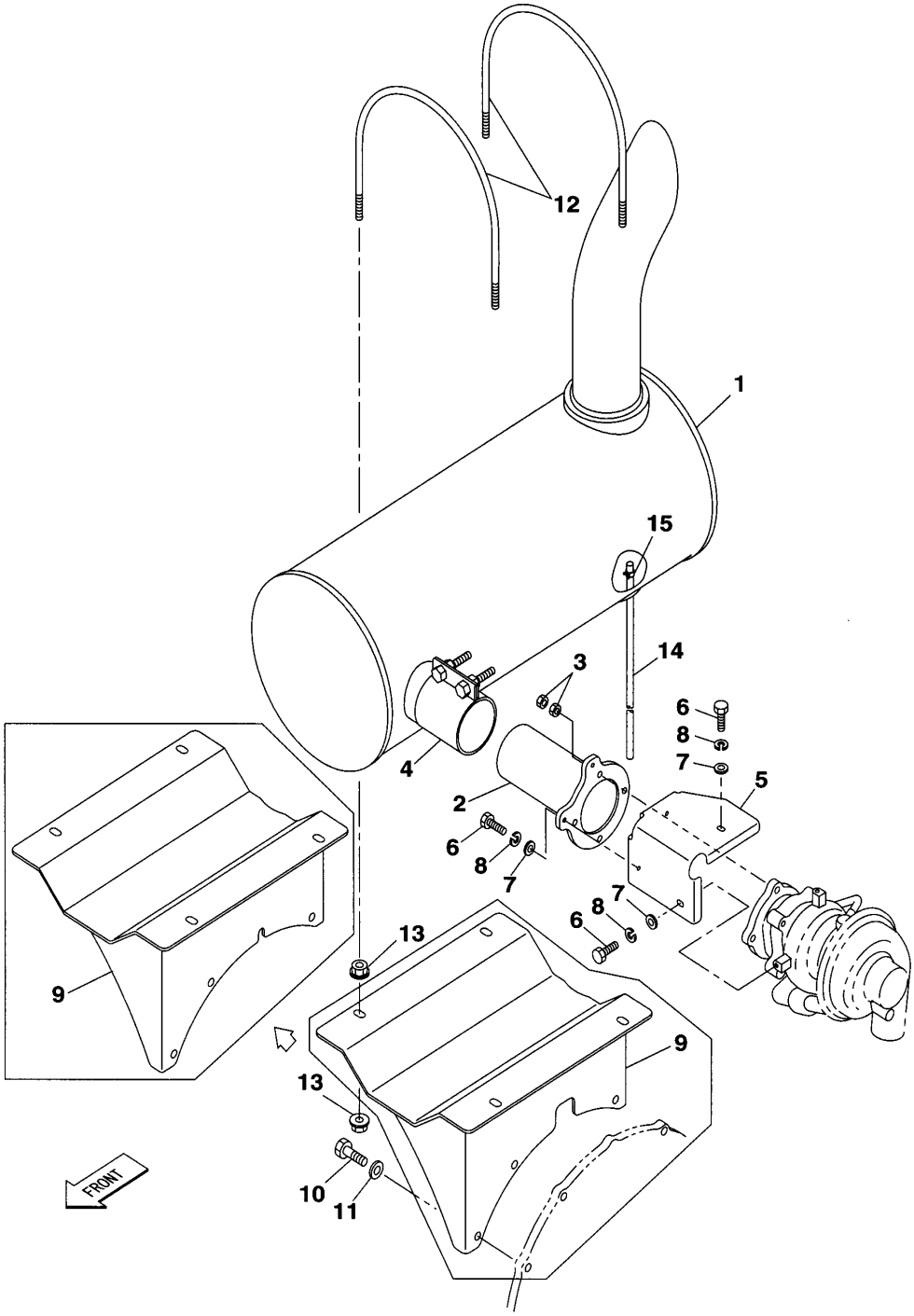

KGORH471-0
KRH10890-EZ

https://truckmanualshub.com/

210A5 1101－ 210L5 1101－

符号 ITEM	構成 COMPO	部品番号 PART NO.	部品名	PART NAME	個数 Q'TY	ｲﾝﾅｰ	適用号機 SERIAL_NO.	互換 ICA	代替部品 REPLACEABLE PART
1	1	KRH10880	ﾏﾌﾗ;ｴｷｿﾞｰｽﾄ D280XL70	MUFFLER	1				
2	1	KRH10160	ﾊﾟｲﾌﾟ;ｴｷｿﾞｰｽﾄ	PIPE;EXHAUST	1				
3	1	162R008VR	ｺｳﾘｷN M 8	NUT;HIGH STRENGTH	8				
4	1	KSH0951	ｸﾗﾝﾌﾟ ｼｰﾙ	CLAMP;SPL	1				
5	1	KRH10930	ｶﾊﾞｰ ﾀｰﾎﾞ	COVER;SPL	1				
6	1	102R006A016N	ｼﾞﾖｳB M 6X 16	BOLT;HEX HD	4				
7	1	182-006AN	ﾐｶﾞｷW 6	WASHER;PLAIN	4				
8	1	183-106AN	SW 6	WASHER;SPRING	4				
9	1	KRH10150	ﾌﾞﾗｹｯﾄ;ﾏﾌﾗ	BRKT;MUFFLER	1		210A5 -1138 210L5 -1140	<	KRH10151
9	1	KRH10151	ﾌﾞﾗｹｯﾄ;ﾏﾌﾗ	BRKT;MUFFLER	1		210A5 1139- 210L5 1141-		
10	1	102R010Y035R	ｺｳﾘｷB M10X 35	BOLT;HIGH STRENGTH	3		210A5 -1138 210L5 -1140	<	102R010Y035R
10	1	102R010Y035R	ｺｳﾘｷB M10X 35	BOLT;HIGH STRENGTH	4		210A5 1139- 210L5 1141-		
11	1	KEH0114	ｺｳﾘｷW M10 ﾒｯｷ	WASHER;HIGH STRENGTH	3		210A5 -1138 210L5 -1140	<	KEH0114
11	1	KEH0114	ｺｳﾘｷW M10 ﾒｯｷ	WASHER;HIGH STRENGTH	4		210A5 1139- 210L5 1141-		
12	1	KHH11400	ﾎﾞﾙﾄ;U M10	BOLT;U	2				
13	1	KHH11440	ﾌﾗﾝｼﾞN M10	NUT;FLANGED	8				
14	1	KHH0208	ﾁｭｰﾌﾞ ﾃﾌﾛﾝ L= 850	TUBE	1				
15	1	KHH0249	ﾊﾞﾝﾄﾞ;ﾎｰｽ	BAND;HOSE	1				

https://truckmanualshub.com/

15 [16 ~ 18]

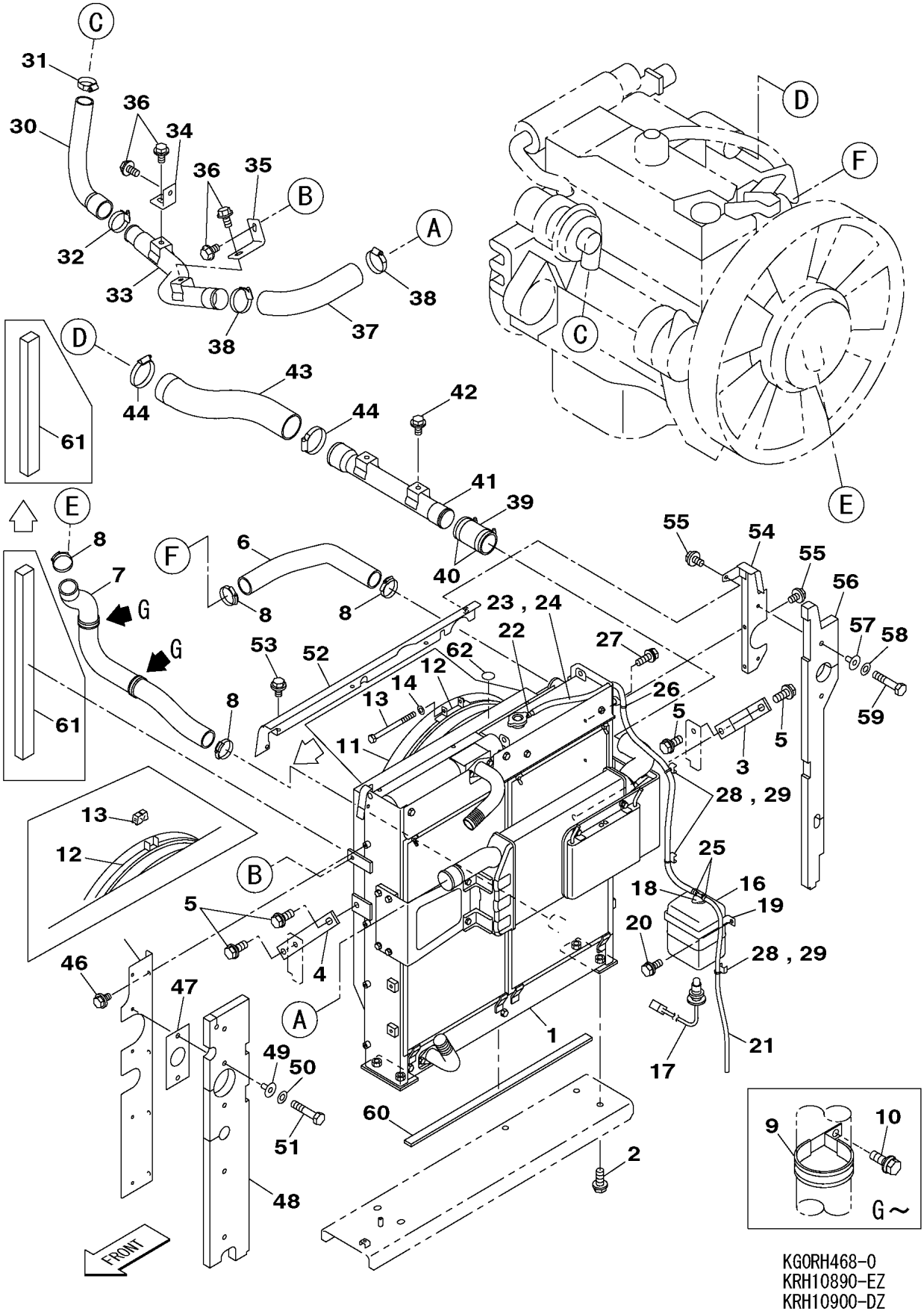

KG0RH468-0
KRH10890-EZ
KRH10900-DZ

https://truckmanualshub.com/

210A5 1101－ 210L5 1101－

符号 ITEM	構成 COMPO	部品番号 PART NO.	部品名	PART NAME	個数 Q'TY	ｲﾝﾅｰ	適用号機 SERIAL_NO.	互換 ICA	代替部品 REPLACEABLE PART
1	1	KRH10810	ﾗｼﾞｴﾀ	RADIATOR	1	*	210A5 -2355 210L5 -1525	=	KRH10811
1	1	KRH10811	ﾗｼﾞｴﾀ	RADIATOR	1	*	210A5 2356- 210L5 1526-		
2	1	105R016Y040R	ｾﾑｽB M16 X 40	BOLT;SEMS	4				
3	1	KRH11070	ｽﾃｰ;ﾗｼﾞｴﾀ	STAY;RADIATOR	1				
4	1	KRH11080	ｽﾃｰ;ﾗｼﾞｴﾀ	STAY;RADIATOR	1				
5	1	105R016Y040R	ｾﾑｽB M16 X 40	BOLT;SEMS	4				
6	1	KRH11110	ﾎｰｽ;ﾗｼﾞｴﾀ	HOSE;RADIATOR	1				
7	1	KRH11100	ﾎｰｽ;ﾗｼﾞｴﾀ	HOSE;RADIATOR	1				
8	1	KHH0351	ｸﾗﾝﾌﾟ;ﾎｰｽ 58-75	CLAMP;HOSE	4		210A5 NOT USED 210L5 NOT USED	<	KHH0350
8	1	KHH0350	ｸﾗﾝﾌﾟ;ﾎｰｽ 50-65	CLAMP;HOSE	4				
9	1	KRH10460	ｸﾗﾝﾌﾟ;ﾎｰｽ	CLAMP;HOSE	2				
10	1	KHJ1215	ﾎﾞﾙﾄ ﾄｸｼｭ M8X25ｻﾞｶﾞﾈ	BOLT;SPL	2		210A5 -1601 210L5 -1313	<	KHJ1214
10	1	KHJ1214	ﾎﾞﾙﾄ ﾄｸｼｭ M8X20ｻﾞｶﾞﾈ	BOLT;SPL	2		210A5 1602- 210L5 1314-		
11	1	KBH0935	ｺﾞﾑ ﾌｧﾝｶﾞｲﾄﾞ	RUBBER;SPL	1		210A5 -1128 210L5 NOT USED	<	KRH11990
11	1	KRH11990	ｺﾞﾑ ﾌｧﾝｶﾞｲﾄﾞ	RUBBER;SPL	1		210A5 1129-1986 210L5 -1437	<	KRH12850
11	1	KRH12850	ｺﾞﾑ ﾌｧﾝｶﾞｲﾄﾞ	RUBBER;SPL	1		210A5 1987- 210L5 1438-		
12	1	KBH0936	ﾊﾞﾝﾄﾞ ｸﾘｯﾌﾟ	BAND;SPL	1		210A5 -1515 210L5 -1291		
12	1	KHH12390	ﾊﾞﾝﾄﾞ ;ﾌｧﾝｶﾞｲﾄﾞ L=25	BAND;SPL	1		210A5 1516- 210L5 1292-		
13	1	KRH1377	ﾎﾞﾙﾄ ﾄｸｼｭ M5X100	BOLT;SPL	1		210A5 -1515 210L5 -1291		
13	1	KHH12410	ﾍｯﾄﾞ ;ﾌｧﾝｶﾞｲﾄﾞﾊﾞﾝﾄﾞ	HEAD;SPL	1		210A5 1516- 210L5 1292-		
14	1	182-005AN	ﾐｶﾞｷW 5	WASHER;PLAIN	1		210A5 -1515 210L5 -1291		
15	1A	KHH10840	ﾀﾝｸ;ﾘｻﾞｰﾌﾞ ASSY	TANK;RESERVE	1				
16	2	KHH0006	ﾀﾝｸ;ﾘｻﾞｰﾌﾞ	TANK;RESERVE	1				
17	2	KHH0221	ｽｲｯﾁ ﾚﾍﾞﾙ	SWITCH;SPL	1				
18	2	KHH10860	ｷｬｯﾌﾟ ﾘｻﾞｰﾌﾞﾀﾝｸ	CAP;SPL	1				
19	1	KRH1270	ﾎﾙﾀﾞ ﾘｻﾞｰﾌﾞﾀﾝｸ	HOLDER	1				
20	1	105R010Y025R	ｾﾑｽB M10X 25	BOLT;SEMS	2				
21	1	KHH0398	ﾎｰｽ;ｺﾞﾑ (L=650)	HOSE;RUBBER	1				
22	1	KHH0248	ﾊﾞﾝﾄﾞ;ﾎｰｽ	BAND;HOSE	1				
23	1	KHH0138	ﾎｰｽ;ｺﾞﾑ	HOSE;RUBBER	1				
24	1	KBR0111	ﾁｭｰﾌﾞ;ｺﾙｹﾞｰﾄ 13X1000	TUBE;CORRUGATED	1				
25	1	KHH0248	ﾊﾞﾝﾄﾞ;ﾎｰｽ	BAND;HOSE	2				
26	1	KHR2584	ｸﾗﾝﾌﾟ ﾊﾞﾝﾄﾞﾂｷ(S)M8	CLAMP	1				
27	1	KHJ1215	ﾎﾞﾙﾄ ﾄｸｼｭ M8X25ｻﾞｶﾞﾈ	BOLT;SPL	1				
28	1	KHR10220	ｸﾗﾝﾌﾟ ﾏｳﾝﾄ	CLAMP;SPL	3				
29	1	KHH0142	ﾊﾞﾝﾄﾞ;ｿｸｾﾝ L=250	BAND;HARNESS	3				
30	1	KRH11040	ﾎｰｽ;ｴｱ ｲﾝﾀｰｸｰﾗ(ｺｳｵﾝｶ	HOSE;AIR	1				
31	1	KHH0307	ｸﾗﾝﾌﾟ;ﾎｰｽ (ﾊｲﾄﾙｸ 45-	CLAMP;HOSE	1				
32	1	KHH0308	ｸﾗﾝﾌﾟ;ﾎｰｽ (ﾊｲﾄﾙｸ 57-	CLAMP;HOSE	1				
33	1	KRH11030	ﾊﾟｲﾌﾟ;ｴｱｲﾝﾚｯﾄ ｲﾝﾀｰｸｰ	PIPE;AIR-INLET	1				
34	1	KRH10380	ﾌﾞﾗｹｯﾄ	BRACKET	1				
35	1	KRH10390	ﾌﾞﾗｹｯﾄ	BRACKET	1				
36	1	KHN1079	ﾎﾞﾙﾄ ﾄｸｼｭ ｻﾞｶﾞﾈ ｸﾐｺﾐ	BOLT;SPL	4				
37	1	KRH10290	ﾎｰｽ;ｴｱ ｲﾝﾀｰｸｰﾗ(ｺｳｵﾝｶ	HOSE;AIR	1				
38	1	KHH0308	ｸﾗﾝﾌﾟ;ﾎｰｽ (ﾊｲﾄﾙｸ 57-	CLAMP;HOSE	2				
39	1	KSH1065	ﾎｰｽ;ｴｱ ｲﾝﾀｰｸｰﾗ	HOSE;AIR	1				
40	1	KHH0308	ｸﾗﾝﾌﾟ;ﾎｰｽ (ﾊｲﾄﾙｸ 57-	CLAMP;HOSE	2				

https://truckmanualshub.com/

210A5 1101－ 210L5 1101－

符号 ITEM	構成 COMPO	部品番号 PART NO.	部品名	PART NAME	個数 Q'TY	ｲﾝﾅｰ	適用号機 SERIAL_NO.	互換 ICA	代替部品 REPLACEABLE PART
41	1	KRH10320	ﾊﾟｲﾌﾟ;ｴｱｲﾝﾚｯﾄ ｲﾝﾀｰｸｰ	PIPE;AIR-INLET	1				
42	1	KHN1079	ﾎﾞﾙﾄ ﾄｸｼｭ ｻﾞｶﾞﾈ ｸﾐｺﾐ	BOLT;SPL	2				
43	1	KRH10300	ﾎｰｽ;ｴｱ ｲﾝﾀｰｸｰﾗ(ﾃｲｵﾝｶ	HOSE;AIR	1				
44	1	KHH0411	ｸﾗﾝﾌﾟ;ﾎｰｽ (ﾊｲﾄﾙｸ 83-	CLAMP;HOSE	2				
45	1	KRH11140	ﾌﾞﾗｹｯﾄ ｼｰﾙ	BRACKET	1				
46	1	105R008Y016R	ｾﾑｽB M 8X 16	BOLT;SEMS	4				
47	1	KBH0929	ﾌﾟﾚｰﾄ;ﾗﾊﾞｰ	PLATE;RUBBER	1				
48	1	KRH11150	ｼｰﾙ;ｸｯｼｮﾝ	SEAL;CUSHION	1				
49	1	KHH0358	ｵｻｴ;ｼｰﾙ	RETAINER;SEAL	5				
50	1	182-008SR	ﾐｶﾞｷW 8	WASHER;PLAIN	5				
51	1	102R008Y040R	ｺｳﾘｷB M 8X 40	BOLT;HIGH STRENGTH	5				
52	1	KRH10960	ﾌﾞﾗｹｯﾄ ｼｰﾙ	BRACKET	1				
53	1	105R008Y016R	ｾﾑｽB M 8X 16	BOLT;SEMS	4				
54	1	KRH10970	ﾌﾞﾗｹｯﾄ ｼｰﾙ	BRACKET	1				
55	1	105R008Y016R	ｾﾑｽB M 8X 16	BOLT;SEMS	3				
56	1	KRH11120	ｼｰﾙ;ｸｯｼｮﾝ	SEAL;CUSHION	1				
57	1	KHH0358	ｵｻｴ;ｼｰﾙ	RETAINER;SEAL	2				
58	1	182-008SR	ﾐｶﾞｷW 8	WASHER;PLAIN	2				
59	1	102R008Y040R	ｺｳﾘｷB M 8X 40	BOLT;HIGH STRENGTH	2				
60	1	KRH10450	ｼｰﾙ;ｸｯｼｮﾝ	SEAL;CUSHION	1				
61	1	KRH10590	ｼｰﾙ;ｸｯｼｮﾝ	SEAL;CUSHION	1		210A5 -2373 210L5 -1533		
61	1	KRH13030	ｼｰﾙ;ｸｯｼｮﾝ	SEAL;CUSHION	1		210A5 2374- 210L5 1534-		
62	1	KHP0873	ﾗﾍﾞﾙ ﾛﾝｸﾞﾗｲﾌｸｰﾗﾝﾄ	LABEL;SPL	1				

https://truckmanualshub.com/

https://truckmanualshub.com/

1 [2 ~ 5]

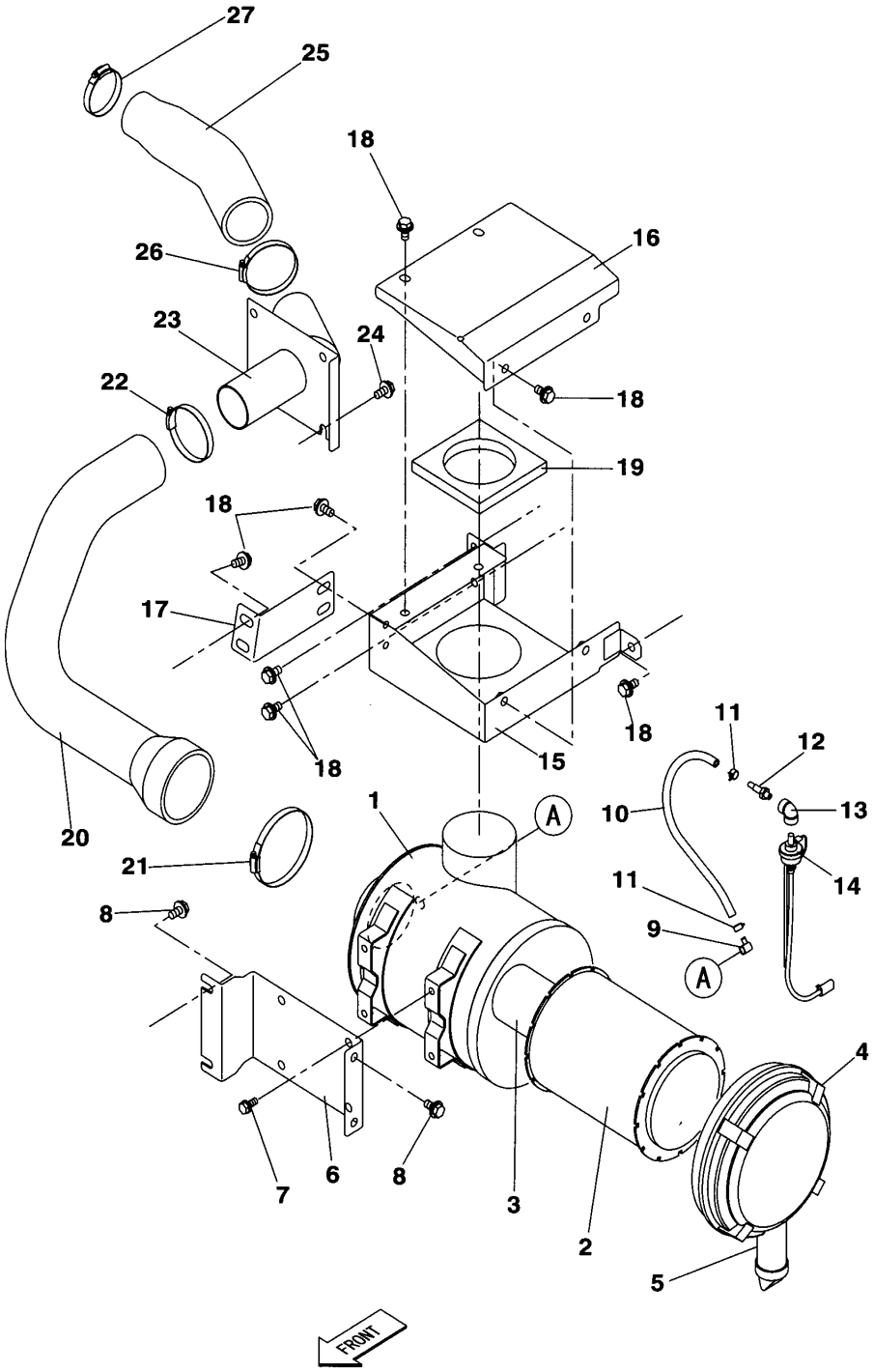

KG0RH490-0
KBH10930-EZ
KRH12000-EZ

https://truckmanualshub.com/

210A5 1101－　　210L5 1101－

符号 ITEM	構成 COMPO	部品番号 PART NO.	部品名	PART NAME	個数 Q'TY	ｲﾝﾅｰ	適用号機 SERIAL_NO.	互換 ICA	代替部品 REPLACEABLE PART
1	1A	KRH1569	ｸﾘｰﾅ;ｴｱ ｺｳﾆｭｳ(Wｴﾚﾒﾝﾄ	CLEANER;AIR	1		210A5 -1110 210L5 NOT USED	<	KRH11950
2	2	KBH0921	ｴﾚﾒﾝﾄ;ｴｱｸﾘｰﾅ (ｱｳﾀ)	ELEMENT;AIR CLEANER	1		210A5 -1110 210L5 NOT USED		
3	2	KBH0922	ｴﾚﾒﾝﾄ;ｴｱｸﾘｰﾅ (ｲﾝﾅ)	ELEMENT;AIR CLEANER	1		210A5 -1110 210L5 NOT USED		
4	2	KBH0923	ｶﾊﾞｰ ｴｱｸﾘｰﾅ	COVER	1		210A5 -1110 210L5 NOT USED		
5	2	KBH0924	ﾊﾞﾙﾌﾞ ﾊﾞｷｭｴｰﾀ	VALVE;SPL	1		210A5 -1110 210L5 NOT USED		
1	1A	KRH11950	ｸﾘｰﾅ;ｴｱ (Wｴﾚﾒﾝﾄ)	CLEANER;AIR	1		210A5 1111-		
2	2	KBH0921	ｴﾚﾒﾝﾄ;ｴｱｸﾘｰﾅ (ｱｳﾀ)	ELEMENT;AIR CLEANER	1		210A5 1111-		
3	2	KBH0922	ｴﾚﾒﾝﾄ;ｴｱｸﾘｰﾅ (ｲﾝﾅ)	ELEMENT;AIR CLEANER	1		210A5 1111-		
4	2	KBH0923	ｶﾊﾞｰ ｴｱｸﾘｰﾅ	COVER	1		210A5 1111-		
5	2	KBH0924	ﾊﾞﾙﾌﾞ ﾊﾞｷｭｴｰﾀ	VALVE;SPL	1		210A5 1111-		
6	1	KRH11940	ﾌﾞﾗｹｯﾄ	BRACKET	1				
7	1	105R010Y025R	ｾﾑｽB M10X 25	BOLT;SEMS	4				
8	1	KHN1079	ﾎﾞﾙﾄ ﾄｸｼｭ ｻﾞｶﾞﾈ ｸﾐｺﾐ	BOLT;SPL	4				
9	1	KRH1237	ｱﾀﾞﾌﾟﾀ;ｴﾙﾎﾞ ｴｱｸﾘｰﾅ	ELBOW	1				
10	1	KHH0024	ﾎｰｽ;ｺﾞﾑ (L= 400)	HOSE;RUBBER	1				
11	1	KHH0248	ﾊﾞﾝﾄﾞ;ﾎｰｽ	BAND;HOSE	2				
12	1	KRH1236	ｼﾞｮｲﾝﾄ ｲﾝｼﾞｹｰﾀ	JOINT;SPL	1				
13	1	KHH0354	ｴﾙﾎﾞ PT1/8-NPT1/8	ELBOW	1				
14	1	KHH10330	ｾﾝｻ;ﾊﾞｷｭｰﾑ	SENSOR;VACUUM	1				
15	1	KRN14720	ｶﾊﾞｰ	COVER	1				
16	1	KRN14730	ｶﾊﾞｰ	COVER	1				
17	1	KRN14710	ﾌﾞﾗｹｯﾄ	BRACKET	1				
18	1	KHN1079	ﾎﾞﾙﾄ ﾄｸｼｭ ｻﾞｶﾞﾈ ｸﾐｺﾐ	BOLT;SPL	11				
19	1	KRH1570	ｼｰﾙ;ｸｯｼｮﾝ	SEAL;CUSHION	1				
20	1	KRH11980	ﾎｰｽ;ｴｱ (ｲﾝﾚｯﾄ)	HOSE;AIR	1				
21	1	KSJ0159	ｸﾘｯﾌﾟ;ｼﾞｭﾋﾞﾘ 6	CLIP;JUBILEE	1				
22	1	KEJ0338	ｸﾘｯﾌﾟ;ｼﾞｭﾋﾞﾘ 77-95	CLIP;JUBILEE	1				
23	1	KRH11930	ﾌﾞﾗｹｯﾄ ｲﾝﾚｯﾄﾎｰｽ	BRACKET	1				
24	1	KHN1079	ﾎﾞﾙﾄ ﾄｸｼｭ ｻﾞｶﾞﾈ ｸﾐｺﾐ	BOLT;SPL	4				
25	1	KRH10490	ﾎｰｽ;ｴｱ (ｲﾝﾚｯﾄ)	HOSE;AIR	1				
26	1	KEJ0338	ｸﾘｯﾌﾟ;ｼﾞｭﾋﾞﾘ 77-95	CLIP;JUBILEE	1				
27	1	KEJ0337	ｸﾘｯﾌﾟ;ｼﾞｭﾋﾞﾘ 68-85	CLIP;JUBILEE	1				

https://truckmanualshub.com/

1 [2 ~ 5]

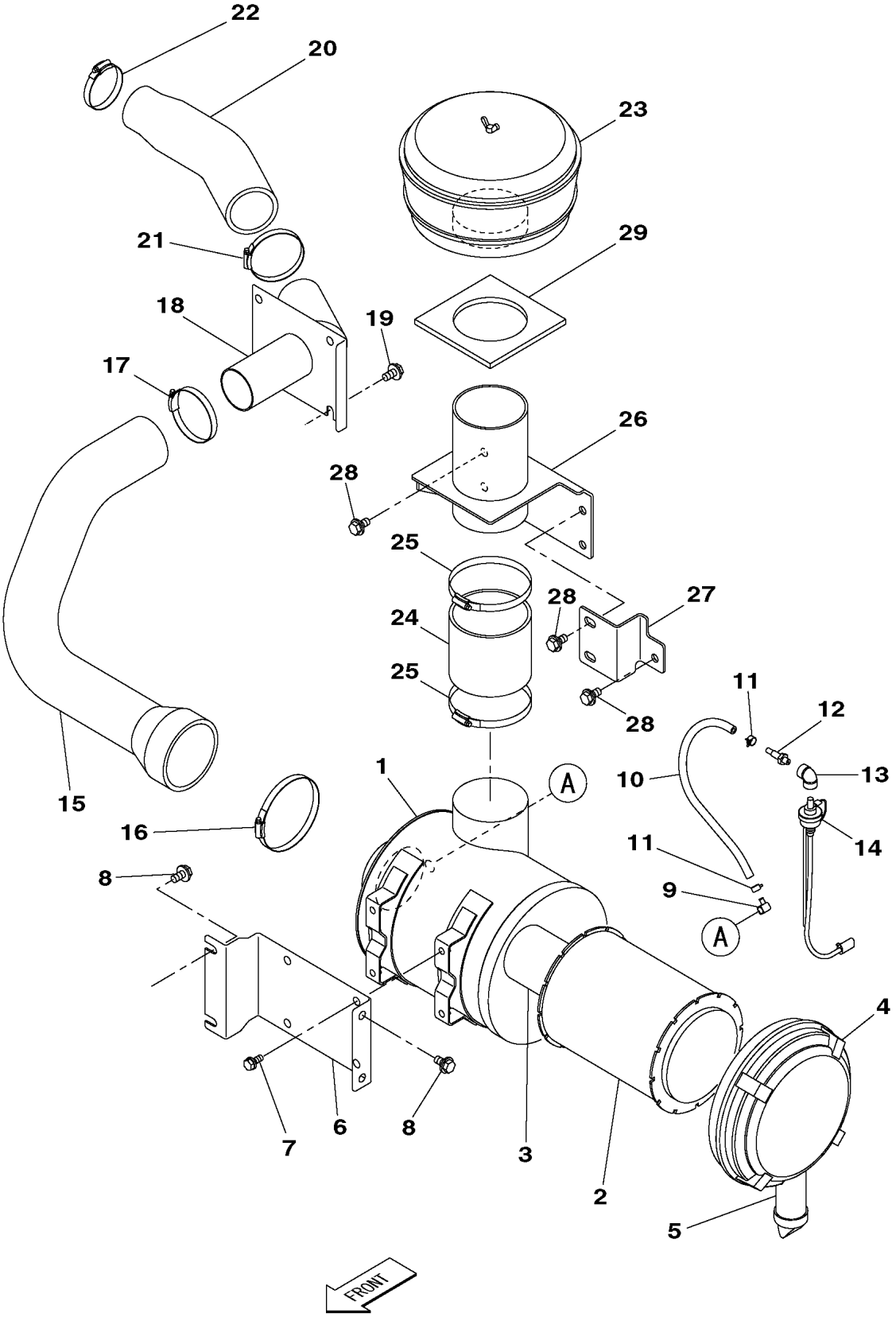

KG0RH489-0
KBH10930-EZ
KRH12000-EZ

https://truckmanualshub.com/

210A5 1101－ 210L5 1101－

符号 ITEM	構成 COMPO	部品番号 PART NO.	部品名	PART NAME	個数 Q'TY	ｲﾝﾅｰ	適用号機 SERIAL_NO.	互換 ICA	代替部品 REPLACEABLE PART
1	1	KRH1569	ｸﾘｰﾅ;ｴｱ ｺｳﾆｭｳ(Wｴﾚﾒﾝﾄ	CLEANER;AIR	1		210A5 -1110 210L5 NOT USED	<	KRH11950
1	1A	KRH11950	ｸﾘｰﾅ;ｴｱ (Wｴﾚﾒﾝﾄ)	CLEANER;AIR	1		210A5 1111-		
2	2	KBH0921	ｴﾚﾒﾝﾄ;ｴｱｸﾘｰﾅ (ｱｳﾀ)	ELEMENT;AIR CLEANER	1		210A5 1111-		
3	2	KBH0922	ｴﾚﾒﾝﾄ;ｴｱｸﾘｰﾅ (ｲﾝﾅ)	ELEMENT;AIR CLEANER	1		210A5 1111-		
4	2	KBH0923	ｶﾊﾞｰ ｴｱｸﾘｰﾅ	COVER	1		210A5 1111-		
5	2	KBH0924	ﾊﾞﾙﾌﾞ ﾊﾞｷｭｴｰﾀ	VALVE;SPL	1		210A5 1111-		
6	1	KRH11940	ﾌﾞﾗｹｯﾄ	BRACKET	1				
7	1	105R010Y025R	ｾﾑｽB M10X 25	BOLT;SEMS	4				
8	1	KHN1079	ﾎﾞﾙﾄ ﾄｸｼｭ ｻﾞｶﾞﾈ ｸﾐｺﾐ	BOLT;SPL	4				
9	1	KRH1237	ｱﾀﾞﾌﾟﾀ;ｴﾙﾎﾞ ｴｱｸﾘｰﾅ	ELBOW	1				
10	1	KHH0024	ﾎｰｽ;ｺﾞﾑ (L= 400)	HOSE;RUBBER	1				
11	1	KHH0248	ﾊﾞﾝﾄﾞ;ﾎｰｽ	BAND;HOSE	2				
12	1	KRH1236	ｼﾞｮｲﾝﾄ ｲﾝｼﾞｹｰﾀ	JOINT;SPL	1				
13	1	KHH0354	ｴﾙﾎﾞ PT1/8-NPT1/8	ELBOW	1				
14	1	KHH10330	ｾﾝｻ;ﾊﾞｷｭｰﾑ	SENSOR;VACUUM	1				
15	1	KRH11980	ﾎｰｽ;ｴｱ (ｲﾝﾚｯﾄ)	HOSE;AIR	1				
16	1	KSJ0159	ｸﾘｯﾌﾟ;ｼﾞｭﾋﾞﾘ 6	CLIP;JUBILEE	1				
17	1	KEJ0338	ｸﾘｯﾌﾟ;ｼﾞｭﾋﾞﾘ 77-95	CLIP;JUBILEE	1				
18	1	KRH11930	ﾌﾞﾗｹｯﾄ ｲﾝﾚｯﾄﾎｰｽ	BRACKET	1				
19	1	KHN1079	ﾎﾞﾙﾄ ﾄｸｼｭ ｻﾞｶﾞﾈ ｸﾐｺﾐ	BOLT;SPL	4				
20	1	KRH10490	ﾎｰｽ;ｴｱ (ｲﾝﾚｯﾄ)	HOSE;AIR	1				
21	1	KEJ0338	ｸﾘｯﾌﾟ;ｼﾞｭﾋﾞﾘ 77-95	CLIP;JUBILEE	1				
22	1	KEJ0337	ｸﾘｯﾌﾟ;ｼﾞｭﾋﾞﾘ 68-85	CLIP;JUBILEE	1				
23	1	KSH0352	ｸﾘｰﾅ;ﾌﾟﾚ	CLEANER;PRE	1		210A5 -1424 210L5 -1261	<	KSH0104
23	1	KSH0104	ｸﾘｰﾅ;ﾌﾟﾚ (ｷｲﾛ)	CLEANER;PRE (YELLOW)	1		210A5 1425- 210L5 1262-		
24	1	KRH12040	ﾎｰｽ;ｴｱ (ｲﾝﾚｯﾄ)	HOSE;AIR	1				
25	1	UHA0316	ｸﾘｯﾌﾟ;ｼﾞｭﾋﾞﾘ 6X	CLIP	2				
26	1	KRH12020	ﾌﾞﾗｹｯﾄ ｲﾝﾚｯﾄﾎｰｽ	BRACKET	1				
27	1	KRH12030	ﾌﾞﾗｹｯﾄ	BRACKET	1				
28	1	KHN1079	ﾎﾞﾙﾄ ﾄｸｼｭ ｻﾞｶﾞﾈ ｸﾐｺﾐ	BOLT;SPL	5				
29	1	KRH12050	ｼｰﾙ;ｸｯｼｮﾝ	SEAL;CUSHION	1				

https://truckmanualshub.com/

1 [2 ~ 8]

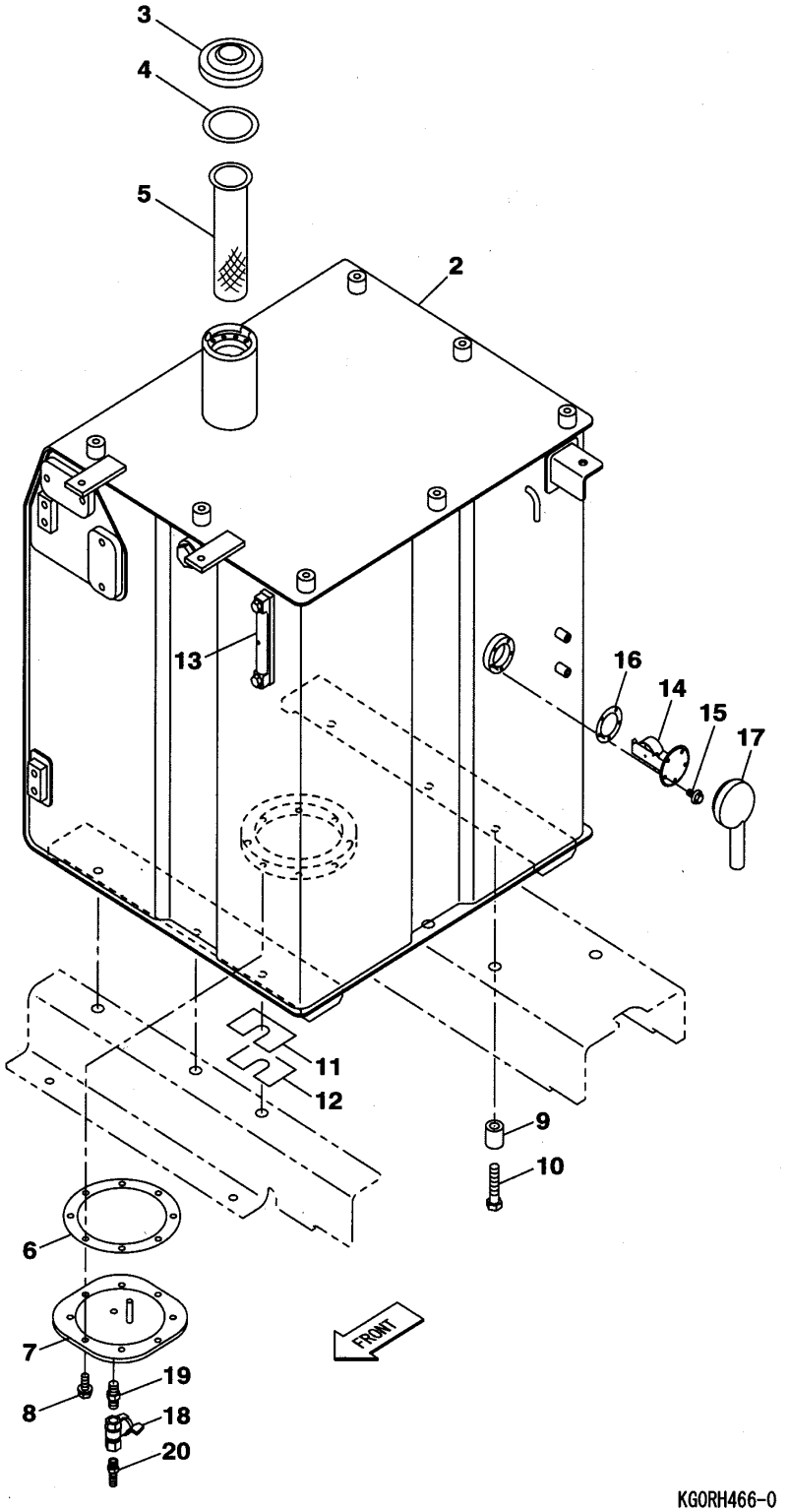

KG0RH466-0
KRH11060-DZ

https://truckmanualshub.com/

210A5 1101－ 210L5 1101－

符号 ITEM	構成 COMPO	部品番号 PART NO.	部品名	PART NAME	個数 Q'TY	ｲﾝﾅｰ	適用号機 SERIAL_NO.	互換 ICA	代替部品 REPLACEABLE PART
1	1A	KRH10800	ﾀﾝｸ;ﾌｭｰｴﾙ ﾉｳﾆｭｳｼｮｳｽﾞ	TANK;FUEL	1				
2	2	KRH10770	ﾀﾝｸ;ﾌｭｰｴﾙ	TANK;FUEL	1				
3	2A	KHH0140	ｷｬｯﾌﾟ (ｷｰﾂｷ)	CAP	1				
4	3	KHH0295	ｼｰﾄ ﾗﾊﾞｰ	SEAT	1				
5	2	KHH10060	ﾌｨﾙﾀ;ｷﾕｳﾕ	FILTER	1				
6	2	KSH0503	ﾊﾟｯｷﾝ ｼﾞｮｲﾝﾄｼｰﾄ	PACKING;SPL	1				
7	2	KRH11460	ｶﾊﾞｰ	COVER	1				
8	2	105R010Y025R	ｾﾑｽB M10X 25	BOLT;SEMS	8				
9	1	KSJ1963	ｽﾍﾟｰｻ	SPACER	6				
10	1	102R016Y070R	ｺｳﾘｷB M16X 70	BOLT;HIGH STRENGTH	6				
11	1	KHH0040	ｼﾑ;ﾌﾟﾚｰﾄ	SHIM;PLATE	1 AR				
12	1	KHH0137	ｼﾑ;ﾌﾟﾚｰﾄ	SHIM;PLATE	1 AR				
13	1	KHH0271	ｹﾞｰｼﾞ;ｵｲﾙ (ﾈﾝﾘﾖｳ)	GAGE;OIL LEVEL	1		210A5 -1171 210L5 -1165	<	KHH12090
13	1	KHH12090	ｹﾞｰｼﾞ;ｵｲﾙ (ﾈﾝﾘﾖｳ)	GAGE;OIL LEVEL	1		210A5 1172- 210L5 1166-		
14	1	KHR10670	ｾﾝｻ ﾌｭｰｴﾙ	SENSOR;SPL	1				
15	1	KHR0617	+ﾅﾍﾞS M5X12(ｻﾞｶﾞﾈﾂｷ)	SCREW;PAN HD	5				
16	1	KHR0956	ﾊﾟｯｷﾝ ﾉﾝｱｽﾍﾞｽﾄ	PACKING;SPL	1				
17	1	KRH0675	ｶﾊﾞｰ ｾﾝｻｰ	COVER;SPL	1				
18	1	KHJ0897	ｺｯｸ;ﾄﾞﾚﾝ	COCK;DRAIN	1				
19	1	UBJ0311	ﾆｯﾌﾟﾙ ST-N-1/4	NIPPLE	1				
20	1	KRR0480	ﾆｯﾌﾟﾙ ﾎｰｽ 1/4-10.5	NIPPLE	1		210A5 -1123 210L5 NOT USED		

https://truckmanualshub.com/

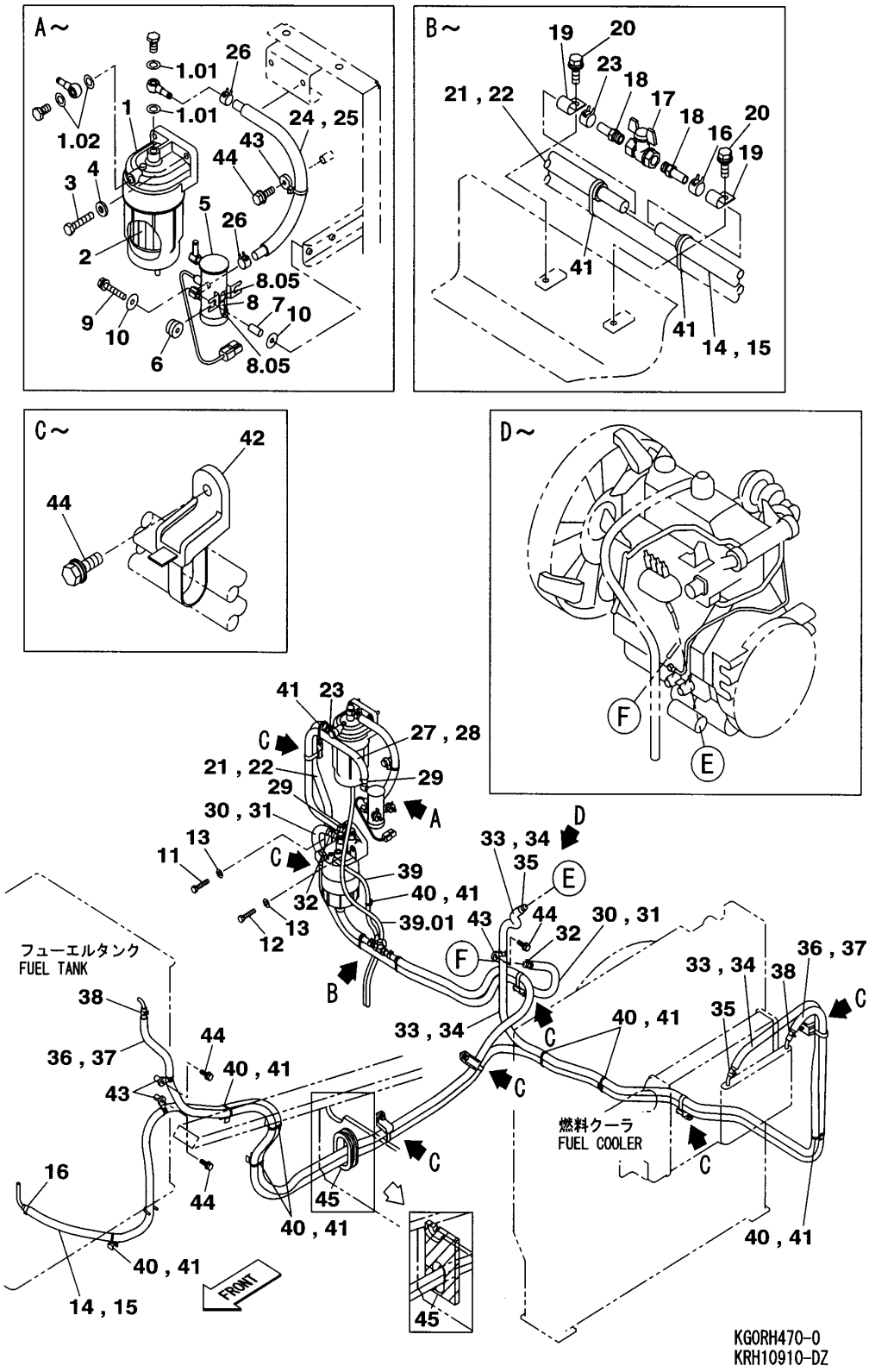

https://truckmanualshub.com/

210A5 1101－　　210L5 1101－

符号 ITEM	構成 COMPO	部品番号 PART NO.	部品名	PART NAME	個数 Q'TY	ｲﾝﾅｰ	適用号機 SERIAL_NO.	互換 ICA	代替部品 REPLACEABLE PART
1	1A	KHH10550	ﾌｲﾙﾀ;ﾌｭｰｴﾙ (ﾌﾟﾚﾌｨﾙﾀ)	FILTER;FUEL	1		210A5 -1161	<	KHH12020
							210L5 -1154		
1.01	2	LEH0007	ｶﾞｽｹｯﾄ ｺﾈｸﾀ	GASKET	4		210A5 -1161		
							210L5 -1154		
1.02	2	LZH0024	ｶﾞｽｹｯﾄ ｴｱﾌﾟﾗｸﾞ	GASKET	1		210A5 -1161		
							210L5 -1154		
2	2	KHH10590	ｴﾚﾒﾝﾄ;ﾌｭｰｴﾙﾌｲﾙﾀ	ELEMENT;FUEL FILTER	1		210A5 -1161		
							210L5 -1154		
1	1A	KHH12020	ﾌｲﾙﾀ;ﾌｭｰｴﾙ (ﾌﾟﾚﾌｨﾙﾀ)	FILTER;FUEL	1		210A5 1162-		
							210L5 1155-		
1.01	2	LEH0007	ｶﾞｽｹｯﾄ ｺﾈｸﾀ	GASKET	4		210A5 1162-		
							210L5 1155-		
1.02	2	LZH0024	ｶﾞｽｹｯﾄ ｴｱﾌﾟﾗｸﾞ	GASKET	1		210A5 1162-		
							210L5 1155-		
2	2	KHH12030	ｴﾚﾒﾝﾄ;ﾌｭｰｴﾙﾌｲﾙﾀ	ELEMENT;FUEL FILTER	1		210A5 1162-		
							210L5 1155-		
3	1	102R008Y040R	ｺｳﾘｷB M 8X 40	BOLT;HIGH STRENGTH	2				
4	1	KAJ1500	ｺｳﾘｷW M8	WASHER;HIGH STRENGTH	2				
5	1A	KHH10460	ﾎﾟﾝﾌﾟ;ﾌｭｰｴﾙﾌｲｰﾄﾞ (ﾌﾟ	PUMP;FUEL FEED	1		210A5 -1127	<	KHH11880
							210L5 NOT USED		
6	2	KHH10470	ｸﾞﾛﾒｯﾄ;ﾗﾊﾞｰ ﾌｭｰｴﾙﾌｨｰ	GROMMET;RUBBER	2		210A5 -1127		
							210L5 NOT USED		
7	2	KHH10480	ｶﾗｰ	COLLAR	2		210A5 -1127		
							210L5 NOT USED		
8	2	KHH10490	ﾌｲﾙﾀ ﾎﾟﾝﾌﾟ	FILTER;SPL	1		210A5 -1127		
							210L5 NOT USED		
5	1A	KHH11880	ﾎﾟﾝﾌﾟ;ﾌｭｰｴﾙﾌｲｰﾄﾞ (ﾌﾟ	PUMP;FUEL FEED	1		210A5 1128-		
6	2	KHH10470	ｸﾞﾛﾒｯﾄ;ﾗﾊﾞｰ ﾌｭｰｴﾙﾌｨｰ	GROMMET;RUBBER	2		210A5 1128-		
7	2	KHH10480	ｶﾗｰ	COLLAR	2		210A5 1128-		
8	2	KHH11890	ﾌｲﾙﾀ ﾎﾟﾝﾌﾟ(ｷﾝｿﾞｸﾒｯｼｭ	FILTER;SPL	1		210A5 1128-		
8.05	2	KHH11900	ｶﾞｽｹｯﾄ KIT	GASKET	1		210A5 1128-		
9	1	KHR1257	ﾎﾞﾙﾄ M 6X 35(ｻﾞｶﾞﾈｯｷ	BOLT;SPL	2				
10	1	KHN0154	ﾜｯｼｬ M6 (ｶﾞｲｹｲ21.5MM	WASHER;SPL	4				
11	1	102R008Y040R	ｺｳﾘｷB M 8X 40	BOLT;HIGH STRENGTH	2				
12	1	102R008Y075R	ｺｳﾘｷB M 8X 75	BOLT;HIGH STRENGTH	1				
13	1	KAJ1500	ｺｳﾘｷW M8	WASHER;HIGH STRENGTH	3				
14	1	KHH11290	ﾎｰｽ;ｺﾞﾑ L=3800 (ｼｷﾍﾞ	HOSE;RUBBER	1				
15	1	KHR13940	ﾁｭｰﾌﾞ;ｺﾙｹﾞｰﾄ 19X3700	TUBE;CORRUGATED	1				
16	1	KHH0405	ﾊﾞﾝﾄﾞ;ﾎｰｽ	BAND;HOSE	2				
17	1	KHJ0897	ｺｯｸ;ﾄﾞﾚﾝ	COCK;DRAIN	1				
18	1	KRR0480	ﾆｯﾌﾟﾙ ﾎｰｽ 1/4-10.5	NIPPLE	2				
19	1	KHR1309	ｸﾗﾝﾌﾟ ｸﾘｯﾌﾟ (D15)	CLAMP;SPL	2				
20	1	KHJ1215	ﾎﾞﾙﾄ ﾄｸｼｭ M8X25ｻﾞｶﾞﾈ	BOLT;SPL	2				
21	1	KHH10980	ﾎｰｽ;ｺﾞﾑ L=1000(ｼｷﾍﾞ	HOSE;RUBBER	1				
22	1	KHR13380	ﾁｭｰﾌﾞ;ｺﾙｹﾞｰﾄ 19X900	TUBE;CORRUGATED	1				
23	1	KHH0405	ﾊﾞﾝﾄﾞ;ﾎｰｽ	BAND;HOSE	2				
24	1	KHH11010	ﾎｰｽ;ｺﾞﾑ L=500(ｼｷﾍﾞｯ	HOSE;RUBBER	1				
25	1	KHR0136	ﾁｭｰﾌﾞ;ｺﾙｹﾞｰﾄ 19X 400	TUBE;CORRUGATED	1				
26	1	KHH0405	ﾊﾞﾝﾄﾞ;ﾎｰｽ	BAND;HOSE	2				
27	1	KHH11020	ﾎｰｽ;ｺﾞﾑ L=750(ｼｷﾍﾞｯ	HOSE;RUBBER	1				
28	1	KHR13370	ﾁｭｰﾌﾞ;ｺﾙｹﾞｰﾄ 19X700	TUBE;CORRUGATED	1				
29	1	KHH0405	ﾊﾞﾝﾄﾞ;ﾎｰｽ	BAND;HOSE	2				
30	1	KHH11320	ﾎｰｽ;ｺﾞﾑ L=1900(ｼｷﾍﾞｯ	HOSE;RUBBER	1				
31	1	KHR3052	ﾁｭｰﾌﾞ;ｺﾙｹﾞｰﾄ 19X1800	TUBE;CORRUGATED	1				
32	1	KHH0405	ﾊﾞﾝﾄﾞ;ﾎｰｽ	BAND;HOSE	2				
33	1	KHH11300	ﾎｰｽ;ｺﾞﾑ L=3100(ｼｷﾍﾞｯ	HOSE;RUBBER	1				
34	1	KHR0724	ﾁｭｰﾌﾞ;ｺﾙｹﾞｰﾄ 19X3000	TUBE;CORRUGATED	1				
35	1	KHH0405	ﾊﾞﾝﾄﾞ;ﾎｰｽ	BAND;HOSE	2				
36	1	KHH11310	ﾎｰｽ;ｺﾞﾑ L=4400 (ｼｷﾍﾞ	HOSE;RUBBER	1				
37	1	KHR10720	ﾁｭｰﾌﾞ;ｺﾙｹﾞｰﾄ 19X4300	TUBE;CORRUGATED	1				

https://truckmanualshub.com/

210A5 1101－ 210L5 1101－

符号 ITEM	構成 COMPO	部品番号 PART NO.	部品名	PART NAME	個数 Q'TY	ｲﾝﾅｰ	適用号機 SERIAL_NO.	互換 ICA	代替部品 REPLACEABLE PART
38	1	KHH0405	ﾊﾞﾝﾄﾞ;ﾎｰｽ	BAND;HOSE	2				
39	1	KHH10820	ﾁｭｰﾌﾞ;ﾋﾞﾆﾙ L=650	TUBE;VINYL	1		210A5 NOT USED 210L5 NOT USED	<	KHH11720
39	1	KHH11720	ﾁｭｰﾌﾞ;ﾋﾞﾆﾙ L=600	TUBE;VINYL	1				
39.01	1	KHH10970	ﾁｭｰﾌﾞ;ﾋﾞﾆﾙ L=850	TUBE;VINYL	1		210A5 NOT USED 210L5 NOT USED	<	KHH10290
39.01	1	KHH10290	ﾁｭｰﾌﾞ;ﾋﾞﾆﾙ L=800	TUBE;VINYL	1				
40	1	KHR10220	ｸﾗﾝﾌﾟ ﾏｳﾝﾄ	CLAMP;SPL	8				
41	1	KHH0142	ﾊﾞﾝﾄﾞ;ｿｸｾﾝ L=250	BAND;HARNESS	11 AR				
42	1	KHR2581	ｸﾗﾝﾌﾟ ﾊﾞﾝﾄﾞﾂｷ(M)M8	CLAMP	7				
43	1	KHR2584	ｸﾗﾝﾌﾟ ﾊﾞﾝﾄﾞﾂｷ(S)M8	CLAMP	4				
44	1	KHJ1215	ﾎﾞﾙﾄ ﾄｸｼｭ M8X25ｻﾞｶﾞﾈ	BOLT;SPL	11				
45	1	KRH10610	ｸｯｼｮﾝ;ﾗﾊﾞｰ (L=290)	CUSHION;RUBBER	1		210A5 NOT USED 210L5 NOT USED	<	KRH11970
45	1	KRH11970	ｼｰﾙ;ｸｯｼｮﾝ	SEAL;CUSHION	1				

https://truckmanualshub.com/

https://truckmanualshub.com/

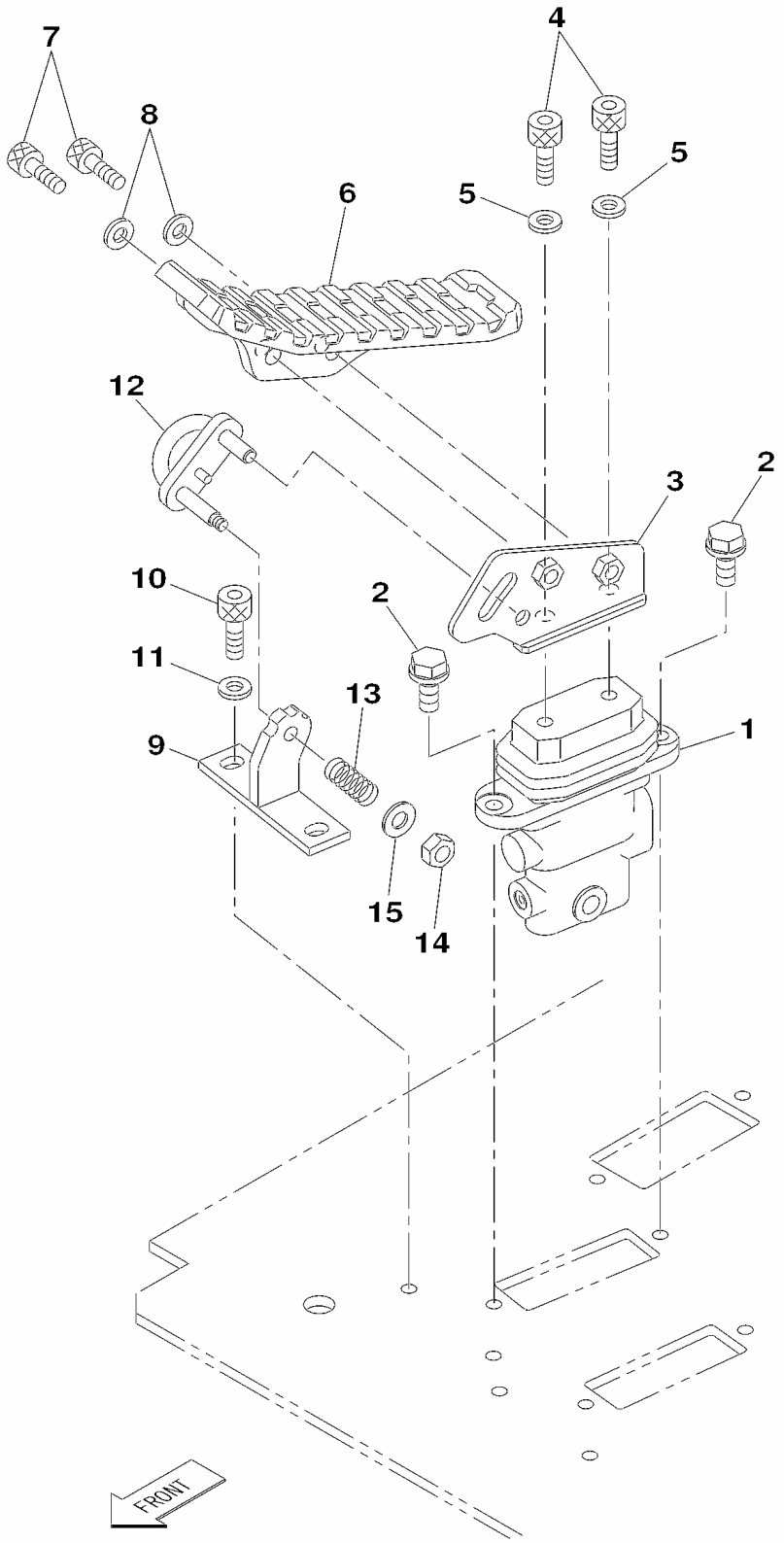

KG0HJ219-0
KHJ14540-DZ

https://truckmanualshub.com/

210A5 1101－ 210L5 1101－

符号 ITEM	構成 COMPO	部品番号 PART NO.	部品名	PART NAME	個数 Q'TY	ｲﾝﾅｰ	適用号機 SERIAL_NO.	互換 ICA	代替部品 REPLACEABLE PART
1	1	KHJ10450	ﾊﾞﾙﾌﾞ;ﾘﾓｺﾝ	VALVE;REMOTE CONT	1	*			
2	1	105R010Y025R	ｾﾑｽB M10X 25	BOLT;SEMS	2				
3	1	KHJ10691	ﾌﾞﾗｹｯﾄ ﾍﾟﾀﾞﾙ (ﾖﾋﾞﾐｷﾞ	BRACKET	1				
4	1	KHJ1104	ﾛｯｶｸｱﾅB M10X20 ｸﾛﾒｯｷ	BOLT;HEX SOC HD	2				
5	1	KHJ0183	ｺｳﾘｷW 10 (ｸﾛﾒｯｷ)	WASHER;HIGH STRENGTH	2				
6	1	KHJ13850	ﾍﾟﾀﾞﾙ ﾖﾋﾞ	PEDAL	1				
7	1	KHJ1820	ﾛｯｶｸｱﾅB M10X25 ｸﾛﾒｯｷ	BOLT;HEX SOC HD	2				
8	1	KHJ0183	ｺｳﾘｷW 10 (ｸﾛﾒｯｷ)	WASHER;HIGH STRENGTH	2				
9	1	KHJ10711	ﾌﾞﾗｹｯﾄ ﾛｯｸ	BRACKET	1				
10	1	108R010Y016R	ﾛｯｶｸｱﾅB M10X 16	BOLT;HEX SOC HD	2				
11	1	KHJ0183	ｺｳﾘｷW 10 (ｸﾛﾒｯｷ)	WASHER;HIGH STRENGTH	2				
12	1	KHJ10701	ﾚﾊﾞｰ;ﾛｯｸ	LEVER;LOCK	1				
13	1	KHJ10721	ｽﾌﾟﾘﾝｸﾞ;ｱｯｼｭｸ	SPRING;COMPRESSION	1				
14	1	KHJ0091	ｺｳﾘｷN M 8 ｸﾛﾒｯｷ	NUT;HIGH STRENGTH	1				
15	1	KHN0420	ﾐｶﾞｷW 8 (ｸﾛﾒｯｷ)	WASHER;PLAIN	1				

DJ
(84,85)

https://truckmanualshub.com/

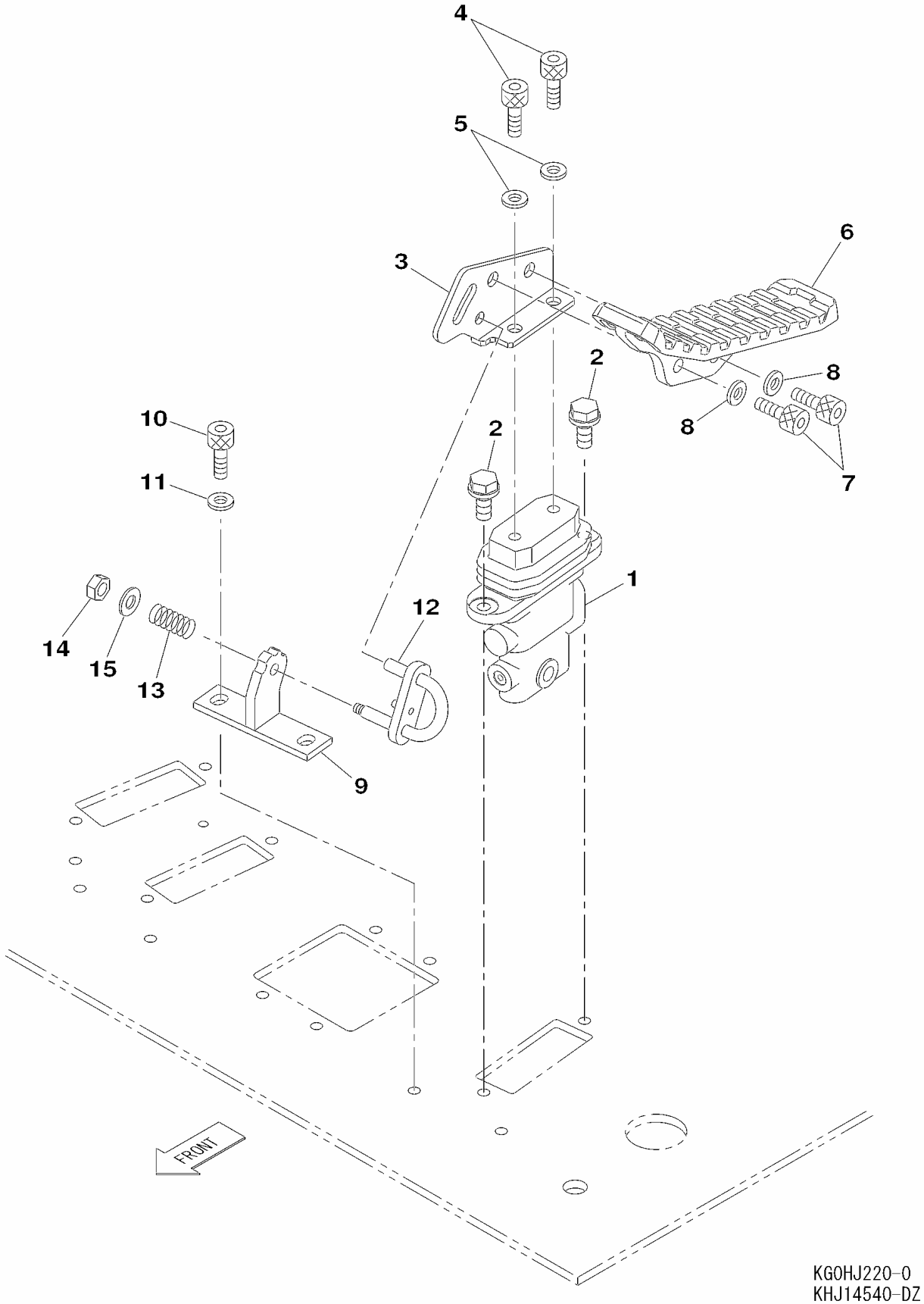

https://truckmanualshub.com/

210A5 1101－ 210L5 1101－

符号 ITEM	構成 COMPO	部品番号 PART NO.	部品名	PART NAME	個数 Q'TY	ｲﾝﾅｰ	適用号機 SERIAL_NO.	互換 ICA	代替部品 REPLACEABLE PART
1	1	KHJ10450	ﾊﾞﾙﾌﾞ;ﾘﾓｺﾝ	VALVE;REMOTE CONT	1	*			
2	1	105R010Y025R	ｾﾑｽB M10X 25	BOLT;SEMS	2				
3	1	KHJ10681	ﾌﾞﾗｹｯﾄ ﾍﾟﾀﾞﾙ (ﾖﾋﾞﾋﾀﾞ	BRACKET	1				
4	1	KHJ1104	ﾛｯｶｸｱﾅB M10X20 ｸﾛﾒｯｷ	BOLT;HEX SOC HD	2				
5	1	KHJ0183	ｺｳﾘｷW 10 (ｸﾛﾒｯｷ)	WASHER;HIGH STRENGTH	2				
6	1	KHJ13850	ﾍﾟﾀﾞﾙ ﾖﾋﾞ	PEDAL	1				
7	1	KHJ1820	ﾛｯｶｸｱﾅB M10X25 ｸﾛﾒｯｷ	BOLT;HEX SOC HD	2				
8	1	KHJ0183	ｺｳﾘｷW 10 (ｸﾛﾒｯｷ)	WASHER;HIGH STRENGTH	2				
9	1	KHJ10711	ﾌﾞﾗｹｯﾄ ﾛｯｸ	BRACKET	1				
10	1	108R010Y016R	ﾛｯｶｸｱﾅB M10X 16	BOLT;HEX SOC HD	2				
11	1	KHJ0183	ｺｳﾘｷW 10 (ｸﾛﾒｯｷ)	WASHER;HIGH STRENGTH	2				
12	1	KHJ10701	ﾚﾊﾞｰ;ﾛｯｸ	LEVER;LOCK	1				
13	1	KHJ10721	ｽﾌﾟﾘﾝｸﾞ;ｱｯｼｭｸ	SPRING;COMPRESSION	1				
14	1	KHJ0091	ｺｳﾘｷN M 8 ｸﾛﾒｯｷ	NUT;HIGH STRENGTH	1				
15	1	KHN0420	ﾐｶﾞｷW 8 (ｸﾛﾒｯｷ)	WASHER;PLAIN	1				

https://truckmanualshub.com/

2［3，4］

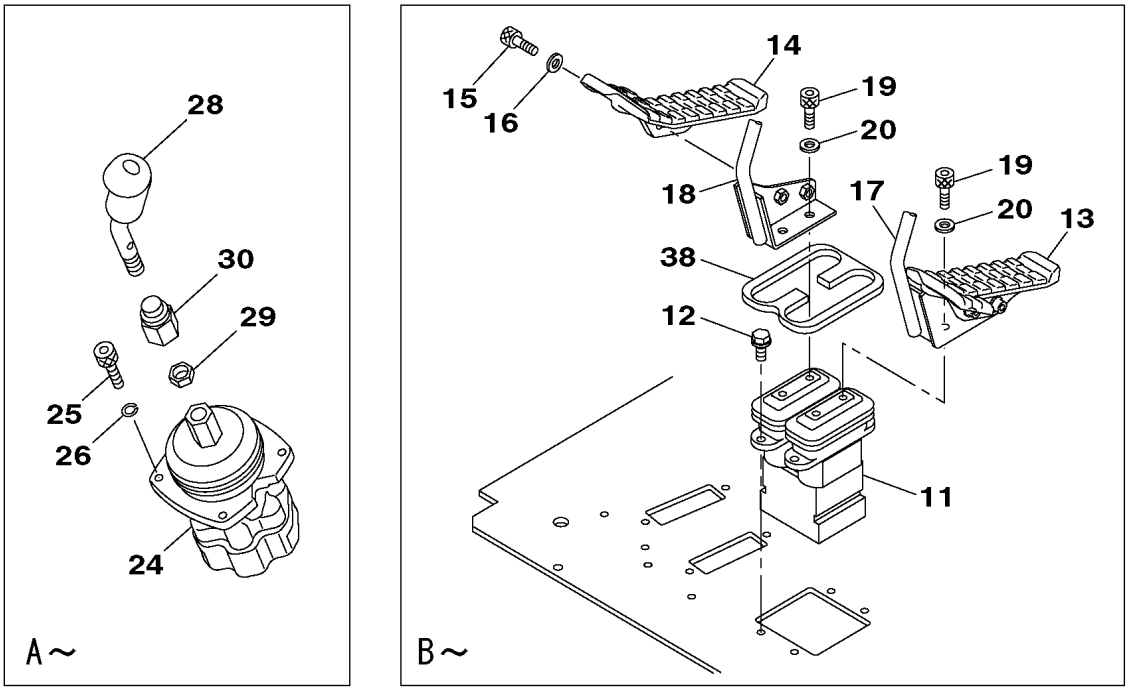

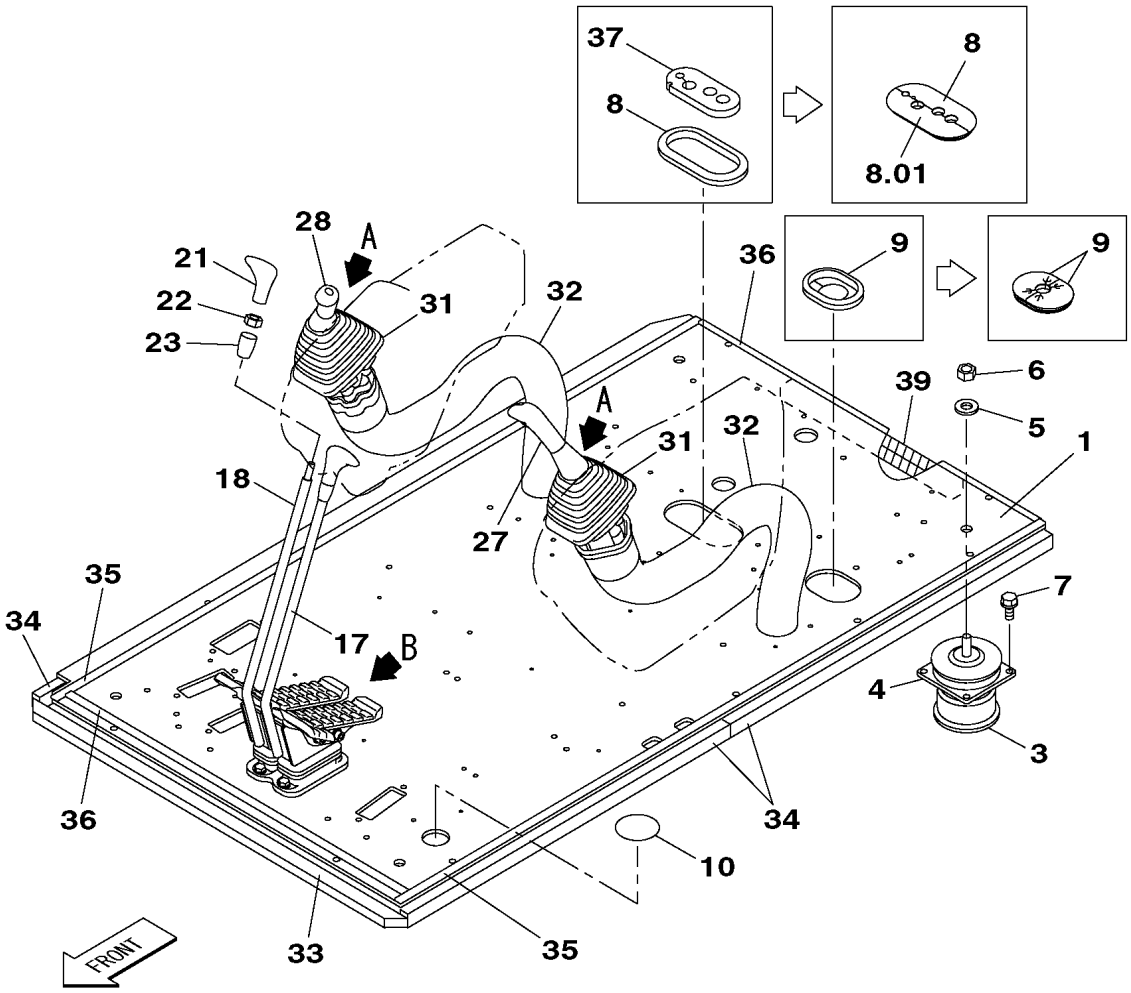

KG0HJ222-0
KHJ14490-EZ

https://truckmanualshub.com/

210A5 1101－1705 210L5 1101－1362

符号 ITEM	構成 COMPO	部品番号 PART NO.	部品名	PART NAME	個数 Q'TY	インナー	適用号機 SERIAL_NO.	互換 ICA	代替部品 REPLACEABLE PART
1	1	KHJ14080	ﾌﾛｱ	FLOOR	1				
2	1A	KHJ10440	ﾗﾊﾞｰ;ﾏｳﾝﾄ (ﾘｭｰﾀｲ)	RUBBER;MOUNT	4				
3	2	KHJ11100	ﾗﾊﾞｰ;ﾏｳﾝﾄ (ﾎﾝﾀｲ)	RUBBER;MOUNT	4				
4	2	KHJ11110	ﾌﾟﾚｰﾄ	PLATE	4				
5	1	KHN0243	ﾜｯｼｬ ﾄｸｼｭ	WASHER;SPL	4				
6	1	162R016VR	ｺｳﾘｷN M16	NUT;HIGH STRENGTH	4				
7	1	KHN3029	ﾎﾞﾙﾄ ｻﾞｶﾞﾈ ｸﾐｺﾐ	BOLT;SPL	16			<	KHN3009
7	1	KHN3009	ﾎﾞﾙﾄ ｻﾞｶﾞﾈ ｸﾐｺﾐ	BOLT;SPL	16				
8	1	KHJ1375	ｸﾞﾛﾒｯﾄ;ﾗﾊﾞｰ ﾏｸﾂｷ	GROMMET;RUBBER	1		210A5 -1298 210L5 -1213		
8	1	KHJ18060	ｸﾞﾛﾒｯﾄ;ﾗﾊﾞｰ ｴｱｺﾝﾎｰｽｦ	GROMMET;RUBBER	1		210A5 1299- 210L5 1214-		
8.01	1	KHJ18070	ｸﾞﾛﾒｯﾄ;ﾗﾊﾞｰ ｴｱｺﾝﾎｰｽｦ	GROMMET;RUBBER	1		210A5 1299- 210L5 1214-		
9	1	KHJ0950	ｸﾞﾛﾒｯﾄ;ﾗﾊﾞｰ ﾏｸﾂｷ	GROMMET;RUBBER	1		210A5 -1298 210L5 -1213		
9	1	KHJ18080	ｸﾞﾛﾒｯﾄ;ﾗﾊﾞｰ ﾊｰﾈｽｦｳ	GROMMET;RUBBER	2		210A5 1299- 210L5 1214-		
10	1	KHJ14570	ｸﾞﾛﾒｯﾄ;ﾗﾊﾞｰ (ﾐｽﾞﾇｷｱﾅ	GROMMET;RUBBER	1				
11	1	KRJ5803	ﾊﾞﾙﾌﾞ;ﾘﾓｺﾝ	VALVE;REMOTE CONT	1	*	210A5 -1489 210L5 -1285	=	KHJ19270
11	1	KHJ19270	ﾊﾞﾙﾌﾞ;ﾘﾓｺﾝ (ｿｳｺｳﾖｳ)	VALVE;REMOTE CONT	1	*	210A5 1490- 210L5 1286-		
12	1	105R010Y025R	ｾﾑｽB M10X 25	BOLT;SEMS	4				
13	1	KHJ13840	ﾍﾟﾀﾞﾙ ｿｳｺｳ(L)	PEDAL	1				
14	1	KHJ13830	ﾍﾟﾀﾞﾙ ｿｳｺｳ(R)	PEDAL	1				
15	1	KHJ1820	ﾛｯｶｸｱﾅB M10X25 ｸﾛﾒｯｷ	BOLT;HEX SOC HD	4				
16	1	KHJ0183	ｺｳﾘｷW 10 (ｸﾛﾒｯｷ)	WASHER;HIGH STRENGTH	4				
17	1	KHJ14430	ﾚﾊﾞｰ ｿｳｺｳ(ﾋﾀﾞﾘ)	LEVER	1				
18	1	KHJ14440	ﾚﾊﾞｰ ｿｳｺｳ(ﾐｷﾞ)	LEVER	1				
19	1	KHJ1104	ﾛｯｶｸｱﾅB M10X20 ｸﾛﾒｯｷ	BOLT;HEX SOC HD	4				
20	1	KHJ0183	ｺｳﾘｷW 10 (ｸﾛﾒｯｷ)	WASHER;HIGH STRENGTH	4				
21	1	KHJ2896	ﾉﾌﾞ ｿｳｺｳ ﾌﾞﾗｯｸ	KNOB	2				
22	1	KHJ0096	ｺｳﾘｷN M12X1.25 ｸﾛﾒｯｷ	NUT;HIGH STRENGTH	2				
23	1	KHJ2897	ｷｬｯﾌﾟ ｿｳｺｳﾉﾌﾞ ﾌﾞﾗｯｸ	CAP;SPL	2				
24	1	KHJ13270	ﾊﾞﾙﾌﾞ;ﾘﾓｺﾝ (ｻｷﾞｮｳﾖｳ)	VALVE;REMOTE CONT	2	*			
25	1	108R006Y020R	ﾛｯｶｸｱﾅB M 6X 20	BOLT;HEX SOC HD	8		210A5 NOT USED 210L5 NOT USED	<	108R006Y025R
25	1	108R006Y025R	ﾛｯｶｸｱﾅB M 6X 25	BOLT;HEX SOC HD	10				
26	1	184-006VR	ﾎｳｹｲSW 6	WASHER;SPRING	8		210A5 NOT USED 210L5 NOT USED	<	184-006VR
26	1	184-006VR	ﾎｳｹｲSW 6	WASHER;SPRING	10				
27	1	KHJ14450	ﾉﾌﾞ (ﾋﾀﾞﾘ) 2ｽｲｯﾁ ﾌﾞﾗ	KNOB	1				
28	1	KHJ14460	ﾉﾌﾞ (ﾐｷﾞ) 2ｽｲｯﾁ ﾌﾞﾗｯ	KNOB	1				
29	1	KHJ0439	ﾄﾒN M14	NUT;JAM	2				
30	1	KHJ0498	ｷｬｯﾌﾟ;ﾋﾞﾆｰﾙ	CAP;VINYL	2				
31	1	KHN3585	ﾌﾞｰﾂ ﾌﾞﾗｯｸ	BOOT	2				
32	1	KHJ14470	ｶﾞｰﾄﾞ;ﾎｰｽ	GUARD;HOSE	2				
33	1	KHJ10640	ｼｰﾙ;ｸｯｼｮﾝ	SEAL;CUSHION	1				
34	1	KHJ12660	ｼｰﾙ;ｸｯｼｮﾝ	SEAL;CUSHION	3				
35	1	KHJ13580	ｼｰﾙ;ｸｯｼｮﾝ	SEAL;CUSHION	2				
36	1	KHJ13590	ｼｰﾙ;ｸｯｼｮﾝ	SEAL;CUSHION	2				
37	1	KHJ13560	ｼｰﾙ;ｸｯｼｮﾝ	SEAL;CUSHION	1		210A5 -1298 210L5 -1213		
38	1	KHJ13910	ｼｰﾙ;ｸｯｼｮﾝ	SEAL;CUSHION	1				
39	1	KLN0257	ｼｰﾙ;ｸｯｼｮﾝ	SEAL;CUSHION	1				

https://truckmanualshub.com/

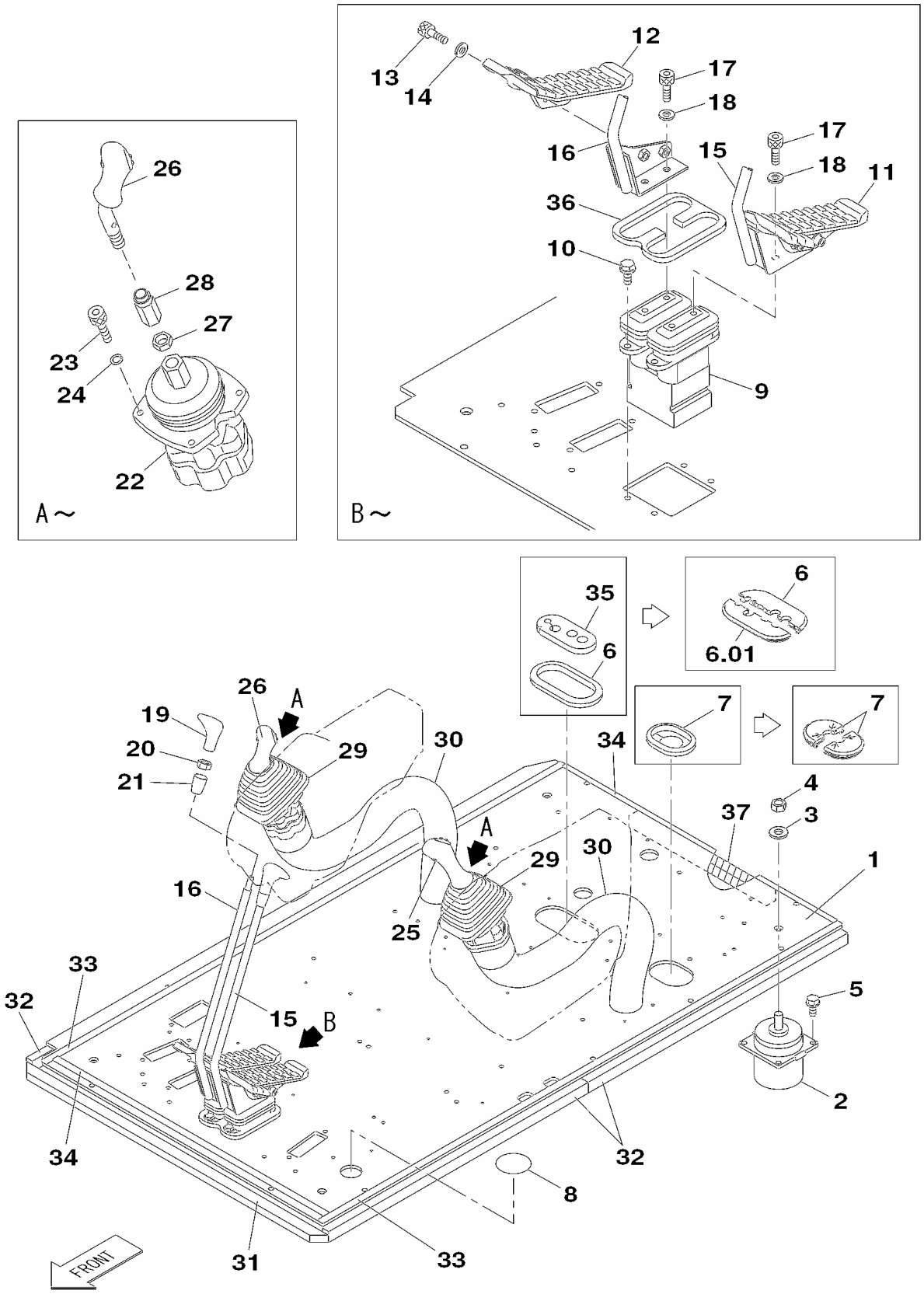

KG0HJ214-0
KHJ14490-EZ

https://truckmanualshub.com/

210A5 1706－　　210L5 1363－

符号 ITEM	構成 COMPO	部品番号 PART NO.	部品名	PART NAME	個数 Q'TY	インナー	適用号機 SERIAL_NO.	互換 ICA	代替部品 REPLACEABLE PART
1	1	KHJ14080	ﾌﾛｱ	FLOOR	1				
2	1	KHJ12900	ﾗﾊﾞｰ;ﾏｳﾝﾄ (ﾘｭｰﾀｲ)	RUBBER;MOUNT	4				
3	1	KHN0243	ﾜｯｼｬ ﾄｸｼｭ	WASHER;SPL	4				
4	1	162R016VR	ｺｳﾘｷN M16	NUT;HIGH STRENGTH	4				
5	1	KHN3029	ﾎﾞﾙﾄ ｻﾞｶﾞﾈ ｸﾐｺﾐ	BOLT;SPL	16			<	KHN3009
5	1	KHN3009	ﾎﾞﾙﾄ ｻﾞｶﾞﾈ ｸﾐｺﾐ	BOLT;SPL	16				
6	1	KHJ1375	ｸﾞﾛﾒｯﾄ;ﾗﾊﾞｰ ﾏｸﾂｷ	GROMMET;RUBBER	1		210A5 NOT USED 210L5 NOT USED		
6	1	KHJ18060	ｸﾞﾛﾒｯﾄ;ﾗﾊﾞｰ ｴｱｺﾝﾎｰｽﾖ	GROMMET;RUBBER	1				
6.01	1	KHJ18070	ｸﾞﾛﾒｯﾄ;ﾗﾊﾞｰ ｴｱｺﾝﾎｰｽﾖ	GROMMET;RUBBER	1				
7	1	KHJ0950	ｸﾞﾛﾒｯﾄ;ﾗﾊﾞｰ ﾏｸﾂｷ	GROMMET;RUBBER	1		210A5 NOT USED 210L5 NOT USED		
7	1	KHJ18080	ｸﾞﾛﾒｯﾄ;ﾗﾊﾞｰ ﾊｰﾈｽﾖｳ	GROMMET;RUBBER	2				
8	1	KHJ14570	ｸﾞﾛﾒｯﾄ;ﾗﾊﾞｰ (ﾐｽﾞﾇｷｱﾅ	GROMMET;RUBBER	1				
9	1	KRJ5803	ﾊﾞﾙﾌﾞ;ﾘﾓｺﾝ	VALVE;REMOTE CONT	1	*	210A5 NOT USED 210L5 NOT USED	=	KHJ19270
9	1	KHJ19270	ﾊﾞﾙﾌﾞ;ﾘﾓｺﾝ (ｿｳｺｳﾖｳ)	VALVE;REMOTE CONT	1	*			
10	1	105R010Y025R	ｾﾑｽB M10X 25	BOLT;SEMS	4				
11	1	KHJ13840	ﾍﾟﾀﾞﾙ ｿｳｺｳ(L)	PEDAL	1				
12	1	KHJ13830	ﾍﾟﾀﾞﾙ ｿｳｺｳ(R)	PEDAL	1				
13	1	KHJ1820	ﾛｯｶｸｱﾅB M10X25 ｸﾛﾒｯｷ	BOLT;HEX SOC HD	4				
14	1	KHJ0183	ｺｳﾘｷW 10 (ｸﾛﾒｯｷ)	WASHER;HIGH STRENGTH	4				
15	1	KHJ14430	ﾚﾊﾞｰ ｿｳｺｳ(ﾋﾀﾞﾘ)	LEVER	1				
16	1	KHJ14440	ﾚﾊﾞｰ ｿｳｺｳ(ﾐｷﾞ)	LEVER	1				
17	1	KHJ1104	ﾛｯｶｸｱﾅB M10X20 ｸﾛﾒｯｷ	BOLT;HEX SOC HD	4				
18	1	KHJ0183	ｺｳﾘｷW 10 (ｸﾛﾒｯｷ)	WASHER;HIGH STRENGTH	4				
19	1	KHJ2896	ﾉﾌﾞ ｿｳｺｳ ﾌﾞﾗｯｸ	KNOB	2				
20	1	KHJ0096	ｺｳﾘｷN M12X1.25 ｸﾛﾒｯｷ	NUT;HIGH STRENGTH	2				
21	1	KHJ2897	ｷｬｯﾌﾟ ｿｳｺｳﾉﾌﾞ ﾌﾞﾗｯｸ	CAP;SPL	2				
22	1	KHJ13270	ﾊﾞﾙﾌﾞ;ﾘﾓｺﾝ (ｻｷﾞｮｳﾖｳ)	VALVE;REMOTE CONT	2	*			
23	1	108R006Y025R	ﾛｯｶｸｱﾅB M 6X 25	BOLT;HEX SOC HD	10				
24	1	184-006VR	ﾎｳｹｲSW 6	WASHER;SPRING	10				
25	1	KHJ14450	ﾉﾌﾞ (ﾋﾀﾞﾘ) 2ｽｲｯﾁ ﾌﾞﾗ	KNOB	1				
26	1	KHJ14460	ﾉﾌﾞ (ﾐｷﾞ) 2ｽｲｯﾁ ﾌﾞﾗｯ	KNOB	1				
27	1	KHJ0439	ﾄﾒN M14	NUT;JAM	2				
28	1	KHJ0498	ｷｬｯﾌﾟ;ﾋﾞﾆｰﾙ	CAP;VINYL	2				
29	1	KHN3585	ﾌﾞｰﾂ ﾌﾞﾗｯｸ	BOOT	2				
30	1	KHJ14470	ｶﾞｰﾄﾞ;ﾎｰｽ	GUARD;HOSE	2				
31	1	KHJ10640	ｼｰﾙ;ｸｯｼｮﾝ	SEAL;CUSHION	1				
32	1	KHJ12660	ｼｰﾙ;ｸｯｼｮﾝ	SEAL;CUSHION	3				
33	1	KHJ13580	ｼｰﾙ;ｸｯｼｮﾝ	SEAL;CUSHION	2				
34	1	KHJ13590	ｼｰﾙ;ｸｯｼｮﾝ	SEAL;CUSHION	2				
35	1	KHJ13560	ｼｰﾙ;ｸｯｼｮﾝ	SEAL;CUSHION	1		210A5 NOT USED 210L5 NOT USED		
36	1	KHJ13910	ｼｰﾙ;ｸｯｼｮﾝ	SEAL;CUSHION	1				
37	1	KLN0257	ｼｰﾙ;ｸｯｼｮﾝ	SEAL;CUSHION	1				

https://truckmanualshub.com/

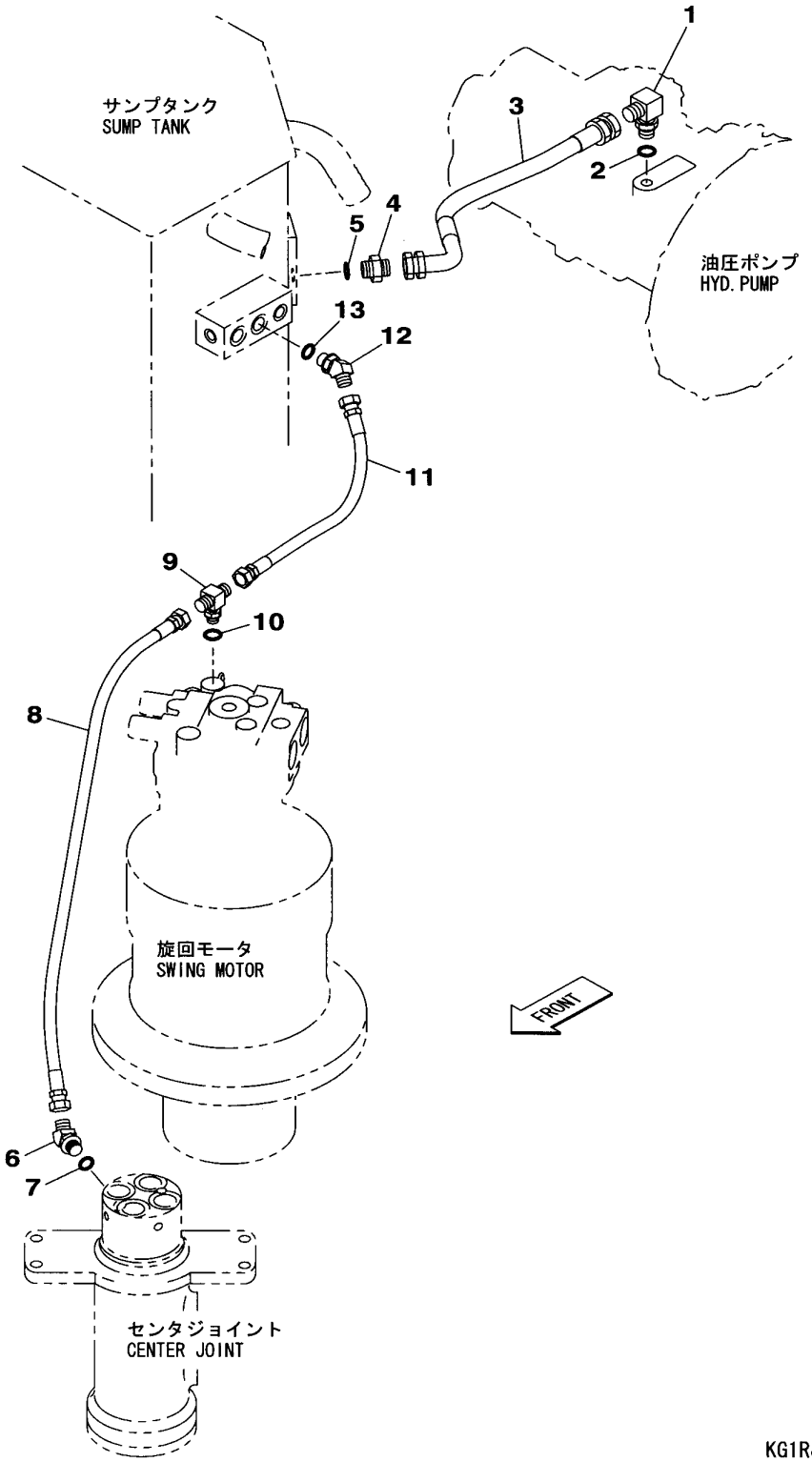

KG1RJ425-0
KRJ11080-EZ

https://truckmanualshub.com/

210A5 1101－ 210L5 1101－

符号 ITEM	構成 COMPO	部品番号 PART NO.	部品名	PART NAME	個数 Q'TY	ｲﾝﾅｰ	適用号機 SERIAL_NO.	互換 ICA	代替部品 REPLACEABLE PART
1	1A	KHJ0344	ｴﾙﾎﾞ HL204-060 G3/4	ELBOW	1				
2	2	UBJ0158	O-ﾘﾝｸﾞ 1B-P24	O-RING	1				
3	1	KRJ11180	ﾎｰｽ;ﾕｱﾂ SIB70-19X520	HOSE;HYD	1				
4	1A	KNJ0605	ｱﾀﾞﾌﾟﾀ;ﾎｰｽ HA208-06	ADAPTER;HOSE	1				
5	2	UBJ0158	O-ﾘﾝｸﾞ 1B-P24	O-RING	1				
6	1A	KHJ0350	ｴﾙﾎﾞ HL205-040 G1/2	ELBOW	1				
7	2	UBJ0157	O-ﾘﾝｸﾞ 1B-P18	O-RING	1				
8	1	CPJ0734	ﾎｰｽ;ﾕｱﾂ IB55X12X900	HOSE;HYD	1				
9	1A	KHJ1157	ﾁｰ	TEE	1				
10	2	BRP0007	O-ﾘﾝｸﾞ 1B-P14	O-RING	1				
11	1	KHJ11140	ﾎｰｽ;ﾕｱﾂ SIB70-12X550	HOSE;HYD	1				
12	1A	KHJ0350	ｴﾙﾎﾞ HL205-040 G1/2	ELBOW	1				
13	2	UBJ0157	O-ﾘﾝｸﾞ 1B-P18	O-RING	1				

https://truckmanualshub.com/

1[2,3]

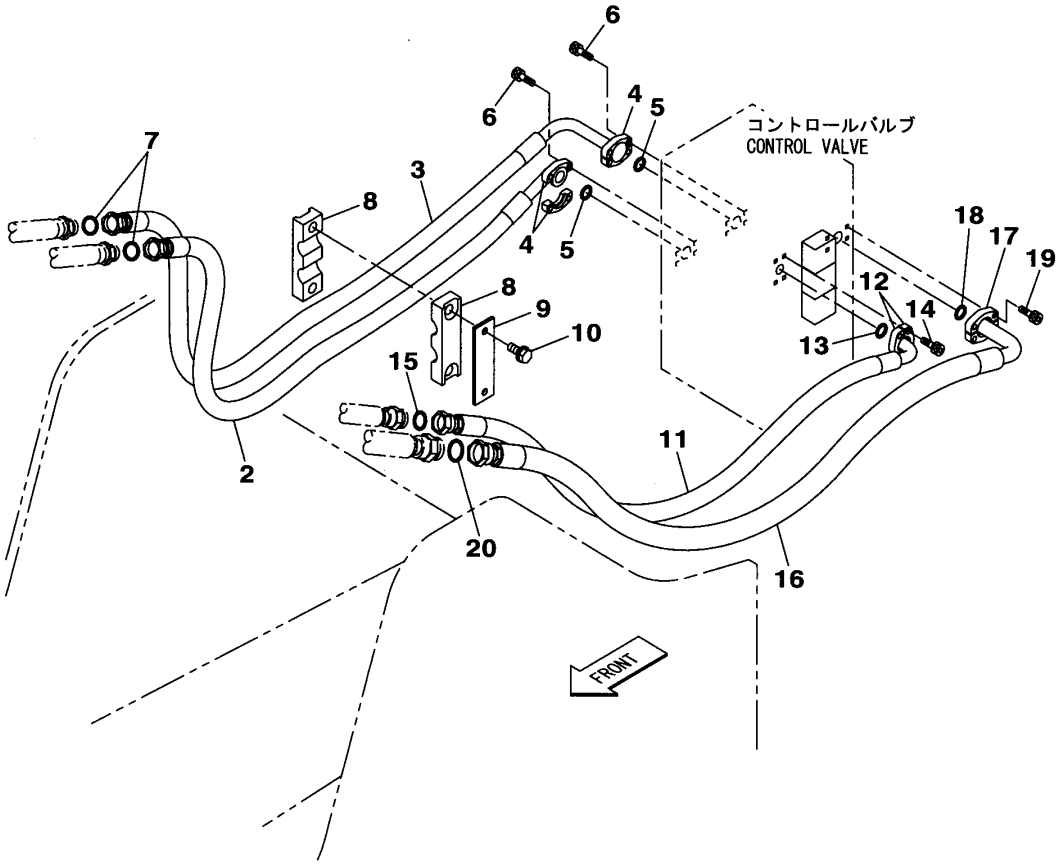

KG1RJ422-0
KRJ11070-DZ

https://truckmanualshub.com/

210A5 1101－1779 210L5 1101－1392

符号 ITEM	構成 COMPO	部品番号 PART NO.	部品名	PART NAME	個数 Q'TY	ｲﾝﾅｰ	適用号機 SERIAL_NO.	互換 ICA	代替部品 REPLACEABLE PART
1	1A	KRJ11200	ﾎｰｽ ｸﾐﾀﾃ (ｺﾞﾑﾎｰｽ)	HOSE SPL	1				
2	2	KRJ10820	ﾎｰｽ;ﾕｱｯ S15-19X1700	HOSE;HYD	1				
3	2	KRJ10830	ﾎｰｽ;ﾕｱｯ S15-19X1670	HOSE;HYD	1				
4	1	KRJ2681	ﾌﾗﾝｼﾞ;ｽﾌﾟﾘｯﾄ 3/4	FLANGE;SPLIT	4				
5	1	KHJ0913	O-ﾘﾝｸﾞ AN6227-19(JIS	O-RING	2				
6	1	108R010Y030R	ﾛｯｶｸｱﾅB M10X 30	BOLT;HEX SOC HD	8				
7	1	KHJ1360	O-ﾘﾝｸﾞ AS568-018	O-RING	2				
8	1	KRJ10860	ｸﾗﾝﾌﾟ;ﾎｰｽ D30X2	CLAMP;HOSE	2				
9	1	KRJ10870	ﾌﾟﾚｰﾄ	PLATE	1				
10	1	105R010Y025R	ｾﾑｽB M10X 25	BOLT;SEMS	2				
11	1	KRJ10850	ﾎｰｽ;ﾕｱｯ S15-19X1240	HOSE;HYD	1				
12	1	KRJ2681	ﾌﾗﾝｼﾞ;ｽﾌﾟﾘｯﾄ 3/4	FLANGE;SPLIT	2				
13	1	KHJ0913	O-ﾘﾝｸﾞ AN6227-19(JIS	O-RING	1				
14	1	108R010Y030R	ﾛｯｶｸｱﾅB M10X 30	BOLT;HEX SOC HD	4				
15	1	KHJ1360	O-ﾘﾝｸﾞ AS568-018	O-RING	1				
16	1	KRJ10840	ﾎｰｽ;ﾕｱｯ S15-25X1420	HOSE;HYD	1				
17	1	KRJ2682	ﾌﾗﾝｼﾞ;ｽﾌﾟﾘｯﾄ 1 (STD	FLANGE;SPLIT	2				
18	1	KHJ0914	O-ﾘﾝｸﾞ AN6227-24(JIS	O-RING	1				
19	1	108R010Y030R	ﾛｯｶｸｱﾅB M10X 30	BOLT;HEX SOC HD	4				
20	1	KHJ1361	O-ﾘﾝｸﾞ AS568-021	O-RING	1				

https://truckmanualshub.com/

１［２，３］

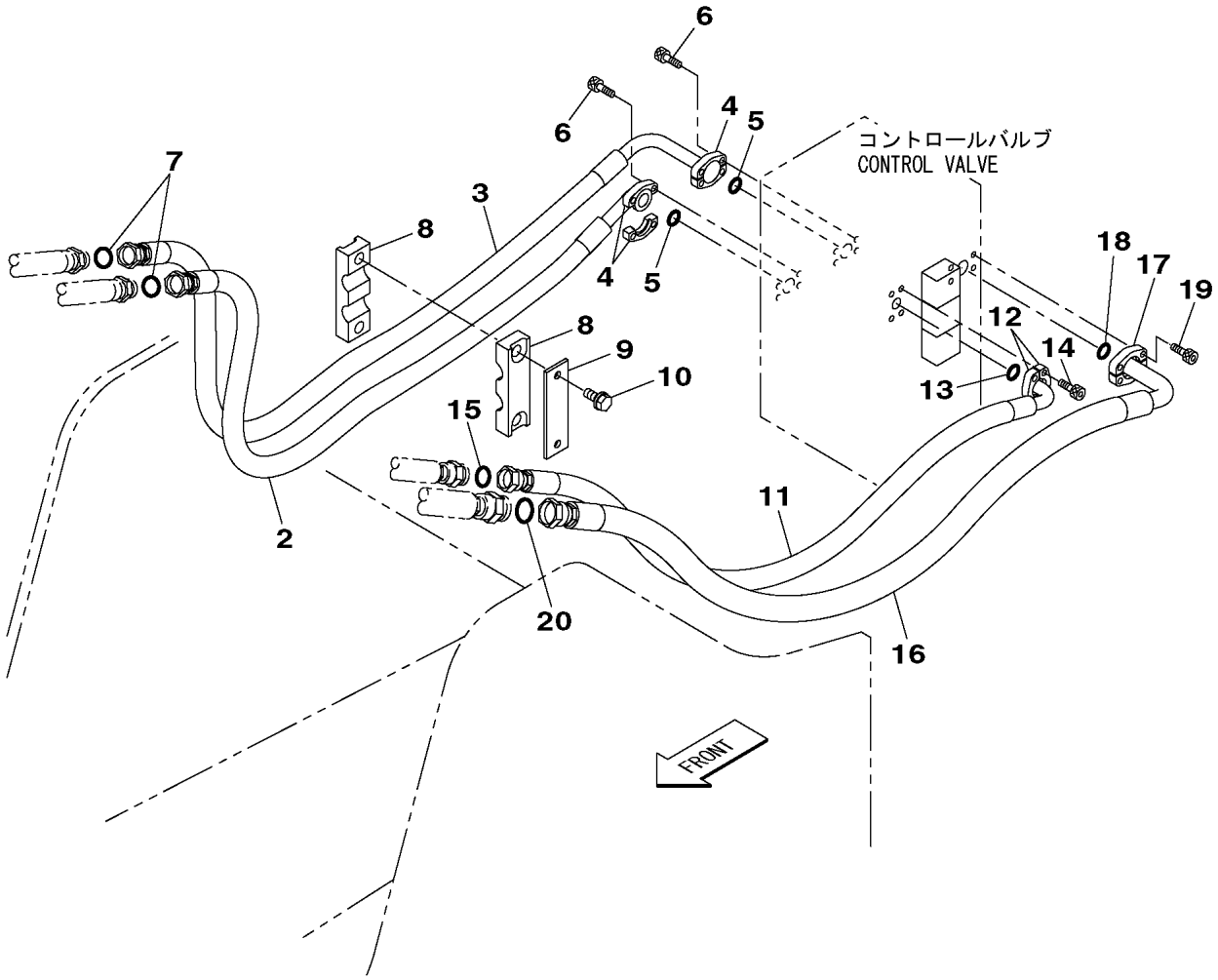

KG1RJ947-0
KRJ11070-DZ

https://truckmanualshub.com/

210A5 1780－　　210L5 1393－

符号 ITEM	構成 COMPO	部品番号 PART NO.	部品名	PART NAME	個数 Q'TY	ｲﾝﾅｰ	適用号機 SERIAL_NO.	互換 ICA	代替部品 REPLACEABLE PART
1	1A	KBJ10480	ﾎｰｽ ｸﾐﾀﾃ (ｺﾞﾑﾎｰｽ)	HOSE SPL	1				
2	2	KBJ10440	ﾎｰｽ;ﾕｱﾂ S15-19X1790	HOSE;HYD	1				
3	2	KBJ10450	ﾎｰｽ;ﾕｱﾂ S15-19X1760	HOSE;HYD	1				
4	1	KRJ2681	ﾌﾗﾝｼﾞ;ｽﾌﾟﾘｯﾄ 3/4	FLANGE;SPLIT	4				
5	1	KHJ0913	O-ﾘﾝｸﾞ AN6227-19(JIS	O-RING	2				
6	1	108R010Y030R	ﾛｯｶｸｱﾅB M10X 30	BOLT;HEX SOC HD	8				
7	1	KHJ1360	O-ﾘﾝｸﾞ AS568-018	O-RING	2				
8	1	KRJ10860	ｸﾗﾝﾌﾟ;ﾎｰｽ D30X2	CLAMP;HOSE	2				
9	1	KRJ10870	ﾌﾟﾚｰﾄ	PLATE	1				
10	1	105R010Y025R	ｾﾑｽB M10X 25	BOLT;SEMS	2				
11	1	KRJ23310	ﾎｰｽ;ﾕｱﾂ S15-19X1300	HOSE;HYD	1				
12	1	KRJ2681	ﾌﾗﾝｼﾞ;ｽﾌﾟﾘｯﾄ 3/4	FLANGE;SPLIT	2				
13	1	KHJ0913	O-ﾘﾝｸﾞ AN6227-19(JIS	O-RING	1				
14	1	108R010Y030R	ﾛｯｶｸｱﾅB M10X 30	BOLT;HEX SOC HD	4				
15	1	KHJ1360	O-ﾘﾝｸﾞ AS568-018	O-RING	1				
16	1	KRJ23320	ﾎｰｽ;ﾕｱﾂ S15-25X1480	HOSE;HYD	1				
17	1	KRJ2682	ﾌﾗﾝｼﾞ;ｽﾌﾟﾘｯﾄ 1 (STD	FLANGE;SPLIT	2				
18	1	KHJ0914	O-ﾘﾝｸﾞ AN6227-24(JIS	O-RING	1				
19	1	108R010Y030R	ﾛｯｶｸｱﾅB M10X 30	BOLT;HEX SOC HD	4				
20	1	KHJ1361	O-ﾘﾝｸﾞ AS568-021	O-RING	1				

https://truckmanualshub.com/

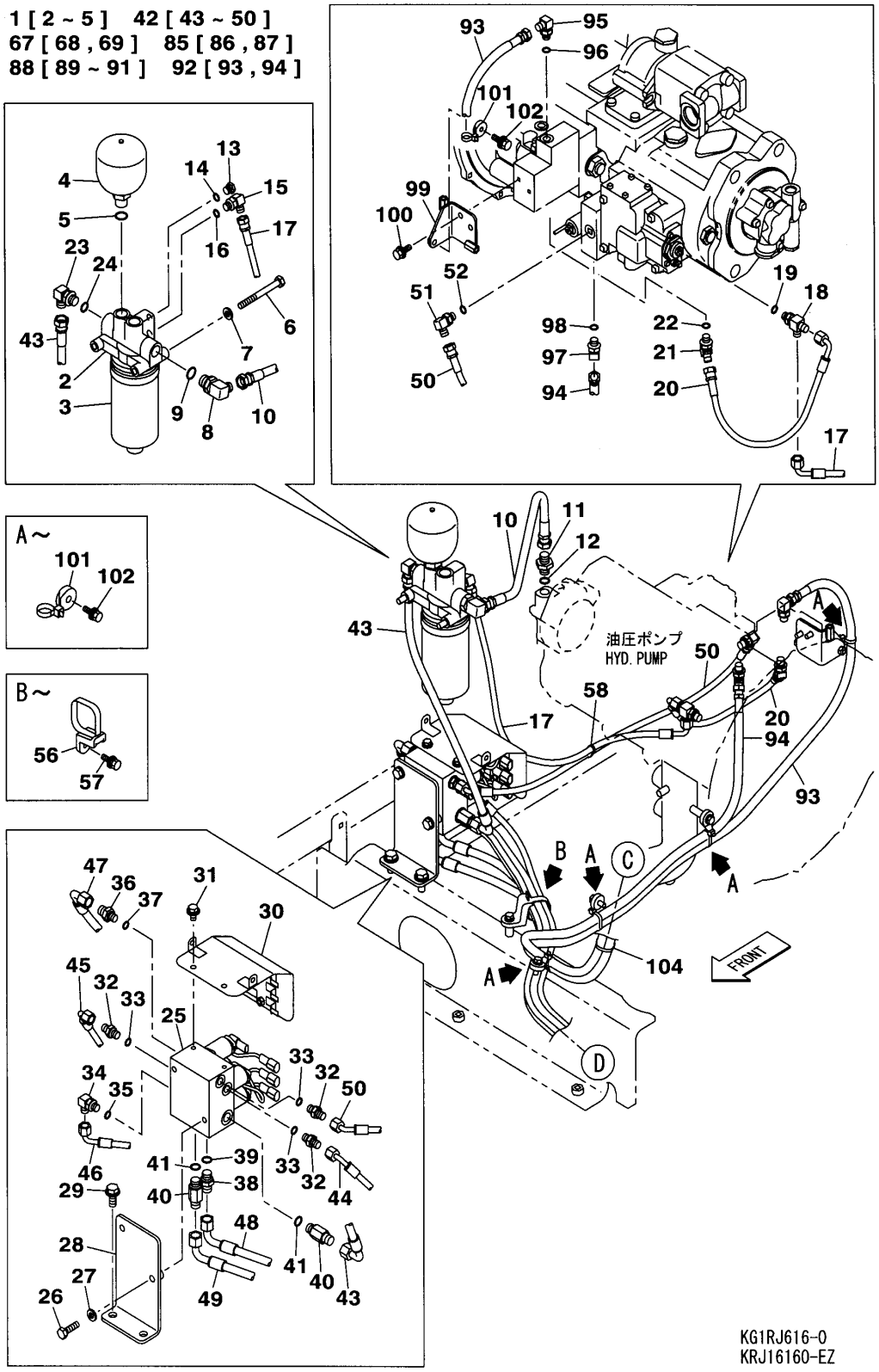

https://truckmanualshub.com/

210A5 1101－　　210L5 1101－

符号 ITEM	構成 COMPO	部品番号 PART NO.	部品名	PART NAME	個数 Q'TY	ｲﾝﾅｰ	適用号機 SERIAL_NO.	互換 ICA	代替部品 REPLACEABLE PART
1	1A	KHJ10930	ｱｷｭﾑﾚｰﾀ ｸﾐﾀﾃ	ACCUMLATOR	1				
2	2A	KHJ10940	ﾏﾆﾎｰﾙﾄﾞ (ﾌｨﾙﾀｯｷ)	MANIFOLD	1				
3	3	KHJ10950	ｴﾚﾒﾝﾄ;ｵｲﾙﾌｲﾙﾀ	ELEMENT;OIL FILTER	1				
4	2A	KHJ2359	ｱｷｭﾑﾚｰﾀ	ACCUMLATOR	1				
5	3	UBJ0157	O-ﾘﾝｸﾞ 1B-P18	O-RING	1				
6	1	102R010Y100R	ｺｳﾘｷB M10X100	BOLT;HIGH STRENGTH	2				
7	1	KEH0114	ｺｳﾘｷW M10 ﾒｯｷ	WASHER;HIGH STRENGTH	2				
8	1A	KHJ0641	ｴﾙﾎﾞ G1/2(OR)X3/8	ELBOW	1				
9	2	UBJ0157	O-ﾘﾝｸﾞ 1B-P18	O-RING	1				
10	1	KHJ1306	ﾎｰｽ;ﾕｱﾂ SIB70-9X550.	HOSE;HYD	1				
11	1A	FAJ0225	ｱﾀﾞﾌﾟﾀ;ﾎｰｽ	ADAPTER;HOSE	1				
12	2	UBJ0157	O-ﾘﾝｸﾞ 1B-P18	O-RING	1				
13	1A	KHJ0363	ﾌﾟﾗｸﾞ G1/4	PLUG	1				
14	2	UEJ0360	O-ﾘﾝｸﾞ 1B-P11	O-RING	1				
15	1A	KHJ0341	ｴﾙﾎﾞ HL204-020 G1/4	ELBOW	1				
16	2	UEJ0360	O-ﾘﾝｸﾞ 1B-P11	O-RING	1				
17	1	KHJ2036	ﾎｰｽ;ﾅｲﾛﾝ 70-6X750 5	HOSE;NYLON	1				
18	1A	KHJ0869	ﾁｰ	TEE	1				
19	2	UEJ0360	O-ﾘﾝｸﾞ 1B-P11	O-RING	1				
20	1	KHJ2342	ﾎｰｽ;ﾅｲﾛﾝ 70-6X380 5+	HOSE;NYLON	1				
21	1A	KHJ0348	ｴﾙﾎﾞ HL205-020 G1/4	ELBOW	1				
22	2	UEJ0360	O-ﾘﾝｸﾞ 1B-P11	O-RING	1				
23	1A	KHJ0342	ｴﾙﾎﾞ HL204-030 G3/8	ELBOW	1				
24	2	BRP0007	O-ﾘﾝｸﾞ 1B-P14	O-RING	1				
25	1	KHJ14520	ﾊﾞﾙﾌﾞ;ｿﾚﾉｲﾄﾞ (5ﾚﾝ)	VALVE;SOLENOID	1	*			
26	1	102R010Y035R	ｺｳﾘｷB M10X 35	BOLT;HIGH STRENGTH	2				
27	1	KEH0114	ｺｳﾘｷW M10 ﾒｯｷ	WASHER;HIGH STRENGTH	2				
28	1	KHJ14960	ﾌﾞﾗｹｯﾄ	BRACKET	1				
29	1	105R012Y030R	ｾﾑｽB M12X 30	BOLT;SEMS	2				
30	1	KHJ14970	ｶﾊﾞｰ	COVER	1				
31	1	105R008Y016R	ｾﾑｽB M 8X 16	BOLT;SEMS	2				
32	1A	KNJ0758	ｱﾀﾞﾌﾟﾀ;ﾎｰｽ HA208-02	ADAPTER;HOSE	3				
33	2	UEJ0360	O-ﾘﾝｸﾞ 1B-P11	O-RING	3				
34	1A	KHJ0341	ｴﾙﾎﾞ HL204-020 G1/4	ELBOW	1				
35	2	UEJ0360	O-ﾘﾝｸﾞ 1B-P11	O-RING	1				
36	1A	KNJ1106	ｱﾀﾞﾌﾟﾀ;ﾎｰｽ (ｹｲﾁｶﾞｲ)	ADAPTER;HOSE	1				
37	2	UEJ0360	O-ﾘﾝｸﾞ 1B-P11	O-RING	1				
38	1A	KNJ0759	ｱﾀﾞﾌﾟﾀ;ﾎｰｽ HA208-03	ADAPTER;HOSE	1				
39	2	BRP0007	O-ﾘﾝｸﾞ 1B-P14	O-RING	1				
40	1A	KNJ1311	ｱﾀﾞﾌﾟﾀ;ﾎｰｽ	ADAPTER;HOSE	2				
41	2	BRP0007	O-ﾘﾝｸﾞ 1B-P14	O-RING	2				
42	1A	KRJ16120	ﾎｰｽ ｸﾐﾀﾃ(ｼﾞｭｳﾅﾝｾｲﾅｲﾛ	HOSE SPL	1				
43	2	KHJ2148	ﾎｰｽ;ﾅｲﾛﾝ 70-9X550 5+	HOSE;NYLON	1				
44	2	KHJ14920	ﾎｰｽ;ﾅｲﾛﾝ 70-6X1850 5	HOSE;NYLON	1				
45	2	KHJ2097	ﾎｰｽ;ﾅｲﾛﾝ 70-6X1750 5	HOSE;NYLON	1				
46	2	KHJ2166	ﾎｰｽ;ﾅｲﾛﾝ 70-6X2300 5	HOSE;NYLON	1				
47	2	KHJ14900	ﾎｰｽ;ﾅｲﾛﾝ 70-9X2600 5	HOSE;NYLON	1				
48	2	KHJ2107	ﾎｰｽ;ﾅｲﾛﾝ 70-9X2400 5	HOSE;NYLON	1				
49	2	KHJ11530	ﾎｰｽ;ﾅｲﾛﾝ 70-9X1250 5	HOSE;NYLON	1				
50	2	KHJ14910	ﾎｰｽ;ﾅｲﾛﾝ 70-6X800 5+	HOSE;NYLON	1				
51	1A	KHJ0341	ｴﾙﾎﾞ HL204-020 G1/4	ELBOW	2				
52	2	UEJ0360	O-ﾘﾝｸﾞ 1B-P11	O-RING	2				
53	1A	KHJ0605	ｴﾙﾎﾞ G1/4XG3/8	ELBOW	1				
54	2	UEJ0360	O-ﾘﾝｸﾞ 1B-P11	O-RING	1				
55	1	MMA1011	ｸｯｼｮﾝ;ﾗﾊﾞｰ 16X320	CUSHION;RUBBER	1				
56	1	KHR2581	ｸﾗﾝﾌﾟ ﾊﾞﾝﾄﾞﾂｷ(M)M8	CLAMP	1				
57	1	KHJ1215	ﾎﾞﾙﾄ ﾄｸｼｭ M8X25ｻﾞｶﾞﾈ	BOLT;SPL	1				
58	1	KHH0142	ﾊﾞﾝﾄﾞ;ｿｸｾﾝ L=250	BAND;HARNESS	5 AR				
59	1A	KHJ0341	ｴﾙﾎﾞ HL204-020 G1/4	ELBOW	2				

https://truckmanualshub.com/

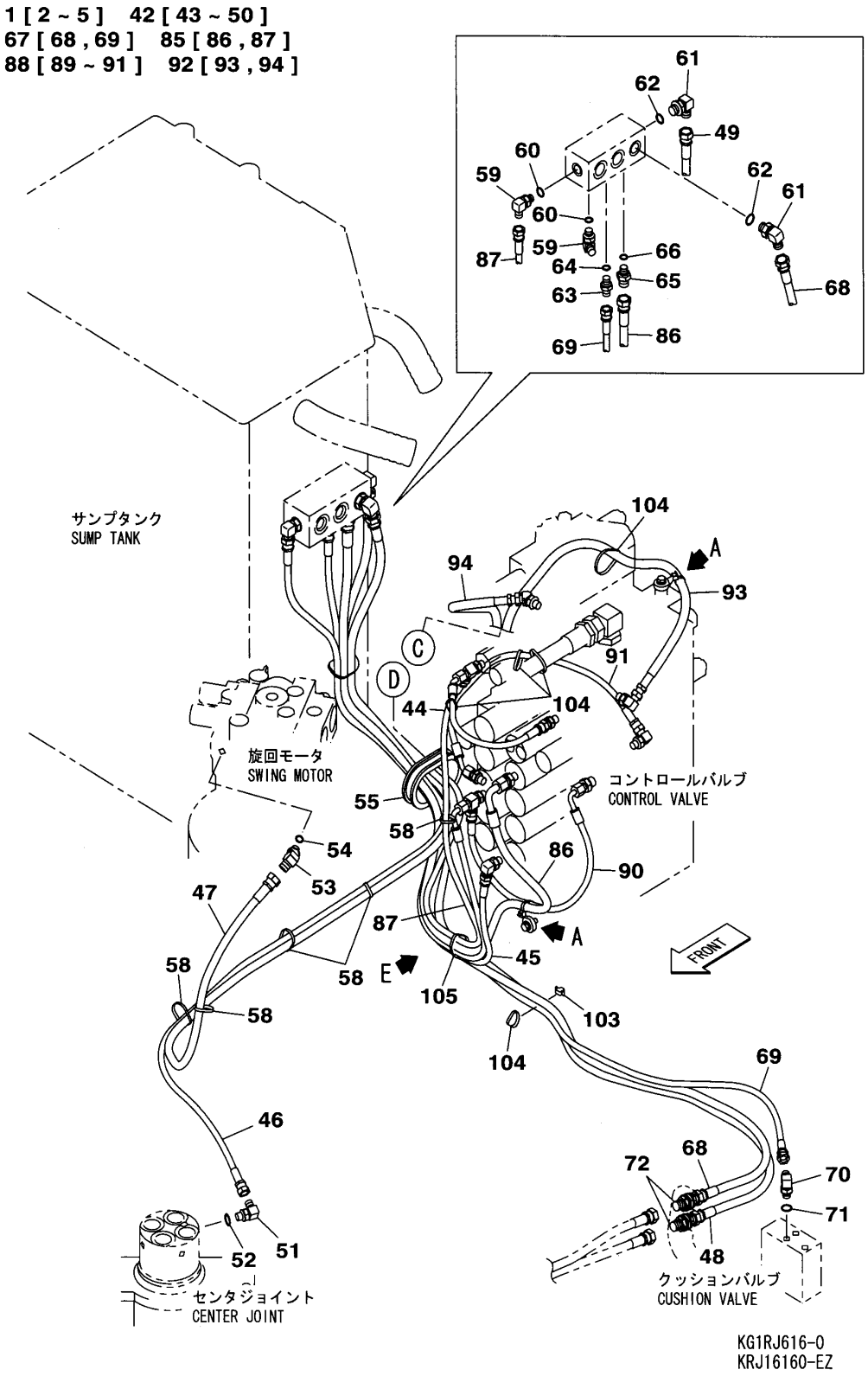

https://truckmanualshub.com/

210A5 1101－　　210L5 1101－

符号 ITEM	構成 COMPO	部品番号 PART NO.	部品名	PART NAME	個数 Q'TY	ｲﾝﾅｰ	適用号機 SERIAL_NO.	互換 ICA	代替部品 REPLACEABLE PART
60	2	UEJ0360	O-ﾘﾝｸﾞ 1B-P11	O-RING	2				
61	1A	KHJ0342	ｴﾙﾎﾞ HL204-030 G3/8	ELBOW	2				
62	2	BRP0007	O-ﾘﾝｸﾞ 1B-P14	O-RING	2				
63	1A	KNJ0758	ｱﾀﾞﾌﾟﾀ;ﾎｰｽ HA208-02	ADAPTER;HOSE	1				
64	2	UEJ0360	O-ﾘﾝｸﾞ 1B-P11	O-RING	1				
65	1A	KNJ1106	ｱﾀﾞﾌﾟﾀ;ﾎｰｽ (ｹｲﾁｶﾞｲ)	ADAPTER;HOSE	1				
66	2	UEJ0360	O-ﾘﾝｸﾞ 1B-P11	O-RING	1				
67	1A	KRJ11270	ﾎｰｽ ｸﾐﾀﾃ(ｼﾞｭｳﾅﾝｾｲﾅｲﾛ	HOSE SPL	1				
68	2	KHJ2625	ﾎｰｽ;ﾅｲﾛﾝ 70-9X2100 5	HOSE;NYLON	1				
69	2	KHJ2255	ﾎｰｽ;ﾅｲﾛﾝ 70-6X2100 5	HOSE;NYLON	1				
70	1A	KHJ0341	ｴﾙﾎﾞ HL204-020 G1/4	ELBOW	1				
71	2	UEJ0360	O-ﾘﾝｸﾞ 1B-P11	O-RING	1				
72	1	KHJ0506	ｱﾀﾞﾌﾟﾀ;ﾎｰｽ G3/8 ｶｸﾍｷ	ADAPTER;HOSE	2				
73	1A	KHJ0869	ﾁｰ	TEE	2				
74	2	UEJ0360	O-ﾘﾝｸﾞ 1B-P11	O-RING	2				
75	1A	KHJ0341	ｴﾙﾎﾞ HL204-020 G1/4	ELBOW	3				
76	2	UEJ0360	O-ﾘﾝｸﾞ 1B-P11	O-RING	3				
77	1A	KNJ0758	ｱﾀﾞﾌﾟﾀ;ﾎｰｽ HA208-02	ADAPTER;HOSE	2				
78	2	UEJ0360	O-ﾘﾝｸﾞ 1B-P11	O-RING	2				
79	1A	KAJ2176	ｱﾀﾞﾌﾟﾀ;ﾎｰｽ G3/8XG1/4	ADAPTER;HOSE	1				
80	2	BRP0007	O-ﾘﾝｸﾞ 1B-P14	O-RING	1				
81	1A	KNJ1106	ｱﾀﾞﾌﾟﾀ;ﾎｰｽ (ｹｲﾁｶﾞｲ)	ADAPTER;HOSE	1				
82	2	UEJ0360	O-ﾘﾝｸﾞ 1B-P11	O-RING	1				
83	1A	KHJ0348	ｴﾙﾎﾞ HL205-020 G1/4	ELBOW	1				
84	2	UEJ0360	O-ﾘﾝｸﾞ 1B-P11	O-RING	1				
85	1A	KRJ16130	ﾎｰｽ ｸﾐﾀﾃ(ｼﾞｭｳﾅﾝｾｲﾅｲﾛ	HOSE SPL	1				
86	2	KHJ2106	ﾎｰｽ;ﾅｲﾛﾝ 70-9X1600 5	HOSE;NYLON	1				
87	2	KHJ11170	ﾎｰｽ;ﾅｲﾛﾝ 70-6X1400 5	HOSE;NYLON	1				
88	1A	KRJ13000	ﾎｰｽ ｸﾐﾀﾃ(ｼﾞｭｳﾅﾝｾｲﾅｲﾛ	HOSE SPL	1				
89	2	KHJ11180	ﾎｰｽ;ﾅｲﾛﾝ 70-6X350 5+	HOSE;NYLON	1				
90	2	KHJ2181	ﾎｰｽ;ﾅｲﾛﾝ 70-6X580 5+	HOSE;NYLON	1				
91	2	KHJ2244	ﾎｰｽ;ﾅｲﾛﾝ 70-6X600 5+	HOSE;NYLON	1				
92	1A	KRJ16140	ﾎｰｽ ｸﾐﾀﾃ(ﾀｲﾏﾓｳｾｲｺﾞﾑﾎ	HOSE SPL	1				
93	2	KHJ1231	ﾎｰｽ;ﾕｱﾂ (SSC70-6X180	HOSE;HYD	1				
94	2	KHJ12370	ﾎｰｽ;ﾕｱﾂ 70-06X2650 5	HOSE;HYD	1				
95	1A	KHJ0341	ｴﾙﾎﾞ HL204-020 G1/4	ELBOW	1				
96	2	UEJ0360	O-ﾘﾝｸﾞ 1B-P11	O-RING	1				
97	1A	KHJ0348	ｴﾙﾎﾞ HL205-020 G1/4	ELBOW	1				
98	2	UEJ0360	O-ﾘﾝｸﾞ 1B-P11	O-RING	1				
99	1	KRJ16150	ﾌﾞﾗｹｯﾄ	BRACKET	1				
100	1	105R008Y020R	ｾﾑｽB M 8X 20	BOLT;SEMS	2				
101	1	KHR2584	ｸﾗﾝﾌﾟ ﾊﾞﾝﾄﾞﾂｷ(S)M8	CLAMP	6				
102	1	KHJ1215	ﾎﾞﾙﾄ ﾄｸｼｭ M8X25ｻﾞｶﾞﾈ	BOLT;SPL	6				
103	1	KHR10220	ｸﾗﾝﾌﾟ ﾏｳﾝﾄ	CLAMP;SPL	1				
104	1	KHH0142	ﾊﾞﾝﾄﾞ;ｿｸｾﾝ L=250	BAND;HARNESS	6 AR				
105	1	KHH0143	ﾊﾞﾝﾄﾞ;ｿｸｾﾝ L=300	BAND;HARNESS	1 AR				

https://truckmanualshub.com/

1 [2 ~ 5] 42 [43 ~ 50]
67 [68 , 69] 85 [86 , 87]
88 [89 ~ 92] 92 [93 , 94]

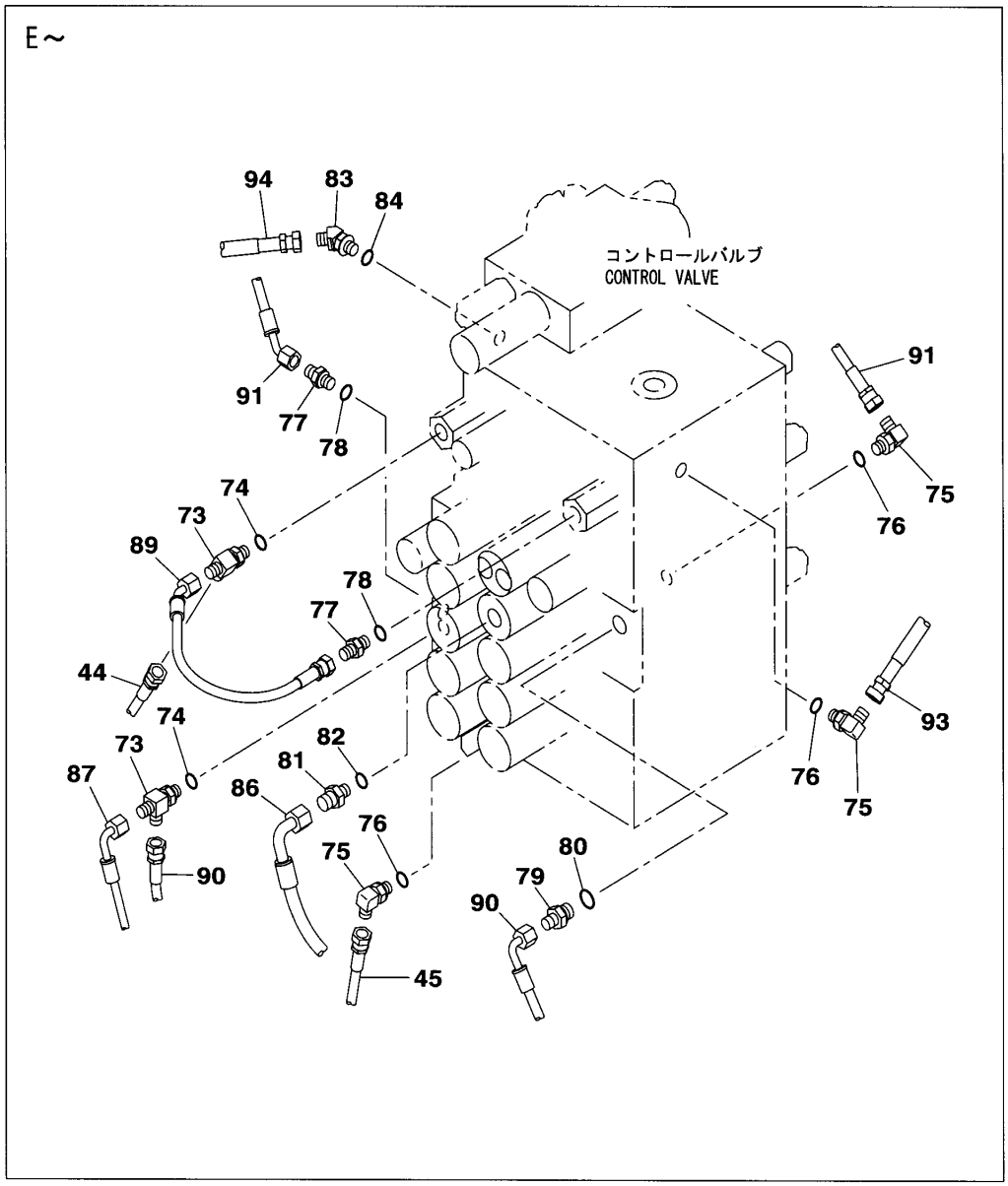

KG1RJ616-0
KRJ16160-EZ

https://truckmanualshub.com/

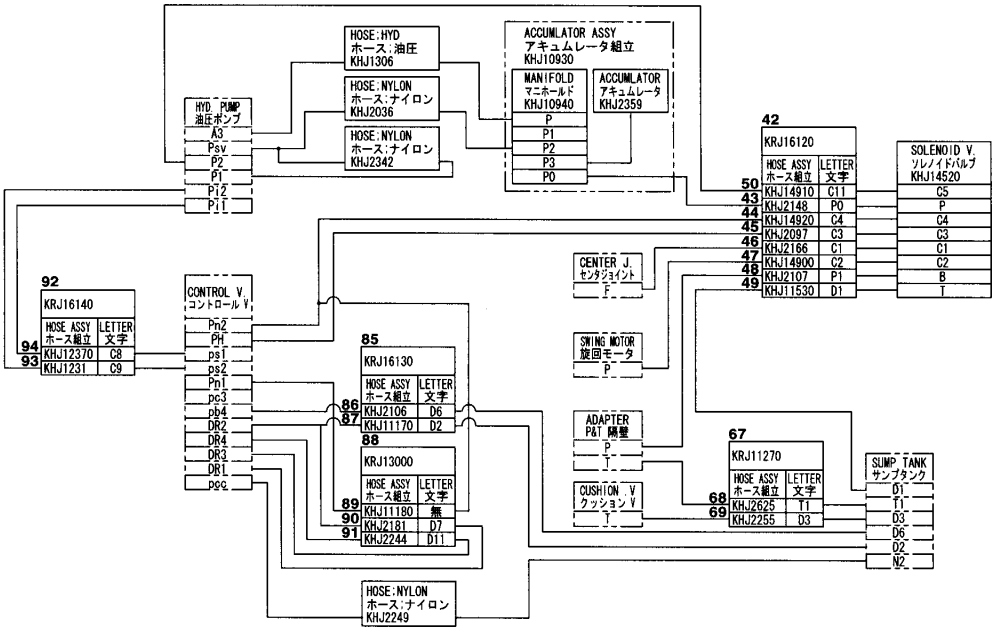

KG1RJ616-0
KRJ16160-EZ

https://truckmanualshub.com/

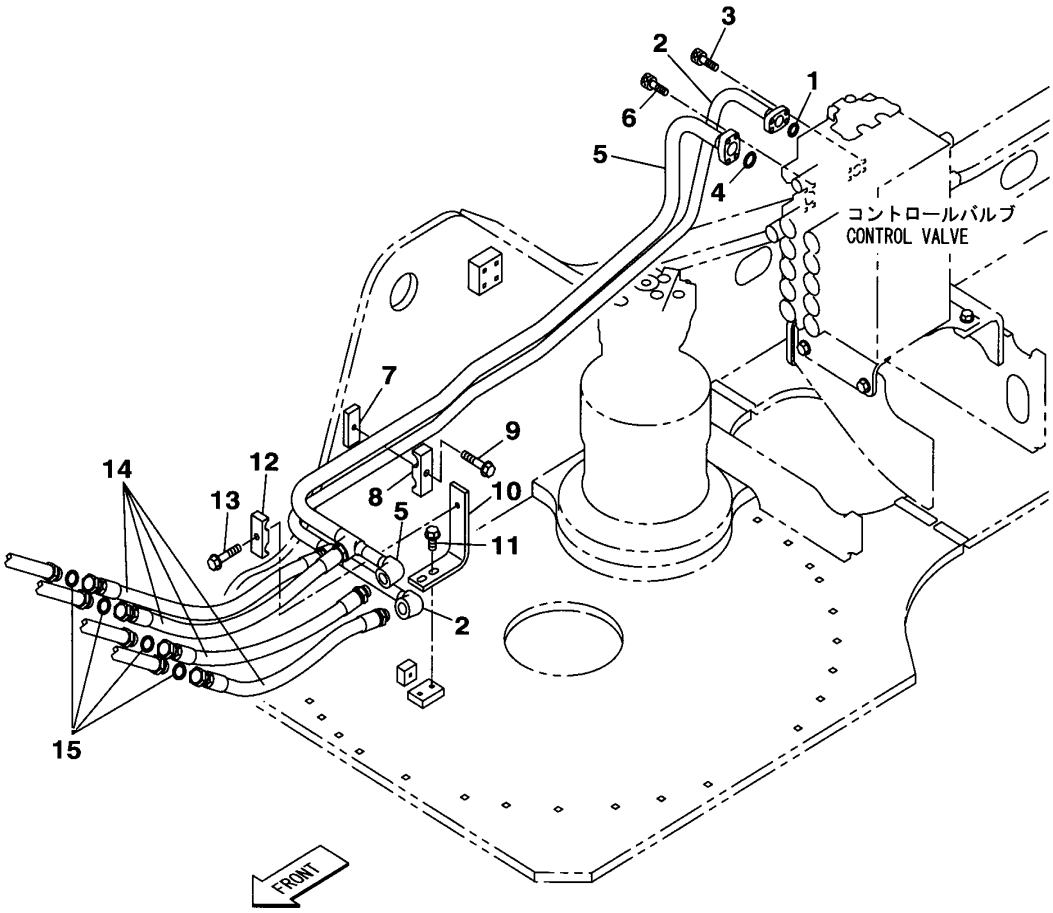

KG1RJ421-0
KRJ11060-DZ

https://truckmanualshub.com/

210A5 1101－ 210L5 1101－

符号 ITEM	構成 COMPO	部品番号 PART NO.	部品名	PART NAME	個数 Q'TY	ｲﾝﾅｰ	適用号機 SERIAL_NO.	互換 ICA	代替部品 REPLACEABLE PART
1	1	KHJ0913	O-ﾘﾝｸﾞ AN6227-19(JIS	O-RING	1				
2	1	KRJ10890	ﾊｲｶﾝｸﾐﾀﾃ	TUBE;ASSY	1				
3	1	108R010Y030R	ﾛｯｶｸｱﾅB M10X 30	BOLT;HEX SOC HD	4				
4	1	KHJ0914	O-ﾘﾝｸﾞ AN6227-24(JIS	O-RING	1				
5	1	KRJ10880	ﾊｲｶﾝｸﾐﾀﾃ	TUBE;ASSY	1				
6	1	108R010Y035R	ﾛｯｶｸｱﾅB M10X 35	BOLT;HEX SOC HD	4				
7	1	KRJ10720	ﾌﾟﾚｰﾄ	PLATE	1				
8	1	KBJ1595	ｸﾗﾝﾌﾟ;ﾊﾟｲﾌﾟ (27.2-34	CLAMP;PIPE	1				
9	1	105R012Y060R	ｾﾑｽB M12X 60	BOLT;SEMS	1				
10	1	KRJ10900	ﾌﾞﾗｹｯﾄ	BRACKET	1				
11	1	105R012Y030R	ｾﾑｽB M12X 30	BOLT;SEMS	2				
12	1	KRJ0727	ｸﾗﾝﾌﾟ;ﾊﾟｲﾌﾟ (2-27.2)	CLAMP;PIPE	1				
13	1	105R012Y060R	ｾﾑｽB M12X 60	BOLT;SEMS	1				
14	1	KRJ11330	ﾎｰｽ;ﾕｱﾂ S15-19X810 O	HOSE;HYD	4				
15	1	KHJ1360	O-ﾘﾝｸﾞ AS568-018	O-RING	4				

https://truckmanualshub.com/

1 [2 ~ 5]
22 [23 ~ 25]

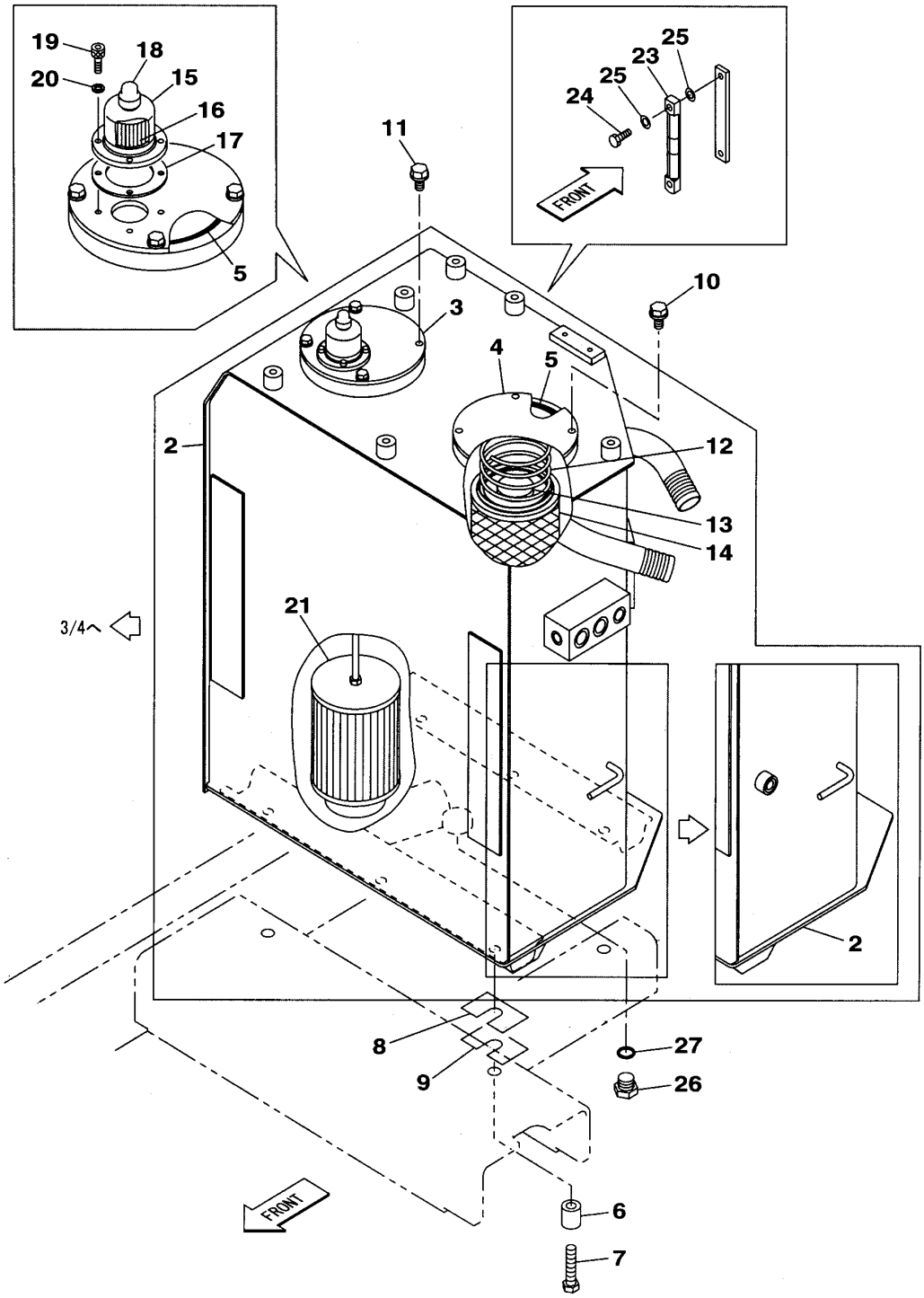

KG1RJ601-0
KRJ16240-DZ

https://truckmanualshub.com/

210A5 1101－ 210L5 1101－

符号 ITEM	構成 COMPO	部品番号 PART NO.	部品名	PART NAME	個数 Q'TY	ｲﾝﾅｰ	適用号機 SERIAL_NO.	互換 ICA	代替部品 REPLACEABLE PART
1	1A	KRJ15660	ﾀﾝｸ;ｻﾝﾌﾟ ﾉｳﾆｭｳｼｮｳｽﾞ	TANK;SUMP	1		210A5 -1123		
							210L5 NOT USED		
2	2	KRJ15350	ﾀﾝｸ;ｻﾝﾌﾟ	TANK;SUMP	1		210A5 -1123		
							210L5 NOT USED		
3	2	KRJ15380	ｶﾊﾞｰ	COVER	1		210A5 -1123		
							210L5 NOT USED		
4	2	KSJ3080	ｶﾊﾞｰ	COVER	1		210A5 -1123		
							210L5 NOT USED		
5	2	KNJ0381	O-ﾘﾝｸﾞ 1B G165	O-RING	2		210A5 -1123		
							210L5 NOT USED		
1	1A	KRJ19960	ﾀﾝｸ;ｻﾝﾌﾟ ﾉｳﾆｭｳｼｮｳｽﾞ	TANK;SUMP	1		210A5 1124-1404	<	KRJ21900
							210L5 -1254		
2	2	KRJ19970	ﾀﾝｸ;ｻﾝﾌﾟ	TANK;SUMP	1		210A5 1124-1404		
							210L5 -1254		
3	2	KRJ15380	ｶﾊﾞｰ	COVER	1		210A5 1124-1404		
							210L5 -1254		
4	2	KRJ3456	ｶﾊﾞｰ	COVER	1		210A5 1124-1404		
							210L5 -1254		
5	2	KNJ0381	O-ﾘﾝｸﾞ 1B G165	O-RING	2		210A5 1124-1404		
							210L5 -1254		
1	1A	KRJ21900	ﾀﾝｸ;ｻﾝﾌﾟ ﾉｳﾆｭｳｼｮｳｽﾞ	TANK;SUMP	1		210A5 1405-		
							210L5 1255-		
2	2	KRJ21910	ﾀﾝｸ;ｻﾝﾌﾟ	TANK;SUMP	1		210A5 1405-		
							210L5 1255-		
3	2	KRJ15380	ｶﾊﾞｰ	COVER	1		210A5 1405-		
							210L5 1255-		
4	2	KRJ3456	ｶﾊﾞｰ	COVER	1		210A5 1405-		
							210L5 1255-		
5	2	KNJ0381	O-ﾘﾝｸﾞ 1B G165	O-RING	2		210A5 1405-		
							210L5 1255-		
6	1	KSJ1963	ｽﾍﾟｰｻ	SPACER	4				
7	1	102R016Y070R	ｺｳﾘｷB M16X 70	BOLT;HIGH STRENGTH	4				
8	1	KHH0040	ｼﾑ;ﾌﾟﾚｰﾄ	SHIM;PLATE	1 AR				
9	1	KHH0137	ｼﾑ;ﾌﾟﾚｰﾄ	SHIM;PLATE	1 AR				
10	1	105R010Y020R	ｾﾑｽB M10X 20	BOLT;SEMS	4				
11	1	105R010Y030R	ｾﾑｽB M10X 30	BOLT;SEMS	4				
12	1	KRJ3457	ｽﾌﾟﾘﾝｸﾞ;ｱﾂｼｭｸ	SPRING;COMPRESSION	1				
13	1	KRJ2246	ﾊﾞﾙﾌﾞ;ﾘﾘｰﾌ	VALVE;RELIEF	1				
14	1	KRJ15830	ﾌｨﾙﾀ;ﾘﾀｰﾝ	FILTER;RETURN	1				
15	1A	KHJ1491	ﾌﾞﾘｰｻﾞ;ｴｱ	BREATHER;AIR	1		210A5 -1404	<	KHJ2322
							210L5 -1254		
16	2	KRJ3461	ｴﾚﾒﾝﾄ	ELEMENT;SPL	1		210A5 -1404		
							210L5 -1254		
17	2	KRJ3463	ﾊﾟｯｷﾝ	PACKING;SPL	1		210A5 -1404		
							210L5 -1254		
18	2	KHJ1492	ｷｬｯﾌﾟ;ﾗﾊﾞｰ	CAP;RUBBER	1		210A5 -1404		
							210L5 -1254		
15	1A	KHJ2322	ﾌﾞﾘｰｻﾞ;ｴｱ	BREATHER;AIR	1		210A5 1405-		
							210L5 1255-		
16	2	KRJ3461	ｴﾚﾒﾝﾄ	ELEMENT;SPL	1		210A5 1405-		
							210L5 1255-		
17	2	KRJ3463	ﾊﾟｯｷﾝ	PACKING;SPL	1		210A5 1405-		
							210L5 1255-		
18	2	KHJ1492	ｷｬｯﾌﾟ;ﾗﾊﾞｰ	CAP;RUBBER	1		210A5 1405-		
							210L5 1255-		
19	1	108R006Y016R	ﾛｯｶｸｱﾅB M 6X 16	BOLT;HEX SOC HD	4				
20	1	184-006VR	ﾎｳｹｲSW 6	WASHER;SPRING	4				
21	1	KRJ10590	ｽﾄﾚｰﾅ;ｻｸｼｮﾝ	STRAINER	1				
22	1A	KHJ0984	ｹﾞｰｼﾞ;ｵｲﾙ (ｻﾄﾞｳｴ)	GAGE;OIL LEVEL	1				
23	2	KHJ0985	ｹﾞｰｼﾞ;ｵｲﾙ ﾎﾞﾃﾞｨｰ	GAGE;OIL LEVEL	1				

https://truckmanualshub.com/

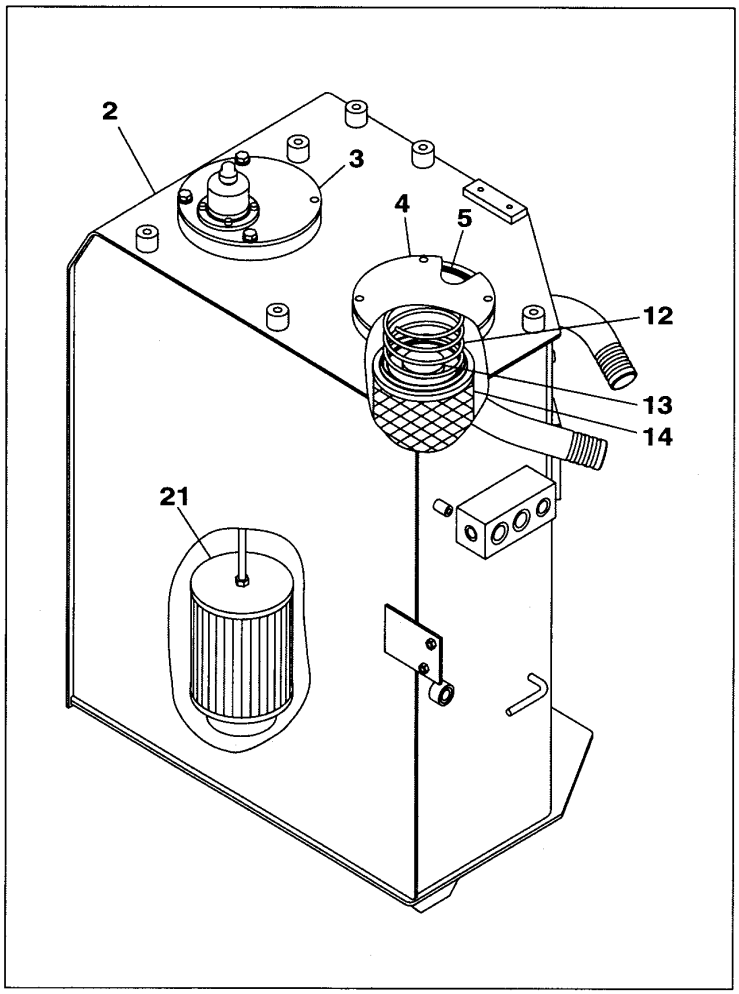

1/4から

KG1RJ601-0
KRJ16240-DZ

https://truckmanualshub.com/

210A5 1101－ 210L5 1101－

符号 ITEM	構成 COMPO	部品番号 PART NO.	部品名	PART NAME	個数 Q'TY	ｲﾝﾅｰ	適用号機 SERIAL_NO.	互換 ICA	代替部品 REPLACEABLE PART
24	2	KHJ0815	ﾎﾞﾙﾄ	BOLT;SPL	2				
25	2	KHJ0816	ｼｰﾙW M10	WASHER;SEAL	4				
26	1A	BRJ1286	ﾌﾟﾗｸﾞ G3/4	PLUG	1				
27	2	UBJ0158	O-ﾘﾝｸﾞ 1B-P24	O-RING	1				

https://truckmanualshub.com/

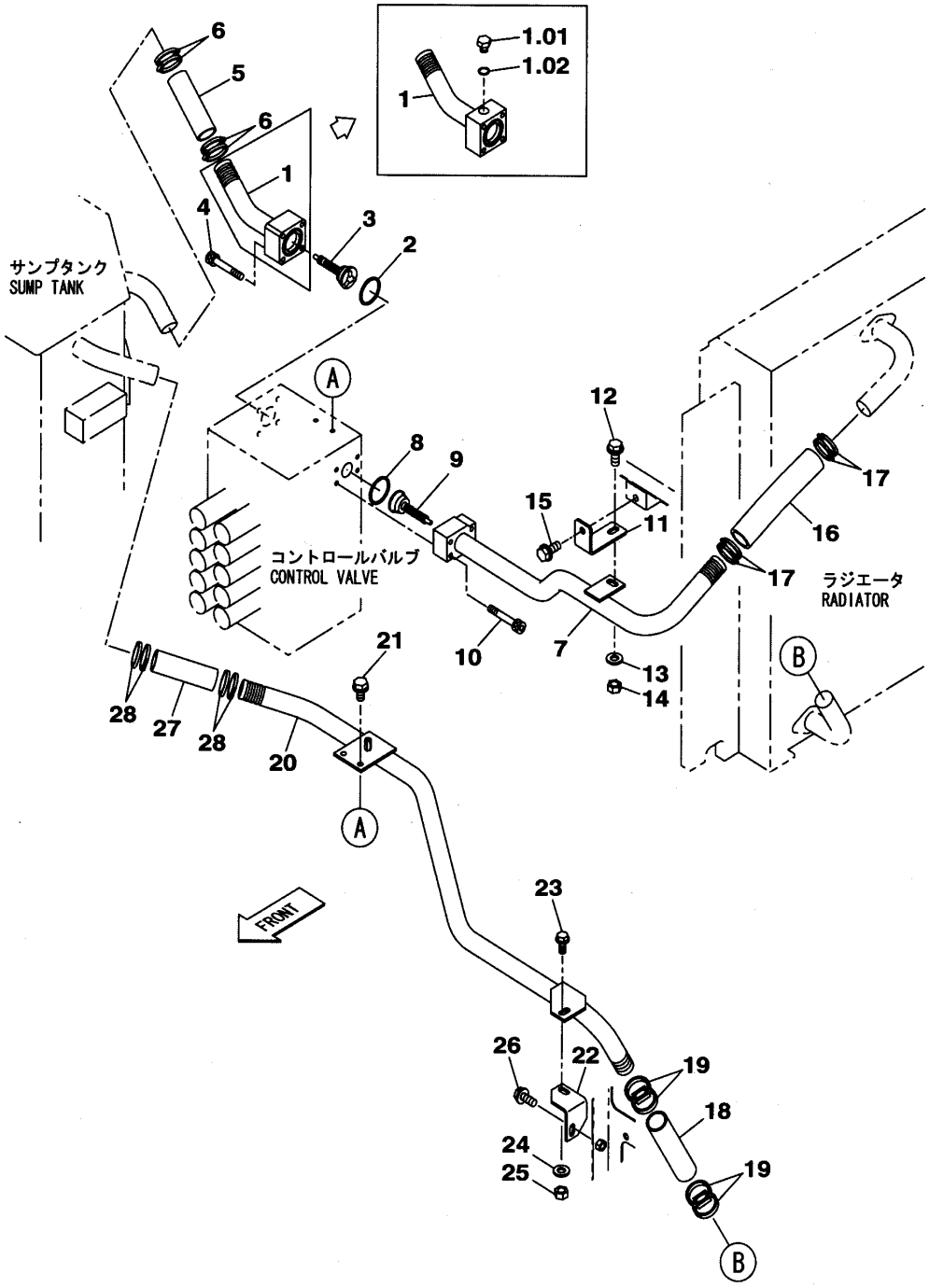

KG1RJ761-0
KRJ19770-EZ

https://truckmanualshub.com/

210A5 1101－　　210L5 1101－

符号 ITEM	構成 COMPO	部品番号 PART NO.	部品名	PART NAME	個数 Q'TY	ｲﾝﾅｰ	適用号機 SERIAL_NO.	互換 ICA	代替部品 REPLACEABLE PART
1	1A	KRJ10950	ﾊｲｶﾝｸﾐﾀﾃ	TUBE;ASSY	1				
1.01	2A	KHJ0363	ﾌﾟﾗｸﾞ G1/4	PLUG	1				
1.02	3	UEJ0360	O-ﾘﾝｸﾞ 1B-P11	O-RING	1				
2	1	BCJ0528	O-ﾘﾝｸﾞ 1B-G60	O-RING	1				
3	1	KRJ3515	ﾊﾞﾙﾌﾞ;ﾁｴｯｸ 0.3MPA	VALVE;CHECK	1				
4	1	108R010Y060R	ﾛｯｶｸｱﾅB M10X 60	BOLT;HEX SOC HD	4				
5	1	KSJ0837	ﾎｰｽ;ﾃｲｱﾂ	HOSE	1				
6	1	KEJ0335	ｸﾘｯﾌﾟ;ｼﾞｭﾋﾞﾘ 50-65	CLIP;JUBILEE	4				
7	1	KRJ10931	ﾊｲｶﾝｸﾐﾀﾃ	TUBE;ASSY	1				
8	1	UBA0151	O-ﾘﾝｸﾞ 1B G50	O-RING	1				
9	1	KRJ3823	ﾊﾞﾙﾌﾞ;ﾁｴｯｸ 0.1MPA	VALVE;CHECK	1				
10	1	108R010Y060R	ﾛｯｶｸｱﾅB M10X 60	BOLT;HEX SOC HD	4				
11	1	KRJ19680	ﾌﾞﾗｹｯﾄ	BRACKET	1				
12	1	105R012Y030R	ｾﾑｽB M12X 30	BOLT;SEMS	1				
13	1	KHN0296	ｺｳﾘｷW 12 (ﾒｯｷ)	WASHER;HIGH STRENGTH	1				
14	1	162R012VR	ｺｳﾘｷN M12	NUT;HIGH STRENGTH	1				
15	1	105R012Y030R	ｾﾑｽB M12X 30	BOLT;SEMS	1				
16	1	KSJ0837	ﾎｰｽ;ﾃｲｱﾂ	HOSE	1				
17	1	KEJ0335	ｸﾘｯﾌﾟ;ｼﾞｭﾋﾞﾘ 50-65	CLIP;JUBILEE	4				
18	1	KSJ0837	ﾎｰｽ;ﾃｲｱﾂ	HOSE	1				
19	1	KEJ0335	ｸﾘｯﾌﾟ;ｼﾞｭﾋﾞﾘ 50-65	CLIP;JUBILEE	4				
20	1	KRJ10942	ﾊｲｶﾝｸﾐﾀﾃ	TUBE;ASSY	1				
21	1	105R010Y020R	ｾﾑｽB M10X 20	BOLT;SEMS	2				
22	1	KRJ10970	ﾌﾞﾗｹｯﾄ	BRACKET	1				
23	1	105R012Y030R	ｾﾑｽB M12X 30	BOLT;SEMS	1				
24	1	KHN0296	ｺｳﾘｷW 12 (ﾒｯｷ)	WASHER;HIGH STRENGTH	1				
25	1	162R012VR	ｺｳﾘｷN M12	NUT;HIGH STRENGTH	1				
26	1	105R012Y030R	ｾﾑｽB M12X 30	BOLT;SEMS	1				
27	1	KSJ0837	ﾎｰｽ;ﾃｲｱﾂ	HOSE	1				
28	1	KEJ0335	ｸﾘｯﾌﾟ;ｼﾞｭﾋﾞﾘ 50-65	CLIP;JUBILEE	4				

https://truckmanualshub.com/

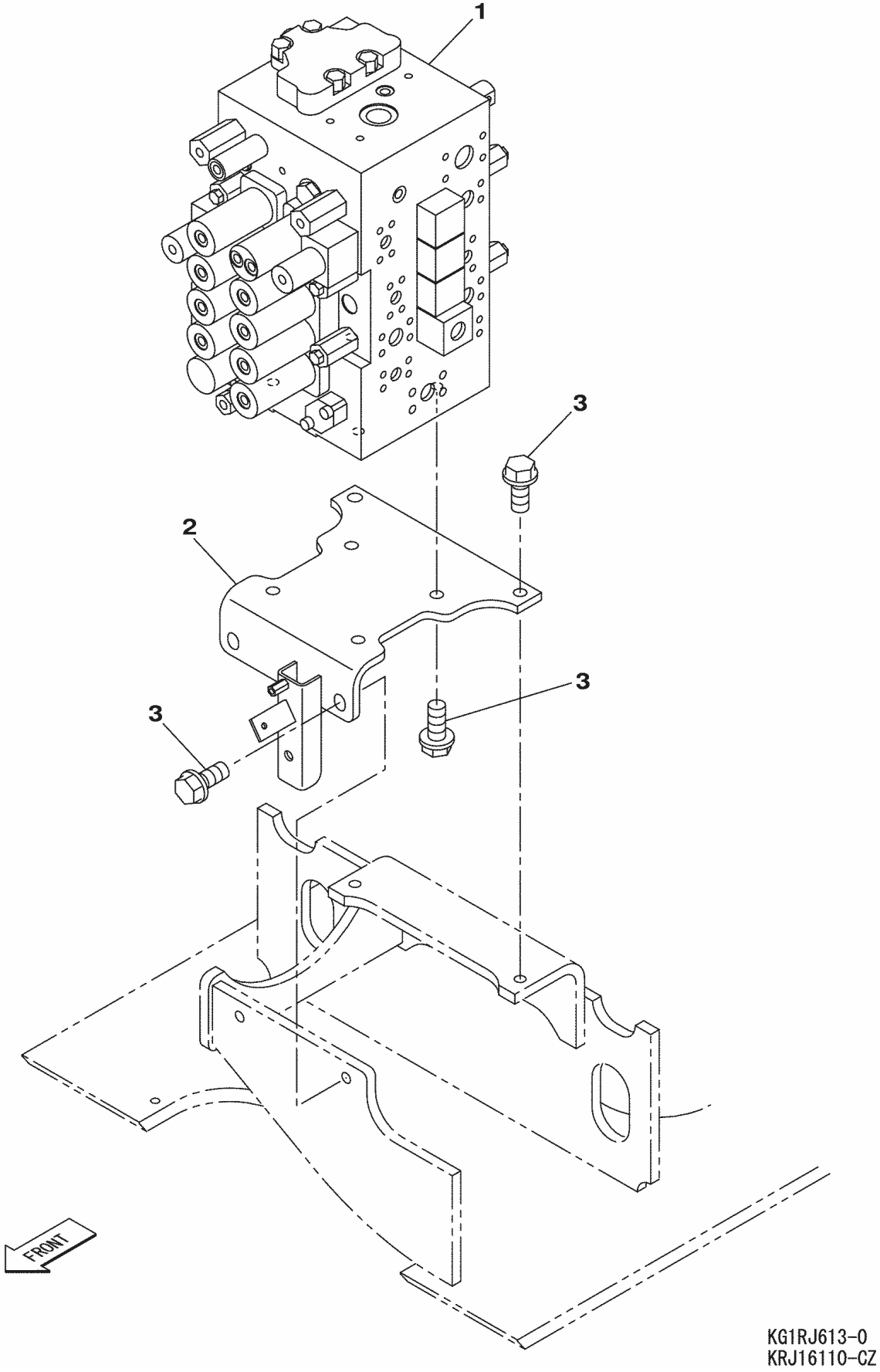

https://truckmanualshub.com/

210A5 1101－ 210L5 1101－

符号 ITEM	構成 COMPO	部品番号 PART NO.	部品名	PART NAME	個数 Q'TY	ｲﾝﾅｰ	適用号機 SERIAL_NO.	互換 ICA	代替部品 REPLACEABLE PART
1	1	KRJ10310	ﾊﾞﾙﾌﾞ;ｺﾝﾄﾛｰﾙ	VALVE;CONTROL	1	*	210A5 -1404 210L5 -1255	<	KRJ10311
1	1	KRJ10311	ﾊﾞﾙﾌﾞ;ｺﾝﾄﾛｰﾙ	VALVE;CONTROL	1	*	210A5 1405-1799 210L5 1256-1396	<	KRJ10312
1	1	KRJ10312	ﾊﾞﾙﾌﾞ;ｺﾝﾄﾛｰﾙ	VALVE;CONTROL	1	*	210A5 1800- 210L5 1397-		
2	1	KRJ16040	ﾌﾞﾗｹｯﾄ	BRACKET	1				
3	1	KHN11250	ﾎﾞﾙﾄ ﾄｸｼｭ (M16X40 ｻﾞ	BOLT;SPL	8		210A5 NOT USED 210L5 NOT USED	<	105R016Y040R
3	1	105R016Y040R	ｾﾑｽB M16 X 40	BOLT;SEMS	8				

https://truckmanualshub.com/

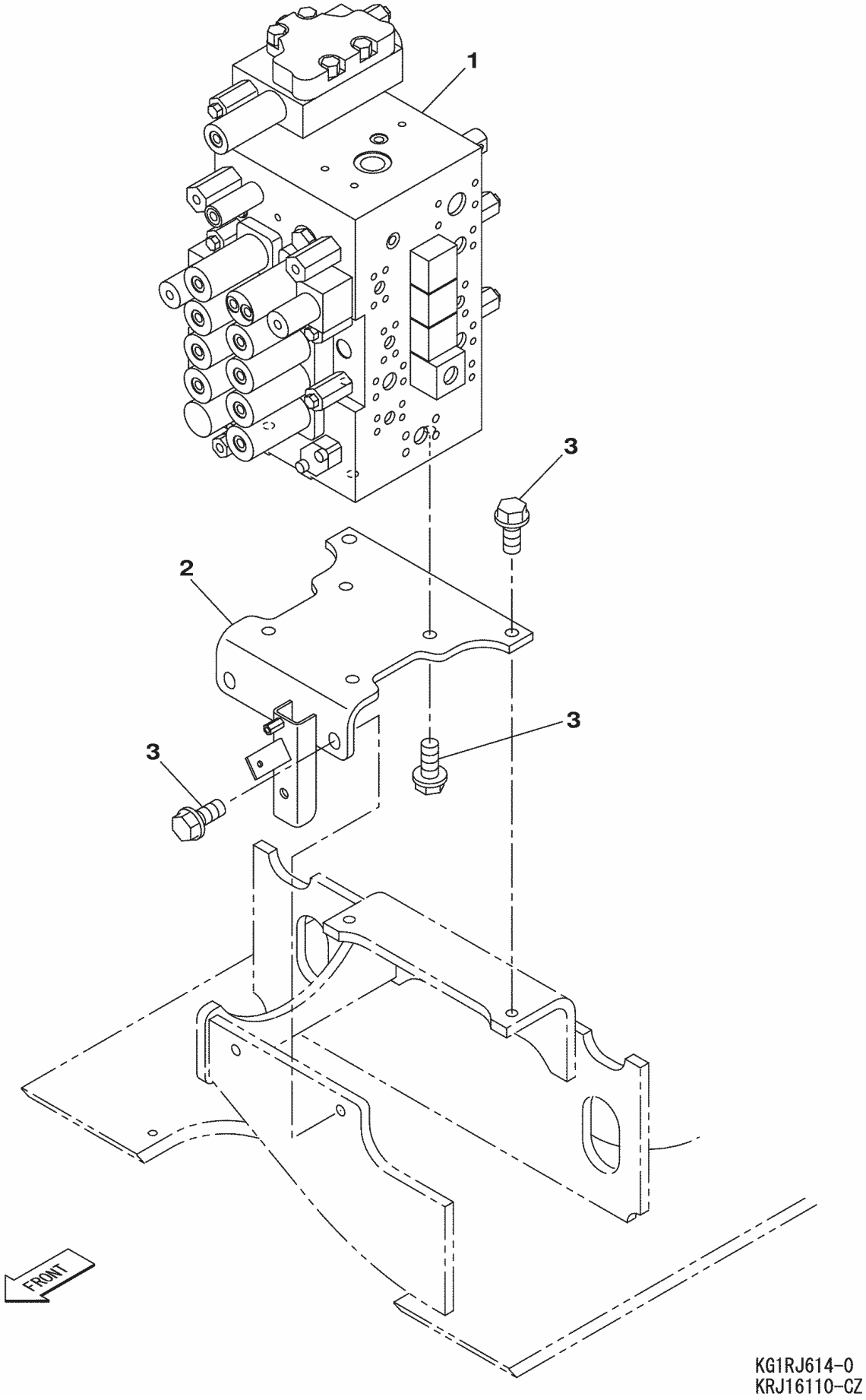

https://truckmanualshub.com/

210A5 1101－ 210L5 1101－

符号 ITEM	構成 COMPO	部品番号 PART NO.	部品名	PART NAME	個数 Q'TY	インナー	適用号機 SERIAL_NO.	互換 ICA	代替部品 REPLACEABLE PART
1	1	KRJ16010	ﾊﾞﾙﾌﾞ;ｺﾝﾄﾛｰﾙ	VALVE;CONTROL	1	*	210A5 -1404 210L5 -1255	<	KRJ16011
1	1	KRJ16011	ﾊﾞﾙﾌﾞ;ｺﾝﾄﾛｰﾙ	VALVE;CONTROL	1	*	210A5 1405-1799 210L5 1256-1396	<	KRJ16012
1	1	KRJ16012	ﾊﾞﾙﾌﾞ;ｺﾝﾄﾛｰﾙ	VALVE;CONTROL	1	*	210A5 1800- 210L5 1397-		
2	1	KRJ16040	ﾌﾞﾗｹｯﾄ	BRACKET	1				
3	1	KHN11250	ﾎﾞﾙﾄ ﾄｸｼｭ (M16X40 ｻﾞ	BOLT;SPL	8		210A5 NOT USED 210L5 NOT USED	<	105R016Y040R
3	1	105R016Y040R	ｾﾑｽB M16 X 40	BOLT;SEMS	8				

https://truckmanualshub.com/

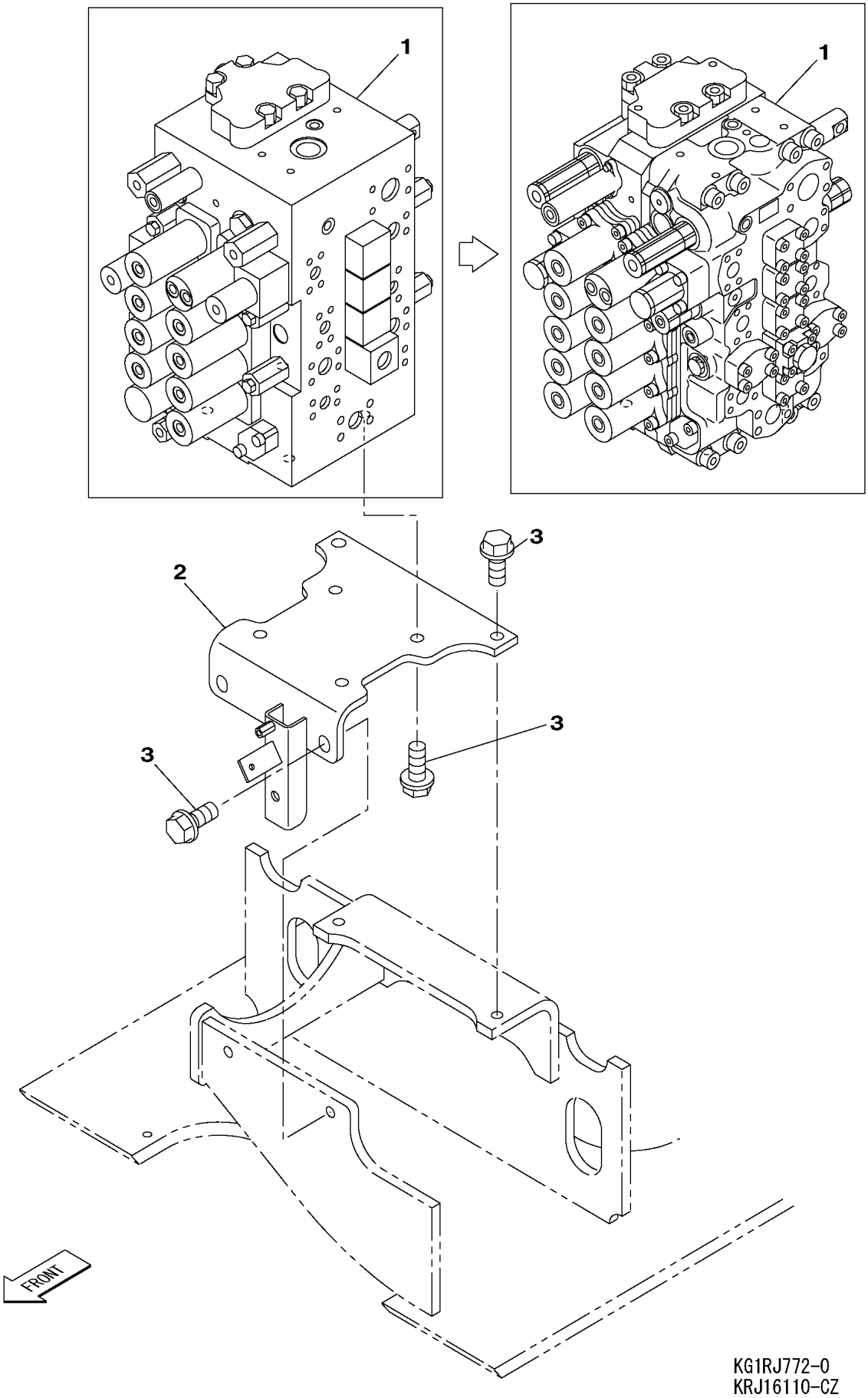

https://truckmanualshub.com/

210L5 1101－

符号 ITEM	構成 COMPO	部品番号 PART NO.	部品名	PART NAME	個数 Q'TY	ｲﾝﾅｰ	適用号機 SERIAL_NO.	互換 ICA	代替部品 REPLACEABLE PART
1	1	KRJ20100	ﾊﾞﾙﾌﾞ;ｺﾝﾄﾛｰﾙ SH200-5	VALVE;CONTROL	1	*	210L5 -1255	<	KRJ20101
1	1	KRJ20101	ﾊﾞﾙﾌﾞ;ｺﾝﾄﾛｰﾙ SH200-5	VALVE;CONTROL	1	*	210L5 1256-1396	<	KRJ20102
1	1	KRJ20102	ﾊﾞﾙﾌﾞ;ｺﾝﾄﾛｰﾙ	VALVE;CONTROL	1	*	210L5 1397-		
2	1	KRJ16040	ﾌﾞﾗｹｯﾄ	BRACKET	1				
3	1	105R016Y040R	ｾﾑｽB M16 X 40	BOLT;SEMS	8				

https://truckmanualshub.com/

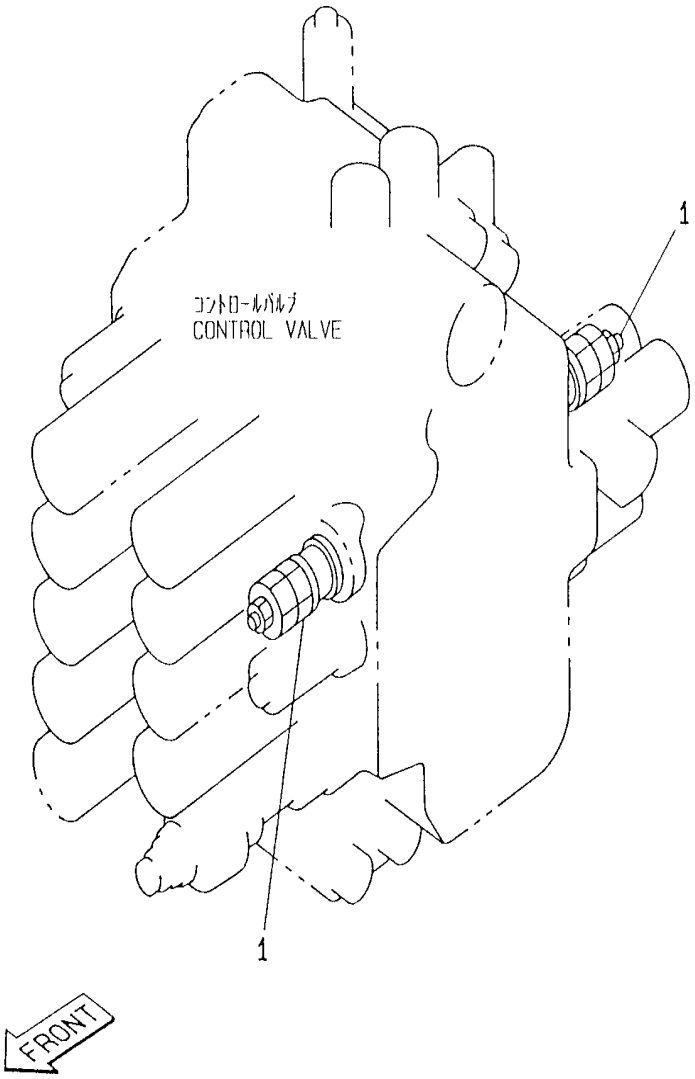

https://truckmanualshub.com/

210A5 1101－ 210L5 1101－

符号 ITEM	構成 COMPO	部品番号 PART NO.	部品名	PART NAME	個数 Q'TY	インナー	適用号機 SERIAL_NO.	互換 ICA	代替部品 REPLACEABLE PART
1	1	BRP0110	ﾊﾞﾙﾌﾞ;ﾎﾟｰﾄﾘﾘｰﾌ	VALVE;RELIEF	2				

https://truckmanualshub.com/

7 [8 , 9] 7 [8] 8.01 [8.02] 18 [19 ~ 21] 18 [19 , 20]
20.01 [20.02] 27 [28 ~ 35] 76 [77 ~ 81] 108 [109 ~ 113]

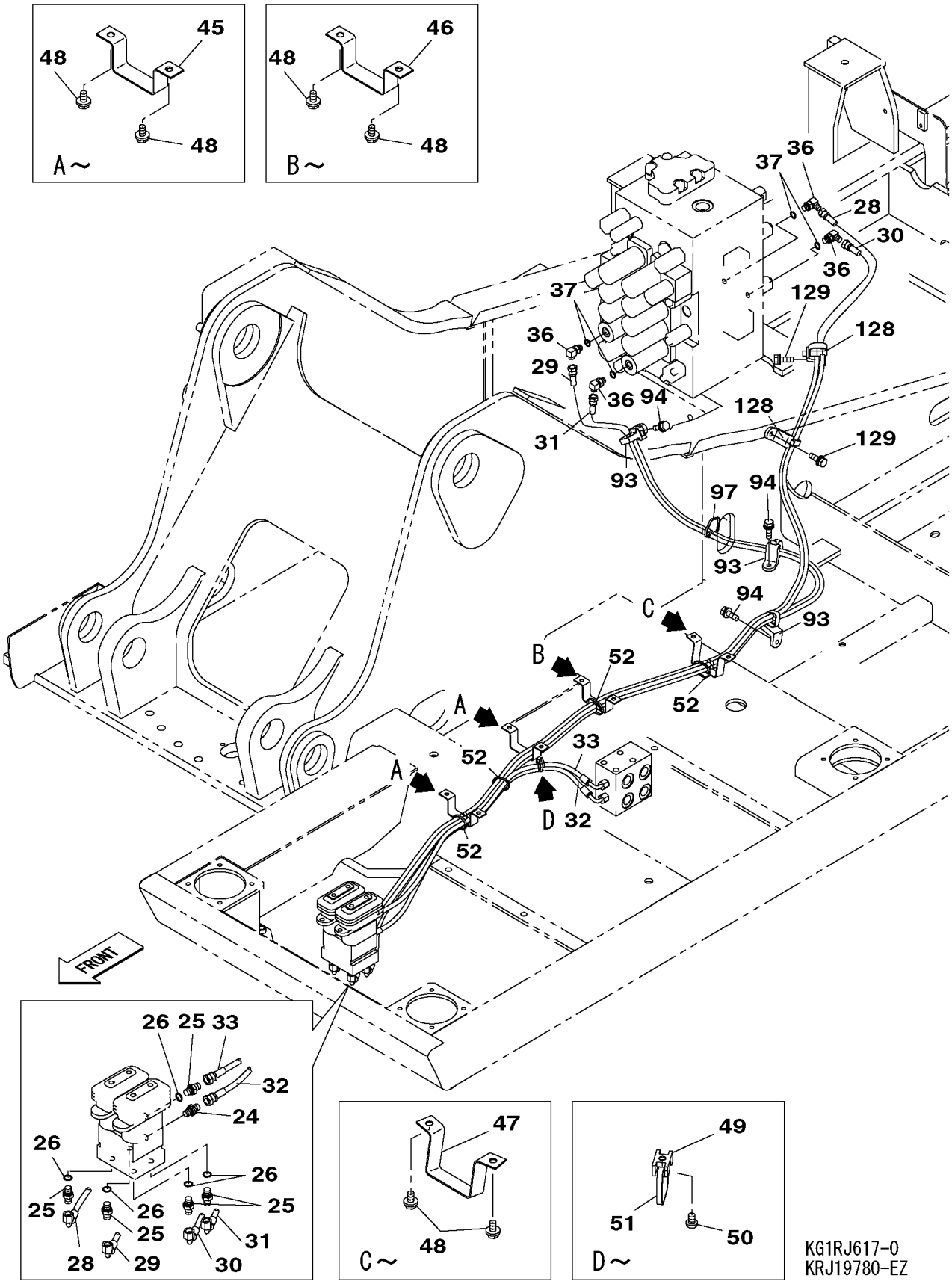

KG1RJ617-0
KRJ19780-EZ

https://truckmanualshub.com/

210A5 1101－ 210L5 1101－

符号 ITEM	構成 COMPO	部品番号 PART NO.	部品名	PART NAME	個数 Q'TY	ｲﾝﾅｰ	適用号機 SERIAL_NO.	互換 ICA	代替部品 REPLACEABLE PART
1	1A	KHJ1402	ｱﾀﾞﾌﾟﾀ;ﾎｰｽ (ﾌｨﾙﾀｰﾂｷ)	ADAPTER;HOSE	2				
2	2	BRP0007	O-ﾘﾝｸﾞ 1B-P14	O-RING	2				
3	1A	KNJ0759	ｱﾀﾞﾌﾟﾀ;ﾎｰｽ HA208-03	ADAPTER;HOSE	3				
4	2	BRP0007	O-ﾘﾝｸﾞ 1B-P14	O-RING	3				
5	1A	KHJ0915	ｱﾀﾞﾌﾟﾀ;ﾎｰｽ (ﾌｨﾙﾀｰﾂｷ)	ADAPTER;HOSE	1				
6	2	UEJ0360	O-ﾘﾝｸﾞ 1B-P11	O-RING	1				
7	1A	KHJ11610	ﾎｰｽ ｸﾐﾀﾃ (ｺﾞﾑﾎｰｽ)	HOSE SPL	1		210A5 -1524 210L5 -1291	<	KHJ18610
8	2	KNJ2004	ﾎｰｽ;ﾕｱﾂ 5･5-06X2000	HOSE;HYD	4		210A5 -1524 210L5 -1291		
9	2	KNJ1997	ﾎｰｽ;ﾕｱﾂ (L=1150)	HOSE;HYD	2		210A5 -1524 210L5 -1291		
7	1A	KHJ18610	ﾎｰｽ ｸﾐﾀﾃ (ｺﾞﾑﾎｰｽ)	HOSE SPL	1		210A5 1525-1535 210L5 1292-1296		
8	2	KNJ2004	ﾎｰｽ;ﾕｱﾂ 5･5-06X2000	HOSE;HYD	4		210A5 1525-1535 210L5 1292-1296		
8.01	1A	KHJ18640	ﾎｰｽ ｸﾐﾀﾃ (ｼﾞｭｳﾅﾝｾｲﾅｲ	HOSE SPL	1		210A5 1525-1535 210L5 1292-1296		
8.02	2	KHJ13810	ﾎｰｽ;ﾅｲﾛﾝ 70-9X1150 5	HOSE;NYLON	2		210A5 1525-1535 210L5 1292-1296		
7	1A	KHJ11610	ﾎｰｽ ｸﾐﾀﾃ (ｺﾞﾑﾎｰｽ)	HOSE SPL	1		210A5 1536- 210L5 1297-		
8	2	KNJ2004	ﾎｰｽ;ﾕｱﾂ 5･5-06X2000	HOSE;HYD	4		210A5 1536- 210L5 1297-		
9	2	KNJ1997	ﾎｰｽ;ﾕｱﾂ (L=1150)	HOSE;HYD	2		210A5 1536- 210L5 1297-		
10	1A	KNJ0759	ｱﾀﾞﾌﾟﾀ;ﾎｰｽ HA208-03	ADAPTER;HOSE	2				
11	2	BRP0007	O-ﾘﾝｸﾞ 1B-P14	O-RING	2				
12	1A	KHJ1402	ｱﾀﾞﾌﾟﾀ;ﾎｰｽ (ﾌｨﾙﾀｰﾂｷ)	ADAPTER;HOSE	2				
13	2	BRP0007	O-ﾘﾝｸﾞ 1B-P14	O-RING	2				
14	1A	KNJ0759	ｱﾀﾞﾌﾟﾀ;ﾎｰｽ HA208-03	ADAPTER;HOSE	3				
15	2	BRP0007	O-ﾘﾝｸﾞ 1B-P14	O-RING	3				
16	1A	KHJ0915	ｱﾀﾞﾌﾟﾀ;ﾎｰｽ (ﾌｨﾙﾀｰﾂｷ)	ADAPTER;HOSE	1				
17	2	UEJ0360	O-ﾘﾝｸﾞ 1B-P11	O-RING	1				
18	1A	KHJ11620	ﾎｰｽ ｸﾐﾀﾃ (ｺﾞﾑﾎｰｽ)	HOSE SPL	1		210A5 -1524 210L5 -1291	<	KHJ18630
19	2	KRJ4134	ﾎｰｽ;ﾕｱﾂ (L=1850)	HOSE;HYD	2		210A5 -1524 210L5 -1291		
20	2	KRJ4381	ﾎｰｽ;ﾕｱﾂ (L=1800)	HOSE;HYD	2		210A5 -1524 210L5 -1291		
21	2	KNJ1997	ﾎｰｽ;ﾕｱﾂ (L=1150)	HOSE;HYD	2		210A5 -1524 210L5 -1291		
18	1A	KHJ18630	ﾎｰｽ ｸﾐﾀﾃ (ｺﾞﾑﾎｰｽ)	HOSE SPL	1		210A5 1525-1535 210L5 1292-1296		
19	2	KRJ4134	ﾎｰｽ;ﾕｱﾂ (L=1850)	HOSE;HYD	2		210A5 1525-1535 210L5 1292-1296		
20	2	KRJ4381	ﾎｰｽ;ﾕｱﾂ (L=1800)	HOSE;HYD	2		210A5 1525-1535 210L5 1292-1296		
20.01	1A	KHJ18770	ﾎｰｽ ｸﾐﾀﾃ (ｼﾞｭｳﾅﾝｾｲﾅｲ	HOSE SPL	1		210A5 1525-1535 210L5 1292-1296		
20.02	2	KHJ13810	ﾎｰｽ;ﾅｲﾛﾝ 70-9X1150 5	HOSE;NYLON	2		210A5 1525-1535 210L5 1292-1296		
18	1A	KHJ11620	ﾎｰｽ ｸﾐﾀﾃ (ｺﾞﾑﾎｰｽ)	HOSE SPL	1		210A5 1536- 210L5 1297-		
19	2	KRJ4134	ﾎｰｽ;ﾕｱﾂ (L=1850)	HOSE;HYD	2		210A5 1536- 210L5 1297-		
20	2	KRJ4381	ﾎｰｽ;ﾕｱﾂ (L=1800)	HOSE;HYD	2		210A5 1536- 210L5 1297-		
21	2	KNJ1997	ﾎｰｽ;ﾕｱﾂ (L=1150)	HOSE;HYD	2		210A5 1536- 210L5 1297-		

https://truckmanualshub.com/

7 [8 , 9] 7 [8] 8.01 [8.02] 18 [19 ~ 21] 18 [19 , 20]
20.01 [20.02] 27 [28 ~ 35] 76 [77 ~ 81] 108 [109 ~ 113]

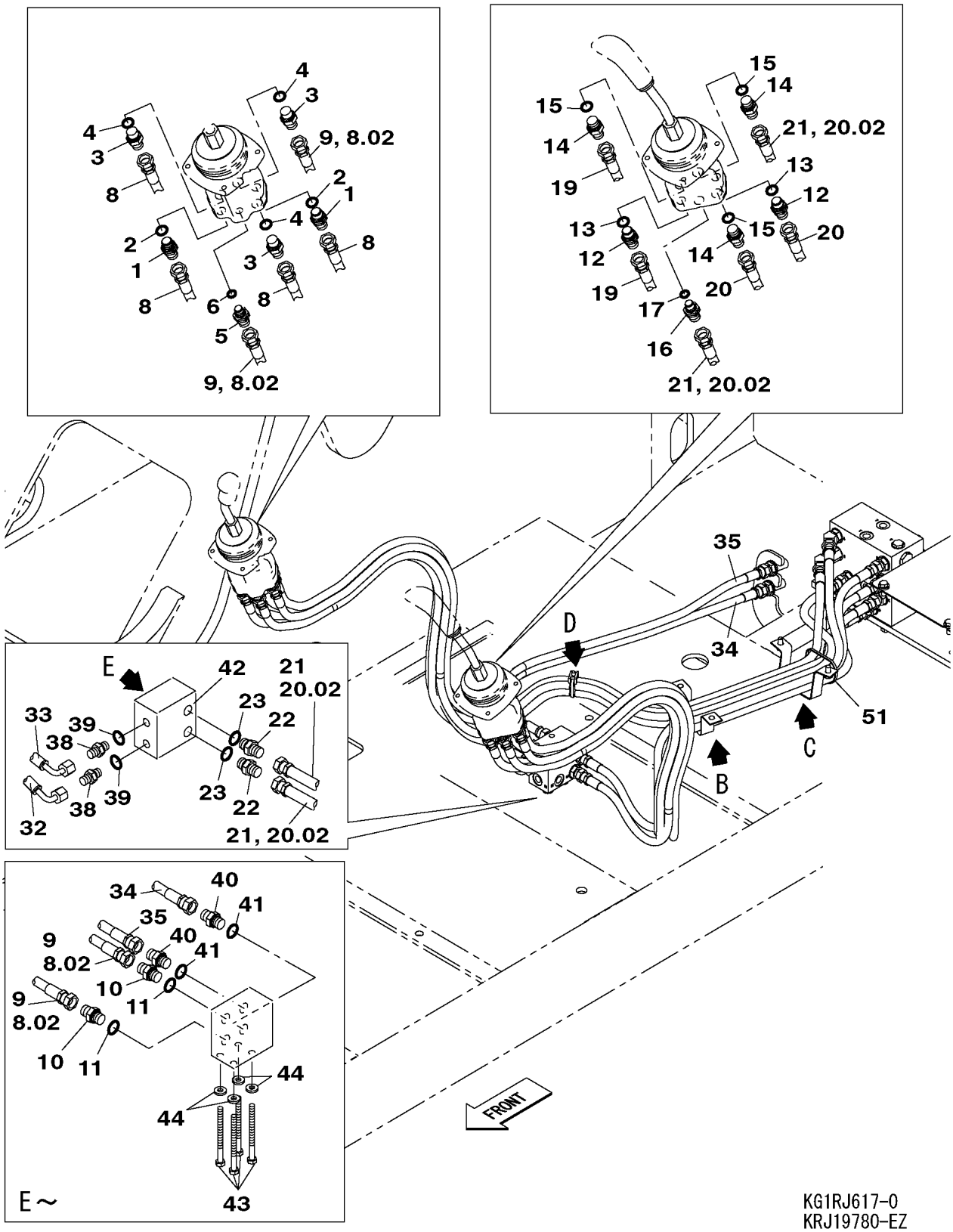

KG1RJ617-0
KRJ19780-EZ

https://truckmanualshub.com/

210A5 1101－ 210L5 1101－

符号 ITEM	構成 COMPO	部品番号 PART NO.	部品名	PART NAME	個数 Q'TY	ｲﾝﾅｰ	適用号機 SERIAL_NO.	互換 ICA	代替部品 REPLACEABLE PART
22	1A	KNJ0759	ｱﾀﾞﾌﾟﾀ;ﾎｰｽ HA208-03	ADAPTER;HOSE	2				
23	2	BRP0007	O-ﾘﾝｸﾞ 1B-P14	O-RING	2				
24	1	CNA0584	ﾆｯﾌﾟﾙ (ﾌｲﾙﾀｰﾂｷ)	NIPPLE	1				
25	1A	KNJ0758	ｱﾀﾞﾌﾟﾀ;ﾎｰｽ HA208-02	ADAPTER;HOSE	5				
26	2	UEJ0360	O-ﾘﾝｸﾞ 1B-P11	O-RING	5				
27	1A	KRJ16170	ﾎｰｽ ｸﾐﾀﾃ(ｼﾞｭｳﾅﾝｾｲﾅｲﾛ	HOSE SPL	1				
28	2	KHJ2248	ﾎｰｽ;ﾅｲﾛﾝ 70-6X3000 5	HOSE;NYLON	1				
29	2	KHJ2199	ﾎｰｽ;ﾅｲﾛﾝ 70-6X2950 5	HOSE;NYLON	1				
30	2	KHJ2199	ﾎｰｽ;ﾅｲﾛﾝ 70-6X2950 5	HOSE;NYLON	1				
31	2	KHJ2165	ﾎｰｽ;ﾅｲﾛﾝ 70-6X2900 5	HOSE;NYLON	1				
32	2	KHJ2249	ﾎｰｽ;ﾅｲﾛﾝ 70-6X950 5+	HOSE;NYLON	1				
33	2	KHJ2249	ﾎｰｽ;ﾅｲﾛﾝ 70-6X950 5+	HOSE;NYLON	1				
34	2	KHJ11520	ﾎｰｽ;ﾅｲﾛﾝ 70-9X900 5+	HOSE;NYLON	1				
35	2	KHJ11520	ﾎｰｽ;ﾅｲﾛﾝ 70-9X900 5+	HOSE;NYLON	1				
36	1A	KHJ0341	ｴﾙﾎﾞ HL204-020 G1/4	ELBOW	4				
37	2	UEJ0360	O-ﾘﾝｸﾞ 1B-P11	O-RING	4				
38	1A	KNJ0758	ｱﾀﾞﾌﾟﾀ;ﾎｰｽ HA208-02	ADAPTER;HOSE	2				
39	2	UEJ0360	O-ﾘﾝｸﾞ 1B-P11	O-RING	2				
40	1A	KNJ0759	ｱﾀﾞﾌﾟﾀ;ﾎｰｽ HA208-03	ADAPTER;HOSE	2				
41	2	BRP0007	O-ﾘﾝｸﾞ 1B-P14	O-RING	2				
42	1	KRJ5903	ﾏﾆﾎｰﾙﾄﾞ	MANIFOLD	1				
43	1	102R008Y100R	ｺｳﾘｷB M 8X100	BOLT;HIGH STRENGTH	4				
44	1	KAJ1500	ｺｳﾘｷW M8	WASHER;HIGH STRENGTH	4				
45	1	KHJ1220	ｸﾗﾝﾌﾟ	CLAMP	2				
46	1	KHJ13770	ｸﾗﾝﾌﾟ	CLAMP	2				
47	1	KHJ13760	ｸﾗﾝﾌﾟ	CLAMP	2				
48	1	105R008Y016R	ｾﾑｽB M 8X 16	BOLT;SEMS	12				
49	1	KHR0319	ｸﾗﾝﾌﾟ ﾏｳﾝﾄ	CLAMP;SPL	2				
50	1	145N006S008R	+ﾅﾍﾞS M 6X 8	SCREW;PAN HD	2				
51	1	KHH0142	ﾊﾞﾝﾄﾞ;ｿｸｾﾝ L=250	BAND;HARNESS	3 AR				
52	1	KHH0143	ﾊﾞﾝﾄﾞ;ｿｸｾﾝ L=300	BAND;HARNESS	4 AR				
53	1	KHJ13750	ﾌﾞﾗｹｯﾄ	BRACKET	1				
54	1	105R012Y030R	ｾﾑｽB M12X 30	BOLT;SEMS	4				
55	1	KRJ12530	ｶﾊﾞｰ (STD)	COVER	1				
56	1	105R008Y020R	ｾﾑｽB M 8X 20	BOLT;SEMS	4				
57	1	KRN11120	ｸｯｼｮﾝ;ﾗﾊﾞｰ L=310	CUSHION;RUBBER	1				
58	1	KRJ10350	ﾊﾞﾙﾌﾞ;ｸｯｼｮﾝ (ｼｬﾄﾙﾊﾞﾙ	VALVE;CUSHION	1	*	210A5 -2182 210L5 -1495	=	KRJ10351
58	1	KRJ10351	ﾊﾞﾙﾌﾞ;ｸｯｼｮﾝ	VALVE;CUSHION	1	*	210A5 2183- 210L5 1496-		
59	1	105R010Y030R	ｾﾑｽB M10X 30	BOLT;SEMS	4				
60	1A	KNJ0759	ｱﾀﾞﾌﾟﾀ;ﾎｰｽ HA208-03	ADAPTER;HOSE	5				
61	2	BRP0007	O-ﾘﾝｸﾞ 1B-P14	O-RING	5				
62	1	KHJ13790	ｽﾀｯﾄﾞ G3/8XG3/8	STUD	1				
63	1A	KHJ0349	ｴﾙﾎﾞ HL205-030 G3/8	ELBOW	3				
64	2	BRP0007	O-ﾘﾝｸﾞ 1B-P14	O-RING	3				
65	1A	KHJ0363	ﾌﾟﾗｸﾞ G1/4	PLUG	1				
66	2	UEJ0360	O-ﾘﾝｸﾞ 1B-P11	O-RING	1				
67	1A	KHJ0349	ｴﾙﾎﾞ HL205-030 G3/8	ELBOW	3				
68	2	BRP0007	O-ﾘﾝｸﾞ 1B-P14	O-RING	3				
69	1A	KAJ2176	ｱﾀﾞﾌﾟﾀ;ﾎｰｽ G3/8XG1/4	ADAPTER;HOSE	1				
70	2	BRP0007	O-ﾘﾝｸﾞ 1B-P14	O-RING	1				
71	1A	KHJ0719	ｴﾙﾎﾞ	ELBOW	1				
72	2	UEJ0360	O-ﾘﾝｸﾞ 1B-P11	O-RING	1				
73	1	KHJ10790	ﾌｲﾙﾀ;ﾗｲﾝ	FILTER;LINE	1				
74	1A	KNJ0758	ｱﾀﾞﾌﾟﾀ;ﾎｰｽ HA208-02	ADAPTER;HOSE	1				
75	2	UEJ0360	O-ﾘﾝｸﾞ 1B-P11	O-RING	1				
76	1A	KRJ16590	ﾎｰｽ ｸﾐﾀﾃ(ｼﾞｭｳﾅﾝｾｲﾅｲﾛ	HOSE SPL	1				
77	2	KHJ11590	ﾎｰｽ;ﾅｲﾛﾝ 70-9X1400 5	HOSE;NYLON	1				
78	2	KHJ2318	ﾎｰｽ;ﾅｲﾛﾝ 70-9X1400 5	HOSE;NYLON	1				

https://truckmanualshub.com/

7 [8 , 9] 7 [8] 8.01 [8.02] 18 [19 ~ 21] 18 [19 , 20]
20.01 [20.02] 27 [28 ~ 35] 76 [77 ~ 81] 108 [109 ~ 113]

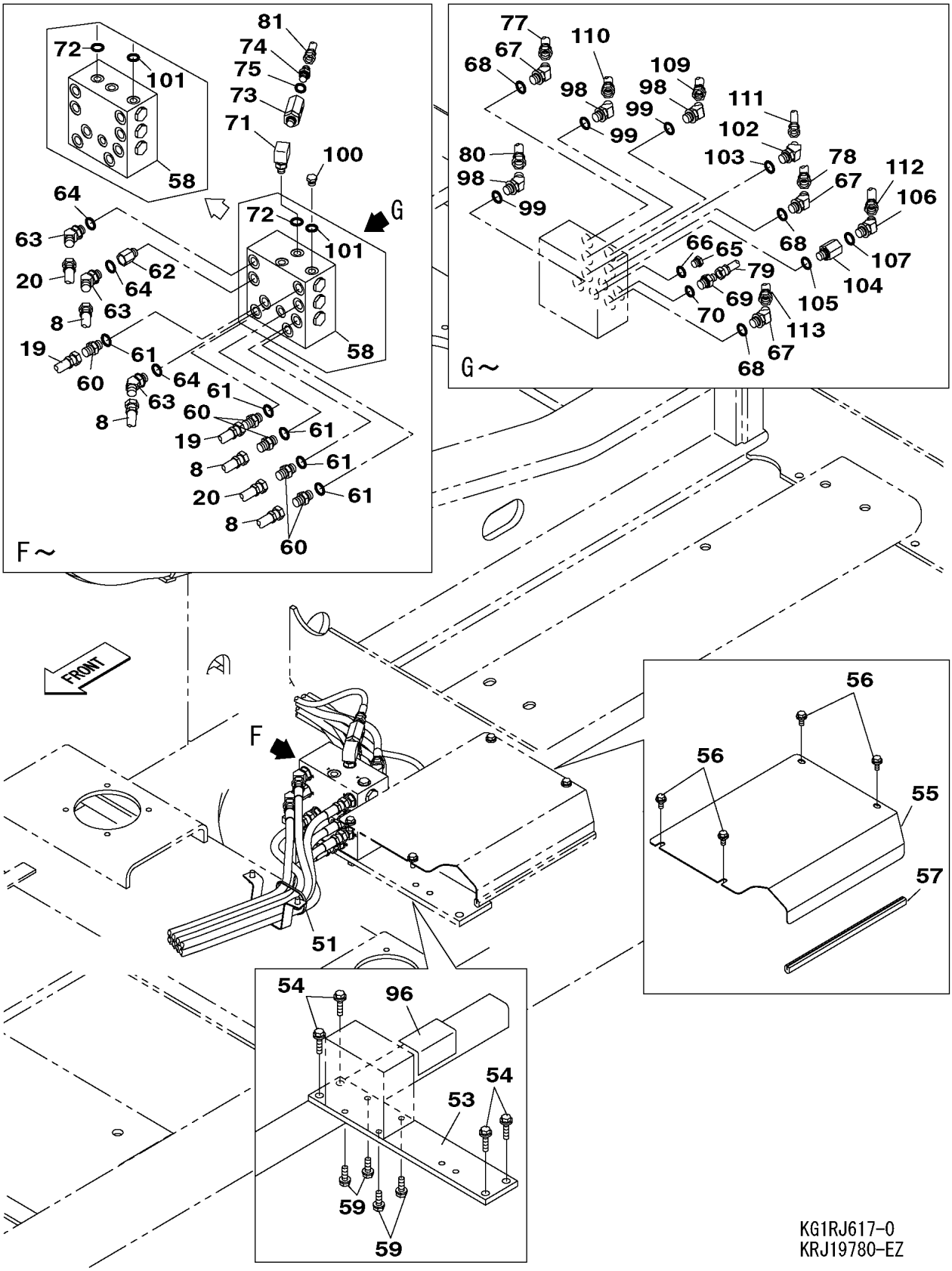

https://truckmanualshub.com/

210A5 1101－ 210L5 1101－

符号 ITEM	構成 COMPO	部品番号 PART NO.	部品名	PART NAME	個数 Q'TY	ｲﾝﾅｰ	適用号機 SERIAL_NO.	互換 ICA	代替部品 REPLACEABLE PART
79	2	KHJ11540	ﾎｰｽ;ﾅｲﾛﾝ 70-6X1450 5	HOSE;NYLON	1				
80	2	KHJ11570	ﾎｰｽ;ﾅｲﾛﾝ 70-9X1300 5	HOSE;NYLON	1				
81	2	KHJ2327	ﾎｰｽ;ﾅｲﾛﾝ 70-6X1550 5	HOSE;NYLON	1				
82	1A	KNJ1106	ｱﾀﾞﾌﾟﾀ;ﾎｰｽ (ｹｲﾁｶﾞｲ)	ADAPTER;HOSE	2				
83	2	UEJ0360	O-ﾘﾝｸﾞ 1B-P11	O-RING	2				
84	1A	KRJ3560	ｴﾙﾎﾞ	ELBOW	1				
85	2	UEJ0360	O-ﾘﾝｸﾞ 1B-P11	O-RING	1				
86	1A	KNJ0758	ｱﾀﾞﾌﾟﾀ;ﾎｰｽ HA208-02	ADAPTER;HOSE	2				
87	2	UEJ0360	O-ﾘﾝｸﾞ 1B-P11	O-RING	2				
88	1A	KHJ0626	ｽﾀｯﾄﾞ	STUD	1				
89	2	UEJ0360	O-ﾘﾝｸﾞ 1B-P11	O-RING	1				
90	1	KHJ2773	ﾁｰ 3-G1/4	TEE	1		210A5 -1298 210L5 -1213	<	KHJ0341
90	1A	KHJ0341	ｴﾙﾎﾞ HL204-020 G1/4	ELBOW	1		210A5 1299- 210L5 1214-		
91	2	UEJ0360	O-ﾘﾝｸﾞ 1B-P11	O-RING	1				
92	1	KHJ1387	ﾎｰｽ;ﾕｱｯ SIB70-6X320·	HOSE;HYD	1				
93	1	KHR2581	ｸﾗﾝﾌﾟ ﾊﾞﾝﾄﾞﾂｷ(M)M8	CLAMP	3				
94	1	KHJ1215	ﾎﾞﾙﾄ ﾄｸｼｭ M8X25ｻﾞｶﾞﾈ	BOLT;SPL	3				
95	1	KRH10610	ｸｯｼｮﾝ;ﾗﾊﾞｰ (L=290)	CUSHION;RUBBER	1				
96	1	KRJ11780	ﾌﾟﾚｰﾄ;ﾗﾊﾞｰ	PLATE;RUBBER	1				
97	1	KHH0142	ﾊﾞﾝﾄﾞ;ｿｸｾﾝ L=250	BAND;HARNESS	1 AR				
98	1A	KHJ0349	ｴﾙﾎﾞ HL205-030 G3/8	ELBOW	3				
99	2	BRP0007	O-ﾘﾝｸﾞ 1B-P14	O-RING	3				
100	1A	KHJ0363	ﾌﾟﾗｸﾞ G1/4	PLUG	1				
101	2	UEJ0360	O-ﾘﾝｸﾞ 1B-P11	O-RING	1				
102	1A	KHJ1445	ｴﾙﾎﾞ G1/4XG3/8	ELBOW	1				
103	2	BRP0007	O-ﾘﾝｸﾞ 1B-P14	O-RING	1				
104	1A	KHJ1584	ｽﾀｯﾄﾞ G1/4(OR)XG3/8	STUD	1				
105	2	UEJ0360	O-ﾘﾝｸﾞ 1B-P11	O-RING	1				
106	1A	KHJ0349	ｴﾙﾎﾞ HL205-030 G3/8	ELBOW	1				
107	2	BRP0007	O-ﾘﾝｸﾞ 1B-P14	O-RING	1				
108	1A	KRJ18000	ﾎｰｽ ｸﾐﾀﾃ(ｼﾞｭｳﾅﾝｾｲﾅｲﾛ	HOSE SPL	1				
109	2	KHJ15490	ﾎｰｽ;ﾅｲﾛﾝ 70-9X1350 5	HOSE;NYLON	1				
110	2	KHJ11530	ﾎｰｽ;ﾅｲﾛﾝ 70-9X1250 5	HOSE;NYLON	1				
111	2	KHJ2054	ﾎｰｽ;ﾅｲﾛﾝ 70-6X1200 5	HOSE;NYLON	1				
112	2	KHJ11600	ﾎｰｽ;ﾅｲﾛﾝ 70-9X1350 5	HOSE;NYLON	1				
113	2	KHJ11580	ﾎｰｽ;ﾅｲﾛﾝ 70-9X1350 5	HOSE;NYLON	1				
114	1A	KNJ1106	ｱﾀﾞﾌﾟﾀ;ﾎｰｽ (ｹｲﾁｶﾞｲ)	ADAPTER;HOSE	3				
115	2	UEJ0360	O-ﾘﾝｸﾞ 1B-P11	O-RING	3				
116	1	KHJ11560	ﾁｰ G1/4XG3/8XG1/4	TEE	1				
117	1A	KHJ0341	ｴﾙﾎﾞ HL204-020 G1/4	ELBOW	1				
118	2	UEJ0360	O-ﾘﾝｸﾞ 1B-P11	O-RING	1				
119	1	KHJ2084	ﾎｰｽ;ﾅｲﾛﾝ 70-6X350 5+	HOSE;NYLON	1				
120	1	KHJ1399	ﾊﾞﾙﾌﾞ;ｸｯｼｮﾝ (ﾏﾙ1.2)	VALVE;CUSHION	1	*	210A5 NOT USED 210L5 NOT USED		
121	1A	KHJ0719	ｴﾙﾎﾞ	ELBOW	1		210A5 NOT USED 210L5 NOT USED	<	KHJ0341
122	2	UEJ0360	O-ﾘﾝｸﾞ 1B-P11	O-RING	1		210A5 NOT USED 210L5 NOT USED		
121	1A	KHJ0341	ｴﾙﾎﾞ HL204-020 G1/4	ELBOW	1				
122	2	UEJ0360	O-ﾘﾝｸﾞ 1B-P11	O-RING	1				
123	1A	KHJ0341	ｴﾙﾎﾞ HL204-020 G1/4	ELBOW	1				
124	2	UEJ0360	O-ﾘﾝｸﾞ 1B-P11	O-RING	1				
125	1A	KNJ0758	ｱﾀﾞﾌﾟﾀ;ﾎｰｽ HA208-02	ADAPTER;HOSE	2				
126	2	UEJ0360	O-ﾘﾝｸﾞ 1B-P11	O-RING	2				
127	1	KHJ2350	ﾎｰｽ;ﾅｲﾛﾝ 70-6X520 90	HOSE;NYLON	1				
128	1	KHR2581	ｸﾗﾝﾌﾟ ﾊﾞﾝﾄﾞﾂｷ(M)M8	CLAMP	2				
129	1	KHJ1215	ﾎﾞﾙﾄ ﾄｸｼｭ M8X25ｻﾞｶﾞﾈ	BOLT;SPL	2				
130	1	KHH0143	ﾊﾞﾝﾄﾞ;ｿｸｾﾝ L=300	BAND;HARNESS	1 AR				

https://truckmanualshub.com/

7 [8 , 9] 7 [8] 8.01 [8.02] 18 [19 ~ 21] 18 [19 , 20] 20.01 [20.02]
27 [28 ~ 35] 76 [77 ~ 81]
108 [109 ~ 113]

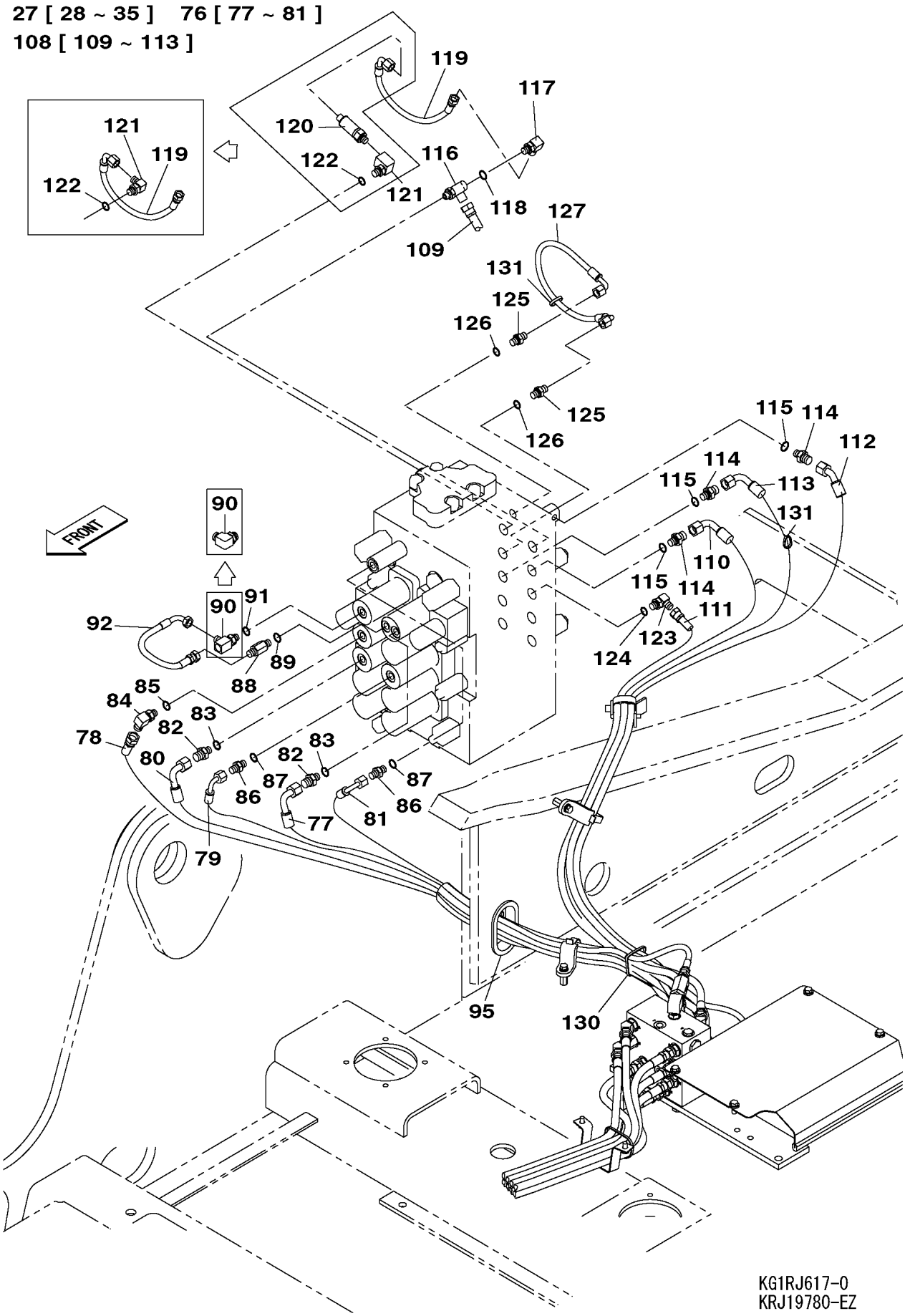

KG1RJ617-0
KRJ19780-EZ

https://truckmanualshub.com/

210A5 1101－ 210L5 1101－

符号 ITEM	構成 COMPO	部品番号 PART NO.	部品名	PART NAME	個数 Q'TY	ｲﾝﾅｰ	適用号機 SERIAL_NO.	互換 ICA	代替部品 REPLACEABLE PART
131	1	KHH0142	ﾊﾞﾝﾄﾞ;ｿｸｾﾝ L=250	BAND;HARNESS	2 AR				

https://truckmanualshub.com/

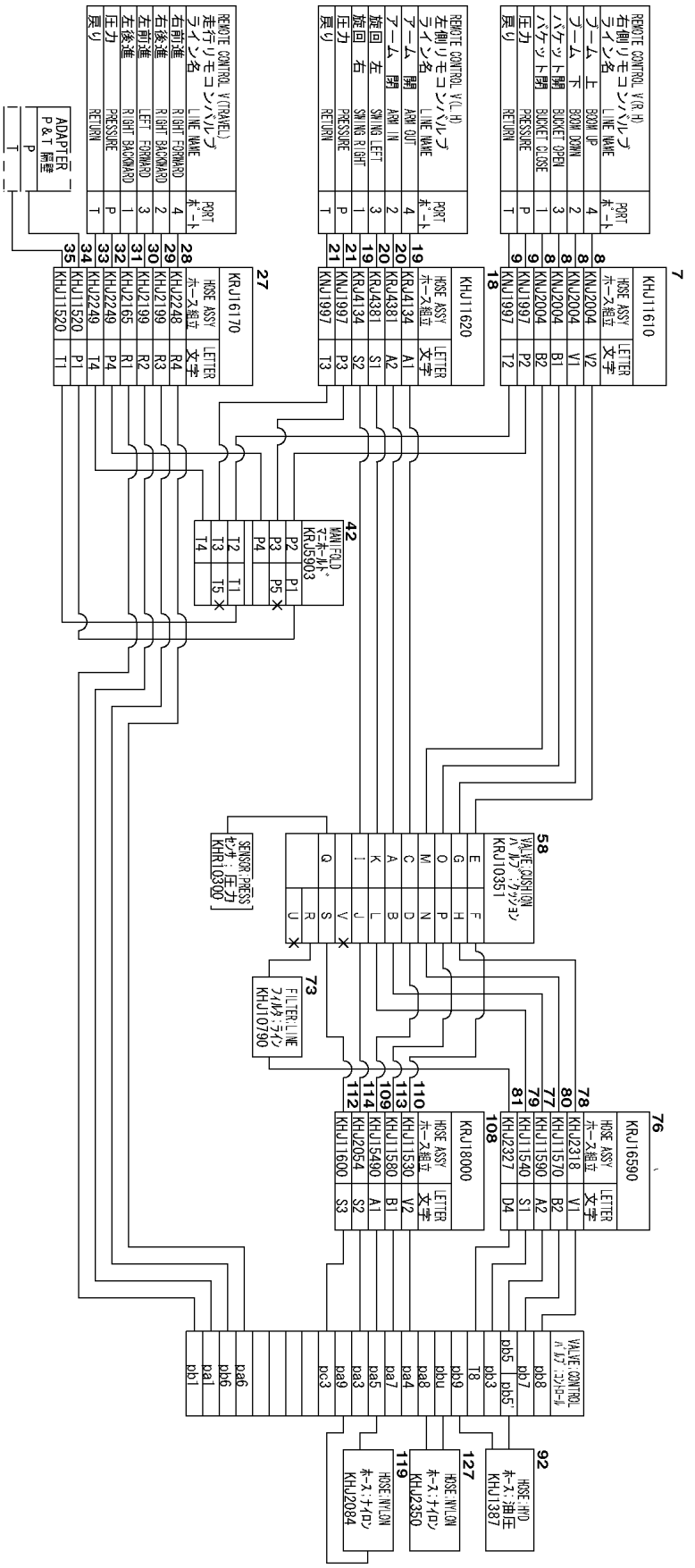

KG1RJ617-0
KRJ19780-EZ

https://truckmanualshub.com/

https://truckmanualshub.com/

２[３] ４[５～７]

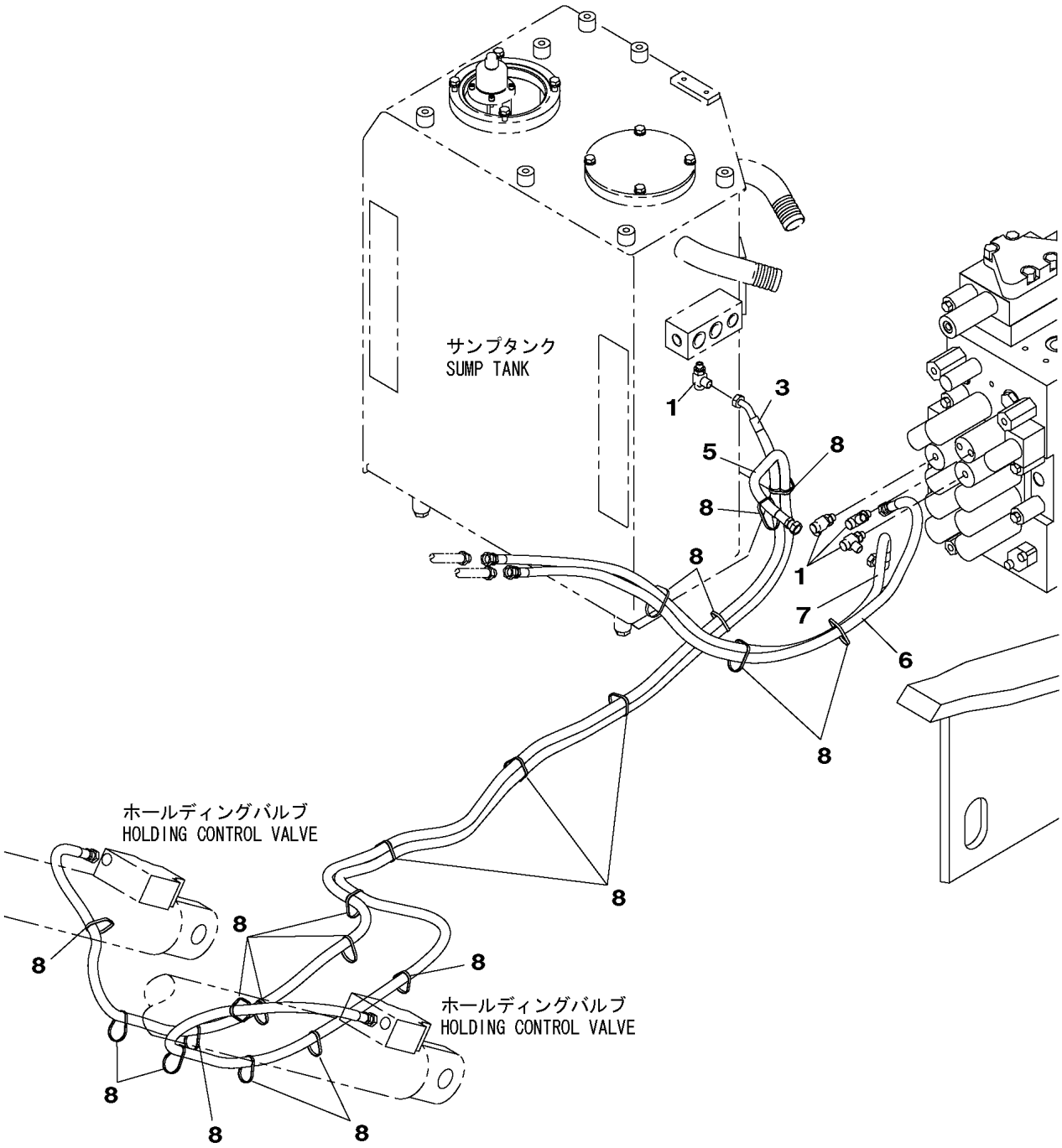

KG1RJ670-0
KRJ16940-DZ

https://truckmanualshub.com/

210A5 1101－ 210L5 1101－

符号 ITEM	構成 COMPO	部品番号 PART NO.	部品名	PART NAME	個数 Q'TY	ｲﾝﾅｰ	適用号機 SERIAL_NO.	互換 ICA	代替部品 REPLACEABLE PART
1	1	KHJ11560	ﾁｰ G1/4XG3/8XG1/4	TEE	4				
2	1A	KRJ11640	ﾎｰｽ ｸﾐﾀﾃ(ｺﾞﾑﾎｰｽ)ｶﾞｰﾄ	HOSE SPL	1				
3	2	KHJ11550	ﾎｰｽ;ﾕｱﾂ SIB70-9X3250	HOSE;HYD	1				
4	1A	KRJ16300	ﾎｰｽ ｸﾐﾀﾃ(ｺﾞﾑﾎｰｽ)ｶﾞｰﾄ	HOSE SPL	1				
5	2	KHJ2805	ﾎｰｽ;ﾕｱﾂ 70-09X3700 5	HOSE;HYD	1				
6	2	KHJ1406	ﾎｰｽ;ﾕｱﾂ (SIB70-9X140	HOSE;HYD	1				
7	2	KHJ2293	ﾎｰｽ;ﾕｱﾂ 70-04X1400 5	HOSE;HYD	1				
8	1	KHH0142	ﾊﾞﾝﾄﾞ;ｿｸｾﾝ L=250	BAND;HARNESS	21 AR				

https://truckmanualshub.com/

14 [15 ~ 18]

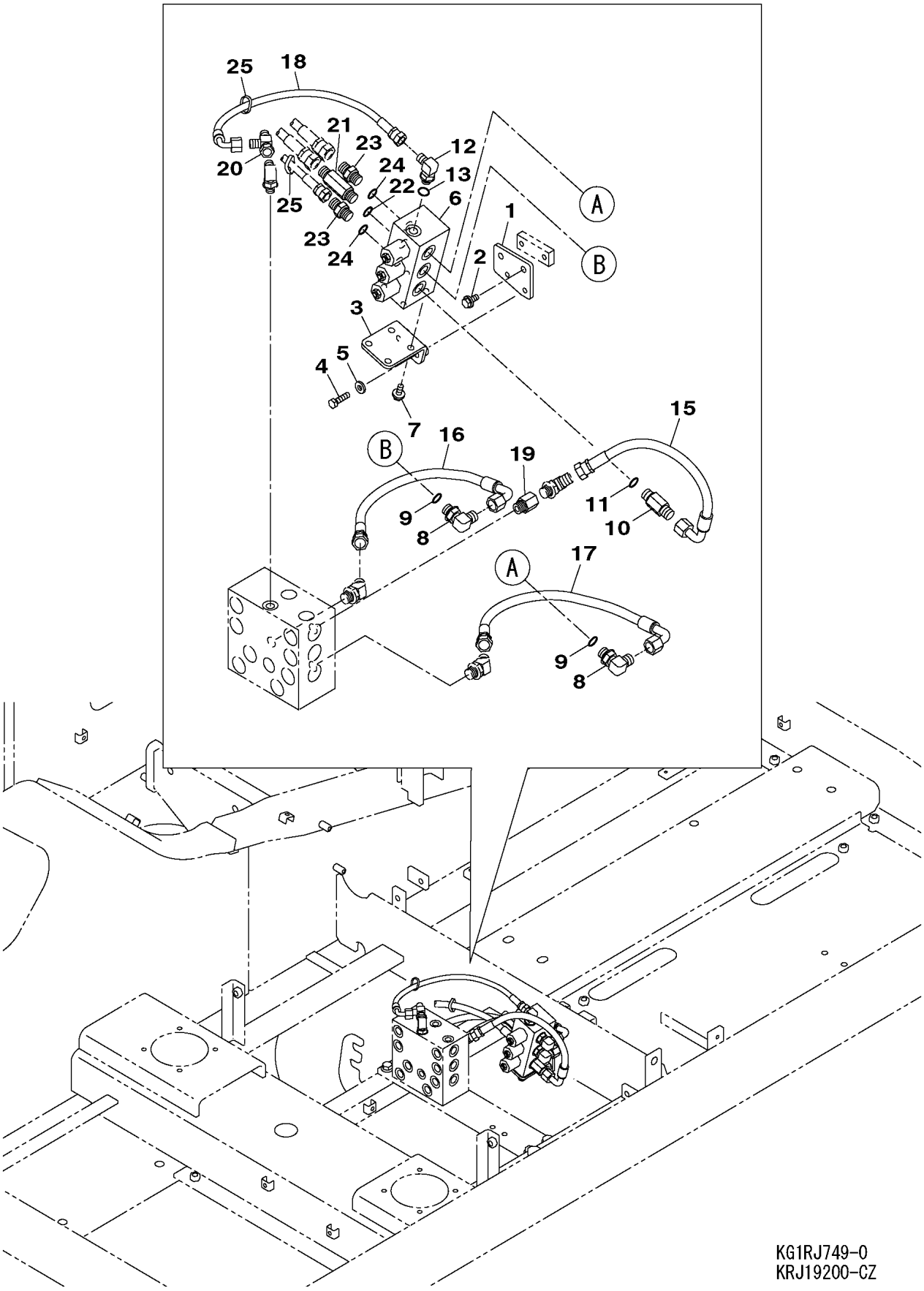

https://truckmanualshub.com/

210L5 1101－

符号 ITEM	構成 COMPO	部品番号 PART NO.	部品名	PART NAME	個数 Q'TY	ｲﾝﾅｰ	適用号機 SERIAL_NO.	互換 ICA	代替部品 REPLACEABLE PART
1	1	KRJ19150	ﾌﾞﾗｹｯﾄ	BRACKET	1				
2	1	105R008Y020R	ｾﾑｽB M 8X 20	BOLT;SEMS	2				
3	1	KRJ19160	ﾌﾞﾗｹｯﾄ	BRACKET	1				
4	1	102R008Y030R	ｺｳﾘｷB M 8X 30	BOLT;HIGH STRENGTH	2				
5	1	KAJ1500	ｺｳﾘｷW M8	WASHER;HIGH STRENGTH	2				
6	1	KRJ19110	ﾊﾞﾙﾌﾞ;ﾚｼﾞｭｰｼﾝｸﾞ	VALVE;REDUCING	1				
7	1	105R008Y020R	ｾﾑｽB M 8X 20	BOLT;SEMS	4				
8	1A	KHJ0342	ｴﾙﾎﾞ HL204-030 G3/8	ELBOW	2				
9	2	BRP0007	O-ﾘﾝｸﾞ 1B-P14	O-RING	2				
10	1A	KNJ1311	ｱﾀﾞﾌﾟﾀ;ﾎｰｽ	ADAPTER;HOSE	1				
11	2	BRP0007	O-ﾘﾝｸﾞ 1B-P14	O-RING	1				
12	1A	KHJ0341	ｴﾙﾎﾞ HL204-020 G1/4	ELBOW	1				
13	2	UEJ0360	O-ﾘﾝｸﾞ 1B-P11	O-RING	1				
14	1A	KRJ19170	ﾎｰｽ ｸﾐﾀﾃ(ｼﾞｭｳﾅﾝｾｲﾅｲﾛ	HOSE SPL	1				
15	2	KHJ2149	ﾎｰｽ;ﾅｲﾛﾝ 70-9X360 5+	HOSE;NYLON	1				
16	2	KHJ2169	ﾎｰｽ;ﾅｲﾛﾝ 70-9X450 5+	HOSE;NYLON	1				
17	2	KHJ16390	ﾎｰｽ;ﾅｲﾛﾝ 70-9X420 5+	HOSE;NYLON	1				
18	2	KHJ2179	ﾎｰｽ;ﾅｲﾛﾝ 70-6X450 5+	HOSE;NYLON	1				
19	1	KHJ13790	ｽﾀｯﾄﾞ G3/8XG3/8	STUD	1				
20	1	KHJ2130	ﾁｰ 3-G1/4	TEE	1				
21	1A	KAJ2351	ｱﾀﾞﾌﾟﾀ;ﾎｰｽ	ADAPTER;HOSE	1				
22	2	BRP0007	O-ﾘﾝｸﾞ 1B-P14	O-RING	1				
23	1A	KNJ0759	ｱﾀﾞﾌﾟﾀ;ﾎｰｽ HA208-03	ADAPTER;HOSE	2				
24	2	BRP0007	O-ﾘﾝｸﾞ 1B-P14	O-RING	2				
25	1	KHH0142	ﾊﾞﾝﾄﾞ;ｿｸｾﾝ L=250	BAND;HARNESS	2 AR				

https://truckmanualshub.com/

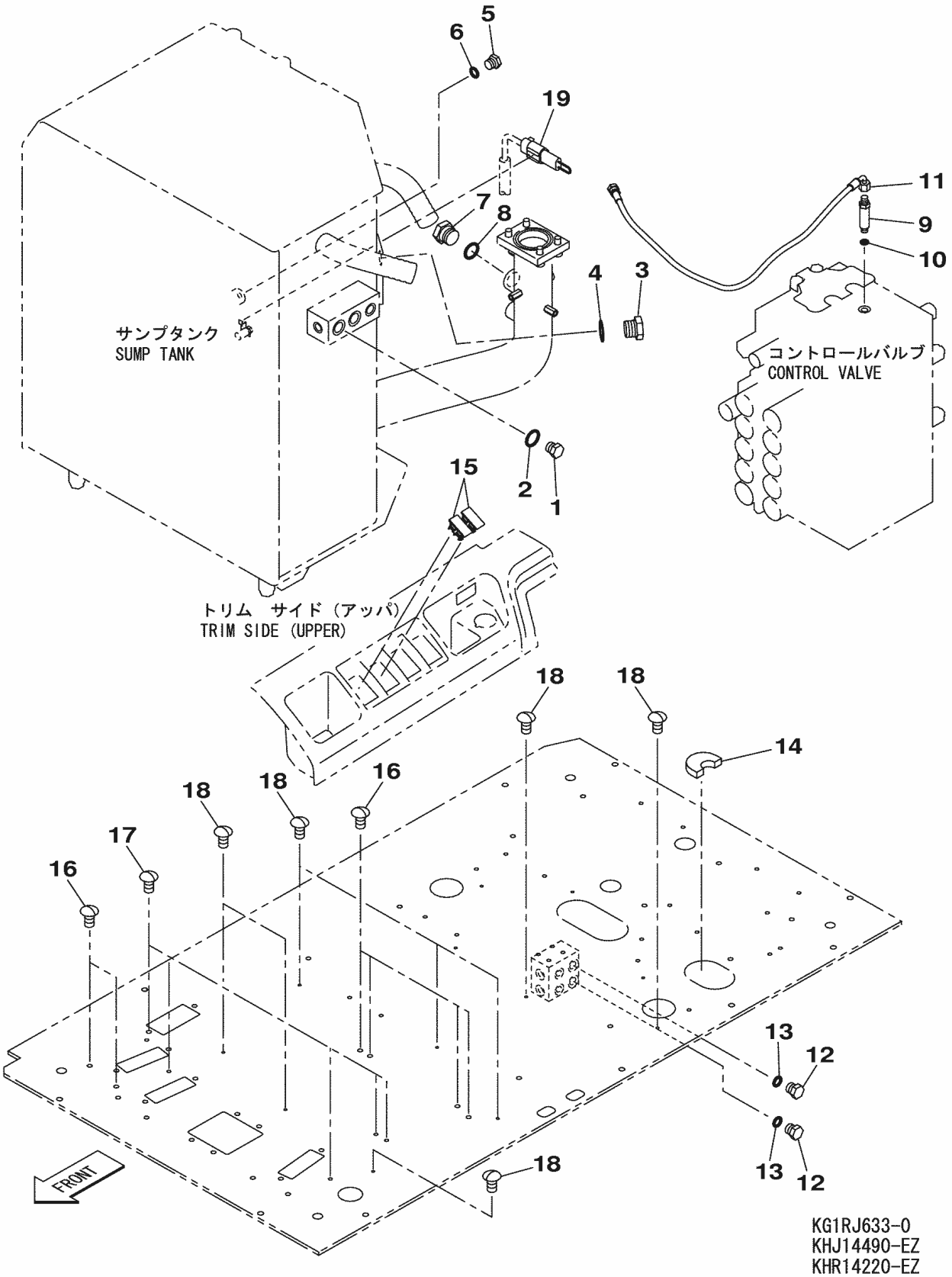

KG1RJ633-0
KHJ14490-EZ
KHR14220-EZ
KRJ11080-EZ
KRJ16160-EZ
KRJ16200-EZ
KRJ16210-EZ
KRJ16220-EZ
KRJ16240-DZ
KRJ16780-EZ
KHR16780-BZ

https://truckmanualshub.com/

210A5 1101－ 210L5 1101－

符号 ITEM	構成 COMPO	部品番号 PART NO.	部品名	PART NAME	個数 Q'TY	ｲﾝﾅｰ	適用号機 SERIAL_NO.	互換 ICA	代替部品 REPLACEABLE PART
1	1A	BRJ0190	ﾌﾟﾗｸﾞ ASSY PF1/2	PLUG	1				
2	2	UBJ0157	O-ﾘﾝｸﾞ 1B-P18	O-RING	1				
3	1A	BRJ0174	ﾌﾟﾗｸﾞ ﾛﾂｶｸ	PLUG	1				
4	2	BHJ0795	O-ﾘﾝｸﾞ 1B P29	O-RING	1				
5	1A	KHJ0363	ﾌﾟﾗｸﾞ G1/4	PLUG	1				
6	2	UEJ0360	O-ﾘﾝｸﾞ 1B-P11	O-RING	1				
7	1A	BRJ0174	ﾌﾟﾗｸﾞ ﾛﾂｶｸ	PLUG	1				
8	2	BHJ0795	O-ﾘﾝｸﾞ 1B P29	O-RING	1				
9	1A	KAJ2177	ｱﾀﾞﾌﾟﾀ;ﾎｰｽ G1/4XG1/4	ADAPTER;HOSE	1				
10	2	UEJ0360	O-ﾘﾝｸﾞ 1B-P11	O-RING	1				
11	1	KHJ2249	ﾎｰｽ;ﾅｲﾛﾝ 70-6X950 5+	HOSE;NYLON	1				
12	1A	KHJ0363	ﾌﾟﾗｸﾞ G1/4	PLUG	2				
13	2	UEJ0360	O-ﾘﾝｸﾞ 1B-P11	O-RING	2				
14	1	KHJ14620	ｼｰﾙ;ｸﾂｼｮﾝ	SEAL;CUSHION	1		210A5 -1298 210L5 -1213		
15	1	KHR10390	ｷｬﾂﾌﾟ ﾒｸﾗ(ﾛｯｶｽｲｯﾁ)	CAP	2				
16	1	KHJ15060	ｷｬﾂﾌﾟ;ﾈｼﾞｺﾐ M10	CAP;SCREW	6				
17	1	KHJ15080	ｷｬﾂﾌﾟ;ﾈｼﾞｺﾐ M8	CAP;SCREW	5				
18	1	KHJ15070	ｷｬﾂﾌﾟ ﾏｽｷﾝｸﾞﾘﾍﾞｯﾄ M6	CAP;SPL	8		210A5 -1298 210L5 -1213		
19	1	KHR16740	ﾊｰﾈｽ;ﾜｲﾔ ｲﾝｼﾞｹｰﾀ ｼﾞｬ	HARNESS;WIRE	1				

https://truckmanualshub.com/

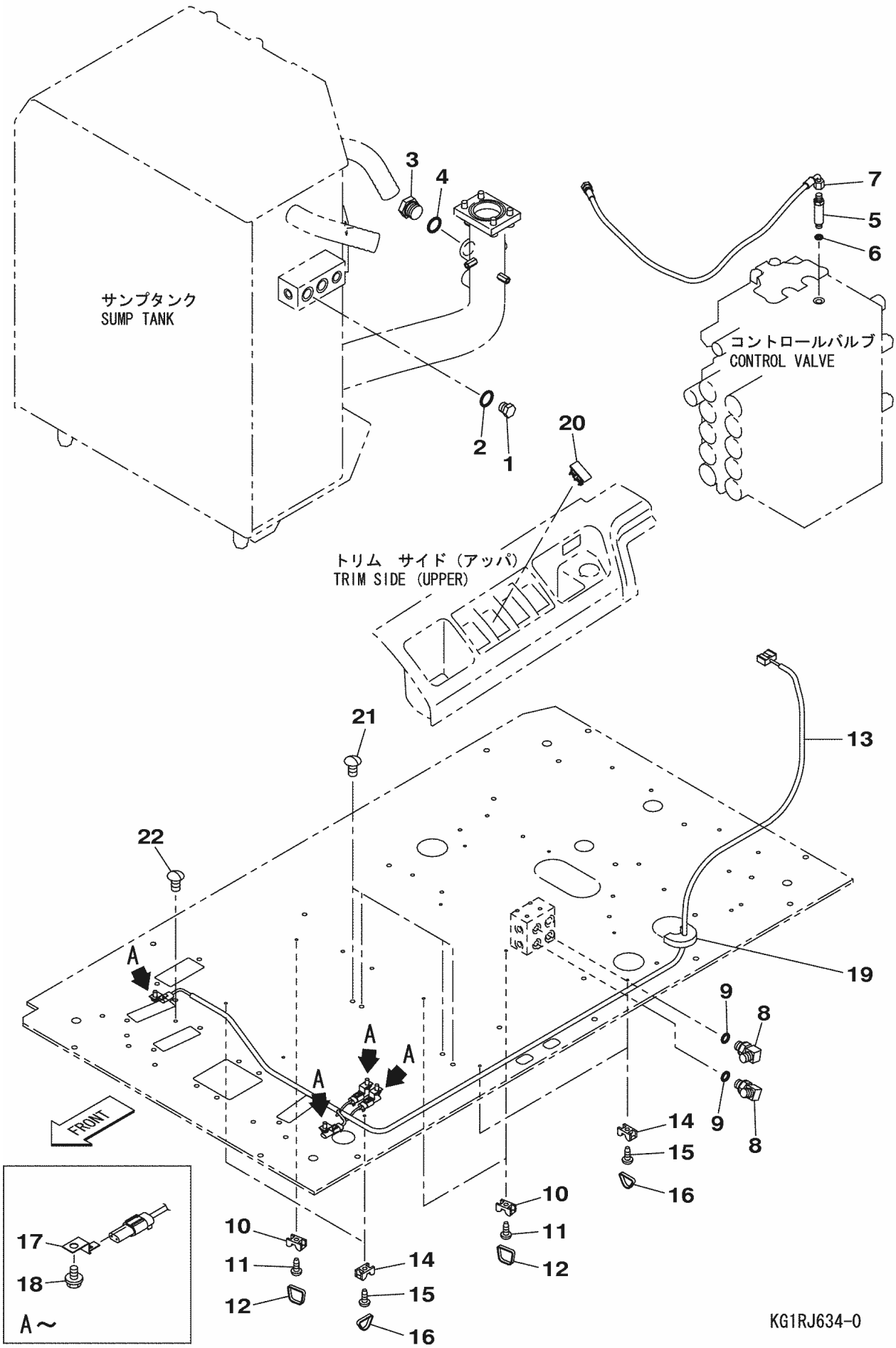

https://truckmanualshub.com/

210A5 1101－ 210L5 1101－

符号 ITEM	構成 COMPO	部品番号 PART NO.	部品名	PART NAME	個数 Q'TY	ｲﾝﾅｰ	適用号機 SERIAL_NO.	互換 ICA	代替部品 REPLACEABLE PART
1	1A	BRJ0190	ﾌﾟﾗｸﾞ ASSY PF1/2	PLUG	1				
2	2	UBJ0157	O-ﾘﾝｸﾞ 1B-P18	O-RING	1				
3	1A	BRJ0174	ﾌﾟﾗｸﾞ ﾛｯｶｸ	PLUG	1				
4	2	BHJ0795	O-ﾘﾝｸﾞ 1B P29	O-RING	1				
5	1A	KAJ2177	ｱﾀﾞﾌﾟﾀ;ﾎｰｽ G1/4XG1/4	ADAPTER;HOSE	1				
6	2	UEJ0360	O-ﾘﾝｸﾞ 1B-P11	O-RING	1				
7	1	KHJ2249	ﾎｰｽ;ﾅｲﾛﾝ 70-6X950 5+	HOSE;NYLON	1				
8	1A	KHJ0341	ｴﾙﾎﾞ HL204-020 G1/4	ELBOW	2				
9	2	UEJ0360	O-ﾘﾝｸﾞ 1B-P11	O-RING	2				
10	1	KHR0319	ｸﾗﾝﾌﾟ ﾏｳﾝﾄ	CLAMP;SPL	3				
11	1	145N006S008R	+ﾅﾍﾞS M 6X 8	SCREW;PAN HD	3				
12	1	KHH0142	ﾊﾞﾝﾄﾞ;ｿｸｾﾝ L=250	BAND;HARNESS	3				
13	1	KHR15960	ﾊｰﾈｽ;ﾜｲﾔ ﾍｲﾖｳ+ﾀﾞｲ2ﾖﾋ	HARNESS;WIRE	1				
14	1	KHR0319	ｸﾗﾝﾌﾟ ﾏｳﾝﾄ	CLAMP;SPL	4				
15	1	145N006S008R	+ﾅﾍﾞS M 6X 8	SCREW;PAN HD	4				
16	1	KHH0142	ﾊﾞﾝﾄﾞ;ｿｸｾﾝ L=250	BAND;HARNESS	4				
17	1	KHR1317	ｸﾘｯﾌﾟ	CLIP	4				
18	1	105R008Y016R	ｾﾑｽB M 8X 16	BOLT;SEMS	4				
19	1	KHJ14640	ｼｰﾙ;ｸｯｼｮﾝ	SEAL;CUSHION	1		210A5 -1298 210L5 -1213		
20	1	KHR10390	ｷｬｯﾌﾟ ﾒｸﾗ(ﾛｯｶｽｲｯﾁ)	CAP	1				
21	1	KHJ15060	ｷｬｯﾌﾟ;ﾈｼﾞｺﾐ M10	CAP;SCREW	4				
22	1	KHJ15080	ｷｬｯﾌﾟ;ﾈｼﾞｺﾐ M8	CAP;SCREW	1				

https://truckmanualshub.com/

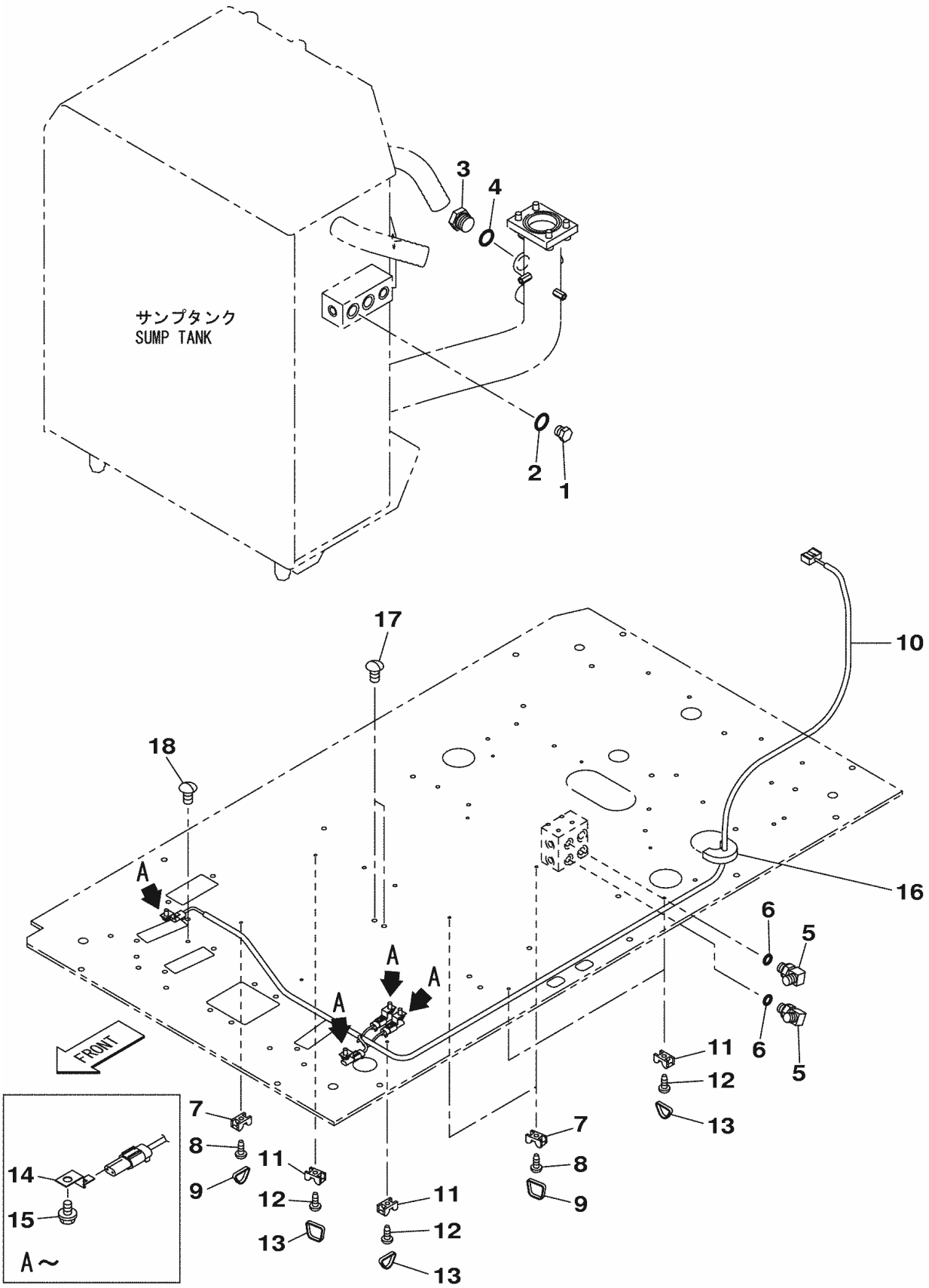

KG1RJ635-0

https://truckmanualshub.com/

210A5 1101－ 210L5 1101－

符号 ITEM	構成 COMPO	部品番号 PART NO.	部品名	PART NAME	個数 Q'TY	ｲﾝﾅｰ	適用号機 SERIAL_NO.	互換 ICA	代替部品 REPLACEABLE PART
1	1A	BRJ0190	ﾌﾟﾗｸﾞ ASSY PF1/2	PLUG	1				
2	2	UBJ0157	O-ﾘﾝｸﾞ 1B-P18	O-RING	1				
3	1A	BRJ0174	ﾌﾟﾗｸﾞ ﾛｯｶｸ	PLUG	1				
4	2	BHJ0795	O-ﾘﾝｸﾞ 1B P29	O-RING	1				
5	1A	KHJ0341	ｴﾙﾎﾞ HL204-020 G1/4	ELBOW	2				
6	2	UEJ0360	O-ﾘﾝｸﾞ 1B-P11	O-RING	2				
7	1	KHR0319	ｸﾗﾝﾌﾟ ﾏｳﾝﾄ	CLAMP;SPL	3				
8	1	145N006S008R	+ﾅﾍﾞS M 6X 8	SCREW;PAN HD	3				
9	1	KHH0142	ﾊﾞﾝﾄﾞ;ｿｸｾﾝ L=250	BAND;HARNESS	3				
10	1	KHR15960	ﾊｰﾈｽ;ﾜｲﾔ ﾍｲﾖｳ+ﾀﾞｲ2ﾖﾋ	HARNESS;WIRE	1				
11	1	KHR0319	ｸﾗﾝﾌﾟ ﾏｳﾝﾄ	CLAMP;SPL	4				
12	1	145N006S008R	+ﾅﾍﾞS M 6X 8	SCREW;PAN HD	4				
13	1	KHH0142	ﾊﾞﾝﾄﾞ;ｿｸｾﾝ L=250	BAND;HARNESS	4				
14	1	KHR1317	ｸﾘｯﾌﾟ	CLIP	4				
15	1	105R008Y016R	ｾﾑｽB M 8X 16	BOLT;SEMS	4				
16	1	KHJ14640	ｼｰﾙ;ｸｯｼｮﾝ	SEAL;CUSHION	1		210A5 -1298 210L5 -1213		
17	1	KHJ15060	ｷｬｯﾌﾟ;ﾈｼﾞｺﾐ M10	CAP;SCREW	2				
18	1	KHJ15080	ｷｬｯﾌﾟ;ﾈｼﾞｺﾐ M8	CAP;SCREW	1				

https://truckmanualshub.com/

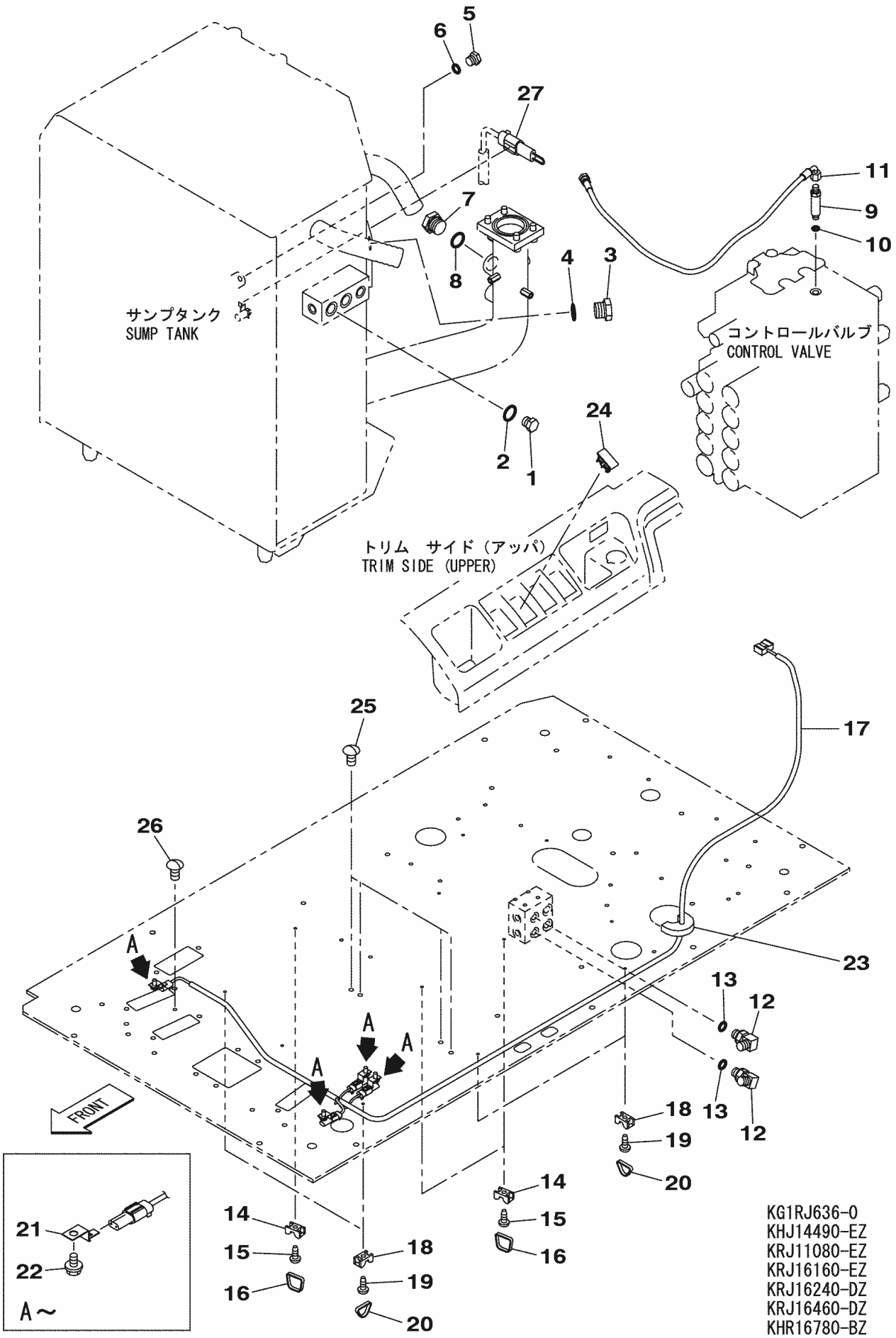

https://truckmanualshub.com/

210L5 1101－

符号 ITEM	構成 COMPO	部品番号 PART NO.	部品名	PART NAME	個数 Q'TY	ｲﾝﾅｰ	適用号機 SERIAL_NO.	互換 ICA	代替部品 REPLACEABLE PART
1	1A	BRJ0190	ﾌﾟﾗｸﾞ ASSY PF1/2	PLUG	1				
2	2	UBJ0157	O-ﾘﾝｸﾞ 1B-P18	O-RING	1				
3	1A	BRJ0174	ﾌﾟﾗｸﾞ ﾛｯｶｸ	PLUG	1				
4	2	BHJ0795	O-ﾘﾝｸﾞ 1B P29	O-RING	1				
5	1A	KHJ0363	ﾌﾟﾗｸﾞ G1/4	PLUG	1				
6	2	UEJ0360	O-ﾘﾝｸﾞ 1B-P11	O-RING	1				
7	1A	BRJ0174	ﾌﾟﾗｸﾞ ﾛｯｶｸ	PLUG	1				
8	2	BHJ0795	O-ﾘﾝｸﾞ 1B P29	O-RING	1				
9	1A	KAJ2177	ｱﾀﾞﾌﾟﾀ;ﾎｰｽ G1/4XG1/4	ADAPTER;HOSE	1				
10	2	UEJ0360	O-ﾘﾝｸﾞ 1B-P11	O-RING	1				
11	1	KHJ2249	ﾎｰｽ;ﾅｲﾛﾝ 70-6X950 5+	HOSE;NYLON	1				
12	1A	KHJ0341	ｴﾙﾎﾞ HL204-020 G1/4	ELBOW	2				
13	2	UEJ0360	O-ﾘﾝｸﾞ 1B-P11	O-RING	2				
14	1	KHR0319	ｸﾗﾝﾌﾟ ﾏｳﾝﾄ	CLAMP;SPL	3				
15	1	145N006S008R	+ﾅﾍﾞS M 6X 8	SCREW;PAN HD	3				
16	1	KHH0142	ﾊﾞﾝﾄﾞ;ｿｸｾﾝ L=250	BAND;HARNESS	3				
17	1	KHR15960	ﾊｰﾈｽ;ﾜｲﾔ ﾍｲﾖｳ+ﾀﾞｲ2ﾖﾋ	HARNESS;WIRE	1				
18	1	KHR0319	ｸﾗﾝﾌﾟ ﾏｳﾝﾄ	CLAMP;SPL	4				
19	1	145N006S008R	+ﾅﾍﾞS M 6X 8	SCREW;PAN HD	4				
20	1	KHH0142	ﾊﾞﾝﾄﾞ;ｿｸｾﾝ L=250	BAND;HARNESS	4				
21	1	KHR1317	ｸﾘｯﾌﾟ	CLIP	4				
22	1	105R008Y016R	ｾﾑｽB M 8X 16	BOLT;SEMS	4				
23	1	KHJ14640	ｼｰﾙ;ｸｯｼｮﾝ	SEAL;CUSHION	1		210L5 -1213		
24	1	KHR10390	ｷｬｯﾌﾟ ﾒｸﾗ(ﾛｯｶｽｲｯﾁ)	CAP	1				
25	1	KHJ15060	ｷｬｯﾌﾟ;ﾈｼﾞｺﾐ M10	CAP;SCREW	4				
26	1	KHJ15080	ｷｬｯﾌﾟ;ﾈｼﾞｺﾐ M8	CAP;SCREW	1				
27	1	KHR16740	ﾊｰﾈｽ;ﾜｲﾔ ｲﾝｼﾞｹｰﾀ ｼﾞｬ	HARNESS;WIRE	1				

https://truckmanualshub.com/

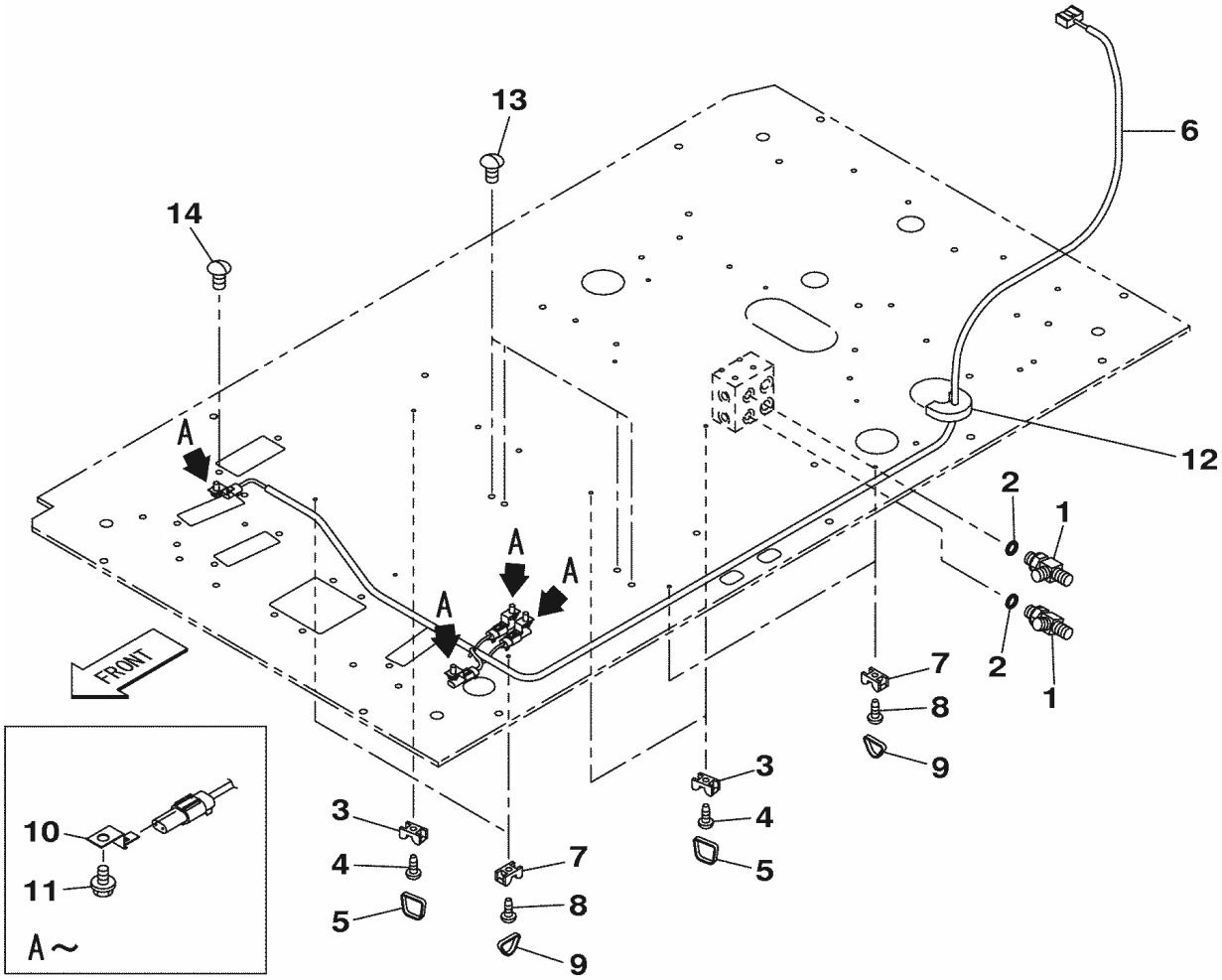

KG1RJ637-0

https://truckmanualshub.com/

210A5 1101－ 210L5 1101－

符号 ITEM	構成 COMPO	部品番号 PART NO.	部品名	PART NAME	個数 Q'TY	ｲﾝﾅｰ	適用号機 SERIAL_NO.	互換 ICA	代替部品 REPLACEABLE PART
1	1A	KHJ0869	ﾁｰ	TEE	2				
2	2	UEJ0360	O-ﾘﾝｸﾞ 1B-P11	O-RING	2				
3	1	KHR0319	ｸﾗﾝﾌﾟ ﾏｳﾝﾄ	CLAMP;SPL	3				
4	1	145N006S008R	+ﾅﾍﾞS M 6X 8	SCREW;PAN HD	3				
5	1	KHH0142	ﾊﾞﾝﾄﾞ;ｿｸｾﾝ L=250	BAND;HARNESS	3				
6	1	KHR15960	ﾊｰﾈｽ;ﾜｲﾔ ﾍｲﾖｳ+ﾀﾞｲ2ﾖﾋ	HARNESS;WIRE	1				
7	1	KHR0319	ｸﾗﾝﾌﾟ ﾏｳﾝﾄ	CLAMP;SPL	4				
8	1	145N006S008R	+ﾅﾍﾞS M 6X 8	SCREW;PAN HD	4				
9	1	KHH0142	ﾊﾞﾝﾄﾞ;ｿｸｾﾝ L=250	BAND;HARNESS	4				
10	1	KHR1317	ｸﾘｯﾌﾟ	CLIP	4				
11	1	105R008Y016R	ｾﾑｽB M 8X 16	BOLT;SEMS	4				
12	1	KHJ14640	ｼｰﾙ;ｸｯｼｮﾝ	SEAL;CUSHION	1		210A5 -1298 210L5 -1213		
13	1	KHJ15060	ｷｬｯﾌﾟ;ﾈｼﾞｺﾐ M10	CAP;SCREW	4				
14	1	KHJ15080	ｷｬｯﾌﾟ;ﾈｼﾞｺﾐ M8	CAP;SCREW	1				

https://truckmanualshub.com/

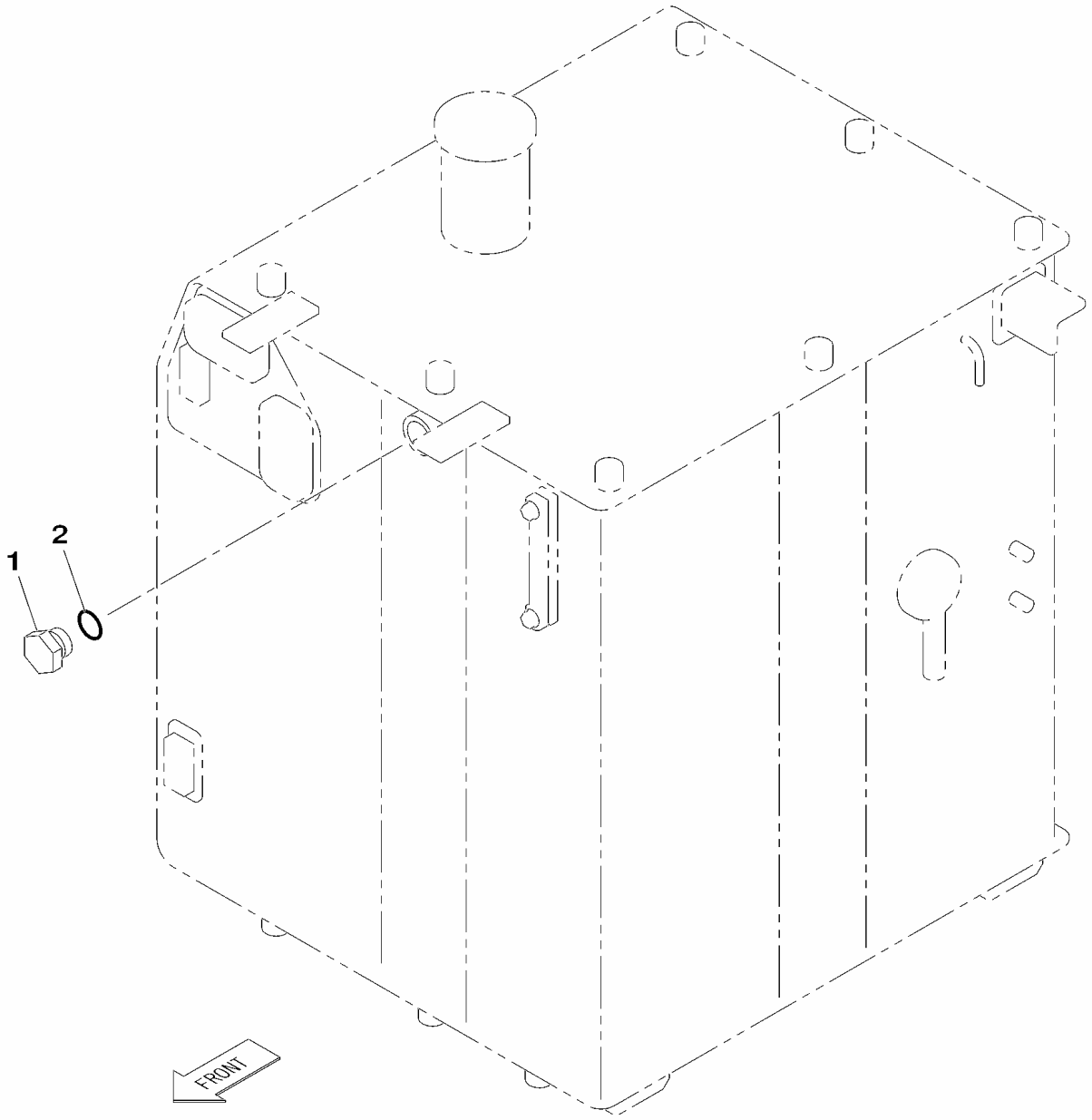

KG0RH472-0
KRH11060-DZ

https://truckmanualshub.com/

210A5 1101－ 210L5 1101－

符号 ITEM	構成 COMPO	部品番号 PART NO.	部品名	PART NAME	個数 Q'TY	ｲﾝﾅｰ	適用号機 SERIAL_NO.	互換 ICA	代替部品 REPLACEABLE PART
1	1A	BRJ1286	ﾌﾟﾗｸﾞ G3/4	PLUG	1				
2	2	UBJ0158	O-ﾘﾝｸﾞ 1B-P24	O-RING	1				

https://truckmanualshub.com/

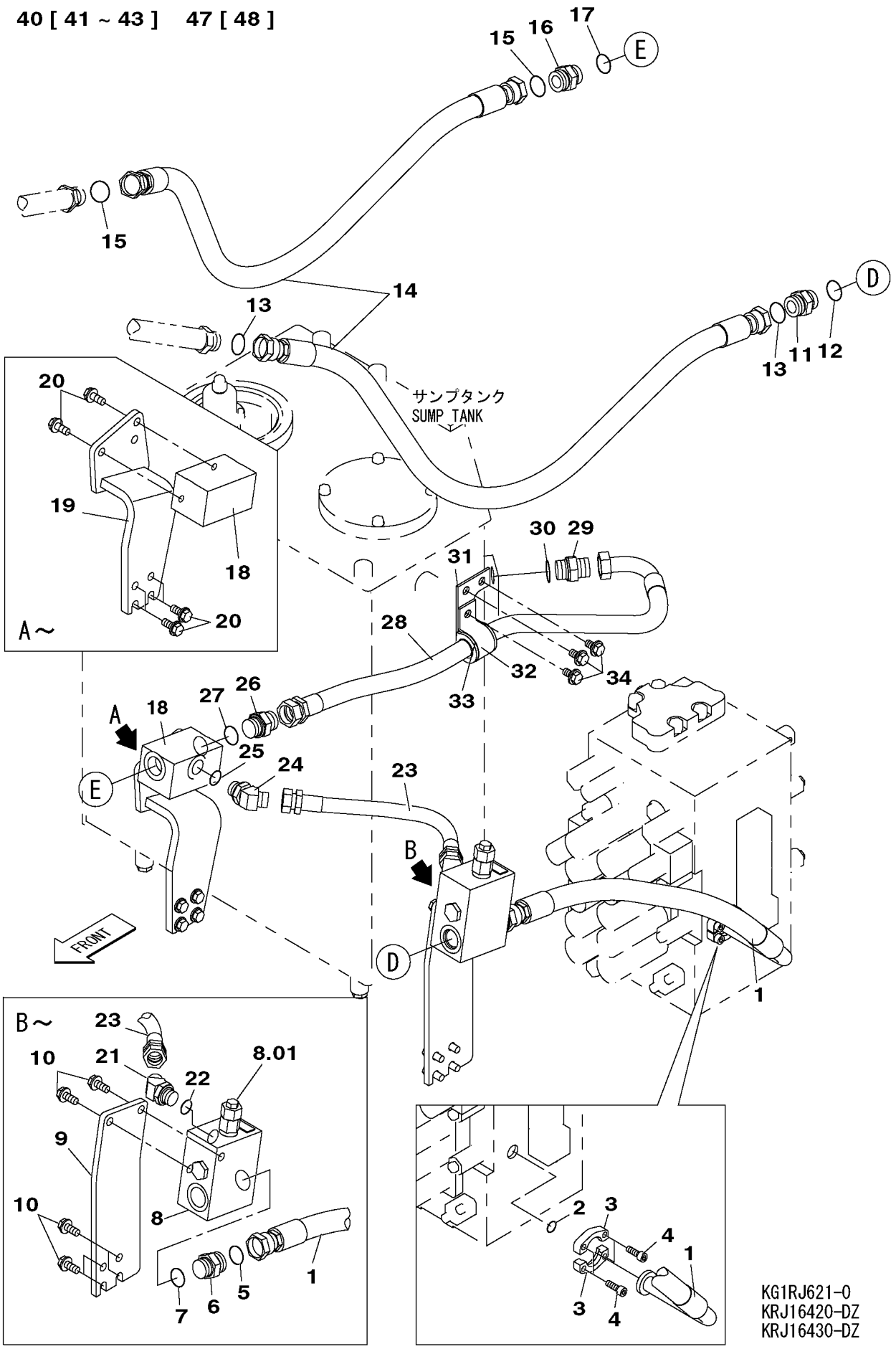

https://truckmanualshub.com/

210A5 1101－ 210L5 1101－

符号 ITEM	構成 COMPO	部品番号 PART NO.	部品名	PART NAME	個数 Q'TY	ｲﾝﾅｰ	適用号機 SERIAL_NO.	互換 ICA	代替部品 REPLACEABLE PART
1	1	KRJ11500	ﾎｰｽ;ﾕｱﾂ S15-25X860 9	HOSE;HYD	1				
2	1	KHJ0914	O-ﾘﾝｸﾞ AN6227-24(JIS	O-RING	1				
3	1	KRJ2682	ﾌﾗﾝｼﾞ;ｽﾌﾟﾘｯﾄ 1 (STD	FLANGE;SPLIT	2				
4	1	108R010Y030R	ﾛｯｶｸｱﾅB M10X 30	BOLT;HEX SOC HD	4				
5	1	KHJ1361	O-ﾘﾝｸﾞ AS568-021	O-RING	1				
6	1A	KHJ1349	ｱﾀﾞﾌﾟﾀ;ﾎｰｽ	ADAPTER;HOSE	1				
7	2	BHJ0795	O-ﾘﾝｸﾞ 1B P29	O-RING	1				
8	1A	KHJ15050	ﾊﾞﾙﾌﾞ;ﾘﾘｰﾌ	VALVE;RELIEF	1	*			
8.01	2	KHJ15850	ﾊﾞﾙﾌﾞ;ﾘﾘｰﾌ	VALVE;RELIEF	1				
9	1	KRJ11470	ﾌﾞﾗｹｯﾄ	BRACKET	1				
10	1	105R012Y030R	ｾﾑｽB M12X 30	BOLT;SEMS	6				
11	1A	KHJ1349	ｱﾀﾞﾌﾟﾀ;ﾎｰｽ	ADAPTER;HOSE	1				
12	2	BHJ0795	O-ﾘﾝｸﾞ 1B P29	O-RING	1				
13	1	KHJ1361	O-ﾘﾝｸﾞ AS568-021	O-RING	2				
14	1	KRJ11510	ﾎｰｽ;ﾕｱﾂ S15-25X1370	HOSE;HYD	2				
15	1	KHJ1361	O-ﾘﾝｸﾞ AS568-021	O-RING	2				
16	1A	KHJ1349	ｱﾀﾞﾌﾟﾀ;ﾎｰｽ	ADAPTER;HOSE	1				
17	2	BHJ0795	O-ﾘﾝｸﾞ 1B P29	O-RING	1				
18	1	KRJ16400	ﾏﾆﾎｰﾙﾄﾞ	MANIFOLD	1				
19	1	KRJ16050	ﾌﾞﾗｹｯﾄ	BRACKET	1				
20	1	105R012Y030R	ｾﾑｽB M12X 30	BOLT;SEMS	6				
21	1A	KHJ0351	ｴﾙﾎﾞ HL205-060 G3/4	ELBOW	1				
22	2	UBJ0158	O-ﾘﾝｸﾞ 1B-P24	O-RING	1				
23	1	KRJ11540	ﾎｰｽ;ﾕｱﾂ 70-19X670 5+	HOSE;HYD	1				
24	1A	KHJ0351	ｴﾙﾎﾞ HL205-060 G3/4	ELBOW	1				
25	2	UBJ0158	O-ﾘﾝｸﾞ 1B-P24	O-RING	1				
26	1A	KNJ0606	ｱﾀﾞﾌﾟﾀ;ﾎｰｽ HA208-08	ADAPTER;HOSE	1				
27	2	BHJ0795	O-ﾘﾝｸﾞ 1B P29	O-RING	1				
28	1	KRJ16340	ﾎｰｽ;ﾕｱﾂ 70-25X1080 5	HOSE;HYD	1				
29	1A	KNJ0606	ｱﾀﾞﾌﾟﾀ;ﾎｰｽ HA208-08	ADAPTER;HOSE	1				
30	2	BHJ0795	O-ﾘﾝｸﾞ 1B P29	O-RING	1				
31	1	KRJ16280	ﾌﾞﾗｹｯﾄ	BRACKET	1				
32	1	KBJ11860	ﾌﾞﾗｹｯﾄ	BRACKET	1				
33	1	KHJ2680	ｸﾗﾝﾌﾟ;ﾎｰｽ 30.0	CLAMP;HOSE	1				
34	1	KHN1079	ﾎﾞﾙﾄ ﾄｸｼｭ ｻﾞｶﾞﾈ ｸﾐｺﾐ	BOLT;SPL	3				
35	1A	KNJ0758	ｱﾀﾞﾌﾟﾀ;ﾎｰｽ HA208-02	ADAPTER;HOSE	2				
36	2	UEJ0360	O-ﾘﾝｸﾞ 1B-P11	O-RING	2				
37	1	CNA0584	ﾆｯﾌﾟﾙ (ﾌｲﾙﾀｰﾂｷ)	NIPPLE	1				
38	1A	KHJ0363	ﾌﾟﾗｸﾞ G1/4	PLUG	2				
39	2	UEJ0360	O-ﾘﾝｸﾞ 1B-P11	O-RING	2				
40	1A	KRJ16410	ﾎｰｽ ｸﾐﾀﾃ(ｼﾞｭｳﾅﾝｾｲﾅｲﾛ	HOSE SPL	1				
41	2	KHJ2165	ﾎｰｽ;ﾅｲﾛﾝ 70-6X2900 5	HOSE;NYLON	1				
42	2	KHJ2050	ﾎｰｽ;ﾅｲﾛﾝ 70-6X1000 5	HOSE;NYLON	1				
43	2	KHJ2050	ﾎｰｽ;ﾅｲﾛﾝ 70-6X1000 5	HOSE;NYLON	1				
44	1	KHJ1178	ｴﾙﾎﾞ 90°ﾛﾝｸﾞ(ﾎｳｺｳﾁｮｳ	ELBOW	1				
45	1A	KHJ0341	ｴﾙﾎﾞ HL204-020 G1/4	ELBOW	1				
46	2	UEJ0360	O-ﾘﾝｸﾞ 1B-P11	O-RING	1				
47	1A	KRJ12470	ﾎｰｽ ｸﾐﾀﾃ(ｼﾞｭｳﾅﾝｾｲﾅｲﾛ	HOSE SPL	1				
48	2	KHJ2309	ﾎｰｽ;ﾅｲﾛﾝ 70-6X550 5+	HOSE;NYLON	1				
49	1A	KHJ2773	ﾁｰ 3-G1/4	TEE	1				
50	2	UEJ0360	O-ﾘﾝｸﾞ 1B-P11	O-RING	1				
51	1	KHH0142	ﾊﾞﾝﾄﾞ;ｿｸｾﾝ L=250	BAND;HARNESS	1 AR				
52	1	KHR14060	ｽｲｯﾁ ﾛｯｶ ﾌﾞﾚｰｶｶｲﾛ	SWITCH;SPL	1				
53	1A	KHR10820	ｽｲｯﾁ;ﾌﾟﾚｯｼｬ (0.49MPA	SWITCH;PRESS.	1				
54	2	UEJ0360	O-ﾘﾝｸﾞ 1B-P11	O-RING	1				

https://truckmanualshub.com/

40 [41 ~ 43] 47 [48]

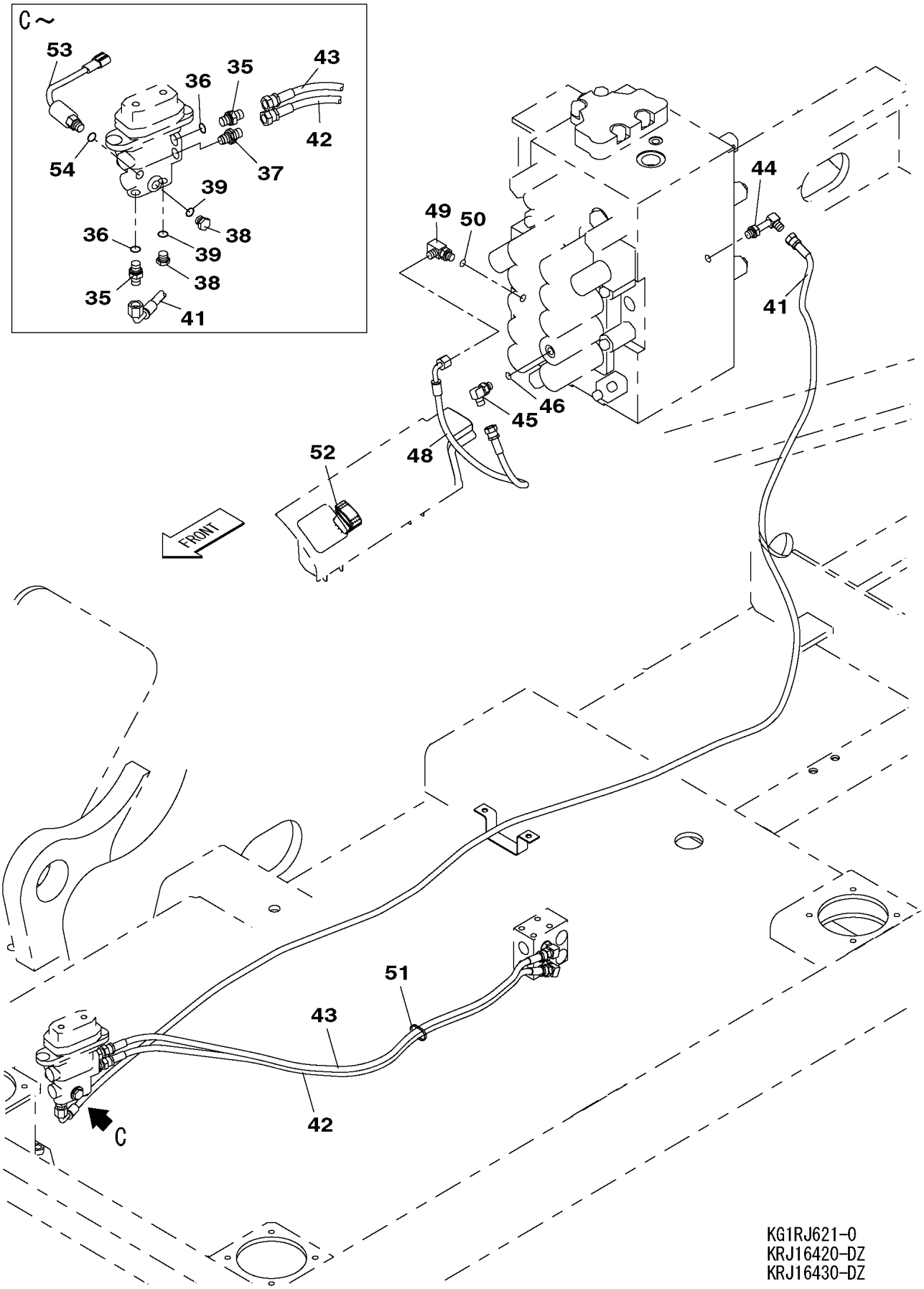

https://truckmanualshub.com/

https://truckmanualshub.com/

38 [39 ~ 42]

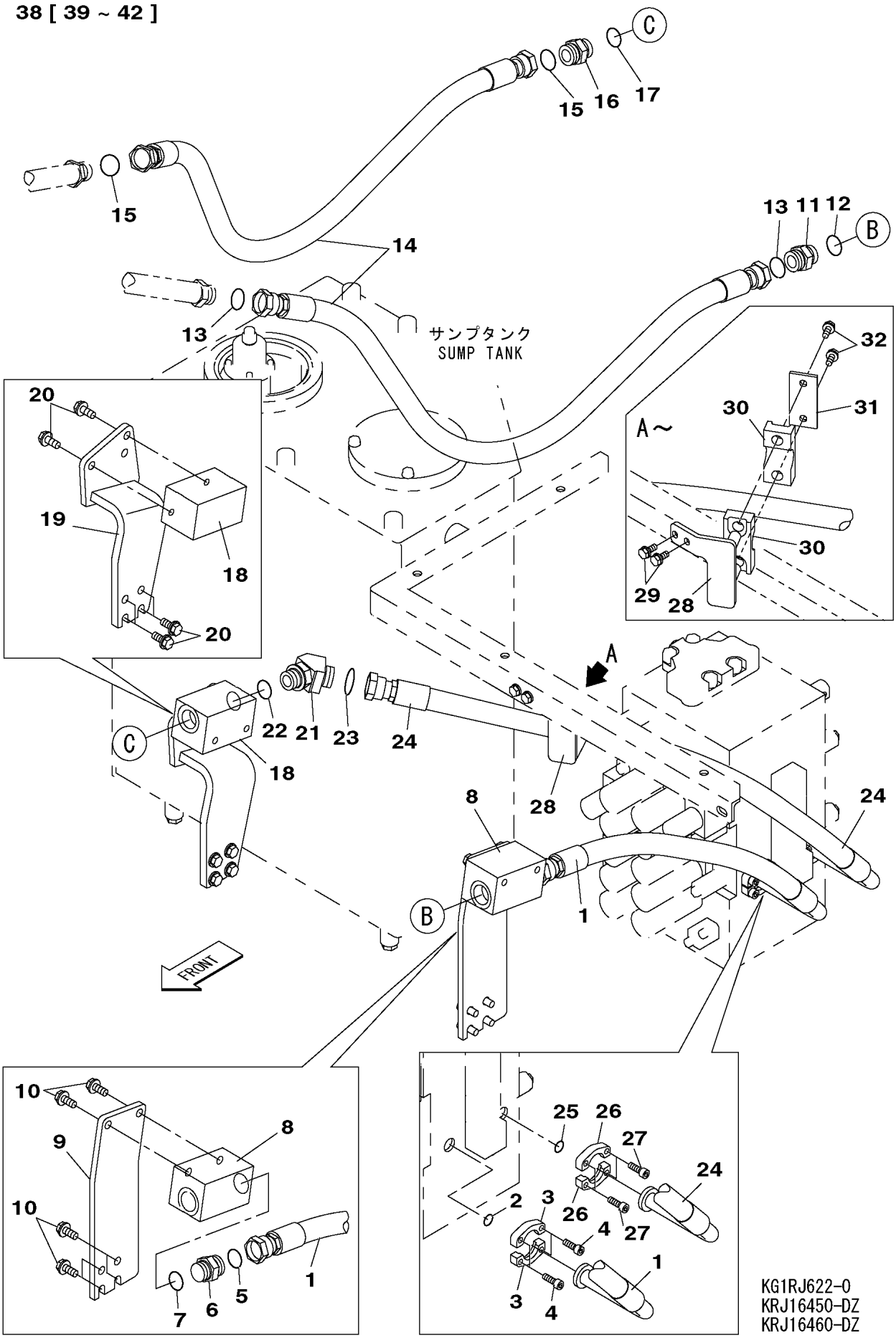

KG1RJ622-0
KRJ16450-DZ
KRJ16460-DZ

https://truckmanualshub.com/

210L5 1101ー

符号 ITEM	構成 COMPO	部品番号 PART NO.	部品名	PART NAME	個数 Q'TY	ｲﾝﾅｰ	適用号機 SERIAL_NO.	互換 ICA	代替部品 REPLACEABLE PART
1	1	KRJ11500	ﾎｰｽ;ﾕｱﾂ S15-25X860 9	HOSE;HYD	1				
2	1	KHJ0914	O-ﾘﾝｸﾞ AN6227-24(JIS	O-RING	1				
3	1	KRJ2682	ﾌﾗﾝｼﾞ;ｽﾌﾟﾘｯﾄ 1 (STD	FLANGE;SPLIT	2				
4	1	108R010Y030R	ﾛｯｶｸｱﾅB M10X 30	BOLT;HEX SOC HD	4				
5	1	KHJ1361	O-ﾘﾝｸﾞ AS568-021	O-RING	1				
6	1A	KHJ1349	ｱﾀﾞﾌﾟﾀ;ﾎｰｽ	ADAPTER;HOSE	1				
7	2	BHJ0795	O-ﾘﾝｸﾞ 1B P29	O-RING	1				
8	1	KRJ12170	ﾏﾆﾎｰﾙﾄﾞ	MANIFOLD	1				
9	1	KRJ11470	ﾌﾞﾗｹｯﾄ	BRACKET	1				
10	1	105R012Y030R	ｾﾑｽB M12X 30	BOLT;SEMS	6				
11	1A	KHJ1349	ｱﾀﾞﾌﾟﾀ;ﾎｰｽ	ADAPTER;HOSE	1				
12	2	BHJ0795	O-ﾘﾝｸﾞ 1B P29	O-RING	1				
13	1	KHJ1361	O-ﾘﾝｸﾞ AS568-021	O-RING	2				
14	1	KRJ11510	ﾎｰｽ;ﾕｱﾂ S15-25X1370	HOSE;HYD	2				
15	1	KHJ1361	O-ﾘﾝｸﾞ AS568-021	O-RING	2				
16	1A	KHJ1349	ｱﾀﾞﾌﾟﾀ;ﾎｰｽ	ADAPTER;HOSE	1				
17	2	BHJ0795	O-ﾘﾝｸﾞ 1B P29	O-RING	1				
18	1	KRJ12170	ﾏﾆﾎｰﾙﾄﾞ	MANIFOLD	1				
19	1	KRJ16050	ﾌﾞﾗｹｯﾄ	BRACKET	1				
20	1	105R012Y030R	ｾﾑｽB M12X 30	BOLT;SEMS	6				
21	1A	KHJ11370	ｴﾙﾎﾞ	ELBOW	1				
22	2	BHJ0795	O-ﾘﾝｸﾞ 1B P29	O-RING	1				
23	1	KHJ1361	O-ﾘﾝｸﾞ AS568-021	O-RING	1				
24	1	KRJ11520	ﾎｰｽ;ﾕｱﾂ S15-25X1300	HOSE;HYD	1				
25	1	KHJ0914	O-ﾘﾝｸﾞ AN6227-24(JIS	O-RING	1				
26	1	KRJ2682	ﾌﾗﾝｼﾞ;ｽﾌﾟﾘｯﾄ 1 (STD	FLANGE;SPLIT	2				
27	1	108R010Y030R	ﾛｯｶｸｱﾅB M10X 30	BOLT;HEX SOC HD	4				
28	1	KRJ16060	ﾌﾞﾗｹｯﾄ	BRACKET	1				
29	1	105R010Y025R	ｾﾑｽB M10X 25	BOLT;SEMS	2				
30	1	KRJ11450	ｸﾗﾝﾌﾟ;ﾎｰｽ D38	CLAMP;HOSE	2				
31	1	KRJ10800	ﾌﾟﾚｰﾄ	PLATE	1				
32	1	105R010Y025R	ｾﾑｽB M10X 25	BOLT;SEMS	2				
33	1A	KNJ0758	ｱﾀﾞﾌﾟﾀ;ﾎｰｽ HA208-02	ADAPTER;HOSE	3				
34	2	UEJ0360	O-ﾘﾝｸﾞ 1B-P11	O-RING	3				
35	1	CNA0584	ﾆｯﾌﾟﾙ (ﾌｨﾙﾀｰﾂｷ)	NIPPLE	1				
36	1A	KHJ0363	ﾌﾟﾗｸﾞ G1/4	PLUG	1				
37	2	UEJ0360	O-ﾘﾝｸﾞ 1B-P11	O-RING	1				
38	1A	KRJ16440	ﾎｰｽ ｸﾐﾀﾃ(ｼﾞｭｳﾅﾝｾｲﾅｲﾛ	HOSE SPL	1				
39	2	KHJ2165	ﾎｰｽ;ﾅｲﾛﾝ 70-6X2900 5	HOSE;NYLON	1				
40	2	KHJ2165	ﾎｰｽ;ﾅｲﾛﾝ 70-6X2900 5	HOSE;NYLON	1				
41	2	KHJ2050	ﾎｰｽ;ﾅｲﾛﾝ 70-6X1000 5	HOSE;NYLON	1				
42	2	KHJ2050	ﾎｰｽ;ﾅｲﾛﾝ 70-6X1000 5	HOSE;NYLON	1				
43	1	KHJ1178	ｴﾙﾎﾞ 90°ﾛﾝｸﾞ(ﾎｳｺｳﾁｮｳ	ELBOW	1				
44	1A	KHJ0341	ｴﾙﾎﾞ HL204-020 G1/4	ELBOW	1				
45	2	UEJ0360	O-ﾘﾝｸﾞ 1B-P11	O-RING	1				
46	1	KHH0142	ﾊﾞﾝﾄﾞ;ｿｸｾﾝ L=250	BAND;HARNESS	1 AR				
47	1	KHR15020	ｽｲｯﾁ ﾛｯｶ ｵｳﾌｸｶｲﾛ	SWITCH;SPL	1				
48	1A	KHR10820	ｽｲｯﾁ;ﾌﾟﾚｯｼｬ (0.49MPA	SWITCH;PRESS.	1				
49	2	UEJ0360	O-ﾘﾝｸﾞ 1B-P11	O-RING	1				

https://truckmanualshub.com/

38 [39 ~ 42]

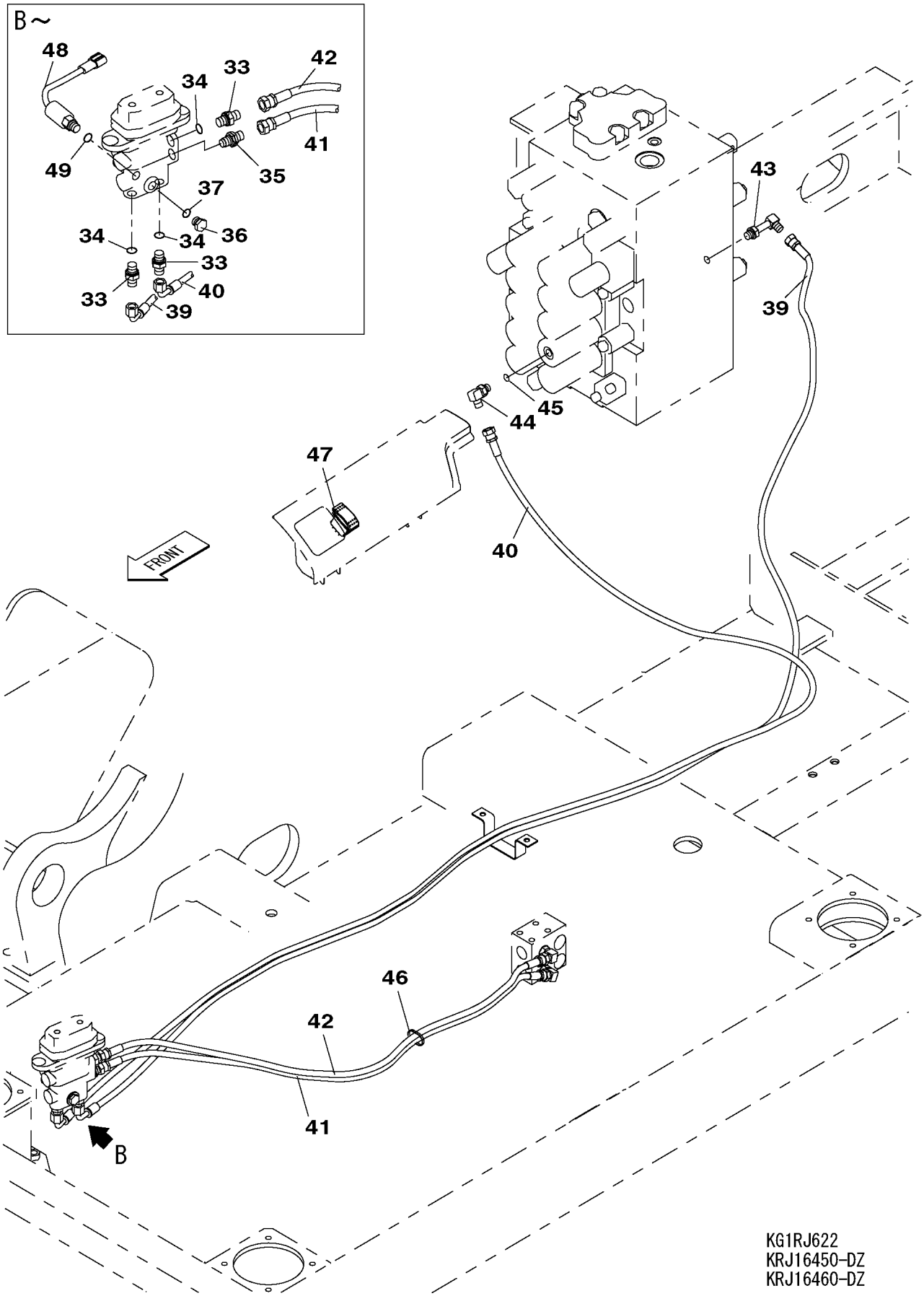

https://truckmanualshub.com/

https://truckmanualshub.com/

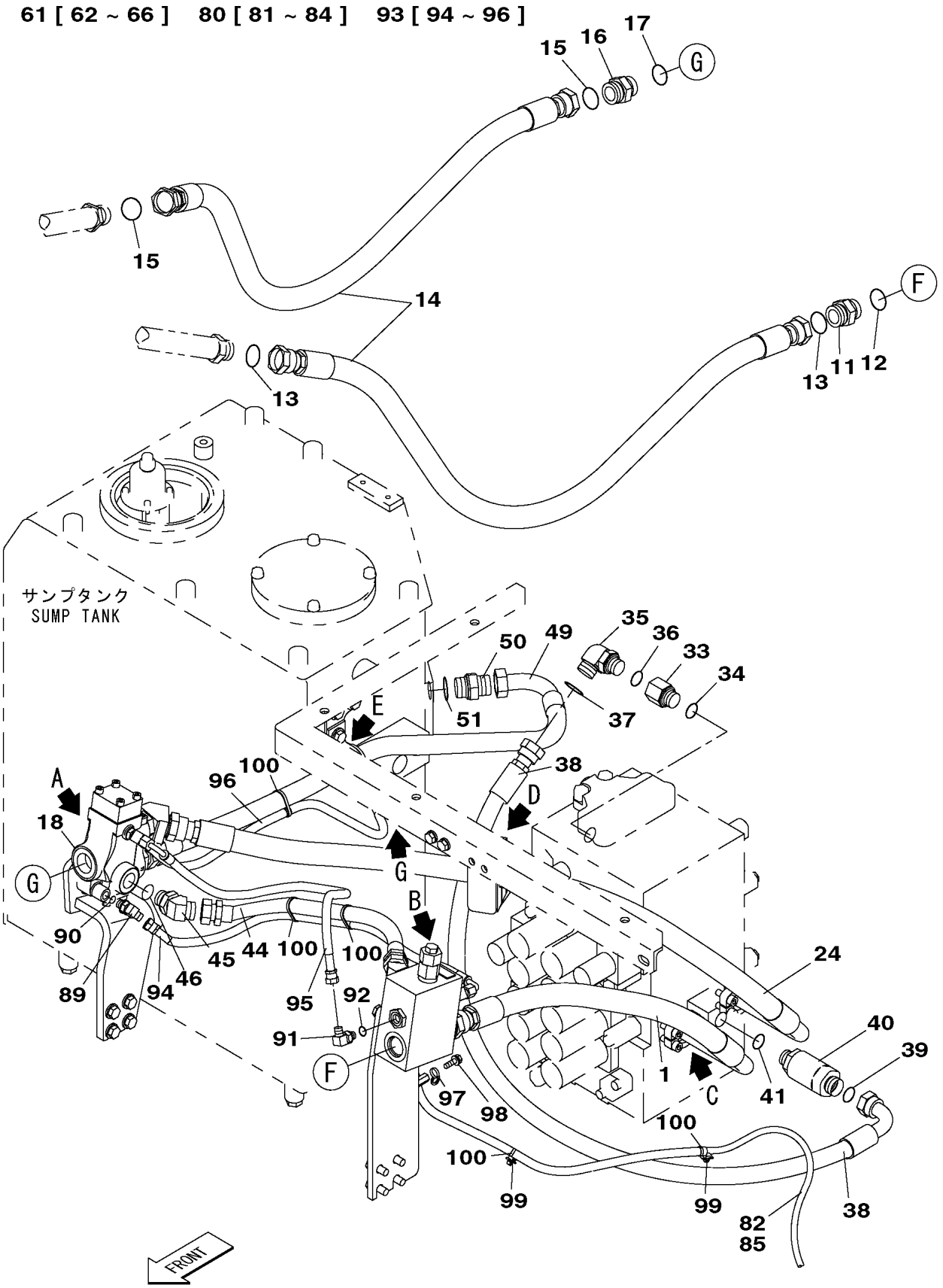

KG1RJ620-0
KRJ16380-DZ
KRJ16390-EZ

https://truckmanualshub.com/

210A5 1101－ 210L5 1101－

符号 ITEM	構成 COMPO	部品番号 PART NO.	部品名	PART NAME	個数 Q'TY	ｲﾝﾅｰ	適用号機 SERIAL_NO.	互換 ICA	代替部品 REPLACEABLE PART
1	1	KRJ11500	ﾎｰｽ;ﾕｱﾂ S15-25X860 9	HOSE;HYD	1				
2	1	KHJ0914	O-ﾘﾝｸﾞ AN6227-24(JIS	O-RING	1				
3	1	KRJ2682	ﾌﾗﾝｼﾞ;ｽﾌﾟﾘｯﾄ 1 (STD	FLANGE;SPLIT	2				
4	1	108R010Y030R	ﾛｯｶｸｱﾅB M10X 30	BOLT;HEX SOC HD	4				
5	1	KHJ1361	O-ﾘﾝｸﾞ AS568-021	O-RING	1				
6	1A	KHJ1349	ｱﾀﾞﾌﾟﾀ;ﾎｰｽ	ADAPTER;HOSE	1				
7	2	BHJ0795	O-ﾘﾝｸﾞ 1B P29	O-RING	1				
8	1A	KHJ10410	ﾊﾞﾙﾌﾞ;ｼｬｯﾄｵﾌ	VALVE;SHUT-OFF	1	*			
8.01	2	KHJ15850	ﾊﾞﾙﾌﾞ;ﾘﾘｰﾌ	VALVE;RELIEF	1				
9	1	KRJ11470	ﾌﾞﾗｹｯﾄ	BRACKET	1				
10	1	105R012Y030R	ｾﾑｽB M12X 30	BOLT;SEMS	6				
11	1A	KHJ1349	ｱﾀﾞﾌﾟﾀ;ﾎｰｽ	ADAPTER;HOSE	1				
12	2	BHJ0795	O-ﾘﾝｸﾞ 1B P29	O-RING	1				
13	1	KHJ1361	O-ﾘﾝｸﾞ AS568-021	O-RING	2				
14	1	KRJ11510	ﾎｰｽ;ﾕｱﾂ S15-25X1370	HOSE;HYD	2				
15	1	KHJ1361	O-ﾘﾝｸﾞ AS568-021	O-RING	2				
16	1A	KHJ1349	ｱﾀﾞﾌﾟﾀ;ﾎｰｽ	ADAPTER;HOSE	1				
17	2	BHJ0795	O-ﾘﾝｸﾞ 1B P29	O-RING	1				
18	1	KHJ10420	ﾊﾞﾙﾌﾞ;ﾃﾞｲﾚｸｼｮﾝ 3ﾎｳｺｳ	VALVE;DIRECTION	1	*			
19	1	KRJ16050	ﾌﾞﾗｹｯﾄ	BRACKET	1				
20	1	105R012Y030R	ｾﾑｽB M12X 30	BOLT;SEMS	6				
21	1A	KHJ11370	ｴﾙﾎﾞ	ELBOW	1				
22	2	BHJ0795	O-ﾘﾝｸﾞ 1B P29	O-RING	1				
23	1	KHJ1361	O-ﾘﾝｸﾞ AS568-021	O-RING	1				
24	1	KRJ11520	ﾎｰｽ;ﾕｱﾂ S15-25X1300	HOSE;HYD	1				
25	1	KHJ0914	O-ﾘﾝｸﾞ AN6227-24(JIS	O-RING	1				
26	1	KRJ2682	ﾌﾗﾝｼﾞ;ｽﾌﾟﾘｯﾄ 1 (STD	FLANGE;SPLIT	2				
27	1	108R010Y030R	ﾛｯｶｸｱﾅB M10X 30	BOLT;HEX SOC HD	4				
28	1	KRJ16060	ﾌﾞﾗｹｯﾄ	BRACKET	1				
29	1	105R010Y025R	ｾﾑｽB M10X 25	BOLT;SEMS	2				
30	1	KRJ11450	ｸﾗﾝﾌﾟ;ﾎｰｽ D38	CLAMP;HOSE	2				
31	1	KRJ10800	ﾌﾟﾚｰﾄ	PLATE	1				
32	1	105R010Y025R	ｾﾑｽB M10X 25	BOLT;SEMS	2				
33	1A	KNJ1936	ｿｹｯﾄ ﾄｸｼｭ	SOCKET	1				
34	2	UBJ0158	O-ﾘﾝｸﾞ 1B-P24	O-RING	1				
35	1A	KHJ1804	ｴﾙﾎﾞ	ELBOW	1				
36	2	UBJ0158	O-ﾘﾝｸﾞ 1B-P24	O-RING	1				
37	1	KHJ1360	O-ﾘﾝｸﾞ AS568-018	O-RING	1				
38	1	KRJ16540	ﾎｰｽ;ﾕｱﾂ S15-19X1130	HOSE;HYD	1				
39	1	KHJ1360	O-ﾘﾝｸﾞ AS568-018	O-RING	1				
40	1A	KHJ10480	ﾊﾞﾙﾌﾞ;ﾁｪｯｸ	VALVE;CHECK	1				
41	2	UBJ0158	O-ﾘﾝｸﾞ 1B-P24	O-RING	1				
42	1A	KHJ0351	ｴﾙﾎﾞ HL205-060 G3/4	ELBOW	1				
43	2	UBJ0158	O-ﾘﾝｸﾞ 1B-P24	O-RING	1				
44	1	KRJ11540	ﾎｰｽ;ﾕｱﾂ 70-19X670 5+	HOSE;HYD	1				
45	1A	KHJ0351	ｴﾙﾎﾞ HL205-060 G3/4	ELBOW	1				
46	2	UBJ0158	O-ﾘﾝｸﾞ 1B-P24	O-RING	1				
47	1A	KNJ0606	ｱﾀﾞﾌﾟﾀ;ﾎｰｽ HA208-08	ADAPTER;HOSE	1				
48	2	BHJ0795	O-ﾘﾝｸﾞ 1B P29	O-RING	1				
49	1	KRJ16340	ﾎｰｽ;ﾕｱﾂ 70-25X1080 5	HOSE;HYD	1				
50	1A	KNJ0606	ｱﾀﾞﾌﾟﾀ;ﾎｰｽ HA208-08	ADAPTER;HOSE	1				
51	2	BHJ0795	O-ﾘﾝｸﾞ 1B P29	O-RING	1				
52	1	KRJ16280	ﾌﾞﾗｹｯﾄ	BRACKET	1				
53	1	KBJ11860	ﾌﾞﾗｹｯﾄ	BRACKET	1				
54	1	KHJ2680	ｸﾗﾝﾌﾟ;ﾎｰｽ 30.0	CLAMP;HOSE	1				
55	1	KHN1079	ﾎﾞﾙﾄ ﾄｸｼｭ ｻﾞｶﾞﾈ ｸﾐｺﾐ	BOLT;SPL	3				
56	1A	KNJ0758	ｱﾀﾞﾌﾟﾀ;ﾎｰｽ HA208-02	ADAPTER;HOSE	3				
57	2	UEJ0360	O-ﾘﾝｸﾞ 1B-P11	O-RING	3				

https://truckmanualshub.com/

61 [62 ~ 66] 80 [81 ~ 84] 93 [94 ~ 96]

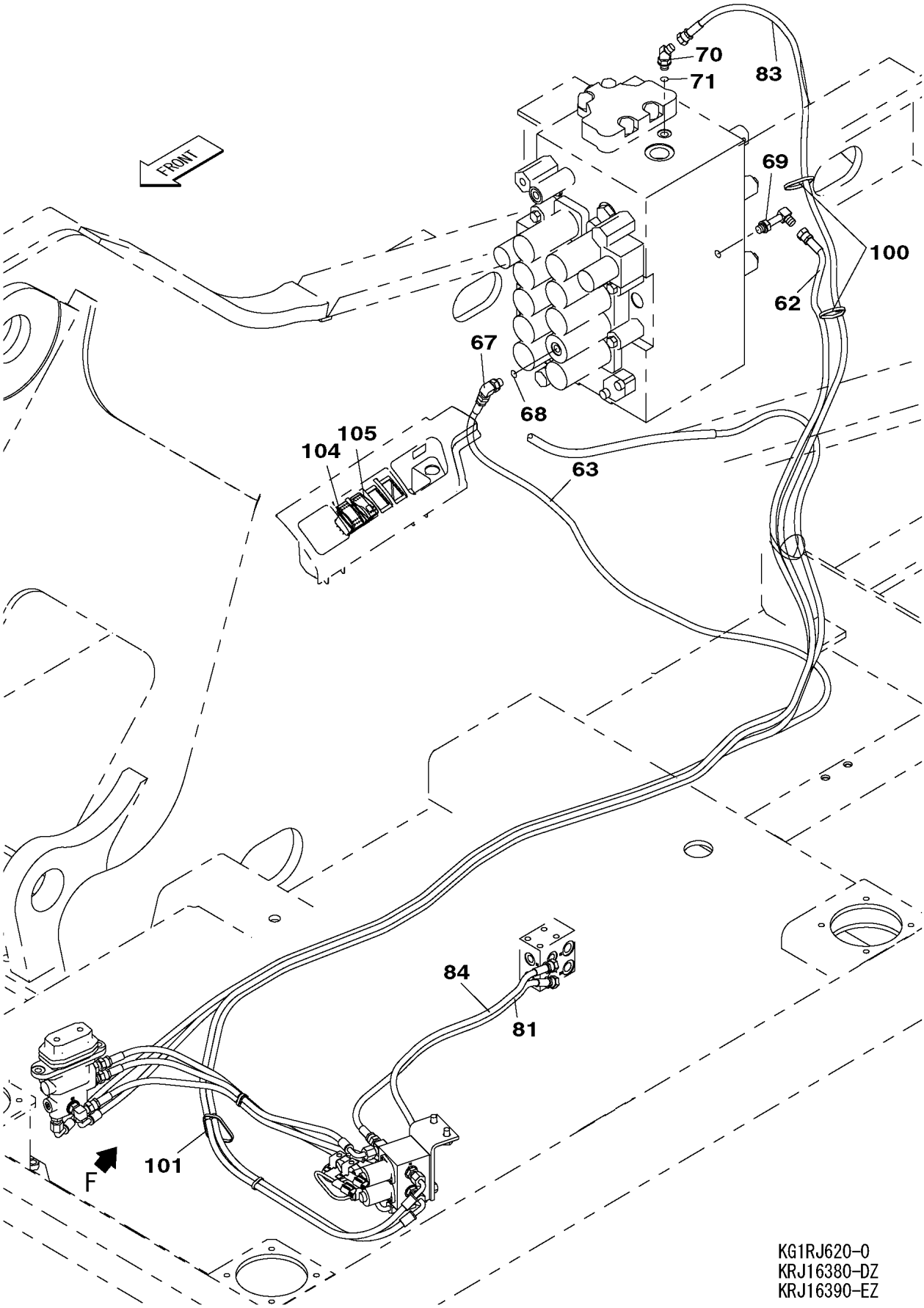

https://truckmanualshub.com/

210A5 1101－ 210L5 1101－

符号 ITEM	構成 COMPO	部品番号 PART NO.	部品名	PART NAME	個数 Q'TY	ｲﾝﾅｰ	適用号機 SERIAL_NO.	互換 ICA	代替部品 REPLACEABLE PART
58	1	CNA0584	ﾆｯﾌﾟﾙ (ﾌｲﾙﾀｰﾂｷ)	NIPPLE	1				
59	1A	KHJ0341	ｴﾙﾎﾞ HL204-020 G1/4	ELBOW	1				
60	2	UEJ0360	O-ﾘﾝｸﾞ 1B-P11	O-RING	1				
61	1A	KRJ16350	ﾎｰｽ ｸﾐﾀﾃ(ｼﾞｭｳﾅﾝｾｲﾅｲﾛ	HOSE SPL	1				
62	2	KHJ2165	ﾎｰｽ;ﾅｲﾛﾝ 70-6X2900 5	HOSE;NYLON	1				
63	2	KHJ2165	ﾎｰｽ;ﾅｲﾛﾝ 70-6X2900 5	HOSE;NYLON	1				
64	2	KHJ2244	ﾎｰｽ;ﾅｲﾛﾝ 70-6X600 5+	HOSE;NYLON	1				
65	2	KHJ2085	ﾎｰｽ;ﾅｲﾛﾝ 70-6X600 5+	HOSE;NYLON	1				
66	2	KHJ2194	ﾎｰｽ;ﾅｲﾛﾝ 70-6X650 5+	HOSE;NYLON	1				
67	1A	KHJ0341	ｴﾙﾎﾞ HL204-020 G1/4	ELBOW	1				
68	2	UEJ0360	O-ﾘﾝｸﾞ 1B-P11	O-RING	1				
69	1	KHJ1178	ｴﾙﾎﾞ 90°ﾛﾝｸﾞ(ﾎｳｺｳﾁｮｳ	ELBOW	1				
70	1A	KHJ0348	ｴﾙﾎﾞ HL205-020 G1/4	ELBOW	1				
71	2	UEJ0360	O-ﾘﾝｸﾞ 1B-P11	O-RING	1				
72	1	KHJ11510	ﾌﾞﾗｹｯﾄ	BRACKET	1				
73	1	KHJ14780	ﾊﾞﾙﾌﾞ;ｿﾚﾉｲﾄﾞ (2ﾚﾝ)	VALVE;SOLENOID	1	*			
74	1	105R010Y020R	ｾﾑｽB M10X 20	BOLT;SEMS	4				
75	1A	KHJ0869	ﾁｰ	TEE	1				
76	2	UEJ0360	O-ﾘﾝｸﾞ 1B-P11	O-RING	1				
77	1	KHJ1382	ﾁｰ 2-G1/4ｵｽXG1/4Oﾘﾝｸ	TEE	1				
78	1A	KNJ0758	ｱﾀﾞﾌﾟﾀ;ﾎｰｽ HA208-02	ADAPTER;HOSE	3				
79	2	UEJ0360	O-ﾘﾝｸﾞ 1B-P11	O-RING	3				
80	1A	KRJ16360	ﾎｰｽ ｸﾐﾀﾃ(ｼﾞｭｳﾅﾝｾｲﾅｲﾛ	HOSE SPL	1				
81	2	KHJ2047	ﾎｰｽ;ﾅｲﾛﾝ 70-6X650 5+	HOSE;NYLON	1				
82	2	KHJ11480	ﾎｰｽ;ﾅｲﾛﾝ 70-6X3950 5	HOSE;NYLON	1				
83	2	KHJ11500	ﾎｰｽ;ﾅｲﾛﾝ 70-6X3600 5	HOSE;NYLON	1				
84	2	KHJ2086	ﾎｰｽ;ﾅｲﾛﾝ 70-6X700 5+	HOSE;NYLON	1				
85	1	KTJ0683	ﾁｭｰﾌﾞ;ｺﾙｹﾞｰﾄ 10X1000	TUBE;CORRUGATED	1				
86	1	KAR0016	ﾊﾞﾝﾄﾞ;ｿｸｾﾝ L=150	BAND;HARNESS	2				
87	1A	KHJ0869	ﾁｰ	TEE	2				
88	2	UEJ0360	O-ﾘﾝｸﾞ 1B-P11	O-RING	2				
89	1A	KHJ0348	ｴﾙﾎﾞ HL205-020 G1/4	ELBOW	1				
90	2	UEJ0360	O-ﾘﾝｸﾞ 1B-P11	O-RING	1				
91	1A	KHJ0341	ｴﾙﾎﾞ HL204-020 G1/4	ELBOW	1				
92	2	UEJ0360	O-ﾘﾝｸﾞ 1B-P11	O-RING	1				
93	1A	KRJ16370	ﾎｰｽ ｸﾐﾀﾃ(ｼﾞｭｳﾅﾝｾｲﾅｲﾛ	HOSE SPL	1				
94	2	KHJ2087	ﾎｰｽ;ﾅｲﾛﾝ 70-6X800 5+	HOSE;NYLON	1				
95	2	KHJ2090	ﾎｰｽ;ﾅｲﾛﾝ 70-6X1000 5	HOSE;NYLON	1				
96	2	KHJ2049	ﾎｰｽ;ﾅｲﾛﾝ 70-6X900 5+	HOSE;NYLON	1				
97	1	KHR2584	ｸﾗﾝﾌﾟ ﾊﾞﾝﾄﾞﾂｷ(S)M8	CLAMP	1				
98	1	KHJ1215	ﾎﾞﾙﾄ ﾄｸｼｭ M8X25ｻﾞｶﾞﾈ	BOLT;SPL	1				
99	1	KHR10220	ｸﾗﾝﾌﾟ ﾏｳﾝﾄ	CLAMP;SPL	2				
100	1	KHH0142	ﾊﾞﾝﾄﾞ;ｿｸｾﾝ L=250	BAND;HARNESS	9 AR				
101	1	KHH0143	ﾊﾞﾝﾄﾞ;ｿｸｾﾝ L=300	BAND;HARNESS	1 AR				
102	1A	KHR10820	ｽｲｯﾁ;ﾌﾟﾚｯｼｬ (0.49MPA	SWITCH;PRESS.	1				
103	2	UEJ0360	O-ﾘﾝｸﾞ 1B-P11	O-RING	1				
104	1	KHR14450	ｽｲｯﾁ ﾛｯｶ ﾍｲﾖｳｶｲﾛ	SWITCH;SPL	1				
105	1	KHR14460	ｽｲｯﾁ ﾛｯｶ ﾖﾋﾞ2ｿｸｷﾘｶｴ	SWITCH;SPL	1				

https://truckmanualshub.com/

61 [62 ~ 66] 80 [81 ~ 84] 93 [94 ~ 96]

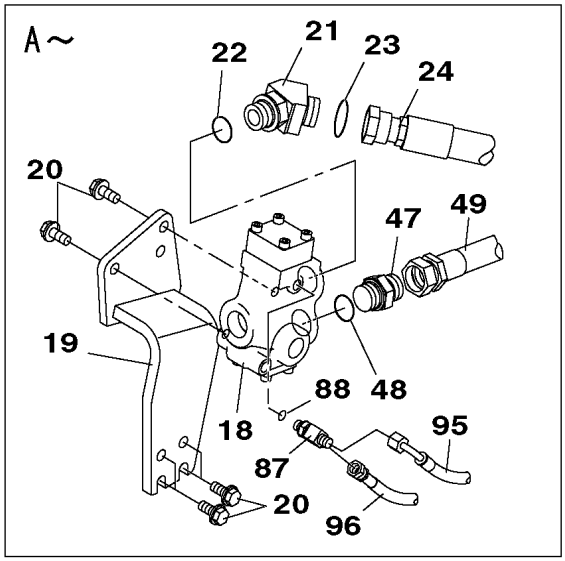

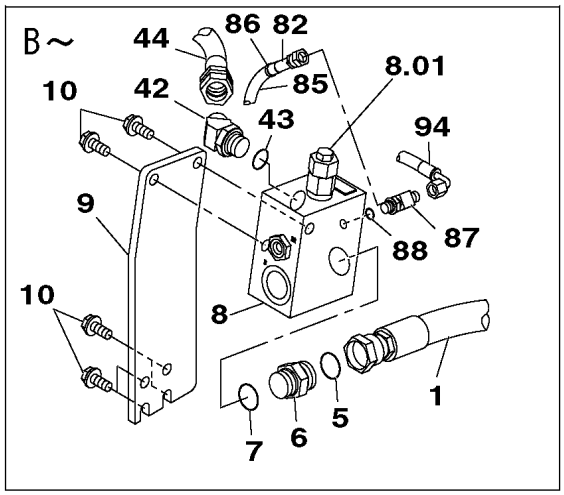

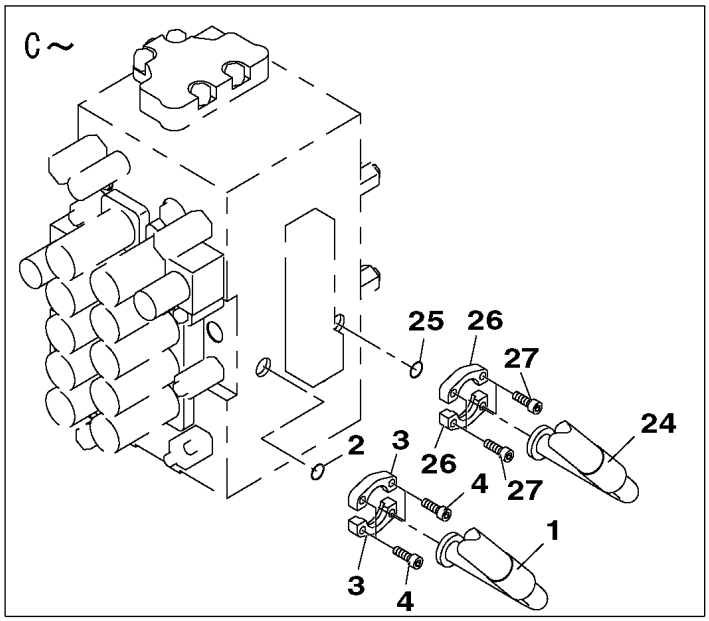

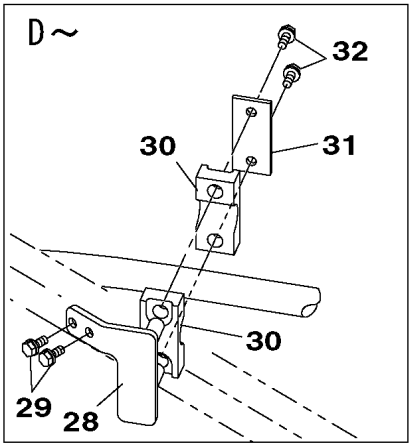

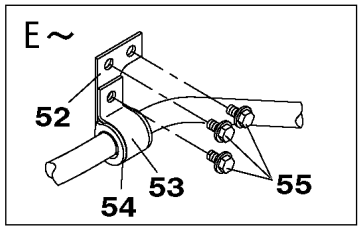

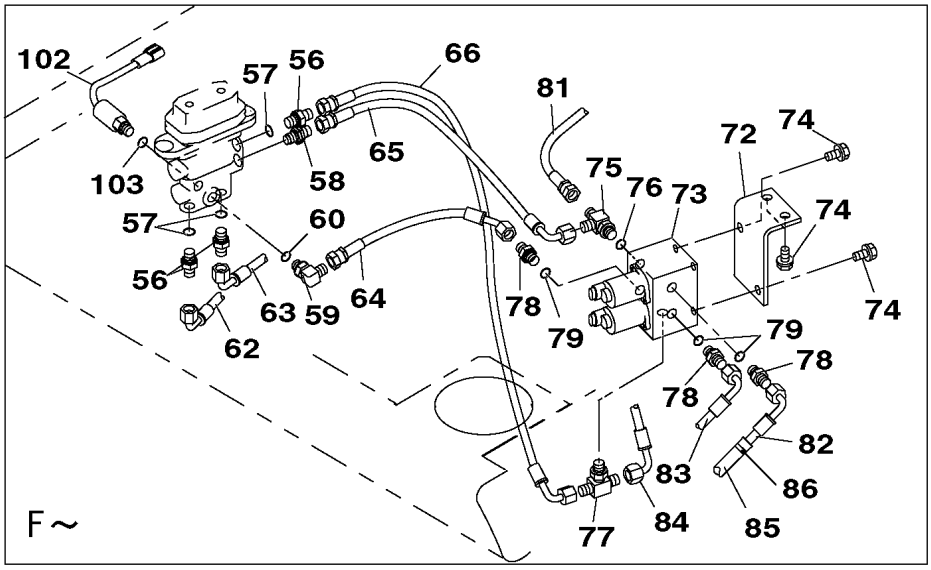

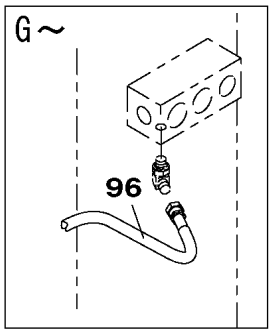

KG1RJ620-0
KRJ16380-DZ
KRJ16390-EZ

https://truckmanualshub.com/

https://truckmanualshub.com/

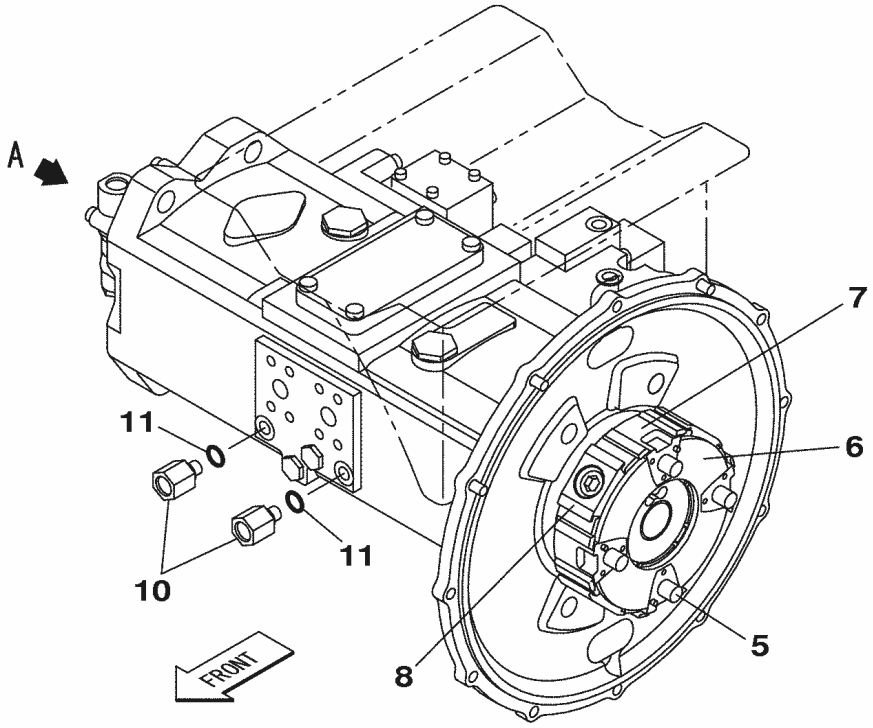

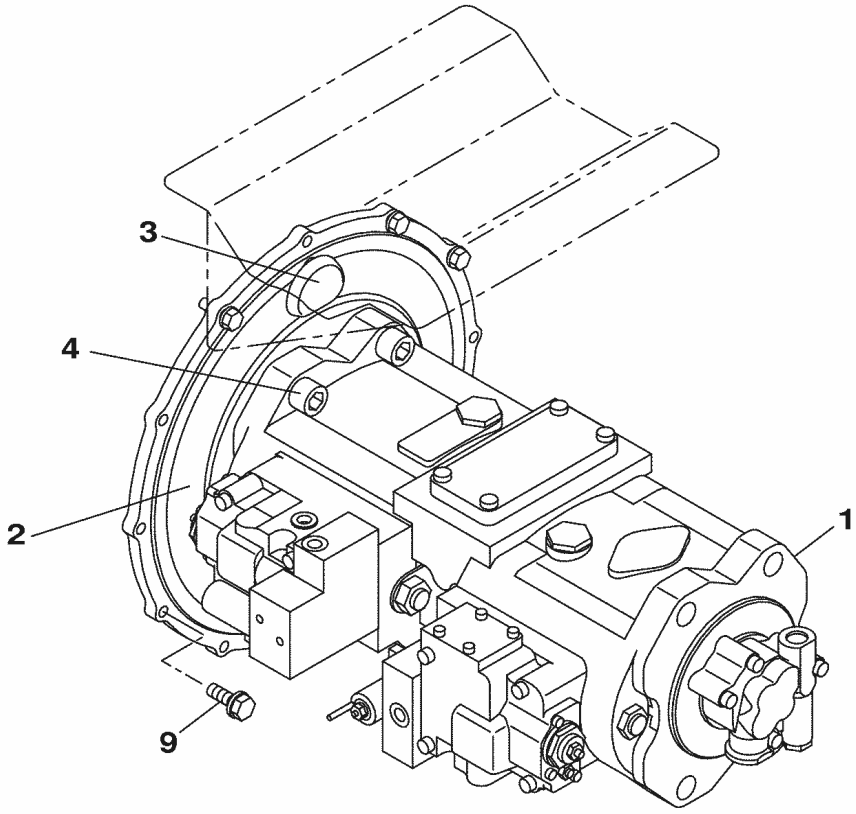

A～

KG1RJ640-0
KRJ10680-DZ

https://truckmanualshub.com/

210A5 1101－ 210L5 1101－

符号 ITEM	構成 COMPO	部品番号 PART NO.	部品名	PART NAME	個数 Q'TY	ｲﾝﾅｰ	適用号機 SERIAL_NO.	互換 ICA	代替部品 REPLACEABLE PART
1	1	KRJ10290	ﾎﾟﾝﾌﾟ;ﾕｱﾂ	PUMP;HYD	1	*			
2	1	KRJ3449	ﾌﾗﾝｼﾞ ﾏｳﾝﾄ	FLANGE;SPL	1				
3	1	KHJ2656	ｸﾞﾛﾒｯﾄ;ﾗﾊﾞｰ	GROMMET;RUBBER	2				
4	1	108R020Y055R	ﾛｯｶｸｱﾅB M20X 55	BOLT;HEX SOC HD	4				
5	1A	KRJ10340	ｶｯﾌﾟﾘﾝｸﾞ;ﾎﾟﾝﾌﾟ	CPLG;PUMP	1				
6	2	KRJ10650	ｴﾚﾒﾝﾄ ﾄｸｼｭ	ELEMENT;SPL	1				
7	2	KRJ10660	ｲﾝｻｰﾄ;ｶｯﾌﾟﾘﾝｸﾞ A	INSERT;CPLG	4				
8	2	KRJ10670	ｲﾝｻｰﾄ;ｶｯﾌﾟﾘﾝｸﾞ R ASS	INSERT;CPLG	1				
9	1	105R010Y030R	ｾﾑｽB M10X 30	BOLT;SEMS	9		210A5 -1138 210L5 -1140	<	105R010Y030R
9	1	105R010Y030R	ｾﾑｽB M10X 30	BOLT;SEMS	8		210A5 1139- 210L5 1141-		
10	1A	KHJ11380	ｽﾀｯﾄﾞ G1/4XM18	STUD	2		210A5 -1148 210L5 -1150	<	KHJ18180
11	2	UEJ0360	O-ﾘﾝｸﾞ 1B-P11	O-RING	2		210A5 -1148 210L5 -1150		
10	1A	KHJ18180	ｽﾀｯﾄﾞ G1/4XM18	STUD	2		210A5 1149- 210L5 1151-		
11	2	UEJ0360	O-ﾘﾝｸﾞ 1B-P11	O-RING	2		210A5 1149- 210L5 1151-		

https://truckmanualshub.com/

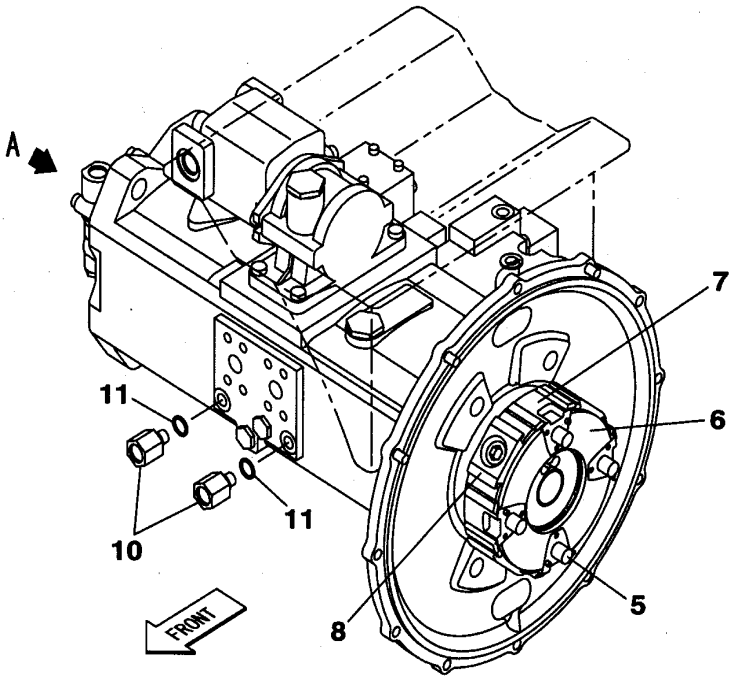

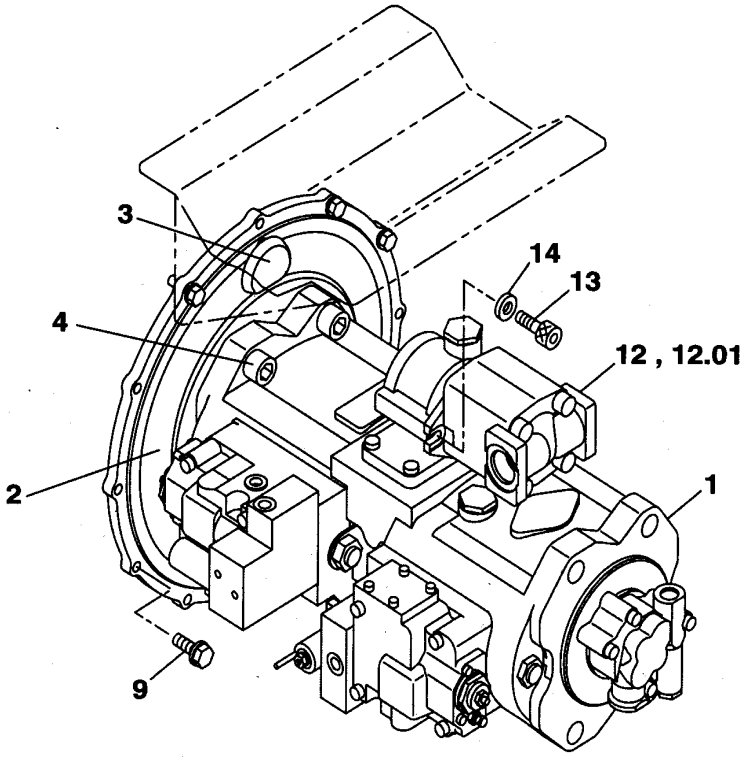

A～

KG1RJ641-0
KRJ10680-DZ

https://truckmanualshub.com/

210A5 1101－ 210L5 1101－

符号 ITEM	構成 COMPO	部品番号 PART NO.	部品名	PART NAME	個数 Q'TY	ｲﾝﾅｰ	適用号機 SERIAL_NO.	互換 ICA	代替部品 REPLACEABLE PART
1	1	KRJ15970	ﾎﾟﾝﾌﾟ;ﾕｱｯ (PTO)	PUMP;HYD	1	*			
2	1	KRJ3449	ﾌﾗﾝｼﾞ ﾏｳﾝﾄ	FLANGE;SPL	1				
3	1	KHJ2656	ｸﾞﾛﾒｯﾄ;ﾗﾊﾞ-	GROMMET;RUBBER	2				
4	1	108R020Y055R	ﾛｯｶｸｱﾅB M20X 55	BOLT;HEX SOC HD	4				
5	1A	KRJ10340	ｶｯﾌﾟﾘﾝｸﾞ;ﾎﾟﾝﾌﾟ	CPLG;PUMP	1				
6	2	KRJ10650	ｴﾚﾒﾝﾄ ﾄｸｼｭ	ELEMENT;SPL	1				
7	2	KRJ10660	ｲﾝｻｰﾄ;ｶｯﾌﾟﾘﾝｸﾞ A	INSERT;CPLG	4				
8	2	KRJ10670	ｲﾝｻｰﾄ;ｶｯﾌﾟﾘﾝｸﾞ R ASS	INSERT;CPLG	1				
9	1	105R010Y030R	ｾﾑｽB M10X 30	BOLT;SEMS	9		210A5 -1138 210L5 -1140	<	105R010Y030R
9	1	105R010Y030R	ｾﾑｽB M10X 30	BOLT;SEMS	8		210A5 1139- 210L5 1141-		
10	1A	KHJ11380	ｽﾀｯﾄﾞ G1/4XM18	STUD	2		210A5 -1148 210L5 -1150	<	KHJ18180
11	2	UEJ0360	O-ﾘﾝｸﾞ 1B-P11	O-RING	2		210A5 -1148 210L5 -1150		
10	1A	KHJ18180	ｽﾀｯﾄﾞ G1/4XM18	STUD	2		210A5 1149- 210L5 1151-		
11	2	UEJ0360	O-ﾘﾝｸﾞ 1B-P11	O-RING	2		210A5 1149- 210L5 1151-		
12	1	KRJ10300	ﾎﾟﾝﾌﾟ;ｷﾞﾔ (ﾀﾞｲ2ﾖﾋﾞﾖｳ	PUMP;GEAR	1	*			
12.01	1	UCD0096	O-ﾘﾝｸﾞ 1B G85	O-RING	1		210A5 1115-		
13	1	KHJ15090	ﾛｯｶｸｱﾅB M10X1.25X30	BOLT;HEX SOC HD	2		210A5 NOT USED 210L5 NOT USED	<	108R010Y030R
13	1	108R010Y030R	ﾛｯｶｸｱﾅB M10X 30	BOLT;HEX SOC HD	2				
14	1	KEH0114	ｺｳﾘｷW M10 ﾒｯｷ	WASHER;HIGH STRENGTH	2				

https://truckmanualshub.com/

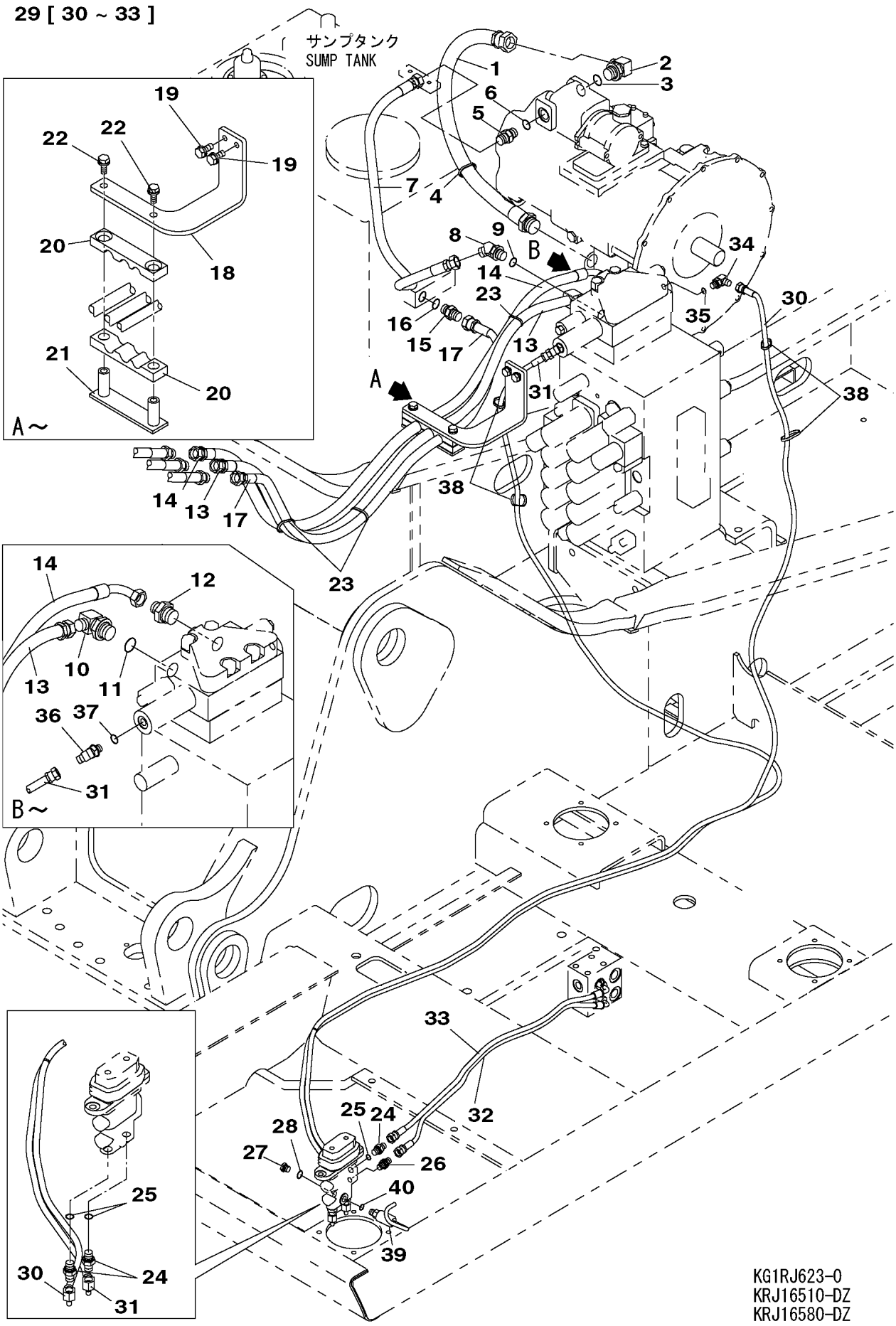

https://truckmanualshub.com/

210A5 1101－ 210L5 1101－

符号 ITEM	構成 COMPO	部品番号 PART NO.	部品名	PART NAME	個数 Q'TY	ｲﾝﾅｰ	適用号機 SERIAL_NO.	互換 ICA	代替部品 REPLACEABLE PART
1	1	KTJ2249	ﾎｰｽ;ﾕｱﾂ SIB70-25X800	HOSE;HYD	1				
2	1A	KHJ0345	ｴﾙﾎﾞ HL204-080 G 1	ELBOW	1				
3	2	BHJ0795	O-ﾘﾝｸﾞ 1B P29	O-RING	1				
4	1	KHH0142	ﾊﾞﾝﾄﾞ;ｿｸｾﾝ L=250	BAND;HARNESS	1				
5	1A	KNJ0604	ｱﾀﾞﾌﾟﾀ;ﾎｰｽ	ADAPTER;HOSE	1				
6	2	UBJ0157	O-ﾘﾝｸﾞ 1B-P18	O-RING	1				
7	1	HLV0082	ﾎｰｽ;ﾕｱﾂ 210A-12X1250	HOSE;HYD	1				
8	1A	KHJ0350	ｴﾙﾎﾞ HL205-040 G1/2	ELBOW	1				
9	2	UBJ0157	O-ﾘﾝｸﾞ 1B-P18	O-RING	1				
10	1A	KHJ0642	ｴﾙﾎﾞ	ELBOW	1				
11	2	UBJ0158	O-ﾘﾝｸﾞ 1B-P24	O-RING	1				
12	1	KHJ1778	ｱﾀﾞﾌﾟﾀ;ﾎｰｽ G1/2XG3/4	ADAPTER;HOSE	1				
13	1	KRJ16470	ﾎｰｽ;ﾕｱﾂ 280-12X1410	HOSE;HYD	1				
14	1	KRJ16480	ﾎｰｽ;ﾕｱﾂ 280-12X1540	HOSE;HYD	1				
15	1A	KNJ0604	ｱﾀﾞﾌﾟﾀ;ﾎｰｽ	ADAPTER;HOSE	1				
16	2	UBJ0157	O-ﾘﾝｸﾞ 1B-P18	O-RING	1				
17	1	KRJ16490	ﾎｰｽ;ﾕｱﾂ SIB70-12X156	HOSE;HYD	1				
18	1	KRJ16070	ﾌﾞﾗｹｯﾄ	BRACKET	1				
19	1	105R010Y025R	ｾﾑｽB M10X 25	BOLT;SEMS	2				
20	1	KRJ11580	ｸﾗﾝﾌﾟ;ﾎｰｽ D22X2+D18	CLAMP;HOSE	2				
21	1	KRJ11590	ﾌﾞﾗｹｯﾄ	BRACKET	1				
22	1	105R010Y025R	ｾﾑｽB M10X 25	BOLT;SEMS	2				
23	1	KHH0142	ﾊﾞﾝﾄﾞ;ｿｸｾﾝ L=250	BAND;HARNESS	3	AR			
24	1A	KNJ0758	ｱﾀﾞﾌﾟﾀ;ﾎｰｽ HA208-02	ADAPTER;HOSE	3				
25	2	UEJ0360	O-ﾘﾝｸﾞ 1B-P11	O-RING	3				
26	1	CNA0584	ﾆｯﾌﾟﾙ (ﾌｲﾙﾀｰﾂｷ)	NIPPLE	1				
27	1A	KHJ0363	ﾌﾟﾗｸﾞ G1/4	PLUG	1				
28	2	UEJ0360	O-ﾘﾝｸﾞ 1B-P11	O-RING	1				
29	1A	KRJ16500	ﾎｰｽ ｸﾐﾀﾃ(ｼﾞｭｳﾅﾝｾｲﾅｲﾛ	HOSE SPL	1				
30	2	KHJ12230	ﾎｰｽ;ﾅｲﾛﾝ 70-6X3450 5	HOSE;NYLON	1				
31	2	KHJ11500	ﾎｰｽ;ﾅｲﾛﾝ 70-6X3600 5	HOSE;NYLON	1				
32	2	KHJ2088	ﾎｰｽ;ﾅｲﾛﾝ 70-6X850 5+	HOSE;NYLON	1				
33	2	KHJ2088	ﾎｰｽ;ﾅｲﾛﾝ 70-6X850 5+	HOSE;NYLON	1				
34	1A	KHJ0341	ｴﾙﾎﾞ HL204-020 G1/4	ELBOW	1				
35	2	UEJ0360	O-ﾘﾝｸﾞ 1B-P11	O-RING	1				
36	1A	KHJ0348	ｴﾙﾎﾞ HL205-020 G1/4	ELBOW	1				
37	2	UEJ0360	O-ﾘﾝｸﾞ 1B-P11	O-RING	1				
38	1	KHH0142	ﾊﾞﾝﾄﾞ;ｿｸｾﾝ L=250	BAND;HARNESS	4	AR			
39	1A	KHR10820	ｽｲｯﾁ;ﾌﾟﾚｯｼｬ (0.49MPA	SWITCH;PRESS.	1				
40	2	UEJ0360	O-ﾘﾝｸﾞ 1B-P11	O-RING	1				

https://truckmanualshub.com/

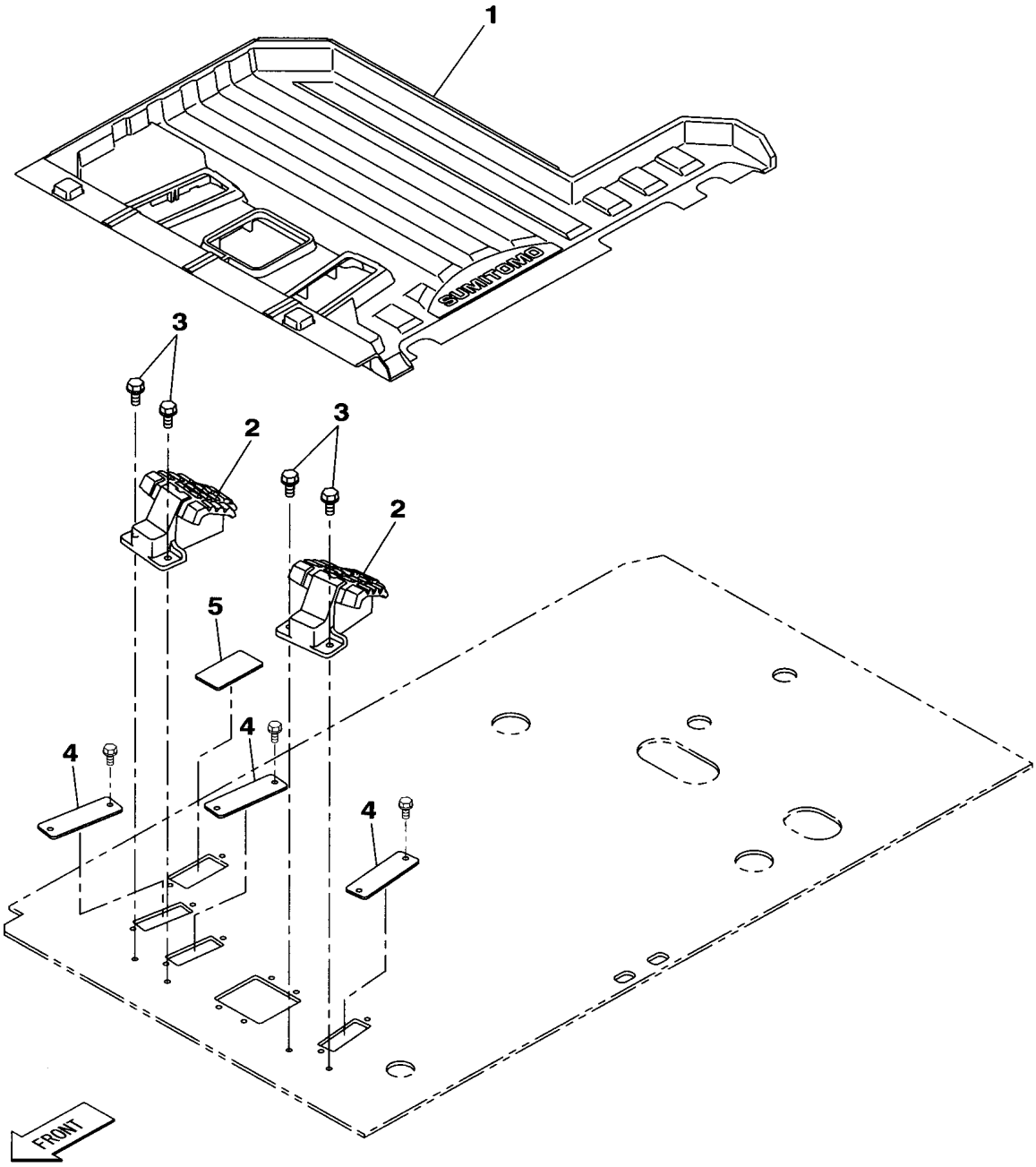

KG0HJ216-0
KHJ14490-EZ

https://truckmanualshub.com/

210A5 1101－　　210L5 1101－

符号 ITEM	構成 COMPO	部品番号 PART NO.	部品名	PART NAME	個数 Q'TY	ｲﾝﾅｰ	適用号機 SERIAL_NO.	互換 ICA	代替部品 REPLACEABLE PART
1	1	KHJ14980	ﾏｯﾄ;ﾌﾛｱ (STD) SUMITO	MAT;FLOOR	1				
2	1	KHJ13860	ﾚｽﾄ;ﾌｰﾄ	REST;FOOT	2				
3	1	105R010Y025R	ｾﾑｽB M10X 25	BOLT;SEMS	4				
4	1	KHJ14550	ｸﾞﾛﾒｯﾄ;ﾗﾊﾞｰ (ﾖﾋﾞﾊﾞﾙﾌ	GROMMET;RUBBER	3				
5	1	KHJ14560	ｸﾞﾛﾒｯﾄ;ﾗﾊﾞｰ (ﾌﾞﾚｰﾄﾞﾚ	GROMMET;RUBBER	1				

https://truckmanualshub.com/

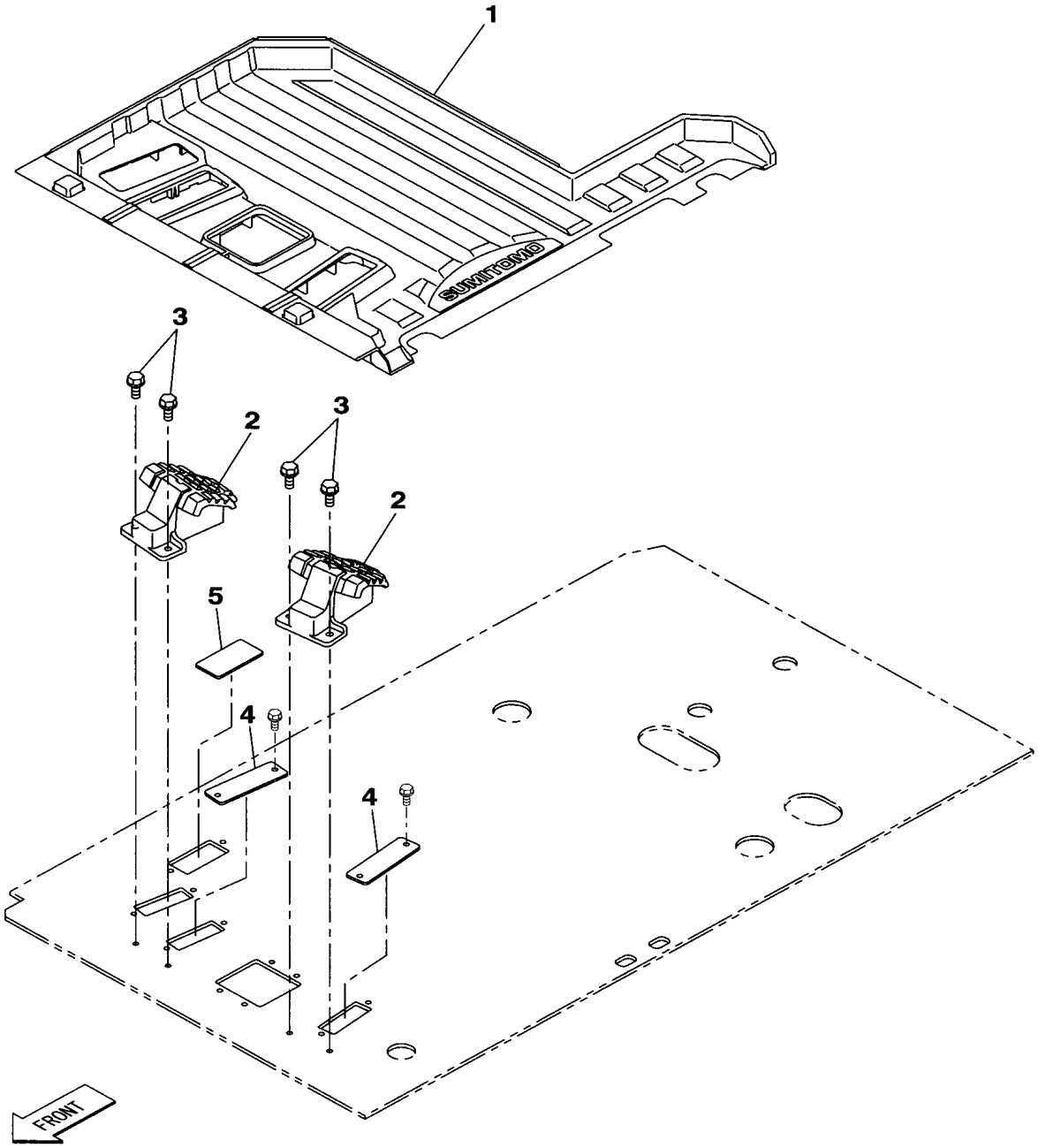

KG0HJ217-0
KHJ14540-DZ

https://truckmanualshub.com/

210A5 1101－　　210L5 1101－

符号 ITEM	構成 COMPO	部品番号 PART NO.	部品名	PART NAME	個数 Q'TY	ｲﾝﾅｰ	適用号機 SERIAL_NO.	互換 ICA	代替部品 REPLACEABLE PART
1	1	KHJ15010	ﾏｯﾄ;ﾌﾛｱ ﾖﾋﾞ SUMITOMO	MAT;FLOOR	1				
2	1	KHJ13860	ﾚｽﾄ;ﾌｰﾄ	REST;FOOT	2				
3	1	105R010Y025R	ｾﾑｽB M10X 25	BOLT;SEMS	4				
4	1	KHJ14550	ｸﾞﾛﾒｯﾄ;ﾗﾊﾞｰ (ﾖﾋﾞﾊﾞﾙﾌ	GROMMET;RUBBER	2				
5	1	KHJ14560	ｸﾞﾛﾒｯﾄ;ﾗﾊﾞｰ (ﾌﾞﾚｰﾄﾞﾚ	GROMMET;RUBBER	1				

https://truckmanualshub.com/

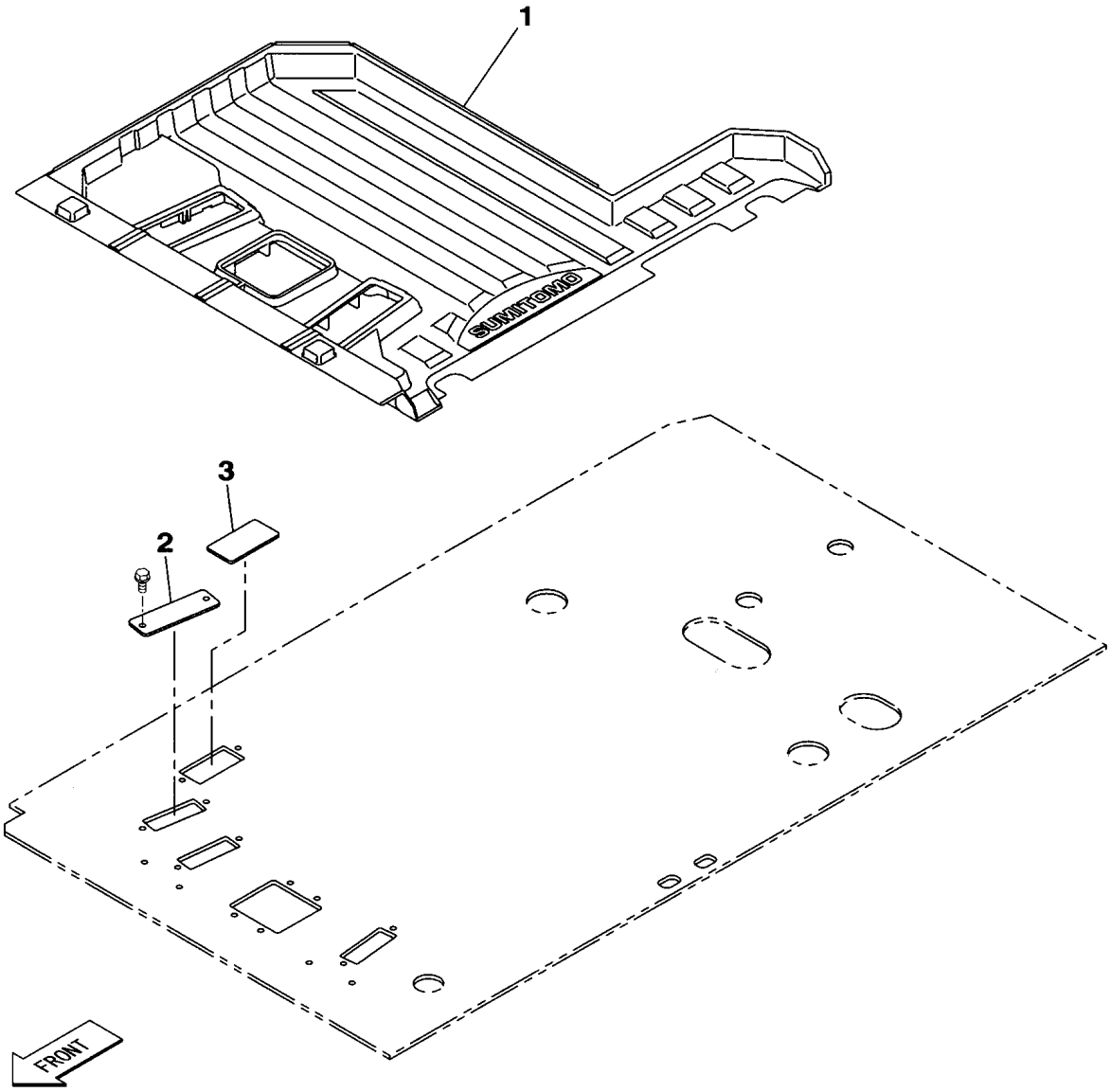

KG0HJ218-0
KHJ14540-DZ

https://truckmanualshub.com/

210A5 1101－ 210L5 1101－

符号 ITEM	構成 COMPO	部品番号 PART NO.	部品名	PART NAME	個数 Q'TY	ｲﾝﾅｰ	適用号機 SERIAL_NO.	互換 ICA	代替部品 REPLACEABLE PART
1	1	KHJ14980	ﾏｯﾄ;ﾌﾛｱ (STD) SUMITO	MAT;FLOOR	1				
2	1	KHJ14550	ｸﾞﾛﾒｯﾄ;ﾗﾊﾞｰ (ﾖﾋﾞﾊﾞﾙﾌ	GROMMET;RUBBER	1				
3	1	KHJ14560	ｸﾞﾛﾒｯﾄ;ﾗﾊﾞｰ (ﾌﾞﾚｰﾄﾞﾚ	GROMMET;RUBBER	1				

https://truckmanualshub.com/

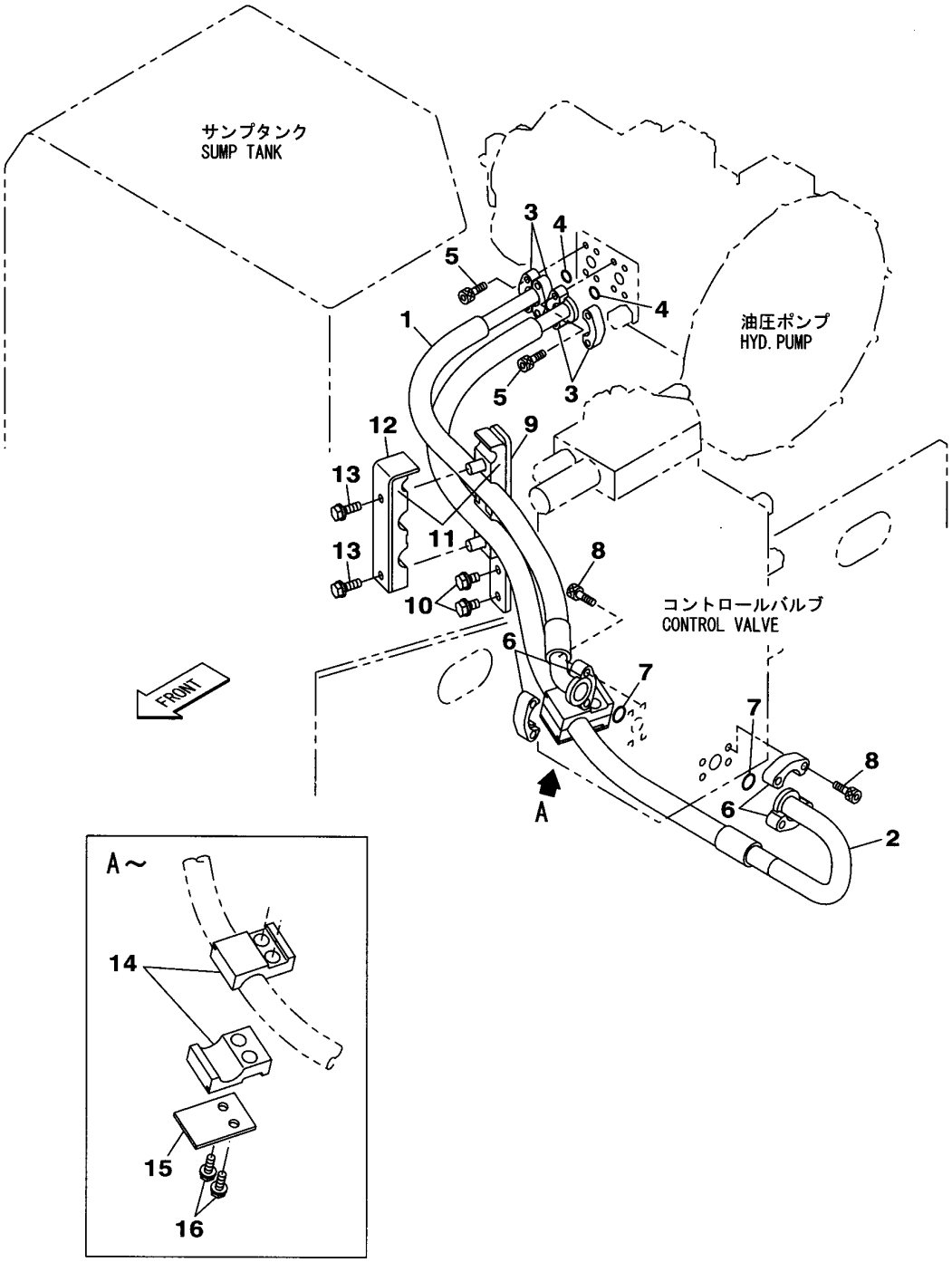

KG1RJ615-0
KRJ16330-DZ

https://truckmanualshub.com/

210A5 1101－ 210L5 1101－

符号 ITEM	構成 COMPO	部品番号 PART NO.	部品名	PART NAME	個数 Q'TY	ｲﾝﾅｰ	適用号機 SERIAL_NO.	互換 ICA	代替部品 REPLACEABLE PART
1	1	KRJ16320	ﾎｰｽ;ﾕｱﾂ 350-22X1070	HOSE;HYD	1				
2	1	KRJ10770	ﾎｰｽ;ﾕｱﾂ 350-22X1290	HOSE;HYD	1				
3	1	KRJ0963	ﾌﾗﾝｼﾞ;ｽﾌﾟﾘｯﾄ 3/4	FLANGE;SPLIT	4				
4	1	KHJ0913	O-ﾘﾝｸﾞ AN6227-19(JIS	O-RING	2				
5	1	108R010Y030R	ﾛｯｶｸｱﾅB M10X 30	BOLT;HEX SOC HD	8				
6	1	KTJ0168	ﾌﾗﾝｼﾞ;ｽﾌﾟﾘｯﾄ 1	FLANGE;SPLIT	4				
7	1	KHJ0914	O-ﾘﾝｸﾞ AN6227-24(JIS	O-RING	2				
8	1	108R012Y045R	ﾛｯｶｸｱﾅB M12X 45	BOLT;HEX SOC HD	8		210A5 -1642 210L5 -1338	<	108R012Y040R
8	1	108R012Y040R	ﾛｯｶｸｱﾅB M12X 40	BOLT;HEX SOC HD	8		210A5 1643- 210L5 1339-		
9	1	KRJ16270	ﾌﾞﾗｹｯﾄ	BRACKET	1				
10	1	KHN1079	ﾎﾞﾙﾄ ﾄｸｼｭ ｻﾞｶﾞﾈ ｸﾐｺﾐ	BOLT;SPL	2				
11	1	KRJ10790	ｸﾗﾝﾌﾟ;ﾎｰｽ D35X2+D21	CLAMP;HOSE	2				
12	1	KRJ10810	ﾌﾟﾚｰﾄ	PLATE	1				
13	1	105R010Y030R	ｾﾑｽB M10X 30	BOLT;SEMS	2				
14	1	KRJ16260	ｸﾗﾝﾌﾟ;ﾎｰｽ D35	CLAMP;HOSE	2				
15	1	KNJ11520	ﾌﾟﾚｰﾄ	PLATE	1				
16	1	105R010Y030R	ｾﾑｽB M10X 30	BOLT;SEMS	2				

https://truckmanualshub.com/

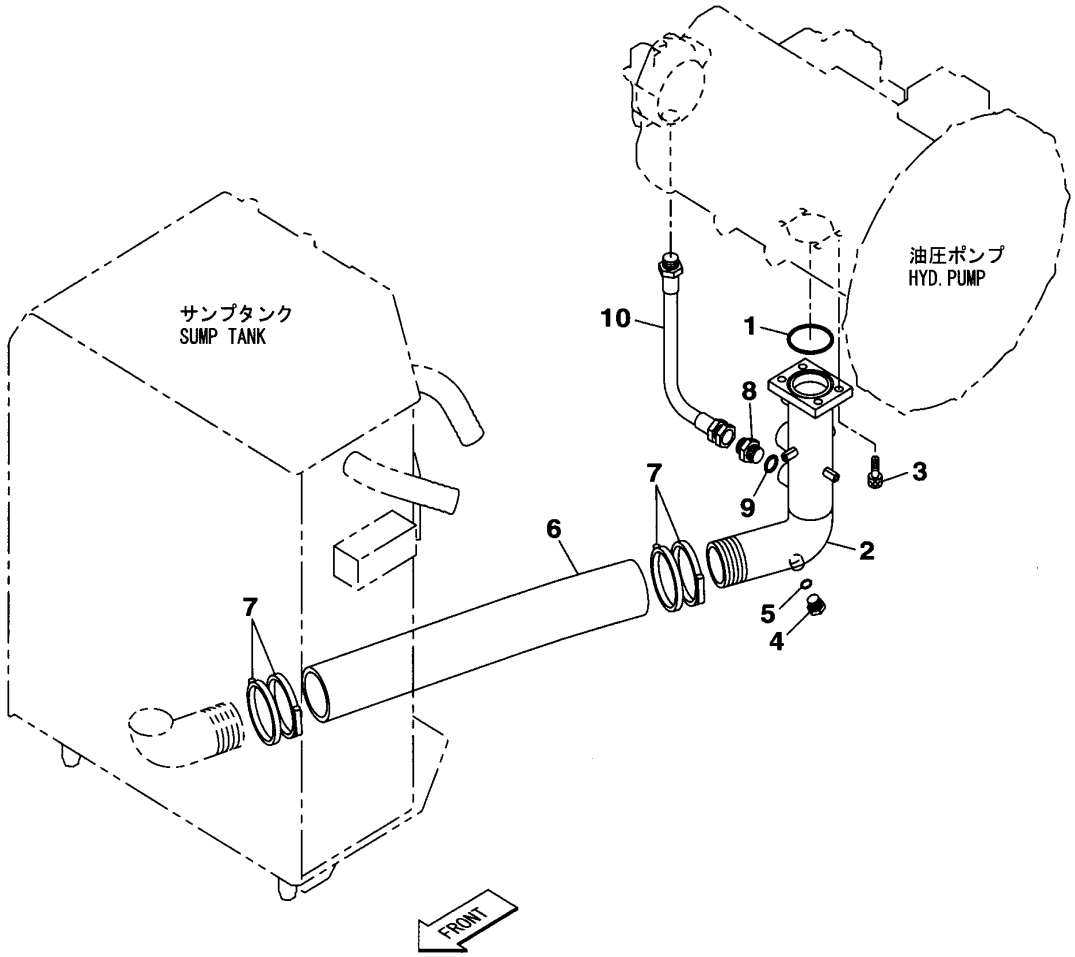

KG1RJ424-0
KRJ11080-EZ

https://truckmanualshub.com/

210A5 1101－ 210L5 1101－

符号 ITEM	構成 COMPO	部品番号 PART NO.	部品名	PART NAME	個数 Q'TY	ｲﾝﾅｰ	適用号機 SERIAL_NO.	互換 ICA	代替部品 REPLACEABLE PART
1	1	KRJ1747	O-ﾘﾝｸﾞ 1B-G75	O-RING	1				
2	1	KRJ10580	ﾊｲｶﾝｸﾐﾀﾃ	TUBE;ASSY	1				
3	1	108R012Y030R	ﾛｯｶｸｱﾅB M12X 30	BOLT;HEX SOC HD	4				
4	1A	KHJ0363	ﾌﾟﾗｸﾞ G1/4	PLUG	1				
5	2	UEJ0360	O-ﾘﾝｸﾞ 1B-P11	O-RING	1				
6	1	KHJ11120	ﾎｰｽ;ﾃｲｱﾂ (ID76.3 X 6	HOSE	1				
7	1	KEJ0339	ｸﾘｯﾌﾟ;ｼﾞｭﾋﾞﾘ 87-112	CLIP;JUBILEE	4				
8	1A	KNJ0605	ｱﾀﾞﾌﾟﾀ;ﾎｰｽ HA208-06	ADAPTER;HOSE	1				
9	2	UBJ0158	O-ﾘﾝｸﾞ 1B-P24	O-RING	1				
10	1	KBJ2809	ﾎｰｽ;ﾕｱﾂ 35-19X450･5･	HOSE;HYD	1				

https://truckmanualshub.com/

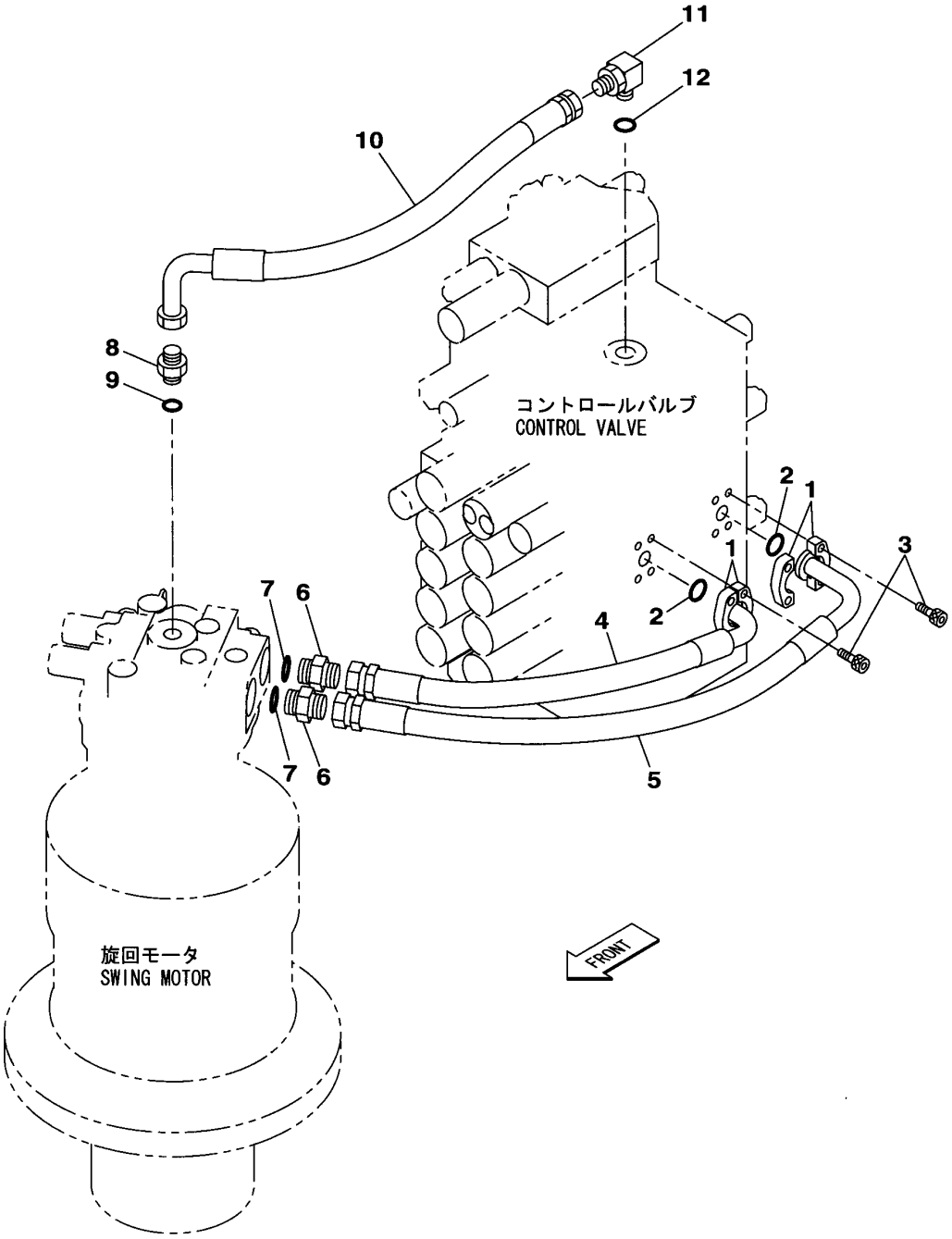

KG1RJ419-0
KRJ11040-CZ

https://truckmanualshub.com/

210A5 1101－ 210L5 1101－

符号 ITEM	構成 COMPO	部品番号 PART NO.	部品名	PART NAME	個数 Q'TY	ｲﾝﾅｰ	適用号機 SERIAL_NO.	互換 ICA	代替部品 REPLACEABLE PART
1	1	KRJ2681	ﾌﾗﾝｼﾞ;ｽﾌﾟﾘｯﾄ 3/4	FLANGE;SPLIT	4				
2	1	KHJ0913	O-ﾘﾝｸﾞ AN6227-19(JIS	O-RING	2				
3	1	108R010Y030R	ﾛｯｶｸｱﾅB M10X 30	BOLT;HEX SOC HD	8				
4	1	KRJ10730	ﾎｰｽ;ﾕｱﾂ S14-19X570 5	HOSE;HYD	1				
5	1	KRJ10740	ﾎｰｽ;ﾕｱﾂ S14-19X760 5	HOSE;HYD	1				
6	1A	KNJ0605	ｱﾀﾞﾌﾟﾀ;ﾎｰｽ HA208-06	ADAPTER;HOSE	2				
7	2	UBJ0158	O-ﾘﾝｸﾞ 1B-P24	O-RING	2				
8	1A	KNJ0606	ｱﾀﾞﾌﾟﾀ;ﾎｰｽ HA208-08	ADAPTER;HOSE	1				
9	2	BHJ0795	O-ﾘﾝｸﾞ 1B P29	O-RING	1				
10	1	KRJ10750	ﾎｰｽ;ﾕｱﾂ 70-25X650 5+	HOSE;HYD	1				
11	1A	KHJ0345	ｴﾙﾎﾞ HL204-080 G 1	ELBOW	1				
12	2	BHJ0795	O-ﾘﾝｸﾞ 1B P29	O-RING	1				

https://truckmanualshub.com/

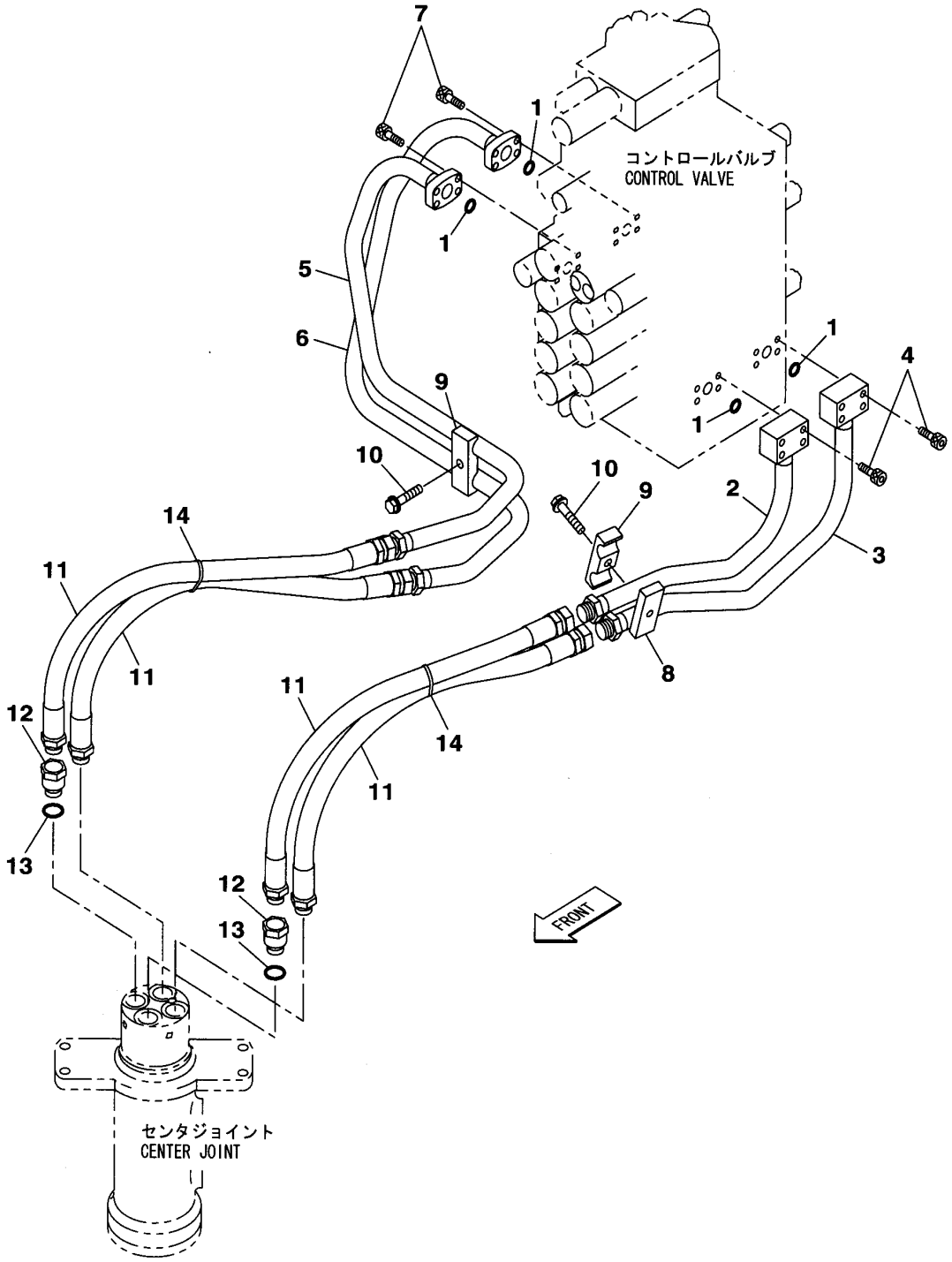

KG1RJ420-0
KRJ11050-DZ

https://truckmanualshub.com/

210A5 1101－　　210L5 1101－

符号 ITEM	構成 COMPO	部品番号 PART NO.	部品名	PART NAME	個数 Q'TY	ｲﾝﾅｰ	適用号機 SERIAL_NO.	互換 ICA	代替部品 REPLACEABLE PART
1	1	KHJ0913	O-ﾘﾝｸﾞ AN6227-19(JIS	O-RING	4				
2	1	KRJ10611	ﾊｲｶﾝｸﾐﾀﾃ	TUBE;ASSY	1				
3	1	KRJ10621	ﾊｲｶﾝｸﾐﾀﾃ	TUBE;ASSY	1				
4	1	108R010Y055R	ﾛｯｶｸｱﾅB M10X 55	BOLT;HEX SOC HD	8				
5	1	KRJ10631	ﾊｲｶﾝｸﾐﾀﾃ	TUBE;ASSY	1				
6	1	KRJ10641	ﾊｲｶﾝｸﾐﾀﾃ	TUBE;ASSY	1				
7	1	108R010Y030R	ﾛｯｶｸｱﾅB M10X 30	BOLT;HEX SOC HD	8				
8	1	KRJ10720	ﾌﾟﾚｰﾄ	PLATE	1				
9	1	KRJ0727	ｸﾗﾝﾌﾟ;ﾊﾟｲﾌﾟ (2-27.2)	CLAMP;PIPE	2				
10	1	105R012Y060R	ｾﾑｽB M12X 60	BOLT;SEMS	2				
11	1	KRJ10710	ﾎｰｽ;ﾕｱﾂ S13-19X780 5	HOSE;HYD	4				
12	1A	KHJ11060	ｽﾀｯﾄﾞ G3/4	STUD	2				
13	2	UBJ0158	O-ﾘﾝｸﾞ 1B-P24	O-RING	2				
14	1	KHH0143	ﾊﾞﾝﾄﾞ;ｿｸｾﾝ L=300	BAND;HARNESS	2 AR				

https://truckmanualshub.com/

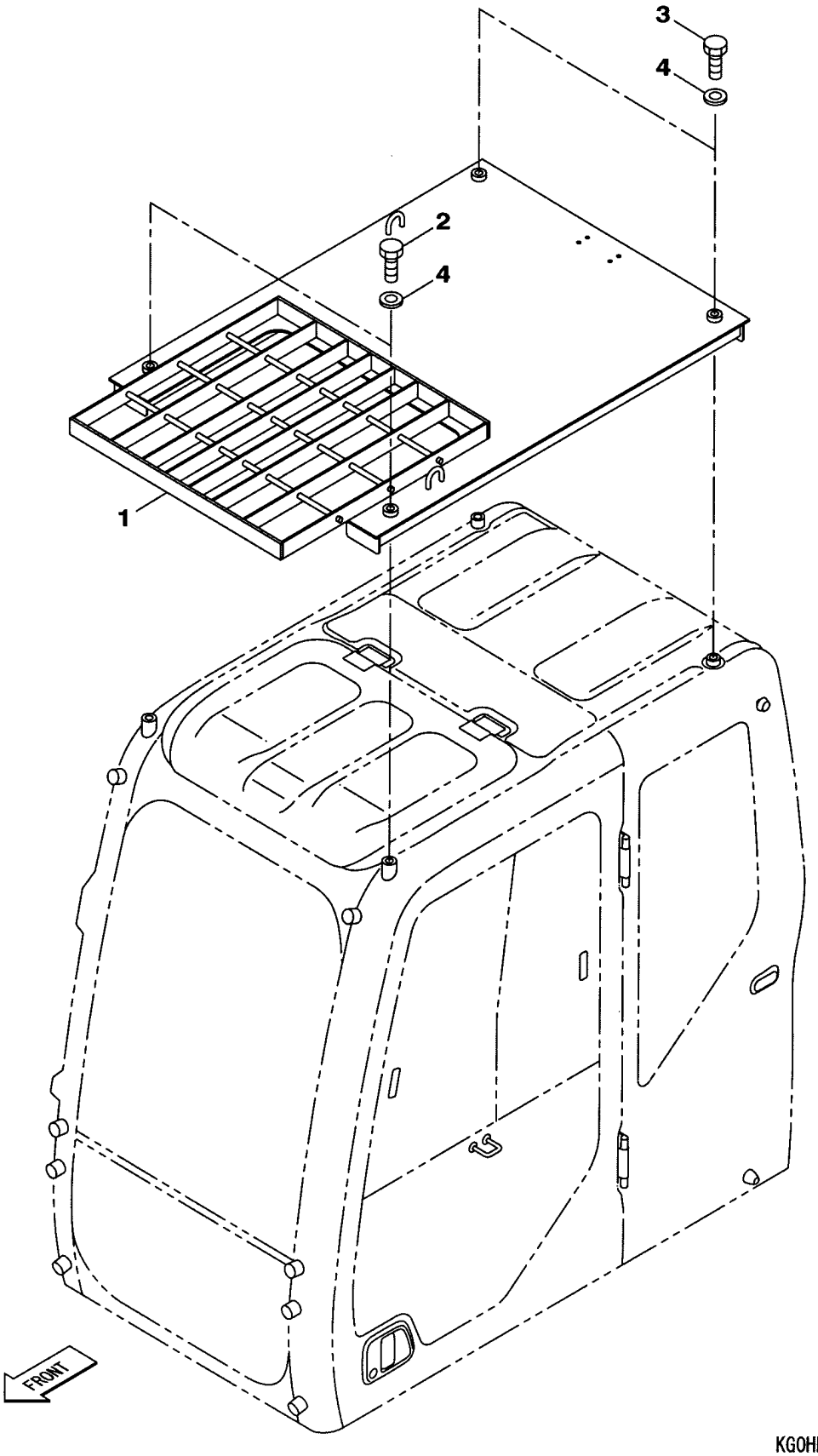

KGOHN320-0
KHN14790-CZ

https://truckmanualshub.com/

210A5 1101－ 210L5 1101－

符号 ITEM	構成 COMPO	部品番号 PART NO.	部品名	PART NAME	個数 Q'TY	インナー	適用号機 SERIAL_NO.	互換 ICA	代替部品 REPLACEABLE PART
1	1	KHN14770	ｶﾞｰﾄﾞ;ﾍｯﾄﾞ FOPS LEVE	GUARD;HEAD	1				
2	1	102R016Y140R	ｺｳﾘｷB M16X140	BOLT;HIGH STRENGTH	2				
3	1	102R016Y110R	ｺｳﾘｷB M16X110	BOLT;HIGH STRENGTH	2				
4	1	KHN0297	ｺｳﾘｷW 16 (ﾒｯｷ)	WASHER;HIGH STRENGTH	4				

DN (90)

https://truckmanualshub.com/

1 [2 ~ 244] 2 [3 ~ 208.02] 3 [4 ~ 137.02]
209 [210 ~ 225.01] 218 [219 , 220]
226 [227 ~ 233] 240 [241 ~ 243]

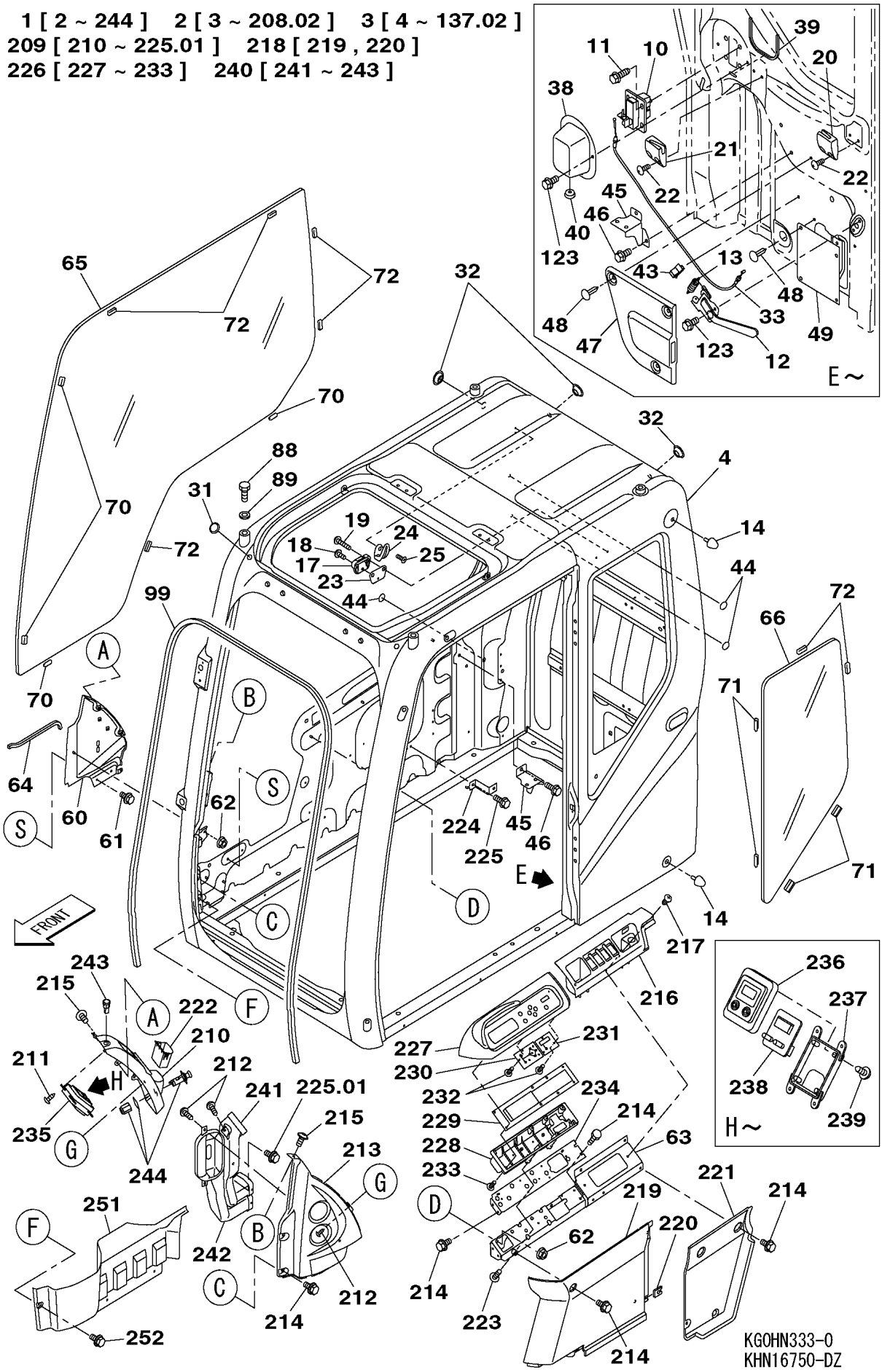

https://truckmanualshub.com/

210A5 1101－ 210L5 1101－

符号 ITEM	構成 COMPO	部品番号 PART NO.	部品名	PART NAME	個数 Q'TY	インナー	適用号機 SERIAL_NO.	互換 ICA	代替部品 REPLACEABLE PART
1	1A	KHN16590	ｷﾔﾌﾞ;ｵﾍﾟﾚｰﾀ ASSY (EX	CAB;OPERATORS	1				
2	2A	--------	ｷﾔﾌﾞ;ｵﾍﾟﾚｰﾀ EXP	CAB;OPERATORS	1				
3	3A	--------	ｷﾔﾌﾞ ﾄﾘﾑﾎﾞﾃﾞｨ ｸﾐﾀﾃ E	CAB;SPL	1				
4	4	KHN18050	ｷﾔﾌﾞ;ｵﾍﾟﾚｰﾀ ﾎﾞﾃﾞｨ(EX	CAB;OPERATORS	1				
5	4	KHN14110	ﾚｰﾙ;ﾊﾝﾄﾞ	RAIL;HAND	1				
6	4	KHN14120	ﾎﾞﾙﾄ M10X1.5X20	BOLT;SPL	2				
7	4	KHN14130	ﾜｯｼｬ 10	WASHER	2				
8	4	KHN14150	ﾚｰﾙ;ﾊﾝﾄﾞ Bﾋﾟﾗｰ	RAIL;HAND	1				
9	4	KHN14160	ﾎﾞﾙﾄ M10X1.5X25	BOLT;SPL	3				
10	4	KHN1487	ｷｬｯﾁ;ﾄﾞｱ	CATCH;DOOR	1				
11	4	KHN2688	ﾎﾞﾙﾄ ﾌﾗﾝｼﾞ M8X1.25X2	BOLT;SPL	4		210A5 -1532 210L5 -1295	=	KHN18920
11	4	KHN18920	ﾎﾞﾙﾄ ﾌﾗﾝｼﾞ M8X1.25X2	BOLT;SPL	4		210A5 1533- 210L5 1296-		
12	4	KHN14170	ﾚﾊﾞｰ	LEVER	1				
13	4	KHN16400	ｽﾌﾟﾘﾝｸﾞ;ﾋｯﾊﾟﾘ	SPRING;EXTENSION	1				
14	4	KHN2704	ｽﾄｯﾊﾟ ﾄﾞｱ	STOPPER;SPL	2				
15	4	KHN14200	ｽﾄﾗｲｶ ﾄﾞｱ ﾛｯｸ	STRIKER	1				
16	4	KHN2702	ﾈｼﾞｽｸﾘｭｰ M8X1.25X20	THREDED SCREW;SPL	2				
17	4	KHN14220	ﾎﾙﾀﾞ ｶﾞﾗｽ UP	HOLDER	1				
18	4	KHN2682	ﾈｼﾞｽｸﾘｭｰ M6X1.0X12	THREDED SCREW;SPL	1				
19	4	KHN2681	ﾈｼﾞｽｸﾘｭｰ M6X1.0X30	THREDED SCREW;SPL	2				
20	4	KHN14230	ﾎﾙﾀﾞ ｶﾞﾗｽ F	HOLDER	1				
21	4	KHN14240	ﾎﾙﾀﾞ ｶﾞﾗｽ R	HOLDER	1				
22	4	KHN2768	ﾈｼﾞｽｸﾘｭｰ M6X1.0X16	THREDED SCREW;SPL	8		210A5 -1532 210L5 -1295		
22	4	KHN2768	ﾈｼﾞｽｸﾘｭｰ M6X1.0X16	THREDED SCREW;SPL	5		210A5 1533- 210L5 1296-		
23	4	KHN2722	ﾌﾞﾗｹｯﾄ ﾎﾙﾀﾞｰ	BRKT;SPL	1				
24	4	KHN14250	ﾌｯｸ ｺｰﾄ	HOOK	1				
25	4	KHN14260	ｽｸﾘｭｰ M4X0.7X12	SCREW	2				
26	4	KHN2714	ﾗﾝﾌﾟ ﾙｰﾑ	LAMP;SPL	1				
27	4	KHN2687	ﾈｼﾞｽｸﾘｭｰ ﾀｯﾋﾟﾝｸﾞ M5X	THREDED SCREW;SPL	2				
28	4	KHN14270	ﾎﾞﾙﾄ M16X2X50	BOLT;SPL	1		210A5 -2278 210L5 -1518		
29	4	KHN14280	ﾜｯｼｬ ｽﾌﾟﾘﾝｸﾞ 16	WASHER;SPL	1		210A5 -2278 210L5 -1518		
30	4	KHN14290	ﾜｯｼｬ 16	WASHER	1		210A5 -2278 210L5 -1518		
31	4	KHN14300	ｸﾞﾛﾒｯﾄ;ﾗﾊﾞｰ	GROMMET;RUBBER	2				
32	4	KHN14310	ｸﾞﾛﾒｯﾄ;ﾗﾊﾞｰ	GROMMET;RUBBER	3				
33	4	KHN14320	ｹｰﾌﾞﾙ;ｺﾝﾄﾛｰﾙ	CABLE;CONTROL	1				
34	4	KHN2769	ｶﾊﾞｰ ｴｱｲﾝﾃｰｸ ｲﾝﾅｰ	COVER;SPL	1				
35	4	KHN14330	ｶﾊﾞｰ ｴｱｲﾝﾃｰｸ ｱｳﾀｰ	COVER;SPL	1				
36	4	KHN2771	ｼｰﾙ ｴｱｲﾝﾃｰｸ	SEAL;SPL	1				
37	4	KHN14340	ﾎﾞﾙﾄ ﾁｮｳ M6X15	BOLT;SPL	2				
38	4	KHN2723	ｶﾊﾞｰ ﾄﾞｱ ｷｬｯﾁｬｰ	COVER;SPL	1				
39	4	KHN1490	ｼｰﾙ ﾄﾞｱ ｷｬｯﾁ ｶﾊﾞｰ	SEAL;SPL	1				
40	4	KHN1518	ｸﾞﾛﾒｯﾄ;ﾗﾊﾞｰ (ｷｬｯﾁ ｹｰ	GROMMET;RUBBER	1				
41	4	KHR2950	ｽｲｯﾁ;ﾘﾐｯﾄ	SWITCH;LIMIT	2				
42	4	KHN2713	ﾈｼﾞｽｸﾘｭｰ M5X16	THREDED SCREW;SPL	2				
43	4	KHN1489	ｸﾘｯﾌﾟ;ﾜｲﾔ	CLIP;WIRE	1				
44	4	KHN14350	ｼｰﾙ ﾊﾟｯﾁ	SEAL;SPL	3				
45	4	KHN14360	ﾌﾞﾗｹｯﾄ ﾌﾟﾚｰﾄ RR	BRACKET	2				
46	4	CDP1373	ﾎﾞﾙﾄ ﾄｸｼｭ	BOLT;SPL	4		210A5 -1532 210L5 -1295	=	KHN18860
46	4	KHN18860	ﾎﾞﾙﾄ ﾄｸｼｭ	BOLT;SPL	4		210A5 1533- 210L5 1296-		
47	4	KHN14370	ｶﾊﾞｰ ﾚﾊﾞｰ	COVER	1				
48	4	KHN14380	ｸﾘｯﾌﾟ XMAS ﾂﾘｰ 7.2-1	CLIP	11				

https://truckmanualshub.com/

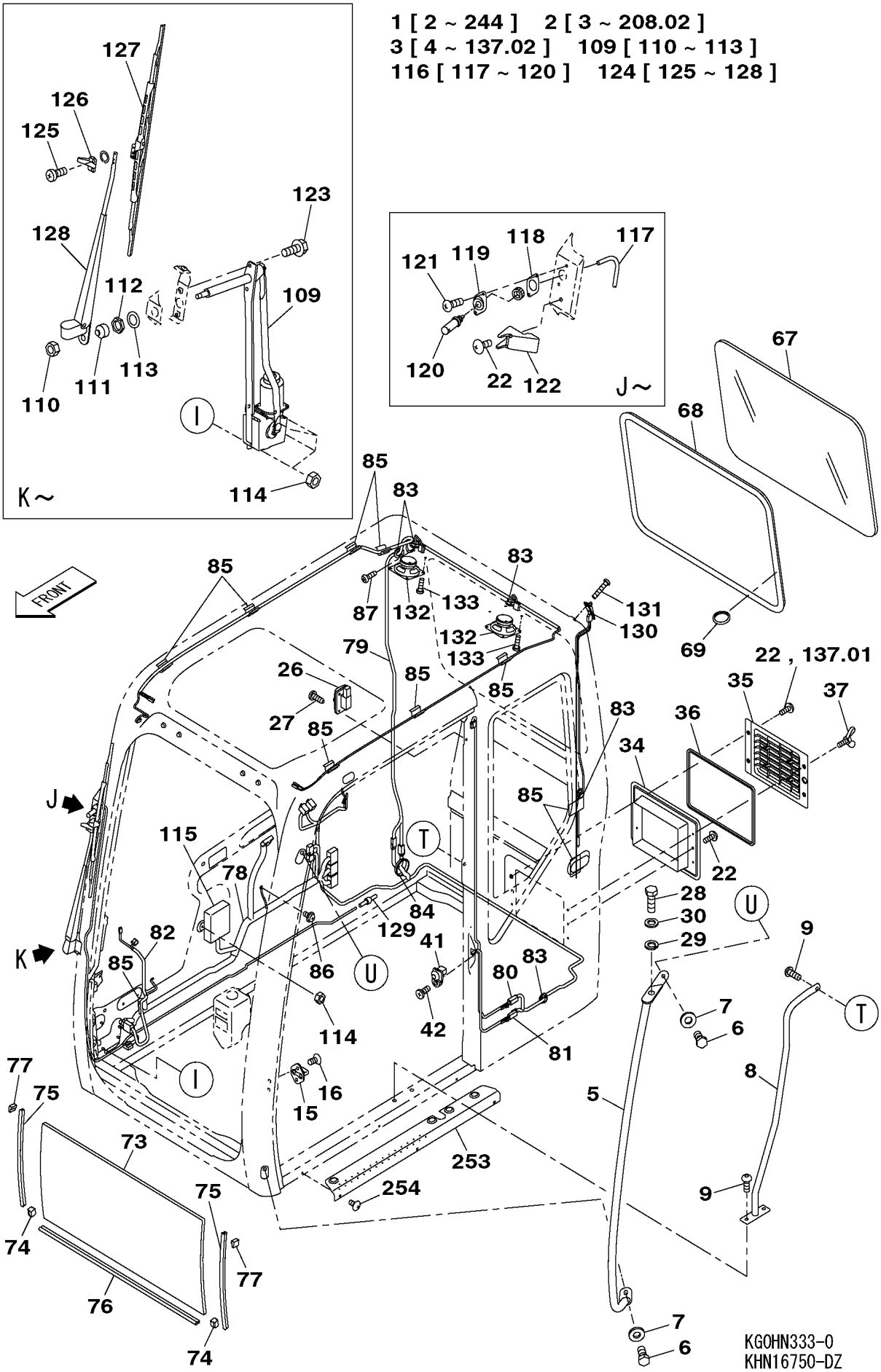

https://truckmanualshub.com/

210A5 1101－ 210L5 1101－

符号 ITEM	構成 COMPO	部品番号 PART NO.	部品名	PART NAME	個数 Q'TY	ｲﾝﾅｰ	適用号機 SERIAL_NO.	互換 ICA	代替部品 REPLACEABLE PART
49	4	KHN14390	ﾄﾘﾑ LH	TRIM;SPL	1				
50	4	KHN14560	ﾌﾟﾚｰﾄ ﾊﾟｯﾄﾞﾙｰﾌ RH	PLATE	2				
51	4	KHN14570	ｽｸﾘｭｰ M6X1.0X8	SCREW	6				
52	4	KHN14600	ｶﾊﾞｰ ｵｰﾄｷｬｯﾁ	COVER	1				
53	4	KHN14610	ｸﾞﾘﾙ ｽﾋﾟｰｶ	GRILL	1				
54	4	KHN14620	ﾊﾟｯﾄﾞ ﾙｰﾌ	PAD	1				
55	4	KHN14630	ｶﾊﾞｰ;ﾌﾛﾝﾄ ﾍｯﾀﾞｰ	COVER;FRONT	1				
56	4	KHN14640	ｸﾘｯﾌﾟ XMAS ﾂﾘｰ 6.5X2	CLIP	11				
57	4	KHN14650	ｽｸﾘｭｰ ﾀｯﾋﾟﾝｸﾞ M5X0.8	SCREW	2				
58	4	KHN14670	ﾌﾞﾗｹｯﾄ ﾙｰﾌﾊﾟｯﾄﾞ ｾﾝﾀｰ	BRACKET	1				
59	4	KHN14690	ｼｰﾙ;ｸｯｼｮﾝ	SEAL;CUSHION	1				
60	4	KHN14700	ｶﾊﾞｰ ﾌﾟﾚｰﾄ ﾐｷﾞﾏｴ	COVER	1		210A5 -1133 210L5 -1134	=	KHN14701
60	4	KHN14701	ｶﾊﾞｰ ﾌﾟﾚｰﾄ ﾐｷﾞﾏｴ	COVER	1		210A5 1134- 210L5 1135-		
61	4	KHN14710	ﾎﾞﾙﾄ ｾﾑｽ M6X1.0X14	BOLT;SPL	2				
62	4	KHN1549	ﾅｯﾄ ﾌﾗﾝｼﾞ M6X1.0 MFZ	NUT;SPL	6		210A5 -1133 210L5 -1134	=	KHN1549
62	4	KHN1549	ﾅｯﾄ ﾌﾗﾝｼﾞ M6X1.0 MFZ	NUT;SPL	7		210A5 1134- 210L5 1135-		
63	4	KHN14730	ﾌﾞﾗｹｯﾄ ｻﾎﾟｰﾄ ﾓﾆﾀ	BRACKET	1				
64	4	KHN16270	ｼｰﾙ;ｸｯｼｮﾝ	SEAL;CUSHION	1		210A5 -1532 210L5 -1295	<	KHN18280
64	4	KHN18280	ｼｰﾙ;ｸｯｼｮﾝ	SEAL;CUSHION	1		210A5 1533- 210L5 1296-		
65	4	KHN14890	ｶﾞﾗｽ;ｷｮｳｶ RH	GLASS;TEMPERED	1				
66	4	KHN14910	ｶﾞﾗｽ;ｷｮｳｶ LH	GLASS;TEMPERED	1				
67	4	KHN14930	ｶﾞﾗｽ;ｷｮｳｶ RR	GLASS;TEMPERED	1				
68	4	KHN14950	ｺﾞﾑ S	RUBBER;SPL	1				
69	4	KHN14960	ﾘﾝｸﾞ ｷｰ	RING	1				
70	4	KHN14970	ｽﾍﾟｰｻ ｳｲﾝﾄﾞA	SPACER	4				
71	4	KHN14980	ｽﾍﾟｰｻ ｳｲﾝﾄﾞB	SPACER	4				
72	4	KHN14990	ｽﾍﾟｰｻ ｳｲﾝﾄﾞC	SPACER	7				
73	4	KHN15000	ｶﾞﾗｽ;ｷｮｳｶ ﾌﾛﾝﾄﾛﾜｰ	GLASS;TEMPERED	1				
74	4	KHN15010	ｽﾄｯﾊﾟ;ｺﾞﾑ	STOPPER;RUBBER	2				
75	4	KHN15020	ﾚｰﾙ ｸﾞﾗｽﾗﾝ	RAIL	2				
76	4	KHN15030	ｽﾄﾘｯﾌﾟ;ｳｴｻﾞ	STRIP;WEATHER	1				
77	4	KHN15040	ｼｰﾙ;ｸｯｼｮﾝ	SEAL;CUSHION	2				
78	4	KHN15050	ﾊｰﾈｽ;ﾜｲﾔ ﾒｲﾝ	HARNESS;WIRE	1				
79	4	KHN15060	ﾊｰﾈｽ;ﾜｲﾔ ﾙｰﾌ	HARNESS;WIRE	1				
80	4	KHN15070	ﾊｰﾈｽ;ﾜｲﾔ ﾙｰﾑﾗﾝﾌﾟ	HARNESS;WIRE	1				
81	4	KHN15080	ﾊｰﾈｽ;ﾜｲﾔ ﾄﾞｱSW	HARNESS;WIRE	1				
82	4	KHN15090	ﾊｰﾈｽ;ﾜｲﾔ ｸﾛｯｸ	HARNESS;WIRE	1				
83	4	KHN2709	ﾌﾟﾛﾃｸﾀ ﾊｰﾈｽ	PROTECTOR;SPL	7		210A5 -1532 210L5 -1295 210A5 1533- 210L5 1296-		
84	4	KHN1514	ｶﾞｰﾄﾞ ﾊｰﾈｽ	GUARD	1				
85	4	KHN2712	ﾃｰﾌﾟ ｿﾌﾄ	TAPE	10				
86	4	KHN2719	ﾈｼﾞｽｸﾘｭｰ ﾀｯﾋﾟﾝｸﾞ M6X	THREDED SCREW;SPL	1				
87	4	KHN16240	ｽｸﾘｭｰ M5X0.8X16	SCREW	1				
88	4	KHN16280	ﾎﾞﾙﾄ M16X2X25	BOLT;SPL	4				
89	4	KHN16290	ﾜｯｼｬ 16	WASHER	4				
90	4	KHN15860	ｽﾌﾟﾘﾝｸﾞ FWｱｼｽﾄ ASSY	SPRING;SPL	1				
91	4	KHN15690	ﾎﾞﾙﾄ ﾌﾗﾝｼﾞ M6X1.0X12	BOLT;SPL	9		210A5 -1532 210L5 -1295		
91	4	KHN15690	ﾎﾞﾙﾄ ﾌﾗﾝｼﾞ M6X1.0X12	BOLT;SPL	6		210A5 1533- 210L5 1296-		
92	4	KHN15870	ｽﾄﾗｲｶ FW	STRIKER	1				
93	4	KHN15880	ﾌﾞﾗｹｯﾄ ｵｰﾄｷｬｯﾁ	BRACKET	1				

https://truckmanualshub.com/

1 [2 ~ 244] 2 [3 ~ 208.02] 138 [139 ~ 178.01] 139 [140 ~ 153]

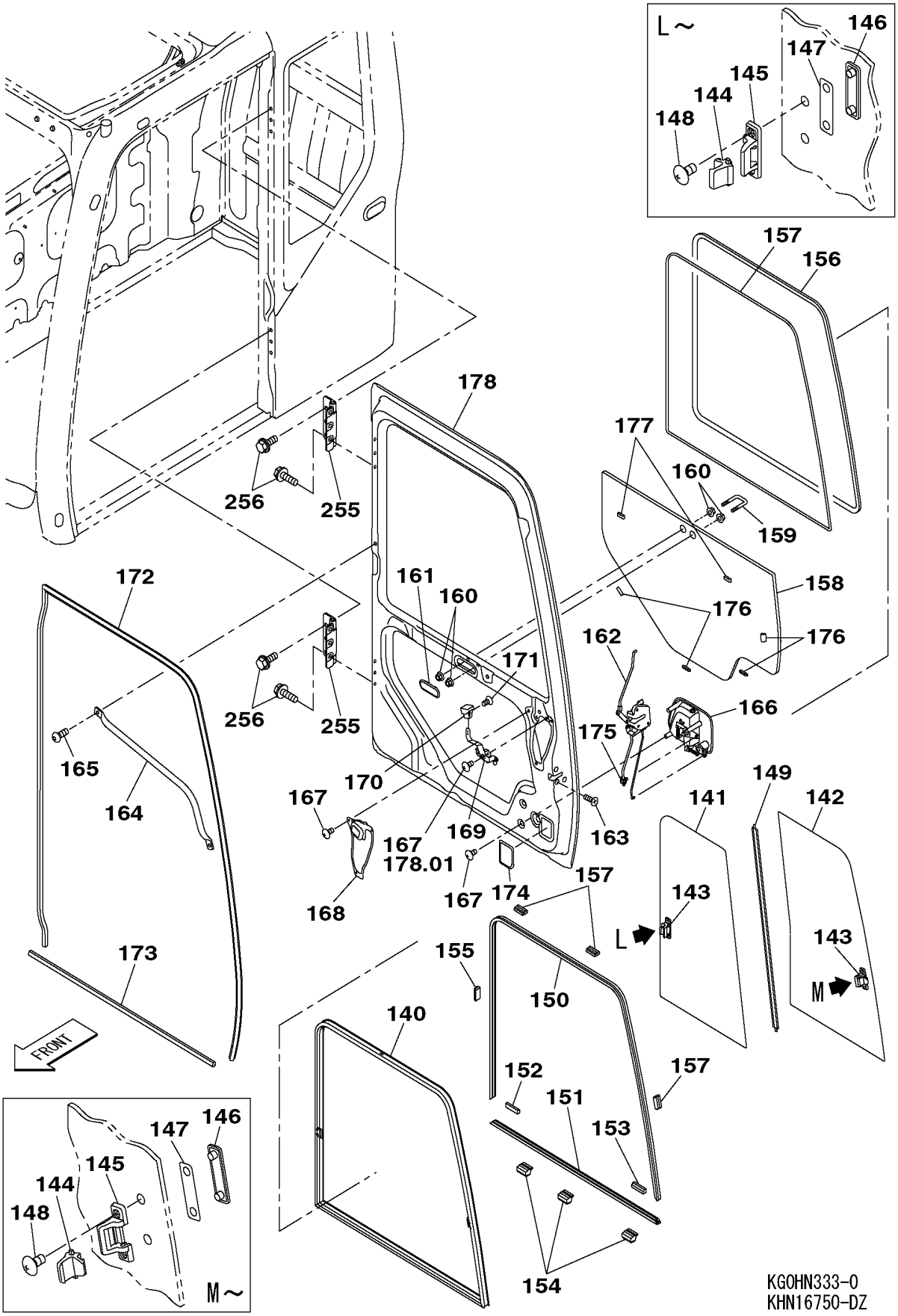

https://truckmanualshub.com/

210A5 1101－ 210L5 1101－

符号 ITEM	構成 COMPO	部品番号 PART NO.	部品名	PART NAME	個数 Q'TY	ｲﾝﾅｰ	適用号機 SERIAL_NO.	互換 ICA	代替部品 REPLACEABLE PART
94	4	KHN15890	ﾎﾞﾙﾄ M10X1.5X20	BOLT;SPL	4				
95	4	KHN15900	ﾌﾞﾗｹｯﾄ ｽﾄｯﾊﾟFW	BRACKET	1				
96	4	KHN15910	ﾜｯｼｬ 10	WASHER	4				
97	4	KHN15920	ｷｬｯﾁ ASSY	CATCH	1				
98	4	KHN2686	ﾎﾞﾙﾄ ﾌﾗﾝｼﾞ M6X1.0X20	BOLT;SPL	3		210A5 -1532 210L5 -1295	=	KHN18890
98	4	KHN18890	ﾎﾞﾙﾄ ﾌﾗﾝｼﾞ M6X1.0X20	BOLT;SPL	3		210A5 1533- 210L5 1296-		
99	4	KHN15930	ｽﾄﾘｯﾌﾟ;ｳｴｻﾞ ﾌﾛﾝﾄ	STRIP;WEATHER	1				
100	4	KHN15940	ｽﾄｯﾊﾟ;ｺﾞﾑ FW	STOPPER;RUBBER	1				
101	4	KHN15950	ﾌﾞﾗｹｯﾄ ﾘﾐｯﾄSW	BRACKET	1				
102	4	KHN16330	ｽﾄｯﾊﾟ;ｺﾞﾑ F/W	STOPPER;RUBBER	1				
103	4	KHN15960	ｽﾄｯﾊﾟ ﾘﾝｸ	STOPPER;SPL	2				
104	4	KHN15970	ｽｸﾘｭｰ M6X1.0X6	SCREW	2				
105	4	KHN15980	ｽﾄｯﾊﾟ;ｺﾞﾑ	STOPPER;RUBBER	2				
106	4	KHN15990	ｽﾄｯﾊﾟ;ｺﾞﾑ	STOPPER;RUBBER	1				
107	4	KHN16000	ﾜｯｼｬ 10	WASHER	1				
108	4	KHN16010	ﾅｯﾄ M10X1.5	NUT;SPL	1				
109	4A	KHN16020	ﾜｲﾊﾟ ﾓｰﾀ ASSY	WIPER;WINDSHIELD	1				
110	5	KHN2740	ﾅｯﾄ ﾄｸｼｭ	NUT;SPL	1				
111	5	KHN2739	ｷｬｯﾌﾟ ﾜｲﾊﾟ ｼｬﾌﾄ	CAP;SPL	1				
112	5	KHN2738	ﾅｯﾄ ﾜｲﾊﾟ ｼｬﾌﾄ	NUT;SPL	1				
113	5	KHN2737	ﾜｯｼｬ ﾄｸｼｭ	WASHER;SPL	1				
114	4	KHN16030	ﾅｯﾄ M6X1.0	NUT;SPL	6				
115	4	KHN3392	ｺﾝﾄﾛｰﾗ ﾜｲﾊﾟ	CONT;SPL	1				
116	4A	KHN16040	ﾉｽﾞﾙ;ｳｵｰﾀ ASSY	NOZZLE	1				
117	5	KHN16050	ﾁｭｰﾌﾞ ﾗﾊﾞｰ	TUBE	1				
118	5	KHN14180	ﾊﾟｯｷﾝ	PACKING	1				
119	5	KHN16060	ｱﾀﾞﾌﾟﾀ;ﾎｰｽ	ADAPTER;HOSE	1		210A5 -1532 210L5 -1295		
119	5	KHN1521	ﾉｽﾞﾙ;ｳｵｰﾀ ｱﾀﾞﾌﾟﾀ	NOZZLE	1		210A5 1533- 210L5 1296-		
120	5	KHN2746	ﾉｽﾞﾙ ﾜｲﾊﾟ	NOZZLE;SPL	1				
121	4	KHN16070	ｽｸﾘｭｰ M4X0.7X12	SCREW	2				
122	4	KHN16080	ﾎﾙﾀﾞ ﾜｲﾊﾟ	HOLDER	1				
123	4	KHN2756	ﾎﾞﾙﾄ ﾌﾗﾝｼﾞ M6X1.0X16	BOLT;SPL	6		210A5 -1532 210L5 -1295	=	KHN18880
123	4	KHN18880	ﾎﾞﾙﾄ ﾌﾗﾝｼﾞ M6X1.0X16	BOLT;SPL	6		210A5 1533- 210L5 1296-		
124	4A	KHN16090	ﾜｲﾊﾟ ｱｰﾑ&ﾌﾞﾚｰﾄﾞ	WIPER;WINDSHIELD	1				
125	5	KHN2733	ﾈｼﾞｽｸﾘｭｰ ﾜｲﾊﾟ ｾｯﾄ	THREDED SCREW;SPL	1		210A5 -1532 210L5 -1295		
125	5	KHN20170	ﾈｼﾞｽｸﾘｭｰ ﾜｲﾊﾟ ｾｯﾄ	THREDED SCREW;SPL	1		210A5 1533- 210L5 1296-		
126	5	KHN2732	ﾜｲﾊﾟ ｽﾗｲﾀﾞｰ ASSY	WIPER;WINDSHIELD	1		210A5 -1532 210L5 -1295		
126	5	KHN20180	ﾜｲﾊﾟ ｽﾗｲﾀﾞｰ ASSY	WIPER;WINDSHIELD	1		210A5 1533- 210L5 1296-		
127	5	KHN16820	ﾌﾞﾚｰﾄﾞ;ﾜｲﾊﾟ ASSY	BLADE;WIPER	1				
128	5	KHN16830	ｱｰﾑ;ﾜｲﾊﾟ ASSY	ARM;WIPER	1				
129	4	KHN16100	ｼﾞｮｲﾝﾄ ﾊﾞﾙﾌﾞ	JOINT;SPL	1				
130	4	KHN16340	ｱﾝﾃﾅ ﾗｼﾞｵ	ANTENNA	1				
131	4	KHN16110	ｽｸﾘｭｰ M4X20	SCREW	1				
132	4	CAP2284	ｽﾋﾟｰｶ ｱｯｾﾝ	LOUDSPEAKER	2		210A5 -1114 210L5 NOT USED	=	KHN18250
132	4	KHN18250	ｽﾋﾟｰｶ	LOUDSPEAKER	2		210A5 1115-1696 210L5 -1360		
132	4	KHR3366	ｽﾋﾟｰｶ	LOUDSPEAKER	2		210A5 1697- 210L5 1361-		
133	4	KHN2716	ﾈｼﾞｽｸﾘｭｰ ﾀｯﾋﾟﾝｸﾞ M4X	THREDED SCREW;SPL	8				

https://truckmanualshub.com/

1 [2 ~ 244] 2 [3 ~ 208.02] 3 [4 ~ 137.02]
179 [180 ~ 187] 188 [189 ~ 208.02]

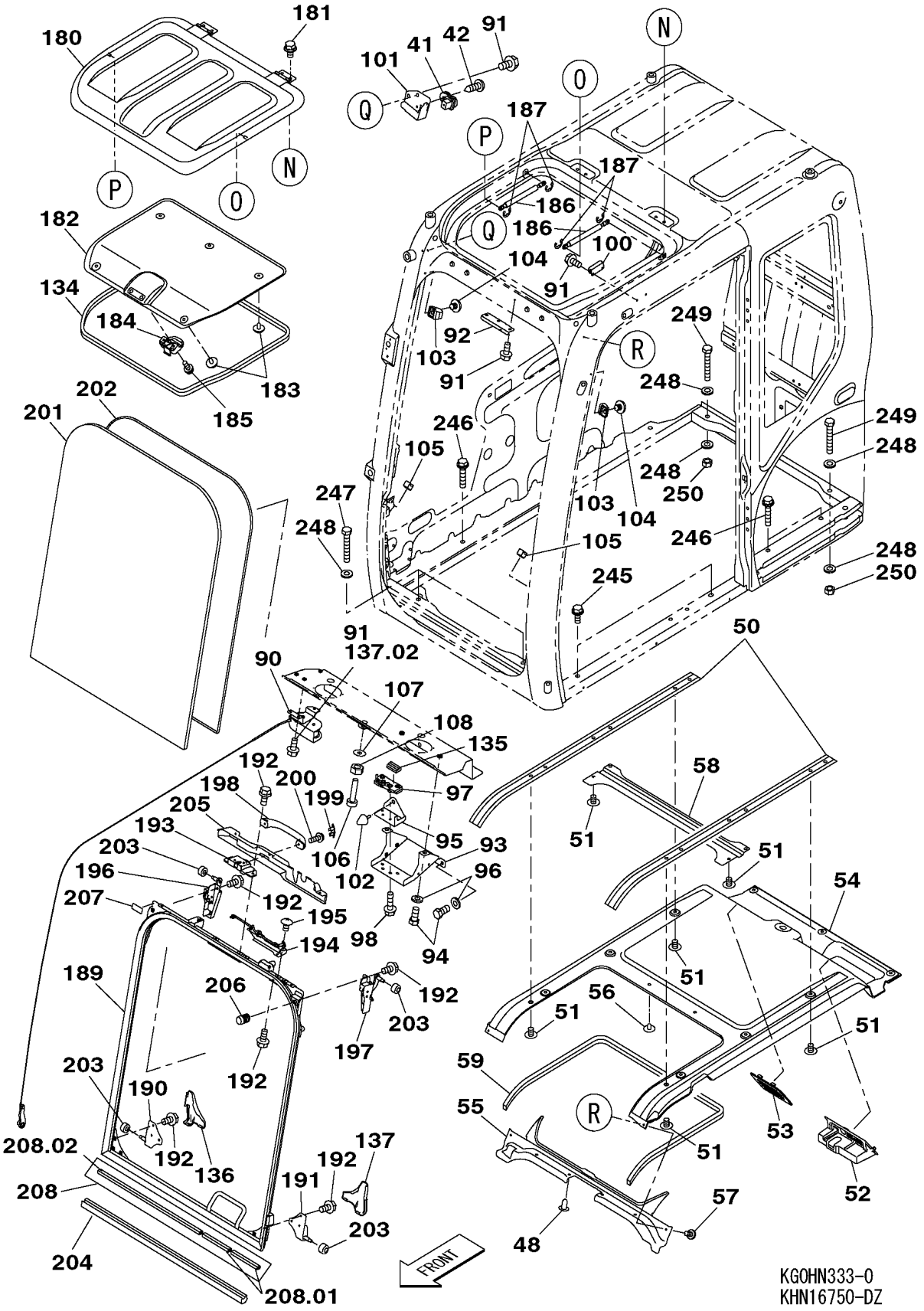

https://truckmanualshub.com/

210A5 1101－ 210L5 1101－

符号 ITEM	構成 COMPO	部品番号 PART NO.	部品名	PART NAME	個数 Q'TY	ｲﾝﾅｰ	適用号機 SERIAL_NO.	互換 ICA	代替部品 REPLACEABLE PART
134	4	KHN15340	ｼｰﾙ;ｸｯｼｮﾝ	SEAL;CUSHION	1				
135	4	KHN1507	ｽﾍﾟｰｻ ｻｯｼ	SPACER	1				
136	4	KHN16220	ｶﾊﾞｰ FW RH	COVER	1				
137	4	KHN16230	ｶﾊﾞｰ FW LH	COVER	1				
137.01	4	KHN18780	ﾈｼﾞｽｸﾘｭｰ M6X1.0X16	THREDED SCREW;SPL	3		210A5 1533- 210L5 1296-		
137.02	4	KHN18870	ﾎﾞﾙﾄ ﾌﾗﾝｼﾞ M6X1.0X12	BOLT;SPL	3		210A5 1533- 210L5 1296-		
138	3A	KHN13670	ﾄﾞｱ ﾄﾘﾑ ｸﾐﾀﾃ	DOOR	1				
139	4A	KHN15350	ｻｯｼ ASSY (ｶﾞﾗｽ)	SASH	1				
140	5	KHN15370	ﾌﾚｰﾑ;ｳｲﾝﾄﾞ ｻｯｼ	FRAME;WINDOW	1				
141	5	KHN15380	ｶﾞﾗｽ;ｷｮｳｶ ｻｯｼ R	GLASS;TEMPERED	1				
142	5	KHN15400	ｶﾞﾗｽ;ｷｮｳｶ ｻｯｼ F	GLASS;TEMPERED	1				
143	5A	KHN15420	ﾛｯｸ;ｳｲﾝﾄﾞ ｻｯｼ	LOCK;WINDOW	2				
144	6	KHN16350	ﾛｯｸ;ｳｲﾝﾄﾞ ｻｯｼ	LOCK;WINDOW	2				
145	6	KHN16360	ﾛｯｸ;ｳｲﾝﾄﾞ ﾍﾞｰｽ	LOCK;WINDOW	2				
146	6	KHN16370	ﾘﾃｰﾅ ｻｯｼﾛｯｸ	RETAINER	2				
147	6	KHN15260	ﾊﾟｯｷﾝ;ｺﾞﾑ	PACKING;RUBBER	2		210A5 -1532 210L5 -1295		
147	6	KHN18290	ﾊﾟｯｷﾝ;ｺﾞﾑ	PACKING;RUBBER	2		210A5 1533- 210L5 1296-		
148	6	KHN16390	ｽｸﾘｭｰ ﾀｯﾋﾟﾝｸﾞ M5X0.8	SCREW	4				
149	5	KHN15430	ｼｰﾙ ｾﾝﾀｰ ｻｯｼ	SEAL;SPL	1				
150	5	KHN15440	ﾚｰﾙ;ｳｲﾝﾄﾞﾄﾗｯｸ ｻｯｼ	RAIL;WINDOW TRACK	1				
151	5	KHN15450	ﾚｰﾙ;ｳｲﾝﾄﾞﾄﾗｯｸ ｻｯｼ	RAIL;WINDOW TRACK	1				
152	5	KHN15460	ｽﾄｯﾊﾟ;ｺﾞﾑ RR	STOPPER;RUBBER	1				
153	5	KHN15470	ｽﾄｯﾊﾟ;ｺﾞﾑ FRT	STOPPER;RUBBER	1				
154	4	KHN15480	ｽﾍﾟｰｻ ｻｯｼ	SPACER	3				
155	4	KHN1507	ｽﾍﾟｰｻ ｻｯｼ	SPACER	4				
156	4	KHN15490	ﾓｰﾙ;ｶﾞｰﾆｯｼｭ ｻｯｼ	MOGOL;GUNNISH	1				
157	4	KHN15500	ｼｰﾙ;ｸｯｼｮﾝ	SEAL;CUSHION	1				
158	4	KHN15510	ｶﾞﾗｽ;ｷｮｳｶ ﾄﾞｱｼﾀ	GLASS;TEMPERED	1				
159	4	KHN15530	ﾌｯｸ	HOOK	1				
160	4	KHN2808	ﾅｯﾄ ﾌﾗﾝｼﾞ M10X1.25	NUT;SPL	4				
161	4	KHN16320	ｶﾊﾞｰ	COVER	1				
162	4	KHN15540	ﾛｯｸ;ﾄﾞｱ	LOCK;DOOR	1				
163	4	KHN15550	ｽｸﾘｭｰ ｾﾑｽ M6X1.0X16	SCREW	3				
164	4	KHN15560	ﾚｰﾙ;ﾊﾝﾄﾞ ﾄﾞｱ	RAIL;HAND	1				
165	4	KHN14160	ﾎﾞﾙﾄ M10X1.5X25	BOLT;SPL	2				
166	4	KHN15570	ﾊﾝﾄﾞﾙ;ﾄﾞｱ	HANDLE;DOOR	1				
167	4	KHN2682	ﾈｼﾞｽｸﾘｭｰ M6X1.0X12	THREDED SCREW;SPL	8		210A5 -1532 210L5 -1295		
167	4	KHN2682	ﾈｼﾞｽｸﾘｭｰ M6X1.0X12	THREDED SCREW;SPL	6		210A5 1533- 210L5 1296-		
168	4	KHN15580	ｶﾊﾞｰ ﾄﾞｱ ｲﾝﾅA	COVER	1				
169	4	KHN15590	ﾊﾝﾄﾞﾙ;ﾄﾞｱ ｲﾝﾅ	HANDLE;DOOR	1				
170	4	KHN15600	ﾉﾌﾞ ﾊﾝﾄﾞﾙ	KNOB	1				
171	4	KHN15610	ｽｸﾘｭｰ ｻﾗ M4X0.7X8	SCREW	2				
172	4	KHN15620	ｽﾄﾘｯﾌﾟ;ｳｴｻﾞ ﾄﾞｱA	STRIP;WEATHER	1				
173	4	KHN15630	ｽﾄﾘｯﾌﾟ;ｳｴｻﾞ ﾄﾞｱB	STRIP;WEATHER	1				
174	4	KHN15640	ｶﾊﾞｰ ﾎｰﾙ	COVER	1				
175	4	KHN15650	ｼﾞｮｲﾝﾄ ﾄﾞｱ ﾘﾝｸ	JOINT;SPL	1				
176	4	KHN14980	ｽﾍﾟｰｻ ｳｲﾝﾄﾞB	SPACER	4				
177	4	KHN14990	ｽﾍﾟｰｻ ｳｲﾝﾄﾞC	SPACER	2				
178	4	KHN16560	ﾄﾞｱ;ｵﾍﾟﾚｰﾀ (STD)	DOOR;OPERATOR	1				
178.01	4	KHN18800	ﾈｼﾞｽｸﾘｭｰ M6X1.0X12	THREDED SCREW;SPL	2		210A5 1533- 210L5 1296-		
179	3A	KHN13690	ﾃﾝﾏﾄﾞ ﾄﾘﾑ ｸﾐﾀﾃ	ROOF WINDOW	1				
180	4	KHN15170	ﾃﾝﾏﾄﾞ (MS37ｸﾞﾚｰ)	ROOF WINDOW	1				
181	4	KHN15320	ﾎﾞﾙﾄ ｾﾑｽ M8X1.25X16	BOLT;SPL	4				

https://truckmanualshub.com/

210A5 1101－ 210L5 1101－

符号 ITEM	構成 COMPO	部品番号 PART NO.	部品名	PART NAME	個数 Q'TY	ｲﾝﾅｰ	適用号機 SERIAL_NO.	互換 ICA	代替部品 REPLACEABLE PART
182	4	KHN15330	ﾊﾟｯﾄﾞ ﾙｰﾌﾊｯﾁ	PAD	1				
183	4	KHN14640	ｸﾘｯﾌﾟ XMAS ﾂﾘｰ 6.5X2	CLIP	5				
184	4	KHN15300	ﾛｯｸ ﾙｰﾌﾊｯﾁ	LOCK	1				
185	4	KHN15310	ｽｸﾘｭｰ M6X1.0X16	SCREW	2				
186	4	KHN2827	ｽﾌﾟﾘﾝｸﾞ ｶﾞｽ	SPRING;SPL	2				
187	4	KHN2828	E-ﾄﾒﾜ	RING;E	4				
188	3A	KHN13680	ｳｲﾝﾄﾞ ｱｯﾊﾟ ﾄﾘﾑ ｸﾐﾀﾃ	WINDOW	1				
189	4	KHN15660	ﾌﾚｰﾑ;ｳｲﾝﾄﾞ ﾌﾛﾝﾄｱｯﾊﾟ	FRAME;WINDOW	1				
190	4	KHN15670	ｽﾃｰ FWﾛﾜｰ RH	STAY	1				
191	4	KHN15680	ｽﾃｰ FWﾛﾜｰ LH	STAY	1				
192	4	KHN15690	ﾎﾞﾙﾄ ﾌﾗﾝｼﾞ M6X1.0X12	BOLT;SPL	14				
193	4	KHN15700	ﾛｯｸ;ｳｲﾝﾄﾞ FW	LOCK;WINDOW	1				
194	4	KHN15710	ﾚﾊﾞｰ;ﾛｯｸ ｵｰﾄｷｬｯﾁ	LEVER;LOCK	1				
195	4	KHN15720	ｽｸﾘｭｰ M6X1.0X10	SCREW	2				
196	4	KHN15730	ﾘﾝｸ ASSY FW RH	LINK	1				
197	4	KHN15740	ﾘﾝｸ ASSY FW LH	LINK	1				
198	4	KHN15750	ﾊﾝﾄﾞﾙ FW	HANDLE	1				
199	4	KHN15760	ｷｬｯﾌﾟ FWﾊﾝﾄﾞﾙ	CAP	2				
200	4	KHN15770	ｽｸﾘｭｰ ｾﾑｽ M6X1.0X20	SCREW	2				
201	4	KHN15780	ｶﾞﾗｽ;ｷｮｳｶ FW ｱｯﾊﾟ	GLASS;TEMPERED	1				
202	4	KHN15790	ｼｰﾙ;ｸｯｼｮﾝ FW ｱｯﾊﾟ	SEAL;CUSHION	1				
203	4	KHN15800	ﾛｰﾗ FW ｱｯﾊﾟ	ROLLER	4				
204	4	KHN15810	ｼｰﾙ;ｸｯｼｮﾝ EPDM	SEAL;CUSHION	1				
205	4	KHN15820	ｶﾊﾞｰ;ﾌﾛﾝﾄ ｳｲﾝﾄﾞ	COVER;FRONT	1				
206	4	KHN15830	ｽﾄｯﾊﾟ;ｺﾞﾑ	STOPPER;RUBBER	1				
207	4	KHN15840	ｽﾄﾘｯﾌﾟ;ｳｴｻﾞ	STRIP;WEATHER	1				
208	4	KHN15850	ｼｰﾙ;ｸｯｼｮﾝ	SEAL;CUSHION	1		210A5 -1532 210L5 -1295		
208.01	4	KHN18140	ｼｰﾙ;ｸｯｼｮﾝ	SEAL;CUSHION	2		210A5 1533- 210L5 1296-		
208.02	4	KHN18150	ｼｰﾙ;ｸｯｼｮﾝ	SEAL;CUSHION	1		210A5 1533- 210L5 1296-		
209	2A	KHN16730	ﾄﾘﾑ ｲﾝﾃﾘｱ ASSY (ｸﾞﾚｰ	TRIM;SPL	1				
210	3	KHN12050	ﾄﾘﾑ ｻｲﾄﾞ (ﾌﾛﾝﾄ ｱｯﾊﾟ)	TRIM;SPL	1				
211	3	KHN16120	ｽｸﾘｭｰ ﾀｯﾋﾟﾝｸﾞ M4X0.7	SCREW	4				
212	3	KHN16130	ｽｸﾘｭｰ ﾀｯﾋﾟﾝｸﾞ M5X0.8	SCREW	8				
213	3	KHN12060	ﾄﾘﾑ ｻｲﾄﾞ (ﾌﾛﾝﾄ ﾛﾜｰ)	TRIM;SPL	1				
214	3	KHN14710	ﾎﾞﾙﾄ ｾﾑｽ M6X1.0X14	BOLT;SPL	15		210A5 -1532 210L5 -1295		
214	3	KHN14710	ﾎﾞﾙﾄ ｾﾑｽ M6X1.0X14	BOLT;SPL	14		210A5 1533- 210L5 1296-		
215	3	KHN16140	ﾎﾞﾙﾄ ﾎﾞﾀﾝ (ﾛｯｶｸｱﾅ) M	BOLT;SPL	3				
216	3	KHN12130	ﾄﾘﾑ ｻｲﾄﾞ (ｱｯﾊﾟ) ｸﾞﾗﾅ	TRIM;SPL	1				
217	3	KHN2682	ﾈｼﾞｽｸﾘｭｰ M6X1.0X12	THREDED SCREW;SPL	2				
218	3A	KHN16410	ﾄﾘﾑ ｻｲﾄﾞ(ﾘﾔ)A ASSY ｸ	TRIM;SPL	1				
219	4	KHN12090	ﾄﾘﾑ ｻｲﾄﾞ (ﾘﾔ A) ｸﾞﾚｰ	TRIM;SPL	1				
220	4	KHN16430	ﾅｯﾄ ｽﾋﾟｰﾄﾞ M6	NUT;SPL	1				
221	3	KHN12110	ﾄﾘﾑ ｻｲﾄﾞ (ﾘﾔ B) ｸﾞﾚｰ	TRIM;SPL	1				
222	3	KHN12880	ﾎﾞｯｸｽ ﾌﾛﾝﾄ	BOX;SPL	1				
223	3	KHN16150	ｽｸﾘｭｰ ﾀｯﾋﾟﾝｸﾞ M4X0.7	SCREW	6				
224	3	KHN16160	ﾌﾞﾗｹｯﾄ ﾄﾘﾑｻｲﾄﾞ ﾘﾔ	BRACKET	1				
225	3	KHN2756	ﾎﾞﾙﾄ ﾌﾗﾝｼﾞ M6X1.0X16	BOLT;SPL	1		210A5 -1532 210L5 -1295		
225.01	3	KHN18110	ﾎﾞﾙﾄ ｾﾑｽ M6X20	BOLT;SPL	1		210A5 1533- 210L5 1296-		
225	3	KHN18880	ﾎﾞﾙﾄ ﾌﾗﾝｼﾞ M6X1.0X16	BOLT;SPL	1		210A5 1533- 210L5 1296-		
226	2	KHR10051	ﾓﾆﾀｰ ﾃﾞｨｽﾌﾟﾚｲ ASSY	MONITOR	1		210A5 -1465 210L5 -1276	=	KHR10052
226	2	KHR10052	ﾓﾆﾀｰ ﾃﾞｨｽﾌﾟﾚｲ ASSY	MONITOR	1		210A5 1466-1882		

https://truckmanualshub.com/

210A5 1101－　　210L5 1101－

符号 ITEM	構成 COMPO	部品番号 PART NO.	部品名	PART NAME	個数 Q'TY	インナー	適用号機 SERIAL_NO.	互換 ICA	代替部品 REPLACEABLE PART
226	2	KHR10052	ﾓﾆﾀｰ ﾃﾞｨｽﾌﾟﾚｲ ASSY	MONITOR	1		210L5 1277-1432		
226	2A	KHR10053	ﾓﾆﾀｰ ﾃﾞｨｽﾌﾟﾚｲ ASSY	MONITOR	1		210A5 1883- 210L5 1433-		
227	3	KHR15220	ｹｰｽ ﾓﾆﾀ(ｳｴ) BK ASSY	CASE	1				
228	3	KHR15230	ｹｰｽ ﾓﾆﾀ(ｼﾀ)ASSY	CASE	1				
229	3	KHR15240	ﾕﾆｯﾄ (MAIN LCD)	UNIT	1		210A5 -1465 210L5 -1276		
229	3	KHR15241	ﾕﾆｯﾄ (MAIN LCD)	UNIT	1		210A5 1466-1882 210L5 1277-1432		
230	3	KHR15250	ｷﾊﾞﾝ;ﾌﾟﾘﾝﾄ (SW)	BOARD;PRINTED CKT	1				
231	3	KHR15260	ｷﾊﾞﾝ;ﾌﾟﾘﾝﾄ (ｱﾜｰﾒｰﾀ)	BOARD;PRINTED CKT	1				
232	3	KHR3213	+ﾅﾍﾞﾀｯﾌﾟS M3X10	SCREW;TAPPING	9				
233	3	KHR1424	+ﾄﾗｽS ﾀｯﾌﾟ M4X16	SCREW;TRUSS HD	8				
234	2	KHR15170	ﾌﾞﾗｹｯﾄ ﾓﾆﾀ	BRACKET	1				
235	2A	KHR10060	ﾄｹｲ (ﾃﾞｼﾞﾀﾙ)	CLOCK	1				
236	3	KHR13810	ｹｰｽ CLOCK(ｳｴ)	CASE	1				
237	3	KHR13820	ｹｰｽ CLOCK(ｼﾀ)	CASE	1				
238	3	KHR13830	ｷﾊﾞﾝ;ﾌﾟﾘﾝﾄ (CLOCK)	BOARD;PRINTED CKT	1				
239	3	KHR13840	+ﾄﾗｽﾀｯﾌﾟS M3X16	SCREW;TAPPING	4				
240	2A	--------	ｴｱｺﾝ DUCT(A)-G	AIR CONDITIONER	1				
241	3	KHR13200	ﾀﾞｸﾄ FACE-A	DUCT	1				
242	3	KHR13230	ﾀﾞｸﾄ DEF-A	DUCT	1				
243	3	KHR10540	ｾﾝｻ ｴｱｺﾝ(ﾆｯｼｬ)	SENSOR;SPL	1				
244	2	KHR11210	ﾗｲﾀ;ｵｰﾄ	LIGHTER;CIGAR	1				
245	1	105R012Y030R	ｾﾑｽB M12X 30	BOLT;SEMS	2				
246	1	105R012Y060R	ｾﾑｽB M12X 60	BOLT;SEMS	4				
247	1	102R012Y075R	ｺｳﾘｷB M12X 75	BOLT;HIGH STRENGTH	2				
248	1	KHN0296	ｺｳﾘｷW 12 (ﾒｯｷ)	WASHER;HIGH STRENGTH	6				
249	1	KHN11930	ｾﾞﾝﾈｼﾞB M12X80	BOLT;FULL THREADED	2				
250	1	162R012VR	ｺｳﾘｷN M12	NUT;HIGH STRENGTH	2				
251	1	KHN12080	ﾄﾘﾑ ｻｲﾄﾞ (ﾛﾜｰ) ﾌﾞﾗｯｸ	TRIM;SPL	1		210A5 NOT USED 210L5 NOT USED		
252	1	KHN2132	ｺｳﾘｷB M6X16 (ｻﾞｶﾞﾈｸﾐ	BOLT;HIGH STRENGTH	3		210A5 NOT USED 210L5 NOT USED		
253	1	KHN13630	ｶﾞｰﾄﾞ ﾃﾞｯｷ	GUARD;SPL	1				
254	1	KHN13640	+ﾄﾗｽS M6X12	SCREW;TRUSS HD	3				
255	1	KHN2850	ﾎﾞﾙﾄ ﾌﾗﾝｼﾞ M10X1.25X	BOLT;SPL	2				
256	1	KHN2907	ﾁｮｳﾊﾞﾝ ﾄﾞｱ	HINGE	2				

https://truckmanualshub.com/

1 [2 ~ 255] 2 [3 ~ 219.02] 3 [4 ~ 139.02]
220 [221 ~ 236.01] 229 [230 , 231]
237 [238 ~ 244] 251 [252 ~ 254]

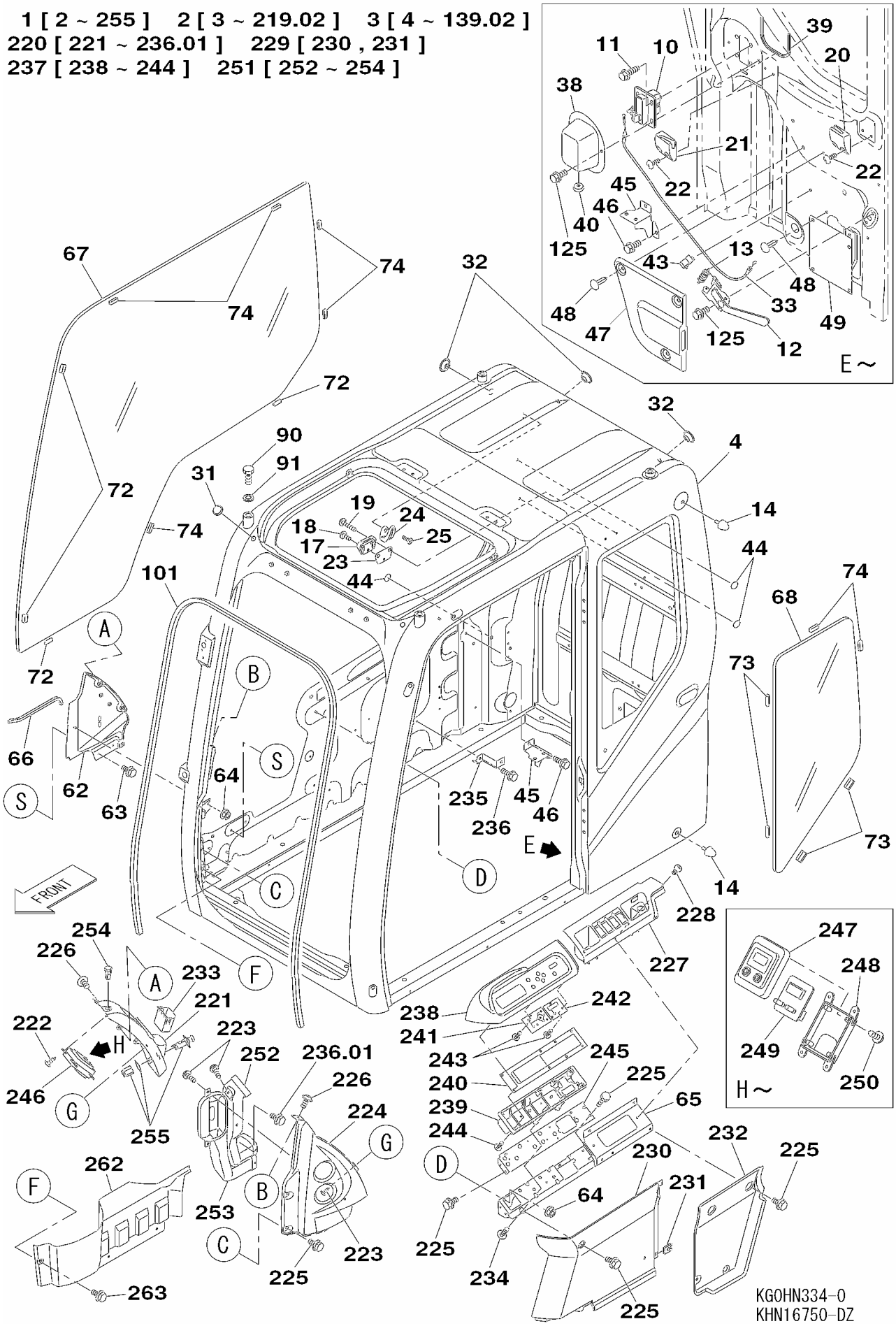

https://truckmanualshub.com/

210A5 1101－　　210L5 1101－

符号 ITEM	構成 COMPO	部品番号 PART NO.	部品名	PART NAME	個数 Q'TY	ｲﾝﾅｰ	適用号機 SERIAL_NO.	互換 ICA	代替部品 REPLACEABLE PART
1	1A	KHN16600	ｷﾔﾌﾞ;ｵﾍﾟﾚｰﾀ ASSY (EX	CAB;OPERATORS	1				
2	2A	--------	ｷﾔﾌﾞ;ｵﾍﾟﾚｰﾀ EXP ｸﾘｱﾊ	CAB;OPERATORS	1				
3	3A	--------	ｷﾔﾌﾞ ﾄﾘﾑﾎﾞﾃﾞｨ ｸﾐﾀﾃ E	CAB;SPL	1				
4	4	KHN18050	ｷﾔﾌﾞ;ｵﾍﾟﾚｰﾀ ﾎﾞﾃﾞｨ(EX	CAB;OPERATORS	1				
5	4	KHN14110	ﾚｰﾙ;ﾊﾝﾄﾞ	RAIL;HAND	1				
6	4	KHN14120	ﾎﾞﾙﾄ M10X1.5X20	BOLT;SPL	2				
7	4	KHN14130	ﾜｯｼｬ 10	WASHER	2				
8	4	KHN14150	ﾚｰﾙ;ﾊﾝﾄﾞ Bﾋﾟﾗｰ	RAIL;HAND	1				
9	4	KHN14160	ﾎﾞﾙﾄ M10X1.5X25	BOLT;SPL	3				
10	4	KHN1487	ｷｬｯﾁ;ﾄﾞｱ	CATCH;DOOR	1				
11	4	KHN2688	ﾎﾞﾙﾄ ﾌﾗﾝｼﾞ M8X1.25X2	BOLT;SPL	4		210A5 -1532 210L5 -1295	=	KHN18920
11	4	KHN18920	ﾎﾞﾙﾄ ﾌﾗﾝｼﾞ M8X1.25X2	BOLT;SPL	4		210A5 1533- 210L5 1296-		
12	4	KHN14170	ﾚﾊﾞｰ	LEVER	1				
13	4	KHN16400	ｽﾌﾟﾘﾝｸﾞ;ﾋｯﾊﾟﾘ	SPRING;EXTENSION	1				
14	4	KHN2704	ｽﾄｯﾊﾟ ﾄﾞｱ	STOPPER;SPL	2				
15	4	KHN14200	ｽﾄﾗｲｶ ﾄﾞｱ ﾛｯｸ	STRIKER	1				
16	4	KHN2702	ﾈｼﾞｽｸﾘｭｰ M8X1.25X20	THREDED SCREW;SPL	2				
17	4	KHN14220	ﾎﾙﾀﾞ ｶﾞﾗｽ UP	HOLDER	1				
18	4	KHN2682	ﾈｼﾞｽｸﾘｭｰ M6X1.0X12	THREDED SCREW;SPL	1				
19	4	KHN2681	ﾈｼﾞｽｸﾘｭｰ M6X1.0X30	THREDED SCREW;SPL	2				
20	4	KHN14230	ﾎﾙﾀﾞ ｶﾞﾗｽ F	HOLDER	1				
21	4	KHN14240	ﾎﾙﾀﾞ ｶﾞﾗｽ R	HOLDER	1				
22	4	KHN2768	ﾈｼﾞｽｸﾘｭｰ M6X1.0X16	THREDED SCREW;SPL	8		210A5 -1532 210L5 -1295		
22	4	KHN2768	ﾈｼﾞｽｸﾘｭｰ M6X1.0X16	THREDED SCREW;SPL	5		210A5 1533- 210L5 1296-		
23	4	KHN2722	ﾌﾞﾗｹｯﾄ ﾎﾙﾀﾞｰ	BRKT;SPL	1				
24	4	KHN14250	ﾌｯｸ ｺｰﾄ	HOOK	1				
25	4	KHN14260	ｽｸﾘｭｰ M4X0.7X12	SCREW	2				
26	4	KHN2714	ﾗﾝﾌﾟ ﾙｰﾑ	LAMP;SPL	1				
27	4	KHN2687	ﾈｼﾞｽｸﾘｭｰ ﾀｯﾋﾟﾝｸﾞ M5X	THREDED SCREW;SPL	2				
28	4	KHN14270	ﾎﾞﾙﾄ M16X2X50	BOLT;SPL	1		210A5 -2278 210L5 -1518		
29	4	KHN14280	ﾜｯｼｬ ｽﾌﾟﾘﾝｸﾞ 16	WASHER;SPL	1		210A5 -2278 210L5 -1518		
30	4	KHN14290	ﾜｯｼｬ 16	WASHER	1		210A5 -2278 210L5 -1518		
31	4	KHN14300	ｸﾞﾛﾒｯﾄ;ﾗﾊﾞｰ	GROMMET;RUBBER	2				
32	4	KHN14310	ｸﾞﾛﾒｯﾄ;ﾗﾊﾞｰ	GROMMET;RUBBER	3				
33	4	KHN14320	ｹｰﾌﾞﾙ;ｺﾝﾄﾛｰﾙ	CABLE;CONTROL	1				
34	4	KHN2769	ｶﾊﾞｰ ｴｱｲﾝﾃｰｸ ｲﾝﾅｰ	COVER;SPL	1				
35	4	KHN14330	ｶﾊﾞｰ ｴｱｲﾝﾃｰｸ ｱｳﾀｰ	COVER;SPL	1				
36	4	KHN2771	ｼｰﾙ ｴｱｲﾝﾃｰｸ	SEAL;SPL	1				
37	4	KHN14340	ﾎﾞﾙﾄ ﾁｮｳ M6X15	BOLT;SPL	2				
38	4	KHN2723	ｶﾊﾞｰ ﾄﾞｱ ｷｬｯﾁｬｰ	COVER;SPL	1				
39	4	KHN1490	ｼｰﾙ ﾄﾞｱ ｷｬｯﾁ ｶﾊﾞｰ	SEAL;SPL	1				
40	4	KHN1518	ｸﾞﾛﾒｯﾄ;ﾗﾊﾞｰ (ｷｬｯﾁ ｹｰ	GROMMET;RUBBER	1				
41	4	KHR2950	ｽｲｯﾁ;ﾘﾐｯﾄ	SWITCH;LIMIT	2				
42	4	KHN2713	ﾈｼﾞｽｸﾘｭｰ M5X16	THREDED SCREW;SPL	2				
43	4	KHN1489	ｸﾘｯﾌﾟ;ﾜｲﾔ	CLIP;WIRE	1				
44	4	KHN14350	ｼｰﾙ ﾊﾟｯﾁ	SEAL;SPL	3				
45	4	KHN14360	ﾌﾞﾗｹｯﾄ ﾌﾟﾚｰﾄ RR	BRACKET	2				
46	4	CDP1373	ﾎﾞﾙﾄ ﾄｸｼｭ	BOLT;SPL	4		210A5 -1532 210L5 -1295	=	KHN18860
46	4	KHN18860	ﾎﾞﾙﾄ ﾄｸｼｭ	BOLT;SPL	4		210A5 1533- 210L5 1296-		
47	4	KHN14370	ｶﾊﾞｰ ﾚﾊﾞｰ	COVER	1				
48	4	KHN14380	ｸﾘｯﾌﾟ XMAS ﾂﾘｰ 7.2-1	CLIP	11				

https://truckmanualshub.com/

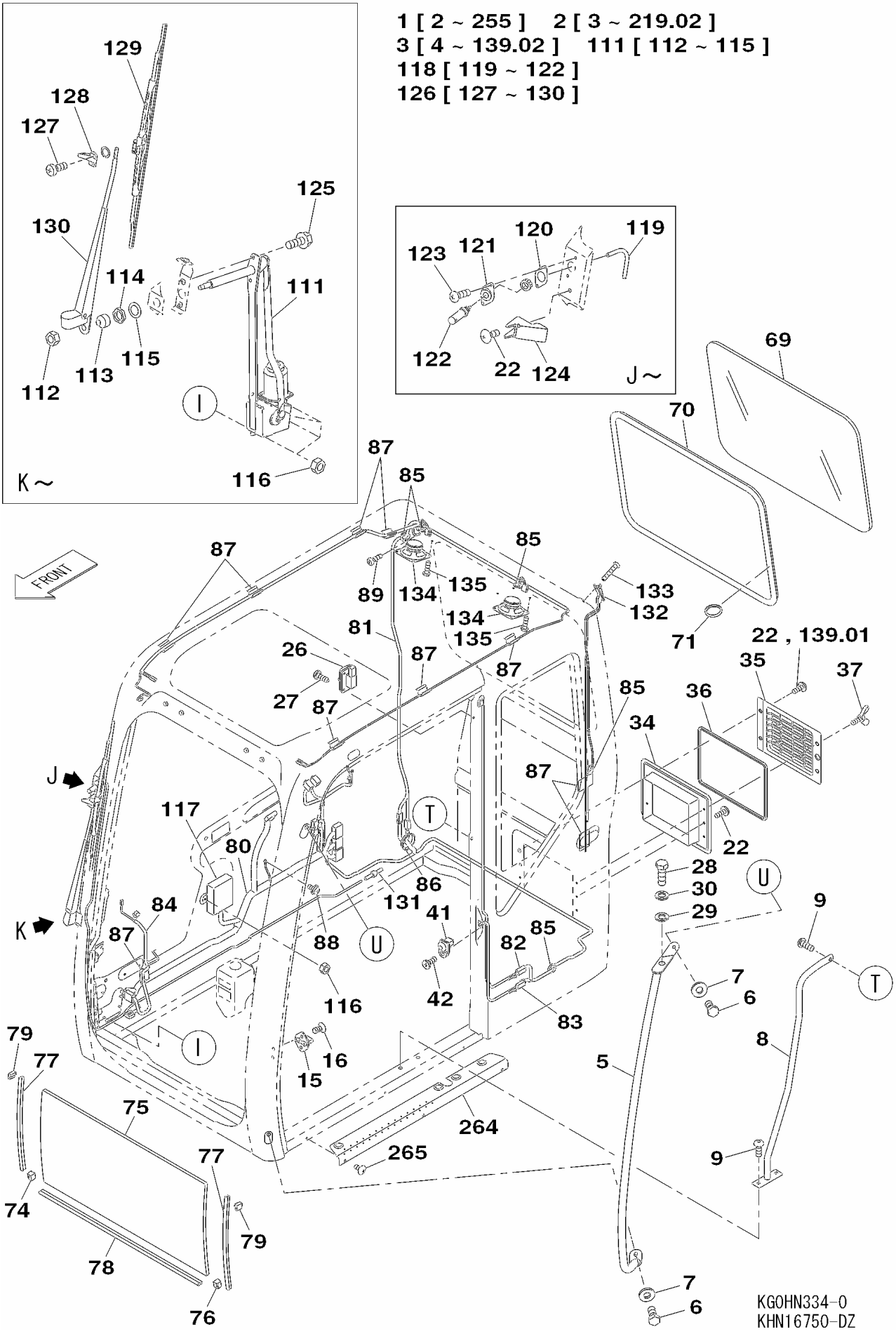

https://truckmanualshub.com/

210A5 1101－ 210L5 1101－

符号 ITEM	構成 COMPO	部品番号 PART NO.	部品名	PART NAME	個数 Q'TY	ｲﾝﾅｰ	適用号機 SERIAL_NO.	互換 ICA	代替部品 REPLACEABLE PART
49	4	KHN14390	ﾄﾘﾑ LH	TRIM;SPL	1				
50	4	KHN14540	ﾚｰﾙ;ｽﾗｲﾄﾞ ｻﾝｼｪｰﾄﾞ RH	RAIL;SLIDE	1				
51	4	KHN14550	ﾚｰﾙ;ｽﾗｲﾄﾞ ｻﾝｼｪｰﾄﾞ LH	RAIL;SLIDE	1				
52	4	KHN14570	ｽｸﾘｭｰ M6X1.0X8	SCREW	6				
53	4	KHN14580	ｼｰﾄ ｻﾝｼｪｰﾄﾞ	SEAT	1				
54	4	KHN14590	ﾊﾝﾄﾞﾙ ｻﾝｼｪｰﾄﾞ	HANDLE	2				
55	4	KHN14600	ｶﾊﾞｰ ｵｰﾄｷｬｯﾁ	COVER	1				
56	4	KHN14610	ｸﾞﾘﾙ ｽﾋﾟｰｶ	GRILL	1				
57	4	KHN14620	ﾊﾟｯﾄﾞ ﾙｰﾌ	PAD	1				
58	4	KHN14630	ｶﾊﾞｰ;ﾌﾛﾝﾄ ﾍｯﾀﾞｰ	COVER;FRONT	1				
59	4	KHN14640	ｸﾘｯﾌﾟ XMAS ﾂﾘｰ 6.5X2	CLIP	11				
60	4	KHN14650	ｽｸﾘｭｰ ﾀｯﾋﾟﾝｸﾞ M5X0.8	SCREW	2				
61	4	KHN14680	ﾌﾞﾗｹｯﾄ ﾙｰﾌﾊﾟｯﾄﾞ ｾﾝﾀｰ	BRACKET	1				
62	4	KHN14700	ｶﾊﾞｰ ﾌﾟﾚｰﾄ ﾐｷﾞﾏｴ	COVER	1		210A5 -1133 210L5 -1134	=	KHN14701
62	4	KHN14701	ｶﾊﾞｰ ﾌﾟﾚｰﾄ ﾐｷﾞﾏｴ	COVER	1		210A5 1134- 210L5 1135-		
63	4	KHN14710	ﾎﾞﾙﾄ ｾﾑｽ M6X1.0X14	BOLT;SPL	2				
64	4	KHN1549	ﾅｯﾄ ﾌﾗﾝｼﾞ M6X1.0 MFZ	NUT;SPL	6		210A5 -1133 210L5 -1134	=	KHN1549
64	4	KHN1549	ﾅｯﾄ ﾌﾗﾝｼﾞ M6X1.0 MFZ	NUT;SPL	7		210A5 1134- 210L5 1135-		
65	4	KHN14730	ﾌﾞﾗｹｯﾄ ｻﾎﾟｰﾄ ﾓﾆﾀ	BRACKET	1				
66	4	KHN16270	ｼｰﾙ;ｸｯｼｮﾝ	SEAL;CUSHION	1		210A5 -1532 210L5 -1295	<	KHN18280
66	4	KHN18280	ｼｰﾙ;ｸｯｼｮﾝ	SEAL;CUSHION	1		210A5 1533- 210L5 1296-		
67	4	KHN14890	ｶﾞﾗｽ;ｷｮｳｶ RH	GLASS;TEMPERED	1				
68	4	KHN14910	ｶﾞﾗｽ;ｷｮｳｶ LH	GLASS;TEMPERED	1				
69	4	KHN14930	ｶﾞﾗｽ;ｷｮｳｶ RR	GLASS;TEMPERED	1				
70	4	KHN14950	ｺﾞﾑ S	RUBBER;SPL	1				
71	4	KHN14960	ﾘﾝｸﾞ ｷｰ	RING	1				
72	4	KHN14970	ｽﾍﾟｰｻ ｳｲﾝﾄﾞA	SPACER	4				
73	4	KHN14980	ｽﾍﾟｰｻ ｳｲﾝﾄﾞB	SPACER	4				
74	4	KHN14990	ｽﾍﾟｰｻ ｳｲﾝﾄﾞC	SPACER	7				
75	4	KHN15000	ｶﾞﾗｽ;ｷｮｳｶ ﾌﾛﾝﾄﾛﾜｰ	GLASS;TEMPERED	1				
76	4	KHN15010	ｽﾄｯﾊﾟ;ｺﾞﾑ	STOPPER;RUBBER	2				
77	4	KHN15020	ﾚｰﾙ ｸﾞﾗｽﾗﾝ	RAIL	2				
78	4	KHN15030	ｽﾄﾘｯﾌﾟ;ｳｴｻﾞ	STRIP;WEATHER	1				
79	4	KHN15040	ｼｰﾙ;ｸｯｼｮﾝ	SEAL;CUSHION	2				
80	4	KHN15050	ﾊｰﾈｽ;ﾜｲﾔ ﾒｲﾝ	HARNESS;WIRE	1				
81	4	KHN15060	ﾊｰﾈｽ;ﾜｲﾔ ﾙｰﾌ	HARNESS;WIRE	1				
82	4	KHN15070	ﾊｰﾈｽ;ﾜｲﾔ ﾙｰﾑﾗﾝﾌﾟ	HARNESS;WIRE	1				
83	4	KHN15080	ﾊｰﾈｽ;ﾜｲﾔ ﾄﾞｱSW	HARNESS;WIRE	1				
84	4	KHN15090	ﾊｰﾈｽ;ﾜｲﾔ ｸﾛｯｸ	HARNESS;WIRE	1				
85	4	KHN2709	ﾌﾟﾛﾃｸﾀ ﾊｰﾈｽ	PROTECTOR;SPL	7		210A5 -1532 210L5 -1295 210A5 1533- 210L5 1296-		
86	4	KHN1514	ｶﾞｰﾄﾞ ﾊｰﾈｽ	GUARD	1				
87	4	KHN2712	ﾃｰﾌﾟ ｿﾌﾄ	TAPE	10				
88	4	KHN2719	ﾈｼﾞｽｸﾘｭｰ ﾀｯﾋﾟﾝｸﾞ M6X	THREDED SCREW;SPL	1				
89	4	KHN16240	ｽｸﾘｭｰ M5X0.8X16	SCREW	1				
90	4	KHN16280	ﾎﾞﾙﾄ M16X2X25	BOLT;SPL	4				
91	4	KHN16290	ﾜｯｼｬ 16	WASHER	4				
92	4	KHN15860	ｽﾌﾟﾘﾝｸﾞ FWｱｼｽﾄ ASSY	SPRING;SPL	1				
93	4	KHN15690	ﾎﾞﾙﾄ ﾌﾗﾝｼﾞ M6X1.0X12	BOLT;SPL	9		210A5 -1532 210L5 -1295		
93	4	KHN15690	ﾎﾞﾙﾄ ﾌﾗﾝｼﾞ M6X1.0X12	BOLT;SPL	6		210A5 1533- 210L5 1296-		

https://truckmanualshub.com/

1 [2 ~ 255]　2 [3 ~ 219.02]　140 [141 ~ 180.01]　141 [142 ~ 155]

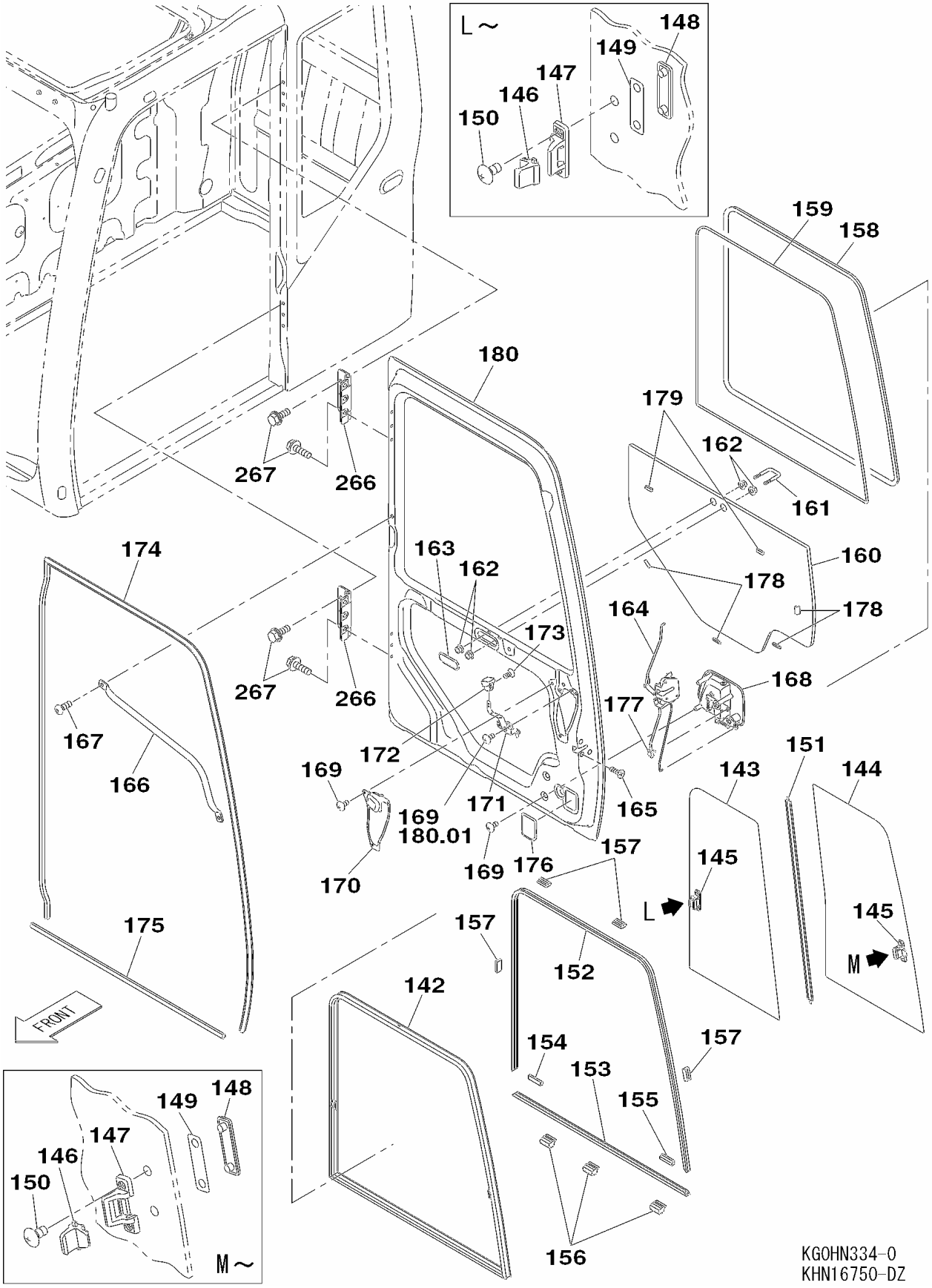

https://truckmanualshub.com/

210A5 1101－ 210L5 1101－

符号 ITEM	構成 COMPO	部品番号 PART NO.	部品名	PART NAME	個数 Q'TY	ｲﾝﾅｰ	適用号機 SERIAL_NO.	互換 ICA	代替部品 REPLACEABLE PART
94	4	KHN15870	ｽﾄﾗｲｶ FW	STRIKER	1				
95	4	KHN15880	ﾌﾞﾗｹｯﾄ ｵｰﾄｷｬｯﾁ	BRACKET	1				
96	4	KHN15890	ﾎﾞﾙﾄ M10X1.5X20	BOLT;SPL	4				
97	4	KHN15900	ﾌﾞﾗｹｯﾄ ｽﾄｯﾊﾟFW	BRACKET	1				
98	4	KHN15910	ﾜｯｼｬ 10	WASHER	4				
99	4	KHN15920	ｷﾔｯﾁ ASSY	CATCH	1				
100	4	KHN2686	ﾎﾞﾙﾄ ﾌﾗﾝｼﾞ M6X1.0X20	BOLT;SPL	3		210A5 -1532 210L5 -1295	=	KHN18890
100	4	KHN18890	ﾎﾞﾙﾄ ﾌﾗﾝｼﾞ M6X1.0X20	BOLT;SPL	3		210A5 1533- 210L5 1296-		
101	4	KHN15930	ｽﾄﾘｯﾌﾟ;ｳｴｻﾞ ﾌﾛﾝﾄ	STRIP;WEATHER	1				
102	4	KHN15940	ｽﾄｯﾊﾟ;ｺﾞﾑ FW	STOPPER;RUBBER	1				
103	4	KHN15950	ﾌﾞﾗｹｯﾄ ﾘﾐｯﾄSW	BRACKET	1				
104	4	KHN16330	ｽﾄｯﾊﾟ;ｺﾞﾑ F/W	STOPPER;RUBBER	1				
105	4	KHN15960	ｽﾄｯﾊﾟ ﾘﾝｸ	STOPPER;SPL	2				
106	4	KHN15970	ｽｸﾘｭｰ M6X1.0X6	SCREW	2				
107	4	KHN15980	ｽﾄｯﾊﾟ;ｺﾞﾑ	STOPPER;RUBBER	2				
108	4	KHN15990	ｽﾄｯﾊﾟ;ｺﾞﾑ	STOPPER;RUBBER	1				
109	4	KHN16000	ﾜｯｼｬ 10	WASHER	1				
110	4	KHN16010	ﾅｯﾄ M10X1.5	NUT;SPL	1				
111	4A	KHN16020	ﾜｲﾊﾟ ﾓｰﾀ ASSY	WIPER;WINDSHIELD	1				
112	5	KHN2740	ﾅｯﾄ ﾄｸｼｭ	NUT;SPL	1				
113	5	KHN2739	ｷﾔｯﾌﾟ ﾜｲﾊﾟ ｼｬﾌﾄ	CAP;SPL	1				
114	5	KHN2738	ﾅｯﾄ ﾜｲﾊﾟ ｼｬﾌﾄ	NUT;SPL	1				
115	5	KHN2737	ﾜｯｼｬ ﾄｸｼｭ	WASHER;SPL	1				
116	4	KHN16030	ﾅｯﾄ M6X1.0	NUT;SPL	6				
117	4	KHN3392	ｺﾝﾄﾛｰﾗ ﾜｲﾊﾟ	CONT;SPL	1				
118	4A	KHN16040	ﾉｽﾞﾙ;ｳｵｰﾀ ASSY	NOZZLE	1				
119	5	KHN16050	ﾁｭｰﾌﾞ ﾗﾊﾞｰ	TUBE	1				
120	5	KHN14180	ﾊﾟｯｷﾝ	PACKING	1				
121	5	KHN16060	ｱﾀﾞﾌﾟﾀ;ﾎｰｽ	ADAPTER;HOSE	1		210A5 -1532 210L5 -1295		
121	5	KHN1521	ﾉｽﾞﾙ;ｳｵｰﾀ ｱﾀﾞﾌﾟﾀ	NOZZLE	1		210A5 1533- 210L5 1296-		
122	5	KHN2746	ﾉｽﾞﾙ ﾜｲﾊﾟ	NOZZLE;SPL	1				
123	4	KHN16070	ｽｸﾘｭｰ M4X0.7X12	SCREW	2				
124	4	KHN16080	ﾎﾙﾀﾞ ﾜｲﾊﾟ	HOLDER	1				
125	4	KHN2756	ﾎﾞﾙﾄ ﾌﾗﾝｼﾞ M6X1.0X16	BOLT;SPL	6		210A5 -1532 210L5 -1295	=	KHN18880
125	4	KHN18880	ﾎﾞﾙﾄ ﾌﾗﾝｼﾞ M6X1.0X16	BOLT;SPL	6		210A5 1533- 210L5 1296-		
126	4A	KHN16090	ﾜｲﾊﾟ ｱｰﾑ&ﾌﾞﾚｰﾄﾞ	WIPER;WINDSHIELD	1				
127	5	KHN2733	ﾈｼﾞｽｸﾘｭｰ ﾜｲﾊﾟ ｾｯﾄ	THREDED SCREW;SPL	1		210A5 -1532 210L5 -1295		
127	5	KHN20170	ﾈｼﾞｽｸﾘｭｰ ﾜｲﾊﾟ ｾｯﾄ	THREDED SCREW;SPL	1		210A5 1533- 210L5 1296-		
128	5	KHN2732	ﾜｲﾊﾟ ｽﾗｲﾀﾞｰ ASSY	WIPER;WINDSHIELD	1		210A5 -1532 210L5 -1295		
128	5	KHN20180	ﾜｲﾊﾟ ｽﾗｲﾀﾞｰ ASSY	WIPER;WINDSHIELD	1		210A5 1533- 210L5 1296-		
129	5	KHN16820	ﾌﾞﾚｰﾄﾞ;ﾜｲﾊﾟ ASSY	BLADE;WIPER	1				
130	5	KHN16830	ｱｰﾑ;ﾜｲﾊﾟ ASSY	ARM;WIPER	1				
131	4	KHN16100	ｼﾞｮｲﾝﾄ ﾊﾞﾙﾌﾞ	JOINT;SPL	1				
132	4	KHN16340	ｱﾝﾃﾅ ﾗｼﾞｵ	ANTENNA	1				
133	4	KHN16110	ｽｸﾘｭｰ M4X20	SCREW	1				
134	4	CAP2284	ｽﾋﾟｰｶ ｱｯｾﾝ	LOUDSPEAKER	2		210A5 -1114 210L5 NOT USED	=	KHN18250
134	4	KHN18250	ｽﾋﾟｰｶ	LOUDSPEAKER	2		210A5 1115-1696 210L5 -1360		
134	4	KHR3366	ｽﾋﾟｰｶ	LOUDSPEAKER	2		210A5 1697-		

https://truckmanualshub.com/

1 [2 ~ 255] 2 [3 ~ 219.02] 3 [4 ~ 139.02] 181 [182 ~ 198]
182 [183 ~ 195] 199 [200 ~ 219.02]

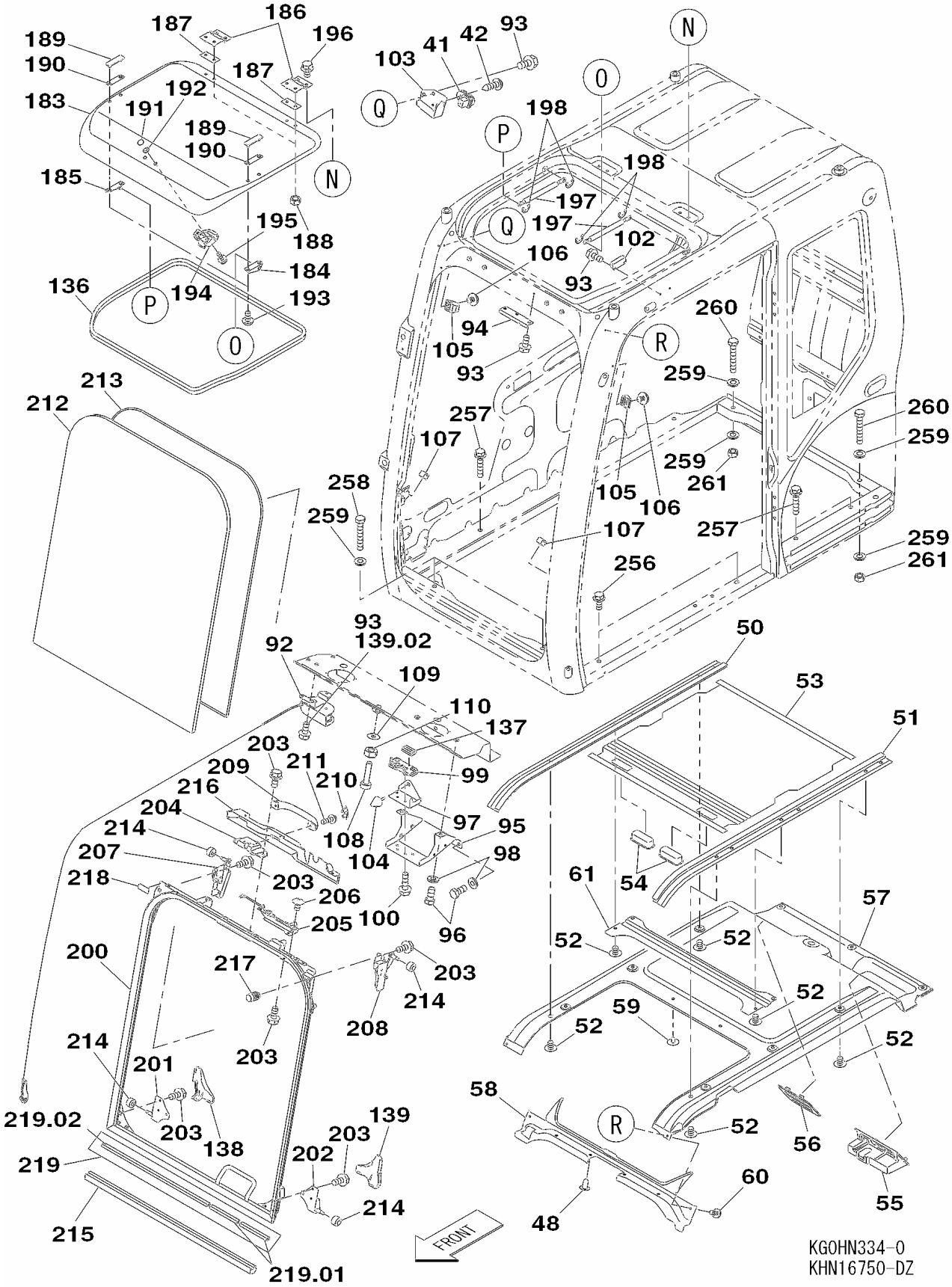

https://truckmanualshub.com/

210A5 1101－　　210L5 1101－

符号 ITEM	構成 COMPO	部品番号 PART NO.	部品名	PART NAME	個数 Q'TY	ｲﾝﾅｰ	適用号機 SERIAL_NO.	互換 ICA	代替部品 REPLACEABLE PART
134	4	KHR3366	ｽﾋﾟｰｶ	LOUDSPEAKER	2		210L5 1361-		
135	4	KHN2716	ﾈｼﾞｽｸﾘｭｰ ﾀｯﾋﾟﾝｸﾞ M4X	THREDED SCREW;SPL	8				
136	4	KHN15340	ｼｰﾙ;ｸｯｼｮﾝ	SEAL;CUSHION	1				
137	4	KHN1507	ｽﾍﾟｰｻ ｻｯｼ	SPACER	1				
138	4	KHN16220	ｶﾊﾞｰ FW RH	COVER	1				
139	4	KHN16230	ｶﾊﾞｰ FW LH	COVER	1				
139.01	4	KHN18780	ﾈｼﾞｽｸﾘｭｰ M6X1.0X16	THREDED SCREW;SPL	3		210A5 1533- 210L5 1296-		
139.02	4	KHN18870	ﾎﾞﾙﾄ ﾌﾗﾝｼﾞ M6X1.0X12	BOLT;SPL	3		210A5 1533- 210L5 1296-		
140	3A	KHN13670	ﾄﾞｱ ﾄﾘﾑ ｸﾐﾀﾃ	DOOR	1				
141	4A	KHN15350	ｻｯｼ ASSY (ｶﾞﾗｽ)	SASH	1				
142	5	KHN15370	ﾌﾚｰﾑ;ｳｲﾝﾄﾞ ｻｯｼ	FRAME;WINDOW	1				
143	5	KHN15380	ｶﾞﾗｽ;ｷｮｳｶ ｻｯｼ R	GLASS;TEMPERED	1				
144	5	KHN15400	ｶﾞﾗｽ;ｷｮｳｶ ｻｯｼ F	GLASS;TEMPERED	1				
145	5A	KHN15420	ﾛｯｸ;ｳｲﾝﾄﾞ ｻｯｼ	LOCK;WINDOW	2				
146	6	KHN16350	ﾛｯｸ;ｳｲﾝﾄﾞ ｻｯｼ	LOCK;WINDOW	2				
147	6	KHN16360	ﾛｯｸ;ｳｲﾝﾄﾞ ﾍﾞｰｽ	LOCK;WINDOW	2				
148	6	KHN16370	ﾘﾃｰﾅ ｻｯｼﾛｯｸ	RETAINER	2				
149	6	KHN15260	ﾊﾟｯｷﾝ;ｺﾞﾑ	PACKING;RUBBER	2		210A5 -1532 210L5 -1295		
149	6	KHN18290	ﾊﾟｯｷﾝ;ｺﾞﾑ	PACKING;RUBBER	2		210A5 1533- 210L5 1296-		
150	6	KHN16390	ｽｸﾘｭｰ ﾀｯﾋﾟﾝｸﾞ M5X0.8	SCREW	4				
151	5	KHN15430	ｼｰﾙ ｾﾝﾀｰ ｻｯｼ	SEAL;SPL	1				
152	5	KHN15440	ﾚｰﾙ;ｳｲﾝﾄﾞﾄﾗｯｸ ｻｯｼ	RAIL;WINDOW TRACK	1				
153	5	KHN15450	ﾚｰﾙ;ｳｲﾝﾄﾞﾄﾗｯｸ ｻｯｼ	RAIL;WINDOW TRACK	1				
154	5	KHN15460	ｽﾄｯﾊﾟ;ｺﾞﾑ RR	STOPPER;RUBBER	1				
155	5	KHN15470	ｽﾄｯﾊﾟ;ｺﾞﾑ FRT	STOPPER;RUBBER	1				
156	4	KHN15480	ｽﾍﾟｰｻ ｻｯｼ	SPACER	3				
157	4	KHN1507	ｽﾍﾟｰｻ ｻｯｼ	SPACER	4				
158	4	KHN15490	ﾓｰﾙ;ｶﾞｰﾆｯｼｭ ｻｯｼ	MOGOL;GUNNISH	1				
159	4	KHN15500	ｼｰﾙ;ｸｯｼｮﾝ	SEAL;CUSHION	1				
160	4	KHN15510	ｶﾞﾗｽ;ｷｮｳｶ ﾄﾞｱｼﾀ	GLASS;TEMPERED	1				
161	4	KHN15530	ﾌｯｸ	HOOK	1				
162	4	KHN2808	ﾅｯﾄ ﾌﾗﾝｼﾞ M10X1.25	NUT;SPL	4				
163	4	KHN16320	ｶﾊﾞｰ	COVER	1				
164	4	KHN15540	ﾛｯｸ;ﾄﾞｱ	LOCK;DOOR	1				
165	4	KHN15550	ｽｸﾘｭｰ ｾﾑｽ M6X1.0X16	SCREW	3				
166	4	KHN15560	ﾚｰﾙ;ﾊﾝﾄﾞ ﾄﾞｱ	RAIL;HAND	1				
167	4	KHN14160	ﾎﾞﾙﾄ M10X1.5X25	BOLT;SPL	2				
168	4	KHN15570	ﾊﾝﾄﾞﾙ;ﾄﾞｱ	HANDLE;DOOR	1				
169	4	KHN2682	ﾈｼﾞｽｸﾘｭｰ M6X1.0X12	THREDED SCREW;SPL	8		210A5 -1532 210L5 -1295		
169	4	KHN2682	ﾈｼﾞｽｸﾘｭｰ M6X1.0X12	THREDED SCREW;SPL	6		210A5 1533- 210L5 1296-		
170	4	KHN15580	ｶﾊﾞｰ ﾄﾞｱ ｲﾝﾅA	COVER	1				
171	4	KHN15590	ﾊﾝﾄﾞﾙ;ﾄﾞｱ ｲﾝﾅ	HANDLE;DOOR	1				
172	4	KHN15600	ﾉﾌﾞ ﾊﾝﾄﾞﾙ	KNOB	1				
173	4	KHN15610	ｽｸﾘｭｰ ｻﾗ M4X0.7X8	SCREW	2				
174	4	KHN15620	ｽﾄﾘｯﾌﾟ;ｳｴｻﾞ ﾄﾞｱA	STRIP;WEATHER	1				
175	4	KHN15630	ｽﾄﾘｯﾌﾟ;ｳｴｻﾞ ﾄﾞｱB	STRIP;WEATHER	1				
176	4	KHN15640	ｶﾊﾞｰ ﾎｰﾙ	COVER	1				
177	4	KHN15650	ｼﾞｮｲﾝﾄ ﾄﾞｱ ﾘﾝｸ	JOINT;SPL	1				
178	4	KHN14980	ｽﾍﾟｰｻ ｳｲﾝﾄﾞB	SPACER	4				
179	4	KHN14990	ｽﾍﾟｰｻ ｳｲﾝﾄﾞC	SPACER	2				
180	4	KHN16560	ﾄﾞｱ;ｵﾍﾟﾚｰﾀ (STD)	DOOR;OPERATOR	1				
180.01	4	KHN18800	ﾈｼﾞｽｸﾘｭｰ M6X1.0X12	THREDED SCREW;SPL	2		210A5 1533- 210L5 1296-		
181	3A	KHN13700	ﾃﾝﾏﾄﾞ ﾄﾘﾑ ｸﾐﾀﾃ(ﾎﾟﾘｶ)	ROOF WINDOW	1				

https://truckmanualshub.com/

210A5 1101－ 210L5 1101－

符号 ITEM	構成 COMPO	部品番号 PART NO.	部品名	PART NAME	個数 Q'TY	インナー	適用号機 SERIAL_NO.	互換 ICA	代替部品 REPLACEABLE PART
182	4A	KHN15180	ﾃﾝﾏﾄﾞ (ﾎﾟﾘｶ)ASSY	ROOF WINDOW	1				
183	5	KHN15190	ﾃﾝﾏﾄﾞ (ﾎﾟﾘｶ)	ROOF WINDOW	1				
184	5	KHN15200	ﾌﾞﾗｹｯﾄ ﾀﾞﾝﾊﾟLH	BRACKET	1				
185	5	KHN15210	ﾌﾞﾗｹｯﾄ ﾀﾞﾝﾊﾟRH	BRACKET	1				
186	5	KHN15220	ﾁｮｳﾊﾞﾝ	HINGE	2				
187	5	KHN15230	ﾊﾟｯｷﾝ;ｺﾞﾑ	PACKING;RUBBER	2				
188	5	KHN15240	ﾅｯﾄ M8X1.25	NUT;SPL	4				
189	5	KHN15250	ﾘﾃｰﾅ ｻｯｼﾛｯｸ	RETAINER	2				
190	5	KHN15260	ﾊﾟｯｷﾝ;ｺﾞﾑ	PACKING;RUBBER	2				
191	5	KHN15270	ﾘﾃｰﾅ	RETAINER	2				
192	5	KHN15280	ﾊﾟｯｷﾝ;ｺﾞﾑ	PACKING;RUBBER	2				
193	5	KHN15290	ｽｸﾘｭｰ M5X0.8X10	SCREW	4				
194	5	KHN15300	ﾛｯｸ ﾙｰﾌﾊｯﾁ	LOCK	1				
195	5	KHN15310	ｽｸﾘｭｰ M6X1.0X16	SCREW	2				
196	4	KHN15320	ﾎﾞﾙﾄ ｾﾑｽ M8X1.25X16	BOLT;SPL	4				
197	4	KHN2827	ｽﾌﾟﾘﾝｸﾞ ｶﾞｽ	SPRING;SPL	2				
198	4	KHN2828	E-ﾄﾒﾜ	RING;E	4				
199	3A	KHN13680	ｳｲﾝﾄﾞ ｱｯﾊﾟ ﾄﾘﾑ ｸﾐﾀﾃ	WINDOW	1				
200	4	KHN15660	ﾌﾚｰﾑ;ｳｲﾝﾄﾞ ﾌﾛﾝﾄｱｯﾊﾟ	FRAME;WINDOW	1				
201	4	KHN15670	ｽﾃｰ FWﾛﾜｰ RH	STAY	1				
202	4	KHN15680	ｽﾃｰ FWﾛﾜｰ LH	STAY	1				
203	4	KHN15690	ﾎﾞﾙﾄ ﾌﾗﾝｼﾞ M6X1.0X12	BOLT;SPL	14				
204	4	KHN15700	ﾛｯｸ;ｳｲﾝﾄﾞ FW	LOCK;WINDOW	1				
205	4	KHN15710	ﾚﾊﾞｰ;ﾛｯｸ ｵｰﾄｷｬｯﾁ	LEVER;LOCK	1				
206	4	KHN15720	ｽｸﾘｭｰ M6X1.0X10	SCREW	2				
207	4	KHN15730	ﾘﾝｸ ASSY FW RH	LINK	1				
208	4	KHN15740	ﾘﾝｸ ASSY FW LH	LINK	1				
209	4	KHN15750	ﾊﾝﾄﾞﾙ FW	HANDLE	1				
210	4	KHN15760	ｷｬｯﾌﾟ FWﾊﾝﾄﾞﾙ	CAP	2				
211	4	KHN15770	ｽｸﾘｭｰ ｾﾑｽ M6X1.0X20	SCREW	2				
212	4	KHN15780	ｶﾞﾗｽ;ｷｮｳｶ FW ｱｯﾊﾟ	GLASS;TEMPERED	1				
213	4	KHN15790	ｼｰﾙ;ｸｯｼｮﾝ FW ｱｯﾊﾟ	SEAL;CUSHION	1				
214	4	KHN15800	ﾛｰﾗ FW ｱｯﾊﾟ	ROLLER	4				
215	4	KHN15810	ｼｰﾙ;ｸｯｼｮﾝ EPDM	SEAL;CUSHION	1				
216	4	KHN15820	ｶﾊﾞｰ;ﾌﾛﾝﾄ ｳｲﾝﾄﾞ	COVER;FRONT	1				
217	4	KHN15830	ｽﾄｯﾊﾟ;ｺﾞﾑ	STOPPER;RUBBER	1				
218	4	KHN15840	ｽﾄﾘｯﾌﾟ;ｳｴｻﾞ	STRIP;WEATHER	1				
219	4	KHN15850	ｼｰﾙ;ｸｯｼｮﾝ	SEAL;CUSHION	1		210A5 -1532 210L5 -1295		
219.01	4	KHN18140	ｼｰﾙ;ｸｯｼｮﾝ	SEAL;CUSHION	2		210A5 1533- 210L5 1296-		
219.02	4	KHN18150	ｼｰﾙ;ｸｯｼｮﾝ	SEAL;CUSHION	1		210A5 1533- 210L5 1296-		
220	2A	KHN16730	ﾄﾘﾑ ｲﾝﾃﾘｱ ASSY (ｸﾞﾚｰ	TRIM;SPL	1				
221	3	KHN12050	ﾄﾘﾑ ｻｲﾄﾞ (ﾌﾛﾝﾄ ｱｯﾊﾟ)	TRIM;SPL	1				
222	3	KHN16120	ｽｸﾘｭｰ ﾀｯﾋﾟﾝｸﾞ M4X0.7	SCREW	4				
223	3	KHN16130	ｽｸﾘｭｰ ﾀｯﾋﾟﾝｸﾞ M5X0.8	SCREW	8				
224	3	KHN12060	ﾄﾘﾑ ｻｲﾄﾞ (ﾌﾛﾝﾄ ﾛﾜｰ)	TRIM;SPL	1				
225	3	KHN14710	ﾎﾞﾙﾄ ｾﾑｽ M6X1.0X14	BOLT;SPL	15		210A5 -1532 210L5 -1295		
225	3	KHN14710	ﾎﾞﾙﾄ ｾﾑｽ M6X1.0X14	BOLT;SPL	14		210A5 1533- 210L5 1296-		
226	3	KHN16140	ﾎﾞﾙﾄ ﾎﾞﾀﾝ (ﾛｯｶｸｱﾅ) M	BOLT;SPL	3				
227	3	KHN12130	ﾄﾘﾑ ｻｲﾄﾞ (ｱｯﾊﾟ) ｸﾞﾗﾅ	TRIM;SPL	1				
228	3	KHN2682	ﾈｼﾞｽｸﾘｭｰ M6X1.0X12	THREDED SCREW;SPL	2				
229	3A	KHN16410	ﾄﾘﾑ ｻｲﾄﾞ(ﾘﾔ)A ASSY ｸ	TRIM;SPL	1				
230	4	KHN12090	ﾄﾘﾑ ｻｲﾄﾞ (ﾘﾔ A) ｸﾞﾚｰ	TRIM;SPL	1				
231	4	KHN16430	ﾅｯﾄ ｽﾋﾟｰﾄﾞ M6	NUT;SPL	1				
232	3	KHN12110	ﾄﾘﾑ ｻｲﾄﾞ (ﾘﾔ B) ｸﾞﾚｰ	TRIM;SPL	1				
233	3	KHN12880	ﾎﾞｯｸｽ ﾌﾛﾝﾄ	BOX;SPL	1				

https://truckmanualshub.com/

210A5 1101－　　210L5 1101－

符号 ITEM	構成 COMPO	部品番号 PART NO.	部品名	PART NAME	個数 Q'TY	インナー	適用号機 SERIAL_NO.	互換 ICA	代替部品 REPLACEABLE PART
234	3	KHN16150	ｽｸﾘｭｰ ﾀｯﾋﾟﾝｸﾞ M4X0.7	SCREW	6				
235	3	KHN16160	ﾌﾞﾗｹｯﾄ ﾄﾘﾑｻｲﾄﾞ ﾘﾔ	BRACKET	1				
236	3	KHN2756	ﾎﾞﾙﾄ ﾌﾗﾝｼﾞ M6X1.0X16	BOLT;SPL	1		210A5 -1532 210L5 -1295		
236	3	KHN18880	ﾎﾞﾙﾄ ﾌﾗﾝｼﾞ M6X1.0X16	BOLT;SPL	1		210A5 1533- 210L5 1296-		
236.01	3	KHN18110	ﾎﾞﾙﾄ ｾﾑｽ M6X20	BOLT;SPL	1		210A5 1533- 210L5 1296-		
237	2	KHR10051	ﾓﾆﾀｰ ﾃﾞｨｽﾌﾟﾚｲ ASSY	MONITOR	1		210A5 -1465 210L5 -1276	=	KHR10052
237	2	KHR10052	ﾓﾆﾀｰ ﾃﾞｨｽﾌﾟﾚｲ ASSY	MONITOR	1		210A5 1466-1882 210L5 1277-1432		
237	2A	KHR10053	ﾓﾆﾀｰ ﾃﾞｨｽﾌﾟﾚｲ ASSY	MONITOR	1		210A5 1883- 210L5 1433-		
238	3	KHR15220	ｹｰｽ ﾓﾆﾀ(ｳｴ) BK ASSY	CASE	1				
239	3	KHR15230	ｹｰｽ ﾓﾆﾀ(ｼﾀ)ASSY	CASE	1				
240	3	KHR15240	ﾕﾆｯﾄ (MAIN LCD)	UNIT	1		210A5 -1465 210L5 -1276		
240	3	KHR15241	ﾕﾆｯﾄ (MAIN LCD)	UNIT	1		210A5 1466-1882 210L5 1277-1432		
240	3	KHR15242	ﾕﾆｯﾄ (MAIN LCD)	UNIT (MAIN LCD)	1		210A5 1883- 210L5 1433-		
241	3	KHR15250	ｷﾊﾞﾝ;ﾌﾟﾘﾝﾄ (SW)	BOARD;PRINTED CKT	1				
242	3	KHR15260	ｷﾊﾞﾝ;ﾌﾟﾘﾝﾄ (ｱﾜｰﾒｰﾀ)	BOARD;PRINTED CKT	1				
243	3	KHR3213	+ﾅﾍﾞﾀｯﾌﾟS M3X10	SCREW;TAPPING	9				
244	3	KHR1424	+ﾄﾗｽS ﾀｯﾌﾟ M4X16	SCREW;TRUSS HD	8				
245	2	KHR15170	ﾌﾞﾗｹｯﾄ ﾓﾆﾀ	BRACKET	1				
246	2A	KHR10060	ﾄｹｲ (ﾃﾞｼﾞﾀﾙ)	CLOCK	1				
247	3	KHR13810	ｹｰｽ CLOCK(ｳｴ)	CASE	1				
248	3	KHR13820	ｹｰｽ CLOCK(ｼﾀ)	CASE	1				
249	3	KHR13830	ｷﾊﾞﾝ;ﾌﾟﾘﾝﾄ (CLOCK)	BOARD;PRINTED CKT	1				
250	3	KHR13840	+ﾄﾗｽﾀｯﾌﾟS M3X16	SCREW;TAPPING	4				
251	2A	--------	ｴｱｺﾝ DUCT(A)-G	AIR CONDITIONER	1				
252	3	KHR13200	ﾀﾞｸﾄ FACE-A	DUCT	1				
253	3	KHR13230	ﾀﾞｸﾄ DEF-A	DUCT	1				
254	3	KHR10540	ｾﾝｻ ｴｱｺﾝ(ﾆｯｼｬ)	SENSOR;SPL	1				
255	2	KHR11210	ﾗｲﾀ;ｵｰﾄ	LIGHTER;CIGAR	1				
256	1	105R012Y030R	ｾﾑｽB M12X 30	BOLT;SEMS	2				
257	1	105R012Y060R	ｾﾑｽB M12X 60	BOLT;SEMS	4				
258	1	102R012Y075R	ｺｳﾘｷB M12X 75	BOLT;HIGH STRENGTH	2				
259	1	KHN0296	ｺｳﾘｷW 12 (ﾒｯｷ)	WASHER;HIGH STRENGTH	6				
260	1	KHN11930	ｾﾞﾝﾈｼﾞB M12X80	BOLT;FULL THREADED	2				
261	1	162R012VR	ｺｳﾘｷN M12	NUT;HIGH STRENGTH	2				
262	1	KHN12080	ﾄﾘﾑ ｻｲﾄﾞ (ﾛﾜｰ) ﾌﾞﾗｯｸ	TRIM;SPL	1		210A5 NOT USED 210L5 NOT USED		
263	1	KHN2132	ｺｳﾘｷB M6X16 (ｻﾞｶﾞﾈｸﾐ	BOLT;HIGH STRENGTH	3		210A5 NOT USED 210L5 NOT USED		
264	1	KHN13630	ｶﾞｰﾄﾞ ﾃﾞｯｷ	GUARD;SPL	1				
265	1	KHN13640	+ﾄﾗｽS M6X12	SCREW;TRUSS HD	3				
266	1	KHN2907	ﾁｮｳﾊﾞﾝ ﾄﾞｱ	HINGE	2				
267	1	KHN2850	ﾎﾞﾙﾄ ﾌﾗﾝｼﾞ M10X1.25X	BOLT;SPL	2				

https://truckmanualshub.com/

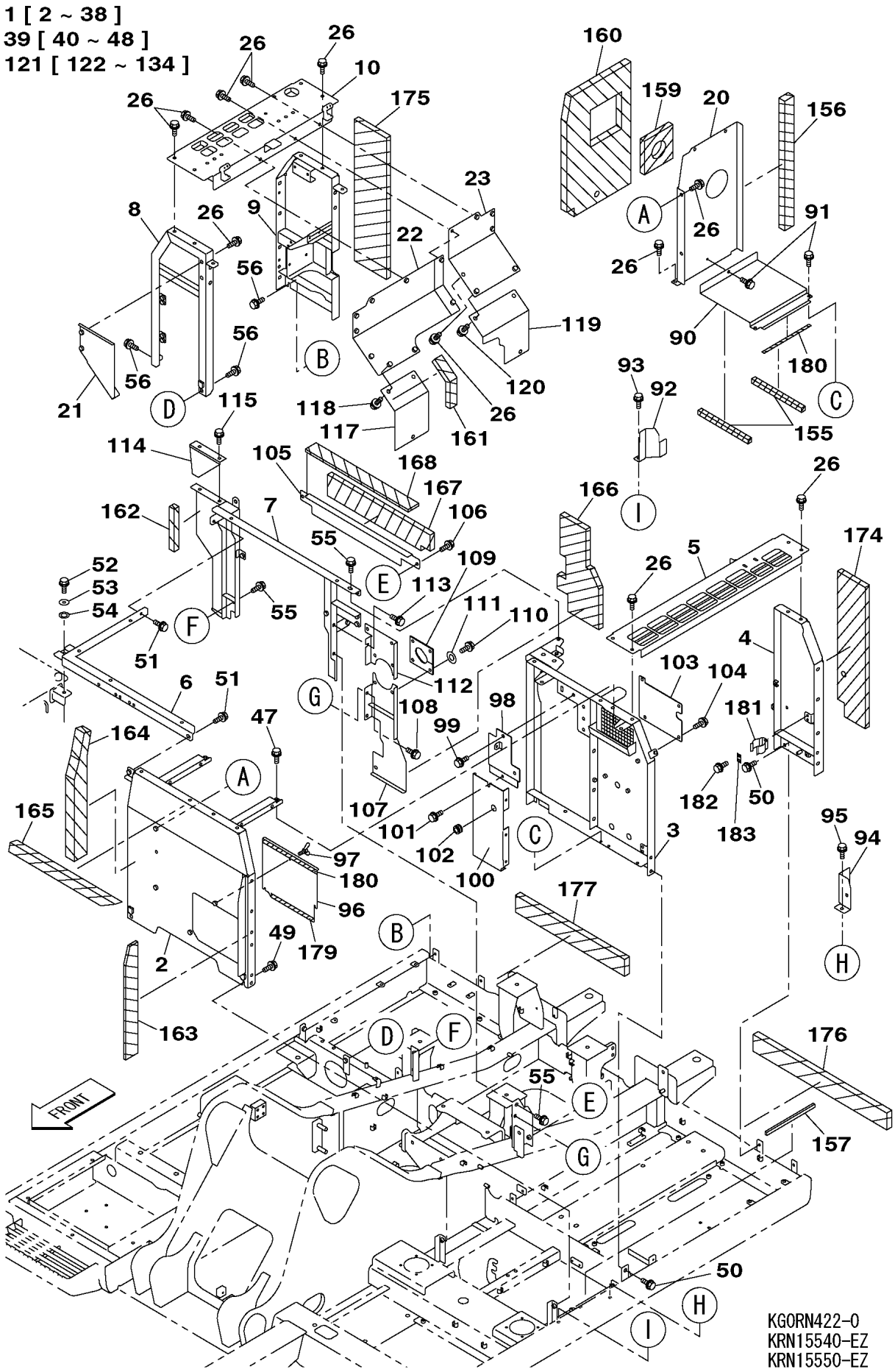

https://truckmanualshub.com/

210A5 1101－ 210L5 1101－

符号 ITEM	構成 COMPO	部品番号 PART NO.	部品名	PART NAME	個数 Q'TY	ｲﾝﾅｰ	適用号機 SERIAL_NO.	互換 ICA	代替部品 REPLACEABLE PART
1	1	--------	ﾊｳｽ ｸﾞﾙｰﾌﾟ SH200-5	HOUSE;SPL	1		210A5 -1161 210L5 -1154	<	KRN15521DM
1	1	--------	ﾊｳｽ ｸﾞﾙｰﾌﾟ SH200-5	HOUSE;SPL	1		210A5 1162-1870 210L5 1155-1422		
1	1	--------	ﾊｳｽ ｸﾞﾙｰﾌﾟ ﾋｮｳ	HOUSE	1		210A5 1871- 210L5 1423-	<	KRN19030DM
1	1A	--------	ﾊｳｽ ｸﾞﾙｰﾌﾟ ﾋｮｳ	HOUSE	1				
2	2	KRN14700	ﾌﾚｰﾑ;ﾊｳｽ (ﾋﾀﾞﾘﾏｴ)	FRAME;HOUSE	1				
3	2	KRN14780	ﾌﾚｰﾑ;ﾊｳｽ (ﾋﾀﾞﾘ)	FRAME;HOUSE	1				
3	2	KRN14781	ﾌﾚｰﾑ;ﾊｳｽ (ﾋﾀﾞﾘﾅｶ)	FRAME;HOUSE	1				
4	2	KRN12440	ﾌﾚｰﾑ;ﾊｳｽ (ﾋﾀﾞﾘｳｼﾛ)	FRAME;HOUSE	1				
5	2	KRN14790G1	ﾌﾚｰﾑ ﾀﾞｸﾄ(ﾋﾀﾞﾘ)	FRAME;SPL	1				
6	2	KRN12460	ﾌﾚｰﾑ;ﾊｳｽ (ｾﾝﾀﾏｴ)	FRAME;HOUSE	1				
7	2	KRN14590	ﾌﾚｰﾑ;ﾊｳｽ (ｾﾝﾀｳｼﾛ)	FRAME;HOUSE	1				
8	2	KRN12480	ﾌﾚｰﾑ;ﾊｳｽ (ﾐｷﾞﾏｴ)	FRAME;HOUSE	1				
9	2	KRN12490	ﾌﾚｰﾑ;ﾊｳｽ (ﾐｷﾞｳｼﾛ)	FRAME;HOUSE	1		210A5 -1161 210L5 -1154		
9	2	KRN12491	ﾌﾚｰﾑ;ﾊｳｽ (ﾐｷﾞｳｼﾛ)	FRAME;HOUSE	1		210A5 1162- 210L5 1155-		
9	2	KRN19020	ﾌﾚｰﾑ;ﾊｳｽ (ﾐｷﾞｳｼﾛ)	FRAME;HOUSE	1				
10	2	KRN12500G1	ﾌﾚｰﾑ ﾀﾞｸﾄ(ﾐｷﾞ)	FRAME;SPL	1				
11	2A	KRN12380Y1	ﾄﾞｱ;ｻｲﾄﾞ (ﾋﾀﾞﾘﾏｴ)	DOOR;SIDE	1				
12	4	KHN12560	ﾁｮｳﾊﾞﾝ	HINGE	2				
13	2	KRN12390Y1	ﾄﾞｱ;ｻｲﾄﾞ (ﾋﾀﾞﾘｳｼﾛ)	DOOR;SIDE	1		210A5 -1870 210L5 -1422		
13	2A	KRN18150Y1	ﾄﾞｱ;ｻｲﾄﾞ (ﾋﾀﾞﾘｳｼﾛ)	DOOR;SIDE	1		210A5 1871- 210L5 1423-		
14	4	KHN12560	ﾁｮｳﾊﾞﾝ	HINGE	2				
15	4	KNN0351	ﾛｯｸ;ﾄﾞｱ (ﾐｷﾞ) ｷｰﾂｷ	LOCK;DOOR	1		210A5 -1870 210L5 -1422		
15	4	KHN21200	ﾛｯｸ;ﾄﾞｱ (ﾐｷﾞ)	LOCK;DOOR	1		210A5 1871- 210L5 1423-		
16	2	KRN12400Y1	ﾄﾞｱ;ｻｲﾄﾞ (ﾐｷﾞ)	DOOR;SIDE	1		210A5 -1870 210L5 -1422		
16	2A	KRN18160Y1	ﾄﾞｱ;ｻｲﾄﾞ (ﾐｷﾞ)	DOOR;SIDE	1		210A5 1871- 210L5 1423-		
17	4	KHN12560	ﾁｮｳﾊﾞﾝ	HINGE	2				
18	4	KNN0351	ﾛｯｸ;ﾄﾞｱ (ﾐｷﾞ) ｷｰﾂｷ	LOCK;DOOR	1		210A5 -1870 210L5 -1422		
18	4	KHN21200	ﾛｯｸ;ﾄﾞｱ (ﾐｷﾞ)	LOCK;DOOR	1		210A5 1871- 210L5 1423-		
19	2	KRN12410Y1	ｶﾊﾞｰ;ｻｲﾄﾞ (ﾀﾝｸ)	COVER;SIDE	1				
20	2	KRN14760	ｶﾊﾞｰ	COVER	1				
21	2	KRN12610	ｶﾊﾞｰ	COVER	1				
22	2	KRN12620	ｶﾊﾞｰ	COVER	1				
23	2	KRN12630	ｶﾊﾞｰ	COVER	1				
24	2	KHN11940	ﾌﾞﾗｹｯﾄ (ｷｬｯﾁ)	BRACKET	2				
25	2	KHN12660	ﾌﾞﾗｹｯﾄ (ｽﾄｯﾊﾟ)	BRACKET	3				
26	2	KHN1079	ﾎﾞﾙﾄ ﾄｸｼｭ ｻﾞｶﾞﾈ ｸﾐｺﾐ	BOLT;SPL	33				
27	2	KHN1395	ｽﾄｯﾊﾟ;ｺﾞﾑ	STOPPER;RUBBER	2				
28	2	162R010VR	ｺｳﾘｷN M10	NUT;HIGH STRENGTH	8				
29	2	KRN2098	ｽﾄｯﾊﾟ	STOPPER	3				
30	2	182-010SR	ﾐｶﾞｷW 10	WASHER;PLAIN	6				
31	2	183-110VR	SW 10	WASHER;SPRING	6				
32	2	105R010Y030R	ｾﾑｽB M10X 30	BOLT;SEMS	10				
33	2	KRN0422	ｽﾄｯﾊﾟ;ｺﾞﾑ	STOPPER;RUBBER	2				
34	2	KBH0446	ﾘﾖｳN M10X1.25	NUT;HEX	2				
35	2	KHN0863	ｷｬｯﾁ;ﾎﾞﾝﾈｯﾄ ﾎﾝﾀｲ	CATCH;BONNET	1				
36	2	KSN0286	ｷｬｯﾁ;ﾎﾞﾝﾈｯﾄ ﾎﾝﾀｲ	CATCH;BONNET	1				
37	2	105R008Y020R	ｾﾑｽB M 8X 20	BOLT;SEMS	4				

https://truckmanualshub.com/

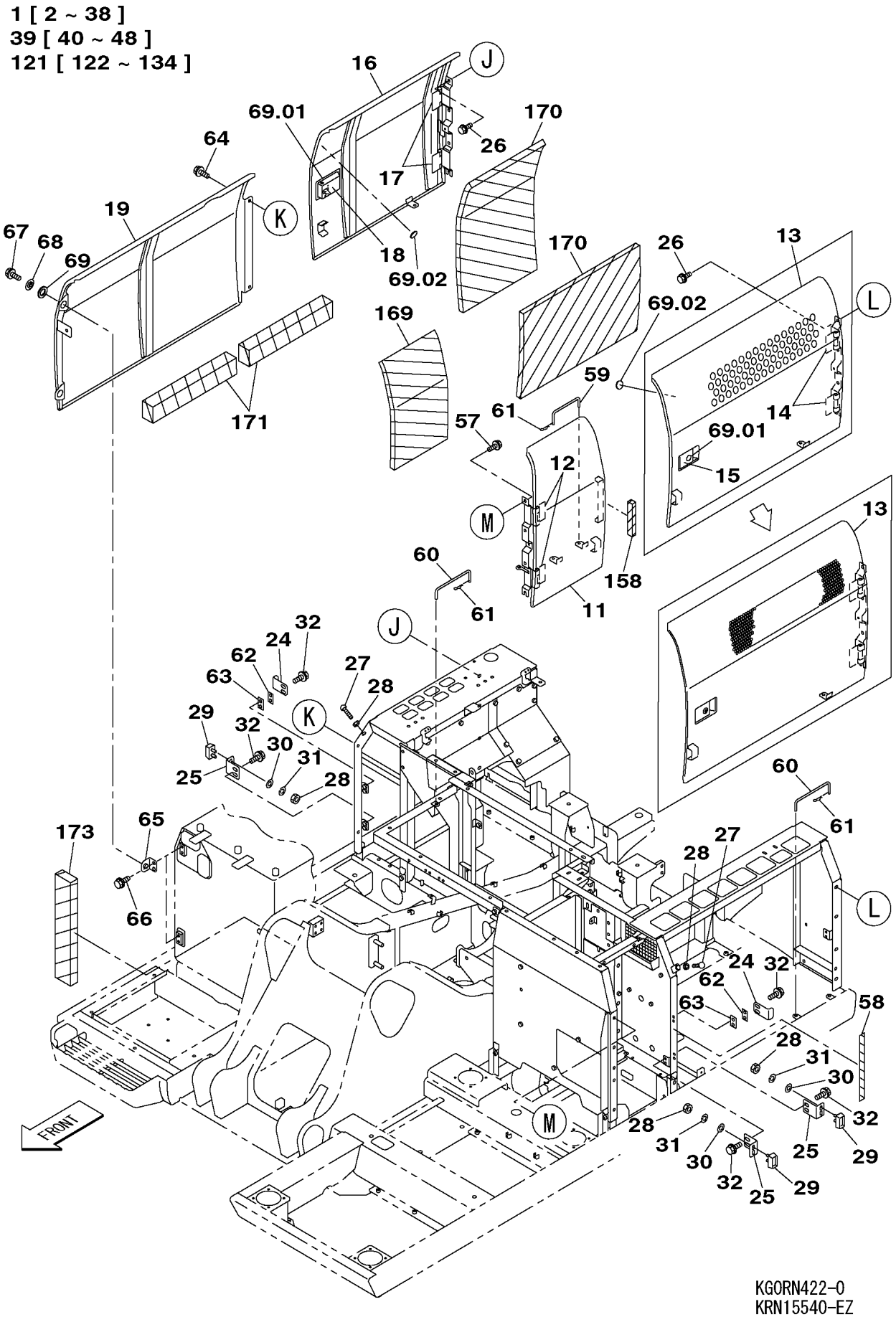

KGORN422-0
KRN15540-EZ
KRN15550-EZ

https://truckmanualshub.com/

210A5 1101－ 210L5 1101－

符号 ITEM	構成 COMPO	部品番号 PART NO.	部品名	PART NAME	個数 Q'TY	ｲﾝﾅｰ	適用号機 SERIAL_NO.	互換 ICA	代替部品 REPLACEABLE PART
38	2	KHN16780	ﾌﾟﾚｰﾄ	PLATE	2				
39	1A	--------	ｶﾊﾞｰ ｸﾞﾙｰﾌﾟ SH210-5	COVER;SPL	1				
40	2	KRN16010G1	ｶﾊﾞｰ;ﾄｯﾌﾟ (ﾋﾀﾞﾘ)	COVER;TOP	1				
41	2	KRN12670G1	ｶﾊﾞｰ;ﾄｯﾌﾟ (ｾﾝﾀ)	COVER;TOP	1				
42	2	KRN12680G1	ｶﾊﾞｰ;ﾄｯﾌﾟ (ｻﾝﾌﾟﾀﾝｸ)	COVER;TOP	1				
43	2	KRN12690G1	ｶﾊﾞｰ;ﾄｯﾌﾟ (ﾌｭｰｴﾙﾀﾝｸ)	COVER;TOP	1				
44	2	KRN14600	ｶﾊﾞｰ;ｾﾝﾀ	COVER;CENTER	1		210A5 -1298 210L5 -1213	<	KRN14601
44	2	KRN14601	ｶﾊﾞｰ;ｾﾝﾀ	COVER;CENTER	1		210A5 1299- 210L5 1214-		
45	2	KAN3478	ﾄﾘﾑ;ｽﾎﾟﾝｼﾞ (L=630)	TRIM;SPONGE	1				
46	2	KRN14610	ｸﾞﾗｽｳｰﾙ	GLASS WOOL	1				
47	2	105R008Y020R	ｾﾑｽB M 8X 20	BOLT;SEMS	6				
48	2	KTN1090	ﾌﾟﾚｰﾄ	PLATE	6				
49	1	KHN1079	ﾎﾞﾙﾄ ﾄｸｼｭ ｻﾞｶﾞﾈ ｸﾐｺﾐ	BOLT;SPL	4				
50	1	KHN1079	ﾎﾞﾙﾄ ﾄｸｼｭ ｻﾞｶﾞﾈ ｸﾐｺﾐ	BOLT;SPL	4				
51	1	KHN1079	ﾎﾞﾙﾄ ﾄｸｼｭ ｻﾞｶﾞﾈ ｸﾐｺﾐ	BOLT;SPL	2				
52	1	105R012Y030R	ｾﾑｽB M12X 30	BOLT;SEMS	1				
53	1	KSN0921	ﾜｯｼｬ ﾄｸｼｭ	WASHER;SPL	1				
54	1	KHN2061	ﾜｯｼｬ;ﾗﾊﾞｰ	WASHER;RUB.	1				
55	1	KHN1079	ﾎﾞﾙﾄ ﾄｸｼｭ ｻﾞｶﾞﾈ ｸﾐｺﾐ	BOLT;SPL	3				
56	1	KHN1079	ﾎﾞﾙﾄ ﾄｸｼｭ ｻﾞｶﾞﾈ ｸﾐｺﾐ	BOLT;SPL	4				
57	1	KHN1079	ﾎﾞﾙﾄ ﾄｸｼｭ ｻﾞｶﾞﾈ ｸﾐｺﾐ	BOLT;SPL	4				
58	1	KHN1708	ｸｯｼｮﾝ;ﾗﾊﾞｰ	CUSHION;RUBBER	1				
59	1	KRN12580	ｽﾃｰ (ﾄﾞｱ;ｻｲﾄﾞ)	STAY	1				
60	1	KRN10420	ｽﾃｰ	STAY	2				
61	1	KRJ1588	ﾋﾟﾝ;ﾏﾂﾊﾞ 10 ﾏﾙﾖｳ	PIN;HAIR CLIP	3				
62	1	KHN1425	ｼﾑ;ﾌﾟﾚｰﾄ (T=1.2)	SHIM;PLATE	2 AR				
63	1	KHN1080	ｼﾑ;ﾌﾟﾚｰﾄ	SHIM;PLATE	2 AR				
64	1	KHN1079	ﾎﾞﾙﾄ ﾄｸｼｭ ｻﾞｶﾞﾈ ｸﾐｺﾐ	BOLT;SPL	2				
65	1	KHN12670	ﾌﾞﾗｹｯﾄ	BRACKET	2				
66	1	KHN1079	ﾎﾞﾙﾄ ﾄｸｼｭ ｻﾞｶﾞﾈ ｸﾐｺﾐ	BOLT;SPL	4				
67	1	105R012Y030R	ｾﾑｽB M12X 30	BOLT;SEMS	2				
68	1	KSN0921	ﾜｯｼｬ ﾄｸｼｭ	WASHER;SPL	2				
69	1	KHN2061	ﾜｯｼｬ;ﾗﾊﾞｰ	WASHER;RUB.	2				
69.01	1	KHN20030	ｼﾘﾝﾀﾞｷｰ ASSY	CYL;SPL	2		210A5 1566- 210L5 1302-		
69.02	1	KRN17430	ﾌﾟﾚｰﾄ;ﾗﾊﾞｰ	PLATE;RUBBER	2		210A5 1602- 210L5 1314-		
70	1A	KRN12330G1	ﾌｰﾄﾞ;ｴﾝｼﾞﾝ	HOOD;ENGINE	1				
71	3	KHN2143	ﾁｮｳﾊﾞﾝ	HINGE	2				
72	1	KHN1079	ﾎﾞﾙﾄ ﾄｸｼｭ ｻﾞｶﾞﾈ ｸﾐｺﾐ	BOLT;SPL	6				
73	1	KRN10870	ﾄﾘﾑ;ｽﾎﾟﾝｼﾞ	TRIM;SPONGE	1				
74	1	KRN12730	ｼｰﾙ;ｸｯｼｮﾝ	SEAL;CUSHION	1				
75	1	KRN14240	ｲﾝｼｭﾚｰｼｮﾝ;ｱｺｰｽﾃｲｯｸ	INSULATION;ACOUSTIC	2				
76	1	KSN0285	ｷｬｯﾁ	CATCH;SPL	2				
77	1	105R008Y020R	ｾﾑｽB M 8X 20	BOLT;SEMS	4				
78	1	KHN2537	ﾄｯﾃ	HANDLE;GRAB	1				
79	1	KHN2538	ﾜｯｼｬ ﾄｸｼｭ	WASHER;SPL	2				
80	1	KHR1254	ﾎﾞﾙﾄ M 6X 20(ｻﾞｶﾞﾈﾂｷ	BOLT;SPL	2				
81	1	KRN12570	ｽﾃｰ (ｴﾝｼﾞﾝﾌｰﾄﾞ)	STAY	1				
82	1	KEH0117	ｺｳﾘｷW M16	WASHER;HIGH STRENGTH	1				
83	1	KHN2373	ﾋﾟﾝ;ﾏﾂﾊﾞ 16ﾏﾙﾖｳ	PIN;HAIR CLIP	1				
84	1	KRN12530	ﾄｰｼｮﾝﾊﾞｰ	SPRING;TORSIONAL BAR	1				
85	1	KRN12540	ﾄｰｼｮﾝﾊﾞｰ	SPRING;TORSIONAL BAR	1				
86	1	KRN12550	ﾌﾞﾗｹｯﾄ (ﾄｰｼｮﾝﾊﾞｰ)	BRACKET	2				
87	1	105R008Y020R	ｾﾑｽB M 8X 20	BOLT;SEMS	4				
88	1	KRN12560	ﾌﾞﾗｹｯﾄ (ﾄｰｼｮﾝﾊﾞｰ)	BRACKET	1				
89	1	105R008Y020R	ｾﾑｽB M 8X 20	BOLT;SEMS	2				
90	1	KRN12600	ｶﾊﾞｰ	COVER	1				

https://truckmanualshub.com/

1 [2 ~ 38]
39 [40 ~ 48]
121 [122 ~ 134]

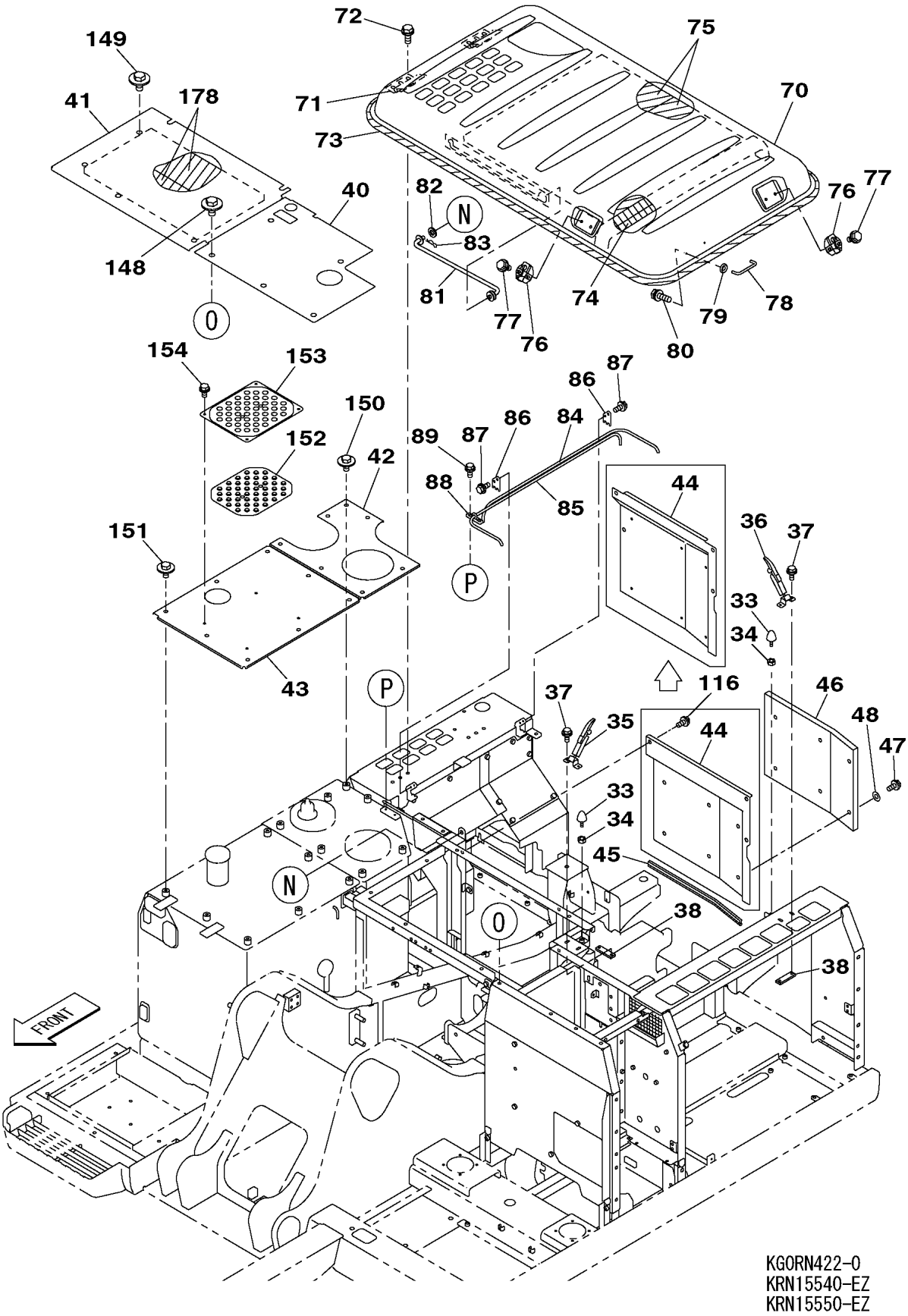

KGORN422-0
KRN15540-EZ
KRN15550-EZ

https://truckmanualshub.com/

210A5 1101－ 210L5 1101－

符号 ITEM	構成 COMPO	部品番号 PART NO.	部品名	PART NAME	個数 Q'TY	ｲﾝﾅｰ	適用号機 SERIAL_NO.	互換 ICA	代替部品 REPLACEABLE PART
91	1	105R008Y020R	ｾﾑｽB M 8X 20	BOLT;SEMS	3				
92	1	KRN11090	ｶﾊﾞｰ	COVER	1				
93	1	KHN1079	ﾎﾞﾙﾄ ﾄｸｼｭ ｻﾞｶﾞﾈ ｸﾐｺﾐ	BOLT;SPL	2				
94	1	KRN11100	ｶﾊﾞｰ	COVER	1				
95	1	KHN1079	ﾎﾞﾙﾄ ﾄｸｼｭ ｻﾞｶﾞﾈ ｸﾐｺﾐ	BOLT;SPL	2				
96	1	KHN12760	ｶﾊﾞｰ	COVER	1				
97	1	KHN17030	ﾁｮｳB M8X12	BOLT;WING HD	3				
98	1	KRN14620	ｶﾊﾞｰ	COVER	1				
99	1	KHN1079	ﾎﾞﾙﾄ ﾄｸｼｭ ｻﾞｶﾞﾈ ｸﾐｺﾐ	BOLT;SPL	2				
100	1	KRN14750	ｶﾊﾞｰ	COVER	1				
101	1	KHN1079	ﾎﾞﾙﾄ ﾄｸｼｭ ｻﾞｶﾞﾈ ｸﾐｺﾐ	BOLT;SPL	5				
102	1	KMR0306	ﾗﾊﾞｰ;ｸﾞﾛﾒｯﾄ	GROMMET	1				
103	1	KRN16000	ｶﾊﾞｰ	COVER	1				
104	1	KHN1079	ﾎﾞﾙﾄ ﾄｸｼｭ ｻﾞｶﾞﾈ ｸﾐｺﾐ	BOLT;SPL	4				
105	1	KRN10530	ｶﾊﾞｰ;ｾﾝﾀ	COVER;CENTER	1				
106	1	KHN1079	ﾎﾞﾙﾄ ﾄｸｼｭ ｻﾞｶﾞﾈ ｸﾐｺﾐ	BOLT;SPL	2				
107	1	KRN14660	ｶﾊﾞｰ;ｾﾝﾀ	COVER;CENTER	1				
108	1	KHN1079	ﾎﾞﾙﾄ ﾄｸｼｭ ｻﾞｶﾞﾈ ｸﾐｺﾐ	BOLT;SPL	3				
109	1	KRN14670	ﾌﾟﾚｰﾄ;ﾗﾊﾞｰ	PLATE;RUBBER	1				
110	1	105R008Y025R	ｾﾑｽB M 8X 25	BOLT;SEMS	4		210A5 -1361 210L5 -1235	<	105R008Y020R
110	1	105R008Y020R	ｾﾑｽB M 8X 20	BOLT;SEMS	4		210A5 1362- 210L5 1236-		
111	1	KTN1090	ﾌﾟﾚｰﾄ	PLATE	4				
112	1	KRN14650	ｶﾊﾞｰ;ｾﾝﾀ	COVER;CENTER	1				
113	1	KHN1079	ﾎﾞﾙﾄ ﾄｸｼｭ ｻﾞｶﾞﾈ ｸﾐｺﾐ	BOLT;SPL	3				
114	1	KRN14580	ｶﾊﾞｰ;ﾄｯﾌﾟ	COVER;TOP	1				
115	1	KHN1079	ﾎﾞﾙﾄ ﾄｸｼｭ ｻﾞｶﾞﾈ ｸﾐｺﾐ	BOLT;SPL	2				
116	1	KHN1079	ﾎﾞﾙﾄ ﾄｸｼｭ ｻﾞｶﾞﾈ ｸﾐｺﾐ	BOLT;SPL	4				
117	1	KRN12640	ｶﾊﾞｰ	COVER	1				
118	1	KHN1079	ﾎﾞﾙﾄ ﾄｸｼｭ ｻﾞｶﾞﾈ ｸﾐｺﾐ	BOLT;SPL	3				
119	1	KRN12650	ｶﾊﾞｰ	COVER	1				
120	1	KHN1079	ﾎﾞﾙﾄ ﾄｸｼｭ ｻﾞｶﾞﾈ ｸﾐｺﾐ	BOLT;SPL	3				
121	1A	KRN12340DM	ｶﾊﾞｰ;ﾌﾛﾝﾄ ASSY	COVER;FRONT	1				
122	2	182-008SR	ﾐｶﾞｷW 8	WASHER;PLAIN	2				
123	2	KAJ1495	ﾋﾟﾝ;ﾏｯﾊﾞ 8 ﾏﾙﾖｳ	PIN;HAIR CLIP	2				
124	2	KTN1391	ｸｯｼｮﾝ;ﾗﾊﾞｰ (L=2150)	CUSHION;RUBBER	1				
125	2	102R006Y016R	ｺｳﾘｷB M 6X 16	BOLT;HIGH STRENGTH	4		210A5 NOT USED 210L5 NOT USED		
125	2	KAN2771	ﾎﾞﾙﾄ ﾄｸｼｭ	BOLT;SPL	4				
126	2	182-006SR	ﾐｶﾞｷW 6	WASHER;PLAIN	4		210A5 NOT USED 210L5 NOT USED		
127	2	KHN12750	ﾀﾞﾝﾊﾟ ｶﾞｽ	DAMPER;SPL	1				
128	2	KHN12730	ﾛｯｸ;ﾊｳｽ	LOCK;HOUSE	1				
129	2	105R010Y020R	ｾﾑｽB M10X 20	BOLT;SEMS	2				
130	2	KHN12740	ﾌﾞﾗｹｯﾄ (ｷｬｯﾁ)	BRACKET	1				
131	2	105R008Y020R	ｾﾑｽB M 8X 20	BOLT;SEMS	2				
132	2A	KRN12360G1	ｶﾊﾞｰ;ﾌﾛﾝﾄ	COVER;FRONT	1				
133	4	KHN3390	ﾁｮｳﾊﾞﾝ	HINGE	2				
134	2	KRN12350G1	ｶﾊﾞｰ;ﾌﾛﾝﾄ	COVER;FRONT	1				
135	1	KHN1079	ﾎﾞﾙﾄ ﾄｸｼｭ ｻﾞｶﾞﾈ ｸﾐｺﾐ	BOLT;SPL	5				
136	1	KRN12370G1	ｶﾊﾞｰ (ﾀﾝｸ)	COVER	1				
137	1	KHN1079	ﾎﾞﾙﾄ ﾄｸｼｭ ｻﾞｶﾞﾈ ｸﾐｺﾐ	BOLT;SPL	2				
138	1	KHN12710Y1	ｶﾊﾞｰ;ｻｲﾄﾞ	COVER;SIDE	1				
139	1	KHN12720	ﾌﾞﾗｹｯﾄ (ｶﾊﾞｰ;ｻｲﾄﾞ)	BRACKET	1				
140	1	KHN1079	ﾎﾞﾙﾄ ﾄｸｼｭ ｻﾞｶﾞﾈ ｸﾐｺﾐ	BOLT;SPL	5				
141	1	105R012Y030R	ｾﾑｽB M12X 30	BOLT;SEMS	1				
142	1	KSN0921	ﾜｯｼｬ ﾄｸｼｭ	WASHER;SPL	1				
143	1	KHN2061	ﾜｯｼｬ;ﾗﾊﾞｰ	WASHER;RUB.	1				
144	1	KHN12680B1	ｽﾃｰ	STAY	1		210A5 -1696	<	KHN12681B1

https://truckmanualshub.com/

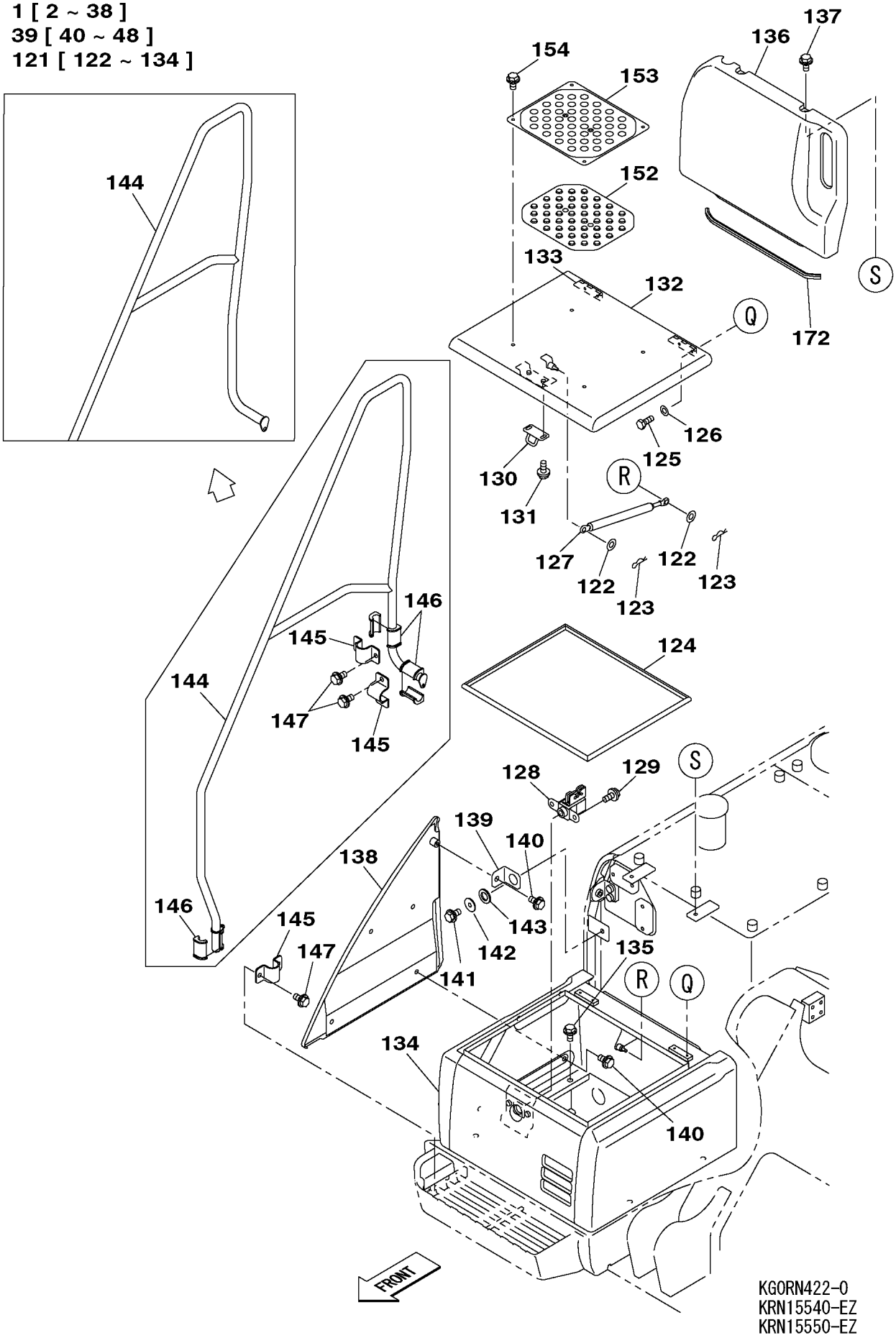

https://truckmanualshub.com/

210A5 1101－ 210L5 1101－

符号 ITEM	構成 COMPO	部品番号 PART NO.	部品名	PART NAME	個数 Q'TY	ｲﾝﾅｰ	適用号機 SERIAL_NO.	互換 ICA	代替部品 REPLACEABLE PART
144	1	KHN12680B1	ｽﾃｰ	STAY	1		210L5 -1360	<	KHN12681B1
144	1	KHN12681B1	ｽﾃｰ	STAY	1		210A5 1697- 210L5 1361-		
145	1	KHN12690	ｸﾗﾝﾌﾟ (ｽﾃｰ)	CLAMP	3				
146	1	KHN12700	ｸﾗﾝﾌﾟ (ｽﾃｰ)	CLAMP	6				
147	1	KHN1079	ﾎﾞﾙﾄ ﾄｸｼｭ ｻﾞｶﾞﾈ ｸﾐｺﾐ	BOLT;SPL	6				
148	1	KHN12020	ﾎﾞﾙﾄ ﾄｸｼｭ ｻﾞｶﾞﾈｸﾐｺﾐ	BOLT;SPL	5				
149	1	KHN12020	ﾎﾞﾙﾄ ﾄｸｼｭ ｻﾞｶﾞﾈｸﾐｺﾐ	BOLT;SPL	6				
150	1	KHN12020	ﾎﾞﾙﾄ ﾄｸｼｭ ｻﾞｶﾞﾈｸﾐｺﾐ	BOLT;SPL	7				
151	1	KHN12020	ﾎﾞﾙﾄ ﾄｸｼｭ ｻﾞｶﾞﾈｸﾐｺﾐ	BOLT;SPL	8				
152	1	KHN10940	ﾌﾟﾚｰﾄ;ﾗﾊﾞｰ	PLATE;RUBBER	2				
153	1	KHN13510B1	ｶﾊﾞｰ	COVER	2				
154	1	KHN13540	ﾎﾞﾙﾄ ﾄｸｼｭ ｻﾞｶﾞﾈｸﾐｺﾐ	BOLT;SPL	8				
155	1	KRN10700	ｼｰﾙ;ｸｯｼｮﾝ	SEAL;CUSHION	2				
156	1	KRN10710	ｼｰﾙ;ｸｯｼｮﾝ	SEAL;CUSHION	1				
157	1	KRN11110	ｼｰﾙ;ｸｯｼｮﾝ	SEAL;CUSHION	1				
158	1	KRN12740	ｼｰﾙ;ｸｯｼｮﾝ	SEAL;CUSHION	1				
159	1	KRN12750	ｼｰﾙ;ｸｯｼｮﾝ	SEAL;CUSHION	1				
160	1	KRN14770	ｲﾝｼｭﾚｰｼｮﾝ;ｱｺｰｽﾃｲｯｸ	INSULATION;ACOUSTIC	1				
161	1	KRN12760	ｼｰﾙ;ｸｯｼｮﾝ	SEAL;CUSHION	1				
162	1	KRN14680	ｼｰﾙ;ｸｯｼｮﾝ	SEAL;CUSHION	1				
163	1	KRN14690	ｼｰﾙ;ｸｯｼｮﾝ	SEAL;CUSHION	1				
164	1	KRN14200	ｼｰﾙ;ｸｯｼｮﾝ	SEAL;CUSHION	1				
165	1	KRN14210	ｼｰﾙ;ｸｯｼｮﾝ	SEAL;CUSHION	1				
166	1	KRN10770	ｼｰﾙ;ｸｯｼｮﾝ	SEAL;CUSHION	1		210A5 -2373 210L5 -1533		
166	1	KRN19190	ｼｰﾙ;ｸｯｼｮﾝ	SEAL;CUSHION	1		210A5 2374- 210L5 1534-		
167	1	KRN10780	ｼｰﾙ;ｸｯｼｮﾝ	SEAL;CUSHION	1				
168	1	KRN10790	ｼｰﾙ;ｸｯｼｮﾝ	SEAL;CUSHION	1				
169	1	KRN12700	ｲﾝｼｭﾚｰｼｮﾝ;ｱｺｰｽﾃｲｯｸ	INSULATION;ACOUSTIC	1				
170	1	KRN12710	ｲﾝｼｭﾚｰｼｮﾝ;ｱｺｰｽﾃｲｯｸ	INSULATION;ACOUSTIC	2				
171	1	KRN14180	ｼｰﾙ;ｸｯｼｮﾝ	SEAL;CUSHION	2				
172	1	KRN12790	ｸｯｼｮﾝ;ﾗﾊﾞｰ L=560	CUSHION;RUBBER	1				
173	1	KRN14110	ｼｰﾙ;ｸｯｼｮﾝ	SEAL;CUSHION	1				
174	1	KRN13360	ｼｰﾙ;ｸｯｼｮﾝ	SEAL;CUSHION	1				
175	1	KBN11490	ｼｰﾙ;ｸｯｼｮﾝ	SEAL;CUSHION	1				
176	1	KRN14150	ｼｰﾙ;ｸｯｼｮﾝ	SEAL;CUSHION	1				
177	1	KRN14160	ｼｰﾙ;ｸｯｼｮﾝ	SEAL;CUSHION	1				
178	1	KRN14230	ｲﾝｼｭﾚｰｼｮﾝ;ｱｺｰｽﾃｲｯｸ	INSULATION;ACOUSTIC	2				
179	1	KRN14530	ｼｰﾙ;ｸｯｼｮﾝ	SEAL;CUSHION	2				
180	1	KRN14540	ｼｰﾙ;ｸｯｼｮﾝ	SEAL;CUSHION	1				
181	1	KRN1133	ﾎﾙﾀﾞ (ｸﾞﾘｰｽ ｶﾞﾝ)	HOLDER;SPL	1				
182	1	105R008Y020R	ｾﾑｽB M 8X 20	BOLT;SEMS	2				
183	1	KHN3548	ｼﾑ;ﾌﾟﾚｰﾄ	SHIM;PLATE	1				

https://truckmanualshub.com/

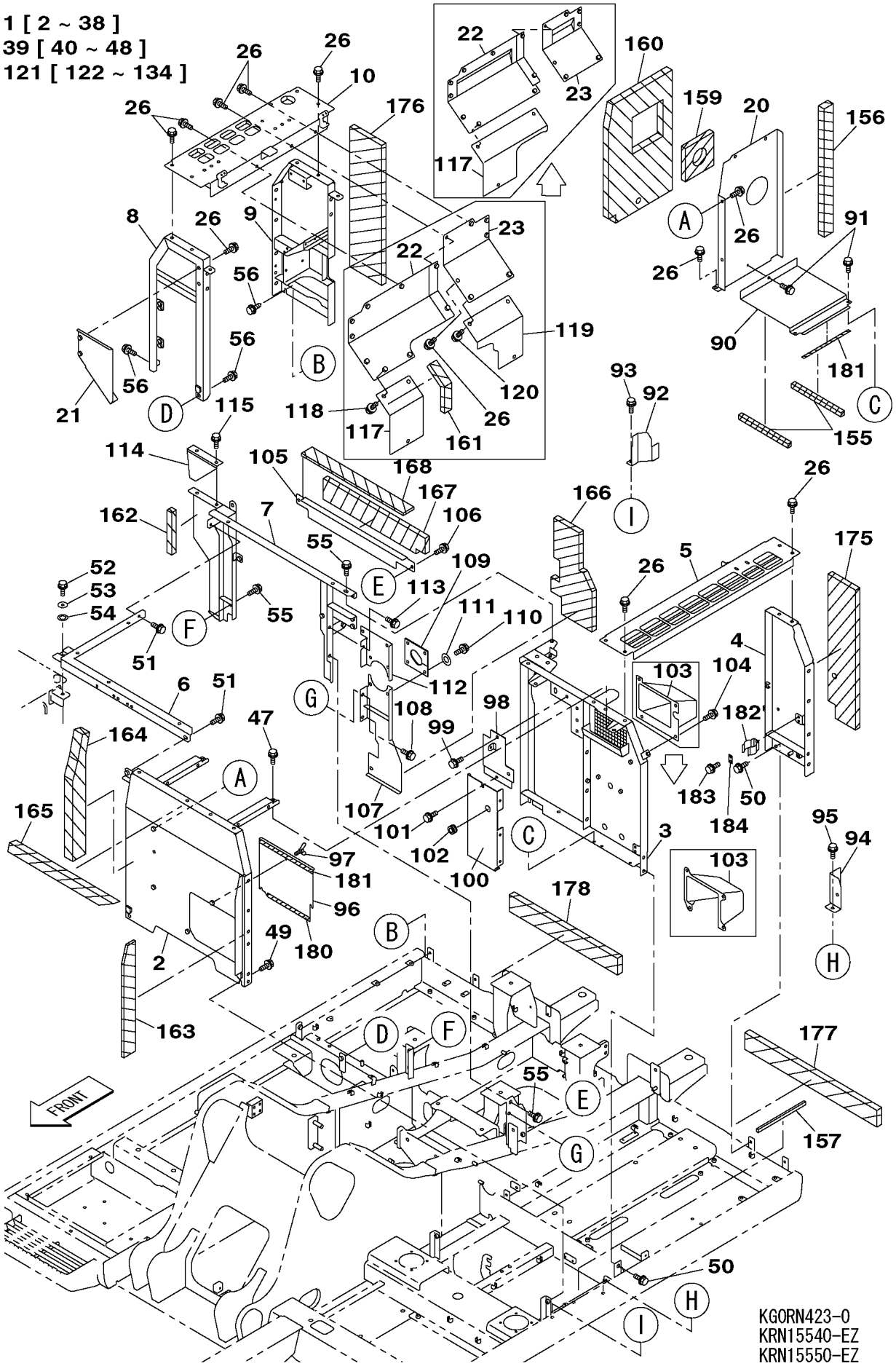

https://truckmanualshub.com/

210A5 1101－ 210L5 1101－

符号 ITEM	構成 COMPO	部品番号 PART NO.	部品名	PART NAME	個数 Q'TY	ｲﾝﾅｰ	適用号機 SERIAL_NO.	互換 ICA	代替部品 REPLACEABLE PART
1	1	--------	ﾊｳｽ ｸﾞﾙｰﾌﾟ SH210-5	HOUSE;SPL	1		210A5 -1161	<	KRN15641DM
							210L5 -1154		
1	1	--------	ﾊｳｽ ｸﾞﾙｰﾌﾟ SH210-5	HOUSE;SPL	1		210A5 1162-1185	<	KRN15642DM
							210L5 1155-1165		
1	1	--------	ﾊｳｽ ｸﾞﾙｰﾌﾟ SH210-5	HOUSE;SPL	1		210A5 1186-1870		
							210L5 1166-1422		
1	1	--------	ﾊｳｽ ｸﾞﾙｰﾌﾟ ﾋｮｳ(ﾈｯﾁｼｮ	HOUSE	1		210A5 1871-	<	KRN19080DM
							210L5 1423-		
1	1A	--------	ﾊｳｽ ｸﾞﾙｰﾌﾟ ﾋｮｳ(ﾈｯﾁｼｮ	HOUSE	1				
2	2	KRN14700	ﾌﾚｰﾑ;ﾊｳｽ (ﾋﾀﾞﾘﾏｴ)	FRAME;HOUSE	1				
3	2	KRN14780	ﾌﾚｰﾑ;ﾊｳｽ (ﾋﾀﾞﾘ)	FRAME;HOUSE	1				
3	2	KRN14781	ﾌﾚｰﾑ;ﾊｳｽ (ﾋﾀﾞﾘﾅｶ)	FRAME;HOUSE	1				
4	2	KRN12440	ﾌﾚｰﾑ;ﾊｳｽ (ﾋﾀﾞﾘｳｼﾛ)	FRAME;HOUSE	1				
5	2	KRN14790G1	ﾌﾚｰﾑ ﾀﾞｸﾄ(ﾋﾀﾞﾘ)	FRAME;SPL	1				
6	2	KRN12460	ﾌﾚｰﾑ;ﾊｳｽ (ｾﾝﾀﾏｴ)	FRAME;HOUSE	1				
7	2	KRN14590	ﾌﾚｰﾑ;ﾊｳｽ (ｾﾝﾀｳｼﾛ)	FRAME;HOUSE	1				
8	2	KRN12480	ﾌﾚｰﾑ;ﾊｳｽ (ﾐｷﾞﾏｴ)	FRAME;HOUSE	1				
9	2	KRN12490	ﾌﾚｰﾑ;ﾊｳｽ (ﾐｷﾞｳｼﾛ)	FRAME;HOUSE	1		210A5 -1161		
							210L5 -1154		
9	2	KRN12491	ﾌﾚｰﾑ;ﾊｳｽ (ﾐｷﾞｳｼﾛ)	FRAME;HOUSE	1		210A5 1162-2373		
							210L5 1155-1533		
9	2	KRN19020	ﾌﾚｰﾑ;ﾊｳｽ (ﾐｷﾞｳｼﾛ)	FRAME;HOUSE	1		210A5 2374-		
							210L5 1534-		
10	2	KRN12500G1	ﾌﾚｰﾑ ﾀﾞｸﾄ(ﾐｷﾞ)	FRAME;SPL	1				
11	2A	KRN12380Y1	ﾄﾞｱ;ｻｲﾄﾞ (ﾋﾀﾞﾘﾏｴ)	DOOR;SIDE	1				
12	4	KHN12560	ﾁｮｳﾊﾞﾝ	HINGE	2				
13	2	KRN15650Y1	ﾄﾞｱ;ｻｲﾄﾞ (ﾋﾀﾞﾘｳｼﾛ)	DOOR;SIDE	1		210A5 -1870		
							210L5 -1422		
13	2A	KRN18190Y1	ﾄﾞｱ;ｻｲﾄﾞ (ﾋﾀﾞﾘｳｼﾛ)	DOOR;SIDE	1		210A5 1871-		
							210L5 1423-		
14	4	KHN12560	ﾁｮｳﾊﾞﾝ	HINGE	2				
15	4	KNN0351	ﾛｯｸ;ﾄﾞｱ (ﾐｷﾞ) ｷｰﾂｷ	LOCK;DOOR	1		210A5 -1870		
							210L5 -1422		
15	4	KHN21200	ﾛｯｸ;ﾄﾞｱ (ﾐｷﾞ)	LOCK;DOOR	1		210A5 1871-		
							210L5 1423-		
16	2	KRN15660Y1	ﾄﾞｱ;ｻｲﾄﾞ (ﾐｷﾞ)	DOOR;SIDE	1		210A5 -1870		
							210L5 -1422		
16	2A	KRN18200Y1	ﾄﾞｱ;ｻｲﾄﾞ (ﾐｷﾞ)	DOOR;SIDE	1		210A5 1871-		
							210L5 1423-		
17	4	KHN12560	ﾁｮｳﾊﾞﾝ	HINGE	2				
18	4	KNN0351	ﾛｯｸ;ﾄﾞｱ (ﾐｷﾞ) ｷｰﾂｷ	LOCK;DOOR	1		210A5 -1870		
							210L5 -1422		
18	4	KHN21200	ﾛｯｸ;ﾄﾞｱ (ﾐｷﾞ)	LOCK;DOOR	1		210A5 1871-		
							210L5 1423-		
19	2	KRN12410Y1	ｶﾊﾞｰ;ｻｲﾄﾞ (ﾀﾝｸ)	COVER;SIDE	1				
20	2	KRN14760	ｶﾊﾞｰ	COVER	1				
21	2	KRN12610	ｶﾊﾞｰ	COVER	1				
22	2	KRN12620	ｶﾊﾞｰ	COVER	1		210A5 -1870		
							210L5 -1422		
22	2	KBN11830	ｶﾊﾞｰ	COVER	1		210A5 1871-		
							210L5 1423-		
23	2	KRN12630	ｶﾊﾞｰ	COVER	1		210A5 -1870		
							210L5 -1422		
23	2	KBN11840	ｶﾊﾞｰ	COVER	1		210A5 1871-		
							210L5 1423-		
24	2	KHN11940	ﾌﾞﾗｹｯﾄ (ｷｬｯﾁ)	BRACKET	2				
25	2	KHN12660	ﾌﾞﾗｹｯﾄ (ｽﾄｯﾊﾟ)	BRACKET	3				
26	2	KHN1079	ﾎﾞﾙﾄ ﾄｸｼｭ ｻﾞｶﾞﾈ ｸﾐｺﾐ	BOLT;SPL	33				
27	2	KHN1395	ｽﾄｯﾊﾟ;ｺﾞﾑ	STOPPER;RUBBER	2				
28	2	162R010VR	ｺｳﾘｷN M10	NUT;HIGH STRENGTH	8				

https://truckmanualshub.com/

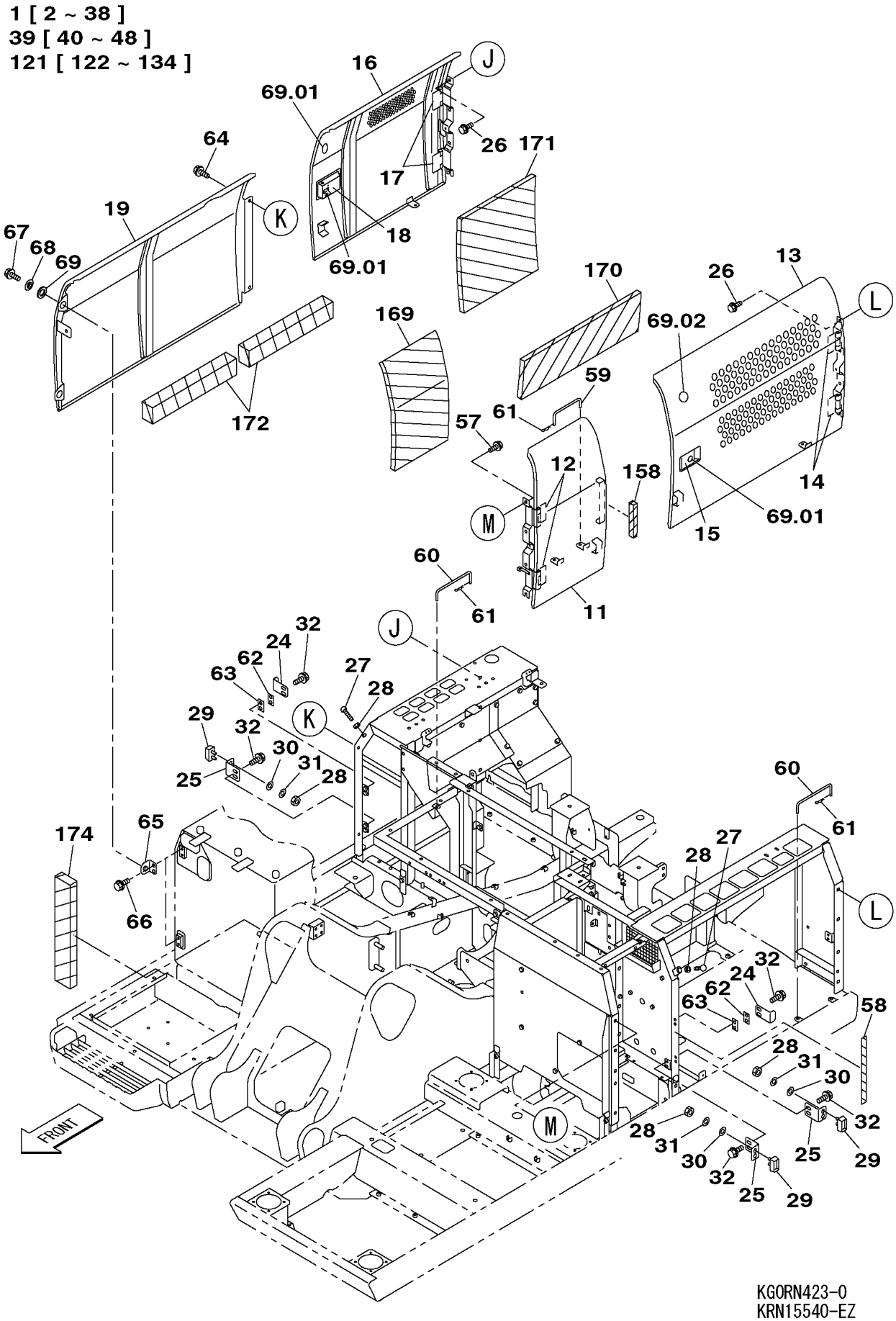

KG0RN423-0
KRN15540-EZ
KRN15550-EZ

https://truckmanualshub.com/

210A5 1101－ 210L5 1101－

符号 ITEM	構成 COMPO	部品番号 PART NO.	部品名	PART NAME	個数 Q'TY	ｲﾝﾅｰ	適用号機 SERIAL_NO.	互換 ICA	代替部品 REPLACEABLE PART
29	2	KRN2098	ｽﾄｯﾊﾟ	STOPPER	3				
30	2	182-010SR	ﾐｶﾞｷW 10	WASHER;PLAIN	6				
31	2	183-110VR	SW 10	WASHER;SPRING	6				
32	2	105R010Y030R	ｾﾑｽB M10X 30	BOLT;SEMS	10				
33	2	KRN0422	ｽﾄｯﾊﾟ;ｺﾞﾑ	STOPPER;RUBBER	2				
34	2	KBH0446	ﾘﾖｳN M10X1.25	NUT;HEX	2				
35	2	KHN0863	ｷｬｯﾁ;ﾎﾞﾝﾈｯﾄ ﾎﾝﾀｲ	CATCH;BONNET	1				
36	2	KSN0286	ｷｬｯﾁ;ﾎﾞﾝﾈｯﾄ ﾎﾝﾀｲ	CATCH;BONNET	1				
37	2	105R008Y020R	ｾﾑｽB M 8X 20	BOLT;SEMS	4				
38	2	KHN16780	ﾌﾟﾚｰﾄ	PLATE	2				
39	1A	--------	ｶﾊﾞｰ ｸﾞﾙｰﾌﾟ SH200-5	COVER;SPL	1				
40	2	KRN14640G1	ｶﾊﾞｰ;ﾄｯﾌﾟ	COVER;TOP	1				
41	2	KRN12670G1	ｶﾊﾞｰ;ﾄｯﾌﾟ (ｾﾝﾀ)	COVER;TOP	1				
42	2	KRN12680G1	ｶﾊﾞｰ;ﾄｯﾌﾟ (ｻﾝﾌﾟﾀﾝｸ)	COVER;TOP	1				
43	2	KRN12690G1	ｶﾊﾞｰ;ﾄｯﾌﾟ (ﾌｭｰｴﾙﾀﾝｸ)	COVER;TOP	1				
44	2	KRN14600	ｶﾊﾞｰ;ｾﾝﾀ	COVER;CENTER	1				
45	2	KAN3478	ﾄﾘﾑ;ｽﾎﾟﾝｼﾞ (L=630)	TRIM;SPONGE	1				
46	2	KRN14610	ｸﾞﾗｽｳｰﾙ	GLASS WOOL	1				
47	2	105R008Y020R	ｾﾑｽB M 8X 20	BOLT;SEMS	6				
48	2	KTN1090	ﾌﾟﾚｰﾄ	PLATE	6				
49	1	KHN1079	ﾎﾞﾙﾄ ﾄｸｼｭ ｻﾞｶﾞﾈ ｸﾐｺﾐ	BOLT;SPL	4				
50	1	KHN1079	ﾎﾞﾙﾄ ﾄｸｼｭ ｻﾞｶﾞﾈ ｸﾐｺﾐ	BOLT;SPL	4				
51	1	KHN1079	ﾎﾞﾙﾄ ﾄｸｼｭ ｻﾞｶﾞﾈ ｸﾐｺﾐ	BOLT;SPL	2				
52	1	105R012Y030R	ｾﾑｽB M12X 30	BOLT;SEMS	1				
53	1	KSN0921	ﾜｯｼｬ ﾄｸｼｭ	WASHER;SPL	1				
54	1	KHN2061	ﾜｯｼｬ;ﾗﾊﾞｰ	WASHER;RUB.	1				
55	1	KHN1079	ﾎﾞﾙﾄ ﾄｸｼｭ ｻﾞｶﾞﾈ ｸﾐｺﾐ	BOLT;SPL	3				
56	1	KHN1079	ﾎﾞﾙﾄ ﾄｸｼｭ ｻﾞｶﾞﾈ ｸﾐｺﾐ	BOLT;SPL	4				
57	1	KHN1079	ﾎﾞﾙﾄ ﾄｸｼｭ ｻﾞｶﾞﾈ ｸﾐｺﾐ	BOLT;SPL	4				
58	1	KHN1708	ｸｯｼｮﾝ;ﾗﾊﾞｰ	CUSHION;RUBBER	1				
59	1	KRN12580	ｽﾃｰ (ﾄﾞｱ;ｻｲﾄﾞ)	STAY	1				
60	1	KRN10420	ｽﾃｰ	STAY	2				
61	1	KRJ1588	ﾋﾟﾝ;ﾏﾂﾊﾞ 10 ﾏﾙﾖｳ	PIN;HAIR CLIP	3				
62	1	KHN1425	ｼﾑ;ﾌﾟﾚｰﾄ (T=1.2)	SHIM;PLATE	2	AR			
63	1	KHN1080	ｼﾑ;ﾌﾟﾚｰﾄ	SHIM;PLATE	2	AR			
64	1	KHN1079	ﾎﾞﾙﾄ ﾄｸｼｭ ｻﾞｶﾞﾈ ｸﾐｺﾐ	BOLT;SPL	2				
65	1	KHN12670	ﾌﾞﾗｹｯﾄ	BRACKET	2				
66	1	KHN1079	ﾎﾞﾙﾄ ﾄｸｼｭ ｻﾞｶﾞﾈ ｸﾐｺﾐ	BOLT;SPL	4				
67	1	105R012Y030R	ｾﾑｽB M12X 30	BOLT;SEMS	2				
68	1	KSN0921	ﾜｯｼｬ ﾄｸｼｭ	WASHER;SPL	2				
69	1	KHN2061	ﾜｯｼｬ;ﾗﾊﾞｰ	WASHER;RUB.	2				
69.01	1	KHN20030	ｼﾘﾝﾀﾞｷｰ ASSY	CYL;SPL	2		210A5 1566- 210L5 1302-		
69.02	1	KRN17430	ﾌﾟﾚｰﾄ;ﾗﾊﾞｰ	PLATE;RUBBER	2		210A5 1602- 210L5 1314-		
70	1A	KRN12330G1	ﾌｰﾄﾞ;ｴﾝｼﾞﾝ	HOOD;ENGINE	1				
71	3	KHN2143	ﾁｮｳﾊﾞﾝ	HINGE	2				
72	1	KHN1079	ﾎﾞﾙﾄ ﾄｸｼｭ ｻﾞｶﾞﾈ ｸﾐｺﾐ	BOLT;SPL	6				
73	1	KRN10870	ﾄﾘﾑ;ｽﾎﾟﾝｼﾞ	TRIM;SPONGE	1				
74	1	KRN12730	ｼｰﾙ;ｸｯｼｮﾝ	SEAL;CUSHION	1				
75	1	KRN14240	ｲﾝｼｭﾚｰｼｮﾝ;ｱｺｰｽﾃｲｯｸ	INSULATION;ACOUSTIC	2				
76	1	KSN0285	ｷｬｯﾁ	CATCH;SPL	2				
77	1	105R008Y020R	ｾﾑｽB M 8X 20	BOLT;SEMS	4				
78	1	KHN2537	ﾄｯﾃ	HANDLE;GRAB	1				
79	1	KHN2538	ﾜｯｼｬ ﾄｸｼｭ	WASHER;SPL	2				
80	1	KHR1254	ﾎﾞﾙﾄ M 6X 20(ｻﾞｶﾞﾈﾂｷ	BOLT;SPL	2				
81	1	KRN12570	ｽﾃｰ (ｴﾝｼﾞﾝﾌｰﾄﾞ)	STAY	1				
82	1	KEH0117	ｺｳﾘｷW M16	WASHER;HIGH STRENGTH	1				
83	1	KHN2373	ﾋﾟﾝ;ﾏﾂﾊﾞ 16ﾏﾙﾖｳ	PIN;HAIR CLIP	1				
84	1	KRN12530	ﾄｰｼｮﾝﾊﾞｰ	SPRING;TORSIONAL BAR	1				

https://truckmanualshub.com/

1 [2 ~ 38]
39 [40 ~ 48]
121 [122 ~ 134]

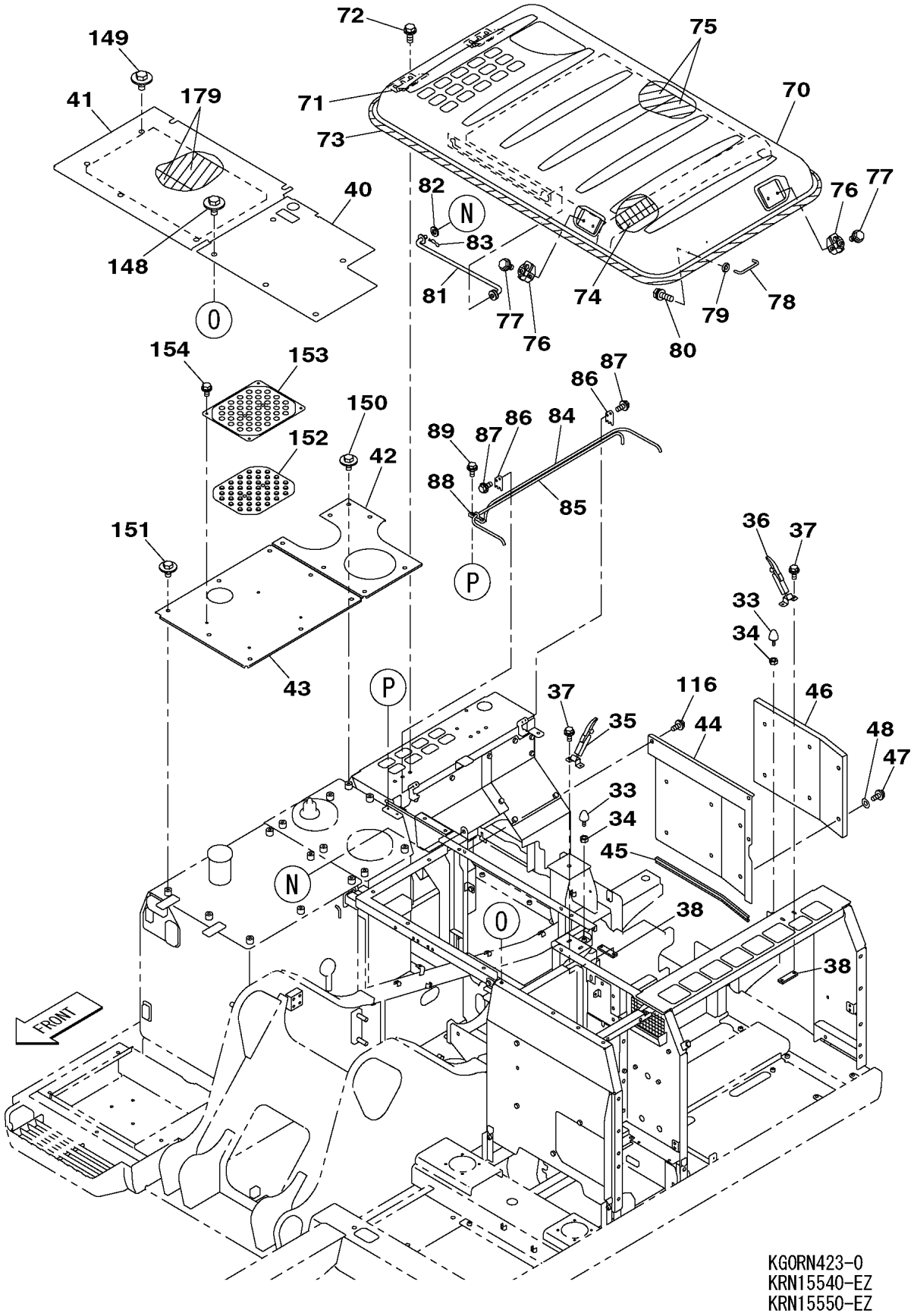

KG0RN423-0
KRN15540-EZ
KRN15550-EZ

https://truckmanualshub.com/

210A5 1101－ 210L5 1101－

符号 ITEM	構成 COMPO	部品番号 PART NO.	部品名	PART NAME	個数 Q'TY	ｲﾝﾅｰ	適用号機 SERIAL_NO.	互換 ICA	代替部品 REPLACEABLE PART
85	1	KRN12540	ﾄｰｼｮﾝﾊﾞｰ	SPRING;TORSIONAL BAR	1				
86	1	KRN12550	ﾌﾞﾗｹｯﾄ (ﾄｰｼｮﾝﾊﾞｰ)	BRACKET	2				
87	1	105R008Y020R	ｾﾑｽB M 8X 20	BOLT;SEMS	4				
88	1	KRN12560	ﾌﾞﾗｹｯﾄ (ﾄｰｼｮﾝﾊﾞｰ)	BRACKET	1				
89	1	105R008Y020R	ｾﾑｽB M 8X 20	BOLT;SEMS	2				
90	1	KRN12600	ｶﾊﾞｰ	COVER	1				
91	1	105R008Y020R	ｾﾑｽB M 8X 20	BOLT;SEMS	3				
92	1	KRN11090	ｶﾊﾞｰ	COVER	1				
93	1	KHN1079	ﾎﾞﾙﾄ ﾄｸｼｭ ｻﾞｶﾞﾈ ｸﾐｺﾐ	BOLT;SPL	2				
94	1	KRN11100	ｶﾊﾞｰ	COVER	1				
95	1	KHN1079	ﾎﾞﾙﾄ ﾄｸｼｭ ｻﾞｶﾞﾈ ｸﾐｺﾐ	BOLT;SPL	2				
96	1	KHN12760	ｶﾊﾞｰ	COVER	1				
97	1	KHN17030	ﾁｮｳB M8X12	BOLT;WING HD	3				
98	1	KRN14620	ｶﾊﾞｰ	COVER	1				
99	1	KHN1079	ﾎﾞﾙﾄ ﾄｸｼｭ ｻﾞｶﾞﾈ ｸﾐｺﾐ	BOLT;SPL	2				
100	1	KRN14750	ｶﾊﾞｰ	COVER	1				
101	1	KHN1079	ﾎﾞﾙﾄ ﾄｸｼｭ ｻﾞｶﾞﾈ ｸﾐｺﾐ	BOLT;SPL	5				
102	1	KMR0306	ﾗﾊﾞｰ;ｸﾞﾛﾒｯﾄ	GROMMET	1				
103	1	KRN14740	ｶﾊﾞｰ	COVER	1		210A5 -1181 210L5 -1165	=	KRN14741
103	1	KRN14741	ｶﾊﾞｰ	COVER	1		210A5 1182- 210L5 1166-		
104	1	KHN1079	ﾎﾞﾙﾄ ﾄｸｼｭ ｻﾞｶﾞﾈ ｸﾐｺﾐ	BOLT;SPL	4				
105	1	KRN10530	ｶﾊﾞｰ;ｾﾝﾀ	COVER;CENTER	1				
106	1	KHN1079	ﾎﾞﾙﾄ ﾄｸｼｭ ｻﾞｶﾞﾈ ｸﾐｺﾐ	BOLT;SPL	2				
107	1	KRN14660	ｶﾊﾞｰ;ｾﾝﾀ	COVER;CENTER	1				
108	1	KHN1079	ﾎﾞﾙﾄ ﾄｸｼｭ ｻﾞｶﾞﾈ ｸﾐｺﾐ	BOLT;SPL	3				
109	1	KRN14670	ﾌﾟﾚｰﾄ;ﾗﾊﾞｰ	PLATE;RUBBER	1				
110	1	105R008Y025R	ｾﾑｽB M 8X 25	BOLT;SEMS	4		210A5 -1361 210L5 -1235	<	105R008Y020R
110	1	105R008Y020R	ｾﾑｽB M 8X 20	BOLT;SEMS	4		210A5 1362- 210L5 1236-		
111	1	KTN1090	ﾌﾟﾚｰﾄ	PLATE	4				
112	1	KRN14650	ｶﾊﾞｰ;ｾﾝﾀ	COVER;CENTER	1				
113	1	KHN1079	ﾎﾞﾙﾄ ﾄｸｼｭ ｻﾞｶﾞﾈ ｸﾐｺﾐ	BOLT;SPL	3				
114	1	KRN14580	ｶﾊﾞｰ;ﾄｯﾌﾟ	COVER;TOP	1				
115	1	KHN1079	ﾎﾞﾙﾄ ﾄｸｼｭ ｻﾞｶﾞﾈ ｸﾐｺﾐ	BOLT;SPL	2				
116	1	KHN1079	ﾎﾞﾙﾄ ﾄｸｼｭ ｻﾞｶﾞﾈ ｸﾐｺﾐ	BOLT;SPL	4				
117	1	KRN12640	ｶﾊﾞｰ	COVER	1		210A5 -1185 210L5 -1165	<	KBN11850
117	1	KBN11850	ｶﾊﾞｰ	COVER	1		210A5 1186- 210L5 1166-		
118	1	KHN1079	ﾎﾞﾙﾄ ﾄｸｼｭ ｻﾞｶﾞﾈ ｸﾐｺﾐ	BOLT;SPL	3				
119	1	KRN12650	ｶﾊﾞｰ	COVER	1				
120	1	KHN1079	ﾎﾞﾙﾄ ﾄｸｼｭ ｻﾞｶﾞﾈ ｸﾐｺﾐ	BOLT;SPL	3				
121	1A	KRN12340DM	ｶﾊﾞｰ;ﾌﾛﾝﾄ ASSY	COVER;FRONT	1				
122	2	182-008SR	ﾐｶﾞｷW 8	WASHER;PLAIN	2				
123	2	KAJ1495	ﾋﾟﾝ;ﾏﾂﾊﾞ 8 ﾏﾙﾖｳ	PIN;HAIR CLIP	2				
124	2	KTN1391	ｸｯｼｮﾝ;ﾗﾊﾞｰ (L=2150)	CUSHION;RUBBER	1				
125	2	102R006Y016R	ｺｳﾘｷB M 6X 16	BOLT;HIGH STRENGTH	4		210A5 NOT USED 210L5 NOT USED		
125	2	KAN2771	ﾎﾞﾙﾄ ﾄｸｼｭ	BOLT;SPL	4				
126	2	182-006SR	ﾐｶﾞｷW 6	WASHER;PLAIN	4		210A5 NOT USED 210L5 NOT USED		
127	2	KHN12750	ﾀﾞﾝﾊﾟ ｶﾞｽ	DAMPER;SPL	1				
128	2	KHN12730	ﾛｯｸ;ﾊｳｽ	LOCK;HOUSE	1				
129	2	105R010Y020R	ｾﾑｽB M10X 20	BOLT;SEMS	2				
130	2	KHN12740	ﾌﾞﾗｹｯﾄ (ｷｬｯﾁ)	BRACKET	1				
131	2	105R008Y020R	ｾﾑｽB M 8X 20	BOLT;SEMS	2				
132	2A	KRN12360G1	ｶﾊﾞｰ;ﾌﾛﾝﾄ	COVER;FRONT	1				

https://truckmanualshub.com/

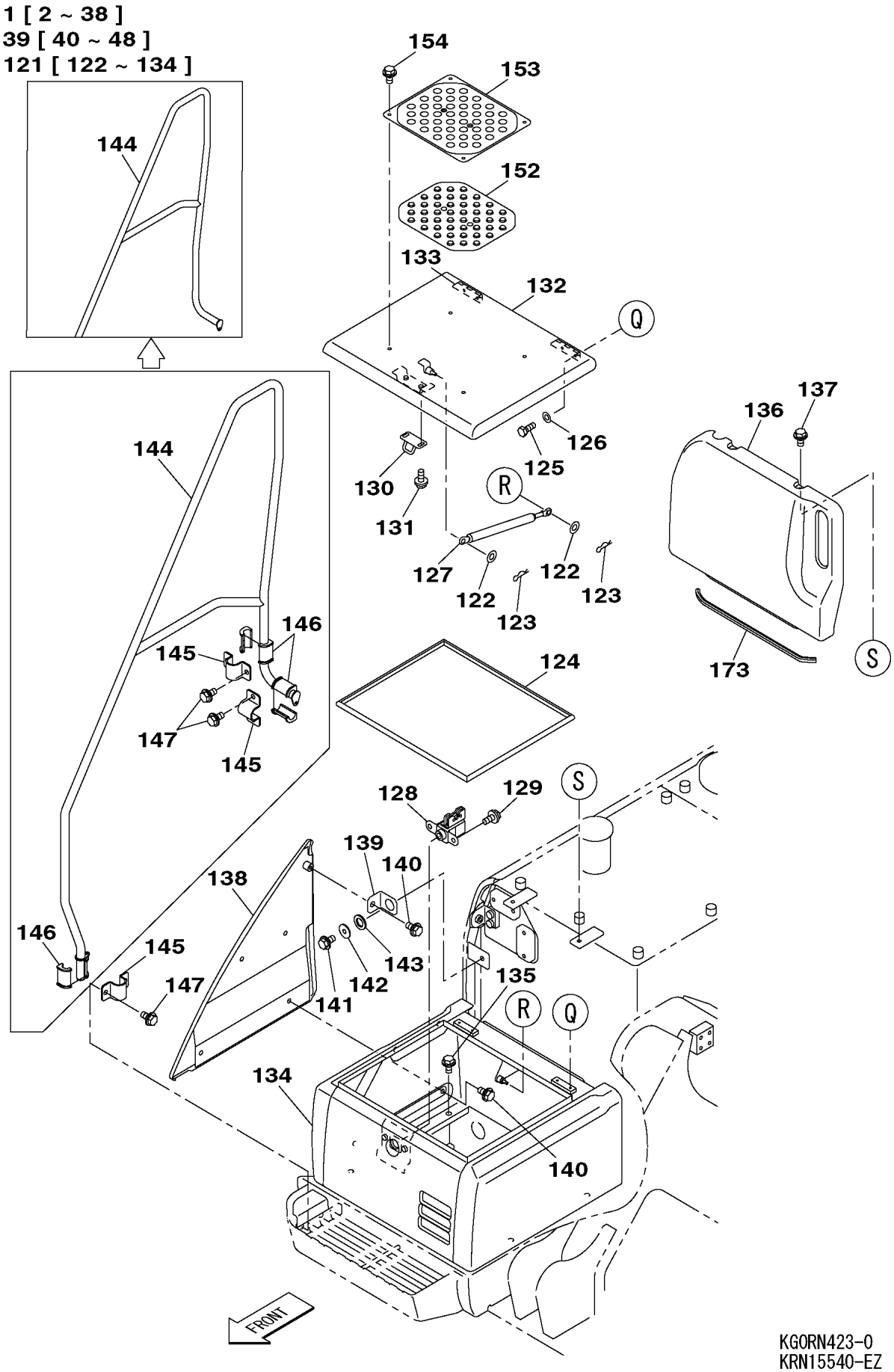

KGORN423-0
KRN15540-EZ
KRN15550-EZ

https://truckmanualshub.com/

210A5 1101－ 210L5 1101－

符号 ITEM	構成 COMPO	部品番号 PART NO.	部品名	PART NAME	個数 Q'TY	ｲﾝﾅｰ	適用号機 SERIAL_NO.	互換 ICA	代替部品 REPLACEABLE PART
133	4	KHN3390	ﾁｮｳﾊﾞﾝ	HINGE	2				
134	2	KRN12350G1	ｶﾊﾞｰ;ﾌﾛﾝﾄ	COVER;FRONT	1				
135	1	KHN1079	ﾎﾞﾙﾄ ﾄｸｼｭ ｻﾞｶﾞﾈ ｸﾐｺﾐ	BOLT;SPL	5				
136	1	KRN12370G1	ｶﾊﾞｰ (ﾀﾝｸ)	COVER	1				
137	1	KHN1079	ﾎﾞﾙﾄ ﾄｸｼｭ ｻﾞｶﾞﾈ ｸﾐｺﾐ	BOLT;SPL	2				
138	1	KHN12710Y1	ｶﾊﾞｰ;ｻｲﾄﾞ	COVER;SIDE	1				
139	1	KHN12720	ﾌﾞﾗｹｯﾄ (ｶﾊﾞｰ;ｻｲﾄﾞ)	BRACKET	1				
140	1	KHN1079	ﾎﾞﾙﾄ ﾄｸｼｭ ｻﾞｶﾞﾈ ｸﾐｺﾐ	BOLT;SPL	5				
141	1	105R012Y030R	ｾﾑｽB M12X 30	BOLT;SEMS	1				
142	1	KSN0921	ﾜｯｼｬ ﾄｸｼｭ	WASHER;SPL	1				
143	1	KHN2061	ﾜｯｼｬ;ﾗﾊﾞｰ	WASHER;RUB.	1				
144	1	KHN12680B1	ｽﾃｰ	STAY	1		210A5 -1696 210L5 -1360	<	KHN12681B1
144	1	KHN12681B1	ｽﾃｰ	STAY	1		210A5 1697- 210L5 1361-		
145	1	KHN12690	ｸﾗﾝﾌﾟ (ｽﾃｰ)	CLAMP	3				
146	1	KHN12700	ｸﾗﾝﾌﾟ (ｽﾃｰ)	CLAMP	6				
147	1	KHN1079	ﾎﾞﾙﾄ ﾄｸｼｭ ｻﾞｶﾞﾈ ｸﾐｺﾐ	BOLT;SPL	6				
148	1	KHN12020	ﾎﾞﾙﾄ ﾄｸｼｭ ｻﾞｶﾞﾈｸﾐｺﾐ	BOLT;SPL	5				
149	1	KHN12020	ﾎﾞﾙﾄ ﾄｸｼｭ ｻﾞｶﾞﾈｸﾐｺﾐ	BOLT;SPL	6				
150	1	KHN12020	ﾎﾞﾙﾄ ﾄｸｼｭ ｻﾞｶﾞﾈｸﾐｺﾐ	BOLT;SPL	7				
151	1	KHN12020	ﾎﾞﾙﾄ ﾄｸｼｭ ｻﾞｶﾞﾈｸﾐｺﾐ	BOLT;SPL	8				
152	1	KHN10940	ﾌﾟﾚｰﾄ;ﾗﾊﾞｰ	PLATE;RUBBER	2				
153	1	KHN13510B1	ｶﾊﾞｰ	COVER	2				
154	1	KHN13540	ﾎﾞﾙﾄ ﾄｸｼｭ ｻﾞｶﾞﾈｸﾐｺﾐ	BOLT;SPL	8				
155	1	KRN10700	ｼｰﾙ;ｸｯｼｮﾝ	SEAL;CUSHION	2				
156	1	KRN10710	ｼｰﾙ;ｸｯｼｮﾝ	SEAL;CUSHION	1				
157	1	KRN11110	ｼｰﾙ;ｸｯｼｮﾝ	SEAL;CUSHION	1				
158	1	KRN12740	ｼｰﾙ;ｸｯｼｮﾝ	SEAL;CUSHION	1				
159	1	KRN12750	ｼｰﾙ;ｸｯｼｮﾝ	SEAL;CUSHION	1				
160	1	KRN14770	ｲﾝｼｭﾚｰｼｮﾝ;ｱｺｰｽﾃｲｯｸ	INSULATION;ACOUSTIC	1				
161	1	KRN12760	ｼｰﾙ;ｸｯｼｮﾝ	SEAL;CUSHION	1				
162	1	KRN14680	ｼｰﾙ;ｸｯｼｮﾝ	SEAL;CUSHION	1				
163	1	KRN14690	ｼｰﾙ;ｸｯｼｮﾝ	SEAL;CUSHION	1				
164	1	KRN14200	ｼｰﾙ;ｸｯｼｮﾝ	SEAL;CUSHION	1				
165	1	KRN14210	ｼｰﾙ;ｸｯｼｮﾝ	SEAL;CUSHION	1				
166	1	KRN10770	ｼｰﾙ;ｸｯｼｮﾝ	SEAL;CUSHION	1		210A5 -2373 210L5 -1533		
166	1	KRN19190	ｼｰﾙ;ｸｯｼｮﾝ	SEAL;CUSHION	1		210A5 2374- 210L5 1534-		
167	1	KRN10780	ｼｰﾙ;ｸｯｼｮﾝ	SEAL;CUSHION	1				
168	1	KRN10790	ｼｰﾙ;ｸｯｼｮﾝ	SEAL;CUSHION	1				
169	1	KRN12700	ｲﾝｼｭﾚｰｼｮﾝ;ｱｺｰｽﾃｲｯｸ	INSULATION;ACOUSTIC	1				
170	1	KRN15670	ｲﾝｼｭﾚｰｼｮﾝ;ｱｺｰｽﾃｲｯｸ	INSULATION;ACOUSTIC	1				
171	1	KRN15680	ｲﾝｼｭﾚｰｼｮﾝ;ｱｺｰｽﾃｲｯｸ	INSULATION;ACOUSTIC	1				
172	1	KRN14180	ｼｰﾙ;ｸｯｼｮﾝ	SEAL;CUSHION	2				
173	1	KRN12790	ｸｯｼｮﾝ;ﾗﾊﾞｰ L=560	CUSHION;RUBBER	1				
174	1	KRN14110	ｼｰﾙ;ｸｯｼｮﾝ	SEAL;CUSHION	1				
175	1	KRN13360	ｼｰﾙ;ｸｯｼｮﾝ	SEAL;CUSHION	1				
176	1	KBN11490	ｼｰﾙ;ｸｯｼｮﾝ	SEAL;CUSHION	1				
177	1	KRN14150	ｼｰﾙ;ｸｯｼｮﾝ	SEAL;CUSHION	1				
178	1	KRN14160	ｼｰﾙ;ｸｯｼｮﾝ	SEAL;CUSHION	1				
179	1	KRN14230	ｲﾝｼｭﾚｰｼｮﾝ;ｱｺｰｽﾃｲｯｸ	INSULATION;ACOUSTIC	2				
180	1	KRN14530	ｼｰﾙ;ｸｯｼｮﾝ	SEAL;CUSHION	2				
181	1	KRN14540	ｼｰﾙ;ｸｯｼｮﾝ	SEAL;CUSHION	1				
182	1	KRN1133	ﾎﾙﾀﾞ (ｸﾞﾘｰｽ ｶﾞﾝ)	HOLDER;SPL	1				
183	1	105R008Y020R	ｾﾑｽB M 8X 20	BOLT;SEMS	2				
184	1	KHN3548	ｼﾑ;ﾌﾟﾚｰﾄ	SHIM;PLATE	1				

https://truckmanualshub.com/

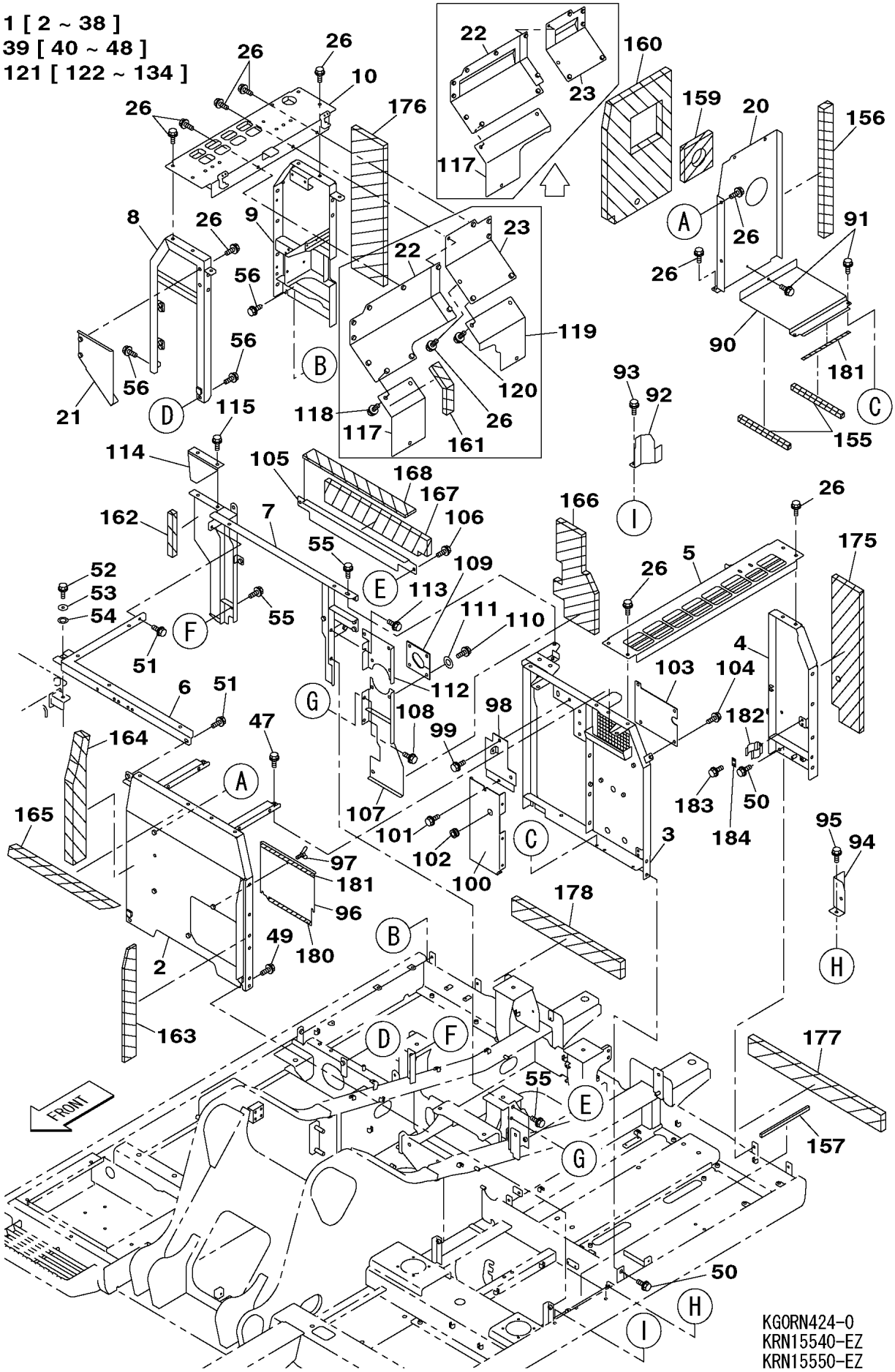

https://truckmanualshub.com/

210A5 1101－ 210L5 1101－

符号 ITEM	構成 COMPO	部品番号 PART NO.	部品名	PART NAME	個数 Q'TY	ｲﾝﾅｰ	適用号機 SERIAL_NO.	互換 ICA	代替部品 REPLACEABLE PART
1	1	--------	ﾊｳｽ ｸﾞﾙｰﾌﾟ SH210-5	HOUSE;SPL	1		210A5 -1161 210L5 -1154	<	KRN15641DM
1	1	--------	ﾊｳｽ ｸﾞﾙｰﾌﾟ SH210-5	HOUSE;SPL	1		210A5 1162-1185 210L5 1155-1165	<	KRN15642DM
1	1	--------	ﾊｳｽ ｸﾞﾙｰﾌﾟ SH210-5	HOUSE;SPL	1		210A5 1186-1870 210L5 1166-1422		
1	1	--------	ﾊｳｽ ｸﾞﾙｰﾌﾟ ﾋｮｳ(ﾈｯﾁｼｮ	HOUSE	1		210A5 1871- 210L5 1423-	<	KRN19080DM
1	1A	--------	ﾊｳｽ ｸﾞﾙｰﾌﾟ ﾋｮｳ(ﾈｯﾁｼｮ	HOUSE	1				
2	2	KRN14700	ﾌﾚｰﾑ;ﾊｳｽ (ﾋﾀﾞﾘﾏｴ)	FRAME;HOUSE	1				
3	2	KRN14780	ﾌﾚｰﾑ;ﾊｳｽ (ﾋﾀﾞﾘ)	FRAME;HOUSE	1				
3	2	KRN14781	ﾌﾚｰﾑ;ﾊｳｽ (ﾋﾀﾞﾘﾅｶ)	FRAME;HOUSE	1				
4	2	KRN12440	ﾌﾚｰﾑ;ﾊｳｽ (ﾋﾀﾞﾘｳｼﾛ)	FRAME;HOUSE	1				
5	2	KRN14790G1	ﾌﾚｰﾑ ﾀﾞｸﾄ(ﾋﾀﾞﾘ)	FRAME;SPL	1				
6	2	KRN12460	ﾌﾚｰﾑ;ﾊｳｽ (ｾﾝﾀﾏｴ)	FRAME;HOUSE	1				
7	2	KRN14590	ﾌﾚｰﾑ;ﾊｳｽ (ｾﾝﾀｳｼﾛ)	FRAME;HOUSE	1				
8	2	KRN12480	ﾌﾚｰﾑ;ﾊｳｽ (ﾐｷﾞﾏｴ)	FRAME;HOUSE	1				
9	2	KRN12490	ﾌﾚｰﾑ;ﾊｳｽ (ﾐｷﾞｳｼﾛ)	FRAME;HOUSE	1		210A5 -1161 210L5 -1154		
9	2	KRN12491	ﾌﾚｰﾑ;ﾊｳｽ (ﾐｷﾞｳｼﾛ)	FRAME;HOUSE	1		210A5 1162- 210L5 1155-		
9	2	KRN19020	ﾌﾚｰﾑ;ﾊｳｽ (ﾐｷﾞｳｼﾛ)	FRAME;HOUSE	1				
10	2	KRN12500G1	ﾌﾚｰﾑ ﾀﾞｸﾄ(ﾐｷﾞ)	FRAME;SPL	1				
11	2A	KRN12380Y1	ﾄﾞｱ;ｻｲﾄﾞ (ﾋﾀﾞﾘﾏｴ)	DOOR;SIDE	1				
12	4	KHN12560	ﾁｮｳﾊﾞﾝ	HINGE	2				
13	2	KRN15650Y1	ﾄﾞｱ;ｻｲﾄﾞ (ﾋﾀﾞﾘｳｼﾛ)	DOOR;SIDE	1		210A5 -1870 210L5 -1422		
13	2A	KRN18190Y1	ﾄﾞｱ;ｻｲﾄﾞ (ﾋﾀﾞﾘｳｼﾛ)	DOOR;SIDE	1		210A5 1871- 210L5 1423-		
14	4	KHN12560	ﾁｮｳﾊﾞﾝ	HINGE	2				
15	4	KNN0351	ﾛｯｸ;ﾄﾞｱ (ﾐｷﾞ) ｷｰﾂｷ	LOCK;DOOR	1		210A5 -1870 210L5 -1422		
15	4	KHN21200	ﾛｯｸ;ﾄﾞｱ (ﾐｷﾞ)	LOCK;DOOR	1		210A5 1871- 210L5 1423-		
16	2	KRN15660Y1	ﾄﾞｱ;ｻｲﾄﾞ (ﾐｷﾞ)	DOOR;SIDE	1		210A5 -1870 210L5 -1422		
16	2A	KRN18200Y1	ﾄﾞｱ;ｻｲﾄﾞ (ﾐｷﾞ)	DOOR;SIDE	1		210A5 1871- 210L5 1423-		
17	4	KHN12560	ﾁｮｳﾊﾞﾝ	HINGE	2				
18	4	KNN0351	ﾛｯｸ;ﾄﾞｱ (ﾐｷﾞ) ｷｰﾂｷ	LOCK;DOOR	1		210A5 -1870 210L5 -1422		
18	4	KHN21200	ﾛｯｸ;ﾄﾞｱ (ﾐｷﾞ)	LOCK;DOOR	1		210A5 1871- 210L5 1423-		
19	2	KRN12410Y1	ｶﾊﾞｰ;ｻｲﾄﾞ (ﾀﾝｸ)	COVER;SIDE	1				
20	2	KRN14760	ｶﾊﾞｰ	COVER	1				
21	2	KRN12610	ｶﾊﾞｰ	COVER	1				
22	2	KRN12620	ｶﾊﾞｰ	COVER	1		210A5 -1870 210L5 -1422		
22	2	KBN11830	ｶﾊﾞｰ	COVER	1		210A5 1871- 210L5 1423-		
23	2	KRN12630	ｶﾊﾞｰ	COVER	1		210A5 -1870 210L5 -1422		
23	2	KBN11840	ｶﾊﾞｰ	COVER	1		210A5 1871- 210L5 1423-		
24	2	KHN11940	ﾌﾞﾗｹｯﾄ (ｷｬｯﾁ)	BRACKET	2				
25	2	KHN12660	ﾌﾞﾗｹｯﾄ (ｽﾄｯﾊﾟ)	BRACKET	3				
26	2	KHN1079	ﾎﾞﾙﾄ ﾄｸｼｭ ｻﾞｶﾞﾈ ｸﾐｺﾐ	BOLT;SPL	33				
27	2	KHN1395	ｽﾄｯﾊﾟ;ｺﾞﾑ	STOPPER;RUBBER	2				
28	2	162R010VR	ｺｳﾘｷN M10	NUT;HIGH STRENGTH	8				
29	2	KRN2098	ｽﾄｯﾊﾟ	STOPPER	3				

https://truckmanualshub.com/

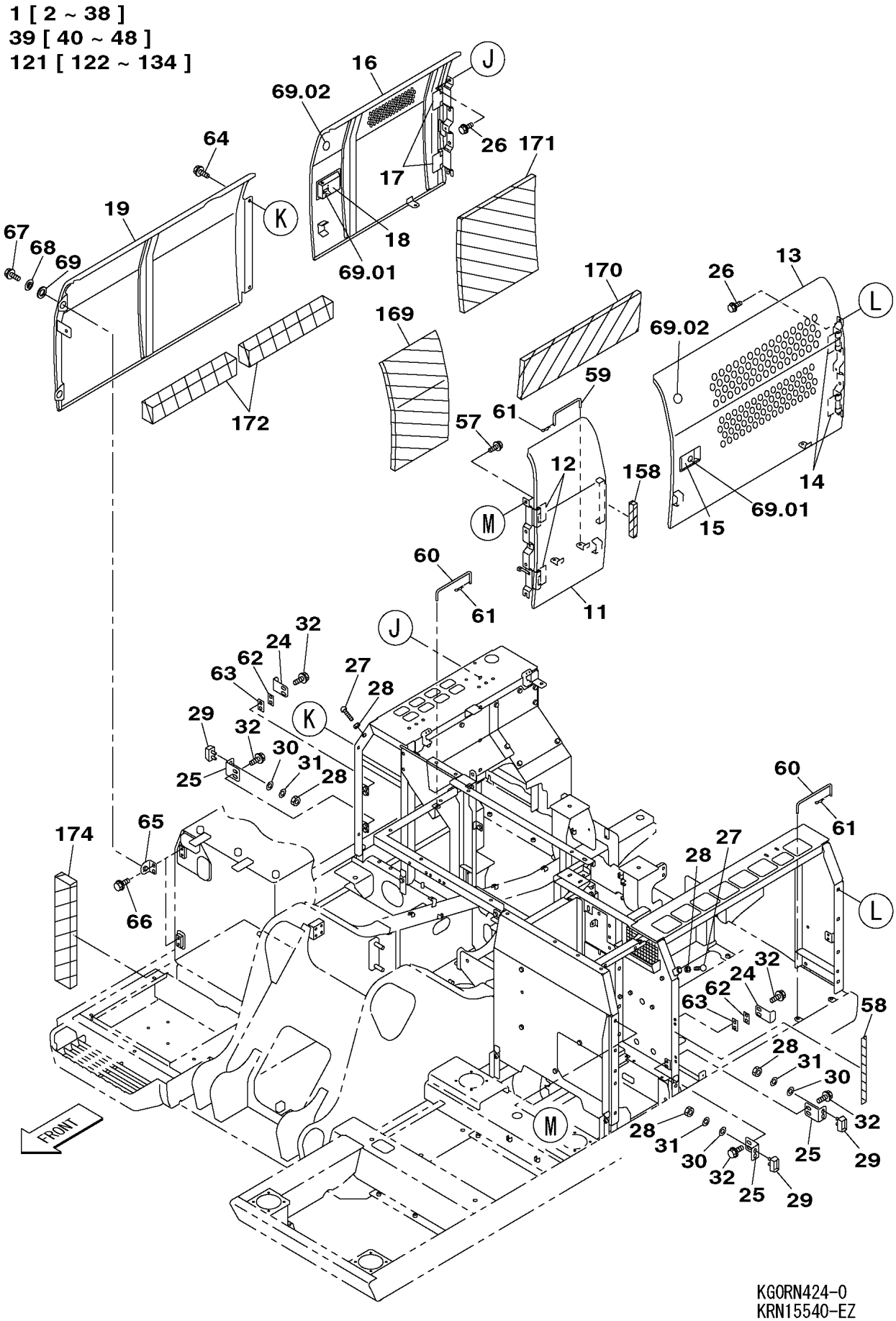

KG0RN424-0
KRN15540-EZ
KRN15550-EZ

https://truckmanualshub.com/

210A5 1101－ 210L5 1101－

符号 ITEM	構成 COMPO	部品番号 PART NO.	部品名	PART NAME	個数 Q'TY	ｲﾝﾅｰ	適用号機 SERIAL_NO.	互換 ICA	代替部品 REPLACEABLE PART
30	2	182-010SR	ﾐｶﾞｷW 10	WASHER;PLAIN	6				
31	2	183-110VR	SW 10	WASHER;SPRING	6				
32	2	105R010Y030R	ｾﾑｽB M10X 30	BOLT;SEMS	10				
33	2	KRN0422	ｽﾄｯﾊﾟ;ｺﾞﾑ	STOPPER;RUBBER	2				
34	2	KBH0446	ﾘﾖｳN M10X1.25	NUT;HEX	2				
35	2	KHN0863	ｷｬｯﾁ;ﾎﾞﾝﾈｯﾄ ﾎﾝﾀｲ	CATCH;BONNET	1				
36	2	KSN0286	ｷｬｯﾁ;ﾎﾞﾝﾈｯﾄ ﾎﾝﾀｲ	CATCH;BONNET	1				
37	2	105R008Y020R	ｾﾑｽB M 8X 20	BOLT;SEMS	4				
38	2	KHN16780	ﾌﾟﾚｰﾄ	PLATE	2				
39	1A	--------	ｶﾊﾞｰ ｸﾞﾙｰﾌﾟ SH210-5	COVER;SPL	1				
40	2	KRN16010G1	ｶﾊﾞｰ;ﾄｯﾌﾟ (ﾋﾀﾞﾘ)	COVER;TOP	1				
41	2	KRN12670G1	ｶﾊﾞｰ;ﾄｯﾌﾟ (ｾﾝﾀ)	COVER;TOP	1				
42	2	KRN12680G1	ｶﾊﾞｰ;ﾄｯﾌﾟ (ｻﾝﾌﾟﾀﾝｸ)	COVER;TOP	1				
43	2	KRN12690G1	ｶﾊﾞｰ;ﾄｯﾌﾟ (ﾌｭｰｴﾙﾀﾝｸ)	COVER;TOP	1				
44	2	KRN14600	ｶﾊﾞｰ;ｾﾝﾀ	COVER;CENTER	1				
45	2	KAN3478	ﾄﾘﾑ;ｽﾎﾟﾝｼﾞ (L=630)	TRIM;SPONGE	1				
46	2	KRN14610	ｸﾞﾗｽｳｰﾙ	GLASS WOOL	1				
47	2	105R008Y020R	ｾﾑｽB M 8X 20	BOLT;SEMS	6				
48	2	KTN1090	ﾌﾟﾚｰﾄ	PLATE	6				
49	1	KHN1079	ﾎﾞﾙﾄ ﾄｸｼｭ ｻﾞｶﾞﾈ ｸﾐｺﾐ	BOLT;SPL	4				
50	1	KHN1079	ﾎﾞﾙﾄ ﾄｸｼｭ ｻﾞｶﾞﾈ ｸﾐｺﾐ	BOLT;SPL	4				
51	1	KHN1079	ﾎﾞﾙﾄ ﾄｸｼｭ ｻﾞｶﾞﾈ ｸﾐｺﾐ	BOLT;SPL	2				
52	1	105R012Y030R	ｾﾑｽB M12X 30	BOLT;SEMS	1				
53	1	KSN0921	ﾜｯｼｬ ﾄｸｼｭ	WASHER;SPL	1				
54	1	KHN2061	ﾜｯｼｬ;ﾗﾊﾞｰ	WASHER;RUB.	1				
55	1	KHN1079	ﾎﾞﾙﾄ ﾄｸｼｭ ｻﾞｶﾞﾈ ｸﾐｺﾐ	BOLT;SPL	3				
56	1	KHN1079	ﾎﾞﾙﾄ ﾄｸｼｭ ｻﾞｶﾞﾈ ｸﾐｺﾐ	BOLT;SPL	4				
57	1	KHN1079	ﾎﾞﾙﾄ ﾄｸｼｭ ｻﾞｶﾞﾈ ｸﾐｺﾐ	BOLT;SPL	4				
58	1	KHN1708	ｸｯｼｮﾝ;ﾗﾊﾞｰ	CUSHION;RUBBER	1				
59	1	KRN12580	ｽﾃｰ (ﾄﾞｱ;ｻｲﾄﾞ)	STAY	1				
60	1	KRN10420	ｽﾃｰ	STAY	2				
61	1	KRJ1588	ﾋﾟﾝ;ﾏｯﾊﾞ 10 ﾏﾙﾖｳ	PIN;HAIR CLIP	3				
62	1	KHN1425	ｼﾑ;ﾌﾟﾚｰﾄ (T=1.2)	SHIM;PLATE	2 AR				
63	1	KHN1080	ｼﾑ;ﾌﾟﾚｰﾄ	SHIM;PLATE	2 AR				
64	1	KHN1079	ﾎﾞﾙﾄ ﾄｸｼｭ ｻﾞｶﾞﾈ ｸﾐｺﾐ	BOLT;SPL	2				
65	1	KHN12670	ﾌﾞﾗｹｯﾄ	BRACKET	2				
66	1	KHN1079	ﾎﾞﾙﾄ ﾄｸｼｭ ｻﾞｶﾞﾈ ｸﾐｺﾐ	BOLT;SPL	4				
67	1	105R012Y030R	ｾﾑｽB M12X 30	BOLT;SEMS	2				
68	1	KSN0921	ﾜｯｼｬ ﾄｸｼｭ	WASHER;SPL	2				
69	1	KHN2061	ﾜｯｼｬ;ﾗﾊﾞｰ	WASHER;RUB.	2				
69.01	1	KHN20030	ｼﾘﾝﾀﾞｷｰ ASSY	CYL;SPL	2		210A5 1566- 210L5 1302-		
69.02	1	KRN17430	ﾌﾟﾚｰﾄ;ﾗﾊﾞｰ	PLATE;RUBBER	2		210A5 1602- 210L5 1314-		
70	1A	KRN12330G1	ﾌｰﾄﾞ;ｴﾝｼﾞﾝ	HOOD;ENGINE	1				
71	3	KHN2143	ﾁｮｳﾊﾞﾝ	HINGE	2				
72	1	KHN1079	ﾎﾞﾙﾄ ﾄｸｼｭ ｻﾞｶﾞﾈ ｸﾐｺﾐ	BOLT;SPL	6				
73	1	KRN10870	ﾄﾘﾑ;ｽﾎﾟﾝｼﾞ	TRIM;SPONGE	1				
74	1	KRN12730	ｼｰﾙ;ｸｯｼｮﾝ	SEAL;CUSHION	1				
75	1	KRN14240	ｲﾝｼｭﾚｰｼｮﾝ;ｱｺｰｽﾃｲｯｸ	INSULATION;ACOUSTIC	2				
76	1	KSN0285	ｷｬｯﾁ	CATCH;SPL	2				
77	1	105R008Y020R	ｾﾑｽB M 8X 20	BOLT;SEMS	4				
78	1	KHN2537	ﾄｯﾃ	HANDLE;GRAB	1				
79	1	KHN2538	ﾜｯｼｬ ﾄｸｼｭ	WASHER;SPL	2				
80	1	KHR1254	ﾎﾞﾙﾄ M 6X 20(ｻﾞｶﾞﾈｯｷ	BOLT;SPL	2				
81	1	KRN12570	ｽﾃｰ (ｴﾝｼﾞﾝﾌｰﾄﾞ)	STAY	1				
82	1	KEH0117	ｺｳﾘｷW M16	WASHER;HIGH STRENGTH	1				
83	1	KHN2373	ﾋﾟﾝ;ﾏｯﾊﾞ 16ﾏﾙﾖｳ	PIN;HAIR CLIP	1				
84	1	KRN12530	ﾄｰｼｮﾝﾊﾞｰ	SPRING;TORSIONAL BAR	1				
85	1	KRN12540	ﾄｰｼｮﾝﾊﾞｰ	SPRING;TORSIONAL BAR	1				

https://truckmanualshub.com/

1 [2 ~ 38]
39 [40 ~ 48]
121 [122 ~ 134]

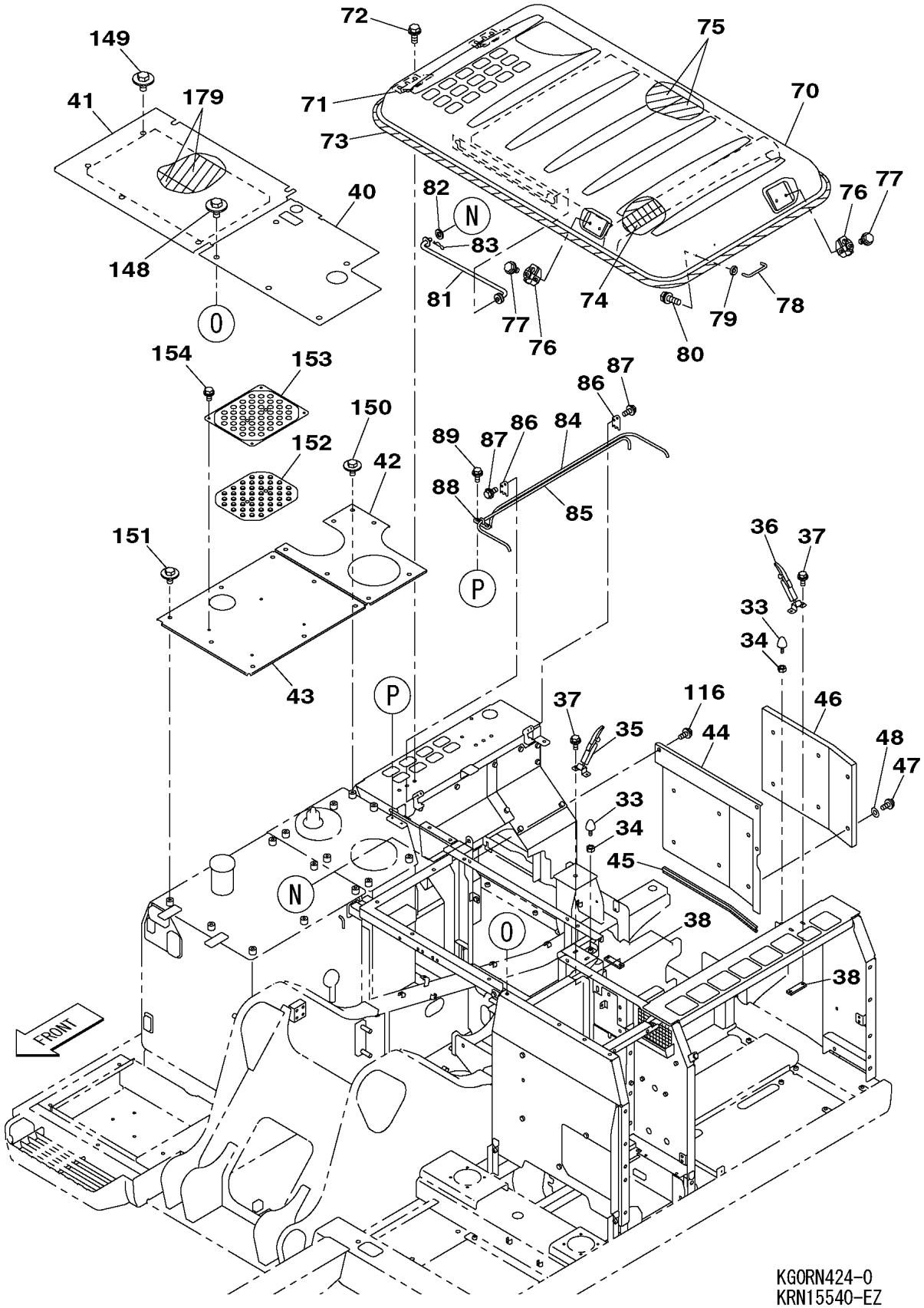

KG0RN424-0
KRN15540-EZ
KRN15550-EZ

https://truckmanualshub.com/

210A5 1101－ 210L5 1101－

符号 ITEM	構成 COMPO	部品番号 PART NO.	部品名	PART NAME	個数 Q'TY	ｲﾝﾅｰ	適用号機 SERIAL_NO.	互換 ICA	代替部品 REPLACEABLE PART
86	1	KRN12550	ﾌﾞﾗｹｯﾄ (ﾄｰｼｮﾝﾊﾞｰ)	BRACKET	2				
87	1	105R008Y020R	ｾﾑｽB M 8X 20	BOLT;SEMS	4				
88	1	KRN12560	ﾌﾞﾗｹｯﾄ (ﾄｰｼｮﾝﾊﾞｰ)	BRACKET	1				
89	1	105R008Y020R	ｾﾑｽB M 8X 20	BOLT;SEMS	2				
90	1	KRN12600	ｶﾊﾞｰ	COVER	1				
91	1	105R008Y020R	ｾﾑｽB M 8X 20	BOLT;SEMS	3				
92	1	KRN11090	ｶﾊﾞｰ	COVER	1				
93	1	KHN1079	ﾎﾞﾙﾄ ﾄｸｼｭ ｻﾞｶﾞﾈ ｸﾐｺﾐ	BOLT;SPL	2				
94	1	KRN11100	ｶﾊﾞｰ	COVER	1				
95	1	KHN1079	ﾎﾞﾙﾄ ﾄｸｼｭ ｻﾞｶﾞﾈ ｸﾐｺﾐ	BOLT;SPL	2				
96	1	KHN12760	ｶﾊﾞｰ	COVER	1				
97	1	KHN17030	ﾁｮｳB M8X12	BOLT;WING HD	3				
98	1	KRN14620	ｶﾊﾞｰ	COVER	1				
99	1	KHN1079	ﾎﾞﾙﾄ ﾄｸｼｭ ｻﾞｶﾞﾈ ｸﾐｺﾐ	BOLT;SPL	2				
100	1	KRN14750	ｶﾊﾞｰ	COVER	1				
101	1	KHN1079	ﾎﾞﾙﾄ ﾄｸｼｭ ｻﾞｶﾞﾈ ｸﾐｺﾐ	BOLT;SPL	5				
102	1	KMR0306	ﾗﾊﾞｰ;ｸﾞﾛﾒｯﾄ	GROMMET	1				
103	1	KRN16000	ｶﾊﾞｰ	COVER	1				
104	1	KHN1079	ﾎﾞﾙﾄ ﾄｸｼｭ ｻﾞｶﾞﾈ ｸﾐｺﾐ	BOLT;SPL	4				
105	1	KRN10530	ｶﾊﾞｰ;ｾﾝﾀ	COVER;CENTER	1				
106	1	KHN1079	ﾎﾞﾙﾄ ﾄｸｼｭ ｻﾞｶﾞﾈ ｸﾐｺﾐ	BOLT;SPL	2				
107	1	KRN14660	ｶﾊﾞｰ;ｾﾝﾀ	COVER;CENTER	1				
108	1	KHN1079	ﾎﾞﾙﾄ ﾄｸｼｭ ｻﾞｶﾞﾈ ｸﾐｺﾐ	BOLT;SPL	3				
109	1	KRN14670	ﾌﾟﾚｰﾄ;ﾗﾊﾞｰ	PLATE;RUBBER	1				
110	1	105R008Y025R	ｾﾑｽB M 8X 25	BOLT;SEMS	4		210A5 -1361 210L5 -1235	<	105R008Y020R
110	1	105R008Y020R	ｾﾑｽB M 8X 20	BOLT;SEMS	4		210A5 1362- 210L5 1236-		
111	1	KTN1090	ﾌﾟﾚｰﾄ	PLATE	4				
112	1	KRN14650	ｶﾊﾞｰ;ｾﾝﾀ	COVER;CENTER	1				
113	1	KHN1079	ﾎﾞﾙﾄ ﾄｸｼｭ ｻﾞｶﾞﾈ ｸﾐｺﾐ	BOLT;SPL	3				
114	1	KRN14580	ｶﾊﾞｰ;ﾄｯﾌﾟ	COVER;TOP	1				
115	1	KHN1079	ﾎﾞﾙﾄ ﾄｸｼｭ ｻﾞｶﾞﾈ ｸﾐｺﾐ	BOLT;SPL	2				
116	1	KHN1079	ﾎﾞﾙﾄ ﾄｸｼｭ ｻﾞｶﾞﾈ ｸﾐｺﾐ	BOLT;SPL	4				
117	1	KRN12640	ｶﾊﾞｰ	COVER	1		210A5 -1185 210L5 -1165	<	KBN11850
117	1	KBN11850	ｶﾊﾞｰ	COVER	1		210A5 1186- 210L5 1166-		
118	1	KHN1079	ﾎﾞﾙﾄ ﾄｸｼｭ ｻﾞｶﾞﾈ ｸﾐｺﾐ	BOLT;SPL	3				
119	1	KRN12650	ｶﾊﾞｰ	COVER	1				
120	1	KHN1079	ﾎﾞﾙﾄ ﾄｸｼｭ ｻﾞｶﾞﾈ ｸﾐｺﾐ	BOLT;SPL	3				
121	1A	KRN12340DM	ｶﾊﾞｰ;ﾌﾛﾝﾄ ASSY	COVER;FRONT	1				
122	2	182-008SR	ﾐｶﾞｷW 8	WASHER;PLAIN	2				
123	2	KAJ1495	ﾋﾟﾝ;ﾏﾂﾊﾞ 8 ﾏﾙﾖｳ	PIN;HAIR CLIP	2				
124	2	KTN1391	ｸｯｼｮﾝ;ﾗﾊﾞｰ (L=2150)	CUSHION;RUBBER	1				
125	2	102R006Y016R	ｺｳﾘｷB M 6X 16	BOLT;HIGH STRENGTH	4		210A5 NOT USED 210L5 NOT USED		
125	2	KAN2771	ﾎﾞﾙﾄ ﾄｸｼｭ	BOLT;SPL	4				
126	2	182-006SR	ﾐｶﾞｷW 6	WASHER;PLAIN	4		210A5 NOT USED 210L5 NOT USED		
127	2	KHN12750	ﾀﾞﾝﾊﾟｶﾞｽ	DAMPER;SPL	1				
128	2	KHN12730	ﾛｯｸ;ﾊｳｽ	LOCK;HOUSE	1				
129	2	105R010Y020R	ｾﾑｽB M10X 20	BOLT;SEMS	2				
130	2	KHN12740	ﾌﾞﾗｹｯﾄ (ｷｬｯﾁ)	BRACKET	1				
131	2	105R008Y020R	ｾﾑｽB M 8X 20	BOLT;SEMS	2				
132	2A	KRN12360G1	ｶﾊﾞｰ;ﾌﾛﾝﾄ	COVER;FRONT	1				
133	4	KHN3390	ﾁｮｳﾊﾞﾝ	HINGE	2				
134	2	KRN12350G1	ｶﾊﾞｰ;ﾌﾛﾝﾄ	COVER;FRONT	1				
135	1	KHN1079	ﾎﾞﾙﾄ ﾄｸｼｭ ｻﾞｶﾞﾈ ｸﾐｺﾐ	BOLT;SPL	5				
136	1	KRN12370G1	ｶﾊﾞｰ (ﾀﾝｸ)	COVER	1				

https://truckmanualshub.com/

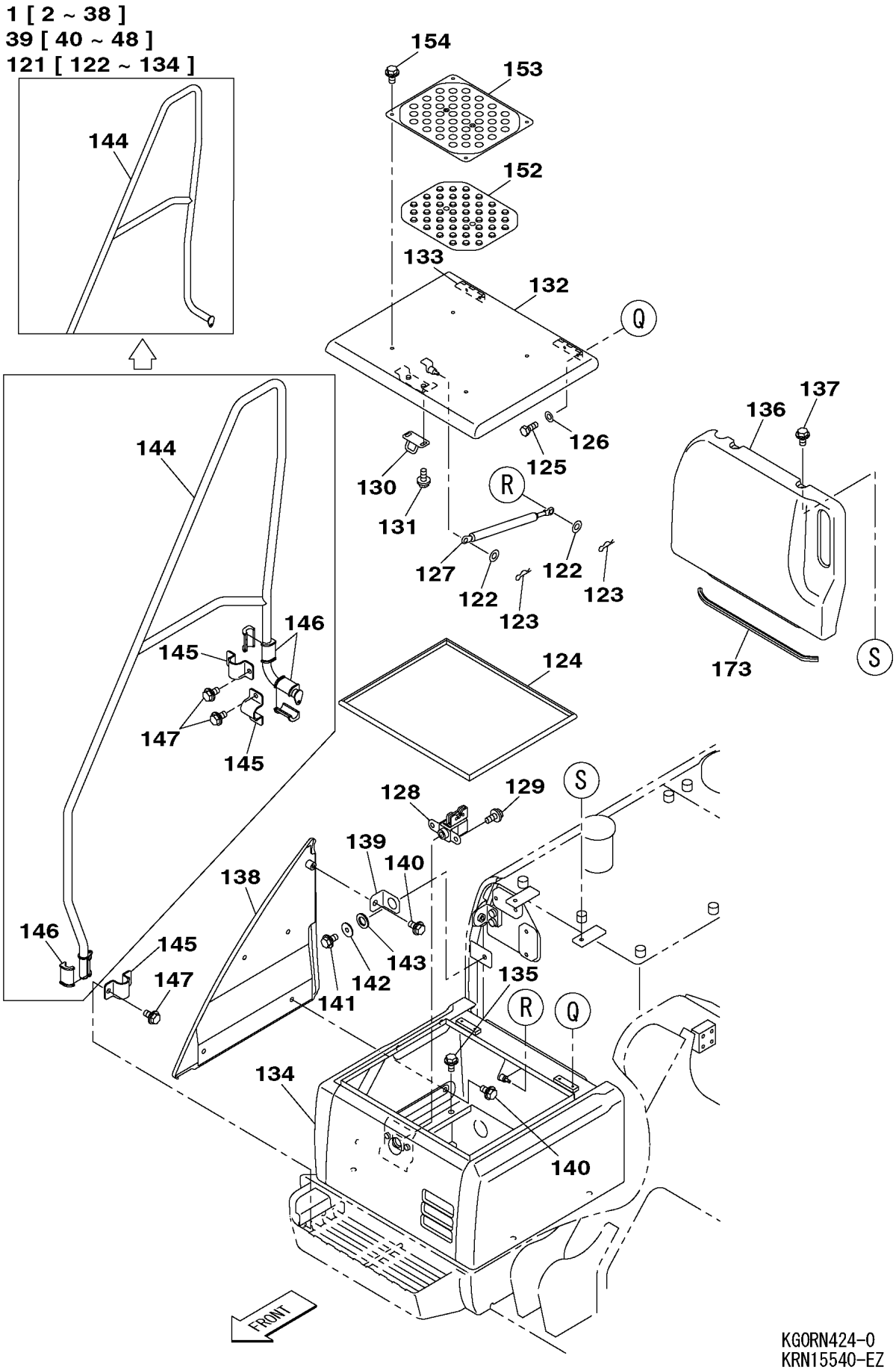

KGORN424-0
KRN15540-EZ
KRN15550-EZ

https://truckmanualshub.com/

210A5 1101－ 210L5 1101－

符号 ITEM	構成 COMPO	部品番号 PART NO.	部品名	PART NAME	個数 Q'TY	ｲﾝﾅｰ	適用号機 SERIAL_NO.	互換 ICA	代替部品 REPLACEABLE PART
137	1	KHN1079	ﾎﾞﾙﾄ ﾄｸｼｭ ｻﾞｶﾞﾈ ｸﾐｺﾐ	BOLT;SPL	2				
138	1	KHN12710Y1	ｶﾊﾞｰ;ｻｲﾄﾞ	COVER;SIDE	1				
139	1	KHN12720	ﾌﾞﾗｹｯﾄ (ｶﾊﾞｰ;ｻｲﾄﾞ)	BRACKET	1				
140	1	KHN1079	ﾎﾞﾙﾄ ﾄｸｼｭ ｻﾞｶﾞﾈ ｸﾐｺﾐ	BOLT;SPL	5				
141	1	105R012Y030R	ｾﾑｽB M12X 30	BOLT;SEMS	1				
142	1	KSN0921	ﾜｯｼｬ ﾄｸｼｭ	WASHER;SPL	1				
143	1	KHN2061	ﾜｯｼｬ;ﾗﾊﾞｰ	WASHER;RUB.	1				
144	1	KHN12680B1	ｽﾃｰ	STAY	1		210A5 -1696 210L5 -1360	<	KHN12681B1
144	1	KHN12681B1	ｽﾃｰ	STAY	1		210A5 1697- 210L5 1361-		
145	1	KHN12690	ｸﾗﾝﾌﾟ (ｽﾃｰ)	CLAMP	3				
146	1	KHN12700	ｸﾗﾝﾌﾟ (ｽﾃｰ)	CLAMP	6				
147	1	KHN1079	ﾎﾞﾙﾄ ﾄｸｼｭ ｻﾞｶﾞﾈ ｸﾐｺﾐ	BOLT;SPL	6				
148	1	KHN12020	ﾎﾞﾙﾄ ﾄｸｼｭ ｻﾞｶﾞﾈｸﾐｺﾐ	BOLT;SPL	5				
149	1	KHN12020	ﾎﾞﾙﾄ ﾄｸｼｭ ｻﾞｶﾞﾈｸﾐｺﾐ	BOLT;SPL	6				
150	1	KHN12020	ﾎﾞﾙﾄ ﾄｸｼｭ ｻﾞｶﾞﾈｸﾐｺﾐ	BOLT;SPL	7				
151	1	KHN12020	ﾎﾞﾙﾄ ﾄｸｼｭ ｻﾞｶﾞﾈｸﾐｺﾐ	BOLT;SPL	8				
152	1	KHN10940	ﾌﾟﾚｰﾄ;ﾗﾊﾞｰ	PLATE;RUBBER	2				
153	1	KHN13510B1	ｶﾊﾞｰ	COVER	2				
154	1	KHN13540	ﾎﾞﾙﾄ ﾄｸｼｭ ｻﾞｶﾞﾈｸﾐｺﾐ	BOLT;SPL	8				
155	1	KRN10700	ｼｰﾙ;ｸｯｼｮﾝ	SEAL;CUSHION	2				
156	1	KRN10710	ｼｰﾙ;ｸｯｼｮﾝ	SEAL;CUSHION	1				
157	1	KRN11110	ｼｰﾙ;ｸｯｼｮﾝ	SEAL;CUSHION	1				
158	1	KRN12740	ｼｰﾙ;ｸｯｼｮﾝ	SEAL;CUSHION	1				
159	1	KRN12750	ｼｰﾙ;ｸｯｼｮﾝ	SEAL;CUSHION	1				
160	1	KRN14770	ｲﾝｼｭﾚｰｼｮﾝ;ｱｺｰｽﾃｲｯｸ	INSULATION;ACOUSTIC	1				
161	1	KRN12760	ｼｰﾙ;ｸｯｼｮﾝ	SEAL;CUSHION	1				
162	1	KRN14680	ｼｰﾙ;ｸｯｼｮﾝ	SEAL;CUSHION	1				
163	1	KRN14690	ｼｰﾙ;ｸｯｼｮﾝ	SEAL;CUSHION	1				
164	1	KRN14200	ｼｰﾙ;ｸｯｼｮﾝ	SEAL;CUSHION	1				
165	1	KRN14210	ｼｰﾙ;ｸｯｼｮﾝ	SEAL;CUSHION	1				
166	1	KRN10770	ｼｰﾙ;ｸｯｼｮﾝ	SEAL;CUSHION	1		210A5 -2373 210L5 -1533		
166	1	KRN19190	ｼｰﾙ;ｸｯｼｮﾝ	SEAL;CUSHION	1		210A5 2374- 210L5 1534-		
167	1	KRN10780	ｼｰﾙ;ｸｯｼｮﾝ	SEAL;CUSHION	1				
168	1	KRN10790	ｼｰﾙ;ｸｯｼｮﾝ	SEAL;CUSHION	1				
169	1	KRN12700	ｲﾝｼｭﾚｰｼｮﾝ;ｱｺｰｽﾃｲｯｸ	INSULATION;ACOUSTIC	1				
170	1	KRN15670	ｲﾝｼｭﾚｰｼｮﾝ;ｱｺｰｽﾃｲｯｸ	INSULATION;ACOUSTIC	1				
171	1	KRN15680	ｲﾝｼｭﾚｰｼｮﾝ;ｱｺｰｽﾃｲｯｸ	INSULATION;ACOUSTIC	1				
172	1	KRN14180	ｼｰﾙ;ｸｯｼｮﾝ	SEAL;CUSHION	2				
173	1	KRN12790	ｸｯｼｮﾝ;ﾗﾊﾞｰ L=560	CUSHION;RUBBER	1				
174	1	KRN14110	ｼｰﾙ;ｸｯｼｮﾝ	SEAL;CUSHION	1				
175	1	KRN13360	ｼｰﾙ;ｸｯｼｮﾝ	SEAL;CUSHION	1				
176	1	KBN11490	ｼｰﾙ;ｸｯｼｮﾝ	SEAL;CUSHION	1				
177	1	KRN14150	ｼｰﾙ;ｸｯｼｮﾝ	SEAL;CUSHION	1				
178	1	KRN14160	ｼｰﾙ;ｸｯｼｮﾝ	SEAL;CUSHION	1				
179	1	KRN14230	ｲﾝｼｭﾚｰｼｮﾝ;ｱｺｰｽﾃｲｯｸ	INSULATION;ACOUSTIC	2				
180	1	KRN14530	ｼｰﾙ;ｸｯｼｮﾝ	SEAL;CUSHION	2				
181	1	KRN14540	ｼｰﾙ;ｸｯｼｮﾝ	SEAL;CUSHION	1				
182	1	KRN1133	ﾎﾙﾀﾞ (ｸﾞﾘｰｽ ｶﾞﾝ)	HOLDER;SPL	1				
183	1	105R008Y020R	ｾﾑｽB M 8X 20	BOLT;SEMS	2				
184	1	KHN3548	ｼﾑ;ﾌﾟﾚｰﾄ	SHIM;PLATE	1				

https://truckmanualshub.com/

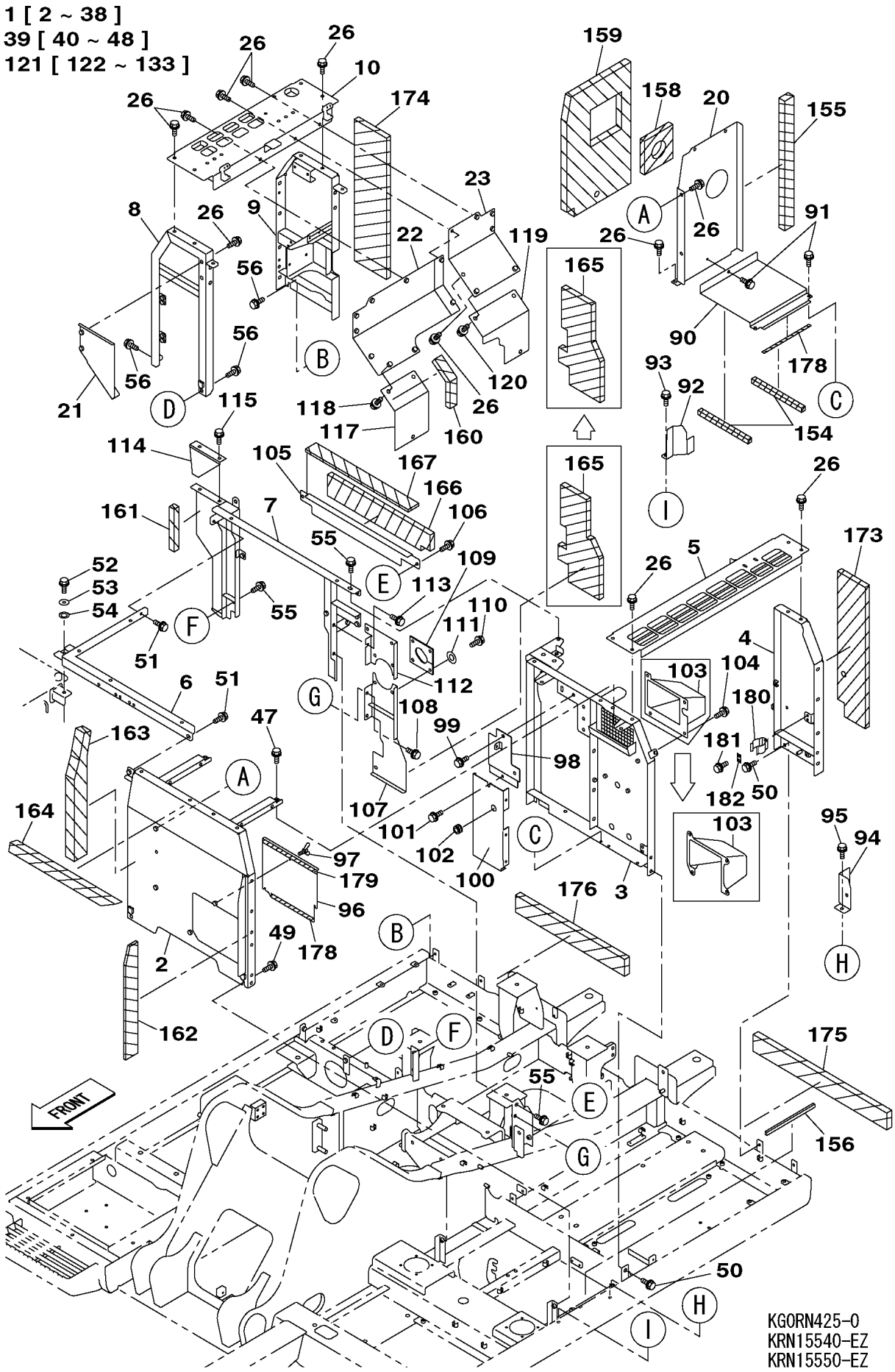

https://truckmanualshub.com/

210A5 1101－ 210L5 1101－

符号 ITEM	構成 COMPO	部品番号 PART NO.	部品名	PART NAME	個数 Q'TY	ｲﾝﾅｰ	適用号機 SERIAL_NO.	互換 ICA	代替部品 REPLACEABLE PART
1	1	--------	ﾊｳｽ ｸﾞﾙｰﾌﾟ SH200-5	HOUSE;SPL	1		210A5 -1161 210L5 -1154	<	KRN15521DM
1	1	--------	ﾊｳｽ ｸﾞﾙｰﾌﾟ SH200-5	HOUSE;SPL	1		210A5 1162-1870 210L5 1155-1422		
1	1	--------	ﾊｳｽ ｸﾞﾙｰﾌﾟ ﾋｮｳ	HOUSE	1		210A5 1871- 210L5 1423-	<	KRN19030DM
1	1A	--------	ﾊｳｽ ｸﾞﾙｰﾌﾟ ﾋｮｳ	HOUSE	1				
2	2	KRN14700	ﾌﾚｰﾑ;ﾊｳｽ (ﾋﾀﾞﾘﾏｴ)	FRAME;HOUSE	1				
3	2	KRN14780	ﾌﾚｰﾑ;ﾊｳｽ (ﾋﾀﾞﾘ)	FRAME;HOUSE	1		210A5 -1870 210L5 -1422		
3	2	KRN14781	ﾌﾚｰﾑ;ﾊｳｽ (ﾋﾀﾞﾘﾅｶ)	FRAME;HOUSE	1		210A5 1871- 210L5 1423-		
4	2	KRN12440	ﾌﾚｰﾑ;ﾊｳｽ (ﾋﾀﾞﾘｳｼﾛ)	FRAME;HOUSE	1				
5	2	KRN14790G1	ﾌﾚｰﾑ ﾀﾞｸﾄ(ﾋﾀﾞﾘ)	FRAME;SPL	1				
6	2	KRN12460	ﾌﾚｰﾑ;ﾊｳｽ (ｾﾝﾀﾏｴ)	FRAME;HOUSE	1				
7	2	KRN14590	ﾌﾚｰﾑ;ﾊｳｽ (ｾﾝﾀｳｼﾛ)	FRAME;HOUSE	1				
8	2	KRN12480	ﾌﾚｰﾑ;ﾊｳｽ (ﾐｷﾞﾏｴ)	FRAME;HOUSE	1				
9	2	KRN12490	ﾌﾚｰﾑ;ﾊｳｽ (ﾐｷﾞｳｼﾛ)	FRAME;HOUSE	1		210A5 -1161 210L5 -1154		
9	2	KRN12491	ﾌﾚｰﾑ;ﾊｳｽ (ﾐｷﾞｳｼﾛ)	FRAME;HOUSE	1		210A5 1162- 210L5 1155-		
9	2	KRN19020	ﾌﾚｰﾑ;ﾊｳｽ (ﾐｷﾞｳｼﾛ)	FRAME;HOUSE	1				
10	2	KRN12500G1	ﾌﾚｰﾑ ﾀﾞｸﾄ(ﾐｷﾞ)	FRAME;SPL	1				
11	2A	KRN12380Y1	ﾄﾞｱ;ｻｲﾄﾞ (ﾋﾀﾞﾘﾏｴ)	DOOR;SIDE	1				
12	4	KHN12560	ﾁｮｳﾊﾞﾝ	HINGE	2				
13	2	KRN12390Y1	ﾄﾞｱ;ｻｲﾄﾞ (ﾋﾀﾞﾘｳｼﾛ)	DOOR;SIDE	1		210A5 -1870 210L5 -1422		
13	2A	KRN18150Y1	ﾄﾞｱ;ｻｲﾄﾞ (ﾋﾀﾞﾘｳｼﾛ)	DOOR;SIDE	1		210A5 1871- 210L5 1423-		
14	4	KHN12560	ﾁｮｳﾊﾞﾝ	HINGE	2				
15	4	KNN0351	ﾛｯｸ;ﾄﾞｱ (ﾐｷﾞ) ｷｰﾂｷ	LOCK;DOOR	1		210A5 -1870 210L5 -1422		
15	4	KHN21200	ﾛｯｸ;ﾄﾞｱ (ﾐｷﾞ)	LOCK;DOOR	1		210A5 1871- 210L5 1423-		
16	2	KRN12400Y1	ﾄﾞｱ;ｻｲﾄﾞ (ﾐｷﾞ)	DOOR;SIDE	1		210A5 -1870 210L5 -1422		
16	2A	KRN18160Y1	ﾄﾞｱ;ｻｲﾄﾞ (ﾐｷﾞ)	DOOR;SIDE	1		210A5 1871- 210L5 1423-		
17	4	KHN12560	ﾁｮｳﾊﾞﾝ	HINGE	2				
18	4	KNN0351	ﾛｯｸ;ﾄﾞｱ (ﾐｷﾞ) ｷｰﾂｷ	LOCK;DOOR	1		210A5 -1870 210L5 -1422		
18	4	KHN21200	ﾛｯｸ;ﾄﾞｱ (ﾐｷﾞ)	LOCK;DOOR	1		210A5 1871- 210L5 1423-		
19	2	KRN12410Y1	ｶﾊﾞｰ;ｻｲﾄﾞ (ﾀﾝｸ)	COVER;SIDE	1				
20	2	KRN14760	ｶﾊﾞｰ	COVER	1				
21	2	KRN12610	ｶﾊﾞｰ	COVER	1				
22	2	KRN12620	ｶﾊﾞｰ	COVER	1				
23	2	KRN12630	ｶﾊﾞｰ	COVER	1				
24	2	KHN11940	ﾌﾞﾗｹｯﾄ (ｷｬｯﾁ)	BRACKET	2				
25	2	KHN12660	ﾌﾞﾗｹｯﾄ (ｽﾄｯﾊﾟ)	BRACKET	3				
26	2	KHN1079	ﾎﾞﾙﾄ ﾄｸｼｭ ｻﾞｶﾞﾈ ｸﾐｺﾐ	BOLT;SPL	33				
27	2	KHN1395	ｽﾄｯﾊﾟ;ｺﾞﾑ	STOPPER;RUBBER	2				
28	2	162R010VR	ｺｳﾘｷN M10	NUT;HIGH STRENGTH	8				
29	2	KRN2098	ｽﾄｯﾊﾟ	STOPPER	3				
30	2	182-010SR	ﾐｶﾞｷW 10	WASHER;PLAIN	6				
31	2	183-110VR	SW 10	WASHER;SPRING	6				
32	2	105R010Y030R	ｾﾑｽB M10X 30	BOLT;SEMS	10				
33	2	KRN0422	ｽﾄｯﾊﾟ;ｺﾞﾑ	STOPPER;RUBBER	2				
34	2	KBH0446	ﾘｮｳN M10X1.25	NUT;HEX	2				
35	2	KHN0863	ｷｬｯﾁ;ﾎﾞﾝﾈｯﾄ ﾎﾝﾀｲ	CATCH;BONNET	1				

https://truckmanualshub.com/

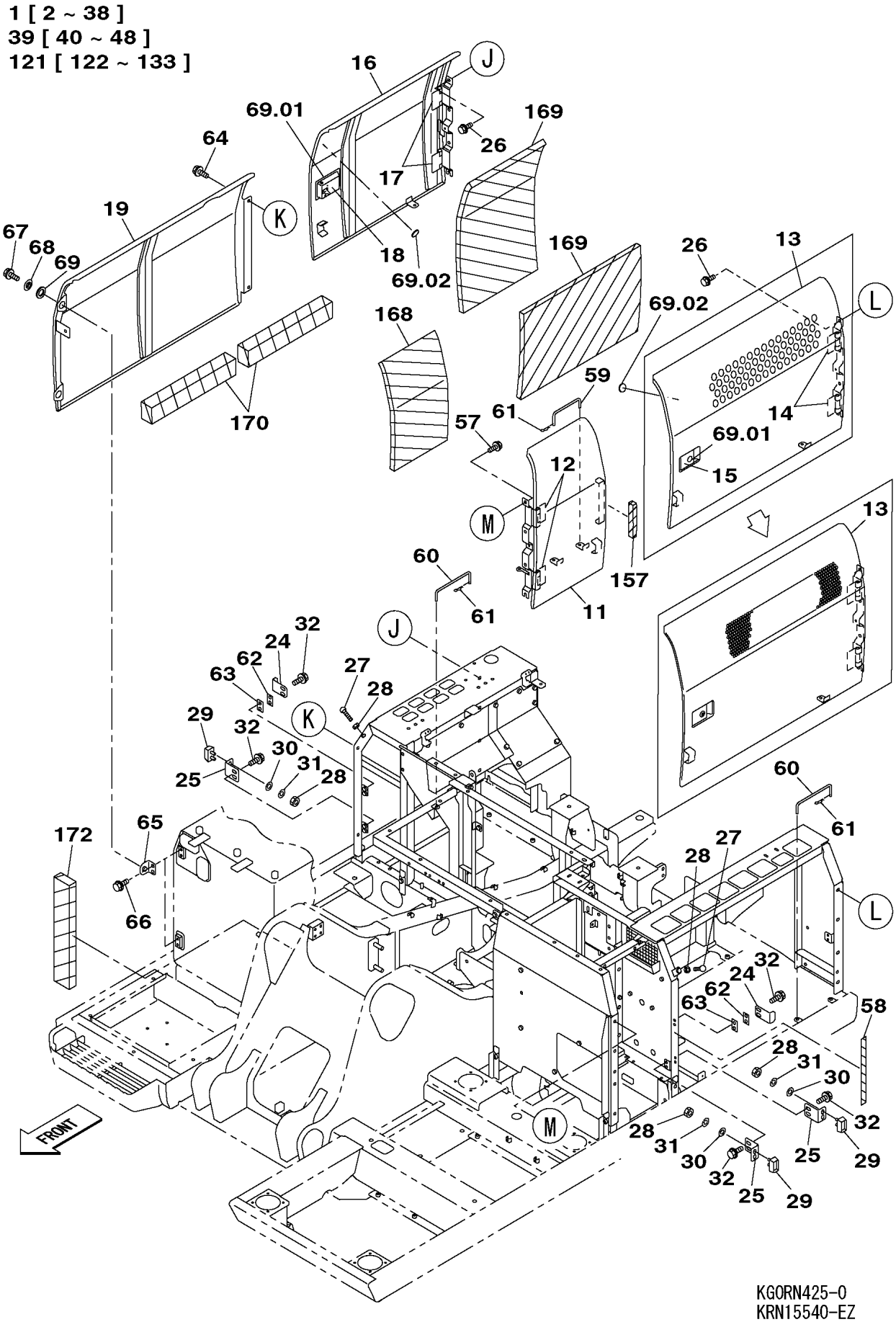

KGORN425-0
KRN15540-EZ
KRN15550-EZ

https://truckmanualshub.com/

210A5 1101－　　210L5 1101－

符号 ITEM	構成 COMPO	部品番号 PART NO.	部品名	PART NAME	個数 Q'TY	ｲﾝﾅｰ	適用号機 SERIAL_NO.	互換 ICA	代替部品 REPLACEABLE PART
36	2	KSN0286	ｷｬﾂﾁ;ﾎﾞﾝﾈﾂﾄ ﾎﾝﾀｲ	CATCH;BONNET	1				
37	2	105R008Y020R	ｾﾑｽB M 8X 20	BOLT;SEMS	4				
38	2	KHN16780	ﾌﾟﾚｰﾄ	PLATE	2				
39	1A	KRN15530DM	ｶﾊﾞｰ ｸﾞﾙｰﾌﾟ SH200-5	COVER;SPL	1				
40	2	KRN14640G1	ｶﾊﾞｰ;ﾄｯﾌﾟ	COVER;TOP	1				
41	2	KRN12670G1	ｶﾊﾞｰ;ﾄｯﾌﾟ (ｾﾝﾀ)	COVER;TOP	1				
42	2	KRN12680G1	ｶﾊﾞｰ;ﾄｯﾌﾟ (ｻﾝﾌﾟﾀﾝｸ)	COVER;TOP	1				
43	2	KRN12690G1	ｶﾊﾞｰ;ﾄｯﾌﾟ (ﾌｭｰｴﾙﾀﾝｸ)	COVER;TOP	1				
44	2	KRN14600	ｶﾊﾞｰ;ｾﾝﾀ	COVER;CENTER	1				
45	2	KAN3478	ﾄﾘﾑ;ｽﾎﾟﾝｼﾞ (L=630)	TRIM;SPONGE	1				
46	2	KRN14610	ｸﾞﾗｽｳｰﾙ	GLASS WOOL	1				
47	2	105R008Y020R	ｾﾑｽB M 8X 20	BOLT;SEMS	6				
48	2	KTN1090	ﾌﾟﾚｰﾄ	PLATE	6				
49	1	KHN1079	ﾎﾞﾙﾄ ﾄｸｼｭ ｻﾞｶﾞﾈ ｸﾐｺﾐ	BOLT;SPL	4				
50	1	KHN1079	ﾎﾞﾙﾄ ﾄｸｼｭ ｻﾞｶﾞﾈ ｸﾐｺﾐ	BOLT;SPL	4				
51	1	KHN1079	ﾎﾞﾙﾄ ﾄｸｼｭ ｻﾞｶﾞﾈ ｸﾐｺﾐ	BOLT;SPL	2				
52	1	105R012Y030R	ｾﾑｽB M12X 30	BOLT;SEMS	1				
53	1	KSN0921	ﾜｯｼｬ ﾄｸｼｭ	WASHER;SPL	1				
54	1	KHN2061	ﾜｯｼｬ;ﾗﾊﾞｰ	WASHER;RUB.	1				
55	1	KHN1079	ﾎﾞﾙﾄ ﾄｸｼｭ ｻﾞｶﾞﾈ ｸﾐｺﾐ	BOLT;SPL	3				
56	1	KHN1079	ﾎﾞﾙﾄ ﾄｸｼｭ ｻﾞｶﾞﾈ ｸﾐｺﾐ	BOLT;SPL	4				
57	1	KHN1079	ﾎﾞﾙﾄ ﾄｸｼｭ ｻﾞｶﾞﾈ ｸﾐｺﾐ	BOLT;SPL	4				
58	1	KHN1708	ｸｯｼｮﾝ;ﾗﾊﾞｰ	CUSHION;RUBBER	1				
59	1	KRN12580	ｽﾃｰ (ﾄﾞｱ;ｻｲﾄﾞ)	STAY	1				
60	1	KRN10420	ｽﾃｰ	STAY	2				
61	1	KRJ1588	ﾋﾟﾝ;ﾏﾂﾊﾞ 10 ﾏﾙﾖｳ	PIN;HAIR CLIP	3				
62	1	KHN1425	ｼﾑ;ﾌﾟﾚｰﾄ (T=1.2)	SHIM;PLATE	2	AR			
63	1	KHN1080	ｼﾑ;ﾌﾟﾚｰﾄ	SHIM;PLATE	2	AR			
64	1	KHN1079	ﾎﾞﾙﾄ ﾄｸｼｭ ｻﾞｶﾞﾈ ｸﾐｺﾐ	BOLT;SPL	2				
65	1	KHN12670	ﾌﾞﾗｹｯﾄ	BRACKET	2				
66	1	KHN1079	ﾎﾞﾙﾄ ﾄｸｼｭ ｻﾞｶﾞﾈ ｸﾐｺﾐ	BOLT;SPL	4				
67	1	105R012Y030R	ｾﾑｽB M12X 30	BOLT;SEMS	2				
68	1	KSN0921	ﾜｯｼｬ ﾄｸｼｭ	WASHER;SPL	2				
69	1	KHN2061	ﾜｯｼｬ;ﾗﾊﾞｰ	WASHER;RUB.	2				
69.01	1	KHN20030	ｼﾘﾝﾀﾞｷｰ ASSY	CYL;SPL	2		210A5 1566-		
69.02	1	KRN17430	ﾌﾟﾚｰﾄ;ﾗﾊﾞｰ	PLATE;RUBBER	2		210L5 1302- 210A5 1602- 210L5 1314-		
70	1A	KRN12330G1	ﾌｰﾄﾞ;ｴﾝｼﾞﾝ	HOOD;ENGINE	1				
71	3	KHN2143	ﾁｮｳﾊﾞﾝ	HINGE	2				
72	1	KHN1079	ﾎﾞﾙﾄ ﾄｸｼｭ ｻﾞｶﾞﾈ ｸﾐｺﾐ	BOLT;SPL	6				
73	1	KRN10870	ﾄﾘﾑ;ｽﾎﾟﾝｼﾞ	TRIM;SPONGE	1				
74	1	KRN12730	ｼｰﾙ;ｸｯｼｮﾝ	SEAL;CUSHION	1				
75	1	KRN14240	ｲﾝｼｭﾚｰｼｮﾝ;ｱｺｰｽﾃｲｯｸ	INSULATION;ACOUSTIC	2				
76	1	KSN0285	ｷｬﾂﾁ	CATCH;SPL	2				
77	1	105R008Y020R	ｾﾑｽB M 8X 20	BOLT;SEMS	4				
78	1	KHN2537	ﾄｯﾃ	HANDLE;GRAB	1				
79	1	KHN2538	ﾜｯｼｬ ﾄｸｼｭ	WASHER;SPL	2				
80	1	KHR1254	ﾎﾞﾙﾄ M 6X 20(ｻﾞｶﾞﾈﾂｷ	BOLT;SPL	2				
81	1	KRN12570	ｽﾃｰ (ｴﾝｼﾞﾝﾌｰﾄﾞ)	STAY	1				
82	1	KEH0117	ｺｳﾘｷW M16	WASHER;HIGH STRENGTH	1				
83	1	KHN2373	ﾋﾟﾝ;ﾏﾂﾊﾞ 16ﾏﾙﾖｳ	PIN;HAIR CLIP	1				
84	1	KRN12530	ﾄｰｼｮﾝﾊﾞｰ	SPRING;TORSIONAL BAR	1				
85	1	KRN12540	ﾄｰｼｮﾝﾊﾞｰ	SPRING;TORSIONAL BAR	1				
86	1	KRN12550	ﾌﾞﾗｹｯﾄ (ﾄｰｼｮﾝﾊﾞｰ)	BRACKET	2				
87	1	105R008Y020R	ｾﾑｽB M 8X 20	BOLT;SEMS	4				
88	1	KRN12560	ﾌﾞﾗｹｯﾄ (ﾄｰｼｮﾝﾊﾞｰ)	BRACKET	1				
89	1	105R008Y020R	ｾﾑｽB M 8X 20	BOLT;SEMS	2				
90	1	KRN12600	ｶﾊﾞｰ	COVER	1				
91	1	105R008Y020R	ｾﾑｽB M 8X 20	BOLT;SEMS	3				

https://truckmanualshub.com/

1 [2 ~ 38]
39 [40 ~ 48]
121 [122 ~ 133]

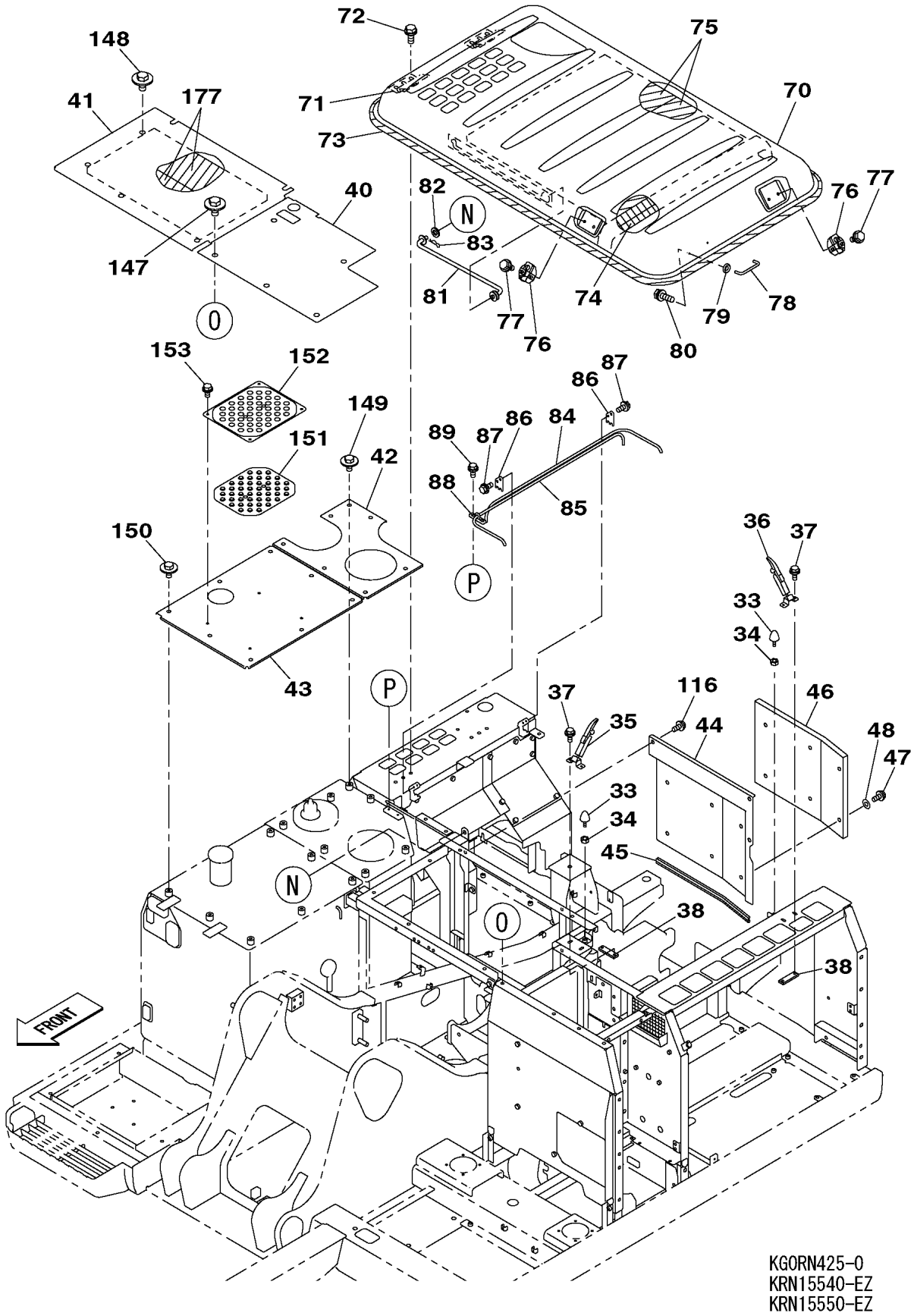

KGORN425-0
KRN15540-EZ
KRN15550-EZ

https://truckmanualshub.com/

210A5 1101－ 210L5 1101－

符号 ITEM	構成 COMPO	部品番号 PART NO.	部品名	PART NAME	個数 Q'TY	ｲﾝﾅｰ	適用号機 SERIAL_NO.	互換 ICA	代替部品 REPLACEABLE PART
92	1	KRN11090	ｶﾊﾞｰ	COVER	1				
93	1	KHN1079	ﾎﾞﾙﾄ ﾄｸｼｭ ｻﾞｶﾞﾈ ｸﾐｺﾐ	BOLT;SPL	2				
94	1	KRN11100	ｶﾊﾞｰ	COVER	1				
95	1	KHN1079	ﾎﾞﾙﾄ ﾄｸｼｭ ｻﾞｶﾞﾈ ｸﾐｺﾐ	BOLT;SPL	2				
96	1	KHN12760	ｶﾊﾞｰ	COVER	1				
97	1	KHN17030	ﾁｮｳB M8X12	BOLT;WING HD	3				
98	1	KRN14620	ｶﾊﾞｰ	COVER	1				
99	1	KHN1079	ﾎﾞﾙﾄ ﾄｸｼｭ ｻﾞｶﾞﾈ ｸﾐｺﾐ	BOLT;SPL	2				
100	1	KRN14750	ｶﾊﾞｰ	COVER	1				
101	1	KHN1079	ﾎﾞﾙﾄ ﾄｸｼｭ ｻﾞｶﾞﾈ ｸﾐｺﾐ	BOLT;SPL	5				
102	1	KMR0306	ﾗﾊﾞｰ;ｸﾞﾛﾒｯﾄ	GROMMET	1				
103	1	KRN14740	ｶﾊﾞｰ	COVER	1		210A5 -1181 210L5 -1165	=	KRN14741
103	1	KRN14741	ｶﾊﾞｰ	COVER	1		210A5 1182- 210L5 1166-		
104	1	KHN1079	ﾎﾞﾙﾄ ﾄｸｼｭ ｻﾞｶﾞﾈ ｸﾐｺﾐ	BOLT;SPL	4				
105	1	KRN10530	ｶﾊﾞｰ;ｾﾝﾀ	COVER;CENTER	1				
106	1	KHN1079	ﾎﾞﾙﾄ ﾄｸｼｭ ｻﾞｶﾞﾈ ｸﾐｺﾐ	BOLT;SPL	2				
107	1	KRN14660	ｶﾊﾞｰ;ｾﾝﾀ	COVER;CENTER	1				
108	1	KHN1079	ﾎﾞﾙﾄ ﾄｸｼｭ ｻﾞｶﾞﾈ ｸﾐｺﾐ	BOLT;SPL	3				
109	1	KRN14670	ﾌﾟﾚｰﾄ;ﾗﾊﾞｰ	PLATE;RUBBER	1				
110	1	105R008Y025R	ｾﾑｽB M 8X 25	BOLT;SEMS	4		210A5 -1361 210L5 -1235	<	105R008Y020R
110	1	105R008Y020R	ｾﾑｽB M 8X 20	BOLT;SEMS	4		210A5 1362- 210L5 1236-		
111	1	KTN1090	ﾌﾟﾚｰﾄ	PLATE	4				
112	1	KRN14650	ｶﾊﾞｰ;ｾﾝﾀ	COVER;CENTER	1				
113	1	KHN1079	ﾎﾞﾙﾄ ﾄｸｼｭ ｻﾞｶﾞﾈ ｸﾐｺﾐ	BOLT;SPL	3				
114	1	KRN14580	ｶﾊﾞｰ;ﾄｯﾌﾟ	COVER;TOP	1				
115	1	KHN1079	ﾎﾞﾙﾄ ﾄｸｼｭ ｻﾞｶﾞﾈ ｸﾐｺﾐ	BOLT;SPL	2				
116	1	KHN1079	ﾎﾞﾙﾄ ﾄｸｼｭ ｻﾞｶﾞﾈ ｸﾐｺﾐ	BOLT;SPL	4				
117	1	KRN12640	ｶﾊﾞｰ	COVER	1				
118	1	KHN1079	ﾎﾞﾙﾄ ﾄｸｼｭ ｻﾞｶﾞﾈ ｸﾐｺﾐ	BOLT;SPL	3				
119	1	KRN12650	ｶﾊﾞｰ	COVER	1				
120	1	KHN1079	ﾎﾞﾙﾄ ﾄｸｼｭ ｻﾞｶﾞﾈ ｸﾐｺﾐ	BOLT;SPL	3				
121	1A	KRN12340DM	ｶﾊﾞｰ;ﾌﾛﾝﾄ ASSY	COVER;FRONT	1				
122	2	182-008SR	ﾐｶﾞｷW 8	WASHER;PLAIN	2				
123	2	KAJ1495	ﾋﾟﾝ;ﾏﾂﾊﾞ 8 ﾏﾙﾖｳ	PIN;HAIR CLIP	2				
124	2	KTN1391	ｸｯｼｮﾝ;ﾗﾊﾞｰ (L=2150)	CUSHION;RUBBER	1				
125	2	KAN2771	ﾎﾞﾙﾄ ﾄｸｼｭ	BOLT;SPL	4				
126	2	KHN12750	ﾀﾞﾝﾊﾟ ｶﾞｽ	DAMPER;SPL	1				
127	2	KHN12730	ﾛｯｸ;ﾊｳｽ	LOCK;HOUSE	1				
128	2	105R010Y020R	ｾﾑｽB M10X 20	BOLT;SEMS	2				
129	2	KHN12740	ﾌﾞﾗｹｯﾄ (ｷｬｯﾁ)	BRACKET	1				
130	2	105R008Y020R	ｾﾑｽB M 8X 20	BOLT;SEMS	2				
131	2A	KRN12360G1	ｶﾊﾞｰ;ﾌﾛﾝﾄ	COVER;FRONT	1				
132	4	KHN3390	ﾁｮｳﾊﾞﾝ	HINGE	2				
133	2	KRN12350G1	ｶﾊﾞｰ;ﾌﾛﾝﾄ	COVER;FRONT	1				
134	1	KHN1079	ﾎﾞﾙﾄ ﾄｸｼｭ ｻﾞｶﾞﾈ ｸﾐｺﾐ	BOLT;SPL	5				
135	1	KRN12370G1	ｶﾊﾞｰ (ﾀﾝｸ)	COVER	1				
136	1	KHN1079	ﾎﾞﾙﾄ ﾄｸｼｭ ｻﾞｶﾞﾈ ｸﾐｺﾐ	BOLT;SPL	2				
137	1	KHN12710Y1	ｶﾊﾞｰ;ｻｲﾄﾞ	COVER;SIDE	1				
138	1	KHN12720	ﾌﾞﾗｹｯﾄ (ｶﾊﾞｰ;ｻｲﾄﾞ)	BRACKET	1				
139	1	KHN1079	ﾎﾞﾙﾄ ﾄｸｼｭ ｻﾞｶﾞﾈ ｸﾐｺﾐ	BOLT;SPL	5				
140	1	105R012Y030R	ｾﾑｽB M12X 30	BOLT;SEMS	1				
141	1	KSN0921	ﾜｯｼｬ ﾄｸｼｭ	WASHER;SPL	1				
142	1	KHN2061	ﾜｯｼｬ;ﾗﾊﾞｰ	WASHER;RUB.	1				
143	1	KHN12680B1	ｽﾃｰ	STAY	1		210A5 -1696 210L5 -1360	<	KHN12681B1
143	1	KHN12681B1	ｽﾃｰ	STAY	1		210A5 1697-		

https://truckmanualshub.com/

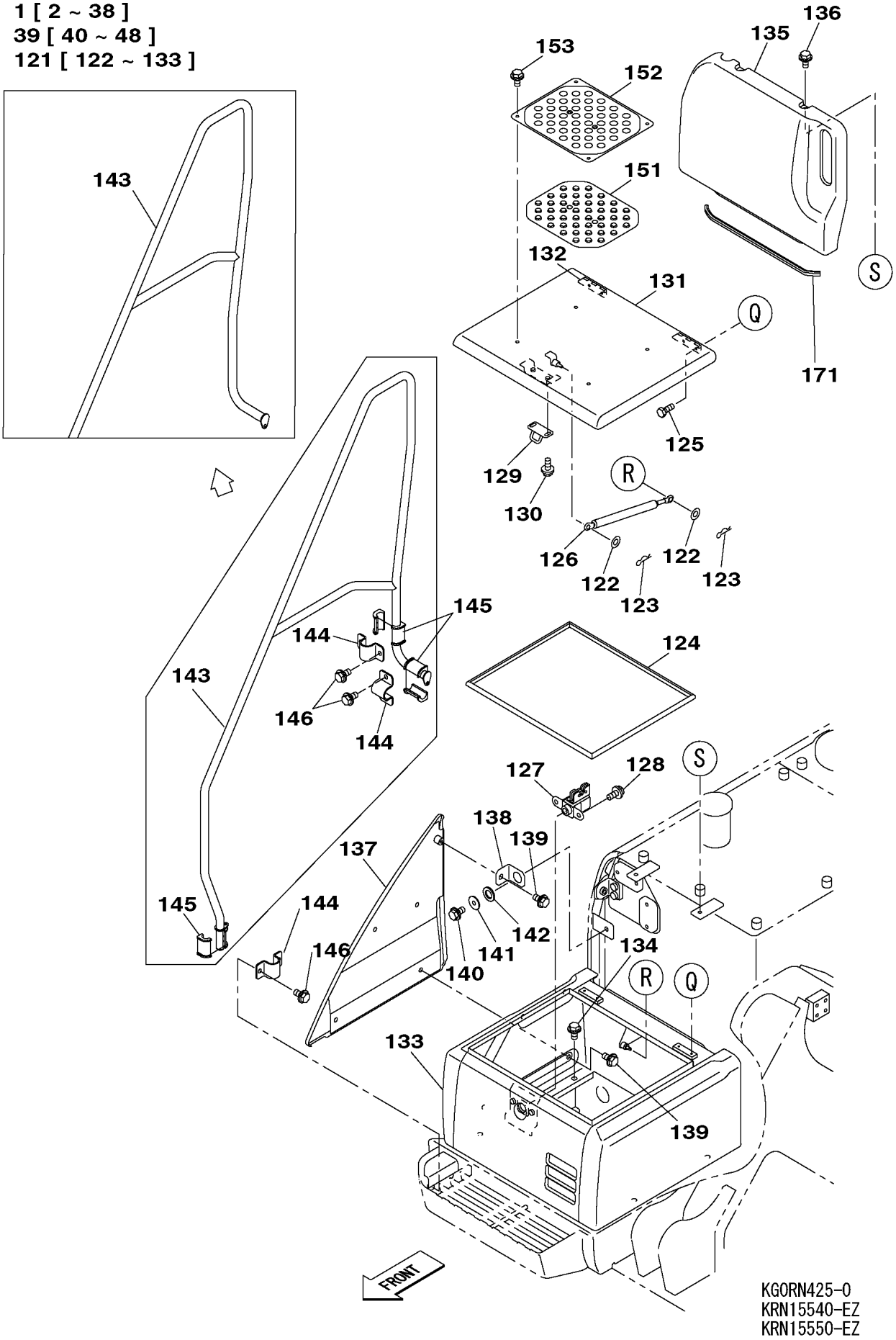

https://truckmanualshub.com/

210A5 1101－ 210L5 1101－

符号 ITEM	構成 COMPO	部品番号 PART NO.	部品名	PART NAME	個数 Q'TY	ｲﾝﾅｰ	適用号機 SERIAL_NO.	互換 ICA	代替部品 REPLACEABLE PART
143	1	KHN12681B1	ｽﾃｰ	STAY	1		210L5 1361-		
144	1	KHN12690	ｸﾗﾝﾌﾟ (ｽﾃｰ)	CLAMP	3				
145	1	KHN12700	ｸﾗﾝﾌﾟ (ｽﾃｰ)	CLAMP	6				
146	1	KHN1079	ﾎﾞﾙﾄ ﾄｸｼｭ ｻﾞｶﾞﾈ ｸﾐｺﾐ	BOLT;SPL	6				
147	1	KHN12020	ﾎﾞﾙﾄ ﾄｸｼｭ ｻﾞｶﾞﾈｸﾐｺﾐ	BOLT;SPL	5				
148	1	KHN12020	ﾎﾞﾙﾄ ﾄｸｼｭ ｻﾞｶﾞﾈｸﾐｺﾐ	BOLT;SPL	6				
149	1	KHN12020	ﾎﾞﾙﾄ ﾄｸｼｭ ｻﾞｶﾞﾈｸﾐｺﾐ	BOLT;SPL	7				
150	1	KHN12020	ﾎﾞﾙﾄ ﾄｸｼｭ ｻﾞｶﾞﾈｸﾐｺﾐ	BOLT;SPL	8				
151	1	KHN10940	ﾌﾟﾚｰﾄ;ﾗﾊﾞｰ	PLATE;RUBBER	2				
152	1	KHN13510B1	ｶﾊﾞｰ	COVER	2				
153	1	KHN13540	ﾎﾞﾙﾄ ﾄｸｼｭ ｻﾞｶﾞﾈｸﾐｺﾐ	BOLT;SPL	8				
154	1	KRN10700	ｼｰﾙ;ｸｯｼｮﾝ	SEAL;CUSHION	2				
155	1	KRN10710	ｼｰﾙ;ｸｯｼｮﾝ	SEAL;CUSHION	1				
156	1	KRN11110	ｼｰﾙ;ｸｯｼｮﾝ	SEAL;CUSHION	1				
157	1	KRN12740	ｼｰﾙ;ｸｯｼｮﾝ	SEAL;CUSHION	1				
158	1	KRN12750	ｼｰﾙ;ｸｯｼｮﾝ	SEAL;CUSHION	1				
159	1	KRN14770	ｲﾝｼｭﾚｰｼｮﾝ;ｱｺｰｽﾃｲｯｸ	INSULATION;ACOUSTIC	1				
160	1	KRN12760	ｼｰﾙ;ｸｯｼｮﾝ	SEAL;CUSHION	1				
161	1	KRN14680	ｼｰﾙ;ｸｯｼｮﾝ	SEAL;CUSHION	1				
162	1	KRN14690	ｼｰﾙ;ｸｯｼｮﾝ	SEAL;CUSHION	1				
163	1	KRN14200	ｼｰﾙ;ｸｯｼｮﾝ	SEAL;CUSHION	1				
164	1	KRN14210	ｼｰﾙ;ｸｯｼｮﾝ	SEAL;CUSHION	1				
165	1	KRN10770	ｼｰﾙ;ｸｯｼｮﾝ	SEAL;CUSHION	1		210A5 -2373 210L5 -1533		
165	1	KRN19190	ｼｰﾙ;ｸｯｼｮﾝ	SEAL;CUSHION	1		210A5 2374- 210L5 1534-		
166	1	KRN10780	ｼｰﾙ;ｸｯｼｮﾝ	SEAL;CUSHION	1				
167	1	KRN10790	ｼｰﾙ;ｸｯｼｮﾝ	SEAL;CUSHION	1				
168	1	KRN12700	ｲﾝｼｭﾚｰｼｮﾝ;ｱｺｰｽﾃｲｯｸ	INSULATION;ACOUSTIC	1				
169	1	KRN12710	ｲﾝｼｭﾚｰｼｮﾝ;ｱｺｰｽﾃｲｯｸ	INSULATION;ACOUSTIC	2				
170	1	KRN14180	ｼｰﾙ;ｸｯｼｮﾝ	SEAL;CUSHION	2				
171	1	KRN12790	ｸｯｼｮﾝ;ﾗﾊﾞｰ L=560	CUSHION;RUBBER	1				
172	1	KRN14110	ｼｰﾙ;ｸｯｼｮﾝ	SEAL;CUSHION	1				
173	1	KRN13360	ｼｰﾙ;ｸｯｼｮﾝ	SEAL;CUSHION	1				
174	1	KBN11490	ｼｰﾙ;ｸｯｼｮﾝ	SEAL;CUSHION	1				
175	1	KRN14150	ｼｰﾙ;ｸｯｼｮﾝ	SEAL;CUSHION	1				
176	1	KRN14160	ｼｰﾙ;ｸｯｼｮﾝ	SEAL;CUSHION	1				
177	1	KRN14230	ｲﾝｼｭﾚｰｼｮﾝ;ｱｺｰｽﾃｲｯｸ	INSULATION;ACOUSTIC	2				
178	1	KRN14530	ｼｰﾙ;ｸｯｼｮﾝ	SEAL;CUSHION	2				
179	1	KRN14540	ｼｰﾙ;ｸｯｼｮﾝ	SEAL;CUSHION	1				
180	1	KRN1133	ﾎﾙﾀﾞ (ｸﾞﾘｰｽ ｶﾞﾝ)	HOLDER;SPL	1				
181	1	105R008Y020R	ｾﾑｽB M 8X 20	BOLT;SEMS	2				
182	1	KHN3548	ｼﾑ;ﾌﾟﾚｰﾄ	SHIM;PLATE	1				

https://truckmanualshub.com/

1 [2 ~ 13] 18 [19 ~ 114] 19 [20 ~ 27] 28 [29 ~ 49]
51 [52 ~ 65] 66 [67 ~ 92] 120 [121 ~ 156] 167 [168 , 169]

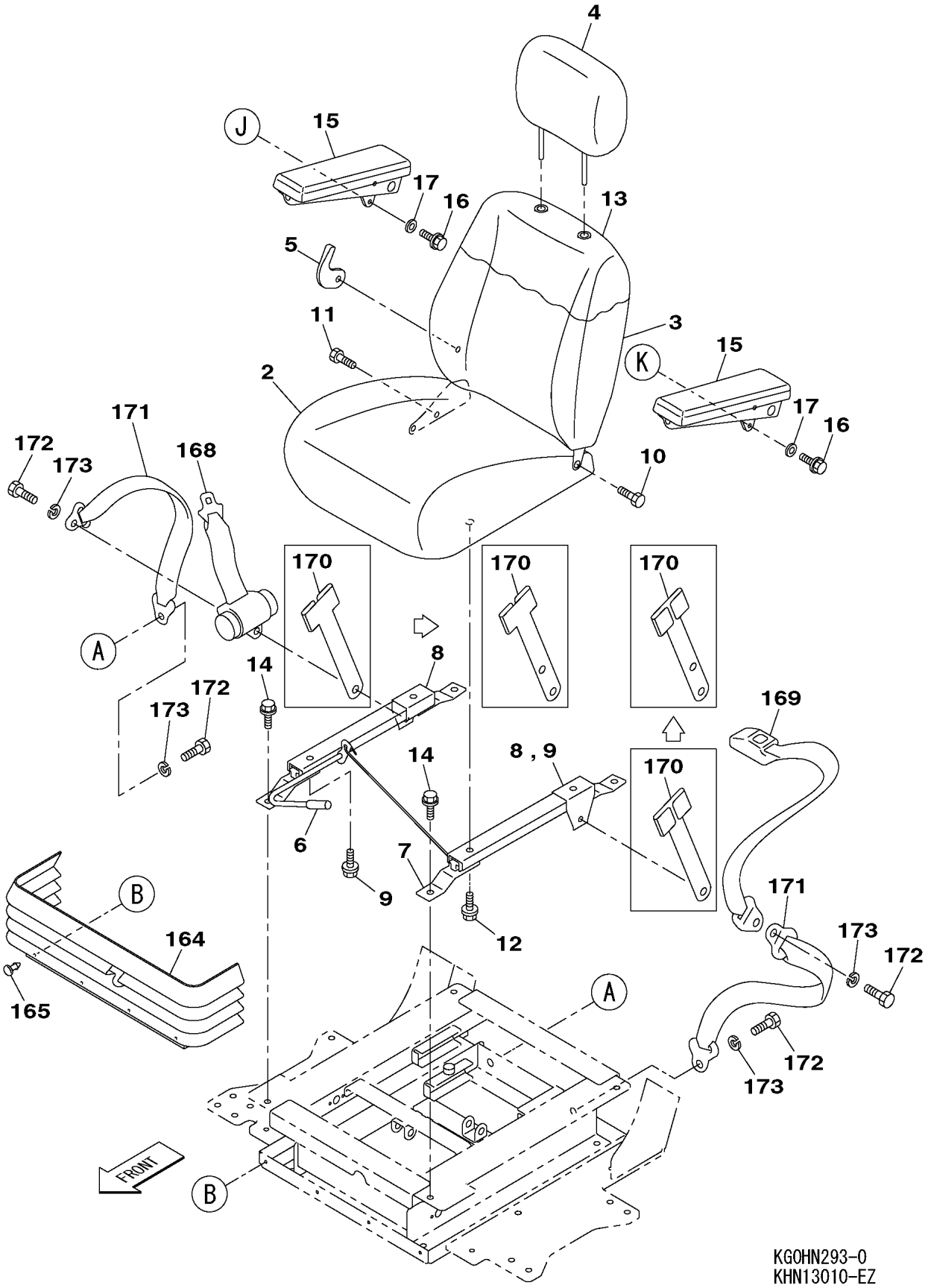

https://truckmanualshub.com/

210A5 1101－ 210L5 1101－

符号 ITEM	構成 COMPO	部品番号 PART NO.	部品名	PART NAME	個数 Q'TY	ｲﾝﾅｰ	適用号機 SERIAL_NO.	互換 ICA	代替部品 REPLACEABLE PART
1	1A	KHN10500	ｼｰﾄ;ｵﾍﾟﾚｰﾀ (ﾌｧﾌﾞﾘｯｸ)	SEAT;OPERATORS	1				
2	2	KHN11170	ｼｰﾄ ｸｯｼｮﾝ ASSY ﾊｯｽｲ	SEAT;SPL	1				
3	2	KHN11180	ｼｰﾄ ﾊﾞｯｸ ASSY ﾊｯｽｲ	SEAT;SPL	1				
4	2	KHN11190	ﾚｽﾄ;ﾍｯﾄﾞ ﾊｯｽｲ	REST;HEAD	1				
5	2	KHN3555	ﾉﾌﾞ ﾋﾝｼﾞ	KNOB	1				
6	2	KHN3556	ｼｰﾄ ｽﾗｲﾄﾞ (R)	SEAT;SPL	1				
7	2	KHN3557	ｼｰﾄ ｽﾗｲﾄﾞ (L)	SEAT;SPL	1				
8	2	KHN3558	ﾌﾞﾗｹｯﾄ ｱﾝｶｰ (R)	BRACKET	1		210A5 NOT USED 210L5 NOT USED		
8	2	KHN17650	ﾌﾞﾗｹｯﾄ ｱﾝｶｰ	BRACKET	2				
9	2	KHN3559	ﾌﾞﾗｹｯﾄ ｱﾝｶｰ (L)	BRACKET	1		210A5 NOT USED 210L5 NOT USED		
9	2	KHN17670	ｾﾑｽB M8X20	BOLT;SEMS	2				
10	2	KHN3560	ﾎﾞﾙﾄ ﾋﾝｼﾞ	BOLT;SPL	1				
11	2	KHN3561	ｾﾑｽB M8X25	BOLT;SEMS	2				
12	2	KHN3562	ｾﾑｽB M8X30	BOLT;SEMS	4		210A5 NOT USED 210L5 NOT USED		
12	2	KHN17660	ｾﾑｽB M8X16	BOLT;SEMS	2				
13	2	KHN3563	ｶﾊﾞｰ;ﾀﾞｽﾄ	COVER;DUST	1		210A5 NOT USED 210L5 NOT USED		
13	2	KHN17680	ｶﾊﾞｰ;ﾀﾞｽﾄ	COVER;DUST	1				
14	1	105R008Y020R	ｾﾑｽB M 8X 20	BOLT;SEMS	4		210A5 NOT USED 210L5 NOT USED		
14	1	KHN17270	ﾎﾞﾙﾄ ﾄｸｼｭ M8X20 ｻﾞｶﾞ	BOLT;SPL	4				
15	1	KHN11720	ﾚｽﾄ;ｱｰﾑ	REST;ARM	2				
16	1	KHN0418	ｺｳﾘｷB M8X20 (ｸﾛﾒｯｷ)	BOLT;HIGH STRENGTH	4		210A5 NOT USED 210L5 NOT USED		
16	1	KHN17270	ﾎﾞﾙﾄ ﾄｸｼｭ M8X20 ｻﾞｶﾞ	BOLT;SPL	4				
17	1	KHN0420	ﾐｶﾞｷW 8 (ｸﾛﾒｯｷ)	WASHER;PLAIN	4		210A5 NOT USED 210L5 NOT USED		
17.01	1	KHN15150	ﾌﾞﾗｹｯﾄ ｱｰﾑﾚｽﾄ	BRACKET	1		210A5 -1424 210L5 -1263		
17.01	1	KHN19770	ﾌﾞﾗｹｯﾄ ｱｰﾑﾚｽﾄ	BRACKET	1		210A5 1425- 210L5 1264-		
17.02	1	KHN17270	ﾎﾞﾙﾄ ﾄｸｼｭ M8X20 ｻﾞｶﾞ	BOLT;SPL	2				
18	1	KHN12200	ﾎﾞｯｸｽ;ｺﾝｿｰﾙ ﾕﾆｯﾄ	BOX;CONSOLE	1		210A5 -1424 210L5 -1263		
18	1A	KHN12201	ﾎﾞｯｸｽ;ｺﾝｿｰﾙ ﾕﾆｯﾄ	BOX;CONSOLE	1		210A5 1425- 210L5 1264-		
19	2	KHN13151	ﾌﾞﾗｹｯﾄ;ｼｰﾄ	BRKT;SEAT	1		210A5 -1424 210L5 -1263		
19	2A	KHN13152	ﾌﾞﾗｹｯﾄ;ｼｰﾄ	BRKT;SEAT	1		210A5 1425- 210L5 1264-		
20	3	KHN13391	ﾍﾞｰｽ ｺﾝｿｰﾙ	BASE;SPL	1		210A5 -1101 210L5 NOT USED		
20	3	KHN18230	ﾍﾞｰｽ ｺﾝｿｰﾙ	BASE;SPL	1		210A5 1102-		
21	3	KHN13400	ﾍﾞｰｽ ｽﾗｲﾄﾞ ﾚｰﾙ	BASE;SPL	1		210A5 NOT USED 210L5 NOT USED		
21	3	KHN13401	ﾍﾞｰｽ ｽﾗｲﾄﾞ ﾚｰﾙ	BASE;SPL	1				
22	3	KHN13420	ﾚｰﾙ;ｽﾗｲﾄﾞ (ﾐｷﾞ)	RAIL;SLIDE	1				
23	3	KHN13430	ﾚｰﾙ;ｽﾗｲﾄﾞ (ﾋﾀﾞﾘ)	RAIL;SLIDE	1				
24	3	KHN13411	ﾚﾊﾞｰ;ﾊﾝﾄﾞ ｽﾗｲﾄﾞ	LEVER;HAND	1				
25	3	108R008Y016R	ﾛｯｶｸｱﾅB M 8X 16	BOLT;HEX SOC HD	8				
26	3	183-108VR	SW 8	WASHER;SPRING	4				
27	3	182-008SR	ﾐｶﾞｷW 8	WASHER;PLAIN	8				
27.01	3	KHN18240	ﾍﾞｰｽ ｱｰﾑﾚｽﾄ (BASE AR	BASE;SPL	1		210A5 1102-1424 210L5 -1263		
27.01	3	KHN19780	ﾍﾞｰｽ ｱｰﾑﾚｽﾄ (BASE AR	BASE;SPL	1		210A5 1425- 210L5 1264-		
27.02	3	105R008Y016R	ｾﾑｽB M 8X 16	BOLT;SEMS	4		210A5 1102-		

https://truckmanualshub.com/

1 [2 ~ 13] 18 [19 ~ 114] 19 [20 ~ 27] 28 [29 ~ 49]
51 [52 ~ 65] 66 [67 ~ 92] 120 [121 ~ 156]
151 [152 ~ 156] 167 [168 , 169]

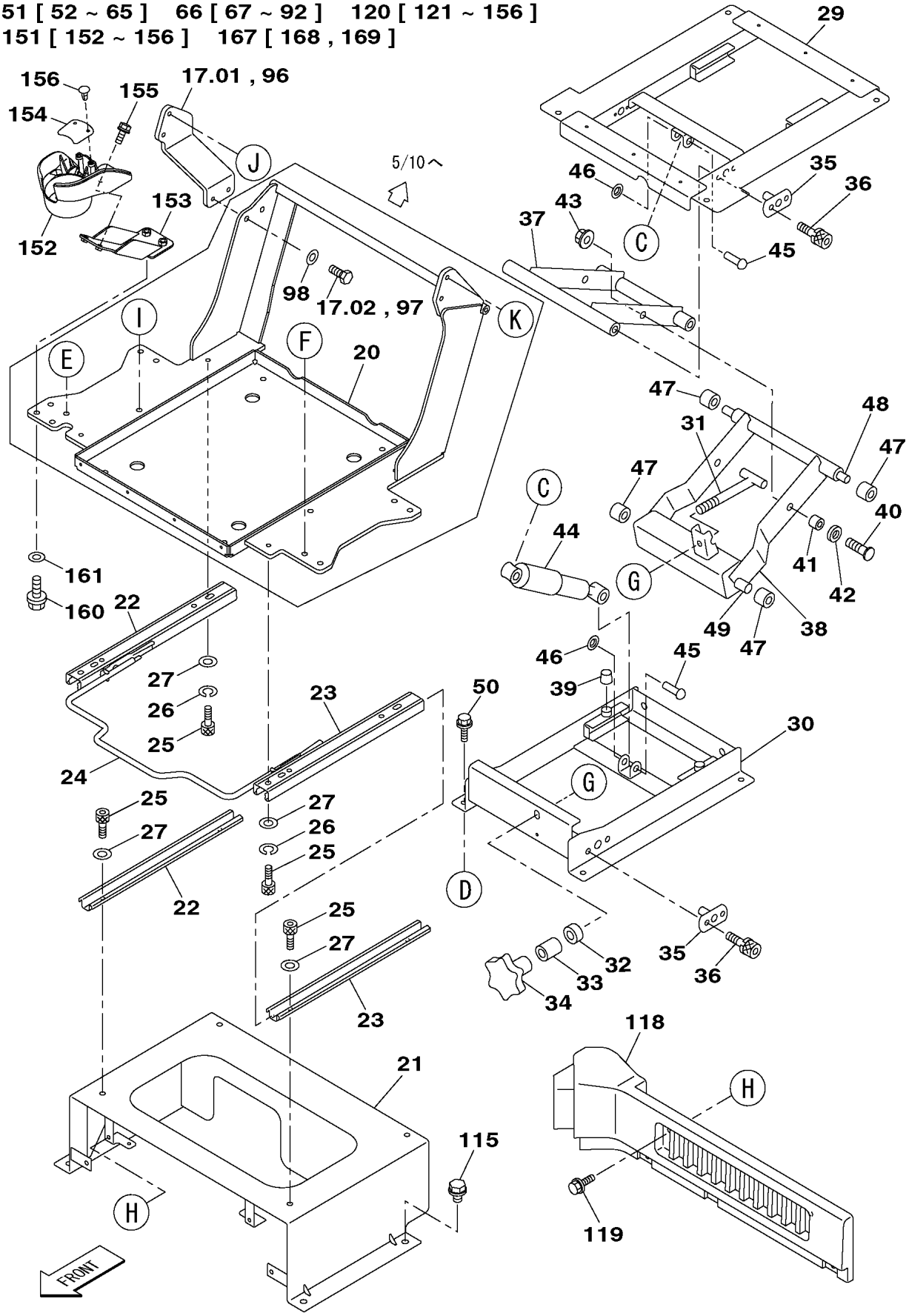

KGOHN293-0
KHN13010-EZ

https://truckmanualshub.com/

210A5 1101－ 210L5 1101－

符号 ITEM	構成 COMPO	部品番号 PART NO.	部品名	PART NAME	個数 Q'TY	ｲﾝﾅｰ	適用号機 SERIAL_NO.	互換 ICA	代替部品 REPLACEABLE PART
28	2A	KHN13361	ｻｽﾍﾟﾝｼｮﾝ ｼｰﾄ	SUSPENSION	1				
29	3	KHN13371	ﾌﾚｰﾑ ｼｰﾄ	FRAME;SPL	1				
30	3	KHN13380	ﾍﾞｰｽ ｻｽﾍﾟﾝｼｮﾝ	BASE;SPL	1				
31	3	KHN2477	ﾎﾞﾙﾄ;T	BOLT;T	1				
32	3	KHN2478	ﾍﾞｱﾘﾝｸﾞ ｽﾗｽﾄ	BEARING;ROLLING	1				
33	3	KHN2479	ｽﾍﾟｰｻ	SPACER	1				
34	3	KHN2611	ﾉﾌﾞ ｼﾒﾂｹ	KNOB	1				
35	3	KHN2481	ｼｬﾌﾄ ｼﾞｸｳｹ	SHAFT	4				
36	3	KHN2482	ﾎﾞﾙﾄ ｷｬｯﾌﾟ	BOLT;SPL	8				
37	3	KHN2483	ｱｰﾑ ｸﾛｽ	ARM;SPL	1				
38	3	KHN2484	ｱｰﾑ NH	ARM;SPL	1				
39	3	KHN1853	ｽﾄｯﾊﾟ;ｺﾞﾑ	STOPPER;RUBBER	2				
40	3	KHN2485	ﾋﾟﾝ;ﾋﾝｼﾞ	PIN;HINGE	2				
41	3	KHN2486	ﾌﾞｼｭ ﾄｸｼｭ	BUSH;SPL	2				
42	3	182-010SR	ﾐｶﾞｷW 10	WASHER;PLAIN	2				
43	3	166R010SR	ﾅｲﾛﾝN M10	NUT;NYLON LOCK	2				
44	3	KHN1855	ﾀﾞﾝﾊﾟ;ｵｲﾙ	DAMPER;OIL	1				
45	3	KHN2487	ﾘﾍﾞｯﾄ ﾄｸｼｭ	RIVET;SPL	2				
46	3	KHN2488	ﾅｯﾄ ﾌﾟｯｼｭ	NUT;SPL	2				
47	3	KHN1854	ﾛｰﾗ	ROLLER	4				
48	3	KHN2489	ｼｬﾌﾄ	SHAFT	1				
49	3	KHN2490	ｼｬﾌﾄ	SHAFT	1				
50	2	105R008Y020R	ｾﾑｽB M 8X 20	BOLT;SEMS	4				
51	2A	KHN13131	ﾎﾞｯｸｽ;ｺﾝｿｰﾙ (R)	BOX;CONSOLE	1				
52	3	KHN13181	ﾌﾚｰﾑ ;ｺﾝｿｰﾙﾎﾞｯｸｽ(R)	FRAME;SPL	1				
53	3	KHN13191	ﾌﾚｰﾑ ;ﾁﾙﾄ(R)	FRAME;SPL	1				
54	3	KHN10740	ﾋﾟﾝ;ｽﾄﾚｰﾄ	PIN;PLAIN	1				
55	3	KHN2261	ﾌﾞｼｭ;ｵｲﾙﾚｽ	BUSH;OILLESS	2				
56	3	KHN2272	ﾄﾒﾜ E 24	LOCK RING;SPL	2				
57	3	KHN13231	ｽﾌﾟﾘﾝｸﾞ;ﾈｼﾞﾘｺｲﾙ (ｺﾝｿ	SPRING;TORSION COIL	1				
58	3	KHN13210	ﾋﾟﾝ;ｽﾄﾚｰﾄ	PIN;PLAIN	1				
59	3	KHN2397	ﾄﾒﾜ E19	LOCK RING;SPL	2				
60	3	KHN13201	ﾘﾝｸ (ﾁﾙﾄﾚﾊﾞｰR)	LINK	1				
61	3	KHN2249	ﾌﾞｼｭ;ｵｲﾙﾚｽ	BUSH;OILLESS	4				
62	3	KHN13240	ｽﾌﾟﾘﾝｸﾞ;ﾋｯﾊﾟﾘ ﾁﾙﾄﾚﾊﾞ	SPRING;EXTENSION	1				
63	3	KHN13220	ﾋﾟﾝ;ｽﾄﾚｰﾄ	PIN;PLAIN	1				
64	3	182-016SR	ﾐｶﾞｷW 16	WASHER;PLAIN	2				
65	3	KHN2270	ﾄﾒﾜ E 15	LOCK RING;SPL	2				
66	2A	KHN13141	ﾎﾞｯｸｽ;ｺﾝｿｰﾙ (L)	BOX;CONSOLE	1				
67	3	KHN13251	ﾌﾚｰﾑ ｺﾝｿｰﾙﾎﾞｯｸｽ(L)	FRAME;SPL	1				
68	3	KHN13261	ﾌﾚｰﾑ ;ﾁﾙﾄ(L)	FRAME;SPL	1				
69	3	KHN10740	ﾋﾟﾝ;ｽﾄﾚｰﾄ	PIN;PLAIN	1				
70	3	KHN2261	ﾌﾞｼｭ;ｵｲﾙﾚｽ	BUSH;OILLESS	2				
71	3	KHN2272	ﾄﾒﾜ E 24	LOCK RING;SPL	2				
72	3	KHN13231	ｽﾌﾟﾘﾝｸﾞ;ﾈｼﾞﾘｺｲﾙ (ｺﾝｿ	SPRING;TORSION COIL	1				
73	3	KHN13210	ﾋﾟﾝ;ｽﾄﾚｰﾄ	PIN;PLAIN	1				
74	3	KHN2397	ﾄﾒﾜ E19	LOCK RING;SPL	2				
75	3	KHN13271	ﾘﾝｸ (ﾁﾙﾄﾚﾊﾞｰL)	LINK	1				
76	3	KHN2249	ﾌﾞｼｭ;ｵｲﾙﾚｽ	BUSH;OILLESS	4				
77	3	KHN13240	ｽﾌﾟﾘﾝｸﾞ;ﾋｯﾊﾟﾘ ﾁﾙﾄﾚﾊﾞ	SPRING;EXTENSION	1				
78	3	KHN13281	ﾘﾝｸ ｹﾞｰﾄﾚﾊﾞｰ	LINK	1				
79	3	182-016SR	ﾐｶﾞｷW 16	WASHER;PLAIN	1				
80	3	KHN2270	ﾄﾒﾜ E 15	LOCK RING;SPL	1				
81	3	KHN13290	ｽﾌﾟﾘﾝｸﾞ;ﾈｼﾞﾘｺｲﾙ ｹﾞｰﾄ	SPRING;TORSION COIL	1				
82	3	KHN13301	ﾌﾟﾚｰﾄ ﾁﾙﾄ	PLATE	1				
83	3	182-010SR	ﾐｶﾞｷW 10	WASHER;PLAIN	2				
84	3	378J0080Z	E-ﾄﾒﾜ 8	RING;E	1				
85	3	KHN13310	ﾌﾞｼｭ;ｵｲﾙﾚｽ	BUSH;OILLESS	1				
86	3	KHN13320	ﾛｰﾗ;ｶﾞｲﾄﾞ	ROLLER;GUIDE	1				
87	3	KHN0482	ﾜｯｼｬ M6 ﾒｯｷ	WASHER;SPL	2				

https://truckmanualshub.com/

1 [2 ~ 13] 18 [19 ~ 114] 19 [20 ~ 27] 28 [29 ~ 49]
51 [52 ~ 65] 66 [67 ~ 92] 120 [121 ~ 156]
151 [152 ~ 156] 167 [168 , 169]

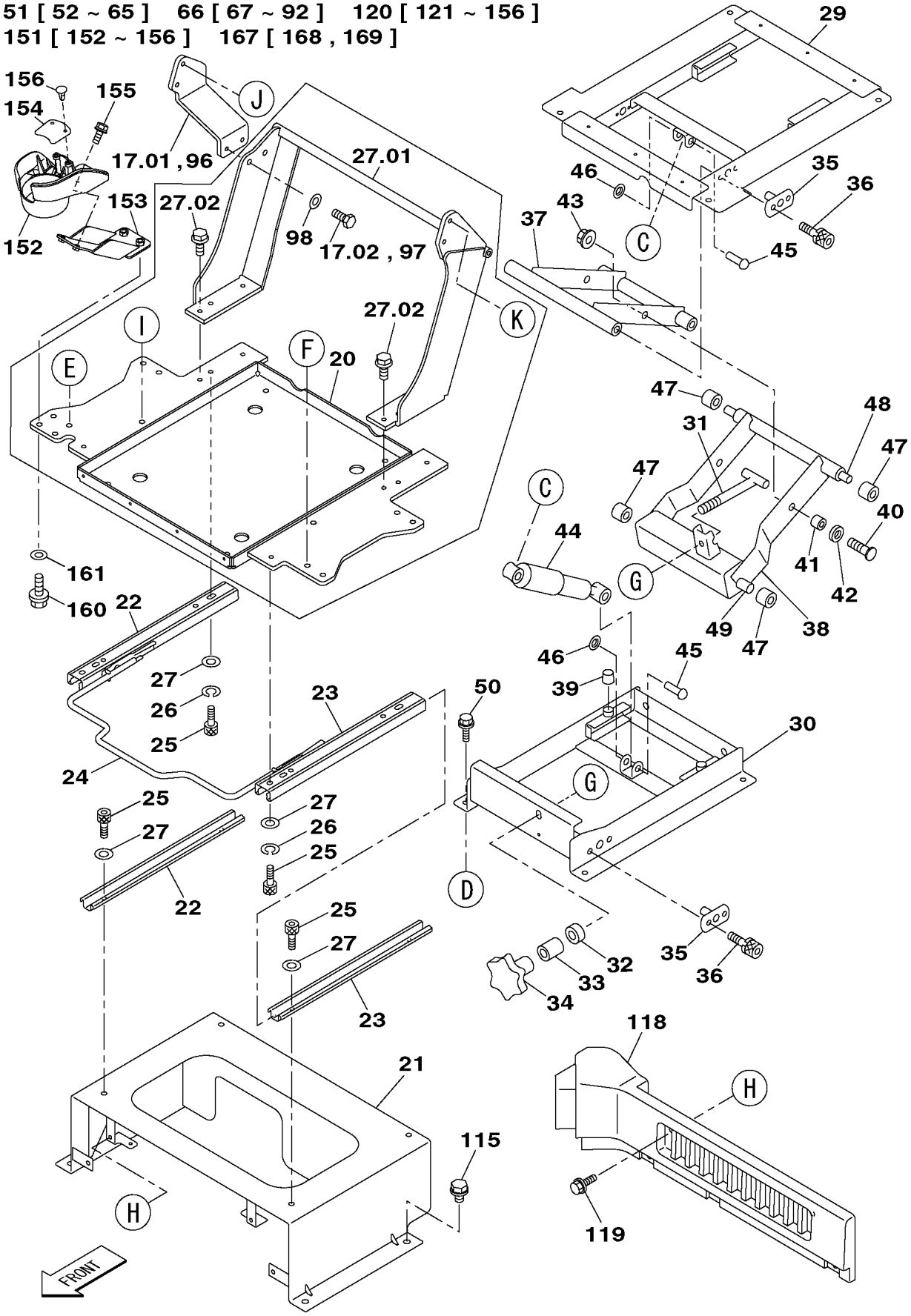

KGOHN293-0
KHN13010-EZ

https://truckmanualshub.com/

210A5 1101－ 210L5 1101－

符号 ITEM	構成 COMPO	部品番号 PART NO.	部品名	PART NAME	個数 Q'TY	ｲﾝﾅｰ	適用号機 SERIAL_NO.	互換 ICA	代替部品 REPLACEABLE PART
88	3	KEH0114	ｺｳﾘｷW M10 ﾒｯｷ	WASHER;HIGH STRENGTH	1				
89	3	378J0050Z	E-ﾄﾒﾜ 5	RING;E	2				
90	3	KHN13341	ﾘﾝｸ ｹﾞｰﾄﾊﾞｰ	LINK	1				
91	3	182-006SR	ﾐｶﾞｷW 6	WASHER;PLAIN	1				
92	3	KHR14930	ｽｲｯﾁ;ﾘﾐｯﾄ	SWITCH;LIMIT	1				
93	2	KHJ1632	ﾛｯｶｸｱﾅB (ﾎﾞﾀﾝｱﾀﾏ)M10	BOLT;HEX SOC HD	8				
94	2	183-110VR	SW 10	WASHER;SPRING	8				
95	2	182-010SR	ﾐｶﾞｷW 10	WASHER;PLAIN	8				
96	2	KHN15150	ﾌﾞﾗｹｯﾄ ｱｰﾑﾚｽﾄ	BRACKET	1		210A5 NOT USED 210L5 NOT USED		
97	2	KHN0418	ｺｳﾘｷB M8X20 (ｸﾛﾒｯｷ)	BOLT;HIGH STRENGTH	2		210A5 NOT USED 210L5 NOT USED		
98	2	KHN0420	ﾐｶﾞｷW 8 (ｸﾛﾒｯｷ)	WASHER;PLAIN	2		210A5 NOT USED 210L5 NOT USED		
99	2A	KHN17040	ﾊﾞｰ ｹﾞｰﾄ ASSY	BAR;SPL	1				
100	3	KHN14881	ﾌﾞﾗｹｯﾄ ｶﾊﾞｰL	BRACKET	1				
101	3	KHN13331	ﾊﾞｰ ｹﾞｰﾄ	BAR	1				
102	3	KHN2249	ﾌﾞｼｭ;ｵｲﾙﾚｽ	BUSH;OILLESS	2				
103	3	182-016SR	ﾐｶﾞｷW 16	WASHER;PLAIN	1				
104	3	KHN2270	ﾄﾒﾜ E 15	LOCK RING;SPL	1				
105	3	KHN13350	ｽﾌﾟﾘﾝｸﾞ;ﾋｯﾊﾟﾘ ｹﾞｰﾄﾊﾞ	SPRING;EXTENSION	1				
106	3	KHN16810	ﾌﾞﾗｹｯﾄ ｽﾌﾟﾘﾝｸﾞ	BRACKET	1				
107	3	KHN2132	ｺｳﾘｷB M6X16 (ｻﾞｶﾞﾈｸﾐ	BOLT;HIGH STRENGTH	2				
108	2	KHN14871	ﾌﾞﾗｹｯﾄ ｶﾊﾞｰR	BRACKET	1				
109	2	KHN17070	ｶﾞｰﾄﾞ ｴｯｼﾞ (L=320)	GUARD	2				
110	2	KHN17060	ｶﾞｰﾄﾞ ｴｯｼﾞ(L=290)	GUARD	2				
111	2	KHN17050	ｸﾘｯﾌﾟ ｴｯｼﾞ	CLIP	6				
112	2	378J0050Z	E-ﾄﾒﾜ 5	RING;E	1		210A5 NOT USED 210L5 NOT USED		
113	2	182-006SR	ﾐｶﾞｷW 6	WASHER;PLAIN	1		210A5 NOT USED 210L5 NOT USED		
114	2	105R010Y016R	ｾﾑｽB M10X 16	BOLT;SEMS	2				
115	1	105R010Y016R	ｾﾑｽB M10X 16	BOLT;SEMS	4				
116	1	378J0050Z	E-ﾄﾒﾜ 5	RING;E	1				
117	1	182-006SR	ﾐｶﾞｷW 6	WASHER;PLAIN	1				
118	1	KHN12190	ｶﾊﾞｰ;ﾌﾛﾝﾄ ﾌﾞﾗｯｸ	COVER;FRONT	1		210A5 NOT USED 210L5 NOT USED		
119	1	KHN2132	ｺｳﾘｷB M6X16 (ｻﾞｶﾞﾈｸﾐ	BOLT;HIGH STRENGTH	4		210A5 NOT USED 210L5 NOT USED		
120	1A	--------	ｶﾊﾞｰ ｸﾞﾙｰﾌﾟﾋｮｳ (ｸﾞﾚｰ	COVER	1				
121	2A	KHN13971	ｶﾊﾞｰ;ﾄｯﾌﾟ ｺﾝｿｰﾙR ASS	COVER;TOP	1				
122	3	KHN12220	ｶﾊﾞｰ;ﾄｯﾌﾟ (ｺﾝｿｰﾙR) ｸ	COVER;TOP	1				
123	3	KHN15100	ﾉﾌﾞ ｽﾛｯﾄﾙ	KNOB	1				
124	3	KHN15110	ﾎﾞﾀﾝ ｽﾛｯﾄﾙ	BUTTON	1				
125	3	KHN15120	ｶﾊﾞｰ ｽﾛｯﾄﾙ	COVER	1				
126	3	KHN15130	ﾌﾞﾗｹｯﾄ ｽﾛｯﾄﾙ	BRACKET	1				
127	3	KHN15140	ｽﾌﾟﾘﾝｸﾞ;ｱｯｼｭｸ ｽﾛｯﾄﾙ	SPRING;COMPRESSION	1				
128	3	KHR2751	ｽｲｯﾁ ｽﾛｯﾄﾙ	SWITCH;SPL	1				
129	3	KHR2741	ﾊﾟｯｷﾝ ﾎﾞｳｽｲ	PACKING	1				
130	3	KHR2737	+ﾄﾗｽﾀｯﾌﾟS M5X14	SCREW;TAPPING	3				
131	3	KHN14071	ﾊﾟﾈﾙ ｼｰﾄ(ｺﾝｿｰﾙR)	PANEL;SPL	1				
132	2A	KHN14010	ｶﾊﾞｰ;ｱﾝﾀﾞ (ｺﾝｿｰﾙ R)A	COVER;UNDER	1				
133	3	KHN12260	ｶﾊﾞｰ;ｱﾝﾀﾞ (ｺﾝｿｰﾙR) ｸ	COVER;UNDER	1				
134	3	KHN12300	ｶﾊﾞｰ;ｻｲﾄﾞ (ｺﾝｿｰﾙRR)	COVER;SIDE	1				
135	3	KHN12320	ｶﾊﾞｰ;ｻｲﾄﾞ (ｺﾝｿｰﾙRL)	COVER;SIDE	1				
136	3	KHR2737	+ﾄﾗｽﾀｯﾌﾟS M5X14	SCREW;TAPPING	4				
137	2A	KHN13990	ｶﾊﾞｰ;ﾄｯﾌﾟ (ｺﾝｿｰﾙ L)	COVER;TOP	1				
138	3	KHN12240	ｶﾊﾞｰ;ﾄｯﾌﾟ (ｺﾝｿｰﾙL) ｸ	COVER;TOP	1				
139	3	KHN16770	ﾊﾟﾈﾙ ｼｰﾄ ｹﾞｰﾄﾚﾊﾞｰ	PANEL;SPL	1				
140	2A	KHN14030	ｶﾊﾞｰ;ｱﾝﾀﾞ (ｺﾝｿｰﾙ L)A	COVER;UNDER	1				

https://truckmanualshub.com/

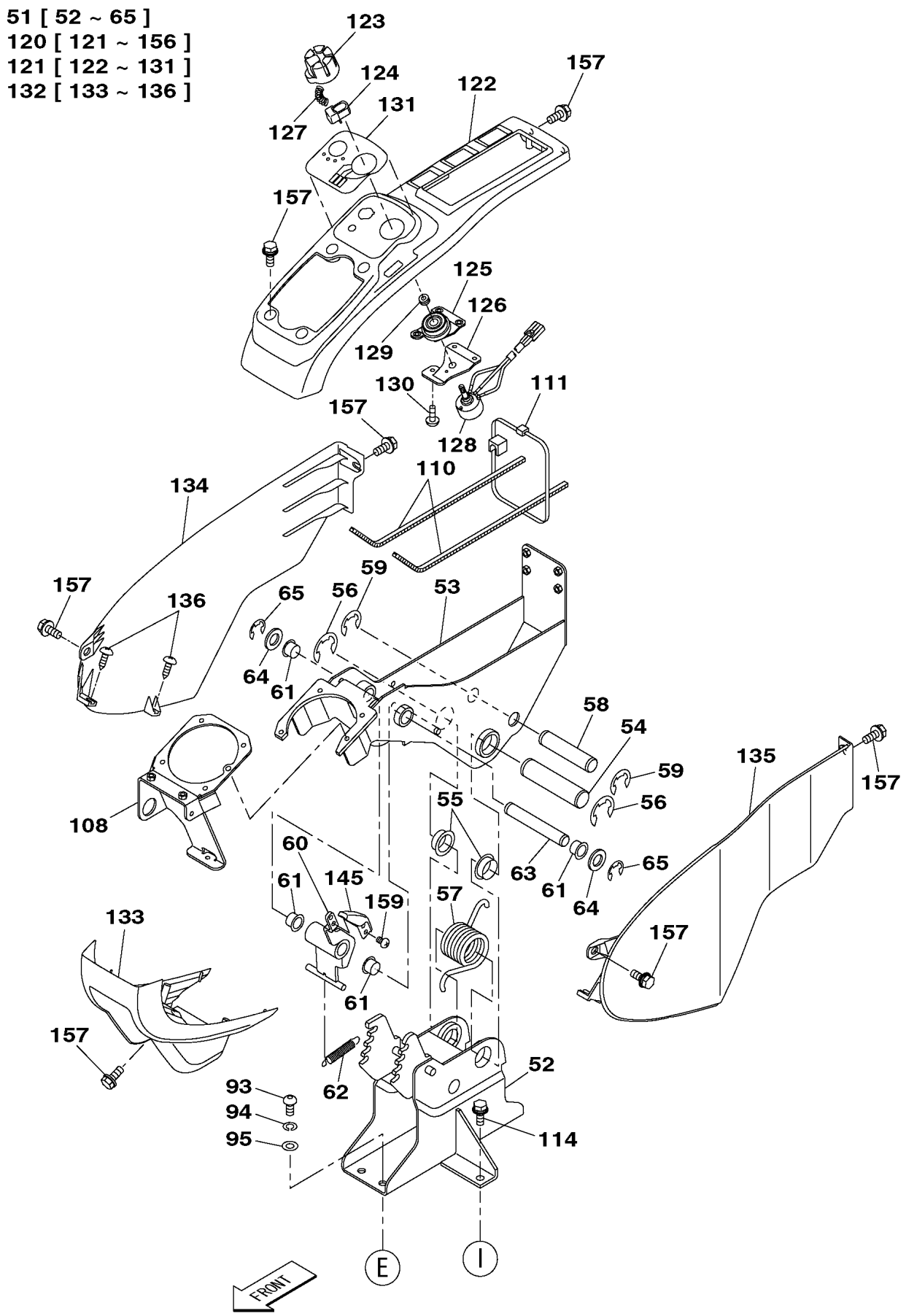

KGOHN293-0
KHN13010-EZ

https://truckmanualshub.com/

210A5 1101－ 210L5 1101－

符号 ITEM	構成 COMPO	部品番号 PART NO.	部品名	PART NAME	個数 Q'TY	ｲﾝﾅｰ	適用号機 SERIAL_NO.	互換 ICA	代替部品 REPLACEABLE PART
141	3	KHN12280	ｶﾊﾞｰ;ｱﾝﾀﾞ (ｺﾝｿｰﾙL) ｸ	COVER;UNDER	1				
142	3	KHN12340	ｶﾊﾞｰ;ｻｲﾄﾞ (ｺﾝｿｰﾙLL)	COVER;SIDE	1				
143	3	KHN13730	ｶﾊﾞｰ;ｻｲﾄﾞ (ｺﾝｿｰﾙLR)	COVER;SIDE	1				
144	3	KHR2737	+ﾄﾗｽﾀｯﾌﾟS M5X14	SCREW;TAPPING	6				
145	2	KHN12360	ﾚﾊﾞｰ ﾁﾙﾄ R	LEVER;SPL	1				
146	2	KHN12370	ﾚﾊﾞｰ ﾁﾙﾄ L	LEVER;SPL	1				
147	2	KHN12380	ｸﾞﾘｯﾌﾟ ｹﾞｰﾄﾚﾊﾞｰ	GRIP	1		210A5 NOT USED 210L5 NOT USED		
147	2A	KHN17080	ｸﾞﾘｯﾌﾟ ｹﾞｰﾄﾚﾊﾞｰASSY	GRIP	1				
148	3	KHN12380	ｸﾞﾘｯﾌﾟ ｹﾞｰﾄﾚﾊﾞｰ	GRIP	1				
149	3	KHN17090	ﾌﾟﾚｰﾄ ｸﾞﾘｯﾌﾟ	PLATE	1				
150	3	KHR2733	+ﾄﾗｽﾀｯﾌﾟS M4X12	SCREW;TAPPING	2				
151	2A	KHN14050	ﾎﾙﾀﾞ ｶｯﾌﾟ ASSY	HOLDER;SPL	1				
152	3	KHN12400	ﾎﾙﾀﾞ ｶｯﾌﾟ	HOLDER;SPL	1				
153	3	KHN14750	ﾌﾞﾗｹｯﾄ ｶｯﾌﾟﾎﾙﾀﾞ	BRACKET	1				
154	3	KHN14760	ﾌﾟﾚｰﾄ;ﾗﾊﾞｰ ｶｯﾌﾟﾎﾙﾀﾞｰ	PLATE;RUBBER	1				
155	3	KHN2132	ｺｳﾘｷB M6X16 (ｻﾞｶﾞﾈｸﾐ	BOLT;HIGH STRENGTH	2				
156	3	KHN2470	ｸﾘｯﾌﾟ ｶﾇｰ	CLIP;SPL	2				
157	1	KHN2132	ｺｳﾘｷB M6X16 (ｻﾞｶﾞﾈｸﾐ	BOLT;HIGH STRENGTH	18				
158	1	KHN10570	ﾛｯｶｸｱﾅB M6X10 ｸﾛﾒｯｷ	BOLT;HEX SOC HD	2		210A5 NOT USED 210L5 NOT USED		
158	1	KHN17280	ﾛｯｶｸｱﾅB M6X10 ｸﾛﾒｯｷ	BOLT;HEX SOC HD	2				
159	1	KHN14060	+ﾅﾍﾞS M5X0.8X8	SCREW;PAN HD	4		210A5 NOT USED 210L5 NOT USED		
159	1	KHN1407	+ﾅﾍﾞS M5X10(ｻﾞｶﾞﾈｯｷ)	SCREW;PAN HD	4				
160	1	KHN0418	ｺｳﾘｷB M8X20 (ｸﾛﾒｯｷ)	BOLT;HIGH STRENGTH	2		210A5 NOT USED 210L5 NOT USED		
160	1	KHN17270	ﾎﾞﾙﾄ ﾄｸｼｭ M8X20 ｻﾞｶﾞ	BOLT;SPL	2				
161	1	KHN0420	ﾐｶﾞｷW 8 (ｸﾛﾒｯｷ)	WASHER;PLAIN	2		210A5 NOT USED 210L5 NOT USED		
162	1	KHN2058	ﾊｲｻﾞﾗ	ASHTRAY	1				
163	1	KHN2336	ｹｰｽ ﾊｲｻﾞﾗ	CASE;SPL	1				
164	1	KHN14780	ﾌﾞｰﾂ ｻｽﾍﾟﾝｼｮﾝ	BOOT	1				
165	1	KHN2470	ｸﾘｯﾌﾟ ｶﾇｰ	CLIP;SPL	7				
166	1	KHN17560	ｼｰﾙ;ｸｯｼｮﾝ	SEAL;CUSHION	1				
167	1A	KHN2047	ﾍﾞﾙﾄ;ｼｰﾄ 2ｲﾝﾁ ﾏｷﾄﾘｼｷ	BELT;SEAT	1				
168	2	KHN2048	ﾍﾞﾙﾄ;ｼｰﾄ 2ｲﾝﾁ ﾘﾄﾗｸﾀ	BELT;SEAT	1				
169	2	KHN2049	ﾍﾞﾙﾄ;ｼｰﾄ 2ｲﾝﾁ ﾊﾞｯｸﾙ	BELT;SEAT	1				
170	1	KHN13520	ﾌﾞﾗｹｯﾄ ｼｰﾄﾍﾞﾙﾄ	BRACKET	2		210A5 NOT USED 210L5 NOT USED		
170	1	KHN2548	ﾌﾞﾗｹｯﾄ ﾀﾝｸﾞ	BRACKET	2				
171	1	KHN14660	ﾍﾞﾙﾄ ｱﾝｶｰ	BELT;SPL	2				
172	1	HEN0088	ｼﾞｮｳB (7/16-20UNF)	BOLT;HEX HD	4				
173	1	KHN2379	SW (7/16UNF)	WASHER;SPRING	4				

https://truckmanualshub.com/

66 [67 ~ 92]
99 [100 ~ 107]
120 [121 ~ 156]
137 [138 , 139]
140 [141 ~ 144]
147 [148 ~ 150]

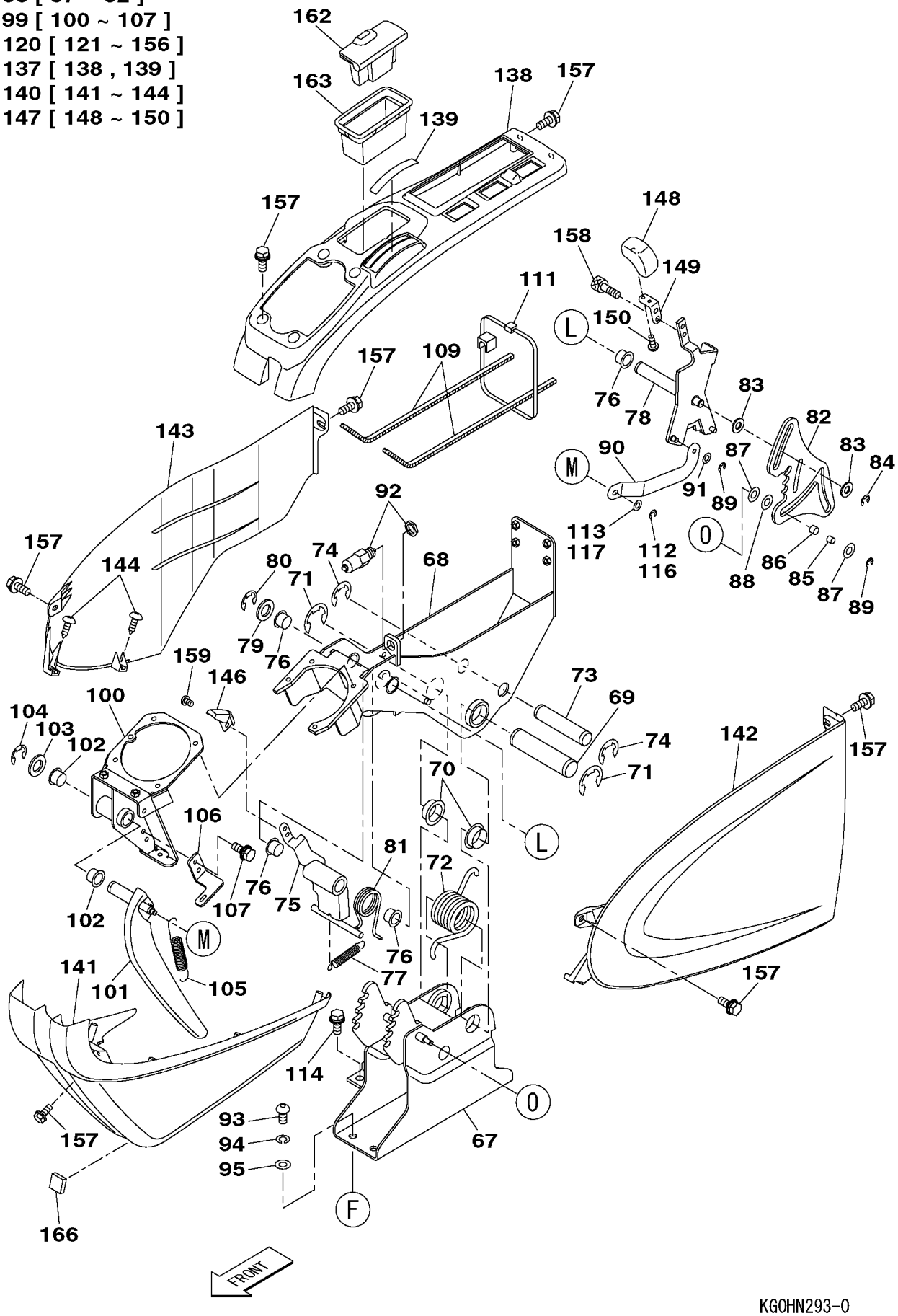

KGOHN293-0
KHN13010-EZ

https://truckmanualshub.com/

https://truckmanualshub.com/

1 [2 ~ 28]

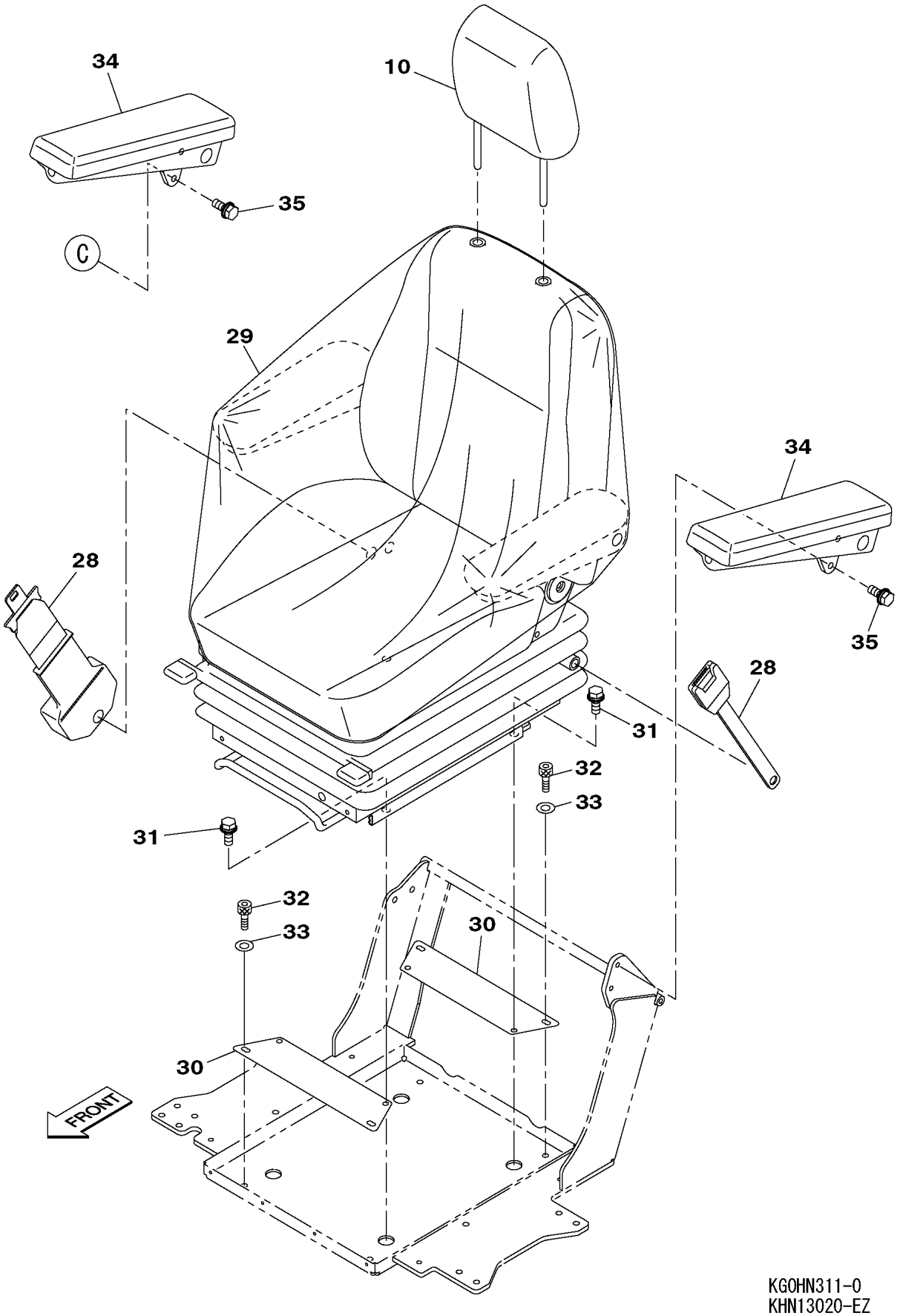

KGOHN311-0
KHN13020-EZ

https://truckmanualshub.com/

210A5 1101－ 210L5 1101－

符号 ITEM	構成 COMPO	部品番号 PART NO.	部品名	PART NAME	個数 Q'TY	ｲﾝﾅｰ	適用号機 SERIAL_NO.	互換 ICA	代替部品 REPLACEABLE PART
1	1A	KHN13570	ｼｰﾄ;ｵﾍﾟﾚｰﾀ (KAB ｴｱｻｽ	SEAT;OPERATORS	1				
2	2A	KHN17710	ｼｰﾄ;ｵﾍﾟﾚｰﾀ ｼｰﾄ ASSY	SEAT;OPERATORS	1				
3	3	KHN17750	ｼｰﾄ;ｵﾍﾟﾚｰﾀ ｼｰﾄﾊﾞｯｸ カ	SEAT;OPERATORS	1				
4	3	KHN2194	ｼｰﾄ;ｵﾍﾟﾚｰﾀ ｼｰﾄﾊﾞｯｸ ク	SEAT;OPERATORS	1				
5	3	KHN2195	ｼｰﾄ;ｵﾍﾟﾚｰﾀ ｼｰﾄﾎﾞﾄﾑ カ	SEAT;OPERATORS	1				
6	3	KHN2196	ｼｰﾄ;ｵﾍﾟﾚｰﾀ ｼｰﾄﾎﾞﾄﾑ ク	SEAT;OPERATORS	1				
7	3A	KHN17760	ｼｰﾄ;ｵﾍﾟﾚｰﾀ ｷｯﾄ ﾗﾝﾊﾞｰ	SEAT;OPERATORS	1				
8	4	KHN17770	ｼｰﾄ;ｵﾍﾟﾚｰﾀ ｷｯﾄ ﾗﾝﾊﾞｰ	SEAT;OPERATORS	1				
9	3	KHN2199	ｼｰﾄ;ｵﾍﾟﾚｰﾀ ｷｯﾄ ﾘｸﾗｲﾅ	SEAT;OPERATORS	1				
28.01	3	KHN17720	ｼｰﾄ;ｵﾍﾟﾚｰﾀ ｷｯﾄ ｼｰﾄﾌﾚ	SEAT;OPERATORS	1		210A5 2281-		
							210L5 1519-		
10	2	KHN2130	ﾚｽﾄ;ﾍｯﾄﾞ (KAB)	REST;HEAD	1				
11	2	KHN17850	ｼｰﾄ;ｵﾍﾟﾚｰﾀ ｷｯﾄ ｽﾗｲﾄﾞ	SEAT;OPERATORS	1				
12	2	KHN17860	ｼｰﾄ;ｵﾍﾟﾚｰﾀ ｷｯﾄ ﾒｶﾆｽﾞ	SEAT;OPERATORS	1				
13	2	KHN17870	ｼｰﾄ;ｵﾍﾟﾚｰﾀ ｷｯﾄ ﾁｬﾝﾈﾙ	SEAT;OPERATORS	1				
14	2	KHN17880	ｼｰﾄ;ｵﾍﾟﾚｰﾀ ｷｯﾄ ﾁｬﾝﾈﾙ	SEAT;OPERATORS	1				
15	2	KHN18000	ｼｰﾄ;ｵﾍﾟﾚｰﾀ ｷｯﾄ ｻｽﾍﾟﾝ	SEAT;OPERATORS	1		210A5 -2280		
							210L5 -1518		
16	2A	KHN17920	ｼｰﾄ;ｵﾍﾟﾚｰﾀ ｷｯﾄ ｻｽﾍﾟﾝ	SEAT;OPERATORS	1				
17	3	KHN17930	ｼｰﾄ;ｵﾍﾟﾚｰﾀ ｷｯﾄ ﾀﾞﾝﾊﾟ	SEAT;OPERATORS	1				
18	3	KHN17940	ｼｰﾄ;ｵﾍﾟﾚｰﾀ ｷｯﾄ ﾍﾞｱﾘﾝ	SEAT;OPERATORS	1				
19	3	KHN17810	ｼｰﾄ;ｵﾍﾟﾚｰﾀ ｷｯﾄ ﾗｲﾄﾞｲ	SEAT;OPERATORS	1				
20	3	KHN17820	ｼｰﾄ;ｵﾍﾟﾚｰﾀ ｷｯﾄ ｱｯﾌﾟ&	SEAT;OPERATORS	1				
21	3	KHN17950	ｼｰﾄ;ｵﾍﾟﾚｰﾀ ｷｯﾄ ｺﾝﾌﾟﾚ	SEAT;OPERATORS	1				
22	3	KHN17960	ｼｰﾄ;ｵﾍﾟﾚｰﾀ ｷｯﾄ ｴｱ ｽﾌ	SEAT;OPERATORS	1				
23	3	KHN17970	ｼｰﾄ;ｵﾍﾟﾚｰﾀ ｷｯﾄ ﾊﾞﾙﾌﾞ	SEAT;OPERATORS	1		210A5 -2280		
							210L5 -1518		
24	3	KHN17980	ｼｰﾄ;ｵﾍﾟﾚｰﾀ ｷｯﾄ ﾊﾞﾙﾌﾞ	SEAT;OPERATORS	1				
28.02	3	KHN18000	ｼｰﾄ;ｵﾍﾟﾚｰﾀ ｷｯﾄ ｻｽﾍﾟﾝ	SEAT;OPERATORS	1		210A5 2281-		
							210L5 1519-		
25	3A	KHN17990	ｼｰﾄ;ｵﾍﾟﾚｰﾀ ｷｯﾄ ﾊｰﾈｽ	SEAT;OPERATORS	1				
28.03	4	KHN17970	ｼｰﾄ;ｵﾍﾟﾚｰﾀ ｷｯﾄ ﾊﾞﾙﾌﾞ	SEAT;OPERATORS	1		210A5 2281-		
							210L5 1519-		
26	2	KHN17840	ｼｰﾄ;ｵﾍﾟﾚｰﾀ ｷｯﾄ ｽﾗｲﾄﾞ	SEAT;OPERATORS	1				
27	2	KHN17900	ｼｰﾄ;ｵﾍﾟﾚｰﾀ ｷｯﾄ ﾘｸﾗｲﾅ	SEAT;OPERATORS	1				
28	2	KHN17910	ｼｰﾄ;ｵﾍﾟﾚｰﾀ ｷｯﾄ ｼｰﾄﾍﾞ	SEAT;OPERATORS	1				
30	1	KHN13530	ﾌﾟﾚｰﾄ KABｼｰﾄ	PLATE	2				
31	1	105R008Y020R	ｾﾑｽB M 8X 20	BOLT;SEMS	4				
32	1	108R008Y020R	ﾛｯｶｸｱﾅB M 8X 20	BOLT;HEX SOC HD	4				
33	1	184-008VR	ﾎｳｹｲSW 8	WASHER;SPRING	4				
34	1	KHN11720	ﾚｽﾄ;ｱｰﾑ	REST;ARM	2				
35	1	KHN17270	ﾎﾞﾙﾄ ﾄｸｼｭ M8X20 ｻﾞｶﾞ	BOLT;SPL	4				
36	1	KHN15150	ﾌﾞﾗｹｯﾄ ｱｰﾑﾚｽﾄ	BRACKET	1		210A5 -1424		
							210L5 -1263		
36	1	KHN19770	ﾌﾞﾗｹｯﾄ ｱｰﾑﾚｽﾄ	BRACKET	1		210A5 1425-		
							210L5 1264-		
37	1	KHN17270	ﾎﾞﾙﾄ ﾄｸｼｭ M8X20 ｻﾞｶﾞ	BOLT;SPL	2				
38	1	KHN12210	ﾎﾞｯｸｽ;ｺﾝｿｰﾙ ﾕﾆｯﾄ (KA	BOX;CONSOLE	1		210A5 -1424		
							210L5 -1263		
38	1A	KHN12211	ﾎﾞｯｸｽ;ｺﾝｿｰﾙ ﾕﾆｯﾄ (KA	BOX;CONSOLE	1		210A5 1425-		
							210L5 1264-		
39	2	KHN13151	ﾌﾞﾗｹｯﾄ;ｼｰﾄ	BRKT;SEAT	1		210A5 -1424		
							210L5 -1263		
39	2A	KHN13152	ﾌﾞﾗｹｯﾄ;ｼｰﾄ	BRKT;SEAT	1		210A5 1425-		
							210L5 1264-		
40	3	KHN18230	ﾍﾞｰｽ ｺﾝｿｰﾙ	BASE;SPL	1		210A5 1102-		
41	3	KHN13401	ﾍﾞｰｽ ｽﾗｲﾄﾞ ﾚｰﾙ	BASE;SPL	1				
42	3	KHN13420	ﾚｰﾙ;ｽﾗｲﾄﾞ (ﾐｷﾞ)	RAIL;SLIDE	1				
43	3	KHN13430	ﾚｰﾙ;ｽﾗｲﾄﾞ (ﾋﾀﾞﾘ)	RAIL;SLIDE	1				
44	3	KHN13411	ﾚﾊﾞｰ;ﾊﾝﾄﾞ ｽﾗｲﾄﾞ	LEVER;HAND	1				

https://truckmanualshub.com/

1 [2 ~ 28]
2 [3 ~ 9]

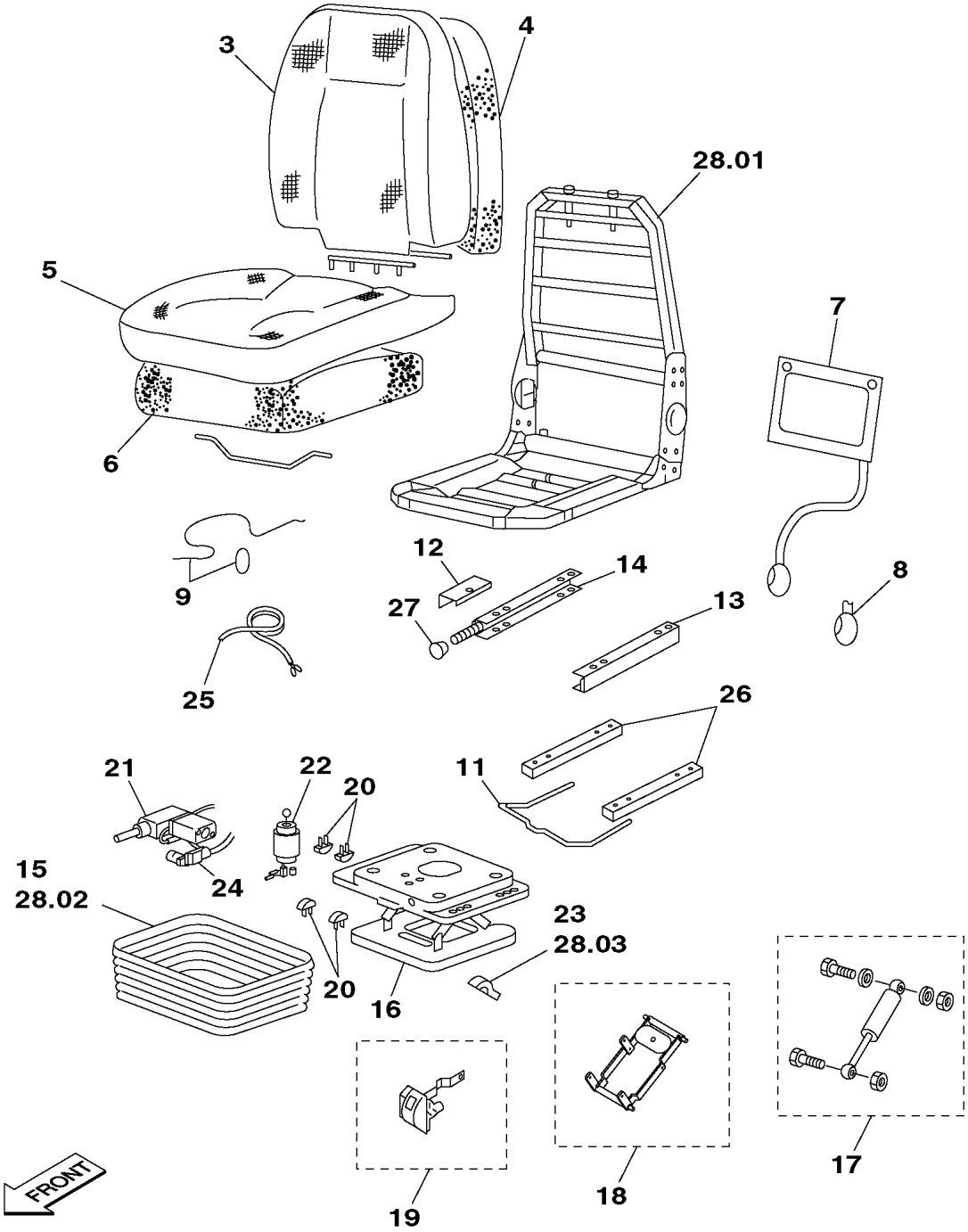

KGOHN311-0
KHN13020-EZ

https://truckmanualshub.com/

210A5 1101－　　210L5 1101－

符号 ITEM	構成 COMPO	部品番号 PART NO.	部品名	PART NAME	個数 Q'TY	ｲﾝﾅｰ	適用号機 SERIAL_NO.	互換 ICA	代替部品 REPLACEABLE PART
45	3	108R008Y016R	ﾛｯｶｸｱﾅB M 8X 16	BOLT;HEX SOC HD	8				
46	3	183-108VR	SW 8	WASHER;SPRING	4				
47	3	182-008SR	ﾐｶﾞｷW 8	WASHER;PLAIN	8				
47.01	3	KHN18240	ﾍﾞｰｽ ｱｰﾑﾚｽﾄ (BASE AR	BASE;SPL	1		210A5 1102-1424 210L5 -1263		
47.01	3	KHN19780	ﾍﾞｰｽ ｱｰﾑﾚｽﾄ (BASE AR	BASE;SPL	1		210A5 1425- 210L5 1264-		
47.02	3	105R008Y016R	ｾﾑｽB M 8X 16	BOLT;SEMS	4		210A5 1102-		
48	2A	KHN13131	ﾎﾞｯｸｽ;ｺﾝｿｰﾙ (R)	BOX;CONSOLE	1				
49	3	KHN13181	ﾌﾚｰﾑ ;ｺﾝｿｰﾙﾎﾞｯｸｽ(R)	FRAME;SPL	1				
50	3	KHN13191	ﾌﾚｰﾑ ;ﾁﾙﾄ(R)	FRAME;SPL	1				
51	3	KHN10740	ﾋﾟﾝ;ｽﾄﾚｰﾄ	PIN;PLAIN	1				
52	3	KHN2261	ﾌﾞｼｭ;ｵｲﾙﾚｽ	BUSH;OILLESS	2				
53	3	KHN2272	ﾄﾒﾜ E 24	LOCK RING;SPL	2				
54	3	KHN13231	ｽﾌﾟﾘﾝｸﾞ;ﾈｼﾞﾘｺｲﾙ (ｺﾝｿ	SPRING;TORSION COIL	1				
55	3	KHN13210	ﾋﾟﾝ;ｽﾄﾚｰﾄ	PIN;PLAIN	1				
56	3	KHN2397	ﾄﾒﾜ E19	LOCK RING;SPL	2				
57	3	KHN13201	ﾘﾝｸ (ﾁﾙﾄﾚﾊﾞｰR)	LINK	1				
58	3	KHN2249	ﾌﾞｼｭ;ｵｲﾙﾚｽ	BUSH;OILLESS	4				
59	3	KHN13240	ｽﾌﾟﾘﾝｸﾞ;ﾋｯﾊﾟﾘ ﾁﾙﾄﾚﾊﾞ	SPRING;EXTENSION	1				
60	3	KHN13220	ﾋﾟﾝ;ｽﾄﾚｰﾄ	PIN;PLAIN	1				
61	3	182-016SR	ﾐｶﾞｷW 16	WASHER;PLAIN	2				
62	3	KHN2270	ﾄﾒﾜ E 15	LOCK RING;SPL	2				
63	2A	KHN13141	ﾎﾞｯｸｽ;ｺﾝｿｰﾙ (L)	BOX;CONSOLE	1				
64	3	KHN13251	ﾌﾚｰﾑ ｺﾝｿｰﾙﾎﾞｯｸｽ(L)	FRAME;SPL	1				
65	3	KHN13261	ﾌﾚｰﾑ ;ﾁﾙﾄ(L)	FRAME;SPL	1				
66	3	KHN10740	ﾋﾟﾝ;ｽﾄﾚｰﾄ	PIN;PLAIN	1				
67	3	KHN2261	ﾌﾞｼｭ;ｵｲﾙﾚｽ	BUSH;OILLESS	2				
68	3	KHN2272	ﾄﾒﾜ E 24	LOCK RING;SPL	2				
69	3	KHN13231	ｽﾌﾟﾘﾝｸﾞ;ﾈｼﾞﾘｺｲﾙ (ｺﾝｿ	SPRING;TORSION COIL	1				
70	3	KHN13210	ﾋﾟﾝ;ｽﾄﾚｰﾄ	PIN;PLAIN	1				
71	3	KHN2397	ﾄﾒﾜ E19	LOCK RING;SPL	2				
72	3	KHN13271	ﾘﾝｸ (ﾁﾙﾄﾚﾊﾞｰL)	LINK	1				
73	3	KHN2249	ﾌﾞｼｭ;ｵｲﾙﾚｽ	BUSH;OILLESS	4				
74	3	KHN13240	ｽﾌﾟﾘﾝｸﾞ;ﾋｯﾊﾟﾘ ﾁﾙﾄﾚﾊﾞ	SPRING;EXTENSION	1				
75	3	KHN13281	ﾘﾝｸ ｹﾞｰﾄﾚﾊﾞｰ	LINK	1				
76	3	182-016SR	ﾐｶﾞｷW 16	WASHER;PLAIN	1				
77	3	KHN2270	ﾄﾒﾜ E 15	LOCK RING;SPL	1				
78	3	KHN13290	ｽﾌﾟﾘﾝｸﾞ;ﾈｼﾞﾘｺｲﾙ ｹﾞｰﾄ	SPRING;TORSION COIL	1				
79	3	KHN13301	ﾌﾟﾚｰﾄ ﾁﾙﾄ	PLATE	1				
80	3	182-010SR	ﾐｶﾞｷW 10	WASHER;PLAIN	2				
81	3	378J0080Z	E-ﾄﾒﾜ 8	RING;E	1				
82	3	KHN13310	ﾌﾞｼｭ;ｵｲﾙﾚｽ	BUSH;OILLESS	1				
83	3	KHN13320	ﾛｰﾗ;ｶﾞｲﾄﾞ	ROLLER;GUIDE	1				
84	3	KHN0482	ﾜｯｼｬ M6 ﾒｯｷ	WASHER;SPL	2				
85	3	KEH0114	ｺｳﾘｷW M10 ﾒｯｷ	WASHER;HIGH STRENGTH	1				
86	3	378J0050Z	E-ﾄﾒﾜ 5	RING;E	2				
87	3	KHN13341	ﾘﾝｸ ｹﾞｰﾄﾊﾞｰ	LINK	1				
88	3	182-006SR	ﾐｶﾞｷW 6	WASHER;PLAIN	1				
89	3	KHR14930	ｽｲｯﾁ;ﾘﾐｯﾄ	SWITCH;LIMIT	1				
90	2	KHJ1632	ﾛｯｶｸｱﾅB (ﾎﾞﾀﾝｱﾀﾏ)M10	BOLT;HEX SOC HD	8				
91	2	183-110VR	SW 10	WASHER;SPRING	8				
92	2	182-010SR	ﾐｶﾞｷW 10	WASHER;PLAIN	8				
93	2A	KHN17040	ﾊﾞｰ ｹﾞｰﾄ ASSY	BAR;SPL	1				
94	3	KHN14880	ﾌﾞﾗｹｯﾄ ｶﾊﾞｰ ﾋﾀﾞﾘ	BRACKET	1		210A5 NOT USED		
							210L5 NOT USED		
94	3	KHN14881	ﾌﾞﾗｹｯﾄ ｶﾊﾞｰL	BRACKET	1				
95	3	KHN13331	ﾊﾞｰ ｹﾞｰﾄ	BAR	1				
96	3	KHN2249	ﾌﾞｼｭ;ｵｲﾙﾚｽ	BUSH;OILLESS	2				
97	3	182-016SR	ﾐｶﾞｷW 16	WASHER;PLAIN	1				

https://truckmanualshub.com/

38 [39 ~ 106] 39 [40 ~ 47] 110 [111 ~ 146] 141 [142 ~ 146]

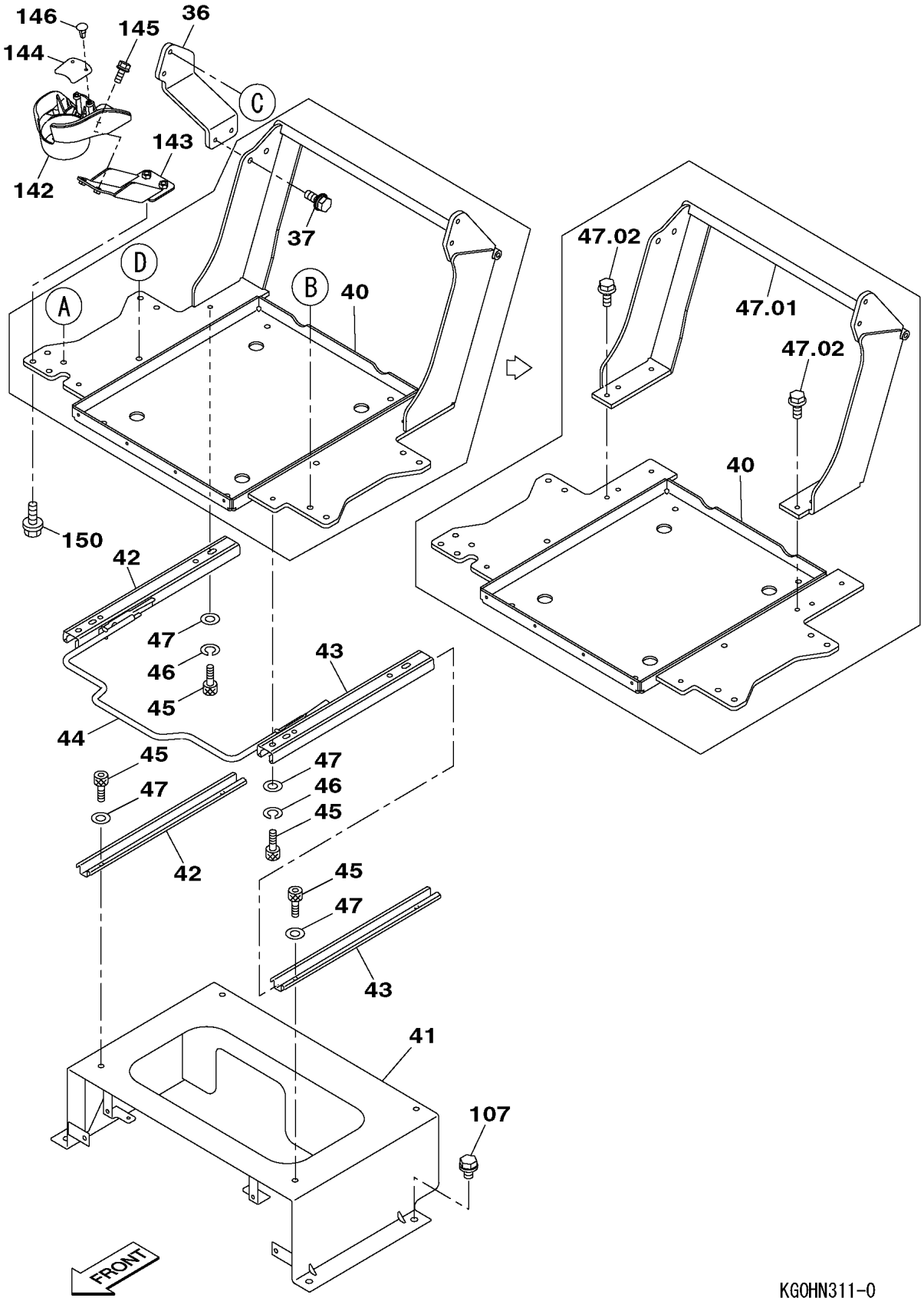

KGOHN311-0
KHN13020-EZ

https://truckmanualshub.com/

210A5 1101－ 210L5 1101－

符号 ITEM	構成 COMPO	部品番号 PART NO.	部品名	PART NAME	個数 Q'TY	ｲﾝﾅｰ	適用号機 SERIAL_NO.	互換 ICA	代替部品 REPLACEABLE PART
98	3	KHN2270	ﾄﾒﾜ E 15	LOCK RING;SPL	1				
99	3	KHN13350	ｽﾌﾟﾘﾝｸﾞ;ﾋｯﾊﾟﾘ ｹﾞｰﾄﾊﾞ	SPRING;EXTENSION	1				
100	3	KHN16810	ﾌﾞﾗｹｯﾄ ｽﾌﾟﾘﾝｸﾞ	BRACKET	1				
101	3	KHN2132	ｺｳﾘｷB M6X16 (ｻﾞｶﾞﾈｸﾐ	BOLT;HIGH STRENGTH	2				
102	2	KHN14871	ﾌﾞﾗｹｯﾄ ｶﾊﾞｰR	BRACKET	1				
103	2	KHN17070	ｶﾞｰﾄﾞ ｴｯｼﾞ (L=320)	GUARD	2				
104	2	KHN17060	ｶﾞｰﾄﾞ ｴｯｼﾞ(L=290)	GUARD	2				
105	2	KHN17050	ｸﾘｯﾌﾟ ｴｯｼﾞ	CLIP	6				
106	2	105R010Y016R	ｾﾑｽB M10X 16	BOLT;SEMS	2				
107	1	105R010Y016R	ｾﾑｽB M10X 16	BOLT;SEMS	4				
108	1	378J0050Z	E-ﾄﾒﾜ 5	RING;E	1				
109	1	182-006SR	ﾐｶﾞｷW 6	WASHER;PLAIN	1				
110	1A	--------	ｶﾊﾞｰ ｸﾞﾙｰﾌﾟﾋｮｳ (ｸﾞﾚｰ	COVER	1				
111	2	KHN13970	ｶﾊﾞｰ;ﾄｯﾌﾟ (ｺﾝｿｰﾙ R)A	COVER;TOP	1		210A5 NOT USED 210L5 NOT USED		
111	2A	KHN13971	ｶﾊﾞｰ;ﾄｯﾌﾟ ｺﾝｿｰﾙR ASS	COVER;TOP	1				
112	3	KHN12220	ｶﾊﾞｰ;ﾄｯﾌﾟ (ｺﾝｿｰﾙR) ｸ	COVER;TOP	1				
113	3	KHN15100	ﾉﾌﾞ ｽﾛｯﾄﾙ	KNOB	1				
114	3	KHN15110	ﾎﾞﾀﾝ ｽﾛｯﾄﾙ	BUTTON	1				
115	3	KHN15120	ｶﾊﾞｰ ｽﾛｯﾄﾙ	COVER	1				
116	3	KHN15130	ﾌﾞﾗｹｯﾄ ｽﾛｯﾄﾙ	BRACKET	1				
117	3	KHN15140	ｽﾌﾟﾘﾝｸﾞ;ｱﾂｼｭｸ ｽﾛｯﾄﾙ	SPRING;COMPRESSION	1				
118	3	KHR2751	ｽｲｯﾁ ｽﾛｯﾄﾙ	SWITCH;SPL	1				
119	3	KHR2741	ﾊﾟｯｷﾝ ﾎﾞｳｽｲ	PACKING	1				
120	3	KHR2737	+ﾄﾗｽﾀｯﾌﾟS M5X14	SCREW;TAPPING	3				
121	3	KHN14070	ﾊﾟﾈﾙ ｼｰﾄ (ｺﾝｿｰﾙ R)	PANEL;SPL	1		210A5 NOT USED 210L5 NOT USED		
121	3	KHN14071	ﾊﾟﾈﾙ ｼｰﾄ(ｺﾝｿｰﾙR)	PANEL;SPL	1				
122	2A	KHN14010	ｶﾊﾞｰ;ｱﾝﾀﾞ (ｺﾝｿｰﾙ R)A	COVER;UNDER	1				
123	3	KHN12260	ｶﾊﾞｰ;ｱﾝﾀﾞ (ｺﾝｿｰﾙR) ｸ	COVER;UNDER	1				
124	3	KHN12300	ｶﾊﾞｰ;ｻｲﾄﾞ (ｺﾝｿｰﾙRR)	COVER;SIDE	1				
125	3	KHN12320	ｶﾊﾞｰ;ｻｲﾄﾞ (ｺﾝｿｰﾙRL)	COVER;SIDE	1				
126	3	KHR2737	+ﾄﾗｽﾀｯﾌﾟS M5X14	SCREW;TAPPING	4				
127	2A	KHN13990	ｶﾊﾞｰ;ﾄｯﾌﾟ (ｺﾝｿｰﾙ L)	COVER;TOP	1				
128	3	KHN12240	ｶﾊﾞｰ;ﾄｯﾌﾟ (ｺﾝｿｰﾙL) ｸ	COVER;TOP	1				
129	3	KHN16770	ﾊﾟﾈﾙ ｼｰﾄ ｹﾞｰﾄﾚﾊﾞｰ	PANEL;SPL	1				
130	2A	KHN14030	ｶﾊﾞｰ;ｱﾝﾀﾞ (ｺﾝｿｰﾙ L)A	COVER;UNDER	1				
131	3	KHN12280	ｶﾊﾞｰ;ｱﾝﾀﾞ (ｺﾝｿｰﾙL) ｸ	COVER;UNDER	1				
132	3	KHN12340	ｶﾊﾞｰ;ｻｲﾄﾞ (ｺﾝｿｰﾙLL)	COVER;SIDE	1				
133	3	KHN13730	ｶﾊﾞｰ;ｻｲﾄﾞ (ｺﾝｿｰﾙLR)	COVER;SIDE	1				
134	3	KHR2737	+ﾄﾗｽﾀｯﾌﾟS M5X14	SCREW;TAPPING	6				
135	2	KHN12360	ﾚﾊﾞｰ ﾁﾙﾄ R	LEVER;SPL	1				
136	2	KHN12370	ﾚﾊﾞｰ ﾁﾙﾄ L	LEVER;SPL	1				
137	2A	KHN17080	ｸﾞﾘｯﾌﾟ ｹﾞｰﾄﾚﾊﾞｰASSY	GRIP	1				
138	3	KHN12380	ｸﾞﾘｯﾌﾟ ｹﾞｰﾄﾚﾊﾞｰ	GRIP	1				
139	3	KHN17090	ﾌﾟﾚｰﾄ ｸﾞﾘｯﾌﾟ	PLATE	1				
140	3	KHR2733	+ﾄﾗｽﾀｯﾌﾟS M4X12	SCREW;TAPPING	2				
141	2A	KHN14050	ﾎﾙﾀﾞ ｶｯﾌﾟ ASSY	HOLDER;SPL	1				
142	3	KHN12400	ﾎﾙﾀﾞ ｶｯﾌﾟ	HOLDER;SPL	1				
143	3	KHN14750	ﾌﾞﾗｹｯﾄ ｶｯﾌﾟﾎﾙﾀﾞ	BRACKET	1				
144	3	KHN14760	ﾌﾟﾚｰﾄ;ﾗﾊﾞｰ ｶｯﾌﾟﾎﾙﾀﾞｰ	PLATE;RUBBER	1				
145	3	KHN2132	ｺｳﾘｷB M6X16 (ｻﾞｶﾞﾈｸﾐ	BOLT;HIGH STRENGTH	2				
146	3	KHN2470	ｸﾘｯﾌﾟ ｶﾇｰ	CLIP;SPL	2				
147	1	KHN2132	ｺｳﾘｷB M6X16 (ｻﾞｶﾞﾈｸﾐ	BOLT;HIGH STRENGTH	18				
148	1	KHN17280	ﾛｯｶｸｱﾅB M6X10 ｸﾛﾒｯｷ	BOLT;HEX SOC HD	2				
149	1	KHN1407	+ﾅﾍﾞS M5X10(ｻﾞｶﾞﾈｯｷ)	SCREW;PAN HD	4				
150	1	KHN17270	ﾎﾞﾙﾄ ﾄｸｼｭ M8X20 ｻﾞｶﾞ	BOLT;SPL	2				
151	1	KHN2058	ﾊｲｻﾞﾗ	ASHTRAY	1				
152	1	KHN2336	ｹｰｽ ﾊｲｻﾞﾗ	CASE;SPL	1				
153	1	KHN17560	ｼｰﾙ;ｸｯｼｮﾝ	SEAL;CUSHION	1				

https://truckmanualshub.com/

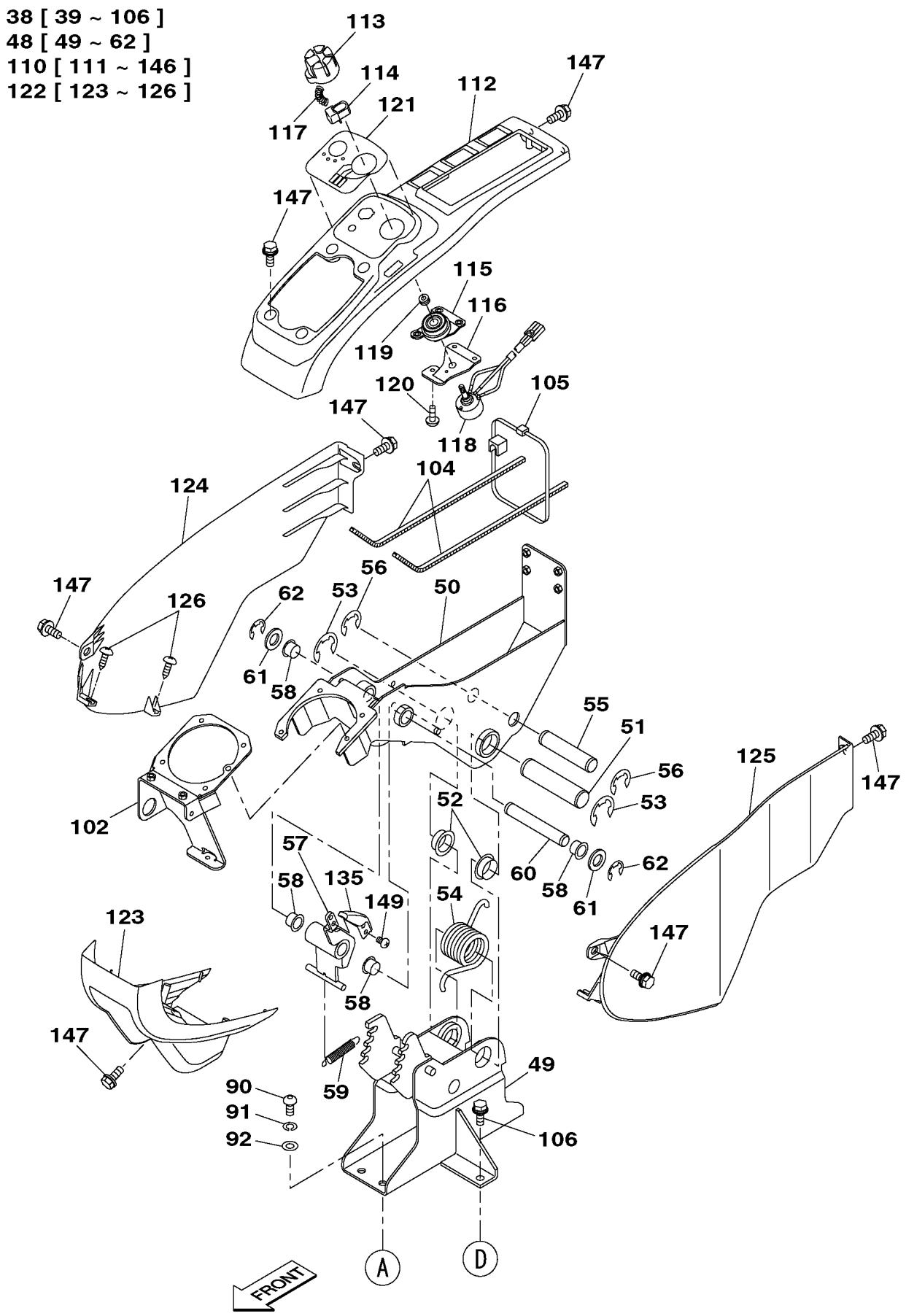

KGOHN311-0
KHN13020-EZ

https://truckmanualshub.com/

38 [39 ~ 106]
63 [64 ~ 89]
93 [94 ~ 101]
110 [111 ~ 146]
111 [112 ~ 121]
127 [128 , 129]
130 [131 ~ 134]
137 [138 ~ 140]

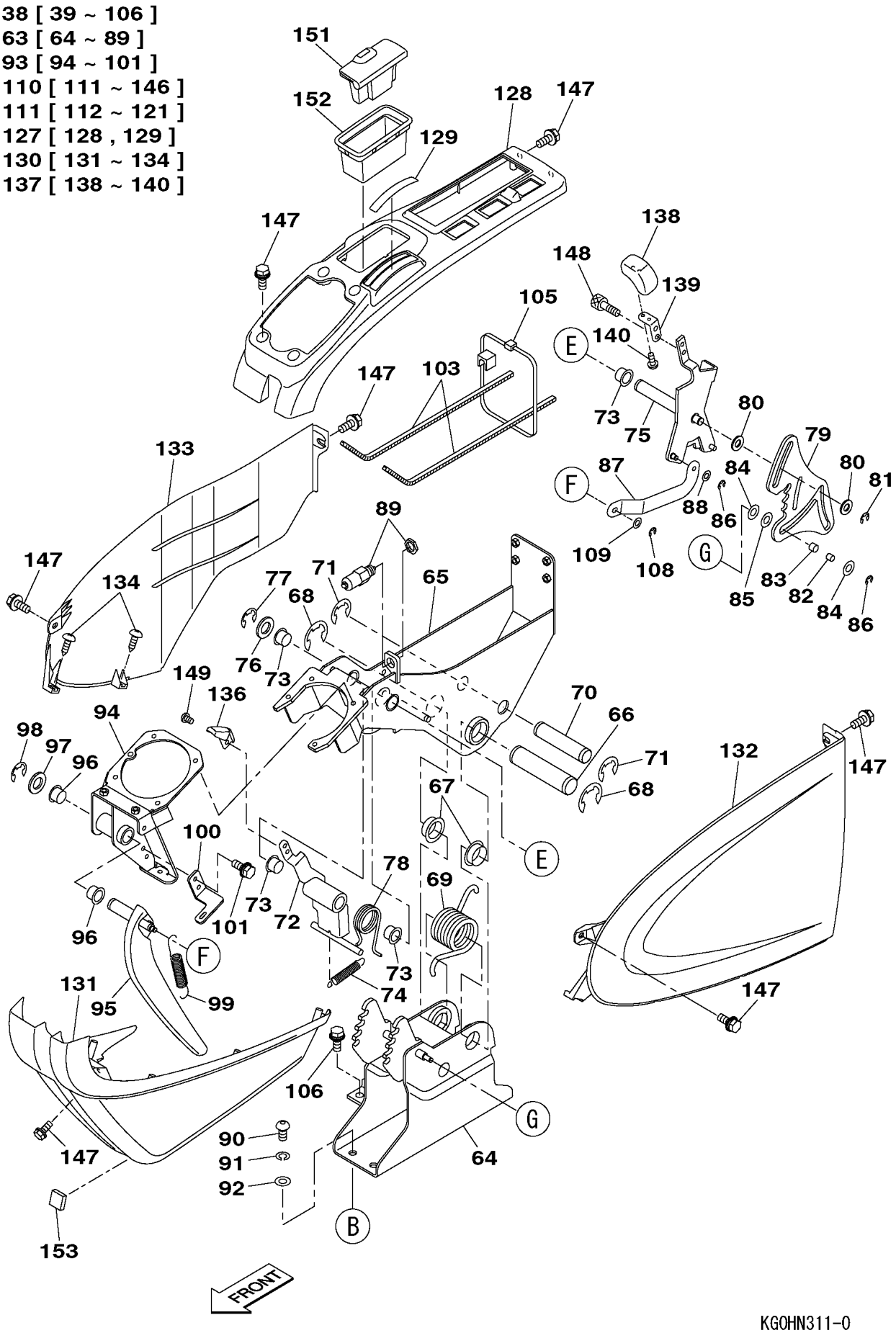

KGOHN311-0
KHN13020-EZ

https://truckmanualshub.com/

1 [2 ~ 24]

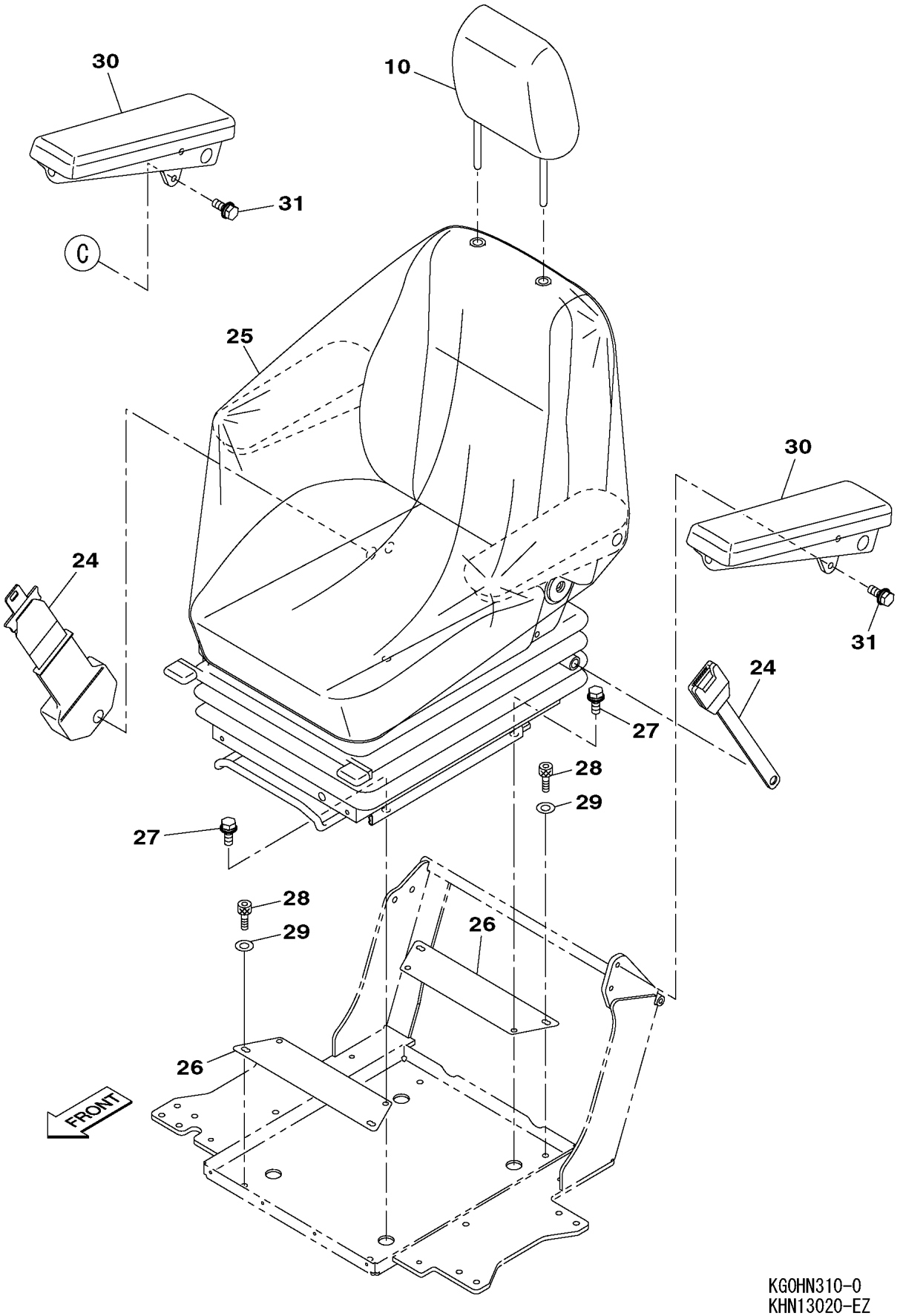

KG0HN310-0
KHN13020-EZ

https://truckmanualshub.com/

210A5 1101－ 210L5 1101－

符号 ITEM	構成 COMPO	部品番号 PART NO.	部品名	PART NAME	個数 Q'TY	ｲﾝﾅｰ	適用号機 SERIAL_NO.	互換 ICA	代替部品 REPLACEABLE PART
1	1A	KHN13550	ｼｰﾄ;ｵﾍﾟﾚｰﾀ (KAB) ｸﾞﾚ	SEAT;OPERATORS	1				
2	2A	KHN17710	ｼｰﾄ;ｵﾍﾟﾚｰﾀ ｼｰﾄ ASSY	SEAT;OPERATORS	1				
3	3	KHN17750	ｼｰﾄ;ｵﾍﾟﾚｰﾀ ｼｰﾄﾊﾞｯｸ カ	SEAT;OPERATORS	1				
4	3	KHN2194	ｼｰﾄ;ｵﾍﾟﾚｰﾀ ｼｰﾄﾊﾞｯｸ ク	SEAT;OPERATORS	1				
5	3	KHN2195	ｼｰﾄ;ｵﾍﾟﾚｰﾀ ｼｰﾄﾎﾞﾄﾑ カ	SEAT;OPERATORS	1				
6	3	KHN2196	ｼｰﾄ;ｵﾍﾟﾚｰﾀ ｼｰﾄﾎﾞﾄﾑ ク	SEAT;OPERATORS	1				
7	3A	KHN17760	ｼｰﾄ;ｵﾍﾟﾚｰﾀ ｷｯﾄ ﾗﾝﾊﾞｰ	SEAT;OPERATORS	1				
8	4	KHN17770	ｼｰﾄ;ｵﾍﾟﾚｰﾀ ｷｯﾄ ﾗﾝﾊﾞｰ	SEAT;OPERATORS	1				
9	3	KHN2199	ｼｰﾄ;ｵﾍﾟﾚｰﾀ ｷｯﾄ ﾘｸﾗｲﾅ	SEAT;OPERATORS	1				
24.02	3	KHN17720	ｼｰﾄ;ｵﾍﾟﾚｰﾀ ｷｯﾄ ｼｰﾄﾌﾚ	SEAT;OPERATORS	1		210A5 2281-		
							210L5 1519-		
10	2	KHN2130	ﾚｽﾄ;ﾍｯﾄﾞ (KAB)	REST;HEAD	1				
11	2	KHN17850	ｼｰﾄ;ｵﾍﾟﾚｰﾀ ｷｯﾄ ｽﾗｲﾄﾞ	SEAT;OPERATORS	1				
12	2	KHN17860	ｼｰﾄ;ｵﾍﾟﾚｰﾀ ｷｯﾄ ﾒｶﾆｽﾞ	SEAT;OPERATORS	1				
13	2	KHN17870	ｼｰﾄ;ｵﾍﾟﾚｰﾀ ｷｯﾄ ﾁｬﾝﾈﾙ	SEAT;OPERATORS	1				
14	2	KHN17880	ｼｰﾄ;ｵﾍﾟﾚｰﾀ ｷｯﾄ ﾁｬﾝﾈﾙ	SEAT;OPERATORS	1				
15	2	KHN17890	ｼｰﾄ;ｵﾍﾟﾚｰﾀ ｷｯﾄ ｻｽﾍﾟﾝ	SEAT;OPERATORS	1		210A5 -2280		
							210L5 -1518		
16	2A	KHN17780	ｼｰﾄ;ｵﾍﾟﾚｰﾀ ｷｯﾄ ｻｽﾍﾟﾝ	SEAT;OPERATORS	1				
17	3	KHN17790	ｼｰﾄ;ｵﾍﾟﾚｰﾀ ｷｯﾄ ﾀﾞﾝﾊﾟ	SEAT;OPERATORS	1				
18	3	KHN17800	ｼｰﾄ;ｵﾍﾟﾚｰﾀ ｷｯﾄ ﾍﾞｱﾘﾝ	SEAT;OPERATORS	1				
19	3	KHN17810	ｼｰﾄ;ｵﾍﾟﾚｰﾀ ｷｯﾄ ﾗｲﾄﾞｲ	SEAT;OPERATORS	1				
20	3	KHN17820	ｼｰﾄ;ｵﾍﾟﾚｰﾀ ｷｯﾄ ｱｯﾌﾟ&	SEAT;OPERATORS	1				
21	3	KHN17830	ｼｰﾄ;ｵﾍﾟﾚｰﾀ ｷｯﾄ ｳｴｲﾄ	SEAT;OPERATORS	1				
24.01	3	KHN17890	ｼｰﾄ;ｵﾍﾟﾚｰﾀ ｷｯﾄ ｻｽﾍﾟﾝ	SEAT;OPERATORS	1		210A5 2281-		
							210L5 1519-		
22	2	KHN17840	ｼｰﾄ;ｵﾍﾟﾚｰﾀ ｷｯﾄ ｽﾗｲﾄﾞ	SEAT;OPERATORS	1				
23	2	KHN17900	ｼｰﾄ;ｵﾍﾟﾚｰﾀ ｷｯﾄ ﾘｸﾗｲﾅ	SEAT;OPERATORS	1				
24	2	KHN17910	ｼｰﾄ;ｵﾍﾟﾚｰﾀ ｷｯﾄ ｼｰﾄﾍﾞ	SEAT;OPERATORS	1				
25	1	KHP1286	ｶﾊﾞｰ ﾋﾞﾆｰﾙ (KABｼｰﾄ ﾖ	COVER;SPL	1		210A5 -1133		
							210L5 NOT USED		
26	1	KHN13530	ﾌﾟﾚｰﾄ KABｼｰﾄ	PLATE	2				
27	1	105R008Y020R	ｾﾑｽB M 8X 20	BOLT;SEMS	4				
28	1	108R008Y020R	ﾛｯｶｸｱﾅB M 8X 20	BOLT;HEX SOC HD	4				
29	1	184-008VR	ﾎｳｹｲSW 8	WASHER;SPRING	4				
30	1	KHN11720	ﾚｽﾄ;ｱｰﾑ	REST;ARM	2				
31	1	KHN17270	ﾎﾞﾙﾄ ﾄｸｼｭ M8X20 ｻﾞｶﾞ	BOLT;SPL	4				
32	1	KHN15150	ﾌﾞﾗｹｯﾄ ｱｰﾑﾚｽﾄ	BRACKET	1		210A5 -1424		
							210L5 -1263		
32	1	KHN19770	ﾌﾞﾗｹｯﾄ ｱｰﾑﾚｽﾄ	BRACKET	1		210A5 1425-		
							210L5 1264-		
33	1	KHN17270	ﾎﾞﾙﾄ ﾄｸｼｭ M8X20 ｻﾞｶﾞ	BOLT;SPL	2				
34	1	KHN12210	ﾎﾞｯｸｽ;ｺﾝｿｰﾙ ﾕﾆｯﾄ (KA	BOX;CONSOLE	1		210A5 -1424		
							210L5 -1263		
34	1A	KHN12211	ﾎﾞｯｸｽ;ｺﾝｿｰﾙ ﾕﾆｯﾄ (KA	BOX;CONSOLE	1		210A5 1425-		
							210L5 1264-		
35	2A	KHN13151	ﾌﾞﾗｹｯﾄ;ｼｰﾄ	BRKT;SEAT	1		210A5 1425-		
							210L5 1264-		
36	3	KHN13391	ﾍﾞｰｽ ｺﾝｿｰﾙ	BASE;SPL	1		210A5 -1101	<	KHN18230
							210L5 NOT USED		
36	3	KHN18230	ﾍﾞｰｽ ｺﾝｿｰﾙ	BASE;SPL	1		210A5 1102-		
37	3	KHN13401	ﾍﾞｰｽ ｽﾗｲﾄﾞ ﾚｰﾙ	BASE;SPL	1		210A5 1425-		
							210L5 1264-		
38	3	KHN13420	ﾚｰﾙ;ｽﾗｲﾄﾞ (ﾐｷﾞ)	RAIL;SLIDE	1		210A5 1425-		
							210L5 1264-		
39	3	KHN13430	ﾚｰﾙ;ｽﾗｲﾄﾞ (ﾋﾀﾞﾘ)	RAIL;SLIDE	1		210A5 1425-		
							210L5 1264-		
40	3	KHN13411	ﾚﾊﾞｰ;ﾊﾝﾄﾞ ｽﾗｲﾄﾞ	LEVER;HAND	1		210A5 1425-		
							210L5 1264-		
41	3	108R008Y016R	ﾛｯｶｸｱﾅB M 8X 16	BOLT;HEX SOC HD	8		210A5 1425-		

https://truckmanualshub.com/

1 [2 ~ 24]
2 [3 ~ 9]

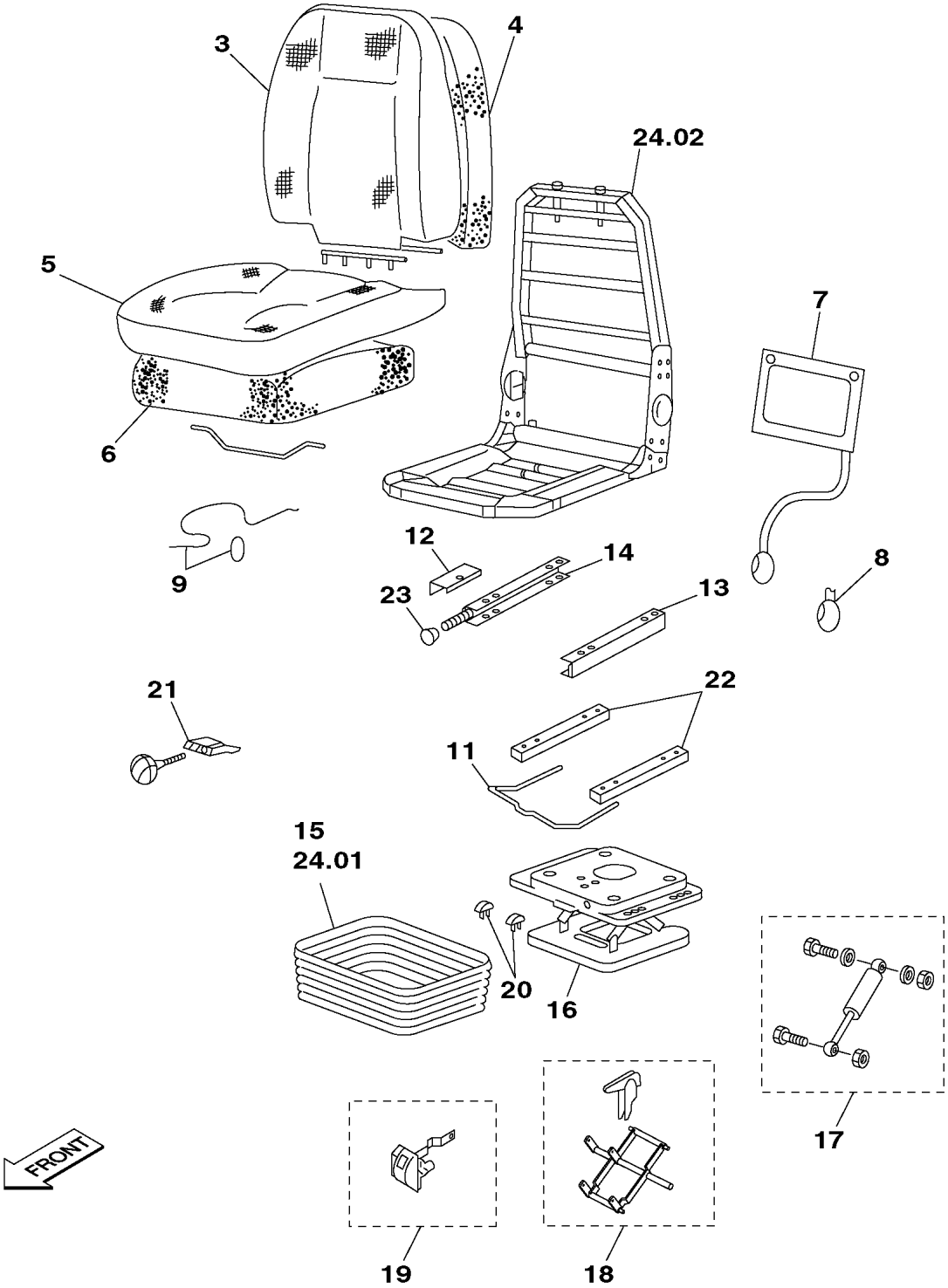

KG0HN310-0
KHN13020-EZ

https://truckmanualshub.com/

210A5 1101－　　210L5 1101－

符号 ITEM	構成 COMPO	部品番号 PART NO.	部品名	PART NAME	個数 Q'TY	ｲﾝﾅｰ	適用号機 SERIAL_NO.	互換 ICA	代替部品 REPLACEABLE PART
41	3	108R008Y016R	ﾛｯｶｸｱﾅB M 8X 16	BOLT;HEX SOC HD	8		210L5 1264-		
42	3	183-108VR	SW 8	WASHER;SPRING	4		210A5 1425- 210L5 1264-		
43	3	182-008SR	ﾐｶﾞｷW 8	WASHER;PLAIN	8		210A5 1425- 210L5 1264-		
44	3	KHN18240	ﾍﾞｰｽ ｱｰﾑﾚｽﾄ (BASE AR	BASE;SPL	1		210A5 NOT USED 210L5 NOT USED		
44	3	KHN19780	ﾍﾞｰｽ ｱｰﾑﾚｽﾄ (BASE AR	BASE;SPL	1				
45	3	105R008Y016R	ｾﾑｽB M 8X 16	BOLT;SEMS	4		210A5 1425- 210L5 1264-		
46	2A	KHN13131	ﾎﾞｯｸｽ;ｺﾝｿｰﾙ (R)	BOX;CONSOLE	1		210A5 1425- 210L5 1264-		
47	3	KHN13181	ﾌﾚｰﾑ ;ｺﾝｿｰﾙﾎﾞｯｸｽ(R)	FRAME;SPL	1		210A5 1425- 210L5 1264-		
48	3	KHN13191	ﾌﾚｰﾑ ;ﾁﾙﾄ(R)	FRAME;SPL	1		210A5 1425- 210L5 1264-		
49	3	KHN10740	ﾋﾟﾝ;ｽﾄﾚｰﾄ	PIN;PLAIN	1		210A5 1425- 210L5 1264-		
50	3	KHN2261	ﾌﾞｼｭ;ｵｲﾙﾚｽ	BUSH;OILLESS	2		210A5 1425- 210L5 1264-		
51	3	KHN2272	ﾄﾒﾜ E 24	LOCK RING;SPL	2		210A5 1425- 210L5 1264-		
52	3	KHN13231	ｽﾌﾟﾘﾝｸﾞ;ﾈｼﾞﾘｺｲﾙ (ｺﾝｿ	SPRING;TORSION COIL	1		210A5 1425- 210L5 1264-		
53	3	KHN13210	ﾋﾟﾝ;ｽﾄﾚｰﾄ	PIN;PLAIN	1		210A5 1425- 210L5 1264-		
54	3	KHN2397	ﾄﾒﾜ E19	LOCK RING;SPL	2		210A5 1425- 210L5 1264-		
55	3	KHN13201	ﾘﾝｸ (ﾁﾙﾄﾚﾊﾞｰR)	LINK	1		210A5 1425- 210L5 1264-		
56	3	KHN2249	ﾌﾞｼｭ;ｵｲﾙﾚｽ	BUSH;OILLESS	4		210A5 1425- 210L5 1264-		
57	3	KHN13240	ｽﾌﾟﾘﾝｸﾞ;ﾋｯﾊﾟﾘ ﾁﾙﾄﾚﾊﾞ	SPRING;EXTENSION	1		210A5 1425- 210L5 1264-		
58	3	KHN13220	ﾋﾟﾝ;ｽﾄﾚｰﾄ	PIN;PLAIN	1		210A5 1425- 210L5 1264-		
59	3	182-016SR	ﾐｶﾞｷW 16	WASHER;PLAIN	2		210A5 1425- 210L5 1264-		
60	3	KHN2270	ﾄﾒﾜ E 15	LOCK RING;SPL	2		210A5 1425- 210L5 1264-		
61	2A	KHN13141	ﾎﾞｯｸｽ;ｺﾝｿｰﾙ (L)	BOX;CONSOLE	1		210A5 1425- 210L5 1264-		
62	3	KHN13251	ﾌﾚｰﾑ ｺﾝｿｰﾙﾎﾞｯｸｽ(L)	FRAME;SPL	1		210A5 1425- 210L5 1264-		
63	3	KHN13261	ﾌﾚｰﾑ ;ﾁﾙﾄ(L)	FRAME;SPL	1		210A5 1425- 210L5 1264-		
64	3	KHN10740	ﾋﾟﾝ;ｽﾄﾚｰﾄ	PIN;PLAIN	1		210A5 1425- 210L5 1264-		
65	3	KHN2261	ﾌﾞｼｭ;ｵｲﾙﾚｽ	BUSH;OILLESS	2		210A5 1425- 210L5 1264-		
66	3	KHN2272	ﾄﾒﾜ E 24	LOCK RING;SPL	2		210A5 1425- 210L5 1264-		
67	3	KHN13231	ｽﾌﾟﾘﾝｸﾞ;ﾈｼﾞﾘｺｲﾙ (ｺﾝｿ	SPRING;TORSION COIL	1		210A5 1425- 210L5 1264-		
68	3	KHN13210	ﾋﾟﾝ;ｽﾄﾚｰﾄ	PIN;PLAIN	1		210A5 1425- 210L5 1264-		
69	3	KHN2397	ﾄﾒﾜ E19	LOCK RING;SPL	2		210A5 1425- 210L5 1264-		
70	3	KHN13271	ﾘﾝｸ (ﾁﾙﾄﾚﾊﾞｰL)	LINK	1		210A5 1425- 210L5 1264-		

https://truckmanualshub.com/

34 [35 ~ 104] 35 [36 ~ 43] 108 [109 ~ 144] 139 [140 ~ 144]

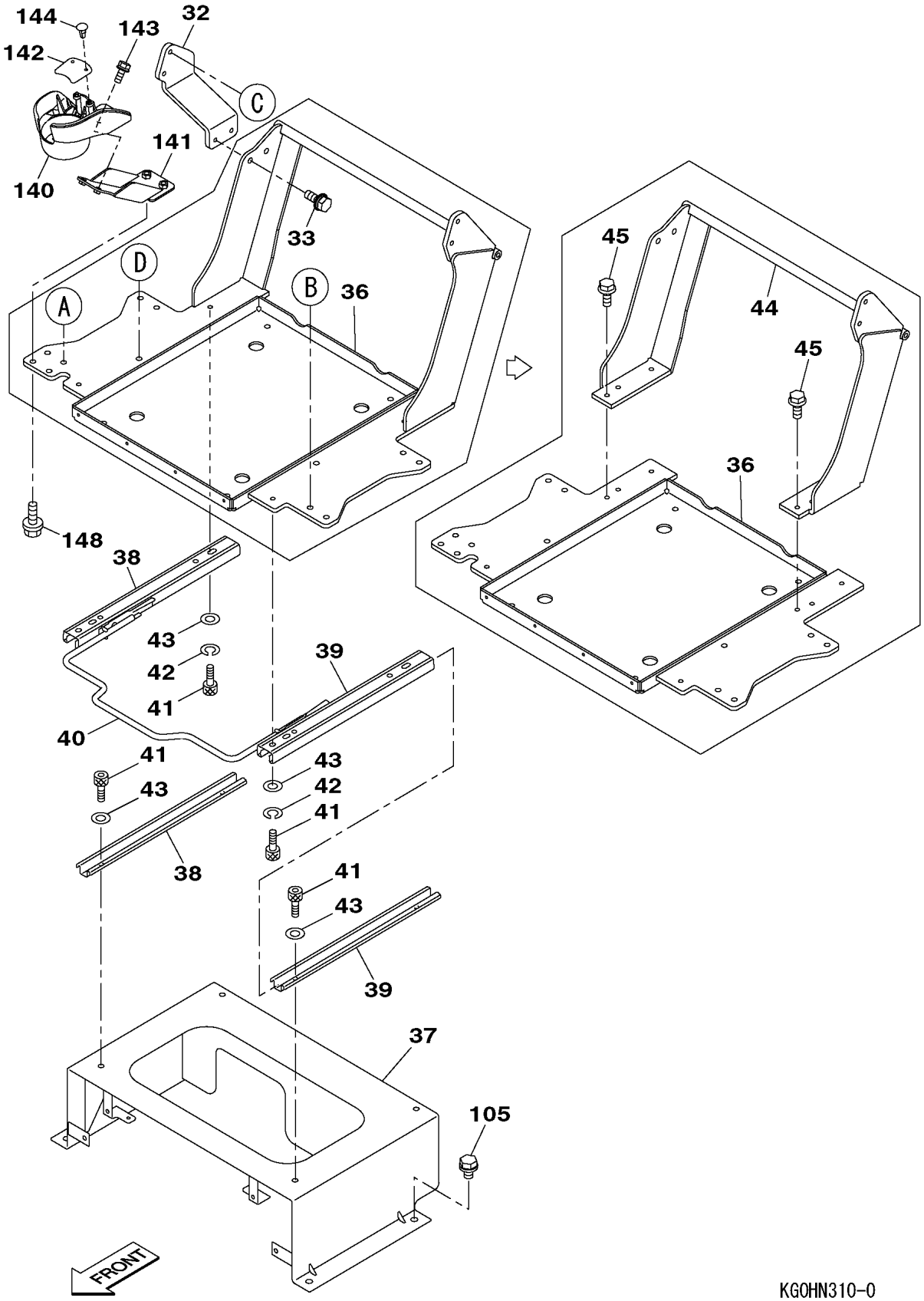

KG0HN310-0
KHN13020-EZ

https://truckmanualshub.com/

210A5 1101－ 210L5 1101－

符号 ITEM	構成 COMPO	部品番号 PART NO.	部品名	PART NAME	個数 Q'TY	ｲﾝﾅｰ	適用号機 SERIAL_NO.	互換 ICA	代替部品 REPLACEABLE PART
71	3	KHN2249	ﾌﾞｼｭ;ｵｲﾙﾚｽ	BUSH;OILLESS	4		210A5 1425- 210L5 1264-		
72	3	KHN13240	ｽﾌﾟﾘﾝｸﾞ;ﾋｯﾊﾟﾘ ﾁﾙﾄﾚﾊﾞ	SPRING;EXTENSION	1		210A5 1425- 210L5 1264-		
73	3	KHN13281	ﾘﾝｸ ｹﾞｰﾄﾚﾊﾞｰ	LINK	1		210A5 1425- 210L5 1264-		
74	3	182-016SR	ﾐｶﾞｷW 16	WASHER;PLAIN	1		210A5 1425- 210L5 1264-		
75	3	KHN2270	ﾄﾒﾜ E 15	LOCK RING;SPL	1		210A5 1425- 210L5 1264-		
76	3	KHN13290	ｽﾌﾟﾘﾝｸﾞ;ﾈｼﾞﾘｺｲﾙ ｹﾞｰﾄ	SPRING;TORSION COIL	1		210A5 1425- 210L5 1264-		
77	3	KHN13301	ﾌﾟﾚｰﾄ ﾁﾙﾄ	PLATE	1		210A5 1425- 210L5 1264-		
78	3	182-010SR	ﾐｶﾞｷW 10	WASHER;PLAIN	2		210A5 1425- 210L5 1264-		
79	3	378J0080Z	E-ﾄﾒﾜ 8	RING;E	1		210A5 1425- 210L5 1264-		
80	3	KHN13310	ﾌﾞｼｭ;ｵｲﾙﾚｽ	BUSH;OILLESS	1		210A5 1425- 210L5 1264-		
81	3	KHN13320	ﾛｰﾗ;ｶﾞｲﾄﾞ	ROLLER;GUIDE	1		210A5 1425- 210L5 1264-		
82	3	KHN0482	ﾜｯｼｬ M6 ﾒｯｷ	WASHER;SPL	2		210A5 1425- 210L5 1264-		
83	3	KEH0114	ｺｳﾘｷW M10 ﾒｯｷ	WASHER;HIGH STRENGTH	1		210A5 1425- 210L5 1264-		
84	3	378J0050Z	E-ﾄﾒﾜ 5	RING;E	2		210A5 1425- 210L5 1264-		
85	3	KHN13341	ﾘﾝｸ ｹﾞｰﾄﾊﾞｰ	LINK	1		210A5 1425- 210L5 1264-		
86	3	182-006SR	ﾐｶﾞｷW 6	WASHER;PLAIN	1		210A5 1425- 210L5 1264-		
87	3	KHR14930	ｽｲｯﾁ;ﾘﾐｯﾄ	SWITCH;LIMIT	1		210A5 1425- 210L5 1264-		
88	2	KHJ1632	ﾛｯｶｸｱﾅB (ﾎﾞﾀﾝｱﾀﾏ)M10	BOLT;HEX SOC HD	8		210A5 1425- 210L5 1264-		
89	2	183-110VR	SW 10	WASHER;SPRING	8		210A5 1425- 210L5 1264-		
90	2	182-010SR	ﾐｶﾞｷW 10	WASHER;PLAIN	8		210A5 1425- 210L5 1264-		
91	2A	KHN17040	ﾊﾞｰ ｹﾞｰﾄ ASSY	BAR;SPL	1		210A5 1425- 210L5 1264-		
92	3	KHN14880	ﾌﾞﾗｹｯﾄ ｶﾊﾞｰ ﾋﾀﾞﾘ	BRACKET	1		210A5 -1424 210L5 -1263		
92	3	KHN14881	ﾌﾞﾗｹｯﾄ ｶﾊﾞｰL	BRACKET	1		210A5 1425- 210L5 1264-		
93	3	KHN13331	ﾊﾞｰ ｹﾞｰﾄ	BAR	1		210A5 1425- 210L5 1264-		
94	3	KHN2249	ﾌﾞｼｭ;ｵｲﾙﾚｽ	BUSH;OILLESS	2		210A5 1425- 210L5 1264-		
95	3	182-016SR	ﾐｶﾞｷW 16	WASHER;PLAIN	1		210A5 1425- 210L5 1264-		
96	3	KHN2270	ﾄﾒﾜ E 15	LOCK RING;SPL	1		210A5 1425- 210L5 1264-		
97	3	KHN13350	ｽﾌﾟﾘﾝｸﾞ;ﾋｯﾊﾟﾘ ｹﾞｰﾄﾊﾞ	SPRING;EXTENSION	1		210A5 1425- 210L5 1264-		
98	3	KHN16810	ﾌﾞﾗｹｯﾄ ｽﾌﾟﾘﾝｸﾞ	BRACKET	1		210A5 1425- 210L5 1264-		
99	3	KHN2132	ｺｳﾘｷB M6X16 (ｻﾞｶﾞﾈｸﾐ	BOLT;HIGH STRENGTH	2		210A5 1425- 210L5 1264-		

https://truckmanualshub.com/

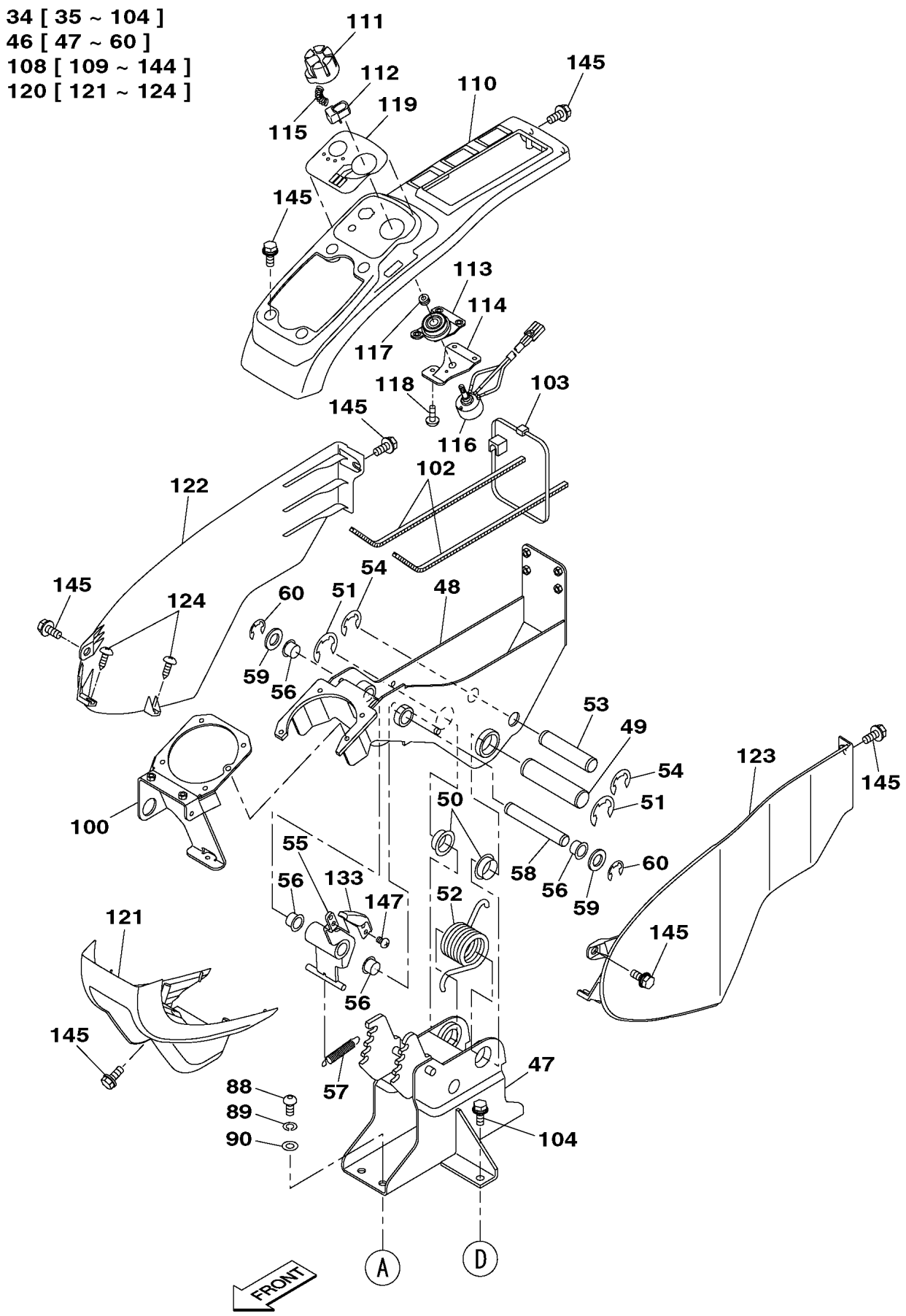

KG0HN310-0
KHN13020-EZ

https://truckmanualshub.com/

210A5 1101－　　210L5 1101－

符号 ITEM	構成 COMPO	部品番号 PART NO.	部品名	PART NAME	個数 Q'TY	ｲﾝﾅｰ	適用号機 SERIAL_NO.	互換 ICA	代替部品 REPLACEABLE PART
100	2	KHN14871	ﾌﾞﾗｹｯﾄ ｶﾊﾞｰR	BRACKET	1		210A5 1425- 210L5 1264-		
101	2	KHN17070	ｶﾞｰﾄﾞ ｴｯｼﾞ (L=320)	GUARD	2		210A5 1425- 210L5 1264-		
102	2	KHN17060	ｶﾞｰﾄﾞ ｴｯｼﾞ(L=290)	GUARD	2		210A5 1425- 210L5 1264-		
103	2	KHN17050	ｸﾘｯﾌﾟ ｴｯｼﾞ	CLIP	6		210A5 1425- 210L5 1264-		
104	2	105R010Y016R	ｾﾑｽB M10X 16	BOLT;SEMS	2		210A5 1425- 210L5 1264-		
105	1	105R010Y016R	ｾﾑｽB M10X 16	BOLT;SEMS	4				
106	1	378J0050Z	E-ﾄﾒﾜ 5	RING;E	1				
107	1	182-006SR	ﾐｶﾞｷW 6	WASHER;PLAIN	1				
108	1A	KHN13950	ｶﾊﾞｰ ｸﾞﾙｰﾌﾟﾋｮｳ (ｸﾞﾚｰ	COVER	1				
109	2	KHN13970	ｶﾊﾞｰ;ﾄｯﾌﾟ (ｺﾝｿｰﾙ R)A	COVER;TOP	1		210A5 NOT USED 210L5 NOT USED		
109	2A	KHN13971	ｶﾊﾞｰ;ﾄｯﾌﾟ ｺﾝｿｰﾙR ASS	COVER;TOP	1				
110	3	KHN12220	ｶﾊﾞｰ;ﾄｯﾌﾟ (ｺﾝｿｰﾙR) ｸ	COVER;TOP	1				
111	3	KHN15100	ﾉﾌﾞ ｽﾛｯﾄﾙ	KNOB	1				
112	3	KHN15110	ﾎﾞﾀﾝ ｽﾛｯﾄﾙ	BUTTON	1				
113	3	KHN15120	ｶﾊﾞｰ ｽﾛｯﾄﾙ	COVER	1				
114	3	KHN15130	ﾌﾞﾗｹｯﾄ ｽﾛｯﾄﾙ	BRACKET	1				
115	3	KHN15140	ｽﾌﾟﾘﾝｸﾞ;ｱｯｼｭｸ ｽﾛｯﾄﾙ	SPRING;COMPRESSION	1				
116	3	KHR2751	ｽｲｯﾁ ｽﾛｯﾄﾙ	SWITCH;SPL	1				
117	3	KHR2741	ﾊﾟｯｷﾝ ﾎﾞｳｽｲ	PACKING	1				
118	3	KHR2737	+ﾄﾗｽﾀｯﾌﾟS M5X14	SCREW;TAPPING	3				
119	3	KHN14070	ﾊﾟﾈﾙ ｼｰﾄ (ｺﾝｿｰﾙ R)	PANEL;SPL	1		210A5 NOT USED 210L5 NOT USED		
119	3	KHN14071	ﾊﾟﾈﾙ ｼｰﾄ(ｺﾝｿｰﾙR)	PANEL;SPL	1				
120	2A	KHN14010	ｶﾊﾞｰ;ｱﾝﾀﾞ (ｺﾝｿｰﾙ R)A	COVER;UNDER	1				
121	3	KHN12260	ｶﾊﾞｰ;ｱﾝﾀﾞ (ｺﾝｿｰﾙR) ｸ	COVER;UNDER	1				
122	3	KHN12300	ｶﾊﾞｰ;ｻｲﾄﾞ (ｺﾝｿｰﾙRR)	COVER;SIDE	1				
123	3	KHN12320	ｶﾊﾞｰ;ｻｲﾄﾞ (ｺﾝｿｰﾙRL)	COVER;SIDE	1				
124	3	KHR2737	+ﾄﾗｽﾀｯﾌﾟS M5X14	SCREW;TAPPING	4				
125	2A	KHN13990	ｶﾊﾞｰ;ﾄｯﾌﾟ (ｺﾝｿｰﾙ L)	COVER;TOP	1				
126	3	KHN12240	ｶﾊﾞｰ;ﾄｯﾌﾟ (ｺﾝｿｰﾙL) ｸ	COVER;TOP	1				
127	3	KHN16770	ﾊﾟﾈﾙ ｼｰﾄ ｹﾞｰﾄﾚﾊﾞｰ	PANEL;SPL	1				
128	2A	KHN14030	ｶﾊﾞｰ;ｱﾝﾀﾞ (ｺﾝｿｰﾙ L)A	COVER;UNDER	1				
129	3	KHN12280	ｶﾊﾞｰ;ｱﾝﾀﾞ (ｺﾝｿｰﾙL) ｸ	COVER;UNDER	1				
130	3	KHN12340	ｶﾊﾞｰ;ｻｲﾄﾞ (ｺﾝｿｰﾙLL)	COVER;SIDE	1				
131	3	KHN13730	ｶﾊﾞｰ;ｻｲﾄﾞ (ｺﾝｿｰﾙLR)	COVER;SIDE	1				
132	3	KHR2737	+ﾄﾗｽﾀｯﾌﾟS M5X14	SCREW;TAPPING	6				
133	2	KHN12360	ﾚﾊﾞｰ ﾁﾙﾄ R	LEVER;SPL	1				
134	2	KHN12370	ﾚﾊﾞｰ ﾁﾙﾄ L	LEVER;SPL	1				
135	2A	KHN17080	ｸﾞﾘｯﾌﾟ ｹﾞｰﾄﾚﾊﾞｰASSY	GRIP	1				
136	3	KHN12380	ｸﾞﾘｯﾌﾟ ｹﾞｰﾄﾚﾊﾞｰ	GRIP	1				
137	3	KHN17090	ﾌﾟﾚｰﾄ ｸﾞﾘｯﾌﾟ	PLATE	1				
138	3	KHR2733	+ﾄﾗｽﾀｯﾌﾟS M4X12	SCREW;TAPPING	2				
139	2A	KHN14050	ﾎﾙﾀﾞ ｶｯﾌﾟ ASSY	HOLDER;SPL	1				
140	3	KHN12400	ﾎﾙﾀﾞ ｶｯﾌﾟ	HOLDER;SPL	1				
141	3	KHN14750	ﾌﾞﾗｹｯﾄ ｶｯﾌﾟﾎﾙﾀﾞ	BRACKET	1				
142	3	KHN14760	ﾌﾟﾚｰﾄ;ﾗﾊﾞｰ ｶｯﾌﾟﾎﾙﾀﾞｰ	PLATE;RUBBER	1				
143	3	KHN2132	ｺｳﾘｷB M6X16 (ｻﾞｶﾞﾈｸﾐ	BOLT;HIGH STRENGTH	2				
144	3	KHN2470	ｸﾘｯﾌﾟ ｶﾇｰ	CLIP;SPL	2				
145	1	KHN2132	ｺｳﾘｷB M6X16 (ｻﾞｶﾞﾈｸﾐ	BOLT;HIGH STRENGTH	18				
146	1	KHN17280	ﾛｯｶｸｱﾅB M6X10 ｸﾛﾒｯｷ	BOLT;HEX SOC HD	2				
147	1	KHN1407	+ﾅﾍﾞS M5X10(ｻﾞｶﾞﾈｯｷ)	SCREW;PAN HD	4				
148	1	KHN17270	ﾎﾞﾙﾄ ﾄｸｼｭ M8X20 ｻﾞｶﾞ	BOLT;SPL	2				
149	1	KHN2058	ﾊｲｻﾞﾗ	ASHTRAY	1				
150	1	KHN2336	ｹｰｽ ﾊｲｻﾞﾗ	CASE;SPL	1				

https://truckmanualshub.com/

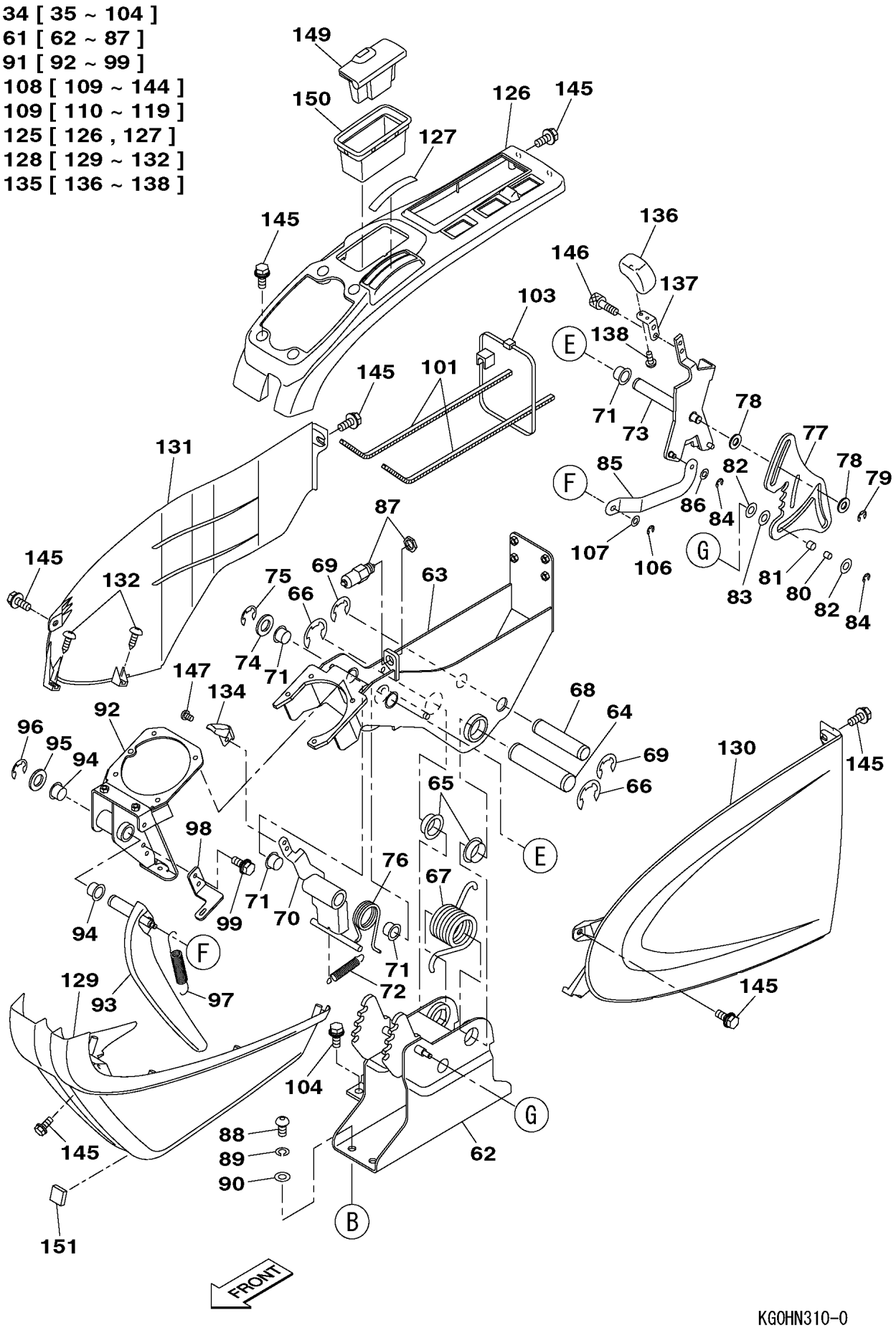

KGOHN310-0
KHN13020-EZ

https://truckmanualshub.com/

210A5 1101－　　210L5 1101－

符号 ITEM	構成 COMPO	部品番号 PART NO.	部品名	PART NAME	個数 Q'TY	インナー	適用号機 SERIAL_NO.	互換 ICA	代替部品 REPLACEABLE PART
151	1	KHN17560	ｼｰﾙ;ｸｯｼｮﾝ	SEAL;CUSHION	1				

https://truckmanualshub.com/

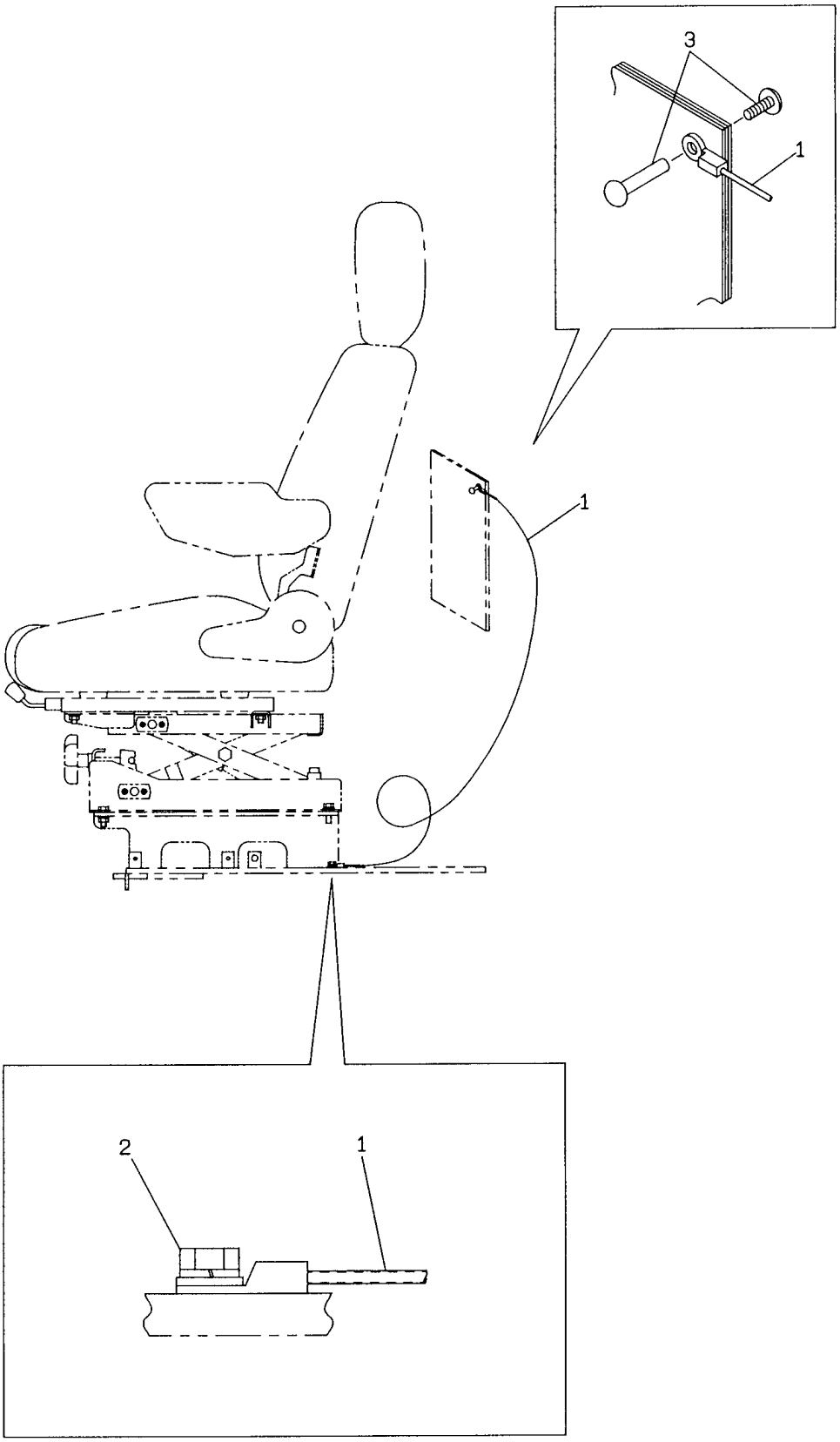

KG0HN092-0
KHN1908Z-B

https://truckmanualshub.com/

210A5 1101－ 210L5 1101－

符号 ITEM	構成 COMPO	部品番号 PART NO.	部品名	PART NAME	個数 Q'TY	ｲﾝﾅｰ	適用号機 SERIAL_NO.	互換 ICA	代替部品 REPLACEABLE PART
1	1	KHN1690	ﾜｲﾔﾛｰﾌﾟ L=1500	ROPE;STEEL WIRE	1				
2	1	KHR1252	ﾎﾞﾙﾄ M 6X 12(ｻﾞｶﾞﾈｯｷ	BOLT;SPL	1				
3	1	KHN1903	ﾈｼﾞｽｸﾘｭｰ ﾄｸｼｺ	THREDED SCREW;SPL	1				

https://truckmanualshub.com/

1 [2 ~ 7]

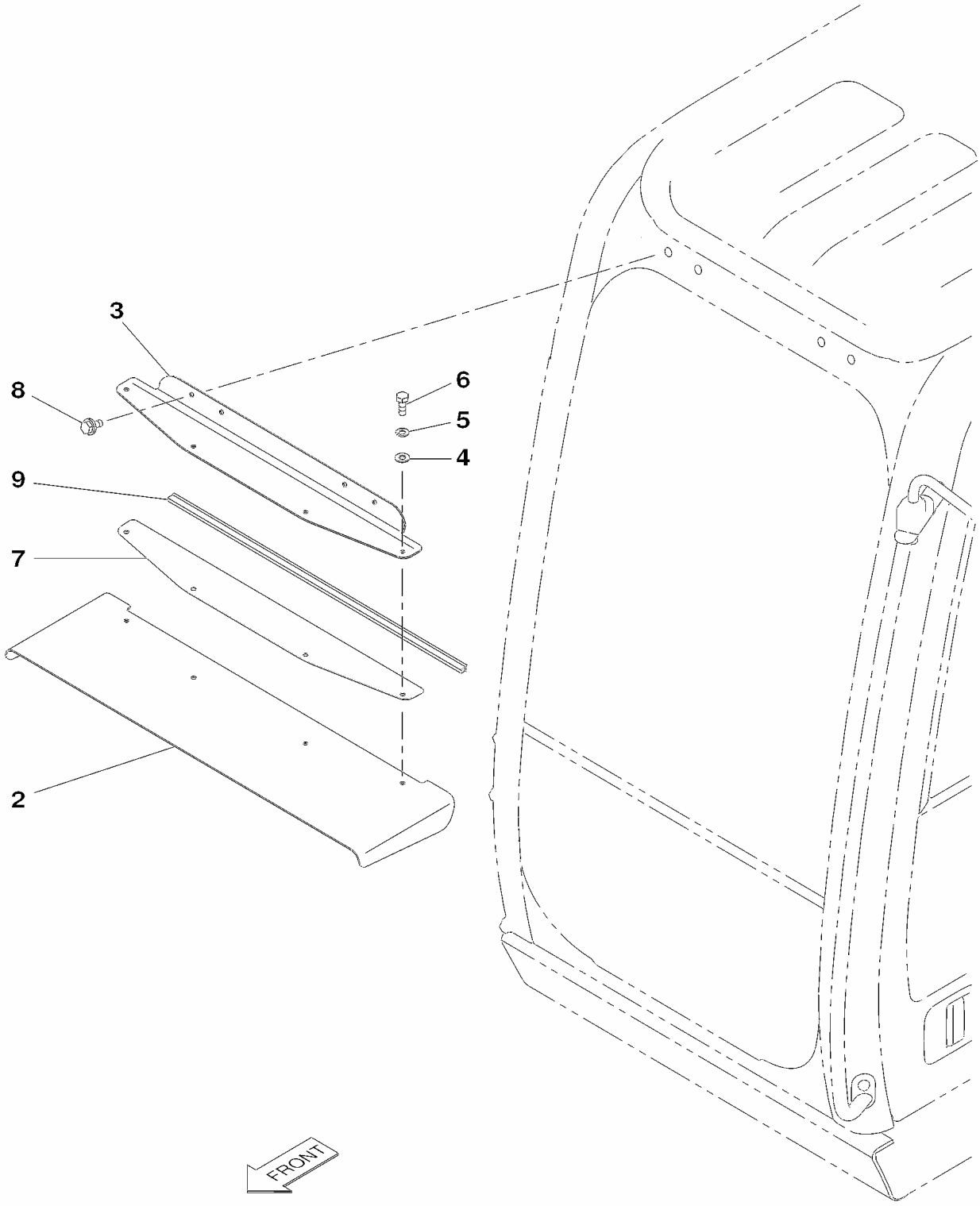

KG0HN304-0
KHN13580-CZ

https://truckmanualshub.com/

210A5 1101－ 210L5 1101－

符号 ITEM	構成 COMPO	部品番号 PART NO.	部品名	PART NAME	個数 Q'TY	ｲﾝﾅｰ	適用号機 SERIAL_NO.	互換 ICA	代替部品 REPLACEABLE PART
1	1A	KHN13590	ﾚﾌﾚｸﾀ ; ﾚｲﾝ ASSY	REFLECTOR	1				
2	2	KHN11900	ﾚﾌﾚｸﾀ ﾚｲﾝ	REFLECTOR	1				
3	2	KHN13600	ﾌﾞﾗｹｯﾄ	BRACKET	1				
4	2	182-008SR	ﾐｶﾞｷW 8	WASHER;PLAIN	4				
5	2	183-108VR	SW 8	WASHER;SPRING	4				
6	2	102R008Y020R	ｺｳﾘｷB M 8X 20	BOLT;HIGH STRENGTH	4				
7	2	KHN11920	ｵｻｴ ﾄｸｼｭ	HOLDER;SPL	1				
8	1	105R008Y020R	ｾﾑｽB M 8X 20	BOLT;SEMS	4				
9	1	KHN2901	ﾄﾘﾑ;ｽﾎﾟﾝｼﾞ	TRIM;SPONGE	1				

https://truckmanualshub.com/

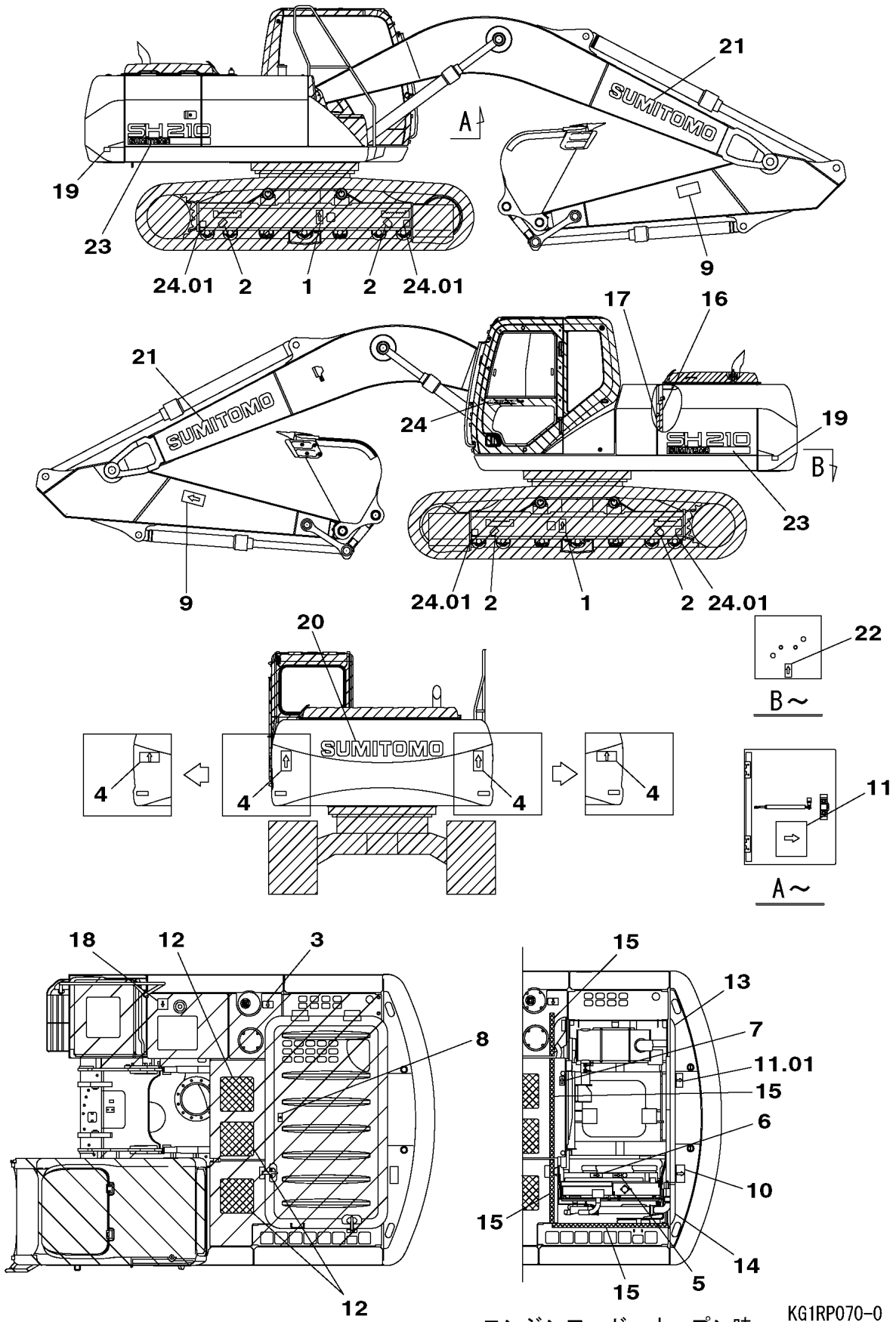

エンジンフード　オープン時
SITUATION OF OPENING
ENGINE HOOD

KG1RP070-0
KHP13000-EZ
KRP12660-DZ
KRP12800-EZ

https://truckmanualshub.com/

210A5 1101－

符号 ITEM	構成 COMPO	部品番号 PART NO.	部品名	PART NAME	個数 Q'TY	ｲﾝﾅｰ	適用号機 SERIAL_NO.	互換 ICA	代替部品 REPLACEABLE PART
1	1	KHP1014	ﾗﾍﾞﾙ;ﾁｭｳｲ ﾁｪｯｸﾊﾞﾙﾌﾞ(	LABEL;WARNING	2				
2	1	KHP12191	ﾗﾍﾞﾙ ﾂﾘﾎﾟｲﾝﾄ	LABEL;SPL	4				
3	1	KHP1542	ﾗﾍﾞﾙ;ﾁｭｳｲ ｻﾝﾌﾟﾀﾝｸ(ｴｲ	LABEL;WARNING	1				
4	1	RAP0144	ﾗﾍﾞﾙ;ﾁｭｳｲ ｾﾝｶｲ	LABEL;WARNING	2		210A5 NOT USED	<	KHP1532
4	1	KHP1532	ﾗﾍﾞﾙ;ﾁｭｳｲ ｾﾝｶｲﾅｲ ﾀﾁｲ	LABEL;WARNING	2				
5	1	KHP11450	ﾗﾍﾞﾙ;ﾁｭｳｲ ﾗｼﾞｴﾀｷｬｯﾌﾟ	LABEL;WARNING	1				
6	1	KHP11470	ﾗﾍﾞﾙ;ﾁｭｳｲ ﾌｧﾝ FAN(ｴｲ	LABEL;WARNING	1				
7	1	KHP11490	ﾗﾍﾞﾙ;ﾁｭｳｲ ﾔｹﾄﾞ HOT S	LABEL;WARNING	1				
8	1	KHP11510	ﾗﾍﾞﾙ;ﾁｭｳｲ ﾊｳｽ(ｴｲﾌﾞﾝ)	LABEL;WARNING	1				
9	1	KHP12200	ﾗﾍﾞﾙ;ﾁｭｳｲ ﾊﾈﾄﾊﾞｻﾚ(ｴｲ	LABEL;WARNING	2				
10	1	KHP11540	ﾗﾍﾞﾙ;ﾁｭｳｲ ﾃﾝﾗｸ	LABEL;WARNING	1				
11	1	KRP11512	ﾗﾍﾞﾙ;ｷﾕｳｼ (ｴｲﾌﾞﾝ)	LABEL;LUB	1				
11.01	1	KHP13150	ﾗﾍﾞﾙ ｹｲｺｸ ｺﾓﾝﾚｰﾙｺｳｱﾂ	LABEL;SPL	1		210A5 1106-		
12	1	KHP1259	ﾃｰﾌﾟ;ﾉﾝｽﾘｯﾌﾟ 320X320	TAPE;NON-SLIP	3				
13	1	KRP11440	ﾃｰﾌﾟ (CTWTｳｴ)ﾋﾞﾋﾞｯﾄﾞ	TAPE	1				
14	1	KRP11450	ﾃｰﾌﾟ (CTWTｳｴ)ﾋﾞﾋﾞｯﾄﾞ	TAPE	1				
15	1	KHP0205	ﾃｰﾌﾟ ｽﾄﾗｲﾋﾟﾝｸﾞ	TAPE;SPL	1		210A5 -1526		
15	1	KHP1217	ﾃｰﾌﾟ ｽﾄﾗｲﾋﾟﾝｸﾞ L=320	TAPE;SPL	1		210A5 1527-		
16	1	KHP0973	ﾃｰﾌﾟ ｽﾄﾗｲﾋﾟﾝｸﾞ L=550	TAPE;SPL	1				
17	1	KHP1185	ﾃｰﾌﾟ ｽﾄﾗｲﾋﾟﾝｸﾞ 30X25	TAPE;SPL	1				
18	1	KHP11691	ﾗﾍﾞﾙ;ﾁｭｳｲ (ｼｮｳﾈﾝﾘｮｳ)	LABEL;WARNING	1				
19	1	KHP12530	ﾗﾍﾞﾙ ﾊﾝｼｬ	LABEL;SPL	2				
20	1	KHP12270	ﾜﾂﾍﾟﾝ ｼｬﾒｲ(ｶｳﾝﾀｳｪｲﾄ)	LABEL;SPL	1				
21	1	KHP1429	ﾜﾂﾍﾟﾝ ｼｬﾒｲ	WAPPEN;SPL	2				
22	1	KHP12260	ﾗﾍﾞﾙ;ﾁｭｳｲ ﾊﾞｯﾃﾘ	LABEL;WARNING	1				
23	1	KRP12080	ﾜﾂﾍﾟﾝ;ｷｼｭ SH210	LABEL;MODEL NO.	2				
24	1	KHP13020	ﾜﾂﾍﾟﾝ ﾚｼﾞｪｽﾄ	LABEL;SPL	1		210A5 1124-		
24.01	1	KHP15190	ﾗﾍﾞﾙ ｺｳｿｸﾎﾟｲﾝﾄ (BLAC	LABEL;SPL	4		210A5 2271-		

DP (92)

https://truckmanualshub.com/

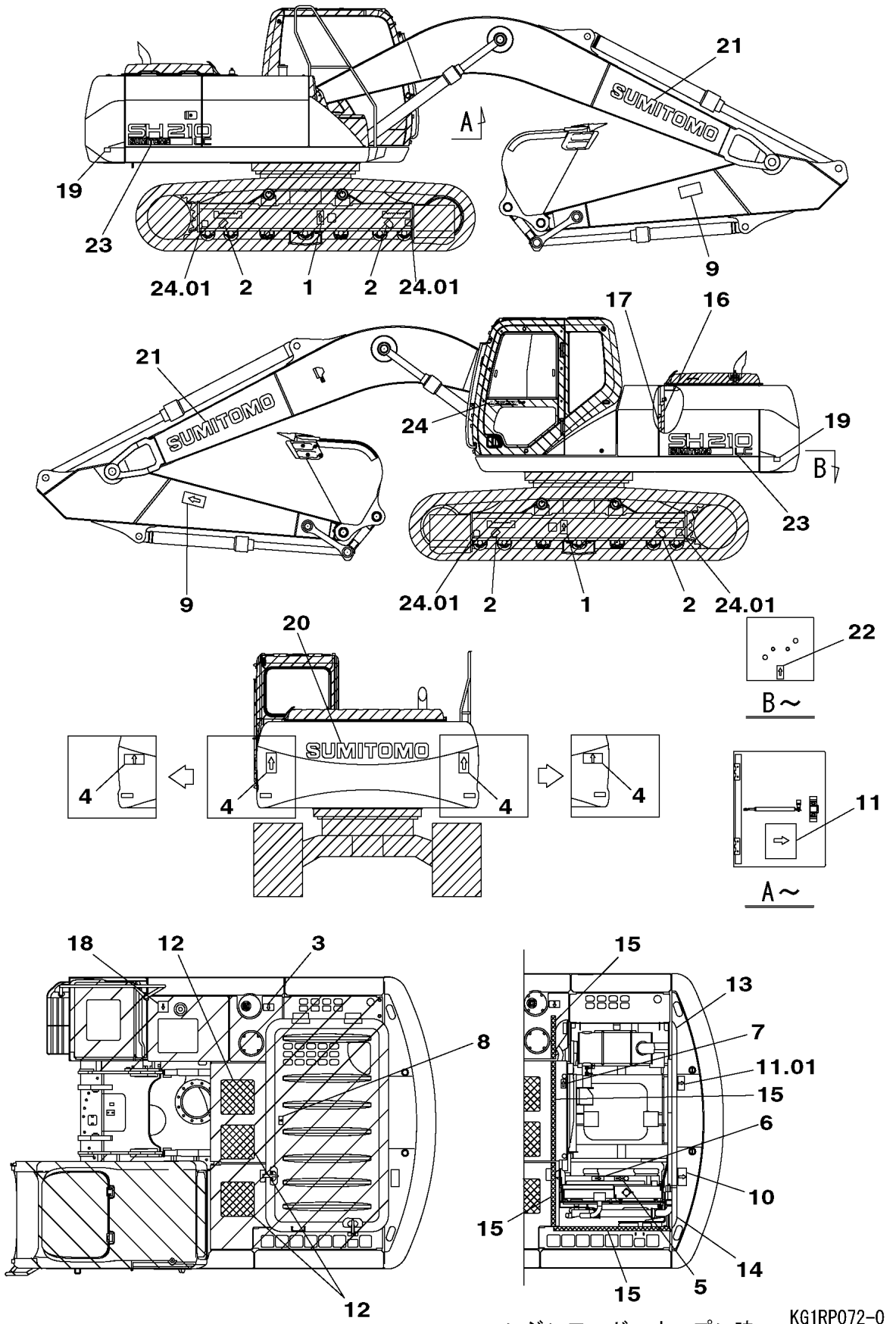

エンジンフード　オープン時
SITUATION OF OPENING
ENGINE HOOD

KG1RP072-0
KHP13000-EZ
KRP12660-DZ
KRP12800-EZ

https://truckmanualshub.com/

210L5 1101－

符号 ITEM	構成 COMPO	部品番号 PART NO.	部品名	PART NAME	個数 Q'TY	ｲﾝﾅｰ	適用号機 SERIAL_NO.	互換 ICA	代替部品 REPLACEABLE PART
1	1	KHP1014	ﾗﾍﾞﾙ;ﾁｭｳｲ ﾁｪｯｸﾊﾞﾙﾌﾞ(	LABEL;WARNING	2				
2	1	KHP12191	ﾗﾍﾞﾙ ﾂﾘﾎﾟｲﾝﾄ	LABEL;SPL	4				
3	1	KHP1542	ﾗﾍﾞﾙ;ﾁｭｳｲ ｻﾝﾌﾟﾀﾝｸ(ｴｲ	LABEL;WARNING	1				
4	1	RAP0144	ﾗﾍﾞﾙ;ﾁｭｳｲ ｾﾝｶｲ	LABEL;WARNING	2		210L5 -1104	<	KHP1532
4	1	KHP1532	ﾗﾍﾞﾙ;ﾁｭｳｲ ｾﾝｶｲﾅｲ ﾀﾁｲ	LABEL;WARNING	2		210L5 1105-		
5	1	KHP11450	ﾗﾍﾞﾙ;ﾁｭｳｲ ﾗｼﾞｴﾀｷｬｯﾌﾟ	LABEL;WARNING	1				
6	1	KHP11470	ﾗﾍﾞﾙ;ﾁｭｳｲ ﾌｧﾝ FAN(ｴｲ	LABEL;WARNING	1				
7	1	KHP11490	ﾗﾍﾞﾙ;ﾁｭｳｲ ﾔｹﾄﾞ HOT S	LABEL;WARNING	1				
8	1	KHP11510	ﾗﾍﾞﾙ;ﾁｭｳｲ ﾊｳｽ(ｴｲﾌﾞﾝ)	LABEL;WARNING	1				
9	1	KHP12200	ﾗﾍﾞﾙ;ﾁｭｳｲ ﾊﾈﾄﾊﾞｻﾚ(ｴｲ	LABEL;WARNING	2				
10	1	KHP11540	ﾗﾍﾞﾙ;ﾁｭｳｲ ﾃﾝﾗｸ	LABEL;WARNING	1				
11	1	KRP11512	ﾗﾍﾞﾙ;ｷﾕｳｼ (ｴｲﾌﾞﾝ)	LABEL;LUB	1				
11.01	1	KHP13150	ﾗﾍﾞﾙ ｹｲｺｸ ｺﾓﾝﾚｰﾙｺｳｱﾂ	LABEL;SPL	1				
12	1	KHP1259	ﾃｰﾌﾟ;ﾉﾝｽﾘｯﾌﾟ 320X320	TAPE;NON-SLIP	3				
13	1	KRP11440	ﾃｰﾌﾟ (CTWTｳｴ)ﾋﾞﾋﾞｯﾄﾞ	TAPE	1				
14	1	KRP11450	ﾃｰﾌﾟ (CTWTｳｴ)ﾋﾞﾋﾞｯﾄﾞ	TAPE	1				
15	1	KHP0205	ﾃｰﾌﾟ ｽﾄﾗｲﾋﾟﾝｸﾞ	TAPE;SPL	1		210L5 -1292		
15	1	KHP1217	ﾃｰﾌﾟ ｽﾄﾗｲﾋﾟﾝｸﾞ L=320	TAPE;SPL	1		210L5 1293-		
16	1	KHP0973	ﾃｰﾌﾟ ｽﾄﾗｲﾋﾟﾝｸﾞ L=550	TAPE;SPL	1				
17	1	KHP1185	ﾃｰﾌﾟ ｽﾄﾗｲﾋﾟﾝｸﾞ 30X25	TAPE;SPL	1				
18	1	KHP11691	ﾗﾍﾞﾙ;ﾁｭｳｲ (ｼﾖｳﾈﾝﾘｮｳ)	LABEL;WARNING	1				
19	1	KHP12530	ﾗﾍﾞﾙ ﾊﾝｼｬ	LABEL;SPL	2				
20	1	KHP12270	ﾜﾂﾍﾟﾝ ｼｬﾒｲ(ｶｳﾝﾀｳｪｲﾄ)	LABEL;SPL	1				
21	1	KHP1429	ﾜﾂﾍﾟﾝ ｼｬﾒｲ	WAPPEN;SPL	2				
22	1	KHP12260	ﾗﾍﾞﾙ;ﾁｭｳｲ ﾊﾞｯﾃﾘ	LABEL;WARNING	1				
23	1	KRP12090	ﾜﾂﾍﾟﾝ;ｷｼｭ SH210LC	LABEL;MODEL NO.	2				
24	1	KHP13020	ﾜﾂﾍﾟﾝ ﾚｼﾞｪｽﾄ	LABEL;SPL	1				
24.01	1	KHP15190	ﾗﾍﾞﾙ ｺｳﾂｸﾎﾟｲﾝﾄ (BLAC	LABEL;SPL	4		210L5 1517-		

https://truckmanualshub.com/

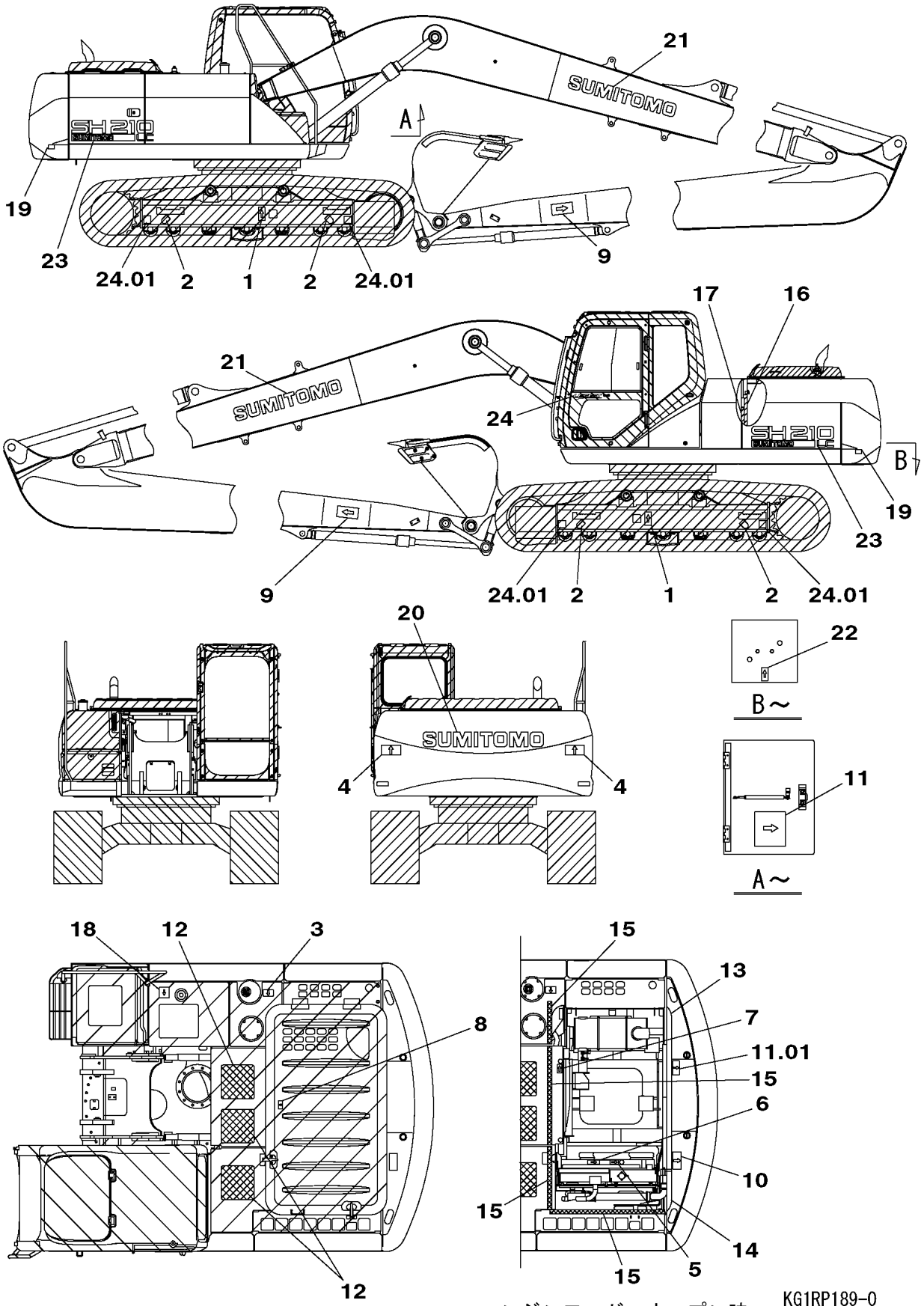

エンジンフード　オープン時
SITUATION OF OPENING
ENGINE HOOD

KG1RP189-0
KHP13000-EZ
KRP12660-DZ
KRP12800-EZ

https://truckmanualshub.com/

210L5 1101－

符号 ITEM	構成 COMPO	部品番号 PART NO.	部品名	PART NAME	個数 Q'TY	ｲﾝﾅｰ	適用号機 SERIAL_NO.	互換 ICA	代替部品 REPLACEABLE PART
1	1	KHP1014	ﾗﾍﾞﾙ;ﾁｭｳｲ ﾁｪｯｸﾊﾞﾙﾌﾞ(	LABEL;WARNING	2				
2	1	KHP12191	ﾗﾍﾞﾙ ﾂﾘﾎﾟｲﾝﾄ	LABEL;SPL	4				
3	1	KHP1542	ﾗﾍﾞﾙ;ﾁｭｳｲ ｻﾝﾌﾟﾀﾝｸ(ｴｲ	LABEL;WARNING	1				
4	1	KHP1532	ﾗﾍﾞﾙ;ﾁｭｳｲ ｾﾝｶｲﾅｲ ﾀﾁｲ	LABEL;WARNING	2		210L5 1105-		
5	1	KHP11450	ﾗﾍﾞﾙ;ﾁｭｳｲ ﾗｼﾞｴﾀｷｬｯﾌﾟ	LABEL;WARNING	1				
6	1	KHP11470	ﾗﾍﾞﾙ;ﾁｭｳｲ ﾌｧﾝ FAN(ｴｲ	LABEL;WARNING	1				
7	1	KHP11490	ﾗﾍﾞﾙ;ﾁｭｳｲ ﾔｹﾄﾞ HOT S	LABEL;WARNING	1				
8	1	KHP11510	ﾗﾍﾞﾙ;ﾁｭｳｲ ﾊｳｽ(ｴｲﾌﾞﾝ)	LABEL;WARNING	1				
9	1	KHP12200	ﾗﾍﾞﾙ;ﾁｭｳｲ ﾊﾈﾄﾊﾞｻﾚ(ｴｲ	LABEL;WARNING	2				
10	1	KHP11540	ﾗﾍﾞﾙ;ﾁｭｳｲ ﾃﾝﾗｸ	LABEL;WARNING	1				
11	1	KRP11512	ﾗﾍﾞﾙ;ｷﾕｳｼ (ｴｲﾌﾞﾝ)	LABEL;LUB	1				
11.01	1	KHP13150	ﾗﾍﾞﾙ ｹｲｺｸ ｺﾓﾝﾚｰﾙｺｳｱﾂ	LABEL;SPL	1				
12	1	KHP1259	ﾃｰﾌﾟ;ﾉﾝｽﾘｯﾌﾟ 320X320	TAPE;NON-SLIP	3				
13	1	KRP11440	ﾃｰﾌﾟ (CTWTｳｴ)ﾋﾞﾋﾞｯﾄﾞ	TAPE	1				
14	1	KRP11450	ﾃｰﾌﾟ (CTWTｳｴ)ﾋﾞﾋﾞｯﾄﾞ	TAPE	1				
15	1	KHP0205	ﾃｰﾌﾟ ｽﾄﾗｲﾋﾟﾝｸﾞ	TAPE;SPL	1		210L5 -1292		
15	1	KHP1217	ﾃｰﾌﾟ ｽﾄﾗｲﾋﾟﾝｸﾞ L=320	TAPE;SPL	1		210L5 1293-		
16	1	KHP0973	ﾃｰﾌﾟ ｽﾄﾗｲﾋﾟﾝｸﾞ L=550	TAPE;SPL	1				
17	1	KHP1185	ﾃｰﾌﾟ ｽﾄﾗｲﾋﾟﾝｸﾞ 30X25	TAPE;SPL	1				
18	1	KHP11691	ﾗﾍﾞﾙ;ﾁｭｳｲ (ｼｮｳﾈﾝﾘｮｳ)	LABEL;WARNING	1				
19	1	KHP12530	ﾗﾍﾞﾙ ﾊﾝｼｬ	LABEL;SPL	2				
20	1	KHP12270	ﾜﾂﾍﾟﾝ ｼｬﾒｲ(ｶｳﾝﾀｳｪｲﾄ)	LABEL;SPL	1				
21	1	KHP1429	ﾜﾂﾍﾟﾝ ｼｬﾒｲ	WAPPEN;SPL	2				
22	1	KHP12260	ﾗﾍﾞﾙ;ﾁｭｳｲ ﾊﾞｯﾃﾘ	LABEL;WARNING	1				
23	1	KRP12090	ﾜﾂﾍﾟﾝ;ｷｼｭ SH210LC	LABEL;MODEL NO.	2				
24	1	KHP13020	ﾜﾂﾍﾟﾝ ﾚｼﾞｪｽﾄ	LABEL;SPL	1				
24.01	1	KHP15190	ﾗﾍﾞﾙ ｺｳｿｸﾎﾟｲﾝﾄ (BLAC	LABEL;SPL	4		210L5 1517-		

https://truckmanualshub.com/

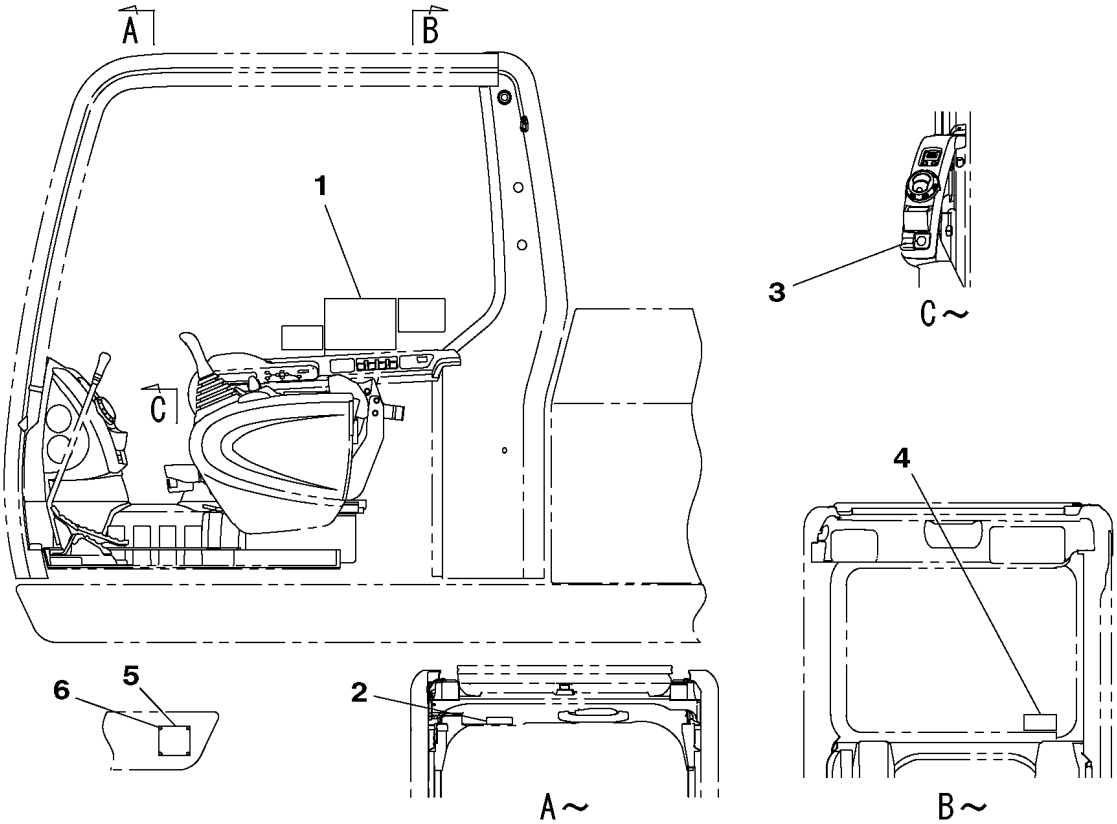

キャブ下プラットホーム右側
RIGHTSIDE OF PLATFORM UNDER CABIN

キャブ内フロントウィンド
FRONT WINDOW INSIDE CABIN

キャブ内後側
REAR SIDE OF CABIN

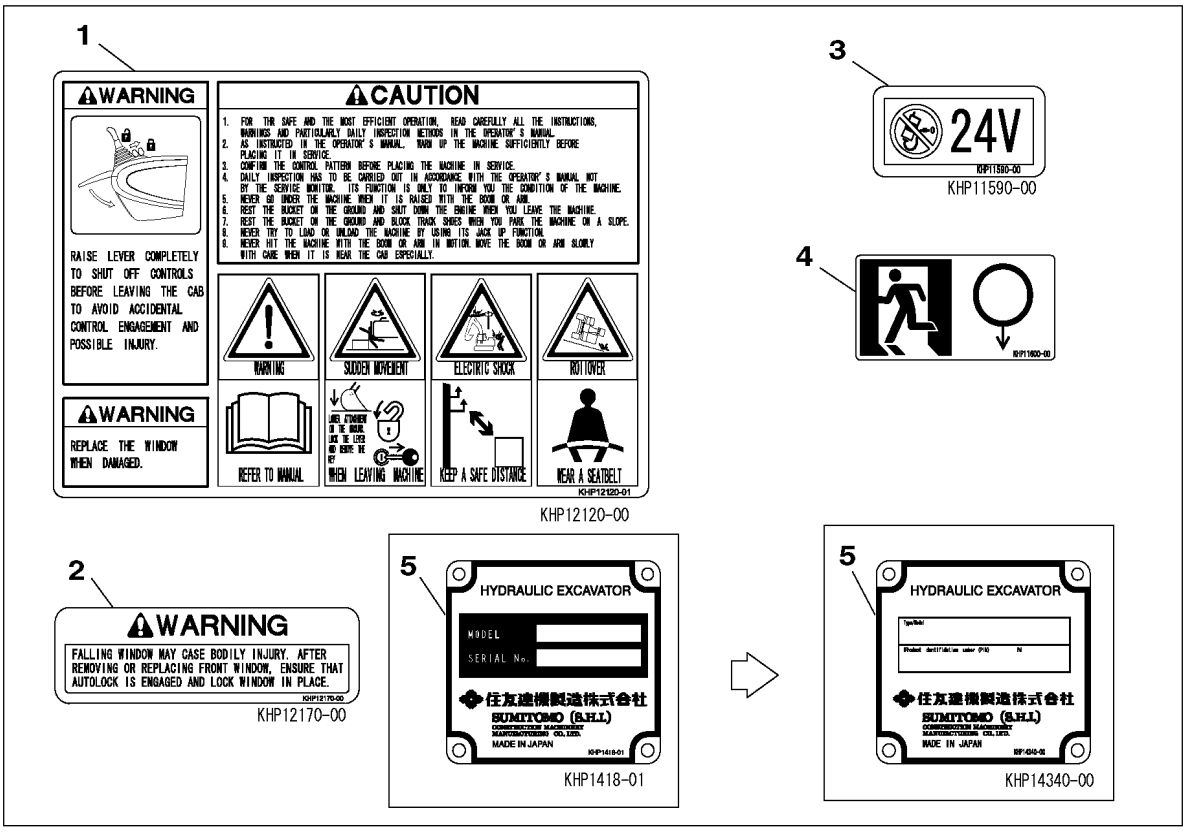

詳細
DETAIL

KG0HP215-00
KHP12050-DZ

https://truckmanualshub.com/

210A5 1101－ 210L5 1101－

符号 ITEM	構成 COMPO	部品番号 PART NO.	部品名	PART NAME	個数 Q'TY	ｲﾝﾅｰ	適用号機 SERIAL_NO.	互換 ICA	代替部品 REPLACEABLE PART
1	1	KHP12120	ﾗﾍﾞﾙ ｿｳｺﾞｳ EXPORT	LABEL;SPL	1				
2	1	KHP12170	ﾗﾍﾞﾙ;ﾁｭｳｲ ｾﾞﾝﾒﾝﾏﾄﾞ	LABEL;WARNING	1				
3	1	KHP11590	ﾗﾍﾞﾙ;ﾁｭｳｲ 24V	LABEL;WARNING	1				
4	1	KHP11600	ﾗﾍﾞﾙ ｷﾝｷｭｳﾀﾞｯｼｭﾂﾖｳ	LABEL;SPL	1				
5	1	KHP1418	ﾒｲﾊﾞﾝ;ｷﾊﾞﾝ	NAMEPLATE;SER NO.	1		210A5 -1607 210L5 -1314		
5	1	KHP14340	ﾒｲﾊﾞﾝ;ｷﾊﾞﾝ	NAMEPLATE;SER NO.	1		210A5 1608- 210L5 1315-		
6	1	KHP1420	ﾌﾞﾗｲﾝﾄﾞR	RIVET;BLIND	4				

https://truckmanualshub.com/

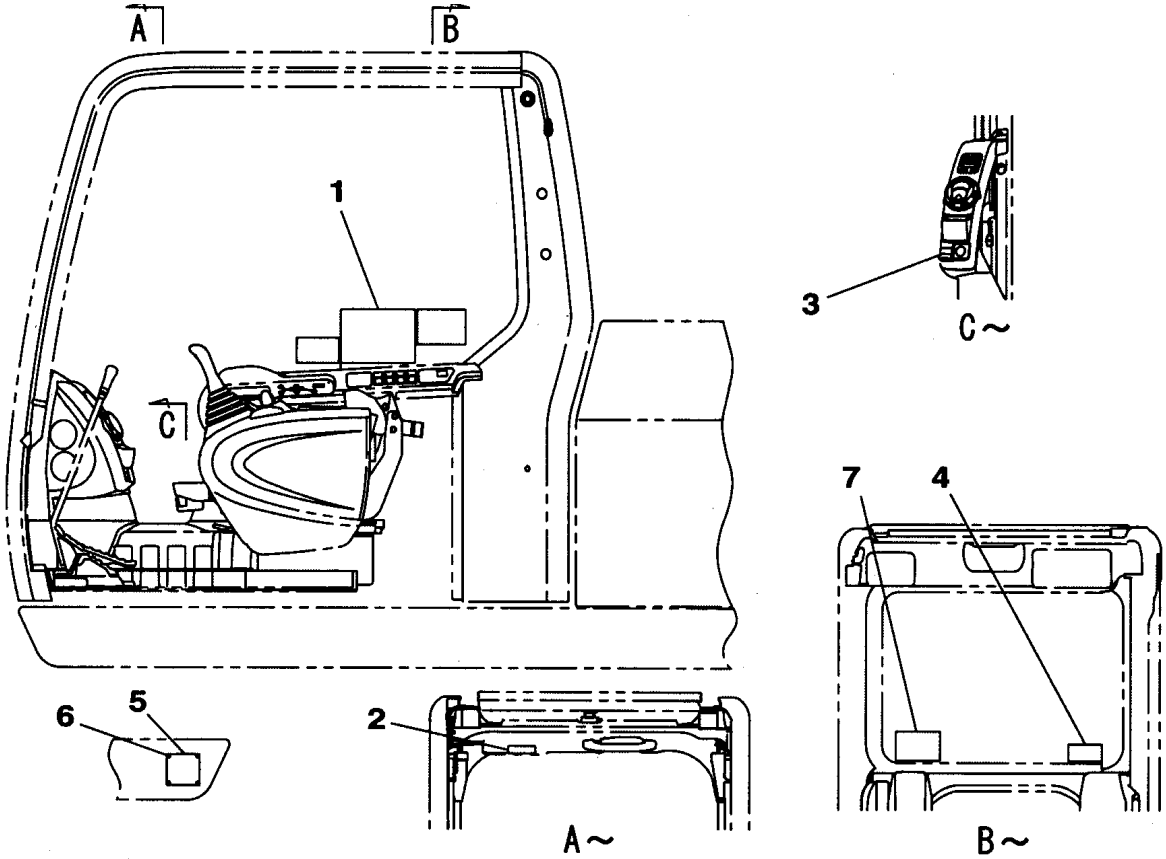

キャブ下プラットホーム右側
RIGHTSIDE OF PLATFORM UNDER CABIN

キャブ内フロントウィンド
FRONT WINDOW INSIDE CABIN

キャブ内後側
REAR SIDE OF CABIN

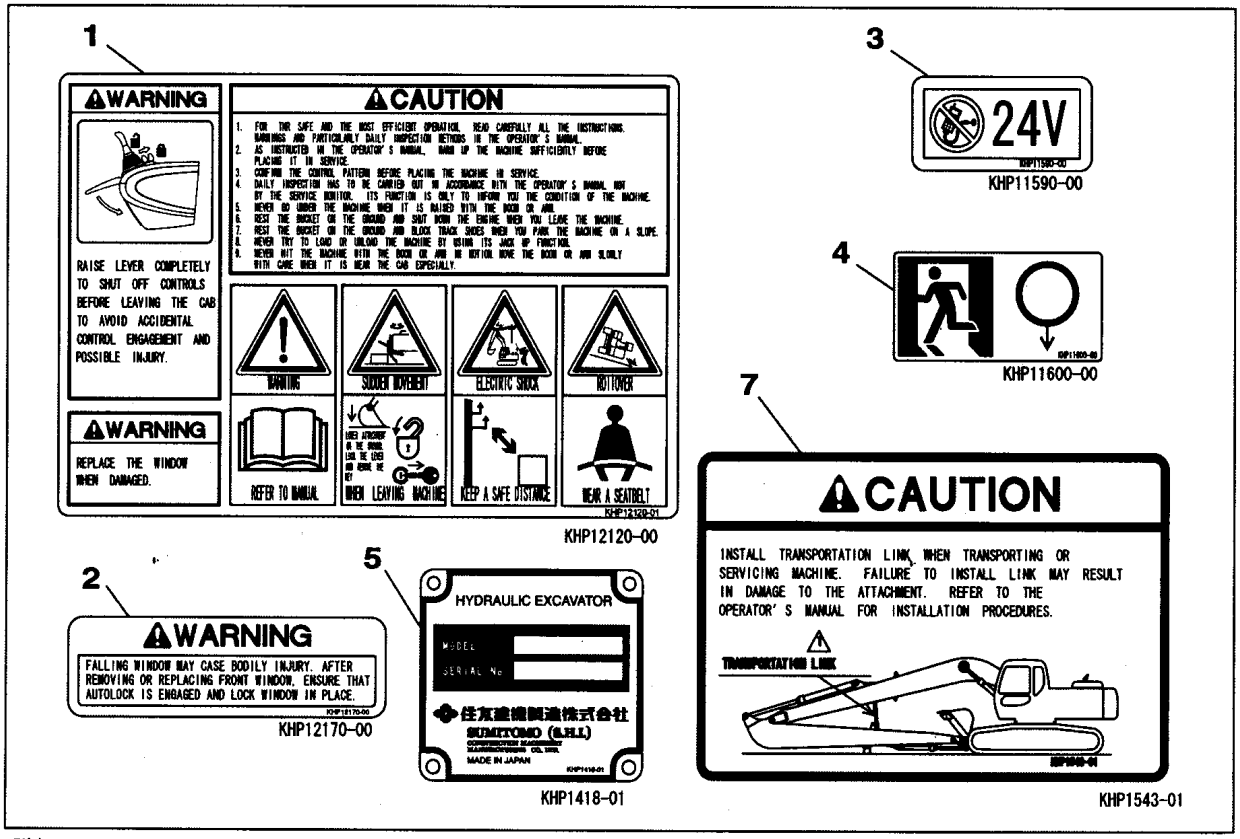

詳細
DETAIL

KG0HP222-0
KHP12050-DZ

https://truckmanualshub.com/

210L5 1101ー

符号 ITEM	構成 COMPO	部品番号 PART NO.	部品名	PART NAME	個数 Q'TY	ｲﾝﾅｰ	適用号機 SERIAL_NO.	互換 ICA	代替部品 REPLACEABLE PART
1	1	KHP12120	ﾗﾍﾞﾙ ｿｳｺﾞｳ EXPORT	LABEL;SPL	1				
2	1	KHP12170	ﾗﾍﾞﾙ;ﾁｭｳｲ ｾﾞﾝﾒﾝﾏﾄﾞ	LABEL;WARNING	1				
3	1	KHP11590	ﾗﾍﾞﾙ;ﾁｭｳｲ 24V	LABEL;WARNING	1				
4	1	KHP11600	ﾗﾍﾞﾙ ｷﾝｷｭｳﾀﾞｯｼｭﾂﾖｳ	LABEL;SPL	1				
5	1	KHP1418	ﾒｲﾊﾞﾝ;ｷﾊﾞﾝ	NAMEPLATE;SER NO.	1				
6	1	KHP1420	ﾌﾞﾗｲﾝﾄﾞR	RIVET;BLIND	4				
7	1	KHP1543	ﾗﾍﾞﾙ;ﾁｭｳｲ (ﾛﾝｸﾞﾘｰﾁ)	LABEL;WARNING	1				

https://truckmanualshub.com/

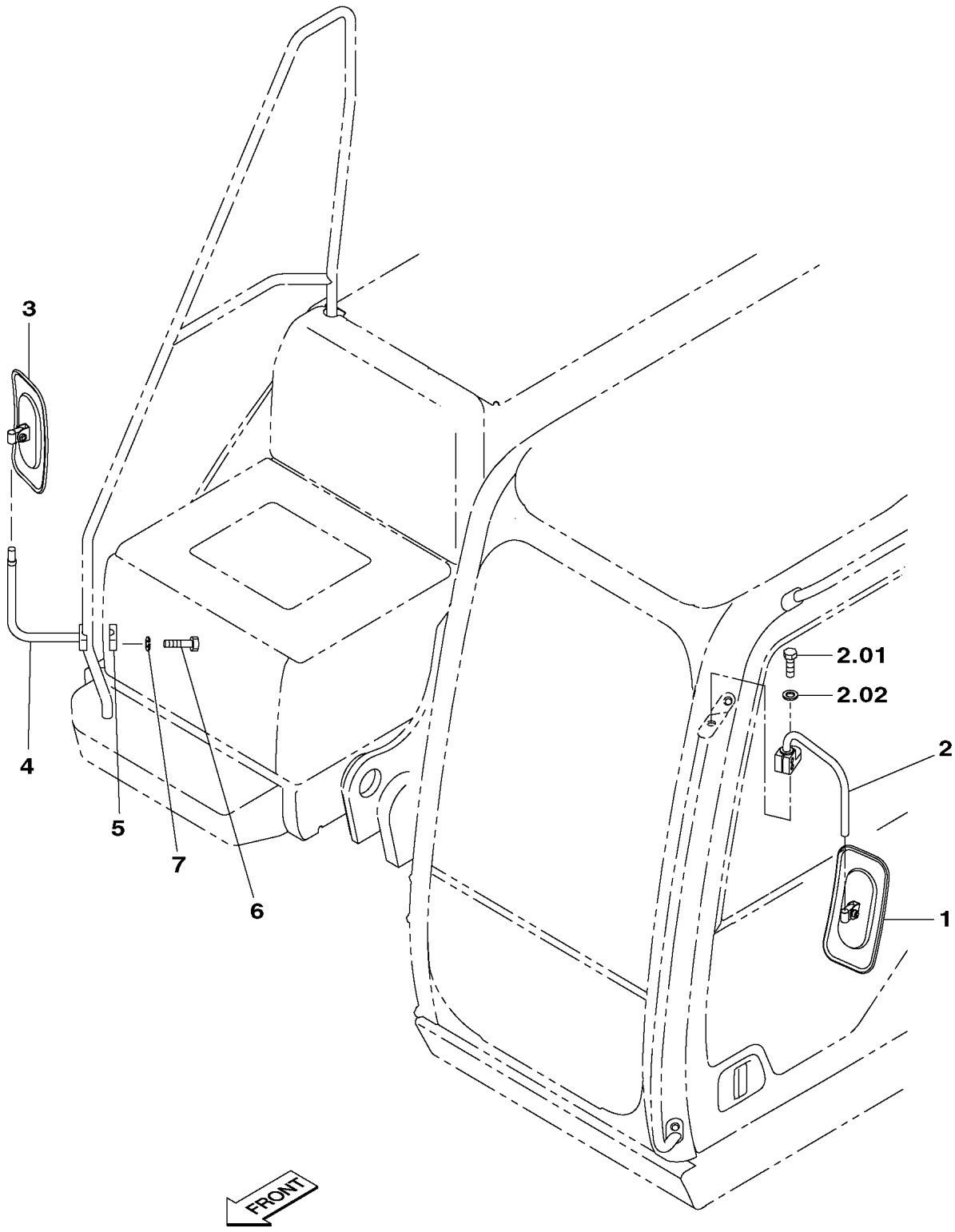

KG0HP208-0
KHP11360-CZ

https://truckmanualshub.com/

210A5 1101－ 210L5 1101－

符号 ITEM	構成 COMPO	部品番号 PART NO.	部品名	PART NAME	個数 Q'TY	ｲﾝﾅｰ	適用号機 SERIAL_NO.	互換 ICA	代替部品 REPLACEABLE PART
1	1	KTP0382	ﾐﾗｰ;ﾊﾞｯｸ	MIRROR;REAR VIEW	1		210A5 -1133 210L5 NOT USED	<	KHP13190
1	1	KHP13190	ﾐﾗｰ;ﾊﾞｯｸ	MIRROR;REAR VIEW	1		210A5 1134-		
2	1	KHP11350	ｽﾃｰ (ﾐﾗｰ;ﾊﾞｯｸ)	STAY	1				
2.01	1	KHP15020	ｺｳﾘｷB M16X50 (ｸﾛﾒｯｷ)	BOLT;HIGH STRENGTH	1		210A5 2279- 210L5 1519-		
2.02	1	KHJ0185	ｺｳﾘｷW 16 (ｸﾛﾒﾂｷ)	WASHER;HIGH STRENGTH	1		210A5 2279- 210L5 1519-		
3	1	KTP0382	ﾐﾗｰ;ﾊﾞｯｸ	MIRROR;REAR VIEW	1		210A5 -1133 210L5 NOT USED	<	KHP13190
3	1	KHP13190	ﾐﾗｰ;ﾊﾞｯｸ	MIRROR;REAR VIEW	1		210A5 1134-		
4	1	KHP1447	ｽﾃｰ	STAY	1				
5	1	KHP1448	ｸﾗﾝﾌﾟ;ﾊﾟｲﾌﾟ	CLAMP;PIPE	1				
6	1	102R010Y045R	ｺｳﾘｷB M10X 45	BOLT;HIGH STRENGTH	2				
7	1	183-110VR	SW 10	WASHER;SPRING	2				

https://truckmanualshub.com/

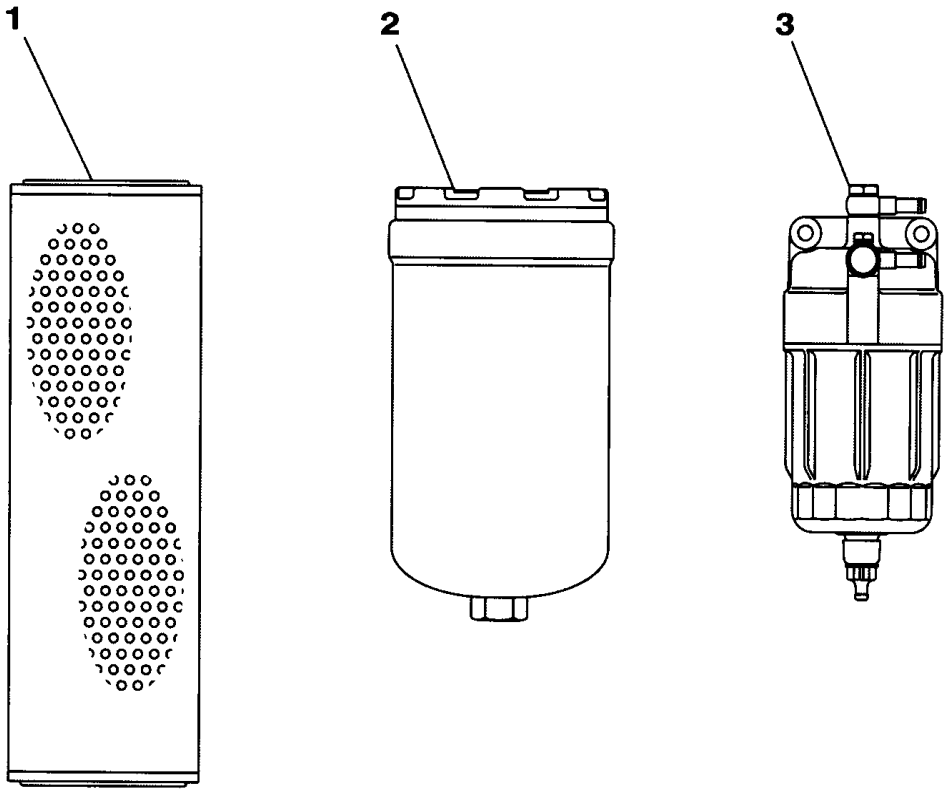

KG1RP073-0

https://truckmanualshub.com/

210A5 1101－ 210L5 1101－

符号 ITEM	構成 COMPO	部品番号 PART NO.	部品名	PART NAME	個数 Q'TY	ｲﾝﾅｰ	適用号機 SERIAL_NO.	互換 ICA	代替部品 REPLACEABLE PART
1	1	KRJ15830	ﾌｨﾙﾀ;ﾘﾀｰﾝ	FILTER;RETURN	1				
2	1	KHJ10950	ｴﾚﾒﾝﾄ;ｵｲﾙﾌｨﾙﾀ	ELEMENT;OIL FILTER	1				
3	1	KHH10590	ｴﾚﾒﾝﾄ;ﾌｭｰｴﾙﾌｨﾙﾀ	ELEMENT;FUEL FILTER	1		210A5 -1161 210L5 -1154	<	KHH12030
3	1	KHH12030	ｴﾚﾒﾝﾄ;ﾌｭｰｴﾙﾌｨﾙﾀ	ELEMENT;FUEL FILTER	1		210A5 1162- 210L5 1155-		

https://truckmanualshub.com/

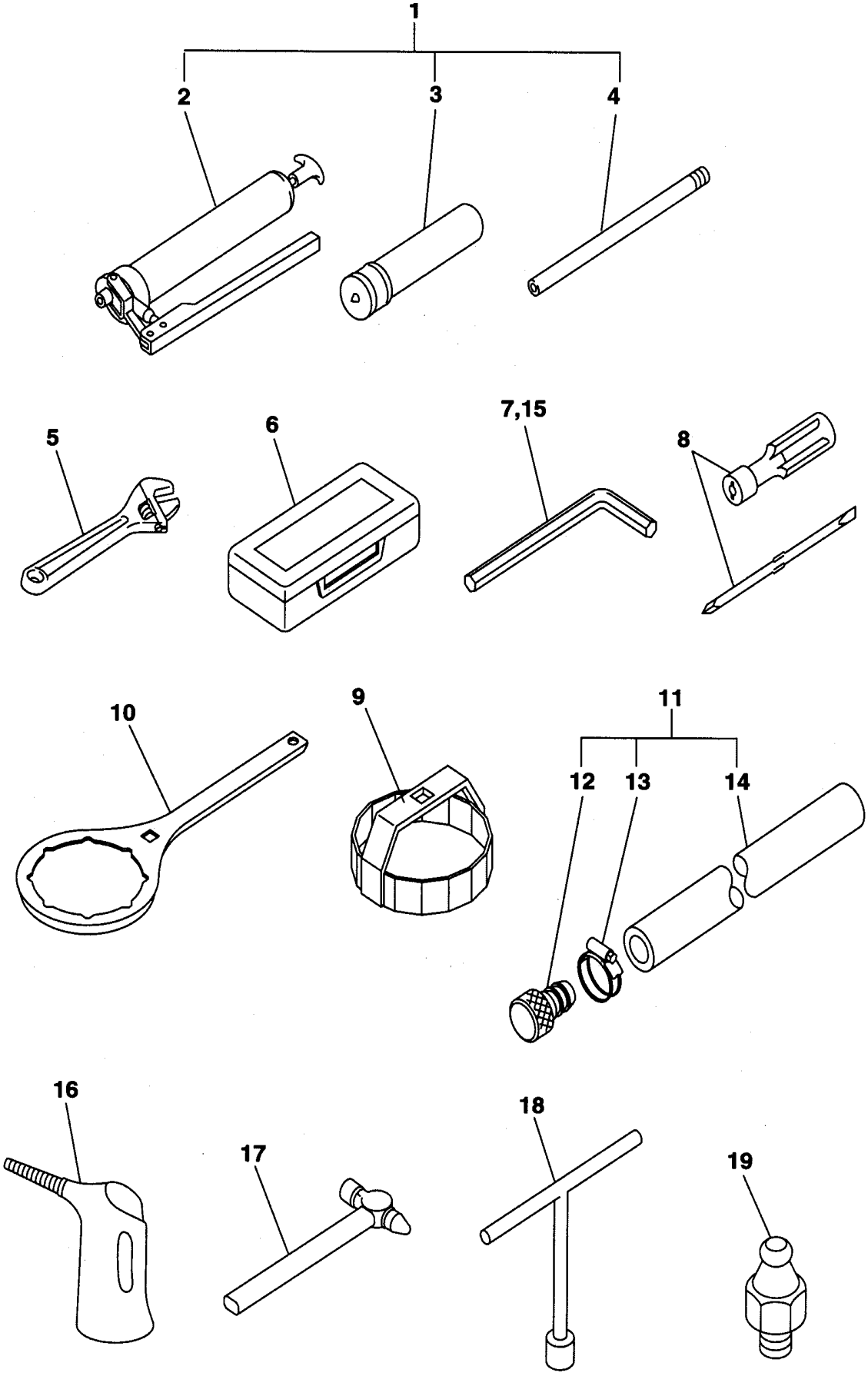

KG1RP068-0

https://truckmanualshub.com/

210A5 1101－ 210L5 1101－

符号 ITEM	構成 COMPO	部品番号 PART NO.	部品名	PART NAME	個数 Q'TY	ｲﾝﾅｰ	適用号機 SERIAL_NO.	互換 ICA	代替部品 REPLACEABLE PART
1	1A	KHP12850	ｶﾞﾝ;ｸﾞﾘｽ ASSY ｶｲｶﾞｲ	GUN;GREASE	1				
2	2	KMP0080	ｶﾞﾝ;ｸﾞﾘｽ	GUN;GREASE	1				
3	2	KMP0077	ｶｰﾄﾘｯｼﾞ;ｸﾞﾘｽ	CARTRIDGE;GREASE	1				
4	2	KHP12860	ﾉｽﾞﾙ;ｸﾞﾘｽ	NOZZLE	1				
5	1	C4E9003	ﾚﾝﾁ;ﾓﾝｷ 250	WRENCH;MONKEY	1				
6	1	KRP0827	ﾎﾞｯｸｽ;ﾂｰﾙ	BOX;TOOL	1				
7	1	C4E7906	ｽﾊﾟﾅ;ﾛｯｶｸﾎﾞｳ 14	SPANNER;SOC SREW	1				
8	1	KHP1293	ﾄﾞﾗｲﾊﾞ ｻｼｶｴｼｷ	DRIVER;SCREW	1				
9	1	KHP11340	ｺｳｸﾞ ｵｲﾙﾌｨﾙﾀﾚﾝﾁ	TOOL	1				
10	1	KHH10880	ｺｳｸﾞ ﾈﾝﾘｮｳﾌｨﾙﾀｰﾚﾝﾁ	TOOL;SPL	1				
11	1A	KHP11330	ﾌﾟﾗｸﾞ ﾄﾞﾚｲﾅｰ ﾉｳﾆｭｳｼｮ	PLUG	1				
12	2	KHP10510	ﾌﾟﾗｸﾞ ﾄﾞﾚｲﾝ(ﾄﾞﾚｲﾅｰｴﾝ	PLUG	1				
13	2	KEJ0330	ｸﾘｯﾌﾟ;ｼﾞｭﾋﾞﾘ 22-32	CLIP;JUBILEE	1				
14	2	KHP11320	ﾎｰｽ;ｺﾞﾑ ﾄﾞﾚｲﾅｰ L=110	HOSE;RUBBER	1				
15	1	BRP0090	ｽﾊﾟﾅ;ﾛｯｶｸﾎﾞｳ 12	SPANNER;SOC SREW	1				
16	1	KRP0821	ｵｲﾙｼﾞｮｳｷ	OIL JUG	1				
17	1	C4E7979	ﾊﾝﾏ 1ﾎﾟﾝﾄﾞ	HAMMER	1				
18	1	KRP0825	ﾚﾝﾁ;Tｶﾞﾀ 10	WRENCH;T	1				
19	1	M01X0812	ﾆｯﾌﾟﾙ;ｸﾞﾘｽ (A-R1/8)	NIPPLE;GREASE	5				

https://truckmanualshub.com/

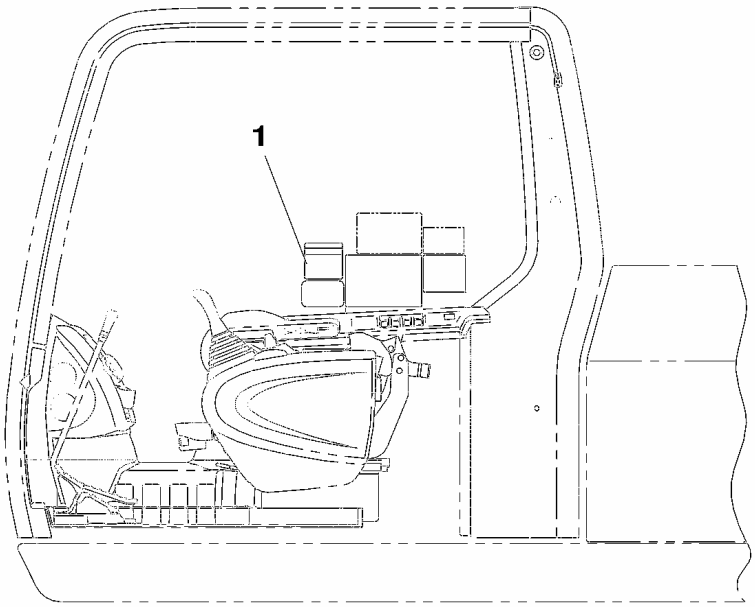

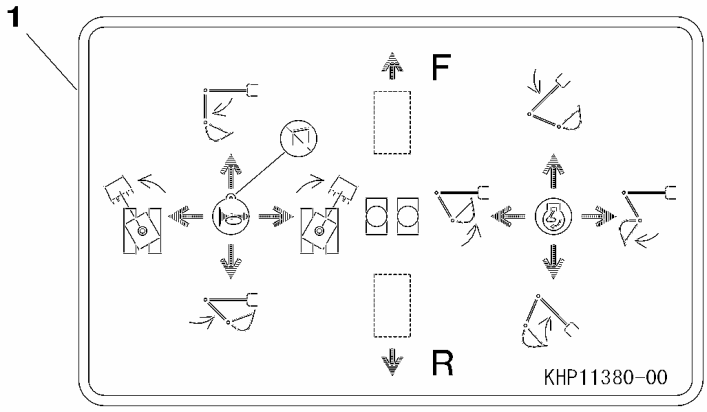

詳細
DETAIL

KG0HP192-0
KHP11430-EZ

https://truckmanualshub.com/

210A5 1101－ 210L5 1101－

符号 ITEM	構成 COMPO	部品番号 PART NO.	部品名	PART NAME	個数 Q'TY	インナー	適用号機 SERIAL_NO.	互換 ICA	代替部品 REPLACEABLE PART
1	1	KHP11370	ﾗﾍﾞﾙ;ｿｳｻ (ISO)	LABEL;OPR	1				

https://truckmanualshub.com/

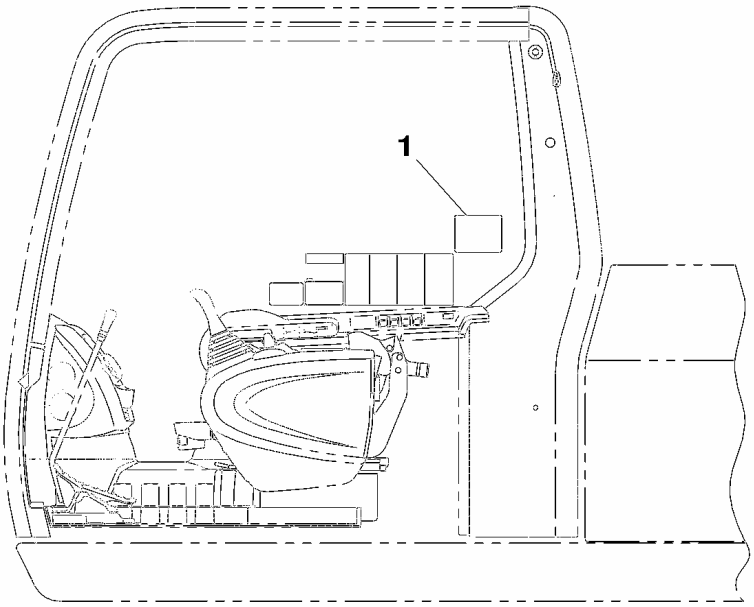

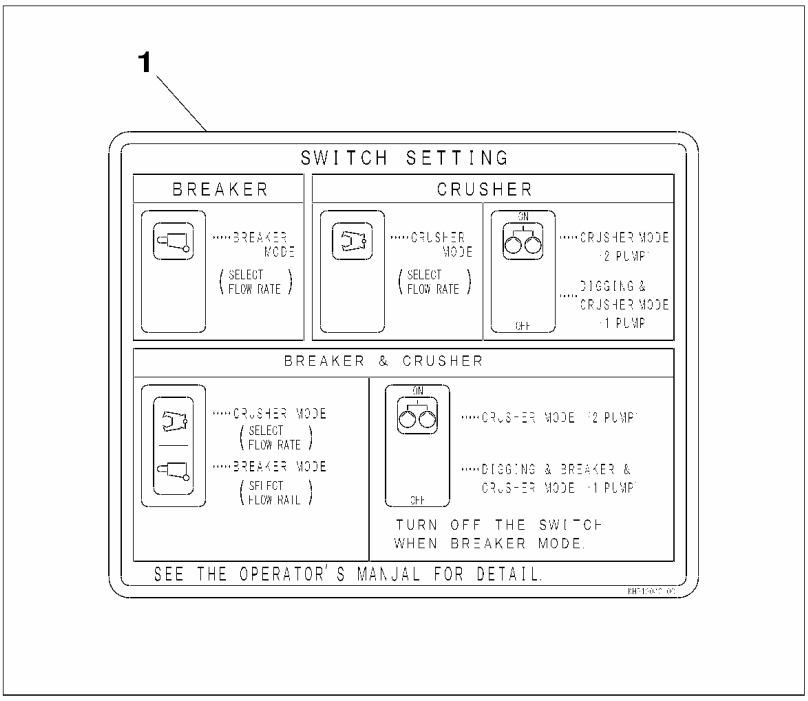

詳細
DETAIL

KG0HP207-0
KHP12050-DZ
KHP12060-EZ
KHP12070-EZ
KHP12080-DZ

https://truckmanualshub.com/

210A5 1101－ 210L5 1101－

符号 ITEM	構成 COMPO	部品番号 PART NO.	部品名	PART NAME	個数 Q'TY	ｲﾝﾅｰ	適用号機 SERIAL_NO.	互換 ICA	代替部品 REPLACEABLE PART
1	1	KHP12040	ﾗﾍﾞﾙ;ｿｳｻ ﾖﾋﾞ	LABEL;OPR	1				

https://truckmanualshub.com/

1 [2 ~ 4]

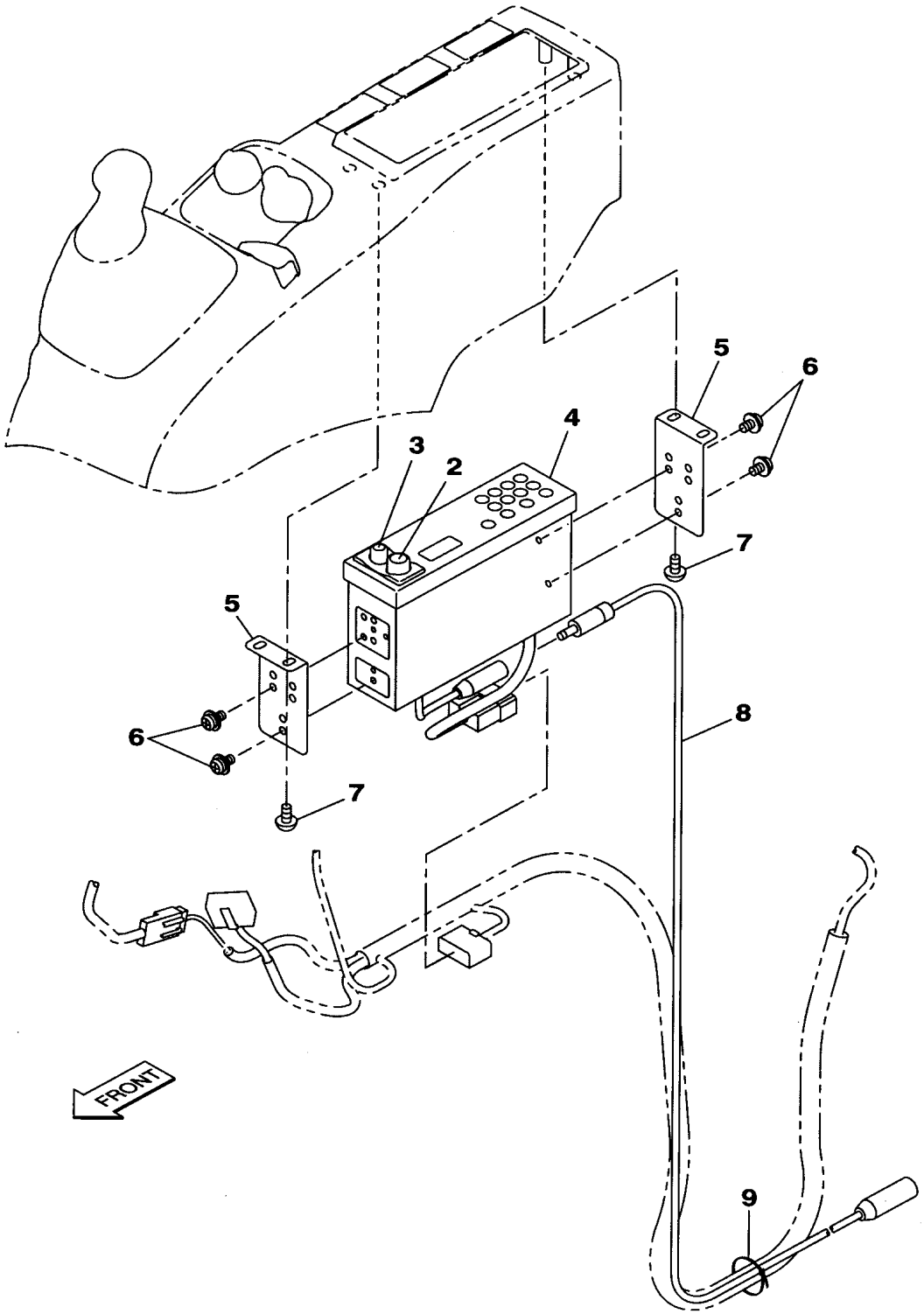

KG0HR370-0

https://truckmanualshub.com/

210A5 1101－ 210L5 1101－

符号 ITEM	構成 COMPO	部品番号 PART NO.	部品名	PART NAME	個数 Q'TY	ｲﾝﾅｰ	適用号機 SERIAL_NO.	互換 ICA	代替部品 REPLACEABLE PART
1	1A	KHR15560	ﾗｼﾞｵ;ｶｰ AM/FM ST (12	RADIO SET	1				
2	2	KHR3332	ﾗｼﾞｵﾊﾟｰﾂ ﾎﾞﾘｭｰﾑﾉﾌﾞ	RADIO PARTS;SPL	1				
3	2	KHR3333	ﾗｼﾞｵﾊﾟｰﾂ ﾄｰﾝﾉﾌﾞ	RADIO PARTS;SPL	1				
4	2	KHR15580	ﾄﾘﾑ ﾌﾟﾚｰﾄ (ﾗｼﾞｵ)	TRIM;SPL	1				
5	1	KHR15640	ﾌﾞﾗｹｯﾄ ﾗｼﾞｵ	BRACKET	2				
6	1	KHR0616	+ﾅﾍﾞS M5X 8(ｻﾞｶﾞﾈｯｷ)	SCREW;PAN HD	4				
7	1	KHR2737	+ﾄﾗｽﾀｯﾌﾟS M5X14	SCREW;TAPPING	4				
8	1	KHR10970	ｺｰﾄﾞ;ｱﾝﾃﾅ	CORD;ANTENNA	1				
9	1	KHH0142	ﾊﾞﾝﾄﾞ;ｿｸｾﾝ L=250	BAND;HARNESS	5				

https://truckmanualshub.com/

1 [2 ~ 78] 2 [3 ~ 69.69] 84 [85 ~ 87]
91 [92 ~ 96] 98 [99 ~ 103]

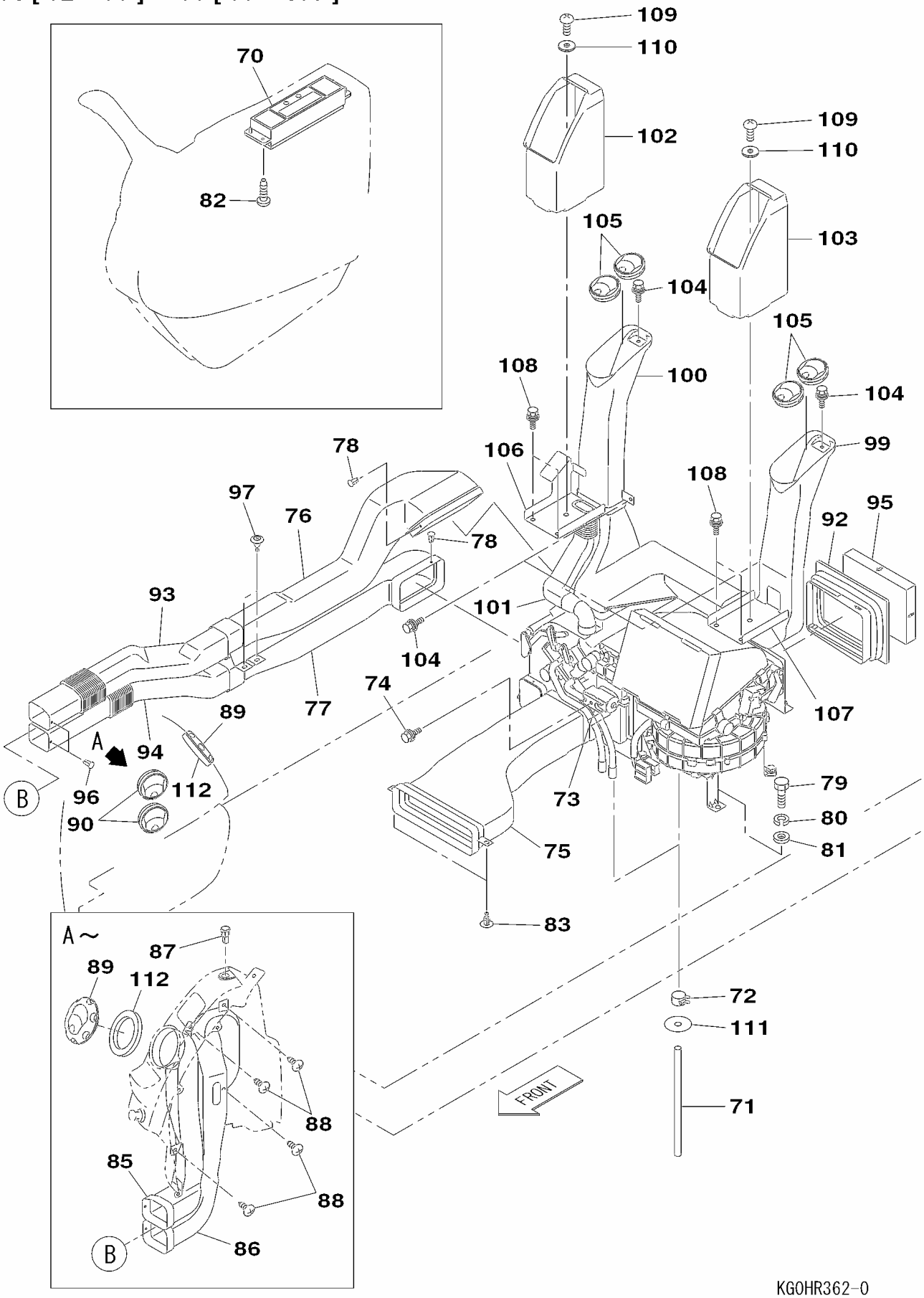

KG0HR362-0
KHR13970-DZ

https://truckmanualshub.com/

210A5 1101－ 210L5 1101－

符号 ITEM	構成 COMPO	部品番号 PART NO.	部品名	PART NAME	個数 Q'TY	ｲﾝﾅｰ	適用号機 SERIAL_NO.	互換 ICA	代替部品 REPLACEABLE PART
1	1	--------	ｴｱｺﾝ UNIT-G	AIR CONDITIONER	1		210A5 -1185 210L5 -1165	<	KHR13031
1	1A	--------	ｴｱｺﾝ UNIT-G	AIR CONDITIONER	1		210A5 1186- 210L5 1166-		
2	2A	KHR13320	ﾕﾆｯﾄ ｴｱｺﾝ	UNIT	1				
3	3	KHR13610	ﾓｰﾀ ｺﾝﾄﾛｰﾙ	MOTOR;SPL	3				
4	3	KHR13620	ｸｰﾗﾊﾟｰﾂ ｴﾊﾞﾎﾟﾚｰﾀ	COOLER PARTS	1				
5	3	KHR13630	ｹｰｽ ﾕﾆｯﾄ ﾏｴ	CASE	1				
6	3	KHR13640	ｹｰｽ ﾕﾆｯﾄ ｳｼﾛ	CASE	1				
7	3	KHR13650	ｹｰｽ ﾕﾆｯﾄ ｼﾀ	CASE	1				
8	3	KHR4116	ｲﾝｼｭﾚｰｼｮﾝ;ﾋｰﾄ	INSULATION;HEAT	1				
9	3	KHR4117	ｲﾝｼｭﾚｰｼｮﾝ;ﾋｰﾄ	INSULATION;HEAT	1				
10	3	KHR2837	ﾊﾟｯｷﾝ DEﾀﾞｸﾄ	PACKING	1				
11	3	KHR2815	ﾊﾟｯｷﾝ VEﾀﾞｸﾄ	PACKING	2				
12	3	KHR2816	ﾊﾟｯｷﾝ FOﾀﾞｸﾄ	PACKING	1				
13	3	KHR2818	ｸﾗﾝﾌﾟ ﾊﾟｲﾌﾟ	CLAMP;SPL	1				
14	3	KHR15860	ｶﾊﾞｰ ｴｷﾊﾟﾝﾊﾞﾙﾌﾞ	COVER	1				
15	3	KHR13660	ﾊﾞﾙﾌﾞ ｴｷｽﾊﾟﾝｼｮﾝ	VALVE;SPL	1				
16	3	KHR13670	ｾﾝｻ;ｻｰﾓ	SENSOR;THERMO	1				
17	3	KHR13680	ﾚﾊﾞｰ MAL1	LEVER	2				
18	3	KHR2820	ﾚﾊﾞｰ AM	LEVER;SPL	1				
19	3	KHR2821	ﾚﾊﾞｰ CM	LEVER;SPL	1				
20	3	KHR2822	ﾚﾊﾞｰ MO1	LEVER;SPL	4				
21	3	KHR2823	ﾚﾊﾞｰ MO2	LEVER;SPL	4				
22	3	KHR2824	ｶﾑ ﾓｰﾄﾞ	CAM;SPL	1				
23	3	KHR2825	ﾛｯﾄﾞ AC	ROD;SPL	1				
24	3	KHR13690	ﾛｯﾄﾞ AM	ROD	1				
25	3	KHR13700	ﾛｯﾄﾞ MODE	ROD	1				
26	3	KHR2828	ﾀﾞﾝﾊﾟ AMｸﾐﾀﾃ	DAMPER;SPL	1				
27	3	KHR2829	ﾀﾞﾝﾊﾟ CMｸﾐﾀﾃ	DAMPER;SPL	1				
28	3	KHR2830	ﾀﾞﾝﾊﾟ VEｸﾐﾀﾃ	DAMPER;SPL	1				
29	3	KHR2831	ﾀﾞﾝﾊﾟ FAｸﾐﾀﾃ	DAMPER;SPL	1				
30	3	KHR2832	ﾀﾞﾝﾊﾟ DEｸﾐﾀﾃ	DAMPER;SPL	1				
31	3	KHR2833	ﾀﾞﾝﾊﾟ FOｸﾐﾀﾃ	DAMPER;SPL	1				
32	3	KHR13710	ﾋｰﾀ ｺｱ	HEATER;SPL	1				
33	3	KHR2861	ﾛｯｶｸｱﾅB M5X40	BOLT;HEX SOC HD	2				
34	3	KHR13720	+ﾅﾍﾞﾀｯﾌﾟS M4X30	SCREW;TAPPING	6				
35	3	KHR2857	+ﾅﾍﾞﾀｯﾌﾟS M5X16	SCREW;TAPPING	30				
36	3	KHR2862	+ﾅﾍﾞﾀｯﾌﾟS M5X12	SCREW;TAPPING	5				
37	3	KHR2805	ｸﾗﾝﾌﾟ ｹｰｽ	CLAMP;SPL	2				
38	3	KHR2806	ﾎﾙﾀﾞ ﾛｯﾄﾞ	HOLDER;SPL	2				
39	3	KHR2807	ﾎﾙﾀﾞ ｾﾝｻ	HOLDER;SPL	2				
40	3	KHR2808	ｸﾗﾝﾌﾟ ｺｰﾄﾞ	CLAMP;SPL	1				
41	3	KHR13730	ｺﾝﾄﾛｰﾗ ﾌﾞﾛﾜ	CONT;SPL	1				
42	3	KHR2841	ｹｰｽ ﾌﾞﾛﾜ ｳｴ	CASE;SPL	1				
43	3	KHR2842	ｹｰｽ ﾌﾞﾛﾜ ｼﾀ	CASE;SPL	1				
44	3	KHR15870	ﾊﾟｯｷﾝ (ﾌﾞﾛﾜ)	PACKING	1				
45	3	KHR2860	ﾌﾞﾗｹｯﾄ ﾕﾆｯﾄ	BRKT;SPL	1				
46	3	KHR2843	ﾌﾞﾗｹｯﾄ ﾕﾆｯﾄ	BRKT;SPL	1				
47	3	KHR2844	ﾎｰｽ ﾚｲｷｬｸ	HOSE SPL	1				
48	3	KHR2845	ﾓｰﾀ ﾌﾞﾛﾜ	MOTOR;SPL	1				
49	3	KHR2855	+ﾄﾗｽS ﾀｯﾌﾟ M4X14	SCREW;TRUSS HD	5				
50	3	KHR2856	+ﾄﾗｽS ﾀｯﾌﾟ M5X14	SCREW;TRUSS HD	14				
51	3	KHR2858	+ﾄﾗｽS ﾀｯﾌﾟ M5X16	SCREW;TRUSS HD	3				
52	3	KHR13740	ｹｰｽ ｲﾝﾃｰｸ R	CASE	1				
53	3	KHR13750	ｹｰｽ ｲﾝﾃｰｸ L	CASE	1				
54	3	KHR13330	ﾌｲﾙﾀ;ｴｱ (RECIRC)	FILTER;AIR	1				
55	3	KHR13760	ﾚﾊﾞｰ MAL2	LEVER	1				
56	3	KHR13770	ﾚﾊﾞｰ IN	LEVER	1				
57	3	KHR2851	ﾀﾝﾊﾟ IN ｸﾐﾀﾃ	TAMPER;SPL	1				

https://truckmanualshub.com/

1 [2 ~ 78] 2 [3 ~ 69.69] 84 [85 ~ 87]
91 [92 ~ 96] 98 [99 ~ 103]

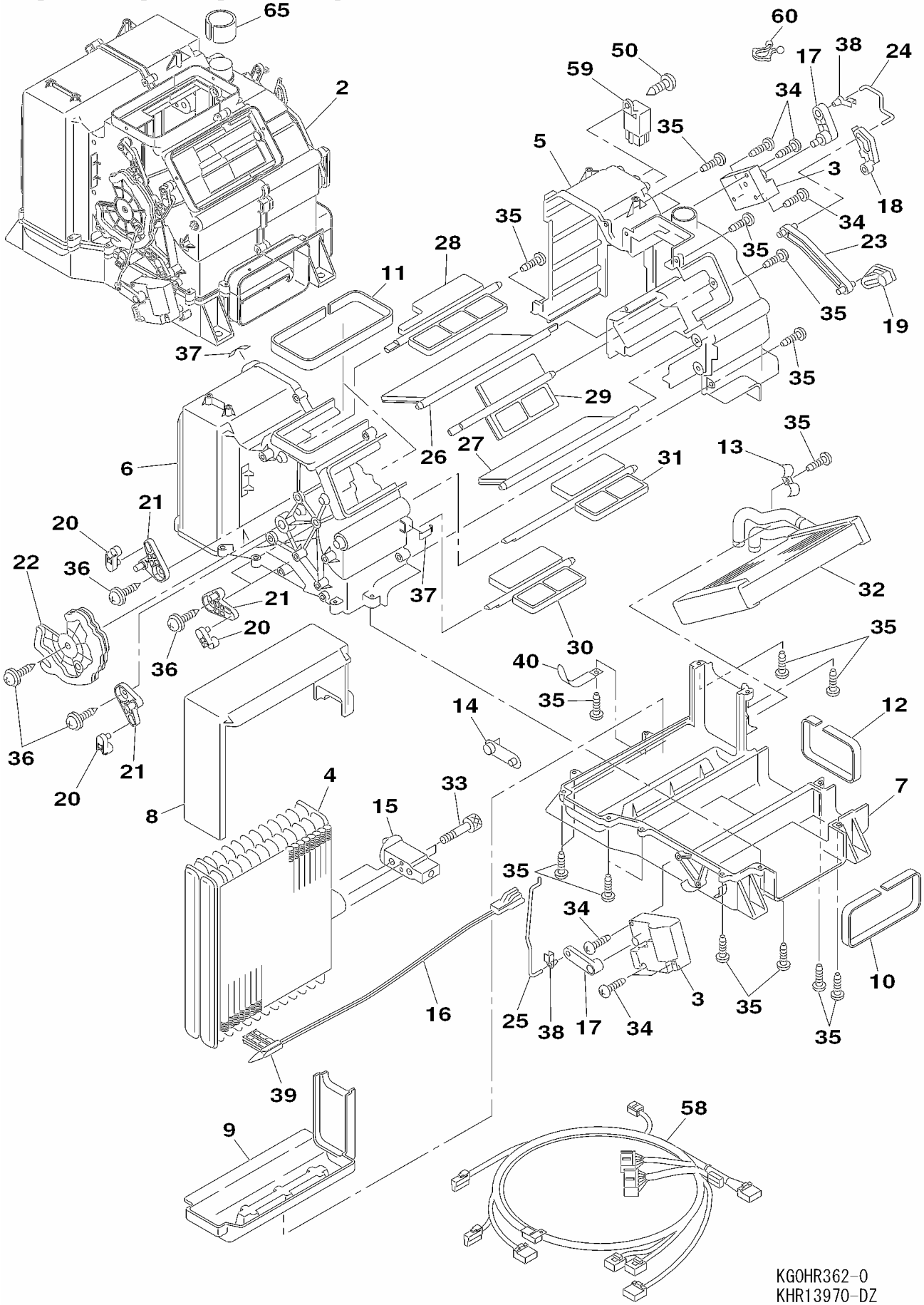

KG0HR362-0
KHR13970-DZ

https://truckmanualshub.com/

210A5 1101－ 210L5 1101－

符号 ITEM	構成 COMPO	部品番号 PART NO.	部品名	PART NAME	個数 Q'TY	ｲﾝﾅｰ	適用号機 SERIAL_NO.	互換 ICA	代替部品 REPLACEABLE PART
58	3	KHR13780	ﾊｰﾈｽ;ﾜｲﾔ A/C-UNIT	HARNESS;WIRE	1				
59	3	KHR2836	ﾘﾚｰ	RELAY;SPL	2				
60	3	KHR2854	ｸﾗﾝﾌﾟ ｺｰﾄﾞ	CLAMP;SPL	1				
61	3	KHR15880	+ﾅﾍﾞﾀｯﾌﾟS M4X28	SCREW;TAPPING	3				
62	3	KHR2773	ｸﾘｯﾌﾟ ｶﾊﾞｰ	CLIP;SPL	3				
63	3	KHR2771	ﾀﾞｸﾄ ﾌﾗﾝｼﾞ	DUCT;SPL	1				
64	3	KHR3229	ﾊﾟｯｷﾝ ｲﾝﾃｰｸ	PACKING	1				
65	3	KHR3230	ﾊﾟｯｷﾝ ｸｰﾙﾎﾞｯｸｽ	PACKING	1				
66	3	KHR13260	ﾀﾞｸﾄ VENT(CENTER)	DUCT	1				
67	3	KHR13170	ﾀﾞｸﾄ;ｷｭｳﾆｭｳ (RECIRC)	DUCT;SUCTION	1				
68	3	KHR13790	ｾﾝｻ;ｻｰﾓ (ﾅｲｷ)	SENSOR;THERMO	1				
69	3	KHR15890	ﾊﾟｯｷﾝ ｲﾝﾃｰｸ(RECIRC)	PACKING	1				
69.69	3	KHR18340	ｸﾘｯﾌﾟ ﾊｰﾈｽ	CLIP	1				
70	2	KHR12510	ﾊﾟﾈﾙ;ｺﾝﾄﾛｰﾙ	PANEL;CONTROL	1		210A5 -1185 210L5 -1165		
70	2	KHR12511	ﾊﾟﾈﾙ;ｺﾝﾄﾛｰﾙ (A/C)	PANEL;CONTROL	1		210A5 1186-1621 210L5 1166-1324	=	KHR12512
70	2	KHR12512	ﾊﾟﾈﾙ;ｺﾝﾄﾛｰﾙ (A/C)	PANEL;CONTROL	1		210A5 1622- 210L5 1325-		
71	2	KHR3574	ﾎｰｽ ﾄﾞﾚﾝ	HOSE SPL	2				
72	2	KHR1478	ﾊﾞﾝﾄﾞ;ﾎｰｽ	BAND;HOSE	2				
73	2	KHR10420	ﾌﾟﾚｰﾄ ﾌﾗﾝｼﾞ	PLATE	1				
74	2	KHR2464	ﾎﾞﾙﾄ ﾌﾗﾝｼﾞ(M6X20XP1)	BOLT;SPL	1				
75	2	KHR13190	ﾀﾞｸﾄ FOOT	DUCT	1				
76	2	KHR13220	ﾀﾞｸﾄ FACE-C	DUCT	1				
77	2	KHR13250	ﾀﾞｸﾄ DEF-C	DUCT	1				
78	2	KHR2986	ﾋﾟﾝ	PIN;SPL	2				
79	1	102R010Y016R	ｺｳﾘｷB M10X 16	BOLT;HIGH STRENGTH	6		210A5 -1565 210L5 -1301	=	KHR20590
79	1	KHR20590	ﾎﾞﾙﾄ M10X20 ｻﾞｶﾞﾈｯｷ	BOLT;SPL	6		210A5 1566- 210L5 1302-		
80	1	183-110VR	SW 10	WASHER;SPRING	6		210A5 -1565 210L5 -1301		
81	1	182-010SR	ﾐｶﾞｷW 10	WASHER;PLAIN	6		210A5 -1565 210L5 -1301		
82	1	KHR2737	+ﾄﾗｽﾀｯﾌﾟS M5X14	SCREW;TAPPING	4				
83	1	KHR13950	ｸﾘｯﾌﾟ ｽｸﾘﾍﾞｯﾄ	CLIP;SPL	2				
84	1A	--------	ｴｱｺﾝ DUCT(A)-G	AIR CONDITIONER	1		210A5 NOT USED 210L5 NOT USED		
85	2	KHR13200	ﾀﾞｸﾄ FACE-A	DUCT	1		210A5 NOT USED 210L5 NOT USED		
86	2	KHR13230	ﾀﾞｸﾄ DEF-A	DUCT	1		210A5 NOT USED 210L5 NOT USED		
87	2	KHR10540	ｾﾝｻ ｴｱｺﾝ(ﾆｯｼｬ)	SENSOR;SPL	1		210A5 NOT USED 210L5 NOT USED		
88	1	KHR2739	+ﾄﾗｽﾀｯﾌﾟS M6X14	SCREW;TAPPING	4		210A5 NOT USED 210L5 NOT USED		
89	1	KHR10870	ｸﾞﾘﾙ ﾌｪｲｽ	GRILL	1		210A5 -2186 210L5 -1509	=	KHR21460
89	1	KHR21460	ｸﾞﾘﾙ ｴｱﾍﾞﾝﾄ L	GRILL AIR VENT L	1		210A5 2187- 210L5 1510-		
90	1	KHR10880	ｸﾞﾘﾙ ﾌｪｲｽ	GRILL	2		210A5 -2186 210L5 -1509	=	KHR21450
90	1	KHR21450	ｸﾞﾘﾙ ｴｱﾍﾞﾝﾄ	GRILL AIR VENT	2		210A5 2187- 210L5 1510-		
91	1A	--------	ｴｱｺﾝ DUCT(B)-G	AIR CONDITIONER	1				
92	2	KHR13180	ﾀﾞｸﾄ;ｷｭｳﾆｭｳ (FRESH)	DUCT;SUCTION	1				
93	2	KHR13210	ﾀﾞｸﾄ FACE-B	DUCT	1				
94	2	KHR13240	ﾀﾞｸﾄ DEF-B	DUCT	1				
95	2	KHR13340	ﾌｨﾙﾀ;ｴｱ (FRESH)	FILTER;AIR	1				

https://truckmanualshub.com/

1 [2 ~ 78] 2 [3 ~ 69.69] 84 [85 ~ 87]
91 [92 ~ 96] 98 [99 ~ 103]

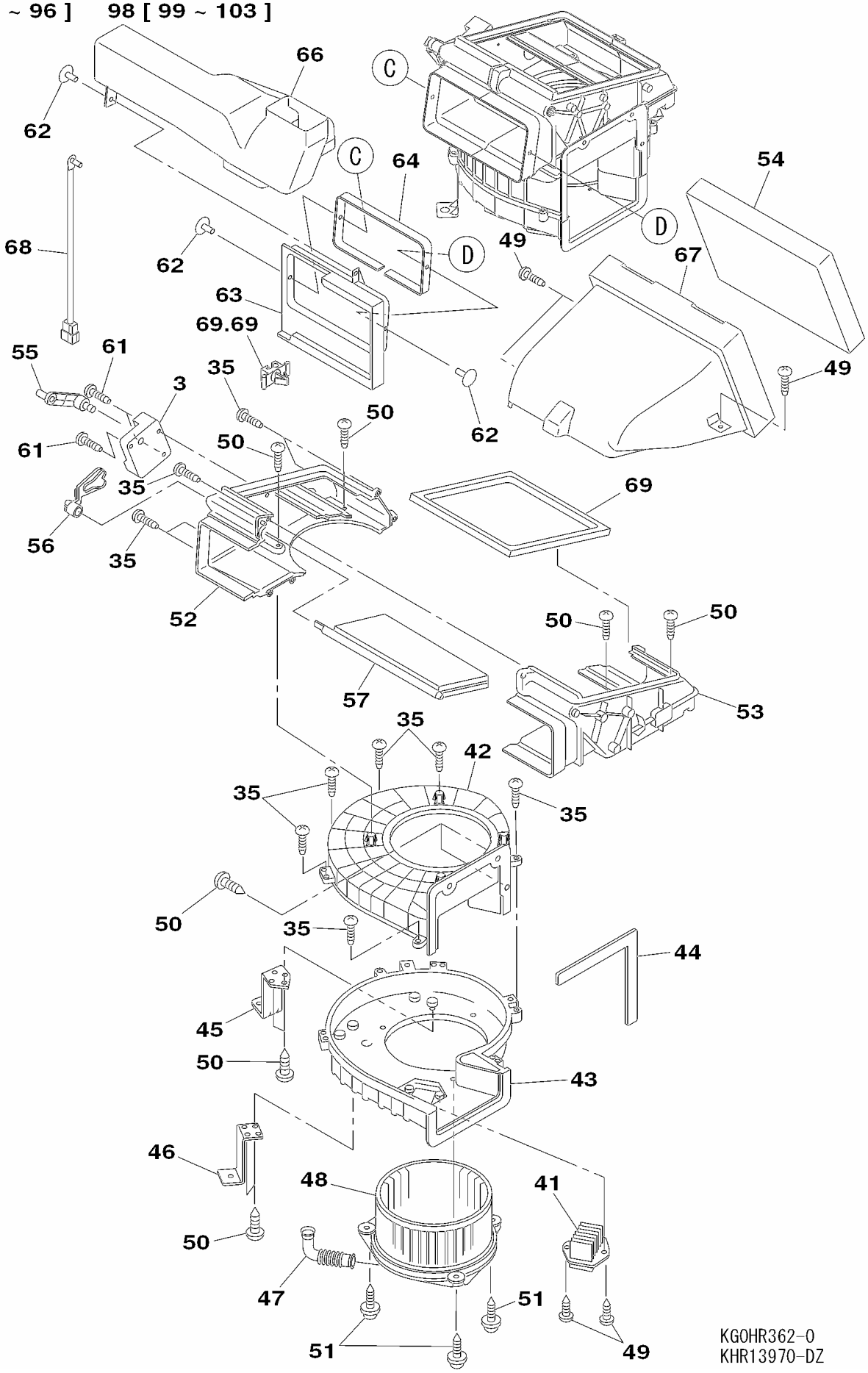

https://truckmanualshub.com/

210A5 1101－ 210L5 1101－

符号 ITEM	構成 COMPO	部品番号 PART NO.	部品名	PART NAME	個数 Q'TY	ｲﾝﾅｰ	適用号機 SERIAL_NO.	互換 ICA	代替部品 REPLACEABLE PART
96	2	KHR2986	ﾋﾟﾝ	PIN;SPL	2				
97	1	KHR13950	ｸﾘｯﾌﾟ ｽﾌﾟﾘﾍﾞｯﾄ	CLIP;SPL	2				
98	1A	--------	ｴｱｺﾝ DUCT(C)-G	AIR CONDITIONER	1				
99	2	KHR13270	ﾀﾞｸﾄ VENT(LEFT)	DUCT	1				
100	2	KHR13280	ﾀﾞｸﾄ VENT(RIGHT)	DUCT	1				
101	2	KHR13290	ﾀﾞｸﾄ H&C BOX	DUCT	1				
102	2	KHR13300	ﾎﾞｯｸｽ HOT&COOL	BOX	1				
103	2	KHR13310	ﾎﾞｯｸｽ REAR	BOX	1				
104	1	KHN2132	ｺｳﾘｷB M6X16 (ｻﾞｶﾞﾈｸﾐ	BOLT;HIGH STRENGTH	4				
105	1	KHR10880	ｸﾞﾘﾙ ﾌｪｲｽ	GRILL	4		210A5 -2186 210L5 -1509	=	KHR21450
105	1	KHR21450	ｸﾞﾘﾙ ｴｱﾍﾞﾝﾄ	GRILL AIR VENT	4		210A5 2187- 210L5 1510-		
106	1	KHR15780	ﾌﾞﾗｹｯﾄ ﾎﾞｯｸｽ(R)	BRACKET	1				
107	1	KHR15790	ﾌﾞﾗｹｯﾄ ﾎﾞｯｸｽ(L)	BRACKET	1				
108	1	105R008Y016R	ｾﾑｽB M 8X 16	BOLT;SEMS	4				
109	1	KHJ0052	+ﾅﾍﾞS M 8X 16	SCREW;PAN HD	2				
110	1	KHN2312	ﾐｶﾞｷW 8	WASHER;PLAIN	2				
111	1	KHJ14580	ｸﾞﾛﾒｯﾄ;ﾗﾊﾞｰ (ｴｱｺﾝﾄﾞﾚ	GROMMET;RUBBER	2				
112	1	KHN18100	ｼｰﾙ;ｸｯｼｮﾝ	SEAL;CUSHION	1				

https://truckmanualshub.com/

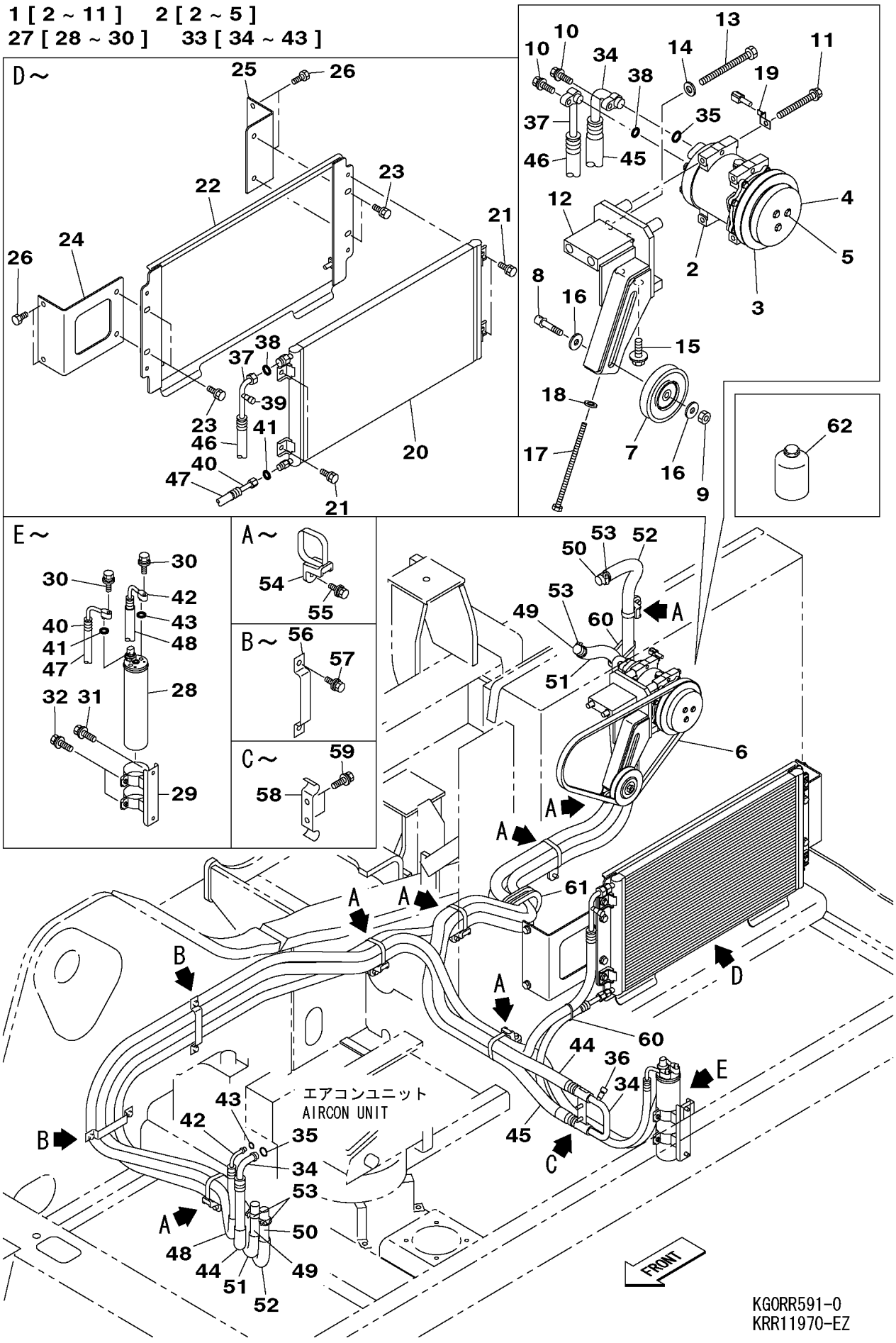

https://truckmanualshub.com/

210A5 1101－ 210L5 1101－

符号 ITEM	構成 COMPO	部品番号 PART NO.	部品名	PART NAME	個数 Q'TY	ｲﾝﾅｰ	適用号機 SERIAL_NO.	互換 ICA	代替部品 REPLACEABLE PART
1	1A	--------	ｴｱｺﾝ COMPRESSOR-G	AIR CONDITIONER	1				
2	2A	KHR3197	ｺﾝﾌﾟﾚｯｻ ｴｱｺﾝ	COMPRESSOR	1				
3	3	KHR3198	ｸﾗｯﾁ ｺﾝﾌﾟﾚｯｻ	CLUTCH;SPL	1				
4	3	KHR3974	ｶﾊﾞｰ ﾀﾞｽﾄ	COVER;SPL	1				
5	3	KHR3975	ﾎﾞﾙﾄ ﾀﾞｽﾄｶﾊﾞｰ(COMP)	BOLT;SPL	3				
6	2	KHR10550	ﾍﾞﾙﾄ;V B47(L=1215)	BELT;V	1				
7	2	KHR11760	ﾌﾟｰﾘ;ﾃﾝｼｮﾝ (ｶﾊﾞｰﾂｷ)	PULLEY	1				
8	2	KRR0326	ｼｬﾌﾄ ｽﾗｲﾄﾞ	SHAFT;SPL	1				
9	2	KHR1267	ﾅｯﾄ M10XP1.25	NUT;SPL	1				
10	2	KHR1675	ﾎﾞﾙﾄ M8X25 ｻﾞｶﾞﾈ ﾂｷ	BOLT;SPL	2				
11	2	KAR0921	ﾎﾞﾙﾄ M8X90	BOLT;SPL	4				
12	1	KHR10710	ﾌﾞﾗｹｯﾄ ｺﾝﾌﾟﾚｯｻ	BRACKET	1				
13	1	102R012Y120R	ｺｳﾘｷB M12X120	BOLT;HIGH STRENGTH	2				
14	1	KHN0296	ｺｳﾘｷW 12 (ﾒﾂｷ)	WASHER;HIGH STRENGTH	2				
15	1	KHN1398	ﾎﾞﾙﾄ ﾄｸｼｭ ｻﾞｶﾞﾈ ｸﾐｺﾐ	BOLT;SPL	2				
16	1	KRN0692	ｺｳﾘｷW 10	WASHER;HIGH STRENGTH	2				
17	1	KHR3171	ﾎﾞﾙﾄ ﾄｸｼｭ (M8X160)	BOLT;SPL	1				
18	1	183-108VR	SW 8	WASHER;SPRING	1				
19	1	KHR1317	ｸﾘｯﾌﾟ	CLIP	1				
20	1	KHR13070	ｺﾝﾃﾞﾝｻ ｴｱｺﾝ	CONDENSER	1				
21	1	105R008Y020R	ｾﾑｽB M 8X 20	BOLT;SEMS	4				
22	1	KRR11860	ﾌﾞﾗｹｯﾄ ｺﾝﾃﾞﾝｻ	BRACKET	1		210A5 NOT USED 210L5 NOT USED	<	KRR11861
22	1	KRR11861	ﾌﾞﾗｹｯﾄ ｺﾝﾃﾞﾝｻ	BRACKET	1				
23	1	105R010Y025R	ｾﾑｽB M10X 25	BOLT;SEMS	4				
24	1	KRR11870	ﾌﾞﾗｹｯﾄ ｺﾝﾃﾞﾝｻ	BRACKET	1				
25	1	KRR11880	ﾌﾞﾗｹｯﾄ ｺﾝﾃﾞﾝｻ	BRACKET	1				
26	1	105R010Y020R	ｾﾑｽB M10X 20	BOLT;SEMS	4				
27	1A	--------	ｴｱｺﾝ ﾚｼｰﾊﾞﾄﾞﾗｲﾔG	AIR CONDITIONER	1				
28	2	KHR13590	ﾚｼｰﾊﾞ;ﾄﾞﾗｲﾔ (D60.5)	RECEIVER;DRIER	1				
29	2	KHR13600	ﾌﾞﾗｹｯﾄ ﾚｼｰﾊﾞ(D60.5)	BRACKET	1				
30	2	KHR1676	ﾎﾞﾙﾄ M6X28 ｻﾞｶﾞﾈ ﾂｷ	BOLT;SPL	2				
31	1	KHJ1213	ﾎﾞﾙﾄ ﾄｸｼｭ M8X16ｻﾞｶﾞﾈ	BOLT;SPL	2				
32	1	KHR1253	ﾎﾞﾙﾄ M 6X 16(ｻﾞｶﾞﾈﾂｷ	BOLT;SPL	2				
33	1A	--------	ｴｱｺﾝ HOSE-G	AIR CONDITIONER	1				
34	2A	KHR14940	ﾎｰｽ;ｸｰﾗ (SUCTION)	HOSE;COOLER	1				
35	3	KHR2905	O-ﾘﾝｸﾞ 5/8	O-RING	2				
36	3	KHR3054	ｷｬｯﾌﾟ ﾁｬｰｼﾞ	CAP;SPL	1				
37	2A	KHR14950	ﾎｰｽ;ｸｰﾗ (DISCHARGE)	HOSE;COOLER	1				
38	3	KHR2906	O-ﾘﾝｸﾞ 1/2	O-RING	2				
39	3	KHR3053	ｷｬｯﾌﾟ ﾁｬｰｼﾞ	CAP;SPL	1				
40	2A	KHR14960	ﾎｰｽ;ｸｰﾗ (LIQUID1)	HOSE;COOLER	1				
41	3	KHR2907	O-ﾘﾝｸﾞ 8	O-RING	2				
42	2A	KHR14970	ﾎｰｽ;ｸｰﾗ (LIQUID2)	HOSE;COOLER	1				
43	3	KHR2907	O-ﾘﾝｸﾞ 8	O-RING	2				
44	1	KBR0655	ﾁｭｰﾌﾞ;ｺﾙｹﾞｰﾄ 25X2000	TUBE;CORRUGATED	1				
45	1	KBR0659	ﾁｭｰﾌﾞ;ｺﾙｹﾞｰﾄ 25X2800	TUBE;CORRUGATED	1				
46	1	KHR11730	ﾁｭｰﾌﾞ;ｺﾙｹﾞｰﾄ 19X2100	TUBE;CORRUGATED	1				
47	1	KRH0278	ﾁｭｰﾌﾞ;ｺﾙｹﾞｰﾄ 15X 800	TUBE;CORRUGATED	1				
48	1	KRH0449	ﾁｭｰﾌﾞ;ｺﾙｹﾞｰﾄ 15-3000	TUBE;CORRUGATED	1				
49	1	KHR15000	ﾎｰｽ;ｺﾞﾑ 16X3800	HOSE;RUBBER	1				
50	1	KHR15010	ﾎｰｽ;ｺﾞﾑ 16X4100	HOSE;RUBBER	1				
51	1	KBR0722	ﾁｭｰﾌﾞ;ｺﾙｹﾞｰﾄ 25X3600	TUBE;CORRUGATED	1				
52	1	KBR0697	ﾁｭｰﾌﾞ;ｺﾙｹﾞｰﾄ 25X4000	TUBE;CORRUGATED	1				
53	1	KRJ1062	ｸﾘｯﾌﾟ;ｼﾞｭﾋﾞﾘ OX	CLIP;JUBILEE	4		210A5 -1298 210L5 -1213	<	KEJ0329
53	1	KEJ0329	ｸﾘｯﾌﾟ;ｼﾞｭﾋﾞﾘ 19-28	CLIP;JUBILEE	4		210A5 1299- 210L5 1214-		
54	1	KHR2581	ｸﾗﾝﾌﾟ ﾊﾞﾝﾄﾞﾂｷ(M)M8	CLAMP	7				
55	1	KHJ1215	ﾎﾞﾙﾄ ﾄｸｼｭ M8X25ｻﾞｶﾞﾈ	BOLT;SPL	7				

https://truckmanualshub.com/

210A5 1101－ 210L5 1101－

符号 ITEM	構成 COMPO	部品番号 PART NO.	部品名	PART NAME	個数 Q'TY	ｲﾝﾅｰ	適用号機 SERIAL_NO.	互換 ICA	代替部品 REPLACEABLE PART
56	1	KHJ11090	ｸﾗﾝﾌﾟ	CLAMP	2				
57	1	KHJ1215	ﾎﾞﾙﾄ ﾄｸｼｭ M8X25ｻﾞｶﾞﾈ	BOLT;SPL	4				
58	1	KHR10730	ｸﾗﾝﾌﾟ;ﾊﾟｲﾌﾟ	CLAMP;PIPE	1				
59	1	KHJ1215	ﾎﾞﾙﾄ ﾄｸｼｭ M8X25ｻﾞｶﾞﾈ	BOLT;SPL	2				
60	1	KHH0142	ﾊﾞﾝﾄﾞ;ｿｸｾﾝ L=250	BAND;HARNESS	1		210A5 -1571 210L5 -1303	<	KHH0142
60	1	KHH0142	ﾊﾞﾝﾄﾞ;ｿｸｾﾝ L=250	BAND;HARNESS	2		210A5 1572- 210L5 1304-		
61	1	KRH10610	ｸｯｼｮﾝ;ﾗﾊﾞｰ (L=290)	CUSHION;RUBBER	1				
62	1	KHP1144	ｶﾞｽ;ｸｰﾗ R134A	GAS;REFRIGERANT	1				

https://truckmanualshub.com/

https://truckmanualshub.com/

1 [2 , 3]
4 [5 ~ 9]

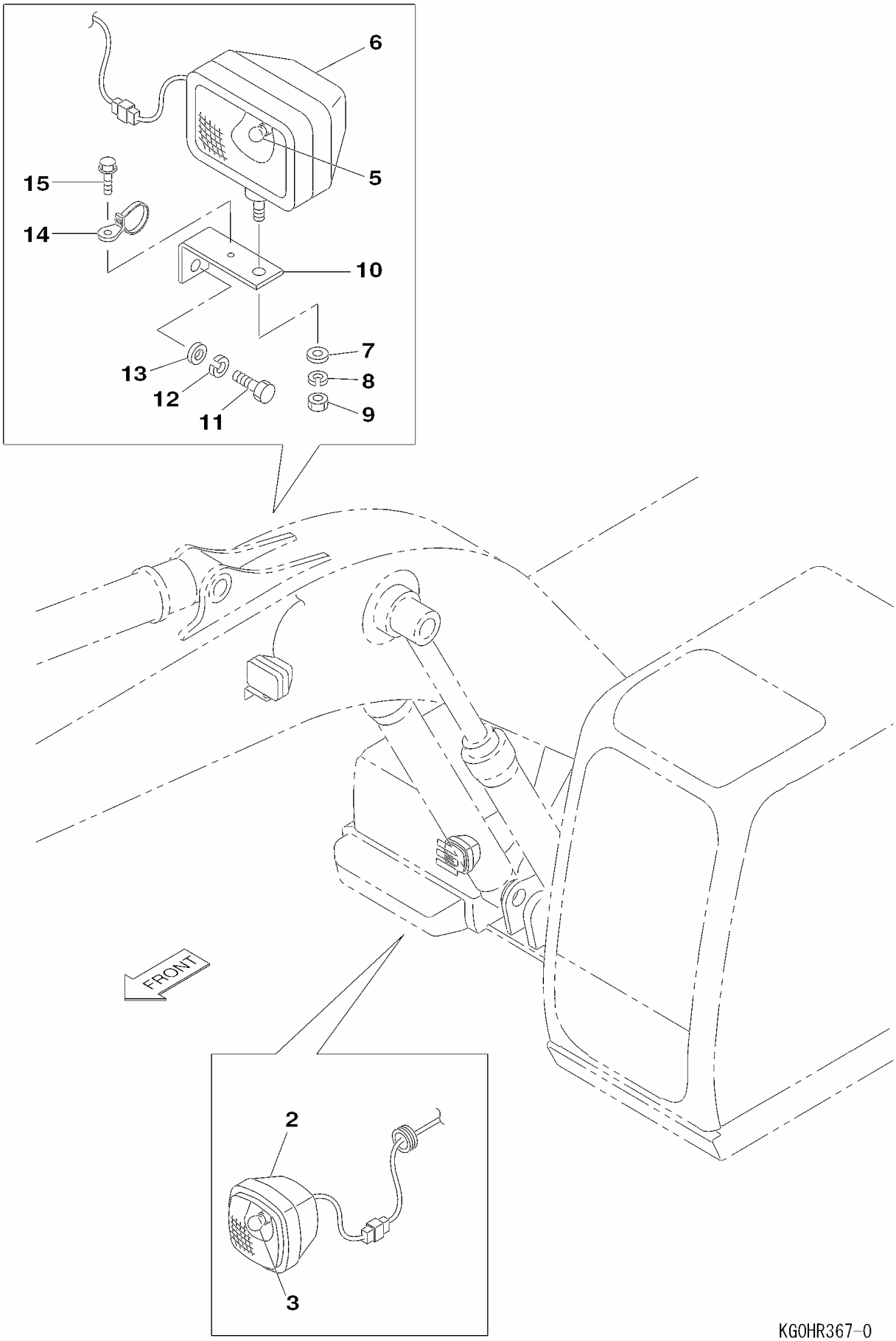

KG0HR367-0
KRR12000-EZ

https://truckmanualshub.com/

210A5 1101－ 210L5 1101－

符号 ITEM	構成 COMPO	部品番号 PART NO.	部品名	PART NAME	個数 Q'TY	ｲﾝﾅｰ	適用号機 SERIAL_NO.	互換 ICA	代替部品 REPLACEABLE PART
1	1A	KHR2475	ﾗｲﾄ;ﾜｰｷﾝｸﾞ 24V X 70W	LAMP;WORKING	1				
2	2	KHR2476	ﾗｲﾄ ﾎﾝﾀｲ	LIGHT;SPL	1				
3	2	KHR2477	ﾃﾞﾝｷｭｳ ﾊﾛｹﾞﾝ	BULB;LAMP	1				
4	1A	KHR0957	ﾗｲﾄ;ﾜｰｷﾝｸﾞ	LAMP;WORKING	1				
5	2	KHR1172	ﾃﾞﾝｷｭｳ ﾊﾛｹﾞﾝ	BULB;LAMP	1				
6	2	KHR1436	ﾗｲﾄ ﾎﾝﾀｲ	LIGHT;SPL	1				
7	2	182-014SR	ﾐｶﾞｷW 14	WASHER;PLAIN	1				
8	2	183-114VR	SW 14	WASHER;SPRING	1				
9	2	UJH0042	ｺｳﾘｷN M14X1.5	NUT;HIGH STRENGTH	1				
10	1	KHR0306	ﾌﾞﾗｹｯﾄ	BRACKET	1				
11	1	102R016Y035R	ｺｳﾘｷB M16X 35	BOLT;HIGH STRENGTH	1				
12	1	183-116VR	SW 16	WASHER;SPRING	1				
13	1	182-016SR	ﾐｶﾞｷW 16	WASHER;PLAIN	1				
14	1	KHR2583	ｸﾗﾝﾌﾟ ﾊﾞﾝﾄﾞﾂｷ(S)M6	CLAMP	1				
15	1	KHR1254	ﾎﾞﾙﾄ M 6X 20(ｻﾞｶﾞﾈﾂｷ	BOLT;SPL	1				

https://truckmanualshub.com/

1[2,3]

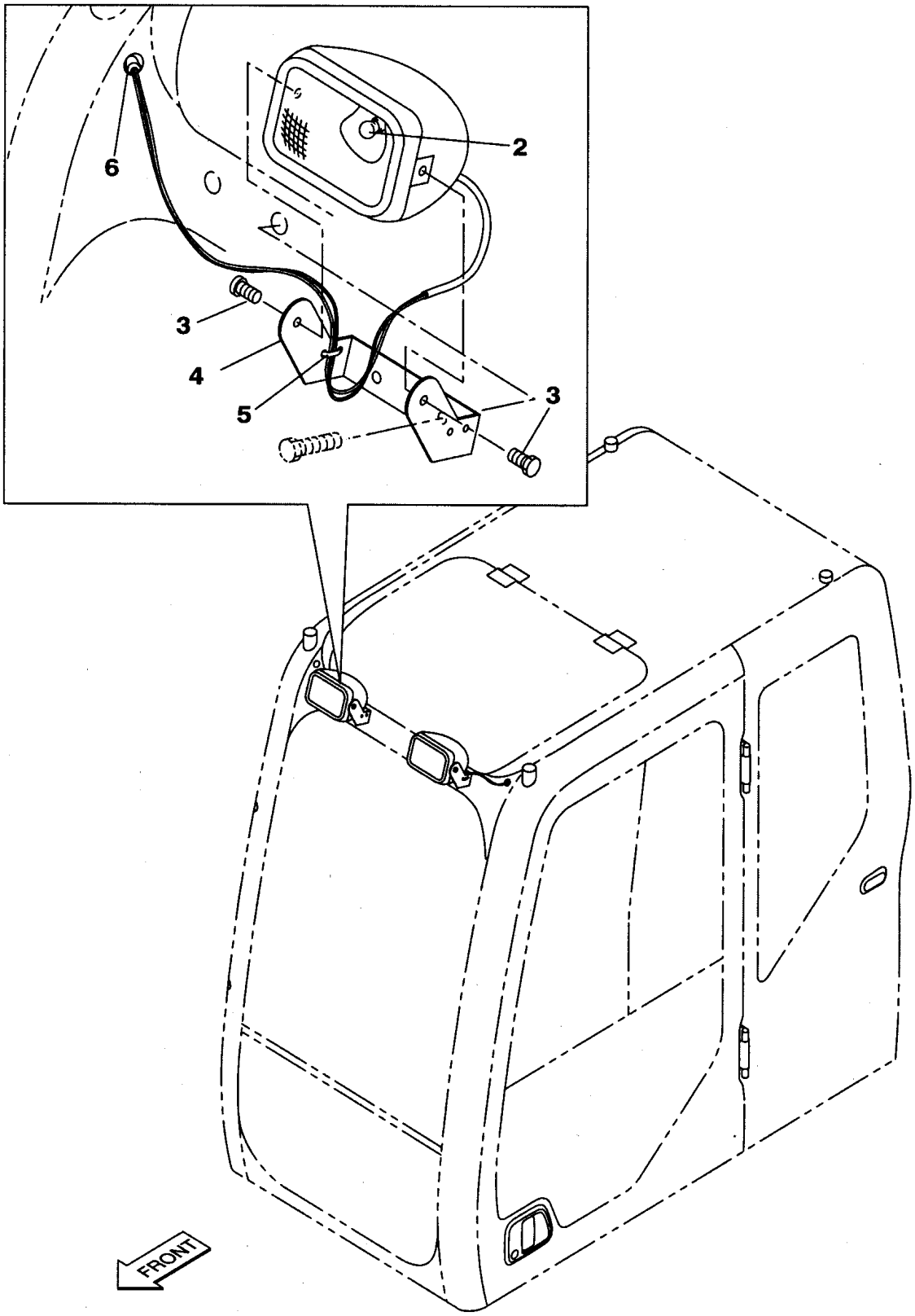

KGOHR415-0
KHR16730-CZ

https://truckmanualshub.com/

210A5 1124－ 210L5 1101－

符号 ITEM	構成 COMPO	部品番号 PART NO.	部品名	PART NAME	個数 Q'TY	ｲﾝﾅｰ	適用号機 SERIAL_NO.	互換 ICA	代替部品 REPLACEABLE PART
1	1A	KHR16240	ﾗｲﾄ;ﾜｰｷﾝｸﾞ	LAMP;WORKING	2				
2	2	KHR1172	ﾃﾞﾝｷﾕｳ ﾊﾛｹﾞﾝ	BULB;LAMP	2				
3	2	KHR3556	ﾎﾞﾙﾄ ﾄﾘﾂｹ M6X16	BOLT;SPL	4				
4	1	KHR16710	ﾌﾞﾗｹｯﾄ ｷｬﾌﾞﾗｲﾄ	BRACKET	2				
5	1	KHH0142	ﾊﾞﾝﾄﾞ;ｿｸｾﾝ L=250	BAND;HARNESS	2				
6	1	KHN17130	ﾊｰﾈｽ;ﾜｲﾔ ﾗｲﾄ	HARNESS;WIRE	2				

https://truckmanualshub.com/

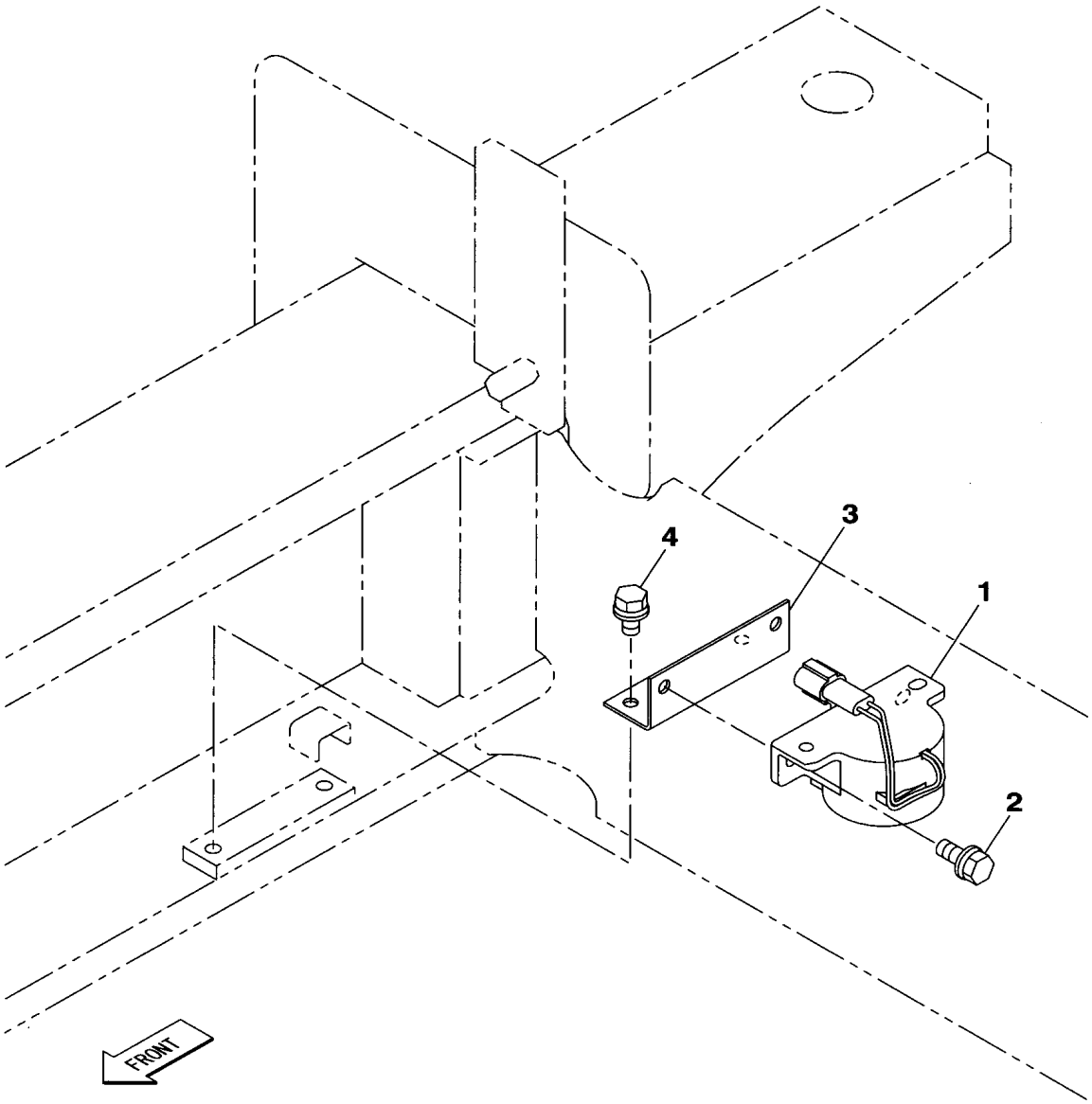

KGOHR320-0
KRR12000-EZ

https://truckmanualshub.com/

210A5 1101－ 210L5 1101－

符号 ITEM	構成 COMPO	部品番号 PART NO.	部品名	PART NAME	個数 Q'TY	ｲﾝﾅｰ	適用号機 SERIAL_NO.	互換 ICA	代替部品 REPLACEABLE PART
1	1	KHR3852	ｱﾗｰﾑ ｿｳｺｳ	ALARM;SPL	1				
2	1	KHR1253	ﾎﾞﾙﾄ M 6X 16(ｻﾞｶﾞﾈｯｷ	BOLT;SPL	2				
3	1	KHR15120	ﾌﾞﾗｹｯﾄ ｱﾗｰﾑ	BRACKET	1				
4	1	KHR1252	ﾎﾞﾙﾄ M 6X 12(ｻﾞｶﾞﾈｯｷ	BOLT;SPL	2				

https://truckmanualshub.com/

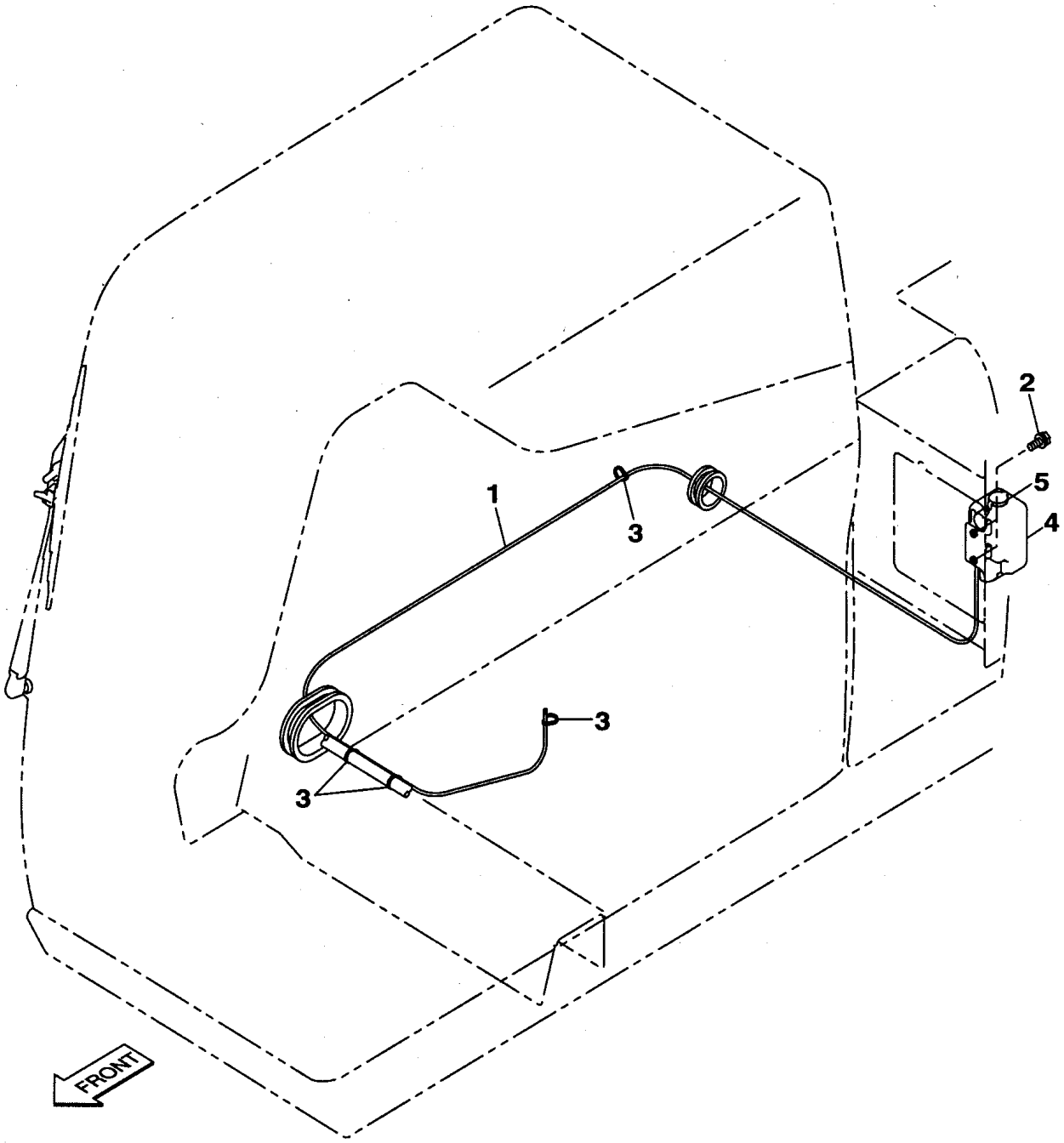

KG0RR593-0
KRR12010-CZ

https://truckmanualshub.com/

210A5 1101－ 210L5 1101－

符号 ITEM	構成 COMPO	部品番号 PART NO.	部品名	PART NAME	個数 Q'TY	ｲﾝﾅｰ	適用号機 SERIAL_NO.	互換 ICA	代替部品 REPLACEABLE PART
1	1	KHR1181	ﾁｭｰﾌﾞ;ﾋﾞﾆﾙ (L=3500)	TUBE;VINYL	1				
2	1	KHR1253	ﾎﾞﾙﾄ M 6X 16(ｻﾞｶﾞﾈｯｷ	BOLT;SPL	2				
3	1	KHH0142	ﾊﾞﾝﾄﾞ;ｿｸｾﾝ L=250	BAND;HARNESS	4 AR				
4	1A	KHN1639	ﾀﾝｸ;ｳｵｯｼｬ	TANK;WASHER	1		210A5 NOT USED 210L5 NOT USED	<	KHR2261
5	2	KHN2506	ｷｬｯﾌﾟ	CAP	1		210A5 NOT USED 210L5 NOT USED		
4	1	KHR2261	ﾀﾝｸ;ｳｵｯｼｬ ASSY	TANK;WASHER	1				

https://truckmanualshub.com/

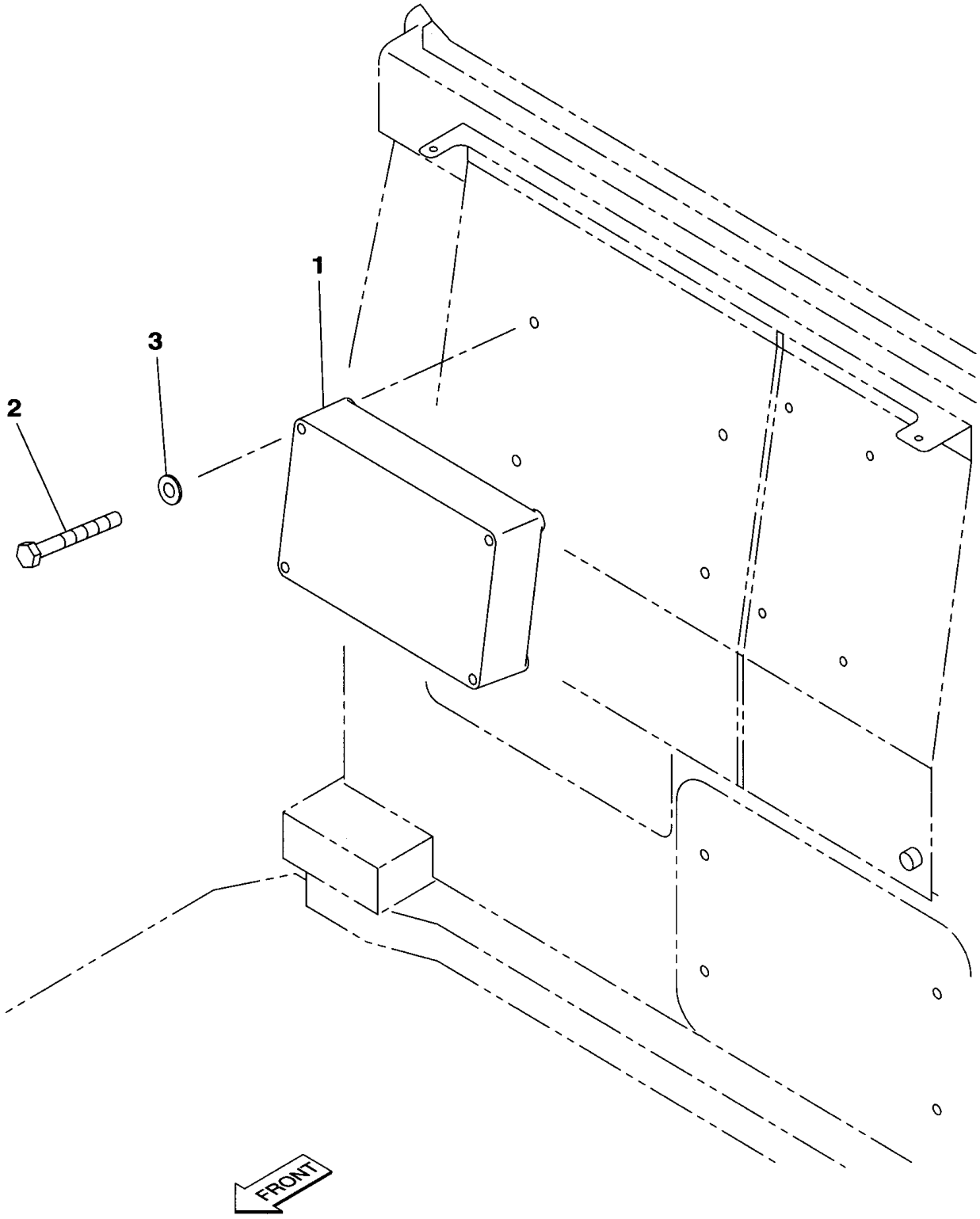

KG0HR352-0
KHR10640-BZ

https://truckmanualshub.com/

210A5 1101－1112

符号 ITEM	構成 COMPO	部品番号 PART NO.	部品名	PART NAME	個数 Q'TY	ｲﾝﾅｰ	適用号機 SERIAL_NO.	互換 ICA	代替部品 REPLACEABLE PART
1	1	KHR10020	ｺﾝﾄﾛｰﾗ A	CONT;SPL	1		210A5 NOT USED	<	KHR10021
1	1	KHR10021	ｺﾝﾄﾛｰﾗ A	CONT;SPL	1		210A5 NOT USED	<	KHR10022
1	1	KHR10022	ｺﾝﾄﾛｰﾗ A	CONT;SPL	1				
2	1	102R008Y070R	ｺｳﾘｷB M 8X 70	BOLT;HIGH STRENGTH	4				
3	1	182-008SR	ﾐｶﾞｷW 8	WASHER;PLAIN	4				

https://truckmanualshub.com/

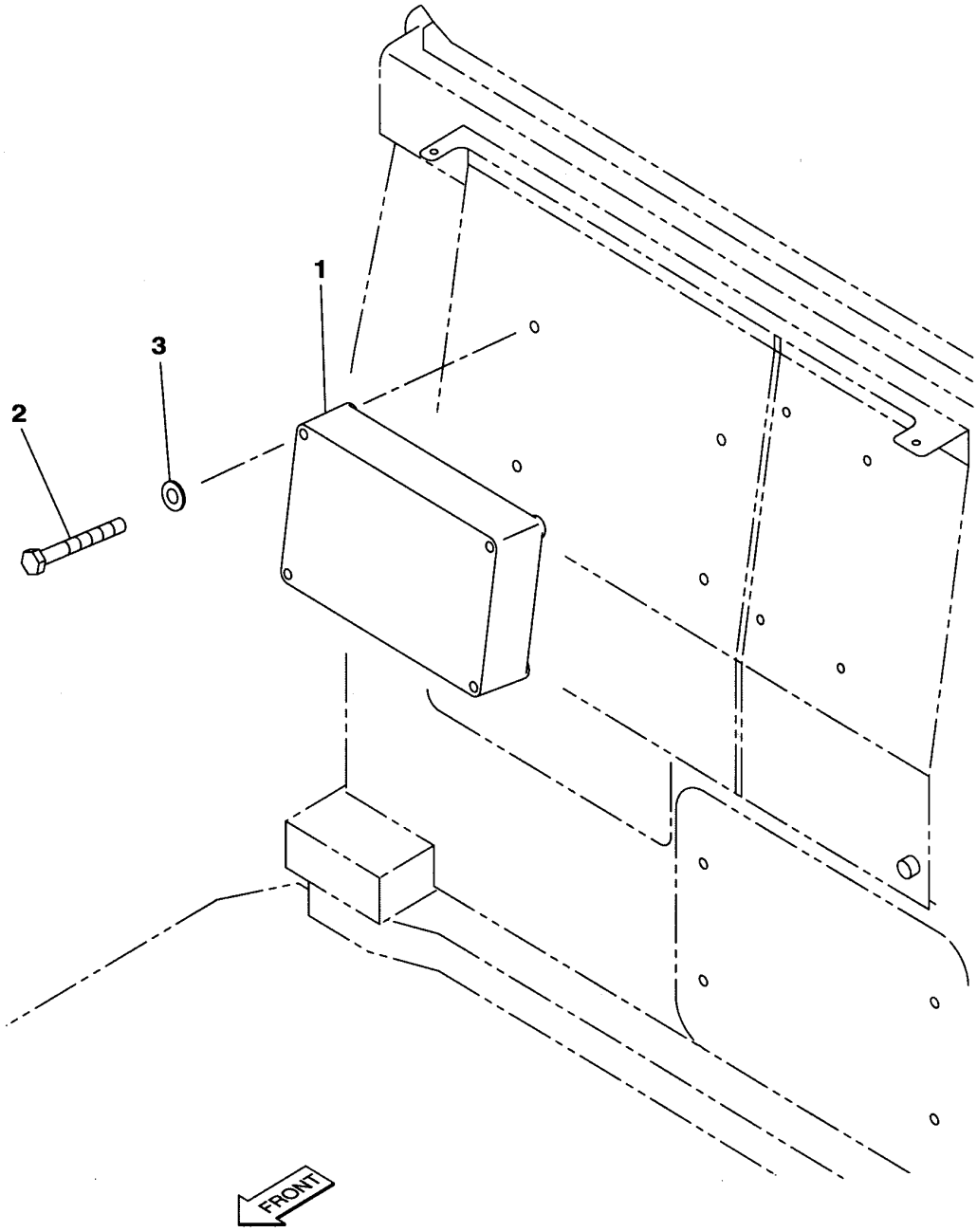

KG0HR406-0
KHR10640-BZ

https://truckmanualshub.com/

210A5 1113－1613 210L5 1101－1319

符号 ITEM	構成 COMPO	部品番号 PART NO.	部品名	PART NAME	個数 Q'TY	インナー	適用号機 SERIAL_NO.	互換 ICA	代替部品 REPLACEABLE PART
1	1	KHR10023	ｺﾝﾄﾛｰﾗ A	CONT;SPL	1		210A5 -1133 210L5 -1133	<	KHR10024
1	1	KHR10024	ｺﾝﾄﾛｰﾗ A	CONT;SPL	1		210A5 1134-1342 210L5 1134-1232	<	KHR10025
1	1	KHR10025	ｺﾝﾄﾛｰﾗ A	CONT;SPL	1		210A5 1343- 210L5 1233-		
2	1	102R008Y070R	ｺｳﾘｷB M 8X 70	BOLT;HIGH STRENGTH	4				
3	1	182-008SR	ﾐｶﾞｷW 8	WASHER;PLAIN	4				

https://truckmanualshub.com/

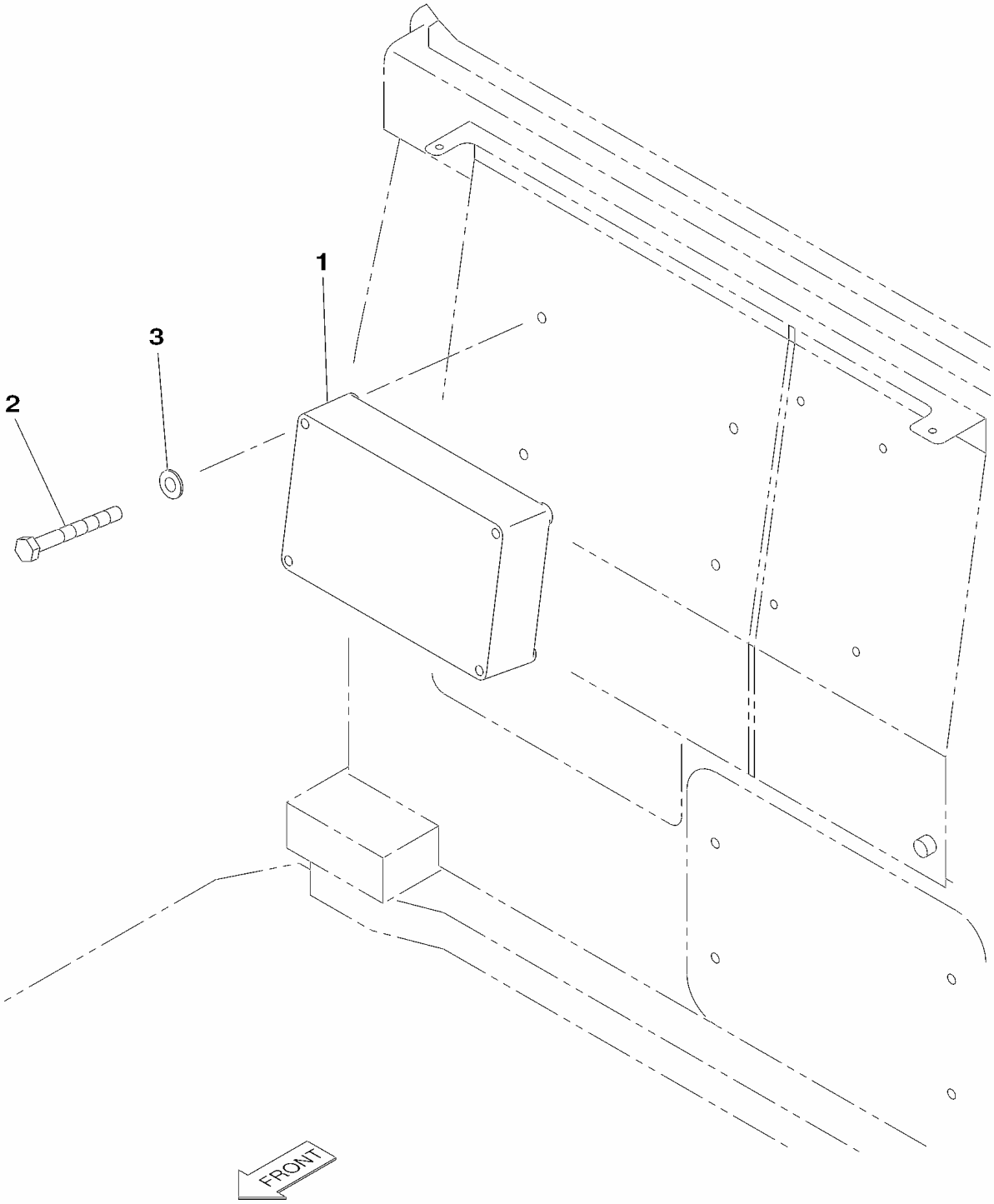

KG0HR406-1
KHR10640-BZ

https://truckmanualshub.com/

210A5 1614－ 210L5 1320－

符号 ITEM	構成 COMPO	部品番号 PART NO.	部品名	PART NAME	個数 Q'TY	ｲﾝﾅｰ	適用号機 SERIAL_NO.	互換 ICA	代替部品 REPLACEABLE PART
1	1	KHR10026	ｺﾝﾄﾛｰﾗ A	CONT;SPL	1		210A5 -1858 210L5 -1420	<	KHR10027
1	1	KHR10027	ｺﾝﾄﾛｰﾗ A	CONT;SPL	1		210A5 1859-2270 210L5 1421-1516	<	KHR10028
1	1	KHR10028	ｺﾝﾄﾛｰﾗ A	CONT;SPL	1		210A5 2271- 210L5 1517-		
2	1	102R008Y070R	ｺｳﾘｷB M 8X 70	BOLT;HIGH STRENGTH	4				
3	1	182-008SR	ﾐｶﾞｷW 8	WASHER;PLAIN	4				

https://truckmanualshub.com/

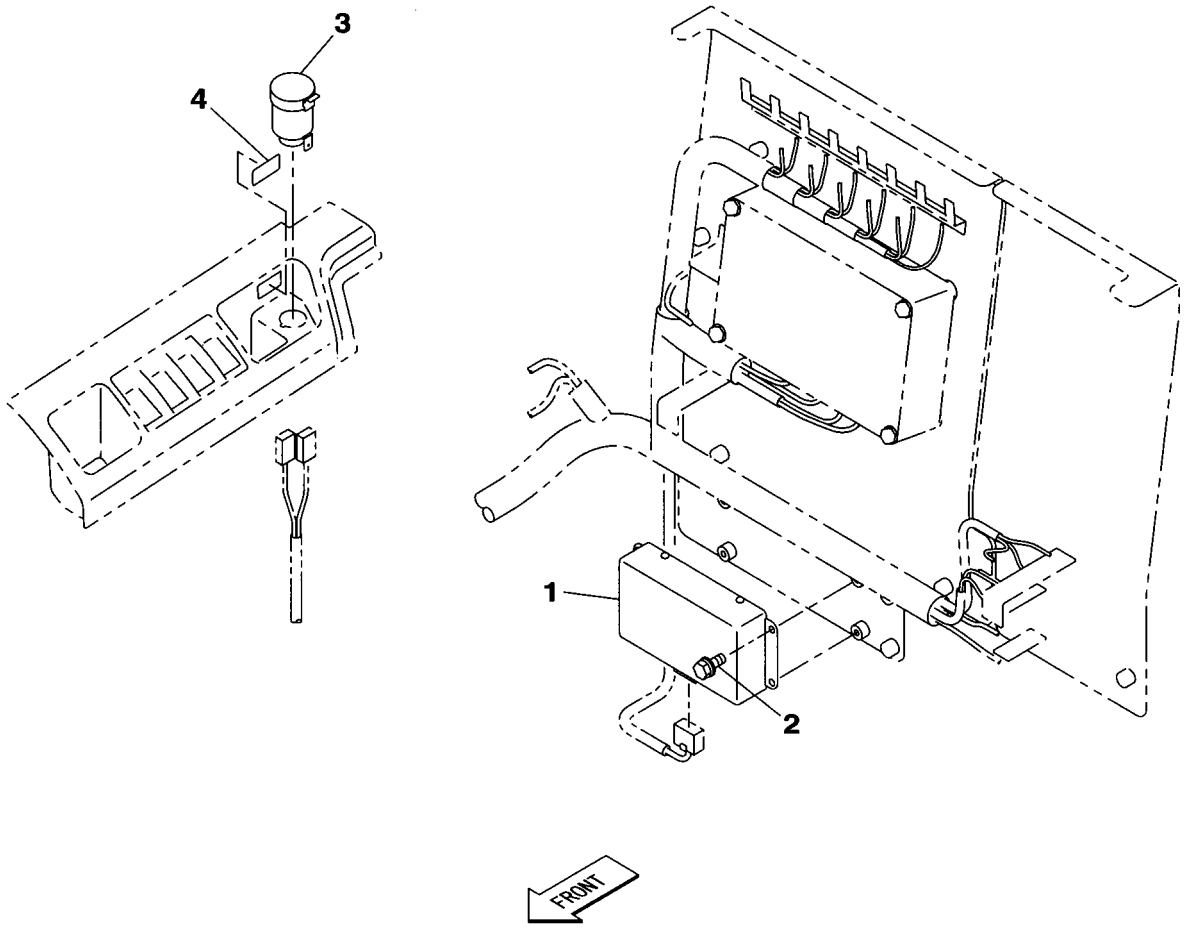

KG0HR323-0
KHR10650-BZ

https://truckmanualshub.com/

210A5 1101－ 210L5 1101－

符号 ITEM	構成 COMPO	部品番号 PART NO.	部品名	PART NAME	個数 Q'TY	ｲﾝﾅｰ	適用号機 SERIAL_NO.	互換 ICA	代替部品 REPLACEABLE PART
1	1	KHR2447	ｺﾝﾊﾞｰﾀ;DC-DC (10A)	CONVERTER;DC-DC	1				
2	1	KHR1253	ﾎﾞﾙﾄ M 6X 16(ｻﾞｶﾞﾈﾂｷ	BOLT;SPL	4				
3	1	KHR2501	ｿｹｯﾄ ｱｸｾｻﾘ(DC12V)	SOCKET	1				
4	1	KHP1803	ﾗﾍﾞﾙ;ﾁｭｳｲ 12V	LABEL;WARNING	1				

https://truckmanualshub.com/

1 [2 , 3] 1 [1.01 ~ 1.03] 1 [1.04 ~ 1.18]
1.16 [1.07 ~ 1.14] 1.15 [1.16 ~ 1.18] 6 [7 ~ 8.06]

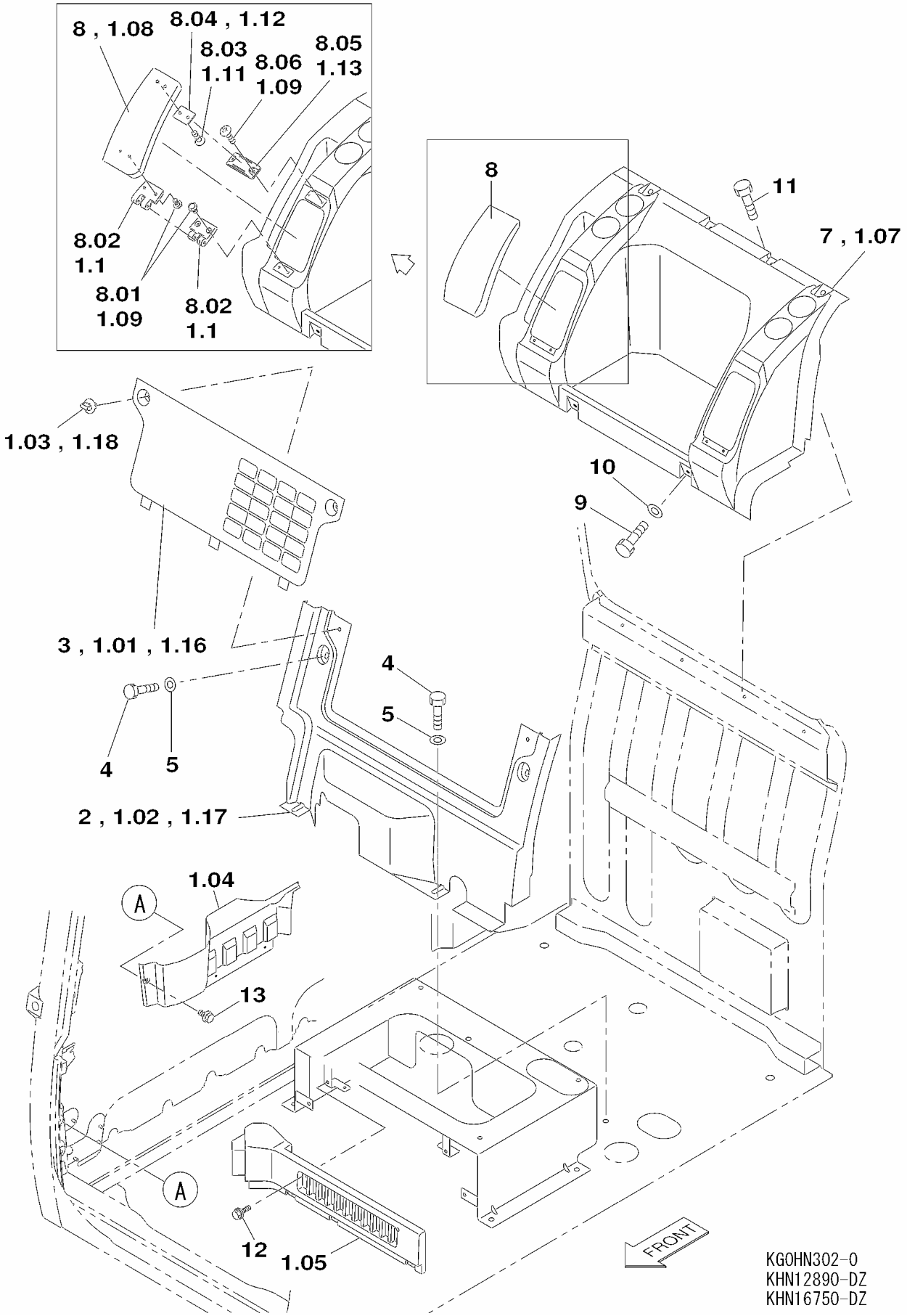

KG0HN302-0
KHN12890-DZ
KHN16750-DZ

https://truckmanualshub.com/

210A5 1101－ 210L5 1101－

符号 ITEM	構成 COMPO	部品番号 PART NO.	部品名	PART NAME	個数 Q'TY	ｲﾝﾅｰ	適用号機 SERIAL_NO.	互換 ICA	代替部品 REPLACEABLE PART
1	1A	KHN12950	ﾄﾘﾑ ﾘﾔ (ﾛﾜ-) ASSY	TRIM;SPL	1		210A5 NOT USED 210L5 NOT USED	<	KHN12951
2	2	KHN12160	ﾄﾘﾑ ﾘﾔ (ﾛﾜ-) ｸﾞﾚ-	TRIM;SPL	1		210A5 NOT USED 210L5 NOT USED		
3	2	KHN12170	ｶﾊﾞｰ;ﾘﾔ (ﾛﾜ-) ｸﾞﾚ-	COVER;REAR	1		210A5 NOT USED 210L5 NOT USED		
1	1A	KHN12951	ﾄﾘﾑ ﾘﾔ (ﾛﾜ-) ASSY	TRIM;SPL	1		210A5 NOT USED 210L5 NOT USED		
1.01	2	KHN18170	ｶﾊﾞｰ;ﾘﾔ (ﾛﾜ-) ｸﾞﾚ-	COVER;REAR	1		210A5 NOT USED 210L5 NOT USED		
1.02	2	KHN18160	ﾄﾘﾑ ﾘﾔ (ﾛﾜ-) ｸﾞﾚ-	TRIM;SPL	1		210A5 NOT USED 210L5 NOT USED		
1.03	2	KHN18180	ｸﾘｯﾌﾟ ﾀｰﾝ	CLIP;SPL	2		210A5 NOT USED 210L5 NOT USED		
1	1A	KHN17580	ﾄﾘﾑ ｷｬﾌﾞﾅｲ ASSY (ｸﾞﾚ	TRIM;SPL	1				
1.04	2	KHN12080	ﾄﾘﾑ ｻｲﾄﾞ (ﾛﾜ-) ﾌﾞﾗｯｸ	TRIM;SPL	1				
1.05	2	KHN12190	ｶﾊﾞｰ;ﾌﾛﾝﾄ ﾌﾞﾗｯｸ	COVER;FRONT	1				
1.06	2A	KHN12940	ﾄﾘﾑ ﾘﾔ (ｱｯﾊﾟ) ASSY	TRIM;SPL	1				
1.07	3	KHN12140	ﾄﾘﾑ ﾘﾔ (ｱｯﾊﾟ) ｸﾞﾗﾅｲﾄ	TRIM;SPL	1				
1.08	3	KHN12180	ｶﾊﾞｰ;ﾘﾔ	COVER;REAR	2				
1.09	3	KHN17250	ｽｸﾘｭｰ ﾀｯﾋﾟﾝｸﾞ M5X1.0	SCREW	8				
1 .1	3	KHN16170	ﾁｮｳﾊﾞﾝ	HINGE	2				
1.11	3	KHN16190	ｽｸﾘｭｰ ﾀｯﾋﾟﾝｸﾞ M3X0.6	SCREW	4				
1.12	3	KHN2334	ﾌﾟﾚｰﾄ	PLATE	2				
1.13	3	KHN2333	ﾏｸﾞﾈｯﾄ ﾎﾝﾀｲ	MAGNET;SPL	2				
1.14	3	KHN16180	ｽｸﾘｭｰ ﾀｯﾋﾟﾝｸﾞ M3X0.6	SCREW	4				
1.15	2A	KHN12951	ﾄﾘﾑ ﾘﾔ (ﾛﾜ-) ASSY	TRIM;SPL	1				
1.16	3	KHN18170	ｶﾊﾞｰ;ﾘﾔ (ﾛﾜ-) ｸﾞﾚ-	COVER;REAR	1				
1.17	3	KHN18160	ﾄﾘﾑ ﾘﾔ (ﾛﾜ-) ｸﾞﾚ-	TRIM;SPL	1				
1.18	3	KHN18180	ｸﾘｯﾌﾟ ﾀｰﾝ	CLIP;SPL	2				
4	1	KHN2309	ﾎﾞﾙﾄ ﾄｸｼｭ M8X20	BOLT;SPL	4				
5	1	KHN2312	ﾐｶﾞｷW 8	WASHER;PLAIN	4				
6	1A	KHN12940	ﾄﾘﾑ ﾘﾔ (ｱｯﾊﾟ) ASSY	TRIM;SPL	1		210A5 NOT USED 210L5 NOT USED		
7	2	KHN12140	ﾄﾘﾑ ﾘﾔ (ｱｯﾊﾟ) ｸﾞﾗﾅｲﾄ	TRIM;SPL	1		210A5 NOT USED 210L5 NOT USED		
8	2	KHN12180	ｶﾊﾞｰ;ﾘﾔ	COVER;REAR	2		210A5 NOT USED 210L5 NOT USED		
8.01	2	KHN17250	ｽｸﾘｭｰ ﾀｯﾋﾟﾝｸﾞ M5X1.0	SCREW	8		210A5 NOT USED 210L5 NOT USED		
8.02	2	KHN16170	ﾁｮｳﾊﾞﾝ	HINGE	2		210A5 NOT USED 210L5 NOT USED		
8.03	2	KHN16190	ｽｸﾘｭｰ ﾀｯﾋﾟﾝｸﾞ M3X0.6	SCREW	4		210A5 NOT USED 210L5 NOT USED		
8.04	2	KHN2334	ﾌﾟﾚｰﾄ	PLATE	2		210A5 NOT USED 210L5 NOT USED		
8.05	2	KHN2333	ﾏｸﾞﾈｯﾄ ﾎﾝﾀｲ	MAGNET;SPL	2		210A5 NOT USED 210L5 NOT USED		
8.06	2	KHN16180	ｽｸﾘｭｰ ﾀｯﾋﾟﾝｸﾞ M3X0.6	SCREW	4		210A5 NOT USED 210L5 NOT USED		
9	1	KHN2309	ﾎﾞﾙﾄ ﾄｸｼｭ M8X20	BOLT;SPL	2				
10	1	KHN2312	ﾐｶﾞｷW 8	WASHER;PLAIN	2				
11	1	KHN2132	ｺｳﾘｷB M6X16 (ｻﾞｶﾞﾈｸﾐ	BOLT;HIGH STRENGTH	4				
12	1	KHN2132	ｺｳﾘｷB M6X16 (ｻﾞｶﾞﾈｸﾐ	BOLT;HIGH STRENGTH	4				
13	1	KHN2132	ｺｳﾘｷB M6X16 (ｻﾞｶﾞﾈｸﾐ	BOLT;HIGH STRENGTH	3				

https://truckmanualshub.com/

7[8,9]

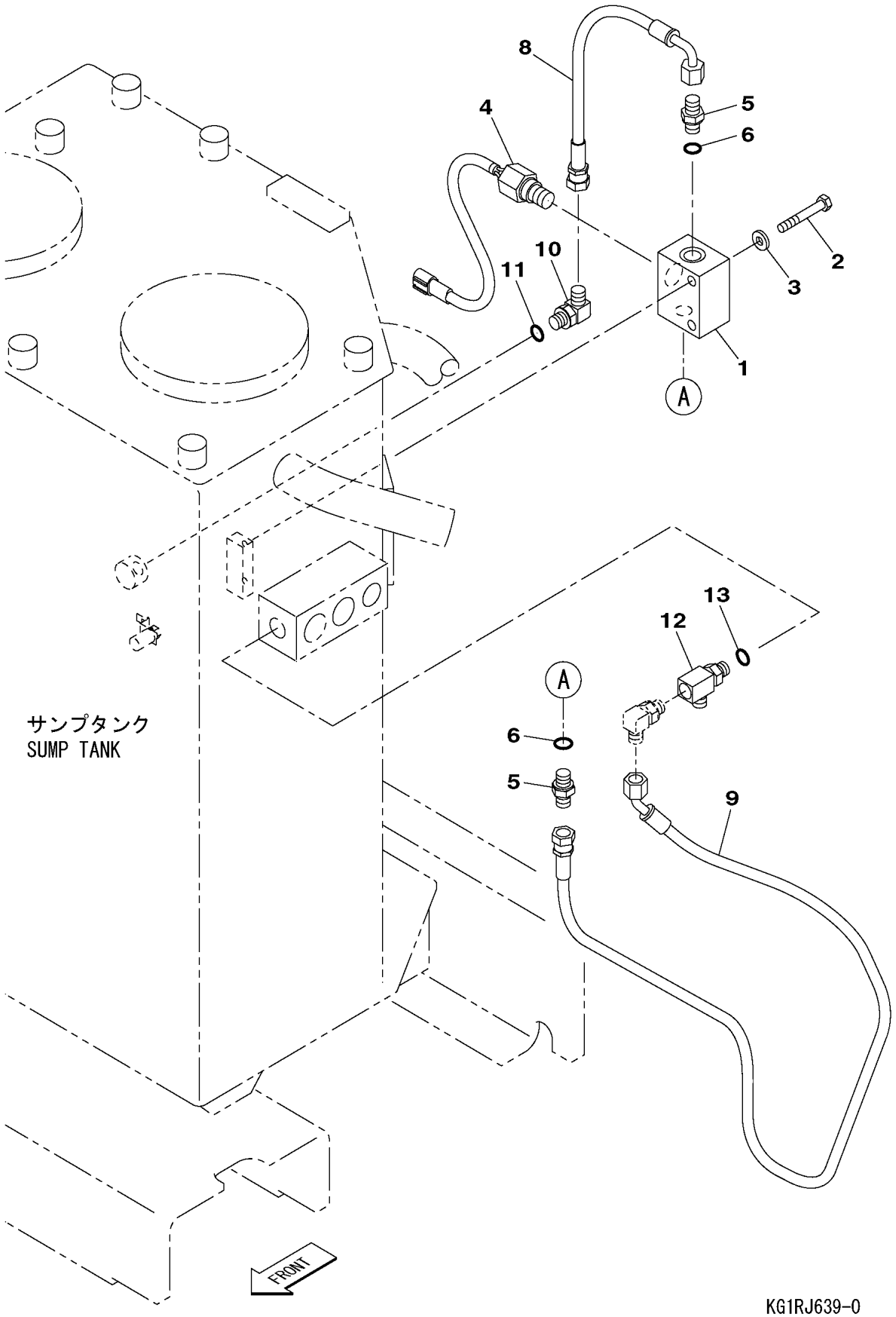

KG1RJ639-0
KRJ16530-CZ

https://truckmanualshub.com/

210A5 1101－1123 210L5 1101－1116

符号 ITEM	構成 COMPO	部品番号 PART NO.	部品名	PART NAME	個数 Q'TY	ｲﾝﾅｰ	適用号機 SERIAL_NO.	互換 ICA	代替部品 REPLACEABLE PART
1	1	KHJ11730	ﾏﾆﾎｰﾙﾄﾞ	MANIFOLD	1				
2	1	102R008Y055R	ｺｳﾘｷB M 8X 55	BOLT;HIGH STRENGTH	2				
3	1	KAJ1500	ｺｳﾘｷW M8	WASHER;HIGH STRENGTH	2				
4	1	KHR14470	ｽｲｯﾁ;ﾌﾟﾚｯｼｬ (ﾌｨﾙﾀﾖｳ)	SWITCH;PRESS.	1				
5	1A	KNJ0758	ｱﾀﾞﾌﾟﾀ;ﾎｰｽ HA208-02	ADAPTER;HOSE	2				
6	2	UEJ0360	O-ﾘﾝｸﾞ 1B-P11	O-RING	2				
7	1A	KRJ16520	ﾎｰｽ ｸﾐﾀﾃ(ｼﾞｭｳﾅﾝｾｲﾅｲﾛ	HOSE SPL	1				
8	2	KHJ2292	ﾎｰｽ;ﾅｲﾛﾝ 70-6X280 5+	HOSE;NYLON	1				
9	2	KHJ15120	ﾎｰｽ;ﾅｲﾛﾝ 70-6X1350 5	HOSE;NYLON	1				
10	1A	KHJ0341	ｴﾙﾎﾞ HL204-020 G1/4	ELBOW	1				
11	2	UEJ0360	O-ﾘﾝｸﾞ 1B-P11	O-RING	1				
12	1A	KHJ2773	ﾁｰ 3-G1/4	TEE	1				
13	2	UEJ0360	O-ﾘﾝｸﾞ 1B-P11	O-RING	1				

https://truckmanualshub.com/

6[7,8]

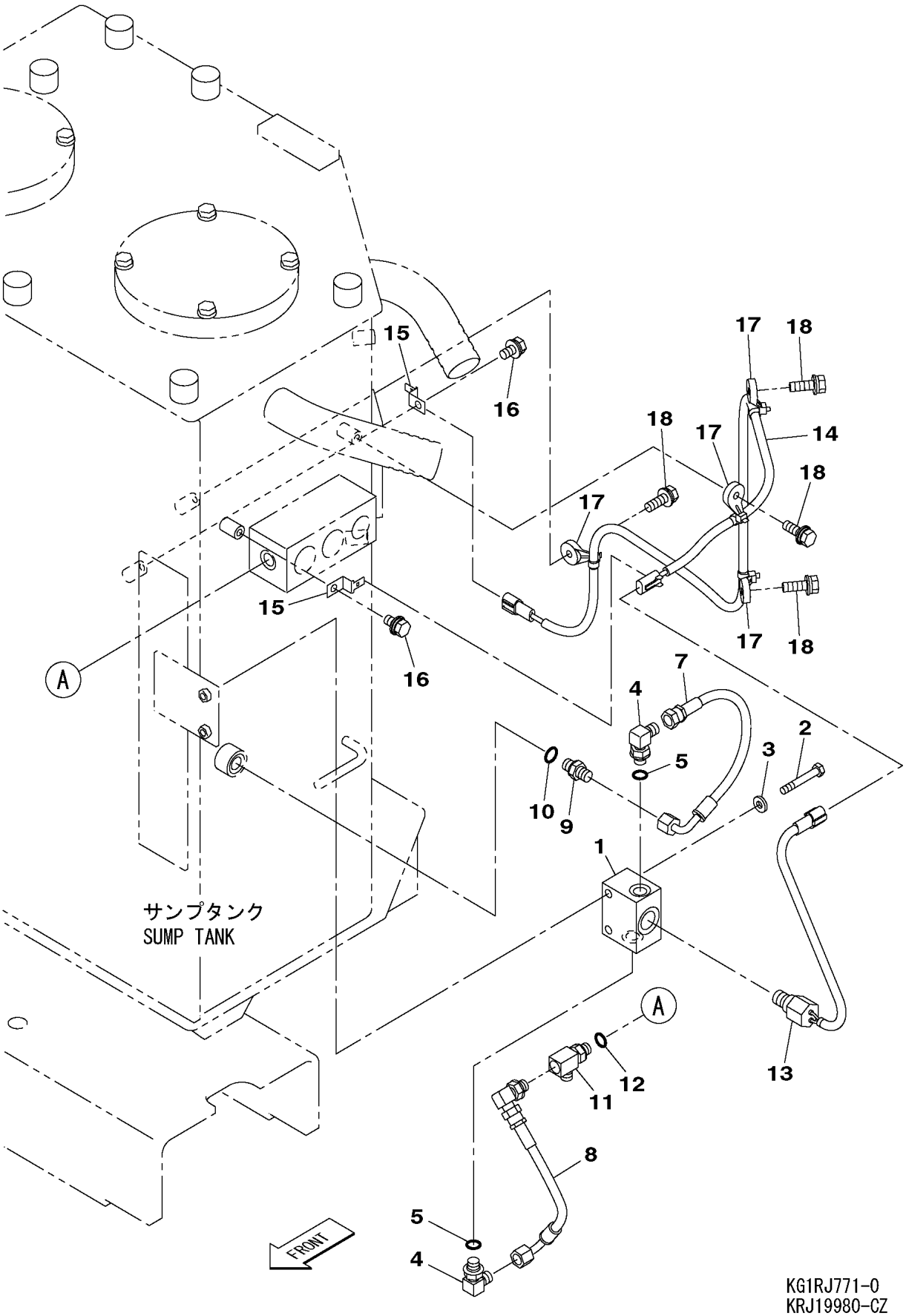

https://truckmanualshub.com/

210A5 1124－ 210L5 1117－

符号 ITEM	構成 COMPO	部品番号 PART NO.	部品名	PART NAME	個数 Q'TY	ｲﾝﾅｰ	適用号機 SERIAL_NO.	互換 ICA	代替部品 REPLACEABLE PART
1	1	KHJ11730	ﾏﾆﾎｰﾙﾄﾞ	MANIFOLD	1				
2	1	102R008Y060R	ｺｳﾘｷB M 8X 60	BOLT;HIGH STRENGTH	2				
3	1	KAJ1500	ｺｳﾘｷW M8	WASHER;HIGH STRENGTH	2				
4	1A	KHJ0341	ｴﾙﾎﾞ HL204-020 G1/4	ELBOW	2				
5	2	UEJ0360	O-ﾘﾝｸﾞ 1B-P11	O-RING	2				
6	1A	KRJ19990	ﾎｰｽ ｸﾐﾀﾃ(ｼﾞｭｳﾅﾝｾｲﾅｲﾛ	HOSE SPL	1				
7	2	KHJ2238	ﾎｰｽ;ﾅｲﾛﾝ 70-6X320 5+	HOSE;NYLON	1				
8	2	KHJ2291	ﾎｰｽ;ﾅｲﾛﾝ 70-6X240 5+	HOSE;NYLON	1				
9	1A	KNJ0758	ｱﾀﾞﾌﾟﾀ;ﾎｰｽ HA208-02	ADAPTER;HOSE	1				
10	2	UEJ0360	O-ﾘﾝｸﾞ 1B-P11	O-RING	1				
11	1A	KHJ2773	ﾁｰ 3-G1/4	TEE	1				
12	2	UEJ0360	O-ﾘﾝｸﾞ 1B-P11	O-RING	1				
13	1	KHR14470	ｽｲｯﾁ;ﾌﾟﾚｯｼｬ (ﾌｨﾙﾀﾖｳ)	SWITCH;PRESS.	1				
14	1	KRR13430	ﾊｰﾈｽ;ﾜｲﾔ (ｲﾝｼﾞｹｰﾀ)	HARNESS;WIRE	1				
15	1	KHR1317	ｸﾘｯﾌﾟ	CLIP	2		210A5 NOT USED		
							210L5 NOT USED		
15	1	KHR1317	ｸﾘｯﾌﾟ	CLIP	1				
16	1	KHJ1213	ﾎﾞﾙﾄ ﾄｸｼｭ M8X16ｻﾞｶﾞﾈ	BOLT;SPL	2		210A5 NOT USED		
							210L5 NOT USED		
16	1	KHJ1213	ﾎﾞﾙﾄ ﾄｸｼｭ M8X16ｻﾞｶﾞﾈ	BOLT;SPL	1				
17	1	KHR2584	ｸﾗﾝﾌﾟ ﾊﾞﾝﾄﾞﾂｷ(S)M8	CLAMP	4				
18	1	KHJ1215	ﾎﾞﾙﾄ ﾄｸｼｭ M8X25ｻﾞｶﾞﾈ	BOLT;SPL	4				

https://truckmanualshub.com/

34 [35 ~ 38]

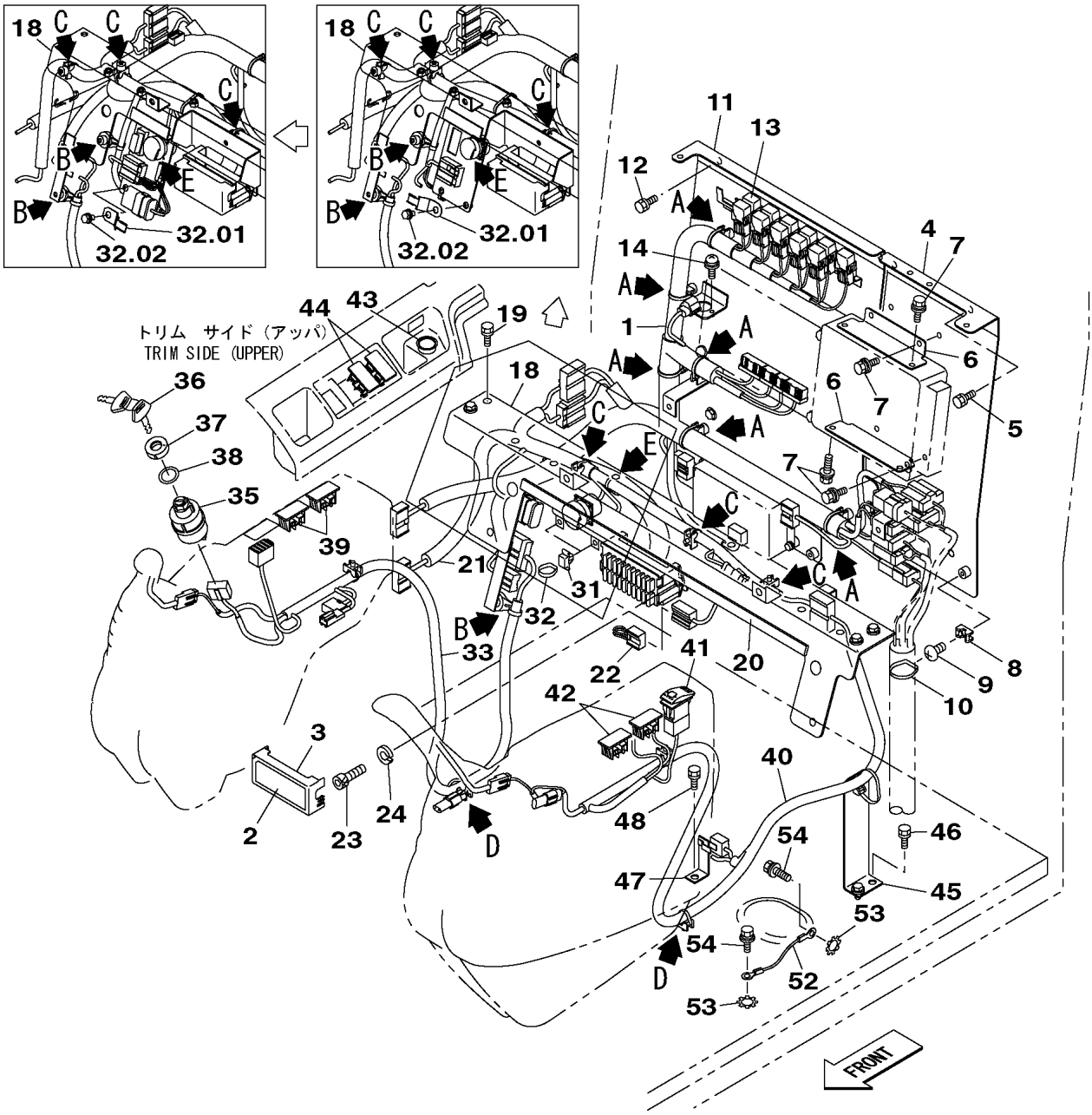

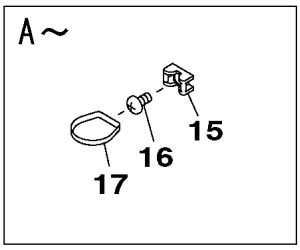

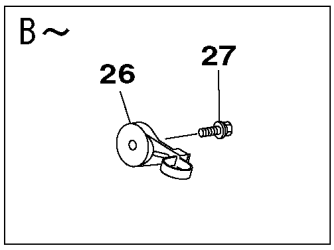

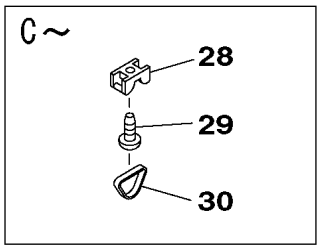

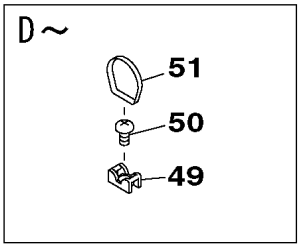

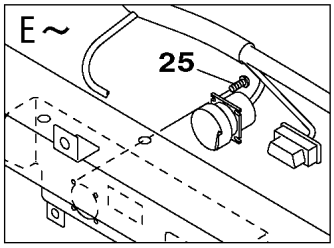

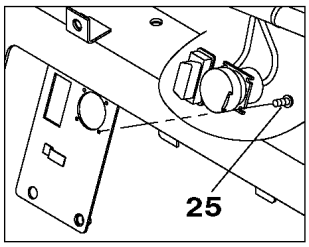

KG0HR388-0
KHR16040-EZ

https://truckmanualshub.com/

210A5 1101－1123 210L5 1101－1116

符号 ITEM	構成 COMPO	部品番号 PART NO.	部品名	PART NAME	個数 Q'TY	ｲﾝﾅｰ	適用号機 SERIAL_NO.	互換 ICA	代替部品 REPLACEABLE PART
1	1	KHR16000	ﾊｰﾈｽ;ﾜｲﾔ ｷｬﾌﾞ ﾒｲﾝ	HARNESS;WIRE	1		210A5 NOT USED	<	KHR16001
							210L5 NOT USED		
1	1	KHR16001	ﾊｰﾈｽ;ﾜｲﾔ ｷｬﾌﾞﾒｲﾝ	HARNESS;WIRE	1			=	KHR16002
1	1A	KHR16002	ﾊｰﾈｽ;ﾜｲﾔ ｷｬﾌﾞﾒｲﾝ	HARNESS;WIRE	1		210A5 NOT USED		
							210L5 NOT USED		
2	2	KHP12180	ﾗﾍﾞﾙ ﾋｭｰｽﾞ	LABEL;SPL	1		210A5 NOT USED		
							210L5 NOT USED		
2	2	KHP12181	ﾗﾍﾞﾙ ﾋｭｰｽﾞ	LABEL;SPL	1				
3	2	KHR15940	ｶﾊﾞｰ ﾋｭｰｽﾞ	COVER	1				
4	1	KHR13450	ﾌﾞﾗｹｯﾄ ﾘﾔ (ﾋﾀﾞﾘ)	BRACKET	1				
5	1	105R008Y016R	ｾﾑｽB M 8X 16	BOLT;SEMS	4				
6	1	KHR13480	ﾌﾞﾗｹｯﾄ ECM	BRACKET	2				
7	1	KHR1253	ﾎﾞﾙﾄ M 6X 16(ｻﾞｶﾞﾈｯｷ	BOLT;SPL	8				
8	1	KHR0319	ｸﾗﾝﾌﾟ ﾏｳﾝﾄ	CLAMP;SPL	1				
9	1	145N006S008R	+ﾅﾍﾞS M 6X 8	SCREW;PAN HD	1				
10	1	KHH0142	ﾊﾞﾝﾄﾞ;ｿｸｾﾝ L=250	BAND;HARNESS	1				
11	1	KHR13460	ﾌﾞﾗｹｯﾄ ﾘﾔ (ﾐｷﾞ)	BRACKET	1				
12	1	105R008Y016R	ｾﾑｽB M 8X 16	BOLT;SEMS	4				
13	1	KHR3802	ﾘﾚｰ ﾁｪﾝｼﾞｵｰﾊﾞ-24V	RELAY;SPL	11				
14	1	KHR0618	+ﾅﾍﾞS M5X16(ｻﾞｶﾞﾈｯｷ)	SCREW;PAN HD	2			=	KHN1410
14	1	KHN1410	+ﾅﾍﾞS M5X20(ｻﾞｶﾞﾈｯｷ)	SCREW;PAN HD	2		210A5 NOT USED		
							210L5 NOT USED		
15	1	KHR0319	ｸﾗﾝﾌﾟ ﾏｳﾝﾄ	CLAMP;SPL	6				
16	1	145N006S008R	+ﾅﾍﾞS M 6X 8	SCREW;PAN HD	6				
17	1	KHH0142	ﾊﾞﾝﾄﾞ;ｿｸｾﾝ L=250	BAND;HARNESS	6				
18	1	KHR13470	ﾌﾞﾗｹｯﾄ ﾄﾘﾑ	BRACKET	1		210A5 NOT USED	<	KHR13471
							210L5 NOT USED		
18	1	KHR13471	ﾌﾞﾗｹｯﾄ ﾄﾘﾑ	BRACKET	1			<	KHR13472
18	1	KHR13472	ﾌﾞﾗｹｯﾄ ﾄﾘﾑ	BRACKET	1		210A5 NOT USED		
							210L5 NOT USED		
19	1	105R008Y016R	ｾﾑｽB M 8X 16	BOLT;SEMS	4				
20	1	KHR14230	ｼｰﾙ;ｸｯｼｮﾝ	SEAL;CUSHION	1				
21	1	KHR15990	ﾊｰﾈｽ;ﾜｲﾔ ｷｬﾌﾞ ｻﾌﾞ	HARNESS;WIRE	1		210A5 NOT USED	<	KHR15991
							210L5 NOT USED		
21	1	KHR15991	ﾊｰﾈｽ;ﾜｲﾔ ｷｬﾌﾞｻﾌﾞ	HARNESS;WIRE	1			<	KHR15992
21	1	KHR15992	ﾊｰﾈｽ;ﾜｲﾔ ｷｬﾌﾞ ｻﾌﾞ	HARNESS;WIRE	1		210A5 NOT USED	<	KHR15993
							210L5 NOT USED		
21	1A	KHR15993	ﾊｰﾈｽ;ﾜｲﾔ ｷｬﾌﾞ ｻﾌﾞ	HARNESS;WIRE	1		210A5 NOT USED		
							210L5 NOT USED		
22	2	KHR15950	ﾊｰﾈｽ;ﾜｲﾔ GPS ｼﾞｬﾝﾊﾟ	HARNESS;WIRE	1		210A5 NOT USED		
							210L5 NOT USED		
22	2	KHR16700	ﾊｰﾈｽ;ﾜｲﾔ GPSｼﾞｬﾝﾊﾟ	HARNESS;WIRE	1				
23	1	108R006Y020R	ﾛｯｶｸｱﾅB M 6X 20	BOLT;HEX SOC HD	2				
24	1	184-006VR	ﾎｳｹｲSW 6	WASHER;SPRING	2				
25	1	145N003S008R	+ﾅﾍﾞS M 3X 8	SCREW;PAN HD	4				
26	1	KHR2583	ｸﾗﾝﾌﾟ ﾊﾞﾝﾄﾞﾂｷ(S)M6	CLAMP	1		210A5 NOT USED	<	KHR2583
							210L5 NOT USED		
26	1	KHR2583	ｸﾗﾝﾌﾟ ﾊﾞﾝﾄﾞﾂｷ(S)M6	CLAMP	2				
27	1	KHR1253	ﾎﾞﾙﾄ M 6X 16(ｻﾞｶﾞﾈｯｷ	BOLT;SPL	1		210A5 NOT USED	<	KHR1253
							210L5 NOT USED		
27	1	KHR1253	ﾎﾞﾙﾄ M 6X 16(ｻﾞｶﾞﾈｯｷ	BOLT;SPL	2				
28	1	KHR0319	ｸﾗﾝﾌﾟ ﾏｳﾝﾄ	CLAMP;SPL	3		210A5 NOT USED	<	KHR0319
							210L5 NOT USED		
28	1	KHR0319	ｸﾗﾝﾌﾟ ﾏｳﾝﾄ	CLAMP;SPL	4				
29	1	145N006S008R	+ﾅﾍﾞS M 6X 8	SCREW;PAN HD	3		210A5 NOT USED	<	145N006S008R
							210L5 NOT USED		
29	1	145N006S008R	+ﾅﾍﾞS M 6X 8	SCREW;PAN HD	4				
30	1	KHH0142	ﾊﾞﾝﾄﾞ;ｿｸｾﾝ L=250	BAND;HARNESS	3		210A5 NOT USED	<	KHH0142
							210L5 NOT USED		
30	1	KHH0142	ﾊﾞﾝﾄﾞ;ｿｸｾﾝ L=250	BAND;HARNESS	4				

https://truckmanualshub.com/

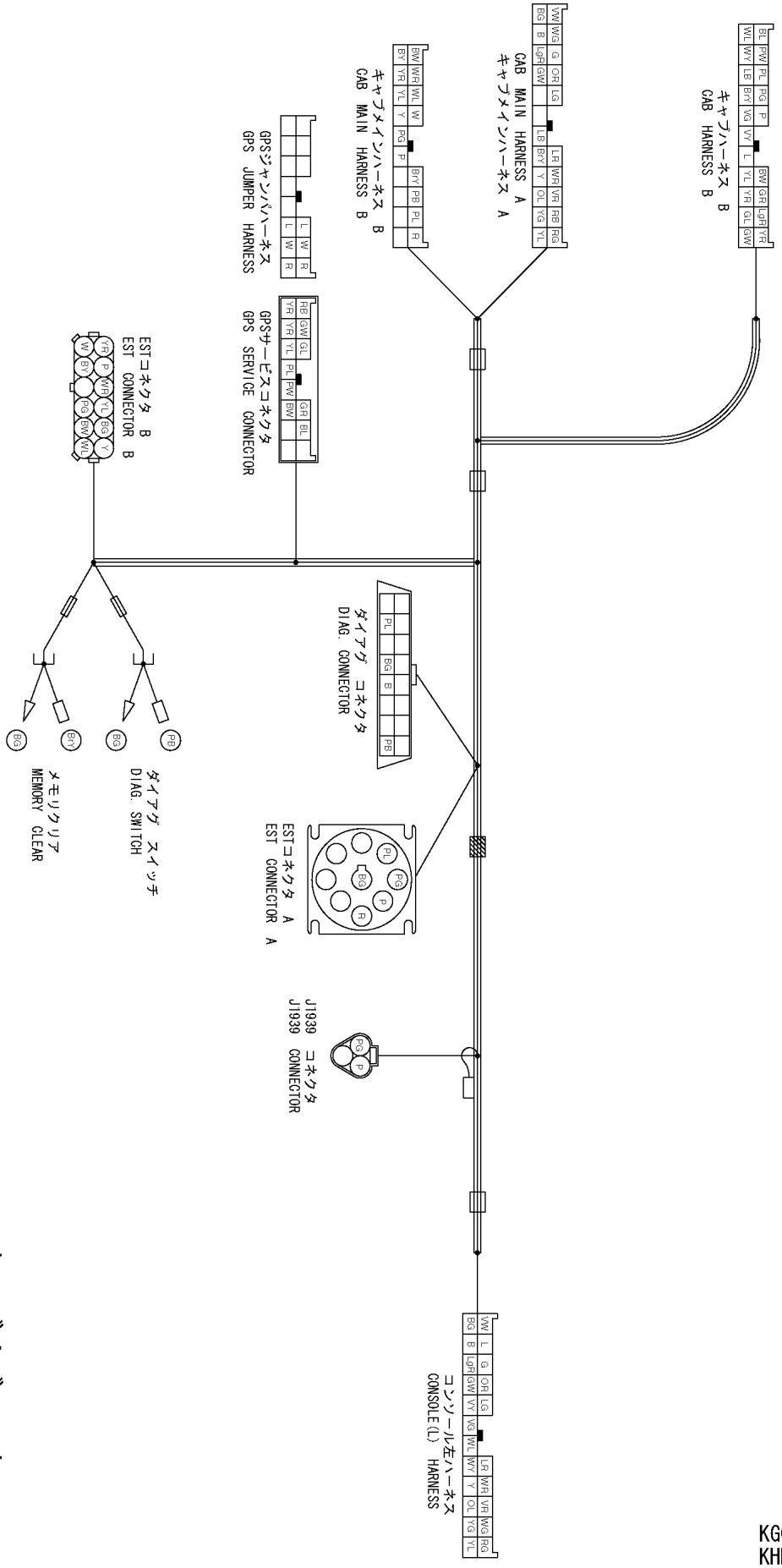

KGOHR388-0
KHR16040-EZ

キャブサブハーネス
CAB SUB HARNESS
KHR15993-D

https://truckmanualshub.com/

210A5 1101－1123 210L5 1101－1116

符号 ITEM	構成 COMPO	部品番号 PART NO.	部品名	PART NAME	個数 Q'TY	ｲﾝﾅｰ	適用号機 SERIAL_NO.	互換 ICA	代替部品 REPLACEABLE PART
31	1	KHR10220	ｸﾗﾝﾌﾟ ﾏｳﾝﾄ	CLAMP;SPL	2		210A5 NOT USED 210L5 NOT USED		
32	1	KHH0142	ﾊﾞﾝﾄﾞ;ｿｸｾﾝ L=250	BAND;HARNESS	2		210A5 NOT USED 210L5 NOT USED		
32.01	1	KHR3748	ｸﾘｯﾌﾟ (DTｺﾈｸﾀﾖｳ)	CLIP	1				
32.02	1	KHJ1213	ﾎﾞﾙﾄ ﾄｸｼｭ M8X16ｻﾞｶﾞﾈ	BOLT;SPL	1				
33	1	KHR15970	ﾊｰﾈｽ;ﾜｲﾔ ｺﾝｿｰﾙ(ﾐｷﾞ)	HARNESS;WIRE	1		210A5 NOT USED 210L5 NOT USED	<	KHR15971
33	1	KHR15971	ﾊｰﾈｽ;ﾜｲﾔ ｺﾝｿｰﾙ(ﾐｷﾞ)	HARNESS;WIRE	1				
34	1	KHR3077	ｽｲｯﾁ;ｽﾀｰﾀ ASSY	SWITCH;STATER	1				
							210L5 NOT USED		
34	1A	KHR15660	ｽｲｯﾁ;ｽﾀｰﾀ ASSY (SUMI	SWITCH;STATER	1		210A5 NOT USED		
35	2	KHR3078	ｽｲｯﾁ;ｽﾀｰﾀ ﾎﾝﾀｲ	SWITCH;STATER	1				
36	2	KHR3079	ﾌﾟﾚｰﾄ ﾓｰﾙﾄﾞｷｰｾｯﾄ	PLATE;SPL	1				
							210L5 NOT USED		
36	2	KHR15670	ﾌﾟﾚｰﾄ ﾓｰﾙﾄﾞｷｰｾｯﾄ(SUM	PLATE;SPL	1		210A5 NOT USED		
37	2	KHR3080	ｷｬｯﾌﾟ ｽﾀｰﾀｽｲｯﾁ	CAP;SPL	1				
38	2	KHR3081	ﾜｯｼｬ ｳｪｰﾌﾞ	WASHER;SPL	1				
39	1	KHR10390	ｷｬｯﾌﾟ ﾒｸﾗ(ﾛｯｶｽｲｯﾁ)	CAP	2				
40	1	KHR15980	ﾊｰﾈｽ;ﾜｲﾔ ｺﾝｿｰﾙ(ﾋﾀﾞﾘ)	HARNESS;WIRE	1		210A5 NOT USED 210L5 NOT USED	<	KHR15981
40	1	KHR15981	ﾊｰﾈｽ;ﾜｲﾔ ｺﾝｿｰﾙ(ﾋﾀﾞﾘ)	HARNESS;WIRE	1				
41	1	KHR14050	ｽｲｯﾁ ﾛｯｶ(E.STOP)	SWITCH;SPL	1				
42	1	KHR10390	ｷｬｯﾌﾟ ﾒｸﾗ(ﾛｯｶｽｲｯﾁ)	CAP	2				
43	1	KHR2743	ﾌﾟﾗｸﾞ ｼﾞｭｼ (25)	PLUG	1				
44	1	KHR10390	ｷｬｯﾌﾟ ﾒｸﾗ(ﾛｯｶｽｲｯﾁ)	CAP	2				
45	1	KHR13490	ﾌﾞﾗｹｯﾄ ﾊｰﾈｽ	BRACKET	1				
46	1	105R008Y016R	ｾﾑｽB M 8X 16	BOLT;SEMS	2				
47	1	KHR13500	ﾌﾞﾗｹｯﾄ ｺﾈｸﾀ	BRACKET	1				
48	1	105R008Y016R	ｾﾑｽB M 8X 16	BOLT;SEMS	1				
49	1	KHR0319	ｸﾗﾝﾌﾟ ﾏｳﾝﾄ	CLAMP;SPL	2				
50	1	145N006S008R	+ﾅﾍﾞS M 6X 8	SCREW;PAN HD	2				
51	1	KHH0142	ﾊﾞﾝﾄﾞ;ｿｸｾﾝ L=250	BAND;HARNESS	2				
52	1	KHR11240	ﾜｲﾔ;ｱｰｽ ｷｬﾌﾞ	WIRE;EARTH	1				
53	1	186-108ZR	ｿﾄﾊW 8	WASHER;TOOTHED	2				
54	1	KHJ1213	ﾎﾞﾙﾄ ﾄｸｼｭ M8X16ｻﾞｶﾞﾈ	BOLT;SPL	2				

https://truckmanualshub.com/

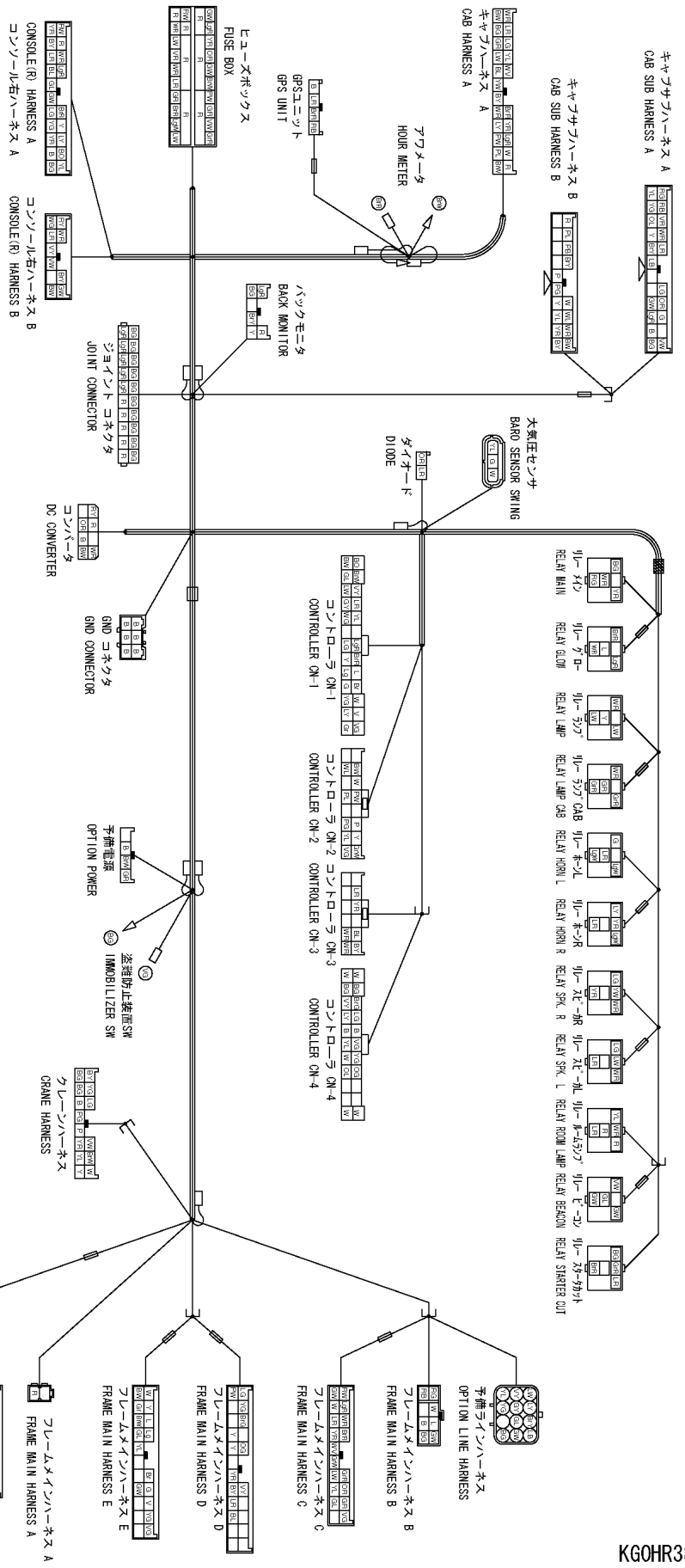

キャブメインハーネス
CAB MAIN HARNESS
KHR16002-E

KG0HR388-0
KHR16040-EZ

https://truckmanualshub.com/

https://truckmanualshub.com/

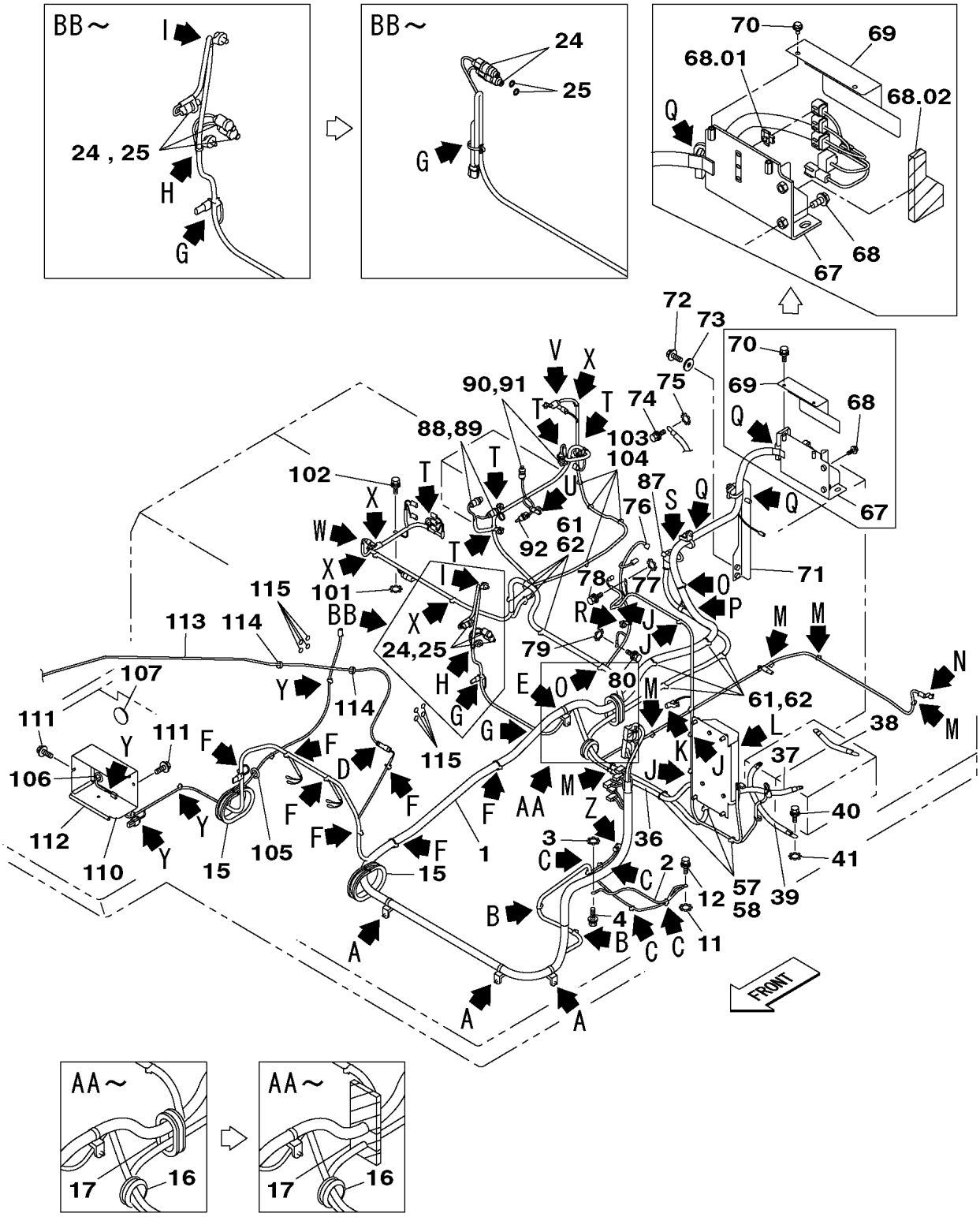

KG0RR589-0
KRR12000-EZ

https://truckmanualshub.com/

210A5 1101－ 210L5 1101－

符号 ITEM	構成 COMPO	部品番号 PART NO.	部品名	PART NAME	個数 Q'TY	ｲﾝﾅｰ	適用号機 SERIAL_NO.	互換 ICA	代替部品 REPLACEABLE PART
1	1	KRR12930	ﾊｰﾈｽ;ﾜｲﾔ ﾌﾚｰﾑﾒｲﾝ	HARNESS;WIRE	1				
2	1	KHR11090	ﾜｲﾔ;ｱｰｽ ﾌﾛｱ	WIRE;EARTH	1				
3	1	186-108ZR	ｿﾄﾊW 8	WASHER;TOOTHED	1				
4	1	KHJ1213	ﾎﾞﾙﾄ ﾄｸｼｭ M8X16ｻﾞｶﾞﾈ	BOLT;SPL	1				
5	1	KHR2581	ｸﾗﾝﾌﾟ ﾊﾞﾝﾄﾞﾂｷ(M)M8	CLAMP	3				
6	1	KHJ1215	ﾎﾞﾙﾄ ﾄｸｼｭ M8X25ｻﾞｶﾞﾈ	BOLT;SPL	3				
7	1	KHR10220	ｸﾗﾝﾌﾟ ﾏｳﾝﾄ	CLAMP;SPL	2				
8	1	KHH0142	ﾊﾞﾝﾄﾞ;ｿｸｾﾝ L=250	BAND;HARNESS	2				
9	1A	KHR10300	ｾﾝｻ;ﾌﾟﾚｯｼｬ (5MPA)G1/	SENSOR;PRESS.	1				
10	2	UEJ0360	O-ﾘﾝｸﾞ 1B-P11	O-RING	1				
11	1	186-108ZR	ｿﾄﾊW 8	WASHER;TOOTHED	1				
12	1	KHJ1213	ﾎﾞﾙﾄ ﾄｸｼｭ M8X16ｻﾞｶﾞﾈ	BOLT;SPL	1				
13	1	KHR10220	ｸﾗﾝﾌﾟ ﾏｳﾝﾄ	CLAMP;SPL	4				
14	1	KHH0142	ﾊﾞﾝﾄﾞ;ｿｸｾﾝ L=250	BAND;HARNESS	4				
15	1	KHR15030	ｸｯｼｮﾝ;ﾗﾊﾞｰ 22X450	CUSHION;RUBBER	2				
16	1	KAR0578	ﾗﾊﾞｰ;ｸﾞﾛﾒｯﾄ	RUBBER;GROMMET	1				
17	1	KRH10610	ｸｯｼｮﾝ;ﾗﾊﾞｰ (L=290)	CUSHION;RUBBER	1		210A5 NOT USED 210L5 NOT USED	<	KRN14630
17	1	KRN14630	ｼｰﾙ;ｸｯｼｮﾝ	SEAL;CUSHION	1				
18	1	KHR1317	ｸﾘｯﾌﾟ	CLIP	1				
19	1	KHJ1213	ﾎﾞﾙﾄ ﾄｸｼｭ M8X16ｻﾞｶﾞﾈ	BOLT;SPL	1				
20	1	KHR2581	ｸﾗﾝﾌﾟ ﾊﾞﾝﾄﾞﾂｷ(M)M8	CLAMP	1				
21	1	KHJ1215	ﾎﾞﾙﾄ ﾄｸｼｭ M8X25ｻﾞｶﾞﾈ	BOLT;SPL	1				
22	1	KHR10220	ｸﾗﾝﾌﾟ ﾏｳﾝﾄ	CLAMP;SPL	7				
23	1	KHH0142	ﾊﾞﾝﾄﾞ;ｿｸｾﾝ L=250	BAND;HARNESS	7				
24	1A	KHR10300	ｾﾝｻ;ﾌﾟﾚｯｼｬ (5MPA)G1/	SENSOR;PRESS.	3		210A5 -1298 210L5 -1213		
24	1A	KHR10300	ｾﾝｻ;ﾌﾟﾚｯｼｬ (5MPA)G1/	SENSOR;PRESS.	2		210A5 1299- 210L5 1214-		
25	2	UEJ0360	O-ﾘﾝｸﾞ 1B-P11	O-RING	3		210A5 -1298 210L5 -1213		
25	2	UEJ0360	O-ﾘﾝｸﾞ 1B-P11	O-RING	2		210A5 1299- 210L5 1214-		
26	1	KHR10220	ｸﾗﾝﾌﾟ ﾏｳﾝﾄ	CLAMP;SPL	2				
27	1	KHH0142	ﾊﾞﾝﾄﾞ;ｿｸｾﾝ L=250	BAND;HARNESS	2				
28	1	KHR2584	ｸﾗﾝﾌﾟ ﾊﾞﾝﾄﾞﾂｷ(S)M8	CLAMP	1		210A5 -1298 210L5 -1213		
29	1	KHJ1215	ﾎﾞﾙﾄ ﾄｸｼｭ M8X25ｻﾞｶﾞﾈ	BOLT;SPL	1		210A5 -1298 210L5 -1213		
30	1	KHR2585	ｸﾗﾝﾌﾟ ﾊﾞﾝﾄﾞﾂｷ(S)M10	CLAMP	1		210A5 -1298 210L5 -1213		
31	1	KHJ2298	ﾎﾞﾙﾄ M10X25 ｻﾞｶﾞﾈﾂｷ	BOLT;SPL	1		210A5 -1298 210L5 -1213		
32	1	KHR10220	ｸﾗﾝﾌﾟ ﾏｳﾝﾄ	CLAMP;SPL	4				
33	1	KHH0142	ﾊﾞﾝﾄﾞ;ｿｸｾﾝ L=250	BAND;HARNESS	4				
34	1	KHR1317	ｸﾘｯﾌﾟ	CLIP	1				
35	1	KHJ1213	ﾎﾞﾙﾄ ﾄｸｼｭ M8X16ｻﾞｶﾞﾈ	BOLT;SPL	1				
36	1	KHR11050	ｹｰﾌﾞﾙ;ﾊﾞｯﾃﾘ ﾘﾚｰ ｽﾀｰﾀ	CABLE;BATTERY	1				
37	1	KHR13910	ｹｰﾌﾞﾙ;ﾊﾞｯﾃﾘ B+ ﾘﾚｰ	CABLE;BATTERY	1				
38	1	KHR15070	ｹｰﾌﾞﾙ;ﾊﾞｯﾃﾘ ﾌﾞﾘｯｼﾞ	CABLE;BATTERY	1				
39	1	KHR13920	ｹｰﾌﾞﾙ;ﾊﾞｯﾃﾘ ｸﾞﾗﾝﾄﾞ	CABLE;BATTERY	1				
40	1	KHJ1213	ﾎﾞﾙﾄ ﾄｸｼｭ M8X16ｻﾞｶﾞﾈ	BOLT;SPL	1				
41	1	186-108ZR	ｿﾄﾊW 8	WASHER;TOOTHED	1				
42	1	KHR14980	ﾌﾞﾗｹｯﾄ ﾘﾚｰ	BRACKET	1				
43	1	KHN1079	ﾎﾞﾙﾄ ﾄｸｼｭ ｻﾞｶﾞﾈ ｸﾐｺﾐ	BOLT;SPL	4				
44	1	KHR14990	ｶﾊﾞｰ ﾘﾚｰ	COVER	1		210A5 -1123 210L5 NOT USED		
44	1	KHR14991	ｶﾊﾞｰ	COVER	1		210A5 1124-1159 210L5 -1154	=	KHR19120
44	1	KHR19120	ｶﾊﾞｰ (ﾘﾚｰ)	COVER	1		210A5 1160-		

https://truckmanualshub.com/

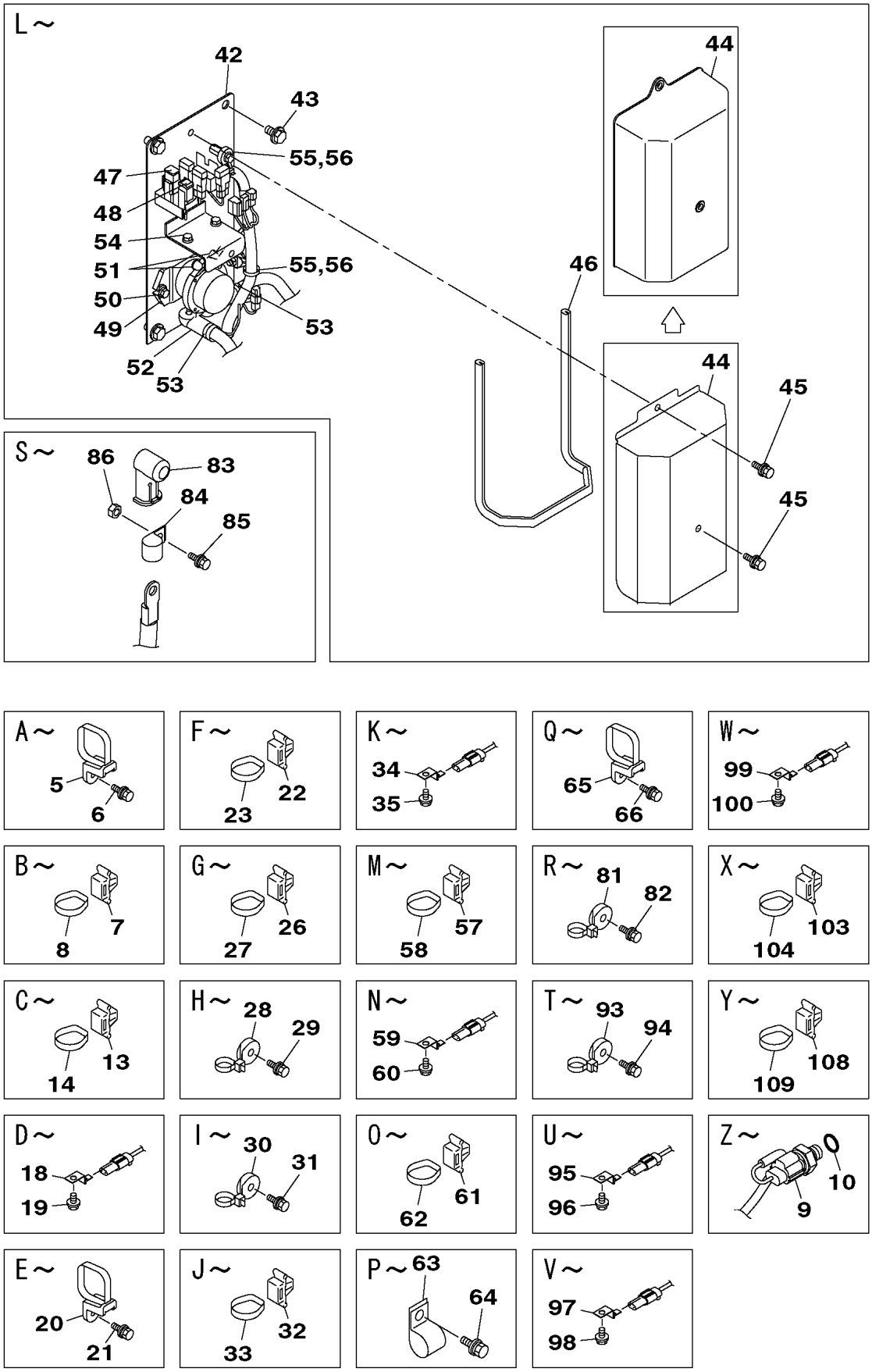

KG0RR589-0
KRR12000-EZ

https://truckmanualshub.com/

210A5 1101－ 210L5 1101－

符号 ITEM	構成 COMPO	部品番号 PART NO.	部品名	PART NAME	個数 Q'TY	ｲﾝﾅｰ	適用号機 SERIAL_NO.	互換 ICA	代替部品 REPLACEABLE PART
44	1	KHR19120	ｶﾊﾞｰ (ﾘﾚｰ)	COVER	1		210L5 1155-		
45	1	KHJ1213	ﾎﾞﾙﾄ ﾄｸｼｭ M8X16ｻﾞｶﾞﾈ	BOLT;SPL	2		210A5 -1159	=	KHJ1215
							210L5 -1154		
45	1	KHJ1215	ﾎﾞﾙﾄ ﾄｸｼｭ M8X25ｻﾞｶﾞﾈ	BOLT;SPL	2		210A5 1160-		
							210L5 1155-		
46	1	KHR15040	ｸｯｼｮﾝ;ﾗﾊﾞｰ L=890	CUSHION;RUBBER	1		210A5 -1123		
							210L5 NOT USED		
46	1	KHN18060	ﾓｰﾙ;ｶﾞｰﾆｯｼｭ L=900	MOGOL;GUNNISH	1		210A5 1124-1159		
							210L5 -1154		
47	1	KHR1592	ﾋｭｰｽﾞ (ﾋｭｰｽﾞﾌﾞﾙﾘﾝｸ)	FUSE	1				
48	1	KHR3850	ﾋｭｰｽﾞ ﾀﾞｲﾃﾞﾝﾘｭｳ A3ｶﾞ	FUSE	1				
49	1	KHR1241	ﾘﾚｰ;ﾊﾞｯﾃﾘ	RELAY;BATTERY	1				
50	1	KHJ1215	ﾎﾞﾙﾄ ﾄｸｼｭ M8X25ｻﾞｶﾞﾈ	BOLT;SPL	2				
51	1	KHR1659	ｷｬｯﾌﾟ;ﾀｰﾐﾅﾙ M4X2.0	CAP;TERMINAL	2				
52	1	KHR1716	ｷｬｯﾌﾟ;ﾀｰﾐﾅﾙ	CAP;TERMINAL	2				
53	1	KAR0016	ﾊﾞﾝﾄﾞ;ｿｸｾﾝ L=150	BAND;HARNESS	2				
54	1	KHJ1213	ﾎﾞﾙﾄ ﾄｸｼｭ M8X16ｻﾞｶﾞﾈ	BOLT;SPL	2				
55	1	KHR2584	ｸﾗﾝﾌﾟ ﾊﾞﾝﾄﾞﾂｷ(S)M8	CLAMP	2				
56	1	KHJ1215	ﾎﾞﾙﾄ ﾄｸｼｭ M8X25ｻﾞｶﾞﾈ	BOLT;SPL	2				
57	1	KHR10220	ｸﾗﾝﾌﾟ ﾏｳﾝﾄ	CLAMP;SPL	8				
58	1	KHH0142	ﾊﾞﾝﾄﾞ;ｿｸｾﾝ L=250	BAND;HARNESS	8				
59	1	KHR1317	ｸﾘｯﾌﾟ	CLIP	1				
60	1	KHJ1213	ﾎﾞﾙﾄ ﾄｸｼｭ M8X16ｻﾞｶﾞﾈ	BOLT;SPL	1				
61	1	KHR10220	ｸﾗﾝﾌﾟ ﾏｳﾝﾄ	CLAMP;SPL	10				
62	1	KHH0142	ﾊﾞﾝﾄﾞ;ｿｸｾﾝ L=250	BAND;HARNESS	10				
63	1	KHR1311	ｸﾗﾝﾌﾟ ｸﾘｯﾌﾟ (D20)	CLAMP;SPL	1				
64	1	KHJ1213	ﾎﾞﾙﾄ ﾄｸｼｭ M8X16ｻﾞｶﾞﾈ	BOLT;SPL	1				
65	1	KHR2581	ｸﾗﾝﾌﾟ ﾊﾞﾝﾄﾞﾂｷ(M)M8	CLAMP	3				
66	1	KHJ1215	ﾎﾞﾙﾄ ﾄｸｼｭ M8X25ｻﾞｶﾞﾈ	BOLT;SPL	3				
67	1	KRR11900	ﾌﾞﾗｹｯﾄ ｺﾈｸﾀ	BRACKET	1		210A5 -1956	<	KRR11901
							210L5 -1437		
67	1	KRR11901	ﾌﾞﾗｹｯﾄ ｺﾈｸﾀ	BRACKET	1		210A5 1957-		
							210L5 1438-		
68	1	105R012Y030R	ｾﾑｽB M12X 30	BOLT;SEMS	2				
68.01	1	KHR20360	ｸﾗﾝﾌﾟ ｺﾈｸﾀ	CLAMP;SPL	3		210A5 1957-		
							210L5 1438-		
68.02	1	KRR15480	ｼｰﾙ;ｸｯｼｮﾝ	SEAL;CUSHION	1		210A5 1957-		
							210L5 1438-		
69	1	KRR11910	ｶﾊﾞｰ ｺﾈｸﾀ	COVER	1		210A5 -1123		
							210L5 NOT USED		
69	1	KRR11911	ｶﾊﾞｰ ;ｺﾈｸﾀ	COVER	1		210A5 1124-1956	<	KRR11912
							210L5 -1437		
69	1	KRR11912	ｶﾊﾞｰ ｺﾈｸﾀ	COVER CONNECTOR	1		210A5 1957-		
							210L5 1438-		
70	1	105R008Y016R	ｾﾑｽB M 8X 16	BOLT;SEMS	2				
71	1	KRR11980	ﾌﾞﾗｹｯﾄ ｸﾗﾝﾌﾟ	BRACKET	1				
72	1	102R012Y035R	ｺｳﾘｷB M12X 35	BOLT;HIGH STRENGTH	2				
73	1	KHN0296	ｺｳﾘｷW 12 (ﾒｯｷ)	WASHER;HIGH STRENGTH	2				
74	1	KHJ2298	ﾎﾞﾙﾄ M10X25 ｻﾞｶﾞﾈｯｷ	BOLT;SPL	1				
75	1	186-110ZR	ｿﾄﾊW 10	WASHER;TOOTHED	1				
76	1	KHR1667	ｷｬｯﾌﾟ;ﾀｰﾐﾅﾙ M6X5.3	CAP;TERMINAL	1				
77	1	186-106ZR	ｿﾄﾊW 6	WASHER;TOOTHED	1				
78	1	KHR1252	ﾎﾞﾙﾄ M 6X 12(ｻﾞｶﾞﾈｯｷ	BOLT;SPL	1				
79	1	186-108ZR	ｿﾄﾊW 8	WASHER;TOOTHED	1				
80	1	KHJ1213	ﾎﾞﾙﾄ ﾄｸｼｭ M8X16ｻﾞｶﾞﾈ	BOLT;SPL	1				
81	1	KHR2584	ｸﾗﾝﾌﾟ ﾊﾞﾝﾄﾞﾂｷ(S)M8	CLAMP	1				
82	1	KHJ1215	ﾎﾞﾙﾄ ﾄｸｼｭ M8X25ｻﾞｶﾞﾈ	BOLT;SPL	1				
83	1	KHR4114	ﾌﾟﾛﾃｸﾀ ｼﾞｬﾝﾌﾟｽﾀｰﾄ	PROTECTOR	1				
84	1	KHR1311	ｸﾗﾝﾌﾟ ｸﾘｯﾌﾟ (D20)	CLAMP;SPL	1				
85	1	KHJ1213	ﾎﾞﾙﾄ ﾄｸｼｭ M8X16ｻﾞｶﾞﾈ	BOLT;SPL	1				

https://truckmanualshub.com/

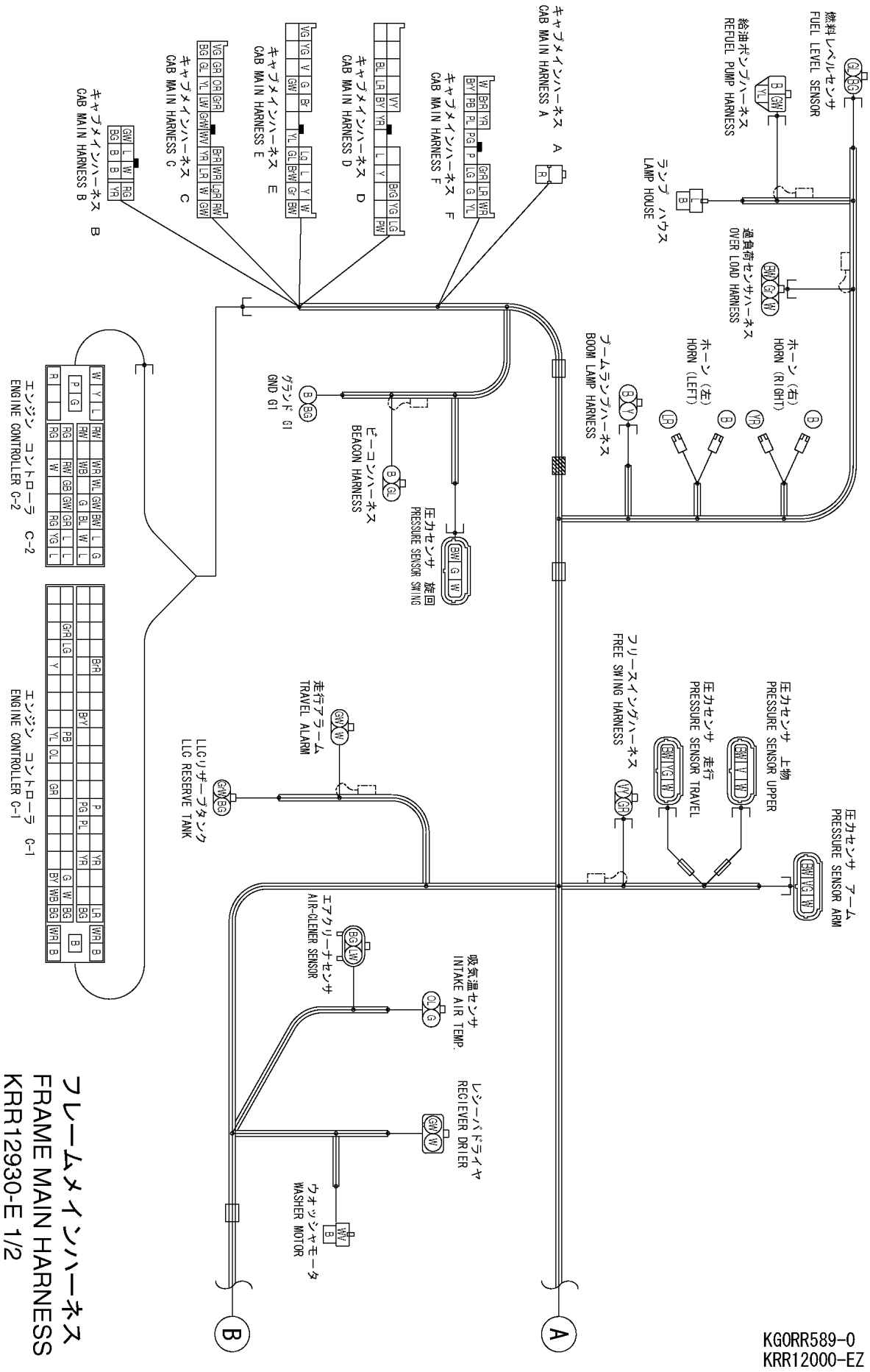

フレームメインハーネス
FRAME MAIN HARNESS
KRR12930-E 1/2

https://truckmanualshub.com/

210A5 1101－ 210L5 1101－

符号 ITEM	構成 COMPO	部品番号 PART NO.	部品名	PART NAME	個数 Q'TY	ｲﾝﾅｰ	適用号機 SERIAL_NO.	互換 ICA	代替部品 REPLACEABLE PART
86	1	162R008VR	ｺｳﾘｷN M 8	NUT;HIGH STRENGTH	1				
87	1	KHR1667	ｷｬｯﾌﾟ;ﾀｰﾐﾅﾙ M6X5.3	CAP;TERMINAL	1				
88	1A	KHR10290	ｾﾝｻ;ﾌﾟﾚｯｼｬ (50MPA)M1	SENSOR;PRESS.	2				
89	2	UCP0101	O-ﾘﾝｸﾞ 1B P16	O-RING	2				
90	1A	KHR10300	ｾﾝｻ;ﾌﾟﾚｯｼｬ (5MPA)G1/	SENSOR;PRESS.	2				
91	2	UEJ0360	O-ﾘﾝｸﾞ 1B-P11	O-RING	2				
92	1	KHR2433	ｾﾝｻ;ｻｰﾓ	SENSOR;THERMO	1				
93	1	KHR2584	ｸﾗﾝﾌﾟ ﾊﾞﾝﾄﾞﾂｷ(S)M8	CLAMP	5				
94	1	KHJ1215	ﾎﾞﾙﾄ ﾄｸｼｭ M8X25ｻﾞｶﾞﾈ	BOLT;SPL	5				
95	1	KHR1957	ｸﾘｯﾌﾟ	CLIP	1				
96	1	KHR1252	ﾎﾞﾙﾄ M 6X 12(ｻﾞｶﾞﾈﾂｷ	BOLT;SPL	1				
97	1	KAR1185	ｸﾘｯﾌﾟ	CLIP	1		210A5 -1123 210L5 NOT USED		
97	1	KHR16450	ｸﾘｯﾌﾟ (W=15)	CLIP	1		210A5 1124-		
98	1	KHJ1213	ﾎﾞﾙﾄ ﾄｸｼｭ M8X16ｻﾞｶﾞﾈ	BOLT;SPL	1				
99	1	KHR1317	ｸﾘｯﾌﾟ	CLIP	1				
100	1	KHJ1213	ﾎﾞﾙﾄ ﾄｸｼｭ M8X16ｻﾞｶﾞﾈ	BOLT;SPL	1				
101	1	186-108ZR	ｿﾄﾊW 8	WASHER;TOOTHED	1				
102	1	KHJ1213	ﾎﾞﾙﾄ ﾄｸｼｭ M8X16ｻﾞｶﾞﾈ	BOLT;SPL	1				
103	1	KHR10220	ｸﾗﾝﾌﾟ ﾏｳﾝﾄ	CLAMP;SPL	8				
104	1	KHH0142	ﾊﾞﾝﾄﾞ;ｿｸｾﾝ L=250	BAND;HARNESS	8				
105	1	KAR0152	ﾗﾊﾞｰ;ｸﾞﾛﾒｯﾄ	RUBBER;GROMMET	1				
106	1	KMR0306	ﾗﾊﾞｰ;ｸﾞﾛﾒｯﾄ	GROMMET	1				
107	1	KHN11510	ｸﾞﾛﾒｯﾄ;ﾗﾊﾞｰ (ﾏｸﾂｷ)	GROMMET;RUBBER	1				
108	1	KHR10220	ｸﾗﾝﾌﾟ ﾏｳﾝﾄ	CLAMP;SPL	5				
109	1	KHH0142	ﾊﾞﾝﾄﾞ;ｿｸｾﾝ L=250	BAND;HARNESS	5				
110	1	KHR14420	ﾌﾞﾗｹｯﾄ ﾗﾝﾌﾟ	BRACKET	1				
111	1	105R008Y016R	ｾﾑｽB M 8X 16	BOLT;SEMS	2				
112	1	KHR14920	ｸｯｼｮﾝ;ﾗﾊﾞｰ L=220	CUSHION;RUBBER	1				
113	1	KHR11160	ﾊｰﾈｽ;ﾜｲﾔ ﾗｲﾄ ﾌﾚｰﾑﾒｲﾝ	HARNESS;WIRE	1				
114	1	KHH0142	ﾊﾞﾝﾄﾞ;ｿｸｾﾝ L=250	BAND;HARNESS	6 AR				
115	1	KHP13440	ﾃｰﾌﾟ;ｼｰﾘﾝｸﾞ	TAPE	8 AR		210A5 1160- 210L5 1155-		

https://truckmanualshub.com/

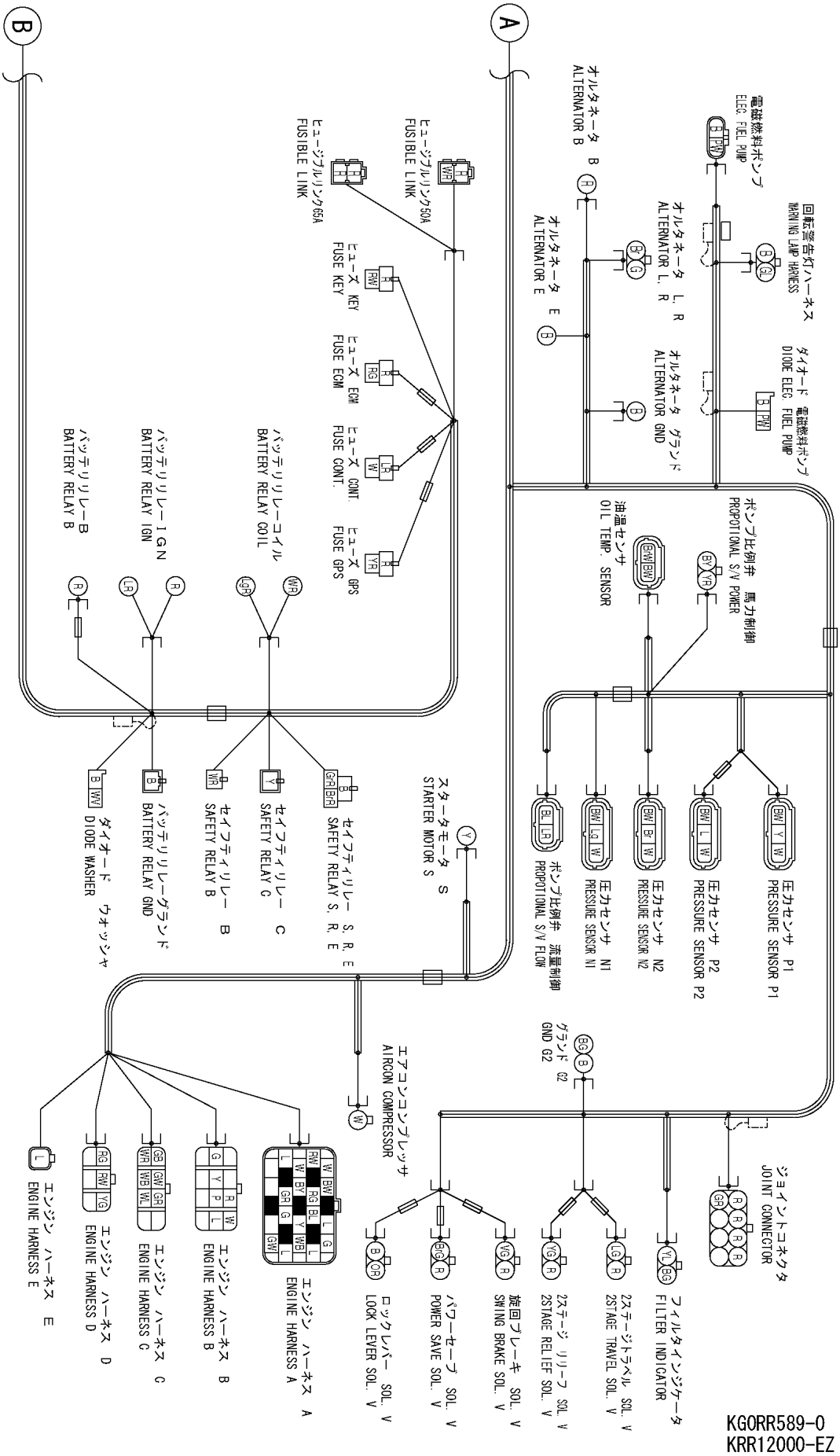

KG0RR589-0
KRR12000-EZ

フレームメインハーネス
FRAME MAIN HARNESS
KRR12930-E 2/2

https://truckmanualshub.com/

https://truckmanualshub.com/

34 [35 ~ 38]

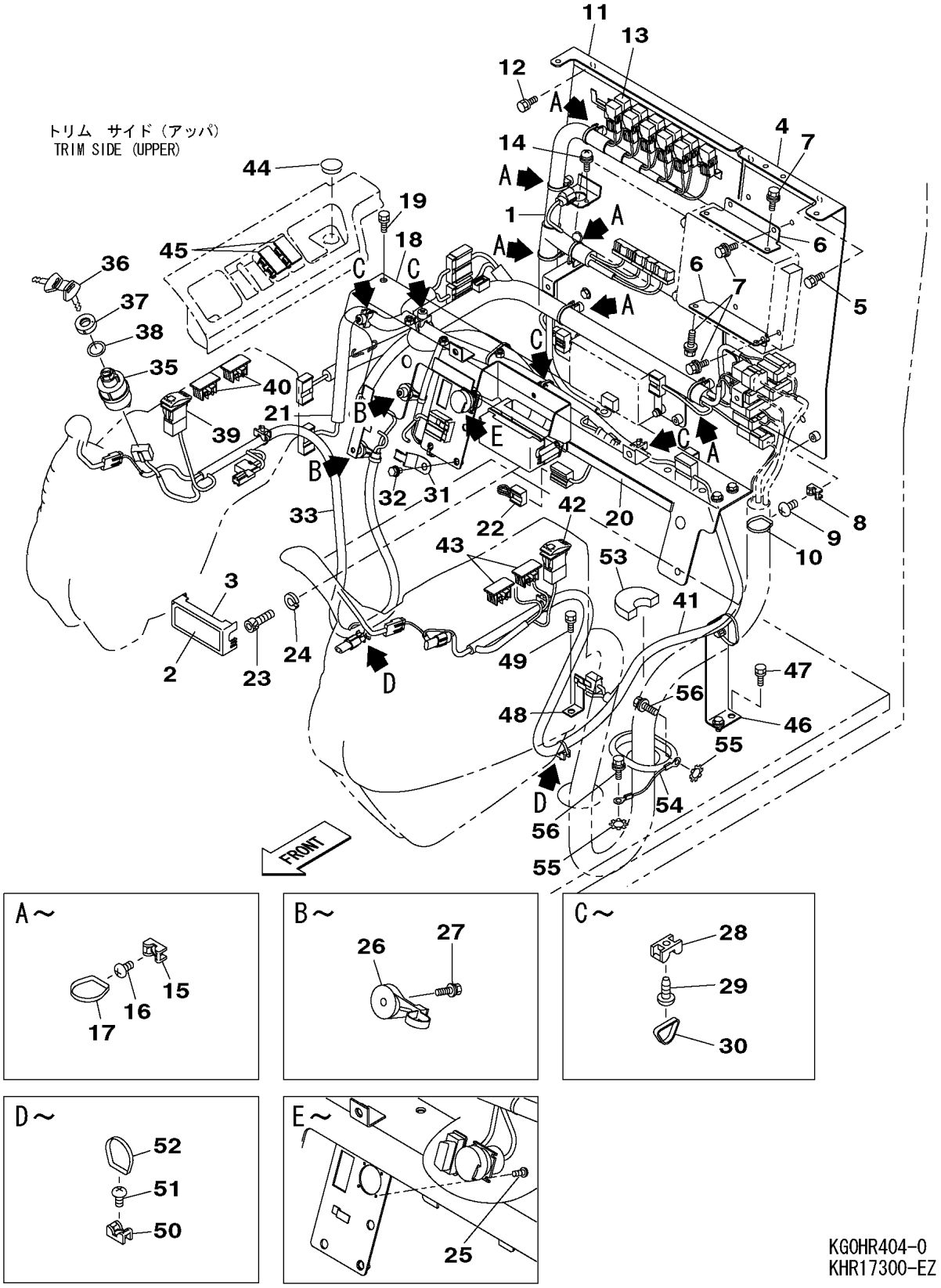

KG0HR404-0
KHR17300-EZ

https://truckmanualshub.com/

210A5 1124－1165 210L5 1117－1159

符号 ITEM	構成 COMPO	部品番号 PART NO.	部品名	PART NAME	個数 Q'TY	ｲﾝﾅｰ	適用号機 SERIAL_NO.	互換 ICA	代替部品 REPLACEABLE PART
1	1A	KHR16001	ﾊｰﾈｽ;ﾜｲﾔ ｷｬﾌﾞﾒｲﾝ	HARNESS;WIRE	1				
2	2	KHP12181	ﾗﾍﾞﾙ ﾋｭｰｽﾞ	LABEL;SPL	1				
3	2	KHR15940	ｶﾊﾞｰ ﾋｭｰｽﾞ	COVER	1				
4	1	KHR13450	ﾌﾞﾗｹｯﾄ ﾘﾔ (ﾋﾀﾞﾘ)	BRACKET	1				
5	1	105R008Y016R	ｾﾑｽB M 8X 16	BOLT;SEMS	4				
6	1	KHR13480	ﾌﾞﾗｹｯﾄ ECM	BRACKET	2				
7	1	KHR1253	ﾎﾞﾙﾄ M 6X 16(ｻﾞｶﾞﾈｯｷ	BOLT;SPL	8				
8	1	KHR0319	ｸﾗﾝﾌﾟ ﾏｳﾝﾄ	CLAMP;SPL	1				
9	1	145N006S008R	+ﾅﾍﾞS M 6X 8	SCREW;PAN HD	1				
10	1	KHH0142	ﾊﾞﾝﾄﾞ;ｿｸｾﾝ L=250	BAND;HARNESS	1				
11	1	KHR13460	ﾌﾞﾗｹｯﾄ ﾘﾔ (ﾐｷﾞ)	BRACKET	1				
12	1	105R008Y016R	ｾﾑｽB M 8X 16	BOLT;SEMS	4				
13	1	KHR3802	ﾘﾚｰ ﾁｪﾝｼﾞｵｰﾊﾞｰ-24V	RELAY;SPL	11				
14	1	KHR0618	+ﾅﾍﾞS M5X16(ｻﾞｶﾞﾈｯｷ)	SCREW;PAN HD	2			=	KHN1410
14	1	KHN1410	+ﾅﾍﾞS M5X20(ｻﾞｶﾞﾈｯｷ)	SCREW;PAN HD	2		210A5 NOT USED		
							210L5 NOT USED		
15	1	KHR0319	ｸﾗﾝﾌﾟ ﾏｳﾝﾄ	CLAMP;SPL	6				
16	1	145N006S008R	+ﾅﾍﾞS M 6X 8	SCREW;PAN HD	6				
17	1	KHH0142	ﾊﾞﾝﾄﾞ;ｿｸｾﾝ L=250	BAND;HARNESS	6				
18	1	KHR13471	ﾌﾞﾗｹｯﾄ ﾄﾘﾑ	BRACKET	1			<	KHR13472
18	1	KHR13472	ﾌﾞﾗｹｯﾄ ﾄﾘﾑ	BRACKET	1		210A5 NOT USED 210L5 NOT USED		
19	1	105R008Y016R	ｾﾑｽB M 8X 16	BOLT;SEMS	4				
20	1	KHR14230	ｼｰﾙ;ｸｯｼｮﾝ	SEAL;CUSHION	1				
21	1	KHR15991	ﾊｰﾈｽ;ﾜｲﾔ ｷｬﾌﾞｻﾌﾞ	HARNESS;WIRE	1			<	KHR15992
21	1	KHR15992	ﾊｰﾈｽ;ﾜｲﾔ ｷｬﾌﾞ ｻﾌﾞ	HARNESS;WIRE	1		210A5 NOT USED 210L5 NOT USED	<	KHR15993
21	1A	KHR15993	ﾊｰﾈｽ;ﾜｲﾔ ｷｬﾌﾞ ｻﾌﾞ	HARNESS;WIRE	1		210A5 NOT USED 210L5 NOT USED		
22	2	KHR16700	ﾊｰﾈｽ;ﾜｲﾔ GPSｼﾞｬﾝﾊﾟ	HARNESS;WIRE	1				
23	1	108R006Y020R	ﾛｯｶｸｱﾅB M 6X 20	BOLT;HEX SOC HD	2				
24	1	184-006VR	ﾎｳｹｲSW 6	WASHER;SPRING	2				
25	1	145N003S008R	+ﾅﾍﾞS M 3X 8	SCREW;PAN HD	4				
26	1	KHR2583	ｸﾗﾝﾌﾟ ﾊﾞﾝﾄﾞｯｷ(S)M6	CLAMP	2				
27	1	KHR1253	ﾎﾞﾙﾄ M 6X 16(ｻﾞｶﾞﾈｯｷ	BOLT;SPL	2				
28	1	KHR0319	ｸﾗﾝﾌﾟ ﾏｳﾝﾄ	CLAMP;SPL	4				
29	1	145N006S008R	+ﾅﾍﾞS M 6X 8	SCREW;PAN HD	4				
30	1	KHH0142	ﾊﾞﾝﾄﾞ;ｿｸｾﾝ L=250	BAND;HARNESS	4				
31	1	KHR3748	ｸﾘｯﾌﾟ (DTｺﾈｸﾀﾖｳ)	CLIP	1				
32	1	KHJ1213	ﾎﾞﾙﾄ ﾄｸｼｭ M8X16ｻﾞｶﾞﾈ	BOLT;SPL	1				
33	1	KHR17290	ﾊｰﾈｽ;ﾜｲﾔ ｺﾝｿｰﾙ(ﾐｷﾞ)	HARNESS;WIRE	1				
34	1A	KHR15660	ｽｲｯﾁ;ｽﾀｰﾀ ASSY (SUMI	SWITCH;STATER	1		210A5 1133-		
35	2	KHR3078	ｽｲｯﾁ;ｽﾀｰﾀ ﾎﾝﾀｲ	SWITCH;STATER	1		210A5 1133-		
36	2	KHR15670	ﾌﾟﾚｰﾄ ﾓｰﾙﾄﾞｷｰｾｯﾄ(SUM	PLATE;SPL	1		210A5 1133-		
37	2	KHR3080	ｷｬｯﾌﾟ ｽﾀｰﾀｽｲｯﾁ	CAP;SPL	1		210A5 1133-		
38	2	KHR3081	ﾜｯｼｬ ｳｪｰﾌﾞ	WASHER;SPL	1		210A5 1133-		
39	1	KHR15850	ｽｲｯﾁ ﾛｯｶ ｹｲﾎｳｷﾘｶｴ	SWITCH;SPL	1				
40	1	KHR10390	ｷｬｯﾌﾟ ﾒｸﾗ(ﾛｯｶｽｲｯﾁ)	CAP	2				
41	1	KHR15981	ﾊｰﾈｽ;ﾜｲﾔ ｺﾝｿｰﾙ(ﾋﾀﾞﾘ)	HARNESS;WIRE	1				
42	1	KHR14050	ｽｲｯﾁ ﾛｯｶ(E.STOP)	SWITCH;SPL	1				
43	1	KHR10390	ｷｬｯﾌﾟ ﾒｸﾗ(ﾛｯｶｽｲｯﾁ)	CAP	2				
44	1	KHR2743	ﾌﾟﾗｸﾞ ｼﾞｭｼ (25)	PLUG	1				
45	1	KHR10390	ｷｬｯﾌﾟ ﾒｸﾗ(ﾛｯｶｽｲｯﾁ)	CAP	2				
46	1	KHR13490	ﾌﾞﾗｹｯﾄ ﾊｰﾈｽ	BRACKET	1				
47	1	105R008Y016R	ｾﾑｽB M 8X 16	BOLT;SEMS	2				
48	1	KHR13500	ﾌﾞﾗｹｯﾄ ｺﾈｸﾀ	BRACKET	1				
49	1	105R008Y016R	ｾﾑｽB M 8X 16	BOLT;SEMS	1				
50	1	KHR0319	ｸﾗﾝﾌﾟ ﾏｳﾝﾄ	CLAMP;SPL	2				
51	1	145N006S008R	+ﾅﾍﾞS M 6X 8	SCREW;PAN HD	2				
52	1	KHH0142	ﾊﾞﾝﾄﾞ;ｿｸｾﾝ L=250	BAND;HARNESS	2				

https://truckmanualshub.com/

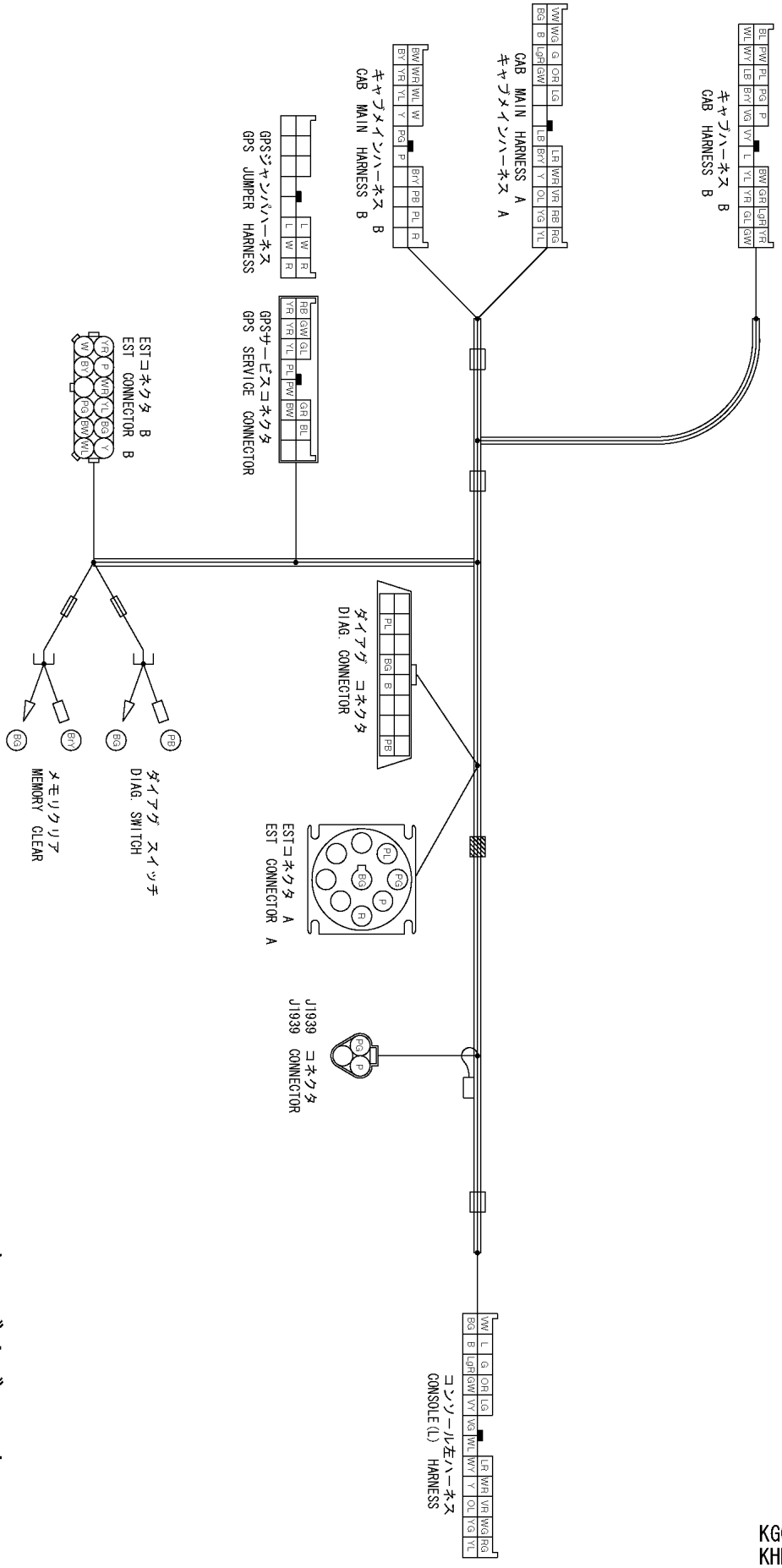

KG0HR404-0
KHR17300-EZ

キャブサブハーネス
CAB SUB HARNESS
KHR15993-D

https://truckmanualshub.com/

210A5 1124－1165 210L5 1117－1159

符号 ITEM	構成 COMPO	部品番号 PART NO.	部品名	PART NAME	個数 Q'TY	ｲﾝﾅｰ	適用号機 SERIAL_NO.	互換 ICA	代替部品 REPLACEABLE PART
53	1	KHJ14620	ｼｰﾙ;ｸｯｼｮﾝ	SEAL;CUSHION	1				
54	1	KHR11240	ﾜｲﾔ;ｱｰｽ ｷｬﾌﾞ	WIRE;EARTH	1				
55	1	186-108ZR	ｿﾄﾊW 8	WASHER;TOOTHED	2				
56	1	KHJ1213	ﾎﾞﾙﾄ ﾄｸｼｭ M8X16ｻﾞｶﾞﾈ	BOLT;SPL	2				

https://truckmanualshub.com/

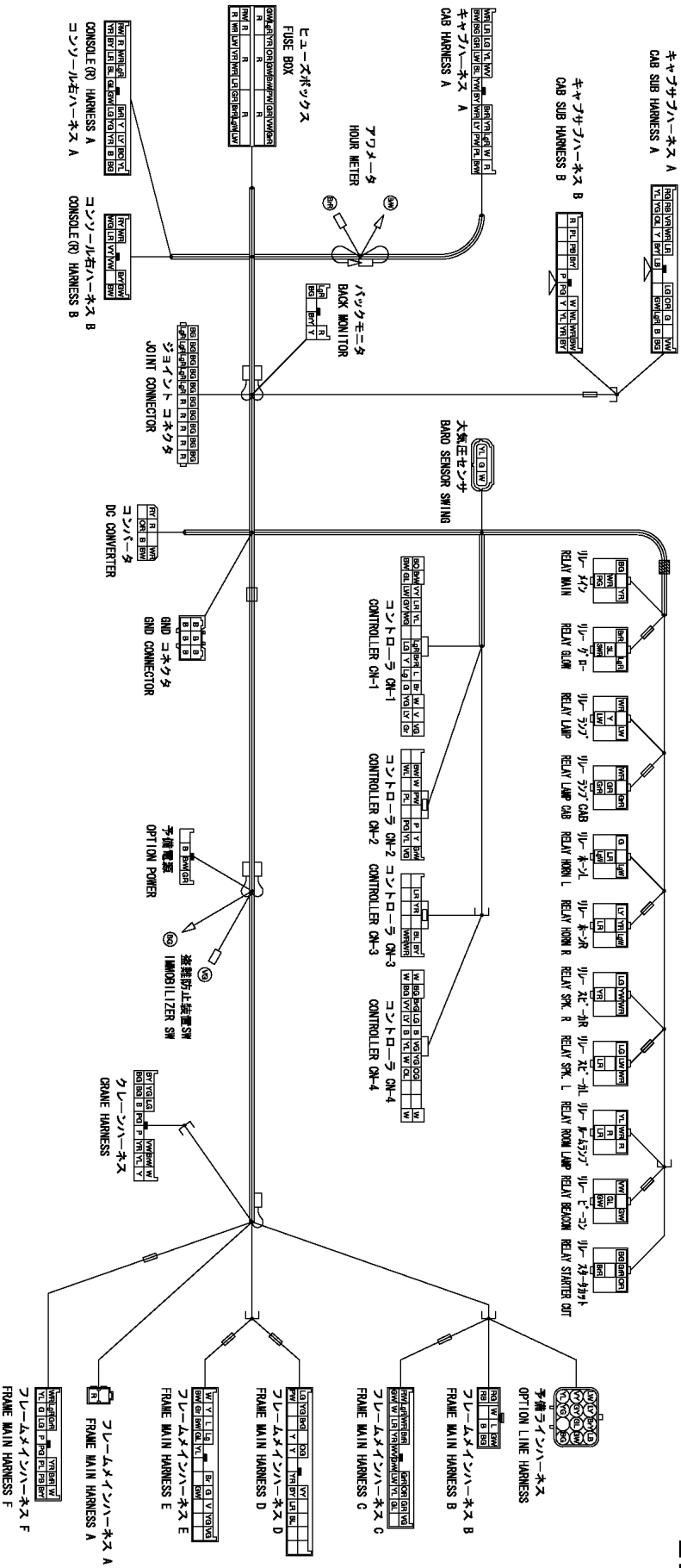

キャブメインハーネス
CAB MAIN HARNESS
KHR16001-E

KG0HR404-0
KHR17300-EZ

https://truckmanualshub.com/

https://truckmanualshub.com/

34 [35 ~ 38]

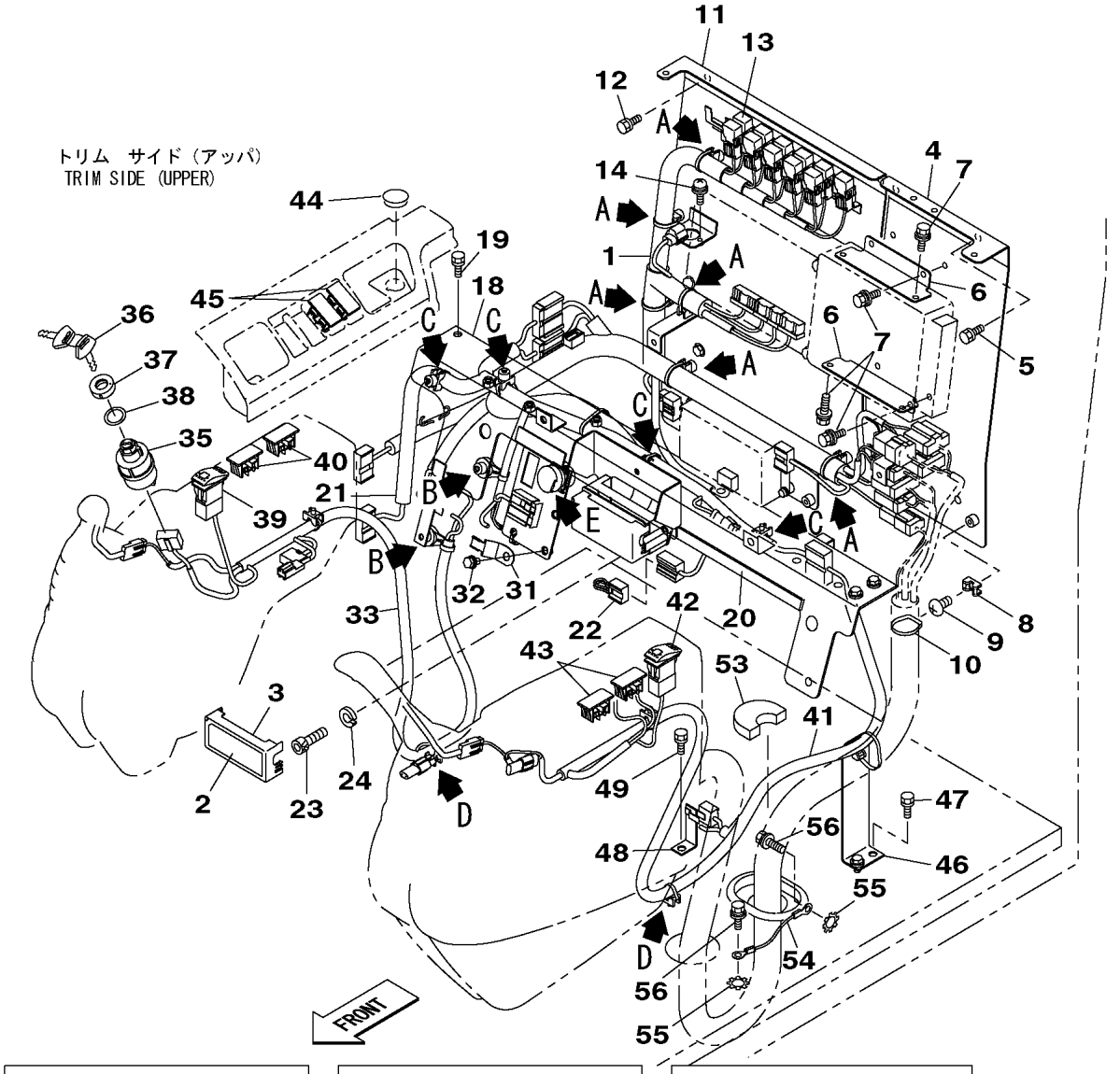

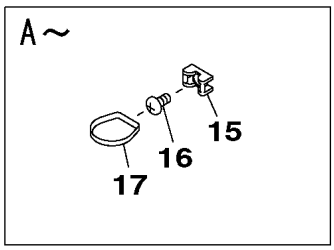

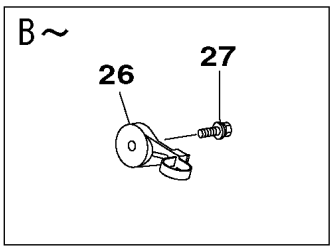

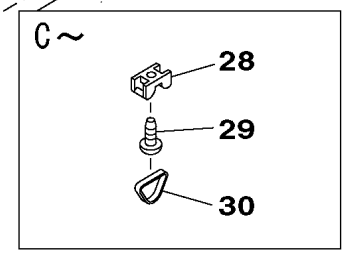

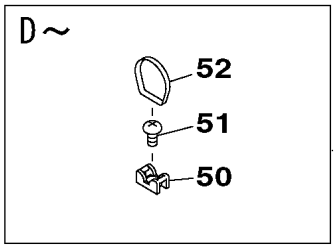

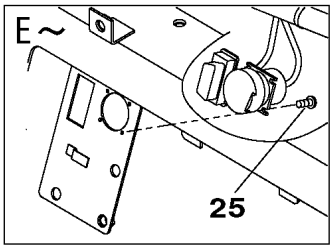

KG0HR426-0
KHR17300-EZ

https://truckmanualshub.com/

210A5 1166－ 210L5 1160－

符号 ITEM	構成 COMPO	部品番号 PART NO.	部品名	PART NAME	個数 Q'TY	ｲﾝﾅｰ	適用号機 SERIAL_NO.	互換 ICA	代替部品 REPLACEABLE PART
1	1A	KHR16002	ﾊｰﾈｽ;ﾜｲﾔ ｷｬﾌﾞﾒｲﾝ	HARNESS;WIRE	1				
2	2	KHP12181	ﾗﾍﾞﾙ ﾋｭｰｽﾞ	LABEL;SPL	1				
3	2	KHR15940	ｶﾊﾞｰ ﾋｭｰｽﾞ	COVER	1				
4	1	KHR13450	ﾌﾞﾗｹｯﾄ ﾘﾔ (ﾋﾀﾞﾘ)	BRACKET	1				
5	1	105R008Y016R	ｾﾑｽB M 8X 16	BOLT;SEMS	4				
6	1	KHR13480	ﾌﾞﾗｹｯﾄ ECM	BRACKET	2				
7	1	KHR1253	ﾎﾞﾙﾄ M 6X 16(ｻﾞｶﾞﾈｯｷ	BOLT;SPL	8				
8	1	KHR0319	ｸﾗﾝﾌﾟ ﾏｳﾝﾄ	CLAMP;SPL	1				
9	1	145N006S008R	+ﾅﾍﾞS M 6X 8	SCREW;PAN HD	1				
10	1	KHH0142	ﾊﾞﾝﾄﾞ;ｿｸｾﾝ L=250	BAND;HARNESS	1				
11	1	KHR13460	ﾌﾞﾗｹｯﾄ ﾘﾔ (ﾐｷﾞ)	BRACKET	1				
12	1	105R008Y016R	ｾﾑｽB M 8X 16	BOLT;SEMS	4				
13	1	KHR3802	ﾘﾚｰ ﾁｪﾝｼﾞｵｰﾊﾞｰ24V	RELAY;SPL	11				
14	1	KHR0618	+ﾅﾍﾞS M5X16(ｻﾞｶﾞﾈｯｷ)	SCREW;PAN HD	2		210A5 -1465 210L5 -1276	=	KHN1410
14	1	KHN1410	+ﾅﾍﾞS M5X20(ｻﾞｶﾞﾈｯｷ)	SCREW;PAN HD	2		210A5 1466- 210L5 1277-		
15	1	KHR0319	ｸﾗﾝﾌﾟ ﾏｳﾝﾄ	CLAMP;SPL	6				
16	1	145N006S008R	+ﾅﾍﾞS M 6X 8	SCREW;PAN HD	6				
17	1	KHH0142	ﾊﾞﾝﾄﾞ;ｿｸｾﾝ L=250	BAND;HARNESS	6				
18	1	KHR13471	ﾌﾞﾗｹｯﾄ ﾄﾘﾑ	BRACKET	1		210A5 -1271 210L5 -1196	<	KHR13472
18	1	KHR13472	ﾌﾞﾗｹｯﾄ ﾄﾘﾑ	BRACKET	1		210A5 1272- 210L5 1197-		
19	1	105R008Y016R	ｾﾑｽB M 8X 16	BOLT;SEMS	4				
20	1	KHR14230	ｼｰﾙ;ｸｯｼｮﾝ	SEAL;CUSHION	1				
21	1	KHR15991	ﾊｰﾈｽ;ﾜｲﾔ ｷｬﾌﾞｻﾌﾞ	HARNESS;WIRE	1		210A5 -1271 210L5 -1196	<	KHR15992
21	1	KHR15992	ﾊｰﾈｽ;ﾜｲﾔ ｷｬﾌﾞ ｻﾌﾞ	HARNESS;WIRE	1		210A5 1272-2278 210L5 1197-1518	<	KHR15993
21	1A	KHR15993	ﾊｰﾈｽ;ﾜｲﾔ ｷｬﾌﾞ ｻﾌﾞ	HARNESS;WIRE	1		210A5 2279- 210L5 1519-		
22	2	KHR16700	ﾊｰﾈｽ;ﾜｲﾔ GPSｼﾞｬﾝﾊﾟ	HARNESS;WIRE	1				
23	1	108R006Y020R	ﾛｯｶｸｱﾅB M 6X 20	BOLT;HEX SOC HD	2				
24	1	184-006VR	ﾎｳｹｲSW 6	WASHER;SPRING	2				
25	1	145N003S008R	+ﾅﾍﾞS M 3X 8	SCREW;PAN HD	4				
26	1	KHR2583	ｸﾗﾝﾌﾟ ﾊﾞﾝﾄﾞﾂｷ(S)M6	CLAMP	2				
27	1	KHR1253	ﾎﾞﾙﾄ M 6X 16(ｻﾞｶﾞﾈｯｷ	BOLT;SPL	2				
28	1	KHR0319	ｸﾗﾝﾌﾟ ﾏｳﾝﾄ	CLAMP;SPL	4				
29	1	145N006S008R	+ﾅﾍﾞS M 6X 8	SCREW;PAN HD	4				
30	1	KHH0142	ﾊﾞﾝﾄﾞ;ｿｸｾﾝ L=250	BAND;HARNESS	4				
31	1	KHR3748	ｸﾘｯﾌﾟ (DTｺﾈｸﾀﾖｳ)	CLIP	1				
32	1	KHJ1213	ﾎﾞﾙﾄ ﾄｸｼｭ M8X16ｻﾞｶﾞﾈ	BOLT;SPL	1				
33	1	KHR17290	ﾊｰﾈｽ;ﾜｲﾔ ｺﾝｿｰﾙ(ﾐｷﾞ)	HARNESS;WIRE	1				
34	1A	KHR15660	ｽｲｯﾁ;ｽﾀｰﾀ ASSY (SUMI	SWITCH;STATER	1				
35	2	KHR3078	ｽｲｯﾁ;ｽﾀｰﾀ ﾎﾝﾀｲ	SWITCH;STATER	1				
36	2	KHR15670	ﾌﾟﾚｰﾄ ﾓｰﾙﾄﾞｷｰｾｯﾄ(SUM	PLATE;SPL	1				
37	2	KHR3080	ｷｬｯﾌﾟ ｽﾀｰﾀｽｲｯﾁ	CAP;SPL	1				
38	2	KHR3081	ﾜｯｼｬ ｳｪｰﾌﾞ	WASHER;SPL	1				
39	1	KHR15850	ｽｲｯﾁ ﾛｯｶ ｹｲﾎｳｷﾘｶｴ	SWITCH;SPL	1				
40	1	KHR10390	ｷｬｯﾌﾟ ﾒｸﾗ(ﾛｯｶｽｲｯﾁ)	CAP	2				
41	1	KHR15981	ﾊｰﾈｽ;ﾜｲﾔ ｺﾝｿｰﾙ(ﾋﾀﾞﾘ)	HARNESS;WIRE	1				
42	1	KHR14050	ｽｲｯﾁ ﾛｯｶ(E.STOP)	SWITCH;SPL	1				
43	1	KHR10390	ｷｬｯﾌﾟ ﾒｸﾗ(ﾛｯｶｽｲｯﾁ)	CAP	2				
44	1	KHR2743	ﾌﾟﾗｸﾞ ｼﾞｭｼ (25)	PLUG	1				
45	1	KHR10390	ｷｬｯﾌﾟ ﾒｸﾗ(ﾛｯｶｽｲｯﾁ)	CAP	2				
46	1	KHR13490	ﾌﾞﾗｹｯﾄ ﾊｰﾈｽ	BRACKET	1				
47	1	105R008Y016R	ｾﾑｽB M 8X 16	BOLT;SEMS	2				
48	1	KHR13500	ﾌﾞﾗｹｯﾄ ｺﾈｸﾀ	BRACKET	1				
49	1	105R008Y016R	ｾﾑｽB M 8X 16	BOLT;SEMS	1				

https://truckmanualshub.com/

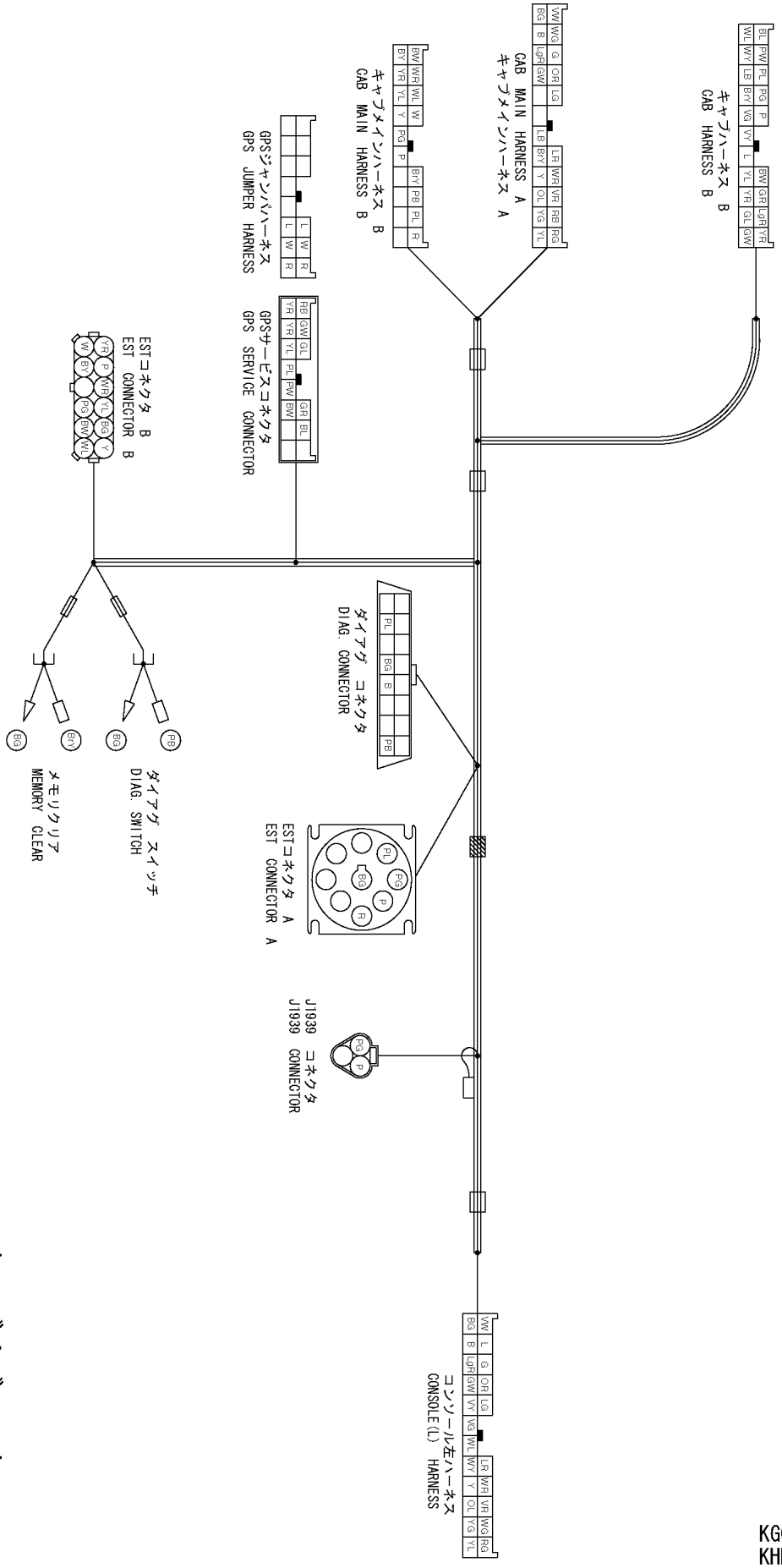

KGOHR426-0
KHR17300-EZ

キャブサブハーネス
CAB SUB HARNESS
KHR15993-D

https://truckmanualshub.com/

210A5 1166－ 210L5 1160－

符号 ITEM	構成 COMPO	部品番号 PART NO.	部品名	PART NAME	個数 Q'TY	ｲﾝﾅｰ	適用号機 SERIAL_NO.	互換 ICA	代替部品 REPLACEABLE PART
50	1	KHR0319	ｸﾗﾝﾌﾟ ﾏｳﾝﾄ	CLAMP;SPL	2				
51	1	145N006S008R	+ﾅﾍﾞS M 6X 8	SCREW;PAN HD	2				
52	1	KHH0142	ﾊﾞﾝﾄﾞ;ｿｸｾﾝ L=250	BAND;HARNESS	2				
53	1	KHJ14620	ｼｰﾙ;ｸｯｼｮﾝ	SEAL;CUSHION	1		210A5 -1298 210L5 -1213		
54	1	KHR11240	ﾜｲﾔ;ｱｰｽ ｷｬﾌﾞ	WIRE;EARTH	1				
55	1	186-108ZR	ｿﾄﾊW 8	WASHER;TOOTHED	2				
56	1	KHJ1213	ﾎﾞﾙﾄ ﾄｸｼｭ M8X16ｻﾞｶﾞﾈ	BOLT;SPL	2				

https://truckmanualshub.com/

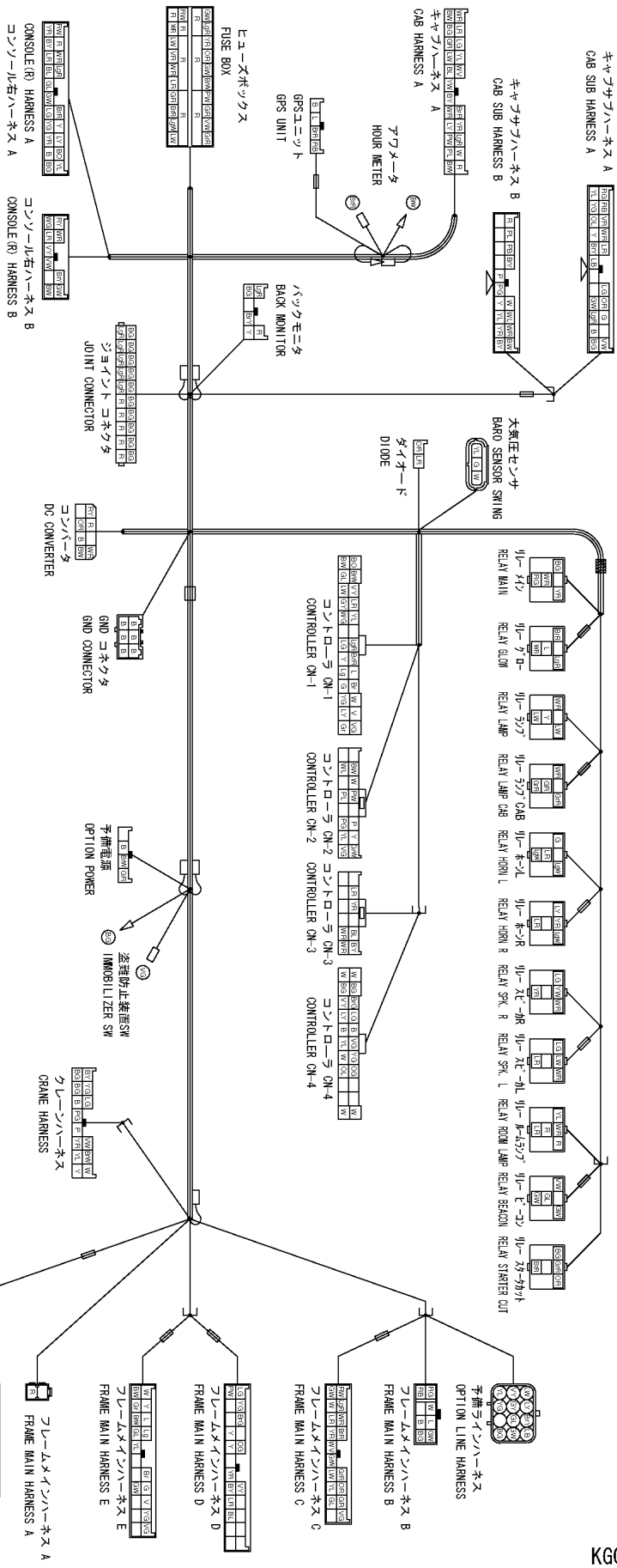

キャブメインハーネス
CAB MAIN HARNESS
KHR16002-E

KG0HR426-0
KHR17300-EZ

https://truckmanualshub.com/

https://truckmanualshub.com/

1 [2 ~ 4]

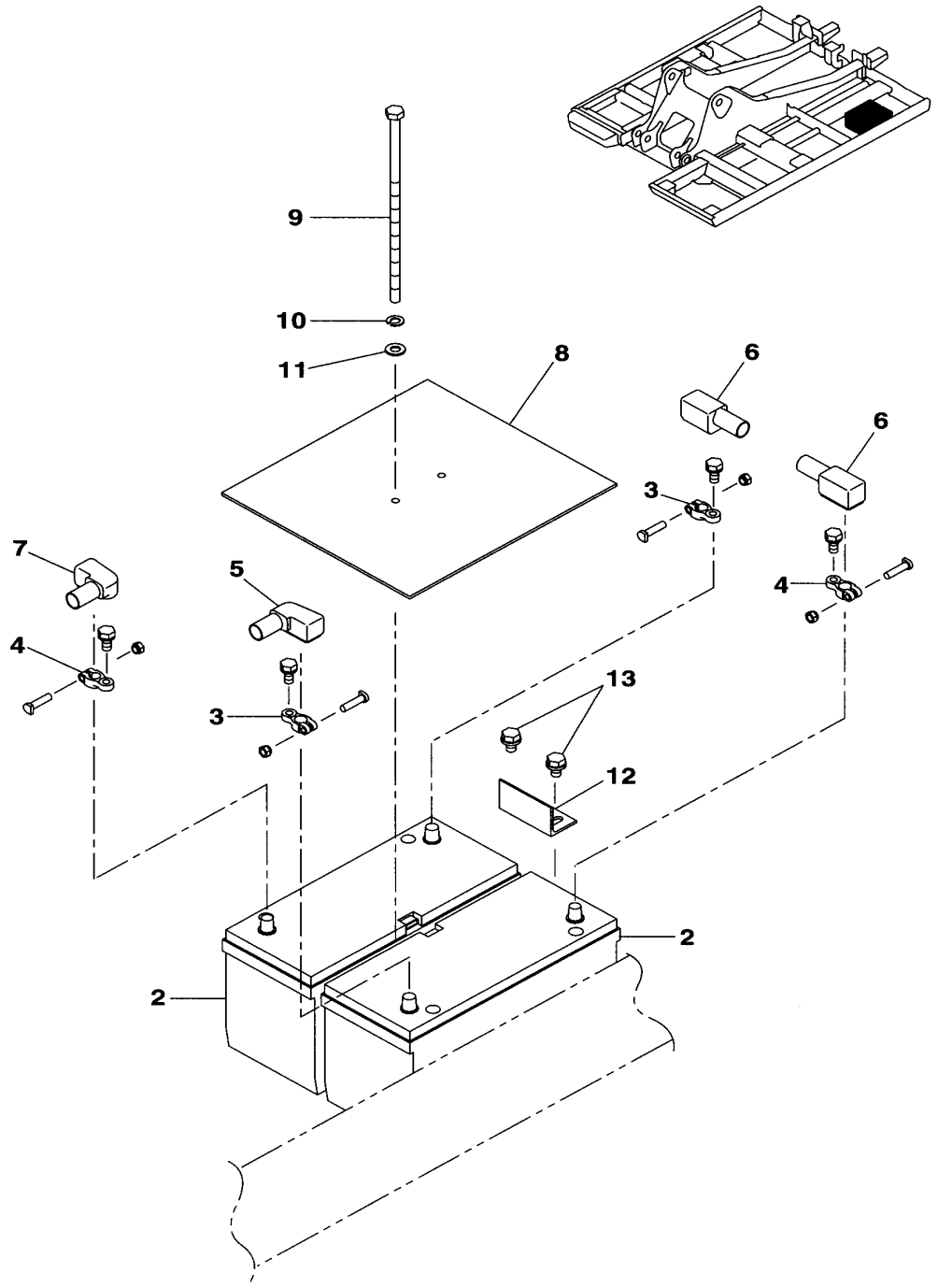

KGORR590-0

https://truckmanualshub.com/

210A5 1101－ 210L5 1101－

符号 ITEM	構成 COMPO	部品番号 PART NO.	部品名	PART NAME	個数 Q'TY	ｲﾝﾅｰ	適用号機 SERIAL_NO.	互換 ICA	代替部品 REPLACEABLE PART
1	1A	KHR3944	ﾊﾞｯﾃﾘ 130E41R(ﾀﾝｼﾂｷ)	BATTERY	2				
2	2	KHR3968	ﾊﾞｯﾃﾘ 130E41R	BATTERY	2				
3	2	KRR0129	ﾀﾝｼ;ﾊﾞｯﾃﾘ	TERMINAL;BATTERY	2				
4	2	KRR0130	ﾀﾝｼ;ﾊﾞｯﾃﾘ	TERMINAL;BATTERY	2				
5	1	KHR2495	ｷｬｯﾌﾟ;ﾀｰﾐﾅﾙ (ｱｶ)	CAP;TERMINAL	1				
6	1	KHR2636	ｷｬｯﾌﾟ;ﾀｰﾐﾅﾙ (ｱｶ)	CAP;TERMINAL	2				
7	1	KHR0093	ｷｬｯﾌﾟ;ﾀｰﾐﾅﾙ (ｸﾛ)	CAP;TERMINAL	1				
8	1	KRR11990	ｵｻｴ;ﾊﾞｯﾃﾘ	HOLDER;BATTERY	1				
9	1	KHR0095	ﾎﾞﾙﾄ ﾄｸｼｭ	BOLT;SPL	2				
10	1	183-110VR	SW 10	WASHER;SPRING	2				
11	1	KEH0114	ｺｳﾘｷW M10 ﾒｯｷ	WASHER;HIGH STRENGTH	2				
12	1	KRJ5983	ﾌﾞﾗｹｯﾄ	BRACKET	1				
13	1	105R010Y016R	ｾﾑｽB M10X 16	BOLT;SEMS	2		210A5 -1582 210L5 -1308	<	105R010Y020R
13	1	105R010Y020R	ｾﾑｽB M10X 20	BOLT;SEMS	2		210A5 1583- 210L5 1309-		

https://truckmanualshub.com/

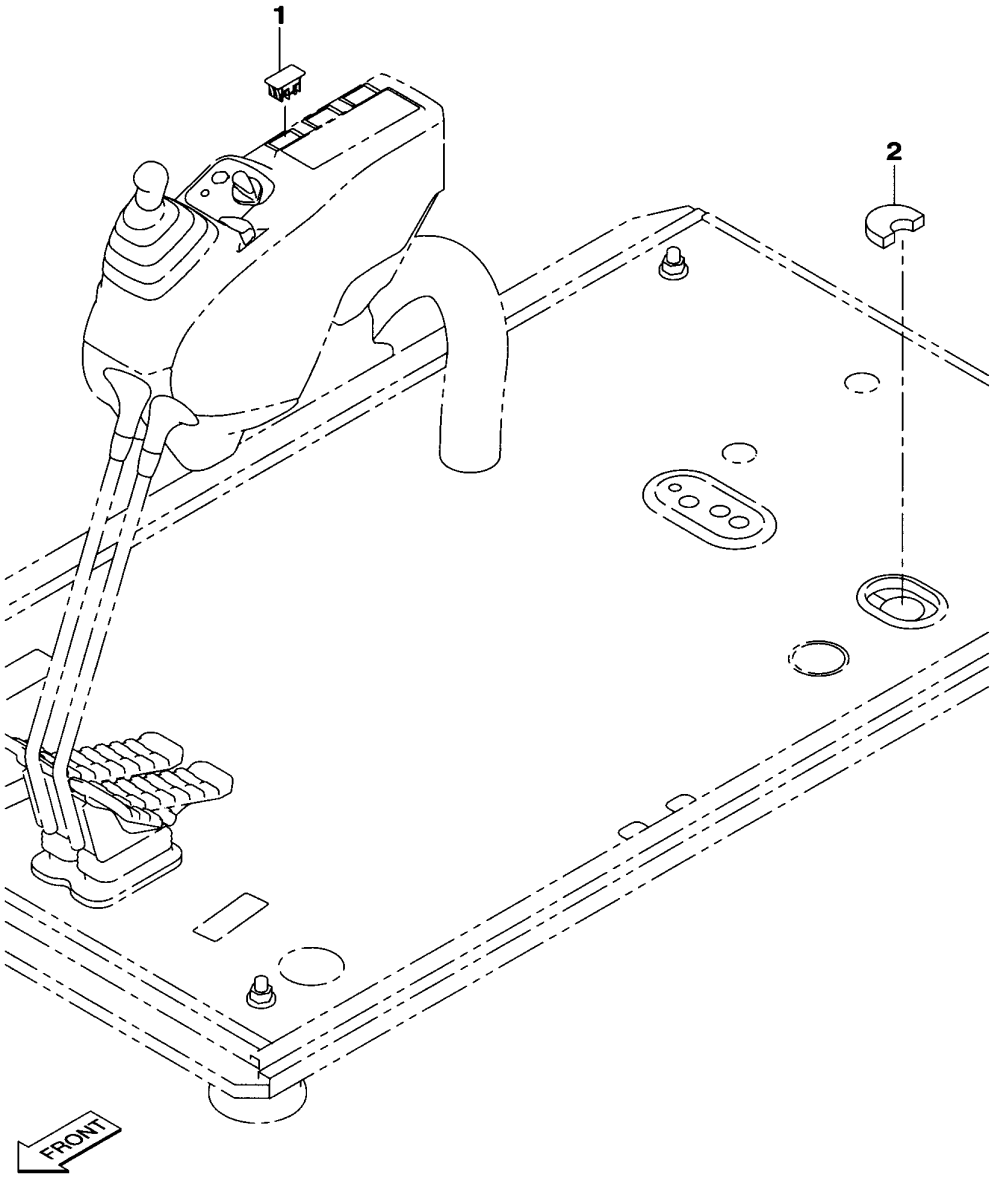

KGOHR384-0
KHR14220-E

https://truckmanualshub.com/

210A5 1101－1123 210L5 1101－1116

符号 ITEM	構成 COMPO	部品番号 PART NO.	部品名	PART NAME	個数 Q'TY	インナー	適用号機 SERIAL_NO.	互換 ICA	代替部品 REPLACEABLE PART
1	1	KHR10390	ｷｬｯﾌﾟ ﾒｸﾗ(ﾛｯｶｽｲｯﾁ)	CAP	1				
2	1	KHJ14620	ｼｰﾙ;ｸｯｼｮﾝ	SEAL;CUSHION	1				

https://truckmanualshub.com/

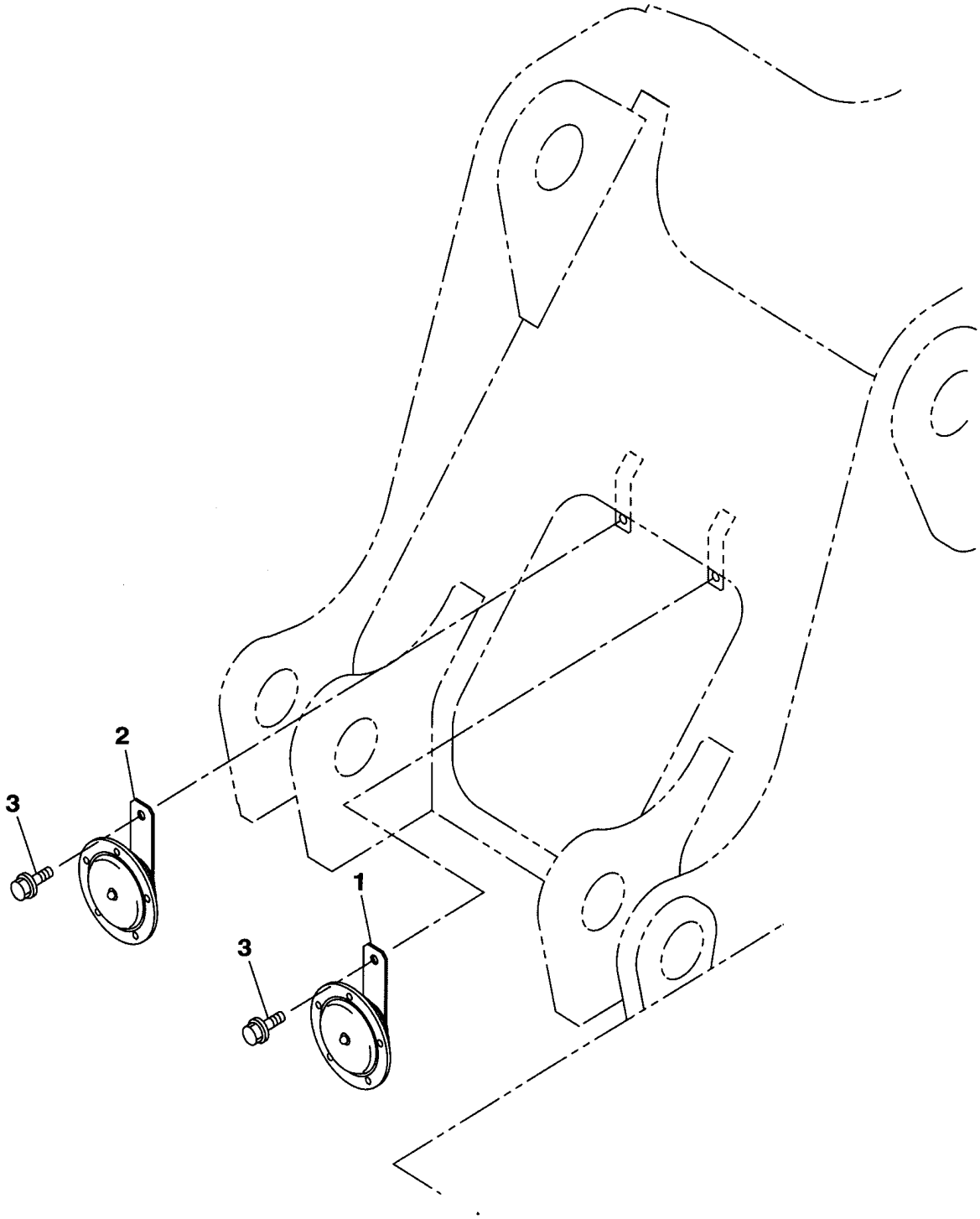

KGOHR366-0

https://truckmanualshub.com/

210A5 1101－ 210L5 1101－

符号 ITEM	構成 COMPO	部品番号 PART NO.	部品名	PART NAME	個数 Q'TY	ｲﾝﾅｰ	適用号機 SERIAL_NO.	互換 ICA	代替部品 REPLACEABLE PART
1	1	KHR2427	ﾎｰﾝ ﾃﾞﾝｷ(LOW)	HORN	1		210A5 -1953 210L5 -1437	<	KHR21430
1	1	KHR21430	ﾎｰﾝ ﾃﾞﾝｷ(LOW)	HORN	1		210A5 1954- 210L5 1438-		
2	1	KHR2428	ﾎｰﾝ ﾃﾞﾝｷ(HIGH)	HORN	1		210A5 -1953 210L5 -1437	<	KHR21440
2	1	KHR21440	ﾎｰﾝ ﾃﾞﾝｷ(HIGH)	HORN	1		210A5 1954- 210L5 1438-		
3	1	105R008Y016R	ｾﾑｽB M 8X 16	BOLT;SEMS	2				

https://truckmanualshub.com/

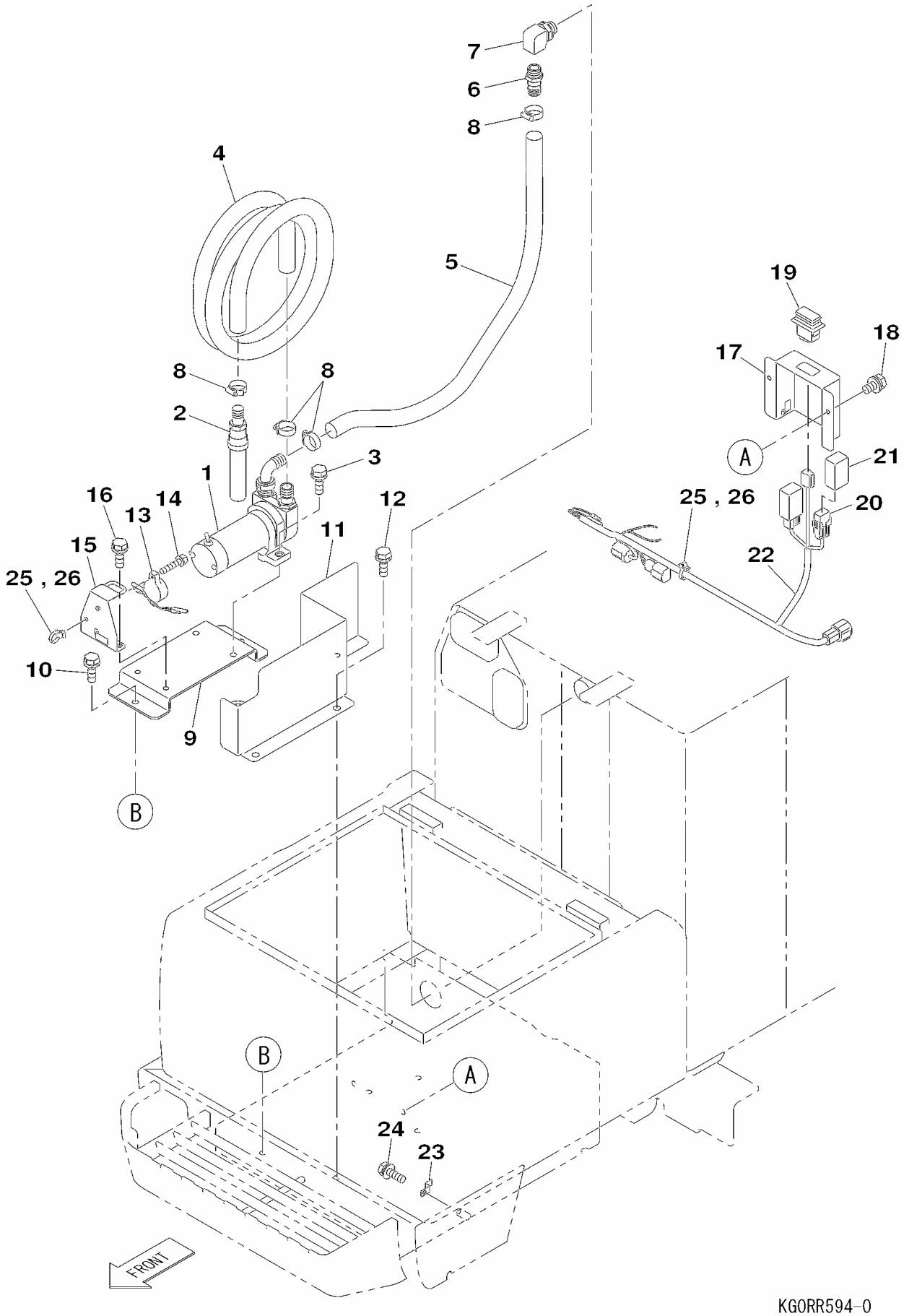

KG0RR594-0
KRR12020-DZ

https://truckmanualshub.com/

210A5 1101－ 210L5 1101－

符号 ITEM	構成 COMPO	部品番号 PART NO.	部品名	PART NAME	個数 Q'TY	ｲﾝﾅｰ	適用号機 SERIAL_NO.	互換 ICA	代替部品 REPLACEABLE PART
1	1	KHR12840	ﾎﾟﾝﾌﾟ;ﾌｭｰｴﾙﾌｨｰﾄﾞ 50L	PUMP;FUEL FEED	1				
2	1	KHR12430	ﾊﾞﾙﾌﾞ ﾌｯﾄ (50L/MINﾖｳ	VALVE;SPL	1				
3	1	105R010Y030R	ｾﾑｽB M10X 30	BOLT;SEMS	2				
4	1	KHR11460	ﾎｰｽ;ﾌｭｰｴﾙ (L=4000 25	HOSE;FUEL	1				
5	1	KHR12910	ﾎｰｽ;ﾌｭｰｴﾙ (L=1200 25	HOSE;FUEL	1				
6	1	KHR11480	ﾆｯﾌﾟﾙ ﾎｰｽ 3/4 26	NIPPLE	1				
7	1	KHJ2320	ｴﾙﾎﾞ G3/4XPT3/4	ELBOW	1				
8	1	KEJ0331	ｸﾘｯﾌﾟ;ｼﾞｭﾋﾞﾘ 26-38	CLIP;JUBILEE	4				
9	1	KHR12860	ﾌﾞﾗｹｯﾄ ｷｭｳﾕ ﾎﾟﾝﾌﾟ	BRACKET	1				
10	1	105R010Y020R	ｾﾑｽB M10X 20	BOLT;SEMS	2				
11	1	KHR15090	ｶﾊﾞｰ ｷｭｳﾕﾎﾟﾝﾌﾟ	COVER	1				
12	1	105R010Y020R	ｾﾑｽB M10X 20	BOLT;SEMS	3				
13	1	KHR4024	ｱﾗｰﾑ ｿｳｺｳ	ALARM;SPL	1				
14	1	KHR1832	ﾎﾞﾙﾄ ｻﾞｶﾞﾈｸﾐｺﾐ(M5X25	BOLT;SPL	1				
15	1	KHR12880	ﾌﾞﾗｹｯﾄ ﾌﾞｻﾞｰ	BRACKET	1				
16	1	105R008Y016R	ｾﾑｽB M 8X 16	BOLT;SEMS	2				
17	1	KHR15080	ｶﾊﾞｰ ｽｲｯﾁ	COVER	1				
18	1	KHR1252	ﾎﾞﾙﾄ M 6X 12(ｻﾞｶﾞﾈｯｷ	BOLT;SPL	2		210A5 NOT USED 210L5 NOT USED		
18	1	KHR1253	ﾎﾞﾙﾄ M 6X 16(ｻﾞｶﾞﾈｯｷ	BOLT;SPL	2				
19	1	KHR12900	ｽｲｯﾁ ﾛｯｶ(ｷｭｳﾕﾎﾟﾝﾌﾟ)	SWITCH;SPL	1				
20	1	KHR3802	ﾘﾚｰ ﾁｪﾝｼﾞｵｰﾊﾞｰ24V	RELAY;SPL	2				
21	1	KHR1587	ｶﾊﾞｰ ﾋｭｰｽﾞ	COVER;SPL	2				
22	1	KHR15100	ﾊｰﾈｽ;ﾜｲﾔ ｷｭｳﾕ ﾎﾟﾝﾌﾟ	HARNESS;WIRE	1		210A5 NOT USED 210L5 NOT USED		
22	1	KHR15101	ﾊｰﾈｽ;ﾜｲﾔ ｷｭｳﾕ ﾎﾟﾝﾌﾟ	HARNESS;WIRE	1				
23	1	KAR1185	ｸﾘｯﾌﾟ	CLIP	1		210A5 NOT USED 210L5 NOT USED		
23	1	KHR16450	ｸﾘｯﾌﾟ (W=15)	CLIP	1				
24	1	KHJ1215	ﾎﾞﾙﾄ ﾄｸｼｭ M8X25ｻﾞｶﾞﾈ	BOLT;SPL	1				
25	1	KHR10220	ｸﾗﾝﾌﾟ ﾏｳﾝﾄ	CLAMP;SPL	2				
26	1	KHH0142	ﾊﾞﾝﾄﾞ;ｿｸｾﾝ L=250	BAND;HARNESS	2				

https://truckmanualshub.com/

新JIS（山積）表示 0.50m³

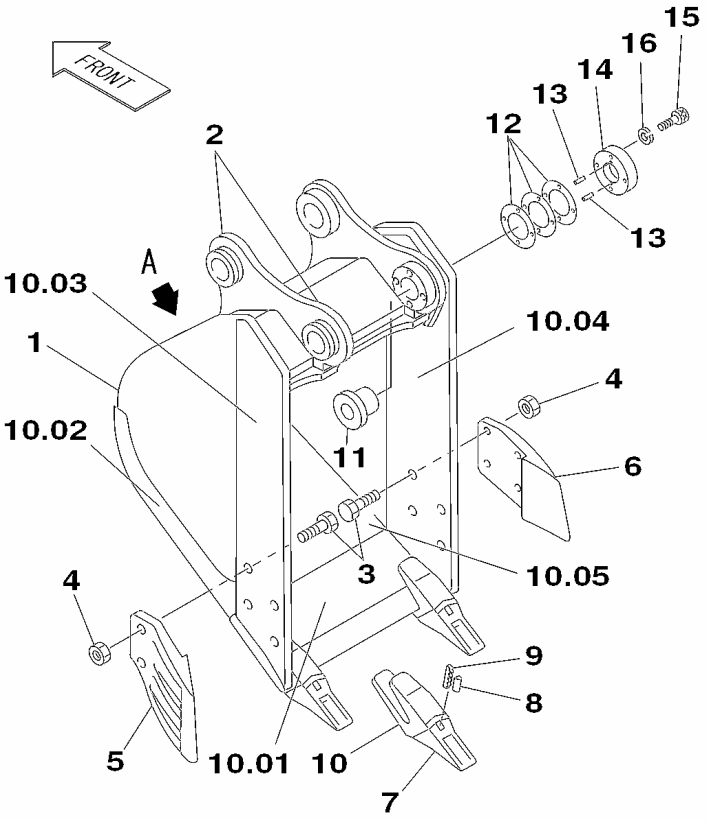

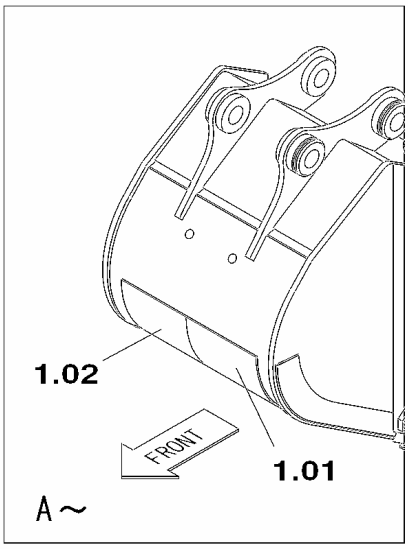

KG1RV462-0

https://truckmanualshub.com/

210A5 1101－ 210L5 1101－

符号 ITEM	構成 COMPO	部品番号 PART NO.	部品名	PART NAME	個数 Q'TY	インナー	適用号機 SERIAL_NO.	互換 ICA	代替部品 REPLACEABLE PART
1	1A	KRV20690	ﾊﾞｹｯﾄ;ﾊﾞｯｸﾎｰ (0.50M3	BUCKET;BACK-HOE	1				
1.01	2	KRV25560	ﾌﾟﾚｰﾄ (ﾎｷｮｳ L)	PLATE	1		210A5 1132- 210L5 1132-		
1.02	2	KRV25570	ﾌﾟﾚｰﾄ (ﾎｷｮｳ R)	PLATE	1		210A5 1132- 210L5 1132-		
2	2	KRV1160	ｶﾗｰ (ﾜﾝﾀﾂﾁ ｺﾃｲ)	COLLAR	2				
3	2	102R024Y065N	ｺｳﾘｷB M24X 65	BOLT;HIGH STRENGTH	8				
4	2	162R024VN	ｺｳﾘｷN M24	NUT;HIGH STRENGTH	8				
5	2	KRV1169	ｶﾂﾀ;ｻｲﾄﾞ (ﾋﾀﾞﾘ)	CUTTER;SIDE	1				
6	2	KRV1168	ｶﾂﾀ;ｻｲﾄﾞ (ﾐｷﾞ)	CUTTER;SIDE	1				
7	2	KRV1018	ﾎﾟｲﾝﾄ;ｺﾆｶﾙ	POINT;CONICAL	3				
8	2	BRV0206	ﾋﾟﾝ;ﾛｯｷﾝｸﾞ (35-PN)	PIN;LOCKING	3		210A5 -2466		
8	2	KHV11830	ﾋﾟﾝ;ﾛｯｷﾝｸﾞ (30-PN)	PIN;LOCKING	3		210A5 2467-		
9	2	BLT0189	ﾛｯｸ;ﾗﾊﾞｰﾋﾟﾝ (40-LK)	LOCK;RUB. PIN	3		210A5 -2466		
9	2	KHV11840	ﾛｯｸ;ﾗﾊﾞｰﾋﾟﾝ (40-LK)	LOCK;RUB. PIN	3		210A5 2467-		
10	2	KRV1157	ｱﾀﾞﾌﾟﾀ;ﾂｰｽ	ADPT;TOOTH	3				
10.01	2	KRV25580	ﾘｯﾌﾟ;ﾊﾞｹｯﾄ (ﾌﾛﾝﾄ)	LIP;BUCKET	1		210A5 1132- 210L5 1132-		
10.02	2	KRV25520	ﾌﾟﾚｰﾄ (ﾎｷｮｳ)	PLATE	2		210A5 1132- 210L5 1132-		
10.03	2	KRV25530	ﾘｯﾌﾟ;ﾊﾞｹｯﾄ (ｻｲﾄﾞ L)	LIP;BUCKET	1		210A5 1132- 210L5 1132-		
10.04	2	KRV25540	ﾘｯﾌﾟ;ﾊﾞｹｯﾄ (ｻｲﾄﾞ R)	LIP;BUCKET	1		210A5 1132- 210L5 1132-		
10.05	2	KRV25590	ﾌﾟﾚｰﾄ (ｿｺｲﾀ)	PLATE	1		210A5 1132- 210L5 1132-		
11	1	KRV2416	ﾌﾞｼｭ;ｽﾁｰﾙ	BUSH;STEEL	1				
12	1	KRV1159	ｼﾑ;ﾌﾟﾚｰﾄ	SHIM;PLATE	6		210A5 -2388 210L5 -1537		
12	1	KRV1159	ｼﾑ;ﾌﾟﾚｰﾄ	SHIM;PLATE	7		210A5 2389- 210L5 1538-		
13	1	335B120T032	ﾍｲｺﾋﾟﾝ 12X 32	PIN	2				
14	1	KRV1518	ﾌﾟﾚｰﾄ	PLATE	1				
15	1	108R016Y040R	ﾛｯｶｸｱﾅB M16X 40	BOLT;HEX SOC HD	4				
16	1	184-016VR	ﾎｳｹｲSW 16	WASHER;SPRING	4				

https://truckmanualshub.com/

新JIS（山積）表示 0.8m³

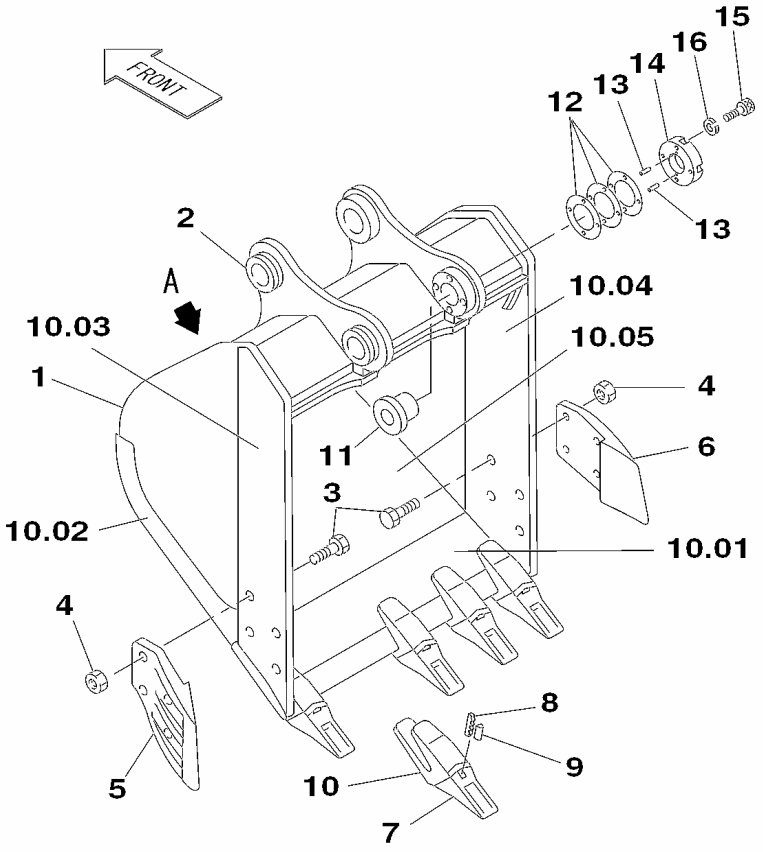

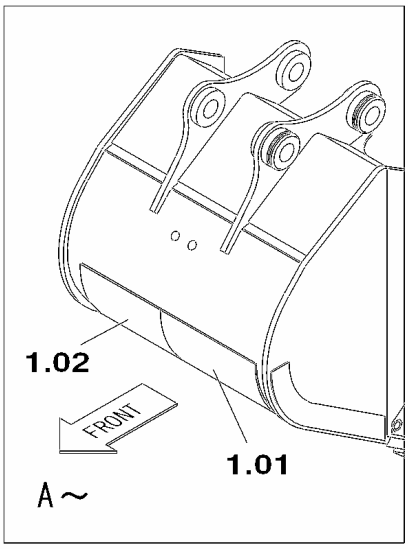

KG1RV399-0

https://truckmanualshub.com/

210A5 1101－ 210L5 1101－

符号 ITEM	構成 COMPO	部品番号 PART NO.	部品名	PART NAME	個数 Q'TY	ｲﾝﾅｰ	適用号機 SERIAL_NO.	互換 ICA	代替部品 REPLACEABLE PART
1	1A	KRV19330	ﾊﾞｹｯﾄ;ﾊﾞｯｸﾎｰ (0.8M3)	BUCKET;BACK-HOE	1				
1.01	2	KRV25490	ﾌﾟﾚｰﾄ (ﾎｷｮｳ L)	PLATE	1		210A5 1132- 210L5 1132-		
1.02	2	KRV25500	ﾌﾟﾚｰﾄ (ﾎｷｮｳ R)	PLATE	1		210A5 1132- 210L5 1132-		
2	2	KRV1160	ｶﾗｰ (ﾜﾝﾀｯﾁ ｺﾃｲ)	COLLAR	2				
3	2	102R024Y065N	ｺｳﾘｷB M24X 65	BOLT;HIGH STRENGTH	8				
4	2	162R024VN	ｺｳﾘｷN M24	NUT;HIGH STRENGTH	8				
5	2	KRV1169	ｶｯﾀ;ｻｲﾄﾞ (ﾋﾀﾞﾘ)	CUTTER;SIDE	1				
6	2	KRV1168	ｶｯﾀ;ｻｲﾄﾞ (ﾐｷﾞ)	CUTTER;SIDE	1				
7	2	KRV1018	ﾎﾟｲﾝﾄ;ｺﾆｶﾙ	POINT;CONICAL	5				
8	2	BRV0206	ﾋﾟﾝ;ﾛｯｷﾝｸﾞ (35-PN)	PIN;LOCKING	5		210A5 -2466		
8	2	KHV11830	ﾋﾟﾝ;ﾛｯｷﾝｸﾞ (30-PN)	PIN;LOCKING	5		210A5 2467-		
9	2	BLT0189	ﾛｯｸ;ﾗﾊﾞｰﾋﾟﾝ (40-LK)	LOCK;RUB. PIN	5		210A5 -2466		
9	2	KHV11840	ﾛｯｸ;ﾗﾊﾞｰﾋﾟﾝ (40-LK)	LOCK;RUB. PIN	5		210A5 2467-		
10	2	KRV1157	ｱﾀﾞﾌﾟﾀ;ﾂｰｽ	ADPT;TOOTH	5				
10.01	2	KRV25510	ﾘｯﾌﾟ;ﾊﾞｹｯﾄ (ﾌﾛﾝﾄ)	LIP;BUCKET	1		210A5 1132- 210L5 1132-		
10.02	2	KRV25520	ﾌﾟﾚｰﾄ (ﾎｷｮｳ)	PLATE	2		210A5 1132- 210L5 1132-		
10.03	2	KRV25530	ﾘｯﾌﾟ;ﾊﾞｹｯﾄ (ｻｲﾄﾞ L)	LIP;BUCKET	1		210A5 1132- 210L5 1132-		
10.04	2	KRV25540	ﾘｯﾌﾟ;ﾊﾞｹｯﾄ (ｻｲﾄﾞ R)	LIP;BUCKET	1		210A5 1132- 210L5 1132-		
10.05	2	KRV25550	ﾌﾟﾚｰﾄ (ｿｺｲﾀ)	PLATE	1		210A5 1132- 210L5 1132-		
11	1	KRV2416	ﾌﾞｼｭ;ｽﾁｰﾙ	BUSH;STEEL	1				
12	1	KRV1159	ｼﾑ;ﾌﾟﾚｰﾄ	SHIM;PLATE	6		210A5 -2388 210L5 -1537		
12	1	KRV1159	ｼﾑ;ﾌﾟﾚｰﾄ	SHIM;PLATE	7		210A5 2389- 210L5 1538-		
13	1	335B120T032	ﾍｲｺﾋﾟﾝ 12X 32	PIN	2				
14	1	KRV1518	ﾌﾟﾚｰﾄ	PLATE	1				
15	1	108R016Y040R	ﾛｯｶｸｱﾅB M16X 40	BOLT;HEX SOC HD	4				
16	1	184-016VR	ﾎｳｹｲSW 16	WASHER;SPRING	4				

https://truckmanualshub.com/

新JIS（山積）表示 0.9m³

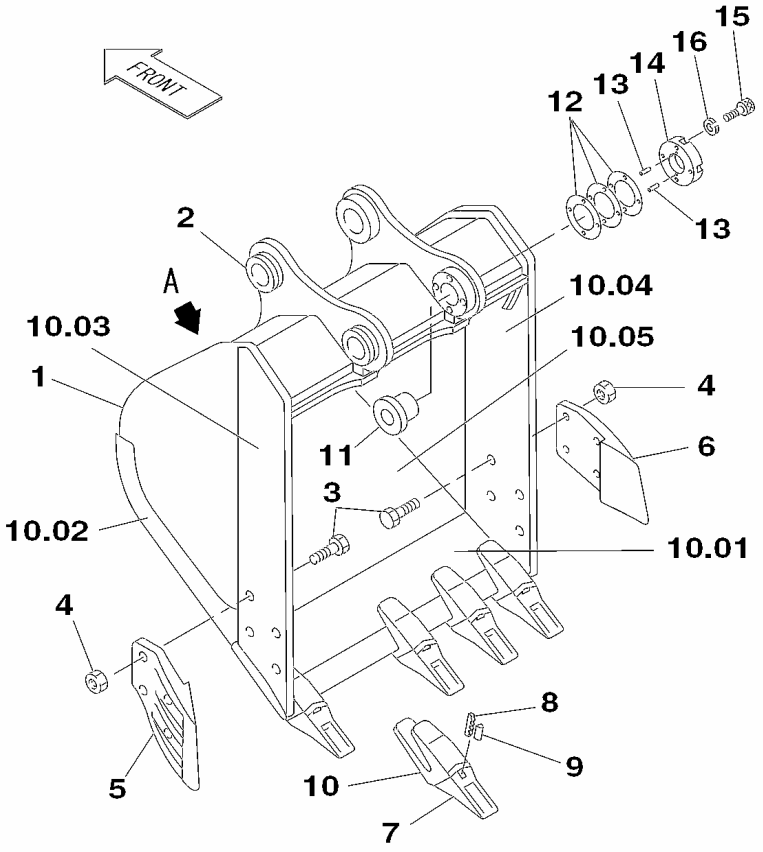

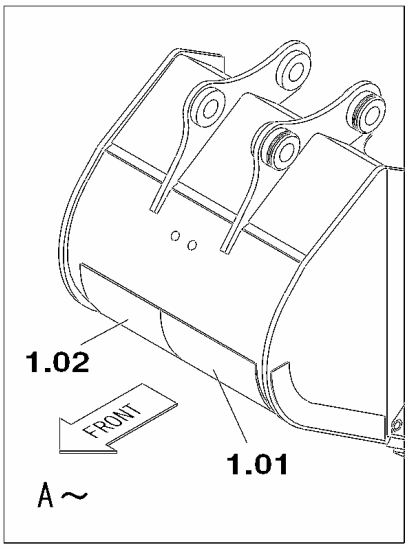

KG1RV463-0

https://truckmanualshub.com/

210A5 1101－ 210L5 1101－

符号 ITEM	構成 COMPO	部品番号 PART NO.	部品名	PART NAME	個数 Q'TY	ｲﾝﾅｰ	適用号機 SERIAL_NO.	互換 ICA	代替部品 REPLACEABLE PART
1	1A	KRV20700	ﾊﾞｹｯﾄ;ﾊﾞｯｸﾎｰ (0.90M3	BUCKET;BACK-HOE	1				
1.01	2	KRV25600	ﾌﾟﾚｰﾄ (ﾎｷｮｳ L)	PLATE	1		210A5 1132- 210L5 1132-		
1.02	2	KRV25610	ﾌﾟﾚｰﾄ (ﾎｷｮｳ R)	PLATE	1		210A5 1132- 210L5 1132-		
2	2	KRV1160	ｶﾗｰ (ﾜﾝﾀｯﾁ ｺﾃｲ)	COLLAR	2				
3	2	102R024Y065N	ｺｳﾘｷB M24X 65	BOLT;HIGH STRENGTH	8				
4	2	162R024VN	ｺｳﾘｷN M24	NUT;HIGH STRENGTH	8				
5	2	KRV1169	ｶｯﾀ;ｻｲﾄﾞ (ﾋﾀﾞﾘ)	CUTTER;SIDE	1				
6	2	KRV1168	ｶｯﾀ;ｻｲﾄﾞ (ﾐｷﾞ)	CUTTER;SIDE	1				
7	2	KRV1018	ﾎﾟｲﾝﾄ;ｺﾆｶﾙ	POINT;CONICAL	5				
8	2	BRV0206	ﾋﾟﾝ;ﾛｯｷﾝｸﾞ (35-PN)	PIN;LOCKING	5		210A5 -2466		
8	2	KHV11830	ﾋﾟﾝ;ﾛｯｷﾝｸﾞ (30-PN)	PIN;LOCKING	5		210A5 2467-		
9	2	BLT0189	ﾛｯｸ;ﾗﾊﾞｰﾋﾟﾝ (40-LK)	LOCK;RUB. PIN	5		210A5 -2466		
9	2	KHV11840	ﾛｯｸ;ﾗﾊﾞｰﾋﾟﾝ (40-LK)	LOCK;RUB. PIN	5		210A5 2467-		
10	2	KRV1157	ｱﾀﾞﾌﾟﾀ;ﾂｰｽ	ADPT;TOOTH	5				
10.01	2	KRV25620	ﾘｯﾌﾟ;ﾊﾞｹｯﾄ (ﾌﾛﾝﾄ)	LIP;BUCKET	1		210A5 1132- 210L5 1132-		
10.02	2	KRV25520	ﾌﾟﾚｰﾄ (ﾎｷｮｳ)	PLATE	2		210A5 1132- 210L5 1132-		
10.03	2	KRV25530	ﾘｯﾌﾟ;ﾊﾞｹｯﾄ (ｻｲﾄﾞ L)	LIP;BUCKET	1		210A5 1132- 210L5 1132-		
10.04	2	KRV25540	ﾘｯﾌﾟ;ﾊﾞｹｯﾄ (ｻｲﾄﾞ R)	LIP;BUCKET	1		210A5 1132- 210L5 1132-		
10.05	2	KRV25630	ﾌﾟﾚｰﾄ (ｿｺｲﾀ)	PLATE	1		210A5 1132- 210L5 1132-		
11	1	KRV2416	ﾌﾞｼｭ;ｽﾁｰﾙ	BUSH;STEEL	1				
12	1	KRV1159	ｼﾑ;ﾌﾟﾚｰﾄ	SHIM;PLATE	6		210A5 -2388 210L5 -1537		
12	1	KRV1159	ｼﾑ;ﾌﾟﾚｰﾄ	SHIM;PLATE	7		210A5 2389- 210L5 1538-		
13	1	335B120T032	ﾍｲｺﾋﾟﾝ 12X 32	PIN	2				
14	1	KRV1518	ﾌﾟﾚｰﾄ	PLATE	1				
15	1	108R016Y040R	ﾛｯｶｸｱﾅB M16X 40	BOLT;HEX SOC HD	4				
16	1	184-016VR	ﾎｳｹｲSW 16	WASHER;SPRING	4				

https://truckmanualshub.com/

新JIS（山積）表示 1.0m³

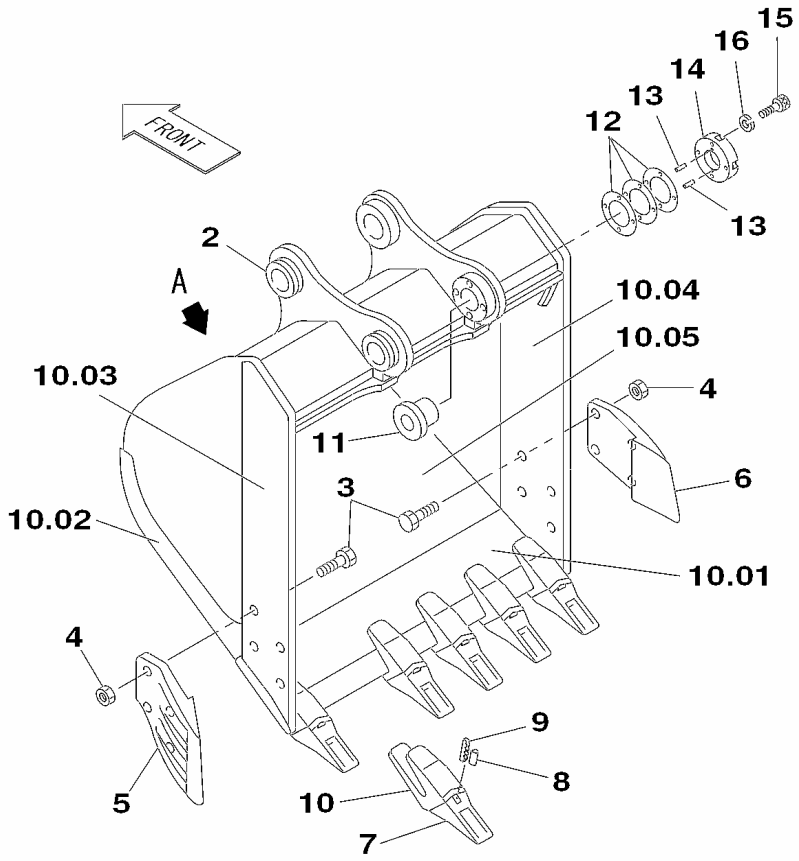

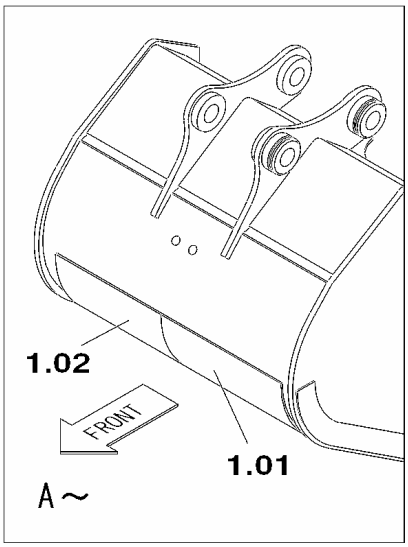

KG1RV464-0

https://truckmanualshub.com/

210A5 1101－ 210L5 1101－

符号 ITEM	構成 COMPO	部品番号 PART NO.	部品名	PART NAME	個数 Q'TY	ｲﾝﾅｰ	適用号機 SERIAL_NO.	互換 ICA	代替部品 REPLACEABLE PART
1	1A	KRV20710	ﾊﾞｹｯﾄ;ﾊﾞｯｸﾎｰ (1.00M3	BUCKET;BACK-HOE	1				
1.01	2	KRV25640	ﾌﾟﾚｰﾄ (ﾎｷｮｳ L)	PLATE	1		210A5 1132- 210L5 1132-		
1.02	2	KRV25650	ﾌﾟﾚｰﾄ (ﾎｷｮｳ R)	PLATE	1		210A5 1132- 210L5 1132-		
2	2	KRV1160	ｶﾗｰ (ﾜﾝﾀｯﾁ ｺﾃｲ)	COLLAR	2				
3	2	102R024Y065N	ｺｳﾘｷB M24X 65	BOLT;HIGH STRENGTH	8				
4	2	162R024VN	ｺｳﾘｷN M24	NUT;HIGH STRENGTH	8				
5	2	KRV1169	ｶｯﾀ;ｻｲﾄﾞ (ﾋﾀﾞﾘ)	CUTTER;SIDE	1				
6	2	KRV1168	ｶｯﾀ;ｻｲﾄﾞ (ﾐｷﾞ)	CUTTER;SIDE	1				
7	2	KRV1018	ﾎﾟｲﾝﾄ;ｺﾆｶﾙ	POINT;CONICAL	6				
8	2	BRV0206	ﾋﾟﾝ;ﾛｯｷﾝｸﾞ (35-PN)	PIN;LOCKING	6		210A5 -2466		
8	2	KHV11830	ﾋﾟﾝ;ﾛｯｷﾝｸﾞ (30-PN)	PIN;LOCKING	6		210A5 2467-		
9	2	BLT0189	ﾛｯｸ;ﾗﾊﾞｰﾋﾟﾝ (40-LK)	LOCK;RUB. PIN	6		210A5 -2466		
9	2	KHV11840	ﾛｯｸ;ﾗﾊﾞｰﾋﾟﾝ (40-LK)	LOCK;RUB. PIN	6		210A5 2467-		
10	2	KRV1157	ｱﾀﾞﾌﾟﾀ;ﾂｰｽ	ADPT;TOOTH	6				
10.01	2	KRV25660	ﾘｯﾌﾟ;ﾊﾞｹｯﾄ (ﾌﾛﾝﾄ)	LIP;BUCKET	1		210A5 1132- 210L5 1132-		
10.02	2	KRV25520	ﾌﾟﾚｰﾄ (ﾎｷｮｳ)	PLATE	2		210A5 1132- 210L5 1132-		
10.03	2	KRV25530	ﾘｯﾌﾟ;ﾊﾞｹｯﾄ (ｻｲﾄﾞ L)	LIP;BUCKET	1		210A5 1132- 210L5 1132-		
10.04	2	KRV25540	ﾘｯﾌﾟ;ﾊﾞｹｯﾄ (ｻｲﾄﾞ R)	LIP;BUCKET	1		210A5 1132- 210L5 1132-		
10.05	2	KRV25670	ﾌﾟﾚｰﾄ (ｿｺｲﾀ)	PLATE	1		210A5 1132- 210L5 1132-		
11	1	KRV2416	ﾌﾞｼｭ;ｽﾁｰﾙ	BUSH;STEEL	1				
12	1	KRV1159	ｼﾑ;ﾌﾟﾚｰﾄ	SHIM;PLATE	6		210A5 -2388 210L5 -1537		
12	1	KRV1159	ｼﾑ;ﾌﾟﾚｰﾄ	SHIM;PLATE	7		210A5 2389- 210L5 1538-		
13	1	335B120T032	ﾍｲｺﾋﾟﾝ 12X 32	PIN	2				
14	1	KRV1518	ﾌﾟﾚｰﾄ	PLATE	1				
15	1	108R016Y040R	ﾛｯｶｸｱﾅB M16X 40	BOLT;HEX SOC HD	4				
16	1	184-016VR	ﾎｳｹｲSW 16	WASHER;SPRING	4				

https://truckmanualshub.com/

新JIS（山積）表示 1.1m³

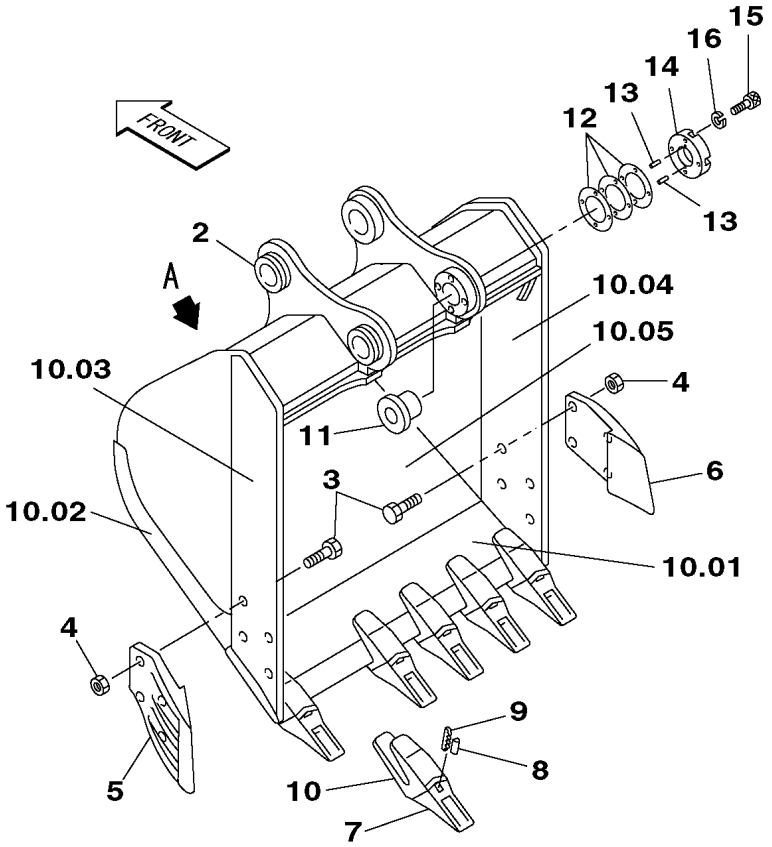

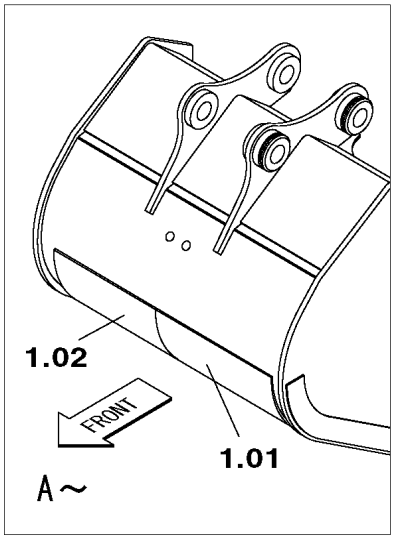

KG1RV465-0

https://truckmanualshub.com/

210A5 1101－ 210L5 1101－

符号 ITEM	構成 COMPO	部品番号 PART NO.	部品名	PART NAME	個数 Q'TY	ｲﾝﾅｰ	適用号機 SERIAL_NO.	互換 ICA	代替部品 REPLACEABLE PART
1	1A	KRV20720	ﾊﾞｹｯﾄ;ﾊﾞｯｸﾎｰ (1.10M3	BUCKET;BACK-HOE	1				
1.01	2	KRV25680	ﾌﾟﾚｰﾄ (ﾎｷｮｳ L)	PLATE	1		210A5 1132- 210L5 1132-		
1.02	2	KRV25690	ﾌﾟﾚｰﾄ (ﾎｷｮｳ R)	PLATE	1		210A5 1132- 210L5 1132-		
2	2	KRV1160	ｶﾗｰ (ﾜﾝﾀｯﾁ ｺﾃｲ)	COLLAR	2				
3	2	102R024Y065N	ｺｳﾘｷB M24X 65	BOLT;HIGH STRENGTH	8				
4	2	162R024VN	ｺｳﾘｷN M24	NUT;HIGH STRENGTH	8				
5	2	KRV1169	ｶｯﾀ;ｻｲﾄﾞ (ﾋﾀﾞﾘ)	CUTTER;SIDE	1				
6	2	KRV1168	ｶｯﾀ;ｻｲﾄﾞ (ﾐｷﾞ)	CUTTER;SIDE	1				
7	2	KRV1018	ﾎﾟｲﾝﾄ;ｺﾆｶﾙ	POINT;CONICAL	6				
8	2	BRV0206	ﾋﾟﾝ;ﾛｯｷﾝｸﾞ (35-PN)	PIN;LOCKING	6		210A5 -2466		
8	2	KHV11830	ﾋﾟﾝ;ﾛｯｷﾝｸﾞ (30-PN)	PIN;LOCKING	6		210A5 2467-		
9	2	BLT0189	ﾛｯｸ;ﾗﾊﾞｰﾋﾟﾝ (40-LK)	LOCK;RUB. PIN	6		210A5 -2466		
9	2	KHV11840	ﾛｯｸ;ﾗﾊﾞｰﾋﾟﾝ (40-LK)	LOCK;RUB. PIN	6		210A5 2467-		
10	2	KRV1157	ｱﾀﾞﾌﾟﾀ;ﾂｰｽ	ADPT;TOOTH	6				
10.01	2	KRV25700	ﾘｯﾌﾟ;ﾊﾞｹｯﾄ (ﾌﾛﾝﾄ)	LIP;BUCKET	1		210A5 1132- 210L5 1132-		
10.02	2	KRV25520	ﾌﾟﾚｰﾄ (ﾎｷｮｳ)	PLATE	2		210A5 1132- 210L5 1132-		
10.03	2	KRV25530	ﾘｯﾌﾟ;ﾊﾞｹｯﾄ (ｻｲﾄﾞ L)	LIP;BUCKET	1		210A5 1132- 210L5 1132-		
10.04	2	KRV25540	ﾘｯﾌﾟ;ﾊﾞｹｯﾄ (ｻｲﾄﾞ R)	LIP;BUCKET	1		210A5 1132- 210L5 1132-		
10.05	2	KRV25710	ﾌﾟﾚｰﾄ (ｿｺｲﾀ)	PLATE	1		210A5 1132- 210L5 1132-		
11	1	KRV2416	ﾌﾞｼｭ;ｽﾁｰﾙ	BUSH;STEEL	1				
12	1	KRV1159	ｼﾑ;ﾌﾟﾚｰﾄ	SHIM;PLATE	6		210A5 -2388 210L5 -1537		
12	1	KRV1159	ｼﾑ;ﾌﾟﾚｰﾄ	SHIM;PLATE	7		210A5 2389- 210L5 1538-		
13	1	335B120T032	ﾍｲｺﾋﾟﾝ 12X 32	PIN	2				
14	1	KRV1518	ﾌﾟﾚｰﾄ	PLATE	1				
15	1	108R016Y040R	ﾛｯｶｸｱﾅB M16X 40	BOLT;HEX SOC HD	4				
16	1	184-016VR	ﾎｳｹｲSW 16	WASHER;SPRING	4				

https://truckmanualshub.com/

新JIS（山積）表示 0.8m³

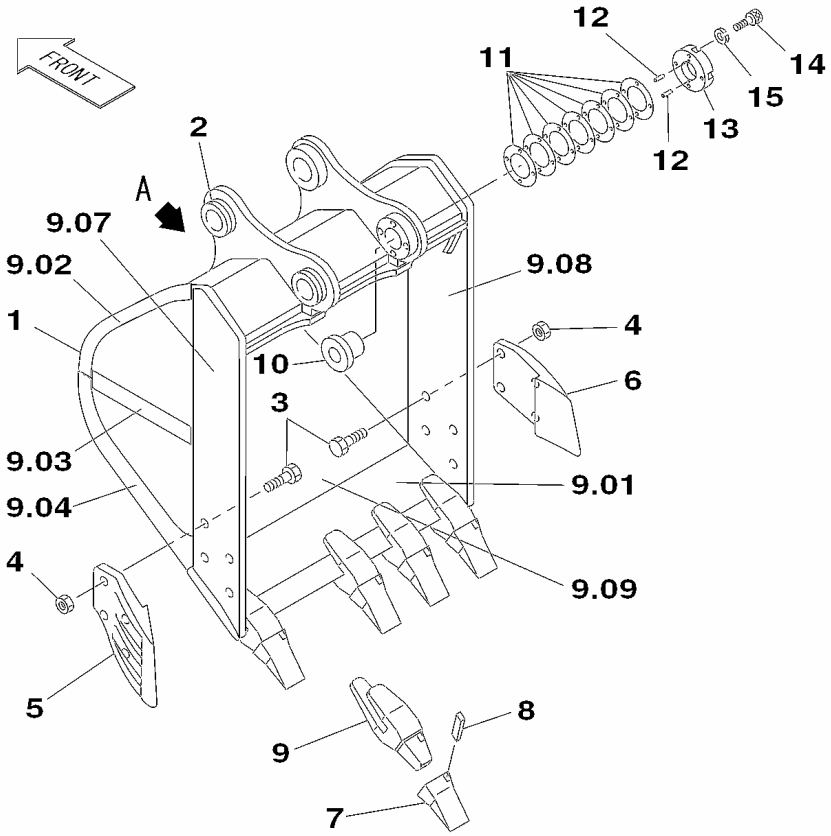

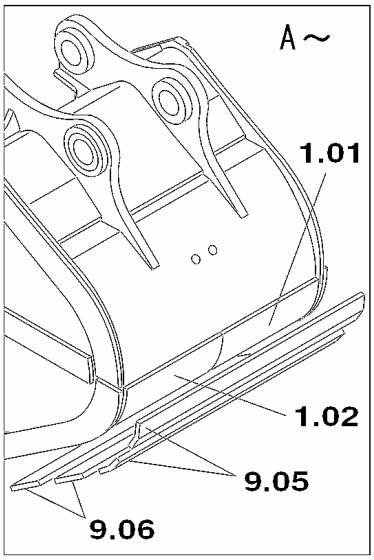

KG1RV466-0

https://truckmanualshub.com/

210A5 1101－ 210L5 1101－

符号 ITEM	構成 COMPO	部品番号 PART NO.	部品名	PART NAME	個数 Q'TY	ｲﾝﾅｰ	適用号機 SERIAL_NO.	互換 ICA	代替部品 REPLACEABLE PART
1	1A	KRV20730	ﾊﾞｹｯﾄ;ﾊﾞｯｸﾎｰ (ｼﾞｭｳｸｯ	BUCKET;BACK-HOE	1				
1.01	2	KRV25490	ﾌﾟﾚｰﾄ (ﾎｷｮｳ L)	PLATE	1		210A5 1132-		
							210L5 1132-		
1.02	2	KRV25500	ﾌﾟﾚｰﾄ (ﾎｷｮｳ R)	PLATE	1		210A5 1132-		
							210L5 1132-		
2	2	KRV1160	ｶﾗｰ (ﾜﾝﾀﾂﾁ ｺﾃｲ)	COLLAR	2				
3	2	102R024Y065N	ｺｳﾘｷB M24X 65	BOLT;HIGH STRENGTH	8				
4	2	162R024VN	ｺｳﾘｷN M24	NUT;HIGH STRENGTH	8				
5	2	KRV1169	ｶﾂﾀ;ｻｲﾄﾞ (ﾋﾀﾞﾘ)	CUTTER;SIDE	1				
6	2	KRV1168	ｶﾂﾀ;ｻｲﾄﾞ (ﾐｷﾞ)	CUTTER;SIDE	1				
7	2	KRV2522	ﾎﾟｲﾝﾄ;ﾂｰｽ	POINT;TOOTH	5				
8	2	KRV2524	ﾋﾟﾝ;ﾛｯｷﾝｸﾞ	PIN;LOCKING	5				
9	2	KRV2523	ｱﾀﾞﾌﾟﾀ;ﾂｰｽ	ADPT;TOOTH	5				
9.01	2	KRV25720	ﾘｯﾌﾟ;ﾊﾞｹｯﾄ (ﾌﾛﾝﾄ)	LIP;BUCKET	1		210A5 1132-		
							210L5 1132-		
9.02	2	KRV25730	ﾌﾟﾚｰﾄ	PLATE	2		210A5 1132-		
							210L5 1132-		
9.03	2	KRV25740	ﾌﾟﾚｰﾄ	PLATE	2		210A5 1132-		
							210L5 1132-		
9.04	2	KRV25520	ﾌﾟﾚｰﾄ (ﾎｷｮｳ)	PLATE	2		210A5 1132-		
							210L5 1132-		
9.05	2	KRV25750	ﾌﾟﾚｰﾄ	PLATE	2		210A5 1132-		
							210L5 1132-		
9.06	2	KRV25760	ﾌﾟﾚｰﾄ	PLATE	2		210A5 1132-		
							210L5 1132-		
9.07	2	KRV25770	ﾘｯﾌﾟ;ﾊﾞｹｯﾄ (ｻｲﾄﾞ L)	LIP;BUCKET	1		210A5 1132-		
							210L5 1132-		
9.08	2	KRV25780	ﾘｯﾌﾟ;ﾊﾞｹｯﾄ (ｻｲﾄﾞ R)	LIP;BUCKET	1		210A5 1132-		
							210L5 1132-		
9.09	2	KRV25550	ﾌﾟﾚｰﾄ (ｿｺｲﾀ)	PLATE	1		210A5 1132-		
							210L5 1132-		
10	1	KRV2416	ﾌﾞｼｭ;ｽﾁｰﾙ	BUSH;STEEL	1				
11	1	KRV1159	ｼﾑ;ﾌﾟﾚｰﾄ	SHIM;PLATE	6		210A5 -2388		
							210L5 -1537		
11	1	KRV1159	ｼﾑ;ﾌﾟﾚｰﾄ	SHIM;PLATE	7		210A5 2389-		
							210L5 1538-		
12	1	335B120T032	ﾍｲｺﾋﾟﾝ 12X 32	PIN	2				
13	1	KRV1518	ﾌﾟﾚｰﾄ	PLATE	1				
14	1	108R016Y040R	ﾛｯｶｸｱﾅB M16X 40	BOLT;HEX SOC HD	4				
15	1	184-016VR	ﾎｳｹｲSW 16	WASHER;SPRING	4				

https://truckmanualshub.com/

新JIS（山積）表示　　0.37m³

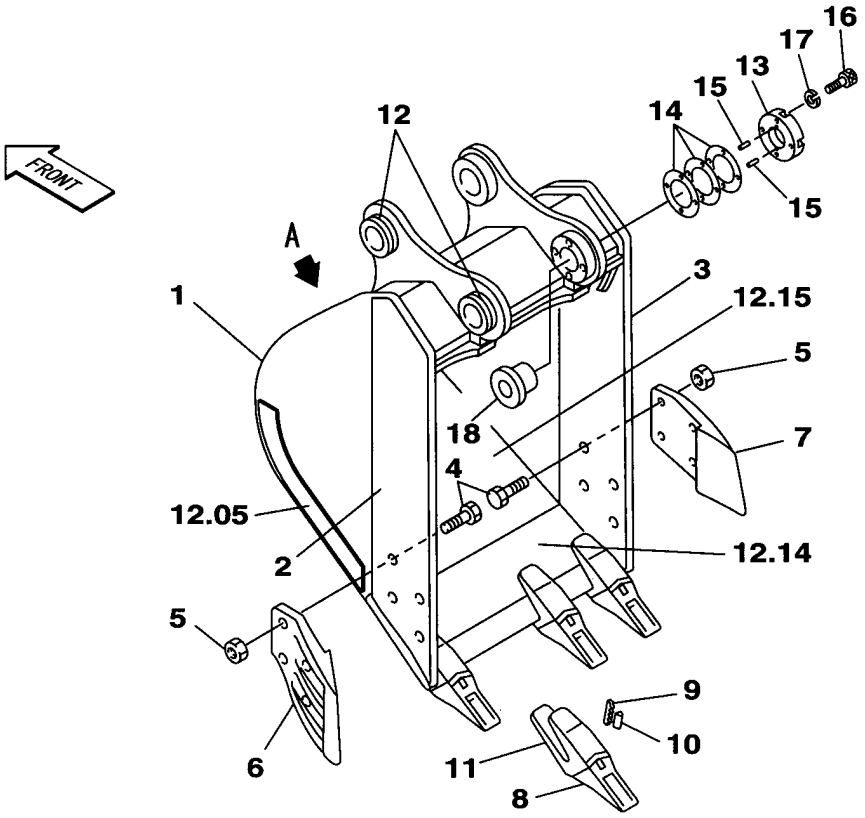

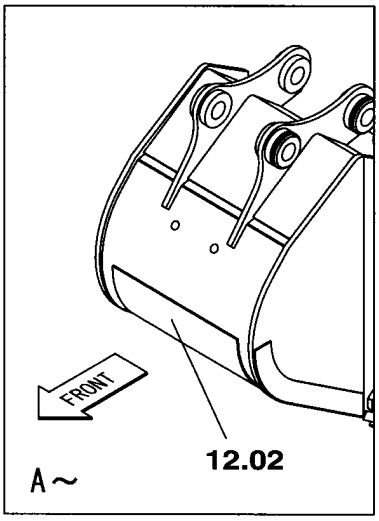

KGONV664-0

https://truckmanualshub.com/

210L5 1101－

符号 ITEM	構成 COMPO	部品番号 PART NO.	部品名	PART NAME	個数 Q'TY	ｲﾝﾅｰ	適用号機 SERIAL_NO.	互換 ICA	代替部品 REPLACEABLE PART
1	1A	KNV16060	ﾊﾞｹｯﾄ;ﾊﾞｯｸﾎｰ (0.37M3	BUCKET;BACK-HOE	1		210L5 -1132		
2	2	KNV10660	ﾘｯﾌﾟ;ﾊﾞｹｯﾄ (ﾋﾀﾞﾘ ｶﾞﾜ	LIP;BUCKET	1		210L5 -1132		
3	2	KNV10670	ﾘｯﾌﾟ;ﾊﾞｹｯﾄ (ﾐｷﾞ ｶﾞﾜ)	LIP;BUCKET	1		210L5 -1132		
4	2	102R020Y060N	ｺｳﾘｷB M20X 60	BOLT;HIGH STRENGTH	8		210L5 -1132		
5	2	162R020VN	ｺｳﾘｷN M20	NUT;HIGH STRENGTH	8		210L5 -1132		
6	2	KNV0460	ｶｯﾀ;ｻｲﾄﾞ (ﾋﾀﾞﾘ)	CUTTER;SIDE	1		210L5 -1132		
7	2	KNV0461	ｶｯﾀ;ｻｲﾄﾞ (ﾐｷﾞ)	CUTTER;SIDE	1		210L5 -1132		
8	2	KNV0438	ﾎﾟｲﾝﾄ;ｺﾆｶﾙ (30T)	POINT;CONICAL	4		210L5 -1132		
9	2	KMV0082	ﾋﾟﾝ;ﾛｯｷﾝｸﾞ (25-30PN)	PIN;LOCKING	4		210L5 -1132		
10	2	KMV0083	ﾛｯｸ;ﾗﾊﾞｰﾋﾟﾝ (25-30LK	LOCK;RUB. PIN	4		210L5 -1132		
11	2	KNV0462	ｱﾀﾞﾌﾟﾀ;ﾂｰｽ (30)	ADPT;TOOTH	4		210L5 -1132		
12	2	KNV0463	ｶﾗｰ	COLLAR	2		210L5 -1132		
1	1A	KNV17670	ﾊﾞｹｯﾄ;ﾊﾞｯｸﾎｰ (0.37M3	BUCKET;BACK-HOE	1		210L5 1133-		
12.02	2	KNV17810	ﾌﾟﾚｰﾄ (ﾎｷｮｳ)	PLATE	1		210L5 1133-		
2	2	KNV17700	ﾘｯﾌﾟ;ﾊﾞｹｯﾄ (ｻｲﾄﾞ L)	LIP;BUCKET	1		210L5 1133-		
3	2	KNV17710	ﾘｯﾌﾟ;ﾊﾞｹｯﾄ (ｻｲﾄﾞ R)	LIP;BUCKET	1		210L5 1133-		
12.05	2	KNV17720	ﾌﾟﾚｰﾄ (ﾎｷｮｳ)	PLATE	2		210L5 1133-		
4	2	102R024Y060N	ｺｳﾘｷB M24X 60	BOLT;HIGH STRENGTH	8		210L5 1133-		
5	2	162R024VN	ｺｳﾘｷN M24	NUT;HIGH STRENGTH	8		210L5 1133-		
6	2	KNV15550	ｶｯﾀ;ｻｲﾄﾞ (ﾋﾀﾞﾘ)	CUTTER;SIDE	1		210L5 1133-		
7	2	KNV15560	ｶｯﾀ;ｻｲﾄﾞ (ﾐｷﾞ)	CUTTER;SIDE	1		210L5 1133-		
8	2	KNV0438	ﾎﾟｲﾝﾄ;ｺﾆｶﾙ (30T)	POINT;CONICAL	4		210L5 1133-		
9	2	KHV11300	ﾋﾟﾝ;ﾛｯｷﾝｸﾞ (25-30PN)	PIN;LOCKING	4		210L5 1409-	=	KMV0082
10	2	KHV11310	ﾛｯｸ;ﾗﾊﾞｰﾋﾟﾝ (25-30LK	LOCK;RUB. PIN	4		210L5 1409-	=	KMV0083
11	2	KNV0462	ｱﾀﾞﾌﾟﾀ;ﾂｰｽ (30)	ADPT;TOOTH	4		210L5 1133-		
12.14	2	KNV17820	ﾘｯﾌﾟ;ﾊﾞｹｯﾄ (ﾌﾛﾝﾄ)	LIP;BUCKET	1		210L5 1133-		
12.15	2	KNV17830	ﾌﾟﾚｰﾄ (ｿｺｲﾀ)	PLATE	1		210L5 1133-		
12	2	KNV0463	ｶﾗｰ	COLLAR	2		210L5 1133-		
13	1	KNV0467	ﾌﾟﾚｰﾄ	PLATE	1				
14	1	KNV0468	ｼﾑ;ﾌﾟﾚｰﾄ	SHIM;PLATE	6				
15	1	335B060T020	ﾍｲｺﾋﾟﾝ 6X 20	PIN	2				
16	1	108R012Y050R	ﾛｯｶｸｱﾅB M12X 50	BOLT;HEX SOC HD	4				
17	1	184-012VR	ﾎｳｹｲSW 12	WASHER;SPRING	4				
18	1	KNV1131	ﾌﾞｼｭ;ｽﾁｰﾙ	BUSH;STEEL	1				

https://truckmanualshub.com/

新JIS（山積）表示 0.8m³

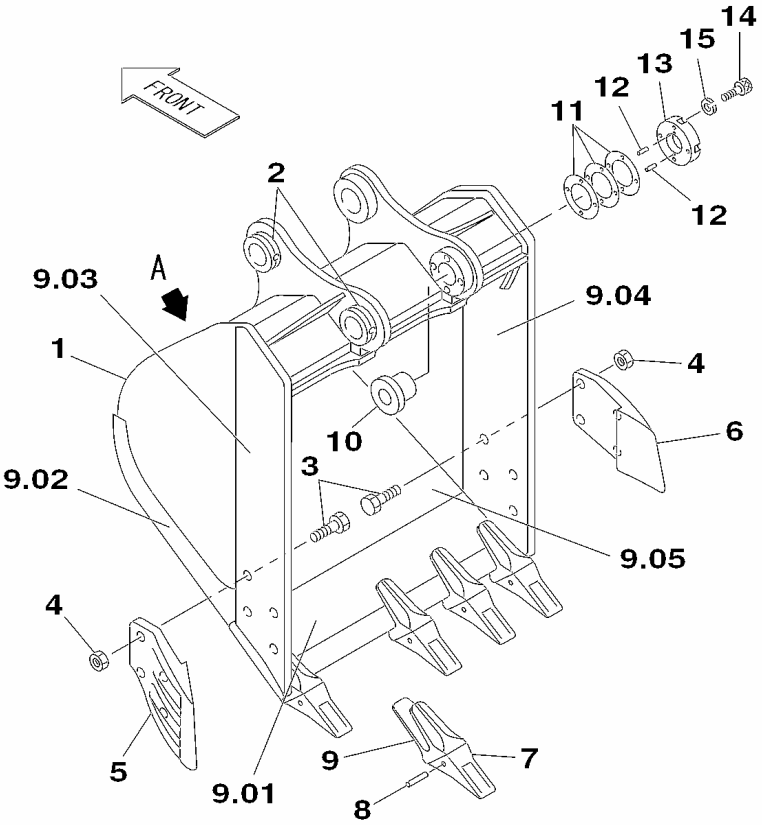

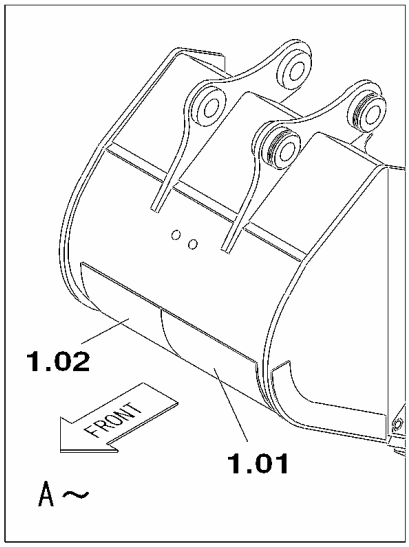

KG1RV467-0

https://truckmanualshub.com/

210A5 2195－

符号 ITEM	構成 COMPO	部品番号 PART NO.	部品名	PART NAME	個数 Q'TY	ｲﾝﾅｰ	適用号機 SERIAL_NO.	互換 ICA	代替部品 REPLACEABLE PART
1	1A	KRV20740	ﾊﾞｹｯﾄ;ﾊﾞｯｸﾎｰ (0.80M3	BUCKET;BACK-HOE	1				
1.01	2	KRV25490	ﾌﾟﾚｰﾄ (ﾎｷｮｳ L)	PLATE	1				
1.02	2	KRV25500	ﾌﾟﾚｰﾄ (ﾎｷｮｳ R)	PLATE	1				
2	2	KRV1160	ｶﾗｰ (ﾜﾝﾀｯﾁ ｺﾃｲ)	COLLAR	2				
3	2	102R024Y065N	ｺｳﾘｷB M24X 65	BOLT;HIGH STRENGTH	8				
4	2	162R024VN	ｺｳﾘｷN M24	NUT;HIGH STRENGTH	8				
5	2	KRV1169	ｶｯﾀ;ｻｲﾄﾞ (ﾋﾀﾞﾘ)	CUTTER;SIDE	1				
6	2	KRV1168	ｶｯﾀ;ｻｲﾄﾞ (ﾐｷﾞ)	CUTTER;SIDE	1				
7	2	KRV3716	ﾎﾟｲﾝﾄ;ﾂｰｽ	POINT;TOOTH	5				
8	2	KRV3718	ﾋﾟﾝ;ﾛｯｷﾝｸﾞ	PIN;LOCKING	5				
9	2	KRV3717	ｱﾀﾞﾌﾟﾀ;ﾂｰｽ	ADPT;TOOTH	5				
9.01	2	KRV25790	ﾘｯﾌﾟ;ﾊﾞｹｯﾄ (ﾌﾛﾝﾄ)	LIP;BUCKET	1				
9.02	2	KRV25520	ﾌﾟﾚｰﾄ (ﾎｷｮｳ)	PLATE	2				
9.03	2	KRV25800	ﾘｯﾌﾟ;ﾊﾞｹｯﾄ (ｻｲﾄﾞ L)	LIP;BUCKET	1				
9.04	2	KRV25810	ﾘｯﾌﾟ;ﾊﾞｹｯﾄ (ｻｲﾄﾞ L)	LIP;BUCKET	1				
9.05	2	KRV25550	ﾌﾟﾚｰﾄ (ｿｺｲﾀ)	PLATE	1				
10	1	KRV2416	ﾌﾞｼｭ;ｽﾁｰﾙ	BUSH;STEEL	1				
11	1	KRV1159	ｼﾑ;ﾌﾟﾚｰﾄ	SHIM;PLATE	6		210A5 -2388		
11	1	KRV1159	ｼﾑ;ﾌﾟﾚｰﾄ	SHIM;PLATE	7		210A5 2389-		
12	1	335B120T032	ﾍｲｺﾋﾟﾝ 12X 32	PIN	2				
13	1	KRV1518	ﾌﾟﾚｰﾄ	PLATE	1				
14	1	108R016Y040R	ﾛｯｶｸｱﾅB M16X 40	BOLT;HEX SOC HD	4				
15	1	184-016VR	ﾎｳｹｲSW 16	WASHER;SPRING	4				

https://truckmanualshub.com/

新JIS（山積）表示 0.9m³

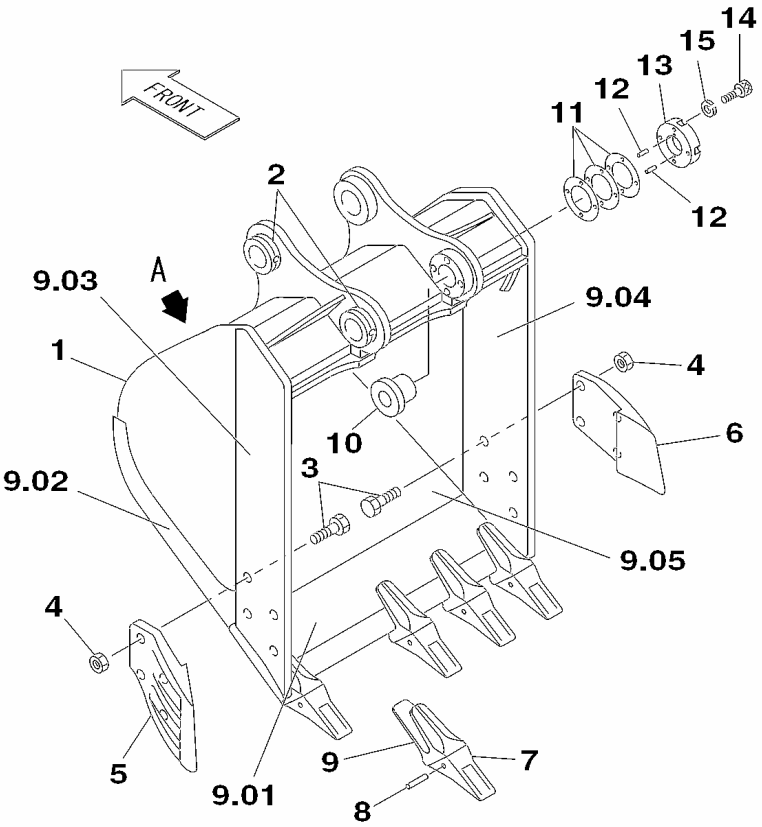

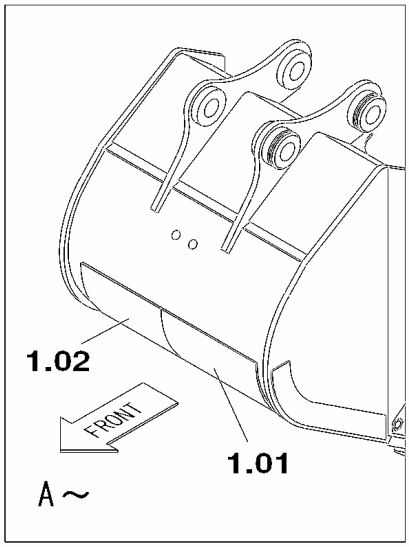

KG1RV468-0

https://truckmanualshub.com/

210A5 2195－

符号 ITEM	構成 COMPO	部品番号 PART NO.	部品名	PART NAME	個数 Q'TY	ｲﾝﾅｰ	適用号機 SERIAL_NO.	互換 ICA	代替部品 REPLACEABLE PART
1	1A	KRV20750	ﾊﾞｹｯﾄ;ﾊﾞｯｸﾎｰ (0.90M3	BUCKET;BACK-HOE	1				
1.01	2	KRV25600	ﾌﾟﾚｰﾄ (ﾎｷｮｳ L)	PLATE	1				
1.02	2	KRV25610	ﾌﾟﾚｰﾄ (ﾎｷｮｳ R)	PLATE	1				
2	2	KRV1160	ｶﾗｰ (ﾜﾝﾀｯﾁ ｺﾃｲ)	COLLAR	2				
3	2	102R024Y065N	ｺｳﾘｷB M24X 65	BOLT;HIGH STRENGTH	8				
4	2	162R024VN	ｺｳﾘｷN M24	NUT;HIGH STRENGTH	8				
5	2	KRV1169	ｶｯﾀ;ｻｲﾄﾞ (ﾋﾀﾞﾘ)	CUTTER;SIDE	1				
6	2	KRV1168	ｶｯﾀ;ｻｲﾄﾞ (ﾐｷﾞ)	CUTTER;SIDE	1				
7	2	KRV3716	ﾎﾟｲﾝﾄ;ﾂｰｽ	POINT;TOOTH	5				
8	2	KRV3718	ﾋﾟﾝ;ﾛｯｷﾝｸﾞ	PIN;LOCKING	5				
9	2	KRV3717	ｱﾀﾞﾌﾟﾀ;ﾂｰｽ	ADPT;TOOTH	5				
9.01	2	KRV25820	ﾘｯﾌﾟ;ﾊﾞｹｯﾄ (ﾌﾛﾝﾄ)	LIP;BUCKET	1				
9.02	2	KRV25520	ﾌﾟﾚｰﾄ (ﾎｷｮｳ)	PLATE	2				
9.03	2	KRV25800	ﾘｯﾌﾟ;ﾊﾞｹｯﾄ (ｻｲﾄﾞ L)	LIP;BUCKET	1				
9.04	2	KRV25810	ﾘｯﾌﾟ;ﾊﾞｹｯﾄ (ｻｲﾄﾞ L)	LIP;BUCKET	1				
9.05	2	KRV25630	ﾌﾟﾚｰﾄ (ｿｺｲﾀ)	PLATE	1				
10	1	KRV2416	ﾌﾞｼｭ;ｽﾁｰﾙ	BUSH;STEEL	1				
11	1	KRV1159	ｼﾑ;ﾌﾟﾚｰﾄ	SHIM;PLATE	6		210A5 -2388		
11	1	KRV1159	ｼﾑ;ﾌﾟﾚｰﾄ	SHIM;PLATE	7		210A5 2389-		
12	1	335B120T032	ﾍｲｺﾋﾟﾝ 12X 32	PIN	2				
13	1	KRV1518	ﾌﾟﾚｰﾄ	PLATE	1				
14	1	108R016Y040R	ﾛｯｶｸｱﾅB M16X 40	BOLT;HEX SOC HD	4				
15	1	184-016VR	ﾎｳｹｲSW 16	WASHER;SPRING	4				

https://truckmanualshub.com/

1 [2 ~ 13]
6 [7 ~ 13]

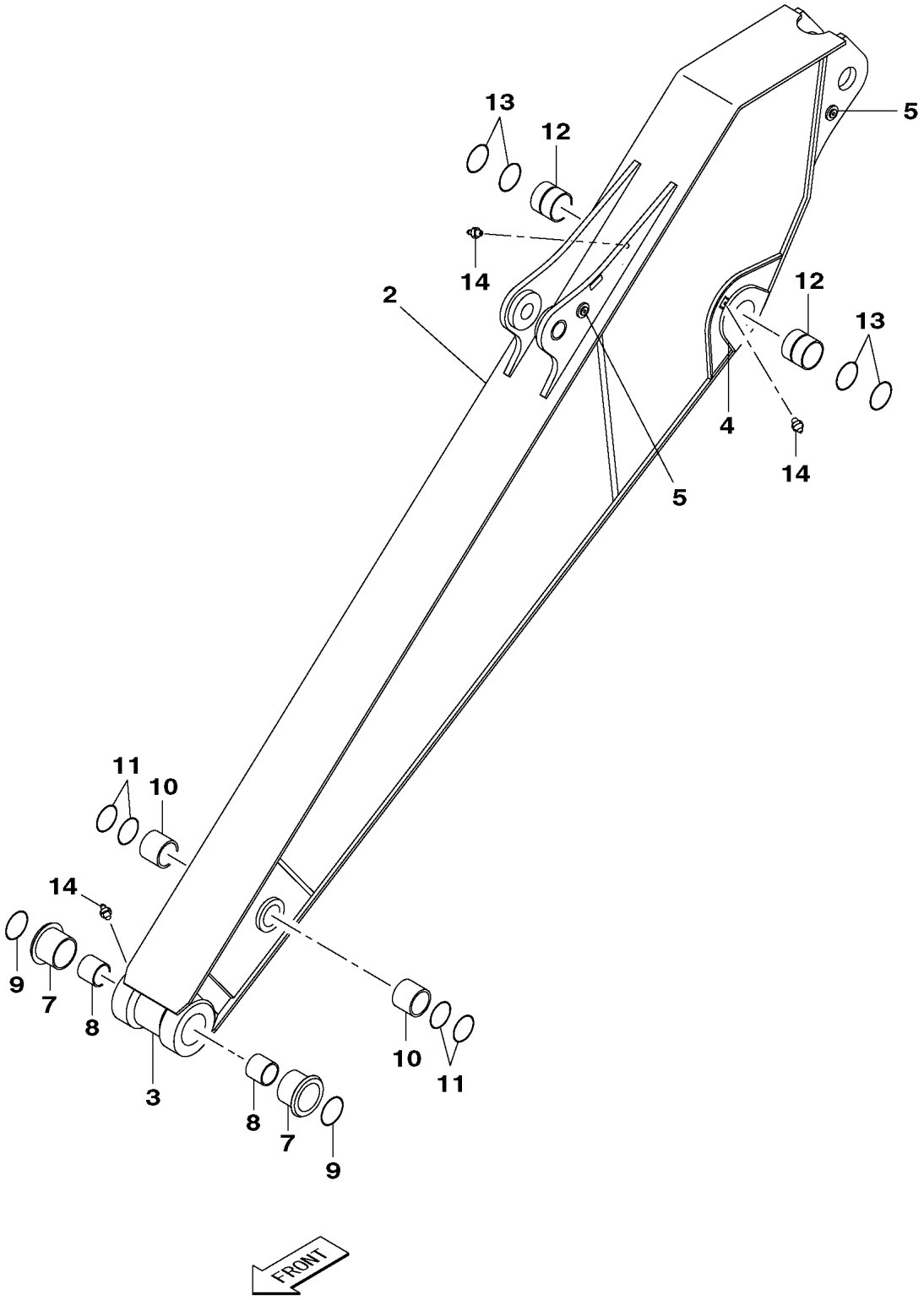

KG1RV445-00
KRV19400-EZ

https://truckmanualshub.com/

210A5 1101－ 210L5 1101－

符号 ITEM	構成 COMPO	部品番号 PART NO.	部品名	PART NAME	個数 Q'TY	ｲﾝﾅｰ	適用号機 SERIAL_NO.	互換 ICA	代替部品 REPLACEABLE PART
1	1	KRV20190	ｱｰﾑ;ﾋｮｳｼﾞｭﾝ (EM3)	ARM;STD	1		210A5 -1438 210L5 -1268	=	KRV20191
1	1	KRV20191	ｱｰﾑ;ﾋｮｳｼﾞｭﾝ (EM3)	ARM;STD	1		210A5 1439-1779 210L5 1269-1392	=	KRV20190
1	1	KRV20190	ｱｰﾑ;ﾋｮｳｼﾞｭﾝ (EM3)	ARM;STD	1		210A5 1780-1943 210L5 1393-1436	=	KRV20192
1	1A	KRV20192	ｱｰﾑ;ﾋｮｳｼﾞｭﾝ (EM3)	ARM;STD	1		210A5 1944- 210L5 1437-		
2	2A	KRV18500	ｱｰﾑ;ﾋｮｳｼﾞｭﾝ	ARM;STD	1				
3	3	KRV11100	ﾎﾞｽ;ﾁｭｳｺｳ (ｱｰﾑﾄｯﾌﾟ)	BOSS;CASTED	1				
4	3	KRV11090	ﾎﾞｽ;ﾀﾝｿﾞｳ (ｱｰﾑﾌｰﾄ)	BOSS;FORGED	2				
5	3	KRV11490	ｻﾞ L=24	BAR;BASE	2				
6	2A	KRV21080	ｱｰﾑ;ﾊﾞｯｸﾎｰ (ﾌﾞｼｭｳﾁｺﾐ	ARM;BACK-HOE	1				
7	3	KRV2408	ﾌﾞｼｭ;ｽﾁｰﾙ	BUSH;STEEL	2				
8	3	KRV10910	ﾌﾞｼｭ;ｽﾁｰﾙ (PEL BH)	BUSH;STEEL	2				
9	3	KHV0101	ｼｰﾙ;ﾀﾞｽﾄ	SEAL;DUST	2				
10	3	KRV2396	ﾌﾞｼｭ;ｵｲﾙﾚｽ	BUSH;OILLESS	2				
11	3	KHV0100	ｼｰﾙ;ﾀﾞｽﾄ	SEAL;DUST	4				
12	3	KRV2397	ﾌﾞｼｭ;ｵｲﾙﾚｽ	BUSH;OILLESS	2				
13	3	KHV0103	ｼｰﾙ;ﾀﾞｽﾄ	SEAL;DUST	4				
14	1	M01X0812	ﾆｯﾌﾟﾙ;ｸﾞﾘｽ (A-R1/8)	NIPPLE;GREASE	4				

https://truckmanualshub.com/

1 [2 ~ 16]
6 [7 ~ 13]
14 [15 , 16]

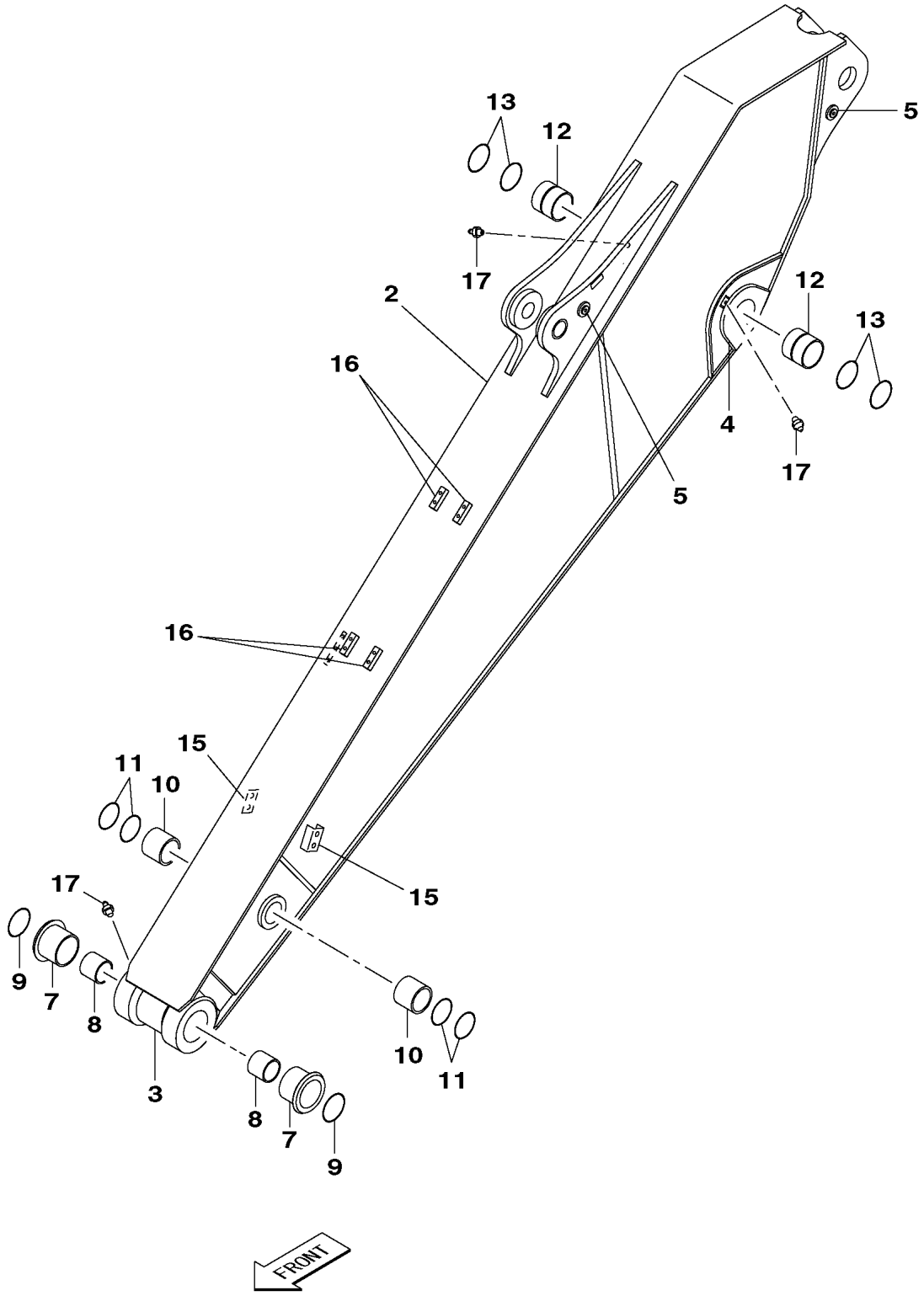

KG1RV446-00
KRV19400-EZ

https://truckmanualshub.com/

210A5 1101－ 210L5 1101－

符号 ITEM	構成 COMPO	部品番号 PART NO.	部品名	PART NAME	個数 Q'TY	ｲﾝﾅｰ	適用号機 SERIAL_NO.	互換 ICA	代替部品 REPLACEABLE PART
1	1	KRV20200	ｱｰﾑ;ﾋｮｳｼﾞｭﾝ (EM3 01)	ARM;STD	1		210A5 NOT USED 210L5 NOT USED		
1	1	KRV23620	ｱｰﾑ;ﾋｮｳｼﾞｭﾝ (EM3 01)	ARM;STD	1		210A5 -1438 210L5 -1268	=	KRV23621
1	1	KRV23621	ｱｰﾑ;ﾋｮｳｼﾞｭﾝ (EM3 01)	ARM;STD	1		210A5 1439-1779 210L5 1269-1392	=	KRV23620
1	1	KRV23620	ｱｰﾑ;ﾋｮｳｼﾞｭﾝ (EM3 01)	ARM;STD	1		210A5 1780-1943 210L5 1393-1436	=	KRV23622
1	1A	KRV23622	ｱｰﾑ;ﾋｮｳｼﾞｭﾝ (EM3 01)	ARM;STD	1		210A5 1944- 210L5 1437-		
2	2A	KRV18500	ｱｰﾑ;ﾋｮｳｼﾞｭﾝ	ARM;STD	1				
3	3	KRV11100	ﾎﾞｽ;ﾁｭｳｺｳ (ｱｰﾑﾄｯﾌﾟ)	BOSS;CASTED	1				
4	3	KRV11090	ﾎﾞｽ;ﾀﾝｿﾞｳ (ｱｰﾑﾌｰﾄ)	BOSS;FORGED	2				
5	3	KRV11490	ｻﾞ L=24	BAR;BASE	2				
6	2A	KRV21080	ｱｰﾑ;ﾊﾞｯｸﾎｰ (ﾌﾞｼｭﾁｺﾐ	ARM;BACK-HOE	1				
7	3	KRV2408	ﾌﾞｼｭ;ｽﾁｰﾙ	BUSH;STEEL	2				
8	3	KRV10910	ﾌﾞｼｭ;ｽﾁｰﾙ (PEL BH)	BUSH;STEEL	2				
9	3	KHV0101	ｼｰﾙ;ﾀﾞｽﾄ	SEAL;DUST	2				
10	3	KRV2396	ﾌﾞｼｭ;ｵｲﾙﾚｽ	BUSH;OILLESS	2				
11	3	KHV0100	ｼｰﾙ;ﾀﾞｽﾄ	SEAL;DUST	4				
12	3	KRV2397	ﾌﾞｼｭ;ｵｲﾙﾚｽ	BUSH;OILLESS	2				
13	3	KHV0103	ｼｰﾙ;ﾀﾞｽﾄ	SEAL;DUST	4				
14	2	KRV18970	ｱｰﾑ/ﾂｲｶｺｳｽﾞ (01)	ARM ADDITION	1		210A5 NOT USED 210L5 NOT USED		
14	2A	KRV23220	ｱｰﾑ/ﾂｲｶｺｳｽﾞ (01)	ARM ADDITION	1				
15	3	KRV1282	ｻﾞ	BAR;BASE	2		210A5 NOT USED 210L5 NOT USED		
15	3	KHV10950	ｻﾞ	BAR;BASE	2				
16	3	KHV10530	ｻﾞ L=20	BAR;BASE	4		210A5 NOT USED 210L5 NOT USED		
16	3	KHV10540	ｻﾞ L=30	BAR;BASE	4				
17	1	M01X0812	ﾆｯﾌﾟﾙ;ｸﾞﾘｽ (A-R1/8)	NIPPLE;GREASE	4				

https://truckmanualshub.com/

1 [2 ~ 16]
6 [7 ~ 13]
14 [15 , 16]

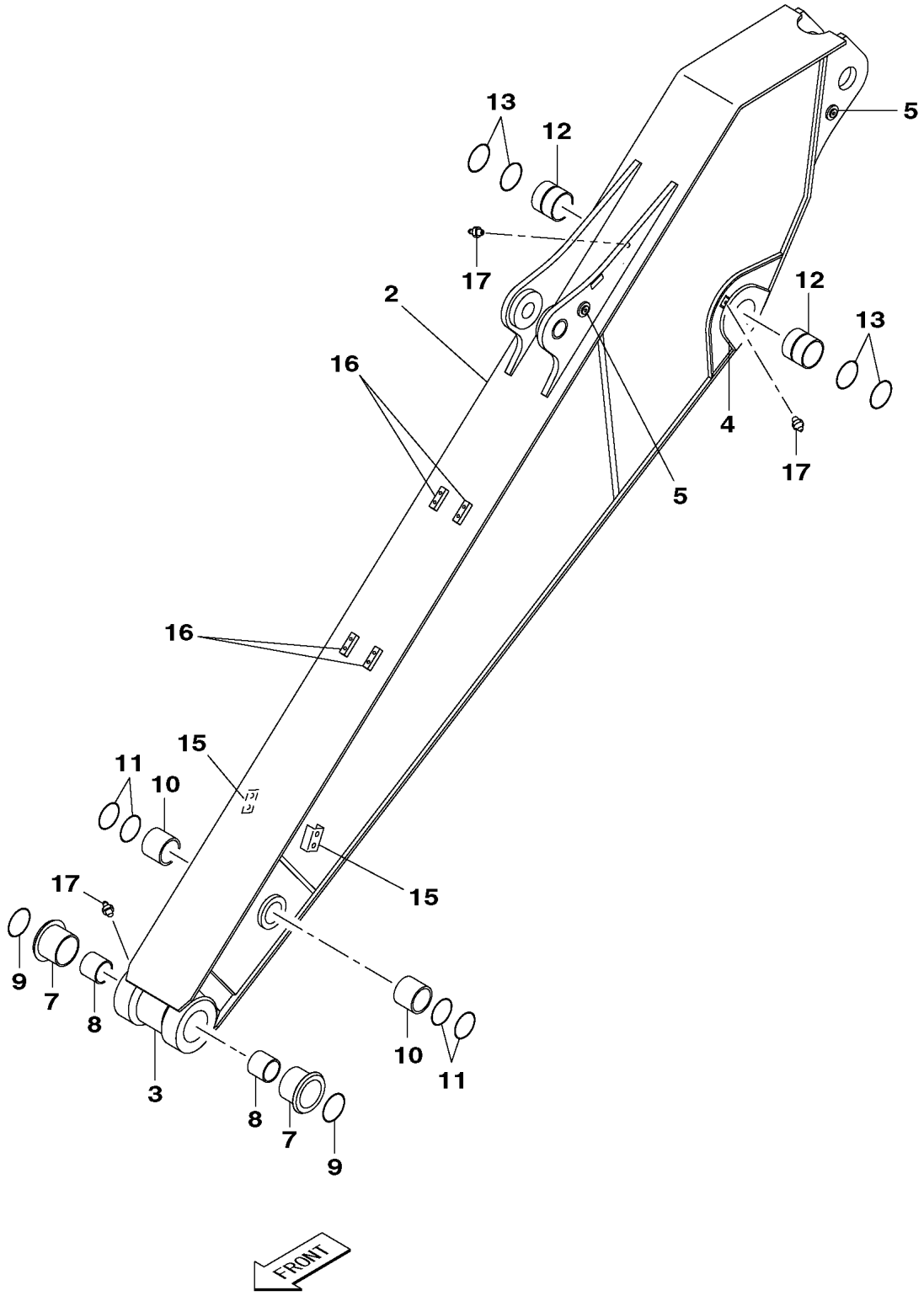

KG1RV471-00
KRV19400-EZ

https://truckmanualshub.com/

210A5 1101－ 210L5 1101－

符号 ITEM	構成 COMPO	部品番号 PART NO.	部品名	PART NAME	個数 Q'TY	ｲﾝﾅｰ	適用号機 SERIAL_NO.	互換 ICA	代替部品 REPLACEABLE PART
1	1	KRV20580	ｱｰﾑ;ﾋｮｳｼﾞｭﾝ (HD EM3	ARM;STD	1		210A5 NOT USED 210L5 NOT USED		
1	1	KRV23660	ｱｰﾑ;ﾋｮｳｼﾞｭﾝ (HD EM3	ARM;STD	1		210A5 -1404 210L5 -1254		
1	1	KRV23661	ｱｰﾑ;ﾋｮｳｼﾞｭﾝ (HD EM3	ARM;STD	1		210A5 1405-1943 210L5 1255-1436	=	KRV23662
1	1A	KRV23662	ｱｰﾑ;ﾋｮｳｼﾞｭﾝ (HD EM3	ARM;STD	1		210A5 1944- 210L5 1437-		
2	2	KRV21090	ｱｰﾑ;ﾋｮｳｼﾞｭﾝ (2.9M HD	ARM;STD	1		210A5 -1943 210L5 -1436		
2	2A	KRV21091	ｱｰﾑ;ﾋｮｳｼﾞｭﾝ (2.94M H	ARM;STD	1		210A5 1944- 210L5 1437-		
3	3	KRV11100	ﾎﾞｽ;ﾁｭｳｺｳ (ｱｰﾑﾄｯﾌﾟ)	BOSS;CASTED	1				
4	3	KRV11090	ﾎﾞｽ;ﾀﾝｿﾞｳ (ｱｰﾑﾌｰﾄ)	BOSS;FORGED	2		210A5 -1943 210L5 -1436		
4	3	KRV11091	ﾎﾞｽ;ﾀﾝｿﾞｳ (ｱｰﾑﾌｰﾄ)	BOSS;FORGED	2		210A5 1944- 210L5 1437-		
5	3	KRV11490	ｻﾞ L=24	BAR;BASE	2				
6	2A	KRV21080	ｱｰﾑ;ﾊﾞｯｸﾎｰ (ﾌﾞｼｭｳﾁｺﾐ	ARM;BACK-HOE	1				
7	3	KRV2408	ﾌﾞｼｭ;ｽﾁｰﾙ	BUSH;STEEL	2				
8	3	KRV10910	ﾌﾞｼｭ;ｽﾁｰﾙ (PEL BH)	BUSH;STEEL	2				
9	3	KHV0101	ｼｰﾙ;ﾀﾞｽﾄ	SEAL;DUST	2				
10	3	KRV2396	ﾌﾞｼｭ;ｵｲﾙﾚｽ	BUSH;OILLESS	2				
11	3	KHV0100	ｼｰﾙ;ﾀﾞｽﾄ	SEAL;DUST	4				
12	3	KRV2397	ﾌﾞｼｭ;ｵｲﾙﾚｽ	BUSH;OILLESS	2				
13	3	KHV0103	ｼｰﾙ;ﾀﾞｽﾄ	SEAL;DUST	4				
14	2	KRV21160	ｱｰﾑ/ﾂｲｶｺｳｽﾞ (HD 01)	ARM ADDITION	1		210A5 NOT USED 210L5 NOT USED		
14	2	KRV23290	ｱｰﾑ/ﾂｲｶｺｳｽﾞ (HD 01)	ARM ADDITION	1		210A5 -1404 210L5 -1254		
14	2A	KRV23220	ｱｰﾑ/ﾂｲｶｺｳｽﾞ (01)	ARM ADDITION	1		210A5 1405- 210L5 1255-		
15	3	KRV1282	ｻﾞ	BAR;BASE	2		210A5 NOT USED 210L5 NOT USED		
15	3	KHV10950	ｻﾞ	BAR;BASE	2				
16	3	KHV10530	ｻﾞ L=20	BAR;BASE	4				
17	1	M01X0812	ﾆｯﾌﾟﾙ;ｸﾞﾘｽ (A-R1/8)	NIPPLE;GREASE	3				

https://truckmanualshub.com/

1 [2 ~ 19]
6 [7 ~ 13]
14 [15 , 16]
17 [18 , 19]

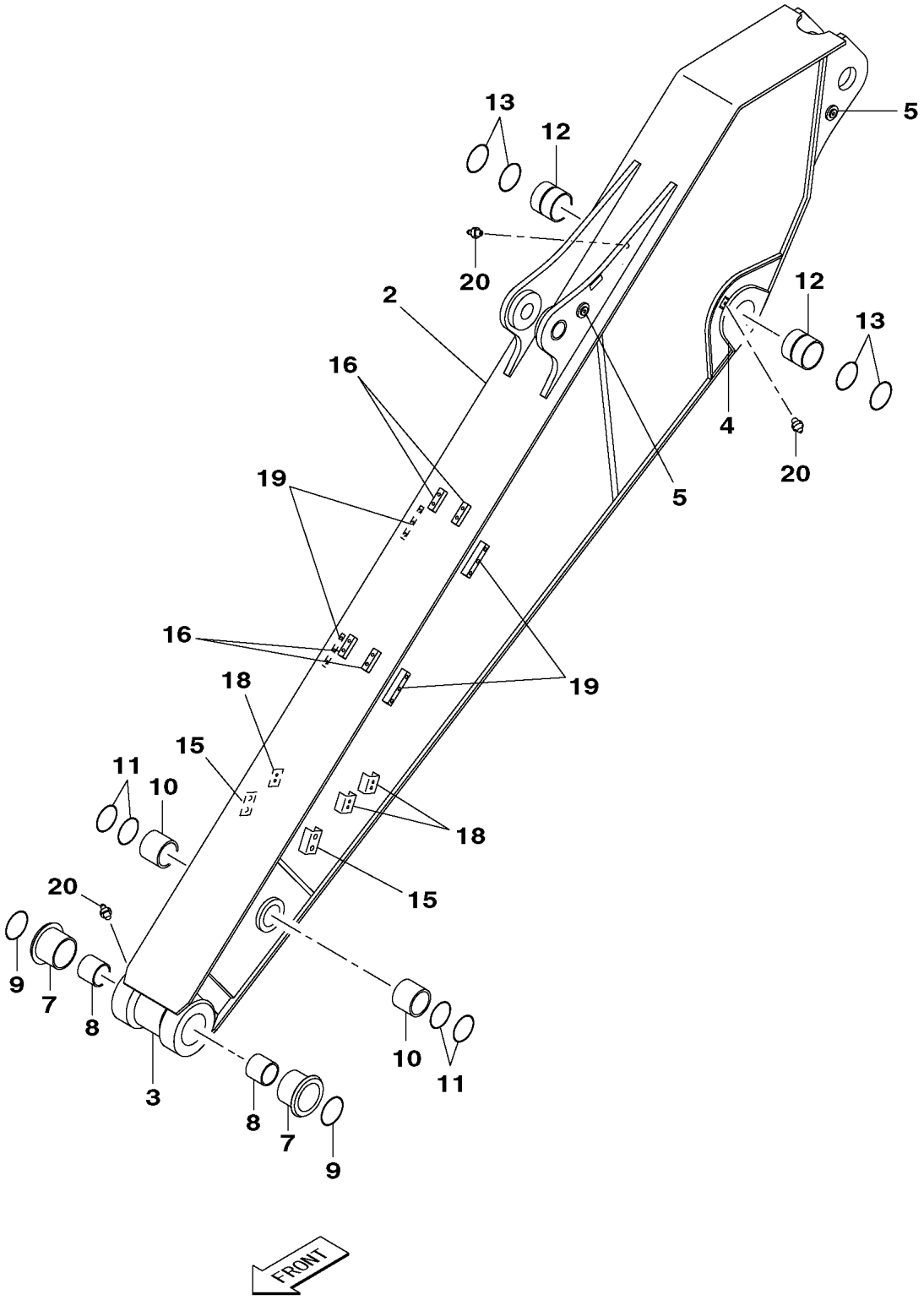

KG1RV472-00
KRV19400-EZ

https://truckmanualshub.com/

210A5 1101－ 210L5 1101－

符号 ITEM	構成 COMPO	部品番号 PART NO.	部品名	PART NAME	個数 Q'TY	ｲﾝﾅｰ	適用号機 SERIAL_NO.	互換 ICA	代替部品 REPLACEABLE PART
1	1	KRV20590	ｱｰﾑ;ﾋｮｳｼﾞｭﾝ (HD EM3	ARM;STD	1		210A5 NOT USED 210L5 NOT USED		
1	1	KRV23670	ｱｰﾑ;ﾋｮｳｼﾞｭﾝ (HD EM3	ARM;STD	1		210A5 -1404 210L5 -1254		
1	1	KRV23671	ｱｰﾑ;ﾋｮｳｼﾞｭﾝ (HD EM3	ARM;STD	1		210A5 1405-1943 210L5 1255-1436	=	KRV23672
1	1A	KRV23672	ｱｰﾑ;ﾋｮｳｼﾞｭﾝ (HD EM3	ARM;STD	1		210A5 1944- 210L5 1437-		
2	2	KRV21090	ｱｰﾑ;ﾋｮｳｼﾞｭﾝ (2.9M HD	ARM;STD	1		210A5 -1943 210L5 -1436		
2	2A	KRV21091	ｱｰﾑ;ﾋｮｳｼﾞｭﾝ (2.94M H	ARM;STD	1		210A5 1944- 210L5 1437-		
3	3	KRV11100	ﾎﾞｽ;ﾁｭｳｺｳ (ｱｰﾑﾄｯﾌﾟ)	BOSS;CASTED	1				
4	3	KRV11090	ﾎﾞｽ;ﾀﾝｿﾞｳ (ｱｰﾑﾌｰﾄ)	BOSS;FORGED	2		210A5 -1943 210L5 -1436		
4	3	KRV11091	ﾎﾞｽ;ﾀﾝｿﾞｳ (ｱｰﾑﾌｰﾄ)	BOSS;FORGED	2		210A5 1944- 210L5 1437-		
5	3	KRV11490	ｻﾞ L=24	BAR;BASE	2				
6	2A	KRV21080	ｱｰﾑ;ﾊﾞｯｸﾎｰ (ﾌﾞｼｭｳﾁｺﾐ	ARM;BACK-HOE	1				
7	3	KRV2408	ﾌﾞｼｭ;ｽﾁｰﾙ	BUSH;STEEL	2				
8	3	KRV10910	ﾌﾞｼｭ;ｽﾁｰﾙ (PEL BH)	BUSH;STEEL	2				
9	3	KHV0101	ｼｰﾙ;ﾀﾞｽﾄ	SEAL;DUST	2				
10	3	KRV2396	ﾌﾞｼｭ;ｵｲﾙﾚｽ	BUSH;OILLESS	2				
11	3	KHV0100	ｼｰﾙ;ﾀﾞｽﾄ	SEAL;DUST	4				
12	3	KRV2397	ﾌﾞｼｭ;ｵｲﾙﾚｽ	BUSH;OILLESS	2				
13	3	KHV0103	ｼｰﾙ;ﾀﾞｽﾄ	SEAL;DUST	4				
14	2	KRV21160	ｱｰﾑ/ﾂｲｶｺｳｽﾞ (HD 01)	ARM ADDITION	1		210A5 NOT USED 210L5 NOT USED		
14	2	KRV23290	ｱｰﾑ/ﾂｲｶｺｳｽﾞ (HD 01)	ARM ADDITION	1		210A5 -1404 210L5 -1254		
14	2A	KRV23220	ｱｰﾑ/ﾂｲｶｺｳｽﾞ (01)	ARM ADDITION	1		210A5 1405- 210L5 1255-		
15	3	KRV1282	ｻﾞ	BAR;BASE	2		210A5 NOT USED 210L5 NOT USED		
15	3	KHV10950	ｻﾞ	BAR;BASE	2				
16	3	KHV10530	ｻﾞ L=20	BAR;BASE	4		210A5 NOT USED 210L5 NOT USED		
16	3	KHV10540	ｻﾞ L=30	BAR;BASE	4				
17	2	KRV18980	ｱｰﾑ/ﾂｲｶｺｳｽﾞ (02)	ARM ADDITION	1		210A5 NOT USED 210L5 NOT USED		
17	2A	KRV23230	ｱｰﾑ/ﾂｲｶｺｳｽﾞ (02)	ARM ADDITION	1				
18	3	KRV1958	ｻﾞ	BAR;BASE	3		210A5 NOT USED 210L5 NOT USED		
18	3	KHV10940	ｻﾞ	BAR;BASE	3				
19	3	KHV10550	ｻﾞ L=25	BAR;BASE	4		210A5 NOT USED 210L5 NOT USED		
19	3	KHV10960	ｻﾞ L=30	BAR;BASE	4				
20	1	M01X0812	ﾆｯﾌﾟﾙ;ｸﾞﾘｽ (A-R1/8)	NIPPLE;GREASE	3				

https://truckmanualshub.com/

1 [2 ~ 15]
9 [10 ~ 15]

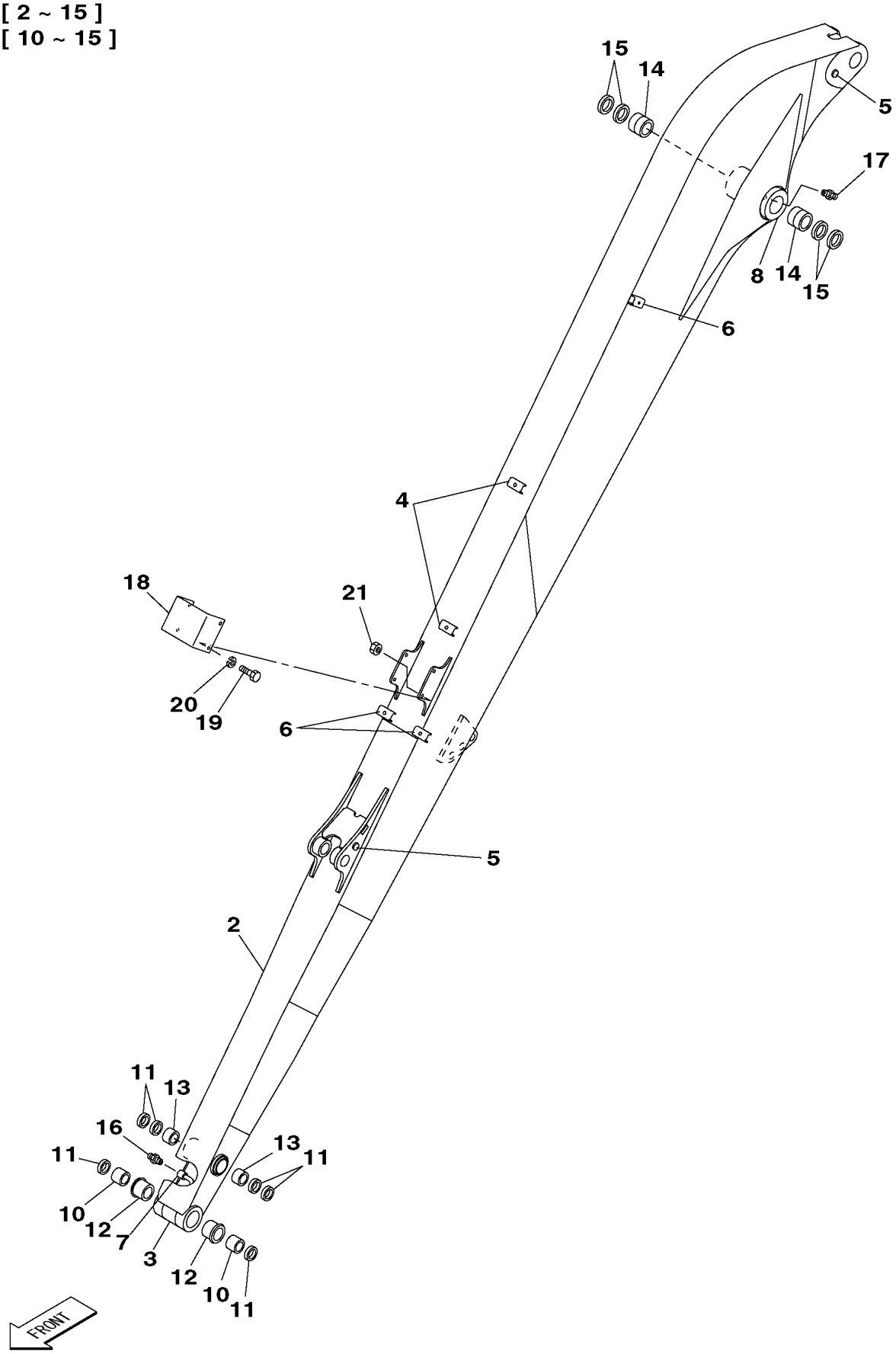

KG1RV581-0
KRV24710-EZ
KRV24720-EZ

https://truckmanualshub.com/

210L5 1101－

符号 ITEM	構成 COMPO	部品番号 PART NO.	部品名	PART NAME	個数 Q'TY	ｲﾝﾅｰ	適用号機 SERIAL_NO.	互換 ICA	代替部品 REPLACEABLE PART
1	1A	KRV24530	ｱｰﾑ;ﾁｮｳﾛﾝｸﾞ (EM3)	ARM;SPL-LONG	1		210L5 -1235		
2	2A	KRV24160	ｱｰﾑ;ﾁｮｳﾛﾝｸﾞ (6.4M)	ARM;SPL-LONG	1		210L5 -1235		
3	3	KRV2977	ﾎﾞｽ (ｱｰﾑﾄｯﾌﾟ)	BOSS	2		210L5 -1235		
4	3	KTV0700	ﾊﾞｰ	BAR;BASE	2		210L5 -1235		
5	3	KRV11490	ﾊﾞｰ L=24	BAR;BASE	2		210L5 -1235		
6	3	KLV0189	ﾊﾞｰ	BAR;BASE	4		210L5 -1235		
7	3	KRV0514	ﾌｨｯﾃｨﾝｸﾞ;ﾀｯﾌﾟ	FTG;TAP	1		210L5 -1235		
8	3	KRV2973	ﾎﾞｽ (ｱｰﾑﾌｰﾄ)	BOSS	2		210L5 -1235		
9	2A	KRV24510	ｱｰﾑ;ﾊﾞｯｸﾎｰ (EM3ﾌﾞｼｭｳ	ARM;BACK-HOE	1		210L5 -1235		
10	3	KNV15910	ﾌﾞｼｭ;ｽﾁｰﾙ (PEL BH2)	BUSH;STEEL	2		210L5 -1235		
11	3	KHV0098	ｼｰﾙ;ﾀﾞｽﾄ	SEAL;DUST	6		210L5 -1235		
12	3	KNV1130	ﾌﾞｼｭ;ｽﾁｰﾙ	BUSH;STEEL	2		210L5 -1235		
13	3	KNV1138	ﾌﾞｼｭ;ｵｲﾙﾚｽ	BUSH;OILLESS	2		210L5 -1235		
14	3	KRV2397	ﾌﾞｼｭ;ｵｲﾙﾚｽ	BUSH;OILLESS	2		210L5 -1235		
15	3	KHV0103	ｼｰﾙ;ﾀﾞｽﾄ	SEAL;DUST	4		210L5 -1235		
1	1A	KRV25440	ｱｰﾑ;ﾁｮｳﾛﾝｸﾞ (EM3)	ARM;SPL-LONG	1		210L5 1236-		
2	2A	KRV25410	ｱｰﾑ;ﾁｮｳﾛﾝｸﾞ (6.4M)	ARM;SPL-LONG	1		210L5 1236-		
3	3	KRV2977	ﾎﾞｽ (ｱｰﾑﾄｯﾌﾟ)	BOSS	2		210L5 1236-		
4	3	KTV0700	ﾊﾞｰ	BAR;BASE	2		210L5 1236-		
5	3	KRV11490	ﾊﾞｰ L=24	BAR;BASE	2		210L5 1236-		
6	3	KLV0189	ﾊﾞｰ	BAR;BASE	4		210L5 1236-		
7	3	KRV0514	ﾌｨｯﾃｨﾝｸﾞ;ﾀｯﾌﾟ	FTG;TAP	1		210L5 1236-		
8	3	KRV2973	ﾎﾞｽ (ｱｰﾑﾌｰﾄ)	BOSS	2		210L5 1236-		
9	2A	KRV24510	ｱｰﾑ;ﾊﾞｯｸﾎｰ (EM3ﾌﾞｼｭｳ	ARM;BACK-HOE	1		210L5 1236-		
10	3	KNV15910	ﾌﾞｼｭ;ｽﾁｰﾙ (PEL BH2)	BUSH;STEEL	2		210L5 1236-		
11	3	KHV0098	ｼｰﾙ;ﾀﾞｽﾄ	SEAL;DUST	6		210L5 1236-		
12	3	KNV1130	ﾌﾞｼｭ;ｽﾁｰﾙ	BUSH;STEEL	2		210L5 1236-		
13	3	KNV1138	ﾌﾞｼｭ;ｵｲﾙﾚｽ	BUSH;OILLESS	2		210L5 1236-		
14	3	KRV2397	ﾌﾞｼｭ;ｵｲﾙﾚｽ	BUSH;OILLESS	2		210L5 1236-		
15	3	KHV0103	ｼｰﾙ;ﾀﾞｽﾄ	SEAL;DUST	4		210L5 1236-		
16	1	M01X0812	ﾆｯﾌﾟﾙ;ｸﾞﾘｽ (A-R1/8)	NIPPLE;GREASE	1				
17	1	M01X0816	ﾆｯﾌﾟﾙ;ｸﾞﾘｽ (B-R1/8)	G-NIPPLE	1				
18	1	KRV1733	ｶﾊﾞｰ	COVER	1				
19	1	102R016Y050R	ｺｳﾘｷB M16X 50	BOLT;HIGH STRENGTH	4				
20	1	KHN0297	ｺｳﾘｷW 16 (ﾒｯｷ)	WASHER;HIGH STRENGTH	4				
21	1	162R016VR	ｺｳﾘｷN M16	NUT;HIGH STRENGTH	4				

https://truckmanualshub.com/

1 [2 ~ 21]
9 [10 ~ 15]
16 [17 ~ 21]

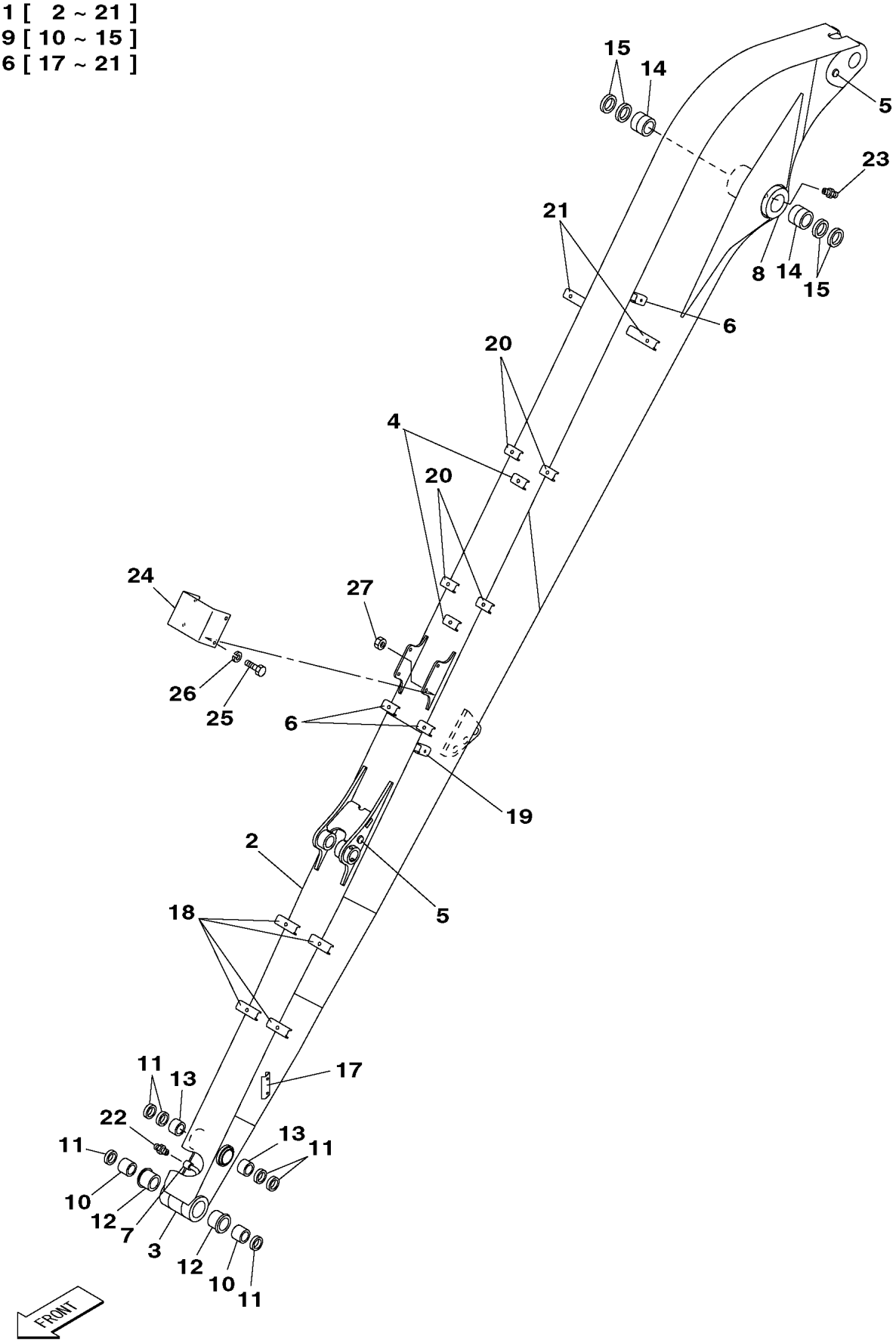

KG1RV582-0
KRV24710-EZ
KRV24720-EZ

https://truckmanualshub.com/

210L5 1101－

符号 ITEM	構成 COMPO	部品番号 PART NO.	部品名	PART NAME	個数 Q'TY	ｲﾝﾅｰ	適用号機 SERIAL_NO.	互換 ICA	代替部品 REPLACEABLE PART
1	1A	KRV24210	ｱｰﾑ;ﾁｮｳﾛﾝｸﾞ (EM3 01)	ARM;SPL-LONG	1		210L5 -1235		
2	2A	KRV24160	ｱｰﾑ;ﾁｮｳﾛﾝｸﾞ (6.4M)	ARM;SPL-LONG	1		210L5 -1235		
3	3	KRV2977	ﾎﾞｽ (ｱｰﾑﾄｯﾌﾟ)	BOSS	2		210L5 -1235		
4	3	KTV0700	ｻﾞ	BAR;BASE	2		210L5 -1235		
5	3	KRV11490	ｻﾞ L=24	BAR;BASE	2		210L5 -1235		
6	3	KLV0189	ｻﾞ	BAR;BASE	4		210L5 -1235		
7	3	KRV0514	ﾌｲｯﾃｲﾝｸﾞ;ﾀｯﾌﾟ	FTG;TAP	1		210L5 -1235		
8	3	KRV2973	ﾎﾞｽ (ｱｰﾑﾌｰﾄ)	BOSS	2		210L5 -1235		
9	2A	KRV24510	ｱｰﾑ;ﾊﾞｯｸﾎｰ (EM3ﾌﾞｼｭｳ	ARM;BACK-HOE	1		210L5 -1235		
10	3	KNV15910	ﾌﾞｼｭ;ｽﾁｰﾙ (PEL BH2)	BUSH;STEEL	2		210L5 -1235		
11	3	KHV0098	ｼｰﾙ;ﾀﾞｽﾄ	SEAL;DUST	6		210L5 -1235		
12	3	KNV1130	ﾌﾞｼｭ;ｽﾁｰﾙ	BUSH;STEEL	2		210L5 -1235		
13	3	KNV1138	ﾌﾞｼｭ;ｵｲﾙﾚｽ	BUSH;OILLESS	2		210L5 -1235		
14	3	KRV2397	ﾌﾞｼｭ;ｵｲﾙﾚｽ	BUSH;OILLESS	2		210L5 -1235		
15	3	KHV0103	ｼｰﾙ;ﾀﾞｽﾄ	SEAL;DUST	4		210L5 -1235		
16	2A	KRV24220	ｱｰﾑ/ﾂｲｶｺｳｽﾞ (01)	ARM ADDITION	1		210L5 -1235		
17	3	KHV10950	ｻﾞ	BAR;BASE	2		210L5 -1235		
18	3	KSV1157	ｻﾞ	BAR;BASE	4		210L5 -1235		
19	3	KRV1646	ｻﾞ	BAR;BASE	2		210L5 -1235		
20	3	KTV0700	ｻﾞ	BAR;BASE	6		210L5 -1235		
21	3	KBV16170	ｻﾞ	BAR;BASE	2		210L5 -1235		
1	1A	KRV25430	ｱｰﾑ;ﾁｮｳﾛﾝｸﾞ (EM3 01)	ARM;SPL-LONG	1		210L5 1236-		
2	2A	KRV25410	ｱｰﾑ;ﾁｮｳﾛﾝｸﾞ (6.4M)	ARM;SPL-LONG	1		210L5 1236-		
3	3	KRV2977	ﾎﾞｽ (ｱｰﾑﾄｯﾌﾟ)	BOSS	2		210L5 1236-		
4	3	KTV0700	ｻﾞ	BAR;BASE	2		210L5 1236-		
5	3	KRV11490	ｻﾞ L=24	BAR;BASE	2		210L5 1236-		
6	3	KLV0189	ｻﾞ	BAR;BASE	4		210L5 1236-		
7	3	KRV0514	ﾌｲｯﾃｲﾝｸﾞ;ﾀｯﾌﾟ	FTG;TAP	1		210L5 1236-		
8	3	KRV2973	ﾎﾞｽ (ｱｰﾑﾌｰﾄ)	BOSS	2		210L5 1236-		
9	2A	KRV24510	ｱｰﾑ;ﾊﾞｯｸﾎｰ (EM3ﾌﾞｼｭｳ	ARM;BACK-HOE	1		210L5 1236-		
10	3	KNV15910	ﾌﾞｼｭ;ｽﾁｰﾙ (PEL BH2)	BUSH;STEEL	2		210L5 1236-		
11	3	KHV0098	ｼｰﾙ;ﾀﾞｽﾄ	SEAL;DUST	6		210L5 1236-		
12	3	KNV1130	ﾌﾞｼｭ;ｽﾁｰﾙ	BUSH;STEEL	2		210L5 1236-		
13	3	KNV1138	ﾌﾞｼｭ;ｵｲﾙﾚｽ	BUSH;OILLESS	2		210L5 1236-		
14	3	KRV2397	ﾌﾞｼｭ;ｵｲﾙﾚｽ	BUSH;OILLESS	2		210L5 1236-		
15	3	KHV0103	ｼｰﾙ;ﾀﾞｽﾄ	SEAL;DUST	4		210L5 1236-		
16	2A	KRV24220	ｱｰﾑ/ﾂｲｶｺｳｽﾞ (01)	ARM ADDITION	1		210L5 1236-		
17	3	KHV10950	ｻﾞ	BAR;BASE	2		210L5 1236-		
18	3	KSV1157	ｻﾞ	BAR;BASE	4		210L5 1236-		
19	3	KRV1646	ｻﾞ	BAR;BASE	2		210L5 1236-		
20	3	KTV0700	ｻﾞ	BAR;BASE	6		210L5 1236-		
21	3	KBV16170	ｻﾞ	BAR;BASE	2		210L5 1236-		
22	1	M01X0812	ﾆｯﾌﾟﾙ;ｸﾞﾘｽ (A-R1/8)	NIPPLE;GREASE	1				
23	1	M01X0816	ﾆｯﾌﾟﾙ;ｸﾞﾘｽ (B-R1/8)	G-NIPPLE	1				
24	1	KRV1733	ｶﾊﾞｰ	COVER	1				
25	1	102R016Y050R	ｺｳﾘｷB M16X 50	BOLT;HIGH STRENGTH	4				
26	1	KHN0297	ｺｳﾘｷW 16 (ﾒｯｷ)	WASHER;HIGH STRENGTH	4				
27	1	162R016VR	ｺｳﾘｷN M16	NUT;HIGH STRENGTH	4				

https://truckmanualshub.com/

1 [2 ~ 16]
6 [7 ~ 13]
14 [15 , 16]

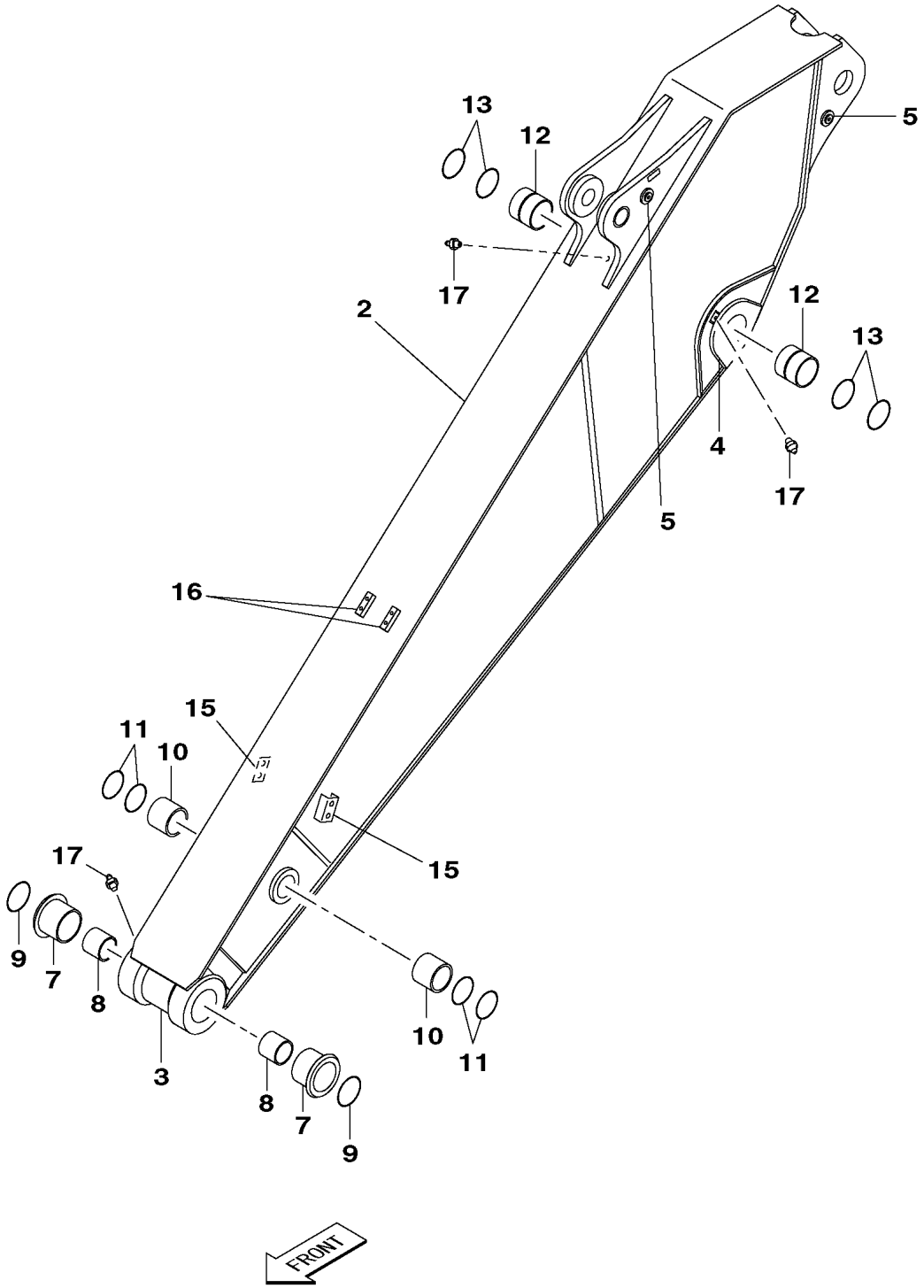

KG1RV477-00
KRV19400-EZ
KRV20400-CZ

https://truckmanualshub.com/

210A5 1101－ 210L5 1101－

符号 ITEM	構成 COMPO	部品番号 PART NO.	部品名	PART NAME	個数 Q'TY	ｲﾝﾅｰ	適用号機 SERIAL_NO.	互換 ICA	代替部品 REPLACEABLE PART
1	1	KRV20640	ｱｰﾑ;ｼｮｰﾄ (EM3 01)	ARM;SHORT	1		210A5 NOT USED 210L5 NOT USED		
1	1	KRV23700	ｱｰﾑ;ｼｮｰﾄ (EM3 01)	ARM;SHORT	1		210A5 -1943 210L5 -1436	=	KRV23701
1	1A	KRV23701	ｱｰﾑ;ｼｮｰﾄ (EM3 01)	ARM;SHORT	1		210A5 1944- 210L5 1437-		
2	2	KRV22070	ｱｰﾑ;ｼｮｰﾄ (2.4M)	ARM;SHORT	1		210A5 NOT USED 210L5 NOT USED 210A5 -1943 210L5 -1436		
2	2A	KRV22071	ｱｰﾑ;ｼｮｰﾄ (2.40M)	ARM;SHORT	1		210A5 1944- 210L5 1437-		
3	3	KRV11100	ﾎﾞｽ;ﾁｭｳｺｳ (ｱｰﾑﾄｯﾌﾟ)	BOSS;CASTED	1				
4	3	KRV11090	ﾎﾞｽ;ﾀﾝｿﾞｳ (ｱｰﾑﾌｰﾄ)	BOSS;FORGED	2		210A5 -1943 210L5 -1436		
4	3	KRV11091	ﾎﾞｽ;ﾀﾝｿﾞｳ (ｱｰﾑﾌｰﾄ)	BOSS;FORGED	2		210A5 1944- 210L5 1437-		
5	3	KRV11490	ｻﾞ L=24	BAR;BASE	2				
6	2A	KRV21080	ｱｰﾑ;ﾊﾞｯｸﾎｰ (ﾌﾞｼｭｳﾁｺﾐ	ARM;BACK-HOE	1				
7	3	KRV2408	ﾌﾞｼｭ;ｽﾁｰﾙ	BUSH;STEEL	2				
8	3	KRV10910	ﾌﾞｼｭ;ｽﾁｰﾙ (PEL BH)	BUSH;STEEL	2				
9	3	KHV0101	ｼｰﾙ;ﾀﾞｽﾄ	SEAL;DUST	2				
10	3	KRV2396	ﾌﾞｼｭ;ｵｲﾙﾚｽ	BUSH;OILLESS	2				
11	3	KHV0100	ｼｰﾙ;ﾀﾞｽﾄ	SEAL;DUST	4				
12	3	KRV2397	ﾌﾞｼｭ;ｵｲﾙﾚｽ	BUSH;OILLESS	2				
13	3	KHV0103	ｼｰﾙ;ﾀﾞｽﾄ	SEAL;DUST	4				
14	2	KRV20900	ｱｰﾑ/ﾂｲｶｺｳｽﾞ (SHORT O	ARM ADDITION	1		210A5 NOT USED 210L5 NOT USED		
14	2A	KRV23300	ｱｰﾑ/ﾂｲｶｺｳｽﾞ (SHORT O	ARM ADDITION	1				
15	3	KRV1282	ｻﾞ	BAR;BASE	2		210A5 NOT USED 210L5 NOT USED		
15	3	KHV10950	ｻﾞ	BAR;BASE	2				
16	3	KHV10530	ｻﾞ L=20	BAR;BASE	2		210A5 NOT USED 210L5 NOT USED		
16	3	KHV10540	ｻﾞ L=30	BAR;BASE	2				
17	1	M01X0812	ﾆｯﾌﾟﾙ;ｸﾞﾘｽ (A-R1/8)	NIPPLE;GREASE	3				

https://truckmanualshub.com/

1 [2 ~ 19]
6 [7 ~ 13]
14 [15 , 16]
17 [18 , 19]

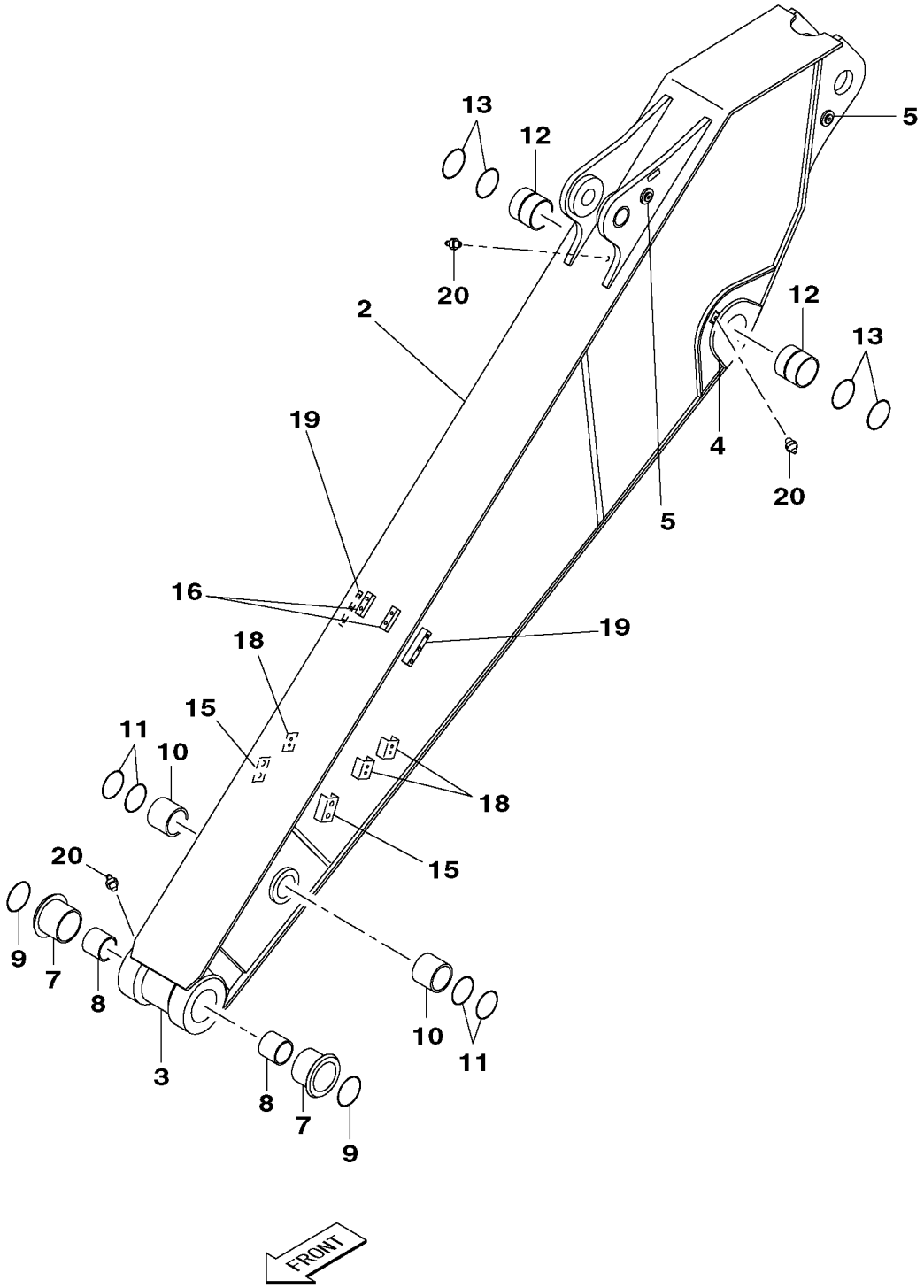

KG1RV478-00
KRV19400-EZ
KRV20400-CZ

https://truckmanualshub.com/

210A5 1101－ 210L5 1101－

符号 ITEM	構成 COMPO	部品番号 PART NO.	部品名	PART NAME	個数 Q'TY	ｲﾝﾅｰ	適用号機 SERIAL_NO.	互換 ICA	代替部品 REPLACEABLE PART
1	1	KRV20650	ｱｰﾑ;ｼｮｰﾄ (EM3 012)	ARM;SHORT	1		210A5 NOT USED 210L5 NOT USED		
1	1	KRV23710	ｱｰﾑ;ｼｮｰﾄ (EM3 012)	ARM;SHORT	1		210A5 -1943 210L5 -1436	=	KRV23711
1	1A	KRV23711	ｱｰﾑ;ｼｮｰﾄ (EM3 012)	ARM;SHORT	1		210A5 1944- 210L5 1437-		
2	2	KRV22070	ｱｰﾑ;ｼｮｰﾄ (2.4M)	ARM;SHORT	1		210A5 NOT USED 210L5 NOT USED 210A5 -1943 210L5 -1436		
2	2A	KRV22071	ｱｰﾑ;ｼｮｰﾄ (2.40M)	ARM;SHORT	1		210A5 1944- 210L5 1437-		
3	3	KRV11100	ﾎﾞｽ;ﾁｭｳｺｳ (ｱｰﾑﾄｯﾌﾟ)	BOSS;CASTED	1				
4	3	KRV11090	ﾎﾞｽ;ﾀﾝｿﾞｳ (ｱｰﾑﾌｰﾄ)	BOSS;FORGED	2		210A5 -1943 210L5 -1436		
4	3	KRV11091	ﾎﾞｽ;ﾀﾝｿﾞｳ (ｱｰﾑﾌｰﾄ)	BOSS;FORGED	2		210A5 1944- 210L5 1437-		
5	3	KRV11490	ｻﾞ L=24	BAR;BASE	2				
6	2A	KRV21080	ｱｰﾑ;ﾊﾞｯｸﾎｰ (ﾌﾞｼｭｳﾁｺﾐ	ARM;BACK-HOE	1				
7	3	KRV2408	ﾌﾞｼｭ;ｽﾁｰﾙ	BUSH;STEEL	2				
8	3	KRV10910	ﾌﾞｼｭ;ｽﾁｰﾙ (PEL BH)	BUSH;STEEL	2				
9	3	KHV0101	ｼｰﾙ;ﾀﾞｽﾄ	SEAL;DUST	2				
10	3	KRV2396	ﾌﾞｼｭ;ｵｲﾙﾚｽ	BUSH;OILLESS	2				
11	3	KHV0100	ｼｰﾙ;ﾀﾞｽﾄ	SEAL;DUST	4				
12	3	KRV2397	ﾌﾞｼｭ;ｵｲﾙﾚｽ	BUSH;OILLESS	2				
13	3	KHV0103	ｼｰﾙ;ﾀﾞｽﾄ	SEAL;DUST	4				
14	2	KRV20900	ｱｰﾑ/ﾂｲｶｺｳｽﾞ (SHORT O	ARM ADDITION	1		210A5 NOT USED 210L5 NOT USED		
14	2A	KRV23300	ｱｰﾑ/ﾂｲｶｺｳｽﾞ (SHORT O	ARM ADDITION	1				
15	3	KRV1282	ｻﾞ	BAR;BASE	2		210A5 NOT USED 210L5 NOT USED		
15	3	KHV10950	ｻﾞ	BAR;BASE	2				
16	3	KHV10530	ｻﾞ L=20	BAR;BASE	2		210A5 NOT USED 210L5 NOT USED		
16	3	KHV10540	ｻﾞ L=30	BAR;BASE	2				
17	2	KRV20920	ｱｰﾑ/ﾂｲｶｺｳｽﾞ (SHORT O	ARM ADDITION	1		210A5 NOT USED 210L5 NOT USED		
17	2A	KRV23310	ｱｰﾑ/ﾂｲｶｺｳｽﾞ (SHORT O	ARM ADDITION	1				
18	3	KRV1958	ｻﾞ	BAR;BASE	3		210A5 NOT USED 210L5 NOT USED		
18	3	KHV10940	ｻﾞ	BAR;BASE	3				
19	3	KHV10550	ｻﾞ L=25	BAR;BASE	2		210A5 NOT USED 210L5 NOT USED		
19	3	KHV10960	ｻﾞ L=30	BAR;BASE	2				
20	1	M01X0812	ﾆｯﾌﾟﾙ;ｸﾞﾘｽ (A-R1/8)	NIPPLE;GREASE	3				

https://truckmanualshub.com/

1 [2 ~ 16]
6 [7 ~ 13]

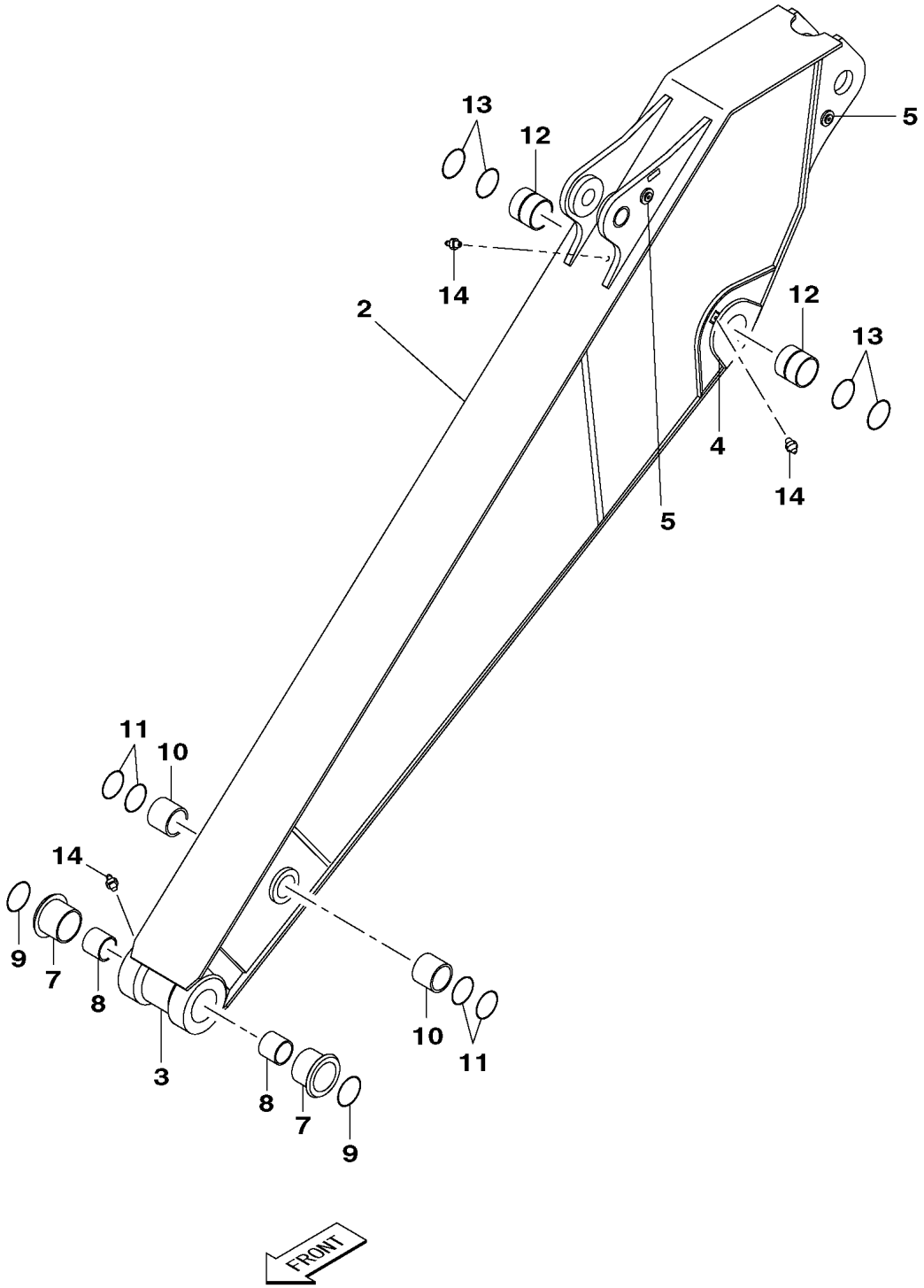

KG1RV476-00
KRV19400-EZ
KRV20400-CZ

https://truckmanualshub.com/

210A5 1101－ 210L5 1101－

符号 ITEM	構成 COMPO	部品番号 PART NO.	部品名	PART NAME	個数 Q'TY	ｲﾝﾅｰ	適用号機 SERIAL_NO.	互換 ICA	代替部品 REPLACEABLE PART
1	1	KRV20630	ｱｰﾑ;ｼｮｰﾄ (EM3)	ARM;SHORT	1		210A5 -1943 210L5 -1436	=	KRV20631
1	1A	KRV20631	ｱｰﾑ;ｼｮｰﾄ (EM3)	ARM;SHORT	1		210A5 1944- 210L5 1437-		
2	2	KRV22070	ｱｰﾑ;ｼｮｰﾄ (2.4M)	ARM;SHORT	1				
2	2A	KRV22071	ｱｰﾑ;ｼｮｰﾄ (2.40M)	ARM;SHORT	1		210A5 1944- 210L5 1437-		
3	3	KRV11100	ﾎﾞｽ;ﾁｭｳｺｳ (ｱｰﾑﾄｯﾌﾟ)	BOSS;CASTED	1				
4	3	KRV11090	ﾎﾞｽ;ﾀﾝｿﾞｳ (ｱｰﾑﾌｰﾄ)	BOSS;FORGED	2		210A5 -1943 210L5 -1436		
4	3	KRV11091	ﾎﾞｽ;ﾀﾝｿﾞｳ (ｱｰﾑﾌｰﾄ)	BOSS;FORGED	2		210A5 1944- 210L5 1437-		
5	3	KRV11490	ｻﾞ L=24	BAR;BASE	2				
6	2A	KRV21080	ｱｰﾑ;ﾊﾞｯｸﾎｰ (ﾌﾞｼｭｳﾁｺﾐ	ARM;BACK-HOE	1		210A5 1944- 210L5 1437-		
7	3	KRV2408	ﾌﾞｼｭ;ｽﾁｰﾙ	BUSH;STEEL	2				
8	3	KRV10910	ﾌﾞｼｭ;ｽﾁｰﾙ (PEL BH)	BUSH;STEEL	2				
9	3	KHV0101	ｼｰﾙ;ﾀﾞｽﾄ	SEAL;DUST	2				
10	3	KRV2396	ﾌﾞｼｭ;ｵｲﾙﾚｽ	BUSH;OILLESS	2				
11	3	KHV0100	ｼｰﾙ;ﾀﾞｽﾄ	SEAL;DUST	4				
12	3	KRV2397	ﾌﾞｼｭ;ｵｲﾙﾚｽ	BUSH;OILLESS	2				
13	3	KHV0103	ｼｰﾙ;ﾀﾞｽﾄ	SEAL;DUST	4				
14	1	M01X0812	ﾆｯﾌﾟﾙ;ｸﾞﾘｽ (A-R1/8)	NIPPLE;GREASE	3				

https://truckmanualshub.com/

1 [2 ~ 17]
15 [16 , 17]

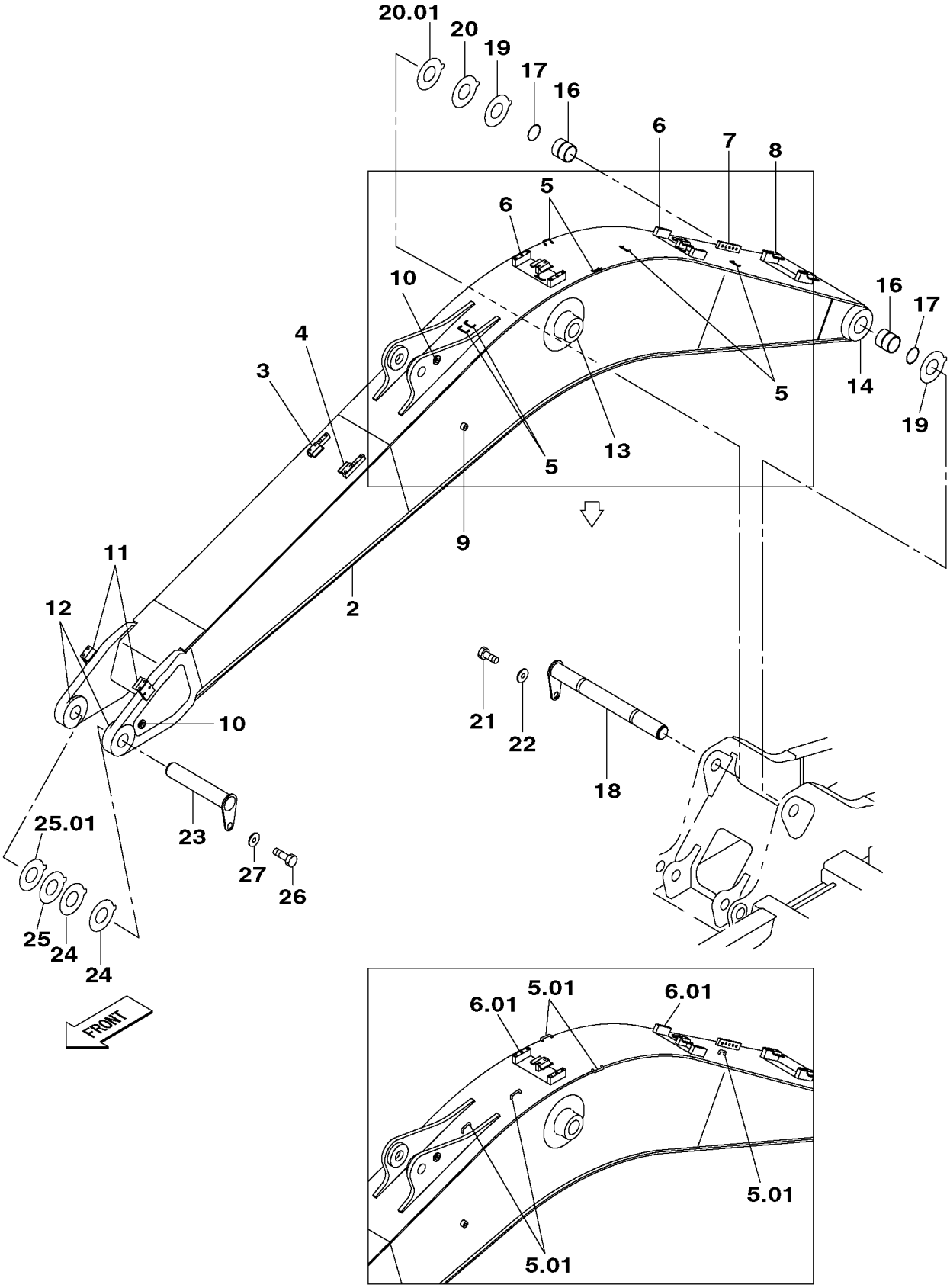

KG1RV442-00
KRV19400-EZ

https://truckmanualshub.com/

210A5 1101－ 210L5 1101－

符号 ITEM	構成 COMPO	部品番号 PART NO.	部品名	PART NAME	個数 Q'TY	ｲﾝﾅｰ	適用号機 SERIAL_NO.	互換 ICA	代替部品 REPLACEABLE PART
1	1	KRV20180	ﾌﾞｰﾑ (5.7M EMS)	BOOM	1		210A5 -1231 210L5 -1176	=	KRV20181
1	1A	KRV20181	ﾌﾞｰﾑ (5.7M EMS)	BOOM	1		210A5 1232- 210L5 1177-		
2	2	KRV19300	ﾌﾞｰﾑ (5.7M)	BOOM	1		210A5 -1231 210L5 -1176		
2	2A	KRV19301	ﾌﾞｰﾑ (5.7M)	BOOM	1		210A5 1232- 210L5 1177-		
3	3	KNV13700	ｻﾞ (ﾌﾞｰﾑ ｼﾘﾝﾀﾞｼﾀ ﾐｷﾞ	BAR;BASE	1		210A5 -1231 210L5 -1176		
4	3	KNV13690	ｻﾞ (ﾌﾞｰﾑ ｼﾘﾝﾀﾞｼﾀ ﾋﾀﾞ	BAR;BASE	1		210A5 1232- 210L5 1177- 210A5 -1231 210L5 -1176		
5	3	KHV10380	ｻﾞ	BAR;BASE	6		210A5 1232- 210L5 1177- 210A5 -1231 210L5 -1176		
5.01	3	KHV11290	ｻﾞ	BAR;BASE	5		210A5 1232-1389 210L5 1177-1248		
6	3	KRV19020	ｻﾞ (ﾌﾞｰﾑｾﾝﾀ)	BAR;BASE	2		210A5 -1231 210L5 -1176		
6.01	3	KRV19021	ｻﾞ (ﾌﾞｰﾑｾﾝﾀ)	BAR;BASE	2		210A5 1232- 210L5 1177-		
7	3	KHV10370	ﾏﾆﾎｰﾙﾄﾞ	MANIFOLD	1		210A5 -1231 210L5 -1176		
8	3	KRV19290	ｻﾞ (ﾌﾞｰﾑﾌｰﾄ)	BAR;BASE	1		210A5 1232- 210L5 1177- 210A5 -1231 210L5 -1176		
9	3	KHV0060	ｻﾞ ｻｷﾞﾖｳﾄｳ	BAR;BASE	1		210A5 1232- 210L5 1177- 210A5 -1231 210L5 -1176		
10	3	KRV11490	ｻﾞ L=24	BAR;BASE	2		210A5 1232- 210L5 1177- 210A5 -1231 210L5 -1176		
11	3	KNV13710	ｻﾞ (ﾌﾞｰﾑﾄｯﾌﾟ)	BAR;BASE	2		210A5 1232- 210L5 1177- 210A5 -1231 210L5 -1176		
12	3	KRV2384	ﾎﾞｽ;ﾀﾝｿﾞｳ (ﾌﾞｰﾑﾄｯﾌﾟ)	BOSS;FORGED	2		210A5 1232- 210L5 1177- 210A5 -1231 210L5 -1176		
13	3	KRV11080	ﾎﾞｽ;ﾀﾝｿﾞｳ (ﾌﾞｰﾑCYLﾄｯ	BOSS;FORGED	2		210A5 1232- 210L5 1177- 210A5 -1231 210L5 -1176		
14	3	KRV3789	ﾎﾞｽ;ﾀﾝｿﾞｳ (ﾌﾞｰﾑﾌｰﾄ)	BOSS;FORGED	2		210A5 1232- 210L5 1177- 210A5 -1231 210L5 -1176		
15	2A	KRV19320	ﾌﾞｰﾑ (EMSﾌﾞｼｭｳﾁｺﾐｼｼﾞ	BOOM	1		210A5 1232- 210L5 1177- 210A5 -1231 210L5 -1176		

https://truckmanualshub.com/

210A5 1101－ 210L5 1101－

符号 ITEM	構成 COMPO	部品番号 PART NO.	部品名	PART NAME	個数 Q'TY	ｲﾝﾅｰ	適用号機 SERIAL_NO.	互換 ICA	代替部品 REPLACEABLE PART
16	3	KRV2397	ﾌﾞｼｭ;ｵｲﾙﾚｽ	BUSH;OILLESS	2		210A5 -1231 210L5 -1176 210A5 1232- 210L5 1177-		
17	3	KHV0103	ｼｰﾙ;ﾀﾞｽﾄ	SEAL;DUST	2		210A5 -1231 210L5 -1176 210A5 1232- 210L5 1177-		
18	1	KRV10950	ﾋﾟﾝ;ｱﾀｯﾁﾒﾝﾄ (EMS)	PIN;ATT	1				
19	1	KRV11030	ｼﾑ;ﾌﾟﾚｰﾄ (ﾂﾊﾞﾂｷ 1.0M	SHIM;PLATE	2				
20	1	KRV11040	ｼﾑ;ﾌﾟﾚｰﾄ (ﾂﾊﾞﾂｷ 2.0M	SHIM;PLATE	1 AR				
20.01	1	KRV31490	ｼﾑ;ﾌﾟﾚｰﾄ (ﾂﾊﾞﾂｷ 1.5M	SHIM;PLATE	1		210A5 2511-		
21	1	102R012Y025R	ｺｳﾘｷB M12X 25	BOLT;HIGH STRENGTH	1				
22	1	KBN0298	ｺｳﾘｷW (M12ﾖｳ)	WASHER;HIGH STRENGTH	1				
23	1	KRV10970	ﾋﾟﾝ;ｱﾀｯﾁﾒﾝﾄ (EMS)	PIN;ATT	1				
24	1	KRV11030	ｼﾑ;ﾌﾟﾚｰﾄ (ﾂﾊﾞﾂｷ 1.0M	SHIM;PLATE	2				
25	1	KRV11040	ｼﾑ;ﾌﾟﾚｰﾄ (ﾂﾊﾞﾂｷ 2.0M	SHIM;PLATE	1 AR				
25.01	1	KRV31490	ｼﾑ;ﾌﾟﾚｰﾄ (ﾂﾊﾞﾂｷ 1.5M	SHIM;PLATE	1		210A5 2511-		
26	1	102R012Y025R	ｺｳﾘｷB M12X 25	BOLT;HIGH STRENGTH	1				
27	1	KBN0298	ｺｳﾘｷW (M12ﾖｳ)	WASHER;HIGH STRENGTH	1				

https://truckmanualshub.com/

https://truckmanualshub.com/

1 [2 ~ 17]
15 [16 , 17]

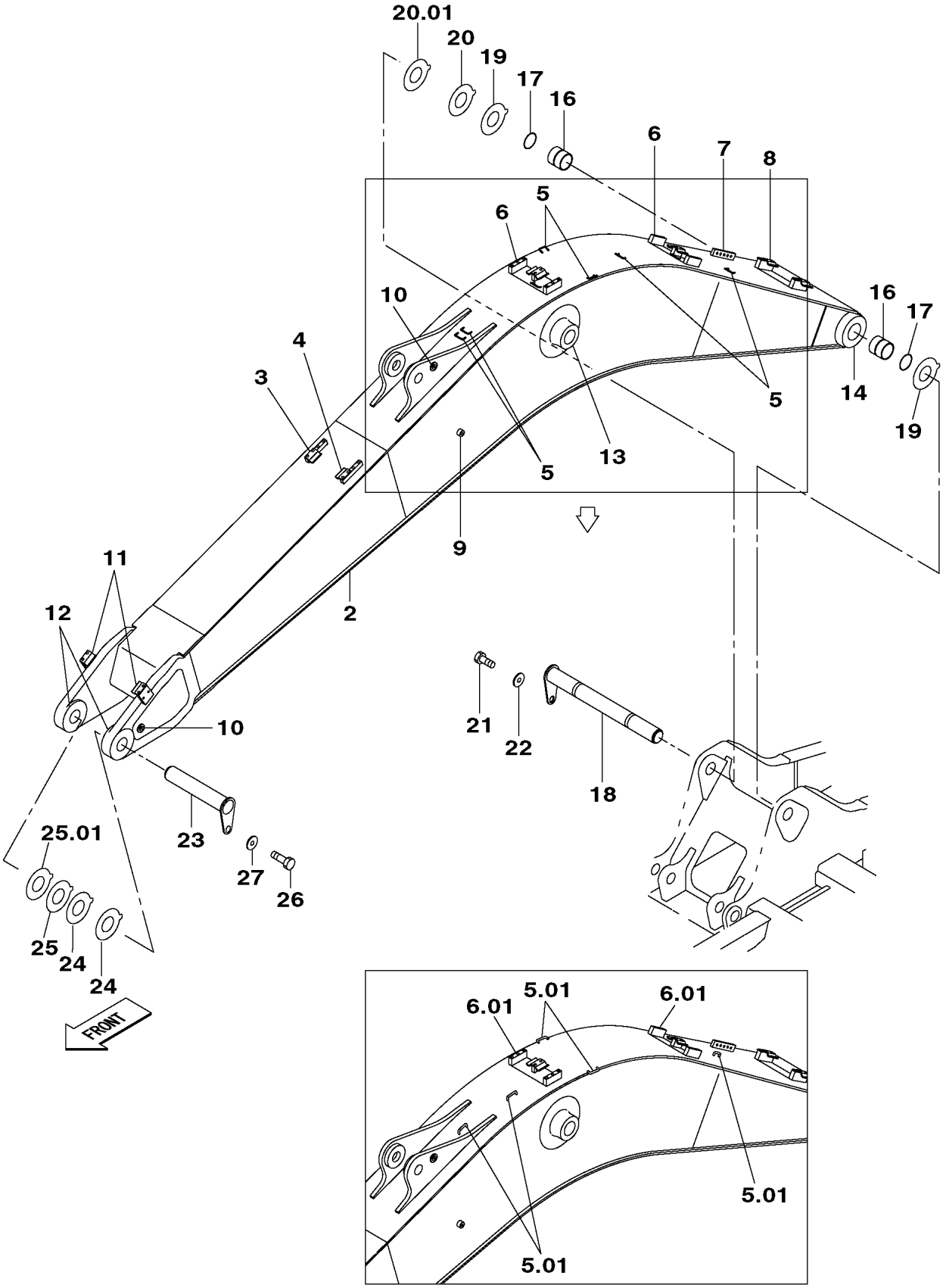

KG1RV443-00
KRV19400-EZ

https://truckmanualshub.com/

210A5 1101－ 210L5 1101－

符号 ITEM	構成 COMPO	部品番号 PART NO.	部品名	PART NAME	個数 Q'TY	ｲﾝﾅｰ	適用号機 SERIAL_NO.	互換 ICA	代替部品 REPLACEABLE PART
1	1	KRV20540	ﾌﾞｰﾑ (5.7M HD EMS)	BOOM	1		210A5 -1231 210L5 -1176	=	KRV20541
1	1A	KRV20541	ﾌﾞｰﾑ (5.7M HD EMS)	BOOM	1		210A5 1232- 210L5 1177-		
2	2	KRV20560	ﾌﾞｰﾑ (5.7M HD)	BOOM	1		210A5 -1231 210L5 -1176		
2	2A	KRV20561	ﾌﾞｰﾑ (5.7M HD)	BOOM	1		210A5 1232- 210L5 1177-		
3	3	KNV13700	ｻﾞ (ﾌﾞｰﾑ ｼﾘﾝﾀﾞｼﾀ ﾐｷﾞ	BAR;BASE	1		210A5 -1231 210L5 -1176		
4	3	KNV13690	ｻﾞ (ﾌﾞｰﾑ ｼﾘﾝﾀﾞｼﾀ ﾋﾀﾞ	BAR;BASE	1		210A5 1232- 210L5 1177- 210A5 -1231 210L5 -1176		
5	3	KHV10380	ｻﾞ	BAR;BASE	6		210A5 1232- 210L5 1177- 210A5 -1231 210L5 -1176		
5.01	3	KHV11290	ｻﾞ	BAR;BASE	5		210A5 1232-1389 210L5 1177-1248		
6	3	KRV19020	ｻﾞ (ﾌﾞｰﾑｾﾝﾀ)	BAR;BASE	2		210A5 -1231 210L5 -1176		
6.01	3	KRV19021	ｻﾞ (ﾌﾞｰﾑｾﾝﾀ)	BAR;BASE	2		210A5 1232- 210L5 1177-		
7	3	KHV10370	ﾏﾆﾎｰﾙﾄﾞ	MANIFOLD	1		210A5 -1231 210L5 -1176		
8	3	KRV19290	ｻﾞ (ﾌﾞｰﾑﾌｰﾄ)	BAR;BASE	1		210A5 1232- 210L5 1177- 210A5 -1231 210L5 -1176		
9	3	KHV0060	ｻﾞ ｻｷﾞﾖｳﾄｳ	BAR;BASE	1		210A5 1232- 210L5 1177- 210A5 -1231 210L5 -1176		
10	3	KRV11490	ｻﾞ L=24	BAR;BASE	2		210A5 1232- 210L5 1177- 210A5 -1231 210L5 -1176		
11	3	KNV13710	ｻﾞ (ﾌﾞｰﾑﾄｯﾌﾟ)	BAR;BASE	2		210A5 1232- 210L5 1177- 210A5 -1231 210L5 -1176		
12	3	KRV2384	ﾎﾞｽ;ﾀﾝｿﾞｳ (ﾌﾞｰﾑﾄｯﾌﾟ)	BOSS;FORGED	2		210A5 1232- 210L5 1177- 210A5 -1231 210L5 -1176		
13	3	KRV11080	ﾎﾞｽ;ﾀﾝｿﾞｳ (ﾌﾞｰﾑCYLﾄｯ	BOSS;FORGED	2		210A5 1232- 210L5 1177- 210A5 -1231 210L5 -1176		
14	3	KRV3789	ﾎﾞｽ;ﾀﾝｿﾞｳ (ﾌﾞｰﾑﾌｰﾄ)	BOSS;FORGED	2		210A5 1232- 210L5 1177- 210A5 -1231 210L5 -1176		
15	2A	KRV19320	ﾌﾞｰﾑ (EMSﾌﾞｼｭｳﾁｺﾐｼｼﾞ	BOOM	1		210A5 1232- 210L5 1177- 210A5 -1231 210L5 -1176		

https://truckmanualshub.com/

210A5 1101－ 210L5 1101－

符号 ITEM	構成 COMPO	部品番号 PART NO.	部品名	PART NAME	個数 Q'TY	ｲﾝﾅｰ	適用号機 SERIAL_NO.	互換 ICA	代替部品 REPLACEABLE PART
16	3	KRV2397	ﾌﾞｼｭ;ｵｲﾙﾚｽ	BUSH;OILLESS	2		210A5 -1231 210L5 -1176 210A5 1232- 210L5 1177-		
17	3	KHV0103	ｼｰﾙ;ﾀﾞｽﾄ	SEAL;DUST	2		210A5 -1231 210L5 -1176 210A5 1232- 210L5 1177-		
18	1	KRV10950	ﾋﾟﾝ;ｱﾀｯﾁﾒﾝﾄ (EMS)	PIN;ATT	1				
19	1	KRV11030	ｼﾑ;ﾌﾟﾚｰﾄ (ﾂﾊﾞﾂｷ 1.0M	SHIM;PLATE	2				
20	1	KRV11040	ｼﾑ;ﾌﾟﾚｰﾄ (ﾂﾊﾞﾂｷ 2.0M	SHIM;PLATE	1	AR			
20.01	1	KRV31490	ｼﾑ;ﾌﾟﾚｰﾄ (ﾂﾊﾞﾂｷ 1.5M	SHIM;PLATE	1		210A5 2511-		
21	1	102R012Y025R	ｺｳﾘｷB M12X 25	BOLT;HIGH STRENGTH	1				
22	1	KBN0298	ｺｳﾘｷW (M12ﾖｳ)	WASHER;HIGH STRENGTH	1				
23	1	KRV10970	ﾋﾟﾝ;ｱﾀｯﾁﾒﾝﾄ (EMS)	PIN;ATT	1				
24	1	KRV11030	ｼﾑ;ﾌﾟﾚｰﾄ (ﾂﾊﾞﾂｷ 1.0M	SHIM;PLATE	2				
25	1	KRV11040	ｼﾑ;ﾌﾟﾚｰﾄ (ﾂﾊﾞﾂｷ 2.0M	SHIM;PLATE	1	AR			
25.01	1	KRV31490	ｼﾑ;ﾌﾟﾚｰﾄ (ﾂﾊﾞﾂｷ 1.5M	SHIM;PLATE	1		210A5 2511-		
26	1	102R012Y025R	ｺｳﾘｷB M12X 25	BOLT;HIGH STRENGTH	1				
27	1	KBN0298	ｺｳﾘｷW (M12ﾖｳ)	WASHER;HIGH STRENGTH	1				

https://truckmanualshub.com/

https://truckmanualshub.com/

1 [2 ~ 15]
13 [14 , 15]

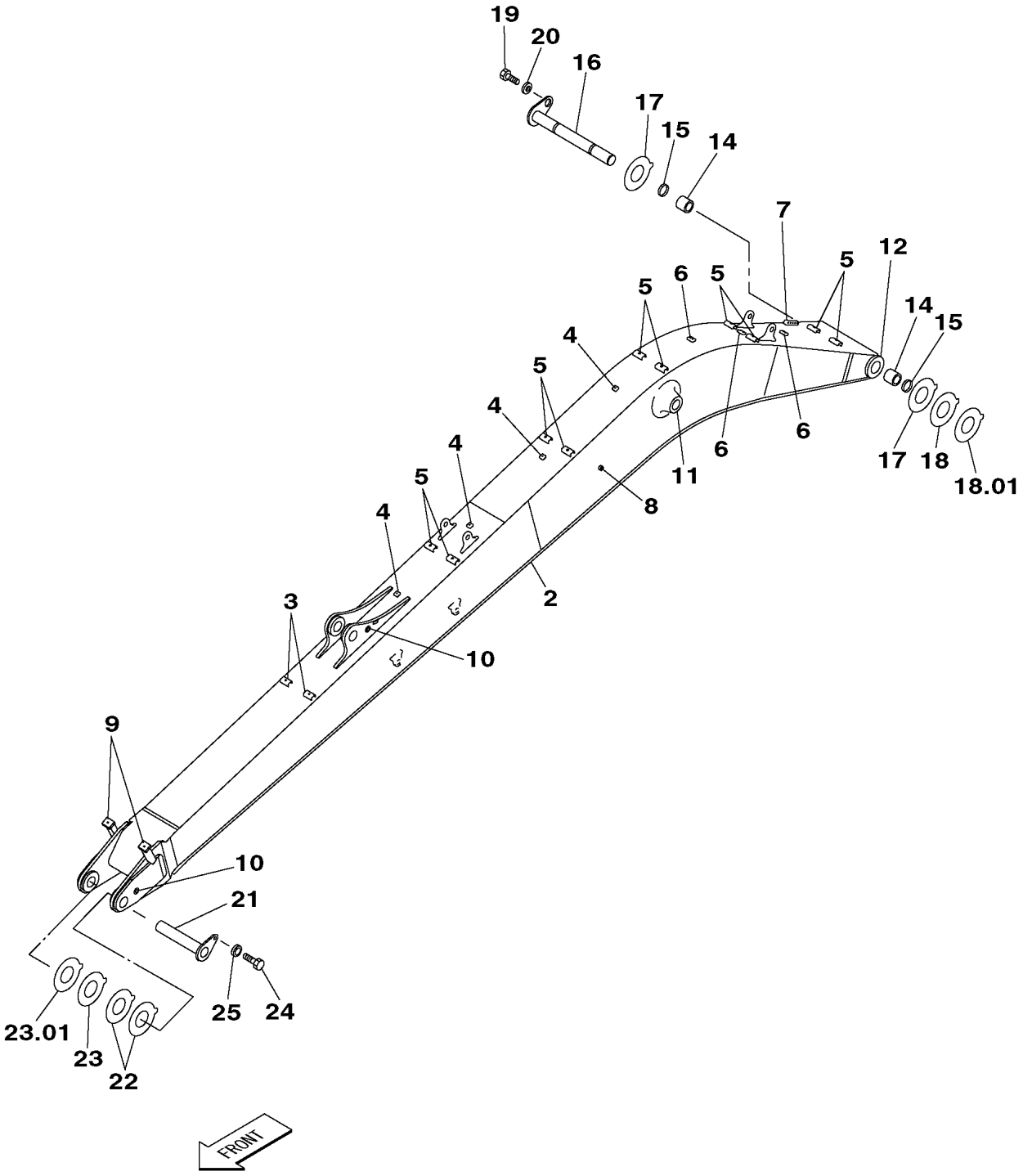

KG1RV579-0
KRV24710-EZ
KRV24720-EZ

https://truckmanualshub.com/

210L5 1101－

符号 ITEM	構成 COMPO	部品番号 PART NO.	部品名	PART NAME	個数 Q'TY	ｲﾝﾅｰ	適用号機 SERIAL_NO.	互換 ICA	代替部品 REPLACEABLE PART
1	1	KRV24540	ﾌﾞｰﾑ;ﾛﾝｸﾞ (EMS)	BOOM;LONG	1		210L5 -1235	=	KRV25470
1	1A	KRV25470	ﾌﾞｰﾑ;ﾛﾝｸﾞ (EMS)	BOOM;LONG	1		210L5 1236-		
2	2	KRV24150	ﾌﾞｰﾑ;ﾛﾝｸﾞ (8.7M)	BOOM;LONG	1		210L5 -1235		
2	2A	KRV25450	ﾌﾞｰﾑ;ﾛﾝｸﾞ (8.7M)	BOOM;LONG	1		210L5 1236-		
3	3	KRV0482	ｻﾞ	BAR;BASE	2		210L5 -1235		
							210L5 1236-		
4	3	KRV0252	ｻﾞ	BAR;BASE	4		210L5 -1235		
							210L5 1236-		
5	3	KTV0700	ｻﾞ	BAR;BASE	10		210L5 -1235		
							210L5 1236-		
6	3	KRV0481	ｻﾞ	BAR;BASE	3		210L5 -1235		
							210L5 1236-		
7	3	KHV10370	ﾏﾆﾎｰﾙﾄﾞ	MANIFOLD	1		210L5 -1235		
							210L5 1236-		
8	3	KHV0060	ｻﾞ ｻｷﾞﾖｳﾄｳ	BAR;BASE	1		210L5 -1235		
							210L5 1236-		
9	3	KBV1025	ｻﾞ	BAR;BASE	2		210L5 -1235		
							210L5 1236-		
10	3	KRV11490	ｻﾞ L=24	BAR;BASE	2		210L5 -1235		
							210L5 1236-		
11	3	KRV11080	ﾎﾞｽ;ﾀﾝｿﾞｳ (ﾌﾞｰﾑCYLﾄｯ	BOSS;FORGED	2		210L5 1236-		
							210L5 -1235		
12	3	KRV3789	ﾎﾞｽ;ﾀﾝｿﾞｳ (ﾌﾞｰﾑﾌｰﾄ)	BOSS;FORGED	2		210L5 1236-		
							210L5 -1235		
13	2A	KRV19320	ﾌﾞｰﾑ (EMSﾌﾞｼｭｳﾁｺﾐｼｼﾞ	BOOM	1		210L5 -1235		
							210L5 1236-		
14	3	KRV2397	ﾌﾞｼｭ;ｵｲﾙﾚｽ	BUSH;OILLESS	2		210L5 -1235		
							210L5 1236-		
15	3	KHV0103	ｼｰﾙ;ﾀﾞｽﾄ	SEAL;DUST	2		210L5 -1235		
							210L5 1236-		
16	1	KRV10950	ﾋﾟﾝ;ｱﾀｯﾁﾒﾝﾄ (EMS)	PIN;ATT	1				
17	1	KRV11030	ｼﾑ;ﾌﾟﾚｰﾄ (ﾂﾊﾞﾂｷ 1.0M	SHIM;PLATE	2				
18	1	KRV11040	ｼﾑ;ﾌﾟﾚｰﾄ (ﾂﾊﾞﾂｷ 2.0M	SHIM;PLATE	1	AR			
18.01	1	KRV31490	ｼﾑ;ﾌﾟﾚｰﾄ (ﾂﾊﾞﾂｷ 1.5M	SHIM;PLATE	1				
19	1	102R012Y025R	ｺｳﾘｷB M12X 25	BOLT;HIGH STRENGTH	1				
20	1	KBN0298	ｺｳﾘｷW (M12ﾖｳ)	WASHER;HIGH STRENGTH	1				
21	1	KRV24500	ﾋﾟﾝ;ｱﾀｯﾁﾒﾝﾄ (EMS)	PIN;ATT	1				
22	1	KRV11030	ｼﾑ;ﾌﾟﾚｰﾄ (ﾂﾊﾞﾂｷ 1.0M	SHIM;PLATE	2				
23	1	KRV11040	ｼﾑ;ﾌﾟﾚｰﾄ (ﾂﾊﾞﾂｷ 2.0M	SHIM;PLATE	1	AR			
23.01	1	KRV31490	ｼﾑ;ﾌﾟﾚｰﾄ (ﾂﾊﾞﾂｷ 1.5M	SHIM;PLATE	1				
24	1	102R012Y025R	ｺｳﾘｷB M12X 25	BOLT;HIGH STRENGTH	1				
25	1	KBN0298	ｺｳﾘｷW (M12ﾖｳ)	WASHER;HIGH STRENGTH	1				

https://truckmanualshub.com/

1 [2 ~ 19]
13 [14 , 15]
16 [17 ~ 19]

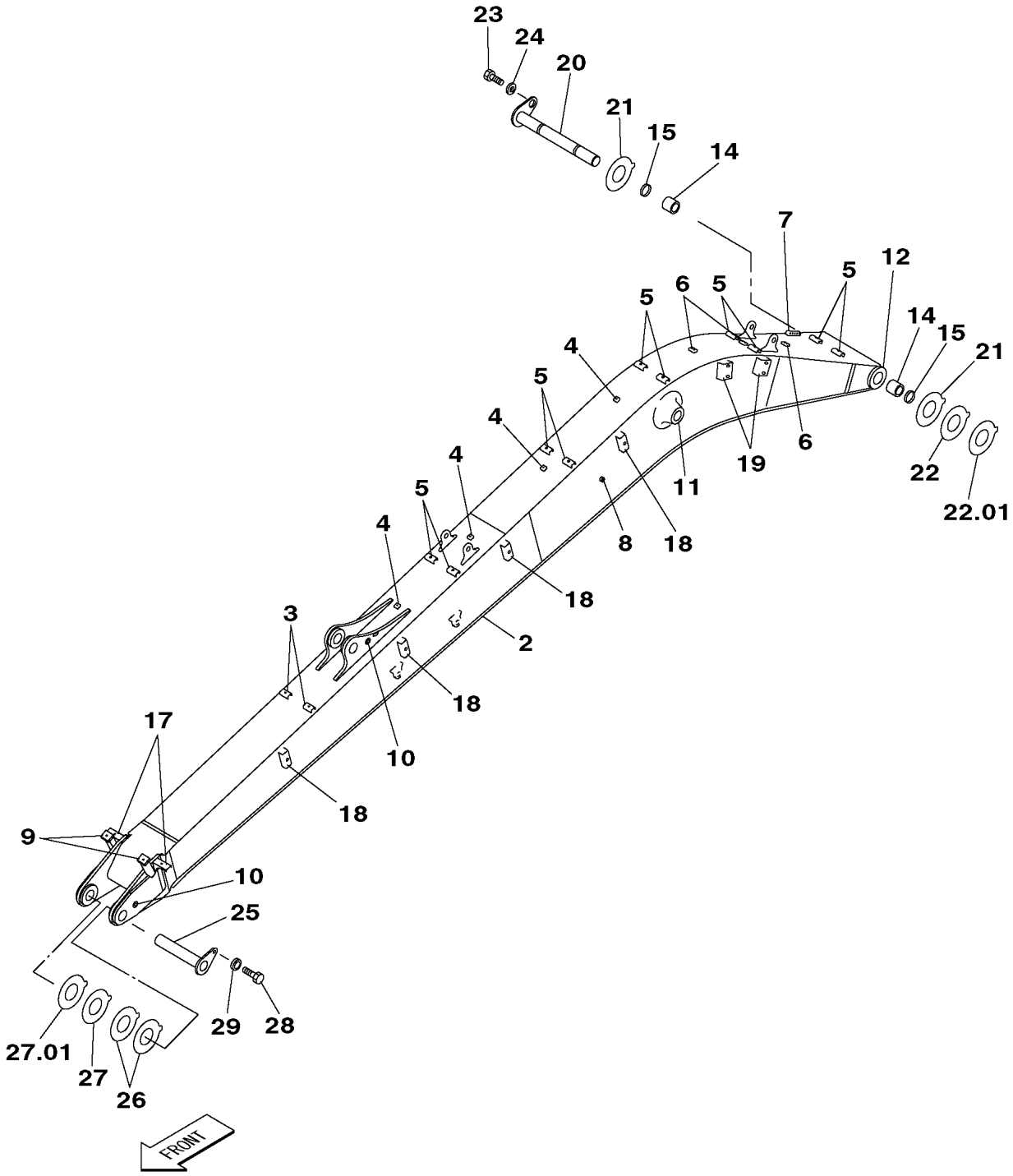

KG1RV580-0
KRV24710-EZ
KRV24720-EZ

https://truckmanualshub.com/

210L5 1101－

符号 ITEM	構成 COMPO	部品番号 PART NO.	部品名	PART NAME	個数 Q'TY	ｲﾝﾅｰ	適用号機 SERIAL_NO.	互換 ICA	代替部品 REPLACEABLE PART
1	1	KRV24180	ﾌﾞｰﾑ;ﾛﾝｸﾞ (EMS 01)	BOOM;LONG	1		210L5 -1235	=	KRV25460
1	1A	KRV25460	ﾌﾞｰﾑ;ﾛﾝｸﾞ (EMS 01)	BOOM;LONG	1		210L5 1236-		
2	2	KRV24150	ﾌﾞｰﾑ;ﾛﾝｸﾞ (8.7M)	BOOM;LONG	1		210L5 -1235		
2	2A	KRV25450	ﾌﾞｰﾑ;ﾛﾝｸﾞ (8.7M)	BOOM;LONG	1		210L5 1236-		
3	3	KRV0482	ｻﾞ	BAR;BASE	2		210L5 -1235		
							210L5 1236-		
4	3	KRV0252	ｻﾞ	BAR;BASE	4		210L5 -1235		
							210L5 1236-		
5	3	KTV0700	ｻﾞ	BAR;BASE	10		210L5 -1235		
							210L5 1236-		
6	3	KRV0481	ｻﾞ	BAR;BASE	3		210L5 -1235		
							210L5 1236-		
7	3	KHV10370	ﾏﾆﾎｰﾙﾄﾞ	MANIFOLD	1		210L5 -1235		
							210L5 1236-		
8	3	KHV0060	ｻﾞ ｻｷﾞﾖｳﾄｳ	BAR;BASE	1		210L5 -1235		
							210L5 1236-		
9	3	KBV1025	ｻﾞ	BAR;BASE	2		210L5 -1235		
							210L5 1236-		
10	3	KRV11490	ｻﾞ L=24	BAR;BASE	2		210L5 -1235		
							210L5 1236-		
11	3	KRV11080	ﾎﾞｽ;ﾀﾝｿﾞｳ (ﾌﾞｰﾑCYLﾄｯ	BOSS;FORGED	2		210L5 1236-		
							210L5 -1235		
12	3	KRV3789	ﾎﾞｽ;ﾀﾝｿﾞｳ (ﾌﾞｰﾑﾌｰﾄ)	BOSS;FORGED	2		210L5 1236-		
							210L5 -1235		
13	2A	KRV19320	ﾌﾞｰﾑ (EMSﾌﾞｼｭｳﾁｺﾐｼｼﾞ	BOOM	1		210L5 -1235		
							210L5 1236-		
14	3	KRV2397	ﾌﾞｼｭ;ｵｲﾙﾚｽ	BUSH;OILLESS	2		210L5 -1235		
							210L5 1236-		
15	3	KHV0103	ｼｰﾙ;ﾀﾞｽﾄ	SEAL;DUST	2		210L5 -1235		
							210L5 1236-		
16	2A	KRV24190	ﾌﾞｰﾑ/ﾂｲｶｺｳｽﾞ (01)	BOOM ADDITION	1		210L5 -1235		
							210L5 1236-		
17	3	KBV0921	ｻﾞ	BAR;BASE	2		210L5 -1235		
							210L5 1236-		
18	3	KRV1646	ｻﾞ	BAR;BASE	8		210L5 -1235		
							210L5 1236-		
19	3	KTV0853	ｻﾞ	BAR;BASE	4		210L5 -1235		
							210L5 1236-		
20	1	KRV10950	ﾋﾟﾝ;ｱﾀｯﾁﾒﾝﾄ (EMS)	PIN;ATT	1				
21	1	KRV11030	ｼﾑ;ﾌﾟﾚｰﾄ (ﾂﾊﾞﾂｷ 1.0M	SHIM;PLATE	2				
22	1	KRV11040	ｼﾑ;ﾌﾟﾚｰﾄ (ﾂﾊﾞﾂｷ 2.0M	SHIM;PLATE	1	AR			
22.01	1	KRV31490	ｼﾑ;ﾌﾟﾚｰﾄ (ﾂﾊﾞﾂｷ 1.5M	SHIM;PLATE	1				
23	1	102R012Y025R	ｺｳﾘｷB M12X 25	BOLT;HIGH STRENGTH	1				
24	1	KBN0298	ｺｳﾘｷW (M12ﾖｳ)	WASHER;HIGH STRENGTH	1				
25	1	KRV24500	ﾋﾟﾝ;ｱﾀｯﾁﾒﾝﾄ (EMS)	PIN;ATT	1				
26	1	KRV11030	ｼﾑ;ﾌﾟﾚｰﾄ (ﾂﾊﾞﾂｷ 1.0M	SHIM;PLATE	2				
27	1	KRV11040	ｼﾑ;ﾌﾟﾚｰﾄ (ﾂﾊﾞﾂｷ 2.0M	SHIM;PLATE	1	AR			
27.01	1	KRV31490	ｼﾑ;ﾌﾟﾚｰﾄ (ﾂﾊﾞﾂｷ 1.5M	SHIM;PLATE	1				
28	1	102R012Y025R	ｺｳﾘｷB M12X 25	BOLT;HIGH STRENGTH	1				
29	1	KBN0298	ｺｳﾘｷW (M12ﾖｳ)	WASHER;HIGH STRENGTH	1				

https://truckmanualshub.com/

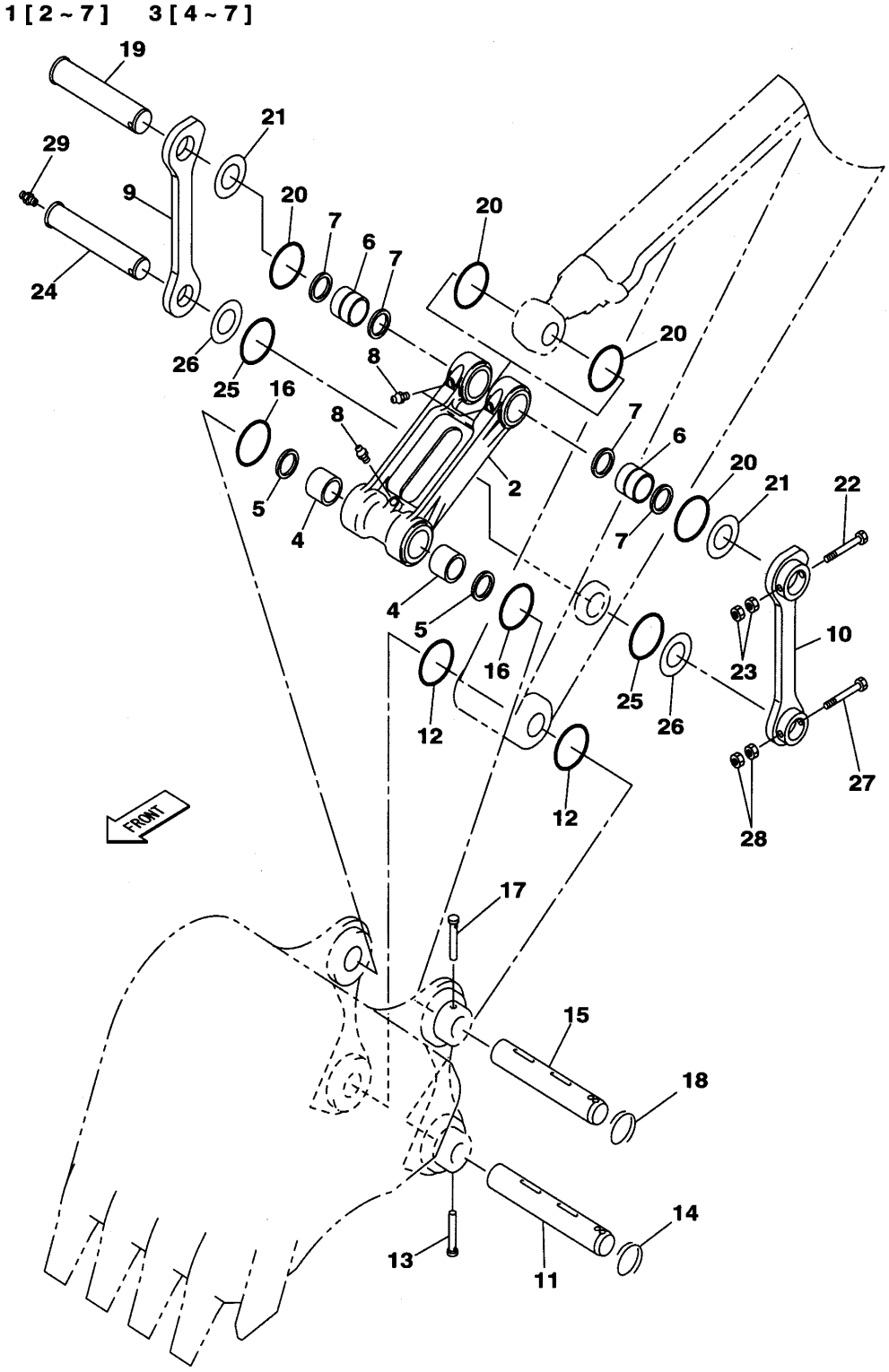

https://truckmanualshub.com/

210A5 1101－ 210L5 1101－

符号 ITEM	構成 COMPO	部品番号 PART NO.	部品名	PART NAME	個数 Q'TY	ｲﾝﾅｰ	適用号機 SERIAL_NO.	互換 ICA	代替部品 REPLACEABLE PART
1	1A	KRV20240	ﾘﾝｸ;ﾊﾞｹｯﾄ (EM3)	LINK;BUCKET	1				
2	2	KRV2364	ﾘﾝｸ;ﾊﾞｹｯﾄ	LINK;BUCKET	1				
3	2A	KRV19510	ﾘﾝｸ;ﾊﾞｹｯﾄ (ﾌﾞｼｭｳﾁｺﾐ	LINK;BUCKET	1				
4	3	KRV10930	ﾌﾞｼﾕ;ｽﾁｰﾙ (PEL-BH)	BUSH;STEEL	2				
5	3	KHV0101	ｼｰﾙ;ﾀﾞｽﾄ	SEAL;DUST	2				
6	3	KRV2395	ﾌﾞｼﾕ;ｵｲﾙﾚｽ	BUSH;OILLESS	2				
7	3	KHV0102	ｼｰﾙ;ﾀﾞｽﾄ	SEAL;DUST	4				
8	1	M01X0812	ﾆｯﾌﾟﾙ;ｸﾞﾘｽ (A-R1/8)	NIPPLE;GREASE	3				
9	1	KRV2365	ﾘﾝｸ;ｱｰﾑ (ﾐｷﾞ)	LINK;ARM	1				
10	1	KRV2366	ﾘﾝｸ;ｱｰﾑ (ﾋﾀﾞﾘ)	LINK;ARM	1				
11	1	KRV2915	ﾋﾟﾝ;ｱﾀｯﾁﾒﾝﾄ (ﾒｯｷ)	PIN;ATT	1				
12	1	KHV0115	O-ﾘﾝｸﾞ	O-RING	2				
13	1	KRV1161	ﾋﾟﾝ (ﾜﾝﾀｯﾁ ｺﾃｲ)	PIN;SPL	1				
14	1	KRV1162	ﾘﾝｸﾞ (ﾜﾝﾀｯﾁ ｺﾃｲ)	RING	1				
15	1	KRV2916	ﾋﾟﾝ;ｱﾀｯﾁﾒﾝﾄ (ﾒｯｷ)	PIN;ATT	1				
16	1	KHV0115	O-ﾘﾝｸﾞ	O-RING	2				
17	1	KRV1161	ﾋﾟﾝ (ﾜﾝﾀｯﾁ ｺﾃｲ)	PIN;SPL	1				
18	1	KRV1162	ﾘﾝｸﾞ (ﾜﾝﾀｯﾁ ｺﾃｲ)	RING	1				
19	1	KRV2367	ﾋﾟﾝ;ｱﾀｯﾁﾒﾝﾄ	PIN;ATT	1				
20	1	KHV0114	O-ﾘﾝｸﾞ	O-RING	4				
21	1	KHV0170	ｼﾑ;ﾌﾟﾚｰﾄ	SHIM;PLATE	2 AR				
22	1	132R020Y170R	ｺｳﾘｷB M20X1.5 X170	BOLT;HIGH STRENGTH	1				
23	1	172R020VR	ｺｳﾘｷN M20X1.5	NUT;HIGH STRENGTH	2				
24	1	KRV2368	ﾋﾟﾝ;ｱﾀｯﾁﾒﾝﾄ	PIN;ATT	1				
25	1	KHV0113	O-ﾘﾝｸﾞ	O-RING	2				
26	1	KHV0169	ｼﾑ;ﾌﾟﾚｰﾄ	SHIM;PLATE	2 AR				
27	1	132R020Y160R	ｺｳﾘｷB M20X1.5 X160	BOLT;HIGH STRENGTH	1				
28	1	172R020VR	ｺｳﾘｷN M20X1.5	NUT;HIGH STRENGTH	2				
29	1	M01X0812	ﾆｯﾌﾟﾙ;ｸﾞﾘｽ (A-R1/8)	NIPPLE;GREASE	1				

https://truckmanualshub.com/

1 [2 ~ 7]　3 [4 ~ 7]

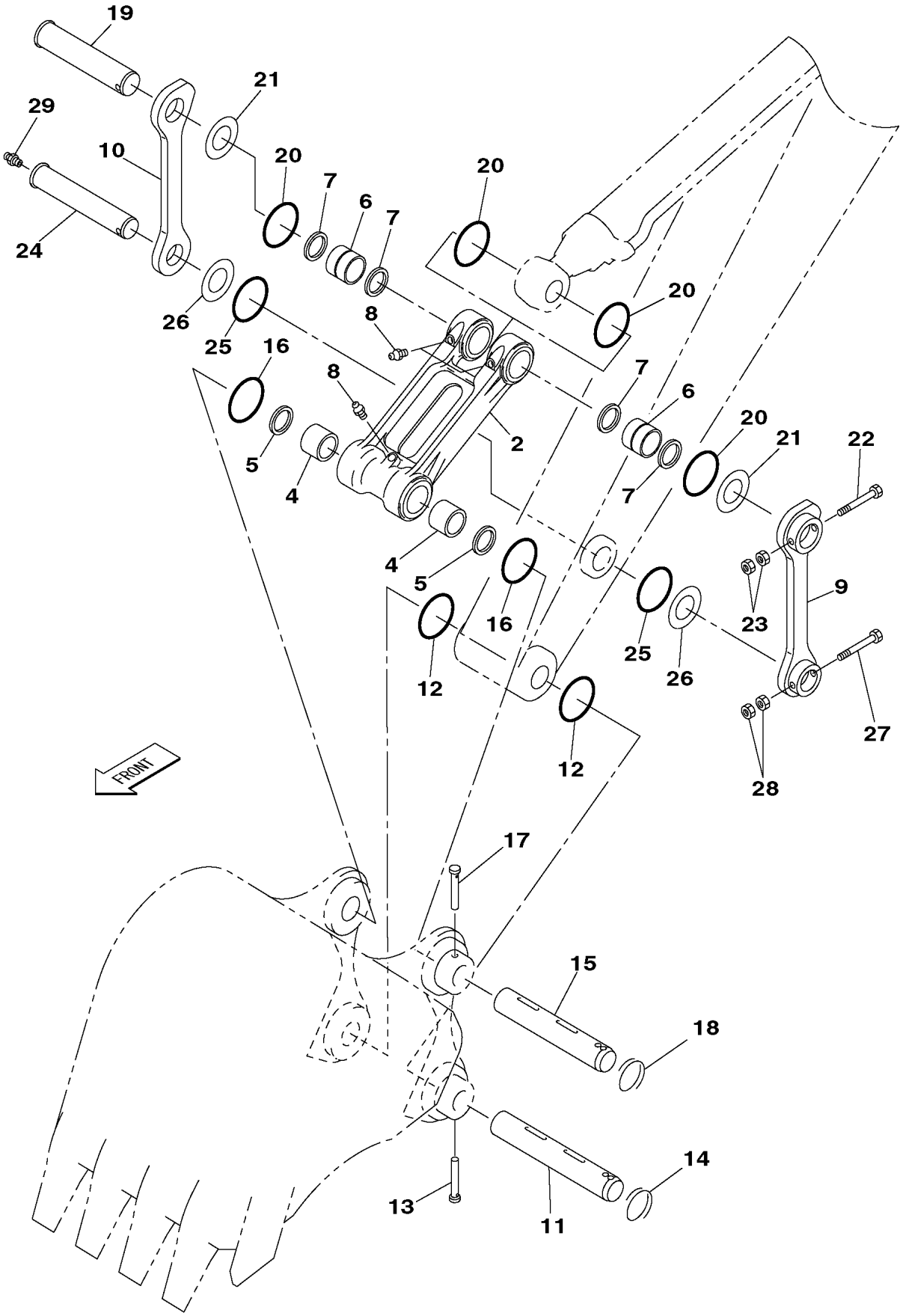

KGONV647-0
KBV17620-E

https://truckmanualshub.com/

210L5 1101－

符号 ITEM	構成 COMPO	部品番号 PART NO.	部品名	PART NAME	個数 Q'TY	ｲﾝﾅｰ	適用号機 SERIAL_NO.	互換 ICA	代替部品 REPLACEABLE PART
1	1A	KNV15570	ﾘﾝｸ;ﾊﾞｹｯﾄ (EM3)	LINK;BUCKET	1				
2	2	KNV1106	ﾘﾝｸ;ﾊﾞｹｯﾄ	LINK;BUCKET	1				
3	2A	KNV13750	ﾘﾝｸ;ﾊﾞｹｯﾄ (ﾌﾞｼｭｳﾁｺﾐ	LINK;BUCKET	1				
4	3	KNV12740	ﾌﾞｼﾕ;ｽﾁｰﾙ (PEL BH2)	BUSH;STEEL	2				
5	3	KHV0098	ｼｰﾙ;ﾀﾞｽﾄ	SEAL;DUST	2				
6	3	KNV1143	ﾌﾞｼﾕ;ｵｲﾙﾚｽ	BUSH;OILLESS	2				
7	3	KHV0099	ｼｰﾙ;ﾀﾞｽﾄ	SEAL;DUST	4				
8	1	M01X0812	ﾆｯﾌﾟﾙ;ｸﾞﾘｽ (A-R1/8)	NIPPLE;GREASE	3				
9	1	KNV1473	ﾘﾝｸ;ｱｰﾑ (ﾋﾀﾞﾘ)	LINK;ARM	1				
10	1	KNV1474	ﾘﾝｸ;ｱｰﾑ (ﾐｷﾞ)	LINK;ARM	1				
11	1	KNV1309	ﾋﾟﾝ;ｱﾀｯﾁﾒﾝﾄ (ﾒｯｷ)	PIN;ATT	1				
12	1	KHV0113	O-ﾘﾝｸﾞ	O-RING	2				
13	1	KNV0464	ﾋﾟﾝ	PIN;SPL	1				
14	1	KAV0743	ﾘﾝｸﾞ	RING	1				
15	1	KNV1310	ﾋﾟﾝ;ｱﾀｯﾁﾒﾝﾄ (ﾒｯｷ)	PIN;ATT	1				
16	1	KHV0113	O-ﾘﾝｸﾞ	O-RING	2				
17	1	KNV0464	ﾋﾟﾝ	PIN;SPL	1				
18	1	KAV0743	ﾘﾝｸﾞ	RING	1				
19	1	KNV1233	ﾋﾟﾝ;ｱﾀｯﾁﾒﾝﾄ (EMS)	PIN;ATT	1				
20	1	KHV0112	O-ﾘﾝｸﾞ	O-RING	4				
21	1	KMV0122	ｼﾑ;ﾌﾟﾚｰﾄ	SHIM;PLATE	2 AR				
22	1	132R016Y140R	ｺｳﾘｷB M16X1.5 X140	BOLT;HIGH STRENGTH	1				
23	1	172R016VR	ｺｳﾘｷN M16X1.5	NUT;HIGH STRENGTH	2				
24	1	KNV1234	ﾋﾟﾝ;ｱﾀｯﾁﾒﾝﾄ (EMS)	PIN;ATT	1				
25	1	KHV0111	O-ﾘﾝｸﾞ	O-RING	2				
26	1	KMV0144	ｼﾑ;ﾌﾟﾚｰﾄ	SHIM 1.2T	2 AR				
27	1	132R016Y140R	ｺｳﾘｷB M16X1.5 X140	BOLT;HIGH STRENGTH	1				
28	1	172R016VR	ｺｳﾘｷN M16X1.5	NUT;HIGH STRENGTH	2				
29	1	M01X0812	ﾆｯﾌﾟﾙ;ｸﾞﾘｽ (A-R1/8)	NIPPLE;GREASE	1				

https://truckmanualshub.com/

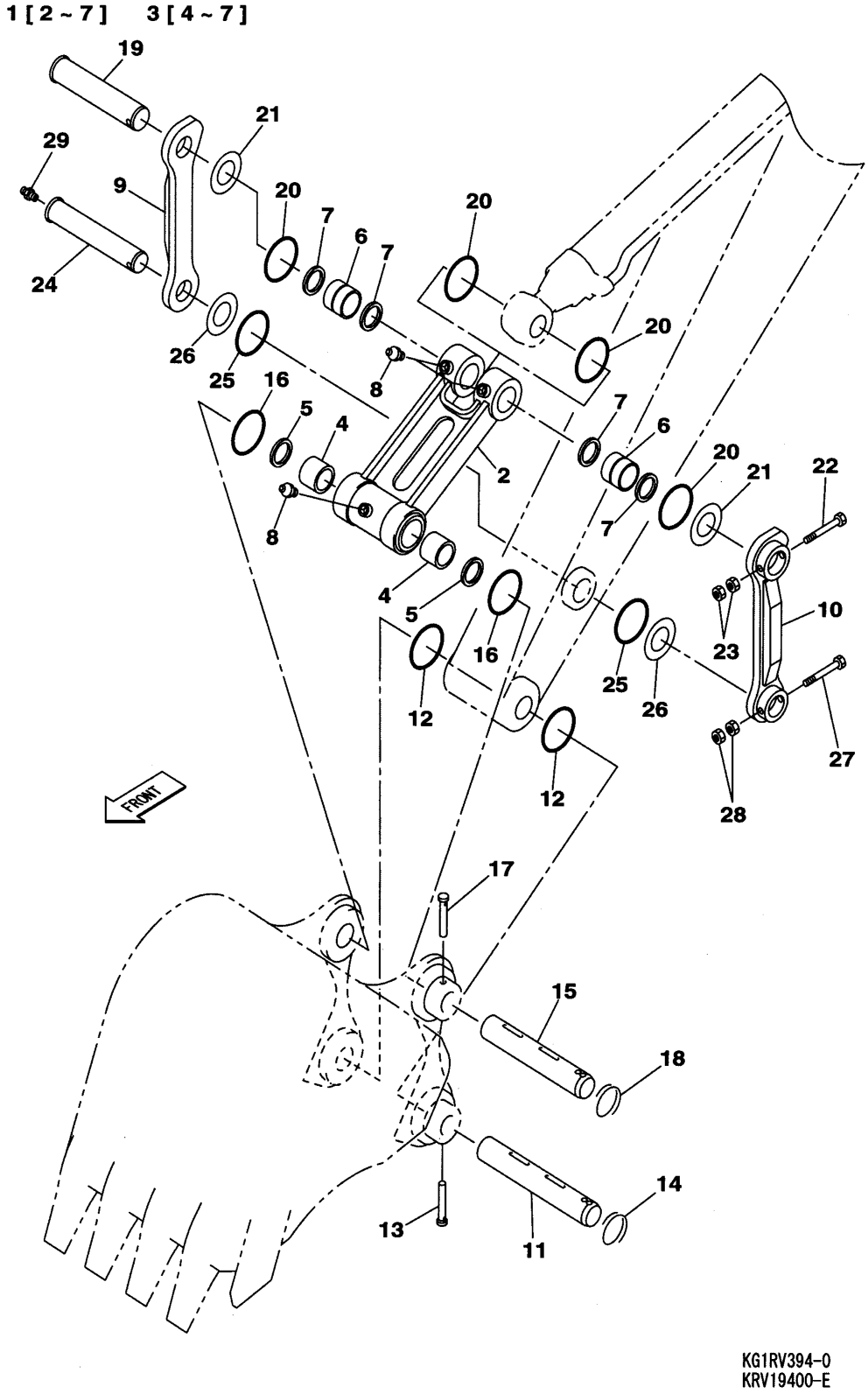

https://truckmanualshub.com/

210A5 1101－ 210L5 1101－

符号 ITEM	構成 COMPO	部品番号 PART NO.	部品名	PART NAME	個数 Q'TY	ｲﾝﾅｰ	適用号機 SERIAL_NO.	互換 ICA	代替部品 REPLACEABLE PART
1	1A	KRV19500	ﾘﾝｸ;ﾊﾞｹｯﾄ (ｷｮｳｶｶﾞﾀ E	LINK;BUCKET	1				
2	2	KRV2715	ﾘﾝｸ;ﾊﾞｹｯﾄ (ｷｮｳｶｶﾞﾀ)	LINK;BUCKET	1				
3	2A	KRV19510	ﾘﾝｸ;ﾊﾞｹｯﾄ (ﾌﾞｼｭｳﾁｺﾐ	LINK;BUCKET	1				
4	3	KRV10930	ﾌﾞｼﾕ;ｽﾁｰﾙ (PEL-BH)	BUSH;STEEL	2				
5	3	KHV0101	ｼｰﾙ;ﾀﾞｽﾄ	SEAL;DUST	2				
6	3	KRV2395	ﾌﾞｼﾕ;ｵｲﾙﾚｽ	BUSH;OILLESS	2				
7	3	KHV0102	ｼｰﾙ;ﾀﾞｽﾄ	SEAL;DUST	4				
8	1	M01X0812	ﾆｯﾌﾟﾙ;ｸﾞﾘｽ (A-R1/8)	NIPPLE;GREASE	3				
9	1	KRV13010	ﾘﾝｸ;ｱｰﾑ (ﾐｷﾞ) (ｷｮｳｶｶ	LINK;ARM	1				
10	1	KRV13020	ﾘﾝｸ;ｱｰﾑ (ﾋﾀﾞﾘ) (ｷｮｳｶ	LINK;ARM	1				
11	1	KRV2915	ﾋﾟﾝ;ｱﾀｯﾁﾒﾝﾄ (ﾒｯｷ)	PIN;ATT	1				
12	1	KHV0115	O-ﾘﾝｸﾞ	O-RING	2				
13	1	KRV1161	ﾋﾟﾝ (ﾜﾝﾀｯﾁ ｺﾃｲ)	PIN;SPL	1				
14	1	KRV1162	ﾘﾝｸﾞ (ﾜﾝﾀｯﾁ ｺﾃｲ)	RING	1				
15	1	KRV2916	ﾋﾟﾝ;ｱﾀｯﾁﾒﾝﾄ (ﾒｯｷ)	PIN;ATT	1				
16	1	KHV0115	O-ﾘﾝｸﾞ	O-RING	2				
17	1	KRV1161	ﾋﾟﾝ (ﾜﾝﾀｯﾁ ｺﾃｲ)	PIN;SPL	1				
18	1	KRV1162	ﾘﾝｸﾞ (ﾜﾝﾀｯﾁ ｺﾃｲ)	RING	1				
19	1	KRV2719	ﾋﾟﾝ;ｱﾀｯﾁﾒﾝﾄ ｷｮｳｶｶﾞﾀ	PIN;ATT	1				
20	1	KHV0114	O-ﾘﾝｸﾞ	O-RING	4				
21	1	KHV0170	ｼﾑ;ﾌﾟﾚｰﾄ	SHIM;PLATE	2 AR				
22	1	132R020Y170R	ｺｳﾘｷB M20X1.5 X170	BOLT;HIGH STRENGTH	1				
23	1	172R020VR	ｺｳﾘｷN M20X1.5	NUT;HIGH STRENGTH	2				
24	1	KRV2368	ﾋﾟﾝ;ｱﾀｯﾁﾒﾝﾄ	PIN;ATT	1				
25	1	KHV0113	O-ﾘﾝｸﾞ	O-RING	2				
26	1	KHV0169	ｼﾑ;ﾌﾟﾚｰﾄ	SHIM;PLATE	2 AR				
27	1	132R020Y160R	ｺｳﾘｷB M20X1.5 X160	BOLT;HIGH STRENGTH	1				
28	1	172R020VR	ｺｳﾘｷN M20X1.5	NUT;HIGH STRENGTH	2				
29	1	M01X0812	ﾆｯﾌﾟﾙ;ｸﾞﾘｽ (A-R1/8)	NIPPLE;GREASE	1				

https://truckmanualshub.com/

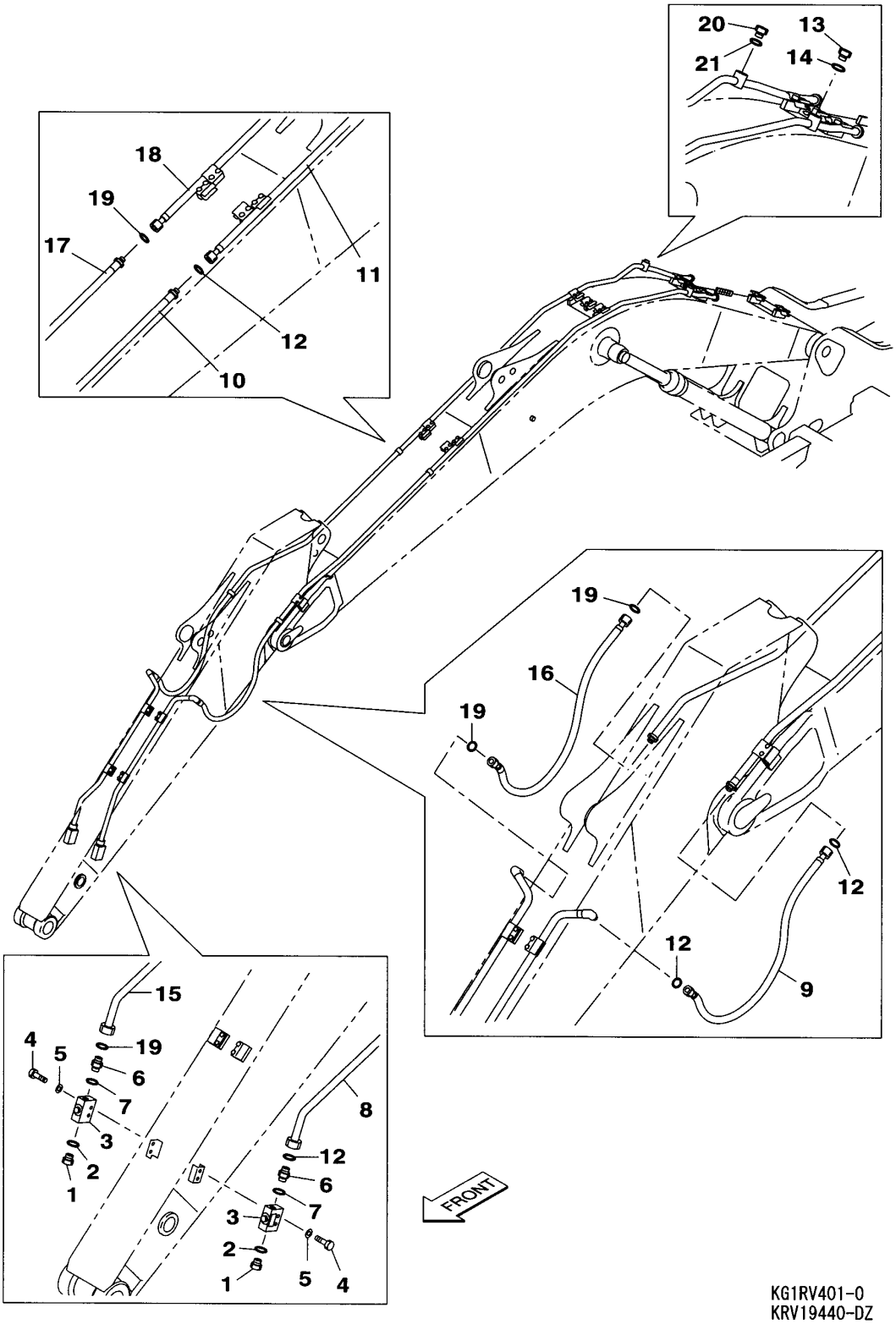

KG1RV401-0
KRV19440-DZ

https://truckmanualshub.com/

210A5 1101－ 210L5 1101－

符号 ITEM	構成 COMPO	部品番号 PART NO.	部品名	PART NAME	個数 Q'TY	ｲﾝﾅｰ	適用号機 SERIAL_NO.	互換 ICA	代替部品 REPLACEABLE PART
1	1A	BRJ0174	ﾌﾟﾗｸﾞ ﾛﾂｶｸ	PLUG	2				
2	2	BHJ0795	O-ﾘﾝｸﾞ 1B P29	O-RING	2				
3	1	KHV10690	ﾊﾞﾙﾌﾞ;ｽﾄｯﾌﾟ G1	VALVE;STOP	2		210A5 NOT USED 210L5 NOT USED		
3	1	KHV10430	ﾊﾞﾙﾌﾞ;ｽﾄｯﾌﾟ G1	VALVE;STOP	2				
4	1	102R012Y080R	ｺｳﾘｷB M12X 80	BOLT;HIGH STRENGTH	4		210A5 NOT USED 210L5 NOT USED		
4	1	102R012Y085R	ｺｳﾘｷB M12X 85	BOLT;HIGH STRENGTH	4				
5	1	KHN0296	ｺｳﾘｷW 12 (ﾒｯｷ)	WASHER;HIGH STRENGTH	4				
6	1A	KHJ1349	ｱﾀﾞﾌﾟﾀ;ﾎｰｽ	ADAPTER;HOSE	2				
7	2	BHJ0795	O-ﾘﾝｸﾞ 1B P29	O-RING	2				
8	1	KRV19130	ﾊｲｶﾝｸﾐﾀﾃ (01 L)	TUBE;ASSY	1		210A5 NOT USED 210L5 NOT USED		
8	1	KRV23240	ﾊｲｶﾝｸﾐﾀﾃ (01 L)	TUBE;ASSY	1				
9	1	KRV19740	ﾎｰｽ;ﾕｱﾂ (L=1500)	HOSE;HYD	1				
10	1	KRV19110	ﾊｲｶﾝｸﾐﾀﾃ (01 L)	TUBE;ASSY	1				
11	1	KRV19090	ﾊｲｶﾝｸﾐﾀﾃ (01 L)	TUBE;ASSY	1				
12	1	KHJ1361	O-ﾘﾝｸﾞ AS568-021	O-RING	4				
13	1A	BRJ1286	ﾌﾟﾗｸﾞ G3/4	PLUG	1				
14	2	UBJ0158	O-ﾘﾝｸﾞ 1B-P24	O-RING	1				
15	1	KRV19140	ﾊｲｶﾝｸﾐﾀﾃ (01 R)	TUBE;ASSY	1		210A5 NOT USED 210L5 NOT USED		
15	1	KRV23250	ﾊｲｶﾝｸﾐﾀﾃ (01 R)	TUBE;ASSY	1				
16	1	KRV19740	ﾎｰｽ;ﾕｱﾂ (L=1500)	HOSE;HYD	1				
17	1	KRV19120	ﾊｲｶﾝｸﾐﾀﾃ (01 R)	TUBE;ASSY	1				
18	1	KRV19100	ﾊｲｶﾝｸﾐﾀﾃ (01 R)	TUBE;ASSY	1				
19	1	KHJ1361	O-ﾘﾝｸﾞ AS568-021	O-RING	4				
20	1A	BRJ1286	ﾌﾟﾗｸﾞ G3/4	PLUG	1				
21	2	UBJ0158	O-ﾘﾝｸﾞ 1B-P24	O-RING	1				

https://truckmanualshub.com/

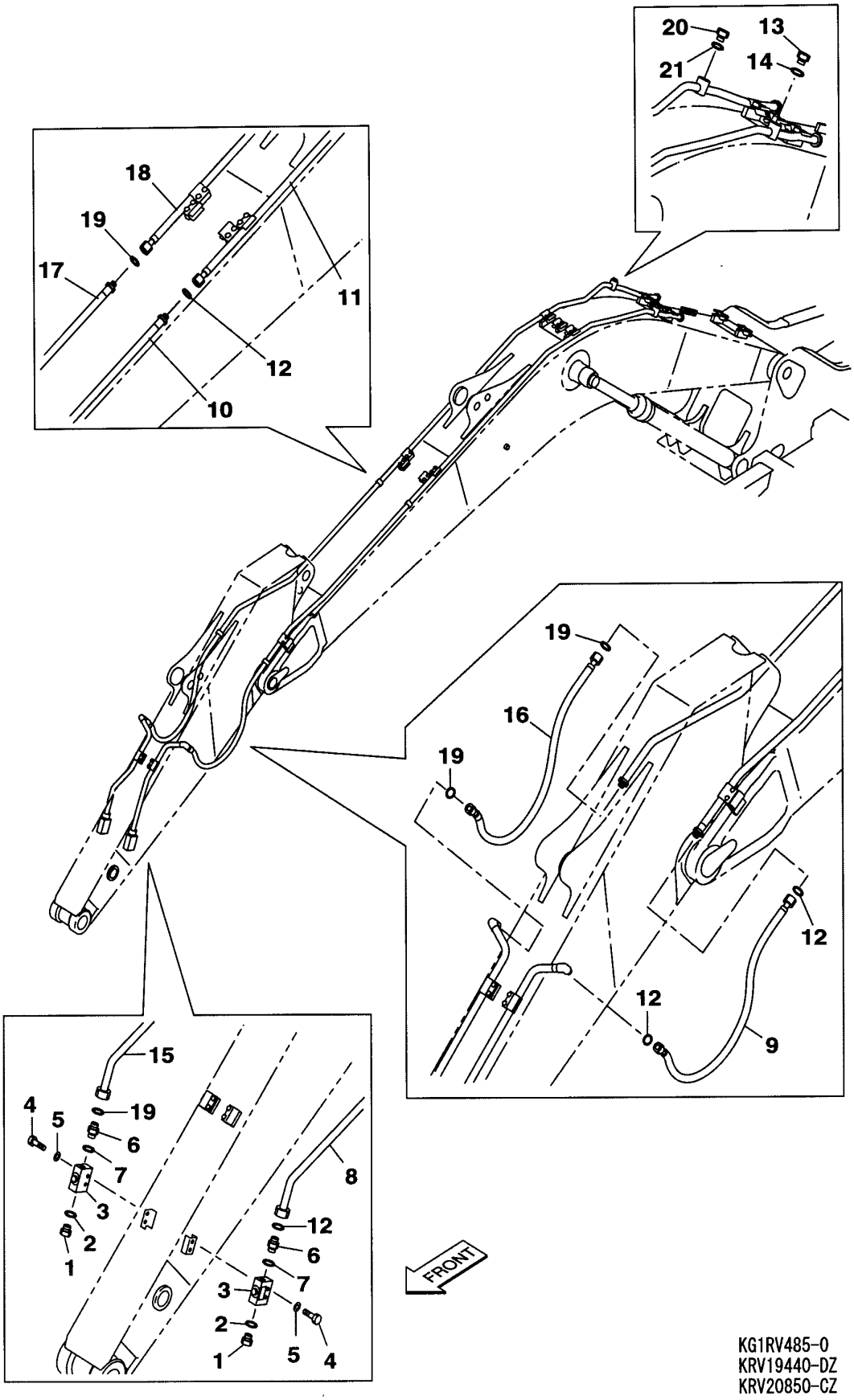

KG1RV485-0
KRV19440-DZ
KRV20850-CZ

https://truckmanualshub.com/

210A5 1101－ 210L5 1101－

符号 ITEM	構成 COMPO	部品番号 PART NO.	部品名	PART NAME	個数 Q'TY	ｲﾝﾅｰ	適用号機 SERIAL_NO.	互換 ICA	代替部品 REPLACEABLE PART
1	1A	BRJ0174	ﾌﾟﾗｸﾞ ﾛﾂｶｸ	PLUG	2				
2	2	BHJ0795	O-ﾘﾝｸﾞ 1B P29	O-RING	2				
3	1	KHV10690	ﾊﾞﾙﾌﾞ;ｽﾄｯﾌﾟ G1	VALVE;STOP	2		210A5 NOT USED 210L5 NOT USED		
3	1	KHV10430	ﾊﾞﾙﾌﾞ;ｽﾄｯﾌﾟ G1	VALVE;STOP	2				
4	1	102R012Y080R	ｺｳﾘｷB M12X 80	BOLT;HIGH STRENGTH	4		210A5 NOT USED 210L5 NOT USED		
4	1	102R012Y085R	ｺｳﾘｷB M12X 85	BOLT;HIGH STRENGTH	4				
5	1	KHN0296	ｺｳﾘｷW 12 (ﾒﾂｷ)	WASHER;HIGH STRENGTH	4				
6	1A	KHJ1349	ｱﾀﾞﾌﾟﾀ;ﾎｰｽ	ADAPTER;HOSE	2				
7	2	BHJ0795	O-ﾘﾝｸﾞ 1B P29	O-RING	2				
8	1	KRV20810	ﾊｲｶﾝｸﾐﾀﾃ (01 L)	TUBE;ASSY	1		210A5 NOT USED 210L5 NOT USED		
8	1	KRV23320	ﾊｲｶﾝｸﾐﾀﾃ (01 L)	TUBE;ASSY	1				
9	1	KRV19740	ﾎｰｽ;ﾕｱﾂ (L=1500)	HOSE;HYD	1				
10	1	KRV19110	ﾊｲｶﾝｸﾐﾀﾃ (01 L)	TUBE;ASSY	1				
11	1	KRV19090	ﾊｲｶﾝｸﾐﾀﾃ (01 L)	TUBE;ASSY	1				
12	1	KHJ1361	O-ﾘﾝｸﾞ AS568-021	O-RING	4				
13	1A	BRJ1286	ﾌﾟﾗｸﾞ G3/4	PLUG	1				
14	2	UBJ0158	O-ﾘﾝｸﾞ 1B-P24	O-RING	1				
15	1	KRV20800	ﾊｲｶﾝｸﾐﾀﾃ (01 R)	TUBE;ASSY	1		210A5 NOT USED 210L5 NOT USED		
15	1	KRV23330	ﾊｲｶﾝｸﾐﾀﾃ (01 R)	TUBE;ASSY	1				
16	1	KRV19740	ﾎｰｽ;ﾕｱﾂ (L=1500)	HOSE;HYD	1				
17	1	KRV19120	ﾊｲｶﾝｸﾐﾀﾃ (01 R)	TUBE;ASSY	1				
18	1	KRV19100	ﾊｲｶﾝｸﾐﾀﾃ (01 R)	TUBE;ASSY	1				
19	1	KHJ1361	O-ﾘﾝｸﾞ AS568-021	O-RING	4				
20	1A	BRJ1286	ﾌﾟﾗｸﾞ G3/4	PLUG	1				
21	2	UBJ0158	O-ﾘﾝｸﾞ 1B-P24	O-RING	1				

https://truckmanualshub.com/

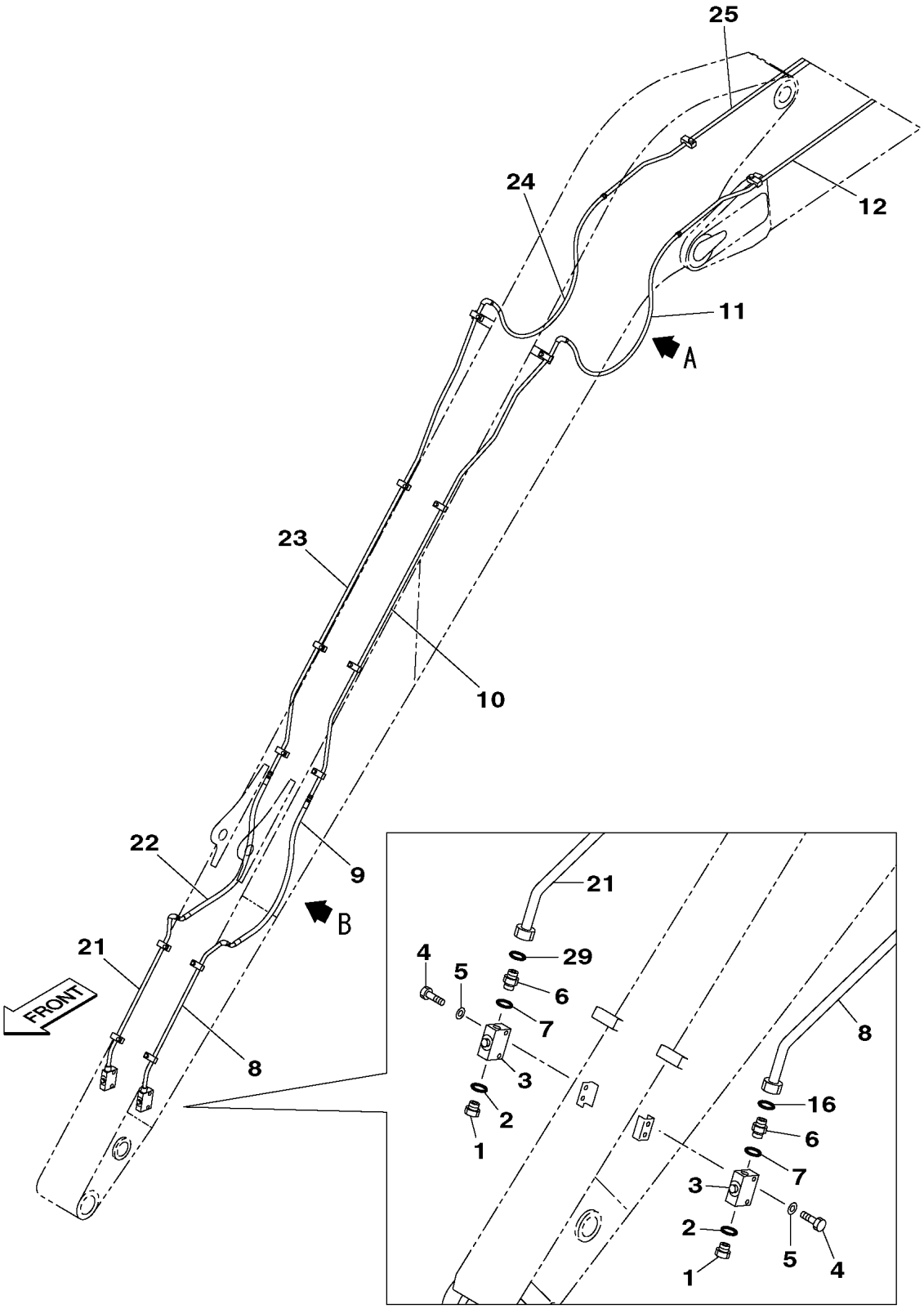

KG1RV589-0
KRV24740-EZ

https://truckmanualshub.com/

210L5 1101－

符号 ITEM	構成 COMPO	部品番号 PART NO.	部品名	PART NAME	個数 Q'TY	ｲﾝﾅｰ	適用号機 SERIAL_NO.	互換 ICA	代替部品 REPLACEABLE PART
1	1A	BRJ0174	ﾌﾟﾗｸﾞ ﾛﾂｶｸ	PLUG	2				
2	2	BHJ0795	O-ﾘﾝｸﾞ 1B P29	O-RING	2				
3	1	KHV10430	ﾊﾞﾙﾌﾞ;ｽﾄｯﾌﾟ G1	VALVE;STOP	2				
4	1	102R012Y080R	ｺｳﾘｷB M12X 80	BOLT;HIGH STRENGTH	4				
5	1	KHN0296	ｺｳﾘｷW 12 (ﾒﾂｷ)	WASHER;HIGH STRENGTH	4				
6	1A	KHJ1349	ｱﾀﾞﾌﾟﾀ;ﾎｰｽ	ADAPTER;HOSE	2				
7	2	BHJ0795	O-ﾘﾝｸﾞ 1B P29	O-RING	2				
8	1	KRV24360	ﾊｲｶﾝｸﾐﾀﾃ (01 L)	TUBE;ASSY	1				
9	1	KRV24770	ﾎｰｽ;ﾕｱﾂ (L=1050)	HOSE;HYD	1		210L5 -1408	<	KRV27950
9	1	KRV27950	ﾎｰｽ;ﾕｱﾂ (L=1100)	HOSE;HYD	1		210L5 1409-		
10	1	KRV24340	ﾊｲｶﾝｸﾐﾀﾃ (01 L)	TUBE;ASSY	1				
11	1	KBV17160	ﾎｰｽ;ﾕｱﾂ (L=1700)	HOSE;HYD	1				
12	1	KRV24440	ﾊｲｶﾝｸﾐﾀﾃ (01 L)	TUBE;ASSY	1				
13	1	KRV17540	ﾊｲｶﾝｸﾐﾀﾃ (ﾖﾋﾞ ﾌﾞｰﾑ)	TUBE;ASSY	1				
14	1	KRV2495	ﾎｰｽ;ﾕｱﾂ (L=1000)	HOSE;HYD	1				
15	1	KRV24320	ﾊｲｶﾝｸﾐﾀﾃ (01 L)	TUBE;ASSY	1				
16	1	KHJ1361	O-ﾘﾝｸﾞ AS568-021	O-RING	7				
17	1	BHJ1054	O-ﾘﾝｸﾞ 1B P35	O-RING	1				
18	1	108R010Y045R	ﾛﾂｶｸｱﾅB M10X 45	BOLT;HEX SOC HD	4				
19	1A	BRJ1286	ﾌﾟﾗｸﾞ G3/4	PLUG	1				
20	2	UBJ0158	O-ﾘﾝｸﾞ 1B-P24	O-RING	1				
21	1	KRV24350	ﾊｲｶﾝｸﾐﾀﾃ (01 R)	TUBE;ASSY	1				
22	1	KRV24770	ﾎｰｽ;ﾕｱﾂ (L=1050)	HOSE;HYD	1		210L5 -1408	<	KRV27950
22	1	KRV27950	ﾎｰｽ;ﾕｱﾂ (L=1100)	HOSE;HYD	1		210L5 1409-		
23	1	KRV24330	ﾊｲｶﾝｸﾐﾀﾃ (01 R)	TUBE;ASSY	1				
24	1	KBV17160	ﾎｰｽ;ﾕｱﾂ (L=1700)	HOSE;HYD	1				
25	1	KRV24430	ﾊｲｶﾝｸﾐﾀﾃ (01 R)	TUBE;ASSY	1				
26	1	KRV17540	ﾊｲｶﾝｸﾐﾀﾃ (ﾖﾋﾞ ﾌﾞｰﾑ)	TUBE;ASSY	1				
27	1	KRV2495	ﾎｰｽ;ﾕｱﾂ (L=1000)	HOSE;HYD	1				
28	1	KRV24310	ﾊｲｶﾝｸﾐﾀﾃ (01 R)	TUBE;ASSY	1				
29	1	KHJ1361	O-ﾘﾝｸﾞ AS568-021	O-RING	7				
30	1	BHJ1054	O-ﾘﾝｸﾞ 1B P35	O-RING	1				
31	1	108R010Y045R	ﾛﾂｶｸｱﾅB M10X 45	BOLT;HEX SOC HD	4				
32	1A	BRJ1286	ﾌﾟﾗｸﾞ G3/4	PLUG	1				
33	2	UBJ0158	O-ﾘﾝｸﾞ 1B-P24	O-RING	1				

https://truckmanualshub.com/

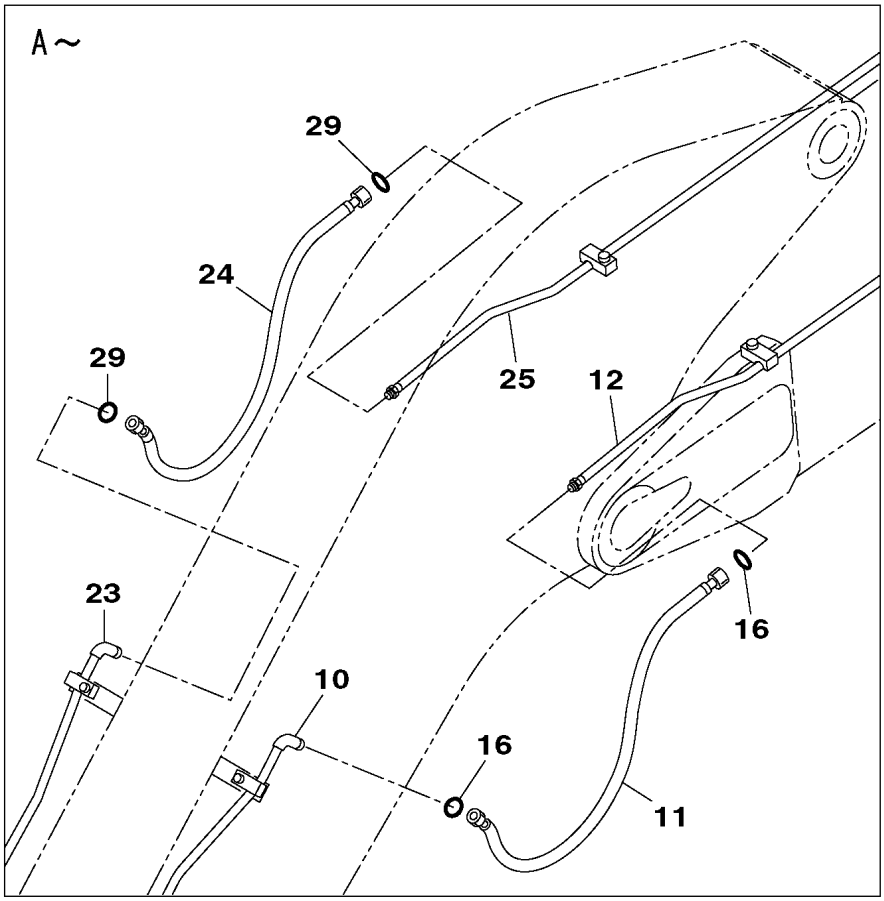

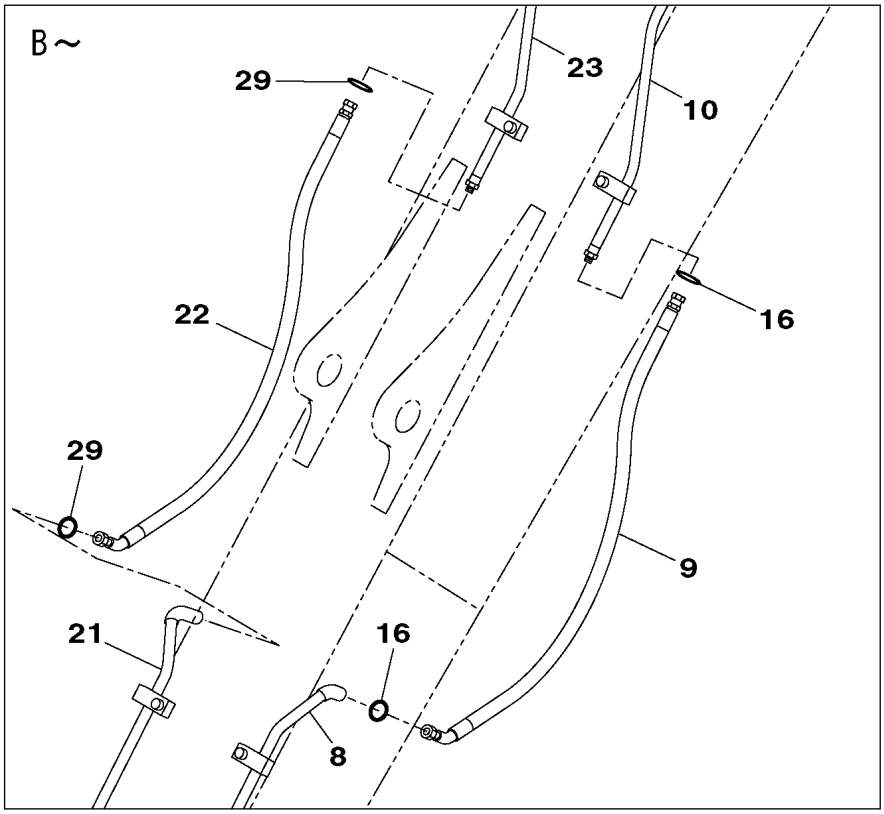

KG1RV589-0
KRV24740-EZ

https://truckmanualshub.com/

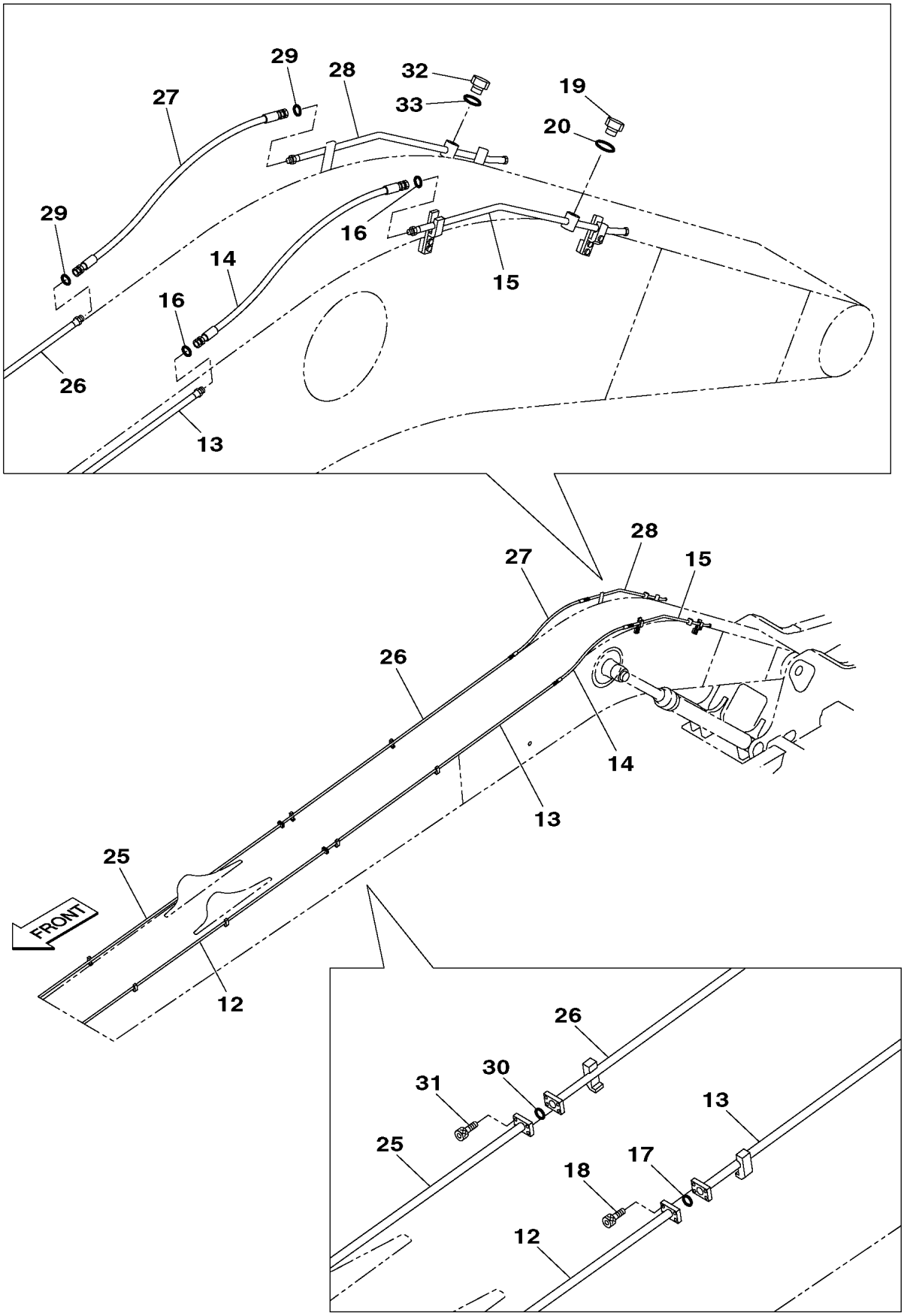

KG1RV589-0
KRV24740-EZ

https://truckmanualshub.com/

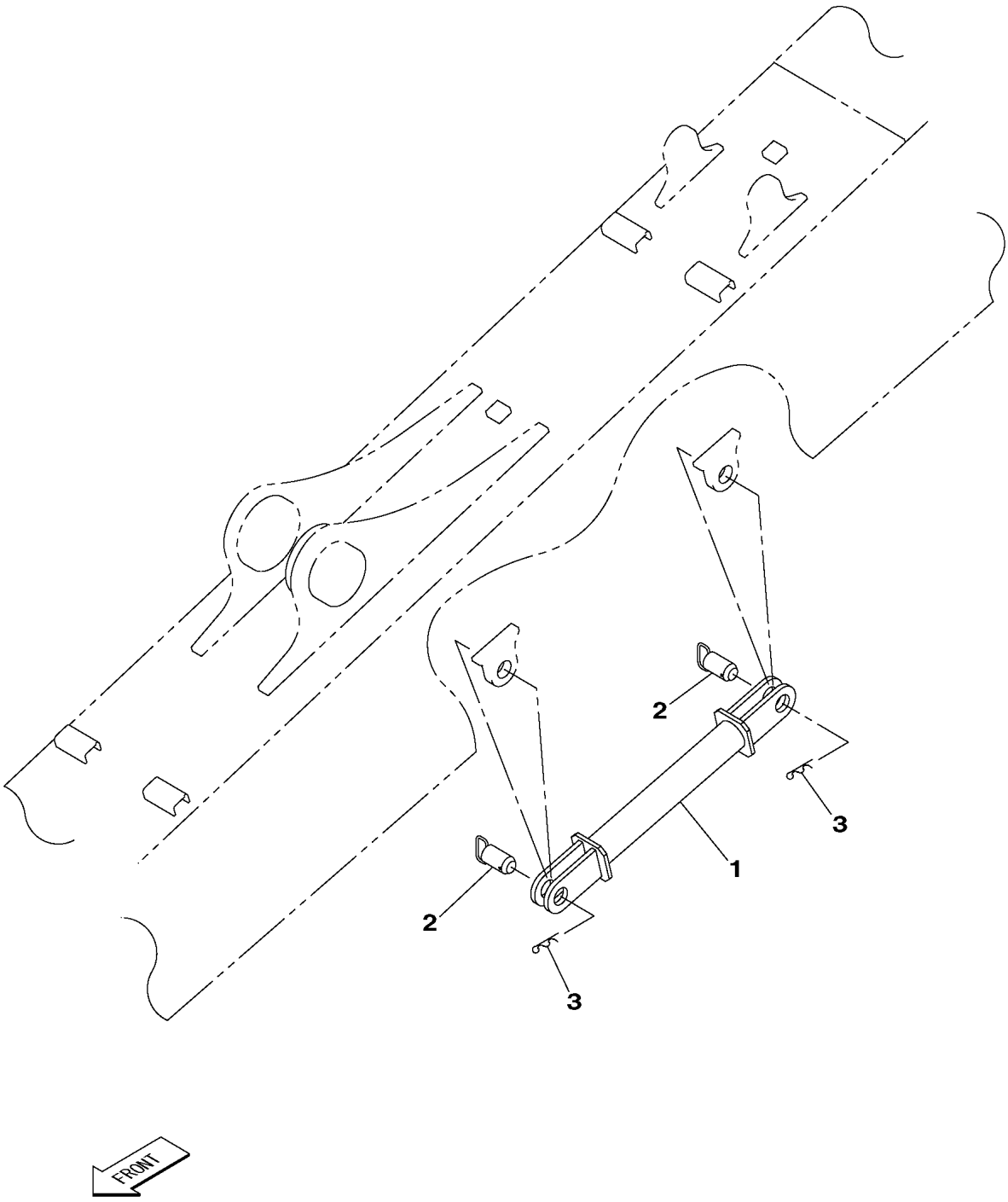

KG0RV749-0
KRV2884Z-E

https://truckmanualshub.com/

210L5 1101ー

符号 ITEM	構成 COMPO	部品番号 PART NO.	部品名	PART NAME	個数 Q'TY	ｲﾝﾅｰ	適用号機 SERIAL_NO.	互換 ICA	代替部品 REPLACEABLE PART
1	1	KRV2905	ｽﾃｰ ﾕｿｳﾖｳ	STAY;SPL	1				
2	1	KRV1323	ﾋﾟﾝ	PIN;SPL	2				
3	1	UJM0020	ﾋﾟﾝ;ﾏｯﾊﾞ	PIN;HAIR CLIP	2				

https://truckmanualshub.com/

1 [2 , 3]

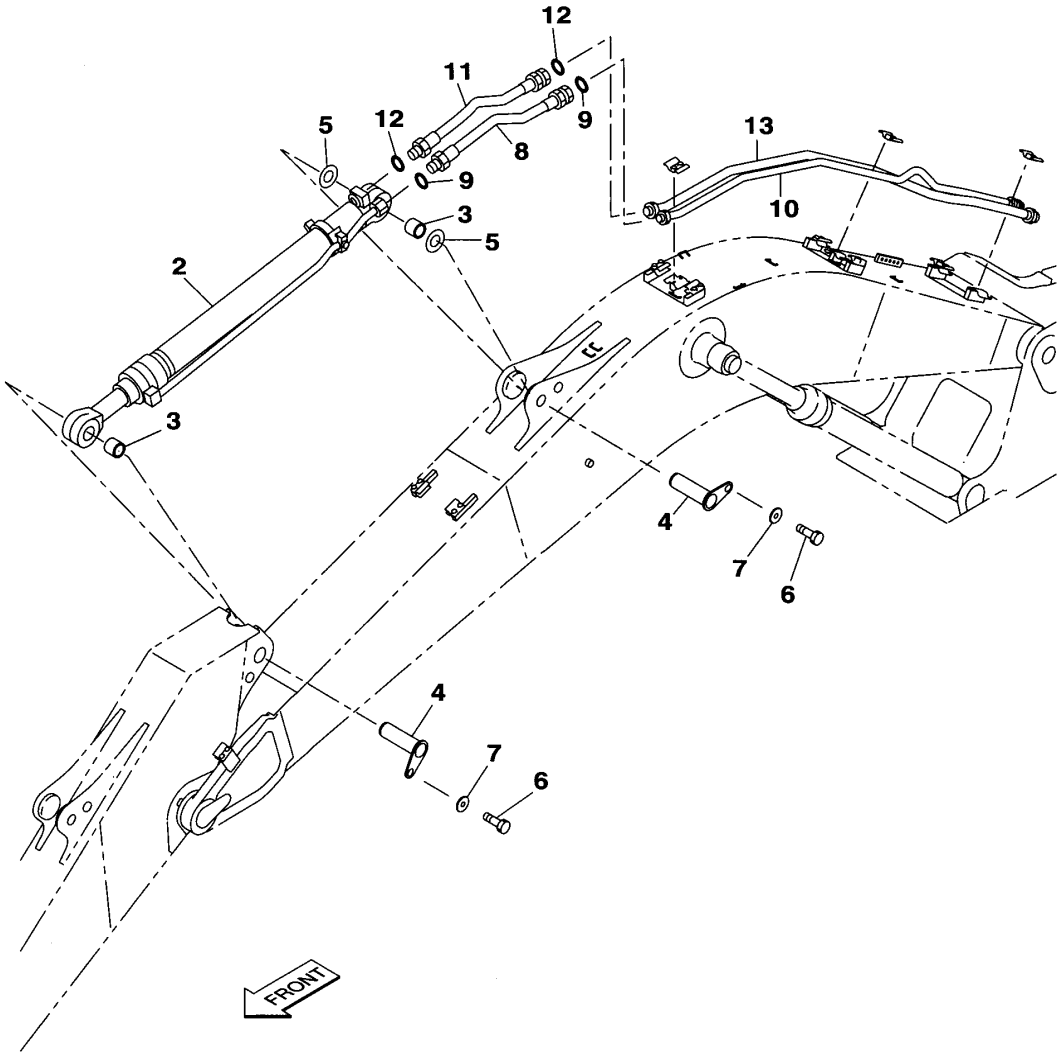

KG1RV454-0
KRV19400-E

https://truckmanualshub.com/

210A5 1101－ 210L5 1101－

符号 ITEM	構成 COMPO	部品番号 PART NO.	部品名	PART NAME	個数 Q'TY	ｲﾝﾅｰ	適用号機 SERIAL_NO.	互換 ICA	代替部品 REPLACEABLE PART
1	1A	KRV19600	ｼﾘﾝﾀﾞ;ｱｰﾑ (EMS)	CYL;ARM	1	*			
2	2	KRV19610	ｼﾘﾝﾀﾞ;ｱｰﾑ	CYL;ARM	1	*			
3	2	KRV2400	ﾌﾞｼｭ;ｵｲﾙﾚｽ	BUSH;OILLESS	2				
4	1	KRV10980	ﾋﾟﾝ;ｱﾀｯﾁﾒﾝﾄ (EMS)	PIN;ATT	2				
5	1	KRV1197	ｼﾑ;ﾌﾟﾚｰﾄ	SHIM;PLATE	2		210A5 -1123	<	KSP0264
							210L5 NOT USED		
5	1	KSP0264	ｼﾑ;ﾌﾟﾚｰﾄ	SHIM;PLATE	2		210A5 1124-		
6	1	102R012Y025R	ｺｳﾘｷB M12X 25	BOLT;HIGH STRENGTH	2				
7	1	KBN0298	ｺｳﾘｷW (M12ﾖｳ)	WASHER;HIGH STRENGTH	2				
8	1	KRV19720	ﾎｰｽ;ﾕｱﾂ (L=850)	HOSE;HYD	1				
9	1	KHJ1360	O-ﾘﾝｸﾞ AS568-018	O-RING	2				
10	1	KRV19030	ﾊｲｶﾝｸﾐﾀﾃ (ｱｰﾑ L)	TUBE;ASSY	1				
11	1	KBJ3115	ﾎｰｽ;ﾕｱﾂ S15-25X850 K	HOSE;HYD	1				
12	1	KHJ1361	O-ﾘﾝｸﾞ AS568-021	O-RING	2				
13	1	KRV19040	ﾊｲｶﾝｸﾐﾀﾃ (ｱｰﾑ R)	TUBE;ASSY	1				

https://truckmanualshub.com/

23 [24 , 25]

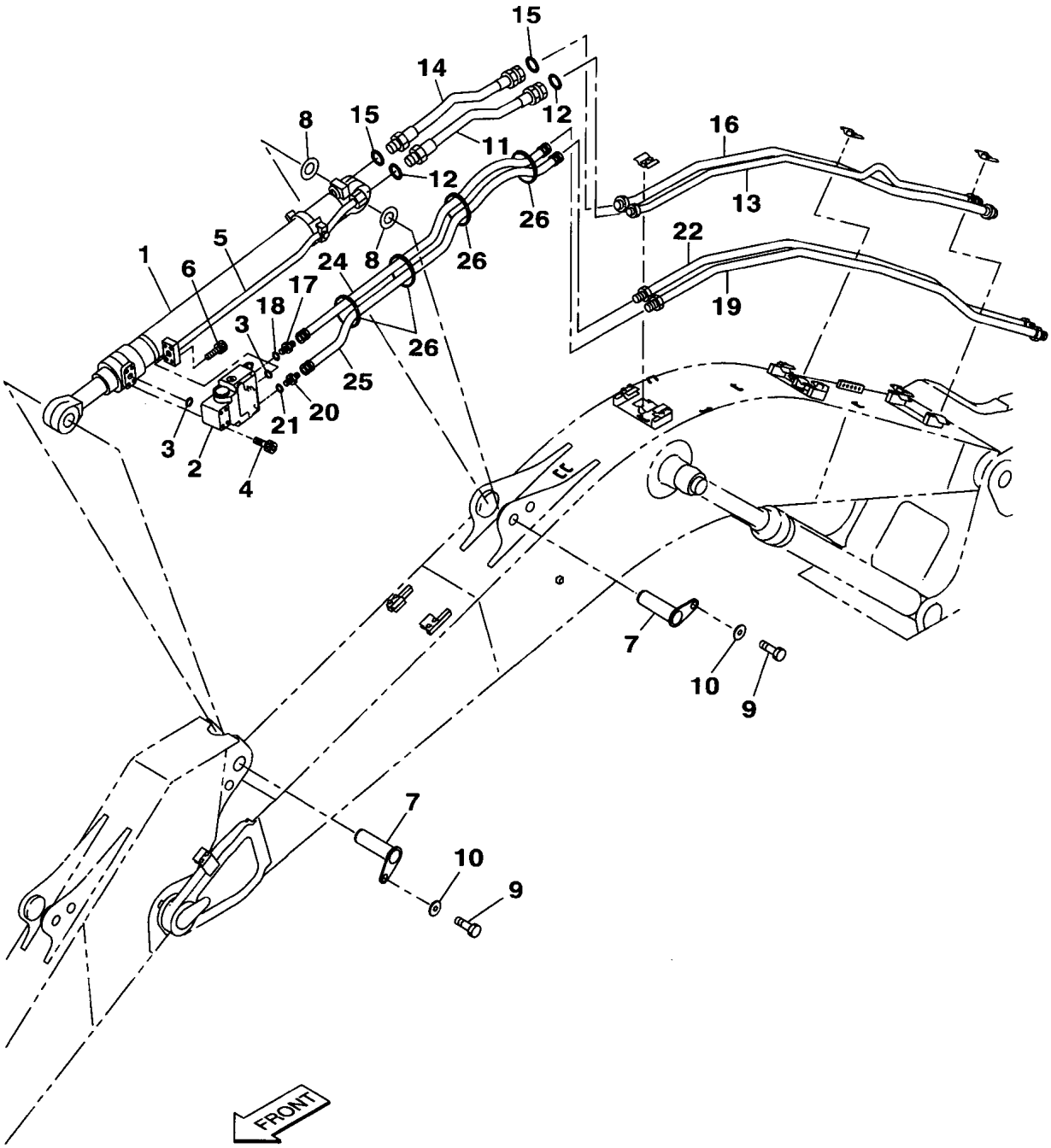

KG1RV396-0
KRV19480-DZ

https://truckmanualshub.com/

210A5 1101－ 210L5 1101－

符号 ITEM	構成 COMPO	部品番号 PART NO.	部品名	PART NAME	個数 Q'TY	ｲﾝﾅｰ	適用号機 SERIAL_NO.	互換 ICA	代替部品 REPLACEABLE PART
1	1	KRV19620	ｼﾘﾝﾀﾞ;ｱｰﾑ (EMS HBCV)	CYL;ARM	1	*			
2	1	KRV11120	ﾊﾞﾙﾌﾞ;ﾎｰﾙﾃﾞｲﾝｸﾞ	VALVE;HOLDING	1	*			
3	1	KHJ0914	O-ﾘﾝｸﾞ AN6227-24(JIS	O-RING	2				
4	1	108R012Y070R	ﾛｯｶｸｱﾅB M12X 70	BOLT;HEX SOC HD	4				
5	1	KRV12090	ﾊｲｶﾝｸﾐﾀﾃ (ｱｰﾑHBCV)	TUBE;ASSY	1				
6	1	108R012Y035R	ﾛｯｶｸｱﾅB M12X 35	BOLT;HEX SOC HD	4				
7	1	KRV10980	ﾋﾟﾝ;ｱﾀｯﾁﾒﾝﾄ (EMS)	PIN;ATT	2				
8	1	KRV1197	ｼﾑ;ﾌﾟﾚｰﾄ	SHIM;PLATE	2		210A5 -1123	<	KSP0264
							210L5 NOT USED		
8	1	KSP0264	ｼﾑ;ﾌﾟﾚｰﾄ	SHIM;PLATE	2		210A5 1124-		
9	1	102R012Y025R	ｺｳﾘｷB M12X 25	BOLT;HIGH STRENGTH	2				
10	1	KBN0298	ｺｳﾘｷW (M12ﾖｳ)	WASHER;HIGH STRENGTH	2				
11	1	KRV19720	ﾎｰｽ;ﾕｱﾂ (L=850)	HOSE;HYD	1		210A5 -1133	<	KLV11420
							210L5 NOT USED		
11	1	KLV11420	ﾎｰｽ;ﾕｱﾂ (L=900)	HOSE;HYD	1		210A5 1134-		
12	1	KHJ1360	O-ﾘﾝｸﾞ AS568-018	O-RING	2				
13	1	KRV19030	ﾊｲｶﾝｸﾐﾀﾃ (ｱｰﾑ L)	TUBE;ASSY	1				
14	1	KBJ3115	ﾎｰｽ;ﾕｱﾂ S15-25X850 K	HOSE;HYD	1		210A5 -1133	<	KRV25340
							210L5 NOT USED		
14	1	KRV25340	ﾎｰｽ;ﾕｱﾂ S15-25X900 K	HOSE;HYD	1		210A5 1134-		
15	1	KHJ1361	O-ﾘﾝｸﾞ AS568-021	O-RING	2				
16	1	KRV19040	ﾊｲｶﾝｸﾐﾀﾃ (ｱｰﾑ R)	TUBE;ASSY	1				
17	1A	KNJ1106	ｱﾀﾞﾌﾟﾀ;ﾎｰｽ (ｹｲﾁｶﾞｲ)	ADAPTER;HOSE	1				
18	2	UEJ0360	O-ﾘﾝｸﾞ 1B-P11	O-RING	1				
19	1	KRV19230	ﾊｲｶﾝｸﾐﾀﾃ (HBCV)	TUBE;ASSY	1				
20	1A	KNJ0759	ｱﾀﾞﾌﾟﾀ;ﾎｰｽ HA208-03	ADAPTER;HOSE	1				
21	2	BRP0007	O-ﾘﾝｸﾞ 1B-P14	O-RING	1				
22	1	KRV19230	ﾊｲｶﾝｸﾐﾀﾃ (HBCV)	TUBE;ASSY	1				
23	1A	KRV19760	ﾎｰｽ ｸﾐﾀﾃ ｶﾞｰﾄﾞﾂｷ	HOSE SPL	1				
24	2	KHJ1276	ﾎｰｽ;ﾕｱﾂ (SIB70-9X260	HOSE;HYD	1		210A5 NOT USED	<	KHJ1367
							210L5 NOT USED		
24	2	KHJ1367	ﾎｰｽ;ﾕｱﾂ (SIB70-9X250	HOSE;HYD	1				
25	2	KHJ1276	ﾎｰｽ;ﾕｱﾂ (SIB70-9X260	HOSE;HYD	1				
26	1	KAR0016	ﾊﾞﾝﾄﾞ;ｿｸｾﾝ L=150	BAND;HARNESS	12 AR				

https://truckmanualshub.com/

1 [2,3]

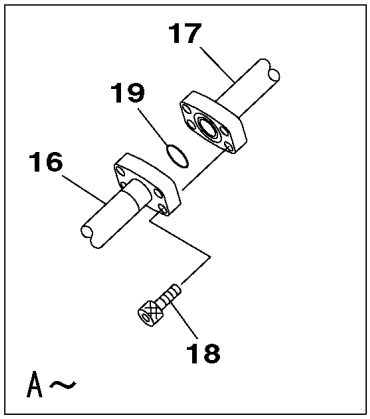

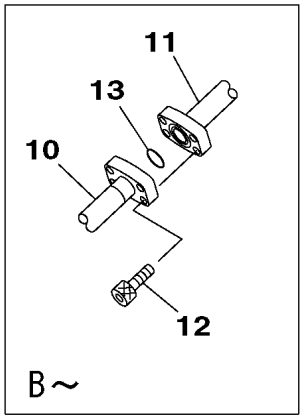

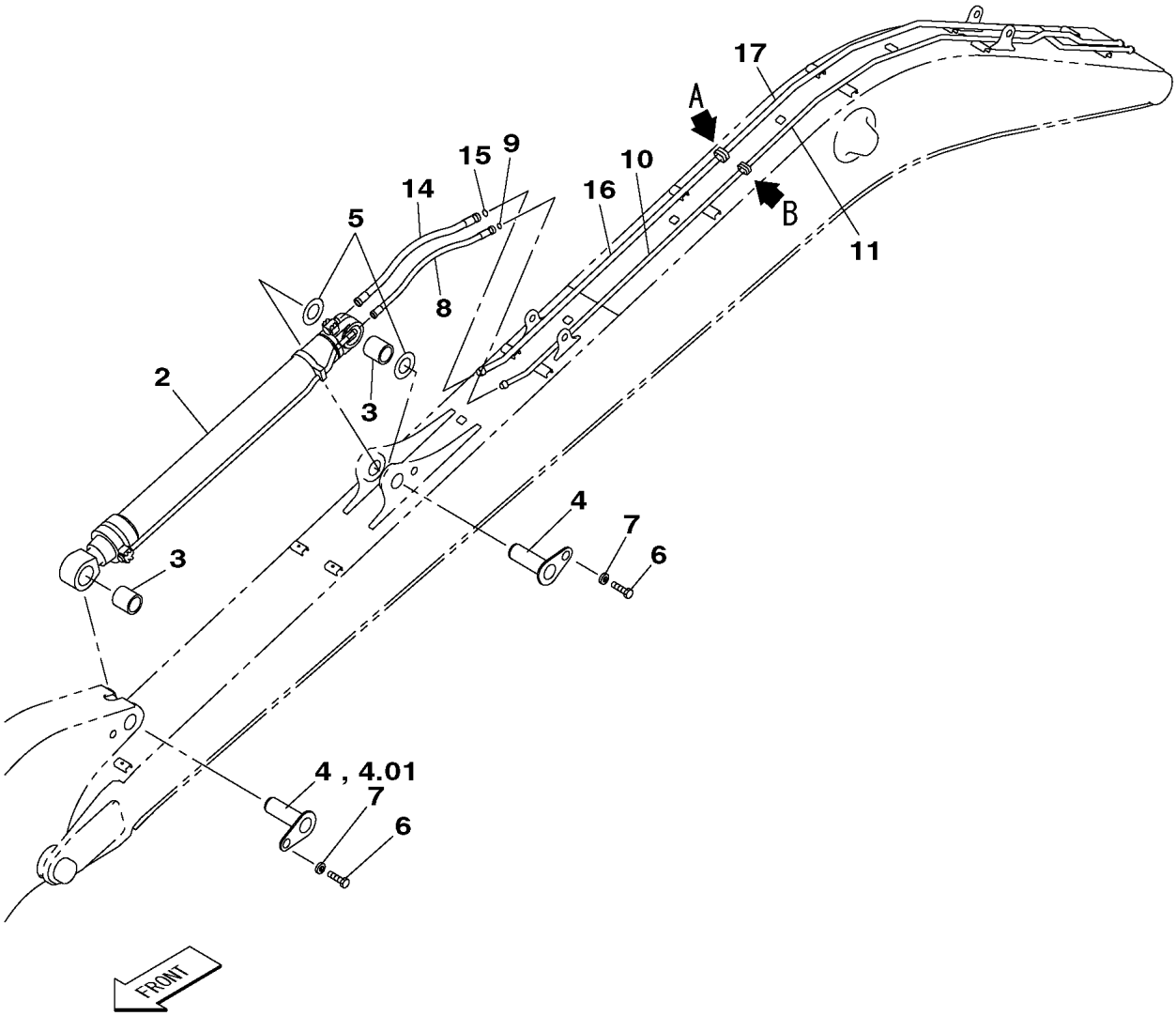

KG1RV586-0
KRV24710-EZ
KRV24720-EZ

https://truckmanualshub.com/

210L5 1101－

符号 ITEM	構成 COMPO	部品番号 PART NO.	部品名	PART NAME	個数 Q'TY	ｲﾝﾅｰ	適用号機 SERIAL_NO.	互換 ICA	代替部品 REPLACEABLE PART
1	1A	KRV24000	ｼﾘﾝﾀﾞ;ｱｰﾑ (EMS)	CYL;ARM	1	*			
2	2	KRV24650	ｼﾘﾝﾀﾞ;ｱｰﾑ	CYL;ARM	1	*			
3	2	KBV1362	ﾌﾞｼｭ;ｵｲﾙﾚｽ	BUSH;OILLESS	2				
4	1	KRV24490	ﾋﾟﾝ;ｱﾀｯﾁﾒﾝﾄ (EMS)	PIN;ATT	2		210L5 -1235		
4	1	KRV24490	ﾋﾟﾝ;ｱﾀｯﾁﾒﾝﾄ (EMS)	PIN;ATT	1		210L5 1236-		
4.01	1	KRV25420	ﾋﾟﾝ;ｱﾀｯﾁﾒﾝﾄ (EMS)	PIN;ATT	1		210L5 1236-		
5	1	KBV0764	ｼﾑ;ﾌﾟﾚｰﾄ	SHIM;PLATE	2				
6	1	102R012Y025R	ｺｳﾘｷB M12X 25	BOLT;HIGH STRENGTH	2				
7	1	KBN0298	ｺｳﾘｷW (M12ﾖｳ)	WASHER;HIGH STRENGTH	2				
8	1	KRV12780	ﾎｰｽ;ﾕｱﾂ (L=1000)	HOSE;HYD	1				
9	1	KHJ1360	O-ﾘﾝｸﾞ AS568-018	O-RING	2				
10	1	KRV2895	ﾊｲｶﾝｸﾐﾀﾃ (ｱｰﾑ L)	TUBE;ASSY	1				
11	1	KRV24240	ﾊｲｶﾝｸﾐﾀﾃ (ｱｰﾑ L)	TUBE;ASSY	1				
12	1	108R010Y035R	ﾛｯｶｸｱﾅB M10X 35	BOLT;HEX SOC HD	4				
13	1	UHJ0415	O-ﾘﾝｸﾞ 1B P30	O-RING	1				
14	1	KRV2495	ﾎｰｽ;ﾕｱﾂ (L=1000)	HOSE;HYD	1				
15	1	KHJ1361	O-ﾘﾝｸﾞ AS568-021	O-RING	2				
16	1	KRV2894	ﾊｲｶﾝｸﾐﾀﾃ (ｱｰﾑ R)	TUBE;ASSY	1				
17	1	KRV24230	ﾊｲｶﾝｸﾐﾀﾃ (ｱｰﾑ R)	TUBE;ASSY	1				
18	1	108R010Y045R	ﾛｯｶｸｱﾅB M10X 45	BOLT;HEX SOC HD	4				
19	1	BHJ1054	O-ﾘﾝｸﾞ 1B P35	O-RING	1				

https://truckmanualshub.com/

1 [2 , 3]　29 [30 , 31]　33 [34 , 35]　33 [35.02]

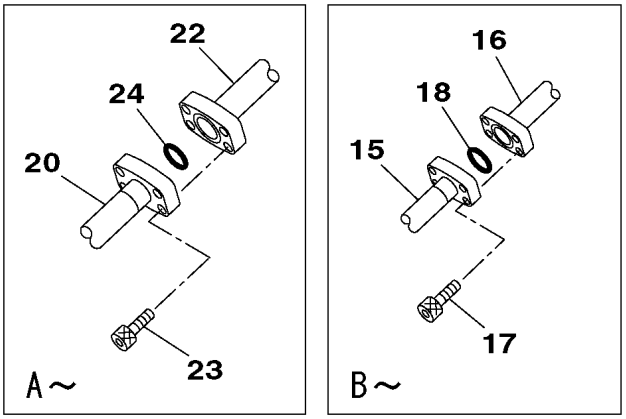

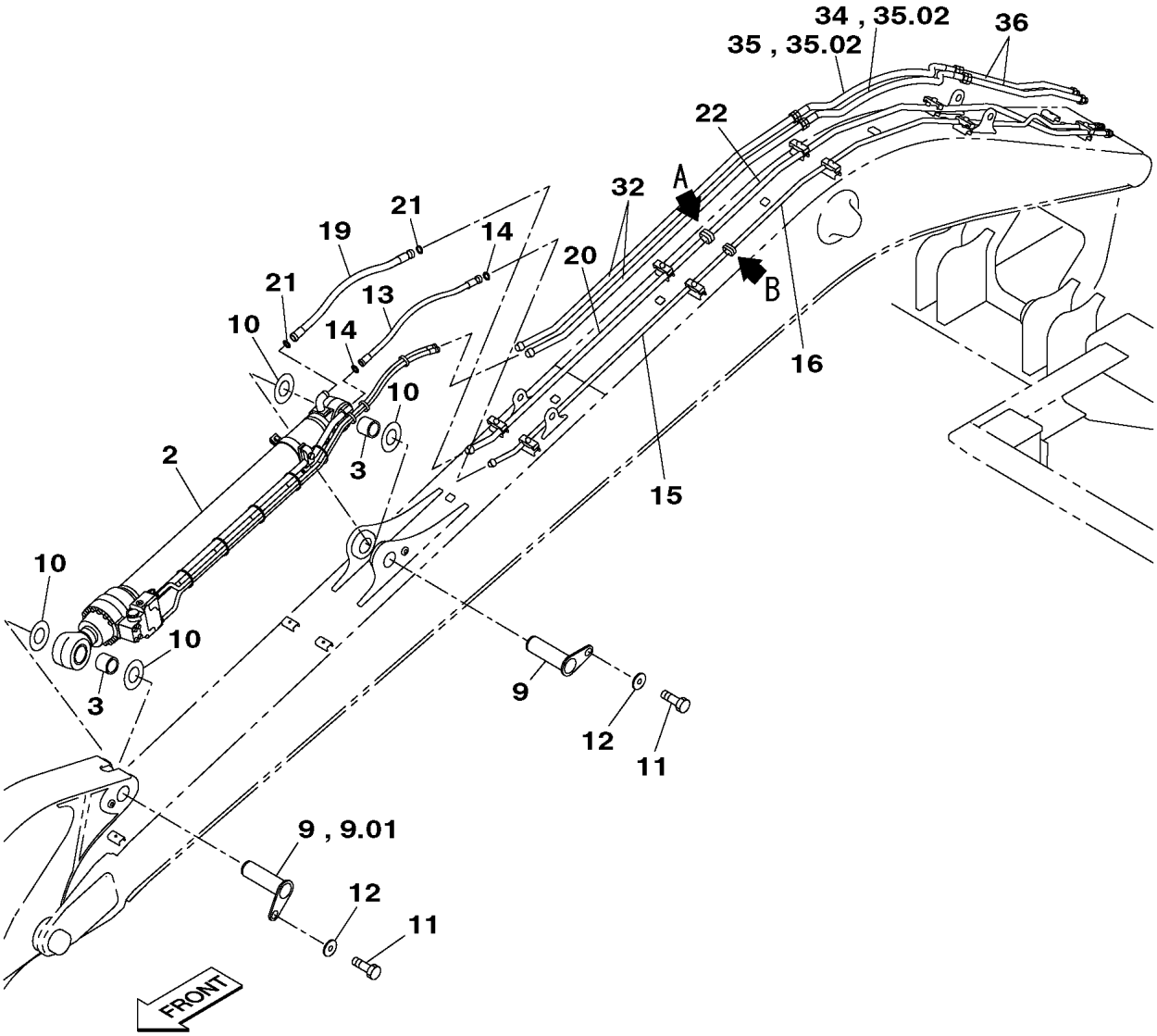

KG1RV587-0
KRV24720-EZ

https://truckmanualshub.com/

210L5 1101－

符号 ITEM	構成 COMPO	部品番号 PART NO.	部品名	PART NAME	個数 Q'TY	ｲﾝﾅｰ	適用号機 SERIAL_NO.	互換 ICA	代替部品 REPLACEABLE PART
1	1A	KRV24010	ｼﾘﾝﾀﾞ;ｱｰﾑ (EMS HBCV)	CYL;ARM	1	*			
2	2	KRV24700	ｼﾘﾝﾀﾞ;ｱｰﾑ	CYL;ARM	1	*			
3	2	KBV1362	ﾌﾞｼｭ;ｵｲﾙﾚｽ	BUSH;OILLESS	2				
4	1	KRV11120	ﾊﾞﾙﾌﾞ;ﾎｰﾙﾃﾞｲﾝｸﾞ	VALVE;HOLDING	1	*			
5	1	KHJ0914	O-ﾘﾝｸﾞ AN6227-24(JIS	O-RING	2				
6	1	108R012Y070R	ﾛｯｶｸｱﾅB M12X 70	BOLT;HEX SOC HD	4				
7	1	KRV24560	ﾊｲｶﾝｸﾐﾀﾃ (ｱｰﾑHBCV)	TUBE;ASSY	1				
8	1	108R012Y035R	ﾛｯｶｸｱﾅB M12X 35	BOLT;HEX SOC HD	4				
9	1	KRV24490	ﾋﾟﾝ;ｱﾀｯﾁﾒﾝﾄ (EMS)	PIN;ATT	2		210L5 -1235		
9	1	KRV24490	ﾋﾟﾝ;ｱﾀｯﾁﾒﾝﾄ (EMS)	PIN;ATT	1		210L5 1236-		
9.01	1	KRV25420	ﾋﾟﾝ;ｱﾀｯﾁﾒﾝﾄ (EMS)	PIN;ATT	1		210L5 1236-		
10	1	KBV0764	ｼﾑ;ﾌﾟﾚｰﾄ	SHIM;PLATE	2				
11	1	102R012Y025R	ｺｳﾘｷB M12X 25	BOLT;HIGH STRENGTH	2				
12	1	KBN0298	ｺｳﾘｷW (M12ﾖｳ)	WASHER;HIGH STRENGTH	2				
13	1	KRV12780	ﾎｰｽ;ﾕｱﾂ (L=1000)	HOSE;HYD	1				
14	1	KHJ1360	O-ﾘﾝｸﾞ AS568-018	O-RING	2				
15	1	KRV2895	ﾊｲｶﾝｸﾐﾀﾃ (ｱｰﾑ L)	TUBE;ASSY	1				
16	1	KRV24240	ﾊｲｶﾝｸﾐﾀﾃ (ｱｰﾑ L)	TUBE;ASSY	1				
17	1	108R010Y035R	ﾛｯｶｸｱﾅB M10X 35	BOLT;HEX SOC HD	4				
18	1	UHJ0415	O-ﾘﾝｸﾞ 1B P30	O-RING	1				
19	1	KRV2495	ﾎｰｽ;ﾕｱﾂ (L=1000)	HOSE;HYD	1				
20	1	KRV2894	ﾊｲｶﾝｸﾐﾀﾃ (ｱｰﾑ R)	TUBE;ASSY	1				
21	1	KHJ1361	O-ﾘﾝｸﾞ AS568-021	O-RING	2				
22	1	KRV24230	ﾊｲｶﾝｸﾐﾀﾃ (ｱｰﾑ R)	TUBE;ASSY	1				
23	1	108R010Y045R	ﾛｯｶｸｱﾅB M10X 45	BOLT;HEX SOC HD	4				
24	1	BHJ1054	O-ﾘﾝｸﾞ 1B P35	O-RING	1				
25	1A	KNJ0759	ｱﾀﾞﾌﾟﾀ;ﾎｰｽ HA208-03	ADAPTER;HOSE	1				
26	2	BRP0007	O-ﾘﾝｸﾞ 1B-P14	O-RING	1				
27	1A	KNJ1106	ｱﾀﾞﾌﾟﾀ;ﾎｰｽ (ｹｲﾁｶﾞｲ)	ADAPTER;HOSE	1				
28	2	UEJ0360	O-ﾘﾝｸﾞ 1B-P11	O-RING	1				
29	1A	KBV18060	ﾎｰｽ ｸﾐﾀﾃ ｶﾞｰﾄﾞﾂｷ	HOSE SPL	1		210L5 -1128		
30	2	KHJ1715	ﾎｰｽ;ﾕｱﾂ SIB70-9X3100	HOSE;HYD	1		210L5 -1128		
31	2	KHJ1715	ﾎｰｽ;ﾕｱﾂ SIB70-9X3100	HOSE;HYD	1		210L5 -1128		
29	1A	KRV25330	ﾎｰｽ ｸﾐﾀﾃ ｶﾞｰﾄﾞﾂｷ	HOSE SPL	1		210L5 1129-		
30	2	KHJ17480	ﾎｰｽ;ﾕｱﾂ SIB70-9X2900	HOSE;HYD	1		210L5 1129-		
31	2	KHJ17480	ﾎｰｽ;ﾕｱﾂ SIB70-9X2900	HOSE;HYD	1		210L5 1129-		
32	1	KRV24300	ﾊｲｶﾝｸﾐﾀﾃ (HBCV ﾄｯﾌﾟ)	TUBE;ASSY	2				
33	1A	KBV18070	ﾎｰｽ ｸﾐﾀﾃ ｶﾞｰﾄﾞﾂｷ	HOSE SPL	1		210L5 -1128		
34	2	KHJ1694	ﾎｰｽ;ﾕｱﾂ SIB70-9X1250	HOSE;HYD	1		210L5 -1128		
35	2	KHJ1694	ﾎｰｽ;ﾕｱﾂ SIB70-9X1250	HOSE;HYD	1		210L5 -1128		
33	1A	KRV25250	ﾎｰｽ ｸﾐﾀﾃ ｶﾞｰﾄﾞﾂｷ	HOSE SPL	1		210L5 1129-		
35.02	2	KHJ1235	ﾎｰｽ;ﾕｱﾂ (SIB70-9X105	HOSE;HYD	2		210L5 1129-		
36	1	KRV24290	ﾊｲｶﾝｸﾐﾀﾃ (HBCV ﾌｰﾄ)	TUBE;ASSY	2				
37	1	KAR0016	ﾊﾞﾝﾄﾞ;ｿｸｾﾝ L=150	BAND;HARNESS	12 AR				

https://truckmanualshub.com/

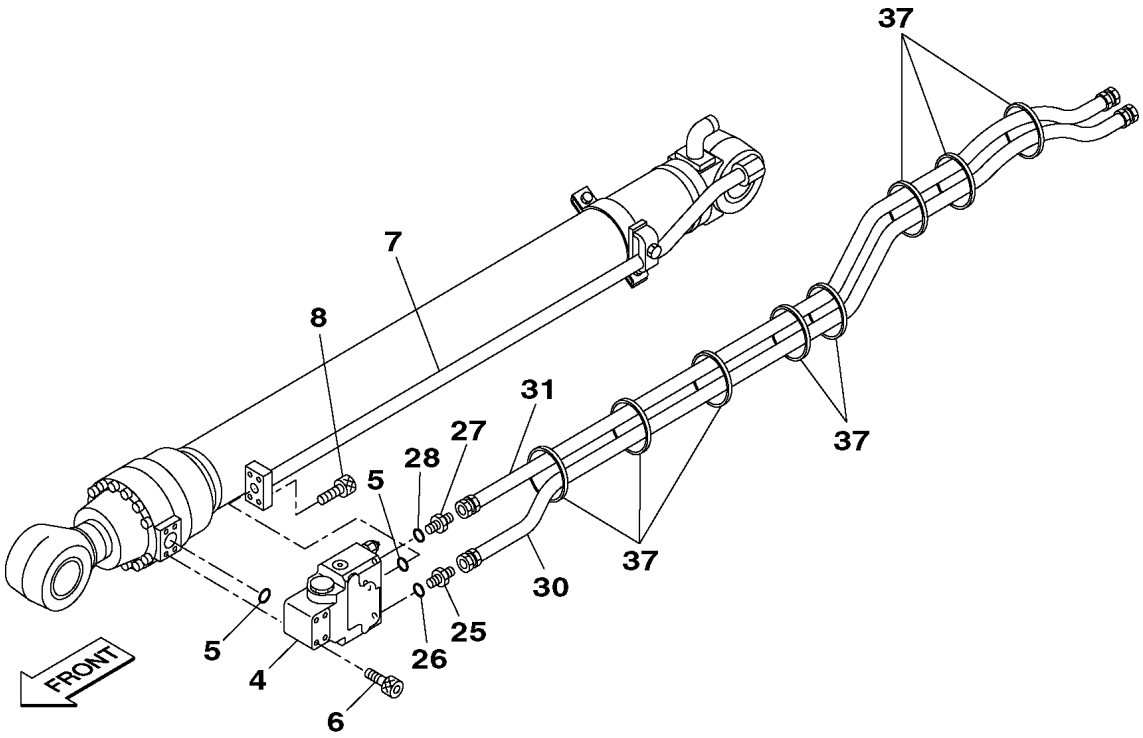

KG1RV587-0
KRV24720-EZ

https://truckmanualshub.com/

https://truckmanualshub.com/

7 [8 ~ 10]

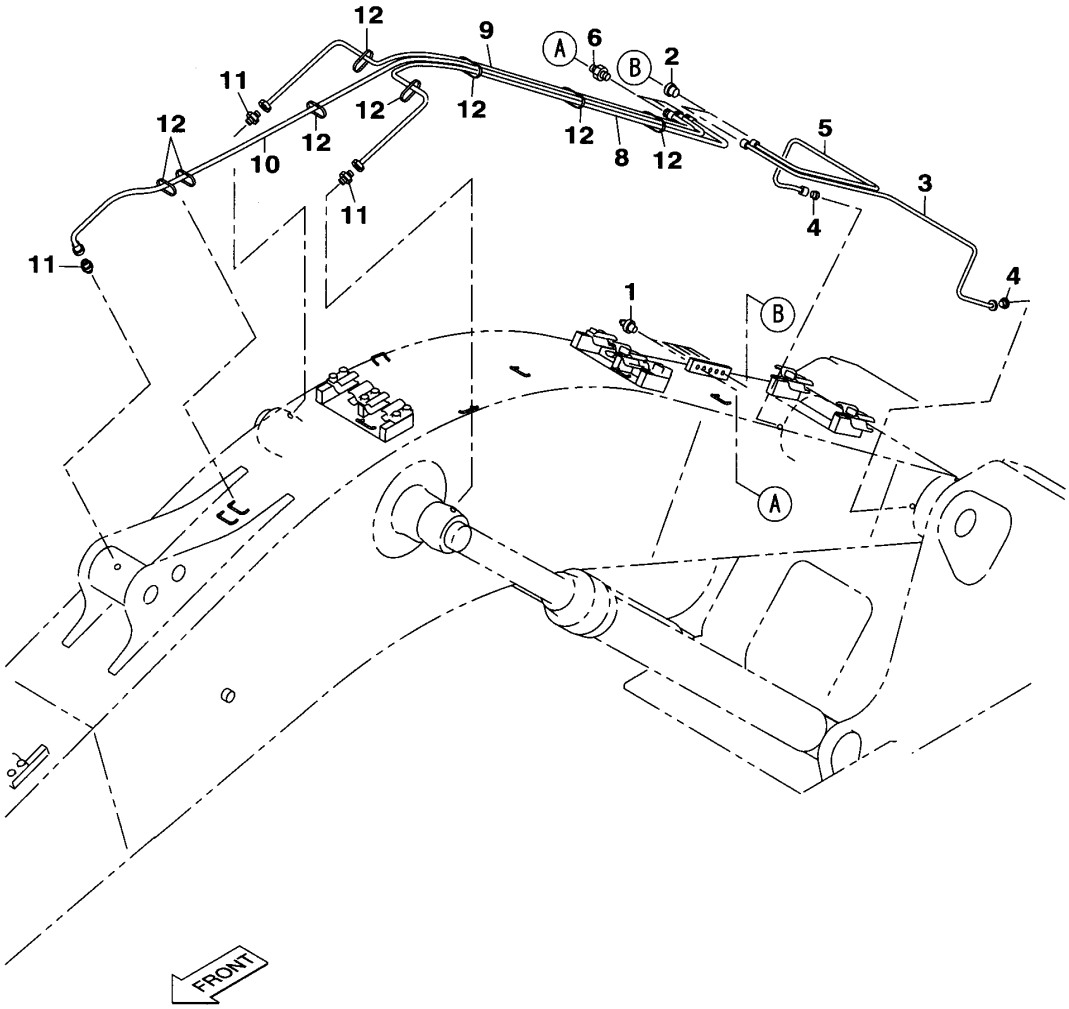

KG1RV398-0
KRV19400-E

https://truckmanualshub.com/

210A5 1101－ 210L5 1101－

符号 ITEM	構成 COMPO	部品番号 PART NO.	部品名	PART NAME	個数 Q'TY	ｲﾝﾅｰ	適用号機 SERIAL_NO.	互換 ICA	代替部品 REPLACEABLE PART
1	1	M01X0812	ﾆｯﾌﾟﾙ;ｸﾞﾘｽ (A-R1/8)	NIPPLE;GREASE	5				
2	1	KMJ0964	ｺﾈｸﾀ;ﾎﾞﾃﾞ KCT08-011N	CONNECTOR	2				
3	1	KRV19270	ﾊｲｶﾝｸﾐﾀﾃ (ｸﾞﾘｽ L)	TUBE;ASSY	1				
4	1	KMJ0964	ｺﾈｸﾀ;ﾎﾞﾃﾞ KCT08-011N	CONNECTOR	2				
5	1	KRV19280	ﾊｲｶﾝｸﾐﾀﾃ (ｸﾞﾘｽ R)	TUBE;ASSY	1				
6	1	KRJ4050	ｱﾀﾞﾌﾟﾀ;ﾎｰｽ	ADAPTER;HOSE	3				
7	1A	KRV19780	ﾎｰｽ ｸﾐﾀﾃ(ｼﾞｭｳﾅﾝｾｲﾅｲﾛ	HOSE SPL	1				
8	2	KHJ2068	ﾎｰｽ;ﾅｲﾛﾝ 70-6X2250 5	HOSE;NYLON	1				
9	2	KHJ2069	ﾎｰｽ;ﾅｲﾛﾝ 70-6X2300 5	HOSE;NYLON	1				
10	2	KHJ2174	ﾎｰｽ;ﾅｲﾛﾝ 70-6X3100 5	HOSE;NYLON	1				
11	1	C4E7635	ｱﾀﾞﾌﾟﾀ;ﾎｰｽ 10-0404	ADAPTER;HOSE	3				
12	1	KAR0016	ﾊﾞﾝﾄﾞ;ｿｸｾﾝ L=150	BAND;HARNESS	8		210A5 -1231 210L5 -1176	/	KAR0016
12	1	KAR0016	ﾊﾞﾝﾄﾞ;ｿｸｾﾝ L=150	BAND;HARNESS	5		210A5 1232-1389 210L5 1177-1248	<	KAR0016
12	1	KAR0016	ﾊﾞﾝﾄﾞ;ｿｸｾﾝ L=150	BAND;HARNESS	7		210A5 1390- 210L5 1249-		

https://truckmanualshub.com/

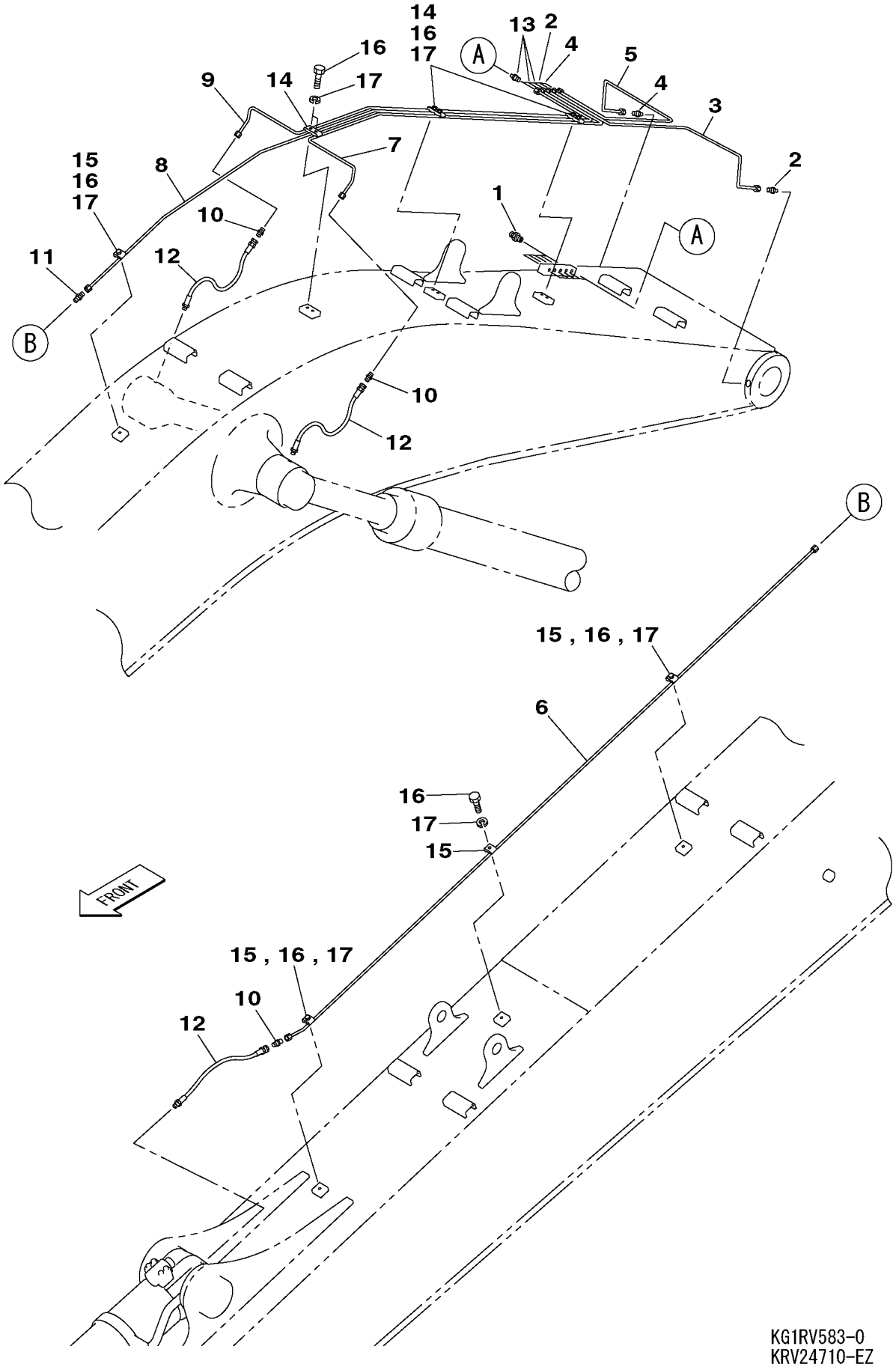

KG1RV583-0
KRV24710-EZ
KRV24720-EZ

https://truckmanualshub.com/

210L5 1101－

符号 ITEM	構成 COMPO	部品番号 PART NO.	部品名	PART NAME	個数 Q'TY	ｲﾝﾅｰ	適用号機 SERIAL_NO.	互換 ICA	代替部品 REPLACEABLE PART
1	1	M01X0812	ﾆｯﾌﾟﾙ;ｸﾞﾘｽ (A-R1/8)	NIPPLE;GREASE	5				
2	1	KMJ0964	ｺﾈｸﾀ;ﾎﾞﾃﾞ KCT08-011N	CONNECTOR	2		210L5 1129-		
3	1	KRV24460	ﾊｲｶﾝｸﾐﾀﾃ (ｸﾞﾘｽ ﾌﾞｰﾑﾌ	TUBE;ASSY	1				
4	1	KMJ0964	ｺﾈｸﾀ;ﾎﾞﾃﾞ KCT08-011N	CONNECTOR	2		210L5 1129-		
5	1	KRV24450	ﾊｲｶﾝｸﾐﾀﾃ (ｸﾞﾘｽ R)	TUBE;ASSY	1				
6	1	KRV1700	ﾊｲｶﾝｸﾐﾀﾃ (ｸﾞﾘｽ)	TUBE;ASSY	1				
7	1	KRV24480	ﾊｲｶﾝｸﾐﾀﾃ (ｸﾞﾘｽ ﾌﾞｰﾑC	TUBE;ASSY	1				
8	1	KRV24390	ﾊｲｶﾝｸﾐﾀﾃ (ｸﾞﾘｽ ｱｰﾑCY	TUBE;ASSY	1				
9	1	KRV24470	ﾊｲｶﾝｸﾐﾀﾃ (ｸﾞﾘｽ ﾌﾞｰﾑC	TUBE;ASSY	1				
10	1	KMJ0707	ﾕﾆｵﾝ;ﾎﾞﾃﾞ KUD08-021N	UNION	3				
11	1	KMJ0601	ﾕﾆｵﾝ;ﾎﾞﾃﾞ KUA08-001N	UNION	1				
12	1	KRV0370	ﾎｰｽ;ﾅｲﾛﾝ 15-04X 450	HOSE;NYLON	3				
13	1	KMJ0964	ｺﾈｸﾀ;ﾎﾞﾃﾞ KCT08-011N	CONNECTOR	3				
14	1	KRV0550	ｸﾗﾝﾌﾟ	CLAMP	3				
15	1	KRV0551	ｸﾗﾝﾌﾟ	CLAMP	4				
16	1	102R008Y030R	ｺｳﾘｷB M 8X 30	BOLT;HIGH STRENGTH	10				
17	1	KAJ1500	ｺｳﾘｷW M8	WASHER;HIGH STRENGTH	10				

https://truckmanualshub.com/

1 [2 ~ 4]

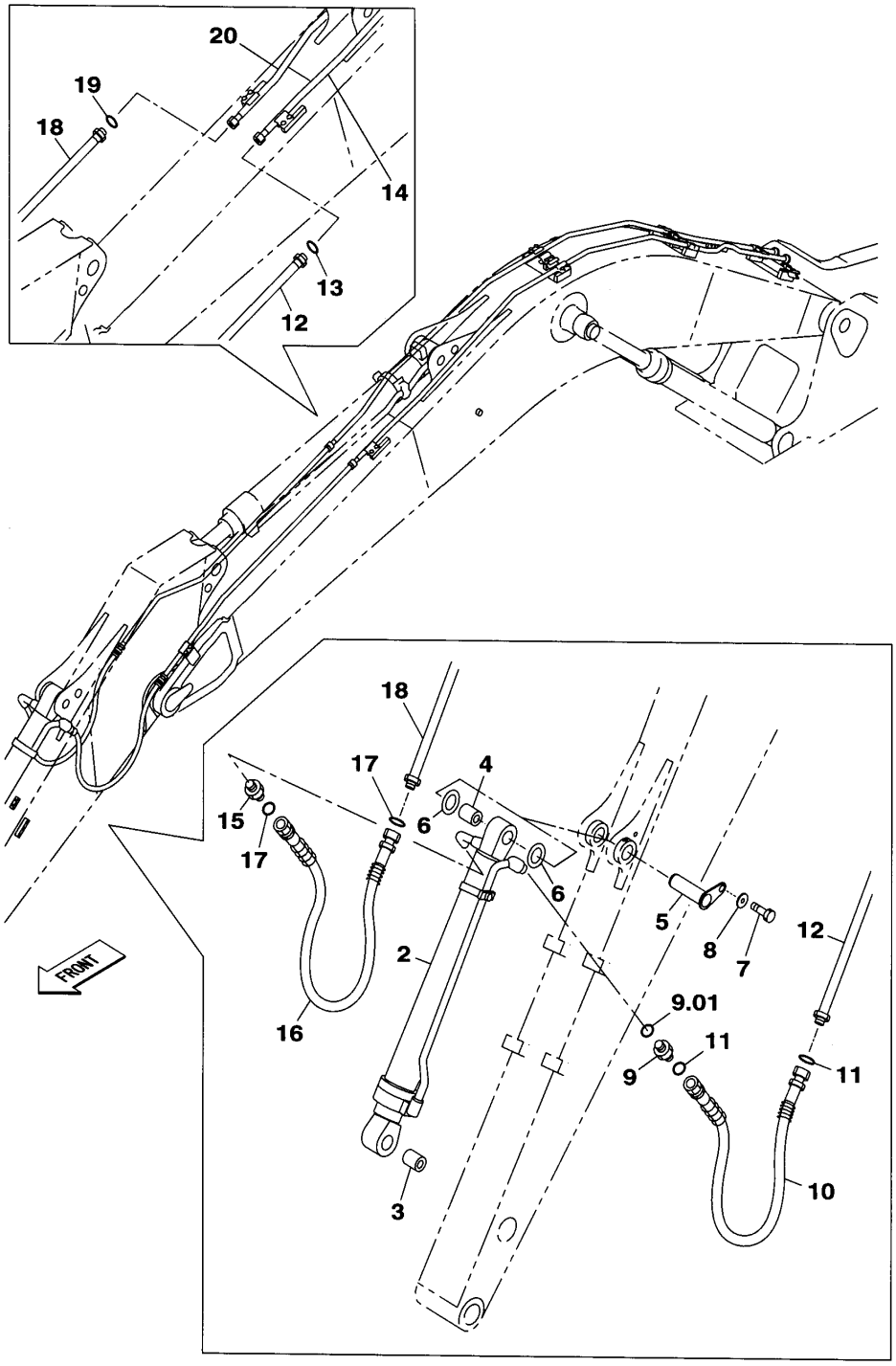

KG1RV397-0
KRV19400-E

https://truckmanualshub.com/

210A5 1101－ 210L5 1101－

符号 ITEM	構成 COMPO	部品番号 PART NO.	部品名	PART NAME	個数 Q'TY	ｲﾝﾅｰ	適用号機 SERIAL_NO.	互換 ICA	代替部品 REPLACEABLE PART
1	1A	KRV19640	ｼﾘﾝﾀﾞ;ﾊﾞｹｯﾄ (EMS)	CYL;BUCKET	1	*			
2	2	KRV19650	ｼﾘﾝﾀﾞ;ﾊﾞｹｯﾄ (ﾌﾞｼｭﾚｽ)	CYL;BUCKET	1	*			
3	2	KRV2398	ﾌﾞｼｭ;ｵｲﾙﾚｽ	BUSH;OILLESS	1				
4	2	KRV2399	ﾌﾞｼｭ;ｵｲﾙﾚｽ	BUSH;OILLESS	1				
5	1	KRV10990	ﾋﾟﾝ;ｱﾀｯﾁﾒﾝﾄ (EMS)	PIN;ATT	1				
6	1	KRV1176	ｼﾑ;ﾌﾟﾚｰﾄ	SHIM;PLATE	2				
7	1	102R012Y025R	ｺｳﾘｷB M12X 25	BOLT;HIGH STRENGTH	1				
8	1	KBN0298	ｺｳﾘｷW (M12ﾖｳ)	WASHER;HIGH STRENGTH	1				
9	1	KHJ15840	ｱﾀﾞﾌﾟﾀ;ﾎｰｽ (G3/4=1+7	ADAPTER;HOSE	1		210A5 -1141 210L5 NOT USED		
9	1A	KHJ1765	ｱﾀﾞﾌﾟﾀ;ﾎｰｽ	ADAPTER;HOSE	1		210A5 NOT USED 210L5 -1142	<	KHJ1348
9.01	2	UBJ0157	O-ﾘﾝｸﾞ 1B-P18	O-RING	1		210A5 NOT USED 210L5 -1142		
9	1A	KHJ1348	ｱﾀﾞﾌﾟﾀ;ﾎｰｽ	ADAPTER;HOSE	1		210A5 1142- 210L5 1143-		
9.01	2	UBJ0158	O-ﾘﾝｸﾞ 1B-P24	O-RING	1		210A5 1142- 210L5 1143-		
10	1	KRV22580	ﾎｰｽ;ﾕｱﾂ (L=1550 OGW)	HOSE;HYD	1		210A5 -1141 210L5 NOT USED		
10	1	KRV12790	ﾎｰｽ;ﾕｱﾂ (L=1550)	HOSE;HYD	1		210A5 1142-		
11	1	KHJ1361	O-ﾘﾝｸﾞ AS568-021	O-RING	2		210A5 -1141 210L5 NOT USED		
11	1	KHJ1360	O-ﾘﾝｸﾞ AS568-018	O-RING	2		210A5 1142-		
12	1	KRV21940	ﾊｲｶﾝｸﾐﾀﾃ (ﾊﾞｹｯﾄ L)	TUBE;ASSY	1		210A5 -1141 210L5 NOT USED		
12	1	KRV19070	ﾊｲｶﾝｸﾐﾀﾃ (ﾊﾞｹｯﾄ L)	TUBE;ASSY	1		210A5 1142-		
13	1	KHJ1360	O-ﾘﾝｸﾞ AS568-018	O-RING	1				
14	1	KRV19050	ﾊｲｶﾝｸﾐﾀﾃ (ﾊﾞｹｯﾄ L)	TUBE;ASSY	1				
15	1	KHJ15840	ｱﾀﾞﾌﾟﾀ;ﾎｰｽ (G3/4=1+7	ADAPTER;HOSE	1				
16	1	KRV22580	ﾎｰｽ;ﾕｱﾂ (L=1550 OGW)	HOSE;HYD	1				
17	1	KHJ1361	O-ﾘﾝｸﾞ AS568-021	O-RING	2				
18	1	KRV21950	ﾊｲｶﾝｸﾐﾀﾃ (ﾊﾞｹｯﾄ R)	TUBE;ASSY	1				
19	1	KHJ1360	O-ﾘﾝｸﾞ AS568-018	O-RING	1				
20	1	KRV19060	ﾊｲｶﾝｸﾐﾀﾃ (ﾊﾞｹｯﾄ R)	TUBE;ASSY	1				

https://truckmanualshub.com/

1 [2 ~ 4]

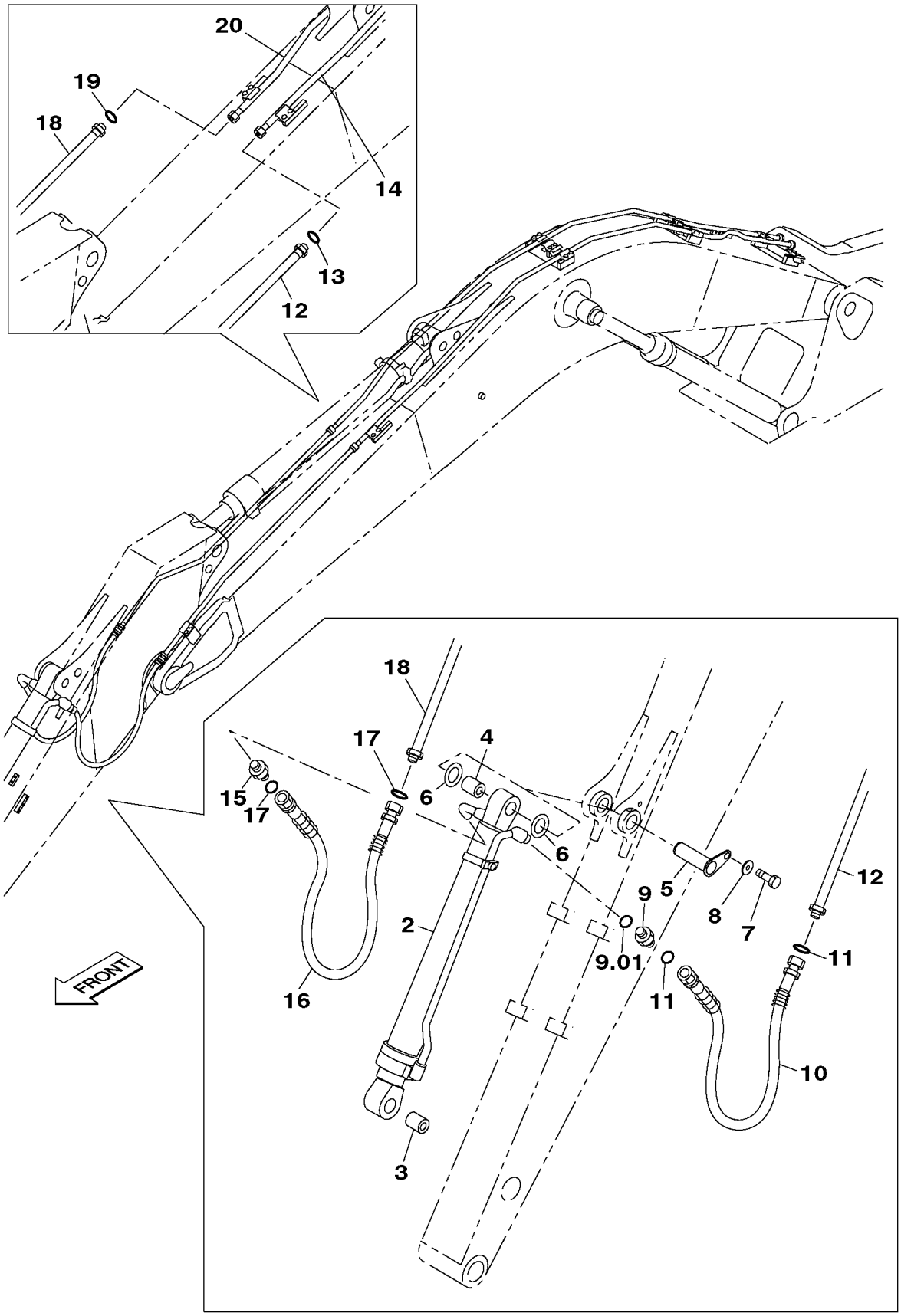

KG1RV483-0
KRV19400-EZ
KRV20400-CZ

https://truckmanualshub.com/

210A5 1101－ 210L5 1101－

符号 ITEM	構成 COMPO	部品番号 PART NO.	部品名	PART NAME	個数 Q'TY	ｲﾝﾅｰ	適用号機 SERIAL_NO.	互換 ICA	代替部品 REPLACEABLE PART
1	1A	KRV19640	ｼﾘﾝﾀﾞ;ﾊﾞｹｯﾄ (EMS)	CYL;BUCKET	1	*			
2	2	KRV19650	ｼﾘﾝﾀﾞ;ﾊﾞｹｯﾄ (ﾌﾞｼｭﾚｽ)	CYL;BUCKET	1	*			
3	2	KRV2398	ﾌﾞｼｭ;ｵｲﾙﾚｽ	BUSH;OILLESS	1				
4	2	KRV2399	ﾌﾞｼｭ;ｵｲﾙﾚｽ	BUSH;OILLESS	1				
5	1	KRV10990	ﾋﾟﾝ;ｱﾀｯﾁﾒﾝﾄ (EMS)	PIN;ATT	1				
6	1	KRV1176	ｼﾑ;ﾌﾟﾚｰﾄ	SHIM;PLATE	2				
7	1	102R012Y025R	ｺｳﾘｷB M12X 25	BOLT;HIGH STRENGTH	1				
8	1	KBN0298	ｺｳﾘｷW (M12ﾖｳ)	WASHER;HIGH STRENGTH	1				
9	1	KHJ15840	ｱﾀﾞﾌﾟﾀ;ﾎｰｽ (G3/4=1+7	ADAPTER;HOSE	1		210A5 -1141 210L5 NOT USED		
9	1A	KHJ1765	ｱﾀﾞﾌﾟﾀ;ﾎｰｽ	ADAPTER;HOSE	1		210A5 NOT USED 210L5 -1142	<	KHJ1348
9.01	2	UBJ0157	O-ﾘﾝｸﾞ 1B-P18	O-RING	1		210A5 NOT USED 210L5 -1142		
9	1A	KHJ1348	ｱﾀﾞﾌﾟﾀ;ﾎｰｽ	ADAPTER;HOSE	1		210A5 1142- 210L5 1143-		
9.01	2	UBJ0158	O-ﾘﾝｸﾞ 1B-P24	O-RING	1		210A5 1142- 210L5 1143-		
10	1	KRV22590	ﾎｰｽ;ﾕｱﾂ (L=1650 OGW)	HOSE;HYD	1		210A5 -1141 210L5 NOT USED		
10	1	KNV15700	ﾎｰｽ;ﾕｱﾂ S15-19X1650	HOSE;HYD	1		210A5 1142-		
11	1	KHJ1361	O-ﾘﾝｸﾞ AS568-021	O-RING	2		210A5 -1141 210L5 NOT USED		
11	1	KHJ1360	O-ﾘﾝｸﾞ AS568-018	O-RING	2		210A5 1142-		
12	1	KRV21940	ﾊｲｶﾝｸﾐﾀﾃ (ﾊﾞｹｯﾄ L)	TUBE;ASSY	1		210A5 -1141 210L5 NOT USED		
12	1	KRV19070	ﾊｲｶﾝｸﾐﾀﾃ (ﾊﾞｹｯﾄ L)	TUBE;ASSY	1		210A5 1142-		
13	1	KHJ1360	O-ﾘﾝｸﾞ AS568-018	O-RING	1				
14	1	KRV19050	ﾊｲｶﾝｸﾐﾀﾃ (ﾊﾞｹｯﾄ L)	TUBE;ASSY	1				
15	1	KHJ15840	ｱﾀﾞﾌﾟﾀ;ﾎｰｽ (G3/4=1+7	ADAPTER;HOSE	1				
16	1	KRV22590	ﾎｰｽ;ﾕｱﾂ (L=1650 OGW)	HOSE;HYD	1				
17	1	KHJ1361	O-ﾘﾝｸﾞ AS568-021	O-RING	2				
18	1	KRV21950	ﾊｲｶﾝｸﾐﾀﾃ (ﾊﾞｹｯﾄ R)	TUBE;ASSY	1				
19	1	KHJ1360	O-ﾘﾝｸﾞ AS568-018	O-RING	1				
20	1	KRV19060	ﾊｲｶﾝｸﾐﾀﾃ (ﾊﾞｹｯﾄ R)	TUBE;ASSY	1				

https://truckmanualshub.com/

1 [2 ~ 4]

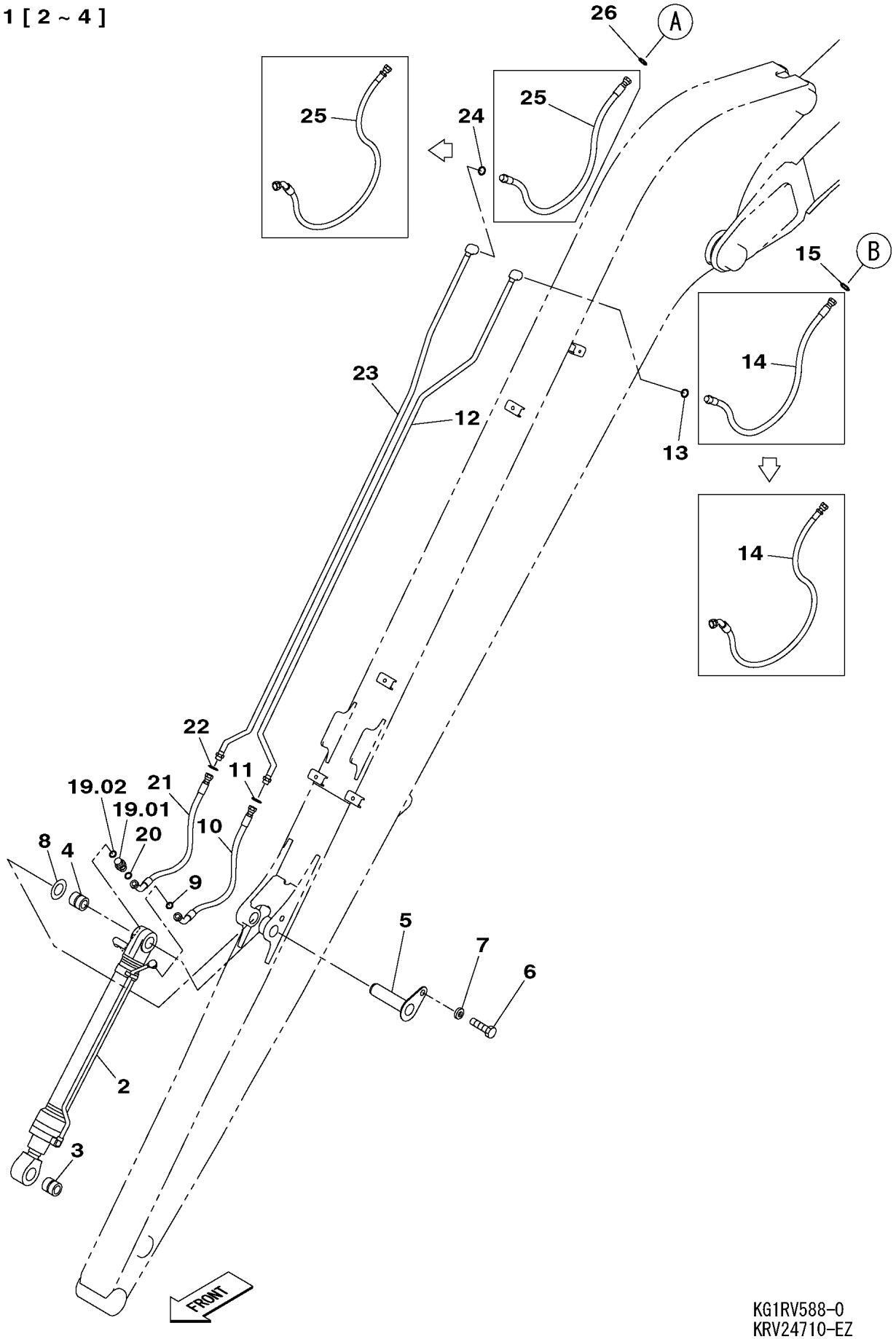

KG1RV588-0
KRV24710-EZ
KRV24720-EZ

https://truckmanualshub.com/

210L5 1101－

符号 ITEM	構成 COMPO	部品番号 PART NO.	部品名	PART NAME	個数 Q'TY	ｲﾝﾅｰ	適用号機 SERIAL_NO.	互換 ICA	代替部品 REPLACEABLE PART
1	1	KNV12540	ｼﾘﾝﾀﾞ;ﾊﾞｹｯﾄ (EMS)	CYL;BUCKET	1	*	210L5 -1408		
1	1A	KNV12541	ｼﾘﾝﾀﾞ;ﾊﾞｹｯﾄ (EMS)	CYL;BUCKET	1	*	210L5 1409-		
2	2	KNV14160	ｼﾘﾝﾀﾞ;ﾊﾞｹｯﾄ (ﾌﾞｼｭﾚｽ)	CYL;BUCKET	1	*	210L5 -1408		
3	2	KNV1139	ﾌﾞｼｭ;ｵｲﾙﾚｽ	BUSH;OILLESS	1		210L5 -1408		
4	2	KNV1141	ﾌﾞｼｭ;ｵｲﾙﾚｽ	BUSH;OILLESS	1		210L5 -1408		
5	1	KBV16930	ﾋﾟﾝ;ｱﾀｯﾁﾒﾝﾄ (EMS)	PIN;ATT	1				
6	1	102R012Y025R	ｺｳﾘｷB M12X 25	BOLT;HIGH STRENGTH	1				
7	1	KBN0298	ｺｳﾘｷW (M12ﾖｳ)	WASHER;HIGH STRENGTH	1				
8	1	KNV0538	ｼﾑ;ﾌﾟﾚｰﾄ	SHIM;PLATE	1				
9	1	KHJ1360	O-ﾘﾝｸﾞ AS568-018	O-RING	1				
10	1	KRV14230	ﾎｰｽ;ﾕｱﾂ (L=900 GW)	HOSE;HYD	1				
11	1	KHJ1360	O-ﾘﾝｸﾞ AS568-018	O-RING	1				
12	1	KRV24280	ﾊｲｶﾝｸﾐﾀﾃ (ﾊﾞｹｯﾄ L)	TUBE;ASSY	1				
13	1	KHJ1360	O-ﾘﾝｸﾞ AS568-018	O-RING	1				
14	1	KRV19730	ﾎｰｽ;ﾕｱﾂ (L=1500)	HOSE;HYD	1				
14	1	KLV0449	ﾎｰｽ;ﾕｱﾂ (L=1700)GWﾂｷ	HOSE;HYD	1				
15	1	KHJ1360	O-ﾘﾝｸﾞ AS568-018	O-RING	1				
16	1	KRV24420	ﾊｲｶﾝｸﾐﾀﾃ (ﾊﾞｹｯﾄ L)	TUBE;ASSY	1				
17	1	UHJ0415	O-ﾘﾝｸﾞ 1B P30	O-RING	1				
18	1	108R010Y035R	ﾛｯｶｸｱﾅB M10X 35	BOLT;HEX SOC HD	4				
19	1	KRV24260	ﾊｲｶﾝｸﾐﾀﾃ (ﾊﾞｹｯﾄ L)	TUBE;ASSY	1				
19.01	1A	KHJ1348	ｱﾀﾞﾌﾟﾀ;ﾎｰｽ	ADAPTER;HOSE	1		210L5 1409-		
19.02	2	UBJ0158	O-ﾘﾝｸﾞ 1B-P24	O-RING	1		210L5 1409-		
20	1	KHJ1360	O-ﾘﾝｸﾞ AS568-018	O-RING	1				
21	1	KRV14230	ﾎｰｽ;ﾕｱﾂ (L=900 GW)	HOSE;HYD	1				
22	1	KHJ1360	O-ﾘﾝｸﾞ AS568-018	O-RING	1				
23	1	KRV24270	ﾊｲｶﾝｸﾐﾀﾃ (ﾊﾞｹｯﾄ R)	TUBE;ASSY	1				
24	1	KHJ1360	O-ﾘﾝｸﾞ AS568-018	O-RING	1				
25	1	KRV19730	ﾎｰｽ;ﾕｱﾂ (L=1500)	HOSE;HYD	1				
25	1	KLV0449	ﾎｰｽ;ﾕｱﾂ (L=1700)GWﾂｷ	HOSE;HYD	1				
26	1	KHJ1360	O-ﾘﾝｸﾞ AS568-018	O-RING	1				
27	1	KRV24410	ﾊｲｶﾝｸﾐﾀﾃ (ﾊﾞｹｯﾄ R)	TUBE;ASSY	1				
28	1	UHJ0415	O-ﾘﾝｸﾞ 1B P30	O-RING	1				
29	1	108R010Y035R	ﾛｯｶｸｱﾅB M10X 35	BOLT;HEX SOC HD	4				
30	1	KRV24250	ﾊｲｶﾝｸﾐﾀﾃ (ﾊﾞｹｯﾄ R)	TUBE;ASSY	1				

https://truckmanualshub.com/

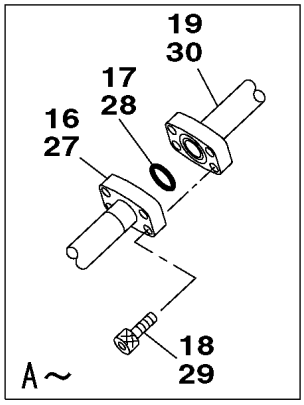

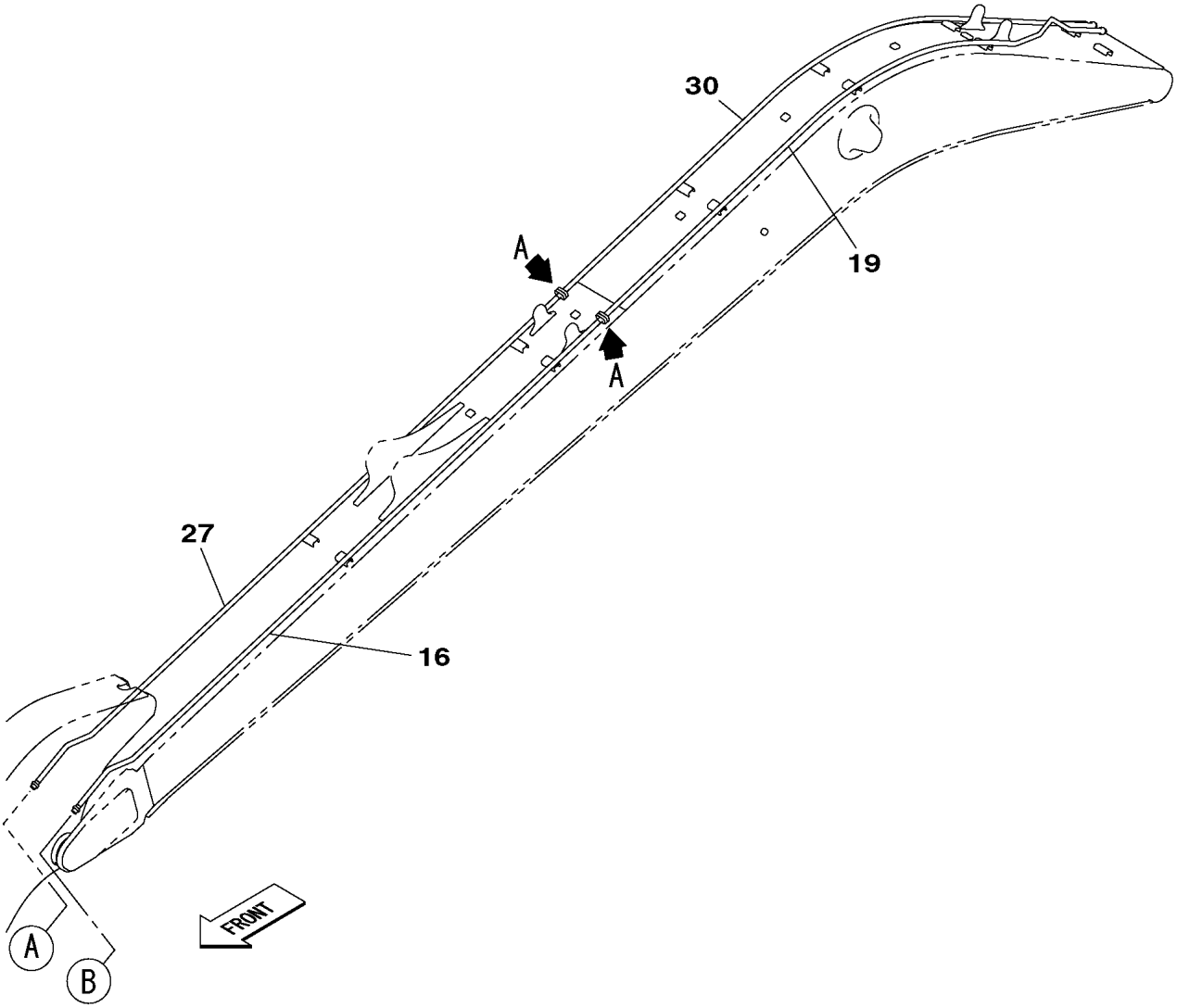

KG1RV588-0
KRV24710-EZ
KRV24720-EZ

https://truckmanualshub.com/

https://truckmanualshub.com/

1 [2 ~ 4]
5 [6 ~ 8]

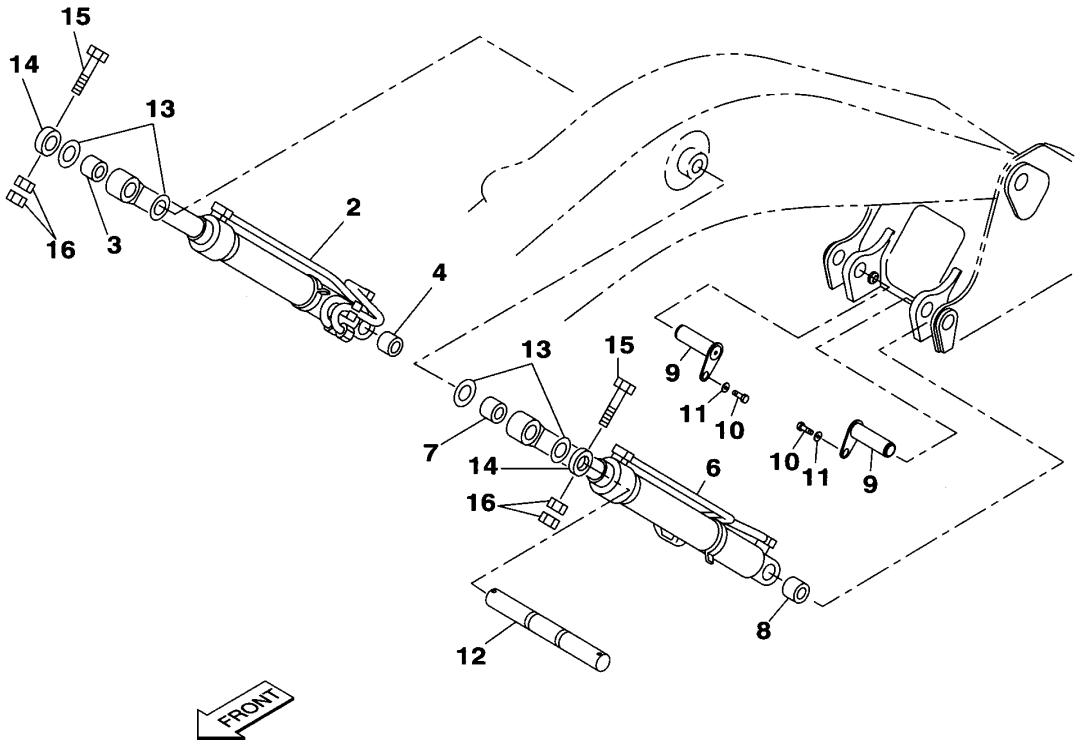

KG1RV452-0
KRV19400-E

https://truckmanualshub.com/

210A5 1101－ 210L5 1101－

符号 ITEM	構成 COMPO	部品番号 PART NO.	部品名	PART NAME	個数 Q'TY	ｲﾝﾅｰ	適用号機 SERIAL_NO.	互換 ICA	代替部品 REPLACEABLE PART
1	1A	KRV19520	ｼﾘﾝﾀﾞ;ﾌﾞｰﾑ (EMS ﾐｷﾞ)	CYL;BOOM	1	*			
2	2	KRV19530	ｼﾘﾝﾀﾞ;ﾌﾞｰﾑ (ﾐｷﾞ ﾌﾞｼｭ	CYL;BOOM	1	*			
3	2	KRV2395	ﾌﾞｼｭ;ｵｲﾙﾚｽ	BUSH;OILLESS	1				
4	2	KRV2401	ﾌﾞｼｭ;ｵｲﾙﾚｽ	BUSH;OILLESS	1				
5	1A	KRV19540	ｼﾘﾝﾀﾞ;ﾌﾞｰﾑ (EMS ﾋﾀﾞ	CYL;BOOM	1	*			
6	2	KRV19550	ｼﾘﾝﾀﾞ;ﾌﾞｰﾑ (ﾋﾀﾞﾘ ﾌﾞｼ	CYL;BOOM	1	*			
7	2	KRV2395	ﾌﾞｼｭ;ｵｲﾙﾚｽ	BUSH;OILLESS	1				
8	2	KRV2401	ﾌﾞｼｭ;ｵｲﾙﾚｽ	BUSH;OILLESS	1				
9	1	KRV10960	ﾋﾟﾝ;ｱﾀｯﾁﾒﾝﾄ (EMS)	PIN;ATT	2				
10	1	102R012Y025R	ｺｳﾘｷB M12X 25	BOLT;HIGH STRENGTH	2				
11	1	KBN0298	ｺｳﾘｷW (M12ﾖｳ)	WASHER;HIGH STRENGTH	2				
12	1	KRV1574	ﾋﾟﾝ;ｱﾀｯﾁﾒﾝﾄ	PIN;ATT	1				
13	1	KRV1178	ｼﾑ;ﾌﾟﾚｰﾄ	SHIM;PLATE	4				
14	1	KRV1156	ﾄﾒﾜ	LOCK RING;SPL	2				
15	1	132R020Y170R	ｺｳﾘｷB M20X1.5 X170	BOLT;HIGH STRENGTH	2				
16	1	172R020VR	ｺｳﾘｷN M20X1.5	NUT;HIGH STRENGTH	4				

https://truckmanualshub.com/

35 [36 , 37]

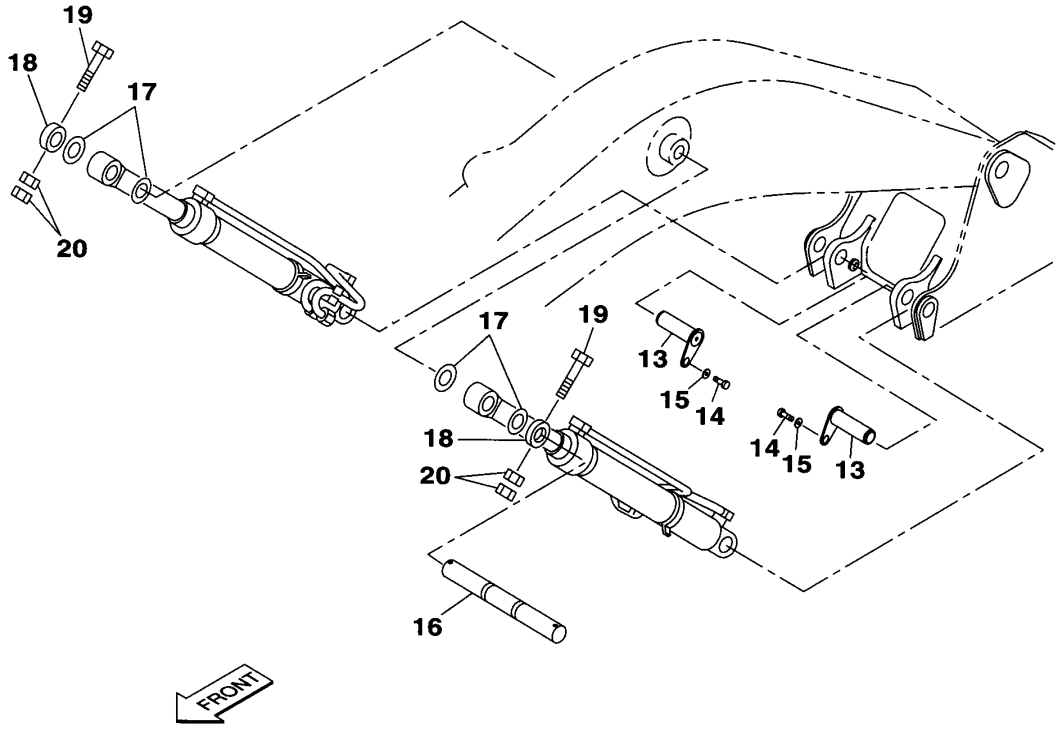

KG1RV453-0
KRV19460-DZ
KRV19470-DZ

https://truckmanualshub.com/

210A5 1101－ 210L5 1101－

符号 ITEM	構成 COMPO	部品番号 PART NO.	部品名	PART NAME	個数 Q'TY	ｲﾝﾅｰ	適用号機 SERIAL_NO.	互換 ICA	代替部品 REPLACEABLE PART
1	1	KRV19580	ｼﾘﾝﾀﾞ;ﾌﾞｰﾑ (EMS HBCV	CYL;BOOM	1	*			
2	1	KRV11110	ﾊﾞﾙﾌﾞ;ﾎｰﾙﾃﾞｨﾝｸﾞ	VALVE;HOLDING	1	*			
3	1	KHJ0913	O-ﾘﾝｸﾞ AN6227-19(JIS	O-RING	2				
4	1	108R010Y070R	ﾛｯｶｸｱﾅB M10X 70	BOLT;HEX SOC HD	4				
5	1	KRV12070	ﾊｲｶﾝｸﾐﾀﾃ (ﾌﾞｰﾑHBCV ﾋ	TUBE;ASSY	1				
6	1	108R010Y035R	ﾛｯｶｸｱﾅB M10X 35	BOLT;HEX SOC HD	4				
7	1	KRV19560	ｼﾘﾝﾀﾞ;ﾌﾞｰﾑ (EMS HBCV	CYL;BOOM	1	*			
8	1	KRV11110	ﾊﾞﾙﾌﾞ;ﾎｰﾙﾃﾞｨﾝｸﾞ	VALVE;HOLDING	1	*			
9	1	KHJ0913	O-ﾘﾝｸﾞ AN6227-19(JIS	O-RING	2				
10	1	108R010Y070R	ﾛｯｶｸｱﾅB M10X 70	BOLT;HEX SOC HD	4				
11	1	KRV12080	ﾊｲｶﾝｸﾐﾀﾃ (ﾌﾞｰﾑHBCV ﾐ	TUBE;ASSY	1				
12	1	108R010Y035R	ﾛｯｶｸｱﾅB M10X 35	BOLT;HEX SOC HD	4				
13	1	KRV10960	ﾋﾟﾝ;ｱﾀｯﾁﾒﾝﾄ (EMS)	PIN;ATT	2				
14	1	102R012Y025R	ｺｳﾘｷB M12X 25	BOLT;HIGH STRENGTH	2				
15	1	KBN0298	ｺｳﾘｷW (M12ﾖｳ)	WASHER;HIGH STRENGTH	2				
16	1	KRV1574	ﾋﾟﾝ;ｱﾀｯﾁﾒﾝﾄ	PIN;ATT	1				
17	1	KRV1178	ｼﾑ;ﾌﾟﾚｰﾄ	SHIM;PLATE	4				
18	1	KRV1156	ﾄﾒﾜ	LOCK RING;SPL	2				
19	1	132R020Y170R	ｺｳﾘｷB M20X1.5 X170	BOLT;HIGH STRENGTH	2				
20	1	172R020VR	ｺｳﾘｷN M20X1.5	NUT;HIGH STRENGTH	4				
21	1A	KNJ0758	ｱﾀﾞﾌﾟﾀ;ﾎｰｽ HA208-02	ADAPTER;HOSE	2				
22	2	UEJ0360	O-ﾘﾝｸﾞ 1B-P11	O-RING	2				
23	1	KRV19790	ﾎｰｽ;ﾕｱﾂ (L=1150 ｶﾞｰﾄ	HOSE;HYD	1				
24	1A	KNJ1106	ｱﾀﾞﾌﾟﾀ;ﾎｰｽ (ｹｲﾁｶﾞｲ)	ADAPTER;HOSE	1				
25	2	UEJ0360	O-ﾘﾝｸﾞ 1B-P11	O-RING	1				
26	1A	KHJ1584	ｽﾀｯﾄﾞ G1/4(OR)XG3/8	STUD	1				
27	2	UEJ0360	O-ﾘﾝｸﾞ 1B-P11	O-RING	1				
28	1A	KHJ0884	ﾁｰ	TEE	1				
29	2	BRP0007	O-ﾘﾝｸﾞ 1B-P14	O-RING	1				
30	1A	KNJ0759	ｱﾀﾞﾌﾟﾀ;ﾎｰｽ HA208-03	ADAPTER;HOSE	1				
31	2	BRP0007	O-ﾘﾝｸﾞ 1B-P14	O-RING	1				
32	1	KHV0373	ｽﾀｯﾄﾞ G3/8XG3/8	STUD	1				
33	1A	KHJ0884	ﾁｰ	TEE	1				
34	2	BRP0007	O-ﾘﾝｸﾞ 1B-P14	O-RING	1				
35	1A	KRV19770	ﾎｰｽ ｸﾐﾀﾃ ｶﾞｰﾄﾞﾂｷ	HOSE SPL	1				
36	2	KHJ1435	ﾎｰｽ;ﾕｱﾂ (SIB70-9X115	HOSE;HYD	1				
37	2	KHJ1435	ﾎｰｽ;ﾕｱﾂ (SIB70-9X115	HOSE;HYD	1				
38	1	KAR0016	ﾊﾞﾝﾄﾞ;ｿｸｾﾝ L=150	BAND;HARNESS	2 AR				

https://truckmanualshub.com/

35 [36 , 37]

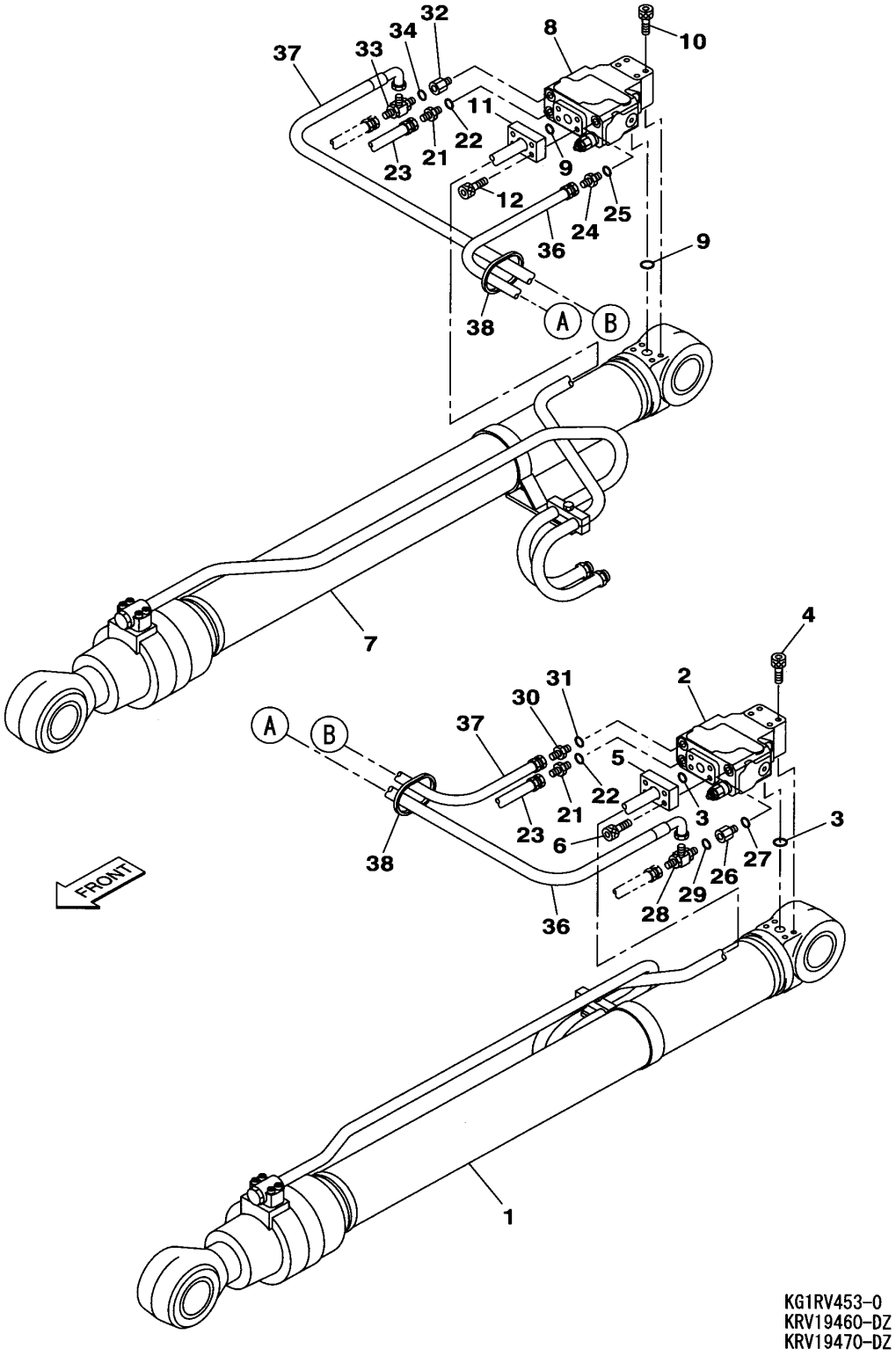

KG1RV453-0
KRV19460-DZ
KRV19470-DZ

https://truckmanualshub.com/

https://truckmanualshub.com/

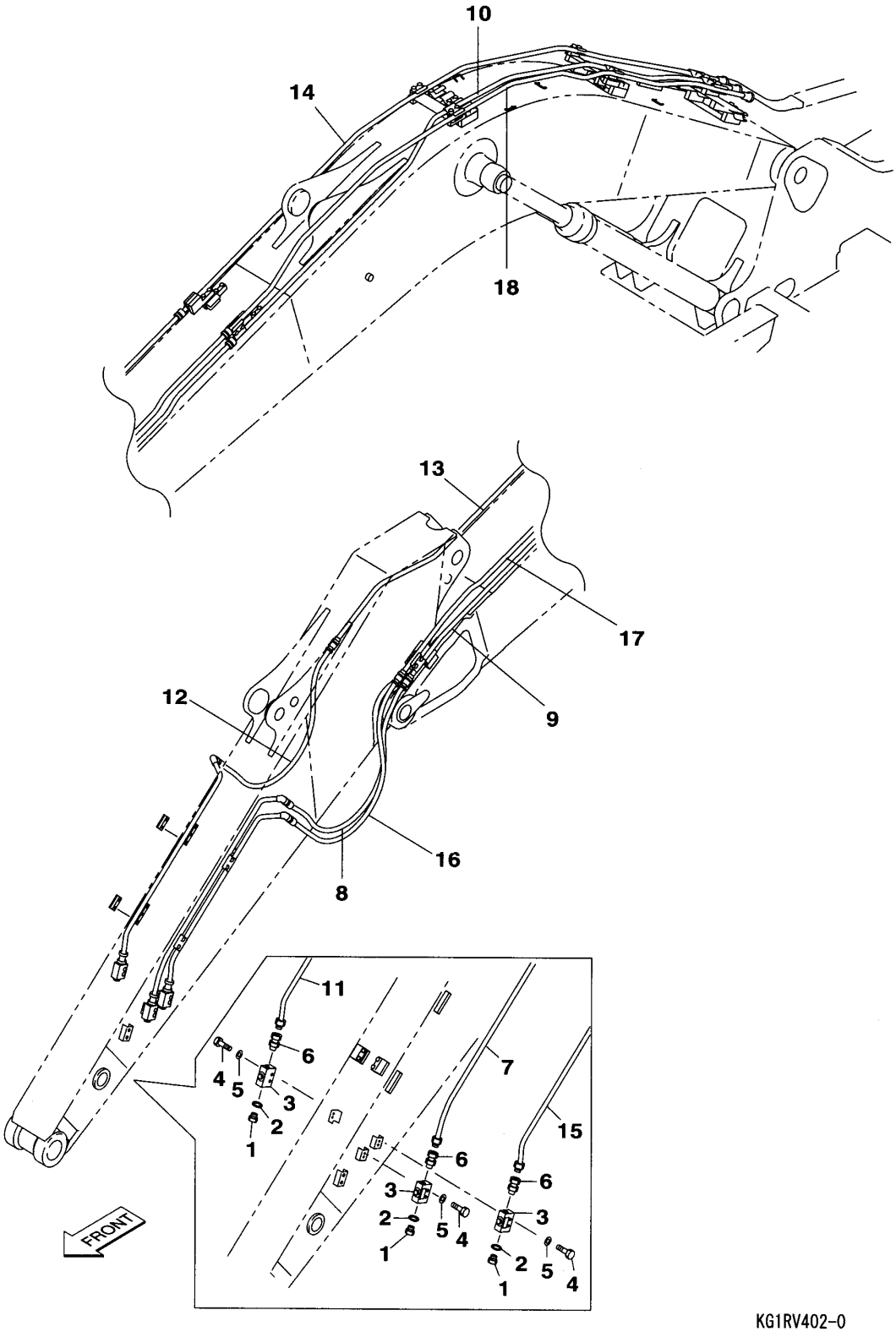

KG1RV402-0
KRV19450-DZ

https://truckmanualshub.com/

210A5 1101－ 210L5 1101－

符号 ITEM	構成 COMPO	部品番号 PART NO.	部品名	PART NAME	個数 Q'TY	ｲﾝﾅｰ	適用号機 SERIAL_NO.	互換 ICA	代替部品 REPLACEABLE PART
1	1A	BRJ0190	ﾌﾟﾗｸﾞ ASSY PF1/2	PLUG	3				
2	2	UBJ0157	O-ﾘﾝｸﾞ 1B-P18	O-RING	3				
3	1	KHV10670	ﾊﾞﾙﾌﾞ;ｽﾄｯﾌﾟ (G1/2)	VALVE;STOP	3		210A5 NOT USED 210L5 NOT USED		
3	1	KHV10440	ﾊﾞﾙﾌﾞ;ｽﾄｯﾌﾟ G1/2	VALVE;STOP	3				
4	1	102R010Y055R	ｺｳﾘｷB M10X 55	BOLT;HIGH STRENGTH	6		210A5 NOT USED 210L5 NOT USED		
4	1	105R012Y060R	ｾﾑｽB M12X 60	BOLT;SEMS	6				
5	1	KEH0114	ｺｳﾘｷW M10 ﾒﾂｷ	WASHER;HIGH STRENGTH	6		210A5 NOT USED 210L5 NOT USED		
6	1	KHJ1939	ｱﾀﾞﾌﾟﾀ;ﾎｰｽ G1/2XG1/	ADAPTER;HOSE	3				
7	1	KRV19200	ﾊｲｶﾝｸﾐﾀﾃ (02 L)	TUBE;ASSY	1		210A5 NOT USED 210L5 NOT USED		
7	1	KRV23260	ﾊｲｶﾝｸﾐﾀﾃ (02 L)	TUBE;ASSY	1				
8	1	KNV14100	ﾎｰｽ;ｺｱﾂ S13-12X1400	HOSE;HYD	1		210A5 -1133 210L5 -1134	<	KRV22550
8	1	KRV22550	ﾎｰｽ;ｺｱﾂ S14-12X1500	HOSE;HYD	1		210A5 1134- 210L5 1135-		
9	1	KRV19180	ﾊｲｶﾝｸﾐﾀﾃ (02 L)	TUBE;ASSY	1				
10	1	KRV19150	ﾊｲｶﾝｸﾐﾀﾃ (02 L)	TUBE;ASSY	1		210A5 -1431 210L5 -1264		
10	1	KRV26980	ﾊｲｶﾝｸﾐﾀﾃ (02 ﾋﾀﾞﾘ ﾌﾞ	TUBE;ASSY	1		210A5 1432- 210L5 1265-		
11	1	KRV19210	ﾊｲｶﾝｸﾐﾀﾃ (02 R)	TUBE;ASSY	1		210A5 NOT USED 210L5 NOT USED		
11	1	KRV23270	ﾊｲｶﾝｸﾐﾀﾃ (02 R)	TUBE;ASSY	1				
12	1	KNV14100	ﾎｰｽ;ｺｱﾂ S13-12X1400	HOSE;HYD	1		210A5 -1133 210L5 -1134	<	KRV22550
12	1	KRV22550	ﾎｰｽ;ｺｱﾂ S14-12X1500	HOSE;HYD	1		210A5 1134- 210L5 1135-		
13	1	KRV19190	ﾊｲｶﾝｸﾐﾀﾃ (02 R)	TUBE;ASSY	1				
14	1	KRV19160	ﾊｲｶﾝｸﾐﾀﾃ (02 R)	TUBE;ASSY	1				
15	1	KRV19220	ﾊｲｶﾝｸﾐﾀﾃ (02 ﾄﾞﾚﾝ)	TUBE;ASSY	1		210A5 NOT USED 210L5 NOT USED		
15	1	KRV23280	ﾊｲｶﾝｸﾐﾀﾃ (02 ﾄﾞﾚﾝ)	TUBE;ASSY	1				
16	1	KRV19750	ﾎｰｽ;ｺｱﾂ IB70X105-12X	HOSE;HYD	1		210A5 -1133 210L5 -1134	<	KRV22550
16	1	KRV22550	ﾎｰｽ;ｺｱﾂ S14-12X1500	HOSE;HYD	1		210A5 1134- 210L5 1135-		
17	1	KRV19180	ﾊｲｶﾝｸﾐﾀﾃ (02 L)	TUBE;ASSY	1				
18	1	KRV19170	ﾊｲｶﾝｸﾐﾀﾃ (02 ﾄﾞﾚﾝ)	TUBE;ASSY	1		210A5 -1431 210L5 -1264		
18	1	KRV26990	ﾊｲｶﾝｸﾐﾀﾃ (02 ﾄﾞﾚﾝ ﾌﾞ	TUBE;ASSY	1		210A5 1432- 210L5 1265-		

https://truckmanualshub.com/

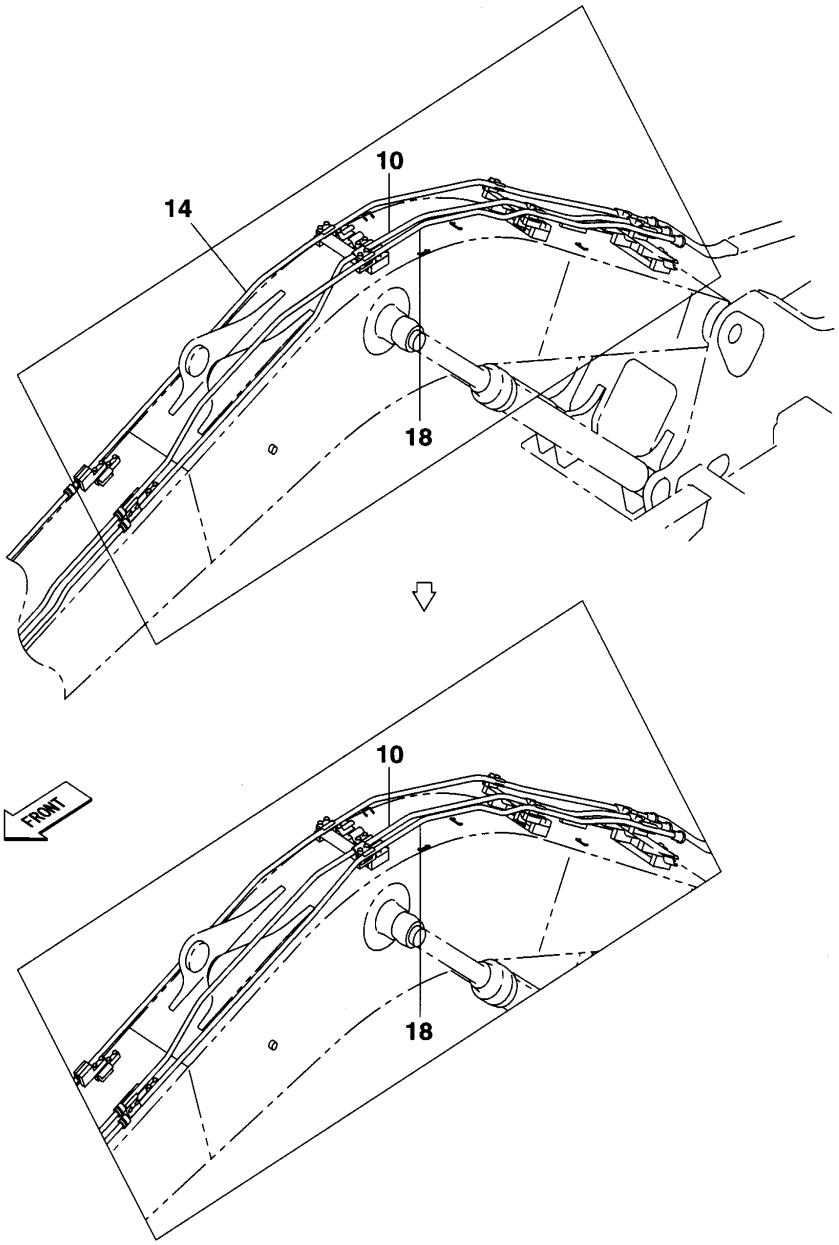

KG1RV487-0
KRV23930-DZ
KRV23900-CZ

https://truckmanualshub.com/

210A5 1101－ 210L5 1101－

符号 ITEM	構成 COMPO	部品番号 PART NO.	部品名	PART NAME	個数 Q'TY	ｲﾝﾅｰ	適用号機 SERIAL_NO.	互換 ICA	代替部品 REPLACEABLE PART
1	1A	BRJ0190	ﾌﾟﾗｸﾞ ASSY PF1/2	PLUG	3				
2	2	UBJ0157	O-ﾘﾝｸﾞ 1B-P18	O-RING	3				
3	1	KHV10670	ﾊﾞﾙﾌﾞ;ｽﾄｯﾌﾟ (G1/2)	VALVE;STOP	3		210A5 NOT USED 210L5 NOT USED		
3	1	KHV10440	ﾊﾞﾙﾌﾞ;ｽﾄｯﾌﾟ G1/2	VALVE;STOP	3				
4	1	102R010Y055R	ｺｳﾘｷB M10X 55	BOLT;HIGH STRENGTH	6		210A5 NOT USED 210L5 NOT USED		
4	1	105R012Y060R	ｾﾑｽB M12X 60	BOLT;SEMS	6				
5	1	KEH0114	ｺｳﾘｷW M10 ﾒﾂｷ	WASHER;HIGH STRENGTH	6		210A5 NOT USED 210L5 NOT USED		
6	1	KHJ1939	ｱﾀﾞﾌﾟﾀ;ﾎｰｽ G1/2XG1/	ADAPTER;HOSE	3				
7	1	KRV20830	ﾊｲｶﾝｸﾐﾀﾃ (02 L)	TUBE;ASSY	1		210A5 NOT USED 210L5 NOT USED		
7	1	KRV23340	ﾊｲｶﾝｸﾐﾀﾃ (02 L)	TUBE;ASSY	1				
8	1	KRV22550	ﾎｰｽ;ｺｱﾂ S14-12X1500	HOSE;HYD	1				
9	1	KRV19180	ﾊｲｶﾝｸﾐﾀﾃ (02 L)	TUBE;ASSY	1				
10	1	KRV19150	ﾊｲｶﾝｸﾐﾀﾃ (02 L)	TUBE;ASSY	1		210A5 -1431 210L5 -1264		
10	1	KRV26980	ﾊｲｶﾝｸﾐﾀﾃ (02 ﾋﾀﾞﾘ ﾌﾞ	TUBE;ASSY	1		210A5 1432- 210L5 1265-		
11	1	KRV20820	ﾊｲｶﾝｸﾐﾀﾃ (02 R)	TUBE;ASSY	1		210A5 NOT USED 210L5 NOT USED		
11	1	KRV23350	ﾊｲｶﾝｸﾐﾀﾃ (02 R)	TUBE;ASSY	1				
12	1	KRV22550	ﾎｰｽ;ｺｱﾂ S14-12X1500	HOSE;HYD	1				
13	1	KRV19190	ﾊｲｶﾝｸﾐﾀﾃ (02 R)	TUBE;ASSY	1				
14	1	KRV19160	ﾊｲｶﾝｸﾐﾀﾃ (02 R)	TUBE;ASSY	1				
15	1	KRV20840	ﾊｲｶﾝｸﾐﾀﾃ (02 DR)	TUBE;ASSY	1		210A5 NOT USED 210L5 NOT USED		
15	1	KRV23360	ﾊｲｶﾝｸﾐﾀﾃ (02 DR)	TUBE;ASSY	1				
16	1	KRV19750	ﾎｰｽ;ｺｱﾂ IB70X105-12X	HOSE;HYD	1		210A5 -1133 210L5 -1134	<	KRV22550
16	1	KRV22550	ﾎｰｽ;ｺｱﾂ S14-12X1500	HOSE;HYD	1		210A5 1134- 210L5 1135-		
17	1	KRV19180	ﾊｲｶﾝｸﾐﾀﾃ (02 L)	TUBE;ASSY	1				
18	1	KRV19170	ﾊｲｶﾝｸﾐﾀﾃ (02 ﾄﾞﾚﾝ)	TUBE;ASSY	1		210A5 -1431 210L5 -1264		
18	1	KRV26990	ﾊｲｶﾝｸﾐﾀﾃ (02 ﾄﾞﾚﾝ ﾌﾞ	TUBE;ASSY	1		210A5 1432- 210L5 1265-		

https://truckmanualshub.com/

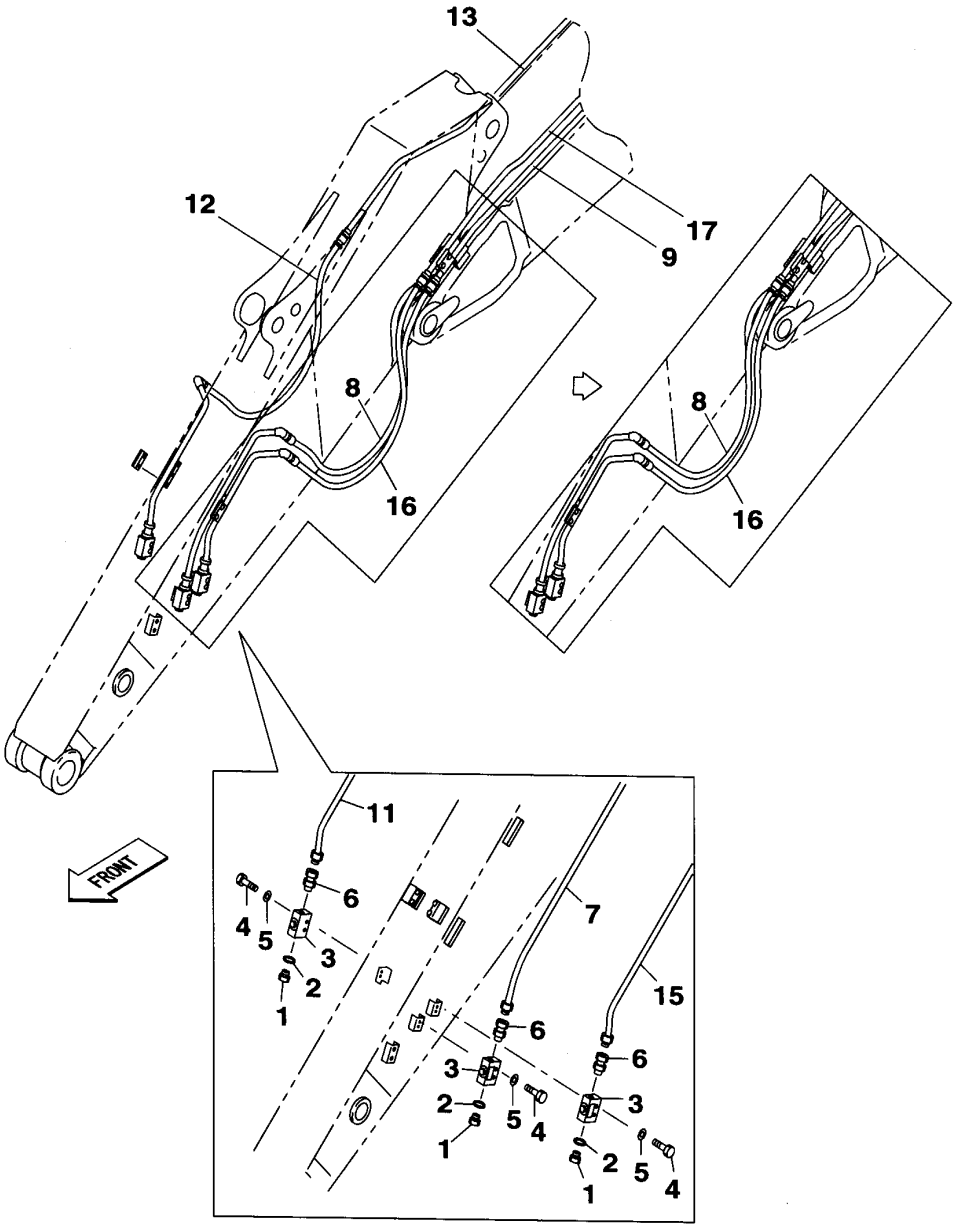

KG1RV487-0
KRV23930-DZ
KRV23900-CZ

https://truckmanualshub.com/

https://truckmanualshub.com/

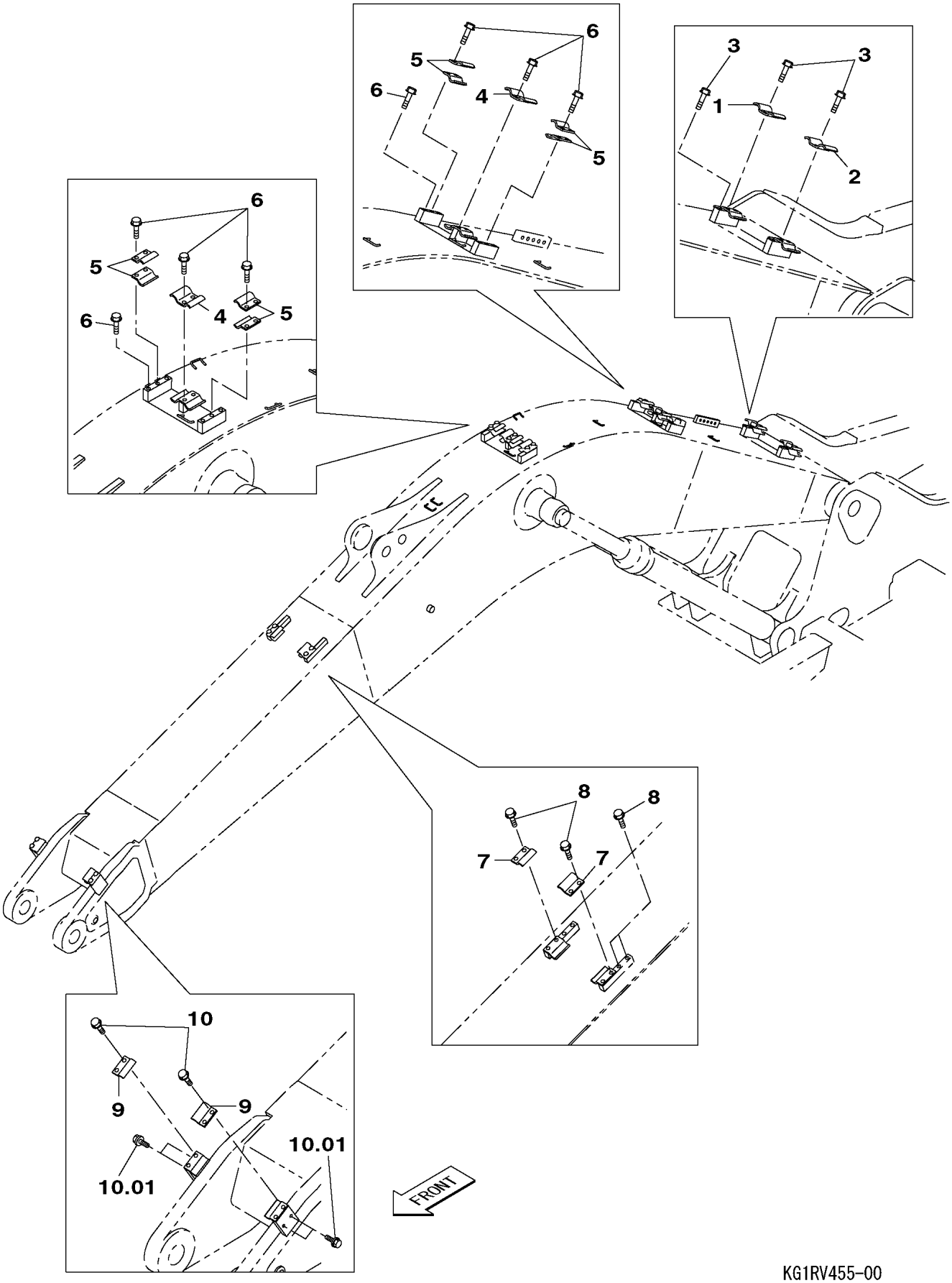

KG1RV455-00
KRV19400-EZ

https://truckmanualshub.com/

210A5 1101－ 210L5 1101－

符号 ITEM	構成 COMPO	部品番号 PART NO.	部品名	PART NAME	個数 Q'TY	ｲﾝﾅｰ	適用号機 SERIAL_NO.	互換 ICA	代替部品 REPLACEABLE PART
1	1	KHV10450	ｸﾗﾝﾌﾟ;ﾊﾟｲﾌﾟ 2X27.2	CLAMP;PIPE	1				
2	1	KHV10610	ｸﾗﾝﾌﾟ;ﾊﾟｲﾌﾟ 27.2X34	CLAMP;PIPE	1				
3	1	105R012Y030R	ｾﾑｽB M12X 30	BOLT;SEMS	6				
4	1	KHV10610	ｸﾗﾝﾌﾟ;ﾊﾟｲﾌﾟ 27.2X34	CLAMP;PIPE	2				
5	1	KHV10460	ｸﾗﾝﾌﾟ;ﾊﾟｲﾌﾟ 27.2	CLAMP;PIPE	8				
6	1	105R012Y030R	ｾﾑｽB M12X 30	BOLT;SEMS	16				
7	1	KHV10460	ｸﾗﾝﾌﾟ;ﾊﾟｲﾌﾟ 27.2	CLAMP;PIPE	2				
8	1	105R012Y030R	ｾﾑｽB M12X 30	BOLT;SEMS	8				
9	1	KHV10460	ｸﾗﾝﾌﾟ;ﾊﾟｲﾌﾟ 27.2	CLAMP;PIPE	2				
10	1	105R012Y030R	ｾﾑｽB M12X 30	BOLT;SEMS	4				
10.01	1	105R012Y030R	ｾﾑｽB M12X 30	BOLT;SEMS	4				

https://truckmanualshub.com/

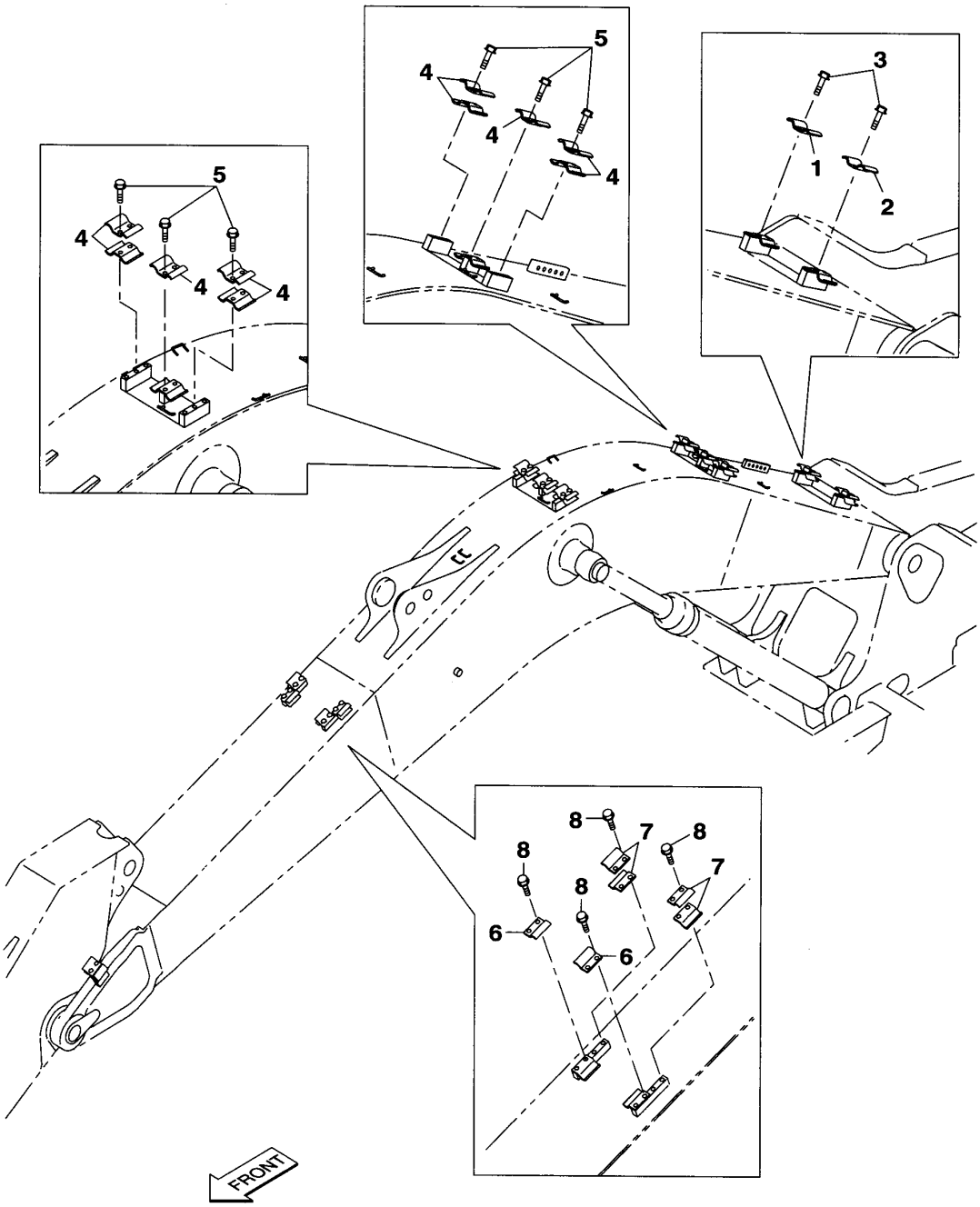

KG1RV456-0
KRV19400-E
KRV19440-D

https://truckmanualshub.com/

210A5 1101－ 210L5 1101－

符号 ITEM	構成 COMPO	部品番号 PART NO.	部品名	PART NAME	個数 Q'TY	ｲﾝﾅｰ	適用号機 SERIAL_NO.	互換 ICA	代替部品 REPLACEABLE PART
1	1	KHV10450	ｸﾗﾝﾌﾟ;ﾊﾟｲﾌﾟ 2X27.2	CLAMP;PIPE	1				
2	1	KHV10610	ｸﾗﾝﾌﾟ;ﾊﾟｲﾌﾟ 27.2X34	CLAMP;PIPE	1				
3	1	105R012Y030R	ｾﾑｽB M12X 30	BOLT;SEMS	6				
4	1	KHV10610	ｸﾗﾝﾌﾟ;ﾊﾟｲﾌﾟ 27.2X34	CLAMP;PIPE	10				
5	1	105R012Y030R	ｾﾑｽB M12X 30	BOLT;SEMS	16				
6	1	KHV10460	ｸﾗﾝﾌﾟ;ﾊﾟｲﾌﾟ 27.2	CLAMP;PIPE	2				
7	1	KHV10630	ｸﾗﾝﾌﾟ;ﾊﾟｲﾌﾟ 34.0	CLAMP;PIPE	4				
8	1	105R012Y030R	ｾﾑｽB M12X 30	BOLT;SEMS	8				
9	1	KHV10460	ｸﾗﾝﾌﾟ;ﾊﾟｲﾌﾟ 27.2	CLAMP;PIPE	2				
10	1	KHV10640	ｸﾗﾝﾌﾟ;ﾊﾟｲﾌﾟ 34.0	CLAMP;PIPE	2				
11	1	105R012Y030R	ｾﾑｽB M12X 30	BOLT;SEMS	8				
12	1	KHV10630	ｸﾗﾝﾌﾟ;ﾊﾟｲﾌﾟ 34.0	CLAMP;PIPE	8				
13	1	105R012Y030R	ｾﾑｽB M12X 30	BOLT;SEMS	8				

https://truckmanualshub.com/

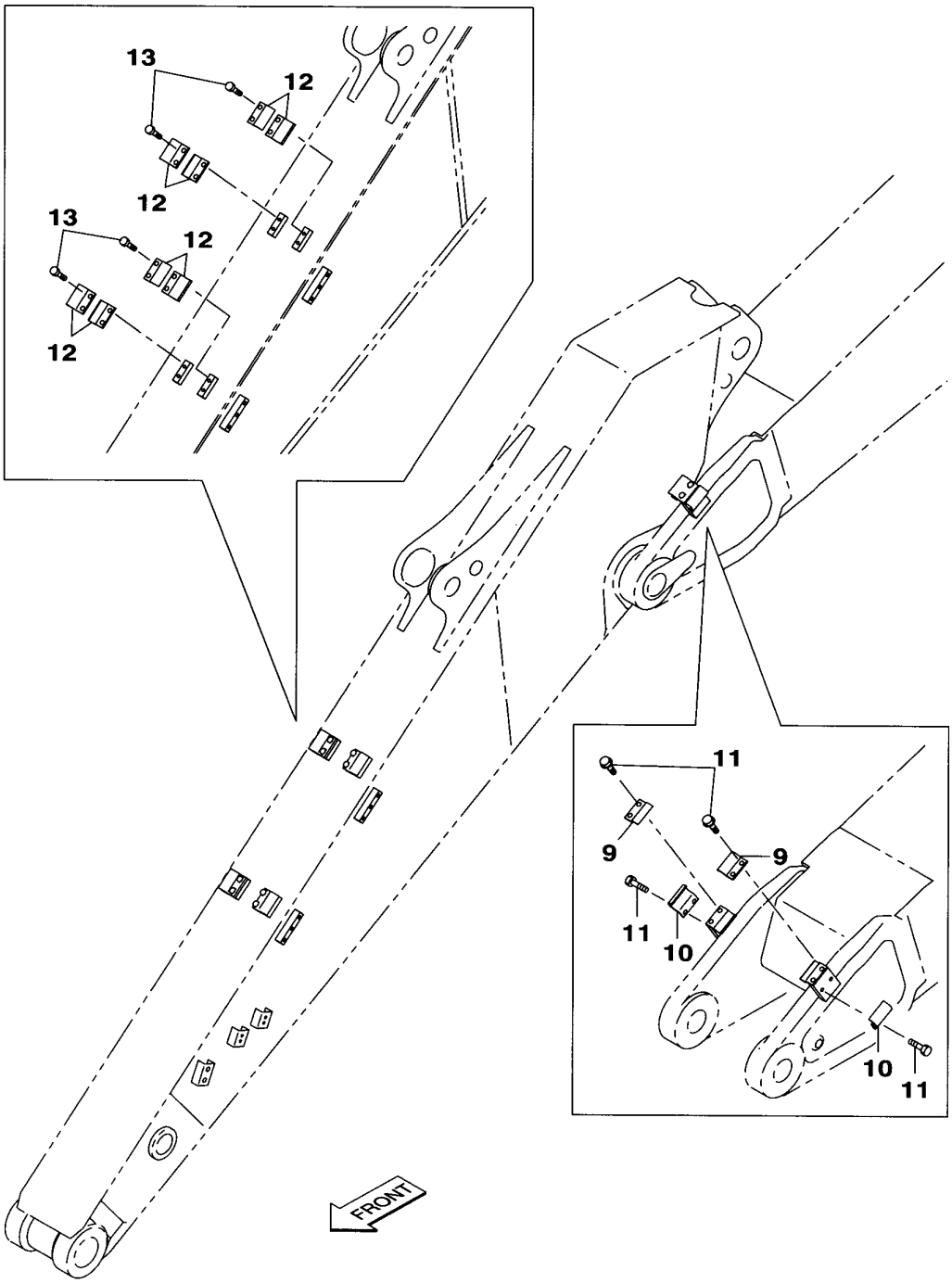

KG1RV456-0
KRV19400-E
KRV19440-D

https://truckmanualshub.com/

https://truckmanualshub.com/

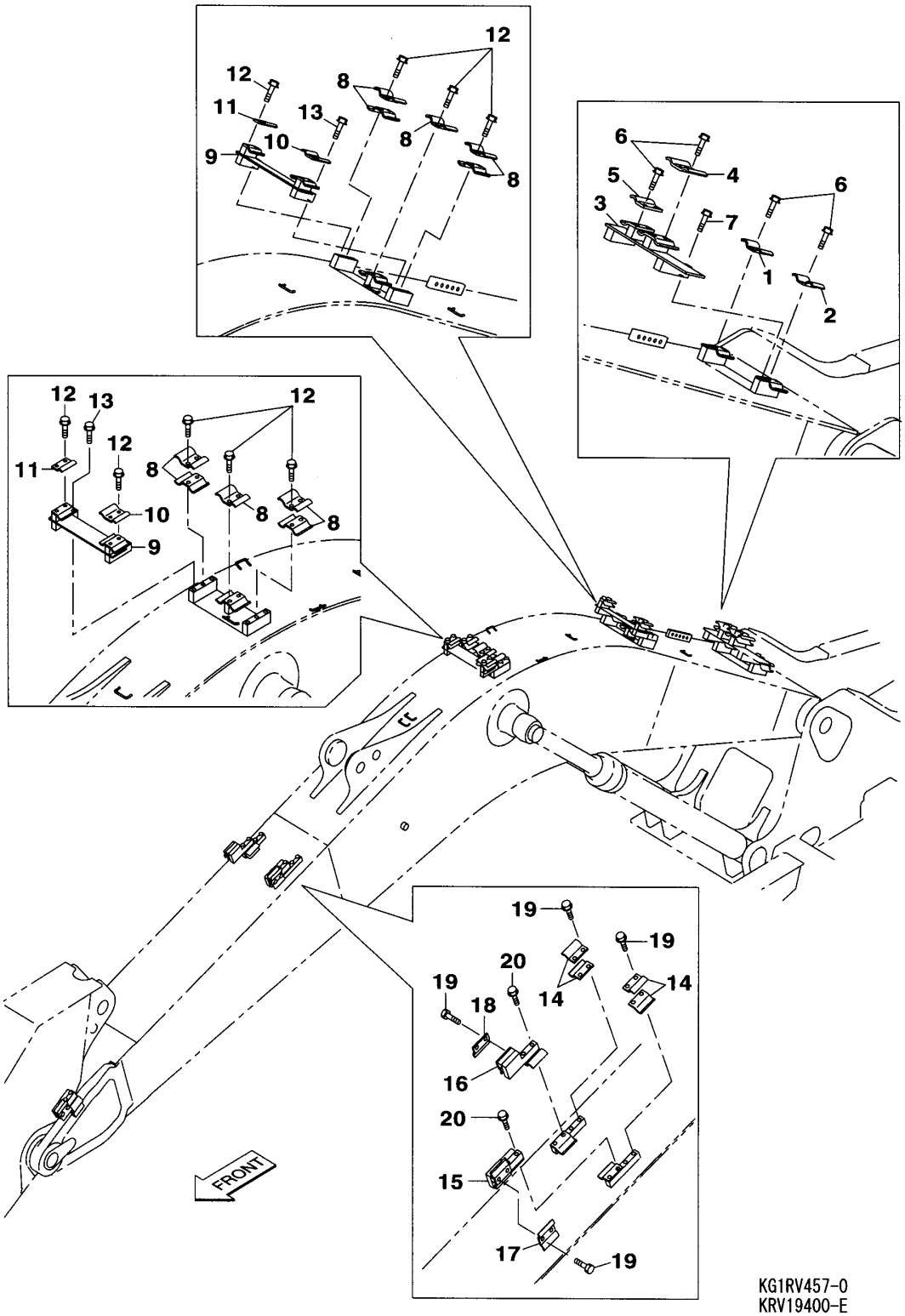

KG1RV457-0
KRV19400-E
KRV19440-D
KRV19450-D

https://truckmanualshub.com/

210A5 1101－1675 210L5 1101－1348

符号 ITEM	構成 COMPO	部品番号 PART NO.	部品名	PART NAME	個数 Q'TY	ｲﾝﾅｰ	適用号機 SERIAL_NO.	互換 ICA	代替部品 REPLACEABLE PART
1	1	KHV10450	ｸﾗﾝﾌﾟ;ﾊﾟｲﾌﾟ 2X27.2	CLAMP;PIPE	1				
2	1	KHV10610	ｸﾗﾝﾌﾟ;ﾊﾟｲﾌﾟ 27.2X34	CLAMP;PIPE	1				
3	1	KRV20290	ｻﾞ (ﾌﾞｰﾑﾌｰﾄ 02)	BAR;BASE	1				
4	1	KHV10480	ｸﾗﾝﾌﾟ;ﾊﾟｲﾌﾟ 2X21.7	CLAMP;PIPE	1				
5	1	KHV10500	ｸﾗﾝﾌﾟ;ﾊﾟｲﾌﾟ 21.7	CLAMP;PIPE	1				
6	1	105R012Y030R	ｾﾑｽB M12X 30	BOLT;SEMS	8				
7	1	105R012Y060R	ｾﾑｽB M12X 60	BOLT;SEMS	2				
8	1	KHV10610	ｸﾗﾝﾌﾟ;ﾊﾟｲﾌﾟ 27.2X34	CLAMP;PIPE	10				
9	1	KRV20300	ｻﾞ (ﾌﾞｰﾑｾﾝﾀ 02)	BAR;BASE	2				
10	1	KHV10480	ｸﾗﾝﾌﾟ;ﾊﾟｲﾌﾟ 2X21.7	CLAMP;PIPE	2				
11	1	KHV10500	ｸﾗﾝﾌﾟ;ﾊﾟｲﾌﾟ 21.7	CLAMP;PIPE	2				
12	1	105R012Y030R	ｾﾑｽB M12X 30	BOLT;SEMS	20				
13	1	105R012Y060R	ｾﾑｽB M12X 60	BOLT;SEMS	4				
14	1	KHV10630	ｸﾗﾝﾌﾟ;ﾊﾟｲﾌﾟ 34.0	CLAMP;PIPE	4				
15	1	KNV13810	ｻﾞ (ﾌﾞｰﾑ ﾄｯﾌﾟ L)	BAR;BASE	1				
16	1	KNV13820	ｻﾞ (ﾌﾞｰﾑﾄｯﾌﾟ R)	BAR;BASE	1				
17	1	KHV10480	ｸﾗﾝﾌﾟ;ﾊﾟｲﾌﾟ 2X21.7	CLAMP;PIPE	1				
18	1	KHV10500	ｸﾗﾝﾌﾟ;ﾊﾟｲﾌﾟ 21.7	CLAMP;PIPE	1				
19	1	105R012Y030R	ｾﾑｽB M12X 30	BOLT;SEMS	8				
20	1	105R012Y060R	ｾﾑｽB M12X 60	BOLT;SEMS	4				
21	1	KHV10640	ｸﾗﾝﾌﾟ;ﾊﾟｲﾌﾟ 34.0	CLAMP;PIPE	2				
22	1	KNV13810	ｻﾞ (ﾌﾞｰﾑ ﾄｯﾌﾟ L)	BAR;BASE	1				
23	1	KNV13820	ｻﾞ (ﾌﾞｰﾑﾄｯﾌﾟ R)	BAR;BASE	1				
24	1	KHV10480	ｸﾗﾝﾌﾟ;ﾊﾟｲﾌﾟ 2X21.7	CLAMP;PIPE	1				
25	1	KHV10500	ｸﾗﾝﾌﾟ;ﾊﾟｲﾌﾟ 21.7	CLAMP;PIPE	1				
26	1	105R012Y030R	ｾﾑｽB M12X 30	BOLT;SEMS	8				
27	1	105R012Y060R	ｾﾑｽB M12X 60	BOLT;SEMS	4				
28	1	KHV10630	ｸﾗﾝﾌﾟ;ﾊﾟｲﾌﾟ 34.0	CLAMP;PIPE	8				
29	1	KHV10480	ｸﾗﾝﾌﾟ;ﾊﾟｲﾌﾟ 2X21.7	CLAMP;PIPE	2				
30	1	KHV10490	ｸﾗﾝﾌﾟ;ﾊﾟｲﾌﾟ 2X21.7	CLAMP;PIPE	2				
31	1	KHV10500	ｸﾗﾝﾌﾟ;ﾊﾟｲﾌﾟ 21.7	CLAMP;PIPE	2				
32	1	KHV10510	ｸﾗﾝﾌﾟ;ﾊﾟｲﾌﾟ 21.7	CLAMP;PIPE	2				
33	1	105R012Y030R	ｾﾑｽB M12X 30	BOLT;SEMS	20				

https://truckmanualshub.com/

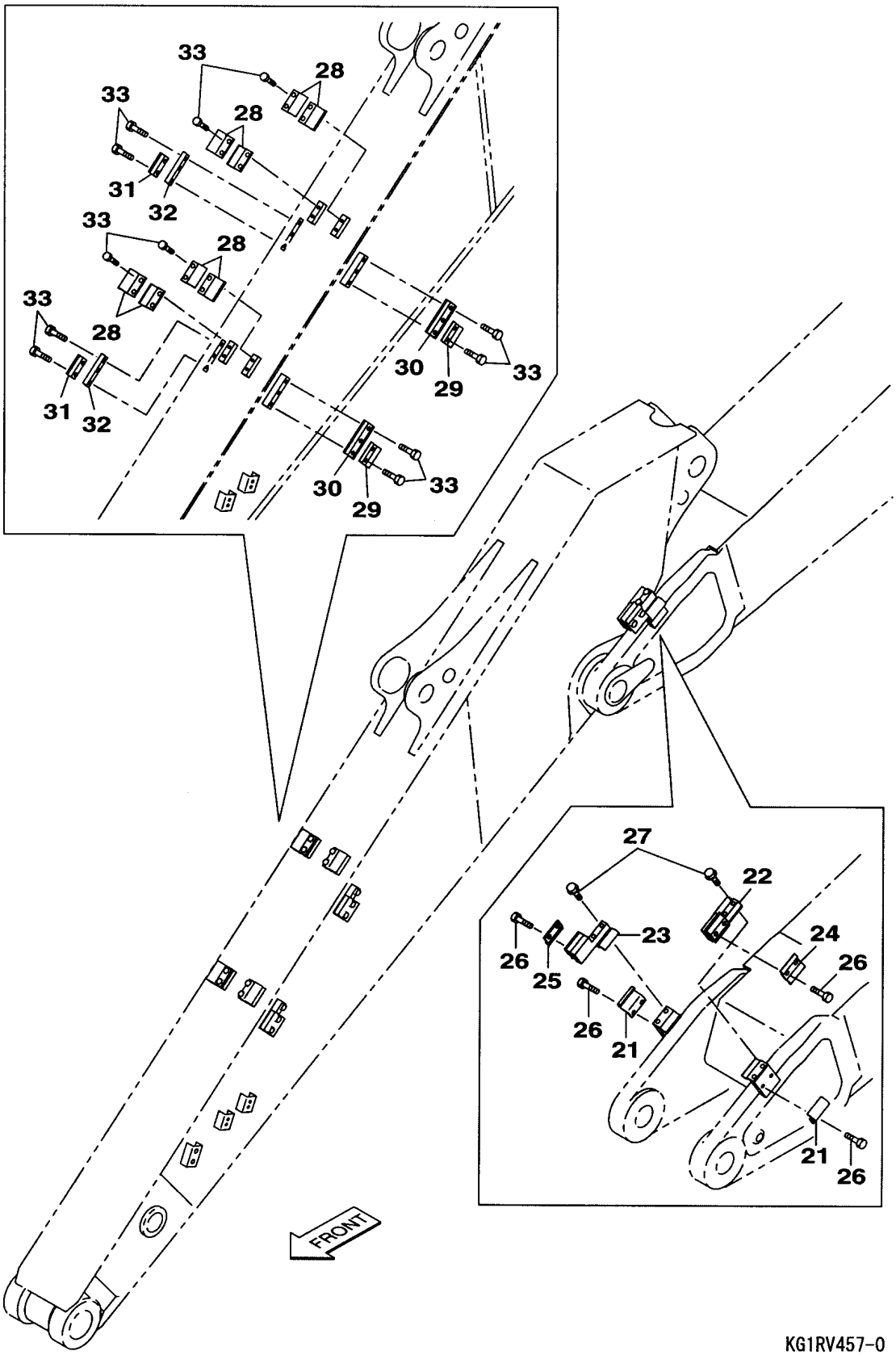

KG1RV457-0
KRV19400-E
KRV19440-D
KRV19450-D

https://truckmanualshub.com/

https://truckmanualshub.com/

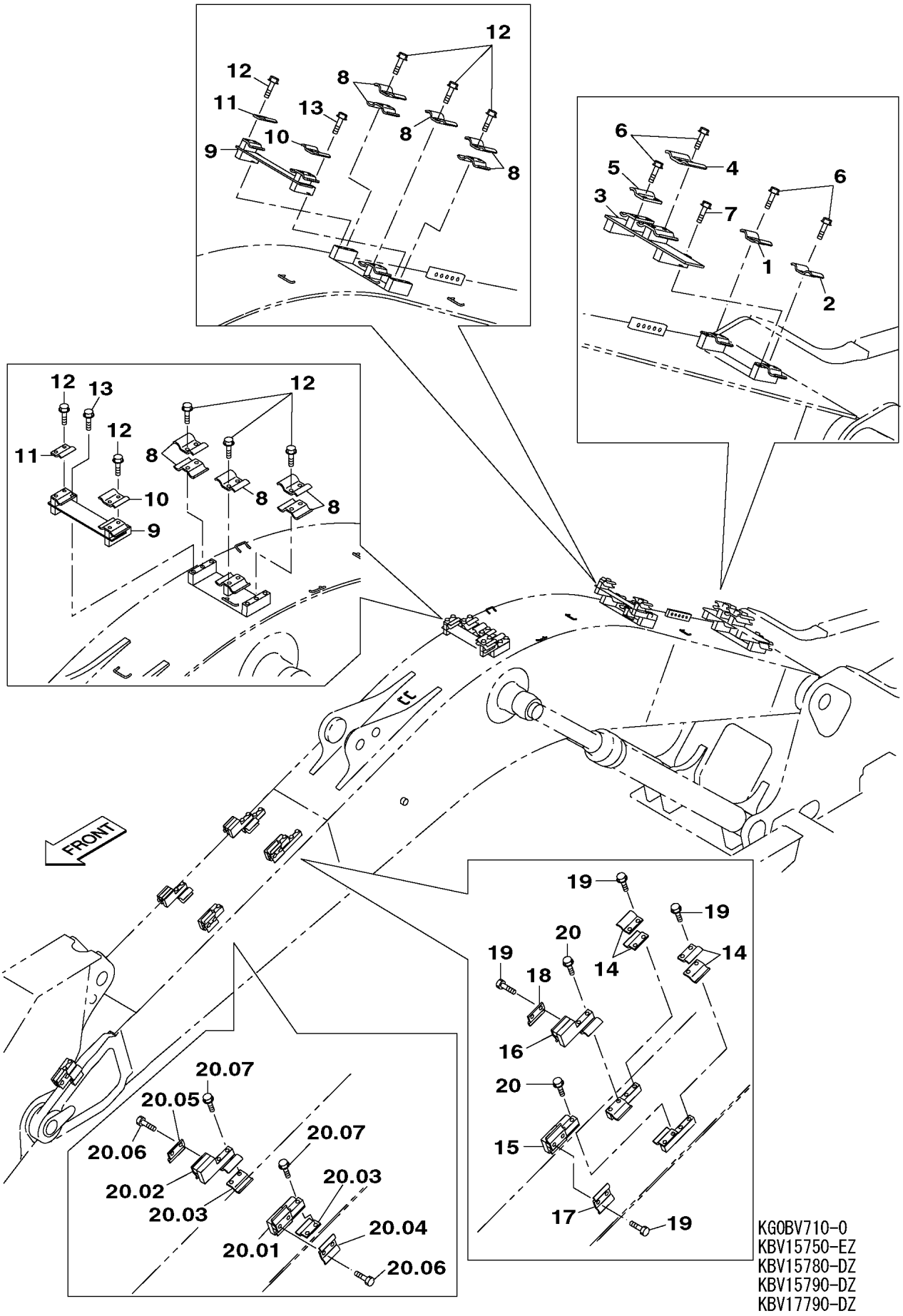

KG0BV710-0
KBV15750-EZ
KBV15780-DZ
KBV15790-DZ
KBV17790-DZ

https://truckmanualshub.com/

210A5 1676－ 210L5 1349－

符号 ITEM	構成 COMPO	部品番号 PART NO.	部品名	PART NAME	個数 Q'TY	ｲﾝﾅｰ	適用号機 SERIAL_NO.	互換 ICA	代替部品 REPLACEABLE PART
1	1	KHV10450	ｸﾗﾝﾌﾟ;ﾊﾟｲﾌﾟ 2X27.2	CLAMP;PIPE	1				
2	1	KHV10610	ｸﾗﾝﾌﾟ;ﾊﾟｲﾌﾟ 27.2X34	CLAMP;PIPE	1				
3	1	KRV20290	ｻﾞ (ﾌﾞｰﾑﾌｰﾄ 02)	BAR;BASE	1				
4	1	KHV10480	ｸﾗﾝﾌﾟ;ﾊﾟｲﾌﾟ 2X21.7	CLAMP;PIPE	1				
5	1	KHV10500	ｸﾗﾝﾌﾟ;ﾊﾟｲﾌﾟ 21.7	CLAMP;PIPE	1				
6	1	105R012Y030R	ｾﾑｽB M12X 30	BOLT;SEMS	8				
7	1	105R012Y060R	ｾﾑｽB M12X 60	BOLT;SEMS	2				
8	1	KHV10610	ｸﾗﾝﾌﾟ;ﾊﾟｲﾌﾟ 27.2X34	CLAMP;PIPE	10				
9	1	KRV20300	ｻﾞ (ﾌﾞｰﾑｾﾝﾀ 02)	BAR;BASE	2				
10	1	KHV10480	ｸﾗﾝﾌﾟ;ﾊﾟｲﾌﾟ 2X21.7	CLAMP;PIPE	2				
11	1	KHV10500	ｸﾗﾝﾌﾟ;ﾊﾟｲﾌﾟ 21.7	CLAMP;PIPE	2				
12	1	105R012Y030R	ｾﾑｽB M12X 30	BOLT;SEMS	20				
13	1	105R012Y060R	ｾﾑｽB M12X 60	BOLT;SEMS	4				
14	1	KHV10630	ｸﾗﾝﾌﾟ;ﾊﾟｲﾌﾟ 34.0	CLAMP;PIPE	4				
15	1	KNV13810	ｻﾞ (ﾌﾞｰﾑ ﾄｯﾌﾟ L)	BAR;BASE	1				
16	1	KNV13820	ｻﾞ (ﾌﾞｰﾑﾄｯﾌﾟ R)	BAR;BASE	1				
17	1	KHV10480	ｸﾗﾝﾌﾟ;ﾊﾟｲﾌﾟ 2X21.7	CLAMP;PIPE	1				
18	1	KHV10500	ｸﾗﾝﾌﾟ;ﾊﾟｲﾌﾟ 21.7	CLAMP;PIPE	1				
19	1	105R012Y030R	ｾﾑｽB M12X 30	BOLT;SEMS	8				
20	1	105R012Y060R	ｾﾑｽB M12X 60	BOLT;SEMS	4				
20.01	1	KNV13810	ｻﾞ (ﾌﾞｰﾑ ﾄｯﾌﾟ L)	BAR;BASE	1				
20.02	1	KNV13820	ｻﾞ (ﾌﾞｰﾑﾄｯﾌﾟ R)	BAR;BASE	1				
20.03	1	KHV11640	ｸﾗﾝﾌﾟ;ﾊﾟｲﾌﾟ 27.2(ﾅｯﾄ	CLAMP;PIPE	2				
20.04	1	KHV10480	ｸﾗﾝﾌﾟ;ﾊﾟｲﾌﾟ 2X21.7	CLAMP;PIPE	1				
20.05	1	KHV10500	ｸﾗﾝﾌﾟ;ﾊﾟｲﾌﾟ 21.7	CLAMP;PIPE	1				
20.06	1	105R012Y030R	ｾﾑｽB M12X 30	BOLT;SEMS	4				
20.07	1	105R012Y060R	ｾﾑｽB M12X 60	BOLT;SEMS	4				
21	1	KHV10640	ｸﾗﾝﾌﾟ;ﾊﾟｲﾌﾟ 34.0	CLAMP;PIPE	2				
22	1	KNV13810	ｻﾞ (ﾌﾞｰﾑ ﾄｯﾌﾟ L)	BAR;BASE	1				
23	1	KNV13820	ｻﾞ (ﾌﾞｰﾑﾄｯﾌﾟ R)	BAR;BASE	1				
24	1	KHV10480	ｸﾗﾝﾌﾟ;ﾊﾟｲﾌﾟ 2X21.7	CLAMP;PIPE	1				
25	1	KHV10500	ｸﾗﾝﾌﾟ;ﾊﾟｲﾌﾟ 21.7	CLAMP;PIPE	1				
26	1	105R012Y030R	ｾﾑｽB M12X 30	BOLT;SEMS	8				
27	1	105R012Y060R	ｾﾑｽB M12X 60	BOLT;SEMS	4				

https://truckmanualshub.com/

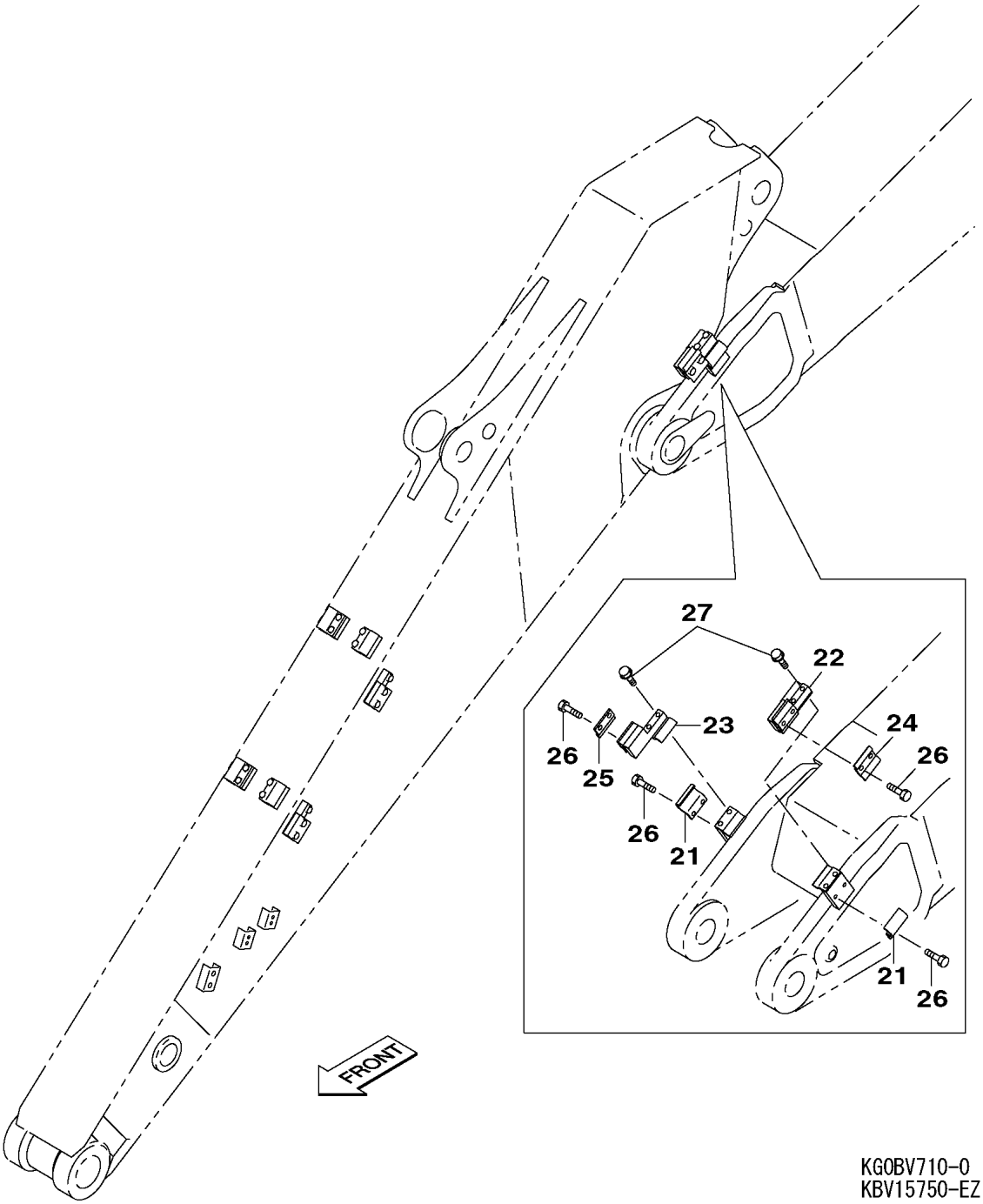

KG0BV710-0
KBV15750-EZ
KBV15780-DZ
KBV15790-DZ
KBV17790-DZ

https://truckmanualshub.com/

https://truckmanualshub.com/

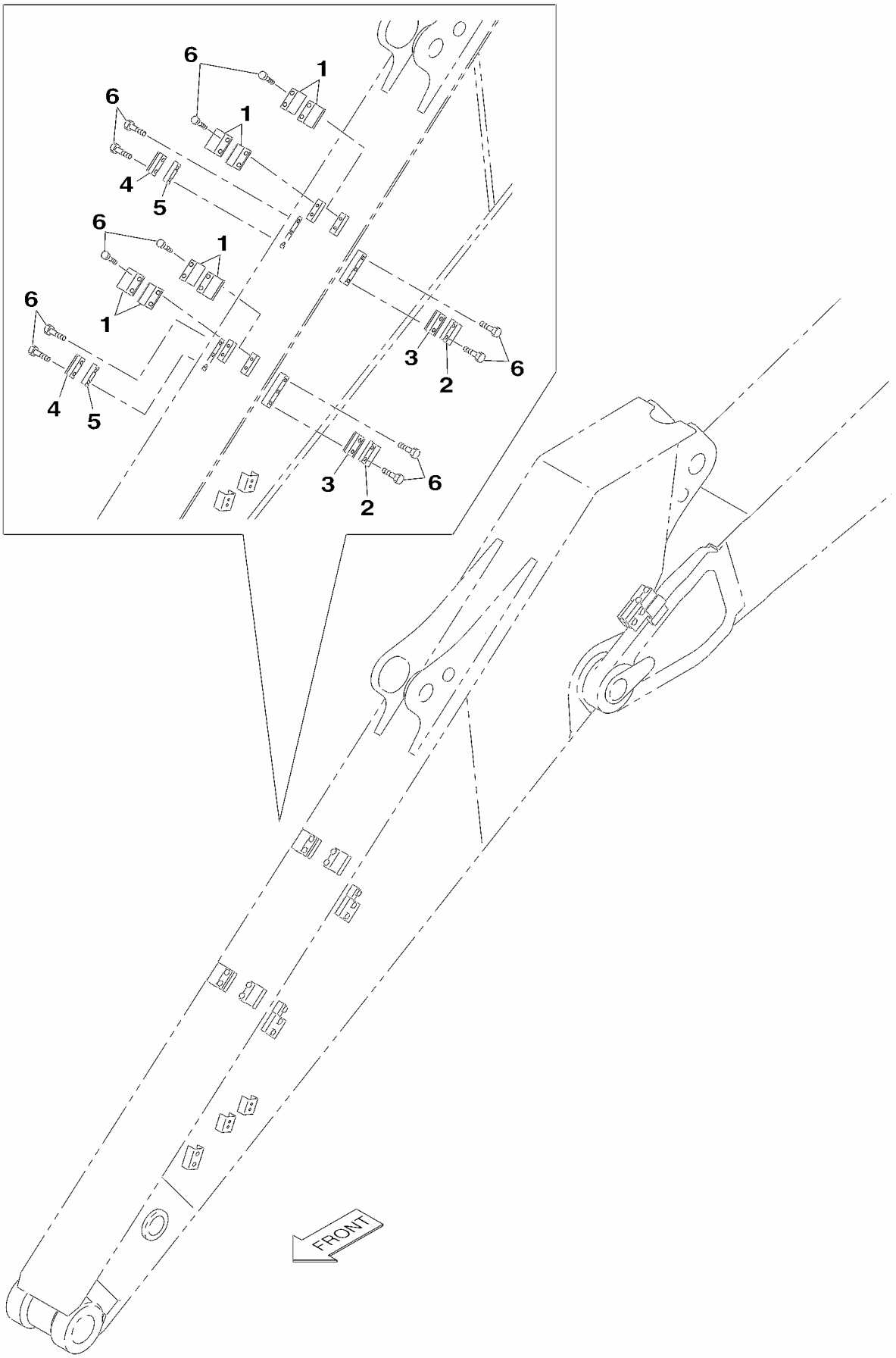

KG0BV729-0
KBV15790-DZ

https://truckmanualshub.com/

210A5 1676－ 210L5 1349－

符号 ITEM	構成 COMPO	部品番号 PART NO.	部品名	PART NAME	個数 Q'TY	ｲﾝﾅｰ	適用号機 SERIAL_NO.	互換 ICA	代替部品 REPLACEABLE PART
1	1	KHV10630	ｸﾗﾝﾌﾟ;ﾊﾟｲﾌﾟ 34.0	CLAMP;PIPE	8				
2	1	KHV10480	ｸﾗﾝﾌﾟ;ﾊﾟｲﾌﾟ 2X21.7	CLAMP;PIPE	2				
3	1	KHV10490	ｸﾗﾝﾌﾟ;ﾊﾟｲﾌﾟ 2X21.7	CLAMP;PIPE	2				
4	1	KHV10500	ｸﾗﾝﾌﾟ;ﾊﾟｲﾌﾟ 21.7	CLAMP;PIPE	2				
5	1	KHV10510	ｸﾗﾝﾌﾟ;ﾊﾟｲﾌﾟ 21.7	CLAMP;PIPE	2				
6	1	105R012Y030R	ｾﾑｽB M12X 30	BOLT;SEMS	20				

https://truckmanualshub.com/

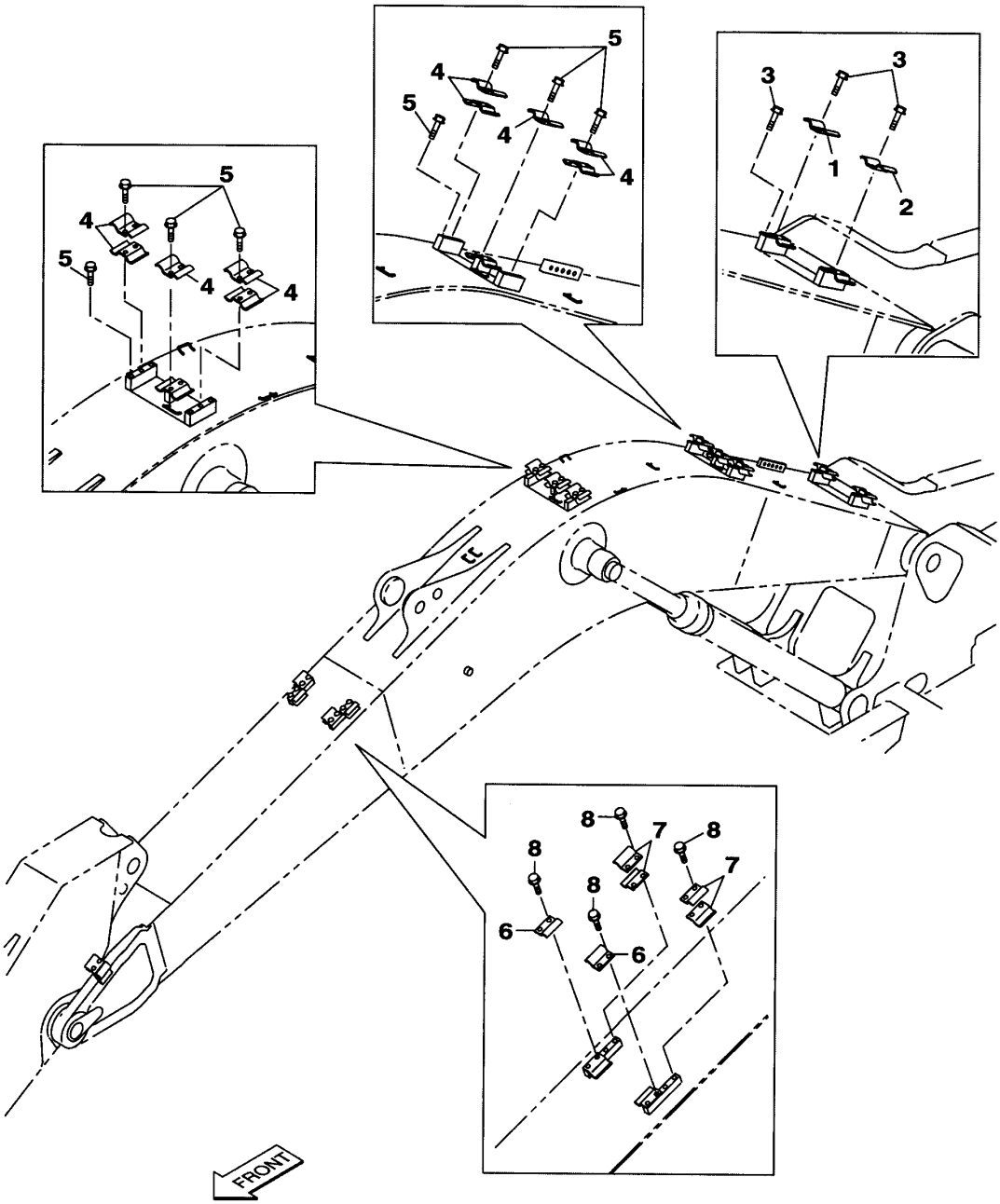

KG1RV490-0
KRV19400-E
KRV23920-D
KRV23880-C

https://truckmanualshub.com/

210A5 1101－ 210L5 1101－

符号 ITEM	構成 COMPO	部品番号 PART NO.	部品名	PART NAME	個数 Q'TY	ｲﾝﾅｰ	適用号機 SERIAL_NO.	互換 ICA	代替部品 REPLACEABLE PART
1	1	KHV10450	ｸﾗﾝﾌﾟ;ﾊﾟｲﾌﾟ 2X27.2	CLAMP;PIPE	1				
2	1	KHV10610	ｸﾗﾝﾌﾟ;ﾊﾟｲﾌﾟ 27.2X34	CLAMP;PIPE	1				
3	1	105R012Y030R	ｾﾑｽB M12X 30	BOLT;SEMS	6				
4	1	KHV10610	ｸﾗﾝﾌﾟ;ﾊﾟｲﾌﾟ 27.2X34	CLAMP;PIPE	10				
5	1	105R012Y030R	ｾﾑｽB M12X 30	BOLT;SEMS	16				
6	1	KHV10460	ｸﾗﾝﾌﾟ;ﾊﾟｲﾌﾟ 27.2	CLAMP;PIPE	2				
7	1	KHV10630	ｸﾗﾝﾌﾟ;ﾊﾟｲﾌﾟ 34.0	CLAMP;PIPE	4				
8	1	105R012Y030R	ｾﾑｽB M12X 30	BOLT;SEMS	8				
9	1	KHV10460	ｸﾗﾝﾌﾟ;ﾊﾟｲﾌﾟ 27.2	CLAMP;PIPE	2				
10	1	KHV10640	ｸﾗﾝﾌﾟ;ﾊﾟｲﾌﾟ 34.0	CLAMP;PIPE	2				
11	1	105R012Y030R	ｾﾑｽB M12X 30	BOLT;SEMS	8				
12	1	KHV10630	ｸﾗﾝﾌﾟ;ﾊﾟｲﾌﾟ 34.0	CLAMP;PIPE	4				
13	1	105R012Y030R	ｾﾑｽB M12X 30	BOLT;SEMS	4				

https://truckmanualshub.com/

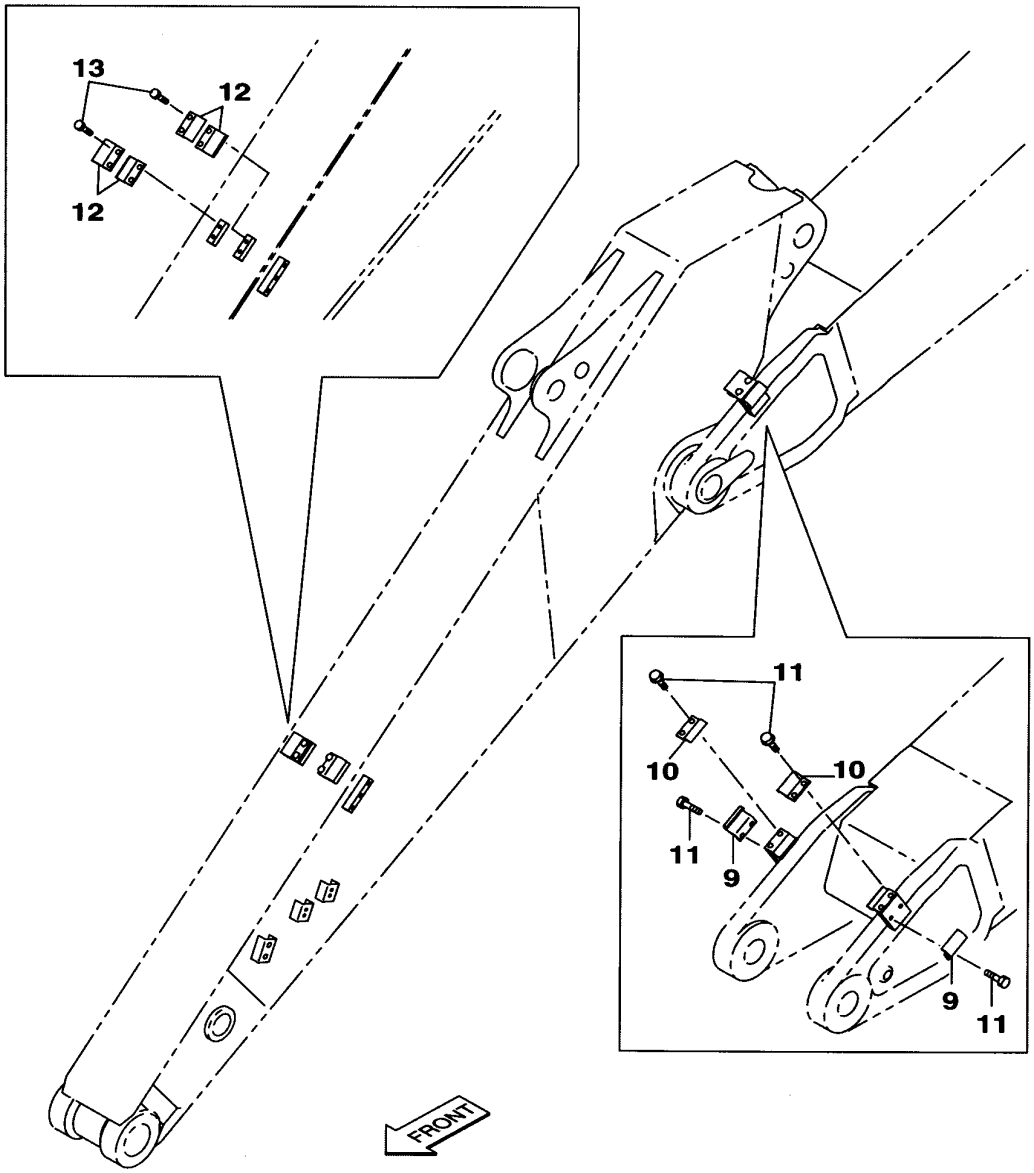

KG1RV490-0
KRV19400-E
KRV23920-D
KRV23880-C

https://truckmanualshub.com/

https://truckmanualshub.com/

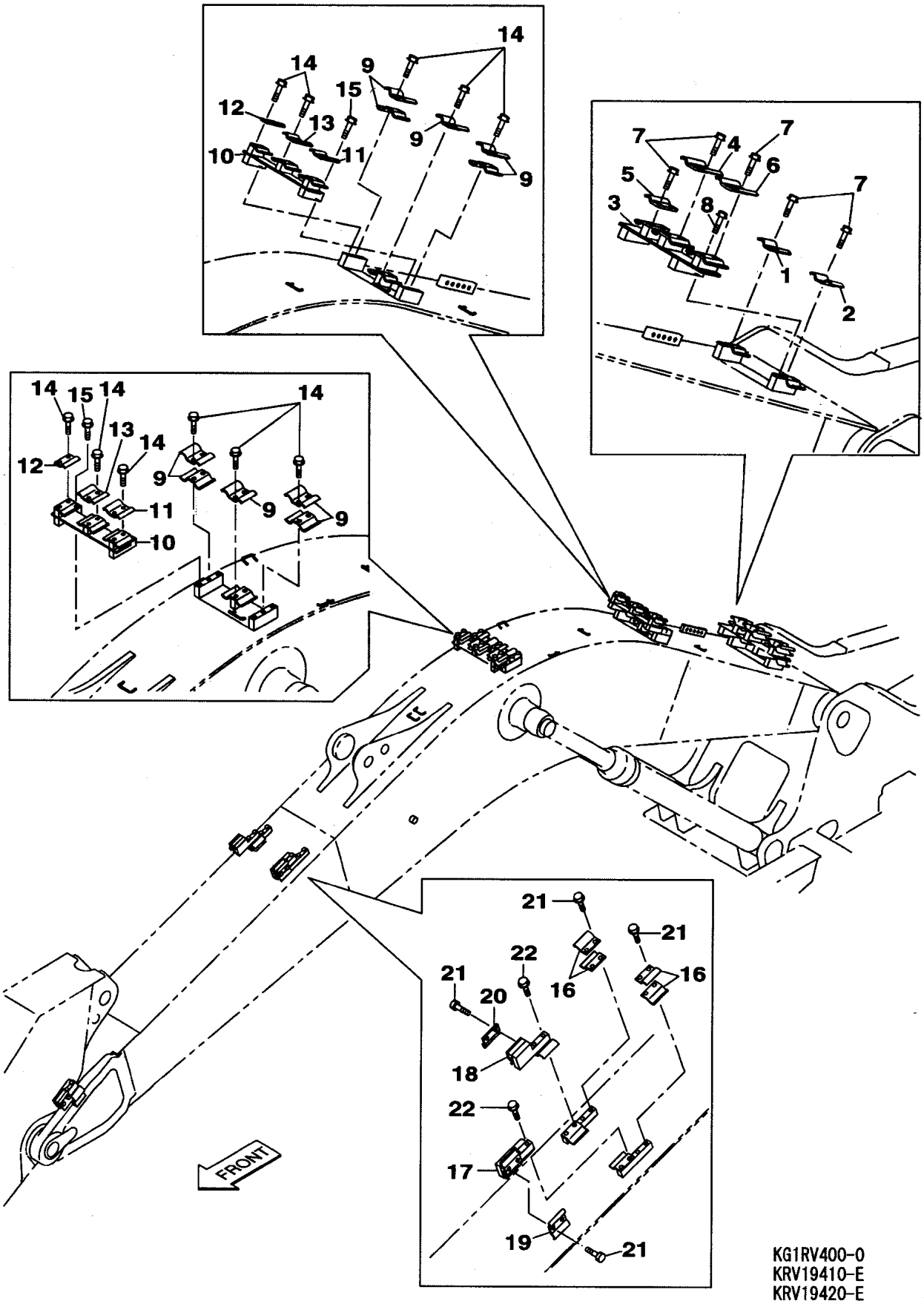

KG1RV400-0
KRV19410-E
KRV19420-E
KRV23920-D
KRV23930-D

https://truckmanualshub.com/

210A5 1101－1675 210L5 1101－1348

符号 ITEM	構成 COMPO	部品番号 PART NO.	部品名	PART NAME	個数 Q'TY	ｲﾝﾅｰ	適用号機 SERIAL_NO.	互換 ICA	代替部品 REPLACEABLE PART
1	1	KHV10450	ｸﾗﾝﾌﾟ;ﾊﾟｲﾌﾟ 2X27.2	CLAMP;PIPE	1				
2	1	KHV10610	ｸﾗﾝﾌﾟ;ﾊﾟｲﾌﾟ 27.2X34	CLAMP;PIPE	1				
3	1	KRV19670	ｻﾞ (ﾌﾞｰﾑﾌｰﾄ HBCV 02)	BAR;BASE	1				
4	1	KHV10480	ｸﾗﾝﾌﾟ;ﾊﾟｲﾌﾟ 2X21.7	CLAMP;PIPE	1				
5	1	KHV10500	ｸﾗﾝﾌﾟ;ﾊﾟｲﾌﾟ 21.7	CLAMP;PIPE	1				
6	1	KHV10520	ｸﾗﾝﾌﾟ;ﾊﾟｲﾌﾟ 2X17.3	CLAMP;PIPE	1				
7	1	105R012Y030R	ｾﾑｽB M12X 30	BOLT;SEMS	10				
8	1	105R012Y060R	ｾﾑｽB M12X 60	BOLT;SEMS	2				
9	1	KHV10610	ｸﾗﾝﾌﾟ;ﾊﾟｲﾌﾟ 27.2X34	CLAMP;PIPE	10				
10	1	KRV19680	ｻﾞ (ﾌﾞｰﾑｾﾝﾀ HBCV 02)	BAR;BASE	2				
11	1	KHV10480	ｸﾗﾝﾌﾟ;ﾊﾟｲﾌﾟ 2X21.7	CLAMP;PIPE	2				
12	1	KHV10500	ｸﾗﾝﾌﾟ;ﾊﾟｲﾌﾟ 21.7	CLAMP;PIPE	2				
13	1	KHV10520	ｸﾗﾝﾌﾟ;ﾊﾟｲﾌﾟ 2X17.3	CLAMP;PIPE	2				
14	1	105R012Y030R	ｾﾑｽB M12X 30	BOLT;SEMS	24				
15	1	105R012Y060R	ｾﾑｽB M12X 60	BOLT;SEMS	4				
16	1	KHV10630	ｸﾗﾝﾌﾟ;ﾊﾟｲﾌﾟ 34.0	CLAMP;PIPE	4				
17	1	KNV13810	ｻﾞ (ﾌﾞｰﾑ ﾄｯﾌﾟ L)	BAR;BASE	1				
18	1	KNV13820	ｻﾞ (ﾌﾞｰﾑﾄｯﾌﾟ R)	BAR;BASE	1				
19	1	KHV10480	ｸﾗﾝﾌﾟ;ﾊﾟｲﾌﾟ 2X21.7	CLAMP;PIPE	1				
20	1	KHV10500	ｸﾗﾝﾌﾟ;ﾊﾟｲﾌﾟ 21.7	CLAMP;PIPE	1				
21	1	105R012Y030R	ｾﾑｽB M12X 30	BOLT;SEMS	8				
22	1	105R012Y060R	ｾﾑｽB M12X 60	BOLT;SEMS	4				
23	1	KHV10640	ｸﾗﾝﾌﾟ;ﾊﾟｲﾌﾟ 34.0	CLAMP;PIPE	2				
24	1	KNV13810	ｻﾞ (ﾌﾞｰﾑ ﾄｯﾌﾟ L)	BAR;BASE	1				
25	1	KNV13820	ｻﾞ (ﾌﾞｰﾑﾄｯﾌﾟ R)	BAR;BASE	1				
26	1	KHV10480	ｸﾗﾝﾌﾟ;ﾊﾟｲﾌﾟ 2X21.7	CLAMP;PIPE	1				
27	1	KHV10500	ｸﾗﾝﾌﾟ;ﾊﾟｲﾌﾟ 21.7	CLAMP;PIPE	1				
28	1	105R012Y030R	ｾﾑｽB M12X 30	BOLT;SEMS	8				
29	1	105R012Y060R	ｾﾑｽB M12X 60	BOLT;SEMS	4				
30	1	KHV10630	ｸﾗﾝﾌﾟ;ﾊﾟｲﾌﾟ 34.0	CLAMP;PIPE	8				
31	1	KHV10480	ｸﾗﾝﾌﾟ;ﾊﾟｲﾌﾟ 2X21.7	CLAMP;PIPE	2				
32	1	KHV10490	ｸﾗﾝﾌﾟ;ﾊﾟｲﾌﾟ 2X21.7	CLAMP;PIPE	2				
33	1	KHV10500	ｸﾗﾝﾌﾟ;ﾊﾟｲﾌﾟ 21.7	CLAMP;PIPE	2				
34	1	KHV10510	ｸﾗﾝﾌﾟ;ﾊﾟｲﾌﾟ 21.7	CLAMP;PIPE	2				
35	1	105R012Y030R	ｾﾑｽB M12X 30	BOLT;SEMS	20				

https://truckmanualshub.com/

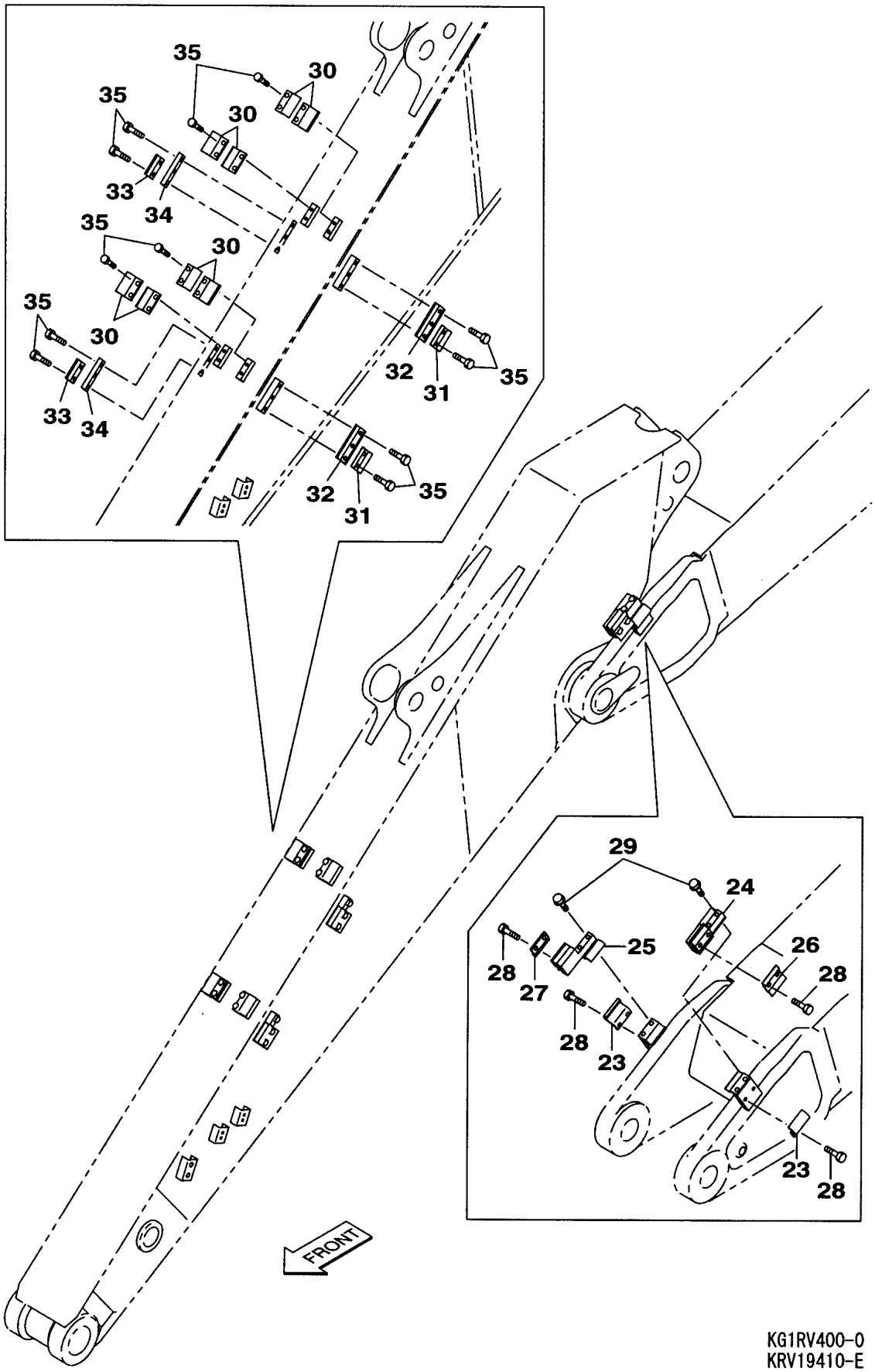

KG1RV400-0
KRV19410-E
KRV19420-E
KRV23920-D
KRV23930-D

https://truckmanualshub.com/

https://truckmanualshub.com/

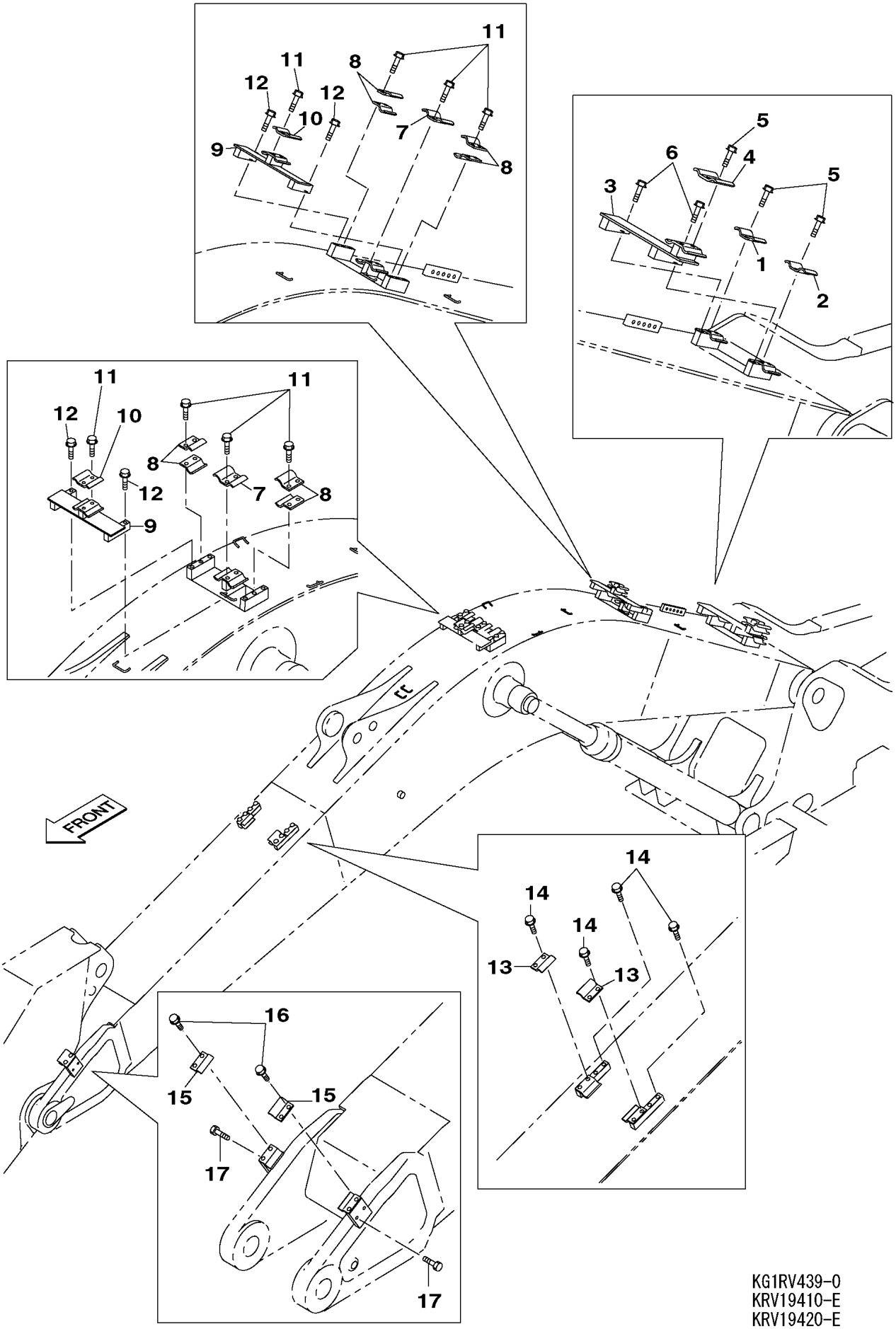

KG1RV439-0
KRV19410-E
KRV19420-E

https://truckmanualshub.com/

210A5 1101－ 210L5 1101－

符号 ITEM	構成 COMPO	部品番号 PART NO.	部品名	PART NAME	個数 Q'TY	ｲﾝﾅｰ	適用号機 SERIAL_NO.	互換 ICA	代替部品 REPLACEABLE PART
1	1	KHV10450	ｸﾗﾝﾌﾟ;ﾊﾟｲﾌﾟ 2X27.2	CLAMP;PIPE	1				
2	1	KHV10610	ｸﾗﾝﾌﾟ;ﾊﾟｲﾌﾟ 27.2X34	CLAMP;PIPE	1				
3	1	KRV20140	ｻﾞ (ﾌﾞｰﾑﾌｰﾄ HBCV)	BAR;BASE	1				
4	1	KHV10520	ｸﾗﾝﾌﾟ;ﾊﾟｲﾌﾟ 2X17.3	CLAMP;PIPE	1				
5	1	105R012Y030R	ｾﾑｽB M12X 30	BOLT;SEMS	6				
6	1	105R012Y060R	ｾﾑｽB M12X 60	BOLT;SEMS	2				
7	1	KHV10610	ｸﾗﾝﾌﾟ;ﾊﾟｲﾌﾟ 27.2X34	CLAMP;PIPE	2				
8	1	KHV10460	ｸﾗﾝﾌﾟ;ﾊﾟｲﾌﾟ 27.2	CLAMP;PIPE	8				
9	1	KRV20150	ｻﾞ (ﾌﾞｰﾑｾﾝﾀ HBCV)	BAR;BASE	2				
10	1	KHV10520	ｸﾗﾝﾌﾟ;ﾊﾟｲﾌﾟ 2X17.3	CLAMP;PIPE	2				
11	1	105R012Y030R	ｾﾑｽB M12X 30	BOLT;SEMS	16				
12	1	105R012Y060R	ｾﾑｽB M12X 60	BOLT;SEMS	4				
13	1	KHV10460	ｸﾗﾝﾌﾟ;ﾊﾟｲﾌﾟ 27.2	CLAMP;PIPE	2				
14	1	105R012Y030R	ｾﾑｽB M12X 30	BOLT;SEMS	8				
15	1	KHV10460	ｸﾗﾝﾌﾟ;ﾊﾟｲﾌﾟ 27.2	CLAMP;PIPE	2				
16	1	105R012Y030R	ｾﾑｽB M12X 30	BOLT;SEMS	4				
17	1	105R012Y030R	ｾﾑｽB M12X 30	BOLT;SEMS	4				

https://truckmanualshub.com/

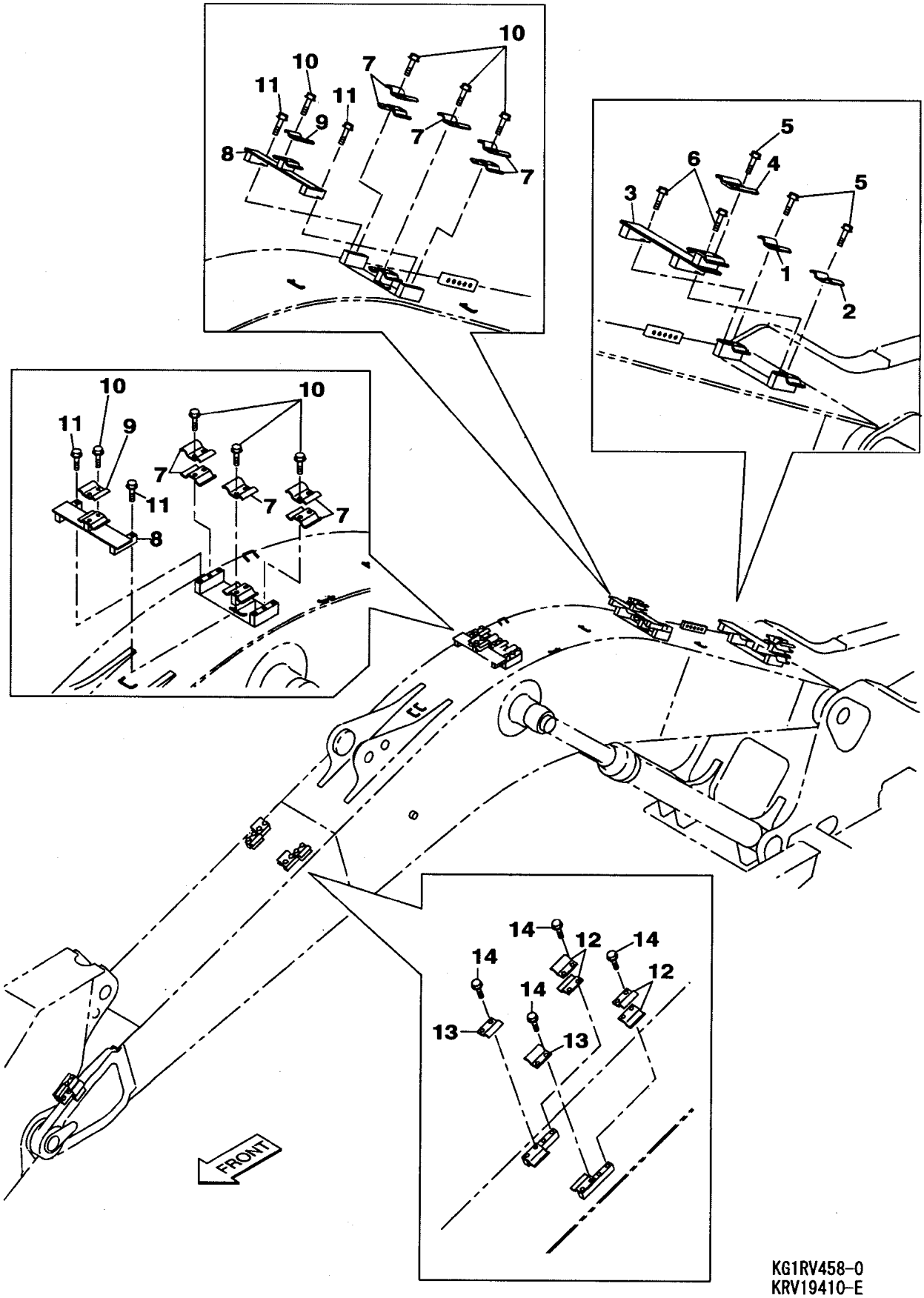

KG1RV458-0
KRV19410-E
KRV19420-E
KRV23920-D

https://truckmanualshub.com/

210A5 1101－ 210L5 1101－

符号 ITEM	構成 COMPO	部品番号 PART NO.	部品名	PART NAME	個数 Q'TY	ｲﾝﾅｰ	適用号機 SERIAL_NO.	互換 ICA	代替部品 REPLACEABLE PART
1	1	KHV10450	ｸﾗﾝﾌﾟ;ﾊﾟｲﾌﾟ 2X27.2	CLAMP;PIPE	1				
2	1	KHV10610	ｸﾗﾝﾌﾟ;ﾊﾟｲﾌﾟ 27.2X34	CLAMP;PIPE	1				
3	1	KRV20140	ｻﾞ (ﾌﾞｰﾑﾌｰﾄ HBCV)	BAR;BASE	1				
4	1	KHV10520	ｸﾗﾝﾌﾟ;ﾊﾟｲﾌﾟ 2X17.3	CLAMP;PIPE	1				
5	1	105R012Y030R	ｾﾑｽB M12X 30	BOLT;SEMS	6				
6	1	105R012Y060R	ｾﾑｽB M12X 60	BOLT;SEMS	2				
7	1	KHV10610	ｸﾗﾝﾌﾟ;ﾊﾟｲﾌﾟ 27.2X34	CLAMP;PIPE	10				
8	1	KRV20150	ｻﾞ (ﾌﾞｰﾑｾﾝﾀ HBCV)	BAR;BASE	2				
9	1	KHV10520	ｸﾗﾝﾌﾟ;ﾊﾟｲﾌﾟ 2X17.3	CLAMP;PIPE	2				
10	1	105R012Y030R	ｾﾑｽB M12X 30	BOLT;SEMS	16				
11	1	105R012Y060R	ｾﾑｽB M12X 60	BOLT;SEMS	4				
12	1	KHV10630	ｸﾗﾝﾌﾟ;ﾊﾟｲﾌﾟ 34.0	CLAMP;PIPE	4				
13	1	KHV10460	ｸﾗﾝﾌﾟ;ﾊﾟｲﾌﾟ 27.2	CLAMP;PIPE	2				
14	1	105R012Y030R	ｾﾑｽB M12X 30	BOLT;SEMS	8				
15	1	KHV10640	ｸﾗﾝﾌﾟ;ﾊﾟｲﾌﾟ 34.0	CLAMP;PIPE	2				
16	1	KHV10460	ｸﾗﾝﾌﾟ;ﾊﾟｲﾌﾟ 27.2	CLAMP;PIPE	2				
17	1	105R012Y030R	ｾﾑｽB M12X 30	BOLT;SEMS	8				
18	1	KHV10630	ｸﾗﾝﾌﾟ;ﾊﾟｲﾌﾟ 34.0	CLAMP;PIPE	8				
19	1	105R012Y030R	ｾﾑｽB M12X 30	BOLT;SEMS	8				

https://truckmanualshub.com/

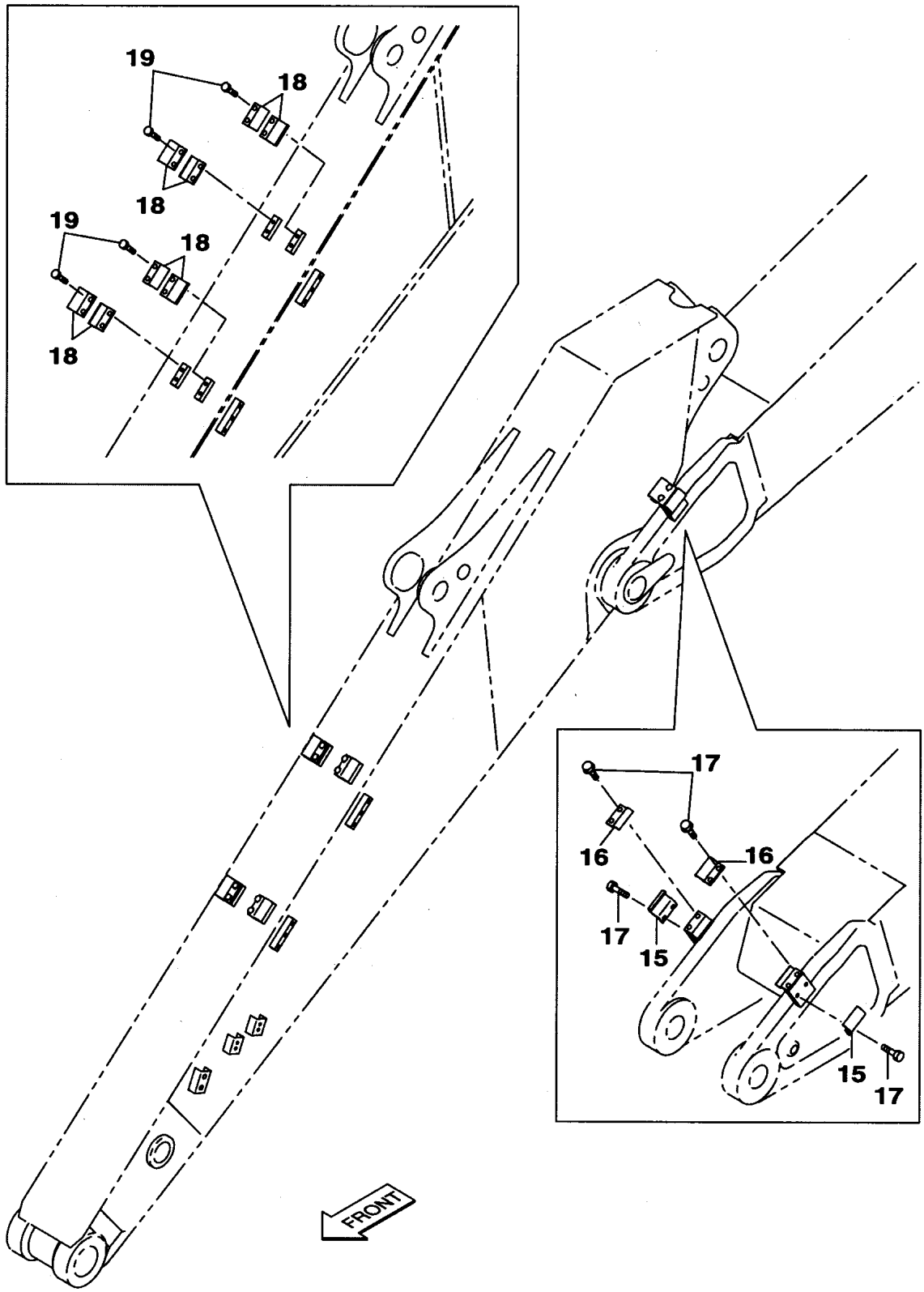

KG1RV458-0
KRV19410-E
KRV19420-E
KRV23920-D

https://truckmanualshub.com/

https://truckmanualshub.com/

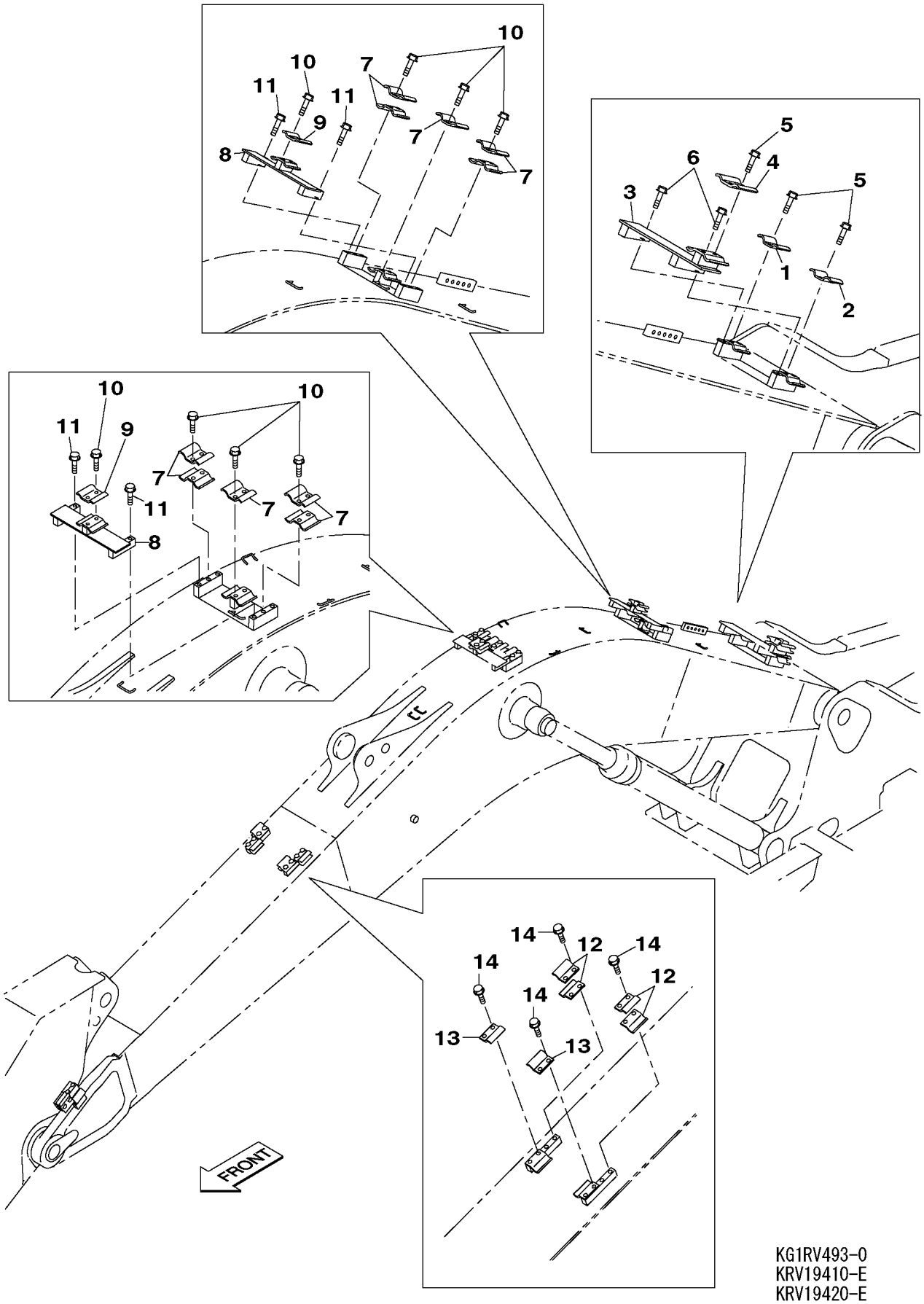

KG1RV493-0
KRV19410-E
KRV19420-E
KRV23920-D
KRV23880-C

https://truckmanualshub.com/

210A5 1101－　　210L5 1101－

符号 ITEM	構成 COMPO	部品番号 PART NO.	部品名	PART NAME	個数 Q'TY	ｲﾝﾅｰ	適用号機 SERIAL_NO.	互換 ICA	代替部品 REPLACEABLE PART
1	1	KHV10450	ｸﾗﾝﾌﾟ;ﾊﾟｲﾌﾟ 2X27.2	CLAMP;PIPE	1				
2	1	KHV10610	ｸﾗﾝﾌﾟ;ﾊﾟｲﾌﾟ 27.2X34	CLAMP;PIPE	1				
3	1	KRV20140	ｻﾞ (ﾌﾞｰﾑﾌｰﾄ HBCV)	BAR;BASE	1				
4	1	KHV10520	ｸﾗﾝﾌﾟ;ﾊﾟｲﾌﾟ 2X17.3	CLAMP;PIPE	1				
5	1	105R012Y030R	ｾﾑｽB M12X 30	BOLT;SEMS	6				
6	1	105R012Y060R	ｾﾑｽB M12X 60	BOLT;SEMS	2				
7	1	KHV10610	ｸﾗﾝﾌﾟ;ﾊﾟｲﾌﾟ 27.2X34	CLAMP;PIPE	10				
8	1	KRV20150	ｻﾞ (ﾌﾞｰﾑｾﾝﾀ HBCV)	BAR;BASE	2				
9	1	KHV10520	ｸﾗﾝﾌﾟ;ﾊﾟｲﾌﾟ 2X17.3	CLAMP;PIPE	2				
10	1	105R012Y030R	ｾﾑｽB M12X 30	BOLT;SEMS	16				
11	1	105R012Y060R	ｾﾑｽB M12X 60	BOLT;SEMS	4				
12	1	KHV10630	ｸﾗﾝﾌﾟ;ﾊﾟｲﾌﾟ 34.0	CLAMP;PIPE	4				
13	1	KHV10460	ｸﾗﾝﾌﾟ;ﾊﾟｲﾌﾟ 27.2	CLAMP;PIPE	2				
14	1	105R012Y030R	ｾﾑｽB M12X 30	BOLT;SEMS	8				
15	1	KHV10640	ｸﾗﾝﾌﾟ;ﾊﾟｲﾌﾟ 34.0	CLAMP;PIPE	2				
16	1	KHV10460	ｸﾗﾝﾌﾟ;ﾊﾟｲﾌﾟ 27.2	CLAMP;PIPE	2				
17	1	105R012Y030R	ｾﾑｽB M12X 30	BOLT;SEMS	8				
18	1	KHV10630	ｸﾗﾝﾌﾟ;ﾊﾟｲﾌﾟ 34.0	CLAMP;PIPE	4				
19	1	105R012Y030R	ｾﾑｽB M12X 30	BOLT;SEMS	4				

https://truckmanualshub.com/

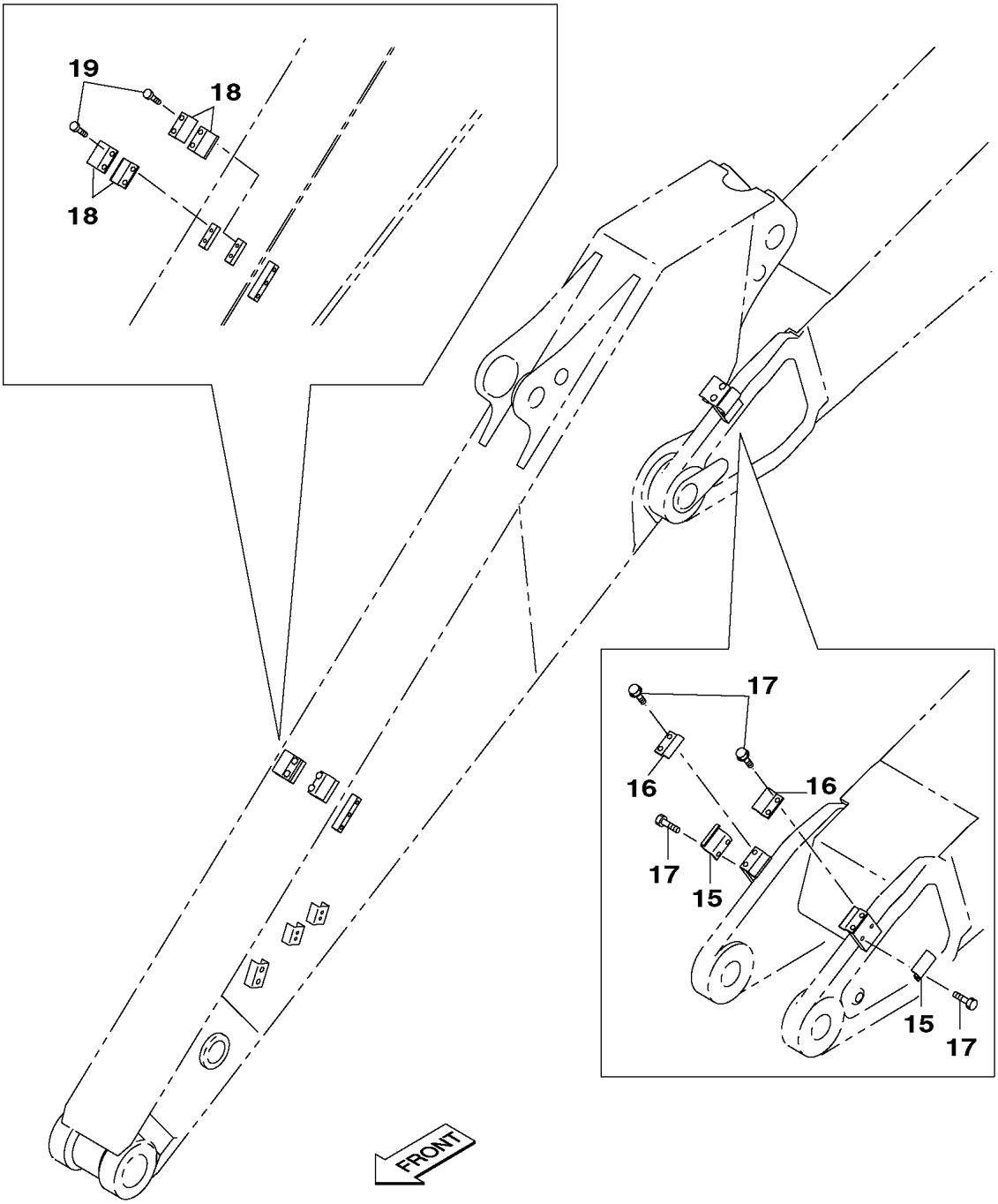

KG1RV493-0
KRV19410-E
KRV19420-E
KRV23920-D
KRV23880-C

https://truckmanualshub.com/

https://truckmanualshub.com/

CLAMP (2.5M ARM)	ｸﾗﾝﾌﾟ (SHORT ARM 012)	DV9901L0057-00 000 1/2	000

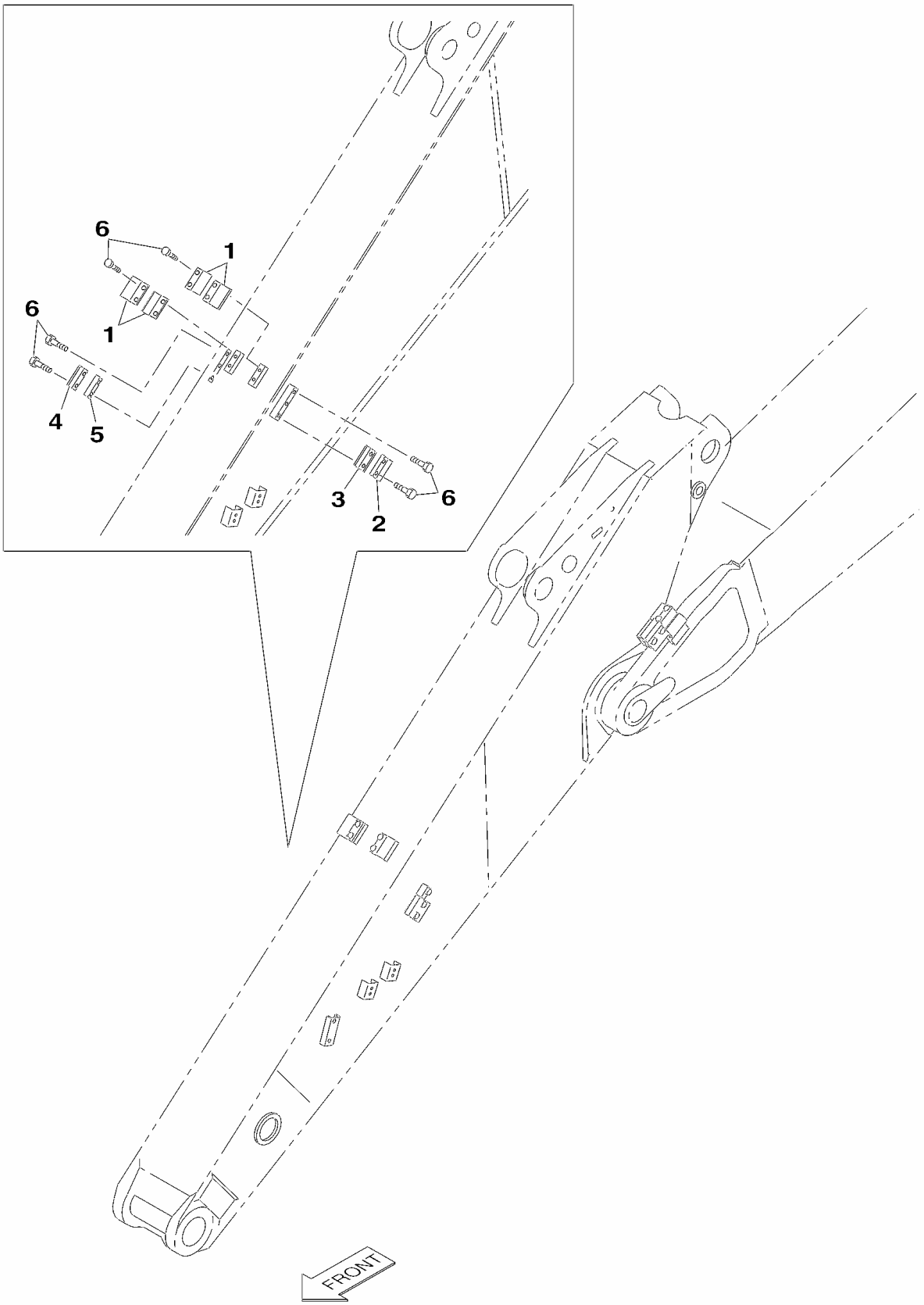

KG0BV727-0
KBV17830-CZ
KBV17850-CZ

https://truckmanualshub.com/

210A5 1676－ 210L5 1349－

符号 ITEM	構成 COMPO	部品番号 PART NO.	部品名	PART NAME	個数 Q'TY	ｲﾝﾅｰ	適用号機 SERIAL_NO.	互換 ICA	代替部品 REPLACEABLE PART
1	1	KHV10630	ｸﾗﾝﾌﾟ;ﾊﾟｲﾌﾟ 34.0	CLAMP;PIPE	4				
2	1	KHV10480	ｸﾗﾝﾌﾟ;ﾊﾟｲﾌﾟ 2X21.7	CLAMP;PIPE	1				
3	1	KHV10490	ｸﾗﾝﾌﾟ;ﾊﾟｲﾌﾟ 2X21.7	CLAMP;PIPE	1				
4	1	KHV10500	ｸﾗﾝﾌﾟ;ﾊﾟｲﾌﾟ 21.7	CLAMP;PIPE	1				
5	1	KHV10510	ｸﾗﾝﾌﾟ;ﾊﾟｲﾌﾟ 21.7	CLAMP;PIPE	1				
6	1	105R012Y030R	ｾﾑｽB M12X 30	BOLT;SEMS	10				

https://truckmanualshub.com/

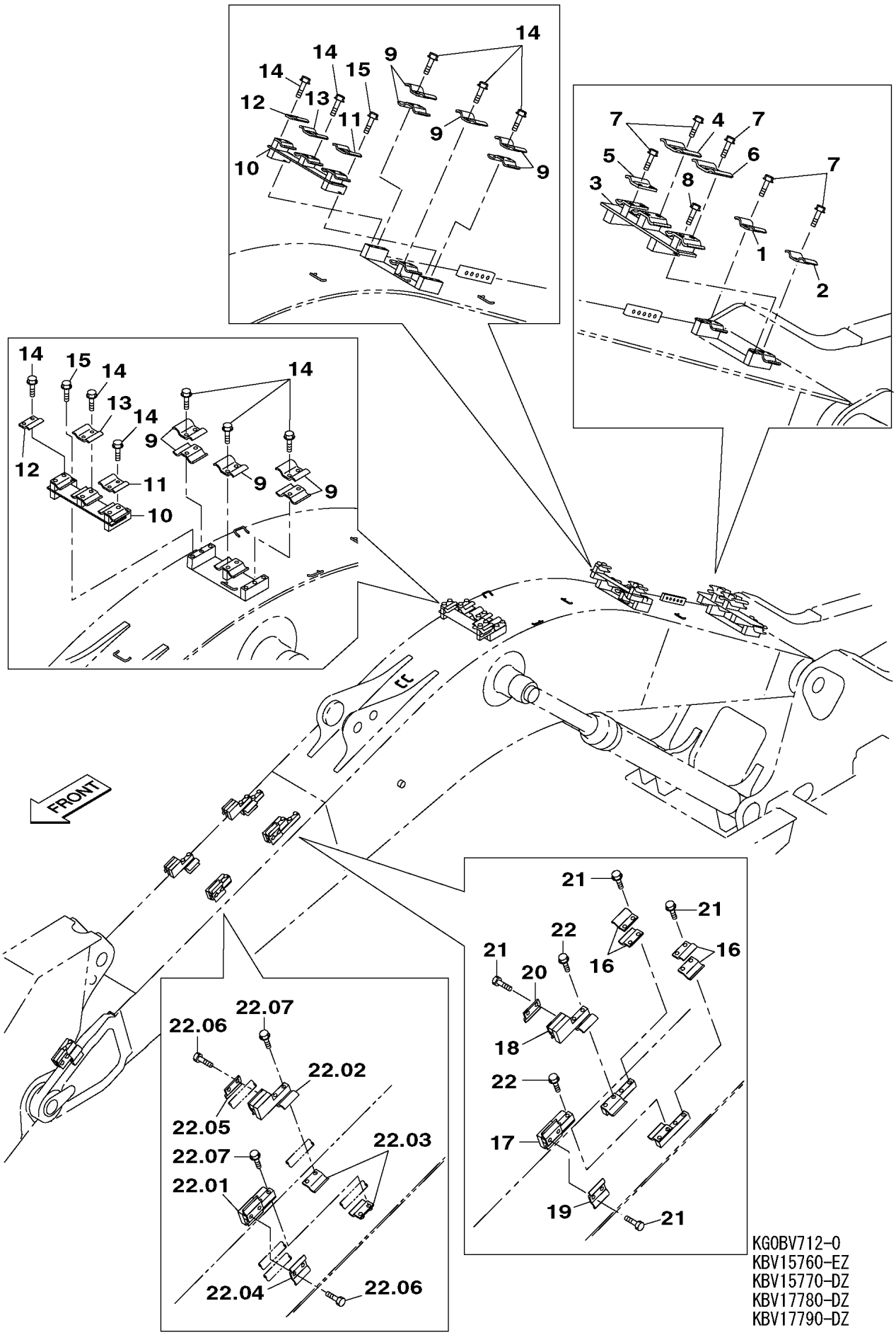

KG0BV712-0
KBV15760-EZ
KBV15770-DZ
KBV17780-DZ
KBV17790-DZ

https://truckmanualshub.com/

210A5 1101－ 210L5 1101－

符号 ITEM	構成 COMPO	部品番号 PART NO.	部品名	PART NAME	個数 Q'TY	ｲﾝﾅｰ	適用号機 SERIAL_NO.	互換 ICA	代替部品 REPLACEABLE PART
1	1	KHV10450	ｸﾗﾝﾌﾟ;ﾊﾟｲﾌﾟ 2X27.2	CLAMP;PIPE	1				
2	1	KHV10610	ｸﾗﾝﾌﾟ;ﾊﾟｲﾌﾟ 27.2X34	CLAMP;PIPE	1				
3	1	KRV19670	ｻﾞ (ﾌﾞｰﾑﾌｰﾄ HBCV 02)	BAR;BASE	1				
4	1	KHV10480	ｸﾗﾝﾌﾟ;ﾊﾟｲﾌﾟ 2X21.7	CLAMP;PIPE	1				
5	1	KHV10500	ｸﾗﾝﾌﾟ;ﾊﾟｲﾌﾟ 21.7	CLAMP;PIPE	1				
6	1	KHV10520	ｸﾗﾝﾌﾟ;ﾊﾟｲﾌﾟ 2X17.3	CLAMP;PIPE	1				
7	1	105R012Y030R	ｾﾑｽB M12X 30	BOLT;SEMS	10				
8	1	105R012Y060R	ｾﾑｽB M12X 60	BOLT;SEMS	2				
9	1	KHV10610	ｸﾗﾝﾌﾟ;ﾊﾟｲﾌﾟ 27.2X34	CLAMP;PIPE	10				
10	1	KRV19680	ｻﾞ (ﾌﾞｰﾑｾﾝﾀ HBCV 02)	BAR;BASE	2				
11	1	KHV10480	ｸﾗﾝﾌﾟ;ﾊﾟｲﾌﾟ 2X21.7	CLAMP;PIPE	2				
12	1	KHV10500	ｸﾗﾝﾌﾟ;ﾊﾟｲﾌﾟ 21.7	CLAMP;PIPE	2				
13	1	KHV10520	ｸﾗﾝﾌﾟ;ﾊﾟｲﾌﾟ 2X17.3	CLAMP;PIPE	2				
14	1	105R012Y030R	ｾﾑｽB M12X 30	BOLT;SEMS	24				
15	1	105R012Y060R	ｾﾑｽB M12X 60	BOLT;SEMS	4				
16	1	KHV10630	ｸﾗﾝﾌﾟ;ﾊﾟｲﾌﾟ 34.0	CLAMP;PIPE	4				
17	1	KNV13810	ｻﾞ (ﾌﾞｰﾑ ﾄｯﾌﾟ L)	BAR;BASE	1				
18	1	KNV13820	ｻﾞ (ﾌﾞｰﾑﾄｯﾌﾟ R)	BAR;BASE	1				
19	1	KHV10480	ｸﾗﾝﾌﾟ;ﾊﾟｲﾌﾟ 2X21.7	CLAMP;PIPE	1				
20	1	KHV10500	ｸﾗﾝﾌﾟ;ﾊﾟｲﾌﾟ 21.7	CLAMP;PIPE	1				
21	1	105R012Y030R	ｾﾑｽB M12X 30	BOLT;SEMS	8				
22	1	105R012Y060R	ｾﾑｽB M12X 60	BOLT;SEMS	4				
22.01	1	KNV13810	ｻﾞ (ﾌﾞｰﾑ ﾄｯﾌﾟ L)	BAR;BASE	1		210A5 1676- 210L5 1349-		
22.02	1	KNV13820	ｻﾞ (ﾌﾞｰﾑﾄｯﾌﾟ R)	BAR;BASE	1		210A5 1676- 210L5 1349-		
22.03	1	KHV11640	ｸﾗﾝﾌﾟ;ﾊﾟｲﾌﾟ 27.2(ﾅｯﾄ	CLAMP;PIPE	2		210A5 1676- 210L5 1349-		
22.04	1	KHV10480	ｸﾗﾝﾌﾟ;ﾊﾟｲﾌﾟ 2X21.7	CLAMP;PIPE	1		210A5 1676- 210L5 1349-		
22.05	1	KHV10500	ｸﾗﾝﾌﾟ;ﾊﾟｲﾌﾟ 21.7	CLAMP;PIPE	1		210A5 1676- 210L5 1349-		
22.06	1	105R012Y030R	ｾﾑｽB M12X 30	BOLT;SEMS	4		210A5 1676- 210L5 1349-		
22.07	1	105R012Y060R	ｾﾑｽB M12X 60	BOLT;SEMS	4		210A5 1676- 210L5 1349-		
23	1	KHV10640	ｸﾗﾝﾌﾟ;ﾊﾟｲﾌﾟ 34.0	CLAMP;PIPE	2				
24	1	KNV13810	ｻﾞ (ﾌﾞｰﾑ ﾄｯﾌﾟ L)	BAR;BASE	1				
25	1	KNV13820	ｻﾞ (ﾌﾞｰﾑﾄｯﾌﾟ R)	BAR;BASE	1				
26	1	KHV10480	ｸﾗﾝﾌﾟ;ﾊﾟｲﾌﾟ 2X21.7	CLAMP;PIPE	1				
27	1	KHV10500	ｸﾗﾝﾌﾟ;ﾊﾟｲﾌﾟ 21.7	CLAMP;PIPE	1				
28	1	105R012Y030R	ｾﾑｽB M12X 30	BOLT;SEMS	8				
29	1	105R012Y060R	ｾﾑｽB M12X 60	BOLT;SEMS	4				

https://truckmanualshub.com/

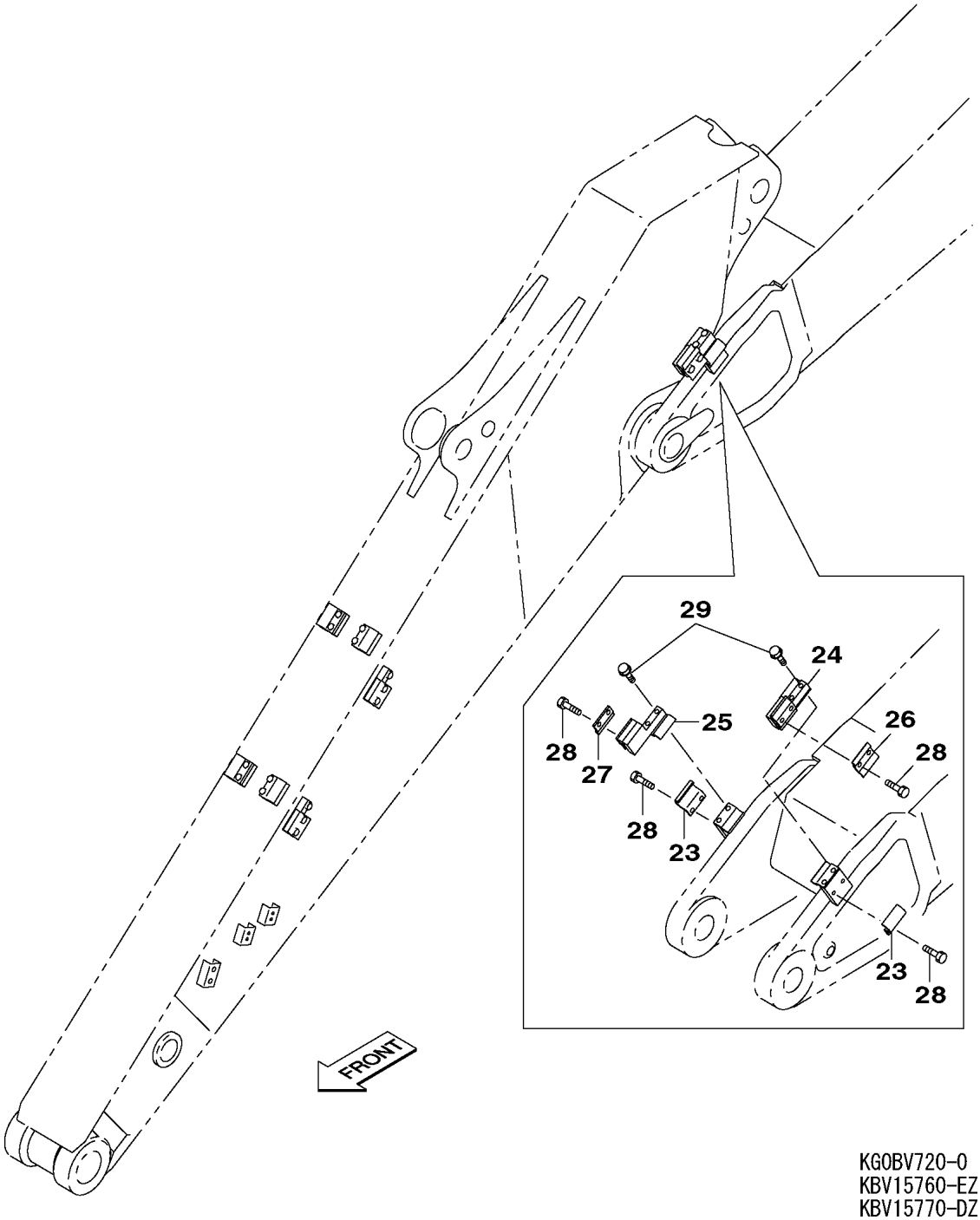

KG0BV720-0
KBV15760-EZ
KBV15770-DZ
KBV17780-DZ
KBV17790-DZ

https://truckmanualshub.com/

https://truckmanualshub.com/

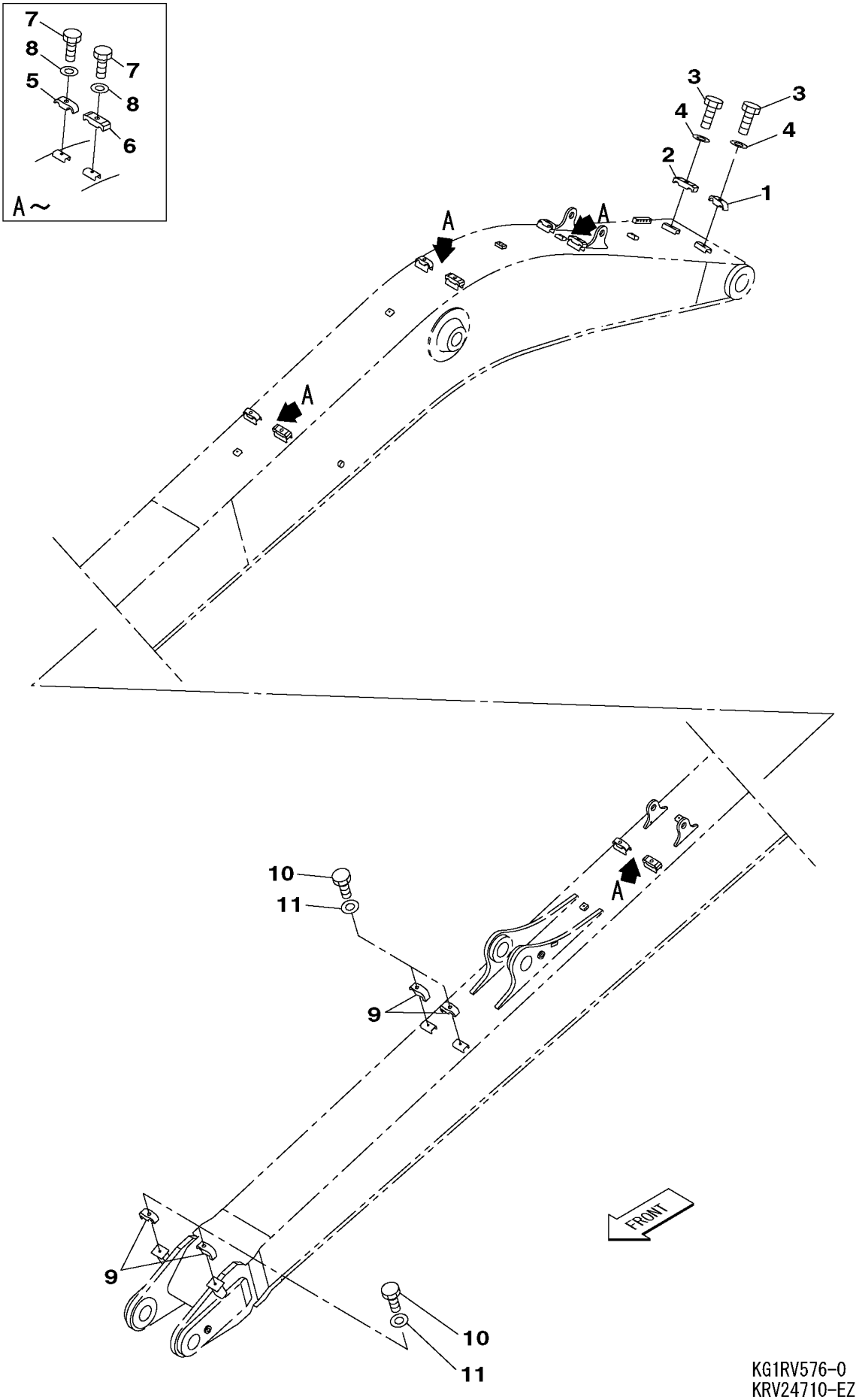

KG1RV576-0
KRV24710-EZ

https://truckmanualshub.com/

210L5 1101－

符号 ITEM	構成 COMPO	部品番号 PART NO.	部品名	PART NAME	個数 Q'TY	ｲﾝﾅｰ	適用号機 SERIAL_NO.	互換 ICA	代替部品 REPLACEABLE PART
1	1	KRV0549	ｸﾗﾝﾌﾟ	CLAMP	1				
2	1	KRV1200	ｸﾗﾝﾌﾟ;ﾊﾟｲﾌﾟ	CLAMP;PIPE	1				
3	1	102R016Y070R	ｺｳﾘｷB M16X 70	BOLT;HIGH STRENGTH	2				
4	1	KHN0297	ｺｳﾘｷW 16 (ﾒﾂｷ)	WASHER;HIGH STRENGTH	2				
5	1	KRV0549	ｸﾗﾝﾌﾟ	CLAMP	4				
6	1	KRV1200	ｸﾗﾝﾌﾟ;ﾊﾟｲﾌﾟ	CLAMP;PIPE	4				
7	1	102R016Y070R	ｺｳﾘｷB M16X 70	BOLT;HIGH STRENGTH	8				
8	1	KHN0297	ｺｳﾘｷW 16 (ﾒﾂｷ)	WASHER;HIGH STRENGTH	8				
9	1	KRV0548	ｸﾗﾝﾌﾟ	CLAMP	4				
10	1	102R012Y060R	ｺｳﾘｷB M12X 60	BOLT;HIGH STRENGTH	4				
11	1	KHN0296	ｺｳﾘｷW 12 (ﾒﾂｷ)	WASHER;HIGH STRENGTH	4				
12	1	KRV0548	ｸﾗﾝﾌﾟ	CLAMP	2				
13	1	102R012Y060R	ｺｳﾘｷB M12X 60	BOLT;HIGH STRENGTH	2				
14	1	KHN0296	ｺｳﾘｷW 12 (ﾒﾂｷ)	WASHER;HIGH STRENGTH	2				
15	1	KRV1200	ｸﾗﾝﾌﾟ;ﾊﾟｲﾌﾟ	CLAMP;PIPE	2				
16	1	102R016Y070R	ｺｳﾘｷB M16X 70	BOLT;HIGH STRENGTH	2				
17	1	KHN0297	ｺｳﾘｷW 16 (ﾒﾂｷ)	WASHER;HIGH STRENGTH	2				
18	1	KRV0548	ｸﾗﾝﾌﾟ	CLAMP	2				
19	1	102R012Y060R	ｺｳﾘｷB M12X 60	BOLT;HIGH STRENGTH	2				
20	1	KHN0296	ｺｳﾘｷW 12 (ﾒﾂｷ)	WASHER;HIGH STRENGTH	2				

https://truckmanualshub.com/

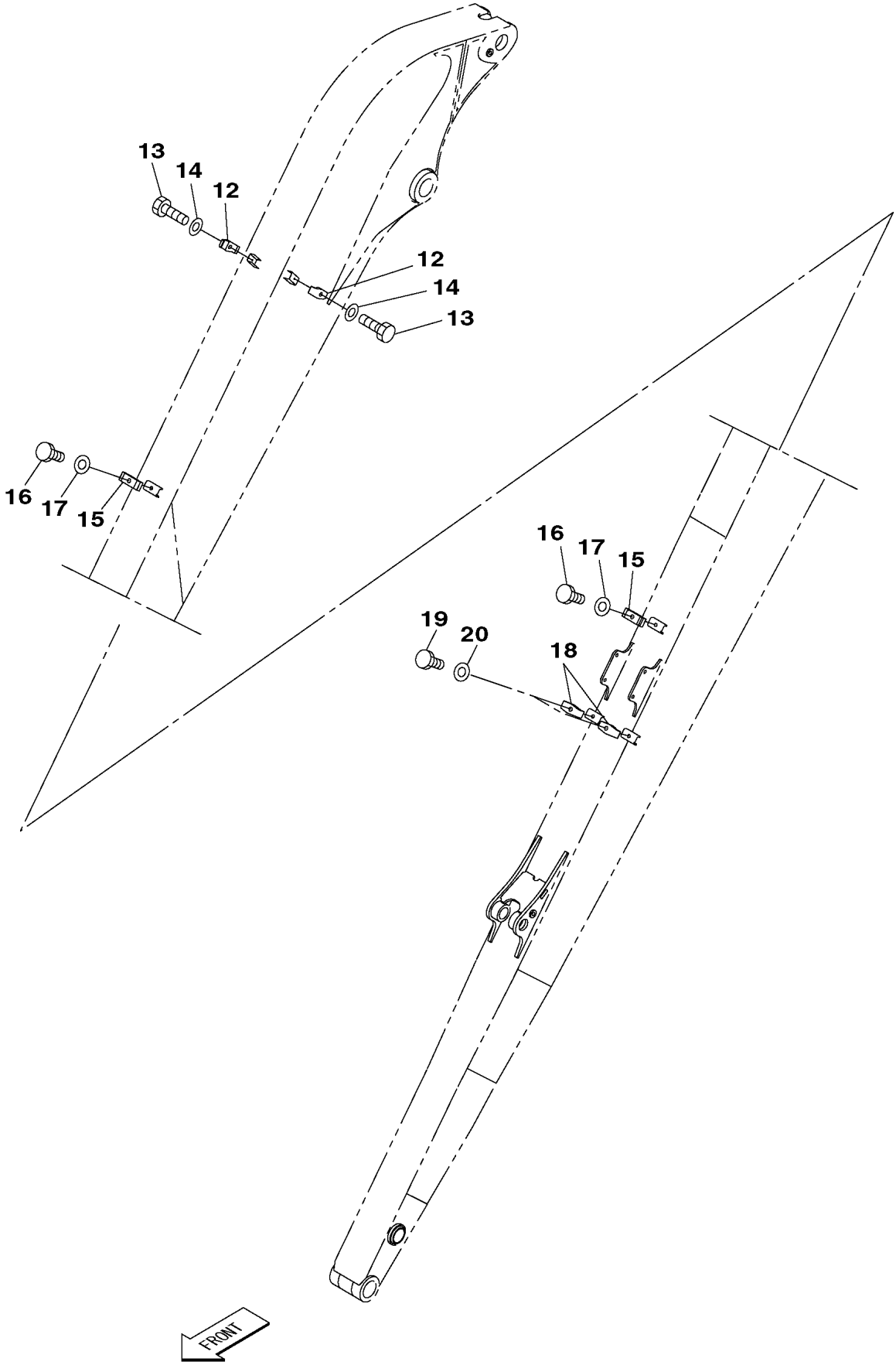

KG1RV576-0
KRV24710-EZ

https://truckmanualshub.com/

https://truckmanualshub.com/

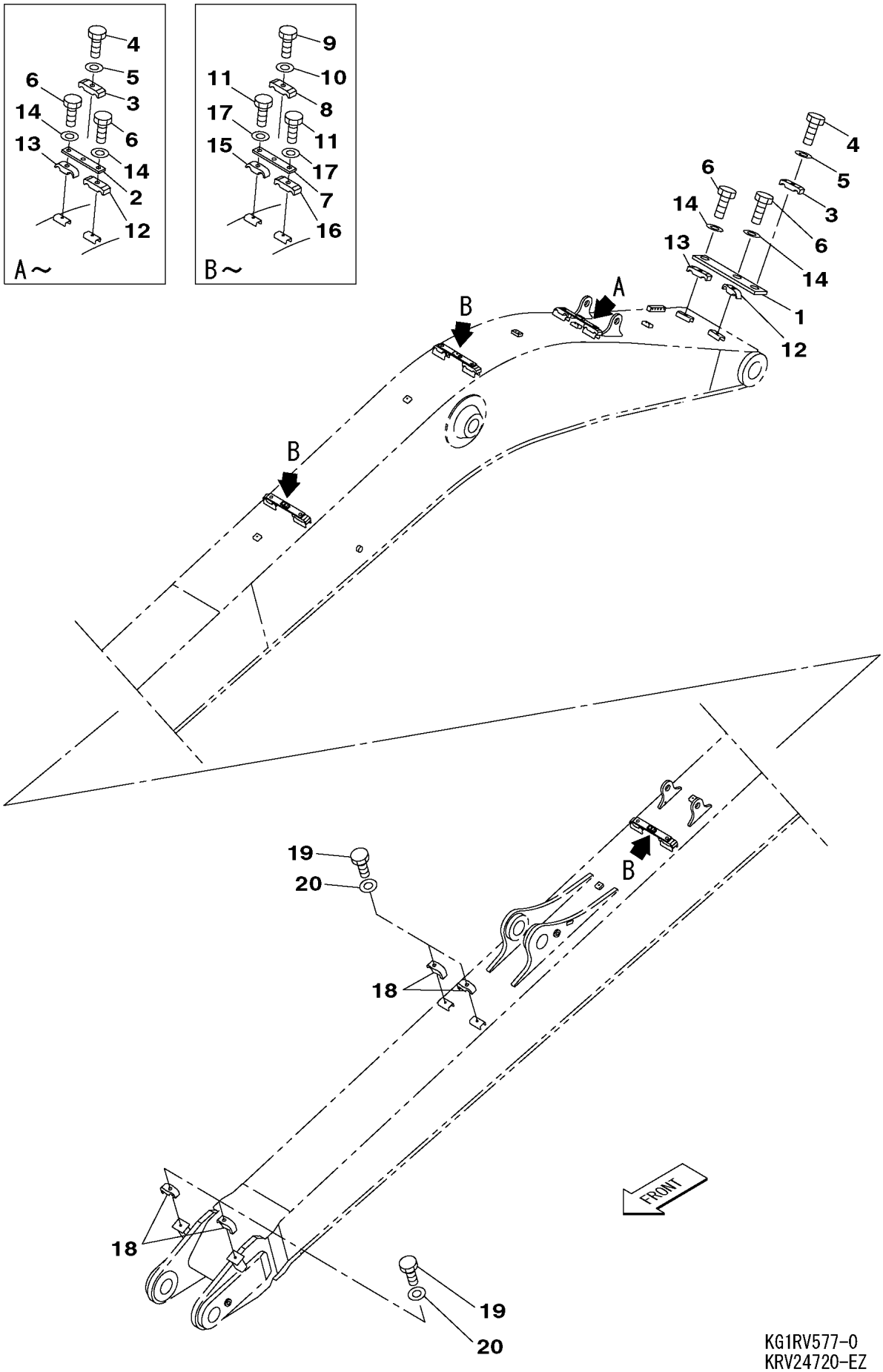

KG1RV577-0
KRV24720-EZ

https://truckmanualshub.com/

210L5 1101－

符号 ITEM	構成 COMPO	部品番号 PART NO.	部品名	PART NAME	個数 Q'TY	ｲﾝﾅｰ	適用号機 SERIAL_NO.	互換 ICA	代替部品 REPLACEABLE PART
1	1	KRV24750	ﾌﾟﾚｰﾄ	PLATE	1				
2	1	KRV24760	ﾌﾟﾚｰﾄ	PLATE	1				
3	1	KAV1627	ｸﾗﾝﾌﾟ;ﾊﾟｲﾌﾟ	CLAMP;PIPE	2				
4	1	102R012Y050R	ｺｳﾘｷB M12X 50	BOLT;HIGH STRENGTH	2				
5	1	KHN0296	ｺｳﾘｷW 12 (ﾒﾂｷ)	WASHER;HIGH STRENGTH	2				
6	1	102R016Y085R	ｺｳﾘｷB M16X 85	BOLT;HIGH STRENGTH	4				
7	1	KRV24760	ﾌﾟﾚｰﾄ	PLATE	3				
8	1	KAV1627	ｸﾗﾝﾌﾟ;ﾊﾟｲﾌﾟ	CLAMP;PIPE	3				
9	1	102R012Y050R	ｺｳﾘｷB M12X 50	BOLT;HIGH STRENGTH	3				
10	1	KHN0296	ｺｳﾘｷW 12 (ﾒﾂｷ)	WASHER;HIGH STRENGTH	3				
11	1	102R016Y085R	ｺｳﾘｷB M16X 85	BOLT;HIGH STRENGTH	6				
12	1	KRV0549	ｸﾗﾝﾌﾟ	CLAMP	1				
13	1	KRV1200	ｸﾗﾝﾌﾟ;ﾊﾟｲﾌﾟ	CLAMP;PIPE	1				
14	1	KHN0297	ｺｳﾘｷW 16 (ﾒﾂｷ)	WASHER;HIGH STRENGTH	2				
15	1	KRV0549	ｸﾗﾝﾌﾟ	CLAMP	4				
16	1	KRV1200	ｸﾗﾝﾌﾟ;ﾊﾟｲﾌﾟ	CLAMP;PIPE	4				
17	1	KHN0297	ｺｳﾘｷW 16 (ﾒﾂｷ)	WASHER;HIGH STRENGTH	8				
18	1	KRV0548	ｸﾗﾝﾌﾟ	CLAMP	4				
19	1	102R012Y060R	ｺｳﾘｷB M12X 60	BOLT;HIGH STRENGTH	4				
20	1	KHN0296	ｺｳﾘｷW 12 (ﾒﾂｷ)	WASHER;HIGH STRENGTH	4				
21	1	KRV0548	ｸﾗﾝﾌﾟ	CLAMP	2				
22	1	102R012Y060R	ｺｳﾘｷB M12X 60	BOLT;HIGH STRENGTH	2				
23	1	KHN0296	ｺｳﾘｷW 12 (ﾒﾂｷ)	WASHER;HIGH STRENGTH	2				
24	1	KRV1200	ｸﾗﾝﾌﾟ;ﾊﾟｲﾌﾟ	CLAMP;PIPE	2				
25	1	102R016Y070R	ｺｳﾘｷB M16X 70	BOLT;HIGH STRENGTH	2				
26	1	KHN0297	ｺｳﾘｷW 16 (ﾒﾂｷ)	WASHER;HIGH STRENGTH	2				
27	1	KRV0548	ｸﾗﾝﾌﾟ	CLAMP	2				
28	1	102R012Y060R	ｺｳﾘｷB M12X 60	BOLT;HIGH STRENGTH	2				
29	1	KHN0296	ｺｳﾘｷW 12 (ﾒﾂｷ)	WASHER;HIGH STRENGTH	2				

https://truckmanualshub.com/

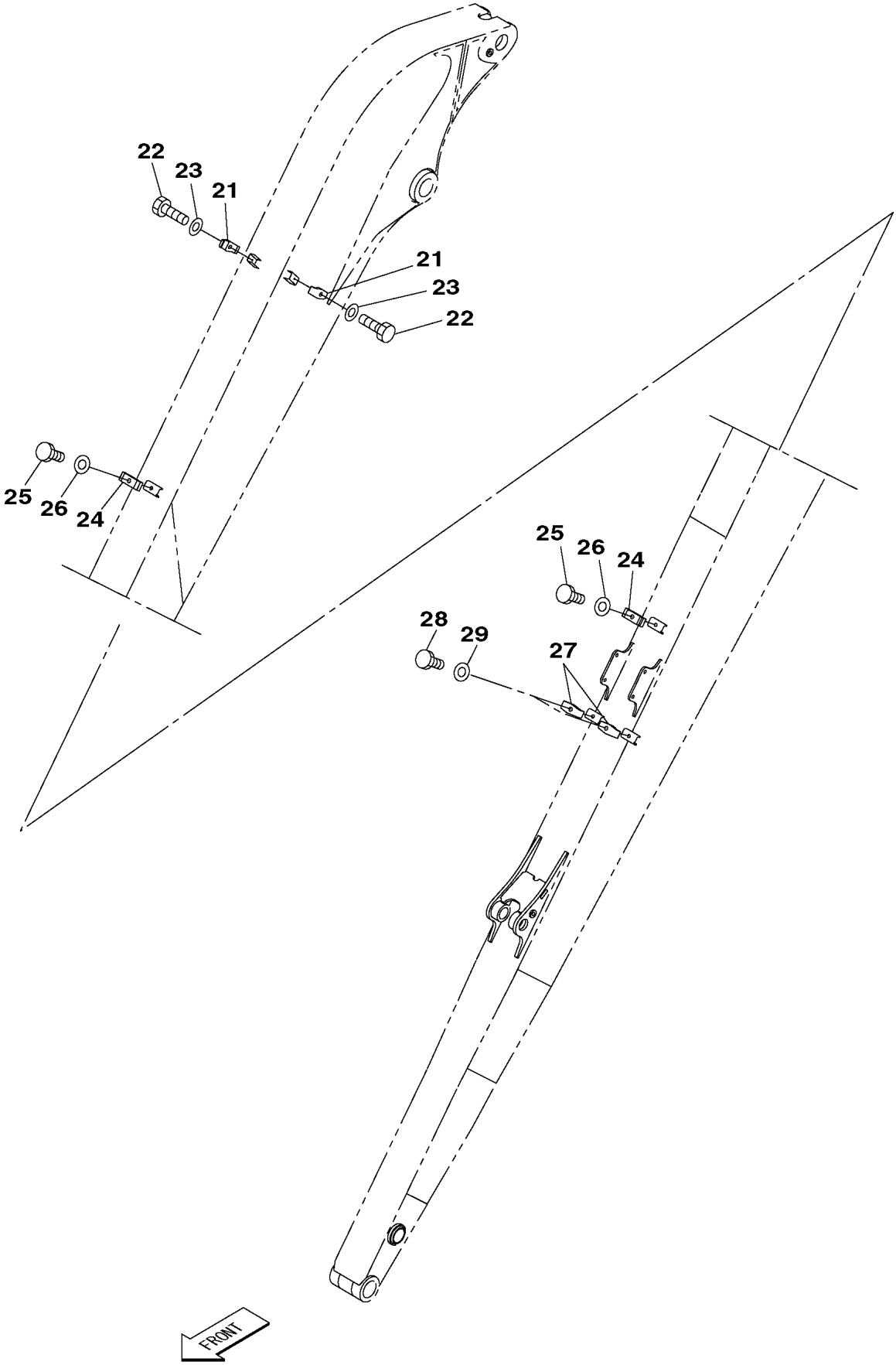

KG1RV577-0
KRV24720-EZ

https://truckmanualshub.com/

https://truckmanualshub.com/

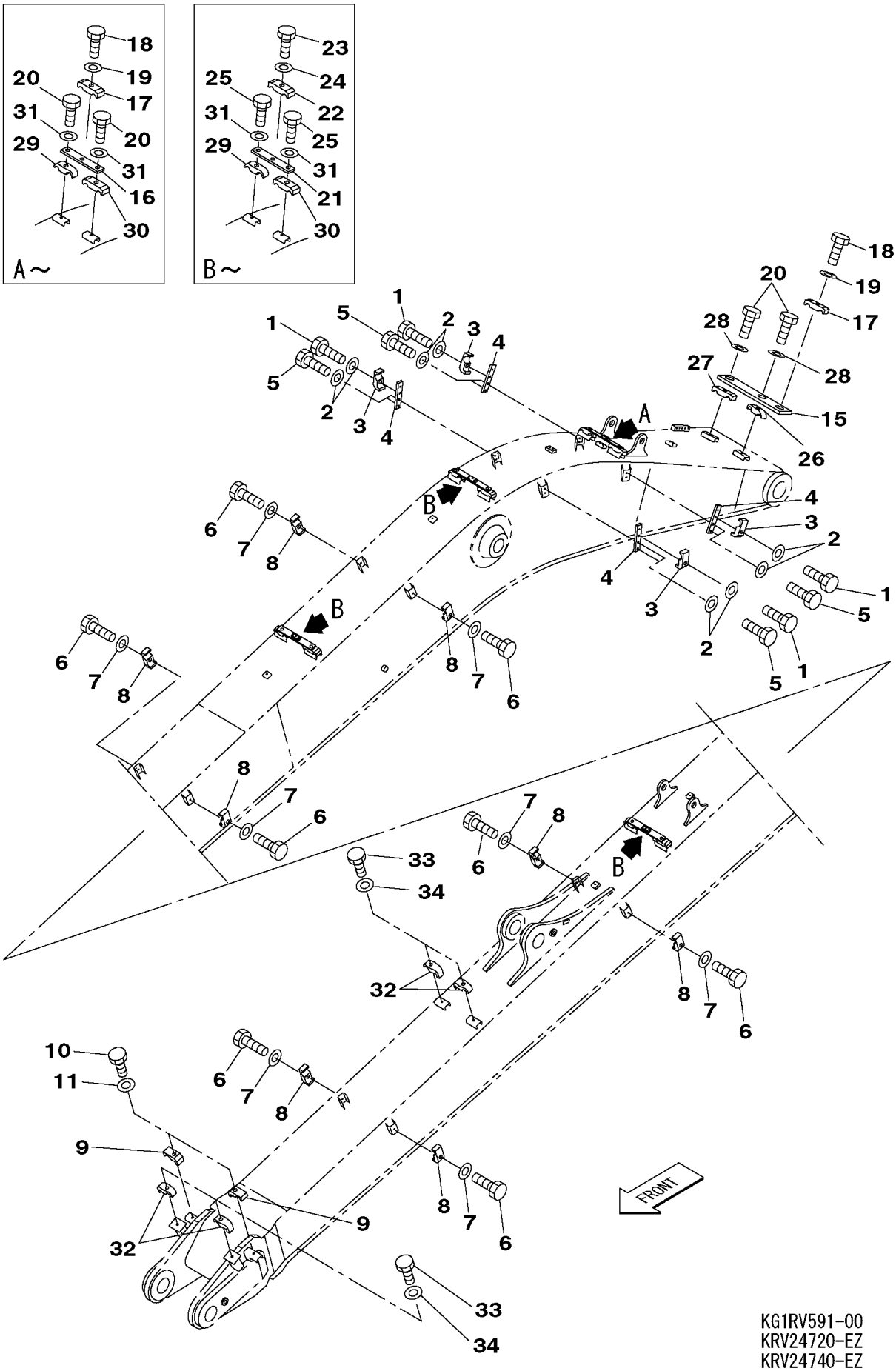

KG1RV591-00
KRV24720-EZ
KRV24740-EZ

https://truckmanualshub.com/

210L5 1101－

符号 ITEM	構成 COMPO	部品番号 PART NO.	部品名	PART NAME	個数 Q'TY	ｲﾝﾅｰ	適用号機 SERIAL_NO.	互換 ICA	代替部品 REPLACEABLE PART
1	1	102R016Y070R	ｺｳﾘｷB M16X 70	BOLT;HIGH STRENGTH	4				
2	1	KHN0297	ｺｳﾘｷW 16 (ﾒﾂｷ)	WASHER;HIGH STRENGTH	12				
3	1	KSV0282	ｸﾗﾝﾌﾟ;ﾊﾟｲﾌﾟ	CLAMP;PIPE	4				
4	1	KRV2815	ｻﾞ	BAR;BASE	4				
5	1	102R016Y045R	ｺｳﾘｷB M16X 45	BOLT;HIGH STRENGTH	8				
6	1	102R016Y070R	ｺｳﾘｷB M16X 70	BOLT;HIGH STRENGTH	8				
7	1	KHN0297	ｺｳﾘｷW 16 (ﾒﾂｷ)	WASHER;HIGH STRENGTH	8				
8	1	KSV0282	ｸﾗﾝﾌﾟ;ﾊﾟｲﾌﾟ	CLAMP;PIPE	8				
9	1	KSV0282	ｸﾗﾝﾌﾟ;ﾊﾟｲﾌﾟ	CLAMP;PIPE	2				
10	1	102R016Y070R	ｺｳﾘｷB M16X 70	BOLT;HIGH STRENGTH	2				
11	1	KHN0297	ｺｳﾘｷW 16 (ﾒﾂｷ)	WASHER;HIGH STRENGTH	2				
12	1	102R016Y070R	ｺｳﾘｷB M16X 70	BOLT;HIGH STRENGTH	12				
13	1	KHN0297	ｺｳﾘｷW 16 (ﾒﾂｷ)	WASHER;HIGH STRENGTH	12				
14	1	KSV0282	ｸﾗﾝﾌﾟ;ﾊﾟｲﾌﾟ	CLAMP;PIPE	12				
15	1	KRV24750	ﾌﾟﾚｰﾄ	PLATE	1				
16	1	KRV24760	ﾌﾟﾚｰﾄ	PLATE	1				
17	1	KAV1627	ｸﾗﾝﾌﾟ;ﾊﾟｲﾌﾟ	CLAMP;PIPE	2				
18	1	102R012Y050R	ｺｳﾘｷB M12X 50	BOLT;HIGH STRENGTH	2				
19	1	KHN0296	ｺｳﾘｷW 12 (ﾒﾂｷ)	WASHER;HIGH STRENGTH	2				
20	1	102R016Y085R	ｺｳﾘｷB M16X 85	BOLT;HIGH STRENGTH	4				
21	1	KRV24760	ﾌﾟﾚｰﾄ	PLATE	3				
22	1	KAV1627	ｸﾗﾝﾌﾟ;ﾊﾟｲﾌﾟ	CLAMP;PIPE	3				
23	1	102R012Y050R	ｺｳﾘｷB M12X 50	BOLT;HIGH STRENGTH	3				
24	1	KHN0296	ｺｳﾘｷW 12 (ﾒﾂｷ)	WASHER;HIGH STRENGTH	3				
25	1	102R016Y085R	ｺｳﾘｷB M16X 85	BOLT;HIGH STRENGTH	6				
26	1	KRV0549	ｸﾗﾝﾌﾟ	CLAMP	1				
27	1	KRV1200	ｸﾗﾝﾌﾟ;ﾊﾟｲﾌﾟ	CLAMP;PIPE	1				
28	1	KHN0297	ｺｳﾘｷW 16 (ﾒﾂｷ)	WASHER;HIGH STRENGTH	2				
29	1	KRV0549	ｸﾗﾝﾌﾟ	CLAMP	4				
30	1	KRV1200	ｸﾗﾝﾌﾟ;ﾊﾟｲﾌﾟ	CLAMP;PIPE	4				
31	1	KHN0297	ｺｳﾘｷW 16 (ﾒﾂｷ)	WASHER;HIGH STRENGTH	8				
32	1	KRV0548	ｸﾗﾝﾌﾟ	CLAMP	4				
33	1	102R012Y060R	ｺｳﾘｷB M12X 60	BOLT;HIGH STRENGTH	4				
34	1	KHN0296	ｺｳﾘｷW 12 (ﾒﾂｷ)	WASHER;HIGH STRENGTH	4				
35	1	KRV0548	ｸﾗﾝﾌﾟ	CLAMP	2				
36	1	102R012Y060R	ｺｳﾘｷB M12X 60	BOLT;HIGH STRENGTH	2				
37	1	KHN0296	ｺｳﾘｷW 12 (ﾒﾂｷ)	WASHER;HIGH STRENGTH	2				
38	1	KRV1200	ｸﾗﾝﾌﾟ;ﾊﾟｲﾌﾟ	CLAMP;PIPE	2				
39	1	102R016Y070R	ｺｳﾘｷB M16X 70	BOLT;HIGH STRENGTH	2				
40	1	KHN0297	ｺｳﾘｷW 16 (ﾒﾂｷ)	WASHER;HIGH STRENGTH	2				
41	1	KRV0548	ｸﾗﾝﾌﾟ	CLAMP	2				
42	1	102R012Y060R	ｺｳﾘｷB M12X 60	BOLT;HIGH STRENGTH	2				
43	1	KHN0296	ｺｳﾘｷW 12 (ﾒﾂｷ)	WASHER;HIGH STRENGTH	2				

https://truckmanualshub.com/

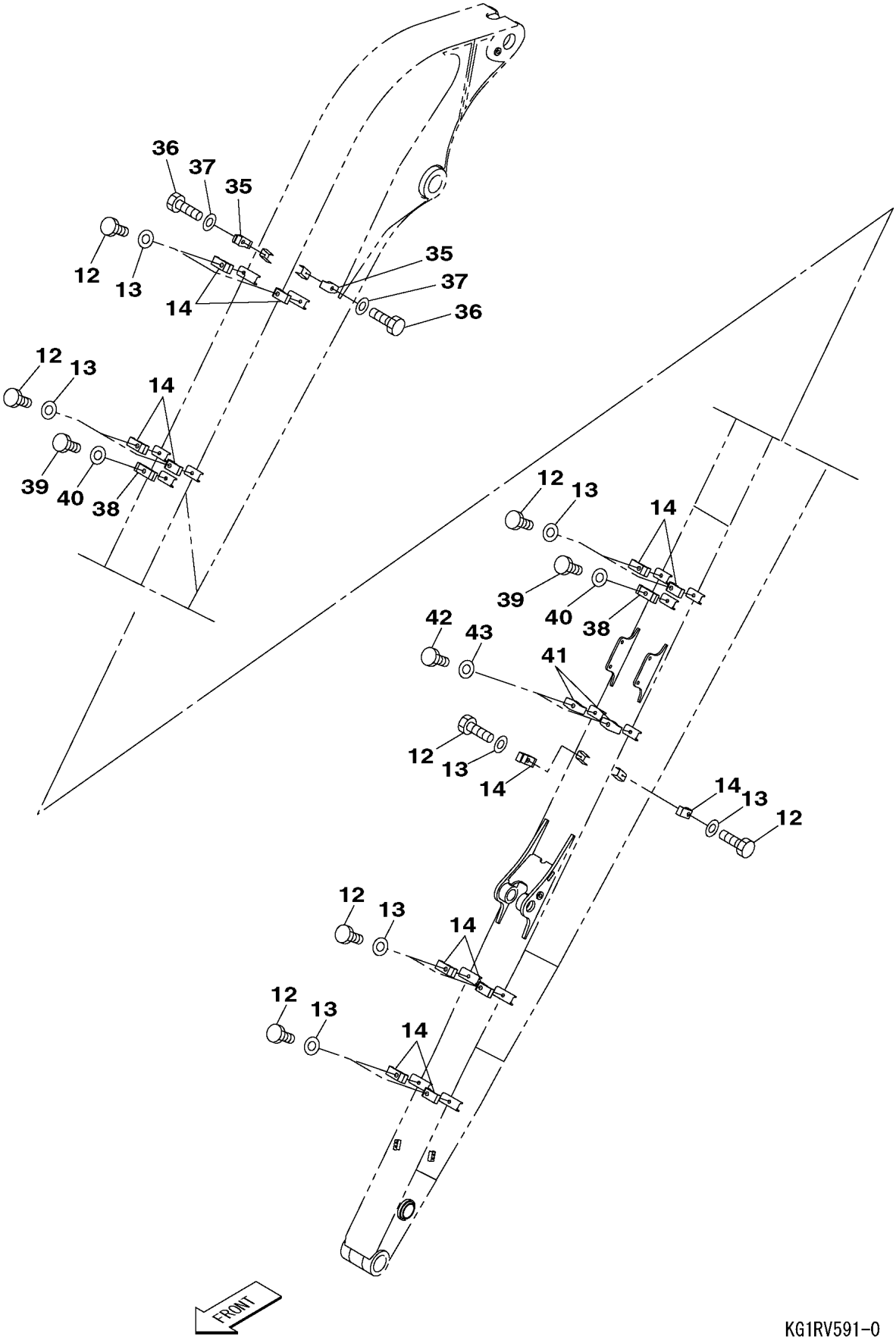

KG1RV591-0
KRV24720-EZ
KRV24740-EZ

https://truckmanualshub.com/

https://truckmanualshub.com/

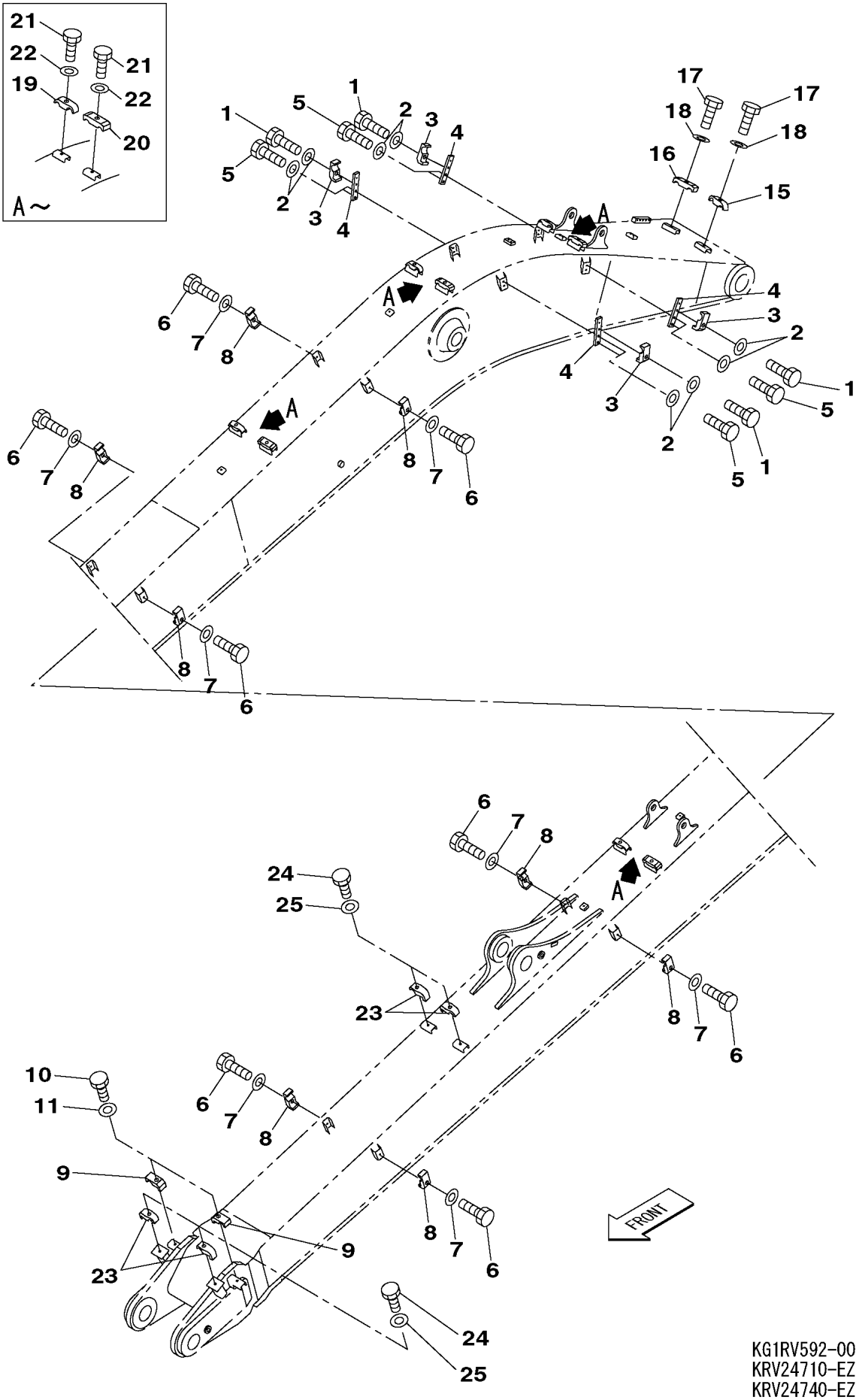

KG1RV592-00
KRV24710-EZ
KRV24740-EZ

https://truckmanualshub.com/

210L5 1101－

符号 ITEM	構成 COMPO	部品番号 PART NO.	部品名	PART NAME	個数 Q'TY	ｲﾝﾅｰ	適用号機 SERIAL_NO.	互換 ICA	代替部品 REPLACEABLE PART
1	1	102R016Y070R	ｺｳﾘｷB M16X 70	BOLT;HIGH STRENGTH	4				
2	1	KHN0297	ｺｳﾘｷW 16 (ﾒﾂｷ)	WASHER;HIGH STRENGTH	12				
3	1	KSV0282	ｸﾗﾝﾌﾟ;ﾊﾟｲﾌﾟ	CLAMP;PIPE	4				
4	1	KRV2815	ｻﾞ	BAR;BASE	4				
5	1	102R016Y045R	ｺｳﾘｷB M16X 45	BOLT;HIGH STRENGTH	8				
6	1	102R016Y070R	ｺｳﾘｷB M16X 70	BOLT;HIGH STRENGTH	8				
7	1	KHN0297	ｺｳﾘｷW 16 (ﾒﾂｷ)	WASHER;HIGH STRENGTH	8				
8	1	KSV0282	ｸﾗﾝﾌﾟ;ﾊﾟｲﾌﾟ	CLAMP;PIPE	8				
9	1	KSV0282	ｸﾗﾝﾌﾟ;ﾊﾟｲﾌﾟ	CLAMP;PIPE	2				
10	1	102R016Y070R	ｺｳﾘｷB M16X 70	BOLT;HIGH STRENGTH	2				
11	1	KHN0297	ｺｳﾘｷW 16 (ﾒﾂｷ)	WASHER;HIGH STRENGTH	2				
12	1	102R016Y070R	ｺｳﾘｷB M16X 70	BOLT;HIGH STRENGTH	12				
13	1	KHN0297	ｺｳﾘｷW 16 (ﾒﾂｷ)	WASHER;HIGH STRENGTH	12				
14	1	KSV0282	ｸﾗﾝﾌﾟ;ﾊﾟｲﾌﾟ	CLAMP;PIPE	12				
15	1	KRV0549	ｸﾗﾝﾌﾟ	CLAMP	1				
16	1	KRV1200	ｸﾗﾝﾌﾟ;ﾊﾟｲﾌﾟ	CLAMP;PIPE	1				
17	1	102R016Y070R	ｺｳﾘｷB M16X 70	BOLT;HIGH STRENGTH	2				
18	1	KHN0297	ｺｳﾘｷW 16 (ﾒﾂｷ)	WASHER;HIGH STRENGTH	2				
19	1	KRV0549	ｸﾗﾝﾌﾟ	CLAMP	4				
20	1	KRV1200	ｸﾗﾝﾌﾟ;ﾊﾟｲﾌﾟ	CLAMP;PIPE	4				
21	1	102R016Y070R	ｺｳﾘｷB M16X 70	BOLT;HIGH STRENGTH	8				
22	1	KHN0297	ｺｳﾘｷW 16 (ﾒﾂｷ)	WASHER;HIGH STRENGTH	8				
23	1	KRV0548	ｸﾗﾝﾌﾟ	CLAMP	4				
24	1	102R012Y060R	ｺｳﾘｷB M12X 60	BOLT;HIGH STRENGTH	4				
25	1	KHN0296	ｺｳﾘｷW 12 (ﾒﾂｷ)	WASHER;HIGH STRENGTH	4				
26	1	KRV0548	ｸﾗﾝﾌﾟ	CLAMP	2				
27	1	102R012Y060R	ｺｳﾘｷB M12X 60	BOLT;HIGH STRENGTH	2				
28	1	KHN0296	ｺｳﾘｷW 12 (ﾒﾂｷ)	WASHER;HIGH STRENGTH	2				
29	1	KRV1200	ｸﾗﾝﾌﾟ;ﾊﾟｲﾌﾟ	CLAMP;PIPE	2				
30	1	102R016Y070R	ｺｳﾘｷB M16X 70	BOLT;HIGH STRENGTH	2				
31	1	KHN0297	ｺｳﾘｷW 16 (ﾒﾂｷ)	WASHER;HIGH STRENGTH	2				
32	1	KRV0548	ｸﾗﾝﾌﾟ	CLAMP	2				
33	1	102R012Y060R	ｺｳﾘｷB M12X 60	BOLT;HIGH STRENGTH	2				
34	1	KHN0296	ｺｳﾘｷW 12 (ﾒﾂｷ)	WASHER;HIGH STRENGTH	2				

https://truckmanualshub.com/

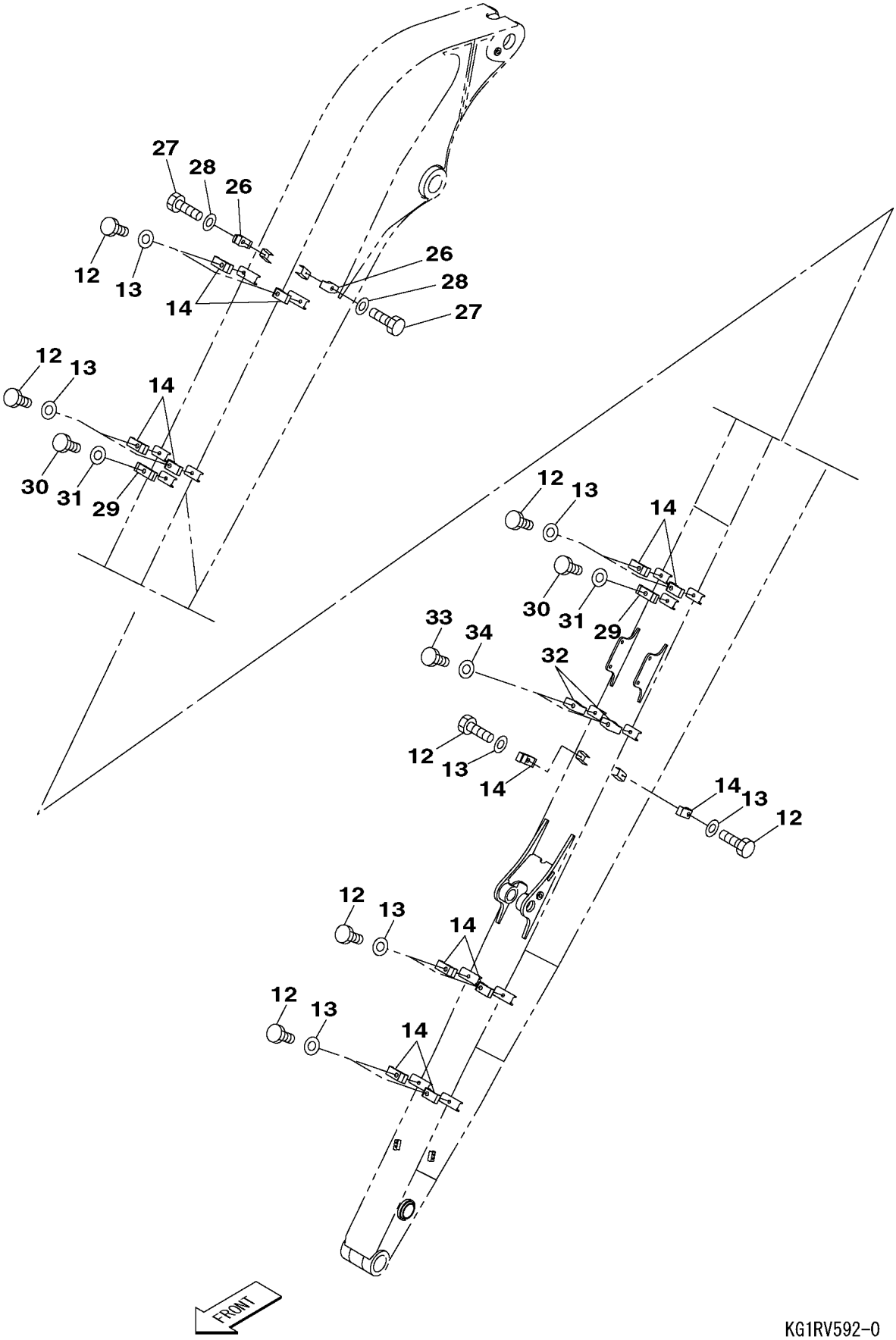

KG1RV592-0
KRV24710-EZ
KRV24740-EZ

https://truckmanualshub.com/

パーツインデックス
Parts index

PART NO.	PPC	ITEM
102R006A016N	DH0201L0031-00	6
102R006Y016R	DN7301L0211-00	125
	DN7301L0211-00	125
	DN7301L0212-00	125
	DN7301L0212-00	125
	DN7301L0213-00	125
	DN7301L0213-00	125
102R008Y020R	DNC701L0002-00	6
102R008Y025R	DAN401L0014-00	39
102R008Y030R	DB1001L0023-00	21
	DJHC01L0111-00	4
	DV5001L0046-00	16
102R008Y040R	DH0101L0051-00	47
	DH0301L0031-00	51
	DH0301L0031-00	59
	DHE001L0044-00	3
	DHE001L0044-00	11
102R008Y055R	DRD701L0001-00	2
102R008Y060R	DRD701L0004-00	2
102R008Y070R	DH0101L0051-00	46
	DR9901L0008-00	2
	DR9901L0009-00	2
	DR9901L0013-00	2
102R008Y075R	DHE001L0044-00	12
102R008Y100R	DJHC01L0093-00	43
102R008Y110R	DH0101L0051-00	38
102R010Y016N	DAN401L0014-00	30
	DAN401L0014-00	30
	DAN401L0014-00	34
102R010Y016R	DR0205L0043-00	79
	DR0205L0043-00	79
102R010Y035R	DH0101L0051-00	17
	DH0201L0031-00	10
	DH0201L0031-00	10
	DH0201L0031-00	10
	DH0201L0031-00	10
	DJBC01L0126-00	26
102R010Y045R	DP0701L0020-00	6
102R010Y055R	DV7501L0047-00	4
	DV7501L0047-00	4
	DV7501L0049-00	4
	DV7501L0049-00	4
102R010Y100R	DJBC01L0126-00	6
102R012Y025R	DV0301L0131-00	21
	DV0301L0131-00	26

PART NO.	PPC	ITEM
102R012Y025R	DV0301L0132-00	21
	DV0301L0132-00	26
	DV0350L0008-00	19
	DV0350L0008-00	24
	DV0350L0009-00	23
	DV0350L0009-00	28
	DV4601L0144-00	6
	DV4601L0146-00	9
	DV4601L0161-00	6
	DV4601L0162-00	11
	DV5601L0153-00	7
	DV5601L0155-00	7
	DV5601L0168-00	6
	DV6001L0087-00	10
	DV6001L0090-00	14
102R012Y035R	DRJ401L0205-00	72
102R012Y050R	DV9901L0073-00	4
	DV9901L0073-00	9
	DV9901L0074-00	18
	DV9901L0074-00	23
102R012Y060R	DV9901L0072-00	10
	DV9901L0072-00	13
	DV9901L0072-00	19
	DV9901L0073-00	19
	DV9901L0073-00	22
	DV9901L0073-00	28
	DV9901L0074-00	33
	DV9901L0074-00	36
	DV9901L0074-00	42
	DV9901L0075-00	24
	DV9901L0075-00	27
	DV9901L0075-00	33
102R012Y075R	DN4801L0083-00	247
	DN4801L0084-00	258
102R012Y080R	DV0601L0092-00	4
	DV0601L0092-00	4
	DV0601L0094-00	4
	DV0601L0094-00	4
	DV0601L0106-00	4
102R012Y085R	DV0601L0092-00	4
	DV0601L0094-00	4
102R012Y120R	DR0205L0044-00	13
102R016Y035R	DR1801L0020-00	11
102R016Y045R	DV9901L0074-00	5
	DV9901L0075-00	5

PART NO.	PPC	ITEM
102R016Y050R	DV0220L0016-00	19
	DV0220L0017-00	25
102R016Y070R	DH8101L0022-00	10
	DJE701L0030-00	7
	DV9901L0072-00	3
	DV9901L0072-00	7
	DV9901L0072-00	16
	DV9901L0073-00	25
	DV9901L0074-00	1
	DV9901L0074-00	6
	DV9901L0074-00	10
	DV9901L0074-00	12
	DV9901L0074-00	39
	DV9901L0075-00	1
	DV9901L0075-00	6
	DV9901L0075-00	10
	DV9901L0075-00	12
	DV9901L0075-00	17
	DV9901L0075-00	21
	DV9901L0075-00	30
102R016Y085R	DV9901L0073-00	6
	DV9901L0073-00	11
	DV9901L0074-00	20
	DV9901L0074-00	25
102R016Y110R	DN0501L0005-00	3
102R016Y130R	DH0101L0051-00	25
102R016Y140R	DN0501L0005-00	2
102R018Y060R	DA0501L0006-00	2
	DA0501L0006-00	2
	DA3805L0003-00	2
	DA3805L0003-00	2
102R020Y060N	DV01D5L0002-00	4
102R020Y100R	DB1001L0023-00	7
102R024Y060N	DV01D5L0002-00	4
102R024Y065N	DV0114L0005-00	3
	DV0117L0004-00	3
	DV0118L0003-00	3
	DV0119L0004-00	3
	DV0120L0004-00	3
	DV01A0L0002-00	3
	DV01H7L0002-00	3
	DV01H8L0002-00	3
105R008Y016R	DB1001L0023-00	19
	DH0301L0031-00	46
	DH0301L0031-00	53

https://truckmanualshub.com/

パーツインデックス

Parts index

PART NO.	PPC	ITEM
105R008Y016R	DH0301L0031-00	55
	DJBC01L0126-00	31
	DJHC01L0093-00	48
	DJK401L0289-00	18
	DJK401L0290-00	15
	DJK401L0291-00	22
	DJK401L0292-00	11
	DN9901L0050-00	27.02
	DN9901L0052-00	47.02
	DN9901L0058-00	45
	DN9901L0058-00	45
	DR0205L0043-00	108
	DRJ401L0204-00	5
	DRJ401L0204-00	12
	DRJ401L0204-00	19
	DRJ401L0204-00	46
	DRJ401L0204-00	48
	DRJ401L0205-00	70
	DRJ401L0205-00	111
	DRJ401L0230-00	5
	DRJ401L0230-00	12
	DRJ401L0230-00	19
	DRJ401L0230-00	47
	DRJ401L0230-00	49
	DRJ401L0256-00	5
	DRJ401L0256-00	12
	DRJ401L0256-00	19
	DRJ401L0256-00	47
	DRJ401L0256-00	49
	DRY003L0010-00	3
	DRY701L0011-00	16
105R008Y020R	DJBC01L0126-00	100
	DJHC01L0093-00	56
	DJHC01L0111-00	2
	DJHC01L0111-00	7
	DN7301L0211-00	37
	DN7301L0211-00	47
	DN7301L0211-00	77
	DN7301L0211-00	87
	DN7301L0211-00	89
	DN7301L0211-00	91
	DN7301L0211-00	110
	DN7301L0211-00	110
	DN7301L0211-00	131
	DN7301L0211-00	182

PART NO.	PPC	ITEM
105R008Y020R	DN7301L0212-00	37
	DN7301L0212-00	47
	DN7301L0212-00	77
	DN7301L0212-00	87
	DN7301L0212-00	89
	DN7301L0212-00	91
	DN7301L0212-00	110
	DN7301L0212-00	110
	DN7301L0212-00	131
	DN7301L0212-00	183
	DN7301L0213-00	37
	DN7301L0213-00	47
	DN7301L0213-00	77
	DN7301L0213-00	87
	DN7301L0213-00	89
	DN7301L0213-00	91
	DN7301L0213-00	110
	DN7301L0213-00	110
	DN7301L0213-00	131
	DN7301L0213-00	183
	DN7301L0246-00	37
	DN7301L0246-00	47
	DN7301L0246-00	77
	DN7301L0246-00	87
	DN7301L0246-00	89
	DN7301L0246-00	91
	DN7301L0246-00	110
	DN7301L0246-00	110
	DN7301L0246-00	130
	DN7301L0246-00	181
	DN9901L0050-00	14
	DN9901L0050-00	14
	DN9901L0050-00	50
	DN9901L0052-00	31
	DN9901L0058-00	27
	DNC701L0002-00	8
	DR0205L0044-00	21
105R008Y025R	DN7301L0211-00	110
	DN7301L0211-00	110
	DN7301L0212-00	110
	DN7301L0212-00	110
	DN7301L0213-00	110
	DN7301L0213-00	110
	DN7301L0246-00	110
	DN7301L0246-00	110

PART NO.	PPC	ITEM
105R010Y016R	DN9901L0050-00	114
	DN9901L0050-00	115
	DN9901L0052-00	106
	DN9901L0052-00	107
	DN9901L0058-00	104
	DN9901L0058-00	104
	DN9901L0058-00	105
	DRV001L0015-00	13
	DRV001L0015-00	13
105R010Y020R	DA9401L0027-00	13
	DB1001L0023-00	12
	DJE701L0030-00	10
	DJEE01L0064-00	21
	DJKZ01L0069-00	74
	DN7301L0211-00	129
	DN7301L0212-00	129
	DN7301L0213-00	129
	DN7301L0246-00	128
	DR0205L0044-00	26
	DRV001L0015-00	13
	DRV001L0015-00	13
	DRY701L0011-00	10
	DRY701L0011-00	12
105R010Y025R	DH0301L0031-00	20
	DH0602L0031-00	7
	DH0602L0032-00	7
	DH8101L0022-00	8
	DJ5801L0012-00	2
	DJ5801L0013-00	2
	DJ6201L0059-00	12
	DJ6201L0063-00	10
	DJAQ01L0029-00	10
	DJAQ01L0041-00	10
	DJKY01L0042-00	29
	DJKY01L0042-00	32
	DJKZ01L0069-00	29
	DJKZ01L0069-00	32
	DJLJ01L0022-00	19
	DJLJ01L0022-00	22
	DJM101L0048-00	3
	DJM101L0049-00	3
	DR0205L0044-00	23
105R010Y030R	DH0101L0051-00	15
	DH0101L0051-00	43
	DJE701L0030-00	11

https://truckmanualshub.com/

パーツインデックス

Parts index

PART NO.	PPC	ITEM
105R010Y030R	DJHC01L0093-00	59
	DJL901L0069-00	9
	DJL901L0069-00	9
	DJL901L0069-00	9
	DJL901L0069-00	9
	DJL901L0070-00	9
	DJL901L0070-00	9
	DJL901L0070-00	9
	DJL901L0070-00	9
	DJP801L0039-00	13
	DJP801L0039-00	16
	DN7301L0211-00	32
	DN7301L0212-00	32
	DN7301L0213-00	32
	DN7301L0246-00	32
	DRY701L0011-00	3
105R012Y030R	DA0301L0012-00	2
	DA0301L0012-00	2
	DA8901L0028-00	15
	DA8901L0028-00	15
	DA8901L0028-00	18
	DA8901L0028-00	18
	DJBC01L0126-00	29
	DJBV01L0039-00	11
	DJEE01L0064-00	12
	DJEE01L0064-00	15
	DJEE01L0064-00	23
	DJEE01L0064-00	26
	DJHC01L0093-00	54
	DJKX01L0052-00	10
	DJKX01L0052-00	20
	DJKY01L0042-00	10
	DJKY01L0042-00	20
	DJKZ01L0069-00	10
	DJKZ01L0069-00	20
	DN4801L0083-00	245
	DN4801L0084-00	256
	DN7301L0211-00	52
	DN7301L0211-00	67
	DN7301L0211-00	141
	DN7301L0212-00	52
	DN7301L0212-00	67
	DN7301L0212-00	141
	DN7301L0213-00	52
	DN7301L0213-00	67

PART NO.	PPC	ITEM
105R012Y030R	DN7301L0213-00	141
	DN7301L0246-00	52
	DN7301L0246-00	67
	DN7301L0246-00	140
	DRJ401L0205-00	68
	DV9901L0029-00	3
	DV9901L0029-00	6
	DV9901L0029-00	8
	DV9901L0029-00	10
	DV9901L0029-00	10.01
	DV9901L0030-00	3
	DV9901L0030-00	5
	DV9901L0030-00	8
	DV9901L0030-00	11
	DV9901L0030-00	13
	DV9901L0031-00	6
	DV9901L0031-00	12
	DV9901L0031-00	19
	DV9901L0031-00	26
	DV9901L0031-00	33
	DV9901L0033-00	6
	DV9901L0033-00	12
	DV9901L0033-00	19
	DV9901L0033-00	20.06
	DV9901L0033-00	26
	DV9901L0035-00	6
	DV9901L0036-00	3
	DV9901L0036-00	5
	DV9901L0036-00	8
	DV9901L0036-00	11
	DV9901L0036-00	13
	DV9901L0038-00	7
	DV9901L0038-00	14
	DV9901L0038-00	21
	DV9901L0038-00	28
	DV9901L0038-00	35
	DV9901L0039-00	5
	DV9901L0039-00	11
	DV9901L0039-00	14
	DV9901L0039-00	16
	DV9901L0039-00	17
	DV9901L0040-00	5
	DV9901L0040-00	10
	DV9901L0040-00	14
	DV9901L0040-00	17

PART NO.	PPC	ITEM
105R012Y030R	DV9901L0040-00	19
	DV9901L0041-00	5
	DV9901L0041-00	10
	DV9901L0041-00	14
	DV9901L0041-00	17
	DV9901L0041-00	19
	DV9901L0057-00	6
	DV9901L0059-00	7
	DV9901L0059-00	14
	DV9901L0059-00	21
	DV9901L0059-00	22.06
	DV9901L0059-00	22.06
	DV9901L0059-00	28
105R012Y045R	DA8901L0028-00	19
	DA8901L0028-00	19
105R012Y060R	DJBV01L0039-00	9
	DJBV01L0039-00	13
	DJY901L0024-00	10
	DN4801L0083-00	246
	DN4801L0084-00	257
	DV7501L0047-00	4
	DV7501L0049-00	4
	DV9901L0031-00	7
	DV9901L0031-00	13
	DV9901L0031-00	20
	DV9901L0031-00	27
	DV9901L0033-00	7
	DV9901L0033-00	13
	DV9901L0033-00	20
	DV9901L0033-00	20.07
	DV9901L0033-00	27
	DV9901L0038-00	8
	DV9901L0038-00	15
	DV9901L0038-00	22
	DV9901L0038-00	29
	DV9901L0039-00	6
	DV9901L0039-00	12
	DV9901L0040-00	6
	DV9901L0040-00	11
	DV9901L0041-00	6
	DV9901L0041-00	11
	DV9901L0059-00	8
	DV9901L0059-00	15
	DV9901L0059-00	22
	DV9901L0059-00	22.07

https://truckmanualshub.com/

パーツインデックス
Parts index

PART NO.	PPC	ITEM
105R012Y060R	DV9901L0059-00	22.07
	DV9901L0059-00	29
105R016Y040R	DH0101L0051-00	21
	DH0301L0031-00	2
	DH0301L0031-00	5
	DJG201L0073-00	3
	DJG201L0074-00	3
	DJG201L0082-00	3
105R016Y050R	DA0221L0004-00	18
	DA0221L0006-00	18
	DA02A5L0004-00	18
	DA02A5L0006-00	18
	DA9401L0027-00	2
105R016Y055R	DA9401L0027-00	16
	DAA801L0021-00	3
105R018Y060R	DA0501L0006-00	2
	DA0501L0006-00	2
	DA3805L0003-00	2
	DA3805L0003-00	2
105R018Y075R	DAP201L0021-00	11
	DAP201L0022-00	11
105R020Y050R	DAN401L0014-00	47
105R020Y065R	DB1001L0023-00	9
105R020Y075R	DC4501L0047-00	4
	DC4501L0051-00	4
	DC4501L0059-00	37
108R006Y016R	DJE701L0030-00	19
108R006Y020R	DJ6201L0059-00	25
	DJ6201L0059-00	25
	DRJ401L0204-00	23
	DRJ401L0230-00	23
	DRJ401L0256-00	23
108R006Y025R	DJ6201L0059-00	25
	DJ6201L0063-00	23
108R008Y016R	DN9901L0050-00	25
	DN9901L0052-00	45
	DN9901L0058-00	41
	DN9901L0058-00	41
108R008Y020R	DN9901L0052-00	32
	DN9901L0058-00	28
108R008Y025R	DA8901L0028-00	8
108R010Y016R	DJ5801L0012-00	10
	DJ5801L0013-00	10
108R010Y030R	DJAQ01L0029-00	6
	DJAQ01L0029-00	14

PART NO.	PPC	ITEM
108R010Y030R	DJAQ01L0029-00	19
	DJAQ01L0041-00	6
	DJAQ01L0041-00	14
	DJAQ01L0041-00	19
	DJBV01L0039-00	3
	DJKX01L0052-00	4
	DJKY01L0042-00	4
	DJKY01L0042-00	27
	DJKZ01L0069-00	4
	DJKZ01L0069-00	27
	DJL901L0070-00	13
	DJP801L0039-00	5
	DJY601L0024-00	3
	DJY901L0024-00	7
108R010Y035R	DJBV01L0039-00	6
	DV4601L0161-00	12
	DV4601L0162-00	17
	DV5601L0168-00	18
	DV5601L0168-00	29
	DV6001L0090-00	6
	DV6001L0090-00	12
108R010Y045R	DV0601L0106-00	18
	DV0601L0106-00	31
	DV4601L0161-00	18
	DV4601L0162-00	23
108R010Y055R	DJY901L0024-00	4
108R010Y060R	DJEE01L0064-00	4
	DJEE01L0064-00	10
108R010Y070R	DV6001L0090-00	4
	DV6001L0090-00	10
108R012Y030R	DJW001L0059-00	3
108R012Y035R	DV4601L0146-00	6
	DV4601L0162-00	8
108R012Y040R	DJP801L0039-00	8
	DJP801L0039-00	8
108R012Y045R	DJP801L0039-00	8
	DJP801L0039-00	8
108R012Y050R	DV01D5L0002-00	16
108R012Y070R	DV4601L0146-00	4
	DV4601L0162-00	6
108R016Y040R	DV0114L0005-00	15
	DV0117L0004-00	15
	DV0118L0003-00	15
	DV0119L0004-00	15
	DV0120L0004-00	15

PART NO.	PPC	ITEM
108R016Y040R	DV01A0L0002-00	14
	DV01H7L0002-00	14
	DV01H8L0002-00	14
108R020Y055R	DJL901L0069-00	4
	DJL901L0070-00	4
132R016Y140R	DV0401L0038-00	22
	DV0401L0038-00	27
132R020Y160R	DV0401L0033-00	27
	DV0402L0029-00	27
132R020Y170R	DV0401L0033-00	22
	DV0402L0029-00	22
	DV6001L0087-00	15
	DV6001L0090-00	19
145N003S008R	DRJ401L0204-00	25
	DRJ401L0230-00	25
	DRJ401L0256-00	25
145N006S008R	DJHC01L0093-00	50
	DJK401L0289-00	11
	DJK401L0289-00	15
	DJK401L0290-00	8
	DJK401L0290-00	12
	DJK401L0291-00	15
	DJK401L0291-00	19
	DJK401L0292-00	4
	DJK401L0292-00	8
	DRJ401L0204-00	9
	DRJ401L0204-00	16
	DRJ401L0204-00	29
	DRJ401L0204-00	29
	DRJ401L0204-00	29
	DRJ401L0204-00	50
	DRJ401L0230-00	9
	DRJ401L0230-00	16
	DRJ401L0230-00	29
	DRJ401L0230-00	51
	DRJ401L0256-00	9
	DRJ401L0256-00	16
	DRJ401L0256-00	29
	DRJ401L0256-00	51
162R008VR	DH0201L0031-00	3
	DRJ401L0205-00	86
162R010VR	DN7301L0211-00	28
	DN7301L0212-00	28
	DN7301L0213-00	28
	DN7301L0246-00	28

https://truckmanualshub.com/

パーツインデックス

Parts index

PART NO.	PPC	ITEM
162R012VR	DJEE01L0064-00	14
	DJEE01L0064-00	25
	DN4801L0083-00	250
	DN4801L0084-00	261
162R016VR	DA0221L0004-00	19
	DA0221L0006-00	19
	DA02A5L0004-00	19
	DA02A5L0006-00	19
	DJ6201L0059-00	6
	DJ6201L0063-00	4
	DV0220L0016-00	21
	DV0220L0017-00	27
162R020VN	DV01D5L0002-00	5
162R024VN	DV0114L0005-00	4
	DV0117L0004-00	4
	DV0118L0003-00	4
	DV0119L0004-00	4
	DV0120L0004-00	4
	DV01A0L0002-00	4
	DV01D5L0002-00	5
	DV01H7L0002-00	4
	DV01H8L0002-00	4
166R010SR	DN9901L0050-00	43
172R016VR	DV0401L0038-00	23
	DV0401L0038-00	28
172R020VR	DV0401L0033-00	23
	DV0401L0033-00	28
	DV0402L0029-00	23
	DV0402L0029-00	28
	DV6001L0087-00	16
	DV6001L0090-00	20
175R048HSN	DA9401L0027-00	4
182-005AN	DH0301L0031-00	14
	DH0301L0031-00	14
182-006AN	DH0201L0031-00	7
182-006SR	DN7301L0211-00	126
	DN7301L0211-00	126
	DN7301L0212-00	126
	DN7301L0212-00	126
	DN7301L0213-00	126
	DN7301L0213-00	126
	DN9901L0050-00	91
	DN9901L0050-00	113
	DN9901L0050-00	113
	DN9901L0050-00	117

PART NO.	PPC	ITEM
182-006SR	DN9901L0052-00	88
	DN9901L0052-00	109
	DN9901L0058-00	86
	DN9901L0058-00	86
	DN9901L0058-00	107
182-008SR	DH0301L0031-00	50
	DH0301L0031-00	58
	DN7301L0211-00	122
	DN7301L0212-00	122
	DN7301L0213-00	122
	DN7301L0246-00	122
	DN9901L0050-00	27
	DN9901L0052-00	47
	DN9901L0058-00	43
	DN9901L0058-00	43
	DNC701L0002-00	4
	DR9901L0008-00	3
	DR9901L0009-00	3
	DR9901L0013-00	3
182-010SR	DN7301L0211-00	30
	DN7301L0212-00	30
	DN7301L0213-00	30
	DN7301L0246-00	30
	DN9901L0050-00	42
	DN9901L0050-00	83
	DN9901L0050-00	95
	DN9901L0052-00	80
	DN9901L0052-00	92
	DN9901L0058-00	78
	DN9901L0058-00	78
	DN9901L0058-00	90
	DN9901L0058-00	90
	DR0205L0043-00	81
	DR0205L0043-00	81
182-014SR	DR1801L0020-00	7
182-016SR	DN9901L0050-00	64
	DN9901L0050-00	79
	DN9901L0050-00	103
	DN9901L0052-00	61
	DN9901L0052-00	76
	DN9901L0052-00	97
	DN9901L0058-00	59
	DN9901L0058-00	59
	DN9901L0058-00	74
	DN9901L0058-00	74

PART NO.	PPC	ITEM
182-016SR	DN9901L0058-00	95
	DN9901L0058-00	95
	DR1801L0020-00	13
183-106AN	DH0201L0031-00	8
183-108VR	DN9901L0050-00	26
	DN9901L0052-00	46
	DN9901L0058-00	42
	DN9901L0058-00	42
	DNC701L0002-00	5
	DR0205L0044-00	18
183-110VR	DN7301L0211-00	31
	DN7301L0212-00	31
	DN7301L0213-00	31
	DN7301L0246-00	31
	DN9901L0050-00	94
	DN9901L0052-00	91
	DN9901L0058-00	89
	DN9901L0058-00	89
	DP0701L0020-00	7
	DR0205L0043-00	80
	DR0205L0043-00	80
	DRV001L0015-00	10
183-114VR	DR1801L0020-00	8
183-116VR	DR1801L0020-00	12
184-006VR	DJ6201L0059-00	26
	DJ6201L0059-00	26
	DJ6201L0059-00	26
	DJ6201L0063-00	24
	DJE701L0030-00	20
	DRJ401L0204-00	24
	DRJ401L0230-00	24
	DRJ401L0256-00	24
184-008VR	DN9901L0052-00	33
	DN9901L0058-00	29
184-012VR	DV01D5L0002-00	17
184-016VR	DV0114L0005-00	16
	DV0117L0004-00	16
	DV0118L0003-00	16
	DV0119L0004-00	16
	DV0120L0004-00	16
	DV01A0L0002-00	15
	DV01H7L0002-00	15
	DV01H8L0002-00	15
186-106ZR	DRJ401L0205-00	77
186-108ZR	DRJ401L0204-00	53

https://truckmanualshub.com/

パーツインデックス

Parts index

PART NO.	PPC	ITEM
186-108ZR	DRJ401L0205-00	3
	DRJ401L0205-00	11
	DRJ401L0205-00	41
	DRJ401L0205-00	79
	DRJ401L0205-00	101
	DRJ401L0230-00	55
	DRJ401L0256-00	55
186-110ZR	DRJ401L0205-00	75
305-02S048N	DA8901L0028-00	14
	DC4501L0059-00	35
335B060T020	DV01D5L0002-00	15
335B120T032	DV0114L0005-00	13
	DV0117L0004-00	13
	DV0118L0003-00	13
	DV0119L0004-00	13
	DV0120L0004-00	13
	DV01A0L0002-00	12
	DV01H7L0002-00	12
	DV01H8L0002-00	12
338W030Z012B	DAN401L0014-00	32
	DAN401L0014-00	32
338W080Z080B	DA9401L0027-00	5
338W100Z020B	DC4501L0059-00	26
370A0550Z	DA9401L0027-00	10
	DA9401L0027-00	10
378J0050Z	DN9901L0050-00	89
	DN9901L0050-00	112
	DN9901L0050-00	112
	DN9901L0050-00	116
	DN9901L0052-00	86
	DN9901L0052-00	108
	DN9901L0058-00	84
	DN9901L0058-00	84
	DN9901L0058-00	106
378J0080Z	DN9901L0050-00	84
	DN9901L0052-00	81
	DN9901L0058-00	79
	DN9901L0058-00	79
380A0850Z	DAN401L0014-00	31
	DAN401L0014-00	31
AEH0017	DH0101L0051-00	11
BCJ0528	DJEE01L0064-00	2
BHA0863	DAN701L0004-00	6
	DAP201L0021-00	6
	DAP201L0022-00	6
BHA1099	DAP201L0021-00	5
	DAP201L0022-00	5
BHJ0795	DAK301L0004-00	4.01
	DAK301L0007-00	5
	DJK401L0288-00	4
	DJK401L0288-00	8
	DJK401L0289-00	4
	DJK401L0290-00	4
	DJK401L0291-00	4
	DJK401L0291-00	8
	DJKX01L0052-00	7
	DJKX01L0052-00	12
	DJKX01L0052-00	17
	DJKX01L0052-00	27
	DJKX01L0052-00	30
	DJKY01L0042-00	7
	DJKY01L0042-00	12
	DJKY01L0042-00	17
	DJKY01L0042-00	22
	DJKZ01L0069-00	7
	DJKZ01L0069-00	12
	DJKZ01L0069-00	17
	DJKZ01L0069-00	22
	DJKZ01L0069-00	48
	DJKZ01L0069-00	51
	DJLJ01L0022-00	3
	DJY601L0024-00	9
	DJY601L0024-00	12
	DV0601L0092-00	2
	DV0601L0092-00	7
	DV0601L0094-00	2
	DV0601L0094-00	7
	DV0601L0106-00	2
	DV0601L0106-00	7
BHJ1054	DV0601L0106-00	17
	DV0601L0106-00	30
	DV4601L0161-00	19
	DV4601L0162-00	24
BLA2371	DAN701L0004-00	4
BLT0189	DV0114L0005-00	9
	DV0117L0004-00	9
	DV0118L0003-00	9
	DV0119L0004-00	9
	DV0120L0004-00	9
BRA0063	DA9401L0027-00	10
BRA0063	DA9401L0027-00	10
BRJ0174	DJK401L0288-00	3
	DJK401L0288-00	7
	DJK401L0289-00	3
	DJK401L0290-00	3
	DJK401L0291-00	3
	DJK401L0291-00	7
	DV0601L0092-00	1
	DV0601L0094-00	1
	DV0601L0106-00	1
BRJ0190	DC4501L0059-00	13
	DJK401L0288-00	1
	DJK401L0289-00	1
	DJK401L0290-00	1
	DJK401L0291-00	1
	DV7501L0047-00	1
	DV7501L0049-00	1
BRJ1286	DJE701L0030-00	26
	DJK401L0295-00	1
	DV0601L0092-00	13
	DV0601L0092-00	20
	DV0601L0094-00	13
	DV0601L0094-00	20
	DV0601L0106-00	19
	DV0601L0106-00	32
BRP0007	DJAH01L0107-00	10
	DJBC01L0126-00	24
	DJBC01L0126-00	39
	DJBC01L0126-00	41
	DJBC01L0126-00	62
	DJBC01L0126-00	80
	DJHC01L0093-00	2
	DJHC01L0093-00	4
	DJHC01L0093-00	11
	DJHC01L0093-00	13
	DJHC01L0093-00	15
	DJHC01L0093-00	23
	DJHC01L0093-00	41
	DJHC01L0093-00	61
	DJHC01L0093-00	64
	DJHC01L0093-00	68
	DJHC01L0093-00	70
	DJHC01L0093-00	99
	DJHC01L0093-00	103
	DJHC01L0093-00	107

https://truckmanualshub.com/

パーツインデックス

Parts index

PART NO.	PPC	ITEM
BRP0007	DJHC01L0111-00	9
	DJHC01L0111-00	11
	DJHC01L0111-00	22
	DJHC01L0111-00	24
	DV4601L0146-00	21
	DV4601L0162-00	26
	DV6001L0090-00	29
	DV6001L0090-00	31
	DV6001L0090-00	34
BRP0090	DPF001L0021-00	15
BRP0110	DJG301L0001-00	1
BRV0206	DV0114L0005-00	8
	DV0117L0004-00	8
	DV0118L0003-00	8
	DV0119L0004-00	8
	DV0120L0004-00	8
C4E7635	DV5001L0041-00	11
C4E7906	DPF001L0021-00	7
C4E7979	DPF001L0021-00	17
C4E9003	DPF001L0021-00	5
CAP2284	DN4801L0083-00	132
	DN4801L0083-00	132
	DN4801L0084-00	134
	DN4801L0084-00	134
CDP1373	DN4801L0083-00	46
	DN4801L0083-00	46
	DN4801L0084-00	46
	DN4801L0084-00	46
CNA0584	DJHC01L0093-00	24
	DJKX01L0052-00	37
	DJKY01L0042-00	35
	DJKZ01L0069-00	58
	DJLJ01L0022-00	26
CPJ0734	DJAH01L0107-00	8
FAJ0225	DJBC01L0126-00	11
HEN0088	DN9901L0050-00	172
HLV0082	DJLJ01L0022-00	7
KAB0604	DB1001L0023-00	10
KAB0623	DB1001L0023-00	11
KAB0804	DB0199L0088-00	5
	DB0199L0102-00	5
	DB0199L0112-00	5
KAJ1495	DN7301L0211-00	123
	DN7301L0212-00	123
	DN7301L0213-00	123

PART NO.	PPC	ITEM
KAJ1495	DN7301L0246-00	123
KAJ1500	DB1001L0023-00	22
	DH0101L0051-00	40
	DH0101L0051-00	48
	DHE001L0044-00	4
	DHE001L0044-00	13
	DJHC01L0093-00	44
	DJHC01L0111-00	5
	DRD701L0001-00	3
	DRD701L0004-00	3
	DV5001L0046-00	17
KAJ2176	DJBC01L0126-00	79
	DJHC01L0093-00	69
KAJ2177	DJK401L0288-00	9
	DJK401L0289-00	5
	DJK401L0291-00	9
KAJ2351	DJHC01L0111-00	21
KAJ2434	DAK301L0004-00	4
	DAK301L0007-00	4
KAJ3331	DAK301L0004-00	17
KAJ4772	DC4501L0047-00	9
	DC4501L0051-00	9
	DC4501L0059-00	42
KAN2771	DN7301L0211-00	125
	DN7301L0212-00	125
	DN7301L0213-00	125
	DN7301L0246-00	125
KAN3478	DN7301L0211-00	45
	DN7301L0212-00	45
	DN7301L0213-00	45
	DN7301L0246-00	45
KAR0016	DJKZ01L0069-00	86
	DRJ401L0205-00	53
	DV4601L0146-00	26
	DV4601L0162-00	37
	DV5001L0041-00	12
	DV5001L0041-00	12
	DV5001L0041-00	12
	DV5001L0041-00	12
	DV5001L0041-00	12
	DV5001L0041-00	12
	DV6001L0090-00	38
KAR0017	DAK301L0004-00	16
	DAK301L0004-00	16
	DAK301L0004-00	16

PART NO.	PPC	ITEM
KAR0017	DAK301L0007-00	16
KAR0152	DRJ401L0205-00	105
KAR0578	DRJ401L0205-00	16
KAR0921	DR0205L0044-00	11
KAR1185	DRJ401L0205-00	97
	DRJ401L0205-00	97
	DRY701L0011-00	23
	DRY701L0011-00	23
KAV0743	DV0401L0038-00	14
	DV0401L0038-00	18
KAV1627	DV9901L0073-00	3
	DV9901L0073-00	8
	DV9901L0074-00	17
	DV9901L0074-00	22
KBA0776	DA02A5L0004-00	14
	DA02A5L0004-00	14
	DA02A5L0006-00	14
	DA02A5L0006-00	14
KBA0783	DAN401L0014-00	20
	DAN401L0014-00	20
	DAN401L0014-00	45
KBA0883	DA0221L0004-00	14
	DA0221L0004-00	14
	DA0221L0006-00	14
	DA0221L0006-00	14
KBA1118	DA9401L0027-00	7
	DA9401L0027-00	7
KBA1119	DA9401L0027-00	11
	DA9401L0027-00	11
KBA1120	DA9401L0027-00	12
	DA9401L0027-00	12
KBA1121	DA9401L0027-00	14
KBB11670	DB0199L0088-00	6
	DB0199L0102-00	6
	DB0199L0112-00	6
KBB11680	DB0199L0088-00	7
	DB0199L0102-00	7
	DB0199L0112-00	7
KBB11690	DB0199L0088-00	8
	DB0199L0102-00	8
	DB0199L0112-00	8
KBH0446	DN7301L0211-00	34
	DN7301L0212-00	34
	DN7301L0213-00	34
	DN7301L0246-00	34

https://truckmanualshub.com/

パーツインデックス
Parts index

PART NO.	PPC	ITEM
KBH0921	DH0602L0031-00	2
	DH0602L0031-00	2
	DH0602L0031-00	2
	DH0602L0032-00	2
KBH0922	DH0602L0031-00	3
	DH0602L0031-00	3
	DH0602L0031-00	3
	DH0602L0032-00	3
KBH0923	DH0602L0031-00	4
	DH0602L0031-00	4
	DH0602L0031-00	4
	DH0602L0032-00	4
KBH0924	DH0602L0031-00	5
	DH0602L0031-00	5
	DH0602L0031-00	5
	DH0602L0032-00	5
KBH0929	DH0301L0031-00	47
KBH0935	DH0301L0031-00	11
	DH0301L0031-00	11
KBH0936	DH0301L0031-00	12
	DH0301L0031-00	12
KBJ10440	DJAQ01L0041-00	2
KBJ10450	DJAQ01L0041-00	3
KBJ10480	DJAQ01L0041-00	1
KBJ11860	DJKX01L0052-00	32
	DJKZ01L0069-00	53
KBJ1595	DJBV01L0039-00	8
KBJ2809	DJW001L0059-00	10
KBJ3115	DV4601L0144-00	11
	DV4601L0146-00	14
	DV4601L0146-00	14
KBN0298	DV0301L0131-00	22
	DV0301L0131-00	27
	DV0301L0132-00	22
	DV0301L0132-00	27
	DV0350L0008-00	20
	DV0350L0008-00	25
	DV0350L0009-00	24
	DV0350L0009-00	29
	DV4601L0144-00	7
	DV4601L0146-00	10
	DV4601L0161-00	7
	DV4601L0162-00	12
	DV5601L0153-00	8
	DV5601L0155-00	8

PART NO.	PPC	ITEM
KBN0298	DV5601L0168-00	7
	DV6001L0087-00	11
	DV6001L0090-00	15
KBN11490	DN7301L0211-00	175
	DN7301L0212-00	176
	DN7301L0213-00	176
	DN7301L0246-00	174
KBN11830	DN7301L0212-00	22
	DN7301L0212-00	22
	DN7301L0213-00	22
	DN7301L0213-00	22
KBN11840	DN7301L0212-00	23
	DN7301L0212-00	23
	DN7301L0213-00	23
	DN7301L0213-00	23
KBN11850	DN7301L0212-00	117
	DN7301L0212-00	117
	DN7301L0213-00	117
	DN7301L0213-00	117
KBR0111	DH0301L0031-00	24
KBR0655	DR0205L0044-00	44
KBR0659	DR0205L0044-00	45
KBR0697	DR0205L0044-00	52
KBR0722	DR0205L0044-00	51
KBR0819	DH0101L0051-00	33
KBV0764	DV4601L0161-00	5
	DV4601L0162-00	10
KBV0921	DV0350L0009-00	17
	DV0350L0009-00	17
KBV1025	DV0350L0008-00	9
	DV0350L0008-00	9
	DV0350L0009-00	9
	DV0350L0009-00	9
KBV1362	DV4601L0161-00	3
	DV4601L0162-00	3
KBV16170	DV0220L0017-00	21
	DV0220L0017-00	21
KBV16930	DV5601L0168-00	5
KBV17160	DV0601L0106-00	11
	DV0601L0106-00	24
KBV18060	DV4601L0162-00	29
KBV18070	DV4601L0162-00	33
KEA0337	DA8901L0028-00	7
KEH0114	DH0101L0051-00	18
	DH0201L0031-00	11

PART NO.	PPC	ITEM
KEH0114	DH0201L0031-00	11
	DH0201L0031-00	11
	DH0201L0031-00	11
	DJBC01L0126-00	7
	DJBC01L0126-00	27
	DJL901L0070-00	14
	DN9901L0050-00	88
	DN9901L0052-00	85
	DN9901L0058-00	83
	DN9901L0058-00	83
	DRV001L0015-00	11
	DV7501L0047-00	5
	DV7501L0047-00	5
	DV7501L0049-00	5
	DV7501L0049-00	5
KEH0117	DN7301L0211-00	82
	DN7301L0212-00	82
	DN7301L0213-00	82
	DN7301L0246-00	82
KEJ0329	DR0205L0044-00	53
	DR0205L0044-00	53
KEJ0330	DPF001L0021-00	13
KEJ0331	DRY701L0011-00	8
KEJ0335	DJEE01L0064-00	6
	DJEE01L0064-00	17
	DJEE01L0064-00	19
	DJEE01L0064-00	28
KEJ0337	DH0602L0031-00	27
	DH0602L0032-00	22
KEJ0338	DH0602L0031-00	22
	DH0602L0031-00	26
	DH0602L0032-00	17
	DH0602L0032-00	21
KEJ0339	DJW001L0059-00	7
KHA0003	DAN401L0014-00	49
KHA0026	DA9401L0027-00	15
KHA0033	DAN401L0014-00	50
KHA0043	DA0221L0004-00	17
	DA0221L0006-00	17
KHA0044	DA02A5L0004-00	17
	DA02A5L0006-00	17
KHA10100	DA9401L0027-00	9
	DA9401L0027-00	9
KHA10130	DA8901L0028-00	6
KHB0031	DB0199L0088-00	9

https://truckmanualshub.com/

パーツインデックス

Parts index

PART NO.	PPC	ITEM
KHB0031	DB0199L0088-00	9
	DB0199L0102-00	9
	DB0199L0112-00	9
	DB0199L0112-00	9
KHB0321	DB0199L0088-00	9
	DB0199L0088-00	9
	DB0199L0102-00	9
	DB0199L0112-00	9
	DB0199L0112-00	9
KHB10390	DB0199L0088-00	3
	DB0199L0102-00	3
	DB0199L0112-00	3
KHH0006	DH0301L0031-00	16
KHH0024	DH0602L0031-00	10
	DH0602L0032-00	10
KHH0040	DH8101L0022-00	11
	DJE701L0030-00	8
KHH0137	DH8101L0022-00	12
	DJE701L0030-00	9
KHH0138	DH0301L0031-00	23
KHH0140	DH8101L0022-00	3
KHH0142	DH0301L0031-00	29
	DHE001L0044-00	41
	DJBC01L0126-00	58
	DJBC01L0126-00	104
	DJHC01L0093-00	51
	DJHC01L0093-00	97
	DJHC01L0093-00	131
	DJHC01L0101-00	8
	DJHC01L0111-00	25
	DJK401L0289-00	12
	DJK401L0289-00	16
	DJK401L0290-00	9
	DJK401L0290-00	13
	DJK401L0291-00	16
	DJK401L0291-00	20
	DJK401L0292-00	5
	DJK401L0292-00	9
	DJKX01L0052-00	51
	DJKY01L0042-00	46
	DJKZ01L0069-00	100
	DJLJ01L0022-00	4
	DJLJ01L0022-00	23
	DJLJ01L0022-00	38
	DR0103L0008-00	9

PART NO.	PPC	ITEM
KHH0142	DR0205L0044-00	60
	DR0205L0044-00	60
	DR0205L0044-00	60
	DR0205L0044-00	60
	DR1801L0023-00	5
	DR5001L0020-00	3
	DRJ401L0204-00	10
	DRJ401L0204-00	17
	DRJ401L0204-00	30
	DRJ401L0204-00	30
	DRJ401L0204-00	30
	DRJ401L0204-00	32
	DRJ401L0204-00	32
	DRJ401L0204-00	51
	DRJ401L0205-00	8
	DRJ401L0205-00	14
	DRJ401L0205-00	23
	DRJ401L0205-00	27
	DRJ401L0205-00	33
	DRJ401L0205-00	58
	DRJ401L0205-00	62
	DRJ401L0205-00	104
	DRJ401L0205-00	109
	DRJ401L0205-00	114
	DRJ401L0230-00	10
	DRJ401L0230-00	17
	DRJ401L0230-00	30
	DRJ401L0230-00	52
	DRJ401L0256-00	10
	DRJ401L0256-00	17
	DRJ401L0256-00	30
	DRJ401L0256-00	52
	DRY701L0011-00	26
KHH0143	DJBC01L0126-00	105
	DJHC01L0093-00	52
	DJHC01L0093-00	130
	DJKZ01L0069-00	101
	DJY901L0024-00	14
KHH0208	DH0201L0031-00	14
KHH0221	DH0301L0031-00	17
KHH0248	DH0301L0031-00	22
	DH0301L0031-00	25
	DH0602L0031-00	11
	DH0602L0032-00	11
KHH0249	DH0201L0031-00	15

PART NO.	PPC	ITEM
KHH0271	DH8101L0022-00	13
	DH8101L0022-00	13
KHH0295	DH8101L0022-00	4
KHH0307	DH0301L0031-00	31
KHH0308	DH0301L0031-00	32
	DH0301L0031-00	38
	DH0301L0031-00	40
KHH0350	DH0301L0031-00	8
KHH0351	DH0301L0031-00	8
	DH0301L0031-00	8
KHH0354	DH0602L0031-00	13
	DH0602L0032-00	13
KHH0358	DH0301L0031-00	49
	DH0301L0031-00	57
KHH0398	DH0301L0031-00	21
KHH0405	DHE001L0044-00	16
	DHE001L0044-00	23
	DHE001L0044-00	26
	DHE001L0044-00	29
	DHE001L0044-00	32
	DHE001L0044-00	35
	DHE001L0044-00	38
KHH0411	DH0301L0031-00	44
KHH0515	DH0101L0051-00	39
KHH0533	DH0101L0051-00	8
KHH0534	DH0101L0051-00	10
KHH0535	DH0101L0051-00	12
KHH0536	DH0101L0051-00	13
KHH10060	DH8101L0022-00	5
KHH10110	DH0101L0051-00	7
KHH10120	DH0101L0051-00	9
KHH10121	DH0101L0051-00	9
KHH10290	DHE001L0044-00	39.01
KHH10330	DH0602L0031-00	14
	DH0602L0032-00	14
KHH10460	DHE001L0044-00	5
	DHE001L0044-00	5
KHH10470	DHE001L0044-00	6
	DHE001L0044-00	6
	DHE001L0044-00	6
KHH10480	DHE001L0044-00	7
	DHE001L0044-00	7
	DHE001L0044-00	7
KHH10490	DHE001L0044-00	8
	DHE001L0044-00	8

https://truckmanualshub.com/

パーツインデックス

Parts index

PART NO.	PPC	ITEM
KHH10550	DHE001L0044-00	1
	DHE001L0044-00	1
KHH10590	DHE001L0044-00	2
	DHE001L0044-00	2
	DP5501L0058-00	3
	DP5501L0058-00	3
KHH10820	DHE001L0044-00	39
	DHE001L0044-00	39
KHH10840	DH0301L0031-00	15
KHH10860	DH0301L0031-00	18
KHH10880	DPF001L0021-00	10
KHH10970	DHE001L0044-00	39.01
	DHE001L0044-00	39.01
KHH10980	DHE001L0044-00	21
KHH11010	DHE001L0044-00	24
KHH11020	DHE001L0044-00	27
KHH11290	DHE001L0044-00	14
KHH11300	DHE001L0044-00	33
KHH11310	DHE001L0044-00	36
KHH11320	DHE001L0044-00	30
KHH11400	DH0201L0031-00	12
KHH11440	DH0201L0031-00	13
KHH11720	DHE001L0044-00	39
KHH11880	DHE001L0044-00	5
KHH11890	DHE001L0044-00	8
KHH11900	DHE001L0044-00	8.05
KHH12020	DHE001L0044-00	1
	DHE001L0044-00	1
KHH12030	DHE001L0044-00	2
	DHE001L0044-00	2
	DP5501L0058-00	3
	DP5501L0058-00	3
KHH12090	DH8101L0022-00	13
	DH8101L0022-00	13
KHH12390	DH0301L0031-00	12
	DH0301L0031-00	12
KHH12410	DH0301L0031-00	13
	DH0301L0031-00	13
KHJ0052	DR0205L0043-00	109
KHJ0091	DJ5801L0012-00	14
	DJ5801L0013-00	14
KHJ0096	DJ6201L0059-00	22
	DJ6201L0063-00	20
KHJ0183	DJ5801L0012-00	5
	DJ5801L0012-00	8
KHJ0183	DJ5801L0012-00	11
	DJ5801L0013-00	5
	DJ5801L0013-00	8
	DJ5801L0013-00	11
	DJ6201L0059-00	16
	DJ6201L0059-00	20
	DJ6201L0063-00	14
	DJ6201L0063-00	18
KHJ0185	DP0701L0020-00	2.02
	DP0701L0020-00	2.02
KHJ0299	DC4501L0059-00	24
KHJ0300	DA8901L0028-00	3
	DAN401L0014-00	21
	DAN401L0014-00	21
	DAN401L0014-00	37
	DAN701L0004-00	9
	DAN701L0004-00	9
	DAN701L0004-00	9
	DAP201L0021-00	8
	DAP201L0022-00	8
KHJ0303	DA8901L0028-00	4
KHJ0341	DJBC01L0126-00	15
	DJBC01L0126-00	34
	DJBC01L0126-00	51
	DJBC01L0126-00	59
	DJBC01L0126-00	70
	DJBC01L0126-00	75
	DJBC01L0126-00	95
	DJHC01L0093-00	36
	DJHC01L0093-00	90
	DJHC01L0093-00	90
	DJHC01L0093-00	117
	DJHC01L0093-00	121
	DJHC01L0093-00	123
	DJHC01L0111-00	12
	DJK401L0289-00	8
	DJK401L0290-00	5
	DJK401L0291-00	12
	DJKX01L0052-00	45
	DJKY01L0042-00	44
	DJKZ01L0069-00	59
	DJKZ01L0069-00	67
	DJKZ01L0069-00	91
	DJLJ01L0022-00	34
	DRD701L0001-00	10
KHJ0341	DRD701L0004-00	4
KHJ0342	DJBC01L0126-00	23
	DJBC01L0126-00	61
	DJHC01L0111-00	8
KHJ0344	DH0101L0051-00	34
	DJAH01L0107-00	1
KHJ0345	DJLJ01L0022-00	2
	DJY601L0024-00	11
KHJ0348	DJBC01L0126-00	21
	DJBC01L0126-00	83
	DJBC01L0126-00	97
	DJKZ01L0069-00	70
	DJKZ01L0069-00	89
	DJLJ01L0022-00	36
KHJ0349	DJHC01L0093-00	63
	DJHC01L0093-00	67
	DJHC01L0093-00	98
	DJHC01L0093-00	106
KHJ0350	DJAH01L0107-00	6
	DJAH01L0107-00	12
	DJLJ01L0022-00	8
KHJ0351	DJKX01L0052-00	21
	DJKX01L0052-00	24
	DJKZ01L0069-00	42
	DJKZ01L0069-00	45
KHJ0363	DC4501L0059-00	17
	DJBC01L0126-00	13
	DJEE01L0064-00	1.01
	DJHC01L0093-00	65
	DJHC01L0093-00	100
	DJK401L0288-00	5
	DJK401L0288-00	12
	DJK401L0291-00	5
	DJKX01L0052-00	38
	DJKY01L0042-00	36
	DJLJ01L0022-00	27
	DJW001L0059-00	4
KHJ0439	DJ6201L0059-00	29
	DJ6201L0063-00	27
KHJ0498	DJ6201L0059-00	30
	DJ6201L0063-00	28
KHJ0506	DJBC01L0126-00	72
KHJ0605	DJBC01L0126-00	53
KHJ0626	DJHC01L0093-00	88
KHJ0641	DJBC01L0126-00	8

https://truckmanualshub.com/

パーツインデックス
Parts index

PART NO.	PPC	ITEM
KHJ0642	DJLJ01L0022-00	10
KHJ0719	DJHC01L0093-00	71
	DJHC01L0093-00	121
	DJHC01L0093-00	121
KHJ0815	DJE701L0030-00	24
KHJ0816	DJE701L0030-00	25
KHJ0869	DJBC01L0126-00	18
	DJBC01L0126-00	73
	DJK401L0292-00	1
	DJKZ01L0069-00	75
	DJKZ01L0069-00	87
KHJ0884	DV6001L0090-00	28
	DV6001L0090-00	33
KHJ0897	DH8101L0022-00	18
	DHE001L0044-00	17
KHJ0913	DJAQ01L0029-00	5
	DJAQ01L0029-00	13
	DJAQ01L0041-00	5
	DJAQ01L0041-00	13
	DJBV01L0039-00	1
	DJP801L0039-00	4
	DJY601L0024-00	2
	DJY901L0024-00	1
	DV6001L0090-00	3
	DV6001L0090-00	9
KHJ0914	DJAQ01L0029-00	18
	DJAQ01L0041-00	18
	DJBV01L0039-00	4
	DJKX01L0052-00	2
	DJKY01L0042-00	2
	DJKY01L0042-00	25
	DJKZ01L0069-00	2
	DJKZ01L0069-00	25
	DJP801L0039-00	7
	DV4601L0146-00	3
	DV4601L0162-00	5
KHJ0915	DJHC01L0093-00	5
	DJHC01L0093-00	16
KHJ0950	DJ6201L0059-00	9
	DJ6201L0059-00	9
	DJ6201L0063-00	7
	DJ6201L0063-00	7
KHJ0984	DJE701L0030-00	22
KHJ0985	DJE701L0030-00	23
KHJ1024	DAK301L0004-00	10

PART NO.	PPC	ITEM
KHJ1024	DAK301L0007-00	10
KHJ10410	DJKZ01L0069-00	8
	DJKZ01L0069-00	8
KHJ10420	DJKZ01L0069-00	18
	DJKZ01L0069-00	18
KHJ10440	DJ6201L0059-00	2
KHJ10450	DJ5801L0012-00	1
	DJ5801L0012-00	1
	DJ5801L0013-00	1
	DJ5801L0013-00	1
KHJ10480	DJKZ01L0069-00	40
KHJ10640	DJ6201L0059-00	33
	DJ6201L0063-00	31
KHJ10681	DJ5801L0013-00	3
KHJ10691	DJ5801L0012-00	3
KHJ10701	DJ5801L0012-00	12
	DJ5801L0013-00	12
KHJ10711	DJ5801L0012-00	9
	DJ5801L0013-00	9
KHJ10721	DJ5801L0012-00	13
	DJ5801L0013-00	13
KHJ10790	DJHC01L0093-00	73
KHJ10930	DJBC01L0126-00	1
KHJ10940	DJBC01L0126-00	2
KHJ10950	DJBC01L0126-00	3
	DP5501L0058-00	2
KHJ1104	DJ5801L0012-00	4
	DJ5801L0013-00	4
	DJ6201L0059-00	19
	DJ6201L0063-00	17
KHJ11060	DJY901L0024-00	12
KHJ11090	DR0205L0044-00	56
KHJ11100	DJ6201L0059-00	3
KHJ11110	DJ6201L0059-00	4
KHJ11120	DJW001L0059-00	6
KHJ11140	DJAH01L0107-00	11
KHJ11170	DJBC01L0126-00	87
KHJ11180	DJBC01L0126-00	89
KHJ11370	DJKY01L0042-00	21
	DJKZ01L0069-00	21
KHJ11380	DJL901L0069-00	10
	DJL901L0069-00	10
	DJL901L0070-00	10
	DJL901L0070-00	10
KHJ11480	DJKZ01L0069-00	82

PART NO.	PPC	ITEM
KHJ11500	DJKZ01L0069-00	83
	DJLJ01L0022-00	31
KHJ11510	DJKZ01L0069-00	72
KHJ11520	DJHC01L0093-00	34
	DJHC01L0093-00	35
KHJ11530	DJBC01L0126-00	49
	DJHC01L0093-00	110
KHJ11540	DJHC01L0093-00	79
KHJ11550	DJHC01L0101-00	3
KHJ11560	DJHC01L0093-00	116
	DJHC01L0101-00	1
KHJ1157	DJAH01L0107-00	9
KHJ11570	DJHC01L0093-00	80
KHJ11580	DJHC01L0093-00	113
KHJ11590	DJHC01L0093-00	77
KHJ11600	DJHC01L0093-00	112
KHJ11610	DJHC01L0093-00	7
	DJHC01L0093-00	7
	DJHC01L0093-00	7
	DJHC01L0093-00	7
KHJ11620	DJHC01L0093-00	18
	DJHC01L0093-00	18
	DJHC01L0093-00	18
	DJHC01L0093-00	18
KHJ11730	DRD701L0001-00	1
	DRD701L0004-00	1
KHJ1178	DAK301L0004-00	9
	DAK301L0007-00	9
	DJKX01L0052-00	44
	DJKY01L0042-00	43
	DJKZ01L0069-00	69
KHJ1213	DR0205L0044-00	31
	DRD701L0004-00	16
	DRD701L0004-00	16
	DRD701L0004-00	16
	DRJ401L0204-00	32.02
	DRJ401L0204-00	54
	DRJ401L0205-00	4
	DRJ401L0205-00	12
	DRJ401L0205-00	19
	DRJ401L0205-00	35
	DRJ401L0205-00	40
	DRJ401L0205-00	45
	DRJ401L0205-00	45
	DRJ401L0205-00	54

https://truckmanualshub.com/

パーツインデックス

Parts index

PART NO.	PPC	ITEM
KHJ1213	DRJ401L0205-00	60
	DRJ401L0205-00	64
	DRJ401L0205-00	80
	DRJ401L0205-00	85
	DRJ401L0205-00	98
	DRJ401L0205-00	100
	DRJ401L0205-00	102
	DRJ401L0230-00	32
	DRJ401L0230-00	56
	DRJ401L0256-00	32
	DRJ401L0256-00	56
KHJ1214	DH0301L0031-00	10
	DH0301L0031-00	10
KHJ1215	DC4501L0047-00	8
	DC4501L0051-00	8
	DC4501L0059-00	41
	DH0301L0031-00	10
	DH0301L0031-00	10
	DH0301L0031-00	27
	DHE001L0044-00	20
	DHE001L0044-00	44
	DJBC01L0126-00	57
	DJBC01L0126-00	102
	DJHC01L0093-00	94
	DJHC01L0093-00	129
	DJKZ01L0069-00	98
	DR0205L0044-00	55
	DR0205L0044-00	57
	DR0205L0044-00	59
	DRD701L0004-00	18
	DRJ401L0205-00	6
	DRJ401L0205-00	21
	DRJ401L0205-00	29
	DRJ401L0205-00	29
	DRJ401L0205-00	45
	DRJ401L0205-00	45
	DRJ401L0205-00	50
	DRJ401L0205-00	56
	DRJ401L0205-00	66
	DRJ401L0205-00	82
	DRJ401L0205-00	94
	DRY701L0011-00	24
KHJ1220	DJHC01L0093-00	45
KHJ12230	DJLJ01L0022-00	30
KHJ1231	DJBC01L0126-00	93

PART NO.	PPC	ITEM
KHJ1235	DV4601L0162-00	35.02
KHJ12370	DJBC01L0126-00	94
KHJ12660	DJ6201L0059-00	34
	DJ6201L0063-00	32
KHJ1276	DV4601L0146-00	24
	DV4601L0146-00	24
	DV4601L0146-00	25
KHJ12900	DJ6201L0063-00	2
KHJ1306	DJBC01L0126-00	10
KHJ13270	DJ6201L0059-00	24
	DJ6201L0059-00	24
	DJ6201L0063-00	22
	DJ6201L0063-00	22
KHJ1348	DV5601L0153-00	9
	DV5601L0153-00	9
	DV5601L0155-00	9
	DV5601L0155-00	9
	DV5601L0168-00	19.01
KHJ1349	DJKX01L0052-00	6
	DJKX01L0052-00	11
	DJKX01L0052-00	16
	DJKY01L0042-00	6
	DJKY01L0042-00	11
	DJKY01L0042-00	16
	DJKZ01L0069-00	6
	DJKZ01L0069-00	11
	DJKZ01L0069-00	16
	DV0601L0092-00	6
	DV0601L0094-00	6
	DV0601L0106-00	6
KHJ13560	DJ6201L0059-00	37
	DJ6201L0059-00	37
	DJ6201L0063-00	35
	DJ6201L0063-00	35
KHJ13580	DJ6201L0059-00	35
	DJ6201L0063-00	33
KHJ13590	DJ6201L0059-00	36
	DJ6201L0063-00	34
KHJ1360	DJAQ01L0029-00	7
	DJAQ01L0029-00	15
	DJAQ01L0041-00	7
	DJAQ01L0041-00	15
	DJBV01L0039-00	15
	DJKZ01L0069-00	37
	DJKZ01L0069-00	39

PART NO.	PPC	ITEM
KHJ1360	DV4601L0144-00	9
	DV4601L0146-00	12
	DV4601L0161-00	9
	DV4601L0162-00	14
	DV5601L0153-00	11
	DV5601L0153-00	13
	DV5601L0153-00	19
	DV5601L0155-00	11
	DV5601L0155-00	13
	DV5601L0155-00	19
	DV5601L0168-00	9
	DV5601L0168-00	11
	DV5601L0168-00	13
	DV5601L0168-00	15
	DV5601L0168-00	20
	DV5601L0168-00	22
	DV5601L0168-00	24
	DV5601L0168-00	26
KHJ1361	DJAQ01L0029-00	20
	DJAQ01L0041-00	20
	DJKX01L0052-00	5
	DJKX01L0052-00	13
	DJKX01L0052-00	15
	DJKY01L0042-00	5
	DJKY01L0042-00	13
	DJKY01L0042-00	15
	DJKY01L0042-00	23
	DJKZ01L0069-00	5
	DJKZ01L0069-00	13
	DJKZ01L0069-00	15
	DJKZ01L0069-00	23
	DV0601L0092-00	12
	DV0601L0092-00	19
	DV0601L0094-00	12
	DV0601L0094-00	19
	DV0601L0106-00	16
	DV0601L0106-00	29
	DV4601L0144-00	12
	DV4601L0146-00	15
	DV4601L0161-00	15
	DV4601L0162-00	21
	DV5601L0153-00	11
	DV5601L0153-00	11
	DV5601L0153-00	17
	DV5601L0155-00	11

https://truckmanualshub.com/

パーツインデックス

Parts index

PART NO.	PPC	ITEM
KHJ1361	DV5601L0155-00	11
	DV5601L0155-00	17
KHJ1367	DV4601L0146-00	24
KHJ1375	DJ6201L0059-00	8
	DJ6201L0059-00	8
	DJ6201L0063-00	6
	DJ6201L0063-00	6
KHJ13750	DJHC01L0093-00	53
KHJ13760	DJHC01L0093-00	47
KHJ13770	DJHC01L0093-00	46
KHJ13790	DJHC01L0093-00	62
	DJHC01L0111-00	19
KHJ13810	DJHC01L0093-00	8.02
	DJHC01L0093-00	8.02
	DJHC01L0093-00	20.02
	DJHC01L0093-00	20.02
KHJ1382	DJKZ01L0069-00	77
KHJ13830	DJ6201L0059-00	14
	DJ6201L0063-00	12
KHJ13840	DJ6201L0059-00	13
	DJ6201L0063-00	11
KHJ13850	DJ5801L0012-00	6
	DJ5801L0013-00	6
KHJ13860	DJM101L0048-00	2
	DJM101L0049-00	2
KHJ1387	DJHC01L0093-00	92
KHJ13910	DJ6201L0059-00	38
	DJ6201L0063-00	36
KHJ1399	DJHC01L0093-00	120
	DJHC01L0093-00	120
KHJ1402	DJHC01L0093-00	1
	DJHC01L0093-00	12
KHJ1406	DJHC01L0101-00	6
KHJ14080	DJ6201L0059-00	1
	DJ6201L0063-00	1
KHJ1435	DV6001L0090-00	36
	DV6001L0090-00	37
KHJ14430	DJ6201L0059-00	17
	DJ6201L0063-00	15
KHJ14440	DJ6201L0059-00	18
	DJ6201L0063-00	16
KHJ1445	DJHC01L0093-00	102
KHJ14450	DJ6201L0059-00	27
	DJ6201L0063-00	25
KHJ14460	DJ6201L0059-00	28

PART NO.	PPC	ITEM
KHJ14460	DJ6201L0063-00	26
KHJ14470	DJ6201L0059-00	32
	DJ6201L0063-00	30
KHJ14520	DJBC01L0126-00	25
	DJBC01L0126-00	25
KHJ14550	DJM101L0048-00	4
	DJM101L0049-00	4
	DJM101L0050-00	2
KHJ14560	DJM101L0048-00	5
	DJM101L0049-00	5
	DJM101L0050-00	3
KHJ14570	DJ6201L0059-00	10
	DJ6201L0063-00	8
KHJ14580	DR0205L0043-00	111
KHJ14620	DJK401L0288-00	14
	DJK401L0288-00	14
	DRJ401L0230-00	53
	DRJ401L0256-00	53
	DRJ401L0256-00	53
	DRX401L0001-00	2
KHJ14640	DJK401L0289-00	19
	DJK401L0289-00	19
	DJK401L0290-00	16
	DJK401L0290-00	16
	DJK401L0291-00	23
	DJK401L0292-00	12
	DJK401L0292-00	12
KHJ14780	DJKZ01L0069-00	73
	DJKZ01L0069-00	73
KHJ14900	DJBC01L0126-00	47
KHJ1491	DJE701L0030-00	15
	DJE701L0030-00	15
KHJ14910	DJBC01L0126-00	50
KHJ1492	DJE701L0030-00	18
	DJE701L0030-00	18
	DJE701L0030-00	18
	DJE701L0030-00	18
KHJ14920	DJBC01L0126-00	44
KHJ14930	DC4501L0047-00	10
	DC4501L0051-00	10
	DC4501L0059-00	43
KHJ14960	DJBC01L0126-00	28
KHJ14970	DJBC01L0126-00	30
KHJ14980	DJM101L0048-00	1
	DJM101L0050-00	1

PART NO.	PPC	ITEM
KHJ15010	DJM101L0049-00	1
KHJ15050	DJKX01L0052-00	8
	DJKX01L0052-00	8
KHJ15060	DJK401L0288-00	16
	DJK401L0289-00	21
	DJK401L0290-00	17
	DJK401L0291-00	25
	DJK401L0292-00	13
KHJ15070	DJK401L0288-00	18
	DJK401L0288-00	18
KHJ15080	DJK401L0288-00	17
	DJK401L0289-00	22
	DJK401L0290-00	18
	DJK401L0291-00	26
	DJK401L0292-00	14
KHJ15090	DJL901L0070-00	13
	DJL901L0070-00	13
KHJ15120	DRD701L0001-00	9
KHJ15490	DJHC01L0093-00	109
KHJ1584	DJHC01L0093-00	104
	DV6001L0090-00	26
KHJ15840	DV5601L0153-00	9
	DV5601L0153-00	9
	DV5601L0153-00	15
	DV5601L0155-00	9
	DV5601L0155-00	9
	DV5601L0155-00	15
KHJ15850	DJKX01L0052-00	8.01
	DJKZ01L0069-00	8.01
KHJ1632	DN9901L0050-00	93
	DN9901L0052-00	90
	DN9901L0058-00	88
	DN9901L0058-00	88
KHJ16390	DJHC01L0111-00	17
KHJ1694	DV4601L0162-00	34
	DV4601L0162-00	35
KHJ1715	DV4601L0162-00	30
	DV4601L0162-00	31
KHJ17480	DV4601L0162-00	30
	DV4601L0162-00	31
KHJ1765	DV5601L0153-00	9
	DV5601L0153-00	9
	DV5601L0155-00	9
	DV5601L0155-00	9
KHJ1778	DJLJ01L0022-00	12

https://truckmanualshub.com/

パーツインデックス

Parts index

PART NO.	PPC	ITEM
KHJ1804	DJKZ01L0069-00	35
KHJ18060	DJ6201L0059-00	8
	DJ6201L0059-00	8
	DJ6201L0063-00	6
KHJ18070	DJ6201L0059-00	8.01
	DJ6201L0059-00	8.01
	DJ6201L0063-00	6.01
KHJ18080	DJ6201L0059-00	9
	DJ6201L0059-00	9
	DJ6201L0063-00	7
KHJ18180	DJL901L0069-00	10
	DJL901L0069-00	10
	DJL901L0070-00	10
	DJL901L0070-00	10
KHJ1820	DJ5801L0012-00	7
	DJ5801L0013-00	7
	DJ6201L0059-00	15
	DJ6201L0063-00	13
KHJ18610	DJHC01L0093-00	7
	DJHC01L0093-00	7
KHJ18630	DJHC01L0093-00	18
	DJHC01L0093-00	18
KHJ18640	DJHC01L0093-00	8.01
	DJHC01L0093-00	8.01
KHJ18770	DJHC01L0093-00	20.01
	DJHC01L0093-00	20.01
KHJ19270	DJ6201L0059-00	11
	DJ6201L0059-00	11
	DJ6201L0063-00	9
	DJ6201L0063-00	9
KHJ1939	DV7501L0047-00	6
	DV7501L0049-00	6
KHJ2036	DJBC01L0126-00	17
KHJ2047	DJKZ01L0069-00	81
KHJ2049	DJKZ01L0069-00	96
KHJ2050	DJKX01L0052-00	42
	DJKX01L0052-00	43
	DJKY01L0042-00	41
	DJKY01L0042-00	42
KHJ2054	DJHC01L0093-00	111
KHJ2068	DV5001L0041-00	8
KHJ2069	DV5001L0041-00	9
KHJ2084	DJHC01L0093-00	119
KHJ2085	DJKZ01L0069-00	65
KHJ2086	DJKZ01L0069-00	84

PART NO.	PPC	ITEM
KHJ2087	DJKZ01L0069-00	94
KHJ2088	DJLJ01L0022-00	32
	DJLJ01L0022-00	33
KHJ2090	DJKZ01L0069-00	95
KHJ2097	DJBC01L0126-00	45
KHJ2106	DJBC01L0126-00	86
KHJ2107	DJBC01L0126-00	48
KHJ2130	DJHC01L0111-00	20
KHJ2148	DJBC01L0126-00	43
KHJ2149	DJHC01L0111-00	15
KHJ2165	DJHC01L0093-00	31
	DJKX01L0052-00	41
	DJKY01L0042-00	39
	DJKY01L0042-00	40
	DJKZ01L0069-00	62
	DJKZ01L0069-00	63
KHJ2166	DJBC01L0126-00	46
KHJ2169	DJHC01L0111-00	16
KHJ2174	DV5001L0041-00	10
KHJ2179	DJHC01L0111-00	18
KHJ2181	DJBC01L0126-00	90
KHJ2194	DJKZ01L0069-00	66
KHJ2199	DJHC01L0093-00	29
	DJHC01L0093-00	30
KHJ2238	DRD701L0004-00	7
KHJ2244	DJBC01L0126-00	91
	DJKZ01L0069-00	64
KHJ2248	DJHC01L0093-00	28
KHJ2249	DJHC01L0093-00	32
	DJHC01L0093-00	33
	DJK401L0288-00	11
	DJK401L0289-00	7
	DJK401L0291-00	11
KHJ2255	DJBC01L0126-00	69
KHJ2291	DRD701L0004-00	8
KHJ2292	DRD701L0001-00	8
KHJ2293	DJHC01L0101-00	7
KHJ2298	DRJ401L0205-00	31
	DRJ401L0205-00	31
	DRJ401L0205-00	74
KHJ2309	DJKX01L0052-00	48
KHJ2318	DJHC01L0093-00	78
KHJ2320	DRY701L0011-00	7
KHJ2322	DJE701L0030-00	15
	DJE701L0030-00	15

PART NO.	PPC	ITEM
KHJ2327	DJHC01L0093-00	81
KHJ2342	DJBC01L0126-00	20
KHJ2350	DJHC01L0093-00	127
KHJ2359	DJBC01L0126-00	4
KHJ2625	DJBC01L0126-00	68
KHJ2656	DJL901L0069-00	3
	DJL901L0070-00	3
KHJ2680	DJKX01L0052-00	33
	DJKZ01L0069-00	54
KHJ2773	DJHC01L0093-00	90
	DJHC01L0093-00	90
	DJKX01L0052-00	49
	DRD701L0001-00	12
	DRD701L0004-00	11
KHJ2805	DJHC01L0101-00	5
KHJ2896	DJ6201L0059-00	21
	DJ6201L0063-00	19
KHJ2897	DJ6201L0059-00	23
	DJ6201L0063-00	21
KHN0154	DHE001L0044-00	10
KHN0243	DJ6201L0059-00	5
	DJ6201L0063-00	3
KHN0296	DJEE01L0064-00	13
	DJEE01L0064-00	24
	DN4801L0083-00	248
	DN4801L0084-00	259
	DR0205L0044-00	14
	DRJ401L0205-00	73
	DV0601L0092-00	5
	DV0601L0094-00	5
	DV0601L0106-00	5
	DV9901L0072-00	11
	DV9901L0072-00	14
	DV9901L0072-00	20
	DV9901L0073-00	5
	DV9901L0073-00	10
	DV9901L0073-00	20
	DV9901L0073-00	23
	DV9901L0073-00	29
	DV9901L0074-00	19
	DV9901L0074-00	24
	DV9901L0074-00	34
	DV9901L0074-00	37
	DV9901L0074-00	43
	DV9901L0075-00	25

https://truckmanualshub.com/

パーツインデックス
Parts index

PART NO.	PPC	ITEM
KHN0296	DV9901L0075-00	28
	DV9901L0075-00	34
KHN0297	DH0101L0051-00	26
	DN0501L0005-00	4
	DV0220L0016-00	20
	DV0220L0017-00	26
	DV9901L0072-00	4
	DV9901L0072-00	8
	DV9901L0072-00	17
	DV9901L0073-00	14
	DV9901L0073-00	17
	DV9901L0073-00	26
	DV9901L0074-00	2
	DV9901L0074-00	7
	DV9901L0074-00	11
	DV9901L0074-00	13
	DV9901L0074-00	28
	DV9901L0074-00	31
	DV9901L0074-00	40
	DV9901L0075-00	2
	DV9901L0075-00	7
	DV9901L0075-00	11
	DV9901L0075-00	13
	DV9901L0075-00	18
	DV9901L0075-00	22
	DV9901L0075-00	31
KHN0418	DN9901L0050-00	16
	DN9901L0050-00	16
	DN9901L0050-00	97
	DN9901L0050-00	97
	DN9901L0050-00	160
	DN9901L0050-00	160
KHN0420	DJ5801L0012-00	15
	DJ5801L0013-00	15
	DN9901L0050-00	17
	DN9901L0050-00	17
	DN9901L0050-00	98
	DN9901L0050-00	98
	DN9901L0050-00	161
	DN9901L0050-00	161
KHN0482	DN9901L0050-00	87
	DN9901L0052-00	84
	DN9901L0058-00	82
	DN9901L0058-00	82
KHN0863	DN7301L0211-00	35

PART NO.	PPC	ITEM
KHN0863	DN7301L0212-00	35
	DN7301L0213-00	35
	DN7301L0246-00	35
KHN10500	DN9901L0050-00	1
KHN10570	DN9901L0050-00	158
	DN9901L0050-00	158
KHN10740	DN9901L0050-00	54
	DN9901L0050-00	69
	DN9901L0052-00	51
	DN9901L0052-00	66
	DN9901L0058-00	49
	DN9901L0058-00	49
	DN9901L0058-00	64
	DN9901L0058-00	64
KHN1079	DH0301L0031-00	36
	DH0301L0031-00	42
	DH0602L0031-00	8
	DH0602L0031-00	18
	DH0602L0031-00	24
	DH0602L0032-00	8
	DH0602L0032-00	19
	DH0602L0032-00	28
	DJKX01L0052-00	34
	DJKZ01L0069-00	55
	DJP801L0039-00	10
	DN7301L0211-00	26
	DN7301L0211-00	49
	DN7301L0211-00	50
	DN7301L0211-00	51
	DN7301L0211-00	55
	DN7301L0211-00	56
	DN7301L0211-00	57
	DN7301L0211-00	64
	DN7301L0211-00	66
	DN7301L0211-00	72
	DN7301L0211-00	93
	DN7301L0211-00	95
	DN7301L0211-00	99
	DN7301L0211-00	101
	DN7301L0211-00	104
	DN7301L0211-00	106
	DN7301L0211-00	108
	DN7301L0211-00	113
	DN7301L0211-00	115
	DN7301L0211-00	116

PART NO.	PPC	ITEM
KHN1079	DN7301L0211-00	118
	DN7301L0211-00	120
	DN7301L0211-00	135
	DN7301L0211-00	137
	DN7301L0211-00	140
	DN7301L0211-00	147
	DN7301L0212-00	26
	DN7301L0212-00	49
	DN7301L0212-00	50
	DN7301L0212-00	51
	DN7301L0212-00	55
	DN7301L0212-00	56
	DN7301L0212-00	57
	DN7301L0212-00	64
	DN7301L0212-00	66
	DN7301L0212-00	72
	DN7301L0212-00	93
	DN7301L0212-00	95
	DN7301L0212-00	99
	DN7301L0212-00	101
	DN7301L0212-00	104
	DN7301L0212-00	106
	DN7301L0212-00	108
	DN7301L0212-00	113
	DN7301L0212-00	115
	DN7301L0212-00	116
	DN7301L0212-00	118
	DN7301L0212-00	120
	DN7301L0212-00	135
	DN7301L0212-00	137
	DN7301L0212-00	140
	DN7301L0212-00	147
	DN7301L0213-00	26
	DN7301L0213-00	49
	DN7301L0213-00	50
	DN7301L0213-00	51
	DN7301L0213-00	55
	DN7301L0213-00	56
	DN7301L0213-00	57
	DN7301L0213-00	64
	DN7301L0213-00	66
	DN7301L0213-00	72
	DN7301L0213-00	93
	DN7301L0213-00	95
	DN7301L0213-00	99

https://truckmanualshub.com/

パーツインデックス
Parts index

PART NO.	PPC	ITEM
KHN1079	DN7301L0213-00	101
	DN7301L0213-00	104
	DN7301L0213-00	106
	DN7301L0213-00	108
	DN7301L0213-00	113
	DN7301L0213-00	115
	DN7301L0213-00	116
	DN7301L0213-00	118
	DN7301L0213-00	120
	DN7301L0213-00	135
	DN7301L0213-00	137
	DN7301L0213-00	140
	DN7301L0213-00	147
	DN7301L0246-00	26
	DN7301L0246-00	49
	DN7301L0246-00	50
	DN7301L0246-00	51
	DN7301L0246-00	55
	DN7301L0246-00	56
	DN7301L0246-00	57
	DN7301L0246-00	64
	DN7301L0246-00	66
	DN7301L0246-00	72
	DN7301L0246-00	93
	DN7301L0246-00	95
	DN7301L0246-00	99
	DN7301L0246-00	101
	DN7301L0246-00	104
	DN7301L0246-00	106
	DN7301L0246-00	108
	DN7301L0246-00	113
	DN7301L0246-00	115
	DN7301L0246-00	116
	DN7301L0246-00	118
	DN7301L0246-00	120
	DN7301L0246-00	134
	DN7301L0246-00	136
	DN7301L0246-00	139
	DN7301L0246-00	146
	DRJ401L0205-00	43
KHN1080	DN7301L0211-00	63
	DN7301L0212-00	63
	DN7301L0213-00	63
	DN7301L0246-00	63
KHN10940	DN7301L0211-00	152

PART NO.	PPC	ITEM
KHN10940	DN7301L0212-00	152
	DN7301L0213-00	152
	DN7301L0246-00	151
KHN11170	DN9901L0050-00	2
KHN11180	DN9901L0050-00	3
KHN11190	DN9901L0050-00	4
KHN11250	DJG201L0073-00	3
	DJG201L0073-00	3
	DJG201L0074-00	3
	DJG201L0074-00	3
KHN11510	DRJ401L0205-00	107
KHN11720	DN9901L0050-00	15
	DN9901L0052-00	34
	DN9901L0058-00	30
KHN11900	DNC701L0002-00	2
KHN11920	DNC701L0002-00	7
KHN11930	DN4801L0083-00	249
	DN4801L0084-00	260
KHN11940	DN7301L0211-00	24
	DN7301L0212-00	24
	DN7301L0213-00	24
	DN7301L0246-00	24
KHN12020	DN7301L0211-00	148
	DN7301L0211-00	149
	DN7301L0211-00	150
	DN7301L0211-00	151
	DN7301L0212-00	148
	DN7301L0212-00	149
	DN7301L0212-00	150
	DN7301L0212-00	151
	DN7301L0213-00	148
	DN7301L0213-00	149
	DN7301L0213-00	150
	DN7301L0213-00	151
	DN7301L0246-00	147
	DN7301L0246-00	148
	DN7301L0246-00	149
	DN7301L0246-00	150
KHN12050	DN4801L0083-00	210
	DN4801L0084-00	221
KHN12060	DN4801L0083-00	213
	DN4801L0084-00	224
KHN12080	DN4801L0083-00	251
	DN4801L0083-00	251
	DN4801L0084-00	262

PART NO.	PPC	ITEM
KHN12080	DN4801L0084-00	262
	DRCB01L0001-00	1.04
KHN12090	DN4801L0083-00	219
	DN4801L0084-00	230
KHN12110	DN4801L0083-00	221
	DN4801L0084-00	232
KHN12130	DN4801L0083-00	216
	DN4801L0084-00	227
KHN12140	DRCB01L0001-00	1.07
	DRCB01L0001-00	7
	DRCB01L0001-00	7
KHN12160	DRCB01L0001-00	2
	DRCB01L0001-00	2
KHN12170	DRCB01L0001-00	3
	DRCB01L0001-00	3
KHN12180	DRCB01L0001-00	1.08
	DRCB01L0001-00	8
	DRCB01L0001-00	8
KHN12190	DN9901L0050-00	118
	DN9901L0050-00	118
	DRCB01L0001-00	1.05
KHN12200	DN9901L0050-00	18
	DN9901L0050-00	18
KHN12201	DN9901L0050-00	18
	DN9901L0050-00	18
KHN12210	DN9901L0052-00	38
	DN9901L0052-00	38
	DN9901L0058-00	34
	DN9901L0058-00	34
KHN12211	DN9901L0052-00	38
	DN9901L0052-00	38
	DN9901L0058-00	34
	DN9901L0058-00	34
KHN12220	DN9901L0050-00	122
	DN9901L0052-00	112
	DN9901L0058-00	110
KHN12240	DN9901L0050-00	138
	DN9901L0052-00	128
	DN9901L0058-00	126
KHN12260	DN9901L0050-00	133
	DN9901L0052-00	123
	DN9901L0058-00	121
KHN12280	DN9901L0050-00	141
	DN9901L0052-00	131
	DN9901L0058-00	129

https://truckmanualshub.com/

パーツインデックス

Parts index

PART NO.	PPC	ITEM
KHN12300	DN9901L0050-00	134
	DN9901L0052-00	124
	DN9901L0058-00	122
KHN12320	DN9901L0050-00	135
	DN9901L0052-00	125
	DN9901L0058-00	123
KHN12340	DN9901L0050-00	142
	DN9901L0052-00	132
	DN9901L0058-00	130
KHN12360	DN9901L0050-00	145
	DN9901L0052-00	135
	DN9901L0058-00	133
KHN12370	DN9901L0050-00	146
	DN9901L0052-00	136
	DN9901L0058-00	134
KHN12380	DN9901L0050-00	147
	DN9901L0050-00	147
	DN9901L0050-00	148
	DN9901L0052-00	138
	DN9901L0058-00	136
KHN12400	DN9901L0050-00	152
	DN9901L0052-00	142
	DN9901L0058-00	140
KHN12560	DN7301L0211-00	12
	DN7301L0211-00	14
	DN7301L0211-00	17
	DN7301L0212-00	12
	DN7301L0212-00	14
	DN7301L0212-00	17
	DN7301L0213-00	12
	DN7301L0213-00	14
	DN7301L0213-00	17
	DN7301L0246-00	12
	DN7301L0246-00	14
	DN7301L0246-00	17
KHN12660	DN7301L0211-00	25
	DN7301L0212-00	25
	DN7301L0213-00	25
	DN7301L0246-00	25
KHN12670	DN7301L0211-00	65
	DN7301L0212-00	65
	DN7301L0213-00	65
	DN7301L0246-00	65
KHN12680B1	DN7301L0211-00	144
	DN7301L0211-00	144

PART NO.	PPC	ITEM
KHN12680B1	DN7301L0212-00	144
	DN7301L0212-00	144
	DN7301L0213-00	144
	DN7301L0213-00	144
	DN7301L0246-00	143
	DN7301L0246-00	143
KHN12681B1	DN7301L0211-00	144
	DN7301L0211-00	144
	DN7301L0212-00	144
	DN7301L0212-00	144
	DN7301L0213-00	144
	DN7301L0213-00	144
	DN7301L0246-00	143
	DN7301L0246-00	143
KHN12690	DN7301L0211-00	145
	DN7301L0212-00	145
	DN7301L0213-00	145
	DN7301L0246-00	144
KHN12700	DN7301L0211-00	146
	DN7301L0212-00	146
	DN7301L0213-00	146
	DN7301L0246-00	145
KHN12710Y1	DN7301L0211-00	138
	DN7301L0212-00	138
	DN7301L0213-00	138
	DN7301L0246-00	137
KHN12720	DN7301L0211-00	139
	DN7301L0212-00	139
	DN7301L0213-00	139
	DN7301L0246-00	138
KHN12730	DN7301L0211-00	128
	DN7301L0212-00	128
	DN7301L0213-00	128
	DN7301L0246-00	127
KHN12740	DN7301L0211-00	130
	DN7301L0212-00	130
	DN7301L0213-00	130
	DN7301L0246-00	129
KHN12750	DN7301L0211-00	127
	DN7301L0212-00	127
	DN7301L0213-00	127
	DN7301L0246-00	126
KHN12760	DN7301L0211-00	96
	DN7301L0212-00	96
	DN7301L0213-00	96

PART NO.	PPC	ITEM
KHN12760	DN7301L0246-00	96
KHN12880	DN4801L0083-00	222
	DN4801L0084-00	233
KHN12940	DRCB01L0001-00	1.06
	DRCB01L0001-00	6
	DRCB01L0001-00	6
KHN12950	DRCB01L0001-00	1
	DRCB01L0001-00	1
KHN12951	DRCB01L0001-00	1
	DRCB01L0001-00	1
	DRCB01L0001-00	1.15
KHN13131	DN9901L0050-00	51
	DN9901L0052-00	48
	DN9901L0058-00	46
	DN9901L0058-00	46
KHN13141	DN9901L0050-00	66
	DN9901L0052-00	63
	DN9901L0058-00	61
	DN9901L0058-00	61
KHN13151	DN9901L0050-00	19
	DN9901L0050-00	19
	DN9901L0052-00	39
	DN9901L0052-00	39
	DN9901L0058-00	35
	DN9901L0058-00	35
KHN13152	DN9901L0050-00	19
	DN9901L0050-00	19
	DN9901L0052-00	39
	DN9901L0052-00	39
KHN13181	DN9901L0050-00	52
	DN9901L0052-00	49
	DN9901L0058-00	47
	DN9901L0058-00	47
KHN13191	DN9901L0050-00	53
	DN9901L0052-00	50
	DN9901L0058-00	48
	DN9901L0058-00	48
KHN13201	DN9901L0050-00	60
	DN9901L0052-00	57
	DN9901L0058-00	55
	DN9901L0058-00	55
KHN13210	DN9901L0050-00	58
	DN9901L0050-00	73
	DN9901L0052-00	55
	DN9901L0052-00	70

https://truckmanualshub.com/

パーツインデックス
Parts index

PART NO.	PPC	ITEM
KHN13210	DN9901L0058-00	53
	DN9901L0058-00	53
	DN9901L0058-00	68
	DN9901L0058-00	68
KHN13220	DN9901L0050-00	63
	DN9901L0052-00	60
	DN9901L0058-00	58
	DN9901L0058-00	58
KHN1323	DA0501L0006-00	3
	DA0501L0006-00	3
	DA3805L0003-00	3
	DA3805L0003-00	3
KHN13231	DN9901L0050-00	57
	DN9901L0050-00	72
	DN9901L0052-00	54
	DN9901L0052-00	69
	DN9901L0058-00	52
	DN9901L0058-00	52
	DN9901L0058-00	67
	DN9901L0058-00	67
KHN13240	DN9901L0050-00	62
	DN9901L0050-00	77
	DN9901L0052-00	59
	DN9901L0052-00	74
	DN9901L0058-00	57
	DN9901L0058-00	57
	DN9901L0058-00	72
	DN9901L0058-00	72
KHN13251	DN9901L0050-00	67
	DN9901L0052-00	64
	DN9901L0058-00	62
	DN9901L0058-00	62
KHN13261	DN9901L0050-00	68
	DN9901L0052-00	65
	DN9901L0058-00	63
	DN9901L0058-00	63
KHN13271	DN9901L0050-00	75
	DN9901L0052-00	72
	DN9901L0058-00	70
	DN9901L0058-00	70
KHN13281	DN9901L0050-00	78
	DN9901L0052-00	75
	DN9901L0058-00	73
	DN9901L0058-00	73
KHN13290	DN9901L0050-00	81

PART NO.	PPC	ITEM
KHN13290	DN9901L0052-00	78
	DN9901L0058-00	76
	DN9901L0058-00	76
KHN13301	DN9901L0050-00	82
	DN9901L0052-00	79
	DN9901L0058-00	77
	DN9901L0058-00	77
KHN13310	DN9901L0050-00	85
	DN9901L0052-00	82
	DN9901L0058-00	80
	DN9901L0058-00	80
KHN13320	DN9901L0050-00	86
	DN9901L0052-00	83
	DN9901L0058-00	81
	DN9901L0058-00	81
KHN13331	DN9901L0050-00	101
	DN9901L0052-00	95
	DN9901L0058-00	93
	DN9901L0058-00	93
KHN13341	DN9901L0050-00	90
	DN9901L0052-00	87
	DN9901L0058-00	85
	DN9901L0058-00	85
KHN13350	DN9901L0050-00	105
	DN9901L0052-00	99
	DN9901L0058-00	97
	DN9901L0058-00	97
KHN13361	DN9901L0050-00	28
KHN13371	DN9901L0050-00	29
KHN13380	DN9901L0050-00	30
KHN13391	DN9901L0050-00	20
	DN9901L0050-00	20
	DN9901L0058-00	36
	DN9901L0058-00	36
KHN13400	DN9901L0050-00	21
	DN9901L0050-00	21
KHN13401	DN9901L0050-00	21
	DN9901L0052-00	41
	DN9901L0058-00	37
	DN9901L0058-00	37
KHN13411	DN9901L0050-00	24
	DN9901L0052-00	44
	DN9901L0058-00	40
	DN9901L0058-00	40
KHN13420	DN9901L0050-00	22

PART NO.	PPC	ITEM
KHN13420	DN9901L0052-00	42
	DN9901L0058-00	38
	DN9901L0058-00	38
KHN13430	DN9901L0050-00	23
	DN9901L0052-00	43
	DN9901L0058-00	39
	DN9901L0058-00	39
KHN13510B1	DN7301L0211-00	153
	DN7301L0212-00	153
	DN7301L0213-00	153
	DN7301L0246-00	152
KHN13520	DN9901L0050-00	170
	DN9901L0050-00	170
KHN13530	DN9901L0052-00	30
	DN9901L0058-00	26
KHN13540	DN7301L0211-00	154
	DN7301L0212-00	154
	DN7301L0213-00	154
	DN7301L0246-00	153
KHN13550	DN9901L0058-00	1
KHN13570	DN9901L0052-00	1
KHN13590	DNC701L0002-00	1
KHN13600	DNC701L0002-00	3
KHN13630	DN4801L0083-00	253
	DN4801L0084-00	264
KHN13640	DN4801L0083-00	254
	DN4801L0084-00	265
KHN13670	DN4801L0083-00	138
	DN4801L0084-00	140
KHN13680	DN4801L0083-00	188
	DN4801L0084-00	199
KHN13690	DN4801L0083-00	179
KHN13700	DN4801L0084-00	181
KHN13730	DN9901L0050-00	143
	DN9901L0052-00	133
	DN9901L0058-00	131
KHN1395	DN7301L0211-00	27
	DN7301L0212-00	27
	DN7301L0213-00	27
	DN7301L0246-00	27
KHN13950	DN9901L0050-00	120
	DN9901L0052-00	110
	DN9901L0058-00	108
KHN13970	DN9901L0052-00	111
	DN9901L0052-00	111

https://truckmanualshub.com/

パーツインデックス

Parts index

PART NO.	PPC	ITEM
KHN13970	DN9901L0058-00	109
	DN9901L0058-00	109
KHN13971	DN9901L0050-00	121
	DN9901L0052-00	111
	DN9901L0058-00	109
KHN1398	DA0301L0012-00	2
	DA0301L0012-00	2
	DAE901L0071-00	4
	DAE901L0072-00	4
	DAE901L0084-00	4
	DB0201L0055-00	12
	DR0205L0044-00	15
KHN13990	DN9901L0050-00	137
	DN9901L0052-00	127
	DN9901L0058-00	125
KHN14010	DN9901L0050-00	132
	DN9901L0052-00	122
	DN9901L0058-00	120
KHN14030	DN9901L0050-00	140
	DN9901L0052-00	130
	DN9901L0058-00	128
KHN14050	DN9901L0050-00	151
	DN9901L0052-00	141
	DN9901L0058-00	139
KHN14060	DN9901L0050-00	159
	DN9901L0050-00	159
KHN1407	DN9901L0050-00	159
	DN9901L0052-00	149
	DN9901L0058-00	147
KHN14070	DN9901L0052-00	121
	DN9901L0052-00	121
	DN9901L0058-00	119
	DN9901L0058-00	119
KHN14071	DN9901L0050-00	131
	DN9901L0052-00	121
	DN9901L0058-00	119
KHN1410	DRJ401L0204-00	14
	DRJ401L0204-00	14
	DRJ401L0230-00	14
	DRJ401L0230-00	14
	DRJ401L0256-00	14
	DRJ401L0256-00	14
KHN14110	DN4801L0083-00	5
	DN4801L0084-00	5
KHN14120	DN4801L0083-00	6

PART NO.	PPC	ITEM
KHN14120	DN4801L0084-00	6
KHN14130	DN4801L0083-00	7
	DN4801L0084-00	7
KHN14150	DN4801L0083-00	8
	DN4801L0084-00	8
KHN14160	DN4801L0083-00	9
	DN4801L0083-00	165
	DN4801L0084-00	9
	DN4801L0084-00	167
KHN14170	DN4801L0083-00	12
	DN4801L0084-00	12
KHN14180	DN4801L0083-00	118
	DN4801L0084-00	120
KHN14200	DN4801L0083-00	15
	DN4801L0084-00	15
KHN14220	DN4801L0083-00	17
	DN4801L0084-00	17
KHN14230	DN4801L0083-00	20
	DN4801L0084-00	20
KHN14240	DN4801L0083-00	21
	DN4801L0084-00	21
KHN1425	DN7301L0211-00	62
	DN7301L0212-00	62
	DN7301L0213-00	62
	DN7301L0246-00	62
KHN14250	DN4801L0083-00	24
	DN4801L0084-00	24
KHN14260	DN4801L0083-00	25
	DN4801L0084-00	25
KHN14270	DN4801L0083-00	28
	DN4801L0083-00	28
	DN4801L0084-00	28
	DN4801L0084-00	28
KHN14280	DN4801L0083-00	29
	DN4801L0083-00	29
	DN4801L0084-00	29
	DN4801L0084-00	29
KHN14290	DN4801L0083-00	30
	DN4801L0083-00	30
	DN4801L0084-00	30
	DN4801L0084-00	30
KHN14300	DN4801L0083-00	31
	DN4801L0084-00	31
KHN14310	DN4801L0083-00	32
	DN4801L0084-00	32

PART NO.	PPC	ITEM
KHN14320	DN4801L0083-00	33
	DN4801L0084-00	33
KHN14330	DN4801L0083-00	35
	DN4801L0084-00	35
KHN14340	DN4801L0083-00	37
	DN4801L0084-00	37
KHN14350	DN4801L0083-00	44
	DN4801L0084-00	44
KHN14360	DN4801L0083-00	45
	DN4801L0084-00	45
KHN14370	DN4801L0083-00	47
	DN4801L0084-00	47
KHN14380	DN4801L0083-00	48
	DN4801L0084-00	48
KHN14390	DN4801L0083-00	49
	DN4801L0084-00	49
KHN14540	DN4801L0084-00	50
KHN14550	DN4801L0084-00	51
KHN14560	DN4801L0083-00	50
KHN14570	DN4801L0083-00	51
	DN4801L0084-00	52
KHN14580	DN4801L0084-00	53
KHN14590	DN4801L0084-00	54
KHN14600	DN4801L0083-00	52
	DN4801L0084-00	55
KHN14610	DN4801L0083-00	53
	DN4801L0084-00	56
KHN14620	DN4801L0083-00	54
	DN4801L0084-00	57
KHN14630	DN4801L0083-00	55
	DN4801L0084-00	58
KHN14640	DN4801L0083-00	56
	DN4801L0083-00	183
	DN4801L0084-00	59
KHN14650	DN4801L0083-00	57
	DN4801L0084-00	60
KHN14660	DN9901L0050-00	171
KHN14670	DN4801L0083-00	58
KHN14680	DN4801L0084-00	61
KHN14690	DN4801L0083-00	59
KHN14700	DN4801L0083-00	60
	DN4801L0083-00	60
	DN4801L0084-00	62
	DN4801L0084-00	62
KHN14701	DN4801L0083-00	60

https://truckmanualshub.com/

パーツインデックス

Parts index

PART NO.	PPC	ITEM
KHN14701	DN4801L0083-00	60
	DN4801L0084-00	62
	DN4801L0084-00	62
KHN14710	DN4801L0083-00	61
	DN4801L0083-00	214
	DN4801L0083-00	214
	DN4801L0083-00	214
	DN4801L0083-00	214
	DN4801L0084-00	63
	DN4801L0084-00	225
	DN4801L0084-00	225
	DN4801L0084-00	225
	DN4801L0084-00	225
KHN14730	DN4801L0083-00	63
	DN4801L0084-00	65
KHN14750	DN9901L0050-00	153
	DN9901L0052-00	143
	DN9901L0058-00	141
KHN14760	DN9901L0050-00	154
	DN9901L0052-00	144
	DN9901L0058-00	142
KHN14770	DN0501L0005-00	1
KHN14780	DN9901L0050-00	164
KHN1487	DN4801L0083-00	10
	DN4801L0084-00	10
KHN14871	DN9901L0050-00	108
	DN9901L0052-00	102
	DN9901L0058-00	100
	DN9901L0058-00	100
KHN14880	DN9901L0052-00	94
	DN9901L0052-00	94
	DN9901L0058-00	92
	DN9901L0058-00	92
KHN14881	DN9901L0050-00	100
	DN9901L0052-00	94
	DN9901L0058-00	92
	DN9901L0058-00	92
KHN1489	DN4801L0083-00	43
	DN4801L0084-00	43
KHN14890	DN4801L0083-00	65
	DN4801L0084-00	67
KHN1490	DN4801L0083-00	39
	DN4801L0084-00	39
KHN14910	DN4801L0083-00	66
	DN4801L0084-00	68

PART NO.	PPC	ITEM
KHN14930	DN4801L0083-00	67
	DN4801L0084-00	69
KHN14950	DN4801L0083-00	68
	DN4801L0084-00	70
KHN14960	DN4801L0083-00	69
	DN4801L0084-00	71
KHN14970	DN4801L0083-00	70
	DN4801L0084-00	72
KHN14980	DN4801L0083-00	71
	DN4801L0083-00	176
	DN4801L0084-00	73
	DN4801L0084-00	178
KHN14990	DN4801L0083-00	72
	DN4801L0083-00	177
	DN4801L0084-00	74
	DN4801L0084-00	179
KHN15000	DN4801L0083-00	73
	DN4801L0084-00	75
KHN15010	DN4801L0083-00	74
	DN4801L0084-00	76
KHN15020	DN4801L0083-00	75
	DN4801L0084-00	77
KHN15030	DN4801L0083-00	76
	DN4801L0084-00	78
KHN15040	DN4801L0083-00	77
	DN4801L0084-00	79
KHN15050	DN4801L0083-00	78
	DN4801L0084-00	80
KHN15060	DN4801L0083-00	79
	DN4801L0084-00	81
KHN1507	DN4801L0083-00	135
	DN4801L0083-00	155
	DN4801L0084-00	137
	DN4801L0084-00	157
KHN15070	DN4801L0083-00	80
	DN4801L0084-00	82
KHN15080	DN4801L0083-00	81
	DN4801L0084-00	83
KHN15090	DN4801L0083-00	82
	DN4801L0084-00	84
KHN15100	DN9901L0050-00	123
	DN9901L0052-00	113
	DN9901L0058-00	111
KHN15110	DN9901L0050-00	124
	DN9901L0052-00	114

PART NO.	PPC	ITEM
KHN15110	DN9901L0058-00	112
KHN15120	DN9901L0050-00	125
	DN9901L0052-00	115
	DN9901L0058-00	113
KHN15130	DN9901L0050-00	126
	DN9901L0052-00	116
	DN9901L0058-00	114
KHN1514	DN4801L0083-00	84
	DN4801L0084-00	86
KHN15140	DN9901L0050-00	127
	DN9901L0052-00	117
	DN9901L0058-00	115
KHN15150	DN9901L0050-00	17.01
	DN9901L0050-00	17.01
	DN9901L0050-00	96
	DN9901L0050-00	96
	DN9901L0052-00	36
	DN9901L0052-00	36
	DN9901L0058-00	32
	DN9901L0058-00	32
KHN15170	DN4801L0083-00	180
KHN1518	DN4801L0083-00	40
	DN4801L0084-00	40
KHN15180	DN4801L0084-00	182
KHN15190	DN4801L0084-00	183
KHN15200	DN4801L0084-00	184
KHN1521	DN4801L0083-00	119
	DN4801L0083-00	119
	DN4801L0084-00	121
	DN4801L0084-00	121
KHN15210	DN4801L0084-00	185
KHN15220	DN4801L0084-00	186
KHN15230	DN4801L0084-00	187
KHN15240	DN4801L0084-00	188
KHN15250	DN4801L0084-00	189
KHN15260	DN4801L0083-00	147
	DN4801L0083-00	147
	DN4801L0084-00	149
	DN4801L0084-00	149
	DN4801L0084-00	190
KHN15270	DN4801L0084-00	191
KHN15280	DN4801L0084-00	192
KHN15290	DN4801L0084-00	193
KHN15300	DN4801L0083-00	184
	DN4801L0084-00	194

https://truckmanualshub.com/

パーツインデックス
Parts index

PART NO.	PPC	ITEM
KHN15310	DN4801L0083-00	185
	DN4801L0084-00	195
KHN15320	DN4801L0083-00	181
	DN4801L0084-00	196
KHN15330	DN4801L0083-00	182
KHN15340	DN4801L0083-00	134
	DN4801L0084-00	136
KHN15350	DN4801L0083-00	139
	DN4801L0084-00	141
KHN15370	DN4801L0083-00	140
	DN4801L0084-00	142
KHN15380	DN4801L0083-00	141
	DN4801L0084-00	143
KHN15400	DN4801L0083-00	142
	DN4801L0084-00	144
KHN15420	DN4801L0083-00	143
	DN4801L0084-00	145
KHN15430	DN4801L0083-00	149
	DN4801L0084-00	151
KHN15440	DN4801L0083-00	150
	DN4801L0084-00	152
KHN15450	DN4801L0083-00	151
	DN4801L0084-00	153
KHN15460	DN4801L0083-00	152
	DN4801L0084-00	154
KHN15470	DN4801L0083-00	153
	DN4801L0084-00	155
KHN15480	DN4801L0083-00	154
	DN4801L0084-00	156
KHN1549	DN4801L0083-00	62
	DN4801L0083-00	62
	DN4801L0083-00	62
	DN4801L0083-00	62
	DN4801L0084-00	64
	DN4801L0084-00	64
	DN4801L0084-00	64
	DN4801L0084-00	64
KHN15490	DN4801L0083-00	156
	DN4801L0084-00	158
KHN15500	DN4801L0083-00	157
	DN4801L0084-00	159
KHN15510	DN4801L0083-00	158
	DN4801L0084-00	160
KHN15530	DN4801L0083-00	159
	DN4801L0084-00	161

PART NO.	PPC	ITEM
KHN15540	DN4801L0083-00	162
	DN4801L0084-00	164
KHN15550	DN4801L0083-00	163
	DN4801L0084-00	165
KHN15560	DN4801L0083-00	164
	DN4801L0084-00	166
KHN15570	DN4801L0083-00	166
	DN4801L0084-00	168
KHN15580	DN4801L0083-00	168
	DN4801L0084-00	170
KHN15590	DN4801L0083-00	169
	DN4801L0084-00	171
KHN15600	DN4801L0083-00	170
	DN4801L0084-00	172
KHN15610	DN4801L0083-00	171
	DN4801L0084-00	173
KHN15620	DN4801L0083-00	172
	DN4801L0084-00	174
KHN15630	DN4801L0083-00	173
	DN4801L0084-00	175
KHN15640	DN4801L0083-00	174
	DN4801L0084-00	176
KHN15650	DN4801L0083-00	175
	DN4801L0084-00	177
KHN15660	DN4801L0083-00	189
	DN4801L0084-00	200
KHN15670	DN4801L0083-00	190
	DN4801L0084-00	201
KHN15680	DN4801L0083-00	191
	DN4801L0084-00	202
KHN15690	DN4801L0083-00	91
	DN4801L0083-00	91
	DN4801L0083-00	91
	DN4801L0083-00	91
	DN4801L0083-00	192
	DN4801L0084-00	93
	DN4801L0084-00	93
	DN4801L0084-00	93
	DN4801L0084-00	93
	DN4801L0084-00	203
KHN15700	DN4801L0083-00	193
	DN4801L0084-00	204
KHN15710	DN4801L0083-00	194
	DN4801L0084-00	205
KHN15720	DN4801L0083-00	195

PART NO.	PPC	ITEM
KHN15720	DN4801L0084-00	206
KHN15730	DN4801L0083-00	196
	DN4801L0084-00	207
KHN15740	DN4801L0083-00	197
	DN4801L0084-00	208
KHN15750	DN4801L0083-00	198
	DN4801L0084-00	209
KHN15760	DN4801L0083-00	199
	DN4801L0084-00	210
KHN15770	DN4801L0083-00	200
	DN4801L0084-00	211
KHN15780	DN4801L0083-00	201
	DN4801L0084-00	212
KHN15790	DN4801L0083-00	202
	DN4801L0084-00	213
KHN15800	DN4801L0083-00	203
	DN4801L0084-00	214
KHN15810	DN4801L0083-00	204
	DN4801L0084-00	215
KHN15820	DN4801L0083-00	205
	DN4801L0084-00	216
KHN15830	DN4801L0083-00	206
	DN4801L0084-00	217
KHN15840	DN4801L0083-00	207
	DN4801L0084-00	218
KHN15850	DN4801L0083-00	208
	DN4801L0083-00	208
	DN4801L0084-00	219
	DN4801L0084-00	219
KHN15860	DN4801L0083-00	90
	DN4801L0084-00	92
KHN15870	DN4801L0083-00	92
	DN4801L0084-00	94
KHN15880	DN4801L0083-00	93
	DN4801L0084-00	95
KHN15890	DN4801L0083-00	94
	DN4801L0084-00	96
KHN15900	DN4801L0083-00	95
	DN4801L0084-00	97
KHN15910	DN4801L0083-00	96
	DN4801L0084-00	98
KHN15920	DN4801L0083-00	97
	DN4801L0084-00	99
KHN15930	DN4801L0083-00	99
	DN4801L0084-00	101

https://truckmanualshub.com/

パーツインデックス

Parts index

PART NO.	PPC	ITEM
KHN15940	DN4801L0083-00	100
	DN4801L0084-00	102
KHN15950	DN4801L0083-00	101
	DN4801L0084-00	103
KHN15960	DN4801L0083-00	103
	DN4801L0084-00	105
KHN15970	DN4801L0083-00	104
	DN4801L0084-00	106
KHN15980	DN4801L0083-00	105
	DN4801L0084-00	107
KHN15990	DN4801L0083-00	106
	DN4801L0084-00	108
KHN16000	DN4801L0083-00	107
	DN4801L0084-00	109
KHN16010	DN4801L0083-00	108
	DN4801L0084-00	110
KHN16020	DN4801L0083-00	109
	DN4801L0084-00	111
KHN16030	DN4801L0083-00	114
	DN4801L0084-00	116
KHN16040	DN4801L0083-00	116
	DN4801L0084-00	118
KHN16050	DN4801L0083-00	117
	DN4801L0084-00	119
KHN16060	DN4801L0083-00	119
	DN4801L0083-00	119
	DN4801L0084-00	121
	DN4801L0084-00	121
KHN16070	DN4801L0083-00	121
	DN4801L0084-00	123
KHN16080	DN4801L0083-00	122
	DN4801L0084-00	124
KHN16090	DN4801L0083-00	124
	DN4801L0084-00	126
KHN16100	DN4801L0083-00	129
	DN4801L0084-00	131
KHN16110	DN4801L0083-00	131
	DN4801L0084-00	133
KHN16120	DN4801L0083-00	211
	DN4801L0084-00	222
KHN16130	DN4801L0083-00	212
	DN4801L0084-00	223
KHN16140	DN4801L0083-00	215
	DN4801L0084-00	226
KHN16150	DN4801L0083-00	223

PART NO.	PPC	ITEM
KHN16150	DN4801L0084-00	234
KHN16160	DN4801L0083-00	224
	DN4801L0084-00	235
KHN16170	DRCB01L0001-00	1.1
	DRCB01L0001-00	8.02
	DRCB01L0001-00	8.02
KHN16180	DRCB01L0001-00	1.14
	DRCB01L0001-00	8.06
	DRCB01L0001-00	8.06
KHN16190	DRCB01L0001-00	1.11
	DRCB01L0001-00	8.03
	DRCB01L0001-00	8.03
KHN16220	DN4801L0083-00	136
	DN4801L0084-00	138
KHN16230	DN4801L0083-00	137
	DN4801L0084-00	139
KHN16240	DN4801L0083-00	87
	DN4801L0084-00	89
KHN16270	DN4801L0083-00	64
	DN4801L0083-00	64
	DN4801L0084-00	66
	DN4801L0084-00	66
KHN16280	DN4801L0083-00	88
	DN4801L0084-00	90
KHN16290	DN4801L0083-00	89
	DN4801L0084-00	91
KHN16320	DN4801L0083-00	161
	DN4801L0084-00	163
KHN16330	DN4801L0083-00	102
	DN4801L0084-00	104
KHN16340	DN4801L0083-00	130
	DN4801L0084-00	132
KHN16350	DN4801L0083-00	144
	DN4801L0084-00	146
KHN16360	DN4801L0083-00	145
	DN4801L0084-00	147
KHN16370	DN4801L0083-00	146
	DN4801L0084-00	148
KHN1639	DR5001L0020-00	4
	DR5001L0020-00	4
KHN16390	DN4801L0083-00	148
	DN4801L0084-00	150
KHN16400	DN4801L0083-00	13
	DN4801L0084-00	13
KHN16410	DN4801L0083-00	218

PART NO.	PPC	ITEM
KHN16410	DN4801L0084-00	229
KHN16430	DN4801L0083-00	220
	DN4801L0084-00	231
KHN16560	DN4801L0083-00	178
	DN4801L0084-00	180
KHN16590	DN4801L0083-00	1
KHN16600	DN4801L0084-00	1
KHN16630	DN4801L0083-00	2
KHN16640	DN4801L0084-00	2
KHN16670	DN4801L0083-00	3
KHN16680	DN4801L0084-00	3
KHN16730	DN4801L0083-00	209
	DN4801L0084-00	220
KHN16770	DN9901L0050-00	139
	DN9901L0052-00	129
	DN9901L0058-00	127
KHN16780	DN7301L0211-00	38
	DN7301L0212-00	38
	DN7301L0213-00	38
	DN7301L0246-00	38
KHN16810	DN9901L0050-00	106
	DN9901L0052-00	100
	DN9901L0058-00	98
	DN9901L0058-00	98
KHN16820	DN4801L0083-00	127
	DN4801L0084-00	129
KHN16830	DN4801L0083-00	128
	DN4801L0084-00	130
KHN1690	DNB501L0002-00	1
KHN17030	DN7301L0211-00	97
	DN7301L0212-00	97
	DN7301L0213-00	97
	DN7301L0246-00	97
KHN17040	DN9901L0050-00	99
	DN9901L0052-00	93
	DN9901L0058-00	91
	DN9901L0058-00	91
KHN17050	DN9901L0050-00	111
	DN9901L0052-00	105
	DN9901L0058-00	103
	DN9901L0058-00	103
KHN17060	DN9901L0050-00	110
	DN9901L0052-00	104
	DN9901L0058-00	102
	DN9901L0058-00	102

https://truckmanualshub.com/

パーツインデックス
Parts index

PART NO.	PPC	ITEM
KHN17070	DN9901L0050-00	109
	DN9901L0052-00	103
	DN9901L0058-00	101
	DN9901L0058-00	101
KHN1708	DN7301L0211-00	58
	DN7301L0212-00	58
	DN7301L0213-00	58
	DN7301L0246-00	58
KHN17080	DN9901L0050-00	147
	DN9901L0052-00	137
	DN9901L0058-00	135
KHN17090	DN9901L0050-00	149
	DN9901L0052-00	139
	DN9901L0058-00	137
KHN17130	DR1801L0023-00	6
KHN17250	DRCB01L0001-00	1.09
	DRCB01L0001-00	8.01
	DRCB01L0001-00	8.01
KHN17270	DN9901L0050-00	14
	DN9901L0050-00	16
	DN9901L0050-00	17.02
	DN9901L0050-00	160
	DN9901L0052-00	35
	DN9901L0052-00	37
	DN9901L0052-00	150
	DN9901L0058-00	31
	DN9901L0058-00	33
	DN9901L0058-00	148
KHN17280	DN9901L0050-00	158
	DN9901L0052-00	148
	DN9901L0058-00	146
KHN17560	DN9901L0050-00	166
	DN9901L0052-00	153
	DN9901L0058-00	151
KHN17580	DRCB01L0001-00	1
KHN17650	DN9901L0050-00	8
KHN17660	DN9901L0050-00	12
KHN17670	DN9901L0050-00	9
KHN17680	DN9901L0050-00	13
KHN17710	DN9901L0052-00	2
	DN9901L0058-00	2
KHN17720	DN9901L0052-00	28.01
	DN9901L0052-00	28.01
	DN9901L0058-00	24.02
	DN9901L0058-00	24.02

PART NO.	PPC	ITEM
KHN17750	DN9901L0052-00	3
	DN9901L0058-00	3
KHN17760	DN9901L0052-00	7
	DN9901L0058-00	7
KHN17770	DN9901L0052-00	8
	DN9901L0058-00	8
KHN17780	DN9901L0058-00	16
KHN17790	DN9901L0058-00	17
KHN17800	DN9901L0058-00	18
KHN17810	DN9901L0052-00	19
	DN9901L0058-00	19
KHN17820	DN9901L0052-00	20
	DN9901L0058-00	20
KHN17830	DN9901L0058-00	21
KHN17840	DN9901L0052-00	26
	DN9901L0058-00	22
KHN17850	DN9901L0052-00	11
	DN9901L0058-00	11
KHN17860	DN9901L0052-00	12
	DN9901L0058-00	12
KHN17870	DN9901L0052-00	13
	DN9901L0058-00	13
KHN17880	DN9901L0052-00	14
	DN9901L0058-00	14
KHN17890	DN9901L0058-00	15
	DN9901L0058-00	15
	DN9901L0058-00	24.01
	DN9901L0058-00	24.01
KHN17900	DN9901L0052-00	27
	DN9901L0058-00	23
KHN17910	DN9901L0052-00	28
	DN9901L0058-00	24
KHN17920	DN9901L0052-00	16
KHN17930	DN9901L0052-00	17
KHN17940	DN9901L0052-00	18
KHN17950	DN9901L0052-00	21
KHN17960	DN9901L0052-00	22
KHN17970	DN9901L0052-00	23
	DN9901L0052-00	23
	DN9901L0052-00	28.03
	DN9901L0052-00	28.03
KHN17980	DN9901L0052-00	24
KHN17990	DN9901L0052-00	25
KHN18000	DN9901L0052-00	15
	DN9901L0052-00	15

PART NO.	PPC	ITEM
KHN18000	DN9901L0052-00	28.02
	DN9901L0052-00	28.02
KHN18050	DN4801L0083-00	4
	DN4801L0084-00	4
KHN18060	DRJ401L0205-00	46
	DRJ401L0205-00	46
KHN18100	DR0205L0043-00	112
KHN18110	DN4801L0083-00	225.01
	DN4801L0083-00	225.01
	DN4801L0084-00	236.01
	DN4801L0084-00	236.01
KHN18140	DN4801L0083-00	208.01
	DN4801L0083-00	208.01
	DN4801L0084-00	219.01
	DN4801L0084-00	219.01
KHN18150	DN4801L0083-00	208.02
	DN4801L0083-00	208.02
	DN4801L0084-00	219.02
	DN4801L0084-00	219.02
KHN18160	DRCB01L0001-00	1.02
	DRCB01L0001-00	1.02
	DRCB01L0001-00	1.17
KHN18170	DRCB01L0001-00	1.01
	DRCB01L0001-00	1.01
	DRCB01L0001-00	1.16
KHN18180	DRCB01L0001-00	1.03
	DRCB01L0001-00	1.03
	DRCB01L0001-00	1.18
KHN18230	DN9901L0050-00	20
	DN9901L0052-00	40
	DN9901L0058-00	36
KHN18240	DN9901L0050-00	27.01
	DN9901L0050-00	27.01
	DN9901L0052-00	47.01
	DN9901L0052-00	47.01
	DN9901L0058-00	44
	DN9901L0058-00	44
KHN18250	DN4801L0083-00	132
	DN4801L0083-00	132
	DN4801L0084-00	134
	DN4801L0084-00	134
KHN18280	DN4801L0083-00	64
	DN4801L0083-00	64
	DN4801L0084-00	66
	DN4801L0084-00	66

https://truckmanualshub.com/

パーツインデックス

Parts index

PART NO.	PPC	ITEM
KHN18290	DN4801L0083-00	147
	DN4801L0083-00	147
	DN4801L0084-00	149
	DN4801L0084-00	149
KHN1853	DN9901L0050-00	39
KHN1854	DN9901L0050-00	47
KHN1855	DN9901L0050-00	44
KHN18780	DN4801L0083-00	137.01
	DN4801L0083-00	137.01
	DN4801L0084-00	139.01
	DN4801L0084-00	139.01
KHN18800	DN4801L0083-00	178.01
	DN4801L0083-00	178.01
	DN4801L0084-00	180.01
	DN4801L0084-00	180.01
KHN18860	DN4801L0083-00	46
	DN4801L0083-00	46
	DN4801L0084-00	46
	DN4801L0084-00	46
KHN18870	DN4801L0083-00	137.02
	DN4801L0083-00	137.02
	DN4801L0084-00	139.02
	DN4801L0084-00	139.02
KHN18880	DN4801L0083-00	123
	DN4801L0083-00	123
	DN4801L0083-00	225
	DN4801L0083-00	225
	DN4801L0084-00	125
	DN4801L0084-00	125
	DN4801L0084-00	236
	DN4801L0084-00	236
KHN18890	DN4801L0083-00	98
	DN4801L0083-00	98
	DN4801L0084-00	100
	DN4801L0084-00	100
KHN18920	DN4801L0083-00	11
	DN4801L0083-00	11
	DN4801L0084-00	11
	DN4801L0084-00	11
KHN1903	DNB501L0002-00	3
KHN19770	DN9901L0050-00	17.01
	DN9901L0050-00	17.01
	DN9901L0052-00	36
	DN9901L0052-00	36
	DN9901L0058-00	32

PART NO.	PPC	ITEM
KHN19770	DN9901L0058-00	32
KHN19780	DN9901L0050-00	27.01
	DN9901L0050-00	27.01
	DN9901L0052-00	47.01
	DN9901L0052-00	47.01
	DN9901L0058-00	44
KHN20030	DN7301L0211-00	69.01
	DN7301L0211-00	69.01
	DN7301L0212-00	69.01
	DN7301L0212-00	69.01
	DN7301L0213-00	69.01
	DN7301L0213-00	69.01
	DN7301L0246-00	69.01
	DN7301L0246-00	69.01
KHN20170	DN4801L0083-00	125
	DN4801L0083-00	125
	DN4801L0084-00	127
	DN4801L0084-00	127
KHN20180	DN4801L0083-00	126
	DN4801L0083-00	126
	DN4801L0084-00	128
	DN4801L0084-00	128
KHN2047	DN9901L0050-00	167
KHN2048	DN9901L0050-00	168
KHN2049	DN9901L0050-00	169
KHN2058	DN9901L0050-00	162
	DN9901L0052-00	151
	DN9901L0058-00	149
KHN2061	DN7301L0211-00	54
	DN7301L0211-00	69
	DN7301L0211-00	143
	DN7301L0212-00	54
	DN7301L0212-00	69
	DN7301L0212-00	143
	DN7301L0213-00	54
	DN7301L0213-00	69
	DN7301L0213-00	143
	DN7301L0246-00	54
	DN7301L0246-00	69
	DN7301L0246-00	142
KHN21200	DN7301L0211-00	15
	DN7301L0211-00	15
	DN7301L0211-00	18
	DN7301L0211-00	18
	DN7301L0212-00	15

PART NO.	PPC	ITEM
KHN21200	DN7301L0212-00	15
	DN7301L0212-00	18
	DN7301L0212-00	18
	DN7301L0213-00	15
	DN7301L0213-00	15
	DN7301L0213-00	18
	DN7301L0213-00	18
	DN7301L0246-00	15
	DN7301L0246-00	15
	DN7301L0246-00	18
	DN7301L0246-00	18
KHN2130	DN9901L0052-00	10
	DN9901L0058-00	10
KHN2132	DN4801L0083-00	252
	DN4801L0083-00	252
	DN4801L0084-00	263
	DN4801L0084-00	263
	DN9901L0050-00	107
	DN9901L0050-00	119
	DN9901L0050-00	119
	DN9901L0050-00	155
	DN9901L0050-00	157
	DN9901L0052-00	101
	DN9901L0052-00	145
	DN9901L0052-00	147
	DN9901L0058-00	99
	DN9901L0058-00	99
	DN9901L0058-00	143
	DN9901L0058-00	145
	DR0205L0043-00	104
	DRCB01L0001-00	11
	DRCB01L0001-00	12
	DRCB01L0001-00	13
KHN2143	DN7301L0211-00	71
	DN7301L0212-00	71
	DN7301L0213-00	71
	DN7301L0246-00	71
KHN2194	DN9901L0052-00	4
	DN9901L0058-00	4
KHN2195	DN9901L0052-00	5
	DN9901L0058-00	5
KHN2196	DN9901L0052-00	6
	DN9901L0058-00	6
KHN2199	DN9901L0052-00	9
	DN9901L0058-00	9

https://truckmanualshub.com/

パーツインデックス
Parts index

PART NO.	PPC	ITEM
KHN2249	DN9901L0050-00	61
	DN9901L0050-00	76
	DN9901L0050-00	102
	DN9901L0052-00	58
	DN9901L0052-00	73
	DN9901L0052-00	96
	DN9901L0058-00	56
	DN9901L0058-00	56
	DN9901L0058-00	71
	DN9901L0058-00	71
	DN9901L0058-00	94
	DN9901L0058-00	94
KHN2261	DN9901L0050-00	55
	DN9901L0050-00	70
	DN9901L0052-00	52
	DN9901L0052-00	67
	DN9901L0058-00	50
	DN9901L0058-00	50
	DN9901L0058-00	65
	DN9901L0058-00	65
KHN2270	DN9901L0050-00	65
	DN9901L0050-00	80
	DN9901L0050-00	104
	DN9901L0052-00	62
	DN9901L0052-00	77
	DN9901L0052-00	98
	DN9901L0058-00	60
	DN9901L0058-00	60
	DN9901L0058-00	75
	DN9901L0058-00	75
	DN9901L0058-00	96
	DN9901L0058-00	96
KHN2272	DN9901L0050-00	56
	DN9901L0050-00	71
	DN9901L0052-00	53
	DN9901L0052-00	68
	DN9901L0058-00	51
	DN9901L0058-00	51
	DN9901L0058-00	66
	DN9901L0058-00	66
KHN2309	DRCB01L0001-00	4
	DRCB01L0001-00	9
KHN2312	DR0205L0043-00	110
	DRCB01L0001-00	5
	DRCB01L0001-00	10

PART NO.	PPC	ITEM
KHN2333	DRCB01L0001-00	1.13
	DRCB01L0001-00	8.05
	DRCB01L0001-00	8.05
KHN2334	DRCB01L0001-00	1.12
	DRCB01L0001-00	8.04
	DRCB01L0001-00	8.04
KHN2336	DN9901L0050-00	163
	DN9901L0052-00	152
	DN9901L0058-00	150
KHN2373	DN7301L0211-00	83
	DN7301L0212-00	83
	DN7301L0213-00	83
	DN7301L0246-00	83
KHN2379	DN9901L0050-00	173
KHN2397	DN9901L0050-00	59
	DN9901L0050-00	74
	DN9901L0052-00	56
	DN9901L0052-00	71
	DN9901L0058-00	54
	DN9901L0058-00	54
	DN9901L0058-00	69
	DN9901L0058-00	69
KHN2470	DN9901L0050-00	156
	DN9901L0050-00	165
	DN9901L0052-00	146
	DN9901L0058-00	144
KHN2477	DN9901L0050-00	31
KHN2478	DN9901L0050-00	32
KHN2479	DN9901L0050-00	33
KHN2481	DN9901L0050-00	35
KHN2482	DN9901L0050-00	36
KHN2483	DN9901L0050-00	37
KHN2484	DN9901L0050-00	38
KHN2485	DN9901L0050-00	40
KHN2486	DN9901L0050-00	41
KHN2487	DN9901L0050-00	45
KHN2488	DN9901L0050-00	46
KHN2489	DN9901L0050-00	48
KHN2490	DN9901L0050-00	49
KHN2506	DR5001L0020-00	5
	DR5001L0020-00	5
KHN2537	DN7301L0211-00	78
	DN7301L0212-00	78
	DN7301L0213-00	78
	DN7301L0246-00	78

PART NO.	PPC	ITEM
KHN2538	DN7301L0211-00	79
	DN7301L0212-00	79
	DN7301L0213-00	79
	DN7301L0246-00	79
KHN2548	DN9901L0050-00	170
KHN2611	DN9901L0050-00	34
KHN2681	DN4801L0083-00	19
	DN4801L0084-00	19
KHN2682	DN4801L0083-00	18
	DN4801L0083-00	167
	DN4801L0083-00	167
	DN4801L0083-00	167
	DN4801L0083-00	167
	DN4801L0083-00	217
	DN4801L0084-00	18
	DN4801L0084-00	169
	DN4801L0084-00	169
	DN4801L0084-00	169
	DN4801L0084-00	169
	DN4801L0084-00	228
KHN2686	DN4801L0083-00	98
	DN4801L0083-00	98
	DN4801L0084-00	100
	DN4801L0084-00	100
KHN2687	DN4801L0083-00	27
	DN4801L0084-00	27
KHN2688	DN4801L0083-00	11
	DN4801L0083-00	11
	DN4801L0084-00	11
	DN4801L0084-00	11
KHN2702	DN4801L0083-00	16
	DN4801L0084-00	16
KHN2704	DN4801L0083-00	14
	DN4801L0084-00	14
KHN2709	DN4801L0083-00	83
	DN4801L0083-00	83
	DN4801L0083-00	83
	DN4801L0083-00	83
	DN4801L0084-00	85
	DN4801L0084-00	85
	DN4801L0084-00	85
	DN4801L0084-00	85
KHN2712	DN4801L0083-00	85
	DN4801L0084-00	87
KHN2713	DN4801L0083-00	42

https://truckmanualshub.com/

パーツインデックス

Parts index

PART NO.	PPC	ITEM
KHN2713	DN4801L0084-00	42
KHN2714	DN4801L0083-00	26
	DN4801L0084-00	26
KHN2716	DN4801L0083-00	133
	DN4801L0084-00	135
KHN2719	DN4801L0083-00	86
	DN4801L0084-00	88
KHN2722	DN4801L0083-00	23
	DN4801L0084-00	23
KHN2723	DN4801L0083-00	38
	DN4801L0084-00	38
KHN2732	DN4801L0083-00	126
	DN4801L0083-00	126
	DN4801L0084-00	128
	DN4801L0084-00	128
KHN2733	DN4801L0083-00	125
	DN4801L0083-00	125
	DN4801L0084-00	127
	DN4801L0084-00	127
KHN2737	DN4801L0083-00	113
	DN4801L0084-00	115
KHN2738	DN4801L0083-00	112
	DN4801L0084-00	114
KHN2739	DN4801L0083-00	111
	DN4801L0084-00	113
KHN2740	DN4801L0083-00	110
	DN4801L0084-00	112
KHN2746	DN4801L0083-00	120
	DN4801L0084-00	122
KHN2756	DN4801L0083-00	123
	DN4801L0083-00	123
	DN4801L0083-00	225
	DN4801L0083-00	225
	DN4801L0084-00	125
	DN4801L0084-00	125
	DN4801L0084-00	236
	DN4801L0084-00	236
KHN2768	DN4801L0083-00	22
	DN4801L0083-00	22
	DN4801L0083-00	22
	DN4801L0083-00	22
	DN4801L0084-00	22
	DN4801L0084-00	22
	DN4801L0084-00	22
	DN4801L0084-00	22

PART NO.	PPC	ITEM
KHN2769	DN4801L0083-00	34
	DN4801L0084-00	34
KHN2771	DN4801L0083-00	36
	DN4801L0084-00	36
KHN2808	DN4801L0083-00	160
	DN4801L0084-00	162
KHN2827	DN4801L0083-00	186
	DN4801L0084-00	197
KHN2828	DN4801L0083-00	187
	DN4801L0084-00	198
KHN2850	DN4801L0083-00	255
	DN4801L0084-00	267
KHN2901	DNC701L0002-00	9
KHN2907	DN4801L0083-00	256
	DN4801L0084-00	266
KHN3009	DJ6201L0059-00	7
	DJ6201L0063-00	5
KHN3029	DJ6201L0059-00	7
	DJ6201L0063-00	5
KHN3390	DN7301L0211-00	133
	DN7301L0212-00	133
	DN7301L0213-00	133
	DN7301L0246-00	132
KHN3392	DN4801L0083-00	115
	DN4801L0084-00	117
KHN3548	DN7301L0211-00	183
	DN7301L0212-00	184
	DN7301L0213-00	184
	DN7301L0246-00	182
KHN3555	DN9901L0050-00	5
KHN3556	DN9901L0050-00	6
KHN3557	DN9901L0050-00	7
KHN3558	DN9901L0050-00	8
	DN9901L0050-00	8
KHN3559	DN9901L0050-00	9
	DN9901L0050-00	9
KHN3560	DN9901L0050-00	10
KHN3561	DN9901L0050-00	11
KHN3562	DN9901L0050-00	12
	DN9901L0050-00	12
KHN3563	DN9901L0050-00	13
	DN9901L0050-00	13
KHN3585	DJ6201L0059-00	31
	DJ6201L0063-00	29
KHP0205	DP0103L0222-00	15

PART NO.	PPC	ITEM
KHP0205	DP0103L0223-00	15
	DP0103L0224-00	15
KHP0578	DC4501L0047-00	6
	DC4501L0051-00	6
	DC4501L0059-00	39
KHP0873	DH0301L0031-00	62
KHP0973	DP0103L0222-00	16
	DP0103L0223-00	16
	DP0103L0224-00	16
KHP1014	DP0103L0222-00	1
	DP0103L0223-00	1
	DP0103L0224-00	1
KHP10510	DPF001L0021-00	12
KHP11320	DPF001L0021-00	14
KHP11330	DPF001L0021-00	11
KHP11340	DPF001L0021-00	9
KHP11350	DP0701L0020-00	2
KHP11370	DPM801L0002-00	1
KHP1144	DR0205L0044-00	62
KHP11450	DP0103L0222-00	5
	DP0103L0223-00	5
	DP0103L0224-00	5
KHP11470	DP0103L0222-00	6
	DP0103L0223-00	6
	DP0103L0224-00	6
KHP11490	DP0103L0222-00	7
	DP0103L0223-00	7
	DP0103L0224-00	7
KHP11510	DP0103L0222-00	8
	DP0103L0223-00	8
	DP0103L0224-00	8
KHP11540	DP0103L0222-00	10
	DP0103L0223-00	10
	DP0103L0224-00	10
KHP11590	DP0210L0141-00	3
	DP0210L0142-00	3
KHP11600	DP0210L0141-00	4
	DP0210L0142-00	4
KHP11691	DP0103L0222-00	18
	DP0103L0223-00	18
	DP0103L0224-00	18
KHP1185	DP0103L0222-00	17
	DP0103L0223-00	17
	DP0103L0224-00	17
KHP12040	DPM801L0005-00	1

https://truckmanualshub.com/

パーツインデックス

Parts index

PART NO.	PPC	ITEM
KHP12120	DP0210L0141-00	1
	DP0210L0142-00	1
KHP1217	DP0103L0222-00	15
	DP0103L0223-00	15
	DP0103L0224-00	15
KHP12170	DP0210L0141-00	2
	DP0210L0142-00	2
KHP12180	DRJ401L0204-00	2
	DRJ401L0204-00	2
KHP12181	DRJ401L0204-00	2
	DRJ401L0230-00	2
	DRJ401L0256-00	2
KHP12191	DP0103L0222-00	2
	DP0103L0223-00	2
	DP0103L0224-00	2
KHP12200	DP0103L0222-00	9
	DP0103L0223-00	9
	DP0103L0224-00	9
KHP12260	DP0103L0222-00	22
	DP0103L0223-00	22
	DP0103L0224-00	22
KHP12270	DP0103L0222-00	20
	DP0103L0223-00	20
	DP0103L0224-00	20
KHP12530	DP0103L0222-00	19
	DP0103L0223-00	19
	DP0103L0224-00	19
KHP1259	DP0103L0222-00	12
	DP0103L0223-00	12
	DP0103L0224-00	12
KHP12850	DPF001L0021-00	1
KHP1286	DN9901L0058-00	25
	DN9901L0058-00	25
KHP12860	DPF001L0021-00	4
KHP1293	DPF001L0021-00	8
KHP13020	DP0103L0222-00	24
	DP0103L0223-00	24
	DP0103L0224-00	24
KHP13150	DP0103L0222-00	11.01
	DP0103L0223-00	11.01
	DP0103L0224-00	11.01
KHP13190	DP0701L0020-00	1
	DP0701L0020-00	3
KHP13360	DC4501L0059-00	34
KHP13440	DRJ401L0205-00	115

PART NO.	PPC	ITEM
KHP13440	DRJ401L0205-00	115
KHP1418	DP0210L0141-00	5
	DP0210L0141-00	5
	DP0210L0142-00	5
KHP1420	DP0210L0141-00	6
	DP0210L0142-00	6
KHP1429	DP0103L0222-00	21
	DP0103L0223-00	21
	DP0103L0224-00	21
KHP14340	DP0210L0141-00	5
	DP0210L0141-00	5
KHP1447	DP0701L0020-00	4
KHP1448	DP0701L0020-00	5
KHP15020	DP0701L0020-00	2.01
	DP0701L0020-00	2.01
KHP15190	DP0103L0222-00	24.01
	DP0103L0223-00	24.01
	DP0103L0224-00	24.01
KHP1532	DP0103L0222-00	4
	DP0103L0223-00	4
	DP0103L0224-00	4
KHP1542	DP0103L0222-00	3
	DP0103L0223-00	3
	DP0103L0224-00	3
KHP1543	DP0210L0142-00	7
KHP1803	DRA801L0007-00	4
KHR0093	DRV001L0015-00	7
KHR0095	DRV001L0015-00	9
KHR0136	DHE001L0044-00	25
KHR0306	DR1801L0020-00	10
KHR0319	DJHC01L0093-00	49
	DJK401L0289-00	10
	DJK401L0289-00	14
	DJK401L0290-00	7
	DJK401L0290-00	11
	DJK401L0291-00	14
	DJK401L0291-00	18
	DJK401L0292-00	3
	DJK401L0292-00	7
	DRJ401L0204-00	8
	DRJ401L0204-00	15
	DRJ401L0204-00	28
	DRJ401L0204-00	28
	DRJ401L0204-00	28
	DRJ401L0204-00	49

PART NO.	PPC	ITEM
KHR0319	DRJ401L0230-00	8
	DRJ401L0230-00	15
	DRJ401L0230-00	28
	DRJ401L0230-00	50
	DRJ401L0256-00	8
	DRJ401L0256-00	15
	DRJ401L0256-00	28
	DRJ401L0256-00	50
KHR0616	DR0103L0008-00	6
KHR0617	DH8101L0022-00	15
KHR0618	DRJ401L0204-00	14
	DRJ401L0230-00	14
	DRJ401L0256-00	14
	DRJ401L0256-00	14
KHR0724	DHE001L0044-00	34
KHR0956	DH8101L0022-00	16
KHR0957	DR1801L0020-00	4
KHR10020	DR9901L0008-00	1
KHR10021	DR9901L0008-00	1
KHR10022	DR9901L0008-00	1
KHR10023	DR9901L0009-00	1
	DR9901L0009-00	1
KHR10024	DR9901L0009-00	1
	DR9901L0009-00	1
KHR10025	DR9901L0009-00	1
	DR9901L0009-00	1
KHR10026	DR9901L0013-00	1
	DR9901L0013-00	1
KHR10027	DR9901L0013-00	1
	DR9901L0013-00	1
KHR10028	DR9901L0013-00	1
	DR9901L0013-00	1
KHR10051	DN4801L0083-00	226
	DN4801L0083-00	226
	DN4801L0084-00	237
	DN4801L0084-00	237
KHR10052	DN4801L0083-00	226
	DN4801L0083-00	226
	DN4801L0084-00	237
	DN4801L0084-00	237
KHR10053	DN4801L0083-00	226
	DN4801L0083-00	226
	DN4801L0084-00	237
	DN4801L0084-00	237
KHR10060	DN4801L0083-00	235

https://truckmanualshub.com/

パーツインデックス
Parts index

PART NO.	PPC	ITEM
KHR10060	DN4801L0084-00	246
KHR10220	DH0301L0031-00	28
	DHE001L0044-00	40
	DJBC01L0126-00	103
	DJKZ01L0069-00	99
	DRJ401L0204-00	31
	DRJ401L0204-00	31
	DRJ401L0205-00	7
	DRJ401L0205-00	13
	DRJ401L0205-00	22
	DRJ401L0205-00	26
	DRJ401L0205-00	32
	DRJ401L0205-00	57
	DRJ401L0205-00	61
	DRJ401L0205-00	103
	DRJ401L0205-00	108
	DRY701L0011-00	25
KHR10240	DR0205L0044-00	1
KHR10290	DRJ401L0205-00	88
KHR10300	DRJ401L0205-00	9
	DRJ401L0205-00	24
	DRJ401L0205-00	24
	DRJ401L0205-00	24
	DRJ401L0205-00	24
	DRJ401L0205-00	90
KHR10390	DJK401L0288-00	15
	DJK401L0289-00	20
	DJK401L0291-00	24
	DRJ401L0204-00	39
	DRJ401L0204-00	42
	DRJ401L0204-00	44
	DRJ401L0230-00	40
	DRJ401L0230-00	43
	DRJ401L0230-00	45
	DRJ401L0256-00	40
	DRJ401L0256-00	43
	DRJ401L0256-00	45
	DRX401L0001-00	1
KHR10420	DR0205L0043-00	73
KHR10540	DN4801L0083-00	243
	DN4801L0084-00	254
	DR0205L0043-00	87
	DR0205L0043-00	87
KHR10550	DR0205L0044-00	6
KHR10670	DH8101L0022-00	14

PART NO.	PPC	ITEM
KHR10710	DR0205L0044-00	12
KHR10720	DHE001L0044-00	37
KHR10730	DR0205L0044-00	58
KHR10820	DJKX01L0052-00	53
	DJKY01L0042-00	48
	DJKZ01L0069-00	102
	DJLJ01L0022-00	39
KHR10870	DR0205L0043-00	89
	DR0205L0043-00	89
KHR10880	DR0205L0043-00	90
	DR0205L0043-00	90
	DR0205L0043-00	105
	DR0205L0043-00	105
KHR10970	DR0103L0008-00	8
KHR11050	DRJ401L0205-00	36
KHR11090	DRJ401L0205-00	2
KHR11160	DRJ401L0205-00	113
KHR11210	DN4801L0083-00	244
	DN4801L0084-00	255
KHR11240	DRJ401L0204-00	52
	DRJ401L0230-00	54
	DRJ401L0256-00	54
KHR11460	DRY701L0011-00	4
KHR11480	DRY701L0011-00	6
KHR1172	DR1801L0020-00	5
	DR1801L0023-00	2
KHR11730	DR0205L0044-00	46
KHR11760	DR0205L0044-00	7
KHR1181	DR5001L0020-00	1
KHR1241	DRJ401L0205-00	49
KHR12430	DRY701L0011-00	2
KHR12510	DR0205L0043-00	70
	DR0205L0043-00	70
KHR12511	DR0205L0043-00	70
	DR0205L0043-00	70
KHR12512	DR0205L0043-00	70
	DR0205L0043-00	70
KHR1252	DNB501L0002-00	2
	DR4301L0005-00	4
	DRJ401L0205-00	78
	DRJ401L0205-00	96
	DRY701L0011-00	18
	DRY701L0011-00	18
KHR1253	DR0205L0044-00	32
	DR4301L0005-00	2

PART NO.	PPC	ITEM
KHR1253	DR5001L0020-00	2
	DRA801L0007-00	2
	DRJ401L0204-00	7
	DRJ401L0204-00	27
	DRJ401L0204-00	27
	DRJ401L0204-00	27
	DRJ401L0230-00	7
	DRJ401L0230-00	27
	DRJ401L0256-00	7
	DRJ401L0256-00	27
	DRY701L0011-00	18
KHR1254	DN7301L0211-00	80
	DN7301L0212-00	80
	DN7301L0213-00	80
	DN7301L0246-00	80
	DR1801L0020-00	15
KHR1257	DHE001L0044-00	9
KHR1267	DR0205L0044-00	9
KHR12840	DRY701L0011-00	1
KHR12860	DRY701L0011-00	9
KHR12880	DRY701L0011-00	15
KHR12900	DRY701L0011-00	19
KHR12910	DRY701L0011-00	5
KHR13030	DR0205L0043-00	1
	DR0205L0043-00	1
KHR13031	DR0205L0043-00	1
	DR0205L0043-00	1
KHR13040	DN4801L0083-00	240
	DN4801L0084-00	251
	DR0205L0043-00	84
	DR0205L0043-00	84
KHR13050	DR0205L0043-00	91
KHR13060	DR0205L0043-00	98
KHR13070	DR0205L0044-00	20
KHR1309	DHE001L0044-00	19
KHR1311	DRJ401L0205-00	63
	DRJ401L0205-00	84
KHR1317	DJK401L0289-00	17
	DJK401L0290-00	14
	DJK401L0291-00	21
	DJK401L0292-00	10
	DR0205L0044-00	19
	DRD701L0004-00	15
	DRD701L0004-00	15
	DRD701L0004-00	15

https://truckmanualshub.com/

パーツインデックス
Parts index

PART NO.	PPC	ITEM
KHR1317	DRJ401L0205-00	18
	DRJ401L0205-00	34
	DRJ401L0205-00	59
	DRJ401L0205-00	99
KHR13170	DR0205L0043-00	67
KHR13180	DR0205L0043-00	92
KHR13190	DR0205L0043-00	75
KHR13200	DN4801L0083-00	241
	DN4801L0084-00	252
	DR0205L0043-00	85
	DR0205L0043-00	85
KHR13210	DR0205L0043-00	93
KHR13220	DR0205L0043-00	76
KHR13230	DN4801L0083-00	242
	DN4801L0084-00	253
	DR0205L0043-00	86
	DR0205L0043-00	86
KHR13240	DR0205L0043-00	94
KHR13250	DR0205L0043-00	77
KHR13260	DR0205L0043-00	66
KHR13270	DR0205L0043-00	99
KHR13280	DR0205L0043-00	100
KHR13290	DR0205L0043-00	101
KHR13300	DR0205L0043-00	102
KHR13310	DR0205L0043-00	103
KHR13320	DR0205L0043-00	2
KHR13330	DR0205L0043-00	54
KHR13340	DR0205L0043-00	95
KHR13370	DHE001L0044-00	28
KHR13380	DHE001L0044-00	22
KHR13450	DRJ401L0204-00	4
	DRJ401L0230-00	4
	DRJ401L0256-00	4
KHR13460	DRJ401L0204-00	11
	DRJ401L0230-00	11
	DRJ401L0256-00	11
KHR13470	DRJ401L0204-00	18
	DRJ401L0204-00	18
KHR13471	DRJ401L0204-00	18
	DRJ401L0230-00	18
	DRJ401L0256-00	18
	DRJ401L0256-00	18
KHR13472	DRJ401L0204-00	18
	DRJ401L0204-00	18
	DRJ401L0230-00	18

PART NO.	PPC	ITEM
KHR13472	DRJ401L0230-00	18
	DRJ401L0256-00	18
	DRJ401L0256-00	18
KHR13480	DRJ401L0204-00	6
	DRJ401L0230-00	6
	DRJ401L0256-00	6
KHR13490	DRJ401L0204-00	45
	DRJ401L0230-00	46
	DRJ401L0256-00	46
KHR13500	DRJ401L0204-00	47
	DRJ401L0230-00	48
	DRJ401L0256-00	48
KHR13580	DR0205L0044-00	27
KHR13590	DR0205L0044-00	28
KHR13600	DR0205L0044-00	29
KHR13610	DR0205L0043-00	3
KHR13620	DR0205L0043-00	4
KHR13630	DR0205L0043-00	5
KHR13640	DR0205L0043-00	6
KHR13650	DR0205L0043-00	7
KHR13660	DR0205L0043-00	15
KHR13670	DR0205L0043-00	16
KHR13680	DR0205L0043-00	17
KHR13690	DR0205L0043-00	24
KHR13700	DR0205L0043-00	25
KHR13710	DR0205L0043-00	32
KHR13720	DR0205L0043-00	34
KHR13730	DR0205L0043-00	41
KHR13740	DR0205L0043-00	52
KHR13750	DR0205L0043-00	53
KHR13760	DR0205L0043-00	55
KHR13770	DR0205L0043-00	56
KHR13780	DR0205L0043-00	58
KHR13790	DR0205L0043-00	68
KHR13810	DN4801L0083-00	236
	DN4801L0084-00	247
KHR13820	DN4801L0083-00	237
	DN4801L0084-00	248
KHR13830	DN4801L0083-00	238
	DN4801L0084-00	249
KHR13840	DN4801L0083-00	239
	DN4801L0084-00	250
KHR13910	DRJ401L0205-00	37
KHR13920	DRJ401L0205-00	39
KHR13940	DHE001L0044-00	15

PART NO.	PPC	ITEM
KHR13950	DR0205L0043-00	83
	DR0205L0043-00	97
KHR14050	DRJ401L0204-00	41
	DRJ401L0230-00	42
	DRJ401L0256-00	42
KHR14060	DJKX01L0052-00	52
KHR14230	DRJ401L0204-00	20
	DRJ401L0230-00	20
	DRJ401L0256-00	20
KHR1424	DN4801L0083-00	233
	DN4801L0084-00	244
KHR1436	DR1801L0020-00	6
KHR14420	DRJ401L0205-00	110
KHR14450	DJKZ01L0069-00	104
KHR14460	DJKZ01L0069-00	105
KHR14470	DRD701L0001-00	4
	DRD701L0004-00	13
KHR1478	DR0205L0043-00	72
KHR14920	DRJ401L0205-00	112
KHR14930	DN9901L0050-00	92
	DN9901L0052-00	89
	DN9901L0058-00	87
	DN9901L0058-00	87
KHR14940	DR0205L0044-00	34
KHR14950	DR0205L0044-00	37
KHR14960	DR0205L0044-00	40
KHR14970	DR0205L0044-00	42
KHR14980	DRJ401L0205-00	42
KHR14990	DRJ401L0205-00	44
	DRJ401L0205-00	44
KHR14991	DRJ401L0205-00	44
	DRJ401L0205-00	44
KHR15000	DR0205L0044-00	49
KHR15010	DR0205L0044-00	50
KHR15020	DJKY01L0042-00	47
KHR15030	DRJ401L0205-00	15
KHR15040	DRJ401L0205-00	46
	DRJ401L0205-00	46
KHR15070	DRJ401L0205-00	38
KHR15080	DRY701L0011-00	17
KHR15090	DRY701L0011-00	11
KHR15100	DRY701L0011-00	22
	DRY701L0011-00	22
KHR15101	DRY701L0011-00	22
KHR15120	DR4301L0005-00	3

https://truckmanualshub.com/

パーツインデックス

Parts index

PART NO.	PPC	ITEM
KHR15170	DN4801L0083-00	234
	DN4801L0084-00	245
KHR15220	DN4801L0083-00	227
	DN4801L0084-00	238
KHR15230	DN4801L0083-00	228
	DN4801L0084-00	239
KHR15240	DN4801L0083-00	229
	DN4801L0083-00	229
	DN4801L0084-00	240
	DN4801L0084-00	240
KHR15241	DN4801L0083-00	229
	DN4801L0083-00	229
	DN4801L0084-00	240
	DN4801L0084-00	240
KHR15242	DN4801L0084-00	240
	DN4801L0084-00	240
KHR15250	DN4801L0083-00	230
	DN4801L0084-00	241
KHR15260	DN4801L0083-00	231
	DN4801L0084-00	242
KHR15560	DR0103L0008-00	1
KHR15580	DR0103L0008-00	4
KHR15640	DR0103L0008-00	5
KHR15660	DRJ401L0204-00	34
	DRJ401L0230-00	34
	DRJ401L0256-00	34
KHR15670	DRJ401L0204-00	36
	DRJ401L0230-00	36
	DRJ401L0256-00	36
KHR15780	DR0205L0043-00	106
KHR15790	DR0205L0043-00	107
KHR15850	DRJ401L0230-00	39
	DRJ401L0256-00	39
KHR15860	DR0205L0043-00	14
KHR1587	DRY701L0011-00	21
KHR15870	DR0205L0043-00	44
KHR15880	DR0205L0043-00	61
KHR15890	DR0205L0043-00	69
KHR1592	DRJ401L0205-00	47
KHR15940	DRJ401L0204-00	3
	DRJ401L0230-00	3
	DRJ401L0256-00	3
KHR15950	DRJ401L0204-00	22
	DRJ401L0204-00	22
KHR15960	DJK401L0289-00	13

PART NO.	PPC	ITEM
KHR15960	DJK401L0290-00	10
	DJK401L0291-00	17
	DJK401L0292-00	6
KHR15970	DRJ401L0204-00	33
	DRJ401L0204-00	33
KHR15971	DRJ401L0204-00	33
KHR15980	DRJ401L0204-00	40
	DRJ401L0204-00	40
KHR15981	DRJ401L0204-00	40
	DRJ401L0230-00	41
	DRJ401L0256-00	41
KHR15990	DRJ401L0204-00	21
	DRJ401L0204-00	21
KHR15991	DRJ401L0204-00	21
	DRJ401L0230-00	21
	DRJ401L0256-00	21
	DRJ401L0256-00	21
KHR15992	DRJ401L0204-00	21
	DRJ401L0204-00	21
	DRJ401L0230-00	21
	DRJ401L0230-00	21
	DRJ401L0256-00	21
	DRJ401L0256-00	21
KHR15993	DRJ401L0204-00	21
	DRJ401L0204-00	21
	DRJ401L0230-00	21
	DRJ401L0230-00	21
	DRJ401L0256-00	21
	DRJ401L0256-00	21
KHR16000	DRJ401L0204-00	1
	DRJ401L0204-00	1
KHR16001	DRJ401L0204-00	1
	DRJ401L0230-00	1
KHR16002	DRJ401L0204-00	1
	DRJ401L0204-00	1
	DRJ401L0256-00	1
KHR16240	DR1801L0023-00	1
KHR16450	DRJ401L0205-00	97
	DRY701L0011-00	23
KHR1659	DRJ401L0205-00	51
KHR1667	DRJ401L0205-00	76
	DRJ401L0205-00	87
KHR16700	DRJ401L0204-00	22
	DRJ401L0230-00	22
	DRJ401L0256-00	22

PART NO.	PPC	ITEM
KHR16710	DR1801L0023-00	4
KHR16740	DJK401L0288-00	19
	DJK401L0291-00	27
KHR1675	DR0205L0044-00	10
KHR1676	DR0205L0044-00	30
KHR1716	DRJ401L0205-00	52
KHR17290	DRJ401L0230-00	33
	DRJ401L0256-00	33
KHR1832	DRY701L0011-00	14
KHR18340	DR0205L0043-00	69.69
KHR19120	DRJ401L0205-00	44
	DRJ401L0205-00	44
KHR1957	DRJ401L0205-00	95
KHR20360	DRJ401L0205-00	68.01
	DRJ401L0205-00	68.01
KHR20590	DR0205L0043-00	79
	DR0205L0043-00	79
KHR21430	DRY003L0010-00	1
	DRY003L0010-00	1
KHR21440	DRY003L0010-00	2
	DRY003L0010-00	2
KHR21450	DR0205L0043-00	90
	DR0205L0043-00	90
	DR0205L0043-00	105
	DR0205L0043-00	105
KHR21460	DR0205L0043-00	89
	DR0205L0043-00	89
KHR2261	DR5001L0020-00	4
KHR2427	DRY003L0010-00	1
	DRY003L0010-00	1
KHR2428	DRY003L0010-00	2
	DRY003L0010-00	2
KHR2433	DRJ401L0205-00	92
KHR2447	DRA801L0007-00	1
KHR2464	DR0205L0043-00	74
KHR2475	DR1801L0020-00	1
KHR2476	DR1801L0020-00	2
KHR2477	DR1801L0020-00	3
KHR2495	DRV001L0015-00	5
KHR2501	DRA801L0007-00	3
KHR2581	DHE001L0044-00	42
	DJBC01L0126-00	56
	DJHC01L0093-00	93
	DJHC01L0093-00	128
	DR0205L0044-00	54

https://truckmanualshub.com/

パーツインデックス

Parts index

PART NO.	PPC	ITEM
KHR2581	DRJ401L0205-00	5
	DRJ401L0205-00	20
	DRJ401L0205-00	65
KHR2583	DR1801L0020-00	14
	DRJ401L0204-00	26
	DRJ401L0204-00	26
	DRJ401L0204-00	26
	DRJ401L0230-00	26
	DRJ401L0256-00	26
KHR2584	DC4501L0047-00	7
	DC4501L0051-00	7
	DC4501L0059-00	40
	DH0301L0031-00	26
	DHE001L0044-00	43
	DJBC01L0126-00	101
	DJKZ01L0069-00	97
	DRD701L0004-00	17
	DRJ401L0205-00	28
	DRJ401L0205-00	28
	DRJ401L0205-00	55
	DRJ401L0205-00	81
	DRJ401L0205-00	93
KHR2585	DRJ401L0205-00	30
	DRJ401L0205-00	30
KHR2636	DRV001L0015-00	6
KHR2733	DN9901L0050-00	150
	DN9901L0052-00	140
	DN9901L0058-00	138
KHR2737	DN9901L0050-00	130
	DN9901L0050-00	136
	DN9901L0050-00	144
	DN9901L0052-00	120
	DN9901L0052-00	126
	DN9901L0052-00	134
	DN9901L0058-00	118
	DN9901L0058-00	124
	DN9901L0058-00	132
	DR0103L0008-00	7
	DR0205L0043-00	82
KHR2739	DR0205L0043-00	88
	DR0205L0043-00	88
KHR2741	DN9901L0050-00	129
	DN9901L0052-00	119
	DN9901L0058-00	117
KHR2743	DRJ401L0204-00	43

PART NO.	PPC	ITEM
KHR2743	DRJ401L0230-00	44
	DRJ401L0256-00	44
KHR2751	DN9901L0050-00	128
	DN9901L0052-00	118
	DN9901L0058-00	116
KHR2771	DR0205L0043-00	63
KHR2773	DR0205L0043-00	62
KHR2805	DR0205L0043-00	37
KHR2806	DR0205L0043-00	38
KHR2807	DR0205L0043-00	39
KHR2808	DR0205L0043-00	40
KHR2815	DR0205L0043-00	11
KHR2816	DR0205L0043-00	12
KHR2818	DR0205L0043-00	13
KHR2820	DR0205L0043-00	18
KHR2821	DR0205L0043-00	19
KHR2822	DR0205L0043-00	20
KHR2823	DR0205L0043-00	21
KHR2824	DR0205L0043-00	22
KHR2825	DR0205L0043-00	23
KHR2828	DR0205L0043-00	26
KHR2829	DR0205L0043-00	27
KHR2830	DR0205L0043-00	28
KHR2831	DR0205L0043-00	29
KHR2832	DR0205L0043-00	30
KHR2833	DR0205L0043-00	31
KHR2836	DR0205L0043-00	59
KHR2837	DR0205L0043-00	10
KHR2841	DR0205L0043-00	42
KHR2842	DR0205L0043-00	43
KHR2843	DR0205L0043-00	46
KHR2844	DR0205L0043-00	47
KHR2845	DR0205L0043-00	48
KHR2851	DR0205L0043-00	57
KHR2854	DR0205L0043-00	60
KHR2855	DR0205L0043-00	49
KHR2856	DR0205L0043-00	50
KHR2857	DR0205L0043-00	35
KHR2858	DR0205L0043-00	51
KHR2860	DR0205L0043-00	45
KHR2861	DR0205L0043-00	33
KHR2862	DR0205L0043-00	36
KHR2905	DR0205L0044-00	35
KHR2906	DR0205L0044-00	38
KHR2907	DR0205L0044-00	41

PART NO.	PPC	ITEM
KHR2907	DR0205L0044-00	43
KHR2950	DN4801L0083-00	41
	DN4801L0084-00	41
KHR2986	DR0205L0043-00	78
	DR0205L0043-00	96
KHR3052	DHE001L0044-00	31
KHR3053	DR0205L0044-00	39
KHR3054	DR0205L0044-00	36
KHR3077	DRJ401L0204-00	34
	DRJ401L0204-00	34
KHR3078	DRJ401L0204-00	35
	DRJ401L0230-00	35
	DRJ401L0256-00	35
KHR3079	DRJ401L0204-00	36
	DRJ401L0204-00	36
KHR3080	DRJ401L0204-00	37
	DRJ401L0230-00	37
	DRJ401L0256-00	37
KHR3081	DRJ401L0204-00	38
	DRJ401L0230-00	38
	DRJ401L0256-00	38
KHR3171	DR0205L0044-00	17
KHR3197	DR0205L0044-00	2
KHR3198	DR0205L0044-00	3
KHR3213	DN4801L0083-00	232
	DN4801L0084-00	243
KHR3229	DR0205L0043-00	64
KHR3230	DR0205L0043-00	65
KHR3332	DR0103L0008-00	2
KHR3333	DR0103L0008-00	3
KHR3366	DN4801L0083-00	132
	DN4801L0083-00	132
	DN4801L0084-00	134
	DN4801L0084-00	134
KHR3556	DR1801L0023-00	3
KHR3574	DR0205L0043-00	71
KHR3748	DRJ401L0204-00	32.01
	DRJ401L0230-00	31
	DRJ401L0256-00	31
KHR3802	DRJ401L0204-00	13
	DRJ401L0230-00	13
	DRJ401L0256-00	13
	DRY701L0011-00	20
KHR3850	DRJ401L0205-00	48
KHR3852	DR4301L0005-00	1

https://truckmanualshub.com/

パーツインデックス
Parts index

PART NO.	PPC	ITEM
KHR3944	DRV001L0015-00	1
KHR3968	DRV001L0015-00	2
KHR3974	DR0205L0044-00	4
KHR3975	DR0205L0044-00	5
KHR4024	DRY701L0011-00	13
KHR4114	DRJ401L0205-00	83
KHR4116	DR0205L0043-00	8
KHR4117	DR0205L0043-00	9
KHV0060	DV0301L0131-00	9
	DV0301L0131-00	9
	DV0301L0131-00	9
	DV0301L0131-00	9
	DV0301L0132-00	9
	DV0301L0132-00	9
	DV0301L0132-00	9
	DV0301L0132-00	9
	DV0350L0008-00	8
	DV0350L0008-00	8
	DV0350L0009-00	8
	DV0350L0009-00	8
KHV0098	DV0220L0016-00	11
	DV0220L0016-00	11
	DV0220L0017-00	11
	DV0220L0017-00	11
	DV0401L0038-00	5
KHV0099	DV0401L0038-00	7
KHV0100	DV0201L0176-00	11
	DV0201L0177-00	11
	DV0201L0180-00	11
	DV0201L0181-00	11
	DV0230L0103-00	11
	DV0230L0104-00	11
	DV0230L0120-00	11
KHV0101	DV0201L0176-00	9
	DV0201L0177-00	9
	DV0201L0180-00	9
	DV0201L0181-00	9
	DV0230L0103-00	9
	DV0230L0104-00	9
	DV0230L0120-00	9
	DV0401L0033-00	5
	DV0402L0029-00	5
KHV0102	DV0401L0033-00	7
	DV0402L0029-00	7
KHV0103	DV0201L0176-00	13

PART NO.	PPC	ITEM
KHV0103	DV0201L0177-00	13
	DV0201L0180-00	13
	DV0201L0181-00	13
	DV0220L0016-00	15
	DV0220L0016-00	15
	DV0220L0017-00	15
	DV0220L0017-00	15
	DV0230L0103-00	13
	DV0230L0104-00	13
	DV0230L0120-00	13
	DV0301L0131-00	17
	DV0301L0131-00	17
	DV0301L0131-00	17
	DV0301L0131-00	17
	DV0301L0132-00	17
	DV0301L0132-00	17
	DV0301L0132-00	17
	DV0301L0132-00	17
	DV0350L0008-00	15
	DV0350L0008-00	15
	DV0350L0009-00	15
	DV0350L0009-00	15
KHV0111	DV0401L0038-00	25
KHV0112	DV0401L0038-00	20
KHV0113	DV0401L0033-00	25
	DV0401L0038-00	12
	DV0401L0038-00	16
	DV0402L0029-00	25
KHV0114	DV0401L0033-00	20
	DV0402L0029-00	20
KHV0115	DV0401L0033-00	12
	DV0401L0033-00	16
	DV0402L0029-00	12
	DV0402L0029-00	16
KHV0169	DV0401L0033-00	26
	DV0402L0029-00	26
KHV0170	DV0401L0033-00	21
	DV0402L0029-00	21
KHV0373	DV6001L0090-00	32
KHV10370	DV0301L0131-00	7
	DV0301L0131-00	7
	DV0301L0131-00	7
	DV0301L0131-00	7
	DV0301L0132-00	7
	DV0301L0132-00	7

PART NO.	PPC	ITEM
KHV10370	DV0301L0132-00	7
	DV0301L0132-00	7
	DV0350L0008-00	7
	DV0350L0008-00	7
	DV0350L0009-00	7
	DV0350L0009-00	7
KHV10380	DV0301L0131-00	5
	DV0301L0131-00	5
	DV0301L0132-00	5
	DV0301L0132-00	5
KHV10430	DV0601L0092-00	3
	DV0601L0094-00	3
	DV0601L0106-00	3
KHV10440	DV7501L0047-00	3
	DV7501L0049-00	3
KHV10450	DV9901L0029-00	1
	DV9901L0030-00	1
	DV9901L0031-00	1
	DV9901L0033-00	1
	DV9901L0036-00	1
	DV9901L0038-00	1
	DV9901L0039-00	1
	DV9901L0040-00	1
	DV9901L0041-00	1
	DV9901L0059-00	1
KHV10460	DV9901L0029-00	5
	DV9901L0029-00	7
	DV9901L0029-00	9
	DV9901L0030-00	6
	DV9901L0030-00	9
	DV9901L0036-00	6
	DV9901L0036-00	9
	DV9901L0039-00	8
	DV9901L0039-00	13
	DV9901L0039-00	15
	DV9901L0040-00	13
	DV9901L0040-00	16
	DV9901L0041-00	13
	DV9901L0041-00	16
KHV10480	DV9901L0031-00	4
	DV9901L0031-00	10
	DV9901L0031-00	17
	DV9901L0031-00	24
	DV9901L0031-00	29
	DV9901L0033-00	4

https://truckmanualshub.com/

パーツインデックス

Parts index

PART NO.	PPC	ITEM
KHV10480	DV9901L0033-00	10
	DV9901L0033-00	17
	DV9901L0033-00	20.04
	DV9901L0033-00	24
	DV9901L0035-00	2
	DV9901L0038-00	4
	DV9901L0038-00	11
	DV9901L0038-00	19
	DV9901L0038-00	26
	DV9901L0038-00	31
	DV9901L0057-00	2
	DV9901L0059-00	4
	DV9901L0059-00	11
	DV9901L0059-00	19
	DV9901L0059-00	22.04
	DV9901L0059-00	22.04
	DV9901L0059-00	26
KHV10490	DV9901L0031-00	30
	DV9901L0035-00	3
	DV9901L0038-00	32
	DV9901L0057-00	3
KHV10500	DV9901L0031-00	5
	DV9901L0031-00	11
	DV9901L0031-00	18
	DV9901L0031-00	25
	DV9901L0031-00	31
	DV9901L0033-00	5
	DV9901L0033-00	11
	DV9901L0033-00	18
	DV9901L0033-00	20.05
	DV9901L0033-00	25
	DV9901L0035-00	4
	DV9901L0038-00	5
	DV9901L0038-00	12
	DV9901L0038-00	20
	DV9901L0038-00	27
	DV9901L0038-00	33
	DV9901L0057-00	4
	DV9901L0059-00	5
	DV9901L0059-00	12
	DV9901L0059-00	20
	DV9901L0059-00	22.05
	DV9901L0059-00	22.05
	DV9901L0059-00	27
KHV10510	DV9901L0031-00	32

PART NO.	PPC	ITEM
KHV10510	DV9901L0035-00	5
	DV9901L0038-00	34
	DV9901L0057-00	5
KHV10520	DV9901L0038-00	6
	DV9901L0038-00	13
	DV9901L0039-00	4
	DV9901L0039-00	10
	DV9901L0040-00	4
	DV9901L0040-00	9
	DV9901L0041-00	4
	DV9901L0041-00	9
	DV9901L0059-00	6
	DV9901L0059-00	13
KHV10530	DV0201L0177-00	16
	DV0201L0177-00	16
	DV0201L0180-00	16
	DV0201L0181-00	16
	DV0201L0181-00	16
	DV0230L0103-00	16
	DV0230L0103-00	16
	DV0230L0104-00	16
	DV0230L0104-00	16
KHV10540	DV0201L0177-00	16
	DV0201L0181-00	16
	DV0230L0103-00	16
	DV0230L0104-00	16
KHV10550	DV0201L0181-00	19
	DV0201L0181-00	19
	DV0230L0104-00	19
	DV0230L0104-00	19
KHV10610	DV9901L0029-00	2
	DV9901L0029-00	4
	DV9901L0030-00	2
	DV9901L0030-00	4
	DV9901L0031-00	2
	DV9901L0031-00	8
	DV9901L0033-00	2
	DV9901L0033-00	8
	DV9901L0036-00	2
	DV9901L0036-00	4
	DV9901L0038-00	2
	DV9901L0038-00	9
	DV9901L0039-00	2
	DV9901L0039-00	7
	DV9901L0040-00	2

PART NO.	PPC	ITEM
KHV10610	DV9901L0040-00	7
	DV9901L0041-00	2
	DV9901L0041-00	7
	DV9901L0059-00	2
	DV9901L0059-00	9
KHV10630	DV9901L0030-00	7
	DV9901L0030-00	12
	DV9901L0031-00	14
	DV9901L0031-00	28
	DV9901L0033-00	14
	DV9901L0035-00	1
	DV9901L0036-00	7
	DV9901L0036-00	12
	DV9901L0038-00	16
	DV9901L0038-00	30
	DV9901L0040-00	12
	DV9901L0040-00	18
	DV9901L0041-00	12
	DV9901L0041-00	18
	DV9901L0057-00	1
	DV9901L0059-00	16
KHV10640	DV9901L0030-00	10
	DV9901L0031-00	21
	DV9901L0033-00	21
	DV9901L0036-00	10
	DV9901L0038-00	23
	DV9901L0040-00	15
	DV9901L0041-00	15
	DV9901L0059-00	23
KHV10670	DV7501L0047-00	3
	DV7501L0047-00	3
	DV7501L0049-00	3
	DV7501L0049-00	3
KHV10690	DV0601L0092-00	3
	DV0601L0092-00	3
	DV0601L0094-00	3
	DV0601L0094-00	3
KHV10940	DV0201L0181-00	18
	DV0230L0104-00	18
KHV10950	DV0201L0177-00	15
	DV0201L0180-00	15
	DV0201L0181-00	15
	DV0220L0017-00	17
	DV0220L0017-00	17
	DV0230L0103-00	15

https://truckmanualshub.com/

パーツインデックス

Parts index

PART NO.	PPC	ITEM
KHV10950	DV0230L0104-00	15
KHV10960	DV0201L0181-00	19
	DV0230L0104-00	19
KHV11290	DV0301L0131-00	5.01
	DV0301L0131-00	5.01
	DV0301L0132-00	5.01
	DV0301L0132-00	5.01
KHV11300	DV01D5L0002-00	9
KHV11310	DV01D5L0002-00	10
KHV11640	DV9901L0033-00	20.03
	DV9901L0059-00	22.03
	DV9901L0059-00	22.03
KHV11830	DV0114L0005-00	8
	DV0117L0004-00	8
	DV0118L0003-00	8
	DV0119L0004-00	8
	DV0120L0004-00	8
KHV11840	DV0114L0005-00	9
	DV0117L0004-00	9
	DV0118L0003-00	9
	DV0119L0004-00	9
	DV0120L0004-00	9
KLA0096	DA0207L0011-00	14
	DA0207L0011-00	14
KLA0152	DA9401L0027-00	1
KLN0257	DJ6201L0059-00	39
	DJ6201L0063-00	37
KLV0189	DV0220L0016-00	6
	DV0220L0016-00	6
	DV0220L0017-00	6
	DV0220L0017-00	6
KLV0449	DV5601L0168-00	14
	DV5601L0168-00	25
KLV11420	DV4601L0146-00	11
KMA0616	DA9401L0027-00	8
KMJ0601	DV5001L0046-00	11
KMJ0707	DV5001L0046-00	10
KMJ0964	DB1001L0023-00	16
	DV5001L0041-00	2
	DV5001L0041-00	4
	DV5001L0046-00	2
	DV5001L0046-00	4
	DV5001L0046-00	13
KMJ0985	DB1001L0023-00	14
KMP0077	DPF001L0021-00	3
KMP0080	DPF001L0021-00	2
KMR0306	DN7301L0211-00	102
	DN7301L0212-00	102
	DN7301L0213-00	102
	DN7301L0246-00	102
	DRJ401L0205-00	106
KMV0082	DV01D5L0002-00	9
KMV0083	DV01D5L0002-00	10
KMV0122	DV0401L0038-00	21
KMV0144	DV0401L0038-00	26
KNA0180	DAN701L0004-00	7
	DAP201L0021-00	9
	DAP201L0022-00	9
KNA0709	DAK301L0004-00	9
KNJ0381	DJE701L0030-00	5
	DJE701L0030-00	5
	DJE701L0030-00	5
	DJE701L0030-00	5
	DJE701L0030-00	5
	DJE701L0030-00	5
KNJ0604	DAK301L0004-00	13
	DAK301L0004-00	13
	DAK301L0007-00	13
	DAK301L0007-00	13
	DJLJ01L0022-00	5
	DJLJ01L0022-00	15
KNJ0605	DAK301L0004-00	1
	DAK301L0007-00	1
	DH0101L0051-00	28
	DJAH01L0107-00	4
	DJW001L0059-00	8
	DJY601L0024-00	6
KNJ0606	DJKX01L0052-00	26
	DJKX01L0052-00	29
	DJKZ01L0069-00	47
	DJKZ01L0069-00	50
	DJY601L0024-00	8
KNJ0660	DA8901L0028-00	5
KNJ0700	DH0101L0051-00	36
KNJ0758	DAK301L0004-00	6
	DAK301L0007-00	6
	DJBC01L0126-00	32
	DJBC01L0126-00	63
	DJBC01L0126-00	77
	DJHC01L0093-00	25
KNJ0758	DJHC01L0093-00	38
	DJHC01L0093-00	74
	DJHC01L0093-00	86
	DJHC01L0093-00	125
	DJKX01L0052-00	35
	DJKY01L0042-00	33
	DJKZ01L0069-00	56
	DJKZ01L0069-00	78
	DJLJ01L0022-00	24
	DRD701L0001-00	5
	DRD701L0004-00	9
	DV6001L0090-00	21
KNJ0759	DJBC01L0126-00	38
	DJHC01L0093-00	3
	DJHC01L0093-00	10
	DJHC01L0093-00	14
	DJHC01L0093-00	22
	DJHC01L0093-00	40
	DJHC01L0093-00	60
	DJHC01L0111-00	23
	DV4601L0146-00	20
	DV4601L0162-00	25
	DV6001L0090-00	30
KNJ0957	DA8901L0028-00	13
KNJ1106	DJBC01L0126-00	36
	DJBC01L0126-00	65
	DJBC01L0126-00	81
	DJHC01L0093-00	82
	DJHC01L0093-00	114
	DV4601L0146-00	17
	DV4601L0162-00	27
	DV6001L0090-00	24
KNJ11520	DJP801L0039-00	15
KNJ1311	DJBC01L0126-00	40
	DJHC01L0111-00	10
KNJ1936	DJKZ01L0069-00	33
KNJ1997	DJHC01L0093-00	9
	DJHC01L0093-00	9
	DJHC01L0093-00	9
	DJHC01L0093-00	9
	DJHC01L0093-00	21
	DJHC01L0093-00	21
	DJHC01L0093-00	21
	DJHC01L0093-00	21
KNJ2004	DJHC01L0093-00	8

https://truckmanualshub.com/

パーツインデックス

Parts index

PART NO.	PPC	ITEM
KNJ2004	DJHC01L0093-00	8
	DJHC01L0093-00	8
	DJHC01L0093-00	8
	DJHC01L0093-00	8
	DJHC01L0093-00	8
KNN0351	DN7301L0211-00	15
	DN7301L0211-00	15
	DN7301L0211-00	18
	DN7301L0211-00	18
	DN7301L0212-00	15
	DN7301L0212-00	15
	DN7301L0212-00	18
	DN7301L0212-00	18
	DN7301L0213-00	15
	DN7301L0213-00	15
	DN7301L0213-00	18
	DN7301L0213-00	18
	DN7301L0246-00	15
	DN7301L0246-00	15
	DN7301L0246-00	18
	DN7301L0246-00	18
KNV0438	DV01D5L0002-00	8
	DV01D5L0002-00	8
KNV0460	DV01D5L0002-00	6
KNV0461	DV01D5L0002-00	7
KNV0462	DV01D5L0002-00	11
	DV01D5L0002-00	11
KNV0463	DV01D5L0002-00	12
	DV01D5L0002-00	12
KNV0464	DV0401L0038-00	13
	DV0401L0038-00	17
KNV0467	DV01D5L0002-00	13
KNV0468	DV01D5L0002-00	14
KNV0538	DV5601L0168-00	8
KNV10660	DV01D5L0002-00	2
KNV10670	DV01D5L0002-00	3
KNV1106	DV0401L0038-00	2
KNV1130	DV0220L0016-00	12
	DV0220L0016-00	12
	DV0220L0017-00	12
	DV0220L0017-00	12
KNV1131	DV01D5L0002-00	18
KNV1138	DV0220L0016-00	13
	DV0220L0016-00	13
	DV0220L0017-00	13

PART NO.	PPC	ITEM
KNV1138	DV0220L0017-00	13
KNV1139	DV5601L0168-00	3
KNV1141	DV5601L0168-00	4
KNV1143	DV0401L0038-00	6
KNV1233	DV0401L0038-00	19
KNV1234	DV0401L0038-00	24
KNV12540	DV5601L0168-00	1
KNV12541	DV5601L0168-00	1
KNV12740	DV0401L0038-00	4
KNV1309	DV0401L0038-00	11
KNV1310	DV0401L0038-00	15
KNV13690	DV0301L0131-00	4
	DV0301L0131-00	4
	DV0301L0131-00	4
	DV0301L0131-00	4
	DV0301L0132-00	4
	DV0301L0132-00	4
	DV0301L0132-00	4
	DV0301L0132-00	4
KNV13700	DV0301L0131-00	3
	DV0301L0131-00	3
	DV0301L0131-00	3
	DV0301L0131-00	3
	DV0301L0132-00	3
	DV0301L0132-00	3
	DV0301L0132-00	3
	DV0301L0132-00	3
KNV13710	DV0301L0131-00	11
	DV0301L0131-00	11
	DV0301L0131-00	11
	DV0301L0131-00	11
	DV0301L0132-00	11
	DV0301L0132-00	11
	DV0301L0132-00	11
	DV0301L0132-00	11
KNV13750	DV0401L0038-00	3
KNV13810	DV9901L0031-00	15
	DV9901L0031-00	22
	DV9901L0033-00	15
	DV9901L0033-00	20.01
	DV9901L0033-00	22
	DV9901L0038-00	17
	DV9901L0038-00	24
	DV9901L0059-00	17
	DV9901L0059-00	22.01

PART NO.	PPC	ITEM
KNV13810	DV9901L0059-00	22.01
	DV9901L0059-00	24
KNV13820	DV9901L0031-00	16
	DV9901L0031-00	23
	DV9901L0033-00	16
	DV9901L0033-00	20.02
	DV9901L0033-00	23
	DV9901L0038-00	18
	DV9901L0038-00	25
	DV9901L0059-00	18
	DV9901L0059-00	22.02
	DV9901L0059-00	22.02
	DV9901L0059-00	25
KNV14100	DV7501L0047-00	8
	DV7501L0047-00	8
	DV7501L0047-00	12
	DV7501L0047-00	12
KNV14160	DV5601L0168-00	2
KNV1473	DV0401L0038-00	9
KNV1474	DV0401L0038-00	10
KNV15550	DV01D5L0002-00	6
KNV15560	DV01D5L0002-00	7
KNV15570	DV0401L0038-00	1
KNV15700	DV5601L0155-00	10
KNV15910	DV0220L0016-00	10
	DV0220L0016-00	10
	DV0220L0017-00	10
	DV0220L0017-00	10
KNV16060	DV01D5L0002-00	1
KNV17670	DV01D5L0002-00	1
KNV17700	DV01D5L0002-00	2
KNV17710	DV01D5L0002-00	3
KNV17720	DV01D5L0002-00	12.05
KNV17810	DV01D5L0002-00	12.02
KNV17820	DV01D5L0002-00	12.14
KNV17830	DV01D5L0002-00	12.15
KRA0103	DA8901L0028-00	6
	DA8901L0028-00	6
KRA0791	DAK301L0004-00	12
KRA0873	DAK301L0007-00	12
KRA0988	DAN701L0004-00	8
KRA1005	DA0219L0010-00	14
	DA0219L0010-00	14
KRA1006	DA0207L0011-00	15
	DA0207L0011-00	15

https://truckmanualshub.com/

パーツインデックス

Parts index

PART NO.	PPC	ITEM
KRA1006	DA0219L0010-00	15
	DA0219L0010-00	15
	DA0219L0012-00	15
	DA0219L0012-00	15
	DA0221L0004-00	15
	DA0221L0004-00	15
	DA0221L0006-00	15
	DA0221L0006-00	15
	DA02A5L0004-00	15
	DA02A5L0004-00	15
	DA02A5L0006-00	15
	DA02A5L0006-00	15
KRA1007	DA0207L0011-00	16
	DA0207L0011-00	16
	DA0219L0010-00	16
	DA0219L0010-00	16
	DA0219L0012-00	16
	DA0219L0012-00	16
	DA0221L0004-00	16
	DA0221L0004-00	16
	DA0221L0006-00	16
	DA0221L0006-00	16
	DA02A5L0004-00	16
	DA02A5L0004-00	16
	DA02A5L0006-00	16
	DA02A5L0006-00	16
KRA1015	DA0207L0011-00	11
	DA0207L0011-00	11
	DA0219L0010-00	11
	DA0219L0010-00	11
	DA0219L0012-00	11
	DA0219L0012-00	11
	DA0221L0004-00	11
	DA0221L0004-00	11
	DA0221L0006-00	11
	DA0221L0006-00	11
	DA02A5L0004-00	11
	DA02A5L0004-00	11
	DA02A5L0006-00	11
	DA02A5L0006-00	11
KRA10150	DAA801L0021-00	1
	DAA801L0021-00	1
KRA10160	DAA801L0021-00	2
	DAA801L0021-00	2
KRA10170	DA9401L0027-00	6

PART NO.	PPC	ITEM
KRA10360	DAP201L0021-00	1
	DAP201L0022-00	1
KRA10370	DAP201L0021-00	2
	DAP201L0022-00	2
KRA10380	DA8901L0028-00	11
KRA10400	DA0301L0012-00	1
KRA1041	DA0207L0011-00	10
	DA0207L0011-00	10
	DA0219L0010-00	10
	DA0219L0010-00	10
	DA0219L0012-00	10
	DA0219L0012-00	10
	DA0221L0004-00	10
	DA0221L0004-00	10
	DA0221L0006-00	10
	DA0221L0006-00	10
	DA02A5L0004-00	10
	DA02A5L0004-00	10
	DA02A5L0006-00	10
	DA02A5L0006-00	10
KRA1072	DA0207L0011-00	12
	DA0207L0011-00	12
	DA0219L0010-00	12
	DA0219L0010-00	12
	DA0219L0012-00	12
	DA0219L0012-00	12
	DA0221L0004-00	12
	DA0221L0004-00	12
	DA0221L0006-00	12
	DA0221L0006-00	12
	DA02A5L0004-00	12
	DA02A5L0004-00	12
	DA02A5L0006-00	12
	DA02A5L0006-00	12
KRA11090	DA8901L0028-00	17
KRA11110	DA0207L0011-00	8
	DA0219L0010-00	8
	DA0219L0012-00	8
	DA0221L0004-00	8
	DA0221L0006-00	8
	DA02A5L0004-00	8
	DA02A5L0006-00	8
KRA11130	DAE901L0071-00	1
KRA11190	DA8901L0028-00	1
KRA11200	DA8901L0028-00	2

PART NO.	PPC	ITEM
KRA11210	DA8901L0028-00	16
KRA1123	DAN401L0014-00	23
	DAN401L0014-00	23
	DAN401L0014-00	40
KRA11260	DAP201L0021-00	3
	DAP201L0022-00	3
KRA11280	DA0219L0012-00	1
KRA11310	DA0221L0006-00	1
KRA11320	DA02A5L0006-00	1
KRA11330	DA0207L0011-00	1
KRA11370	DA0219L0010-00	1
KRA1138	DAK301L0004-00	15
	DAK301L0007-00	15
KRA11380	DA0221L0004-00	1
KRA11390	DA02A5L0004-00	1
KRA11450	DA0207L0011-00	2
	DA0219L0012-00	2
	DA0221L0006-00	2
	DA02A5L0006-00	2
KRA11500	DA0219L0010-00	2
	DA0221L0004-00	2
	DA02A5L0004-00	2
KRA11560	DAE901L0072-00	1
KRA1195	DAP201L0021-00	3
	DAP201L0022-00	3
KRA1196	DAP201L0021-00	7
	DAP201L0022-00	7
KRA1197	DAP201L0021-00	4
	DAP201L0022-00	4
KRA1200	DAN701L0004-00	5
	DAN701L0004-00	5
	DAN701L0004-00	5
KRA1201	DAN701L0004-00	3
KRA12140	DA0501L0006-00	1
	DA3805L0003-00	1
KRA12260	DAE901L0084-00	1
KRA1248	DAN401L0014-00	25
	DAN401L0014-00	25
	DAN401L0014-00	42
KRA1249	DAN401L0014-00	26
	DAN401L0014-00	26
	DAN401L0014-00	43
KRA1252	DAN401L0014-00	28
	DAN401L0014-00	28
	DAN401L0014-00	41

https://truckmanualshub.com/

パーツインデックス
Parts index

PART NO.	PPC	ITEM
KRA12850	DA9401L0027-00	7
	DA9401L0027-00	7
KRA12860	DA9401L0027-00	9
	DA9401L0027-00	9
KRA12880	DA9401L0027-00	11
	DA9401L0027-00	11
KRA12890	DA9401L0027-00	12
	DA9401L0027-00	12
KRA12900	DAA801L0021-00	2
	DAA801L0021-00	2
KRA12910	DAA801L0021-00	1
	DAA801L0021-00	1
KRA1302	DAN401L0014-00	19
	DAN401L0014-00	19
KRA1303	DAN401L0014-00	27
	DAN401L0014-00	27
KRA1304	DAN401L0014-00	22
	DAN401L0014-00	22
KRA1305	DAN401L0014-00	24
	DAN401L0014-00	24
	DAN401L0014-00	46
KRA1400	DA0219L0012-00	14
	DA0219L0012-00	14
KRA1416	DAK301L0004-00	3
KRA1432	DAN701L0004-00	1
	DAN701L0004-00	1
KRA1433	DAN701L0004-00	2
	DAN701L0004-00	2
KRA1536	DAK301L0007-00	3
KRA1553	DAE901L0071-00	3
	DAE901L0072-00	3
	DAE901L0084-00	3
KRA1567	DA0207L0011-00	8
	DA0219L0010-00	8
	DA0219L0012-00	8
	DA0221L0004-00	8
	DA0221L0006-00	8
	DA02A5L0004-00	8
	DA02A5L0006-00	8
KRA1569	DA0207L0011-00	9
	DA0207L0011-00	9
	DA0219L0010-00	9
	DA0219L0010-00	9
	DA0219L0012-00	9
	DA0219L0012-00	9

PART NO.	PPC	ITEM
KRA1569	DA0221L0004-00	9
	DA0221L0004-00	9
	DA0221L0006-00	9
	DA0221L0006-00	9
	DA02A5L0004-00	9
	DA02A5L0004-00	9
	DA02A5L0006-00	9
	DA02A5L0006-00	9
KRA1594	DAN701L0004-00	10
KRA1595	DAP201L0021-00	10
	DAP201L0022-00	10
KRA1606	DA9401L0027-00	3
KRA1717	DAN401L0014-00	19
KRA1718	DAN401L0014-00	44
KRA1719	DAN401L0014-00	36
KRA1767	DAN701L0004-00	1
KRA1768	DAN701L0004-00	2
KRA1789	DA0219L0012-00	1
KRA1792	DA0221L0006-00	1
KRA1795	DA02A5L0006-00	1
KRA1797	DA0219L0010-00	1
KRA1798	DA0221L0004-00	1
KRA1803	DA0207L0011-00	2
	DA0219L0012-00	2
	DA0221L0006-00	2
	DA02A5L0006-00	2
KRA1805	DA0219L0010-00	2
	DA0221L0004-00	2
	DA02A5L0004-00	2
KRA1807	DA0207L0011-00	3
	DA0207L0011-00	3
	DA0219L0010-00	3
	DA0219L0010-00	3
	DA0219L0012-00	3
	DA0219L0012-00	3
	DA0221L0004-00	3
	DA0221L0004-00	3
	DA0221L0006-00	3
	DA0221L0006-00	3
	DA02A5L0004-00	3
	DA02A5L0004-00	3
	DA02A5L0006-00	3
	DA02A5L0006-00	3
KRA1808	DA0207L0011-00	4
	DA0207L0011-00	4

PART NO.	PPC	ITEM
KRA1808	DA0219L0010-00	4
	DA0219L0010-00	4
	DA0219L0012-00	4
	DA0219L0012-00	4
	DA0221L0004-00	4
	DA0221L0004-00	4
	DA0221L0006-00	4
	DA0221L0006-00	4
	DA02A5L0004-00	4
	DA02A5L0004-00	4
	DA02A5L0006-00	4
	DA02A5L0006-00	4
KRA1809	DA0207L0011-00	5
	DA0207L0011-00	5
	DA0219L0010-00	5
	DA0219L0010-00	5
	DA0219L0012-00	5
	DA0219L0012-00	5
	DA0221L0004-00	5
	DA0221L0004-00	5
	DA0221L0006-00	5
	DA0221L0006-00	5
	DA02A5L0004-00	5
	DA02A5L0004-00	5
	DA02A5L0006-00	5
	DA02A5L0006-00	5
KRA1810	DA0207L0011-00	6
	DA0207L0011-00	6
	DA0219L0010-00	6
	DA0219L0010-00	6
	DA0219L0012-00	6
	DA0219L0012-00	6
	DA0221L0004-00	6
	DA0221L0004-00	6
	DA0221L0006-00	6
	DA0221L0006-00	6
	DA02A5L0004-00	6
	DA02A5L0004-00	6
	DA02A5L0006-00	6
	DA02A5L0006-00	6
KRA1811	DA0207L0011-00	7
	DA0207L0011-00	7
	DA0219L0010-00	7
	DA0219L0010-00	7
	DA0219L0012-00	7

https://truckmanualshub.com/

パーツインデックス
Parts index

PART NO.	PPC	ITEM
KRA1811	DA0219L0012-00	7
	DA0221L0004-00	7
	DA0221L0004-00	7
	DA0221L0006-00	7
	DA0221L0006-00	7
	DA02A5L0004-00	7
	DA02A5L0004-00	7
	DA02A5L0006-00	7
	DA02A5L0006-00	7
KRA1812	DA0219L0010-00	8
	DA0221L0004-00	8
	DA02A5L0004-00	8
KRA1813	DA0219L0010-00	9
	DA0221L0004-00	9
	DA02A5L0004-00	9
KRA1814	DA0207L0011-00	13
	DA0207L0011-00	13
	DA0219L0010-00	13
	DA0219L0010-00	13
	DA0219L0012-00	13
	DA0219L0012-00	13
	DA0221L0004-00	13
	DA0221L0004-00	13
	DA0221L0006-00	13
	DA0221L0006-00	13
	DA02A5L0004-00	13
	DA02A5L0004-00	13
	DA02A5L0006-00	13
	DA02A5L0006-00	13
KRA1833	DA02A5L0004-00	1
KRA1834	DA0207L0011-00	1
KRA1872	DA8901L0028-00	12
KRA1874	DA8901L0028-00	10
KRB0369	DB1001L0023-00	4
KRB0680	DB1001L0023-00	3
KRB10291	DBA201L0088-00	10
KRB10301	DBA201L0088-00	9
KRB10340	DBA201L0088-00	3
KRB10490	DB0201L0055-00	4
KRB10500	DB0201L0055-00	5
KRB10540	DB0201L0055-00	8
KRB1055	DB1001L0023-00	5
KRB10560	DB0201L0055-00	10
KRB10590	DB0199L0088-00	4
	DB0199L0102-00	4

PART NO.	PPC	ITEM
KRB10590	DB0199L0112-00	4
KRB10720	DB1001L0023-00	15
KRB10730	DB1001L0023-00	17
KRB11710	DB1001L0023-00	1
KRB12590	DBA201L0088-00	1
KRB12600	DBA201L0088-00	5
KRB12610	DB0199L0088-00	2
	DB0199L0088-00	2
	DB0199L0102-00	2
	DB0199L0112-00	2
	DB0199L0112-00	2
KRB12620Y1	DB0199L0088-00	1
	DB0199L0088-00	1
KRB12640	DBA201L0088-00	7
KRB12700	DBA201L0088-00	8
KRB12710	DBA201L0088-00	2
KRB12720	DBA201L0088-00	6
KRB1273	DB1001L0023-00	2
KRB1274	DB1001L0023-00	6
KRB1307	DB1001L0023-00	8
KRB13110	DB0201L0055-00	3
KRB13120	DB0201L0055-00	6
KRB13130	DB0201L0055-00	7
KRB13150	DB0201L0055-00	11
KRB13170	DB0201L0055-00	1
KRB13220	DBA201L0088-00	4
KRB14330	DB0201L0055-00	2
KRB14340	DB0201L0055-00	9
KRB14350Y1	DB0199L0112-00	1
	DB0199L0112-00	1
KRB15040Y1	DB0199L0102-00	1
KRB17610Y1	DB0199L0088-00	1
	DB0199L0088-00	1
KRB17730Y1	DB0199L0112-00	1
	DB0199L0112-00	1
KRB17740Y1	DB0199L0102-00	1
KRC0105	DC4501L0047-00	3
	DC4501L0051-00	3
	DC4501L0059-00	36
KRC0135	DC4501L0059-00	23
KRC0136	DC4501L0059-00	11
KRC0137	DC4501L0059-00	19
KRC0138	DC4501L0059-00	12
KRC0139	DC4501L0059-00	21
KRC0140	DC4501L0059-00	20

PART NO.	PPC	ITEM
KRC0141	DC4501L0059-00	15
KRC0142	DC4501L0059-00	22
KRC0143	DC4501L0059-00	16
KRC0145	DC4501L0059-00	25
KRC0146	DC4501L0059-00	30
KRC0147	DC4501L0059-00	5
KRC0148	DC4501L0059-00	7
KRC0149	DC4501L0059-00	31
KRC0150	DC4501L0059-00	28
KRC0151	DC4501L0059-00	8
KRC0152	DC4501L0059-00	32
KRC0153	DC4501L0059-00	29
KRC0154	DC4501L0059-00	6
KRC0155	DC4501L0059-00	9
KRC0156	DC4501L0059-00	27
KRC0163	DC4501L0059-00	33
KRC10010	DC4501L0047-00	1
	DC4501L0047-00	1
KRC10030	DC4501L0047-00	2
	DC4501L0051-00	2
KRC10130	DC4501L0051-00	1
KRC10150	DC4501L0059-00	10
KRC10160	DC4501L0059-00	4
KRC10170	DC4501L0059-00	3
KRC10190	DC4501L0059-00	2
	DC4501L0059-00	2
KRC10200	DC4501L0059-00	1
KRH0278	DR0205L0044-00	47
KRH0449	DR0205L0044-00	48
KRH0675	DH8101L0022-00	17
KRH10130	DH0101L0051-00	19
KRH10140	DH0101L0051-00	20
KRH10150	DH0201L0031-00	9
	DH0201L0031-00	9
KRH10151	DH0201L0031-00	9
	DH0201L0031-00	9
KRH10160	DH0201L0031-00	2
KRH10190	DH0101L0051-00	24
KRH10200	DH0101L0051-00	41
KRH10210	DH0101L0051-00	42
KRH1024	DH0101L0051-00	4
KRH10290	DH0301L0031-00	37
KRH10300	DH0301L0031-00	43
KRH10320	DH0301L0031-00	41
KRH10330	DH0101L0051-00	32

https://truckmanualshub.com/

パーツインデックス
Parts index

PART NO.	PPC	ITEM
KRH10380	DH0301L0031-00	34
KRH10390	DH0301L0031-00	35
KRH10450	DH0301L0031-00	60
KRH10460	DH0301L0031-00	9
KRH10490	DH0602L0031-00	25
	DH0602L0032-00	20
KRH10560	DH0101L0051-00	5
KRH10590	DH0301L0031-00	61
	DH0301L0031-00	61
KRH10610	DHE001L0044-00	45
	DHE001L0044-00	45
	DJHC01L0093-00	95
	DR0205L0044-00	61
	DRJ401L0205-00	17
	DRJ401L0205-00	17
KRH10740	DH0101L0051-00	6
KRH10770	DH8101L0022-00	2
KRH10800	DH8101L0022-00	1
KRH10810	DH0301L0031-00	1
	DH0301L0031-00	1
KRH10811	DH0301L0031-00	1
	DH0301L0031-00	1
KRH10850	DH0101L0051-00	2
KRH10860	DH0101L0051-00	23
KRH10870	DH0101L0051-00	22
KRH10880	DH0201L0031-00	1
KRH10930	DH0201L0031-00	5
KRH10950	DH0101L0051-00	30
KRH10960	DH0301L0031-00	52
KRH10970	DH0301L0031-00	54
KRH10990	DH0101L0051-00	14
KRH11000	DH0101L0051-00	16
KRH11030	DH0301L0031-00	33
KRH11040	DH0301L0031-00	30
KRH11050	DH0101L0051-00	45
KRH11070	DH0301L0031-00	3
KRH11080	DH0301L0031-00	4
KRH11090	DH0101L0051-00	31
KRH11100	DH0301L0031-00	7
KRH11110	DH0301L0031-00	6
KRH11120	DH0301L0031-00	56
KRH11130	DH0101L0051-00	3
	DH0101L0051-00	3
KRH11131	DH0101L0051-00	3
	DH0101L0051-00	3

PART NO.	PPC	ITEM
KRH11132	DH0101L0051-00	3
	DH0101L0051-00	3
KRH11133	DH0101L0051-00	3
	DH0101L0051-00	3
KRH11134	DH0101L0051-00	3
	DH0101L0051-00	3
KRH11140	DH0301L0031-00	45
KRH11150	DH0301L0031-00	48
KRH11170	DH0101L0051-00	1
KRH11460	DH8101L0022-00	7
KRH11930	DH0602L0031-00	23
	DH0602L0032-00	18
KRH11940	DH0602L0031-00	6
	DH0602L0032-00	6
KRH11950	DH0602L0031-00	1
	DH0602L0032-00	1
KRH11970	DHE001L0044-00	45
KRH11980	DH0602L0031-00	20
	DH0602L0032-00	15
KRH11990	DH0301L0031-00	11
	DH0301L0031-00	11
KRH12020	DH0602L0032-00	26
KRH12030	DH0602L0032-00	27
KRH12040	DH0602L0032-00	24
KRH12050	DH0602L0032-00	29
KRH1236	DH0602L0031-00	12
	DH0602L0032-00	12
KRH1237	DH0602L0031-00	9
	DH0602L0032-00	9
KRH1251	DH0101L0051-00	27
KRH1270	DH0301L0031-00	19
KRH12850	DH0301L0031-00	11
	DH0301L0031-00	11
KRH13030	DH0301L0031-00	61
	DH0301L0031-00	61
KRH1377	DH0301L0031-00	13
	DH0301L0031-00	13
KRH1569	DH0602L0031-00	1
	DH0602L0031-00	1
	DH0602L0032-00	1
	DH0602L0032-00	1
KRH1570	DH0602L0031-00	19
KRJ0727	DJBV01L0039-00	12
	DJY901L0024-00	9
KRJ0963	DJP801L0039-00	3

PART NO.	PPC	ITEM
KRJ10290	DJL901L0069-00	1
	DJL901L0069-00	1
KRJ10300	DJL901L0070-00	12
	DJL901L0070-00	12
KRJ10310	DJG201L0073-00	1
	DJG201L0073-00	1
KRJ10311	DJG201L0073-00	1
	DJG201L0073-00	1
KRJ10312	DJG201L0073-00	1
	DJG201L0073-00	1
KRJ10340	DJL901L0069-00	5
	DJL901L0070-00	5
KRJ10350	DJHC01L0093-00	58
	DJHC01L0093-00	58
KRJ10351	DJHC01L0093-00	58
	DJHC01L0093-00	58
KRJ10580	DJW001L0059-00	2
KRJ10590	DJE701L0030-00	21
KRJ10611	DJY901L0024-00	2
KRJ1062	DR0205L0044-00	53
	DR0205L0044-00	53
KRJ10621	DJY901L0024-00	3
KRJ10631	DJY901L0024-00	5
KRJ10641	DJY901L0024-00	6
KRJ10650	DJL901L0069-00	6
	DJL901L0070-00	6
KRJ10660	DJL901L0069-00	7
	DJL901L0070-00	7
KRJ10670	DJL901L0069-00	8
	DJL901L0070-00	8
KRJ10710	DJY901L0024-00	11
KRJ10720	DJBV01L0039-00	7
	DJY901L0024-00	8
KRJ10730	DJY601L0024-00	4
KRJ10740	DJY601L0024-00	5
KRJ10750	DJY601L0024-00	10
KRJ10770	DJP801L0039-00	2
KRJ10790	DJP801L0039-00	11
KRJ10800	DJKY01L0042-00	31
	DJKZ01L0069-00	31
KRJ10810	DJP801L0039-00	12
KRJ10820	DJAQ01L0029-00	2
KRJ10830	DJAQ01L0029-00	3
KRJ10840	DJAQ01L0029-00	16
KRJ10850	DJAQ01L0029-00	11

https://truckmanualshub.com/

パーツインデックス

Parts index

PART NO.	PPC	ITEM
KRJ10860	DJAQ01L0029-00	8
	DJAQ01L0041-00	8
KRJ10870	DJAQ01L0029-00	9
	DJAQ01L0041-00	9
KRJ10880	DJBV01L0039-00	5
KRJ10890	DJBV01L0039-00	2
KRJ10900	DJBV01L0039-00	10
KRJ10931	DJEE01L0064-00	7
KRJ10942	DJEE01L0064-00	20
KRJ10950	DJEE01L0064-00	1
KRJ10970	DJEE01L0064-00	22
KRJ11180	DJAH01L0107-00	3
KRJ11200	DJAQ01L0029-00	1
KRJ11270	DJBC01L0126-00	67
KRJ11330	DJBV01L0039-00	14
KRJ11450	DJKY01L0042-00	30
	DJKZ01L0069-00	30
KRJ11470	DJKX01L0052-00	9
	DJKY01L0042-00	9
	DJKZ01L0069-00	9
KRJ11500	DJKX01L0052-00	1
	DJKY01L0042-00	1
	DJKZ01L0069-00	1
KRJ11510	DJKX01L0052-00	14
	DJKY01L0042-00	14
	DJKZ01L0069-00	14
KRJ11520	DJKY01L0042-00	24
	DJKZ01L0069-00	24
KRJ11540	DJKX01L0052-00	23
	DJKZ01L0069-00	44
KRJ11580	DJLJ01L0022-00	20
KRJ11590	DJLJ01L0022-00	21
KRJ11640	DJHC01L0101-00	2
KRJ11780	DJHC01L0093-00	96
KRJ12170	DJKY01L0042-00	8
	DJKY01L0042-00	18
KRJ12470	DJKX01L0052-00	47
KRJ12530	DJHC01L0093-00	55
KRJ13000	DJBC01L0126-00	88
KRJ15350	DJE701L0030-00	2
	DJE701L0030-00	2
KRJ15380	DJE701L0030-00	3
	DJE701L0030-00	3
	DJE701L0030-00	3
	DJE701L0030-00	3

PART NO.	PPC	ITEM
KRJ15380	DJE701L0030-00	3
	DJE701L0030-00	3
KRJ15660	DJE701L0030-00	1
	DJE701L0030-00	1
KRJ15830	DJE701L0030-00	14
	DP5501L0058-00	1
KRJ1588	DN7301L0211-00	61
	DN7301L0212-00	61
	DN7301L0213-00	61
	DN7301L0246-00	61
KRJ15970	DJL901L0070-00	1
	DJL901L0070-00	1
KRJ16010	DJG201L0074-00	1
	DJG201L0074-00	1
KRJ16011	DJG201L0074-00	1
	DJG201L0074-00	1
KRJ16012	DJG201L0074-00	1
	DJG201L0074-00	1
KRJ16040	DJG201L0073-00	2
	DJG201L0074-00	2
	DJG201L0082-00	2
KRJ16050	DJKX01L0052-00	19
	DJKY01L0042-00	19
	DJKZ01L0069-00	19
KRJ16060	DJKY01L0042-00	28
	DJKZ01L0069-00	28
KRJ16070	DJLJ01L0022-00	18
KRJ16100	DC4501L0047-00	5
	DC4501L0051-00	5
	DC4501L0059-00	38
KRJ16120	DJBC01L0126-00	42
KRJ16130	DJBC01L0126-00	85
KRJ16140	DJBC01L0126-00	92
KRJ16150	DJBC01L0126-00	99
KRJ16170	DJHC01L0093-00	27
KRJ16260	DJP801L0039-00	14
KRJ16270	DJP801L0039-00	9
KRJ16280	DJKX01L0052-00	31
	DJKZ01L0069-00	52
KRJ16300	DJHC01L0101-00	4
KRJ16320	DJP801L0039-00	1
KRJ16340	DJKX01L0052-00	28
	DJKZ01L0069-00	49
KRJ16350	DJKZ01L0069-00	61
KRJ16360	DJKZ01L0069-00	80

PART NO.	PPC	ITEM
KRJ16370	DJKZ01L0069-00	93
KRJ16400	DJKX01L0052-00	18
KRJ16410	DJKX01L0052-00	40
KRJ16440	DJKY01L0042-00	38
KRJ16470	DJLJ01L0022-00	13
KRJ16480	DJLJ01L0022-00	14
KRJ16490	DJLJ01L0022-00	17
KRJ16500	DJLJ01L0022-00	29
KRJ16520	DRD701L0001-00	7
KRJ16540	DJKZ01L0069-00	38
KRJ16590	DJHC01L0093-00	76
KRJ1747	DJW001L0059-00	1
KRJ18000	DJHC01L0093-00	108
KRJ19110	DJHC01L0111-00	6
KRJ19150	DJHC01L0111-00	1
KRJ19160	DJHC01L0111-00	3
KRJ19170	DJHC01L0111-00	14
KRJ19680	DJEE01L0064-00	11
KRJ19960	DJE701L0030-00	1
	DJE701L0030-00	1
KRJ19970	DJE701L0030-00	2
	DJE701L0030-00	2
KRJ19990	DRD701L0004-00	6
KRJ20100	DJG201L0082-00	1
KRJ20101	DJG201L0082-00	1
KRJ20102	DJG201L0082-00	1
KRJ21900	DJE701L0030-00	1
	DJE701L0030-00	1
KRJ21910	DJE701L0030-00	2
	DJE701L0030-00	2
KRJ2246	DJE701L0030-00	13
KRJ23310	DJAQ01L0041-00	11
KRJ23320	DJAQ01L0041-00	16
KRJ2681	DJAQ01L0029-00	4
	DJAQ01L0029-00	12
	DJAQ01L0041-00	4
	DJAQ01L0041-00	12
	DJY601L0024-00	1
KRJ2682	DJAQ01L0029-00	17
	DJAQ01L0041-00	17
	DJKX01L0052-00	3
	DJKY01L0042-00	3
	DJKY01L0042-00	26
	DJKZ01L0069-00	3
	DJKZ01L0069-00	26

https://truckmanualshub.com/

パーツインデックス
Parts index

PART NO.	PPC	ITEM
KRJ3449	DJL901L0069-00	2
	DJL901L0070-00	2
KRJ3456	DJE701L0030-00	4
	DJE701L0030-00	4
	DJE701L0030-00	4
	DJE701L0030-00	4
KRJ3457	DJE701L0030-00	12
KRJ3461	DJE701L0030-00	16
	DJE701L0030-00	16
	DJE701L0030-00	16
	DJE701L0030-00	16
KRJ3463	DJE701L0030-00	17
	DJE701L0030-00	17
	DJE701L0030-00	17
	DJE701L0030-00	17
KRJ3515	DJEE01L0064-00	3
KRJ3560	DJHC01L0093-00	84
KRJ3823	DJEE01L0064-00	9
KRJ4050	DC4501L0047-00	11
	DC4501L0051-00	11
	DC4501L0059-00	44
	DV5001L0041-00	6
KRJ4134	DJHC01L0093-00	19
	DJHC01L0093-00	19
	DJHC01L0093-00	19
	DJHC01L0093-00	19
	DJHC01L0093-00	19
	DJHC01L0093-00	19
KRJ4381	DJHC01L0093-00	20
	DJHC01L0093-00	20
	DJHC01L0093-00	20
	DJHC01L0093-00	20
	DJHC01L0093-00	20
	DJHC01L0093-00	20
KRJ5803	DJ6201L0059-00	11
	DJ6201L0059-00	11
	DJ6201L0063-00	9
	DJ6201L0063-00	9
KRJ5903	DJHC01L0093-00	42
KRJ5983	DRV001L0015-00	12
KRN0422	DN7301L0211-00	33
	DN7301L0212-00	33
	DN7301L0213-00	33
	DN7301L0246-00	33
KRN0692	DR0205L0044-00	16

PART NO.	PPC	ITEM
KRN10420	DN7301L0211-00	60
	DN7301L0212-00	60
	DN7301L0213-00	60
	DN7301L0246-00	60
KRN10530	DN7301L0211-00	105
	DN7301L0212-00	105
	DN7301L0213-00	105
	DN7301L0246-00	105
KRN10700	DN7301L0211-00	155
	DN7301L0212-00	155
	DN7301L0213-00	155
	DN7301L0246-00	154
KRN10710	DN7301L0211-00	156
	DN7301L0212-00	156
	DN7301L0213-00	156
	DN7301L0246-00	155
KRN10770	DN7301L0211-00	166
	DN7301L0211-00	166
	DN7301L0212-00	166
	DN7301L0212-00	166
	DN7301L0213-00	166
	DN7301L0213-00	166
	DN7301L0246-00	165
	DN7301L0246-00	165
KRN10780	DN7301L0211-00	167
	DN7301L0212-00	167
	DN7301L0213-00	167
	DN7301L0246-00	166
KRN10790	DN7301L0211-00	168
	DN7301L0212-00	168
	DN7301L0213-00	168
	DN7301L0246-00	167
KRN10870	DN7301L0211-00	73
	DN7301L0212-00	73
	DN7301L0213-00	73
	DN7301L0246-00	73
KRN11090	DN7301L0211-00	92
	DN7301L0212-00	92
	DN7301L0213-00	92
	DN7301L0246-00	92
KRN11100	DN7301L0211-00	94
	DN7301L0212-00	94
	DN7301L0213-00	94
	DN7301L0246-00	94
KRN11110	DN7301L0211-00	157

PART NO.	PPC	ITEM
KRN11110	DN7301L0212-00	157
	DN7301L0213-00	157
	DN7301L0246-00	156
KRN11120	DJHC01L0093-00	57
KRN1133	DN7301L0211-00	181
	DN7301L0212-00	182
	DN7301L0213-00	182
	DN7301L0246-00	180
KRN12330G1	DN7301L0211-00	70
	DN7301L0212-00	70
	DN7301L0213-00	70
	DN7301L0246-00	70
KRN12340DM	DN7301L0211-00	121
	DN7301L0212-00	121
	DN7301L0213-00	121
	DN7301L0246-00	121
KRN12350G1	DN7301L0211-00	134
	DN7301L0212-00	134
	DN7301L0213-00	134
	DN7301L0246-00	133
KRN12360G1	DN7301L0211-00	132
	DN7301L0212-00	132
	DN7301L0213-00	132
	DN7301L0246-00	131
KRN12370G1	DN7301L0211-00	136
	DN7301L0212-00	136
	DN7301L0213-00	136
	DN7301L0246-00	135
KRN12380Y1	DN7301L0211-00	11
	DN7301L0212-00	11
	DN7301L0213-00	11
	DN7301L0246-00	11
KRN12390Y1	DN7301L0211-00	13
	DN7301L0211-00	13
	DN7301L0246-00	13
	DN7301L0246-00	13
KRN12400Y1	DN7301L0211-00	16
	DN7301L0211-00	16
	DN7301L0246-00	16
	DN7301L0246-00	16
KRN12410Y1	DN7301L0211-00	19
	DN7301L0212-00	19
	DN7301L0213-00	19
	DN7301L0246-00	19
KRN12440	DN7301L0211-00	4

https://truckmanualshub.com/

パーツインデックス

Parts index

PART NO.	PPC	ITEM
KRN12440	DN7301L0212-00	4
	DN7301L0213-00	4
	DN7301L0246-00	4
KRN12460	DN7301L0211-00	6
	DN7301L0212-00	6
	DN7301L0213-00	6
	DN7301L0246-00	6
KRN12480	DN7301L0211-00	8
	DN7301L0212-00	8
	DN7301L0213-00	8
	DN7301L0246-00	8
KRN12490	DN7301L0211-00	9
	DN7301L0211-00	9
	DN7301L0212-00	9
	DN7301L0212-00	9
	DN7301L0213-00	9
	DN7301L0213-00	9
	DN7301L0246-00	9
	DN7301L0246-00	9
KRN12491	DN7301L0211-00	9
	DN7301L0211-00	9
	DN7301L0212-00	9
	DN7301L0212-00	9
	DN7301L0213-00	9
	DN7301L0213-00	9
	DN7301L0246-00	9
	DN7301L0246-00	9
KRN12500G1	DN7301L0211-00	10
	DN7301L0212-00	10
	DN7301L0213-00	10
	DN7301L0246-00	10
KRN12530	DN7301L0211-00	84
	DN7301L0212-00	84
	DN7301L0213-00	84
	DN7301L0246-00	84
KRN12540	DN7301L0211-00	85
	DN7301L0212-00	85
	DN7301L0213-00	85
	DN7301L0246-00	85
KRN12550	DN7301L0211-00	86
	DN7301L0212-00	86
	DN7301L0213-00	86
	DN7301L0246-00	86
KRN12560	DN7301L0211-00	88
	DN7301L0212-00	88
KRN12560	DN7301L0213-00	88
	DN7301L0246-00	88
KRN12570	DN7301L0211-00	81
	DN7301L0212-00	81
	DN7301L0213-00	81
	DN7301L0246-00	81
KRN12580	DN7301L0211-00	59
	DN7301L0212-00	59
	DN7301L0213-00	59
	DN7301L0246-00	59
KRN12600	DN7301L0211-00	90
	DN7301L0212-00	90
	DN7301L0213-00	90
	DN7301L0246-00	90
KRN12610	DN7301L0211-00	21
	DN7301L0212-00	21
	DN7301L0213-00	21
	DN7301L0246-00	21
KRN12620	DN7301L0211-00	22
	DN7301L0212-00	22
	DN7301L0212-00	22
	DN7301L0213-00	22
	DN7301L0213-00	22
	DN7301L0246-00	22
KRN12630	DN7301L0211-00	23
	DN7301L0212-00	23
	DN7301L0212-00	23
	DN7301L0213-00	23
	DN7301L0213-00	23
	DN7301L0246-00	23
KRN12640	DN7301L0211-00	117
	DN7301L0212-00	117
	DN7301L0212-00	117
	DN7301L0213-00	117
	DN7301L0213-00	117
	DN7301L0246-00	117
KRN12650	DN7301L0211-00	119
	DN7301L0212-00	119
	DN7301L0213-00	119
	DN7301L0246-00	119
KRN12670G1	DN7301L0211-00	41
	DN7301L0212-00	41
	DN7301L0213-00	41
	DN7301L0246-00	41
KRN12680G1	DN7301L0211-00	42
KRN12680G1	DN7301L0212-00	42
	DN7301L0213-00	42
	DN7301L0246-00	42
KRN12690G1	DN7301L0211-00	43
	DN7301L0212-00	43
	DN7301L0213-00	43
	DN7301L0246-00	43
KRN12700	DN7301L0211-00	169
	DN7301L0212-00	169
	DN7301L0213-00	169
	DN7301L0246-00	168
KRN12710	DN7301L0211-00	170
	DN7301L0246-00	169
KRN12730	DN7301L0211-00	74
	DN7301L0212-00	74
	DN7301L0213-00	74
	DN7301L0246-00	74
KRN12740	DN7301L0211-00	158
	DN7301L0212-00	158
	DN7301L0213-00	158
	DN7301L0246-00	157
KRN12750	DN7301L0211-00	159
	DN7301L0212-00	159
	DN7301L0213-00	159
	DN7301L0246-00	158
KRN12760	DN7301L0211-00	161
	DN7301L0212-00	161
	DN7301L0213-00	161
	DN7301L0246-00	160
KRN12790	DN7301L0211-00	172
	DN7301L0212-00	173
	DN7301L0213-00	173
	DN7301L0246-00	171
KRN13360	DN7301L0211-00	174
	DN7301L0212-00	175
	DN7301L0213-00	175
	DN7301L0246-00	173
KRN14110	DN7301L0211-00	173
	DN7301L0212-00	174
	DN7301L0213-00	174
	DN7301L0246-00	172
KRN14150	DN7301L0211-00	176
	DN7301L0212-00	177
	DN7301L0213-00	177
	DN7301L0246-00	175

https://truckmanualshub.com/

パーツインデックス

Parts index

PART NO.	PPC	ITEM
KRN14160	DN7301L0211-00	177
	DN7301L0212-00	178
	DN7301L0213-00	178
	DN7301L0246-00	176
KRN14180	DN7301L0211-00	171
	DN7301L0212-00	172
	DN7301L0213-00	172
	DN7301L0246-00	170
KRN14200	DN7301L0211-00	164
	DN7301L0212-00	164
	DN7301L0213-00	164
	DN7301L0246-00	163
KRN14210	DN7301L0211-00	165
	DN7301L0212-00	165
	DN7301L0213-00	165
	DN7301L0246-00	164
KRN14230	DN7301L0211-00	178
	DN7301L0212-00	179
	DN7301L0213-00	179
	DN7301L0246-00	177
KRN14240	DN7301L0211-00	75
	DN7301L0212-00	75
	DN7301L0213-00	75
	DN7301L0246-00	75
KRN14530	DN7301L0211-00	179
	DN7301L0212-00	180
	DN7301L0213-00	180
	DN7301L0246-00	178
KRN14540	DN7301L0211-00	180
	DN7301L0212-00	181
	DN7301L0213-00	181
	DN7301L0246-00	179
KRN14580	DN7301L0211-00	114
	DN7301L0212-00	114
	DN7301L0213-00	114
	DN7301L0246-00	114
KRN14590	DN7301L0211-00	7
	DN7301L0212-00	7
	DN7301L0213-00	7
	DN7301L0246-00	7
KRN14600	DN7301L0211-00	44
	DN7301L0211-00	44
	DN7301L0212-00	44
	DN7301L0213-00	44
	DN7301L0246-00	44
KRN14601	DN7301L0211-00	44
	DN7301L0211-00	44
KRN14610	DN7301L0211-00	46
	DN7301L0212-00	46
	DN7301L0213-00	46
	DN7301L0246-00	46
KRN14620	DN7301L0211-00	98
	DN7301L0212-00	98
	DN7301L0213-00	98
	DN7301L0246-00	98
KRN14630	DRJ401L0205-00	17
KRN14640G1	DN7301L0212-00	40
	DN7301L0246-00	40
KRN14650	DN7301L0211-00	112
	DN7301L0212-00	112
	DN7301L0213-00	112
	DN7301L0246-00	112
KRN14660	DN7301L0211-00	107
	DN7301L0212-00	107
	DN7301L0213-00	107
	DN7301L0246-00	107
KRN14670	DN7301L0211-00	109
	DN7301L0212-00	109
	DN7301L0213-00	109
	DN7301L0246-00	109
KRN14680	DN7301L0211-00	162
	DN7301L0212-00	162
	DN7301L0213-00	162
	DN7301L0246-00	161
KRN14690	DN7301L0211-00	163
	DN7301L0212-00	163
	DN7301L0213-00	163
	DN7301L0246-00	162
KRN14700	DN7301L0211-00	2
	DN7301L0212-00	2
	DN7301L0213-00	2
	DN7301L0246-00	2
KRN14710	DH0602L0031-00	17
KRN14720	DH0602L0031-00	15
KRN14730	DH0602L0031-00	16
KRN14740	DN7301L0212-00	103
	DN7301L0212-00	103
	DN7301L0246-00	103
	DN7301L0246-00	103
KRN14741	DN7301L0212-00	103
	DN7301L0246-00	103
	DN7301L0246-00	103
KRN14750	DN7301L0211-00	100
	DN7301L0212-00	100
	DN7301L0213-00	100
	DN7301L0246-00	100
KRN14760	DN7301L0211-00	20
	DN7301L0212-00	20
	DN7301L0213-00	20
	DN7301L0246-00	20
KRN14770	DN7301L0211-00	160
	DN7301L0212-00	160
	DN7301L0213-00	160
	DN7301L0246-00	159
KRN14780	DN7301L0211-00	3
	DN7301L0212-00	3
	DN7301L0213-00	3
	DN7301L0246-00	3
	DN7301L0246-00	3
KRN14781	DN7301L0211-00	3
	DN7301L0212-00	3
	DN7301L0213-00	3
	DN7301L0246-00	3
	DN7301L0246-00	3
KRN14790G1	DN7301L0211-00	5
	DN7301L0212-00	5
	DN7301L0213-00	5
	DN7301L0246-00	5
KRN15520DM	DN7301L0211-00	1
	DN7301L0211-00	1
	DN7301L0246-00	1
	DN7301L0246-00	1
KRN15521DM	DN7301L0211-00	1
	DN7301L0211-00	1
	DN7301L0246-00	1
	DN7301L0246-00	1
KRN15530DM	DN7301L0212-00	39
	DN7301L0246-00	39
KRN15640DM	DN7301L0212-00	1
	DN7301L0212-00	1
	DN7301L0213-00	1
	DN7301L0213-00	1
KRN15641DM	DN7301L0212-00	1
	DN7301L0212-00	1

https://truckmanualshub.com/

パーツインデックス

Parts index

PART NO.	PPC	ITEM
KRN15641DM	DN7301L0213-00	1
	DN7301L0213-00	1
KRN15642DM	DN7301L0212-00	1
	DN7301L0212-00	1
	DN7301L0213-00	1
	DN7301L0213-00	1
KRN15650Y1	DN7301L0212-00	13
	DN7301L0212-00	13
	DN7301L0213-00	13
	DN7301L0213-00	13
KRN15660Y1	DN7301L0212-00	16
	DN7301L0212-00	16
	DN7301L0213-00	16
	DN7301L0213-00	16
KRN15670	DN7301L0212-00	170
	DN7301L0213-00	170
KRN15680	DN7301L0212-00	171
	DN7301L0213-00	171
KRN16000	DN7301L0211-00	103
	DN7301L0213-00	103
KRN16010G1	DN7301L0211-00	40
	DN7301L0213-00	40
KRN16020DM	DN7301L0211-00	39
	DN7301L0213-00	39
KRN17430	DN7301L0211-00	69.02
	DN7301L0211-00	69.02
	DN7301L0212-00	69.02
	DN7301L0212-00	69.02
	DN7301L0213-00	69.02
	DN7301L0213-00	69.02
	DN7301L0246-00	69.02
	DN7301L0246-00	69.02
KRN18150Y1	DN7301L0211-00	13
	DN7301L0211-00	13
	DN7301L0246-00	13
	DN7301L0246-00	13
KRN18160Y1	DN7301L0211-00	16
	DN7301L0211-00	16
	DN7301L0246-00	16
	DN7301L0246-00	16
KRN18190Y1	DN7301L0212-00	13
	DN7301L0212-00	13
	DN7301L0213-00	13
	DN7301L0213-00	13
KRN18200Y1	DN7301L0212-00	16

PART NO.	PPC	ITEM
KRN18200Y1	DN7301L0212-00	16
	DN7301L0213-00	16
	DN7301L0213-00	16
KRN18260DM	DN7301L0211-00	1
	DN7301L0211-00	1
	DN7301L0246-00	1
	DN7301L0246-00	1
KRN18270DM	DN7301L0212-00	1
	DN7301L0212-00	1
	DN7301L0213-00	1
	DN7301L0213-00	1
KRN19020	DN7301L0211-00	9
	DN7301L0212-00	9
	DN7301L0212-00	9
	DN7301L0213-00	9
	DN7301L0246-00	9
KRN19030DM	DN7301L0211-00	1
	DN7301L0246-00	1
KRN19080DM	DN7301L0212-00	1
	DN7301L0213-00	1
KRN19190	DN7301L0211-00	166
	DN7301L0211-00	166
	DN7301L0212-00	166
	DN7301L0212-00	166
	DN7301L0213-00	166
	DN7301L0213-00	166
	DN7301L0246-00	165
	DN7301L0246-00	165
KRN2098	DN7301L0211-00	29
	DN7301L0212-00	29
	DN7301L0213-00	29
	DN7301L0246-00	29
KRP0821	DPF001L0021-00	16
KRP0825	DPF001L0021-00	18
KRP0827	DPF001L0021-00	6
KRP11440	DP0103L0222-00	13
	DP0103L0223-00	13
	DP0103L0224-00	13
KRP11450	DP0103L0222-00	14
	DP0103L0223-00	14
	DP0103L0224-00	14
KRP11512	DP0103L0222-00	11
	DP0103L0223-00	11
	DP0103L0224-00	11
KRP12080	DP0103L0222-00	23

PART NO.	PPC	ITEM
KRP12090	DP0103L0223-00	23
	DP0103L0224-00	23
KRR0129	DRV001L0015-00	3
KRR0130	DRV001L0015-00	4
KRR0326	DR0205L0044-00	8
KRR0480	DH8101L0022-00	20
	DH8101L0022-00	20
	DHE001L0044-00	18
KRR10090	DR0205L0044-00	33
KRR11860	DR0205L0044-00	22
	DR0205L0044-00	22
KRR11861	DR0205L0044-00	22
KRR11870	DR0205L0044-00	24
KRR11880	DR0205L0044-00	25
KRR11900	DRJ401L0205-00	67
	DRJ401L0205-00	67
KRR11901	DRJ401L0205-00	67
	DRJ401L0205-00	67
KRR11910	DRJ401L0205-00	69
	DRJ401L0205-00	69
KRR11911	DRJ401L0205-00	69
	DRJ401L0205-00	69
KRR11912	DRJ401L0205-00	69
	DRJ401L0205-00	69
KRR11980	DRJ401L0205-00	71
KRR11990	DRV001L0015-00	8
KRR12930	DRJ401L0205-00	1
KRR13430	DRD701L0004-00	14
KRR15480	DRJ401L0205-00	68.02
	DRJ401L0205-00	68.02
KRV0252	DV0350L0008-00	4
	DV0350L0008-00	4
	DV0350L0009-00	4
	DV0350L0009-00	4
KRV0370	DV5001L0046-00	12
KRV0481	DV0350L0008-00	6
	DV0350L0008-00	6
	DV0350L0009-00	6
	DV0350L0009-00	6
KRV0482	DV0350L0008-00	3
	DV0350L0008-00	3
	DV0350L0009-00	3
	DV0350L0009-00	3
KRV0514	DV0220L0016-00	7
	DV0220L0016-00	7

https://truckmanualshub.com/

パーツインデックス

Parts index

PART NO.	PPC	ITEM
KRV0514	DV0220L0017-00	7
	DV0220L0017-00	7
KRV0548	DV9901L0072-00	9
	DV9901L0072-00	12
	DV9901L0072-00	18
	DV9901L0073-00	18
	DV9901L0073-00	21
	DV9901L0073-00	27
	DV9901L0074-00	32
	DV9901L0074-00	35
	DV9901L0074-00	41
	DV9901L0075-00	23
	DV9901L0075-00	26
	DV9901L0075-00	32
KRV0549	DV9901L0072-00	1
	DV9901L0072-00	5
	DV9901L0073-00	12
	DV9901L0073-00	15
	DV9901L0074-00	26
	DV9901L0074-00	29
	DV9901L0075-00	15
	DV9901L0075-00	19
KRV0550	DV5001L0046-00	14
KRV0551	DB1001L0023-00	20
	DV5001L0046-00	15
KRV1018	DV0114L0005-00	7
	DV0117L0004-00	7
	DV0118L0003-00	7
	DV0119L0004-00	7
	DV0120L0004-00	7
KRV10910	DV0201L0176-00	8
	DV0201L0177-00	8
	DV0201L0180-00	8
	DV0201L0181-00	8
	DV0230L0103-00	8
	DV0230L0104-00	8
	DV0230L0120-00	8
KRV10930	DV0401L0033-00	4
	DV0402L0029-00	4
KRV10950	DV0301L0131-00	18
	DV0301L0132-00	18
	DV0350L0008-00	16
	DV0350L0009-00	20
KRV10960	DV6001L0087-00	9
	DV6001L0090-00	13

PART NO.	PPC	ITEM
KRV10970	DV0301L0131-00	23
	DV0301L0132-00	23
KRV10980	DV4601L0144-00	4
	DV4601L0146-00	7
KRV10990	DV5601L0153-00	5
	DV5601L0155-00	5
KRV11030	DV0301L0131-00	19
	DV0301L0131-00	24
	DV0301L0132-00	19
	DV0301L0132-00	24
	DV0350L0008-00	17
	DV0350L0008-00	22
	DV0350L0009-00	21
	DV0350L0009-00	26
KRV11040	DV0301L0131-00	20
	DV0301L0131-00	25
	DV0301L0132-00	20
	DV0301L0132-00	25
	DV0350L0008-00	18
	DV0350L0008-00	23
	DV0350L0009-00	22
	DV0350L0009-00	27
KRV11080	DV0301L0131-00	13
	DV0301L0131-00	13
	DV0301L0131-00	13
	DV0301L0131-00	13
	DV0301L0132-00	13
	DV0301L0132-00	13
	DV0301L0132-00	13
	DV0301L0132-00	13
	DV0350L0008-00	11
	DV0350L0008-00	11
	DV0350L0009-00	11
	DV0350L0009-00	11
KRV11090	DV0201L0176-00	4
	DV0201L0177-00	4
	DV0201L0180-00	4
	DV0201L0180-00	4
	DV0201L0181-00	4
	DV0201L0181-00	4
	DV0230L0103-00	4
	DV0230L0103-00	4
	DV0230L0104-00	4
	DV0230L0104-00	4
	DV0230L0120-00	4
	DV0230L0120-00	4

PART NO.	PPC	ITEM
KRV11090	DV0230L0120-00	4
KRV11091	DV0201L0180-00	4
	DV0201L0180-00	4
	DV0201L0181-00	4
	DV0201L0181-00	4
	DV0230L0103-00	4
	DV0230L0103-00	4
	DV0230L0104-00	4
	DV0230L0104-00	4
	DV0230L0120-00	4
	DV0230L0120-00	4
KRV11100	DV0201L0176-00	3
	DV0201L0177-00	3
	DV0201L0180-00	3
	DV0201L0181-00	3
	DV0230L0103-00	3
	DV0230L0104-00	3
	DV0230L0120-00	3
KRV11110	DV6001L0090-00	2
	DV6001L0090-00	2
	DV6001L0090-00	8
	DV6001L0090-00	8
KRV11120	DV4601L0146-00	2
	DV4601L0146-00	2
	DV4601L0162-00	4
KRV11490	DV0201L0176-00	5
	DV0201L0177-00	5
	DV0201L0180-00	5
	DV0201L0181-00	5
	DV0220L0016-00	5
	DV0220L0016-00	5
	DV0220L0017-00	5
	DV0220L0017-00	5
	DV0230L0103-00	5
	DV0230L0104-00	5
	DV0230L0120-00	5
	DV0301L0131-00	10
	DV0301L0131-00	10
	DV0301L0131-00	10
	DV0301L0131-00	10
	DV0301L0132-00	10
	DV0301L0132-00	10
	DV0301L0132-00	10
	DV0301L0132-00	10
	DV0350L0008-00	10

https://truckmanualshub.com/

パーツインデックス

Parts index

PART NO.	PPC	ITEM
KRV11490	DV0350L0008-00	10
	DV0350L0009-00	10
	DV0350L0009-00	10
KRV1156	DV6001L0087-00	14
	DV6001L0090-00	18
KRV1157	DV0114L0005-00	10
	DV0117L0004-00	10
	DV0118L0003-00	10
	DV0119L0004-00	10
	DV0120L0004-00	10
KRV1159	DV0114L0005-00	12
	DV0114L0005-00	12
	DV0114L0005-00	12
	DV0114L0005-00	12
	DV0117L0004-00	12
	DV0117L0004-00	12
	DV0117L0004-00	12
	DV0117L0004-00	12
	DV0118L0003-00	12
	DV0118L0003-00	12
	DV0118L0003-00	12
	DV0118L0003-00	12
	DV0119L0004-00	12
	DV0119L0004-00	12
	DV0119L0004-00	12
	DV0119L0004-00	12
	DV0120L0004-00	12
	DV0120L0004-00	12
	DV0120L0004-00	12
	DV0120L0004-00	12
	DV01A0L0002-00	11
	DV01A0L0002-00	11
	DV01A0L0002-00	11
	DV01A0L0002-00	11
	DV01H7L0002-00	11
	DV01H7L0002-00	11
	DV01H8L0002-00	11
	DV01H8L0002-00	11
KRV1160	DV0114L0005-00	2
	DV0117L0004-00	2
	DV0118L0003-00	2
	DV0119L0004-00	2
	DV0120L0004-00	2
	DV01A0L0002-00	2
	DV01H7L0002-00	2

PART NO.	PPC	ITEM
KRV1160	DV01H8L0002-00	2
KRV1161	DV0401L0033-00	13
	DV0401L0033-00	17
	DV0402L0029-00	13
	DV0402L0029-00	17
KRV1162	DV0401L0033-00	14
	DV0401L0033-00	18
	DV0402L0029-00	14
	DV0402L0029-00	18
KRV1168	DV0114L0005-00	6
	DV0117L0004-00	6
	DV0118L0003-00	6
	DV0119L0004-00	6
	DV0120L0004-00	6
	DV01A0L0002-00	6
	DV01H7L0002-00	6
	DV01H8L0002-00	6
KRV1169	DV0114L0005-00	5
	DV0117L0004-00	5
	DV0118L0003-00	5
	DV0119L0004-00	5
	DV0120L0004-00	5
	DV01A0L0002-00	5
	DV01H7L0002-00	5
	DV01H8L0002-00	5
KRV1176	DV5601L0153-00	6
	DV5601L0155-00	6
KRV1178	DV6001L0087-00	13
	DV6001L0090-00	17
KRV1197	DV4601L0144-00	5
	DV4601L0144-00	5
	DV4601L0146-00	8
	DV4601L0146-00	8
KRV1200	DV9901L0072-00	2
	DV9901L0072-00	6
	DV9901L0072-00	15
	DV9901L0073-00	13
	DV9901L0073-00	16
	DV9901L0073-00	24
	DV9901L0074-00	27
	DV9901L0074-00	30
	DV9901L0074-00	38
	DV9901L0075-00	16
	DV9901L0075-00	20
	DV9901L0075-00	29

PART NO.	PPC	ITEM
KRV12070	DV6001L0090-00	5
KRV12080	DV6001L0090-00	11
KRV12090	DV4601L0146-00	5
KRV12780	DV4601L0161-00	8
	DV4601L0162-00	13
KRV12790	DV5601L0153-00	10
KRV1282	DV0201L0177-00	15
	DV0201L0177-00	15
	DV0201L0180-00	15
	DV0201L0180-00	15
	DV0201L0181-00	15
	DV0201L0181-00	15
	DV0230L0103-00	15
	DV0230L0103-00	15
	DV0230L0104-00	15
	DV0230L0104-00	15
KRV13010	DV0402L0029-00	9
KRV13020	DV0402L0029-00	10
KRV1323	DV2401L0001-00	2
KRV14230	DV5601L0168-00	10
	DV5601L0168-00	21
KRV1518	DV0114L0005-00	14
	DV0117L0004-00	14
	DV0118L0003-00	14
	DV0119L0004-00	14
	DV0120L0004-00	14
	DV01A0L0002-00	13
	DV01H7L0002-00	13
	DV01H8L0002-00	13
KRV1574	DV6001L0087-00	12
	DV6001L0090-00	16
KRV1646	DV0220L0017-00	19
	DV0220L0017-00	19
	DV0350L0009-00	18
	DV0350L0009-00	18
KRV1700	DV5001L0046-00	6
KRV1733	DV0220L0016-00	18
	DV0220L0017-00	24
KRV17540	DV0601L0106-00	13
	DV0601L0106-00	26
KRV18500	DV0201L0176-00	2
	DV0201L0177-00	2
KRV18970	DV0201L0177-00	14
	DV0201L0177-00	14
KRV18980	DV0201L0181-00	17

https://truckmanualshub.com/

パーツインデックス
Parts index

PART NO.	PPC	ITEM
KRV18980	DV0201L0181-00	17
KRV19020	DV0301L0131-00	6
	DV0301L0131-00	6
	DV0301L0132-00	6
	DV0301L0132-00	6
KRV19021	DV0301L0131-00	6.01
	DV0301L0131-00	6.01
	DV0301L0132-00	6.01
	DV0301L0132-00	6.01
KRV19030	DV4601L0144-00	10
	DV4601L0146-00	13
KRV19040	DV4601L0144-00	13
	DV4601L0146-00	16
KRV19050	DV5601L0153-00	14
	DV5601L0155-00	14
KRV19060	DV5601L0153-00	20
	DV5601L0155-00	20
KRV19070	DV5601L0153-00	12
	DV5601L0155-00	12
KRV19090	DV0601L0092-00	11
	DV0601L0094-00	11
KRV19100	DV0601L0092-00	18
	DV0601L0094-00	18
KRV19110	DV0601L0092-00	10
	DV0601L0094-00	10
KRV19120	DV0601L0092-00	17
	DV0601L0094-00	17
KRV19130	DV0601L0092-00	8
	DV0601L0092-00	8
KRV19140	DV0601L0092-00	15
	DV0601L0092-00	15
KRV19150	DV7501L0047-00	10
	DV7501L0047-00	10
	DV7501L0049-00	10
	DV7501L0049-00	10
KRV19160	DV7501L0047-00	14
	DV7501L0049-00	14
KRV19170	DV7501L0047-00	18
	DV7501L0047-00	18
	DV7501L0049-00	18
	DV7501L0049-00	18
KRV19180	DV7501L0047-00	9
	DV7501L0047-00	17
	DV7501L0049-00	9
	DV7501L0049-00	17

PART NO.	PPC	ITEM
KRV19190	DV7501L0047-00	13
	DV7501L0049-00	13
KRV19200	DV7501L0047-00	7
	DV7501L0047-00	7
KRV19210	DV7501L0047-00	11
	DV7501L0047-00	11
KRV19220	DV7501L0047-00	15
	DV7501L0047-00	15
KRV19230	DV4601L0146-00	19
	DV4601L0146-00	22
KRV19270	DV5001L0041-00	3
KRV19280	DV5001L0041-00	5
KRV19290	DV0301L0131-00	8
	DV0301L0131-00	8
	DV0301L0131-00	8
	DV0301L0131-00	8
	DV0301L0132-00	8
	DV0301L0132-00	8
	DV0301L0132-00	8
	DV0301L0132-00	8
KRV19300	DV0301L0131-00	2
	DV0301L0131-00	2
KRV19301	DV0301L0131-00	2
	DV0301L0131-00	2
KRV19320	DV0301L0131-00	15
	DV0301L0131-00	15
	DV0301L0131-00	15
	DV0301L0131-00	15
	DV0301L0132-00	15
	DV0301L0132-00	15
	DV0301L0132-00	15
	DV0301L0132-00	15
	DV0350L0008-00	13
	DV0350L0008-00	13
	DV0350L0009-00	13
	DV0350L0009-00	13
KRV19330	DV0117L0004-00	1
KRV19500	DV0402L0029-00	1
KRV19510	DV0401L0033-00	3
	DV0402L0029-00	3
KRV19520	DV6001L0087-00	1
	DV6001L0087-00	1
KRV19530	DV6001L0087-00	2
	DV6001L0087-00	2
KRV19540	DV6001L0087-00	5

PART NO.	PPC	ITEM
KRV19540	DV6001L0087-00	5
KRV19550	DV6001L0087-00	6
	DV6001L0087-00	6
KRV19560	DV6001L0090-00	7
	DV6001L0090-00	7
KRV1958	DV0201L0181-00	18
	DV0201L0181-00	18
	DV0230L0104-00	18
	DV0230L0104-00	18
KRV19580	DV6001L0090-00	1
	DV6001L0090-00	1
KRV19600	DV4601L0144-00	1
	DV4601L0144-00	1
KRV19610	DV4601L0144-00	2
	DV4601L0144-00	2
KRV19620	DV4601L0146-00	1
	DV4601L0146-00	1
KRV19640	DV5601L0153-00	1
	DV5601L0153-00	1
	DV5601L0155-00	1
	DV5601L0155-00	1
KRV19650	DV5601L0153-00	2
	DV5601L0153-00	2
	DV5601L0155-00	2
	DV5601L0155-00	2
KRV19670	DV9901L0038-00	3
	DV9901L0059-00	3
KRV19680	DV9901L0038-00	10
	DV9901L0059-00	10
KRV19720	DV4601L0144-00	8
	DV4601L0146-00	11
	DV4601L0146-00	11
KRV19730	DV5601L0168-00	14
	DV5601L0168-00	25
KRV19740	DV0601L0092-00	9
	DV0601L0092-00	16
	DV0601L0094-00	9
	DV0601L0094-00	16
KRV19750	DV7501L0047-00	16
	DV7501L0047-00	16
	DV7501L0049-00	16
	DV7501L0049-00	16
KRV19760	DV4601L0146-00	23
KRV19770	DV6001L0090-00	35
KRV19780	DV5001L0041-00	7

https://truckmanualshub.com/

パーツインデックス

Parts index

PART NO.	PPC	ITEM
KRV19790	DV6001L0090-00	23
KRV20140	DV9901L0039-00	3
	DV9901L0040-00	3
	DV9901L0041-00	3
KRV20150	DV9901L0039-00	9
	DV9901L0040-00	8
	DV9901L0041-00	8
KRV20180	DV0301L0131-00	1
	DV0301L0131-00	1
KRV20181	DV0301L0131-00	1
	DV0301L0131-00	1
KRV20190	DV0201L0176-00	1
	DV0201L0176-00	1
	DV0201L0176-00	1
	DV0201L0176-00	1
KRV20191	DV0201L0176-00	1
	DV0201L0176-00	1
KRV20192	DV0201L0176-00	1
	DV0201L0176-00	1
KRV20200	DV0201L0177-00	1
	DV0201L0177-00	1
KRV20240	DV0401L0033-00	1
KRV20290	DV9901L0031-00	3
	DV9901L0033-00	3
KRV20300	DV9901L0031-00	9
	DV9901L0033-00	9
KRV20540	DV0301L0132-00	1
	DV0301L0132-00	1
KRV20541	DV0301L0132-00	1
	DV0301L0132-00	1
KRV20560	DV0301L0132-00	2
	DV0301L0132-00	2
KRV20561	DV0301L0132-00	2
	DV0301L0132-00	2
KRV20580	DV0201L0180-00	1
	DV0201L0180-00	1
KRV20590	DV0201L0181-00	1
	DV0201L0181-00	1
KRV20630	DV0230L0120-00	1
	DV0230L0120-00	1
KRV20631	DV0230L0120-00	1
	DV0230L0120-00	1
KRV20640	DV0230L0103-00	1
	DV0230L0103-00	1
KRV20650	DV0230L0104-00	1

PART NO.	PPC	ITEM
KRV20650	DV0230L0104-00	1
KRV20690	DV0114L0005-00	1
KRV20700	DV0118L0003-00	1
KRV20710	DV0119L0004-00	1
KRV20720	DV0120L0004-00	1
KRV20730	DV01A0L0002-00	1
KRV20740	DV01H7L0002-00	1
KRV20750	DV01H8L0002-00	1
KRV20800	DV0601L0094-00	15
	DV0601L0094-00	15
KRV20810	DV0601L0094-00	8
	DV0601L0094-00	8
KRV20820	DV7501L0049-00	11
	DV7501L0049-00	11
KRV20830	DV7501L0049-00	7
	DV7501L0049-00	7
KRV20840	DV7501L0049-00	15
	DV7501L0049-00	15
KRV20900	DV0230L0103-00	14
	DV0230L0103-00	14
	DV0230L0104-00	14
	DV0230L0104-00	14
KRV20920	DV0230L0104-00	17
	DV0230L0104-00	17
KRV21080	DV0201L0176-00	6
	DV0201L0177-00	6
	DV0201L0180-00	6
	DV0201L0181-00	6
	DV0230L0103-00	6
	DV0230L0104-00	6
	DV0230L0120-00	6
	DV0230L0120-00	6
	DV0230L0120-00	6
KRV21090	DV0201L0180-00	2
	DV0201L0180-00	2
	DV0201L0181-00	2
	DV0201L0181-00	2
KRV21091	DV0201L0180-00	2
	DV0201L0180-00	2
	DV0201L0181-00	2
	DV0201L0181-00	2
KRV21160	DV0201L0180-00	14
	DV0201L0180-00	14
	DV0201L0181-00	14
	DV0201L0181-00	14

PART NO.	PPC	ITEM
KRV21940	DV5601L0153-00	12
	DV5601L0153-00	12
	DV5601L0155-00	12
	DV5601L0155-00	12
KRV21950	DV5601L0153-00	18
	DV5601L0155-00	18
KRV22070	DV0230L0103-00	2
	DV0230L0103-00	2
	DV0230L0103-00	2
	DV0230L0103-00	2
	DV0230L0104-00	2
	DV0230L0104-00	2
	DV0230L0104-00	2
	DV0230L0104-00	2
	DV0230L0120-00	2
KRV22071	DV0230L0103-00	2
	DV0230L0103-00	2
	DV0230L0104-00	2
	DV0230L0104-00	2
	DV0230L0120-00	2
	DV0230L0120-00	2
KRV22550	DV7501L0047-00	8
	DV7501L0047-00	8
	DV7501L0047-00	12
	DV7501L0047-00	12
	DV7501L0047-00	16
	DV7501L0047-00	16
	DV7501L0049-00	8
	DV7501L0049-00	12
	DV7501L0049-00	16
	DV7501L0049-00	16
KRV22580	DV5601L0153-00	10
	DV5601L0153-00	10
	DV5601L0153-00	16
KRV22590	DV5601L0155-00	10
	DV5601L0155-00	10
	DV5601L0155-00	16
KRV23220	DV0201L0177-00	14
	DV0201L0180-00	14
	DV0201L0180-00	14
	DV0201L0181-00	14
	DV0201L0181-00	14
KRV23230	DV0201L0181-00	17
KRV23240	DV0601L0092-00	8
KRV23250	DV0601L0092-00	15

https://truckmanualshub.com/

パーツインデックス
Parts index

PART NO.	PPC	ITEM
KRV23260	DV7501L0047-00	7
KRV23270	DV7501L0047-00	11
KRV23280	DV7501L0047-00	15
KRV23290	DV0201L0180-00	14
	DV0201L0180-00	14
	DV0201L0181-00	14
	DV0201L0181-00	14
KRV23300	DV0230L0103-00	14
	DV0230L0104-00	14
KRV23310	DV0230L0104-00	17
KRV23320	DV0601L0094-00	8
KRV23330	DV0601L0094-00	15
KRV23340	DV7501L0049-00	7
KRV23350	DV7501L0049-00	11
KRV23360	DV7501L0049-00	15
KRV23620	DV0201L0177-00	1
	DV0201L0177-00	1
	DV0201L0177-00	1
	DV0201L0177-00	1
KRV23621	DV0201L0177-00	1
	DV0201L0177-00	1
KRV23622	DV0201L0177-00	1
	DV0201L0177-00	1
KRV2364	DV0401L0033-00	2
KRV2365	DV0401L0033-00	9
KRV2366	DV0401L0033-00	10
KRV23660	DV0201L0180-00	1
	DV0201L0180-00	1
KRV23661	DV0201L0180-00	1
	DV0201L0180-00	1
KRV23662	DV0201L0180-00	1
	DV0201L0180-00	1
KRV2367	DV0401L0033-00	19
KRV23670	DV0201L0181-00	1
	DV0201L0181-00	1
KRV23671	DV0201L0181-00	1
	DV0201L0181-00	1
KRV23672	DV0201L0181-00	1
	DV0201L0181-00	1
KRV2368	DV0401L0033-00	24
	DV0402L0029-00	24
KRV23700	DV0230L0103-00	1
	DV0230L0103-00	1
KRV23701	DV0230L0103-00	1
	DV0230L0103-00	1

PART NO.	PPC	ITEM
KRV23710	DV0230L0104-00	1
	DV0230L0104-00	1
KRV23711	DV0230L0104-00	1
	DV0230L0104-00	1
KRV2384	DV0301L0131-00	12
	DV0301L0131-00	12
	DV0301L0131-00	12
	DV0301L0131-00	12
	DV0301L0132-00	12
	DV0301L0132-00	12
	DV0301L0132-00	12
	DV0301L0132-00	12
KRV2395	DV0401L0033-00	6
	DV0402L0029-00	6
	DV6001L0087-00	3
	DV6001L0087-00	7
KRV2396	DV0201L0176-00	10
	DV0201L0177-00	10
	DV0201L0180-00	10
	DV0201L0181-00	10
	DV0230L0103-00	10
	DV0230L0104-00	10
	DV0230L0120-00	10
KRV2397	DV0201L0176-00	12
	DV0201L0177-00	12
	DV0201L0180-00	12
	DV0201L0181-00	12
	DV0220L0016-00	14
	DV0220L0016-00	14
	DV0220L0017-00	14
	DV0220L0017-00	14
	DV0230L0103-00	12
	DV0230L0104-00	12
	DV0230L0120-00	12
	DV0301L0131-00	16
	DV0301L0131-00	16
	DV0301L0131-00	16
	DV0301L0131-00	16
	DV0301L0132-00	16
	DV0301L0132-00	16
	DV0301L0132-00	16
	DV0301L0132-00	16
	DV0350L0008-00	14
	DV0350L0008-00	14
	DV0350L0009-00	14

PART NO.	PPC	ITEM
KRV2397	DV0350L0009-00	14
KRV2398	DV5601L0153-00	3
	DV5601L0155-00	3
KRV2399	DV5601L0153-00	4
	DV5601L0155-00	4
KRV2400	DV4601L0144-00	3
KRV24000	DV4601L0161-00	1
KRV2401	DV6001L0087-00	4
	DV6001L0087-00	8
KRV24010	DV4601L0162-00	1
KRV2408	DV0201L0176-00	7
	DV0201L0177-00	7
	DV0201L0180-00	7
	DV0201L0181-00	7
	DV0230L0103-00	7
	DV0230L0104-00	7
	DV0230L0120-00	7
KRV24150	DV0350L0008-00	2
	DV0350L0009-00	2
KRV2416	DV0114L0005-00	11
	DV0117L0004-00	11
	DV0118L0003-00	11
	DV0119L0004-00	11
	DV0120L0004-00	11
	DV01A0L0002-00	10
	DV01H7L0002-00	10
	DV01H8L0002-00	10
KRV24160	DV0220L0016-00	2
	DV0220L0017-00	2
KRV24180	DV0350L0009-00	1
KRV24190	DV0350L0009-00	16
	DV0350L0009-00	16
KRV24210	DV0220L0017-00	1
KRV24220	DV0220L0017-00	16
	DV0220L0017-00	16
KRV24230	DV4601L0161-00	17
	DV4601L0162-00	22
KRV24240	DV4601L0161-00	11
	DV4601L0162-00	16
KRV24250	DV5601L0168-00	30
KRV24260	DV5601L0168-00	19
KRV24270	DV5601L0168-00	23
KRV24280	DV5601L0168-00	12
KRV24290	DV4601L0162-00	36
KRV24300	DV4601L0162-00	32

https://truckmanualshop.com/

PART NO.	PPC	ITEM
KRV24310	DV0601L0106-00	28
KRV24320	DV0601L0106-00	15
KRV24330	DV0601L0106-00	23
KRV24340	DV0601L0106-00	10
KRV24350	DV0601L0106-00	21
KRV24360	DV0601L0106-00	8
KRV24390	DV5001L0046-00	8
KRV24410	DV5601L0168-00	27
KRV24420	DV5601L0168-00	16
KRV24430	DV0601L0106-00	25
KRV24440	DV0601L0106-00	12
KRV24450	DV5001L0046-00	5
KRV24460	DV5001L0046-00	3
KRV24470	DV5001L0046-00	9
KRV24480	DV5001L0046-00	7
KRV24490	DV4601L0161-00	4
	DV4601L0161-00	4
	DV4601L0162-00	9
	DV4601L0162-00	9
KRV24500	DV0350L0008-00	21
	DV0350L0009-00	25
KRV24510	DV0220L0016-00	9
	DV0220L0016-00	9
	DV0220L0017-00	9
	DV0220L0017-00	9
KRV24530	DV0220L0016-00	1
KRV24540	DV0350L0008-00	1
KRV24560	DV4601L0162-00	7
KRV24650	DV4601L0161-00	2
KRV24700	DV4601L0162-00	2
KRV24750	DV9901L0073-00	1
	DV9901L0074-00	15
KRV24760	DV9901L0073-00	2
	DV9901L0073-00	7
	DV9901L0074-00	16
	DV9901L0074-00	21
KRV24770	DV0601L0106-00	9
	DV0601L0106-00	22
KRV2495	DV0601L0106-00	14
	DV0601L0106-00	27
	DV4601L0161-00	14
	DV4601L0162-00	19
KRV2522	DV01A0L0002-00	7
KRV2523	DV01A0L0002-00	9
KRV2524	DV01A0L0002-00	8

PART NO.	PPC	ITEM
KRV25250	DV4601L0162-00	33
KRV25330	DV4601L0162-00	29
KRV25340	DV4601L0146-00	14
KRV25410	DV0220L0016-00	2
	DV0220L0017-00	2
KRV25420	DV4601L0161-00	4.01
	DV4601L0162-00	9.01
KRV25430	DV0220L0017-00	1
KRV25440	DV0220L0016-00	1
KRV25450	DV0350L0008-00	2
	DV0350L0009-00	2
KRV25460	DV0350L0009-00	1
KRV25470	DV0350L0008-00	1
KRV25490	DV0117L0004-00	1.01
	DV0117L0004-00	1.01
	DV01A0L0002-00	1.01
	DV01A0L0002-00	1.01
	DV01H7L0002-00	1.01
KRV25500	DV0117L0004-00	1.02
	DV0117L0004-00	1.02
	DV01A0L0002-00	1.02
	DV01A0L0002-00	1.02
	DV01H7L0002-00	1.02
KRV25510	DV0117L0004-00	10.01
	DV0117L0004-00	10.01
KRV25520	DV0114L0005-00	10.02
	DV0114L0005-00	10.02
	DV0117L0004-00	10.02
	DV0117L0004-00	10.02
	DV0118L0003-00	10.02
	DV0118L0003-00	10.02
	DV0119L0004-00	10.02
	DV0119L0004-00	10.02
	DV0120L0004-00	10.02
	DV0120L0004-00	10.02
	DV01A0L0002-00	9.04
	DV01A0L0002-00	9.04
	DV01H7L0002-00	9.02
	DV01H8L0002-00	9.02
KRV25530	DV0114L0005-00	10.03
	DV0114L0005-00	10.03
	DV0117L0004-00	10.03
	DV0117L0004-00	10.03
	DV0118L0003-00	10.03
	DV0118L0003-00	10.03

PART NO.	PPC	ITEM
KRV25530	DV0119L0004-00	10.03
	DV0119L0004-00	10.03
	DV0120L0004-00	10.03
	DV0120L0004-00	10.03
KRV25540	DV0114L0005-00	10.04
	DV0114L0005-00	10.04
	DV0117L0004-00	10.04
	DV0117L0004-00	10.04
	DV0118L0003-00	10.04
	DV0118L0003-00	10.04
	DV0119L0004-00	10.04
	DV0119L0004-00	10.04
	DV0120L0004-00	10.04
	DV0120L0004-00	10.04
KRV25550	DV0117L0004-00	10.05
	DV0117L0004-00	10.05
	DV01A0L0002-00	9.09
	DV01A0L0002-00	9.09
	DV01H7L0002-00	9.05
KRV25560	DV0114L0005-00	1.01
	DV0114L0005-00	1.01
KRV25570	DV0114L0005-00	1.02
	DV0114L0005-00	1.02
KRV25580	DV0114L0005-00	10.01
	DV0114L0005-00	10.01
KRV25590	DV0114L0005-00	10.05
	DV0114L0005-00	10.05
KRV25600	DV0118L0003-00	1.01
	DV0118L0003-00	1.01
	DV01H8L0002-00	1.01
KRV25610	DV0118L0003-00	1.02
	DV0118L0003-00	1.02
	DV01H8L0002-00	1.02
KRV25620	DV0118L0003-00	10.01
	DV0118L0003-00	10.01
KRV25630	DV0118L0003-00	10.05
	DV0118L0003-00	10.05
	DV01H8L0002-00	9.05
KRV25640	DV0119L0004-00	1.01
	DV0119L0004-00	1.01
KRV25650	DV0119L0004-00	1.02
	DV0119L0004-00	1.02
KRV25660	DV0119L0004-00	10.01
	DV0119L0004-00	10.01
KRV25670	DV0119L0004-00	10.05

https://truckmanualshub.com/

パーツインデックス
Parts index

PART NO.	PPC	ITEM
KRV25670	DV0119L0004-00	10.05
KRV25680	DV0120L0004-00	1.01
	DV0120L0004-00	1.01
KRV25690	DV0120L0004-00	1.02
	DV0120L0004-00	1.02
KRV25700	DV0120L0004-00	10.01
	DV0120L0004-00	10.01
KRV25710	DV0120L0004-00	10.05
	DV0120L0004-00	10.05
KRV25720	DV01A0L0002-00	9.01
	DV01A0L0002-00	9.01
KRV25730	DV01A0L0002-00	9.02
	DV01A0L0002-00	9.02
KRV25740	DV01A0L0002-00	9.03
	DV01A0L0002-00	9.03
KRV25750	DV01A0L0002-00	9.05
	DV01A0L0002-00	9.05
KRV25760	DV01A0L0002-00	9.06
	DV01A0L0002-00	9.06
KRV25770	DV01A0L0002-00	9.07
	DV01A0L0002-00	9.07
KRV25780	DV01A0L0002-00	9.08
	DV01A0L0002-00	9.08
KRV25790	DV01H7L0002-00	9.01
KRV25800	DV01H7L0002-00	9.03
	DV01H8L0002-00	9.03
KRV25810	DV01H7L0002-00	9.04
	DV01H8L0002-00	9.04
KRV25820	DV01H8L0002-00	9.01
KRV26980	DV7501L0047-00	10
	DV7501L0047-00	10
	DV7501L0049-00	10
	DV7501L0049-00	10
KRV26990	DV7501L0047-00	18
	DV7501L0047-00	18
	DV7501L0049-00	18
	DV7501L0049-00	18
KRV2715	DV0402L0029-00	2
KRV2719	DV0402L0029-00	19
KRV27950	DV0601L0106-00	9
	DV0601L0106-00	22
KRV2815	DV9901L0074-00	4
	DV9901L0075-00	4
KRV2894	DV4601L0161-00	16
	DV4601L0162-00	20

PART NO.	PPC	ITEM
KRV2895	DV4601L0161-00	10
	DV4601L0162-00	15
KRV2905	DV2401L0001-00	1
KRV2915	DV0401L0033-00	11
	DV0402L0029-00	11
KRV2916	DV0401L0033-00	15
	DV0402L0029-00	15
KRV2973	DV0220L0016-00	8
	DV0220L0016-00	8
	DV0220L0017-00	8
	DV0220L0017-00	8
KRV2977	DV0220L0016-00	3
	DV0220L0016-00	3
	DV0220L0017-00	3
	DV0220L0017-00	3
KRV31490	DV0301L0131-00	20.01
	DV0301L0131-00	25.01
	DV0301L0132-00	20.01
	DV0301L0132-00	25.01
	DV0350L0008-00	18.01
	DV0350L0008-00	23.01
	DV0350L0009-00	22.01
	DV0350L0009-00	27.01
KRV3716	DV01H7L0002-00	7
	DV01H8L0002-00	7
KRV3717	DV01H7L0002-00	9
	DV01H8L0002-00	9
KRV3718	DV01H7L0002-00	8
	DV01H8L0002-00	8
KRV3789	DV0301L0131-00	14
	DV0301L0131-00	14
	DV0301L0131-00	14
	DV0301L0131-00	14
	DV0301L0132-00	14
	DV0301L0132-00	14
	DV0301L0132-00	14
	DV0301L0132-00	14
	DV0350L0008-00	12
	DV0350L0008-00	12
	DV0350L0009-00	12
	DV0350L0009-00	12
KSH0104	DH0602L0032-00	23
	DH0602L0032-00	23
KSH0352	DH0602L0032-00	23
	DH0602L0032-00	23

PART NO.	PPC	ITEM
KSH0503	DH8101L0022-00	6
KSH0951	DH0201L0031-00	4
KSH1065	DH0301L0031-00	39
KSJ0159	DH0602L0031-00	21
	DH0602L0032-00	16
KSJ0837	DJEE01L0064-00	5
	DJEE01L0064-00	16
	DJEE01L0064-00	18
	DJEE01L0064-00	27
KSJ1135	DAK301L0007-00	8
KSJ1963	DH8101L0022-00	9
	DJE701L0030-00	6
KSJ3080	DJE701L0030-00	4
	DJE701L0030-00	4
KSN0285	DN7301L0211-00	76
	DN7301L0212-00	76
	DN7301L0213-00	76
	DN7301L0246-00	76
KSN0286	DN7301L0211-00	36
	DN7301L0212-00	36
	DN7301L0213-00	36
	DN7301L0246-00	36
KSN0921	DN7301L0211-00	53
	DN7301L0211-00	68
	DN7301L0211-00	142
	DN7301L0212-00	53
	DN7301L0212-00	68
	DN7301L0212-00	142
	DN7301L0213-00	53
	DN7301L0213-00	68
	DN7301L0213-00	142
	DN7301L0246-00	53
	DN7301L0246-00	68
	DN7301L0246-00	141
KSP0264	DV4601L0144-00	5
	DV4601L0146-00	8
KSV0282	DV9901L0074-00	3
	DV9901L0074-00	8
	DV9901L0074-00	9
	DV9901L0074-00	14
	DV9901L0075-00	3
	DV9901L0075-00	8
	DV9901L0075-00	9
	DV9901L0075-00	14
KSV1157	DV0220L0017-00	18

https://truckmanualshub.com/

パーツインデックス
Parts index

PART NO.	PPC	ITEM
KSV1157	DV0220L0017-00	18
KTJ0168	DJP801L0039-00	6
KTJ0677	DAK301L0004-00	8
KTJ0683	DJKZ01L0069-00	85
KTJ0809	DAK301L0007-00	8
KTJ2249	DJLJ01L0022-00	1
KTN1090	DN7301L0211-00	48
	DN7301L0211-00	111
	DN7301L0212-00	48
	DN7301L0212-00	111
	DN7301L0213-00	48
	DN7301L0213-00	111
	DN7301L0246-00	48
	DN7301L0246-00	111
KTN1391	DN7301L0211-00	124
	DN7301L0212-00	124
	DN7301L0213-00	124
	DN7301L0246-00	124
KTP0382	DP0701L0020-00	1
	DP0701L0020-00	1
	DP0701L0020-00	3
	DP0701L0020-00	3
KTV0700	DV0220L0016-00	4
	DV0220L0016-00	4
	DV0220L0017-00	4
	DV0220L0017-00	4
	DV0220L0017-00	20
	DV0220L0017-00	20
	DV0350L0008-00	5
	DV0350L0008-00	5
	DV0350L0009-00	5
	DV0350L0009-00	5
KTV0853	DV0350L0009-00	19
	DV0350L0009-00	19
LEH0007	DHE001L0044-00	1.01
	DHE001L0044-00	1.01
	DHE001L0044-00	1.01
	DHE001L0044-00	1.01
LZH0024	DHE001L0044-00	1.02
	DHE001L0044-00	1.02
	DHE001L0044-00	1.02
	DHE001L0044-00	1.02
M01X0812	DB1001L0023-00	13
	DPF001L0021-00	19
	DV0201L0176-00	14

PART NO.	PPC	ITEM
M01X0812	DV0201L0177-00	17
	DV0201L0180-00	17
	DV0201L0181-00	20
	DV0220L0016-00	16
	DV0220L0017-00	22
	DV0230L0103-00	17
	DV0230L0104-00	20
	DV0230L0120-00	14
	DV0401L0033-00	8
	DV0401L0033-00	29
	DV0401L0038-00	8
	DV0401L0038-00	29
	DV0402L0029-00	8
	DV0402L0029-00	29
	DV5001L0041-00	1
	DV5001L0046-00	1
M01X0816	DB1001L0023-00	18
	DV0220L0016-00	17
	DV0220L0017-00	23
M01X0831	DAE901L0071-00	2
	DAE901L0072-00	2
	DAE901L0084-00	2
M01X1800	DC4501L0047-00	12
	DC4501L0051-00	12
	DC4501L0059-00	45
MMA1011	DH0101L0051-00	44
	DJBC01L0126-00	55
RAP0144	DP0103L0222-00	4
	DP0103L0223-00	4
UBA0151	DJEE01L0064-00	8
UBJ0157	DAK301L0004-00	10.01
	DAK301L0004-00	14
	DAK301L0007-00	11
	DAK301L0007-00	14
	DC4501L0059-00	14
	DJAH01L0107-00	7
	DJAH01L0107-00	13
	DJBC01L0126-00	5
	DJBC01L0126-00	9
	DJBC01L0126-00	12
	DJK401L0288-00	2
	DJK401L0289-00	2
	DJK401L0290-00	2
	DJK401L0291-00	2
	DJLJ01L0022-00	6

PART NO.	PPC	ITEM
UBJ0157	DJLJ01L0022-00	9
	DJLJ01L0022-00	16
	DV5601L0153-00	9.01
	DV5601L0153-00	9.01
	DV5601L0155-00	9.01
	DV5601L0155-00	9.01
	DV7501L0047-00	2
	DV7501L0049-00	2
UBJ0158	DAK301L0004-00	2
	DAK301L0007-00	2
	DH0101L0051-00	29
	DH0101L0051-00	35
	DH0101L0051-00	37
	DJAH01L0107-00	2
	DJAH01L0107-00	5
	DJE701L0030-00	27
	DJK401L0295-00	2
	DJKX01L0052-00	22
	DJKX01L0052-00	25
	DJKZ01L0069-00	34
	DJKZ01L0069-00	36
	DJKZ01L0069-00	41
	DJKZ01L0069-00	43
	DJKZ01L0069-00	46
	DJLJ01L0022-00	11
	DJW001L0059-00	9
	DJY601L0024-00	7
	DJY901L0024-00	13
	DV0601L0092-00	14
	DV0601L0092-00	21
	DV0601L0094-00	14
	DV0601L0094-00	21
	DV0601L0106-00	20
	DV0601L0106-00	33
	DV5601L0153-00	9.01
	DV5601L0153-00	9.01
	DV5601L0155-00	9.01
	DV5601L0155-00	9.01
	DV5601L0168-00	19.02
UBJ0311	DH8101L0022-00	19
UCD0096	DJL901L0070-00	12.01
UCD0097	DA8901L0028-00	9
UCP0101	DRJ401L0205-00	89
UEJ0360	DAK301L0004-00	6.01
	DAK301L0004-00	9.002

https://truckmanualshub.com/

パーツインデックス
Parts index

PART NO.	PPC	ITEM
UEJ0360	DAK301L0007-00	7
	DC4501L0059-00	18
	DJBC01L0126-00	14
	DJBC01L0126-00	16
	DJBC01L0126-00	19
	DJBC01L0126-00	22
	DJBC01L0126-00	33
	DJBC01L0126-00	35
	DJBC01L0126-00	37
	DJBC01L0126-00	52
	DJBC01L0126-00	54
	DJBC01L0126-00	60
	DJBC01L0126-00	64
	DJBC01L0126-00	66
	DJBC01L0126-00	71
	DJBC01L0126-00	74
	DJBC01L0126-00	76
	DJBC01L0126-00	78
	DJBC01L0126-00	82
	DJBC01L0126-00	84
	DJBC01L0126-00	96
	DJBC01L0126-00	98
	DJEE01L0064-00	1.02
	DJHC01L0093-00	6
	DJHC01L0093-00	17
	DJHC01L0093-00	26
	DJHC01L0093-00	37
	DJHC01L0093-00	39
	DJHC01L0093-00	66
	DJHC01L0093-00	72
	DJHC01L0093-00	75
	DJHC01L0093-00	83
	DJHC01L0093-00	85
	DJHC01L0093-00	87
	DJHC01L0093-00	89
	DJHC01L0093-00	91
	DJHC01L0093-00	101
	DJHC01L0093-00	105
	DJHC01L0093-00	115
	DJHC01L0093-00	118
	DJHC01L0093-00	122
	DJHC01L0093-00	122
	DJHC01L0093-00	122
	DJHC01L0093-00	124
	DJHC01L0093-00	126

PART NO.	PPC	ITEM
UEJ0360	DJHC01L0111-00	13
	DJK401L0288-00	6
	DJK401L0288-00	10
	DJK401L0288-00	13
	DJK401L0289-00	6
	DJK401L0289-00	9
	DJK401L0290-00	6
	DJK401L0291-00	6
	DJK401L0291-00	10
	DJK401L0291-00	13
	DJK401L0292-00	2
	DJKX01L0052-00	36
	DJKX01L0052-00	39
	DJKX01L0052-00	46
	DJKX01L0052-00	50
	DJKX01L0052-00	54
	DJKY01L0042-00	34
	DJKY01L0042-00	37
	DJKY01L0042-00	45
	DJKY01L0042-00	49
	DJKZ01L0069-00	57
	DJKZ01L0069-00	60
	DJKZ01L0069-00	68
	DJKZ01L0069-00	71
	DJKZ01L0069-00	76
	DJKZ01L0069-00	79
	DJKZ01L0069-00	88
	DJKZ01L0069-00	90
	DJKZ01L0069-00	92
	DJKZ01L0069-00	103
	DJL901L0069-00	11
	DJL901L0069-00	11
	DJL901L0069-00	11
	DJL901L0069-00	11
	DJL901L0070-00	11
	DJL901L0070-00	11
	DJL901L0070-00	11
	DJL901L0070-00	11
	DJLJ01L0022-00	25
	DJLJ01L0022-00	28
	DJLJ01L0022-00	35
	DJLJ01L0022-00	37
	DJLJ01L0022-00	40
	DJW001L0059-00	5
	DRD701L0001-00	6

PART NO.	PPC	ITEM
UEJ0360	DRD701L0001-00	11
	DRD701L0001-00	13
	DRD701L0004-00	5
	DRD701L0004-00	10
	DRD701L0004-00	12
	DRJ401L0205-00	10
	DRJ401L0205-00	25
	DRJ401L0205-00	25
	DRJ401L0205-00	25
	DRJ401L0205-00	25
	DRJ401L0205-00	91
	DV4601L0146-00	18
	DV4601L0162-00	28
	DV6001L0090-00	22
	DV6001L0090-00	25
	DV6001L0090-00	27
UHA0049	DAN401L0014-00	29
	DAN401L0014-00	29
	DAN401L0014-00	38
UHA0316	DH0602L0032-00	25
UHJ0415	DV4601L0161-00	13
	DV4601L0162-00	18
	DV5601L0168-00	17
	DV5601L0168-00	28
UJH0042	DR1801L0020-00	9
UJM0020	DV2401L0001-00	3

https://truckmanualshub.com/

https://truckmanualshub.com/

HYDRAULIC EXCAVATOR

PARTS MANUAL

[INNER PARTS]

book No. Rev

WCLC 200A51BH 002

SH210-5,SH210LC-5

WCLC 200A51LR 001

SH210LC-5LR

ZA
(95)

INDEX

https://truckmanualshub.com/

Preface (For inner parts)

◆ This parts manual contains the service main parts used in the hydraulic excavator.
Refer to the "Engine parts manual" issued separately for the engine service parts.

◆ The reference to "right-hand" and "left-hand" in the manual is defined by the operator sitting in the position for proper operation when the track idler is located front.

◆ Use "Sumitomo's parts" in the Sumitomo's hydraulic excavator, which are of high quality and best suited to the products.

Ⅰ. How to order the parts.

1. When ordering, specify clearly "Machine model, Machine serial No., Part No., Part name and Quantity required".
   It will be convenient to you, if you enter your Machine model, Machine serial No., Machine delivered year, month and date to the form shown below beforehand.

Machine model (This is shown in the Name plate provided in the operator's cab)	Machine Serial No. (This is shown in the Name plate provided in the operator's cab)	Delivered Year, Month, Date
		Year: Month: Date:

2. Supply term of the service parts.
   The term of the service part supply is ten (10) years after the discontinuation of the production for the machine model.
   But, even in the production period, it may happen to set the new delivery term in some cases.
   When any service parts be required for the machine after the model production term is expired and be ordered, we will accept the order subject to the delivery term and price required to the part production.

Ⅱ. Notes.

1. As the illustrations provided in this manual are for reference only since the position・shape of the respective part are shown in proper relation to each other without any hindrance for placing order, refrain from using them only with this manual for the maintenance work of the excavator.
2. Changes to the product may make it necessary to revise or add pages to this manual, for which announcement will be followed.
3. The parts described in this manual will be changed (including changes in the option), or deleted , without any prior notice.

https://truckmanualshub.com/

III. Abbreviation of part names.

◆ Each abbreviation for part name used in this manual are as follows:

LH : Left side

RH : Right side

T : Thickness

ASSY : Assembly part

S/A : Sub-assembled part

OPT : Option

HYD : Hydraulic

SPL : Special product

REV : Swing related parts

PRESS : Pressure

ATT : Attachment

iv. How to read the part manual.

◆ CONTENTS are summarized below:

Item	Explanation	Position
MODEL	Shows the entered machine model name.	Upper center of the page
BOOK NO.	Shows the kind of the book.	Upper center of the page
AREA	Shows the first classification of the item described in the part manual.	Top of the CONTENTS
NAME	Shows the name of the part page.	2nd column of the CONTENTS page
PART PAGE CODE	Shows the classification number given to each item.	Center column of the CONTENTS page
PPC EDITION NO.	Shows the part page edition number.	Right in the PART PAGE CODE.
PARTL NO.	Shows the Part No. of the equipment entered in the part page.	Right side of the PART PAGE CODE column
CHANGE	Mark ∗ shows the part which has been changed since the previous edition.	Right of the STANDARD column

◆ Part page is entered in the following way:

[Part pages of (ZA)]

Item	Explanatory	Position
PPC NAME	Shows the name of the part page.	Upper in the upper frame of the page.
PPC CODE	Shows the classified No. given to each item.	Top right side in the upper frame of the page.
PPC EDITION NO.	Shows the number of the edition of the part page.	Right side in the PPC Code.
ITEM	This is the number showing each part in the part page.	1st column of the list.
COMPO (COMPOSITION)	Shows the part level and whether it has the composition parts or not. (Number: Showing the level) (A: having the composition part(s)). Sample of description: ITEM COMPO PART NO. 1 1 KAA1234 (Single part) 2 1A KAA5678 (possessing composition parts) 3 2 KNA9012 (Composition part in the just prior page) 4 1 KNH3456 (Single part)	2nd column of the list.
PART NO.	Shows the part number. Part shown by ------- shows the part which is not supplied.	3rd column of the list.
PART NAME	Shows the name of the part. For the each part abbreviation, refer to the parts abbreviation table.	4th・5th column of the list.
Q'TY	Showing the quantity of the part needed to the assembly of one set of the machine. Quantity of part which constructs the assembly shows the quantity necessary to one set of the assembled part. AR = As required.	6th column of the list.
ICA (INTERCHANGEABILITY	Interchangeability between the part in the part No. column and that in the replaceable part column is shown in the following symbols:	7th item of the list.

<table>
<tr><td></td><td>Meaning of the symbols:
Part entered in the left side
= Part entered in the part No. column.
Interchangeable part (Replaceable part) =
Part entered in the replaceable part column.
<table>
<tr><th>MARK</th><th>ICA (INTERCHANGEABILITY)</th></tr>
<tr><td>=</td><td>Same parts.
Part No. is “substitute ‘A’ part ‘B’ ” .</td></tr>
<tr><td><</td><td>Substitute A parts ‘B’ for A part ‘A’.
Substitute A part ‘A’ for A part ‘B’.</td></tr>
<tr><td>/</td><td>Substitute A part ‘A’ for A part ‘B’.
Not substitute A part ‘B’ for A part ‘A’.</td></tr>
<tr><td>X</td><td>Not substitute A part ‘B’ for A part ‘A’.
Not substitute A part ‘A’ for A part ‘B’.</td></tr>
</table></td><td></td></tr>
<tr><td>REPLACEABLE PART</td><td>Shows the replaceable part for the part in the PART NAME column.
(Interchangeability is shown in the column of the ICA.)</td><td>8th item of the list.</td></tr>
<tr><td>NOTE</td><td>Shows reference information as a reference.</td><td>9th item of the list.</td></tr>
</table>

Note : Since the page number of the illustration is arranged to match with that of the list in the part page, the illustration or the list may be shown several times accordingly.

https://truckmanualshub.com/

◆ Part page is entered in the following way:

[Part pages of (95)] ((83-4) Radiator is included.)

Item	Explanatory	Position
PPC NAME	Shows the name of the part page.	Center in the page upper.
PPC CODE	Shows the classified No. given to each item.	Center in the page lower frame.
DATE	Shows the entered date in the month (2 digits) and the year (2 digits).	Left in the page lower frame.
ITEM	This is the number showing each part in the part page.	1st column of the list.
PART NO.	Shows the part No. Part shown by ------- shows the part which is not supplied.	2nd column of the list.
QUANTITY	Showing the quantity of the part needed to the assembly of one piece of the equipment. Quantity of part which constructs the assembly shows the quantity necessary to one piece of the assembled part. AR = As required.	3rd column of the list.
PART NAME	Shows the name of the part. For the each part abbreviation, refer to the parts abbreviation table.	4th・5th column of the list.
INTEERCHANGEABILITY	Interchangeability between the part in the part No. column and that in the replaceable part column is shown in the following symbol: Meaning of the symbol: △ : This part can be used in lieu of the part entered in a line above. ▽ : This part can be used in lieu of the part entered in a line below. ▲ : This part can not be used in lieu of the part entered in a line above. ▼ : This part can not be used in lieu of the part entered in a line below.	6th column of the list.
SERIAL NO>	Shows the machine serial No. to which the part is applicable. Part which does not have the Serial No. can not be applied.	7th column of the list.

https://truckmanualshub.com/

目 次 CONTENTS

エリア AREA	NAME	パーツページコード PARTS PAGE CODE		標準(STANDARD)=STD 部品番 PART NO.	変更 CHANGE	ページ番号 PAGE NO.
ZA:インナーパーツ	INNER PARTS					
ポンプ;ユアツ	PUMP;HYD	ZAJ010L0056	001	KRJ10290		1
ポンプ;ユアツ (PTO)	PUMP;HYD	ZAJ010L0057	001	KRJ15970		11
ポンプ;ギヤ (ダイ2ヨビヨウ)	PUMP;GEAR	ZAJ012L0006	000	KRJ10300		21
モータ;ソウコウ ユニット	MOTOR;TRACTION	ZAJ121L0030	002	KRA10150		23
モータ;ソウコウ	MOTOR;TRACTION	ZAJ121L0038	000	KRA12910	*	29
モータ;センカイ	MOTOR;SWING	ZAJ122L0029	002	KRC10010		33
モータ;センカイ	MOTOR;SWING	ZAJ122L0039	000	KRC10190	*	41
シリンダ;ブーム (EMS HBCV ヒダリ)	CYL;BOOM	ZAJ221L0160	000	KRV19580		43
シリンダ;ブーム (EMS HBCV ミギ)	CYL;BOOM	ZAJ221L0161	000	KRV19560		45
シリンダ;ブーム (EMS ミギ)	CYL;BOOM	ZAJ221L0162	000	KRV19520		47
シリンダ;ブーム (EMS ヒダリ)	CYL;BOOM	ZAJ221L0163	000	KRV19540		49
シリンダ;アーム (EMS)	CYL;ARM	ZAJ222L0097	001	KRV19600		51
シリンダ;アーム (EMS HBCV)	CYL;ARM	ZAJ222L0098	001	KRV19620		53
シリンダ;バケット (EMS)	CYL;BUCKET	ZAJ223L0061	000	KRV19640		59
バルブ;コントロール	VALVE;CONTROL	ZAJ313L0090	001	KRJ10310	*	65
バルブ;コントロール	VALVE;CONTROL	ZAJ313L0091	001	KRJ16010	*	85
バルブ;コントロール	VALVE;CONTROL	ZAJ313L0117	000	KRJ10311	*	117
バルブ;コントロール	VALVE;CONTROL	ZAJ313L0120	000	KRJ16011	*	137
バルブ;コントロール	VALVE;CONTROL	ZAJ313L0150	000	KRJ10312	*	177
バルブ;コントロール	VALVE;CONTROL	ZAJ313L0154	000	KRJ16012	*	217
バルブ;ソレノイド (5レン)	VALVE;SOLENOID	ZAJ314L0014	000	KHJ14520		237
バルブ;ソレノイド (2レン)	VALVE;SOLENOID	ZAJ314L0015	000	KHJ14780		239
バルブ;リモコン	VALVE;REMOTE CONT	ZAJ316L0001	000	KRJ5803		241
バルブ;リモコン (サギョウヨウ)	VALVE;REMOTE CONT	ZAJ316L0023	000	KHJ13270		243
バルブ;リモコン (ヨビヨウ シャトルツキ)	VALVE;REMOTE CONT	ZAJ316L0025	001	KHJ10450		245
バルブ;リモコン (ソウコウヨウ)	VALVE;REMOTE CONT	ZAJ316L0027	000	KHJ19270	*	247
バルブ;ディレクション 3ホウコウ	VALVE;DIRECTION	ZAJ327L0004	000	KHJ10420		249
バルブ;シャットオフ	VALVE;SHUT-OFF	ZAJ335L0001	000	KHJ10410		251
バルブ;クッション (マル1.2)	VALVE;CUSHION	ZAJ345L0002	001	KHJ1399		253
バルブ;クッション (シャトルバルブツキ)	VALVE;CUSHION	ZAJ345L0029	001	KRJ10350		255
バルブ;クッション	VALVE;CUSHION	ZAJ345L0054	000	KRJ10351	*	257
バルブ;リリーフ	VALVE;RELIEF	ZAJ351L0003	000	KHJ15050		259
バルブ;ホールディング	VALVE;HOLDING	ZAJ362L0020	001	KRV11110		261
バルブ;ホールディング	VALVE;HOLDING	ZAJ362L0021	001	KRV11120		263
ラジエタ	RADIATOR	ZAN320L0038	001	KRH10810		265
ラジエタ	RADIATOR	ZAN320L0054	000	KRH10811	*	267

https://truckmanualshub.com/

https://truckmanualshub.com/

目 次 CONTENTS

エリア AREA	NAME	パーツページコード PARTS PAGE CODE		標準(STANDARD)=STD 部品番 PART NO.	変更 CHANGE	ページ番号 PAGE NO.
ZA:インナーパーツ	INNER PARTS					
ポンプ;ユアツ	PUMP;HYD	ZAJ010L0056	001	KRJ10290		1
モータ;ソウコウ ユニット	MOTOR;TRACTION	ZAJ121L0030	002	KRA10150	*	23
モータ;ソウコウ	MOTOR;TRACTION	ZAJ121L0038	000	KRA12910	*	29
モータ;センカイ クミタテ	MOTOR;SWING	ZAJ122L0033	001	KRC10130		37
シリンダ;ブーム (EMS HBCV ヒダリ)	CYL;BOOM	ZAJ221L0160	000	KRV19580		43
シリンダ;ブーム (EMS HBCV ミギ)	CYL;BOOM	ZAJ221L0161	000	KRV19560		45
シリンダ;ブーム (EMS ミギ)	CYL;BOOM	ZAJ221L0162	000	KRV19520		47
シリンダ;ブーム (EMS ヒダリ)	CYL;BOOM	ZAJ221L0163	000	KRV19540		49
シリンダ;アーム (EMS)	CYL;ARM	ZAJ222L0128	001	KRV24000		55
シリンダ;アーム (EMS HBCV)	CYL;ARM	ZAJ222L0130	001	KRV24010		57
シリンダ;バケット (EMS)	CYL;BUCKET	ZAJ223L0075	000	KNV12540		61
シリンダ;バケット (EMS)	CYL;BUCKET	ZAJ223L0080	000	KNV12541	*	63
バルブ;コントロール SH200-5LR	VALVE;CONTROL	ZAJ313L0110	000	KRJ20100		105
バルブ;コントロール SH200-5LR	VALVE;CONTROL	ZAJ313L0121	000	KRJ20101	*	157
バルブ;コントロール	VALVE;CONTROL	ZAJ313L0151	000	KRJ20102	*	197
バルブ;ソレノイド (5レン)	VALVE;SOLENOID	ZAJ314L0014	000	KHJ14520		237
バルブ;リモコン	VALVE;REMOTE CONT	ZAJ316L0001	000	KRJ5803		241
バルブ;リモコン (サギョウヨウ)	VALVE;REMOTE CONT	ZAJ316L0023	000	KHJ13270		243
バルブ;リモコン (ヨビヨウ シャトルツキ)	VALVE;REMOTE CONT	ZAJ316L0025	001	KHJ10450		245
バルブ;リモコン (ソウコウヨウ)	VALVE;REMOTE CONT	ZAJ316L0027	000	KHJ19270	*	247
バルブ;クッション (マル1.2)	VALVE;CUSHION	ZAJ345L0002	001	KHJ1399		253
バルブ;クッション (シャトルバルブツキ)	VALVE;CUSHION	ZAJ345L0029	001	KRJ10350		255
バルブ;クッション	VALVE;CUSHION	ZAJ345L0054	000	KRJ10351	*	257
バルブ;ホールディング	VALVE;HOLDING	ZAJ362L0020	001	KRV11110		261
バルブ;ホールディング	VALVE;HOLDING	ZAJ362L0021	001	KRV11120		263
ラジエタ	RADIATOR	ZAN320L0038	001	KRH10810		265
ラジエタ	RADIATOR	ZAN320L0054	000	KRH10811	*	267

https://truckmanualshub.com/

PUMP;HYD	ﾎﾟﾝﾌﾟ;ﾕｱﾂ	ZAJ010L0056 001 1/10	000

1 [2 ~ 22] 2 [3 ~ 8] 23 [24 , 25] 26 [27 , 28] 29 [30 , 31] 32 [33 , 34]
35 [36 ~ 38] 39 [40 ~ 42] 43 [44 ~ 61] 50 [51 ~ 61] 62 [63 , 64]

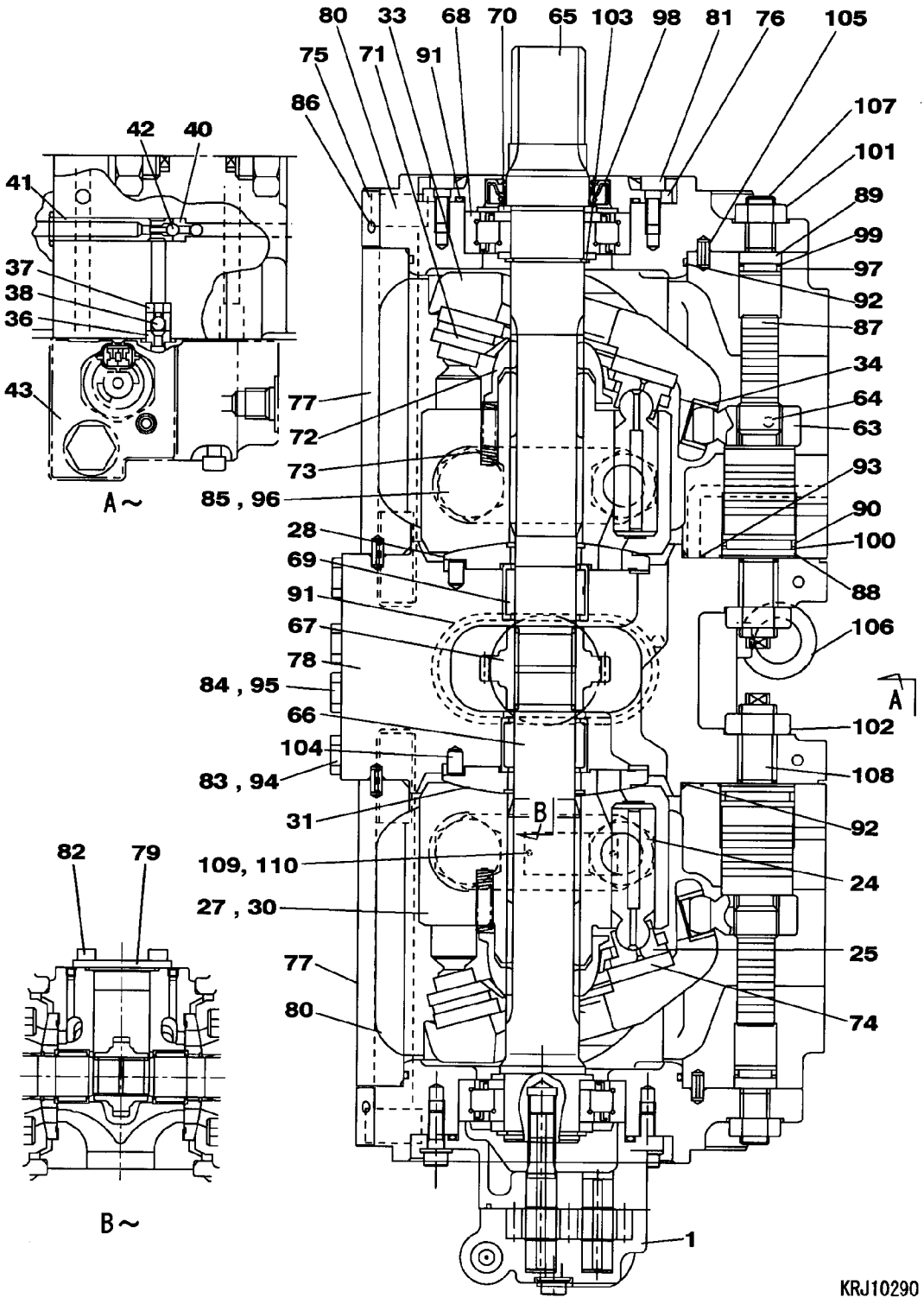

https://truckmanualshub.com/

PUMP;HYD	ﾎﾟﾝﾌﾟ;ﾕｱﾂ	ZAJ010L0056 001 2/10	001

符号 ITEM	構成 COMPO	部品番号 PART NO.	部品名	PART NAME	個数 Q'TY	互換 ICA	代替部品 REPLACEABLE PART	備考 MEMO
		KRJ10290			1			
1	1A	LJ014510	ﾎﾟﾝﾌﾟ;ｷﾞﾔ	PUMP;GEAR	1			
2	2A	LC002870	ｷﾞﾔ ﾄｸｼｭ	GEAR;SPL	1			
3	3	-------	ﾎﾟﾍﾟｯﾄ	POPPET	1			
4	3	-------	ｼｰﾄ	SEAT	1			
5	3	-------	ｹｰｽ;ｷﾞﾔ	CASE;GEAR	1			
6	3	-------	ｷﾞﾔ ｸﾄﾞｳ	GEAR;SPL	1			
7	3	-------	ｷﾞﾔ ｼﾞﾕｳﾄﾞｳ	GEAR;SPL	1			
8	3	-------	ｹｰｽ ﾌﾛﾝﾄ	CASE	1			
9	2	LE01175	ﾘﾝｸﾞ	RING	1			
10	2	LG00536	ｽﾌﾟﾘﾝｸﾞ ﾄｸｼｭ	SPRING;SPL	1			
11	2	LF00043	ｱｼﾞﾔｽﾀ ﾎﾞﾙﾄ	ADJUSTER	1			
12	2	LPP0172	ﾅｯﾄ ﾛｯｸ	NUT;SPL	1			
13	2	LPP0173	ﾌｲﾙﾀ	FILTER;SPL	1			
14	2	LMP0228	ﾎﾞﾙﾄ ﾌﾗﾝｼﾞ	BOLT;SPL	2			
15	2	LMP0229	ﾎﾞﾙﾄ ﾌﾗﾝｼﾞ	BOLT;SPL	2			
16	2	LMP0230	ﾎﾞﾙﾄ ﾌﾗﾝｼﾞ	BOLT;SPL	4			
17	2	LLP0041	ﾌﾟﾗｸﾞ	PLUG	1			
18	2	LBP0068	ﾘﾝｸﾞ ｶｸ	RING	1			
19	2	LE013510	O-ﾘﾝｸﾞ G95	O-RING	1			
20	2	LBQ0112	O-ﾘﾝｸﾞ JISB2401 1BP1	O-RING	1			
21	2	LBQ0162	O-ﾘﾝｸﾞ JISB2401 1BP1	O-RING	1			
22	2	LPP0174	ﾄﾒﾜ	LOCK RING;SPL	1			
23	1A	TJ00765	ﾋﾟｽﾄﾝ S/A	PISTON	2			
24	2	-------	ﾋﾟｽﾄﾝ	PISTON	18			
25	2	-------	ｼｭｰ	SHOE	18			
26	1A	LJ014500	ｼﾘﾝﾀﾞ ﾄｸｼｭ	CYL;SPL	1			
27	2	-------	ﾌﾞﾛｯｸ;ｼﾘﾝﾀﾞ	BLOCK;CYL	1			
28	2	-------	ﾌﾟﾚｰﾄ	PLATE	1			
29	1A	LJ014490	ｼﾘﾝﾀﾞ ﾄｸｼｭ	CYL;SPL	1			
30	2	-------	ﾌﾞﾛｯｸ;ｼﾘﾝﾀﾞ	BLOCK;CYL	1			
31	2	-------	ﾌﾟﾚｰﾄ	PLATE	1			
32	1A	LR00552	ﾌﾟﾚｰﾄ ｽｳｵｯｼｭ S/A	PLATE	2			
33	2	-------	ﾌﾟﾚｰﾄ ｽｳｵｯｼｭ	PLATE	2			
34	2	-------	ﾌﾞｼｭ ﾃﾝｼｬ	BUSH;SPL	2			
35	1A	TNP0022	ﾊﾞﾙﾌﾞ;ﾁｪｯｸ 295380204	VALVE;CHECK	2			
36	2	-------	ｼｰﾄ	SEAT	2			
37	2	-------	ｽﾄｯﾊﾟ 1	STOPPER	2			
38	2	-------	ﾎﾞｰﾙ	BALL	2			
39	1A	TNP0023	ﾊﾞﾙﾌﾞ;ﾁｪｯｸ 295380204	VALVE;CHECK	2			
40	2	-------	ｼｰﾄ	SEAT	2			
41	2	-------	ｽﾄｯﾊﾟ 2	STOPPER	2			
42	2	-------	ﾎﾞｰﾙ	BALL	2			
43	1A	LJ014460	ﾊﾞﾙﾌﾞ ﾄｸｼｭ	VALVE;SPL	1			
44	2	-------	ｹｰｽ	CASE	1			
45	2	108R006Y060R	ﾛｯｸｶｸｱﾅB M 6X 60	BOLT;HEX SOC HD	3			
46	2	LLP0041	ﾌﾟﾗｸﾞ	PLUG	1			
47	2	LK00003	ﾌﾟﾗｸﾞ	PLUG	3			
48	2	LE013410	O-ﾘﾝｸﾞ P11	O-RING	4			
49	2	LE013420	O-ﾘﾝｸﾞ P16	O-RING	1			
50	2A	-------	ﾊﾞﾙﾌﾞ ﾌﾟﾛﾎﾟ	VALVE;SPL	1			
51	3	-------	ｽﾌﾟｰﾙ;ﾊﾞﾙﾌﾞ	SPOOL;VALVE	1			
52	3	-------	ｽﾘｰﾌﾞ	SLEEVE	1			
53	3	-------	ｽﾌﾟﾘﾝｸﾞ;ｱｯｼｭｸ	SPRING;COMPRESSION	1			
54	3	-------	ﾘﾝｸﾞ C	RING	1			
55	3	-------	ｼｰﾄ;ｽﾌﾟﾘﾝｸﾞ	SEAT;SPRING	1			
56	3	-------	ｵﾘﾌｲｽ	ORIFICE	1			
57	3	LBQ6013	O-ﾘﾝｸﾞ	O-RING	1			
58	3	LBQ6014	O-ﾘﾝｸﾞ	O-RING	1			
59	3	LBQ6015	O-ﾘﾝｸﾞ AS568-015-HS9	O-RING	1			
60	3	LL00055	ｿﾚﾉｲﾄﾞ	SOLENOID	1			
61	3	-------	ﾒｲﾊﾞﾝ;ｼﾔﾒｲ	NAMEPLATE;CO.	1			
62	1A	LNP0180	ﾋﾟﾝ ﾁﾙﾄ S/A	PIN;SPL	2			
63	2	-------	ﾋﾟﾝ ﾃﾝｼｬ	PIN;SPL	1			
64	2	-------	ﾋﾟﾝ ﾄｸｼｭ	PIN;SPL	1			
65	1	LJP0038	ｼﾔﾌﾄ;ﾄﾞﾗｲﾌﾞ (F)	SHAFT;DRIVE	1			
66	1	LJP0039	ｼﾔﾌﾄ;ﾄﾞﾗｲﾌﾞ (R)	SHAFT;DRIVE	1			
67	1	LB00535	ｶｯﾌﾟﾘﾝｸﾞ;ｼﾞｸ ｷﾞﾔ ﾂｷ	COUPLING;SHAFT	1			

https://truckmanualshub.com/

1 [2 ~ 22]

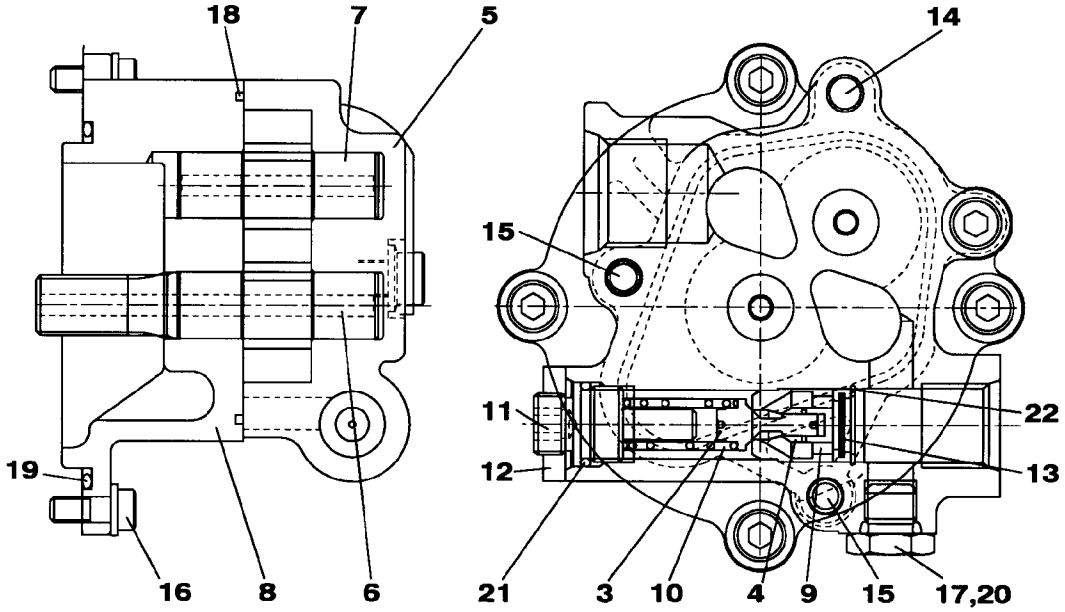

KRJ10290

https://truckmanualshub.com/

PUMP;HYD	ﾎﾟﾝﾌﾟ;ﾕｱｯ	ZAJ010L0056 001 4/10	001

符号 ITEM	構成 COMPO	部品番号 PART NO.	部品名	PART NAME	個数 Q'TY	互換 ICA	代替部品 REPLACEABLE PART	備考 MEMO
48	2	LE013410	O-ﾘﾝｸﾞ P11	O-RING	4			
49	2	LE013420	O-ﾘﾝｸﾞ P16	O-RING	1			
50	2A	-------	ﾊﾞﾙﾌﾞ ﾌﾟﾛﾎﾟ	VALVE;SPL	1			
51	3	-------	ｽﾌﾟｰﾙ;ﾊﾞﾙﾌﾞ	SPOOL;VALVE	1			
52	3	-------	ｽﾘｰﾌﾞ	SLEEVE	1			
53	3	-------	ｽﾌﾟﾘﾝｸﾞ;ｱｯｼｭｸ	SPRING;COMPRESSION	1			
54	3	-------	ﾘﾝｸﾞ C	RING	1			
55	3	-------	ｼｰﾄ;ｽﾌﾟﾘﾝｸﾞ	SEAT;SPRING	1			
56	3	-------	ｵﾘﾌｲｽ	ORIFICE	1			
57	3	LBQ6013	O-ﾘﾝｸﾞ	O-RING	1			
58	3	LBQ6014	O-ﾘﾝｸﾞ	O-RING	1			
59	3	LBQ6015	O-ﾘﾝｸﾞ AS568-015-HS9	O-RING	1			
60	3	LL00055	ｿﾚﾉｲﾄﾞ	SOLENOID	1			
61	3	-------	ﾒｲﾊﾞﾝ;ｼﾔﾒｲ	NAMEPLATE;CO.	1			
62	1A	LNP0180	ﾋﾟﾝ ﾁﾙﾄ S/A	PIN;SPL	2			
63	2	-------	ﾋﾟﾝ ﾃﾝｼﾔ	PIN;SPL	1			
64	2	-------	ﾋﾟﾝ ﾄｸｼｭ	PIN;SPL	1			
65	1	LJP0038	ｼﾔﾌﾄ;ﾄﾞﾗｲﾌﾞ (F)	SHAFT;DRIVE	1			
66	1	LJP0039	ｼﾔﾌﾄ;ﾄﾞﾗｲﾌﾞ (R)	SHAFT;DRIVE	1			
67	1	LB00535	ｶﾌﾟﾘﾝｸﾞ;ｼﾞｸ ｷﾞﾔ ﾂｷ	COUPLING;SHAFT	1			
68	1	TB00026	ﾍﾞｱﾘﾝｸﾞ ;ﾛｰﾗ	BEARING;ROLLING	2			
69	1	TB00082	BRG;ﾆｰﾄﾞﾙ	BRG;NEEDLE	2			
70	1	LMP0147	ｽﾍﾟｰｻ	SPACER	4			
71	1	TR00047	ﾌﾟﾚｰﾄ ;ｵｻｴ	PLATE;SPL	2			
72	1	LB00502	ﾌﾞｼｭ ｷｭｳﾒﾝ	BUSH;SPL	2			
73	1	LSP0109	ｽﾌﾟﾘﾝｸﾞ	SPRING;SPL	18			
74	1	LMP0208	ﾌﾟﾚｰﾄ;ｼｭｰ	PLATE;SHOE	2			
75	1	TPP0080	ｻﾎﾟｰﾄ ｼﾔﾊﾞﾝ 29238008	BAR	2			
76	1	LZP0176	ｶﾊﾞｰ;ｼｰﾙ (F)	COVER;SEAL	1			
77	1	LJ014520	ﾎﾟﾝﾌﾟ ﾄｸｼｭ	PUMP;SPL	2			
78	1	TJ00067	ﾌﾞﾛｯｸ;ﾊﾞﾙﾌﾞ	BLOCK;VALVE	1			
79	1	-------	ｶﾊﾞｰ	COVER	1			
80	1	LA00527	ﾛｯｶｸｱﾅB	BOLT;HEX SOC HD	8			
81	1	108R008Y020N	ﾛｯｶｸｱﾅB M 8X 20	BOLT;HEX SOC HD	4			
82	1	108R010Y020N	ﾛｯｶｸｱﾅB M10X 20	BOLT;HEX SOC HD	4			
83	1	LLP0041	ﾌﾟﾗｸﾞ	PLUG	2			
84	1	TLM0023	ﾌﾟﾗｸﾞ VP OVP38	PLUG	2			
85	1	LLM0028	ﾌﾟﾗｸﾞ	PLUG	4			
86	1	LK00003	ﾌﾟﾗｸﾞ	PLUG	27			
87	1	TJ00066	ﾋﾟｽﾄﾝ ;ｻｰﾎﾞ	PISTON	2			
88	1	TG00286	ｽﾄｯﾊﾟ	STOPPER	2			
89	1	LMP0213	ｽﾄｯﾊﾟ (S)	STOPPER	2			
90	1	LE01176	O-ﾘﾝｸﾞ ﾌﾂｿ G35	O-RING	2			
91	1	LE013510	O-ﾘﾝｸﾞ G95	O-RING	2			
92	1	LE013500	O-ﾘﾝｸﾞ G145	O-RING	4			
93	1	LE013470	O-ﾘﾝｸﾞ P8	O-RING	16			
94	1	LE013410	O-ﾘﾝｸﾞ P11	O-RING	6			
95	1	LE013490	O-ﾘﾝｸﾞ P14	O-RING	2			
96	1	LE013440	O-ﾘﾝｸﾞ P24	O-RING	4			
97	1	LE01177	O-ﾘﾝｸﾞ ﾌﾂｿ P18	O-RING	2			
98	1	LE01178	ｼｰﾙ;ｵｲﾙ	SEAL;OIL	1			
99	1	LBB0182	ﾘﾝｸﾞ;ﾊﾞｯｸｱｯﾌﾟ	RING;BACK-UP	2			
100	1	LBB0353	ﾘﾝｸﾞ;ﾊﾞｯｸｱｯﾌﾟ	RING;BACK-UP	2			
101	1	164R016VR	ﾄﾒN M16	NUT;JAM	2			
102	1	164R020VR	ﾄﾒN M20	NUT;JAM	2			
103	1	370A0400Z	ｼﾞｸﾄﾒﾜ 40	RING;SNAP	2			
104	1	LMP0108	ﾋﾟﾝ ﾌﾟﾚｰﾄ	PIN;SPL	2			
105	1	338W060Z014B	SPﾋﾟﾝ 6 X 14	PIN;SPRING	4			
106	1	126R010SR	ｱｲB M 10	EYEBOLT	2			
107	1	LA00036	ﾛｯｶｸﾄﾒS	SCREW;SET HEX HD	2			
108	1	LUP0190	ｽｸﾘｭｰ ｾｯﾄ	SCREW	2			
109	1	TM00046	ﾒｲﾊﾞﾝ	NAMEPLATE;SPL	1			
110	1	LA00027	ﾘﾍﾞｯﾄ ﾄｸｼｭ	RIVET;SPL	2			
111	1A	LL001100	ﾚｷﾞｭﾚｰﾀ	REGULATOR	1			
112	2	108R008Z050N	ﾛｯｶｸｱﾅB	BOLT;HEX SOC HD	2			
113	2	108R008Z070N	ﾛｯｶｸｱﾅB	BOLT;HEX SOC HD	2			
114	2	108R006Z040R	ﾛｯｶｸｱﾅB JIS B 1176 M	BOLT;HEX SOC HD	4			
115	2	108R006Z020N	ﾛｯｶｸｱﾅB	BOLT;HEX SOC HD	8			

https://truckmanualshub.com/

43 [44 ~ 61] 50 [51 ~ 61]

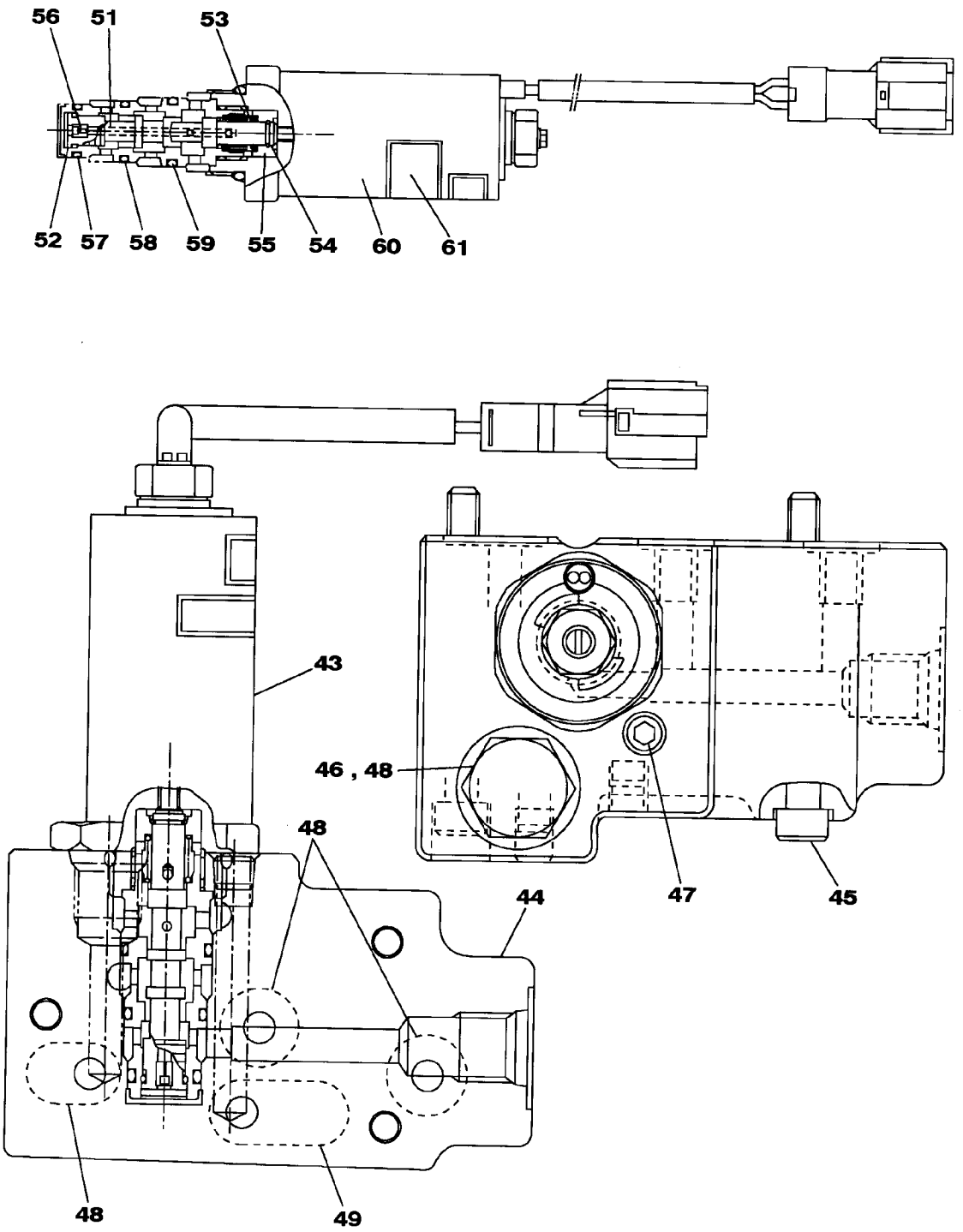

KRJ10290

https://truckmanualshub.com/

符号 ITEM	構成 COMPO	部品番号 PART NO.	部品名	PART NAME	個数 Q'TY	互換 ICA	代替部品 REPLACEABLE PART	備考 MEMO
96	1	LE013440	O-ﾘﾝｸﾞ P24	O-RING	4			
97	1	LE01177	O-ﾘﾝｸﾞ ﾌﾂｿ P18	O-RING	2			
98	1	LE01178	ｼｰﾙ;ｵｲﾙ	SEAL;OIL	1			
99	1	LBB0182	ﾘﾝｸﾞ;ﾊﾞｯｸｱｯﾌﾟ	RING;BACK-UP	2			
100	1	LBB0353	ﾘﾝｸﾞ;ﾊﾞｯｸｱｯﾌﾟ	RING;BACK-UP	2			
101	1	164R016VR	ﾄﾒN M16	NUT;JAM	2			
102	1	164R020VR	ﾄﾒN M20	NUT;JAM	2			
103	1	370A0400Z	ｼﾞｸﾄﾒﾜ 40	RING;SNAP	2			
104	1	LMP0108	ﾋﾟﾝ ﾌﾟﾚｰﾄ	PIN;SPL	2			
105	1	338W060Z014B	SPﾋﾟﾝ 6 X 14	PIN;SPRING	4			
106	1	126R010SR	ｱｲB M 10	EYEBOLT	2			
107	1	LA00036	ﾛｯｶｸﾄﾒS	SCREW;SET HEX HD	2			
108	1	LUP0190	ｽｸﾘｭｰ ｾｯﾄ	SCREW	2			
109	1	TM00046	ﾒｲﾊﾞﾝ	NAMEPLATE;SPL	1			
110	1	LA00027	ﾘﾍﾞｯﾄ ﾄｸｼｭ	RIVET;SPL	2			
111	1A	LL001100	ﾚｷﾞｭﾚｰﾀ	REGULATOR	1			
112	2	108R008Z050N	ﾛｯｶｸｱﾅB	BOLT;HEX SOC HD	2			
113	2	108R008Z070N	ﾛｯｶｸｱﾅB	BOLT;HEX SOC HD	2			
114	2	108R006Z040R	ﾛｯｶｸｱﾅB JIS B 1176 M	BOLT;HEX SOC HD	4			
115	2	108R006Z020N	ﾛｯｶｸｱﾅB	BOLT;HEX SOC HD	8			
116	2	LLP0041	ﾌﾟﾗｸﾞ	PLUG	1			
117	2	TLM0023	ﾌﾟﾗｸﾞ VP OVP38	PLUG	1			
118	2	LK00003	ﾌﾟﾗｸﾞ	PLUG	6			
119	2A	LJ014480	ﾊﾞﾙﾌﾞ;ｼｬﾂﾄﾙ	VALVE;SHUTTLE	1			
120	3	-------	ﾎﾞｰﾙ	BALL	1			
121	3	-------	ｼｰﾄ	SEAT	1			
122	3	-------	ｼｰﾄ	SEAT	1			
123	2	-------	ｹｰｽ	CASE	1			
124	2	-------	ﾚﾊﾞｰ ﾌｲｰﾄﾞﾊﾞｯｸ	LEVER	1			
125	2	-------	ﾚﾊﾞｰ	LEVER	1			
126	2	-------	ﾚﾊﾞｰ	LEVER	1			
127	2	-------	ﾌﾟﾗｸﾞ	PLUG	1			
128	2	-------	ﾌﾟﾗｸﾞ	PLUG	1			
129	2	-------	ﾋﾟｽﾄﾝ ｺﾝﾍﾟﾝｾｰﾀ	PISTON	1			
130	2	-------	ｹｰｽ ﾄｸｼｭ	CASE;SPL	1			
131	2	-------	ﾛｯﾄﾞ ﾄｸｼｭ	ROD;SPL	1			
132	2	-------	ｼｰﾄ;ｽﾌﾟﾘﾝｸﾞ	SEAT;SPRING	1			
133	2	-------	ｽﾌﾟﾘﾝｸﾞ ;ｱｳﾀｰ	SPRING;SPL	1			
134	2	-------	ｽﾌﾟﾘﾝｸﾞ;ｱｯｼｭｸ	SPRING;COMPRESSION	1			
135	2	-------	ｼｰﾄ;ｽﾌﾟﾘﾝｸﾞ	SEAT;SPRING	1			
136	2	-------	ﾈｼﾞｽｸﾘｭｰ ﾄｸｼｭ	THREDED SCREW;SPL	1			
137	2	-------	ｶﾊﾞｰ	COVER	1			
138	2	-------	ﾅｯﾄ ﾄｸｼｭ 2953801695	NUT;SPL	1			
139	2	-------	ｽﾘｰﾌﾞ	SLEEVE	1			
140	2	-------	ｶﾊﾞｰ ﾄｸｼｭ	COVER;SPL	1			
141	2	-------	ﾋﾟｽﾄﾝ	PISTON	1			
142	2	-------	ｼｰﾄ;ｽﾌﾟﾘﾝｸﾞ	SEAT;SPRING	1			
143	2	-------	ﾋﾟﾝ ﾁｮｳｾｲ	PIN;SPL	1			
144	2	-------	ｽﾌﾟﾘﾝｸﾞ ﾄｸｼｭ	SPRING;SPL	1			
145	2	-------	ｽﾘｰﾌﾞ	SLEEVE	1			
146	2	-------	ｽﾌﾟｰﾙ	SPOOL	1			
147	2	-------	ｼｰﾄ;ｽﾌﾟﾘﾝｸﾞ	SEAT;SPRING	1			
148	2	-------	ｽﾌﾟﾘﾝｸﾞ ﾄｸｼｭ	SPRING;SPL	1			
149	2	-------	ｽﾌﾟﾘﾝｸﾞ ﾄｸｼｭ	SPRING;SPL	1			
150	2	-------	ｶﾊﾞｰ ﾄｸｼｭ	COVER;SPL	1			
151	2	LE013390	O-ﾘﾝｸﾞ G75	O-RING	1			
152	2	LE013460	O-ﾘﾝｸﾞ P6	O-RING	3			
153	2	LE013470	O-ﾘﾝｸﾞ P8	O-RING	9			
154	2	LE013400	O-ﾘﾝｸﾞ P10	O-RING	1			
155	2	LE013490	O-ﾘﾝｸﾞ P14	O-RING	1			
156	2	LE01177	O-ﾘﾝｸﾞ ﾌﾂｿ P18	O-RING	1			
157	2	LE00608	O-ﾘﾝｸﾞ	O-RING	1			
158	2	LE013420	O-ﾘﾝｸﾞ P16	O-RING	1			
159	2	LE013550	O-ﾘﾝｸﾞ	O-RING	4			
160	2	LE013380	O-ﾘﾝｸﾞ G25	O-RING	1			
161	2	LE013520	O-ﾘﾝｸﾞ P12.5	O-RING	1			
162	2	LE013540	O-ﾘﾝｸﾞ P9	O-RING	1			
163	2	LE013410	O-ﾘﾝｸﾞ P11	O-RING	3			

https://truckmanualshub.com/

111 [112 ~ 177] 119 [120 ~ 122]

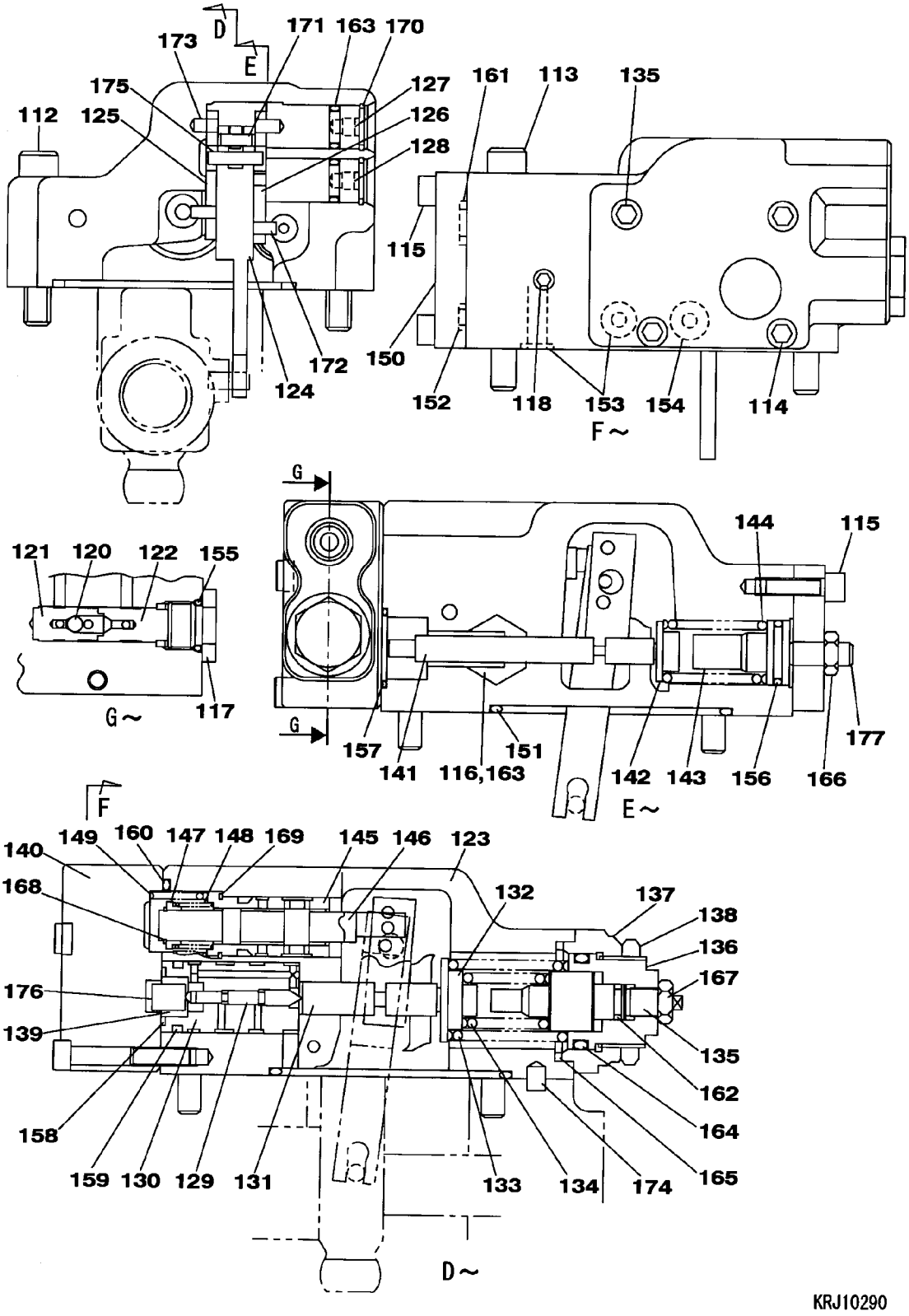

https://truckmanualshub.com/

符号 ITEM	構成 COMPO	部品番号 PART NO.	部品名	PART NAME	個数 Q'TY	互換 ICA	代替部品 REPLACEABLE PART	備考 MEMO
144	2	-------	ｽﾌﾟﾘﾝｸﾞ ﾄｸｼｭ	SPRING;SPL	1			
145	2	-------	ｽﾘｰﾌﾞ	SLEEVE	1			
146	2	-------	ｽﾌﾟｰﾙ	SPOOL	1			
147	2	-------	ｼｰﾄ;ｽﾌﾟﾘﾝｸﾞ	SEAT;SPRING	1			
148	2	-------	ｽﾌﾟﾘﾝｸﾞ ﾄｸｼｭ	SPRING;SPL	1			
149	2	-------	ｽﾌﾟﾘﾝｸﾞ ﾄｸｼｭ	SPRING;SPL	1			
150	2	-------	ｶﾊﾞｰ ﾄｸｼｭ	COVER;SPL	1			
151	2	LE013390	O-ﾘﾝｸﾞ G75	O-RING	1			
152	2	LE013460	O-ﾘﾝｸﾞ P6	O-RING	3			
153	2	LE013470	O-ﾘﾝｸﾞ P8	O-RING	9			
154	2	LE013400	O-ﾘﾝｸﾞ P10	O-RING	1			
155	2	LE013490	O-ﾘﾝｸﾞ P14	O-RING	1			
156	2	LE01177	O-ﾘﾝｸﾞ ﾌﾂｿ P18	O-RING	1			
157	2	LE00608	O-ﾘﾝｸﾞ	O-RING	1			
158	2	LE013420	O-ﾘﾝｸﾞ P16	O-RING	1			
159	2	LE013550	O-ﾘﾝｸﾞ	O-RING	4			
160	2	LE013380	O-ﾘﾝｸﾞ G25	O-RING	1			
161	2	LE013520	O-ﾘﾝｸﾞ P12.5	O-RING	1			
162	2	LE013540	O-ﾘﾝｸﾞ P9	O-RING	1			
163	2	LE013410	O-ﾘﾝｸﾞ P11	O-RING	3			
164	2	LE013450	O-ﾘﾝｸﾞ P26	O-RING	1			
165	2	LE01176	O-ﾘﾝｸﾞ ﾌﾂｿ G35	O-RING	1			
166	2	LA00065	ﾄﾒN M8X1	NUT;JAM	1			
167	2	LA010640	ﾄﾒN	NUT;JAM	1			
168	2	370A0100Z	ｼﾞｸﾄﾒﾜ 10	RING;SNAP	1			
169	2	-------	ｼﾞｸﾄﾒﾜ	RING;SNAP	1			
170	2	380A0150Z	ｱﾅﾄﾒﾜ 15	RING;SNAP	2			
171	2	-------	ﾋﾟﾝ ﾄｸｼｭ	PIN;SPL	1			
172	2	-------	ﾋﾟﾝ ﾄｸｼｭ	PIN;SPL	2			
173	2	-------	ﾋﾟﾝ	PIN;SPL	2			
174	2	-------	ﾋﾟﾝ ﾄｸｼｭ	PIN;SPL	1			
175	2	-------	ﾋﾟﾝ	PIN;SPL	1			
176	2	-------	ﾋﾟﾝ ﾄｸｼｭ	PIN;SPL	1			
177	2	LA00759	ﾎﾞﾙﾄ ﾛｯｶｸｱﾅﾂｷ	BOLT;SPL	1			
178	1A	LL001090	ﾚｷﾞｭﾚｰﾀ	REGULATOR	1			
179	2	108R008Z050N	ﾛｯｶｸｱﾅB	BOLT;HEX SOC HD	2			
180	2	108R008Z070N	ﾛｯｶｸｱﾅB	BOLT;HEX SOC HD	2			
181	2	LA010920	ﾛｯｶｸｱﾅB M5-12	BOLT;HEX SOC HD	2			
182	2	108R006Z040R	ﾛｯｶｸｱﾅB JIS B 1176 M	BOLT;HEX SOC HD	4			
183	2	108R006Z020N	ﾛｯｶｸｱﾅB	BOLT;HEX SOC HD	8			
184	2	LLP0041	ﾌﾟﾗｸﾞ	PLUG	1			
185	2	TLM0023	ﾌﾟﾗｸﾞ VP OVP38	PLUG	1			
186	2	LK00003	ﾌﾟﾗｸﾞ	PLUG	12			
187	2A	LJ014480	ﾊﾞﾙﾌﾞ;ｼﾔｯﾄﾙ	VALVE;SHUTTLE	1			
188	3	-------	ﾎﾞｰﾙ	BALL	1			
189	3	-------	ｼｰﾄ	SEAT	1			
190	3	-------	ｼｰﾄ	SEAT	1			
191	2	-------	ｹｰｽ	CASE	1			
192	2	-------	ﾚﾊﾞｰ ﾌｲｰﾄﾞﾊﾞｯｸ	LEVER	1			
193	2	-------	ﾚﾊﾞｰ	LEVER	1			
194	2	-------	ﾚﾊﾞｰ	LEVER	1			
195	2	-------	ﾌﾟﾗｸﾞ	PLUG	1			
196	2	-------	ﾌﾟﾗｸﾞ	PLUG	1			
197	2	-------	ﾋﾟｽﾄﾝ ｺﾝﾍﾟﾝｾｰﾀ	PISTON	1			
198	2	-------	ｹｰｽ ﾄｸｼｭ	CASE;SPL	1			
199	2	-------	ﾛｯﾄﾞ ﾄｸｼｭ	ROD;SPL	1			
200	2	-------	ｼｰﾄ;ｽﾌﾟﾘﾝｸﾞ	SEAT;SPRING	1			
201	2	-------	ｽﾌﾟﾘﾝｸﾞ ;ｱｳﾀｰ	SPRING;SPL	1			
202	2	-------	ｽﾌﾟﾘﾝｸﾞ;ｱｯｼｭｸ	SPRING;COMPRESSION	1			
203	2	-------	ｼｰﾄ;ｽﾌﾟﾘﾝｸﾞ	SEAT;SPRING	1			
204	2	-------	ﾈｼﾞｽｸﾘｭｰ ﾄｸｼｭ	THREDED SCREW;SPL	1			
205	2	-------	ｶﾊﾞｰ	COVER	1			
206	2	-------	ﾅｯﾄ ﾄｸｼｭ 2953801695	NUT;SPL	1			
207	2	-------	ｽﾘｰﾌﾞ	SLEEVE	1			
208	2	-------	ｶﾊﾞｰ ﾄｸｼｭ	COVER;SPL	1			
209	2	-------	ﾋﾟｽﾄﾝ	PISTON	1			
210	2	-------	ｼｰﾄ;ｽﾌﾟﾘﾝｸﾞ	SEAT;SPRING	1			
211	2	-------	ﾋﾟﾝ ﾁｮｳｾｲ	PIN;SPL	1			

https://truckmanualshub.com/

PUMP;HYD	ﾎﾟﾝﾌﾟ;ﾕｱﾂ	ZAJ010L0056 001 9/10	000

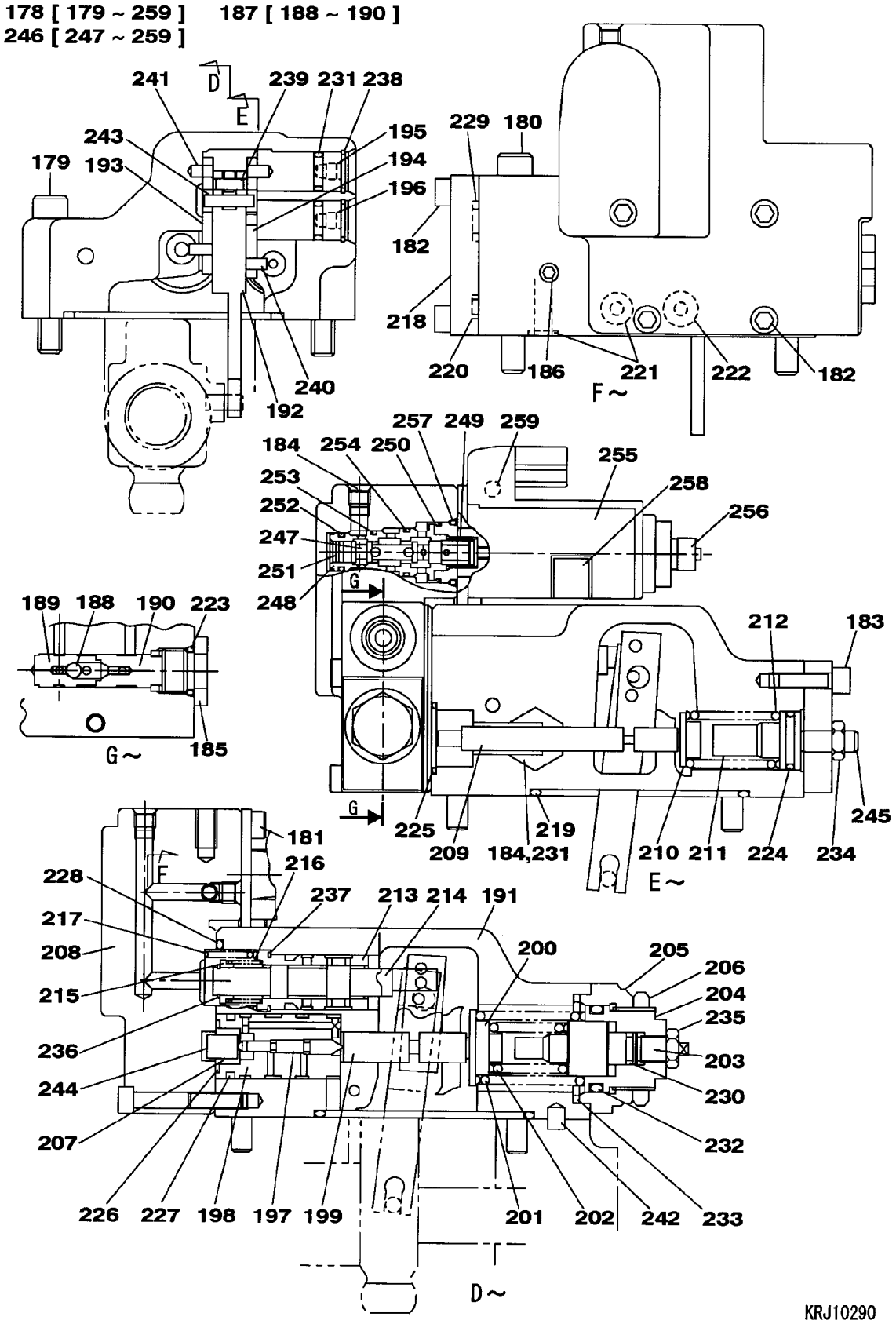

https://truckmanualshub.com/

符号 ITEM	構成 COMPO	部品番号 PART NO.	部品名	PART NAME	個数 Q'TY	互換 ICA	代替部品 REPLACEABLE PART	備考 MEMO
192	2	-------	ﾚﾊﾞｰ ﾌｲｰﾄﾞﾊﾞｯｸ	LEVER	1			
193	2	-------	ﾚﾊﾞｰ	LEVER	1			
194	2	-------	ﾚﾊﾞｰ	LEVER	1			
195	2	-------	ﾌﾟﾗｸﾞ	PLUG	1			
196	2	-------	ﾌﾟﾗｸﾞ	PLUG	1			
197	2	-------	ﾋﾟｽﾄﾝ ｺﾝﾍﾟﾝｾｰﾀ	PISTON	1			
198	2	-------	ｹｰｽ ﾄｸｼｭ	CASE;SPL	1			
199	2	-------	ﾛｯﾄﾞ ﾄｸｼｭ	ROD;SPL	1			
200	2	-------	ｼｰﾄ;ｽﾌﾟﾘﾝｸﾞ	SEAT;SPRING	1			
201	2	-------	ｽﾌﾟﾘﾝｸﾞ ;ｱｳﾀｰ	SPRING;SPL	1			
202	2	-------	ｽﾌﾟﾘﾝｸﾞ;ｱｯｼｭｸ	SPRING;COMPRESSION	1			
203	2	-------	ｼｰﾄ;ｽﾌﾟﾘﾝｸﾞ	SEAT;SPRING	1			
204	2	-------	ﾈｼﾞｽｸﾘｭｰ ﾄｸｼｭ	THREDED SCREW;SPL	1			
205	2	-------	ｶﾊﾞｰ	COVER	1			
206	2	-------	ﾅｯﾄ ﾄｸｼｭ 2953801695	NUT;SPL	1			
207	2	-------	ｽﾘｰﾌﾞ	SLEEVE	1			
208	2	-------	ｶﾊﾞｰ ﾄｸｼｭ	COVER;SPL	1			
209	2	-------	ﾋﾟｽﾄﾝ	PISTON	1			
210	2	-------	ｼｰﾄ;ｽﾌﾟﾘﾝｸﾞ	SEAT;SPRING	1			
211	2	-------	ﾋﾟﾝ ﾁｮｳｾｲ	PIN;SPL	1			
212	2	-------	ｽﾌﾟﾘﾝｸﾞ ﾄｸｼｭ	SPRING;SPL	1			
213	2	-------	ｽﾘｰﾌﾞ	SLEEVE	1			
214	2	-------	ｽﾌﾟｰﾙ	SPOOL	1			
215	2	-------	ｼｰﾄ;ｽﾌﾟﾘﾝｸﾞ	SEAT;SPRING	1			
216	2	-------	ｽﾌﾟﾘﾝｸﾞ ﾄｸｼｭ	SPRING;SPL	1			
217	2	-------	ｽﾌﾟﾘﾝｸﾞ ﾄｸｼｭ	SPRING;SPL	1			
218	2	-------	ｶﾊﾞｰ ﾄｸｼｭ	COVER;SPL	1			
219	2	LE013390	O-ﾘﾝｸﾞ G75	O-RING	1			
220	2	LE013460	O-ﾘﾝｸﾞ P6	O-RING	3			
221	2	LE013470	O-ﾘﾝｸﾞ P8	O-RING	9			
222	2	LE013400	O-ﾘﾝｸﾞ P10	O-RING	1			
223	2	LE013490	O-ﾘﾝｸﾞ P14	O-RING	1			
224	2	LE01177	O-ﾘﾝｸﾞ ﾌﾂｿ P18	O-RING	1			
225	2	LE00608	O-ﾘﾝｸﾞ	O-RING	1			
226	2	LE013420	O-ﾘﾝｸﾞ P16	O-RING	1			
227	2	LE013550	O-ﾘﾝｸﾞ	O-RING	4			
228	2	LE013380	O-ﾘﾝｸﾞ G25	O-RING	1			
229	2	LE013520	O-ﾘﾝｸﾞ P12.5	O-RING	1			
230	2	LE013540	O-ﾘﾝｸﾞ P9	O-RING	1			
231	2	LE013410	O-ﾘﾝｸﾞ P11	O-RING	3			
232	2	LE013450	O-ﾘﾝｸﾞ P26	O-RING	1			
233	2	LE01176	O-ﾘﾝｸﾞ ﾌﾂｿ G35	O-RING	1			
234	2	LA00065	ﾄﾒN M8X1	NUT;JAM	1			
235	2	LA010640	ﾄﾒN	NUT;JAM	1			
236	2	370A0100Z	ｼﾞｸﾄﾒﾜ 10	RING;SNAP	1			
237	2	-------	ｼﾞｸﾄﾒﾜ	RING;SNAP	1			
238	2	380A0150Z	ｱﾅﾄﾒﾜ 15	RING;SNAP	2			
239	2	-------	ﾋﾟﾝ ﾄｸｼｭ	PIN;SPL	1			
240	2	-------	ﾋﾟﾝ ﾄｸｼｭ	PIN;SPL	2			
241	2	-------	ﾋﾟﾝ	PIN;SPL	2			
242	2	-------	ﾋﾟﾝ ﾄｸｼｭ	PIN;SPL	1			
243	2	-------	ﾋﾟﾝ	PIN;SPL	1			
244	2	-------	ﾋﾟﾝ ﾄｸｼｭ	PIN;SPL	1			
245	2	LA00759	ﾎﾞﾙﾄ ﾛｯｶｸｱﾅﾂｷ	BOLT;SPL	1			
246	2A	-------	ﾊﾞﾙﾌﾞ ﾌﾟﾛﾎﾟ	VALVE;SPL	1			
247	3	-------	ｽﾌﾟｰﾙ	SPOOL	1			
248	3	-------	ｽﾘｰﾌﾞ	SLEEVE	1			
249	3	-------	ｽﾌﾟﾘﾝｸﾞ ﾄｸｼｭ	SPRING;SPL	1			
250	3	-------	ﾘﾝｸﾞ ﾄｸｼｭ	RING;SPL	1			
251	3	-------	ｵﾘﾌｲｽ	ORIFICE	1			
252	3	LBQ6013	O-ﾘﾝｸﾞ	O-RING	1			
253	3	LBQ6014	O-ﾘﾝｸﾞ	O-RING	1			
254	3	LBQ6015	O-ﾘﾝｸﾞ AS568-015-HS9	O-RING	1			
255	3	-------	ｿﾚﾉｲﾄﾞ	SOLENOID	1			
256	3	LA010930	ﾅｯﾄ	NUT;SPL	1			
257	3	LBQ0202	O-ﾘﾝｸﾞ JISB2401 1BP2	O-RING	1			
258	3	-------	ﾒｲﾊﾞﾝ ﾄｸｼｭ	NAMEPLATE;SPL	1			
259	3	-------	ﾒｲﾊﾞﾝ ﾄｸｼｭ	NAMEPLATE;SPL	1			

https://truckmanualshub.com/

1 [2 ~ 22] 2 [3 ~ 8] 23 [24 ~ 41] 42 [43 , 44] 45 [46 , 47] 48 [49 , 50]
51 [52 , 53] 54 [55 ~ 57] 58 [59 ~ 61] 62 [63 ~ 80] 69 [70 ~ 80] 81 [82 , 83]

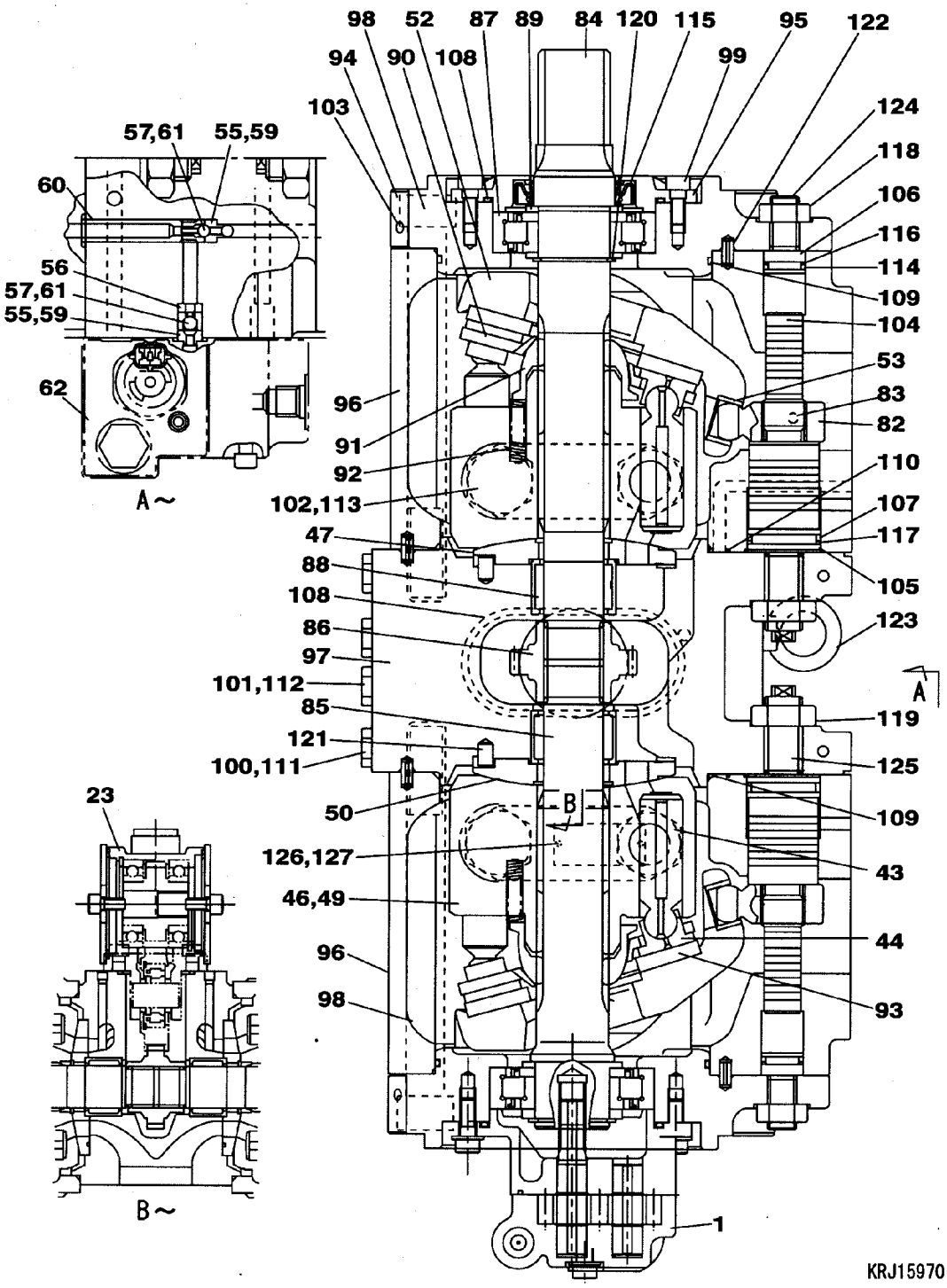

https://truckmanualshub.com/

PUMP;HYD	ﾎﾟﾝﾌﾟ;ﾕｱｯ (PTO)	ZAJ010L0057 001 2/10	001

符号 ITEM	構成 COMPO	部品番号 PART NO.	部品名	PART NAME	個数 Q'TY	互換 ICA	代替部品 REPLACEABLE PART	備考 MEMO
		KRJ15970			1			
1	1A	LJ014510	ﾎﾟﾝﾌﾟ;ｷﾞﾔ	PUMP;GEAR	1			
2	2A	LC002870	ｷﾞﾔ ﾄｸｼｭ	GEAR;SPL	1			
3	3	-------	ﾎﾟﾍﾟｯﾄ	POPPET	1			
4	3	-------	ｼｰﾄ	SEAT	1			
5	3	-------	ｹｰｽ;ｷﾞﾔ	CASE;GEAR	1			
6	3	-------	ｷﾞﾔ ｸﾄﾞｳ	GEAR;SPL	1			
7	3	-------	ｷﾞﾔ ｼﾞﾕｳﾄﾞｳ	GEAR;SPL	1			
8	3	-------	ｹｰｽ ﾌﾛﾝﾄ	CASE	1			
9	2	LE01175	ﾘﾝｸﾞ	RING	1			
10	2	LG00536	ｽﾌﾟﾘﾝｸﾞ ﾄｸｼｭ	SPRING;SPL	1			
11	2	LF00043	ｱｼﾞﾔｽﾀ ﾎﾞﾙﾄ	ADJUSTER	1			
12	2	LPP0172	ﾅｯﾄ ﾛｯｸ	NUT;SPL	1			
13	2	LPP0173	ﾌｲﾙﾀ	FILTER;SPL	1			
14	2	LMP0228	ﾎﾞﾙﾄ ﾌﾗﾝｼﾞ	BOLT;SPL	2			
15	2	LMP0229	ﾎﾞﾙﾄ ﾌﾗﾝｼﾞ	BOLT;SPL	2			
16	2	LMP0230	ﾎﾞﾙﾄ ﾌﾗﾝｼﾞ	BOLT;SPL	4			
17	2	LLP0041	ﾌﾟﾗｸﾞ	PLUG	1			
18	2	LBP0068	ﾘﾝｸﾞ ｶｸ	RING	1			
19	2	LE013510	O-ﾘﾝｸﾞ G95	O-RING	1			
20	2	LBQ0112	O-ﾘﾝｸﾞ JISB2401 1BP1	O-RING	1			
21	2	LBQ0162	O-ﾘﾝｸﾞ JISB2401 1BP1	O-RING	1			
22	2	LPP0174	ﾄﾒﾜ	LOCK RING;SPL	1			
23	1A	LC002860	ｷﾞﾔ PTO	GEAR;SPL	1			
24	2	-------	ｼﾔﾌﾄ;ｱｲﾄﾞﾗ	SHAFT;IDLER	1			
25	2	-------	ｷﾞﾔ;ﾋﾟﾆｵﾝ	GEAR;PINION	1			
26	2	-------	ｷﾞﾔ;ﾋﾟﾆｵﾝ	GEAR;PINION	1			
27	2	-------	ﾍﾞｱﾘﾝｸﾞ	BEARING;ROLLING	2			
28	2	-------	ﾍﾞｱﾘﾝｸﾞ	BEARING;ROLLING	1			
29	2	-------	ｽﾍﾟｰｻ ﾍﾞｱﾘﾝｸﾞ	SPACER;SPL	2			
30	2	-------	ｶﾊﾞｰ ﾄｸｼｭ	COVER;SPL	2			
31	2	-------	ｹｰｽ ｷﾞﾔ	CASE;SPL	1			
32	2	108R010Y020N	ﾛｯｶｸｱﾅB M10X 20	BOLT;HEX SOC HD	4			
33	2	LA00691	ﾛｯｶｸｱﾅB ﾌﾗﾝｼﾞﾂｷ	BOLT;HEX SOC HD	4			
34	2	LLM0028	ﾌﾟﾗｸﾞ	PLUG	1			
35	2	LBQ0803	O-ﾘﾝｸﾞ JISB2401 1BG8	O-RING	1			
36	2	LBQ0853	O-ﾘﾝｸﾞ JISB2401 1BG8	O-RING	1			
37	2	LBQ0242	O-ﾘﾝｸﾞ JISB2401 1BP2	O-RING	1			
38	2	-------	ｱﾅﾄﾒﾜ 72	RING;SNAP	1			
39	2	-------	ｱﾅﾄﾒﾜ 52	RING;SNAP	1			
40	2	LA010900	ﾋﾟﾝ ｽﾌﾟﾘﾝｸﾞ	PIN;SPL	1			
41	2	-------	ﾋﾟﾝ ﾄｸｼｭ	PIN;SPL	2			
42	1A	TJ00765	ﾋﾟｽﾄﾝ S/A	PISTON	2			
43	2	-------	ﾋﾟｽﾄﾝ	PISTON	18			
44	2	-------	ｼｭｰ	SHOE	18			
45	1A	LJ014500	ｼﾘﾝﾀﾞ ﾄｸｼｭ	CYL;SPL	1			
46	2	-------	ﾌﾞﾛｯｸ;ｼﾘﾝﾀﾞ	BLOCK;CYL	1			
47	2	-------	ﾌﾟﾚｰﾄ	PLATE	1			
48	1A	LJ014490	ｼﾘﾝﾀﾞ ﾄｸｼｭ	CYL;SPL	1			
49	2	-------	ﾌﾞﾛｯｸ;ｼﾘﾝﾀﾞ	BLOCK;CYL	1			
50	2	-------	ﾌﾟﾚｰﾄ	PLATE	1			
51	1A	LR00552	ﾌﾟﾚｰﾄ ｽｳｵｯｼｭ S/A	PLATE	2			
52	2	-------	ﾌﾟﾚｰﾄ ｽｳｵｯｼｭ	PLATE	2			
53	2	-------	ﾌﾞｼｭ ﾃﾝｼﾔ	BUSH;SPL	2			
54	1A	TNP0022	ﾊﾞﾙﾌﾞ;ﾁｴｯｸ 295380204	VALVE;CHECK	2			
55	2	-------	ｼｰﾄ	SEAT	2			
56	2	-------	ｽﾄｯﾊﾟ 1	STOPPER	2			
57	2	-------	ﾎﾞｰﾙ	BALL	2			
58	1A	TNP0023	ﾊﾞﾙﾌﾞ;ﾁｴｯｸ 295380204	VALVE;CHECK	2			
59	2	-------	ｼｰﾄ	SEAT	2			
60	2	-------	ｽﾄｯﾊﾟ 2	STOPPER	2			
61	2	-------	ﾎﾞｰﾙ	BALL	2			
62	1A	LJ014460	ﾊﾞﾙﾌﾞ ﾄｸｼｭ	VALVE;SPL	1			
63	2	-------	ｹｰｽ	CASE	1			
64	2	108R006Y060R	ﾛｯｶｸｱﾅB M 6X 60	BOLT;HEX SOC HD	3			
65	2	LLP0041	ﾌﾟﾗｸﾞ	PLUG	1			
66	2	LK00003	ﾌﾟﾗｸﾞ	PLUG	3			
67	2	LE013410	O-ﾘﾝｸﾞ P11	O-RING	4			

https://truckmanualshub.com/

1 [2 ~ 22] 2 [3 ~ 8]

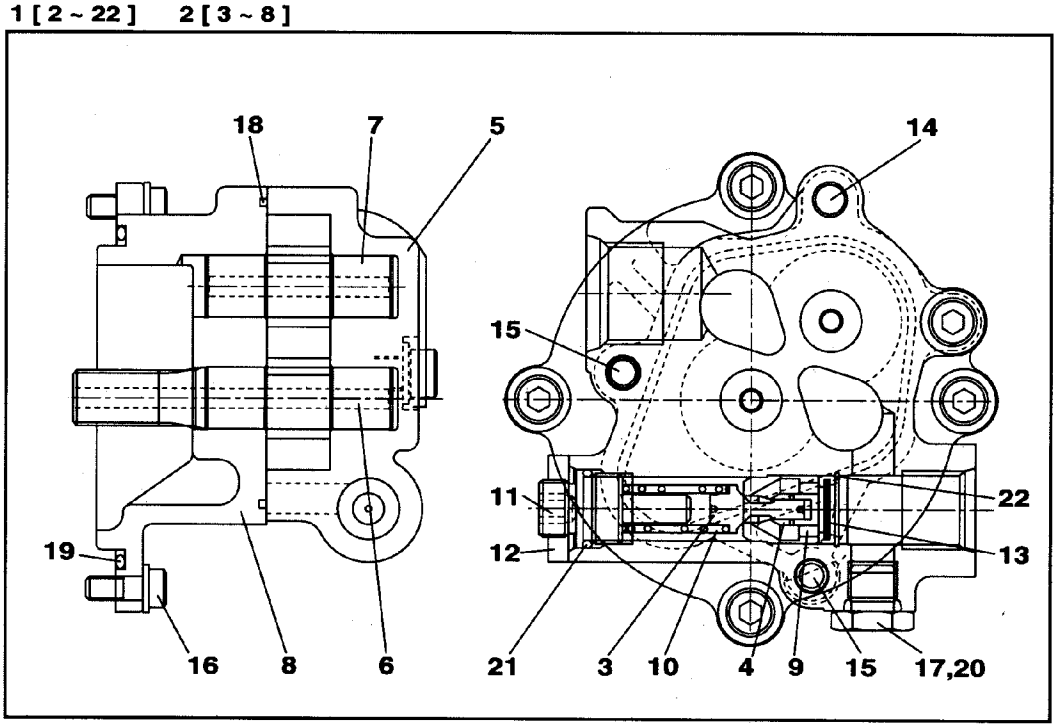

23 [24 ~ 41]

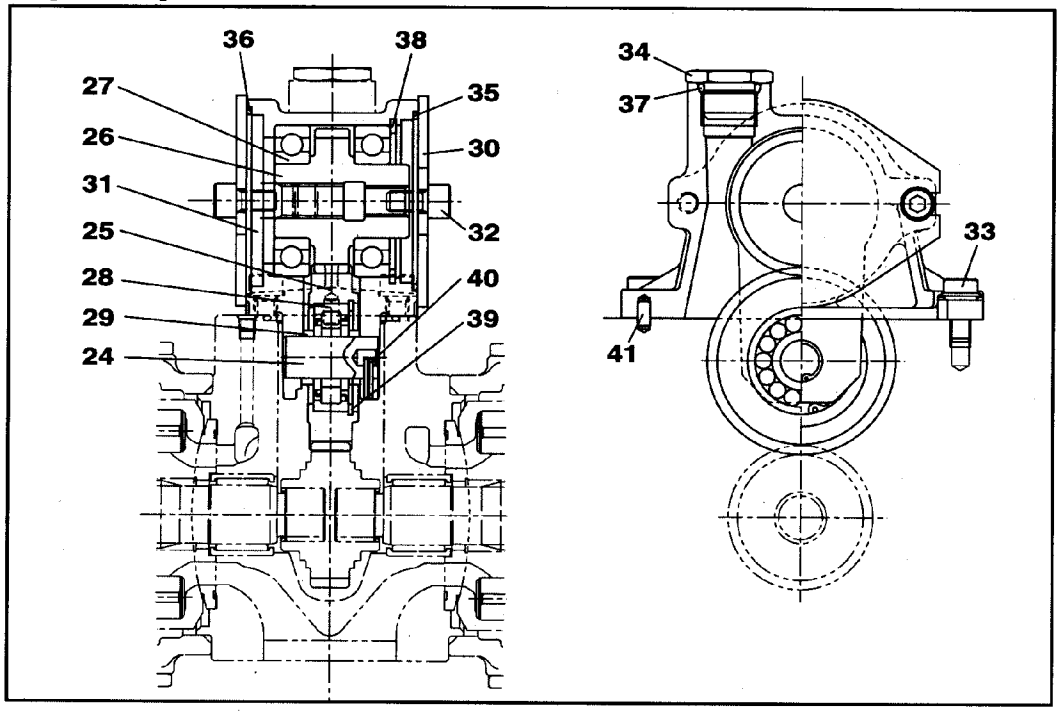

KRJ15970

https://truckmanualshub.com/

PUMP;HYD	ﾎﾟﾝﾌﾟ;ﾕｱｯ (PTO)	ZAJ010L0057 001 4/10	001

符号 ITEM	構成 COMPO	部品番号 PART NO.	部品名	PART NAME	個数 Q'TY	互換 ICA	代替部品 REPLACEABLE PART	備考 MEMO
68	2	LE013420	O-ﾘﾝｸﾞ P16	O-RING	1			
69	2A	-------	ﾊﾞﾙﾌﾞ ﾌﾟﾛﾎﾟ	VALVE;SPL	1			
70	3	-------	ｽﾌﾟｰﾙ;ﾊﾞﾙﾌﾞ	SPOOL;VALVE	1			
71	3	-------	ｽﾘｰﾌﾞ	SLEEVE	1			
72	3	-------	ｽﾌﾟﾘﾝｸﾞ;ｱｯｼｭｸ	SPRING;COMPRESSION	1			
73	3	-------	ﾘﾝｸﾞ C	RING	1			
74	3	-------	ｼｰﾄ;ｽﾌﾟﾘﾝｸﾞ	SEAT;SPRING	1			
75	3	-------	ｵﾘﾌｨｽ	ORIFICE	1			
76	3	LBQ6013	O-ﾘﾝｸﾞ	O-RING	1			
77	3	LBQ6014	O-ﾘﾝｸﾞ	O-RING	1			
78	3	LBQ6015	O-ﾘﾝｸﾞ AS568-015-HS9	O-RING	1			
79	3	LL00055	ｿﾚﾉｲﾄﾞ	SOLENOID	1			
80	3	-------	ﾒｲﾊﾞﾝ;ｼﾔﾒｲ	NAMEPLATE;CO.	1			
81	1A	LNP0180	ﾋﾟﾝ ﾁﾙﾄ S/A	PIN;SPL	2			
82	2	-------	ﾋﾟﾝ ﾃﾝｼﾔ	PIN;SPL	1			
83	2	-------	ﾋﾟﾝ ﾄｸｼｭ	PIN;SPL	1			
84	1	LJP0038	ｼﾔﾌﾄ;ﾄﾞﾗｲﾌﾞ (F)	SHAFT;DRIVE	1			
85	1	LJP0039	ｼﾔﾌﾄ;ﾄﾞﾗｲﾌﾞ (R)	SHAFT;DRIVE	1			
86	1	LB00535	ｶｯﾌﾟﾘﾝｸﾞ;ｼﾞｸ ｷﾞﾔ ﾂｷ	COUPLING;SHAFT	1			
87	1	TB00026	ﾍﾞｱﾘﾝｸﾞ ;ﾛｰﾗ	BEARING;ROLLING	2			
88	1	TB00082	BRG;ﾆｰﾄﾞﾙ	BRG;NEEDLE	2			
89	1	LMP0147	ｽﾍﾟｰｻ	SPACER	4			
90	1	TR00047	ﾌﾟﾚｰﾄ ;ｵｻｴ	PLATE;SPL	2			
91	1	LB00502	ﾌﾞｼｭ ｷｭｳﾒﾝ	BUSH;SPL	2			
92	1	LSP0109	ｽﾌﾟﾘﾝｸﾞ	SPRING;SPL	18			
93	1	LMP0208	ﾌﾟﾚｰﾄ;ｼｭｰ	PLATE;SHOE	2			
94	1	TPP0080	ｻﾎﾟｰﾄ ｼﾔﾊﾞﾝ 29238008	BAR	2			
95	1	LZP0176	ｶﾊﾞｰ;ｼｰﾙ (F)	COVER;SEAL	1			
96	1	LJ014520	ﾎﾟﾝﾌﾟ ﾄｸｼｭ	PUMP;SPL	2			
97	1	TJ00067	ﾌﾞﾛｯｸ;ﾊﾞﾙﾌﾞ	BLOCK;VALVE	1			
98	1	LA00527	ﾛｯｶｸｱﾅB	BOLT;HEX SOC HD	8			
99	1	108R008Y020N	ﾛｯｶｸｱﾅB M 8X 20	BOLT;HEX SOC HD	4			
100	1	LLP0041	ﾌﾟﾗｸﾞ	PLUG	2			
101	1	TLM0023	ﾌﾟﾗｸﾞ VP 0VP38	PLUG	2			
102	1	LLM0028	ﾌﾟﾗｸﾞ	PLUG	4			
103	1	LK00003	ﾌﾟﾗｸﾞ	PLUG	27			
104	1	TJ00066	ﾋﾟｽﾄﾝ ;ｻｰﾎﾞ	PISTON	2			
105	1	TG00286	ｽﾄｯﾊﾟ	STOPPER	2			
106	1	LMP0213	ｽﾄｯﾊﾟ (S)	STOPPER	2			
107	1	LE01176	O-ﾘﾝｸﾞ ﾌﾂｿ G35	O-RING	2			
108	1	LE013510	O-ﾘﾝｸﾞ G95	O-RING	2			
109	1	LE013500	O-ﾘﾝｸﾞ G145	O-RING	4			
110	1	LE013470	O-ﾘﾝｸﾞ P8	O-RING	16			
111	1	LE013410	O-ﾘﾝｸﾞ P11	O-RING	6			
112	1	LE013490	O-ﾘﾝｸﾞ P14	O-RING	2			
113	1	LE013440	O-ﾘﾝｸﾞ P24	O-RING	4			
114	1	LE01177	O-ﾘﾝｸﾞ ﾌﾂｿ P18	O-RING	2			
115	1	LE01178	ｼｰﾙ;ｵｲﾙ	SEAL;OIL	1			
116	1	LBB0182	ﾘﾝｸﾞ;ﾊﾞｯｸｱｯﾌﾟ	RING;BACK-UP	2			
117	1	LBB0353	ﾘﾝｸﾞ;ﾊﾞｯｸｱｯﾌﾟ	RING;BACK-UP	2			
118	1	164R016VR	ﾄﾒN M16	NUT;JAM	2			
119	1	164R020VR	ﾄﾒN M20	NUT;JAM	2			
120	1	370A0400Z	ｼﾞｸﾄﾒﾜ 40	RING;SNAP	2			
121	1	LMP0108	ﾋﾟﾝ ﾌﾟﾚｰﾄ	PIN;SPL	2			
122	1	338W060Z014B	SPﾋﾟﾝ 6 X 14	PIN;SPRING	4			
123	1	126R010SR	ｱｲB M 10	EYEBOLT	2			
124	1	LUP0189	ｽｸﾘｭｰ ｾｯﾄ	SCREW	2			
125	1	LUP0190	ｽｸﾘｭｰ ｾｯﾄ	SCREW	2			
126	1	TM00046	ﾒｲﾊﾞﾝ	NAMEPLATE;SPL	1			
127	1	LA00027	ﾘﾍﾞｯﾄ ﾄｸｼｭ	RIVET;SPL	2			
128	1A	LL001100	ﾚｷﾞｭﾚｰﾀ	REGULATOR	1			
129	2	108R008Z050N	ﾛｯｶｸｱﾅB	BOLT;HEX SOC HD	2			
130	2	108R008Z070N	ﾛｯｶｸｱﾅB	BOLT;HEX SOC HD	2			
131	2	108R006Z040R	ﾛｯｶｸｱﾅB JIS B 1176 M	BOLT;HEX SOC HD	4			
132	2	108R006Z020N	ﾛｯｶｸｱﾅB	BOLT;HEX SOC HD	8			
133	2	LLP0041	ﾌﾟﾗｸﾞ	PLUG	1			
134	2	TLM0023	ﾌﾟﾗｸﾞ VP 0VP38	PLUG	1			
135	2	LK00003	ﾌﾟﾗｸﾞ	PLUG	6			

https://truckmanualshub.com/

62 [63 ~ 80] 69[70 ~ 80]

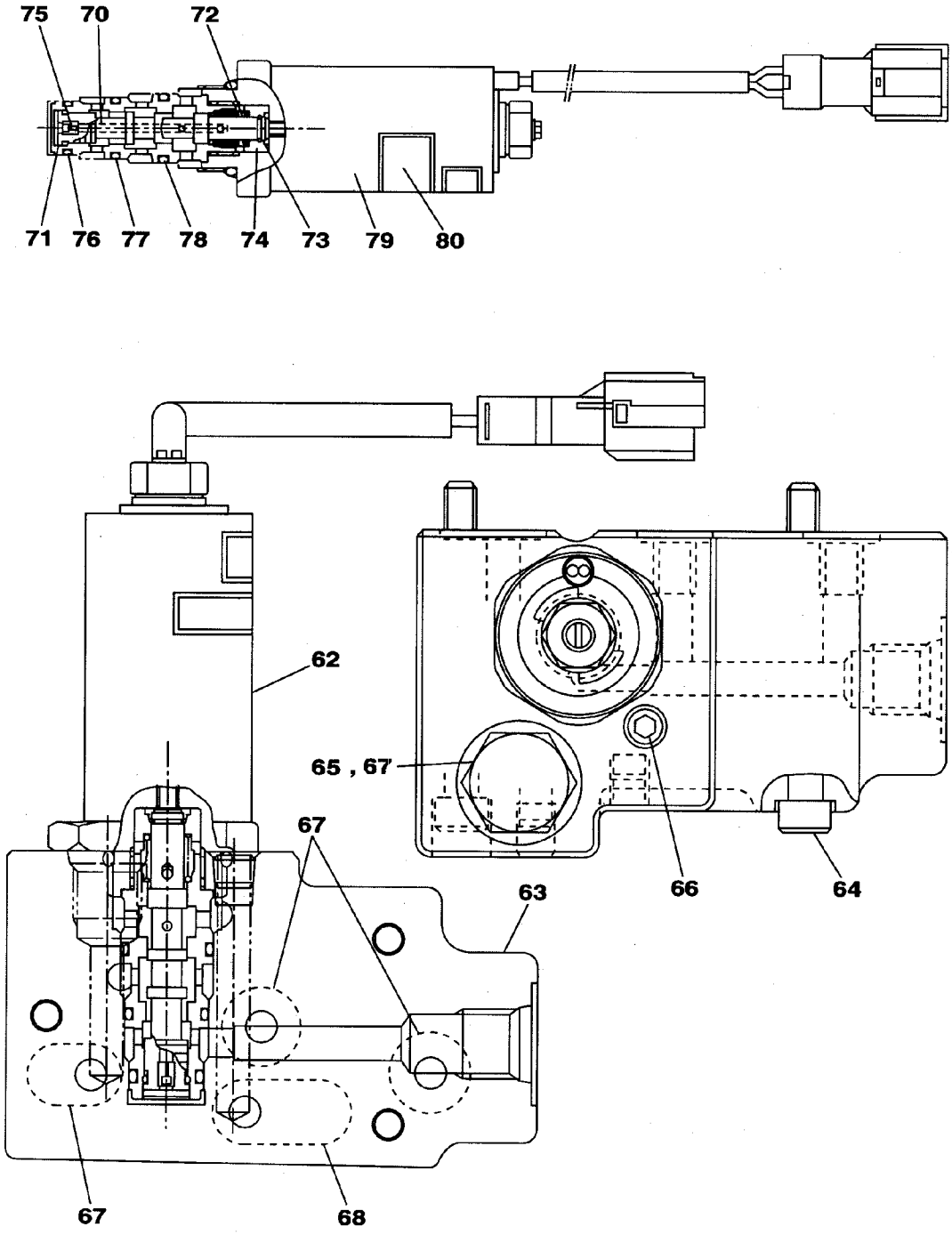

KRJ15970

https://truckmanualshub.com/

符号 ITEM	構成 COMPO	部品番号 PART NO.	部品名	PART NAME	個数 Q'TY	互換 ICA	代替部品 REPLACEABLE PART	備考 MEMO
136	2A	LJ014480	ﾊﾞﾙﾌﾞ;ｼｬｯﾄﾙ	VALVE;SHUTTLE	1			
137	3	-------	ﾎﾞｰﾙ	BALL	1			
138	3	-------	ｼｰﾄ	SEAT	1			
139	3	-------	ｼｰﾄ	SEAT	1			
140	2	-------	ｹｰｽ	CASE	1			
141	2	-------	ﾚﾊﾞｰ ﾌｲｰﾄﾞﾊﾞｯｸ	LEVER	1			
142	2	-------	ﾚﾊﾞｰ	LEVER	1			
143	2	-------	ﾚﾊﾞｰ	LEVER	1			
144	2	-------	ﾌﾟﾗｸﾞ	PLUG	1			
145	2	-------	ﾌﾟﾗｸﾞ	PLUG	1			
146	2	-------	ﾋﾟｽﾄﾝ ｺﾝﾍﾟﾝｾｰﾀ	PISTON	1			
147	2	-------	ｹｰｽ ﾄｸｼｭ	CASE;SPL	1			
148	2	-------	ﾛｯﾄﾞ ﾄｸｼｭ	ROD;SPL	1			
149	2	-------	ｼｰﾄ;ｽﾌﾟﾘﾝｸﾞ	SEAT;SPRING	1			
150	2	-------	ｽﾌﾟﾘﾝｸﾞ ;ｱｳﾀｰ	SPRING;SPL	1			
151	2	-------	ｽﾌﾟﾘﾝｸﾞ;ｱｯｼｭｸ	SPRING;COMPRESSION	1			
152	2	-------	ｼｰﾄ;ｽﾌﾟﾘﾝｸﾞ	SEAT;SPRING	1			
153	2	-------	ﾈｼﾞｽｸﾘｭｰ ﾄｸｼｭ	THREDED SCREW;SPL	1			
154	2	-------	ｶﾊﾞｰ	COVER	1			
155	2	-------	ﾅｯﾄ ﾄｸｼｭ 2953801695	NUT;SPL	1			
156	2	-------	ｽﾘｰﾌﾞ	SLEEVE	1			
157	2	-------	ｶﾊﾞｰ ﾄｸｼｭ	COVER;SPL	1			
158	2	-------	ﾋﾟｽﾄﾝ	PISTON	1			
159	2	-------	ｼｰﾄ;ｽﾌﾟﾘﾝｸﾞ	SEAT;SPRING	1			
160	2	-------	ﾋﾟﾝ ﾁｮｳｾｲ	PIN;SPL	1			
161	2	-------	ｽﾌﾟﾘﾝｸﾞ ﾄｸｼｭ	SPRING;SPL	1			
162	2	-------	ｽﾘｰﾌﾞ	SLEEVE	1			
163	2	-------	ｽﾌﾟｰﾙ	SPOOL	1			
164	2	-------	ｼｰﾄ;ｽﾌﾟﾘﾝｸﾞ	SEAT;SPRING	1			
165	2	-------	ｽﾌﾟﾘﾝｸﾞ ﾄｸｼｭ	SPRING;SPL	1			
166	2	-------	ｽﾌﾟﾘﾝｸﾞ ﾄｸｼｭ	SPRING;SPL	1			
167	2	-------	ｶﾊﾞｰ ﾄｸｼｭ	COVER;SPL	1			
168	2	LE013390	O-ﾘﾝｸﾞ G75	O-RING	1			
169	2	LE013460	O-ﾘﾝｸﾞ P6	O-RING	3			
170	2	LE013470	O-ﾘﾝｸﾞ P8	O-RING	9			
171	2	LE013400	O-ﾘﾝｸﾞ P10	O-RING	1			
172	2	LE013490	O-ﾘﾝｸﾞ P14	O-RING	1			
173	2	LE01177	O-ﾘﾝｸﾞ ﾌﾂｿ P18	O-RING	1			
174	2	LE00608	O-ﾘﾝｸﾞ	O-RING	1			
175	2	LE013420	O-ﾘﾝｸﾞ P16	O-RING	1			
176	2	LE013550	O-ﾘﾝｸﾞ	O-RING	4			
177	2	LE013380	O-ﾘﾝｸﾞ G25	O-RING	1			
178	2	LE013520	O-ﾘﾝｸﾞ P12.5	O-RING	1			
179	2	LE013540	O-ﾘﾝｸﾞ P9	O-RING	1			
180	2	LE013410	O-ﾘﾝｸﾞ P11	O-RING	3			
181	2	LE013450	O-ﾘﾝｸﾞ P26	O-RING	1			
182	2	LE01176	O-ﾘﾝｸﾞ ﾌﾂｿ G35	O-RING	1			
183	2	LA00065	ﾄﾒN M8X1	NUT;JAM	1			
184	2	LA010640	ﾄﾒN	NUT;JAM	1			
185	2	370A0100Z	ｼﾞｸﾄﾒﾜ 10	RING;SNAP	1			
186	2	-------	ｼﾞｸﾄﾒﾜ	RING;SNAP	1			
187	2	380A0150Z	ｱﾅﾄﾒﾜ 15	RING;SNAP	2			
188	2	-------	ﾋﾟﾝ ﾄｸｼｭ	PIN;SPL	1			
189	2	-------	ﾋﾟﾝ ﾄｸｼｭ	PIN;SPL	2			
190	2	-------	ﾋﾟﾝ	PIN;SPL	2			
191	2	-------	ﾋﾟﾝ ﾄｸｼｭ	PIN;SPL	1			
192	2	-------	ﾋﾟﾝ	PIN;SPL	1			
193	2	-------	ﾋﾟﾝ ﾄｸｼｭ	PIN;SPL	1			
194	2	LA00759	ﾎﾞﾙﾄ ﾛｯｶｸｱﾅﾂｷ	BOLT;SPL	1			
195	1A	LL001090	ﾚｷﾞｭﾚｰﾀ	REGULATOR	1			
196	2	108R008Z050N	ﾛｯｶｸｱﾅB	BOLT;HEX SOC HD	2			
197	2	108R008Z070N	ﾛｯｶｸｱﾅB	BOLT;HEX SOC HD	2			
198	2	LA010920	ﾛｯｶｸｱﾅB M5-12	BOLT;HEX SOC HD	2			
199	2	108R006Z040R	ﾛｯｶｸｱﾅB JIS B 1176 M	BOLT;HEX SOC HD	4			
200	2	108R006Z020N	ﾛｯｶｸｱﾅB	BOLT;HEX SOC HD	8			
201	2	LLP0041	ﾌﾟﾗｸﾞ	PLUG	1			
202	2	TLM0023	ﾌﾟﾗｸﾞ VP 0VP38	PLUG	1			
203	2	LK00003	ﾌﾟﾗｸﾞ	PLUG	12			

https://truckmanualshub.com/

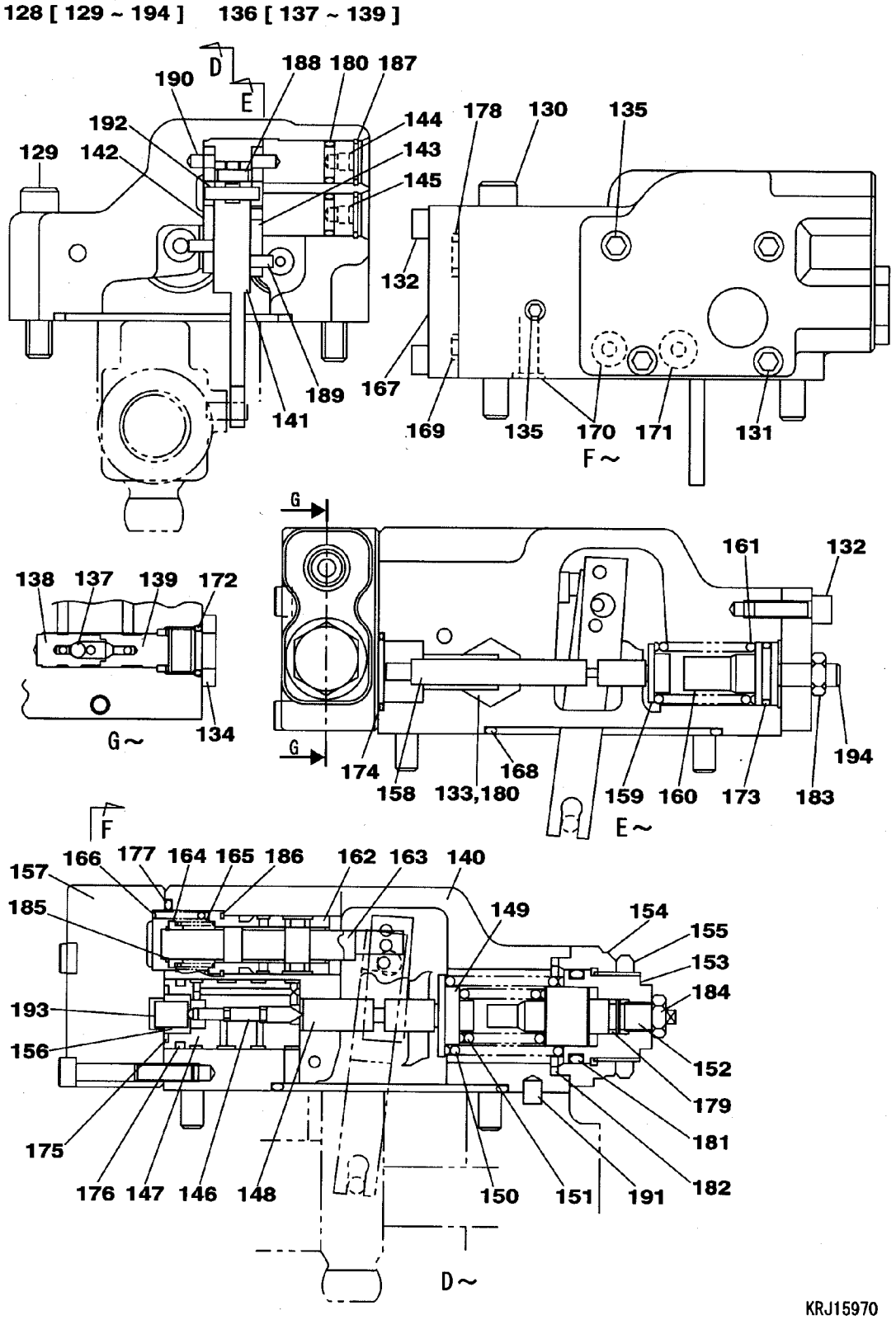

https://truckmanualshub.com/

PUMP;HYD	ﾎﾟﾝﾌﾟ;ﾕｱｯ (PTO)	ZAJ010L0057 001 8/10	001

符号 ITEM	構成 COMPO	部品番号 PART NO.	部品名	PART NAME	個数 Q'TY	互換 ICA	代替部品 REPLACEABLE PART	備考 MEMO
204	2A	LJ014480	ﾊﾞﾙﾌﾞ;ｼｬｯﾄﾙ	VALVE;SHUTTLE	1			
205	3	-------	ﾎﾞｰﾙ	BALL	1			
206	3	-------	ｼｰﾄ	SEAT	1			
207	3	-------	ｼｰﾄ	SEAT	1			
208	2	-------	ｹｰｽ	CASE	1			
209	2	-------	ﾚﾊﾞｰ ﾌｲｰﾄﾞﾊﾞｯｸ	LEVER	1			
210	2	-------	ﾚﾊﾞｰ	LEVER	1			
211	2	-------	ﾚﾊﾞｰ	LEVER	1			
212	2	-------	ﾌﾟﾗｸﾞ	PLUG	1			
213	2	-------	ﾌﾟﾗｸﾞ	PLUG	1			
214	2	-------	ﾋﾟｽﾄﾝ ｺﾝﾍﾟﾝｾｰﾀ	PISTON	1			
215	2	-------	ｹｰｽ ﾄｸｼｭ	CASE;SPL	1			
216	2	-------	ﾛｯﾄﾞ ﾄｸｼｭ	ROD;SPL	1			
217	2	-------	ｼｰﾄ;ｽﾌﾟﾘﾝｸﾞ	SEAT;SPRING	1			
218	2	-------	ｽﾌﾟﾘﾝｸﾞ ;ｱｳﾀｰ	SPRING;SPL	1			
219	2	-------	ｽﾌﾟﾘﾝｸﾞ;ｱｯｼｭｸ	SPRING;COMPRESSION	1			
220	2	-------	ｼｰﾄ;ｽﾌﾟﾘﾝｸﾞ	SEAT;SPRING	1			
221	2	-------	ﾈｼﾞｽｸﾘｭｰ ﾄｸｼｭ	THREDED SCREW;SPL	1			
222	2	-------	ｶﾊﾞｰ	COVER	1			
223	2	-------	ﾅｯﾄ ﾄｸｼｭ 2953801695	NUT;SPL	1			
224	2	-------	ｽﾘｰﾌﾞ	SLEEVE	1			
225	2	-------	ｶﾊﾞｰ ﾄｸｼｭ	COVER;SPL	1			
226	2	-------	ﾋﾟｽﾄﾝ	PISTON	1			
227	2	-------	ｼｰﾄ;ｽﾌﾟﾘﾝｸﾞ	SEAT;SPRING	1			
228	2	-------	ﾋﾟﾝ ﾁｮｳｾｲ	PIN;SPL	1			
229	2	-------	ｽﾌﾟﾘﾝｸﾞ ﾄｸｼｭ	SPRING;SPL	1			
230	2	-------	ｽﾘｰﾌﾞ	SLEEVE	1			
231	2	-------	ｽﾌﾟｰﾙ	SPOOL	1			
232	2	-------	ｼｰﾄ;ｽﾌﾟﾘﾝｸﾞ	SEAT;SPRING	1			
233	2	-------	ｽﾌﾟﾘﾝｸﾞ ﾄｸｼｭ	SPRING;SPL	1			
234	2	-------	ｽﾌﾟﾘﾝｸﾞ ﾄｸｼｭ	SPRING;SPL	1			
235	2	-------	ｶﾊﾞｰ ﾄｸｼｭ	COVER;SPL	1			
236	2	LE013390	O-ﾘﾝｸﾞ G75	O-RING	1			
237	2	LE013460	O-ﾘﾝｸﾞ P6	O-RING	3			
238	2	LE013470	O-ﾘﾝｸﾞ P8	O-RING	9			
239	2	LE013400	O-ﾘﾝｸﾞ P10	O-RING	1			
240	2	LE013490	O-ﾘﾝｸﾞ P14	O-RING	1			
241	2	LE01177	O-ﾘﾝｸﾞ ﾌﾂｿ P18	O-RING	1			
242	2	LE00608	O-ﾘﾝｸﾞ	O-RING	1			
243	2	LE013420	O-ﾘﾝｸﾞ P16	O-RING	1			
244	2	LE013550	O-ﾘﾝｸﾞ	O-RING	4			
245	2	LE013380	O-ﾘﾝｸﾞ G25	O-RING	1			
246	2	LE013520	O-ﾘﾝｸﾞ P12.5	O-RING	1			
247	2	LE013540	O-ﾘﾝｸﾞ P9	O-RING	1			
248	2	LE013410	O-ﾘﾝｸﾞ P11	O-RING	3			
249	2	LE013450	O-ﾘﾝｸﾞ P26	O-RING	1			
250	2	LE01176	O-ﾘﾝｸﾞ ﾌﾂｿ G35	O-RING	1			
251	2	LA00065	ﾄﾒN M8X1	NUT;JAM	1			
252	2	LA010640	ﾄﾒN	NUT;JAM	1			
253	2	370A0100Z	ｼﾞｸﾄﾒﾜ 10	RING;SNAP	1			
254	2	-------	ｼﾞｸﾄﾒﾜ	RING;SNAP	1			
255	2	380A0150Z	ｱﾅﾄﾒﾜ 15	RING;SNAP	2			
256	2	-------	ﾋﾟﾝ ﾄｸｼｭ	PIN;SPL	1			
257	2	-------	ﾋﾟﾝ ﾄｸｼｭ	PIN;SPL	2			
258	2	-------	ﾋﾟﾝ	PIN;SPL	2			
259	2	-------	ﾋﾟﾝ ﾄｸｼｭ	PIN;SPL	1			
260	2	-------	ﾋﾟﾝ	PIN;SPL	1			
261	2	-------	ﾋﾟﾝ ﾄｸｼｭ	PIN;SPL	1			
262	2	LA00759	ﾎﾞﾙﾄ ﾛｯｶｸｱﾅﾂｷ	BOLT;SPL	1			
263	2A	-------	ﾊﾞﾙﾌﾞ ﾌﾟﾛﾎﾟ	VALVE;SPL	1			
264	3	-------	ｽﾌﾟｰﾙ	SPOOL	1			
265	3	-------	ｽﾘｰﾌﾞ	SLEEVE	1			
266	3	-------	ｽﾌﾟﾘﾝｸﾞ ﾄｸｼｭ	SPRING;SPL	1			
267	3	-------	ﾘﾝｸﾞ ﾄｸｼｭ	RING;SPL	1			
268	3	-------	ｵﾘﾌｲｽ	ORIFICE	1			
269	3	LBQ6013	O-ﾘﾝｸﾞ	O-RING	1			
270	3	LBQ6014	O-ﾘﾝｸﾞ	O-RING	1			
271	3	LBQ6015	O-ﾘﾝｸﾞ AS568-015-HS9	O-RING	1			

https://truckmanualshub.com/

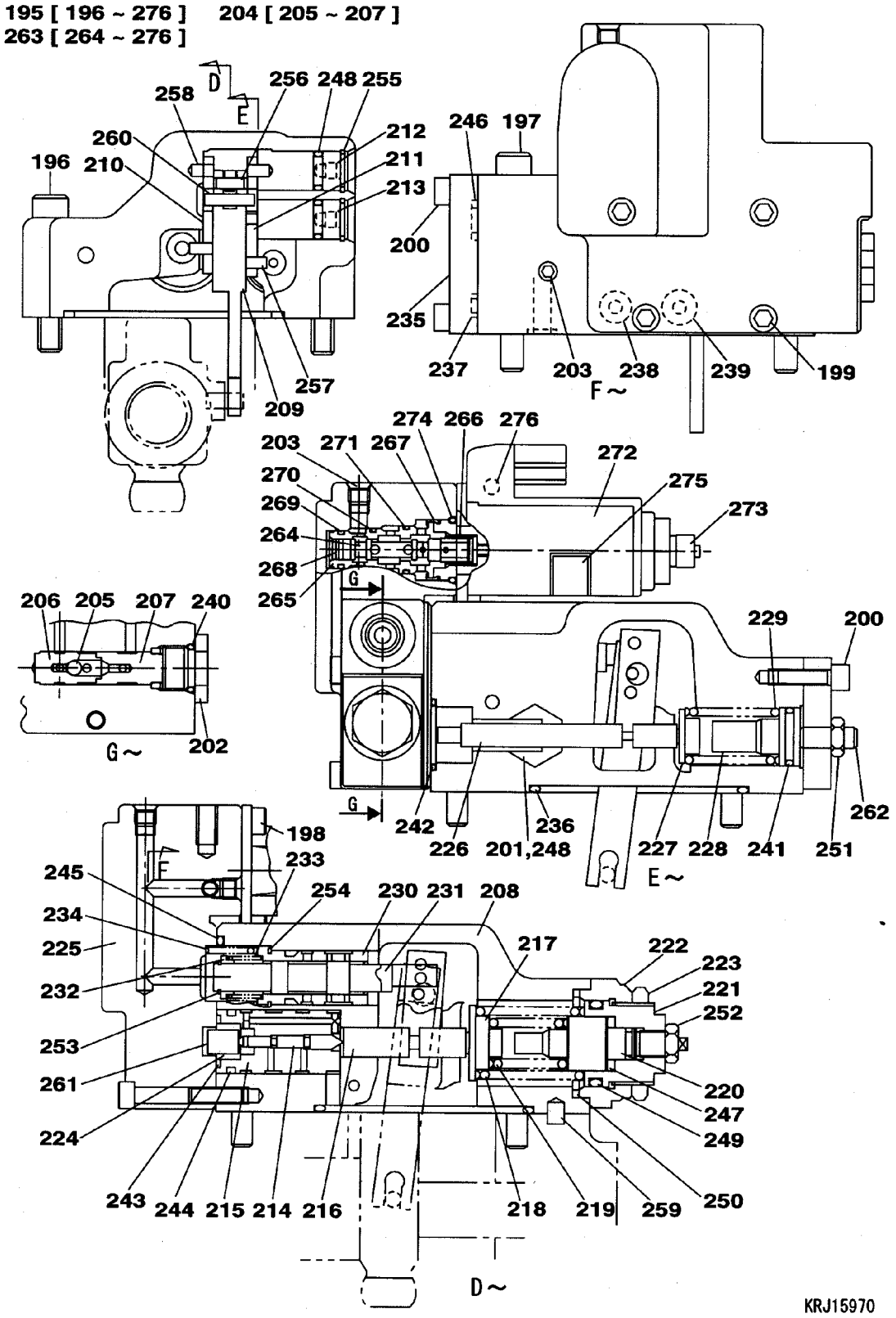

https://truckmanualshub.com/

PUMP;HYD	ﾎﾟﾝﾌﾟ;ﾕｱﾂ (PTO)	ZAJ010L0057 001 10/10	001

符号 ITEM	構成 COMPO	部品番号 PART NO.	部品名	PART NAME	個数 Q'TY	互換 ICA	代替部品 REPLACEABLE PART	備考 MEMO
272	3	-------	ｿﾚﾉｲﾄﾞ	SOLENOID	1			
273	3	LA010930	ﾅｯﾄ	NUT;SPL	1			
274	3	LBQ0202	O-ﾘﾝｸﾞ JISB2401 1BP2	O-RING	1			
275	3	-------	ﾒｲﾊﾞﾝ ﾄｸｼｭ	NAMEPLATE;SPL	1			
276	3	-------	ﾒｲﾊﾞﾝ ﾄｸｼｭ	NAMEPLATE;SPL	1			

https://truckmanualshub.com/

PUMP;GEAR	ﾎﾟﾝﾌﾟ;ｷﾞﾔ (ﾀﾞｲ2ﾖﾋﾞﾖｳ)	ZAJ012L0006 000 1/2	000

2 [3 , 4]
8 [9 ~ 12]

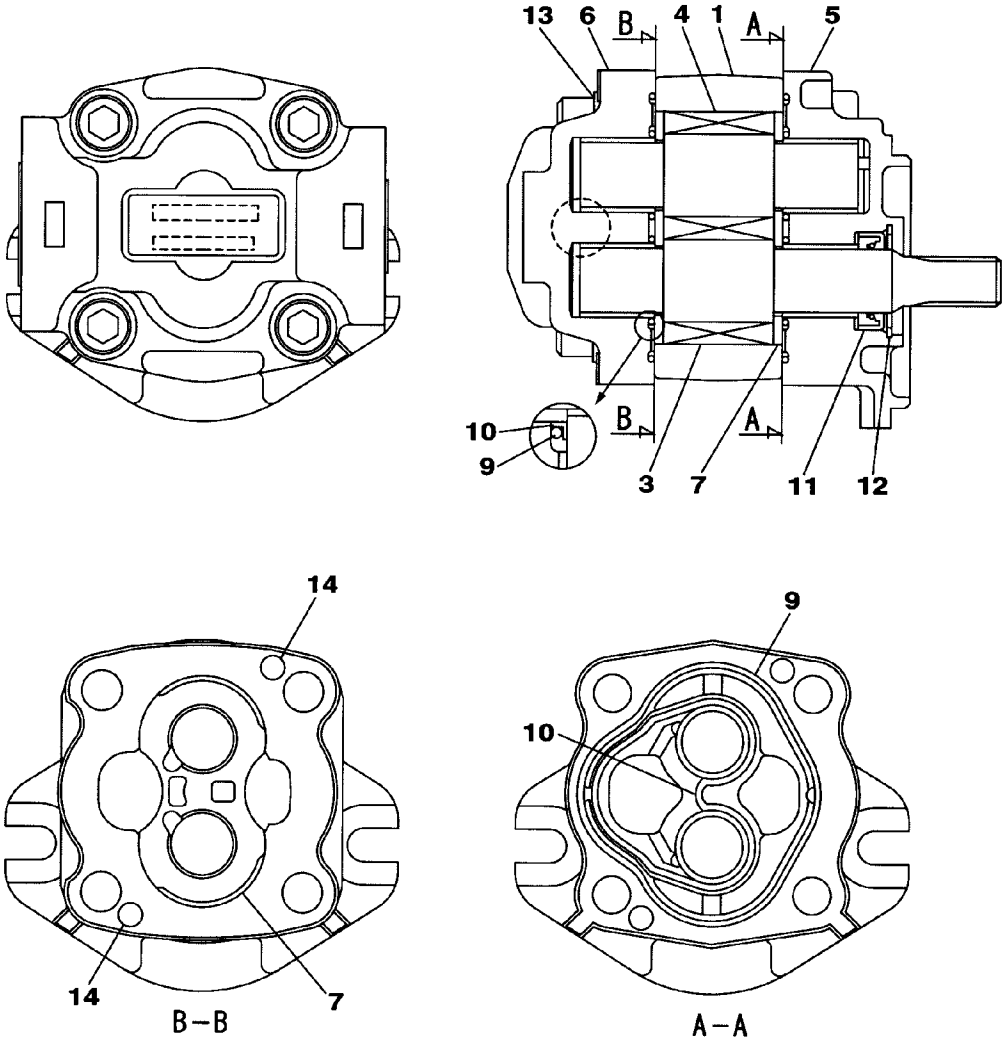

KRJ10300

https://truckmanualshub.com/

PUMP;GEAR	ﾎﾟﾝﾌﾟ;ｷﾞﾔ (ﾀﾞｲ2ﾖﾋﾞﾖｳ)	ZAJ012L0006 000 2/2	000

符号 ITEM	構成 COMPO	部品番号 PART NO.	部品名	PART NAME	個数 Q'TY	互換 ICA	代替部品 REPLACEABLE PART	備考 MEMO
		KRJ10300			1			
1	1	-------	ﾌﾟﾚｰﾄ ｷﾞﾔ	PLATE;SPL	1			
2	1A	LC002970	ｷﾞﾔ S/A	GEAR;SPL	1			
3	2	-------	ｷﾞﾔ ﾄﾞﾗｲﾌﾞ	GEAR;SPL	1			
4	2	-------	ｷﾞﾔ ﾄﾞﾘﾌﾞﾝ	GEAR;SPL	1			
5	1	LH004940	ﾌﾗﾝｼﾞ ﾄｸｼｭ	FLANGE;SPL	1			
6	1	LW005070	ｶﾊﾞｰ	COVER	1			
7	1	LR015150	ﾌﾟﾚｰﾄ	PLATE	2			
8	1A	LZ008000	ｷｯﾄ;ﾘﾍﾟｱﾊﾟｰﾂ	KIT;REPAIR PART	1			
9	2	LAP0032	ｼｰﾙ ﾌﾟﾚｰﾄ	SEAL;SPL	2			
10	2	LBP0073	ﾘﾝｸﾞ;ﾊﾞｯｸｱｯﾌﾟ ﾄｸｼｭ	RING;BACK-UP	2			
11	2	LAP0033	ｼｰﾙ;ｵｲﾙ	SEAL;OIL	1			
12	2	LMP0257	ﾘﾝｸﾞ ｽﾅｯﾌﾟ	RING;SPL	1			
13	1	LA011070	ﾛｯｶｸｱﾅB	BOLT;HEX SOC HD	4			
14	1	LA011060	ﾋﾟﾝ ﾄｸｼｭ	PIN;SPL	4			

https://truckmanualshub.com/

1 [2～86]　3 [4～51-1]　5 [6～10]　14 [15～21]　22 [23～38]
40 [41 , 42]　53 [54～62]　90 [91～95]　116 [117～121]
127 [10 , 16 , 21 , 29 , 31 , 32 , 37 , 38 , 45 , 50 , 70 , 74 , 75 , 80 , 81]
128 [87 , 125]　129 [2 , 65]　130 [39 , 40 , 48～51-1]　131 [65 , 87～126]
132 [122 , 123]

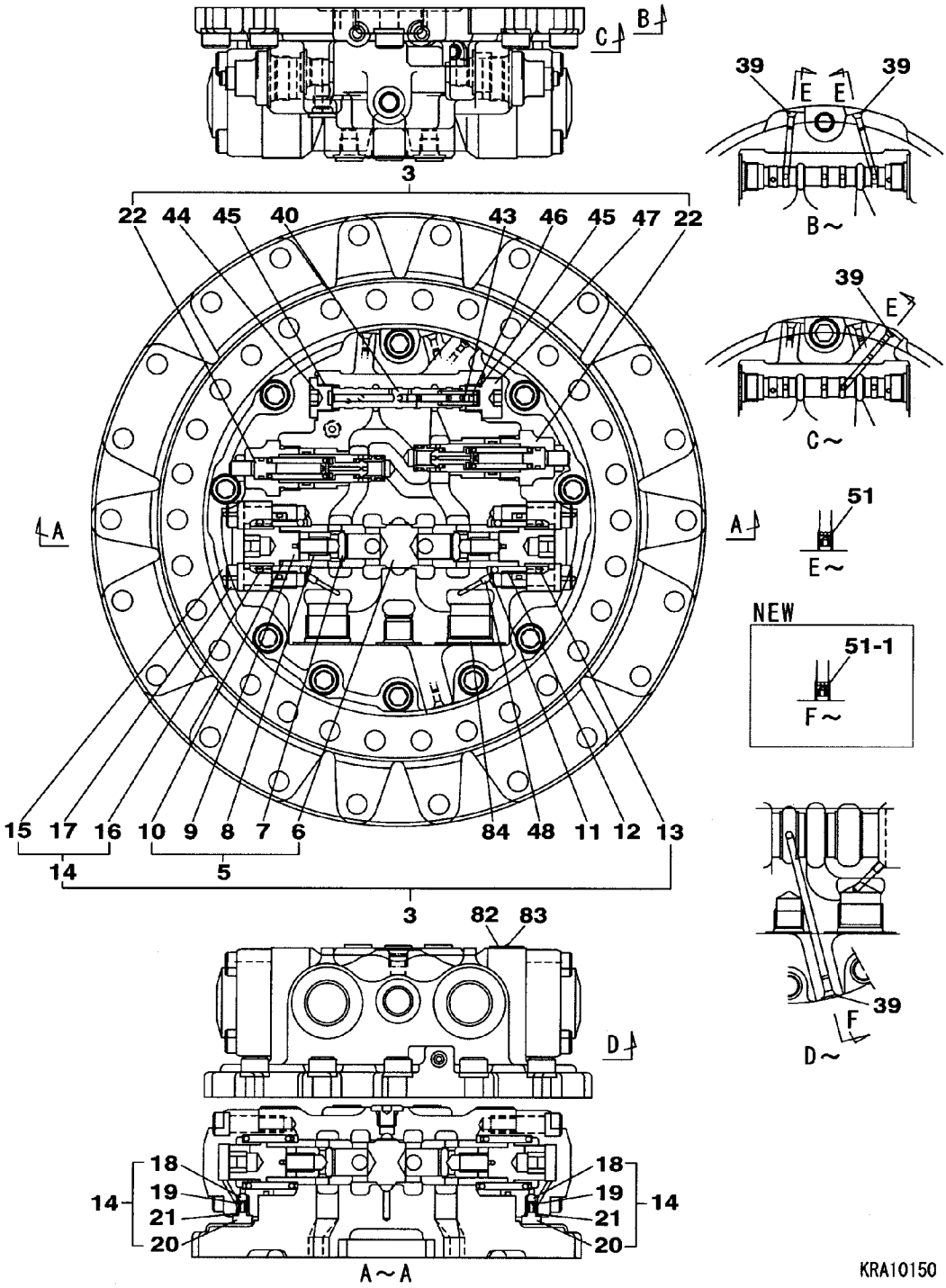

https://truckmanualshub.com/

MOTOR;TRACTION	ﾓｰﾀ;ｿｳｺｳ ﾕﾆｯﾄ	ZAJ121L0030 002 2/6	002

符号 ITEM	構成 COMPO	部品番号 PART NO.	部品名	PART NAME	個数 Q'TY	互換 ICA	代替部品 REPLACEABLE PART	備考 MEMO
		KRA10150			1			
1	1A	-------	ﾓｰﾀ;ﾋﾟｽﾄﾝ S/A	MOTOR;PISTON	1			
2	2	-------	ﾌﾗﾝｼﾞ ﾄｸｼｭ	FLANGE;SPL	1			
3	2A	-------	ﾌﾟﾚｰﾄ ﾍﾞｰｽ S/A	PLATE	1			
4	3	-------	ﾌﾟﾚｰﾄ ﾍﾞｰｽ	PLATE	1			
5	3A	-------	ｽﾌﾟｰﾙ S/A	SPOOL	1			
6	4	-------	ｽﾌﾟｰﾙ	SPOOL	1			
7	4	-------	ﾊﾞﾙﾌﾞ;ﾁｪｯｸ	VALVE;CHECK	2			
8	4	-------	ｽﾌﾟﾘﾝｸﾞ	SPRING;SPL	2			
9	4	-------	ﾌﾟﾗｸﾞ	PLUG	2			
10	4	LBQ0212	O-ﾘﾝｸﾞ JISB2401 1BP2	O-RING	2			
11	3	LSS0023	ｼｰﾄ;ｽﾌﾟﾘﾝｸﾞ	SEAT;SPRING	2			
12	3	LSM0113	ｽﾌﾟﾘﾝｸﾞ	SPRING;SPL	2			
12	3	LG006200	ｽﾌﾟﾘﾝｸﾞ ﾄｸｼｭ	SPRING;SPL	2			
13	3	LSS0024	ｼｰﾄ;ｽﾌﾟﾘﾝｸﾞ	SEAT;SPRING	2			
13	3	LR015850	ｼｰﾄ;ｽﾌﾟﾘﾝｸﾞ	SEAT;SPRING	2			
14	3	TR00587	ｷｬｯﾌﾟ ｱｯｼ	CAP;SPL	2			
14	3A	LR015910	ｷｬｯﾌﾟ S/A	CAP;SPL	2			
15	4	-------	ｷｬｯﾌﾟ	CAP	2			
16	4	LBQ0453	O-ﾘﾝｸﾞ JISB2401 1BG4	O-RING	2			
17	4	108R012Z040N	ﾛｯｶｸﾅﾄB	BOLT;HEX SOC HD	8			
18	4	LPU0073	ﾎﾞｰﾙ ｽﾁｰﾙ	BALL	2			
19	4	LSM3120	ｽﾌﾟﾘﾝｸﾞ ﾄｸｼｭ	SPRING;SPL	2			
20	4	-------	ﾌﾟﾗｸﾞ	PLUG	2			
21	4	LBQ0082	O-ﾘﾝｸﾞ JISB2401 1BP8	O-RING	2			
22	3A	LJ014590	ﾊﾞﾙﾌﾞ;ﾘﾘｰﾌ S/A	VALVE;RELIEF	2			
23	4	-------	ﾊｳｼﾞﾝｸﾞ ﾘﾘｰﾌ	HOUSING;SPL	2			
24	4	-------	ﾎﾟﾍﾟｯﾄ	POPPET	2			
25	4	-------	ﾎﾟﾍﾟｯﾄ ｼｰﾄ	POPPET	2			
26	4	-------	ｼｰﾄ;ｽﾌﾟﾘﾝｸﾞ	SEAT;SPRING	2			
27	4	-------	ｽﾌﾟﾘﾝｸﾞ ﾄｸｼｭ	SPRING;SPL	2			
28	4	-------	ﾌﾟﾗｸﾞ	PLUG	2			
29	4	LBQ6916	O-ﾘﾝｸﾞ	O-RING	2			
30	4	-------	ﾋﾟｽﾄﾝ ﾌﾘｰ	PISTON	2			
31	4	LBQ0212	O-ﾘﾝｸﾞ JISB2401 1BP2	O-RING	2			
32	4	LBB0214	ﾘﾝｸﾞ;ﾊﾞｯｸｱｯﾌﾟ	RING;BACK-UP	4			
33	4	-------	ｶﾞｲﾄﾞ;ｽﾌﾟﾘﾝｸﾞ	GUIDE;SPRING	2			
34	4	LBQ8122	O-ﾘﾝｸﾞ JISB2401 1BP1	O-RING	2			
35	4	-------	ｽｸﾘｭｰ ｾｯﾄ	SCREW	2			
36	4	LUM0168	ﾅｯﾄ	NUT;SPL	2			
37	4	LBQ0152	O-ﾘﾝｸﾞ JISB2401 1BP1	O-RING	2			
38	4	LBB0152	ﾘﾝｸﾞ;ﾊﾞｯｸｱｯﾌﾟ	RING;BACK-UP	4			
39	3	-------	ﾌﾟﾗｸﾞ	PLUG	8			
40	3A	-------	ｽﾌﾟｰﾙ ASSY	SPOOL	1			
41	4	-------	ｽﾌﾟｰﾙ A	SPOOL	1			
42	4	-------	ｽﾌﾟｰﾙ	SPOOL	1			
43	3	LG00343	ｽﾌﾟﾘﾝｸﾞ;ｱｯｼｭｸ	SPRING;COMPRESSION	1			
44	3	LK00329	ﾌﾟﾗｸﾞ	PLUG	1			
45	3	LBQ0182	O-ﾘﾝｸﾞ JISB2401 1BP1	O-RING	2			
46	3	LS00127	ｶﾞｲﾄﾞ;ｽﾌﾟﾘﾝｸﾞ	GUIDE;SPRING	1			
47	3	LK00306	ﾌﾟﾗｸﾞ	PLUG	1			
48	3	-------	ｵﾘﾌｨｽ M5*0.8*5L 2.0	ORIFICE	2			
49	3	LPP0087	ﾌﾟﾗｸﾞ	PLUG	5			
50	3	LBQ0112	O-ﾘﾝｸﾞ JISB2401 1BP1	O-RING	5			
51	3	LPP0041	ｵﾘﾌｨｽ	ORIFICE	4			
51	3	LPP0041	ｵﾘﾌｨｽ	ORIFICE	3			
51-1	3	LPP0042	ｵﾘﾌｨｽ	ORIFICE	1			
52	2	LB00545	ｼｬﾌﾄ	SHAFT	1			
53	2A	LS003330	ﾌﾞﾛｯｸ;ｼﾘﾝﾀﾞ S/A	BLOCK;CYL	1			
54	3	-------	ﾌﾞﾛｯｸ;ｼﾘﾝﾀﾞ	BLOCK;CYL	1			
55	3	-------	ﾋﾟｽﾄﾝ ASSY	PISTON	9			
56	3	-------	ﾘﾃｰﾅ ﾌﾟﾚｰﾄ	RETAINER	1			
57	3	-------	ﾎﾙﾀﾞ ﾘﾃｰﾅ	HOLDER	1			
58	3	LMM0548	ﾘﾝｸﾞ ｽﾅｯﾌﾟ	RING	1			
59	3	LPM0099	ｼｰﾄ;ｽﾌﾟﾘﾝｸﾞ	SEAT;SPRING	1			
60	3	LSM0118	ｽﾌﾟﾘﾝｸﾞ	SPRING;SPL	1			
61	3	LMM0513	ｶﾗｰ	COLLAR	1			
62	3	LMM0363	ﾛｰﾗ ﾆｰﾄﾞﾙ	ROLLER	3			

https://truckmanualshub.com/

1 [2～86]　3 [4～51-1]　5 [6～10]　14 [15～21]　22 [23～38]
40 [41 , 42]　53 [54～62]　90 [91～95]　116 [117～121]
127 [10 , 16 , 21 , 29 , 31 , 32 , 37 , 38 , 45 , 50 , 70 , 74 , 75 , 80 , 81]
128 [87 , 125]　129 [2 , 65]　130 [39 , 40 , 48～51-1]　131 [65 , 87～126]
132 [122 , 123]

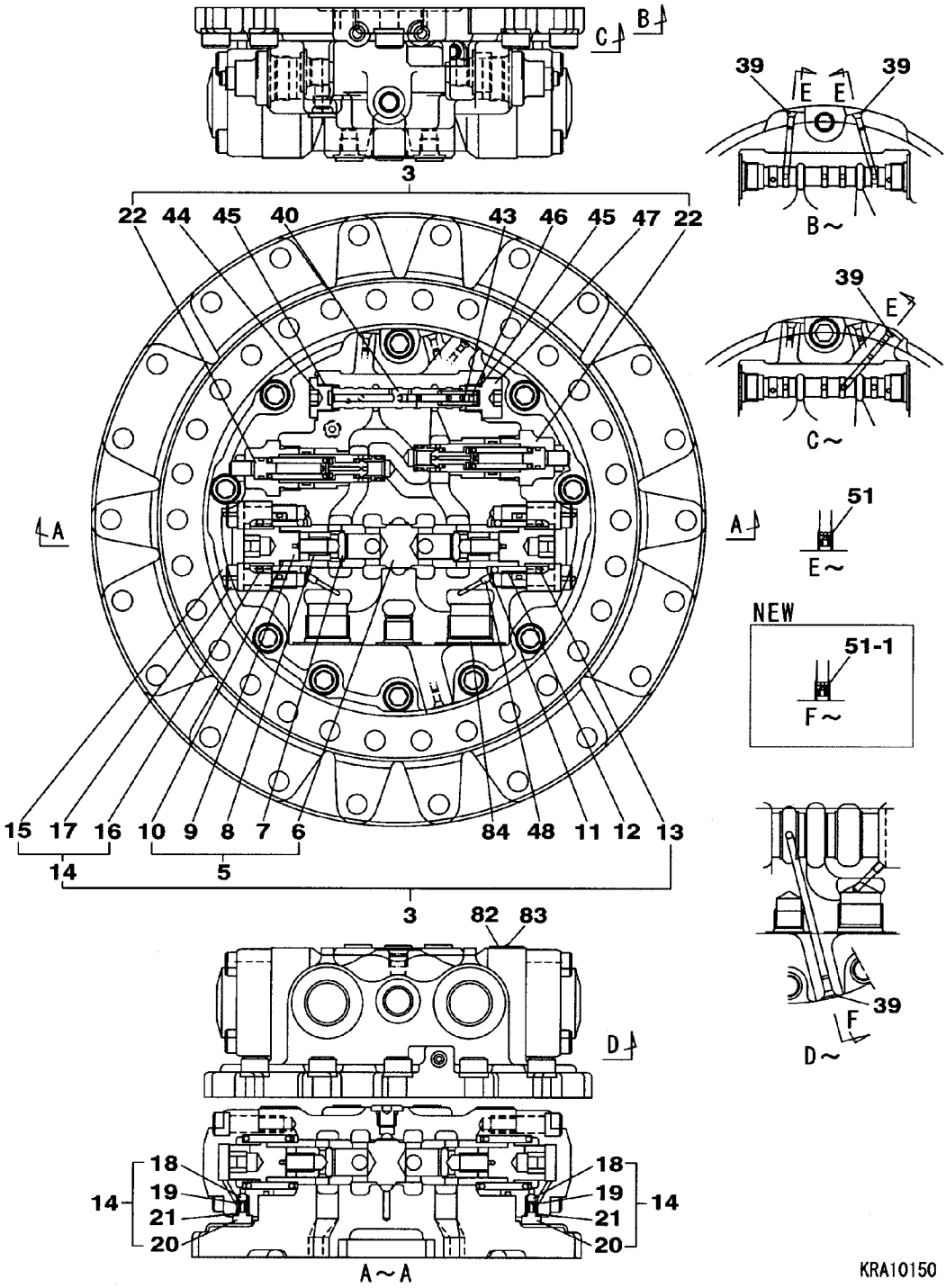

https://truckmanualshub.com/

符号 ITEM	構成 COMPO	部品番号 PART NO.	部品名	PART NAME	個数 Q'TY	互換 ICA	代替部品 REPLACEABLE PART	備考 MEMO
63	2	LR012550	ﾌﾟﾚｰﾄ	PLATE	1			
64	2	LPM0063	ﾎﾞｰﾙ;ｽﾁｰﾙ	STEEL BALL	2			
65	2	-------	ﾋﾟｽﾄﾝ ASSY	PISTON	2			
66	2	LB00546	ﾍﾞｱﾘﾝｸﾞ ﾎﾞｰﾙ	BEARING;ROLLING	1			
67	2	LB00547	ﾍﾞｱﾘﾝｸﾞ ﾎﾞｰﾙ	BEARING;ROLLING	1			
68	2	LA010950	ﾋﾟﾝ	PIN;SPL	1			
69	2	108R014Z035N	ﾛｯｶｸｱﾅB JIS B 1176 M	BOLT;HEX SOC HD	10			
70	2	LE014680	ｼｰﾙ;ｵｲﾙ TCZ50X72X9X1	SEAL;OIL	1			
71	2	LR015020	ﾌﾟﾚｰﾄ ﾃﾞｨｽｸ	PLATE;SPL	3			
72	2	LPM0146	ﾌﾟﾚｰﾄ ﾌﾘｸｼｮﾝ	PLATE;SPL	2			
73	2	LJ014600	ﾋﾟｽﾄﾝ ﾌﾞﾚｰｷ	PISTON	1			
74	2	LBM0123	ﾘﾝｸﾞ D	RING;SPL	1			
75	2	LBM0124	ﾘﾝｸﾞ D	RING	1			
76	2	LSM0092	ｽﾌﾟﾘﾝｸﾞ ﾄｸｼｭ	SPRING;SPL	8			
77	2	LMM0519	ﾋﾟﾝ	PIN;SPL	4			
78	2	LSM0120	ｽﾌﾟﾘﾝｸﾞ	SPRING;SPL	2			
79	2	LR015030	ﾌﾟﾚｰﾄ ﾊﾞﾙﾌﾞ	PLATE	1			
80	2	LBQ0102	O-ﾘﾝｸﾞ JISB2401 1BP1	O-RING	4			
81	2	LBQ6273	O-ﾘﾝｸﾞ	O-RING	1			
82	2	-------	ﾒｲﾊﾞﾝ;ｼﾔﾒｲ	NAMEPLATE;CO.	1			
83	2	-------	ｽｸﾘｭｰ ﾄﾞﾗｲﾌﾞ	SCREW	2			
84	2	-------	ﾌﾟﾗｸﾞ	PLUG	2			
85	2	-------	ﾌﾟﾗｸﾞ	PLUG	1			
86	2	-------	ﾌﾟﾗｸﾞ ;ｼﾂﾋﾟﾝｸﾞ	PLUG	1			
87	1	LE01126	ｼｰﾙ;ﾌﾛｰﾃｲﾝｸﾞ	SEAL;FLOATING	2			
88	1	LB00548	ﾍﾞｱﾘﾝｸﾞ ｱﾝｷﾞｭﾗ	BEARING;ROLLING	2			
89	1	-------	ﾊｳｼﾞﾝｸﾞ	HOUSING;SPL	1			
90	1A	LH00254	ｼﾑ;ﾌﾟﾚｰﾄ KIT	SHIM;PLATE	1			
91	2	-------	ｼﾑ;ﾌﾟﾚｰﾄ T=0.05	SHIM;PLATE	1			
92	2	-------	ｼﾑ;ﾌﾟﾚｰﾄ T=0.1	SHIM;PLATE	1			
93	2	-------	ｼﾑ;ﾌﾟﾚｰﾄ T=0.3	SHIM;PLATE	1			
94	2	-------	ｼﾑ;ﾌﾟﾚｰﾄ T=0.5	SHIM;PLATE	1			
95	2	-------	ｼﾑ;ﾌﾟﾚｰﾄ T=1.0	SHIM;PLATE	1			
96	1	LS003340	ﾎﾙﾀﾞ	HOLDER	1			
97	1	LA00702	ﾜｯｼｬ	WASHER	8			
98	1	LA00703	ﾎﾞﾙﾄ	BOLT;SPL	8			
99	1	LR00583	ﾌﾟﾚｰﾄ;ｽﾗｽﾄ	PLATE;THRUST	4			
100	1	LB00549	ﾚｰｽ;ｲﾝﾅ	RACE;BRG INNER	4			
101	1	LB011790	BRG;ﾆｰﾄﾞﾙ	BRG;NEEDLE	4			
102	1	LC00163	ｷﾞﾔ;ﾌﾟﾗﾈﾀﾘ	GEAR;PLANETARY	4			
103	1	LR015040	ﾌﾟﾚｰﾄ;ｽﾗｽﾄ	PLATE;THRUST	4			
104	1	LA00704	ﾎﾞﾙﾄ ﾄｸｼｭ	BOLT;SPL	4			
105	1	LC002880	ｷﾞﾔ;ｻﾝ	GEAR;SUN	1			
106	1	LA00705	ｼﾞｸﾄﾒﾜ ﾄｸｼｭ	RING;SNAP	1			
107	1	LS003350	ﾎﾙﾀﾞ	HOLDER	1			
108	1	LR00585	ﾌﾟﾚｰﾄ;ｽﾗｽﾄ	PLATE;THRUST	3			
109	1	LB011800	ﾚｰｽ;ｲﾝﾅ	RACE;BRG INNER	3			
110	1	LB011810	BRG;ﾆｰﾄﾞﾙ	BRG;NEEDLE	3			
111	1	LC002890	ｷﾞﾔ;ﾌﾟﾗﾈﾀﾘ	GEAR;PLANETARY	3			
112	1	LR00586	ﾌﾟﾚｰﾄ;ｽﾗｽﾄ	PLATE;THRUST	3			
113	1	LR015050	ﾌﾟﾚｰﾄ;ｽﾗｽﾄ	PLATE;THRUST	1			
114	1	LV00029	ｽｸﾘｭｰ	SCREW	3			
115	1	LC002900	ｷﾞﾔ ﾄﾞﾗｲﾌﾞ	GEAR;SPL	1			
116	1A	LR00588	ﾌﾟﾚｰﾄ;ｽﾗｽﾄ 2.3/2.8/3	PLATE;THRUST	1			
117	2	-------	ﾌﾟﾚｰﾄ;ｽﾗｽﾄ T=3.6	PLATE;THRUST	1			
118	2	-------	ﾌﾟﾚｰﾄ;ｽﾗｽﾄ T=2.3	PLATE;THRUST	1			
119	2	-------	ﾌﾟﾚｰﾄ;ｽﾗｽﾄ T=2.8	PLATE;THRUST	1			
120	2	-------	ﾌﾟﾚｰﾄ;ｽﾗｽﾄ T=3.0	PLATE;THRUST	1			
121	2	-------	ﾌﾟﾚｰﾄ;ｽﾗｽﾄ T=3.2	PLATE;THRUST	1			
122	1	LW00316	ｶﾊﾞｰ	COVER	1			
122	1	-------	ｶﾊﾞｰ	COVER	1			
123	1	108R010Z016N	ﾛｯｶｸｱﾅB JIS B 1176 M	BOLT;HEX SOC HD	16			
123	1	108R010Z020N	ﾛｯｶｸｱﾅB M10X 20	BOLT;HEX SOC HD	16			
124	1	LLM0098	ﾌﾟﾗｸﾞ	PLUG	3			
125	1	LBQ0242	O-ﾘﾝｸﾞ JISB2401 1BP2	O-RING	3			
126	1	LMM0549	ﾋﾟﾝ	PIN;SPL	4			
127	1	LZ007960	KIT;ﾓｰﾀ ｼｰﾙ	KIT;MOTOR SEAL	1			
128	1	LZ006890	KIT;ﾓｰﾀ ｼｰﾙ	KIT;MOTOR SEAL	1			

https://truckmanualshub.com/

1 [2～86]　3 [4～51-1]　5 [6～10]　14 [15～21]　22 [23～38]
40 [41 , 42]　53 [54～62]　90 [91～95]　116 [117～121]
127 [10 , 16 , 21 , 29 , 31 , 32 , 37 , 38 , 45 , 50 , 70 , 74 , 75 , 80 , 81]
128 [87 , 125]　129 [2 , 65]　130 [39 , 40 , 48～51-1]　131 [65 , 87～126]
132 [122 , 123]

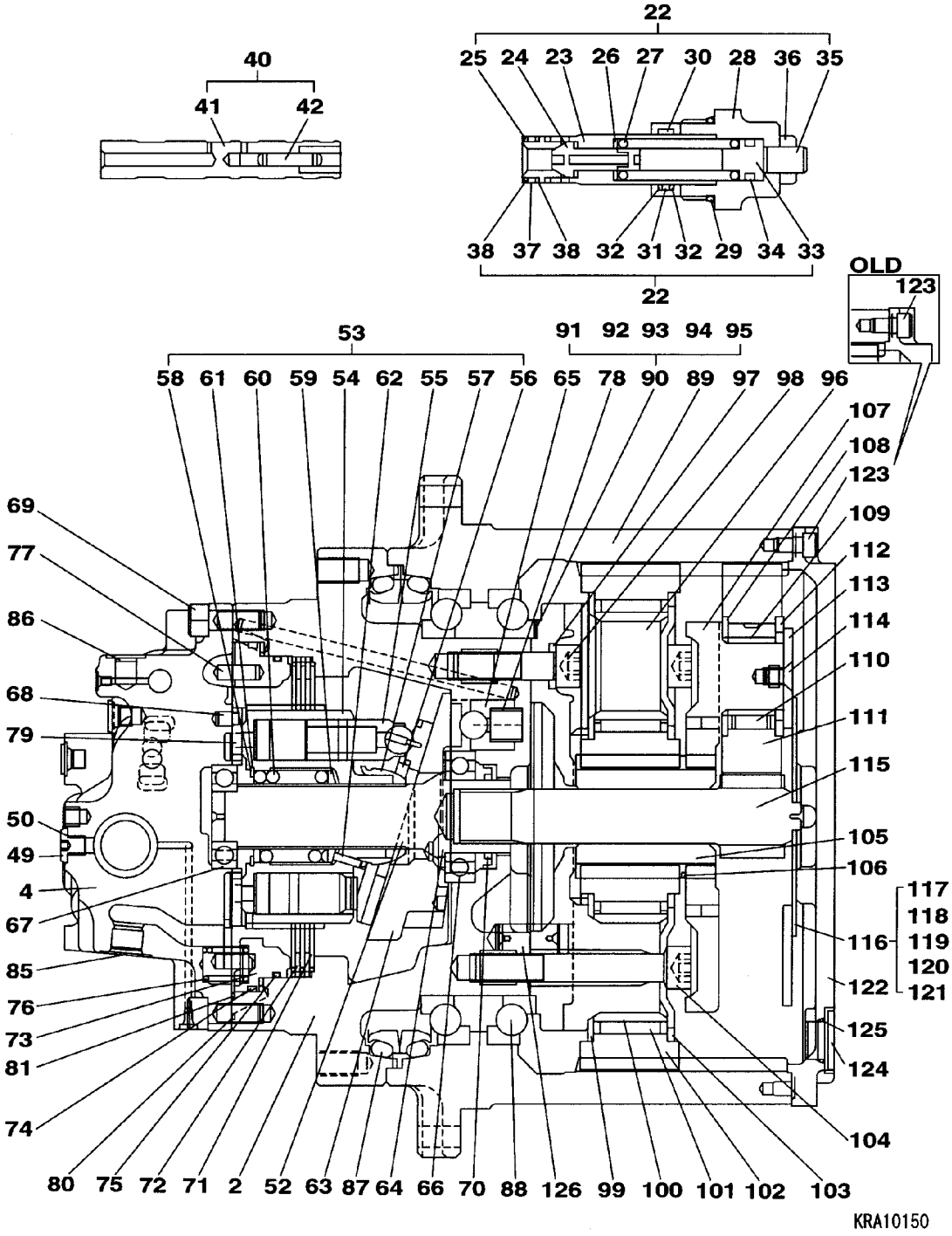

https://truckmanualshub.com/

MOTOR;TRACTION	ﾓｰﾀ;ｿｳｺｳ ﾕﾆｯﾄ	ZAJ121L0030 002 6/6	002

符号 ITEM	構成 COMPO	部品番号 PART NO.	部品名	PART NAME	個数 Q'TY	互換 ICA	代替部品 REPLACEABLE PART	備考 MEMO
129	1	LZ006910	KIT;ﾓｰﾀ ﾌﾗﾝｼﾞ	KIT;MOTOR FLANGE	1			
130	1	LZ007970	KIT;ﾓｰﾀ ﾍﾞｰｽﾌﾟﾚｰﾄ	KIT;MOTOR BASE PLATE	1			
131	1	LN001880	ｹﾞﾝｿｸｷ;ｿｳｺｳ	RED. GEARS TRACTION	1			
132	1	LW005570	ｶﾊﾞｰ KIT	COVER;SPL	1			

https://truckmanualshub.com/

MOTOR;TRACTION	ﾓｰﾀ;ｿｳｺｳ	ZAJ121L0038 000 1/4	000

1 [2～87]　3 [4～52]　5 [6～10]　14 [15～21]　22 [23～38]
40 [41 , 42]　54 [55～63]　91 [92～96]　117 [118～122]
128 [10 , 16 , 21 , 29 , 31 , 32 , 37 , 38 , 45 , 50 , 71 , 75 , 76 , 81 , 82]
129 [88 , 126]　130 [2 , 66]　131 [4 , 5 , 39 , 40 , 48～52]　132 [88～127]
133 [123 , 124]

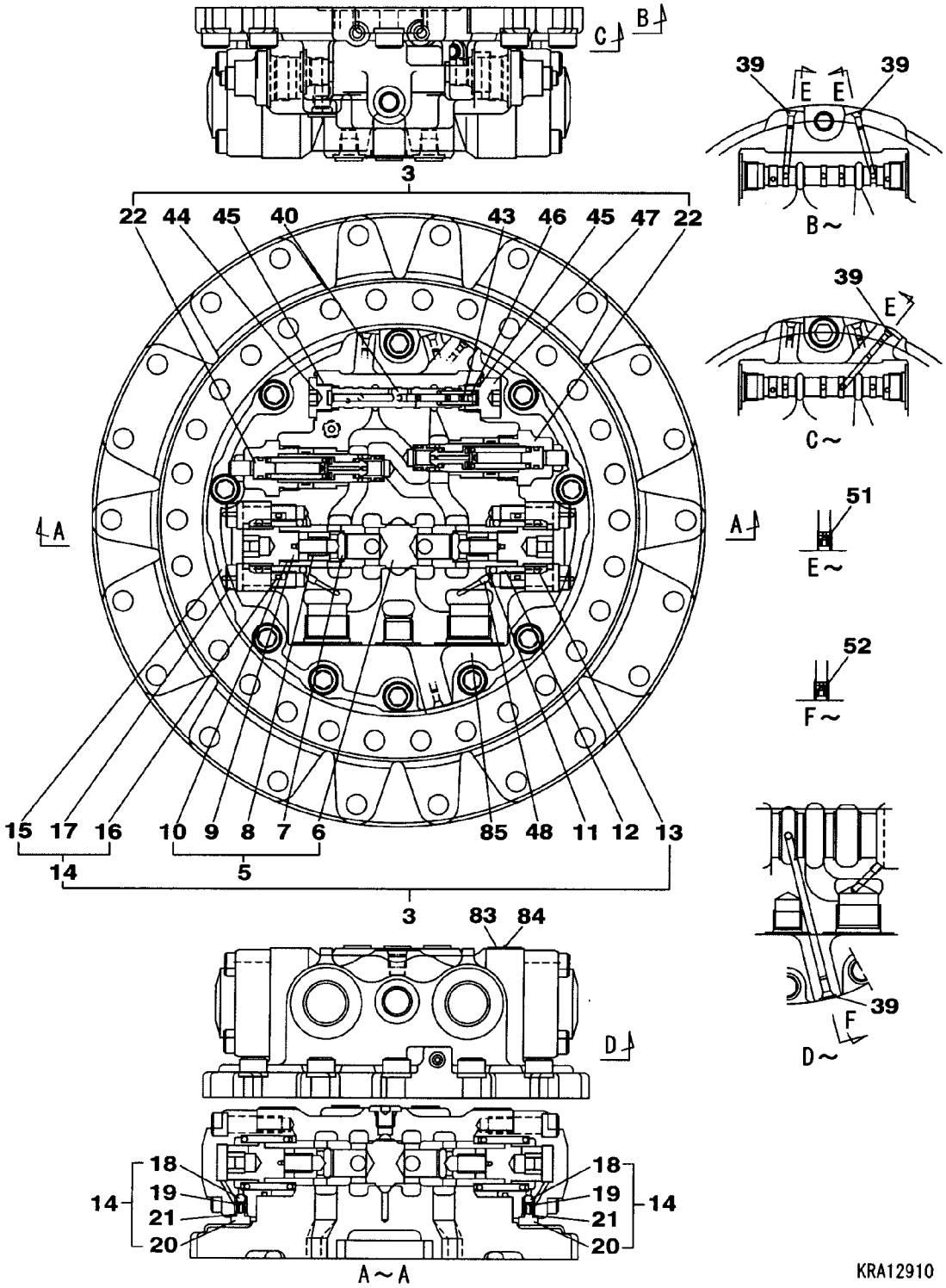

https://truckmanualshub.com/

符号 ITEM	構成 COMPO	部品番号 PART NO.	部品名	PART NAME	個数 Q'TY	互換 ICA	代替部品 REPLACEABLE PART	備考 MEMO
		KRA12910			1			
1	1A	-------	ﾓｰﾀ;ﾋﾟｽﾄﾝ S/A	MOTOR;PISTON	1			
2	2	-------	ﾌﾗﾝｼﾞ ﾄｸｼｭ	FLANGE;SPL	1			
3	2A	-------	ﾌﾟﾚｰﾄ ﾍﾞｰｽ S/A	PLATE	1			
4	3	-------	ﾌﾟﾚｰﾄ ﾍﾞｰｽ	PLATE	1			
5	3A	-------	ｽﾌﾟｰﾙ S/A	SPOOL	1			
6	4	-------	ｽﾌﾟｰﾙ	SPOOL	1			
7	4	-------	ﾊﾞﾙﾌﾞ;ﾁｪｯｸ	VALVE;CHECK	2			
8	4	-------	ｽﾌﾟﾘﾝｸﾞ	SPRING;SPL	2			
9	4	-------	ﾌﾟﾗｸﾞ	PLUG	2			
10	4	LBQ0212	O-ﾘﾝｸﾞ JISB2401 1BP2	O-RING	2			
11	3	LSS0023	ｼｰﾄ;ｽﾌﾟﾘﾝｸﾞ	SEAT;SPRING	2			
12	3	LG006200	ｽﾌﾟﾘﾝｸﾞ ﾄｸｼｭ	SPRING;SPL	2			
13	3	LR015850	ｼｰﾄ;ｽﾌﾟﾘﾝｸﾞ	SEAT;SPRING	2			
14	3A	LR015910	ｷｬｯﾌﾟ S/A	CAP;SPL	2			
15	4	-------	ｷｬｯﾌﾟ	CAP	2			
16	4	LBQ0453	O-ﾘﾝｸﾞ JISB2401 1BG4	O-RING	2			
17	4	108R012Z040N	ﾛｯｶｸｱﾅB	BOLT;HEX SOC HD	8			
18	4	LPU0073	ﾎﾞｰﾙ ｽﾁｰﾙ	BALL	2			
19	4	LSM3120	ｽﾌﾟﾘﾝｸﾞ ﾄｸｼｭ	SPRING;SPL	2			
20	4	-------	ﾌﾟﾗｸﾞ	PLUG	2			
21	4	LBQ0082	O-ﾘﾝｸﾞ JISB2401 1BP8	O-RING	2			
22	3A	LJ014590	ﾊﾞﾙﾌﾞ;ﾘﾘｰﾌ S/A	VALVE;RELIEF	2			
23	4	-------	ﾊｳｼﾞﾝｸﾞ ﾘﾘｰﾌ	HOUSING;SPL	2			
24	4	-------	ﾎﾟﾍﾟｯﾄ	POPPET	2			
25	4	-------	ﾎﾟﾍﾟｯﾄ ｼｰﾄ	POPPET	2			
26	4	-------	ｼｰﾄ;ｽﾌﾟﾘﾝｸﾞ	SEAT;SPRING	2			
27	4	-------	ｽﾌﾟﾘﾝｸﾞ ﾄｸｼｭ	SPRING;SPL	2			
28	4	-------	ﾌﾟﾗｸﾞ	PLUG	2			
29	4	LBQ6916	O-ﾘﾝｸﾞ	O-RING	2			
30	4	-------	ﾋﾟｽﾄﾝ ﾌﾘｰ	PISTON	2			
31	4	LBQ0212	O-ﾘﾝｸﾞ JISB2401 1BP2	O-RING	2			
32	4	LBB0214	ﾘﾝｸﾞ;ﾊﾞｯｸｱｯﾌﾟ	RING;BACK-UP	4			
33	4	-------	ｶﾞｲﾄﾞ;ｽﾌﾟﾘﾝｸﾞ	GUIDE;SPRING	2			
34	4	LBQ8122	O-ﾘﾝｸﾞ JISB2401 1BP1	O-RING	2			
35	4	-------	ｽｸﾘｭｰ ｾｯﾄ	SCREW	2			
36	4	LUM0168	ﾅｯﾄ	NUT;SPL	2			
37	4	LBQ0152	O-ﾘﾝｸﾞ JISB2401 1BP1	O-RING	2			
38	4	LBB0152	ﾘﾝｸﾞ;ﾊﾞｯｸｱｯﾌﾟ	RING;BACK-UP	4			
39	3	-------	ﾌﾟﾗｸﾞ	PLUG	8			
40	3A	-------	ｽﾌﾟｰﾙ ASSY	SPOOL	1			
41	4	-------	ｽﾌﾟｰﾙ A	SPOOL	1			
42	4	-------	ｽﾌﾟｰﾙ	SPOOL	1			
43	3	LG00343	ｽﾌﾟﾘﾝｸﾞ;ｱｯｼｭｸ	SPRING;COMPRESSION	1			
44	3	LK00329	ﾌﾟﾗｸﾞ	PLUG	1			
45	3	LBQ0182	O-ﾘﾝｸﾞ JISB2401 1BP1	O-RING	2			
46	3	LS00127	ｶﾞｲﾄﾞ;ｽﾌﾟﾘﾝｸﾞ	GUIDE;SPRING	1			
47	3	LK00306	ﾌﾟﾗｸﾞ	PLUG	1			
48	3	-------	ｵﾘﾌｨｽ M5*0.8*5L 2.0	ORIFICE	2			
49	3	LPP0087	ﾌﾟﾗｸﾞ	PLUG	5			
50	3	LBQ0112	O-ﾘﾝｸﾞ JISB2401 1BP1	O-RING	5			
51	3	LPP0041	ｵﾘﾌｨｽ	ORIFICE	3			
52	3	LPP0042	ｵﾘﾌｨｽ	ORIFICE	1			
53	2	LB00545	ｼｬﾌﾄ	SHAFT	1			
54	2A	LS003330	ﾌﾞﾛｯｸ;ｼﾘﾝﾀﾞ S/A	BLOCK;CYL	1			
55	3	-------	ﾌﾞﾛｯｸ;ｼﾘﾝﾀﾞ	BLOCK;CYL	1			
56	3	-------	ﾋﾟｽﾄﾝ ASSY	PISTON	9			
57	3	-------	ﾘﾃｰﾅ ﾌﾟﾚｰﾄ	RETAINER	1			
58	3	-------	ﾎﾙﾀﾞ ﾘﾃｰﾅ	HOLDER	1			
59	3	LMM0548	ﾘﾝｸﾞ ｽﾅｯﾌﾟ	RING	1			
60	3	LPM0099	ｼｰﾄ;ｽﾌﾟﾘﾝｸﾞ	SEAT;SPRING	1			
61	3	LSM0118	ｽﾌﾟﾘﾝｸﾞ;ｱｯｼｭｸ	SPRING;COMPRESSION	1			
62	3	LMM0513	ｶﾗｰ	COLLAR	1			
63	3	LMM0363	ﾛｰﾗ ﾆｰﾄﾞﾙ	ROLLER	3			
64	2	LR012550	ﾌﾟﾚｰﾄ	PLATE	1			
65	2	LPM0063	ﾎﾞｰﾙ;ｽﾁｰﾙ	STEEL BALL	2			
66	2	-------	ﾋﾟｽﾄﾝ ASSY	PISTON	2			
67	2	LB00546	ﾍﾞｱﾘﾝｸﾞ ﾎﾞｰﾙ	BEARING;ROLLING	1			

https://truckmanualshub.com/

1 [2～87]　3 [4～52]　5 [6～10]　14 [15～21]　22 [23～38]
40 [41 , 42]　54 [55～63]　91 [92～96]　117 [118～122]
128 [10 , 16 , 21 , 29 , 31 , 32 , 37 , 38 , 45 , 50 , 71 , 75 , 76 , 81 , 82]
129 [88 , 126]　130 [2 , 66]　131 [4 , 5 , 39 , 40 , 48～52]　132 [88～127]
133 [123 , 124]

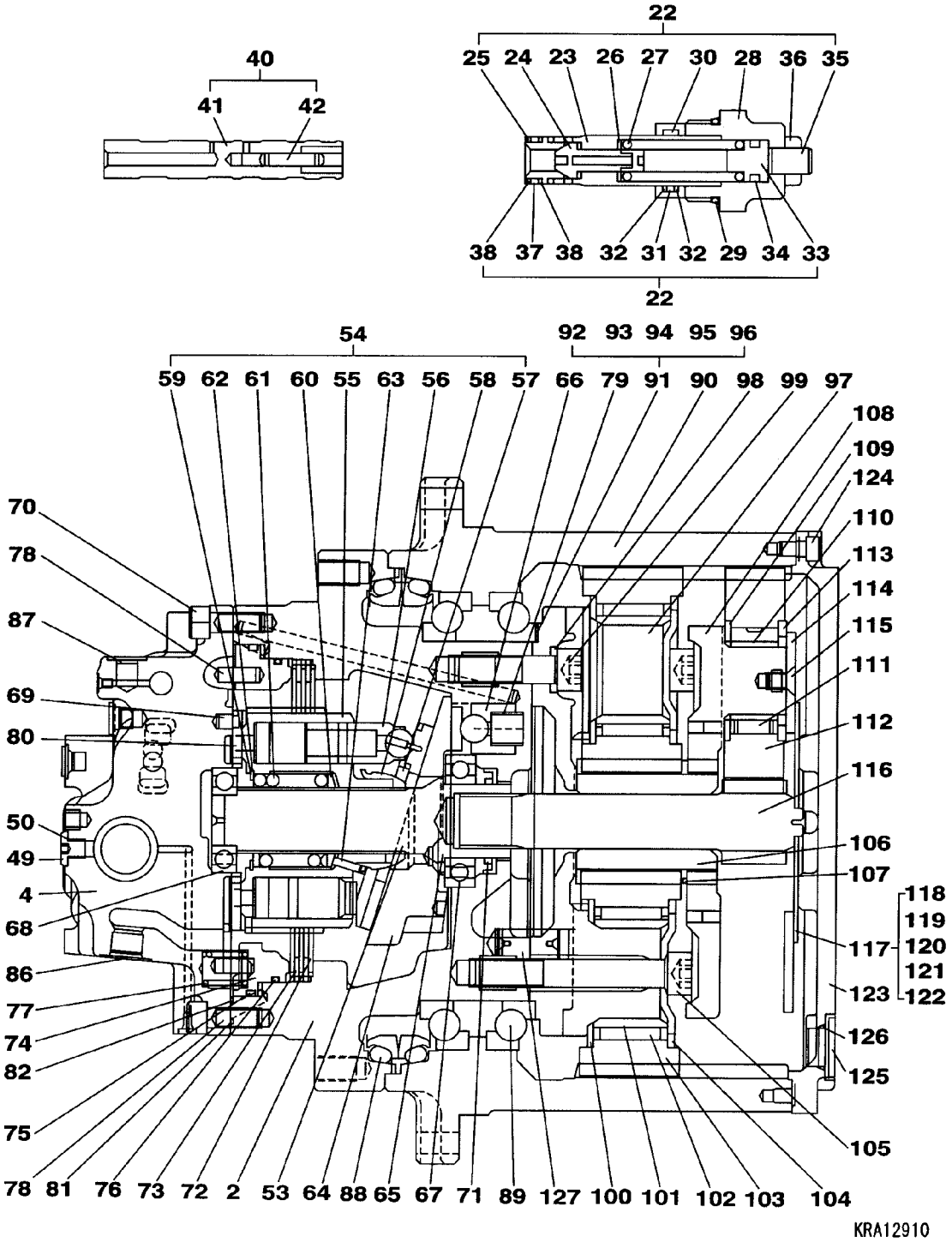

https://truckmanualshub.com/

MOTOR;TRACTION	ﾓｰﾀ;ｿｳｺｳ	ZAJ121L0038 000 4/4	000

符号 ITEM	構成 COMPO	部品番号 PART NO.	部品名	PART NAME	個数 Q'TY	互換 ICA	代替部品 REPLACEABLE PART	備考 MEMO
68	2	LB00547	ﾍﾞｱﾘﾝｸﾞ ﾎﾞｰﾙ	BEARING;ROLLING	1			
69	2	LA010950	ﾋﾟﾝ	PIN;SPL	1			
70	2	108R014Z035N	ﾛｯｶｸｱﾅB JIS B 1176 M	BOLT;HEX SOC HD	10			
71	2	LE014680	ｼｰﾙ;ｵｲﾙ TCZ50X72X9X1	SEAL;OIL	1			
72	2	LR015020	ﾌﾟﾚｰﾄ ﾃﾞｨｽｸ	PLATE;SPL	3			
73	2	LPM0146	ﾌﾟﾚｰﾄ ﾌﾘｸｼｮﾝ	PLATE;SPL	2			
74	2	LJ014600	ﾋﾟｽﾄﾝ ﾌﾞﾚｰｷ	PISTON	1			
75	2	LBM0123	ﾘﾝｸﾞ D	RING;SPL	1			
76	2	LBM0124	ﾘﾝｸﾞ D	RING	1			
77	2	LSM0092	ｽﾌﾟﾘﾝｸﾞ;ｱﾂｼｭｸ	SPRING;COMPRESSION	8			
78	2	LMM0519	ﾋﾟﾝ	PIN;SPL	4			
79	2	LSM0120	ｽﾌﾟﾘﾝｸﾞ	SPRING;SPL	2			
80	2	LR015030	ﾌﾟﾚｰﾄ ﾊﾞﾙﾌﾞ	PLATE	1			
81	2	LBQ0102	O-ﾘﾝｸﾞ JISB2401 1BP1	O-RING	4			
82	2	LBQ6273	O-ﾘﾝｸﾞ	O-RING	1			
83	2	-------	ﾒｲﾊﾞﾝ;ｼﾔﾒｲ	NAMEPLATE;CO.	1			
84	2	-------	ｽｸﾘｭｰ ﾄﾞﾗｲﾌﾞ	SCREW	2			
85	2	-------	ﾌﾟﾗｸﾞ	PLUG	2			
86	2	-------	ﾌﾟﾗｸﾞ	PLUG	1			
87	2	-------	ﾌﾟﾗｸﾞ ;ｼｯﾋﾟﾝｸﾞ	PLUG	1			
88	1	LE01126	ｼｰﾙ;ﾌﾛｰﾃｲﾝｸﾞ	SEAL;FLOATING	2			
89	1	LB00548	ﾍﾞｱﾘﾝｸﾞ ｱﾝｷﾞｭﾗ	BEARING;ROLLING	2			
90	1	-------	ﾊｳｼﾞﾝｸﾞ ﾄｸｼｭ	HOUSING;SPL	1			
91	1A	LH00254	ｼﾑ;ﾌﾟﾚｰﾄ KIT	SHIM;PLATE	1			
92	2	-------	ｼﾑ;ﾌﾟﾚｰﾄ T=0.05	SHIM;PLATE	1			
93	2	-------	ｼﾑ;ﾌﾟﾚｰﾄ T=0.1	SHIM;PLATE	1			
94	2	-------	ｼﾑ;ﾌﾟﾚｰﾄ T=0.3	SHIM;PLATE	1			
95	2	-------	ｼﾑ;ﾌﾟﾚｰﾄ T=0.5	SHIM;PLATE	1			
96	2	-------	ｼﾑ;ﾌﾟﾚｰﾄ T=1.0	SHIM;PLATE	1			
97	1	LS003340	ﾎﾙﾀﾞ	HOLDER	1			
98	1	LA00702	ﾜｯｼｬ	WASHER	8			
99	1	LA00703	ﾎﾞﾙﾄ	BOLT;SPL	8			
100	1	LR00583	ﾌﾟﾚｰﾄ;ｽﾗｽﾄ	PLATE;THRUST	4			
101	1	LB00549	ﾚｰｽ;ｲﾝﾅ	RACE;BRG INNER	4			
102	1	LB011790	BRG;ﾆｰﾄﾞﾙ	BRG;NEEDLE	4			
103	1	LC00163	ｷﾞﾔ;ﾌﾟﾗﾈﾀﾘ	GEAR;PLANETARY	4			
104	1	LR015040	ﾌﾟﾚｰﾄ;ｽﾗｽﾄ	PLATE;THRUST	4			
105	1	LA00704	ﾎﾞﾙﾄ ﾄｸｼｭ	BOLT;SPL	4			
106	1	LC002880	ｷﾞﾔ;ｻﾝ	GEAR;SUN	1			
107	1	LA00705	ｼﾞｸﾄﾒﾜ ﾄｸｼｭ	RING;SNAP	1			
108	1	LS003350	ﾎﾙﾀﾞ	HOLDER	1			
109	1	LR00585	ﾌﾟﾚｰﾄ;ｽﾗｽﾄ	PLATE;THRUST	3			
110	1	LB011800	ﾚｰｽ;ｲﾝﾅ	RACE;BRG INNER	3			
111	1	LB011810	BRG;ﾆｰﾄﾞﾙ	BRG;NEEDLE	3			
112	1	LC002890	ｷﾞﾔ;ﾌﾟﾗﾈﾀﾘ	GEAR;PLANETARY	3			
113	1	LR00586	ﾌﾟﾚｰﾄ;ｽﾗｽﾄ	PLATE;THRUST	3			
114	1	LR015050	ﾌﾟﾚｰﾄ;ｽﾗｽﾄ	PLATE;THRUST	1			
115	1	LV00029	ｽｸﾘｭｰ	SCREW	3			
116	1	LC002900	ｷﾞﾔ ﾄﾞﾗｲﾌﾞ	GEAR;SPL	1			
117	1A	LR00588	ﾌﾟﾚｰﾄ;ｽﾗｽﾄ 2.3/2.8/3	PLATE;THRUST	1			
118	2	-------	ﾌﾟﾚｰﾄ;ｽﾗｽﾄ T=3.6	PLATE;THRUST	1			
119	2	-------	ﾌﾟﾚｰﾄ;ｽﾗｽﾄ T=2.3	PLATE;THRUST	1			
120	2	-------	ﾌﾟﾚｰﾄ;ｽﾗｽﾄ T=2.8	PLATE;THRUST	1			
121	2	-------	ﾌﾟﾚｰﾄ;ｽﾗｽﾄ T=3.0	PLATE;THRUST	1			
122	2	-------	ﾌﾟﾚｰﾄ;ｽﾗｽﾄ T=3.2	PLATE;THRUST	1			
123	1	-------	ｶﾊﾞｰ	COVER	1			
124	1	108R010Z020N	ﾛｯｶｸｱﾅB JIS1176 M10X	BOLT;HEX SOC HD	16			
125	1	LLM0098	ﾌﾟﾗｸﾞ	PLUG	3			
126	1	LBQ0242	O-ﾘﾝｸﾞ JISB2401 1BP2	O-RING	3			
127	1	LMM0549	ﾋﾟﾝ	PIN;SPL	4			
128	1	LZ007960	KIT;ﾓｰﾀ ｼｰﾙ	KIT;MOTOR SEAL	1			
129	1	LZ006890	KIT;ﾓｰﾀ ｼｰﾙ	KIT;MOTOR SEAL	1			
130	1	LZ006910	KIT;ﾓｰﾀ ﾌﾗﾝｼﾞ	KIT;MOTOR FLANGE	1			
131	1	LZ007970	KIT;ﾓｰﾀ ﾍﾞｰｽﾌﾟﾚｰﾄ	KIT;MOTOR BASE PLATE	1			
132	1	LN002420	ｹﾞﾝｿｸｷ;ｿｳｺｳ	RED. GEARS TRACTION	1			
133	1	LW005570	ｶﾊﾞｰ KIT	COVER;SPL	1			

https://truckmanualshub.com/

2 [3 ~ 45-1]

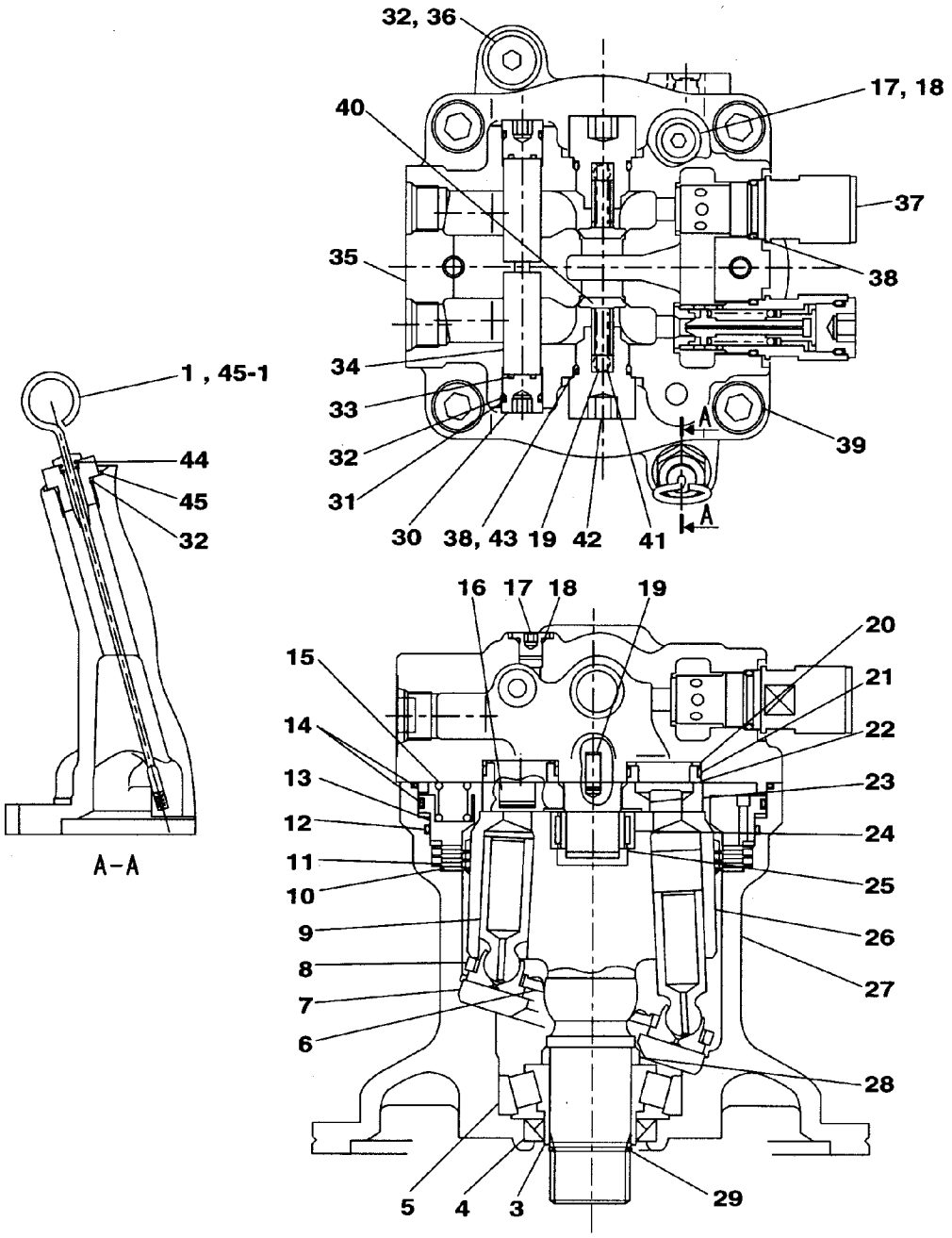

KRC10010

https://truckmanualshub.com/

MOTOR;SWING	ﾓｰﾀ;ｾﾝｶｲ ｸﾐﾀﾃ	ZAJ122L0029 002 2/4	002

符号 ITEM	構成 COMPO	部品番号 PART NO.	部品名	PART NAME	個数 Q'TY	互換 ICA	代替部品 REPLACEABLE PART	備考 MEMO
		KRC10010			1			
1	1	KRC10030	ｹﾞｰｼﾞ;ｵｲﾙ	GAGE;OIL LEVEL	1			
1	1	BLANK						
2	1	LJ014440	ﾓｰﾀ;ｾﾝｶｲ	MOTOR;SWING	1			
2	1A	KRC10190	ﾓｰﾀ;ｾﾝｶｲ	MOTOR;SWING	1			
3	2	LMM0338	ｶﾗｰ	COLLAR	1			
4	2	LAM0037	ｼｰﾙ;ｵｲﾙ	SEAL;OIL	1			
5	2	LTM0129	ﾍﾞｱﾘﾝｸﾞ	BEARING;ROLLING	1			
6	2	LSM0080	ｽﾌﾟﾘﾝｸﾞ	SPRING;SPL	1			
7	2	LMM0334	ﾌﾟﾚｰﾄ ｶﾑ	PLATE;SPL	1			
8	2	LMM0335	ﾌﾟﾚｰﾄ ﾘﾀｰﾝ	PLATE;SPL	1			
9	2	---------	ﾋﾟｽﾄﾝ S/A	PISTON	9			
10	2	LMM0337	ﾌﾟﾚｰﾄ ﾏｻﾂ	PLATE;SPL	3			
11	2	LMM0336	ﾌﾟﾚｰﾄ ｱｲﾃﾞ	PLATE;SPL	3			
12	2	LBQ5262	O-ﾘﾝｸﾞ	O-RING	1			
13	2	LPM0116	ﾋﾟｽﾄﾝ	PISTON	1			
14	2	LBQ5263	O-ﾘﾝｸﾞ	O-RING	2			
15	2	LSM0082	ｽﾌﾟﾘﾝｸﾞ	SPRING;SPL	20			
16	2	LJ00723	ﾋﾟｽﾄﾝ	PISTON	2			
17	2	LZC0076	ｷｬｯﾌﾟ	CAP	3			
18	2	LBQ0112	O-ﾘﾝｸﾞ JISB2401 1BP1	O-RING	3			
19	2	LMM0545	ﾋﾟﾝ ﾄｸｼｭ	PIN;SPL	2			
20	2	LG00337	ｽﾌﾟﾘﾝｸﾞ ｳｴｰﾌﾞ	SPRING;SPL	4			
21	2	LE00776	ﾘﾝｸﾞ ﾃﾌﾛﾝ	RING	4			
22	2	LB00544	ﾌﾞｼｭ	BUSH;SPL	4			
23	2	LR014920	ﾌﾟﾚｰﾄ ﾊﾞﾗﾝｽ	PLATE;SPL	1			
24	2	LTM0130	BRG;ﾆｰﾄﾞﾙ	BRG;NEEDLE	1			
25	2	LMM0330	ｼﾞｸﾄﾒﾜ	RING;SNAP	1			
26	2	---------	ﾌﾞﾛｯｸ;ｼﾘﾝﾀﾞ	BLOCK;CYL	1			
27	2	---------	ﾊｳｼﾞﾝｸﾞ	HOUSING;SPL	1			
28	2	LMM0605	ｶﾗｰ	COLLAR	1			
29	2	LMM0329	ｼﾞｸﾄﾒﾜ	RING;SNAP	1			
30	2	LZC0156	ｷｬｯﾌﾟ	CAP	2			
31	2	LBC0201	ﾘﾝｸﾞ;ﾊﾞｯｸｱｯﾌﾟ	RING;BACK-UP	2			
32	2	LBQ0182	O-ﾘﾝｸﾞ JISB2401 1BP1	O-RING	4			
33	2	LBQ0122	O-ﾘﾝｸﾞ JISB2401 1BP1	O-RING	2			
34	2	LK005600	ﾌﾟﾗｸﾞ	PLUG	2			
35	2	---------	ｶﾊﾞｰ	COVER	1			
36	2	LPC0113	ｷｬｯﾌﾟ	CAP	1			
37	2	LJ015420	ﾊﾞﾙﾌﾞ;ﾘﾘｰﾌ 29.4MPA-1	VALVE;RELIEF	2			
38	2	LBQ0262	O-ﾘﾝｸﾞ JISB2401 1BP2	O-RING	4			
39	2	108R016Y060N	ﾛｯｸｶｸｱﾅB M16X 60	BOLT;HEX SOC HD	4			
40	2	LPM0052	ﾊﾞﾙﾌﾞ;ﾁｪｯｸ	VALVE;CHECK	2			
41	2	LSM0075	ｽﾌﾟﾘﾝｸﾞ	SPRING;SPL	2			
42	2	LZM0191	ｷｬｯﾌﾟ	CAP	2			
43	2	LBB0262	ﾘﾝｸﾞ;ﾊﾞｯｸｱｯﾌﾟ	RING;BACK-UP	2			
44	2	LBQ6011	O-ﾘﾝｸﾞ AS568 011-HS9	O-RING	1			
45	2	LR00895	ｷｬｯﾌﾟ	CAP	1			
45-1	2	KRC10030	ｹﾞｰｼﾞ;ｵｲﾙ	GAGE;OIL LEVEL	1			
46	1A	LN001820	ｹﾞﾝｿｸｷ;ｾﾝｶｲ	REDUCTION GEARS	1			
47	2	LB011740	ｼｬﾌﾄ ﾋﾟﾆｵﾝ	SHAFT;SPL	1			
48	2	LMM0558	ｶﾗｰ	COLLAR	1			
49	2	LZM0289	ﾌﾟﾚｰﾄ	PLATE	1			
50	2	LMM0504	ｱﾅﾄﾒﾜ (ｽﾅｯﾌﾟﾘﾝｸﾞ)	RING;SNAP	1			
51	2	LTM0185	BRG;ﾛｰﾗ	BRG;ROLLER	1			
52	2	LW005020	ｹｰｽ;ｷﾞﾔ	CASE;GEAR	1			
53	2	LH00337	ｶﾗｰ	COLLAR	1			
54	2	LK00053	ﾌﾟﾗｸﾞ	PLUG	1			
55	2	LMM0505	ｱﾅﾄﾒﾜ (ｽﾅｯﾌﾟﾘﾝｸﾞ)	RING;SNAP	1			
56	2	LAM0038	ｼｰﾙ;ｵｲﾙ	SEAL;OIL	1			
57	2	LTM0206	ﾍﾞｱﾘﾝｸﾞ	BEARING;ROLLING	1			
58	2	LMM0341	ﾋﾟﾝ	PIN;SPL	4			
59	2	LC00221	ｷﾞﾔ;ﾘﾝｸﾞ	GEAR;RING	1			
60	2	LDM0188	ｷﾞﾔ	GEAR;SPL	1			
61	2	LKM0109	ﾌﾟﾚｰﾄ;ｽﾗｽﾄ	PLATE;THRUST	1			
62	2	LC00222	ｷﾞﾔ;ｻﾝ	GEAR;SUN	1			
63	2	LS00222	ﾎﾙﾀﾞ S/A	HOLDER	1			
64	2	LA00069	ｺｳﾘｷB M12 X 150	BOLT;HIGH STRENGTH	16			

https://truckmanualshub.com/

46 [47 ~ 75]
66 [67 ~ 71]

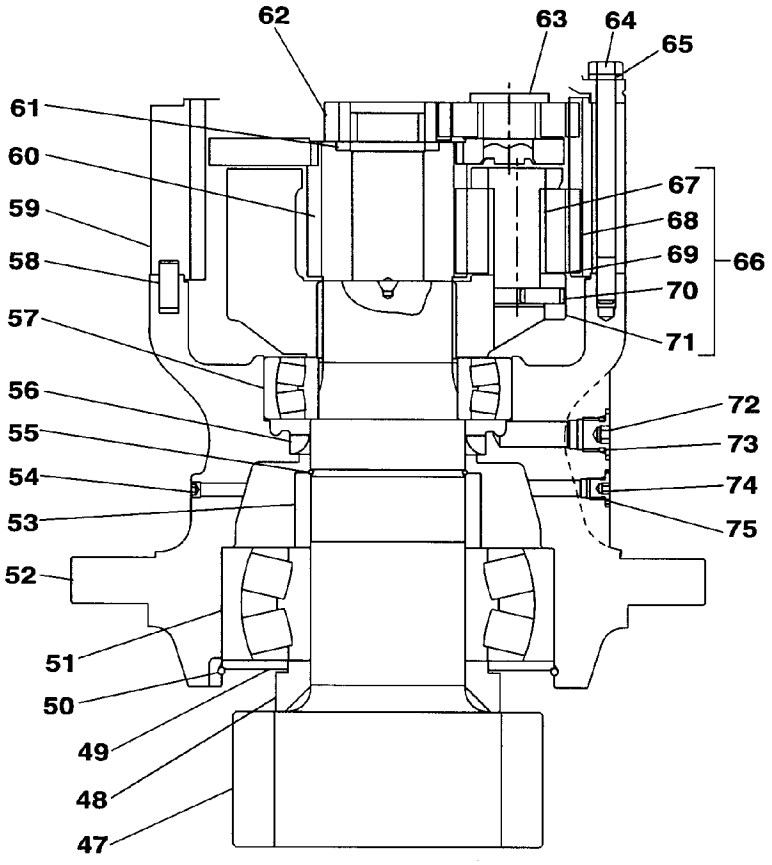

KRC10010

https://truckmanualshub.com/

MOTOR;SWING	ﾓｰﾀ;ｾﾝｶｲ ｸﾐﾀﾃ	ZAJ122L0029 002 4/4	002

符号 ITEM	構成 COMPO	部品番号 PART NO.	部品名	PART NAME	個数 Q'TY	互換 ICA	代替部品 REPLACEABLE PART	備考 MEMO
65	2	183-112VN	SW 12	WASHER;SPRING	16			
66	2A	LNM0604	ｷﾞﾔ;ﾌﾟﾗﾈﾀﾘ S/A	GEAR;PLANETARY	1			
67	3	LB00758	ｼﾔﾌﾄ;ｷﾞﾔ	SHAFT;GEAR	3			
68	3	LC00149	ｷﾞﾔ;ﾌﾟﾗﾈﾀﾘ (NO.2ﾎﾙﾀﾞ	GEAR;PLANETARY	3			
69	3	LKM0054	ﾌﾟﾚｰﾄ;ｽﾗｽﾄ (2)	PLATE;THRUST	3			
70	3	LA00068	ﾋﾟﾝ	PIN;SPL	3			
71	3	LS00190	ﾎﾙﾀﾞ ｷﾞﾔ	HOLDER	1			
72	2	LPC0113	ｷｬｯﾌﾟ	CAP	1			
73	2	LBQ0182	O-ﾘﾝｸﾞ JISB2401 1BP1	O-RING	1			
74	2	LZC0076	ｷｬｯﾌﾟ	CAP	1			
75	2	LBQ0112	O-ﾘﾝｸﾞ JISB2401 1BP1	O-RING	1			

https://truckmanualshub.com/

2 [3 ~ 45]

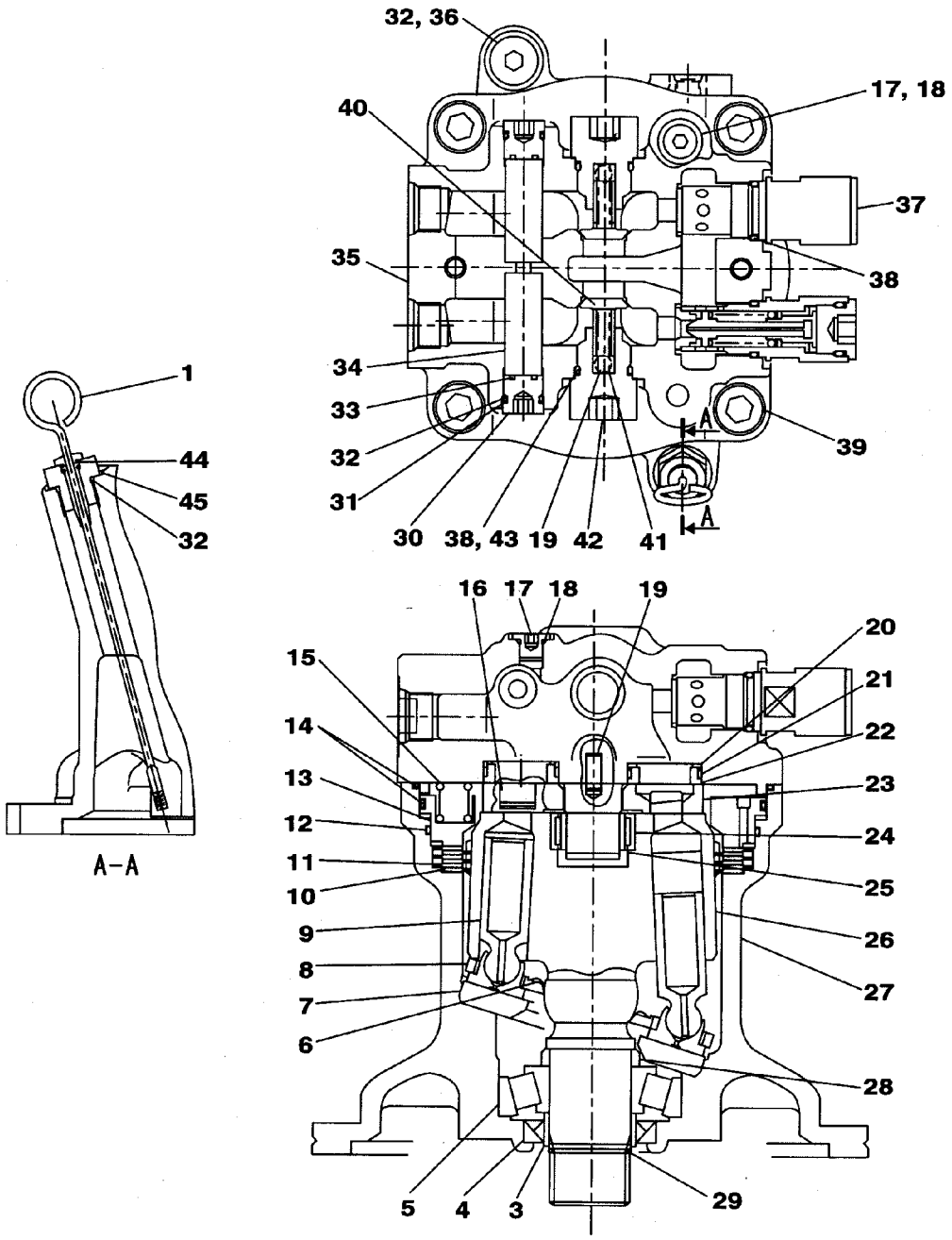

KRC10130

https://truckmanualshub.com/

MOTOR;SWING	ﾓｰﾀ;ｾﾝｶｲ ｸﾐﾀﾃ	ZAJ122L0033 001 2/4	001

符号 ITEM	構成 COMPO	部品番号 PART NO.	部品名	PART NAME	個数 Q'TY	互換 ICA	代替部品 REPLACEABLE PART	備考 MEMO
		KRC10130			1			
1	1	KRC10030	ｹﾞｰｼﾞ;ｵｲﾙ	GAGE;OIL LEVEL	1			
2	1A	LJ015310	ﾓｰﾀ;ｾﾝｶｲ	MOTOR;SWING	1			
3	2	LMM0338	ｶﾗｰ	COLLAR	1			
4	2	LAM0037	ｼｰﾙ;ｵｲﾙ	SEAL;OIL	1			
5	2	LTM0129	ﾍﾞｱﾘﾝｸﾞ	BEARING;ROLLING	1			
6	2	LSM0080	ｽﾌﾟﾘﾝｸﾞ	SPRING;SPL	1			
7	2	LMM0334	ﾌﾟﾚｰﾄ ｶﾑ	PLATE;SPL	1			
8	2	LMM0335	ﾌﾟﾚｰﾄ ﾘﾀｰﾝ	PLATE;SPL	1			
9	2	-------	ﾋﾟｽﾄﾝ S/A	PISTON	9			
10	2	LMM0337	ﾌﾟﾚｰﾄ ﾏｻﾂ	PLATE;SPL	3			
11	2	LMM0336	ﾌﾟﾚｰﾄ ｱｲﾃﾞ	PLATE;SPL	3			
12	2	LBQ5262	O-ﾘﾝｸﾞ	O-RING	1			
13	2	LPM0116	ﾋﾟｽﾄﾝ	PISTON	1			
14	2	LBQ5263	O-ﾘﾝｸﾞ	O-RING	2			
15	2	LSM0082	ｽﾌﾟﾘﾝｸﾞ	SPRING;SPL	20			
16	2	LJ00723	ﾋﾟｽﾄﾝ	PISTON	2			
17	2	LZC0076	ｷｬｯﾌﾟ	CAP	3			
18	2	LBQ0112	O-ﾘﾝｸﾞ JISB2401 1BP1	O-RING	3			
19	2	LMM0545	ﾋﾟﾝ ﾄｸｼｭ	PIN;SPL	2			
20	2	LG00337	ｽﾌﾟﾘﾝｸﾞ ｳｴｰﾌﾞ	SPRING;SPL	4			
21	2	LE00776	ﾘﾝｸﾞ ﾃﾌﾛﾝ	RING	4			
22	2	LB00544	ﾌﾞｼｭ	BUSH;SPL	4			
23	2	LR014920	ﾌﾟﾚｰﾄ ﾊﾞﾗﾝｽ	PLATE;SPL	1			
24	2	LTM0130	BRG;ﾆｰﾄﾞﾙ	BRG;NEEDLE	1			
25	2	LMM0330	ｼﾞｸﾄﾒﾜ	RING;SNAP	1			
26	2	-------	ﾌﾞﾛｯｸ;ｼﾘﾝﾀﾞ	BLOCK;CYL	1			
27	2	-------	ﾊｳｼﾞﾝｸﾞ	HOUSING;SPL	1			
28	2	LMM0605	ｶﾗｰ	COLLAR	1			
29	2	LMM0329	ｼﾞｸﾄﾒﾜ	RING;SNAP	1			
30	2	LZC0156	ｷｬｯﾌﾟ	CAP	2			
31	2	LBC0201	ﾘﾝｸﾞ;ﾊﾞｯｸｱｯﾌﾟ	RING;BACK-UP	2			
32	2	LBQ0182	O-ﾘﾝｸﾞ JISB2401 1BP1	O-RING	4			
33	2	LBQ0122	O-ﾘﾝｸﾞ JISB2401 1BP1	O-RING	2			
34	2	LK005600	ﾌﾟﾗｸﾞ	PLUG	2			
35	2	-------	ｶﾊﾞｰ	COVER	1			
36	2	LPC0113	ｷｬｯﾌﾟ	CAP	1			
37	2	KRC0184	ﾊﾞﾙﾌﾞ;ﾘﾘｰﾌ	VALVE;RELIEF	2			
37	2	LJ015410	ﾊﾞﾙﾌﾞ;ﾘﾘｰﾌ 24.0MPA-1	VALVE;RELIEF	2			
38	2	LBQ0262	O-ﾘﾝｸﾞ JISB2401 1BP2	O-RING	4			
39	2	108R016Y060N	ﾛｯｸｶｸﾅﾄB M16X 60	BOLT;HEX SOC HD	4			
40	2	LPM0052	ﾊﾞﾙﾌﾞ;ﾁｪｯｸ	VALVE;CHECK	2			
41	2	LSM0075	ｽﾌﾟﾘﾝｸﾞ	SPRING;SPL	2			
42	2	LZM0191	ｷｬｯﾌﾟ	CAP	2			
43	2	LBB0262	ﾘﾝｸﾞ;ﾊﾞｯｸｱｯﾌﾟ	RING;BACK-UP	2			
44	2	LBQ6011	O-ﾘﾝｸﾞ AS568 011-HS9	O-RING	1			
45	2	LR00895	ｷｬｯﾌﾟ	CAP	1			
46	1A	LN001820	ｹﾞﾝｿｸｷ;ｾﾝｶｲ	REDUCTION GEARS	1			
47	2	LB011740	ｼｬﾌﾄ ﾋﾟﾆｵﾝ	SHAFT;SPL	1			
48	2	LMM0558	ｶﾗｰ	COLLAR	1			
49	2	LZM0289	ﾌﾟﾚｰﾄ	PLATE	1			
50	2	LMM0504	ｱﾅﾄﾒﾜ (ｽﾅｯﾌﾟﾘﾝｸﾞ)	RING;SNAP	1			
51	2	LTM0185	BRG;ﾛｰﾗ	BRG;ROLLER	1			
52	2	LW005020	ｹｰｽ;ｷﾞｬ	CASE;GEAR	1			
53	2	LH00337	ｶﾗｰ	COLLAR	1			
54	2	LK00053	ﾌﾟﾗｸﾞ	PLUG	1			
55	2	LMM0505	ｱﾅﾄﾒﾜ (ｽﾅｯﾌﾟﾘﾝｸﾞ)	RING;SNAP	1			
56	2	LAM0038	ｼｰﾙ;ｵｲﾙ	SEAL;OIL	1			
57	2	LTM0206	ﾍﾞｱﾘﾝｸﾞ	BEARING;ROLLING	1			
58	2	LMM0341	ﾋﾟﾝ	PIN;SPL	4			
59	2	LC00221	ｷﾞｬ;ﾘﾝｸﾞ	GEAR;RING	1			
60	2	LDM0188	ｷﾞｬ	GEAR;SPL	1			
61	2	LKM0109	ﾌﾟﾚｰﾄ;ｽﾗｽﾄ	PLATE;THRUST	1			
62	2	LC00222	ｷﾞｬ;ｻﾝ	GEAR;SUN	1			
63	2	LS00222	ﾎﾙﾀﾞ S/A	HOLDER	1			
64	2	LA00069	ｺｳﾘｷﾎﾞﾙﾄB M12 X 150	BOLT;HIGH STRENGTH	16			
65	2	183-112VN	SW 12	WASHER;SPRING	16			
66	2A	LNM0604	ｷﾞｬ;ﾌﾟﾗﾈﾀﾘ S/A	GEAR;PLANETARY	1			

https://truckmanualshub.com/

46 [47 ~ 75]
66 [67 ~ 71]

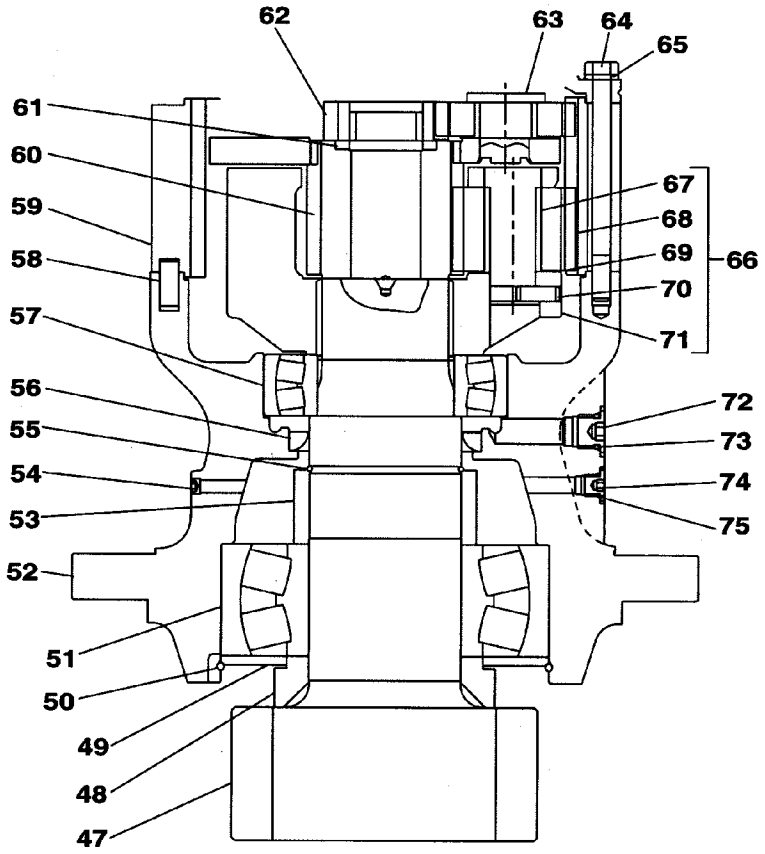

KRC10130

https://truckmanualshub.com/

MOTOR;SWING	ﾓｰﾀ;ｾﾝｶｲ ｸﾐﾀﾃ	ZAJ122L0033 001 4/4	001

符号 ITEM	構成 COMPO	部品番号 PART NO.	部品名	PART NAME	個数 Q'TY	互換 ICA	代替部品 REPLACEABLE PART	備考 MEMO
67	3	LB00758	ｼｬﾌﾄ;ｷﾞﾔ	SHAFT;GEAR	3			
68	3	LC00149	ｷﾞﾔ;ﾌﾟﾗﾈﾀﾘ (NO.2ﾎﾙﾀﾞ	GEAR;PLANETARY	3			
69	3	LKM0054	ﾌﾟﾚｰﾄ;ｽﾗｽﾄ (2)	PLATE;THRUST	3			
70	3	LA00068	ﾋﾟﾝ	PIN;SPL	3			
71	3	LS00190	ﾎﾙﾀﾞ ｷﾞﾔ	HOLDER	1			
72	2	LPC0113	ｷｬｯﾌﾟ	CAP	1			
73	2	LBQ0182	O-ﾘﾝｸﾞ JISB2401 1BP1	O-RING	1			
74	2	LZC0076	ｷｬｯﾌﾟ	CAP	1			
75	2	LBQ0112	O-ﾘﾝｸﾞ JISB2401 1BP1	O-RING	1			

https://truckmanualshub.com/

MOTOR;SWING	ﾓｰﾀ;ｾﾝｶｲ	ZAJ122L0039 000 1/2	000

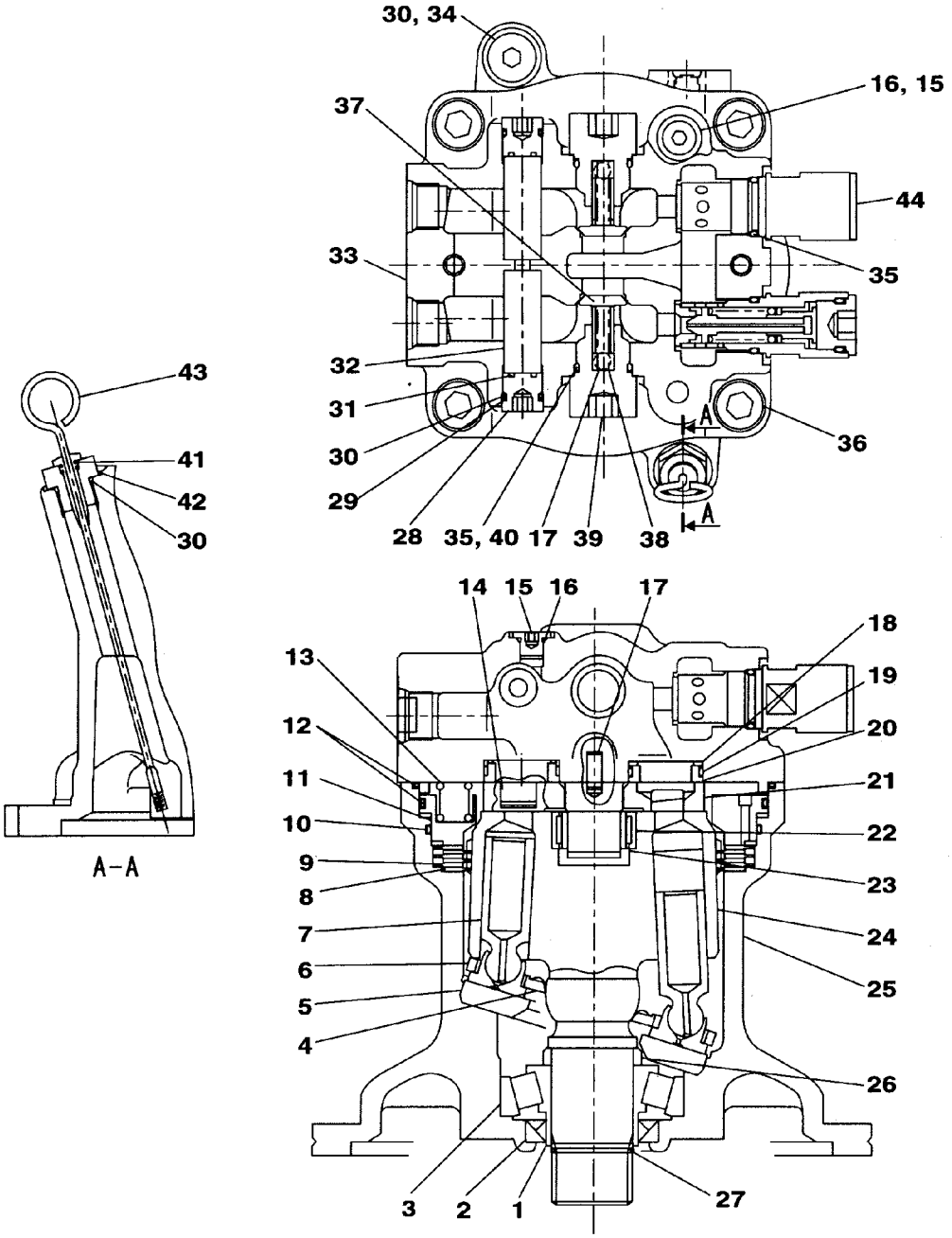

KRC10190

https://truckmanualshub.com/

MOTOR;SWING	ﾓｰﾀ;ｾﾝｶｲ	ZAJ122L0039 000 2/2	000

符号 ITEM	構成 COMPO	部品番号 PART NO.	部品名	PART NAME	個数 Q'TY	互換 ICA	代替部品 REPLACEABLE PART	備考 MEMO
		KRC10190			1			
1	1	LMM0338	ｶﾗｰ	COLLAR	1			
2	1	LAM0037	ｼｰﾙ;ｵｲﾙ	SEAL;OIL	1			
3	1	LTM0129	ﾍﾞｱﾘﾝｸﾞ	BEARING;ROLLING	1			
4	1	LSM0080	ｽﾌﾟﾘﾝｸﾞ	SPRING;SPL	1			
5	1	LMM0334	ﾌﾟﾚｰﾄ ｶﾑ	PLATE;SPL	1			
6	1	LMM0335	ﾌﾟﾚｰﾄ ﾘﾀｰﾝ	PLATE;SPL	1			
7	1	-------	ﾋﾟｽﾄﾝ S/A	PISTON	9			
8	1	LMM0337	ﾌﾟﾚｰﾄ ﾏｻﾂ	PLATE;SPL	3			
9	1	LMM0336	ﾌﾟﾚｰﾄ ｱｲﾃ	PLATE;SPL	3			
10	1	LBQ5262	O-ﾘﾝｸﾞ	O-RING	1			
11	1	LPM0116	ﾋﾟｽﾄﾝ	PISTON	1			
12	1	LBQ5263	O-ﾘﾝｸﾞ	O-RING	2			
13	1	LSM0082	ｽﾌﾟﾘﾝｸﾞ	SPRING;SPL	20			
14	1	LJ00723	ﾋﾟｽﾄﾝ	PISTON	2			
15	1	LZC0076	ｷｬｯﾌﾟ	CAP	3			
16	1	LBQ0112	O-ﾘﾝｸﾞ JISB2401 1BP1	O-RING	3			
17	1	LMM0545	ﾋﾟﾝ ﾄｸｼｭ	PIN;SPL	2			
18	1	LG00337	ｽﾌﾟﾘﾝｸﾞ ｳｴｰﾌﾞ	SPRING;SPL	4			
19	1	LE00776	ﾘﾝｸﾞ ﾃﾌﾛﾝ	RING	4			
20	1	LB00544	ﾌﾞｼｭ	BUSH;SPL	4			
21	1	LR014920	ﾌﾟﾚｰﾄ ﾊﾞﾗﾝｽ	PLATE;SPL	1			
22	1	LTM0130	BRG;ﾆｰﾄﾞﾙ	BRG;NEEDLE	1			
23	1	LMM0330	ｼﾞｸﾄﾒﾜ	RING;SNAP	1			
24	1	-------	ﾌﾞﾛｯｸ;ｼﾘﾝﾀﾞ	BLOCK;CYL	1			
25	1	-------	ﾊｳｼﾞﾝｸﾞ	HOUSING;SPL	1			
26	1	LMM0605	ｶﾗｰ	COLLAR	1			
27	1	LMM0329	ｼﾞｸﾄﾒﾜ	RING;SNAP	1			
28	1	LZC0156	ｷｬｯﾌﾟ	CAP	2			
29	1	LBC0201	ﾘﾝｸﾞ;ﾊﾞｯｸｱｯﾌﾟ	RING;BACK-UP	2			
30	1	LBQ0182	O-ﾘﾝｸﾞ JISB2401 1BP1	O-RING	4			
31	1	LBQ0122	O-ﾘﾝｸﾞ JISB2401 1BP1	O-RING	2			
32	1	LK005600	ﾌﾟﾗｸﾞ	PLUG	2			
33	1	-------	ｶﾊﾞｰ	COVER	1			
34	1	LPC0113	ｷｬｯﾌﾟ	CAP	1			
35	1	LBQ0262	O-ﾘﾝｸﾞ JISB2401 1BP2	O-RING	4			
36	1	108R016Y060N	ﾛｯｶｸｱﾅB M16X 60	BOLT;HEX SOC HD	4			
37	1	LPM0052	ﾊﾞﾙﾌﾞ;ﾁｪｯｸ	VALVE;CHECK	2			
38	1	LSM0075	ｽﾌﾟﾘﾝｸﾞ	SPRING;SPL	2			
39	1	LZM0191	ｷｬｯﾌﾟ	CAP	2			
40	1	LBB0262	ﾘﾝｸﾞ;ﾊﾞｯｸｱｯﾌﾟ	RING;BACK-UP	2			
41	1	LBQ6011	O-ﾘﾝｸﾞ AS568 011-HS9	O-RING	1			
42	1	LR00895	ｷｬｯﾌﾟ	CAP	1			
43	1	KRC10030	ｹﾞｰｼﾞ;ｵｲﾙ	GAGE;OIL LEVEL	1			
44	1	LJ015420	ﾊﾞﾙﾌﾞ;ﾘﾘｰﾌ 29.4MPA-1	VALVE;RELIEF	2			

https://truckmanualshub.com/

CYL;BOOM	ｼﾘﾝﾀﾞ;ﾌﾞｰﾑ (EMS HBCV ﾋﾀﾞﾘ)	ZAJ221L0160 000 1/2	000

2 [3 ～ 5]　37 [6～ 11 , 14 , 16 ～ 19]　38 [39 , 40]　41 [42 , 43]

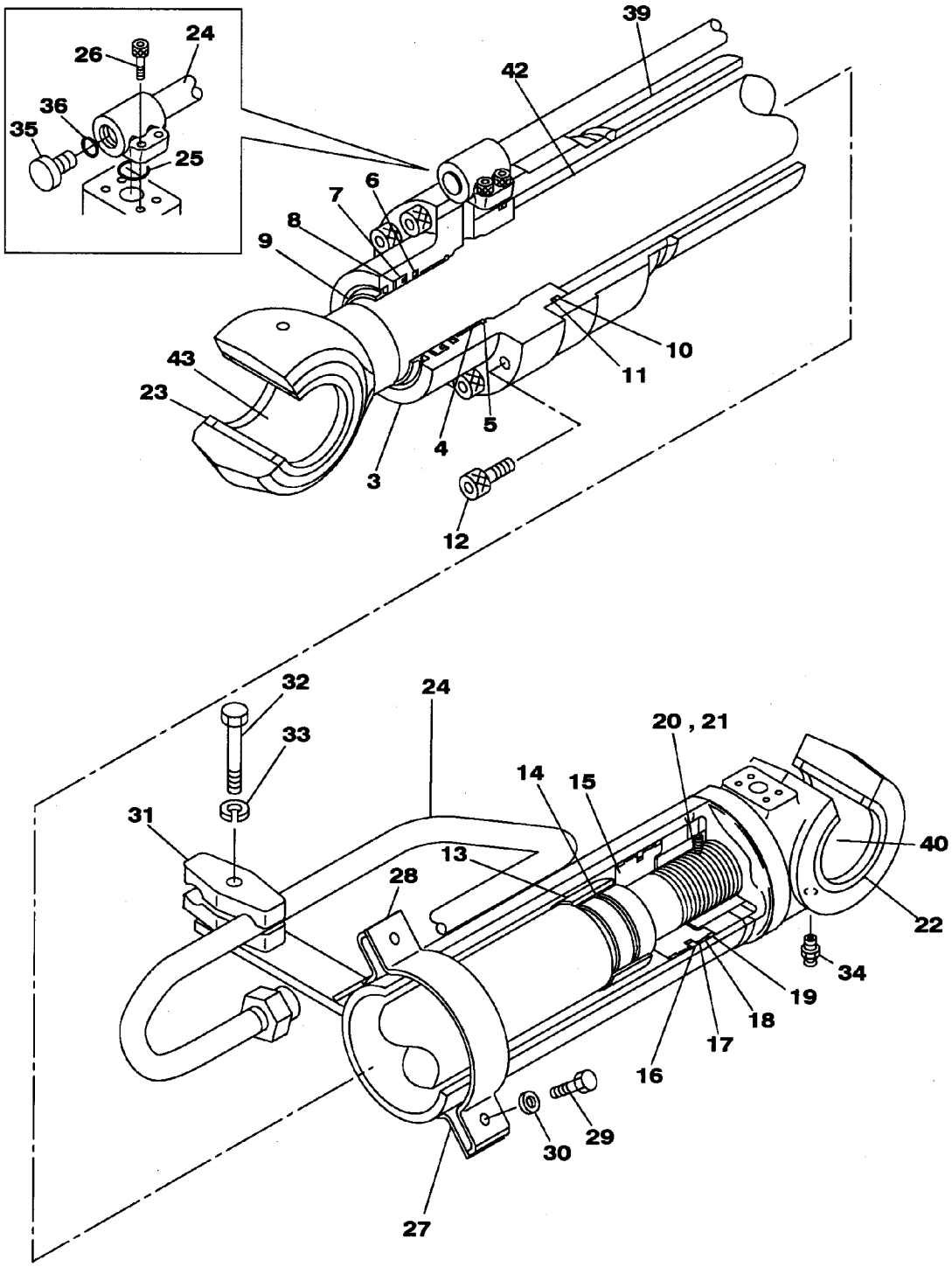

KRV19580

https://truckmanualshub.com/

CYL;BOOM	ｼﾘﾝﾀﾞ;ﾌﾞｰﾑ (EMS HBCV ﾋﾀﾞﾘ)	ZAJ221L0160 000 2/2	000

符号 ITEM	構成 COMPO	部品番号 PART NO.	部品名	PART NAME	個数 Q'TY	互換 ICA	代替部品 REPLACEABLE PART	備考 MEMO
		KRV19580			1			
1	1A	KRV19590	ｼﾘﾝﾀﾞ;ﾌﾞｰﾑ (ﾋﾀﾞﾘ ﾌﾞｼ	CYL;BOOM	1			
2	2A	LU00073	ﾍｯﾄﾞ;ｼﾘﾝﾀﾞ S/A	HEAD;CYL	1			
3	3	LU00106	ﾍｯﾄﾞ;ｼﾘﾝﾀﾞ	HEAD;CYL	1			
4	3	LKU0087	ﾌﾞｼｭ ﾄｸｼｭ	BUSH;SPL	1			
5	3	LMU0135	ﾘﾝｸﾞ ｽﾅｯﾌﾟ	RING	1			
6	2	LE013140	ﾘﾝｸﾞ ﾊﾞｯﾌｧ	RING	1			
7	2	LE013150	U-ﾘﾝｸﾞ	U-RING	1			
8	2	LBU0042	ﾘﾝｸﾞ;ﾊﾞｯｸｱｯﾌﾟ	RING;BACK-UP	1			
9	2	LPU0118	ﾘﾝｸﾞ;ﾜｲﾊﾟ	RING;WIPER	1			
10	2	LBQ1153	O-ﾘﾝｸﾞ JISB2401 1BG1	O-RING	1			
11	2	LBU0044	ﾘﾝｸﾞ;ﾊﾞｯｸｱｯﾌﾟ	RING;BACK-UP	1			
12	2	LUU0152	ﾎﾞﾙﾄ	BOLT;SPL	12			
13	2	LE013160	ﾘﾝｸﾞ;ｸｯｼｮﾝ	CUSHION RING	1			
14	2	LE00704	ｼｰﾙ;ｸｯｼｮﾝ	SEAL;CUSHION	1			
15	2	LJ014150	ﾋﾟｽﾄﾝ	PISTON	1			
16	2	LEU0021	ｼｰﾙﾘﾝｸﾞ S/A	SEAL RING;SPL	1			
17	2	LE00705	ﾘﾝｸﾞ;ﾊﾞｯｸｱｯﾌﾟ ﾄｸｼｭ	RING;BACK-UP	2			
18	2	LE013170	ﾘﾝｸﾞ;ｽﾗｲﾄﾞ	SLIDE RING	2			
19	2	LEU0009	ﾘﾝｸﾞ ｽﾗｲﾄﾞ	RING;SPL	2			
20	2	LUU0100	ｽｸﾘｭｰ ｾｯﾄ	SCREW	1			
21	2	LPU0074	ﾎﾞｰﾙ ｽﾁｰﾙ	BALL	1			
22	2	KHV0237	ﾘﾝｸﾞ;ﾜｲﾊﾟ	RING;WIPER	2			
23	2	KHV0238	ﾘﾝｸﾞ;ﾜｲﾊﾟ	RING;WIPER	2			
24	2	LR014100	ﾊﾟｲﾌﾟ S/A	PIPE;SPL	1			
25	2	LBQ0302	O-ﾘﾝｸﾞ JISB2401 1BP3	O-RING	1			
26	2	108R010Z030N	ﾛｯｶｸｱﾅB JISB1176 M10	BOLT;HEX SOC HD	4			
27	2	LD001370	ﾊﾞﾝﾄﾞ S/A	BAND;SPL	1			
28	2	LD00040	ﾊﾞﾝﾄﾞ ﾄｸｼｭ	BAND;SPL	1			
29	2	LUU0137	ﾎﾞﾙﾄ	BOLT;SPL	2			
30	2	LUU0105	ﾜｯｼｬ	WASHER	2			
31	2	LMU0143	ﾎﾙﾀﾞ ﾊﾟｲﾌﾟ	HOLDER	2			
32	2	KTV0059	ｺｳﾘｷB M14X 80	BOLT;HIGH STRENGTH	1			
33	2	183-114VR	SW 14	WASHER;SPRING	1			
34	2	M01X0812	ﾆｯﾌﾟﾙ;ｸﾞﾘｽ (A-R1/8)	NIPPLE;GREASE	1			
35	2	LK00195	ﾌﾟﾗｸﾞ	PLUG	1			
36	2	LBQ0142	O-ﾘﾝｸﾞ JISB2401 1BP1	O-RING	1			
37	2	LZ007630	ｷｯﾄ;ｼﾘﾝﾀﾞ ｼｰﾙ	KIT;CYL SEAL	1			
38	2A	LR014070	ﾁｭｰﾌﾞ;ｼﾘﾝﾀﾞ S/A	TUBE;CYL	1			
39	3	LR014040	ﾁｭｰﾌﾞ;ｼﾘﾝﾀﾞ	TUBE;CYL	1			
40	3	KRV2401	ﾌﾞｼｭ;ｵｲﾙﾚｽ	BUSH;OILLESS	1			
41	2A	LB011320	ﾛｯﾄﾞ;ｼﾘﾝﾀﾞ S/A	CYLINDER ROD	1			
42	3	LB011310	ﾛｯﾄﾞ;ｼﾘﾝﾀﾞ	CYLINDER ROD	1			
43	3	KRV2395	ﾌﾞｼｭ;ｵｲﾙﾚｽ	BUSH;OILLESS	1			

https://truckmanualshub.com/

CYL;BOOM	ｼﾘﾝﾀﾞ;ﾌﾞｰﾑ (EMS HBCV ﾐｷﾞ)	ZAJ221L0161 000 1/2	000

2 [3 ～ 5]　35 [6 ～ 11 , 14 , 16 ～ 19]　36 [37 , 38]　39 [40 , 41]

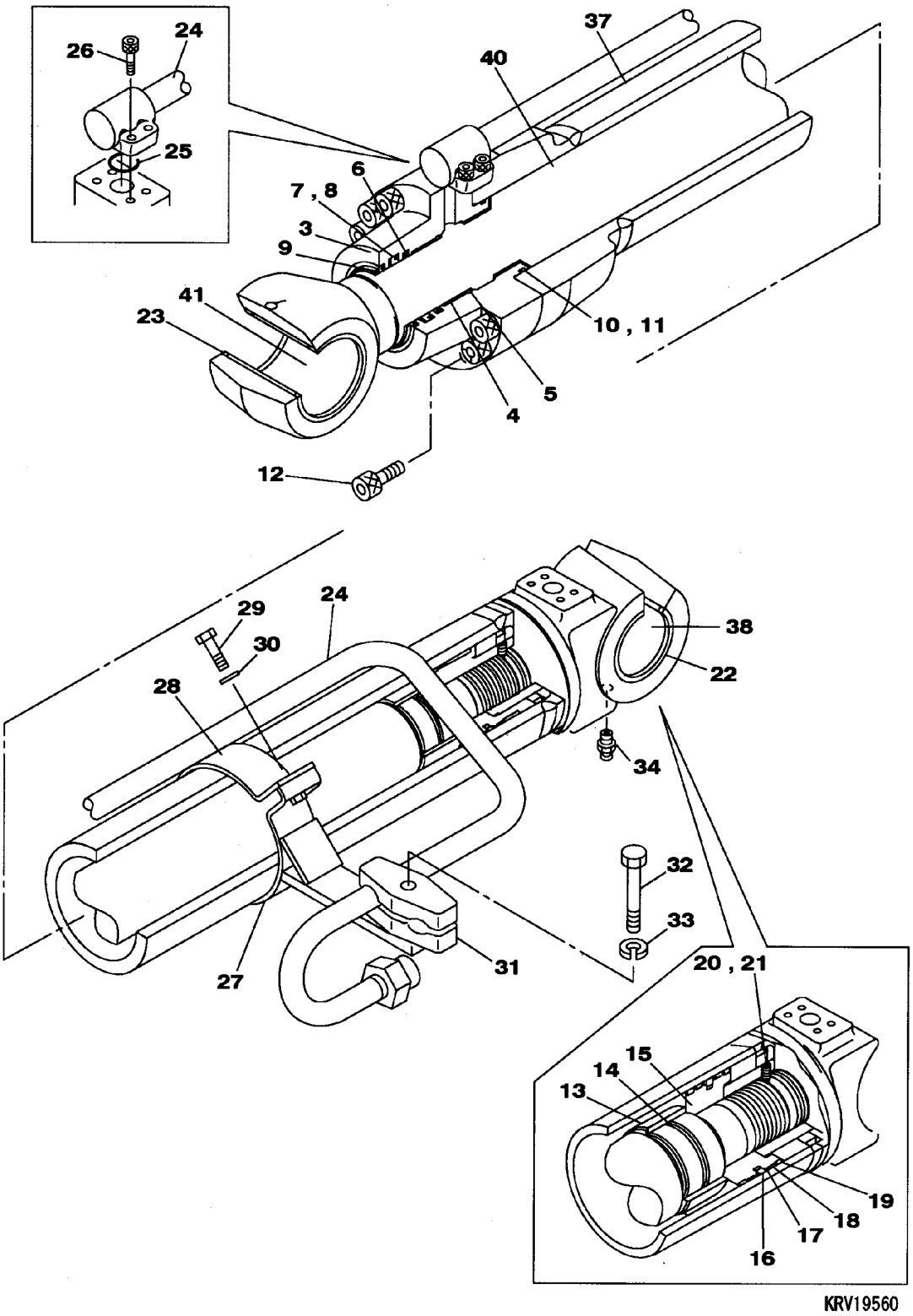

KRV19560

https://truckmanualshub.com/

CYL;BOOM	ｼﾘﾝﾀﾞ;ﾌﾞｰﾑ (EMS HBCV ﾐｷﾞ)	ZAJ221L0161 000 2/2	000

符号 ITEM	構成 COMPO	部品番号 PART NO.	部品名	PART NAME	個数 Q'TY	互換 ICA	代替部品 REPLACEABLE PART	備考 MEMO
		KRV19560			1			
1	1A	KRV19570	ｼﾘﾝﾀﾞ;ﾌﾞｰﾑ (ﾐｷﾞ ﾌﾞｼｭ	CYL;BOOM	1			
2	2A	LU00073	ﾍｯﾄﾞ;ｼﾘﾝﾀﾞ S/A	HEAD;CYL	1			
3	3	LU00106	ﾍｯﾄﾞ;ｼﾘﾝﾀﾞ	HEAD;CYL	1			
4	3	LKU0087	ﾌﾞｼｭ ﾄｸｼｭ	BUSH;SPL	1			
5	3	LMU0135	ﾘﾝｸﾞ ｽﾅｯﾌﾟ	RING	1			
6	2	LE013140	ﾘﾝｸﾞ ﾊﾞｯﾌｧ	RING	1			
7	2	LE013150	U-ﾘﾝｸﾞ	U-RING	1			
8	2	LBU0042	ﾘﾝｸﾞ;ﾊﾞｯｸｱｯﾌﾟ	RING;BACK-UP	1			
9	2	LPU0118	ﾘﾝｸﾞ;ﾜｲﾊﾟ	RING;WIPER	1			
10	2	LBQ1153	O-ﾘﾝｸﾞ JISB2401 1BG1	O-RING	1			
11	2	LBU0044	ﾘﾝｸﾞ;ﾊﾞｯｸｱｯﾌﾟ	RING;BACK-UP	1			
12	2	LUU0152	ﾎﾞﾙﾄ	BOLT;SPL	12			
13	2	LE013160	ﾘﾝｸﾞ;ｸｯｼｮﾝ	CUSHION RING	1			
14	2	LE00704	ｼｰﾙ;ｸｯｼｮﾝ	SEAL;CUSHION	1			
15	2	LJ014150	ﾋﾟｽﾄﾝ	PISTON	1			
16	2	LEU0021	ｼｰﾙﾘﾝｸﾞ S/A	SEAL RING;SPL	1			
17	2	LE00705	ﾘﾝｸﾞ;ﾊﾞｯｸｱｯﾌﾟ ﾄｸｼｭ	RING;BACK-UP	2			
18	2	LE013170	ﾘﾝｸﾞ;ｽﾗｲﾄﾞ	SLIDE RING	2			
19	2	LEU0009	ﾘﾝｸﾞ ｽﾗｲﾄﾞ	RING;SPL	2			
20	2	LUU0100	ｽｸﾘｭｰ ｾｯﾄ	SCREW	1			
21	2	LPU0074	ﾎﾞｰﾙ ｽﾁｰﾙ	BALL	1			
22	2	KHV0237	ﾘﾝｸﾞ;ﾜｲﾊﾟ	RING;WIPER	2			
23	2	KHV0238	ﾘﾝｸﾞ;ﾜｲﾊﾟ	RING;WIPER	2			
24	2	LR014060	ﾊﾟｲﾌﾟ S/A	PIPE;SPL	1			
25	2	LBQ0302	O-ﾘﾝｸﾞ JISB2401 1BP3	O-RING	1			
26	2	108R010Z030N	ﾛｯｶｸｱﾅB JISB1176 M10	BOLT;HEX SOC HD	4			
27	2	LD001370	ﾊﾞﾝﾄﾞ S/A	BAND;SPL	1			
28	2	LD00040	ﾊﾞﾝﾄﾞ ﾄｸｼｭ	BAND;SPL	1			
29	2	LUU0137	ﾎﾞﾙﾄ	BOLT;SPL	2			
30	2	LUU0105	ﾜｯｼｬ	WASHER	2			
31	2	LMU0143	ﾎﾙﾀﾞ ﾊﾟｲﾌﾟ	HOLDER	2			
32	2	KTV0059	ｺｳﾘｷB M14X 80	BOLT;HIGH STRENGTH	1			
33	2	183-114VR	SW 14	WASHER;SPRING	1			
34	2	M01X0812	ﾆｯﾌﾟﾙ;ｸﾞﾘｽ (A-R1/8)	NIPPLE;GREASE	1			
35	2	LZ007630	ｷｯﾄ;ｼﾘﾝﾀﾞ ｼｰﾙ	KIT;CYL SEAL	1			
36	2A	LR014070	ﾁｭｰﾌﾞ;ｼﾘﾝﾀﾞ S/A	TUBE;CYL	1			
37	3	LR014040	ﾁｭｰﾌﾞ;ｼﾘﾝﾀﾞ	TUBE;CYL	1			
38	3	KRV2401	ﾌﾞｼｭ;ｵｲﾙﾚｽ	BUSH;OILLESS	1			
39	2A	LB011320	ﾛｯﾄﾞ;ｼﾘﾝﾀﾞ S/A	CYLINDER ROD	1			
40	3	LB011310	ﾛｯﾄﾞ;ｼﾘﾝﾀﾞ	CYLINDER ROD	1			
41	3	KRV2395	ﾌﾞｼｭ;ｵｲﾙﾚｽ	BUSH;OILLESS	1			
41	3A	KRV2395	ﾌﾞｼｭ;ｵｲﾙﾚｽ	BUSH;OILLESS	1			

https://truckmanualshub.com/

CYL;BOOM	ｼﾘﾝﾀﾞ;ﾌﾞｰﾑ (EMS ﾐｷﾞ)	ZAJ221L0162 000 1/2	000

2 [3 ～ 5]　36 [6 ～ 11 , 14 , 16 ～ 19]　37 [38 , 39]　40 [41 , 42]

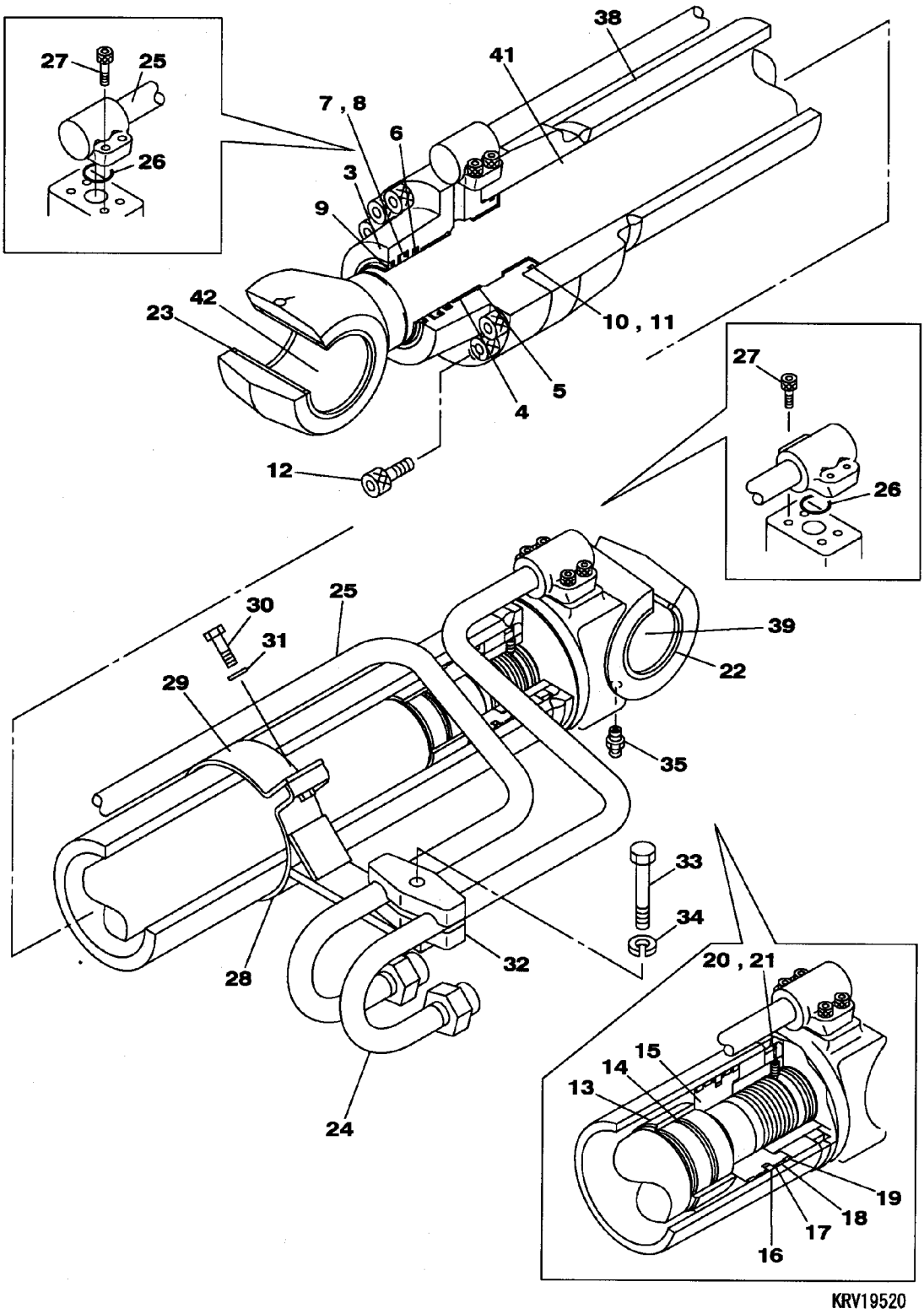

https://truckmanualshub.com/

CYL;BOOM	ｼﾘﾝﾀﾞ;ﾌﾞｰﾑ (EMS ﾐｷﾞ)	ZAJ221L0162 000 2/2	000

符号 ITEM	構成 COMPO	部品番号 PART NO.	部品名	PART NAME	個数 Q'TY	互換 ICA	代替部品 REPLACEABLE PART	備考 MEMO
		KRV19520			1			
1	1A	KRV19530	ｼﾘﾝﾀﾞ;ﾌﾞｰﾑ (ﾐｷﾞ ﾌﾞｼｭ	CYL;BOOM	1			
2	2A	LU00073	ﾍｯﾄﾞ;ｼﾘﾝﾀﾞ S/A	HEAD;CYL	1			
3	3	LU00106	ﾍｯﾄﾞ;ｼﾘﾝﾀﾞ	HEAD;CYL	1			
4	3	LKU0087	ﾌﾞｼｭ ﾄｸｼｭ	BUSH;SPL	1			
5	3	LMU0135	ﾘﾝｸﾞ ｽﾅｯﾌﾟ	RING	1			
6	2	LE013140	ﾘﾝｸﾞ ﾊﾞｯﾌｧ	RING	1			
7	2	LE013150	U-ﾘﾝｸﾞ	U-RING	1			
8	2	LBU0042	ﾘﾝｸﾞ;ﾊﾞｯｸｱｯﾌﾟ	RING;BACK-UP	1			
9	2	LPU0118	ﾘﾝｸﾞ;ﾜｲﾊﾟ	RING;WIPER	1			
10	2	LBQ1153	O-ﾘﾝｸﾞ JISB2401 1BG1	O-RING	1			
11	2	LBU0044	ﾘﾝｸﾞ;ﾊﾞｯｸｱｯﾌﾟ	RING;BACK-UP	1			
12	2	LUU0152	ﾎﾞﾙﾄ	BOLT;SPL	12			
13	2	LE013160	ﾘﾝｸﾞ;ｸｯｼｮﾝ	CUSHION RING	1			
14	2	LE00704	ｼｰﾙ;ｸｯｼｮﾝ	SEAL;CUSHION	1			
15	2	LJ014150	ﾋﾟｽﾄﾝ	PISTON	1			
16	2	LEU0021	ｼｰﾙﾘﾝｸﾞ S/A	SEAL RING;SPL	1			
17	2	LE00705	ﾘﾝｸﾞ;ﾊﾞｯｸｱｯﾌﾟ ﾄｸｼｭ	RING;BACK-UP	2			
18	2	LE013170	ﾘﾝｸﾞ;ｽﾗｲﾄﾞ	SLIDE RING	2			
19	2	LEU0009	ﾘﾝｸﾞ ｽﾗｲﾄﾞ	RING;SPL	2			
20	2	LUU0100	ｽｸﾘｭｰ ｾｯﾄ	SCREW	1			
21	2	LPU0074	ﾎﾞｰﾙ ｽﾁｰﾙ	BALL	1			
22	2	KHV0237	ﾘﾝｸﾞ;ﾜｲﾊﾟ	RING;WIPER	2			
23	2	KHV0238	ﾘﾝｸﾞ;ﾜｲﾊﾟ	RING;WIPER	2			
24	2	LR014050	ﾊﾟｲﾌﾟ S/A	PIPE;SPL	1			
25	2	LR014060	ﾊﾟｲﾌﾟ S/A	PIPE;SPL	1			
26	2	LBQ0302	O-ﾘﾝｸﾞ JISB2401 1BP3	O-RING	2			
27	2	108R010Z030N	ﾛｯｶｸｱﾅB JISB1176 M10	BOLT;HEX SOC HD	8			
28	2	LD001370	ﾊﾞﾝﾄﾞ S/A	BAND;SPL	1			
29	2	LD00040	ﾊﾞﾝﾄﾞ ﾄｸｼｭ	BAND;SPL	1			
30	2	LUU0137	ﾎﾞﾙﾄ	BOLT;SPL	2			
31	2	LUU0105	ﾜｯｼｬ	WASHER	2			
32	2	LMU0143	ﾎﾙﾀﾞ ﾊﾟｲﾌﾟ	HOLDER	2			
33	2	KTV0059	ｺｳﾘｷB M14X 80	BOLT;HIGH STRENGTH	1			
34	2	183-114VR	SW 14	WASHER;SPRING	1			
35	2	M01X0812	ﾆｯﾌﾟﾙ;ｸﾞﾘｽ (A-R1/8)	NIPPLE;GREASE	1			
36	2	LZ007630	ｷｯﾄ;ｼﾘﾝﾀﾞ ｼｰﾙ	KIT;CYL SEAL	1			
37	2A	LR014070	ﾁｭｰﾌﾞ;ｼﾘﾝﾀﾞ S/A	TUBE;CYL	1			
38	3	LR014040	ﾁｭｰﾌﾞ;ｼﾘﾝﾀﾞ	TUBE;CYL	1			
39	3	KRV2401	ﾌﾞｼｭ;ｵｲﾙﾚｽ	BUSH;OILLESS	1			
40	2A	LB011320	ﾛｯﾄﾞ;ｼﾘﾝﾀﾞ S/A	CYLINDER ROD	1			
41	3	LB011310	ﾛｯﾄﾞ;ｼﾘﾝﾀﾞ	CYLINDER ROD	1			
42	3	KRV2395	ﾌﾞｼｭ;ｵｲﾙﾚｽ	BUSH;OILLESS	1			

https://truckmanualshub.com/

CYL;BOOM	ｼﾘﾝﾀﾞ;ﾌﾞｰﾑ (EMS ﾋﾀﾞﾘ)	ZAJ221L0163 000 1/2	000

2 [3 ～ 5]　36 [6～ 11 , 14 , 16 ～ 19]　37 [38 , 39]　40 [41 , 42]

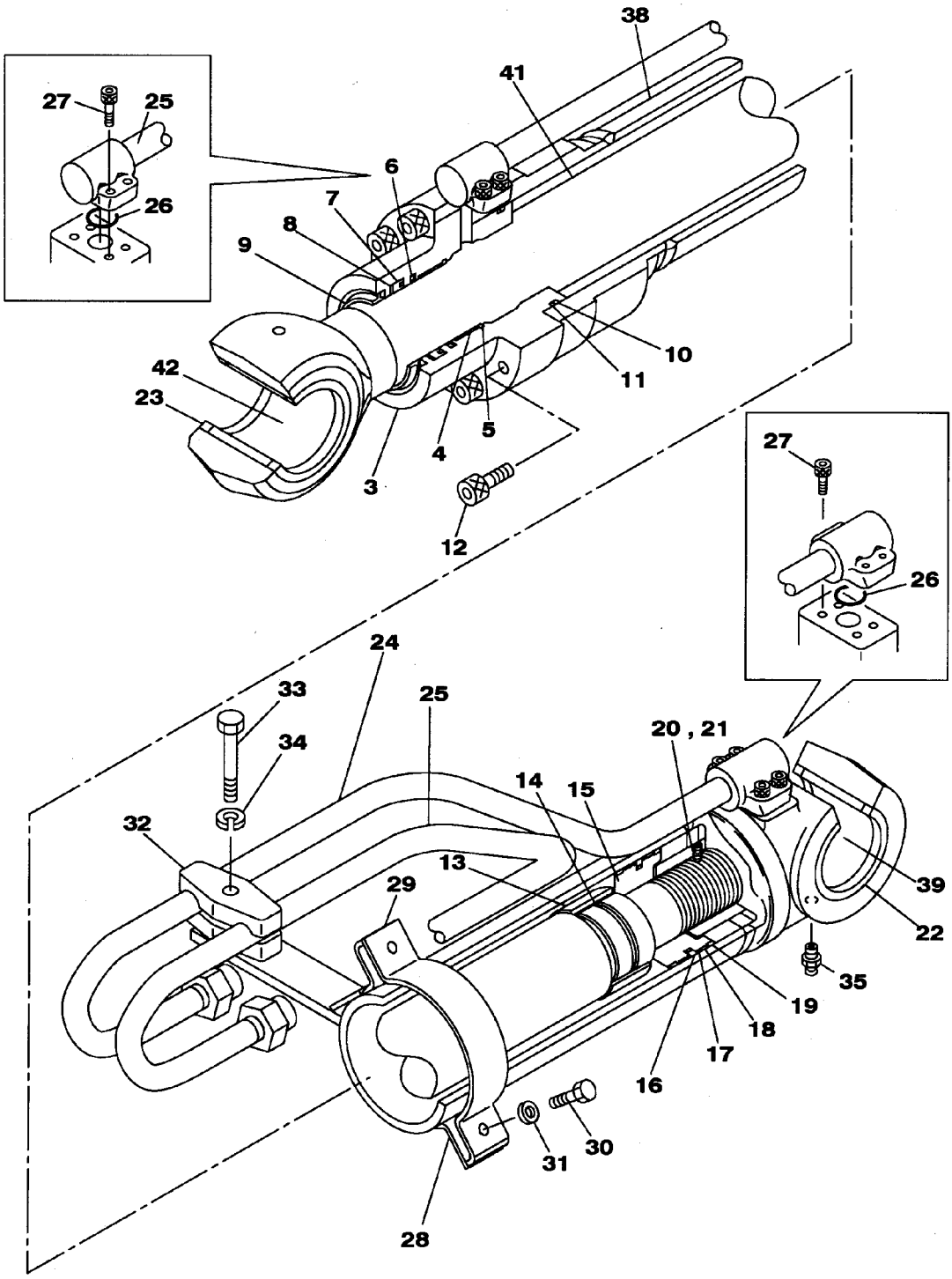

KRV19540

https://truckmanualshub.com/

CYL;BOOM	ｼﾘﾝﾀﾞ;ﾌﾞｰﾑ (EMS ﾋﾀﾞﾘ)	ZAJ221L0163 000 2/2	000

符号 ITEM	構成 COMPO	部品番号 PART NO.	部品名	PART NAME	個数 Q'TY	互換 ICA	代替部品 REPLACEABLE PART	備考 MEMO
		KRV19540			1			
1	1A	KRV19550	ｼﾘﾝﾀﾞ;ﾌﾞｰﾑ (ﾋﾀﾞﾘ ﾌﾞｼ	CYL;BOOM	1			
2	2A	LU00073	ﾍｯﾄﾞ;ｼﾘﾝﾀﾞ S/A	HEAD;CYL	1			
3	3	LU00106	ﾍｯﾄﾞ;ｼﾘﾝﾀﾞ	HEAD;CYL	1			
4	3	LKU0087	ﾌﾞｼｭ ﾄｸｼｭ	BUSH;SPL	1			
5	3	LMU0135	ﾘﾝｸﾞ ｽﾅｯﾌﾟ	RING	1			
6	2	LE013140	ﾘﾝｸﾞ ﾊﾞｯﾌｧ	RING	1			
7	2	LE013150	U-ﾘﾝｸﾞ	U-RING	1			
8	2	LBU0042	ﾘﾝｸﾞ;ﾊﾞｯｸｱｯﾌﾟ	RING;BACK-UP	1			
9	2	LPU0118	ﾘﾝｸﾞ;ﾜｲﾊﾟ	RING;WIPER	1			
10	2	LBQ1153	O-ﾘﾝｸﾞ JISB2401 1BG1	O-RING	1			
11	2	LBU0044	ﾘﾝｸﾞ;ﾊﾞｯｸｱｯﾌﾟ	RING;BACK-UP	1			
12	2	LUU0152	ﾎﾞﾙﾄ	BOLT;SPL	12			
13	2	LE013160	ﾘﾝｸﾞ;ｸｯｼｮﾝ	CUSHION RING	1			
14	2	LE00704	ｼｰﾙ;ｸｯｼｮﾝ	SEAL;CUSHION	1			
15	2	LJ014150	ﾋﾟｽﾄﾝ	PISTON	1			
16	2	LEU0021	ｼｰﾙﾘﾝｸﾞ S/A	SEAL RING;SPL	1			
17	2	LE00705	ﾘﾝｸﾞ;ﾊﾞｯｸｱｯﾌﾟ ﾄｸｼｭ	RING;BACK-UP	2			
18	2	LE013170	ﾘﾝｸﾞ;ｽﾗｲﾄﾞ	SLIDE RING	2			
19	2	LEU0009	ﾘﾝｸﾞ ｽﾗｲﾄﾞ	RING;SPL	2			
20	2	LUU0100	ｽｸﾘｭｰ ｾｯﾄ	SCREW	1			
21	2	LPU0074	ﾎﾞｰﾙ ｽﾁｰﾙ	BALL	1			
22	2	KHV0237	ﾘﾝｸﾞ;ﾜｲﾊﾟ	RING;WIPER	2			
23	2	KHV0238	ﾘﾝｸﾞ;ﾜｲﾊﾟ	RING;WIPER	2			
24	2	LR014080	ﾊﾟｲﾌﾟ S/A	PIPE;SPL	1			
25	2	LR014090	ﾊﾟｲﾌﾟ S/A	PIPE;SPL	1			
26	2	LBQ0302	O-ﾘﾝｸﾞ JISB2401 1BP3	O-RING	2			
27	2	108R010Z030N	ﾛｯｶｸｱﾅB JISB1176 M10	BOLT;HEX SOC HD	8			
28	2	LD001370	ﾊﾞﾝﾄﾞ S/A	BAND;SPL	1			
29	2	LD00040	ﾊﾞﾝﾄﾞ ﾄｸｼｭ	BAND;SPL	1			
30	2	LUU0137	ﾎﾞﾙﾄ	BOLT;SPL	2			
31	2	LUU0105	ﾜｯｼｬ	WASHER	2			
32	2	LMU0143	ﾎﾙﾀﾞ ﾊﾟｲﾌﾟ	HOLDER	2			
33	2	KTV0059	ｺｳﾘｷB M14X 80	BOLT;HIGH STRENGTH	1			
34	2	183-114VR	SW 14	WASHER;SPRING	1			
35	2	M01X0812	ﾆｯﾌﾟﾙ;ｸﾞﾘｽ (A-R1/8)	NIPPLE;GREASE	1			
36	2	LZ007630	ｷｯﾄ;ｼﾘﾝﾀﾞ ｼｰﾙ	KIT;CYL SEAL	1			
37	2A	LR014070	ﾁｭｰﾌﾞ;ｼﾘﾝﾀﾞ S/A	TUBE;CYL	1			
38	3	LR014040	ﾁｭｰﾌﾞ;ｼﾘﾝﾀﾞ	TUBE;CYL	1			
39	3	KRV2401	ﾌﾞｼｭ;ｵｲﾙﾚｽ	BUSH;OILLESS	1			
40	2A	LB011320	ﾛｯﾄﾞ;ｼﾘﾝﾀﾞ S/A	CYLINDER ROD	1			
41	3	LB011310	ﾛｯﾄﾞ;ｼﾘﾝﾀﾞ	CYLINDER ROD	1			
42	3	KRV2395	ﾌﾞｼｭ;ｵｲﾙﾚｽ	BUSH;OILLESS	1			

https://truckmanualshub.com/

CYL;ARM	ｼﾘﾝﾀﾞ;ｱｰﾑ (EMS)	ZAJ222L0097 001 1/2	000

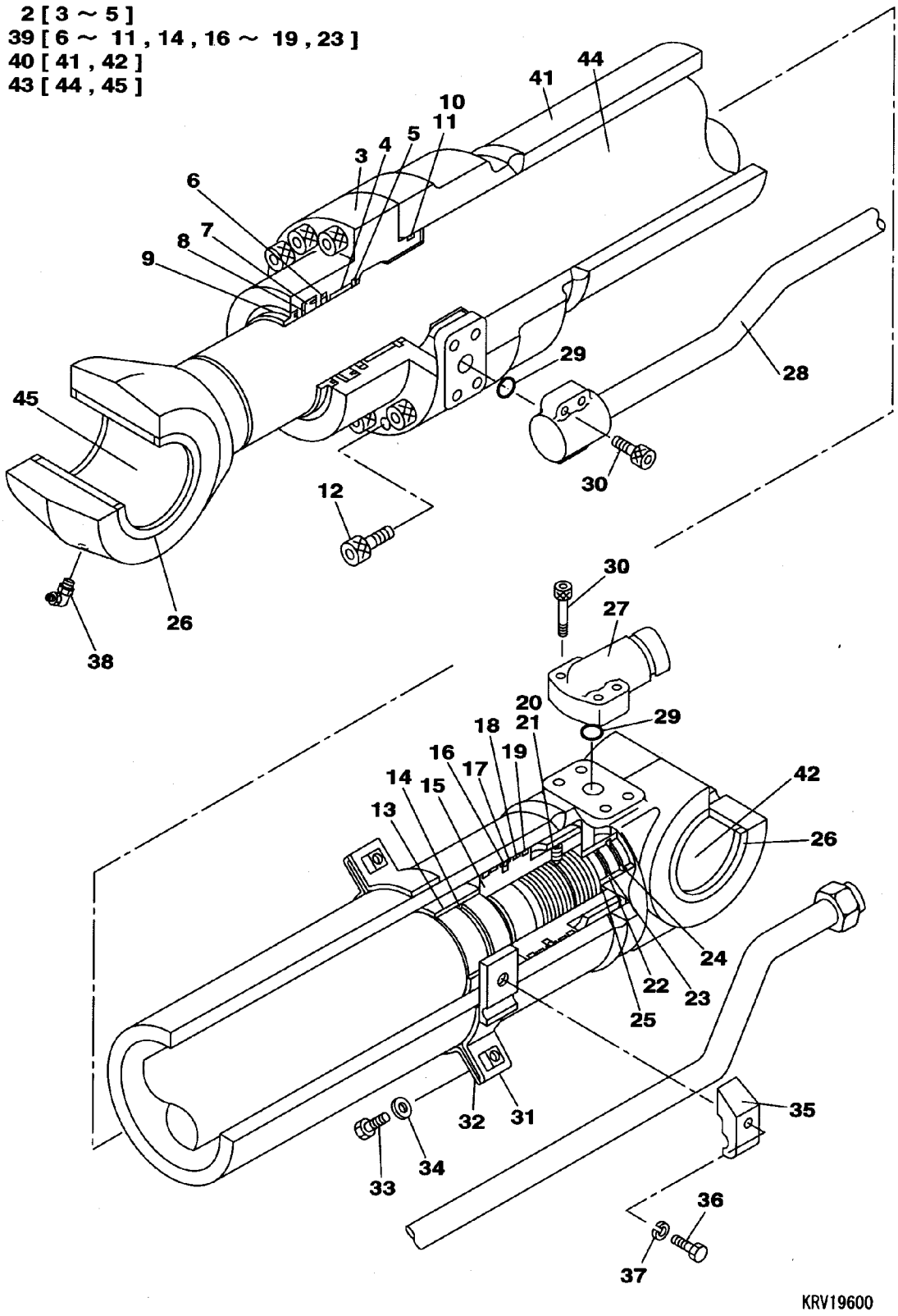

https://truckmanualshub.com/

CYL;ARM	ｼﾘﾝﾀﾞ;ｱｰﾑ (EMS)	ZAJ222L0097 001 2/2	001

符号 ITEM	構成 COMPO	部品番号 PART NO.	部品名	PART NAME	個数 Q'TY	互換 ICA	代替部品 REPLACEABLE PART	備考 MEMO
		KRV19600			1			
1	1A	KRV19610	ｼﾘﾝﾀﾞ;ｱｰﾑ	CYL;ARM	1			
2	2A	LU002410	ﾍｯﾄﾞ;ｼﾘﾝﾀﾞ S/A	HEAD;CYL	1			
3	3	LU002400	ﾍｯﾄﾞ;ｼﾘﾝﾀﾞ	HEAD;CYL	1			
4	3	LKU0098	ﾌﾞｼｭ ﾄｸｼｭ	BUSH;SPL	1			
5	3	LMU0131	ﾘﾝｸﾞ ｽﾅｯﾌﾟ	RING	1			
6	2	LE012390	ﾘﾝｸﾞ ﾊﾞｯﾌｧ	RING	1			
7	2	LE012310	U-ﾘﾝｸﾞ	U-RING	1			
8	2	LE00954	ﾘﾝｸﾞ;ﾊﾞｯｸｱｯﾌﾟ ﾄｸｼｭ	RING;BACK-UP	1			
9	2	LPU0116	ﾘﾝｸﾞ;ﾜｲﾊﾟ	RING;WIPER	1			
10	2	LBQ1353	O-ﾘﾝｸﾞ JISB2401 1BG1	O-RING	1			
11	2	LE00784	ﾘﾝｸﾞ;ﾊﾞｯｸｱｯﾌﾟ ﾄｸｼｭ	RING;BACK-UP	1			
12	2	108R018Z080N	ﾛｯｶｸｱﾅB M18X 80	BOLT;HEX SOC HD	12			
13	2	LE013180	ﾘﾝｸﾞ;ｸｯｼｮﾝ	CUSHION RING	1			
14	2	LE013190	ｼｰﾙ;ｸｯｼｮﾝ	SEAL;CUSHION	1			
14	2	LE015980	ｼｰﾙ;ｸｯｼｮﾝ	SEAL;CUSHION	1			
15	2	LJ014160	ﾋﾟｽﾄﾝ	PISTON	1			
16	2	LEU0020	ｼｰﾙﾘﾝｸﾞ S/A	SEAL RING;SPL	1			
17	2	LE00785	ﾘﾝｸﾞ;ﾊﾞｯｸｱｯﾌﾟ ﾄｸｼｭ	RING;BACK-UP	2			
18	2	LE013200	ﾘﾝｸﾞ;ｽﾗｲﾄﾞ	SLIDE RING	2			
19	2	LEU0007	ﾘﾝｸﾞ ｽﾗｲﾄﾞ	RING;SPL	2			
20	2	LUU0106	ｽｸﾘｭｰ ﾄｸｼｭ	SCREW;SPL	1			
21	2	LPU0078	ﾎﾞｰﾙ;ｽﾁｰﾙ	STEEL BALL	1			
22	2	LE013210	ﾘﾝｸﾞ;ｸｯｼｮﾝ	CUSHION RING	1			
23	2	LE00746	ｼｰﾙ;ｸｯｼｮﾝ	SEAL;CUSHION	1			
24	2	LMU0359	ｽﾄｯﾊﾟ	STOPPER	2			
25	2	LMU0361	ｼﾞｸﾄﾒﾜ (ｽﾅｯﾌﾟﾘﾝｸﾞ)	RING;SNAP	1			
26	2	KHV0237	ﾘﾝｸﾞ;ﾜｲﾊﾟ	RING;WIPER	4			
27	2	LJ014170	ｼﾞｮｲﾝﾄ	JOINT;SPL	1			
28	2	LR014120	ﾊﾟｲﾌﾟ S/A	PIPE;SPL	1			
29	2	LBQ0342	O-ﾘﾝｸﾞ JISB2401 1BP3	O-RING	2			
30	2	108R012Y035N	ﾛｯｶｸｱﾅB M12X 35	BOLT;HEX SOC HD	8			
31	2	LD001380	ﾊﾞﾝﾄﾞ S/A	BAND;SPL	1			
32	2	LZU0021	ﾊﾞﾝﾄﾞ	BAND;SPL	1			
33	2	LUU0137	ﾎﾞﾙﾄ	BOLT;SPL	2			
34	2	LUU0105	ﾜｯｼｬ	WASHER	2			
35	2	LMU0207	ﾎﾙﾀﾞ ﾊﾟｲﾌﾟ	HOLDER	1			
36	2	102R012Y055N	ｺｳﾘｷB M12X 55	BOLT;HIGH STRENGTH	1			
37	2	183-112VN	SW 12	WASHER;SPRING	1			
38	2	M01X1800	ﾆｯﾌﾟﾙ;ｸﾞﾘｽ (C-R1/8)	NIPPLE;GREASE	1			
39	2	LZ007640	ｷｯﾄ;ｼﾘﾝﾀﾞ ｼｰﾙ	KIT;CYL SEAL	1			
40	2A	LR014130	ﾁｭｰﾌﾞ;ｼﾘﾝﾀﾞ S/A	TUBE;CYL	1			
41	3	LR014110	ﾁｭｰﾌﾞ;ｼﾘﾝﾀﾞ	TUBE;CYL	1			
42	3	KRV2400	ﾌﾞｼｭ;ｵｲﾙﾚｽ	BUSH;OILLESS	1			
43	2A	LB011340	ﾛｯﾄﾞ;ｼﾘﾝﾀﾞ S/A	CYLINDER ROD	1			
44	3	LB011330	ﾛｯﾄﾞ;ｼﾘﾝﾀﾞ	CYLINDER ROD	1			
45	3	KRV2400	ﾌﾞｼｭ;ｵｲﾙﾚｽ	BUSH;OILLESS	1			

https://truckmanualshub.com/

CYL;ARM	ｼﾘﾝﾀﾞ;ｱｰﾑ (EMS HBCV)	ZAJ222L0098 001 1/2	000

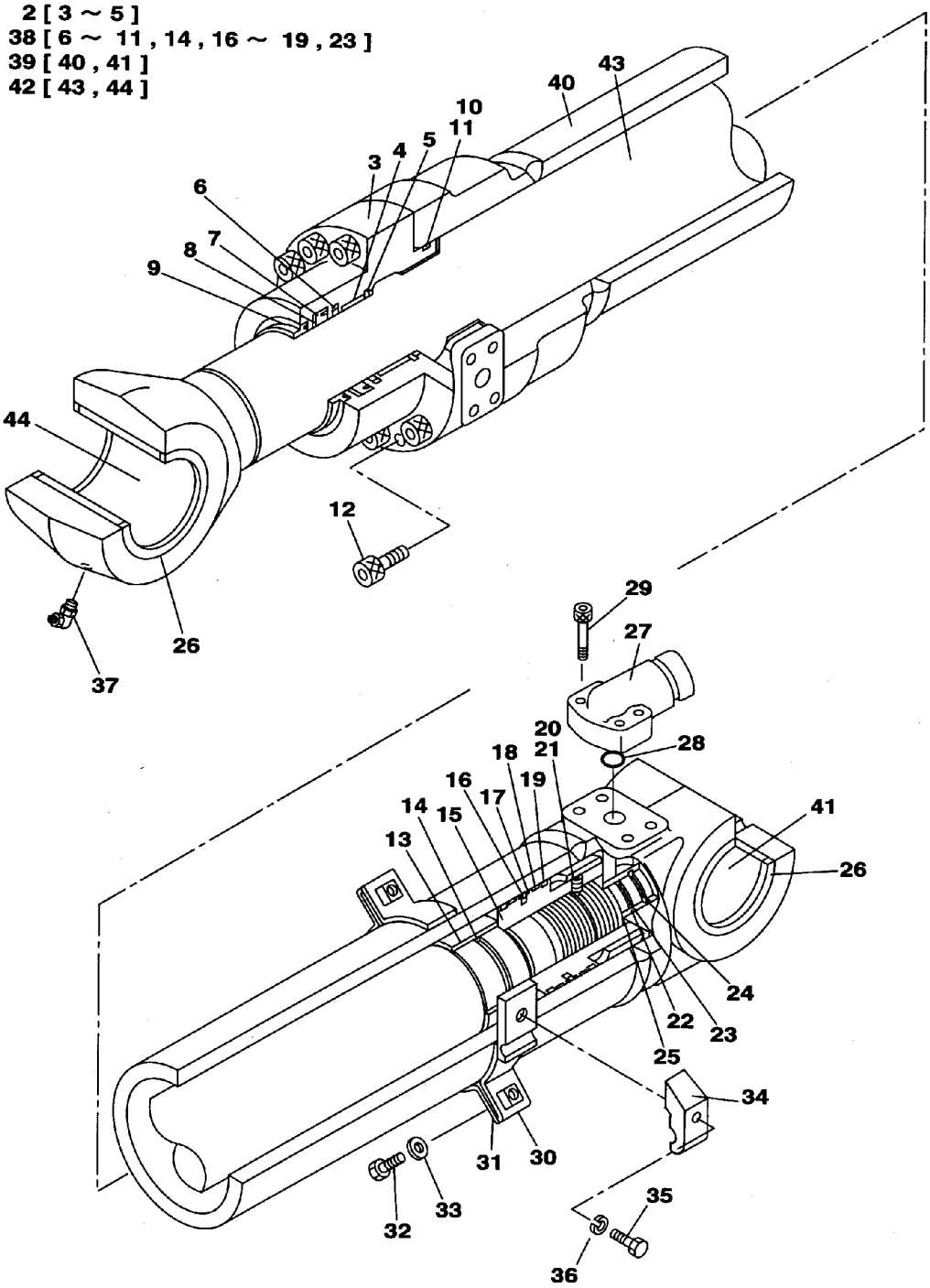

KRV19620

https://truckmanualshub.com/

CYL;ARM	ｼﾘﾝﾀﾞ;ｱｰﾑ (EMS HBCV)	ZAJ222L0098 001 2/2	001

符号 ITEM	構成 COMPO	部品番号 PART NO.	部品名	PART NAME	個数 Q'TY	互換 ICA	代替部品 REPLACEABLE PART	備考 MEMO
		KRV19620			1			
1	1A	KRV19630	ｼﾘﾝﾀﾞ;ｱｰﾑ (ﾌﾞｼｭﾚｽ)	CYL;ARM	1			
2	2A	LU002410	ﾍｯﾄﾞ;ｼﾘﾝﾀﾞ S/A	HEAD;CYL	1			
3	3	LU002400	ﾍｯﾄﾞ;ｼﾘﾝﾀﾞ	HEAD;CYL	1			
4	3	LKU0098	ﾌﾞｼｭ ﾄｸｼｭ	BUSH;SPL	1			
5	3	LMU0131	ﾘﾝｸﾞ ｽﾅｯﾌﾟ	RING	1			
6	2	LE012390	ﾘﾝｸﾞ ﾊﾞｯﾌｧ	RING	1			
7	2	LE012310	U-ﾘﾝｸﾞ	U-RING	1			
8	2	LE00954	ﾘﾝｸﾞ;ﾊﾞｯｸｱｯﾌﾟ ﾄｸｼｭ	RING;BACK-UP	1			
9	2	LPU0116	ﾘﾝｸﾞ;ﾜｲﾊﾟ	RING;WIPER	1			
10	2	LBQ1353	O-ﾘﾝｸﾞ JISB2401 1BG1	O-RING	1			
11	2	LE00784	ﾘﾝｸﾞ;ﾊﾞｯｸｱｯﾌﾟ ﾄｸｼｭ	RING;BACK-UP	1			
12	2	108R018Z080N	ﾛｯｶｸｱﾅB M18X 80	BOLT;HEX SOC HD	12			
13	2	LE013180	ﾘﾝｸﾞ;ｸｯｼｮﾝ	CUSHION RING	1			
14	2	LE013190	ｼｰﾙ;ｸｯｼｮﾝ	SEAL;CUSHION	1			
14	2	LE015980	ｼｰﾙ;ｸｯｼｮﾝ	SEAL;CUSHION	1			
15	2	LJ014160	ﾋﾟｽﾄﾝ	PISTON	1			
16	2	LEU0020	ｼｰﾙﾘﾝｸﾞ S/A	SEAL RING;SPL	1			
17	2	LE00785	ﾘﾝｸﾞ;ﾊﾞｯｸｱｯﾌﾟ ﾄｸｼｭ	RING;BACK-UP	2			
18	2	LE013200	ﾘﾝｸﾞ;ｽﾗｲﾄﾞ	SLIDE RING	2			
19	2	LEU0007	ﾘﾝｸﾞ ｽﾗｲﾄﾞ	RING;SPL	2			
20	2	LUU0106	ｽｸﾘｭｰ ﾄｸｼｭ	SCREW;SPL	1			
21	2	LPU0078	ﾎﾞｰﾙ;ｽﾁｰﾙ	STEEL BALL	1			
22	2	LE013210	ﾘﾝｸﾞ;ｸｯｼｮﾝ	CUSHION RING	1			
23	2	LE00746	ｼｰﾙ;ｸｯｼｮﾝ	SEAL;CUSHION	1			
24	2	LMU0359	ｽﾄｯﾊﾟ	STOPPER	2			
25	2	LMU0361	ｼﾞｸﾄﾒﾜ (ｽﾅｯﾌﾟﾘﾝｸﾞ)	RING;SNAP	1			
26	2	KHV0237	ﾘﾝｸﾞ;ﾜｲﾊﾟ	RING;WIPER	4			
27	2	LJ014170	ｼﾞｮｲﾝﾄ	JOINT;SPL	1			
28	2	LBQ0342	O-ﾘﾝｸﾞ JISB2401 1BP3	O-RING	1			
29	2	108R012Y035N	ﾛｯｶｸｱﾅB M12X 35	BOLT;HEX SOC HD	4			
30	2	LD001380	ﾊﾞﾝﾄﾞ S/A	BAND;SPL	1			
31	2	LZU0021	ﾊﾞﾝﾄﾞ	BAND;SPL	1			
32	2	LUU0137	ﾎﾞﾙﾄ	BOLT;SPL	2			
33	2	LUU0105	ﾜｯｼｬ	WASHER	2			
34	2	LMU0207	ﾎﾙﾀﾞ ﾊﾟｲﾌﾟ	HOLDER	1			
35	2	102R012Y055N	ｺｳﾘｷB M12X 55	BOLT;HIGH STRENGTH	1			
36	2	183-112VN	SW 12	WASHER;SPRING	1			
37	2	M01X1800	ﾆｯﾌﾟﾙ;ｸﾞﾘｽ (C-R1/8)	NIPPLE;GREASE	1			
38	2	LZ007640	ｷｯﾄ;ｼﾘﾝﾀﾞ ｼｰﾙ	KIT;CYL SEAL	1			
39	2A	LR014130	ﾁｭｰﾌﾞ;ｼﾘﾝﾀﾞ S/A	TUBE;CYL	1			
40	3	LR014110	ﾁｭｰﾌﾞ;ｼﾘﾝﾀﾞ	TUBE;CYL	1			
41	3	KRV2400	ﾌﾞｼｭ;ｵｲﾙﾚｽ	BUSH;OILLESS	1			
42	2A	LB011340	ﾛｯﾄﾞ;ｼﾘﾝﾀﾞ S/A	CYLINDER ROD	1			
43	3	LB011330	ﾛｯﾄﾞ;ｼﾘﾝﾀﾞ	CYLINDER ROD	1			
44	3	KRV2400	ﾌﾞｼｭ;ｵｲﾙﾚｽ	BUSH;OILLESS	1			

https://truckmanualshub.com/

CYL;ARM	ｼﾘﾝﾀﾞ;ｱｰﾑ (EMS)	ZAJ222L0128 001 1/2	000

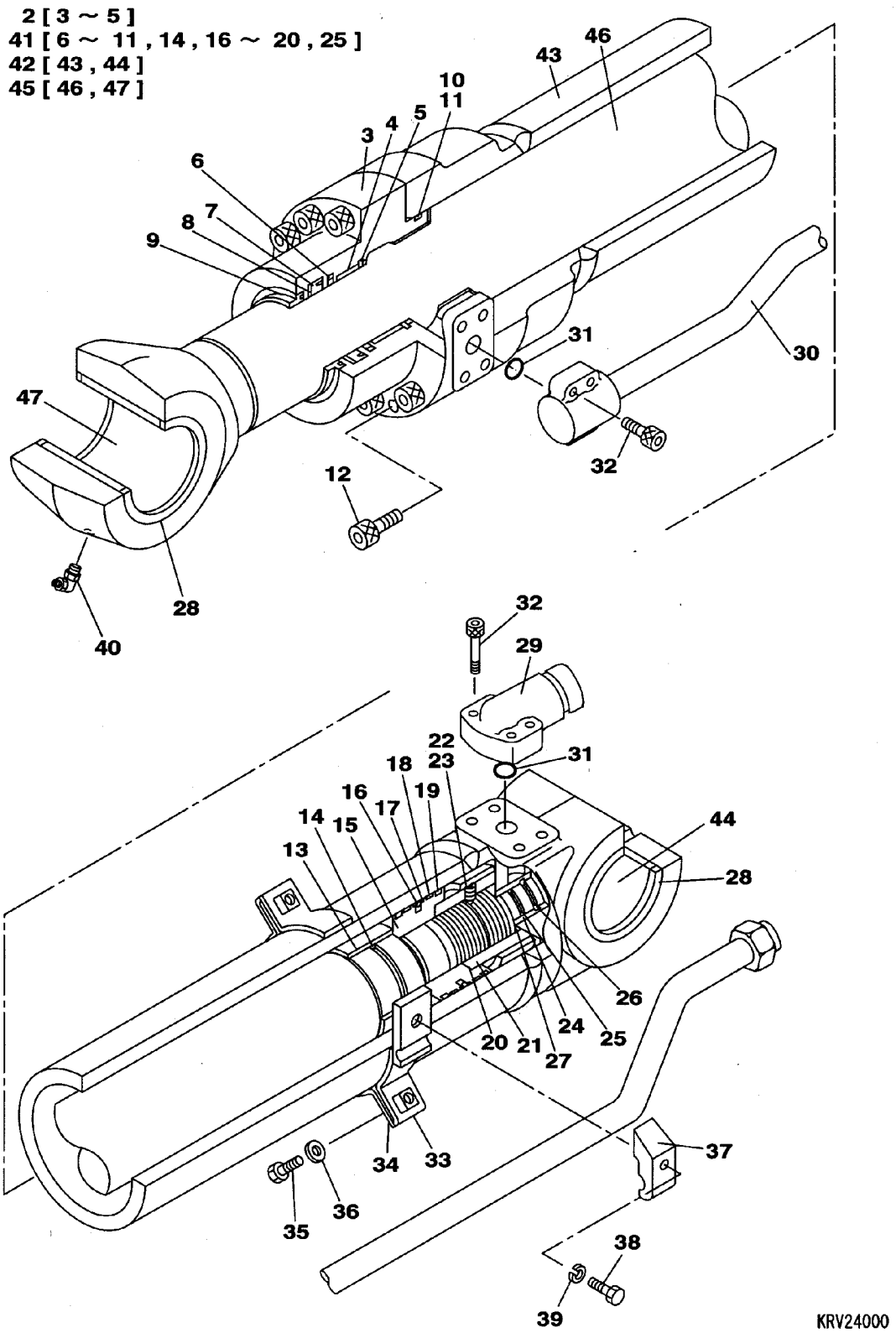

https://truckmanualshub.com/

CYL;ARM	ｼﾘﾝﾀﾞ;ｱｰﾑ (EMS)	ZAJ222L0128 001 2/2	001

符号 ITEM	構成 COMPO	部品番号 PART NO.	部品名	PART NAME	個数 Q'TY	互換 ICA	代替部品 REPLACEABLE PART	備考 MEMO
		KRV24000			1			
1	1A	KRV24650	ｼﾘﾝﾀﾞ;ｱｰﾑ (ﾌﾞｼｭﾚｽ)	CYL;ARM	1			
2	2	LZ007780	ｷｯﾄ;ｼﾘﾝﾀﾞ ﾍｯﾄﾞ	KIT;CYL HEAD	1			
2	2A	LU00191	ｷｯﾄ;ｼﾘﾝﾀﾞ ﾍｯﾄﾞ	KIT;CYL HEAD	1			
3	3	LU002440	ﾍｯﾄﾞ;ｼﾘﾝﾀﾞ	HEAD;CYL	1			
3	3	LU00192	ﾍｯﾄﾞ;ｼﾘﾝﾀﾞ	HEAD;CYL	1			
4	3	LKU0106	ﾌﾞｼｭ ﾄｸｼｭ	BUSH;SPL	1			
5	3	LMU0188	ﾘﾝｸﾞ ｽﾅｯﾌﾟ	RING	1			
6	2	LE012550	ﾘﾝｸﾞ ﾊﾞｯﾌｧ	RING	1			
7	2	LE012320	U-ﾘﾝｸﾞ	U-RING	1			
8	2	LE00738	ﾘﾝｸﾞ;ﾊﾞｯｸｱｯﾌﾟ ﾄｸｼｭ	RING;BACK-UP	1			
9	2	LAU0174	ﾘﾝｸﾞ;ﾜｲﾊﾟ	RING;WIPER	1			
10	2	LBQ1403	O-ﾘﾝｸﾞ JISB2401 1BG1	O-RING	1			
11	2	LE00739	ﾘﾝｸﾞ;ﾊﾞｯｸｱｯﾌﾟ ﾄｸｼｭ	RING;BACK-UP	1			
12	2	108R020Z080N	ﾛｯｶｸｱﾅB M20X80-F12.9	BOLT;HEX SOC HD	10			
13	2	LE015470	ﾘﾝｸﾞ;ｸｯｼｮﾝ	CUSHION RING	1			
13	2	LE00740	ﾘﾝｸﾞ;ｸｯｼｮﾝ	CUSHION RING	1			
14	2	LE00741	ｼｰﾙ;ｸｯｼｮﾝ	SEAL;CUSHION	1			
15	2	LJ014420	ﾋﾟｽﾄﾝ	PISTON	1			
16	2	LE00742	ｼｰﾙﾘﾝｸﾞ ASSY	SEAL RING;SPL	1			
17	2	LE00743	ﾘﾝｸﾞ;ﾊﾞｯｸｱｯﾌﾟ ﾄｸｼｭ	RING;BACK-UP	2			
18	2	LE013620	ﾘﾝｸﾞ;ｽﾗｲﾄﾞ	SLIDE RING	2			
19	2	LE00745	ﾘﾝｸﾞ;ｽﾗｲﾄﾞ	SLIDE RING	2			
20	2	LMU0371	ｼﾑ	SHIM;SPL	1			
21	2	LA010880	ﾅｯﾄ ﾄｸｼｭ	NUT;SPL	1			
22	2	LUU0106	ｽｸﾘｭｰ ﾄｸｼｭ	SCREW;SPL	1			
23	2	LPU0078	ﾎﾞｰﾙ;ｽﾁｰﾙ	STEEL BALL	1			
24	2	LE015480	ﾘﾝｸﾞ;ｸｯｼｮﾝ	CUSHION RING	1			
24	2	LKU0131	ﾘﾝｸﾞ;ｸｯｼｮﾝ	CUSHION RING	1			
25	2	LE00746	ｼｰﾙ;ｸｯｼｮﾝ	SEAL;CUSHION	1			
26	2	LMU0359	ｽﾄｯﾊﾟ	STOPPER	2			
27	2	LMU0361	ｼﾞｸﾄﾒﾜ (ｽﾅｯﾌﾟﾘﾝｸﾞ)	RING;SNAP	1			
28	2	KHV0239	ﾘﾝｸﾞ;ﾜｲﾊﾟ	RING;WIPER	4			
29	2	LJ014170	ｼﾞｮｲﾝﾄ	JOINT;SPL	1			
30	2	LR015930	ﾊﾟｲﾌﾟ S/A	PIPE;SPL	1			
31	2	LBQ0342	O-ﾘﾝｸﾞ JISB2401 1BP3	O-RING	2			
32	2	108R012Y035N	ﾛｯｶｸｱﾅB M12X 35	BOLT;HEX SOC HD	8			
33	2	LD001410	ﾊﾞﾝﾄﾞ ﾄｸｼｭ	BAND;SPL	1			
34	2	LD001400	ﾊﾞﾝﾄﾞ ﾄｸｼｭ	BAND;SPL	1			
35	2	LUU0137	ﾎﾞﾙﾄ	BOLT;SPL	2			
36	2	LUU0105	ﾜｯｼｬ	WASHER	2			
37	2	LMU0207	ﾎﾙﾀﾞ ﾊﾟｲﾌﾟ	HOLDER	1			
38	2	102R012Y055N	ｺｳﾘｷB M12X 55	BOLT;HIGH STRENGTH	1			
39	2	183-112VN	SW 12	WASHER;SPRING	1			
40	2	M01X1800	ﾆｯﾌﾟﾙ;ｸﾞﾘｽ (C-R1/8)	NIPPLE;GREASE	1			
41	2	LZ008050	KIT;ｼﾘﾝﾀﾞ ﾊﾟｰﾂ	KIT;CYL PARTS	1			
42	2A	LZ008630	S/A;ｼﾘﾝﾀﾞ ﾁｭｰﾌﾞ	SA;CYL TUBE	1			
43	3	LR015920	ﾁｭｰﾌﾞ;ｼﾘﾝﾀﾞ	TUBE;CYL	1			
43	3	LR016080	ﾁｭｰﾌﾞ;ｼﾘﾝﾀﾞ	TUBE;CYL	1			
44	3	KBV1362	ﾌﾞｼｭ;ｵｲﾙﾚｽ	BUSH;OILLESS	1			
45	2A	LZ008640	SA;ｼﾘﾝﾀﾞ ﾛｯﾄﾞ	SA;CYL ROD	1			
46	3	LB012210	ﾛｯﾄﾞ;ﾋﾟｽﾄﾝ	ROD;PISTON	1			
47	3	KBV1362	ﾌﾞｼｭ;ｵｲﾙﾚｽ	BUSH;OILLESS	1			

https://truckmanualshub.com/

CYL;ARM	ｼﾘﾝﾀﾞ;ｱｰﾑ (EMS HBCV)	ZAJ222L0130	001	1/2	000

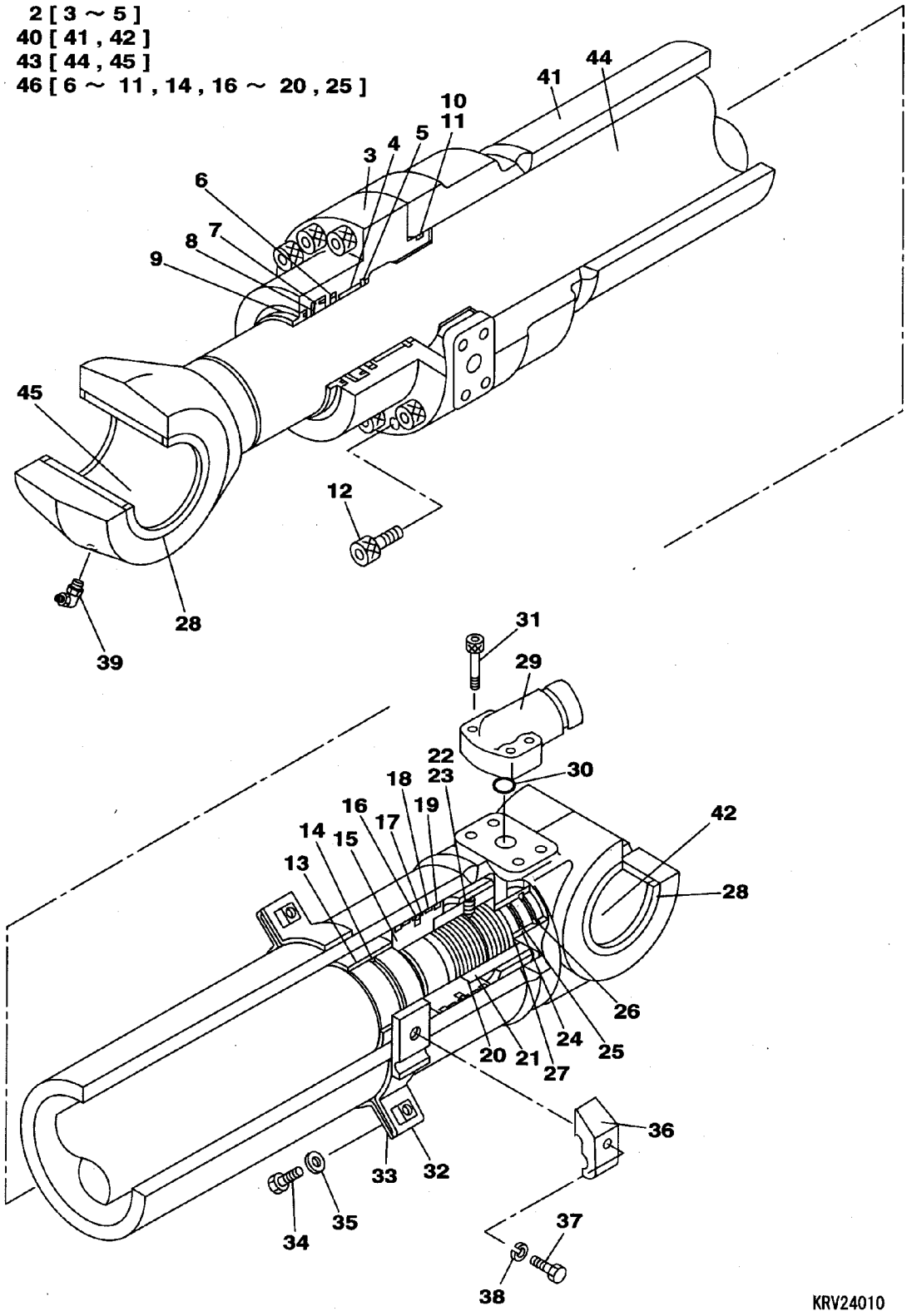

https://truckmanualshub.com/

CYL;ARM	ｼﾘﾝﾀﾞ;ｱｰﾑ (EMS HBCV)	ZAJ222L0130 001 2/2	001

符号 ITEM	構成 COMPO	部品番号 PART NO.	部品名	PART NAME	個数 Q'TY	互換 ICA	代替部品 REPLACEABLE PART	備考 MEMO
		KRV24010			1			
1	1A	KRV24700	ｼﾘﾝﾀﾞ;ｱｰﾑ (HBCV ﾌﾞｼｭ	CYL;ARM	1			
2	2	LZ007780	ｷｯﾄ;ｼﾘﾝﾀﾞ ﾍｯﾄﾞ	KIT;CYL HEAD	1			
2	2A	LU00191	ｷｯﾄ;ｼﾘﾝﾀﾞ ﾍｯﾄﾞ	KIT;CYL HEAD	1			
3	3	LU002440	ﾍｯﾄﾞ;ｼﾘﾝﾀﾞ	HEAD;CYL	1			
3	3	LU00192	ﾍｯﾄﾞ;ｼﾘﾝﾀﾞ	HEAD;CYL	1			
4	3	LKU0106	ﾌﾞｼｭ ﾄｸｼｭ	BUSH;SPL	1			
5	3	LMU0188	ﾘﾝｸﾞ ｽﾅｯﾌﾟ	RING	1			
6	2	LE012550	ﾘﾝｸﾞ ﾊﾞｯﾌｧ	RING	1			
7	2	LE012320	U-ﾘﾝｸﾞ	U-RING	1			
8	2	LE00738	ﾘﾝｸﾞ;ﾊﾞｯｸｱｯﾌﾟ ﾄｸｼｭ	RING;BACK-UP	1			
9	2	LAU0174	ﾘﾝｸﾞ;ﾜｲﾊﾟ	RING;WIPER	1			
10	2	LBQ1403	O-ﾘﾝｸﾞ JISB2401 1BG1	O-RING	1			
11	2	LE00739	ﾘﾝｸﾞ;ﾊﾞｯｸｱｯﾌﾟ ﾄｸｼｭ	RING;BACK-UP	1			
12	2	108R020Z080N	ﾛｯｶｸｱﾅB M20X80-F12.9	BOLT;HEX SOC HD	10			
13	2	LE015490	ﾘﾝｸﾞ;ｸｯｼｮﾝ	CUSHION RING	1			
13	2	LE00740	ﾘﾝｸﾞ;ｸｯｼｮﾝ	CUSHION RING	1			
14	2	LE00741	ｼｰﾙ;ｸｯｼｮﾝ	SEAL;CUSHION	1			
15	2	LJ014420	ﾋﾟｽﾄﾝ	PISTON	1			
16	2	LE00742	ｼｰﾙﾘﾝｸﾞ ASSY	SEAL RING;SPL	1			
17	2	LE00743	ﾘﾝｸﾞ;ﾊﾞｯｸｱｯﾌﾟ ﾄｸｼｭ	RING;BACK-UP	2			
18	2	LE013620	ﾘﾝｸﾞ;ｽﾗｲﾄﾞ	SLIDE RING	2			
19	2	LE00745	ﾘﾝｸﾞ;ｽﾗｲﾄﾞ	SLIDE RING	2			
20	2	LMU0371	ｼﾑ	SHIM;SPL	1			
21	2	LA010880	ﾅｯﾄ ﾄｸｼｭ	NUT;SPL	1			
22	2	LUU0106	ｽｸﾘｭｰ ﾄｸｼｭ	SCREW;SPL	1			
23	2	LPU0078	ﾎﾞｰﾙ;ｽﾁｰﾙ	STEEL BALL	1			
24	2	LE015500	ﾘﾝｸﾞ;ｸｯｼｮﾝ	CUSHION RING	1			
24	2	LKU0131	ﾘﾝｸﾞ;ｸｯｼｮﾝ	CUSHION RING	1			
25	2	LE00746	ｼｰﾙ;ｸｯｼｮﾝ	SEAL;CUSHION	1			
26	2	LMU0359	ｽﾄｯﾊﾟ	STOPPER	2			
27	2	LMU0361	ｼﾞｸﾄﾒﾜ (ｽﾅｯﾌﾟﾘﾝｸﾞ)	RING;SNAP	1			
28	2	KHV0239	ﾘﾝｸﾞ;ﾜｲﾊﾟ	RING;WIPER	4			
29	2	LJ014170	ｼﾞｮｲﾝﾄ	JOINT;SPL	1			
30	2	LBQ0342	O-ﾘﾝｸﾞ JISB2401 1BP3	O-RING	1			
31	2	108R012Y035N	ﾛｯｶｸｱﾅB M12X 35	BOLT;HEX SOC HD	4			
32	2	LD001410	ﾊﾞﾝﾄﾞ ﾄｸｼｭ	BAND;SPL	1			
33	2	LD001400	ﾊﾞﾝﾄﾞ ﾄｸｼｭ	BAND;SPL	1			
34	2	LUU0137	ﾎﾞﾙﾄ	BOLT;SPL	2			
35	2	LUU0105	ﾜｯｼｬ	WASHER	2			
36	2	LMU0207	ﾎﾙﾀﾞ ﾊﾟｲﾌﾟ	HOLDER	1			
37	2	102R012Y055N	ｺｳﾘｷB M12X 55	BOLT;HIGH STRENGTH	1			
38	2	183-112VN	SW 12	WASHER;SPRING	1			
39	2	M01X1800	ﾆｯﾌﾟﾙ;ｸﾞﾘｽ (C-R1/8)	NIPPLE;GREASE	1			
40	2A	LZ008630	S/A;ｼﾘﾝﾀﾞ ﾁｭｰﾌﾞ	SA;CYL TUBE	1			
41	3	LR015920	ﾁｭｰﾌﾞ;ｼﾘﾝﾀﾞ	TUBE;CYL	1			
41	3	LR016080	ﾁｭｰﾌﾞ;ｼﾘﾝﾀﾞ	TUBE;CYL	1			
42	3	KBV1362	ﾌﾞｼｭ;ｵｲﾙﾚｽ	BUSH;OILLESS	1			
43	2A	LZ008640	SA;ｼﾘﾝﾀﾞ ﾛｯﾄﾞ	SA;CYL ROD	1			
44	3	LB012210	ﾛｯﾄﾞ;ﾋﾟｽﾄﾝ	ROD;PISTON	1			
45	3	KBV1362	ﾌﾞｼｭ;ｵｲﾙﾚｽ	BUSH;OILLESS	1			
46	2	LZ008050	KIT;ｼﾘﾝﾀﾞ ﾊﾟｰﾂ	KIT;CYL PARTS	1			

https://truckmanualshub.com/

CYL;BUCKET	ｼﾘﾝﾀﾞ;ﾊﾞｹｯﾄ (EMS)	ZAJ223L0061 000 1/2	000

1 [2 ~ 35 , 37 , 40] 2 [3 ~ 5] 35 [5 ~ 10 , 15 ~ 17]
36 [37 , 38] 39 [40 , 41]

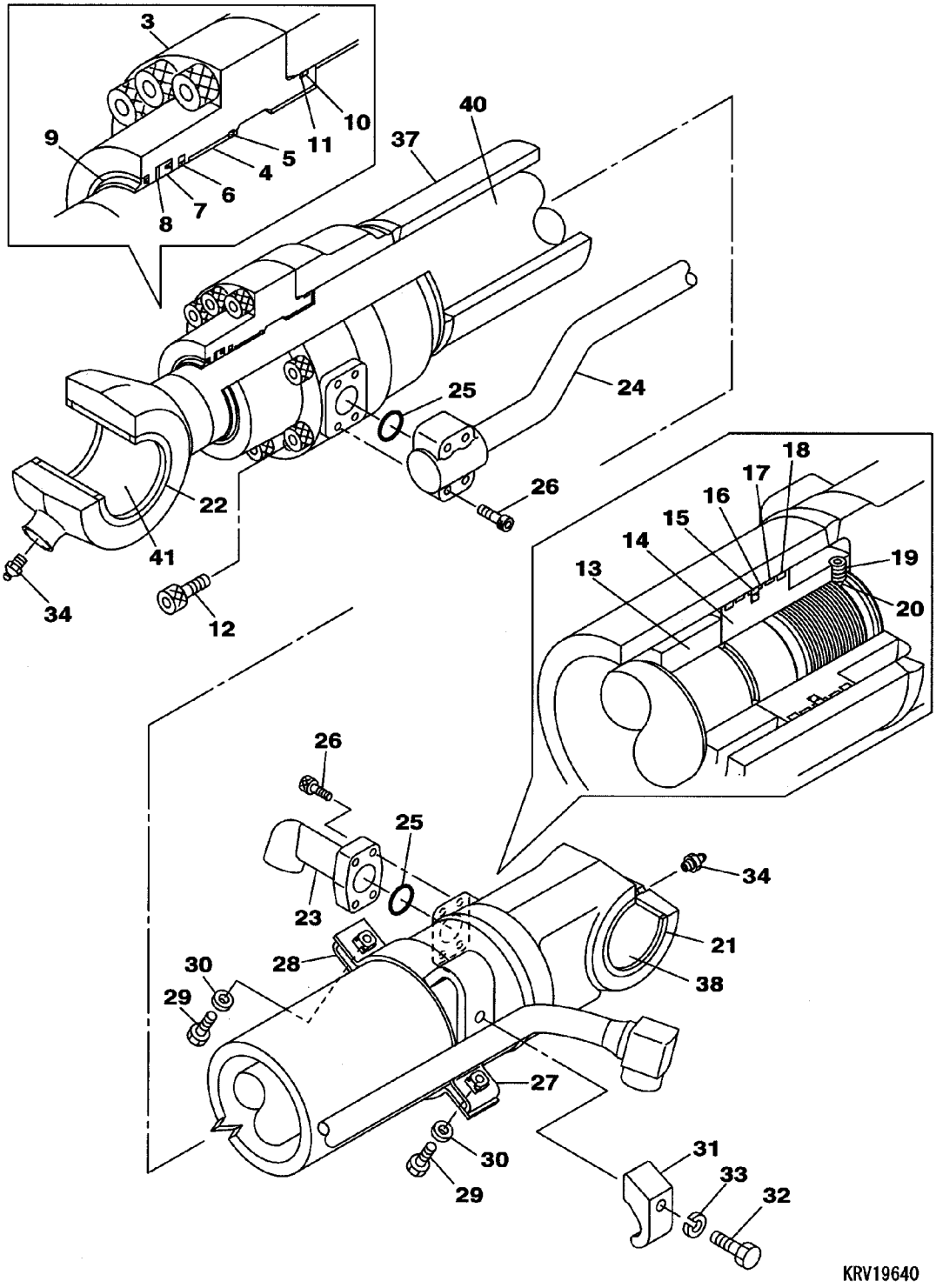

https://truckmanualshub.com/

CYL;BUCKET	ｼﾘﾝﾀﾞ;ﾊﾞｹｯﾄ (EMS)	ZAJ223L0061 000 2/2	000

符号 ITEM	構成 COMPO	部品番号 PART NO.	部品名	PART NAME	個数 Q'TY	互換 ICA	代替部品 REPLACEABLE PART	備考 MEMO
		KRV19640			1			
1	1A	KRV19650	ｼﾘﾝﾀﾞ;ﾊﾞｹｯﾄ (ﾌﾞｼｭﾚｽ)	CYL;BUCKET	1			
2	2A	LU00073	ﾍｯﾄﾞ;ｼﾘﾝﾀﾞ S/A	HEAD;CYL	1			
3	3	LU00106	ﾍｯﾄﾞ;ｼﾘﾝﾀﾞ	HEAD;CYL	1			
4	3	LKU0087	ﾌﾞｼｭ ﾄｸｼｭ	BUSH;SPL	1			
5	3	LMU0135	ﾘﾝｸﾞ ｽﾅｯﾌﾟ	RING	1			
6	2	LE013140	ﾘﾝｸﾞ ﾊﾞｯﾌｧ	RING	1			
7	2	LE013150	U-ﾘﾝｸﾞ	U-RING	1			
8	2	LBU0042	ﾘﾝｸﾞ;ﾊﾞｯｸｱｯﾌﾟ	RING;BACK-UP	1			
9	2	LPU0118	ﾘﾝｸﾞ;ﾜｲﾊﾟ	RING;WIPER	1			
10	2	LBQ1153	O-ﾘﾝｸﾞ JISB2401 1BG1	O-RING	1			
11	2	LBU0044	ﾘﾝｸﾞ;ﾊﾞｯｸｱｯﾌﾟ	RING;BACK-UP	1			
12	2	LUU0152	ﾎﾞﾙﾄ	BOLT;SPL	12			
13	2	LE013220	ﾘﾝｸﾞ;ｸｯｼｮﾝ	CUSHION RING	1			
14	2	LJ014180	ﾋﾟｽﾄﾝ	PISTON	1			
15	2	LEU0021	ｼｰﾙﾘﾝｸﾞ S/A	SEAL RING;SPL	1			
16	2	LE00705	ﾘﾝｸﾞ;ﾊﾞｯｸｱｯﾌﾟ ﾄｸｼｭ	RING;BACK-UP	2			
17	2	LE013170	ﾘﾝｸﾞ;ｽﾗｲﾄﾞ	SLIDE RING	2			
18	2	LEU0009	ﾘﾝｸﾞ ｽﾗｲﾄﾞ	RING;SPL	2			
19	2	LUU0100	ｽｸﾘｭｰ ｾｯﾄ	SCREW	1			
20	2	LPU0074	ﾎﾞｰﾙ ｽﾁｰﾙ	BALL	1			
21	2	LAU0086	ﾘﾝｸﾞ;ﾜｲﾊﾟ	RING;WIPER	2			
22	2	KHV0238	ﾘﾝｸﾞ;ﾜｲﾊﾟ	RING;WIPER	2			
23	2	LK00290	ﾂｷﾞﾃ	JOINT	1			
24	2	LR014150	ﾊﾟｲﾌﾟ S/A	PIPE;SPL	1			
25	2	LBQ0302	O-ﾘﾝｸﾞ JISB2401 1BP3	O-RING	2			
26	2	108R010Z030N	ﾛｯｶｸｱﾅB JISB1176 M10	BOLT;HEX SOC HD	8			
27	2	LD001390	ﾊﾞﾝﾄﾞ S/A	BAND;SPL	1			
28	2	LZU0022	ﾊﾞﾝﾄﾞ	BAND;SPL	1			
29	2	LUU0137	ﾎﾞﾙﾄ	BOLT;SPL	2			
30	2	LUU0105	ﾜｯｼｬ	WASHER	2			
31	2	LMU0207	ﾎﾙﾀﾞ ﾊﾟｲﾌﾟ	HOLDER	1			
32	2	102R012Y055N	ｺｳﾘｷB M12X 55	BOLT;HIGH STRENGTH	1			
33	2	183-112VN	SW 12	WASHER;SPRING	1			
34	2	M01X0812	ﾆｯﾌﾟﾙ;ｸﾞﾘｽ (A-R1/8)	NIPPLE;GREASE	2			
35	2	LZ007650	ｷｯﾄ;ｼﾘﾝﾀﾞ ｼｰﾙ	KIT;CYL SEAL	1			
36	2A	LR014160	ﾁｭｰﾌﾞ;ｼﾘﾝﾀﾞ S/A	TUBE;CYL	1			
37	3	LR014140	ﾁｭｰﾌﾞ;ｼﾘﾝﾀﾞ	TUBE;CYL	1			
38	3	KRV2399	ﾌﾞｼｭ;ｵｲﾙﾚｽ	BUSH;OILLESS	1			
39	2A	LB011360	ﾛｯﾄﾞ;ｼﾘﾝﾀﾞ S/A	CYLINDER ROD	1			
40	3	LB011350	ﾛｯﾄﾞ;ｼﾘﾝﾀﾞ	CYLINDER ROD	1			
41	3	KRV2398	ﾌﾞｼｭ;ｵｲﾙﾚｽ	BUSH;OILLESS	1			
41	3A	KRV2398	ﾌﾞｼｭ;ｵｲﾙﾚｽ	BUSH;OILLESS	1			

https://truckmanualshub.com/

CYL;BUCKET	ｼﾘﾝﾀﾞ;ﾊﾞｹｯﾄ (EMS)	ZAJ223L0075 000 1/2	000

2 [3 ~ 5] 39 [40 , 41] 42 [43 , 44] 45 [6 ~ 11 , 15 ~ 18]

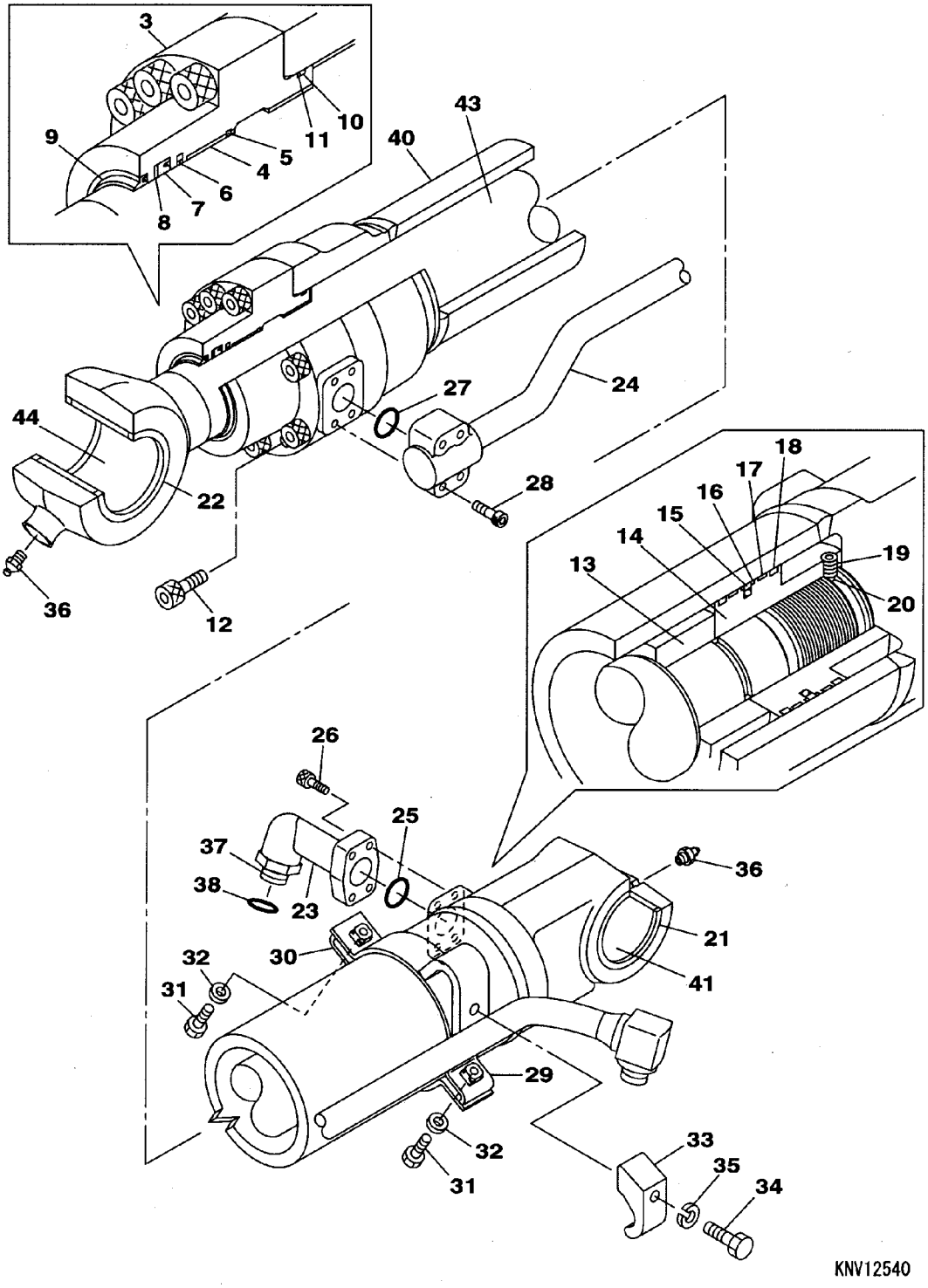

https://truckmanualshub.com/

CYL;BUCKET	ｼﾘﾝﾀﾞ;ﾊﾞｹｯﾄ (EMS)	ZAJ223L0075 000 2/2	000

符号 ITEM	構成 COMPO	部品番号 PART NO.	部品名	PART NAME	個数 Q'TY	互換 ICA	代替部品 REPLACEABLE PART	備考 MEMO
		KNV12540			1			
1	1A	KNV14160	ｼﾘﾝﾀﾞ;ﾊﾞｹｯﾄ (ﾌﾞｼｭﾚｽ)	CYL;BUCKET	1			
2	2A	LU00079	ﾍｯﾄﾞ;ｼﾘﾝﾀﾞ S/A	HEAD;CYL	1			
3	3	LU00104	ﾍｯﾄﾞ;ｼﾘﾝﾀﾞ	HEAD;CYL	1			
4	3	LB00512	ﾌﾞｼｭ	BUSH;SPL	1			
5	3	LMU0137	ﾘﾝｸﾞ ｽﾅｯﾌﾟ	RING	1			
6	2	LE015600	ﾘﾝｸﾞ ﾊﾞｯﾌｧ	RING	1			
7	2	LE015610	U-ﾘﾝｸﾞ	U-RING	1			
8	2	LBU0039	ﾘﾝｸﾞ;ﾊﾞｯｸｱｯﾌﾟ	RING;BACK-UP	1			
9	2	LE00422	ﾘﾝｸﾞ;ﾜｲﾊﾟ	RING;WIPER	1			
10	2	LBQ0903	O-ﾘﾝｸﾞ JISB2401 1BG9	O-RING	1			
11	2	LBU0088	ﾘﾝｸﾞ;ﾊﾞｯｸｱｯﾌﾟ	RING;BACK-UP	1			
12	2	108R014Z055R	ﾛｯｶｸｱﾅB M14X55-F12.9	BOLT;HEX SOC HD	10			
13	2	LE00735	ﾘﾝｸﾞ;ｸｯｼｮﾝ	CUSHION RING	1			
14	2	LJ015400	ﾋﾟｽﾄﾝ	PISTON	1			
15	2	LEU0085	ﾘﾝｸﾞ;ｼｰﾙ	RING;SEAL	1			
16	2	LBU0097	ﾘﾝｸﾞ;ﾊﾞｯｸｱｯﾌﾟ	RING;BACK-UP	2			
17	2	LE015620	ﾘﾝｸﾞ;ｽﾗｲﾄﾞ	SLIDE RING	2			
18	2	LEU0104	ﾘﾝｸﾞ;ｽﾗｲﾄﾞ	SLIDE RING	2			
19	2	LUU0099	ｽｸﾘｭｰ ｾｯﾄ	SCREW	1			
20	2	LPU0073	ﾎﾞｰﾙ ｽﾁｰﾙ	BALL	1			
21	2	KHV0245	ｼｰﾙ;ﾀﾞｽﾄ	SEAL;DUST	2			
22	2	KHV0249	ﾘﾝｸﾞ;ﾜｲﾊﾟ	RING;WIPER	2			
23	2	LLU0014	ﾂｷﾞﾃ	JOINT	1			
24	2	LR016020	ﾊﾟｲﾌﾟ S/A	PIPE	1			
25	2	LBQ0302	O-ﾘﾝｸﾞ JISB2401 1BP3	O-RING	1			
26	2	108R010Z030N	ﾛｯｶｸｱﾅB JISB1176 M10	BOLT;HEX SOC HD	4			
27	2	LBQ0222	O-ﾘﾝｸﾞ JISB2401 1BP2	O-RING	1			
28	2	108R008Z025N	ﾛｯｶｸｱﾅB M8X25-F12.9	BOLT;HEX SOC HD	4			
29	2	LD001640	ﾊﾞﾝﾄﾞ S/A	BAND;SPL	1			
30	2	LZU0081	ﾊﾞﾝﾄﾞ	BAND;SPL	1			
31	2	LUU0137	ﾎﾞﾙﾄ	BOLT;SPL	2			
32	2	LUU0105	ﾜｯｼｬ	WASHER	2			
33	2	LMU0338	ﾎﾙﾀﾞ ﾊﾟｲﾌﾟ	HOLDER	1			
34	2	102R012Y050R	ｺｳﾘｷB M12X 50	BOLT;HIGH STRENGTH	1			
35	2	183-112VN	SW 12	WASHER;SPRING	1			
36	2	M01X0812	ﾆｯﾌﾟﾙ;ｸﾞﾘｽ (A-R1/8)	NIPPLE;GREASE	2			
37	2	LK005460	ﾆｯﾌﾟﾙ	NIPPLE	1			
38	2	LBQ0242	O-ﾘﾝｸﾞ JISB2401 1BP2	O-RING	1			
39	2A	LZ008760	S/A;ｼﾘﾝﾀﾞ ﾁｭｰﾌﾞ	SA;CYL TUBE	1			
40	3	LR016030	ﾁｭｰﾌﾞ;ｼﾘﾝﾀﾞ	TUBE;CYL	1			
41	3	KNV1141	ﾌﾞｼｭ;ｵｲﾙﾚｽ	BUSH;OILLESS	1			
42	2A	LZ008770	D/S;ｼﾘﾝﾀﾞ ﾛｯﾄﾞ	SA;CYL ROD	1			
43	3	LB012270	ﾛｯﾄﾞ;ﾋﾟｽﾄﾝ	ROD;PISTON	1			
44	3	KNV1139	ﾌﾞｼｭ;ｵｲﾙﾚｽ	BUSH;OILLESS	1			
45	2	LZ008750	KIT;ｼﾘﾝﾀﾞ ﾊﾟｰﾂ	KIT;CYL PARTS	1			

https://truckmanualshub.com/

CYL;BUCKET	ｼﾘﾝﾀﾞ;ﾊﾞｹｯﾄ (EMS)	ZAJ223L0080 000 1/2	000

2 [3 ~ 5]　37 [6 ~ 11 , 15 ~ 18]　38 [39 , 40]　41 [42 , 43]

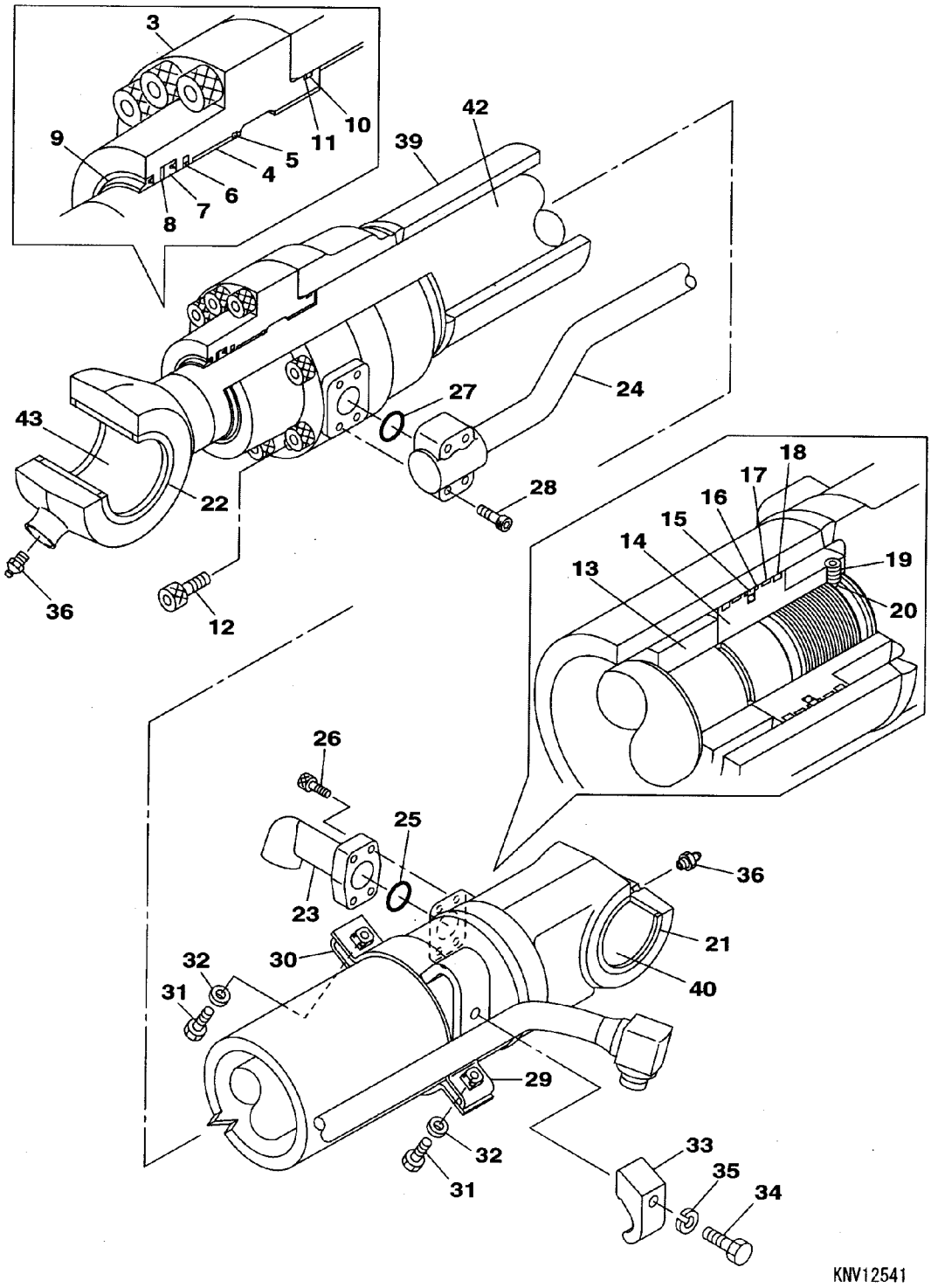

https://truckmanualshub.com/

CYL;BUCKET	ｼﾘﾝﾀﾞ;ﾊﾞｹｯﾄ (EMS)	ZAJ223L0080 000 2/2	000

符号 ITEM	構成 COMPO	部品番号 PART NO.	部品名	PART NAME	個数 Q'TY	互換 ICA	代替部品 REPLACEABLE PART	備考 MEMO
		KNV12541			1			
1	1A	KNV14161	ｼﾘﾝﾀﾞ;ﾊﾞｹｯﾄ (ﾌﾞｼｭﾚｽ)	CYL;BUCKET	1			
2	2A	LU00079	ﾍｯﾄﾞ;ｼﾘﾝﾀﾞ S/A	HEAD;CYL	1			
3	3	LU00104	ﾍｯﾄﾞ;ｼﾘﾝﾀﾞ	HEAD;CYL	1			
4	3	LB00512	ﾌﾞｼｭ	BUSH;SPL	1			
5	3	LMU0137	ﾘﾝｸﾞ ｽﾅｯﾌﾟ	RING	1			
6	2	LE015600	ﾘﾝｸﾞ ﾊﾞｯﾌｧ	RING	1			
7	2	LE015610	U-ﾘﾝｸﾞ	U-RING	1			
8	2	LBU0039	ﾘﾝｸﾞ;ﾊﾞｯｸｱｯﾌﾟ	RING;BACK-UP	1			
9	2	LE00422	ﾘﾝｸﾞ;ﾜｲﾊﾟ	RING;WIPER	1			
10	2	LBQ0903	O-ﾘﾝｸﾞ JISB2401 1BG9	O-RING	1			
11	2	LBU0088	ﾘﾝｸﾞ;ﾊﾞｯｸｱｯﾌﾟ	RING;BACK-UP	1			
12	2	108R014Z055R	ﾛｯｶｸｱﾅB M14X55-F12.9	BOLT;HEX SOC HD	10			
13	2	LE00735	ﾘﾝｸﾞ;ｸｯｼｮﾝ	CUSHION RING	1			
14	2	LJ015400	ﾋﾟｽﾄﾝ	PISTON	1			
15	2	LEU0085	ﾘﾝｸﾞ;ｼｰﾙ	RING;SEAL	1			
16	2	LBU0097	ﾘﾝｸﾞ;ﾊﾞｯｸｱｯﾌﾟ	RING;BACK-UP	2			
17	2	LE015620	ﾘﾝｸﾞ;ｽﾗｲﾄﾞ	SLIDE RING	2			
18	2	LEU0104	ﾘﾝｸﾞ;ｽﾗｲﾄﾞ	SLIDE RING	2			
19	2	LUU0099	ｽｸﾘｭｰ ｾｯﾄ	SCREW	1			
20	2	LPU0073	ﾎﾞｰﾙ ｽﾁｰﾙ	BALL	1			
21	2	KHV0245	ｼｰﾙ;ﾀﾞｽﾄ	SEAL;DUST	2			
22	2	KHV0249	ﾘﾝｸﾞ;ﾜｲﾊﾟ	RING;WIPER	2			
23	2	LLU0014	ﾂｷﾞﾃ	JOINT	1			
24	2	LR016020	ﾊﾟｲﾌﾟ S/A	PIPE	1			
25	2	LBQ0302	O-ﾘﾝｸﾞ JISB2401 1BP3	O-RING	1			
26	2	108R010Z030N	ﾛｯｶｸｱﾅB JISB1176 M10	BOLT;HEX SOC HD	4			
27	2	LBQ0222	O-ﾘﾝｸﾞ JISB2401 1BP2	O-RING	1			
28	2	108R008Z025N	ﾛｯｶｸｱﾅB M8X25-F12.9	BOLT;HEX SOC HD	4			
29	2	LD001640	ﾊﾞﾝﾄﾞ S/A	BAND;SPL	1			
30	2	LZU0081	ﾊﾞﾝﾄﾞ	BAND;SPL	1			
31	2	LUU0137	ﾎﾞﾙﾄ	BOLT;SPL	2			
32	2	LUU0105	ﾜｯｼｬ	WASHER	2			
33	2	LMU0338	ﾎﾙﾀﾞ ﾊﾟｲﾌﾟ	HOLDER	1			
34	2	102R012Y050R	ｺｳﾘｷB M12X 50	BOLT;HIGH STRENGTH	1			
35	2	183-112VN	SW 12	WASHER;SPRING	1			
36	2	M01X0812	ﾆｯﾌﾟﾙ;ｸﾞﾘｽ (A-R1/8)	NIPPLE;GREASE	2			
37	2	LZ008750	KIT;ｼﾘﾝﾀﾞ ﾊﾟｰﾂ	KIT;CYL PARTS	1			
38	2A	LZ008760	S/A;ｼﾘﾝﾀﾞ ﾁｭｰﾌﾞ	SA;CYL TUBE	1			
39	3	LR016030	ﾁｭｰﾌﾞ;ｼﾘﾝﾀﾞ	TUBE;CYL	1			
40	3	KNV1141	ﾌﾞｼｭ;ｵｲﾙﾚｽ	BUSH;OILLESS	1			
41	2A	LZ008770	S/A;ｼﾘﾝﾀﾞ ﾛｯﾄﾞ	SA;CYL ROD	1			
42	3	LB012270	ﾛｯﾄﾞ;ﾋﾟｽﾄﾝ	ROD;PISTON	1			
43	3	KNV1139	ﾌﾞｼｭ;ｵｲﾙﾚｽ	BUSH;OILLESS	1			

https://truckmanualshub.com/

64 [65] 66 [67 , 68] 69 [70 , 71] 73 [74] 75 [76] 77 [78 , 79]

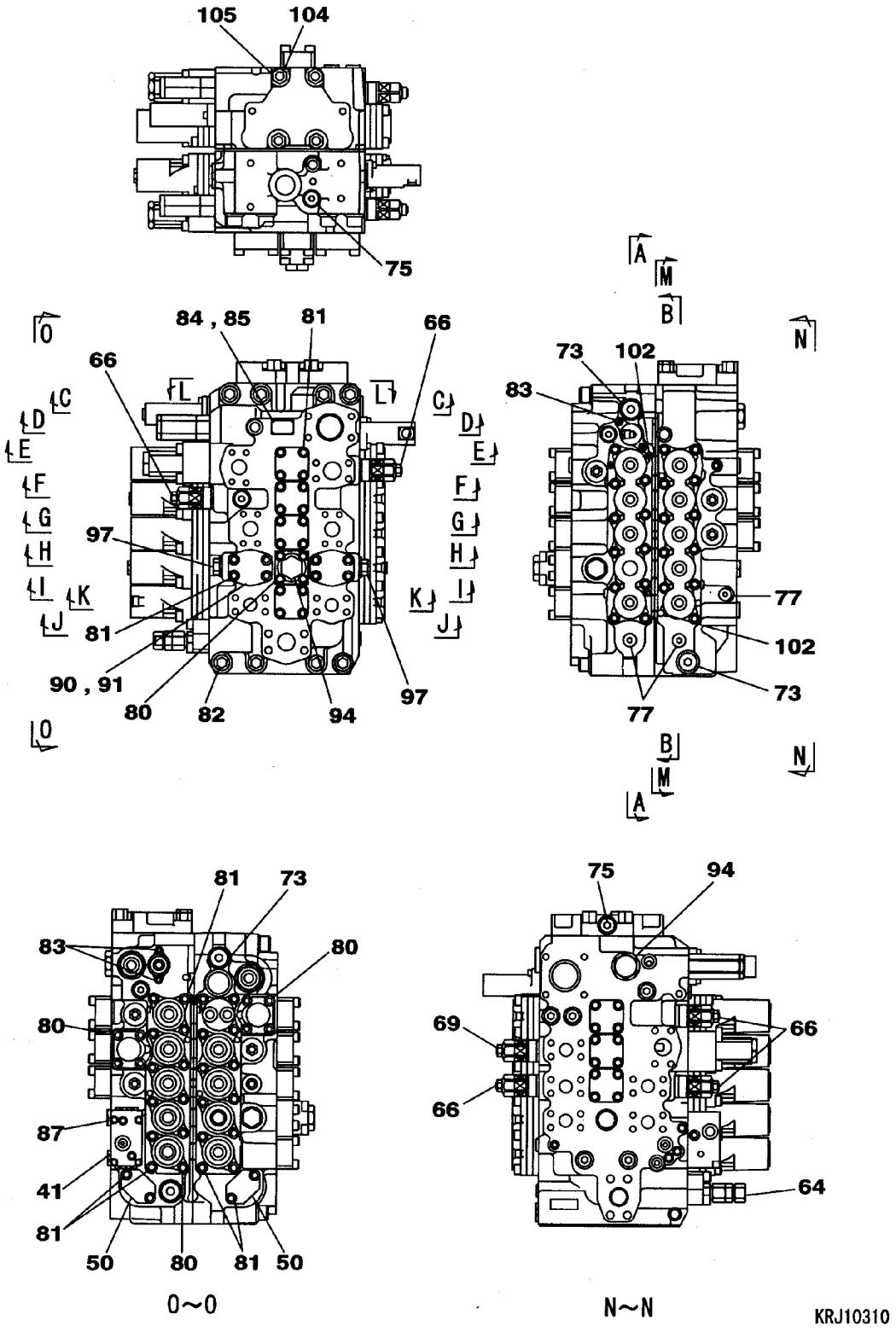

https://truckmanualshub.com/

VALVE;CONTROL	ﾊﾞﾙﾌﾞ;ｺﾝﾄﾛｰﾙ	ZAJ313L0090 001 2/20	001

符号 ITEM	構成 COMPO	部品番号 PART NO.	部品名	PART NAME	個数 Q'TY	互換 ICA	代替部品 REPLACEABLE PART	備考 MEMO
		KRJ10310			1			
1	1	-------	ﾊｳｼﾞﾝｸﾞ;ﾊﾞﾙﾌﾞ	HOUSING;VALVE	1			
2	1	-------	ｽﾌﾟｰﾙ ASSY	SPOOL	1			
3	1	-------	ｽﾌﾟｰﾙ ASSY	SPOOL	1			
4	1	-------	ｽﾌﾟｰﾙ ASSY	SPOOL	1			
5	1	-------	ｽﾌﾟｰﾙ ASSY	SPOOL	2			
6	1	-------	ｽﾌﾟｰﾙ ASSY	SPOOL	1			
7	1	LBQ0453	O-ﾘﾝｸﾞ JISB2401 1BG4	O-RING	20			
8	1	LR015210	ｷｬｯﾌﾟ	CAP	9			
9	1	LR015220	ｷｬｯﾌﾟ	CAP	1			
10	1A	LR015230	ﾌﾟﾚｰﾄ ASS'Y	PLATE;SPL	1			
10.01	2A	-------	ﾌﾟﾚｰﾄ ASS'Y	PLATE;SPL	1			
10.02	3	-------	ﾌﾟﾚｰﾄ	PLATE	1			
10.03	3	-------	ﾌﾟﾚｰﾄ	PLATE	1			
10.04	3	-------	ﾌﾟﾚｰﾄ	PLATE	1			
10.05	3	-------	ｶﾞｽｹｯﾄ	GASKET	2			
10.06	3	-------	ｽﾌﾟｰﾙ	SPOOL	5			
10.07	3	-------	ﾌｲﾙﾀ ﾄｸｼｭ	FILTER;SPL	4			
10.08	3	LBQ0453	O-ﾘﾝｸﾞ JISB2401 1BG4	O-RING	5			
10.09	3	108R006Z025N	ﾛｯｶｸｱﾅB M6X25-12.9	BOLT;HEX SOC HD	2			
11	1A	LR015240	ﾌﾟﾚｰﾄ ASS'Y	PLATE;SPL	1			
11.01	2A	-------	ﾌﾟﾚｰﾄ ASS'Y	PLATE;SPL	1			
11.02	3	-------	ﾌﾟﾚｰﾄ	PLATE	1			
11.03	3	-------	ﾌﾟﾚｰﾄ	PLATE	1			
11.04	3	-------	ﾌﾟﾚｰﾄ	PLATE	1			
11.05	3	-------	ｶﾞｽｹｯﾄ	GASKET	2			
11.06	3	-------	ｽﾌﾟｰﾙ	SPOOL	5			
11.07	3	-------	ﾌｲﾙﾀ ﾄｸｼｭ	FILTER;SPL	5			
11.08	3	LBQ0453	O-ﾘﾝｸﾞ JISB2401 1BG4	O-RING	5			
11.09	3	108R006Z025N	ﾛｯｶｸｱﾅB M6X25-12.9	BOLT;HEX SOC HD	2			
12	1	-------	ﾊｳｼﾞﾝｸﾞ;ﾊﾞﾙﾌﾞ	HOUSING;VALVE	1			
13	1	-------	ｽﾌﾟｰﾙ ASSY	SPOOL	1			
14	1	-------	ｽﾌﾟｰﾙ ASSY	SPOOL	1			
15	1	-------	ｽﾌﾟｰﾙ ASSY	SPOOL	1			
16	1	-------	ｽﾌﾟｰﾙ ASSY	SPOOL	1			
17	1	LR015250	ｷｬｯﾌﾟ	CAP	1			
18	1	-------	ｽﾌﾟｰﾙ;ﾊﾞﾙﾌﾞ	SPOOL;VALVE	1			
19	1	LSC0158	ｼｰﾄ;ｽﾌﾟﾘﾝｸﾞ	SEAT;SPRING	2			
20	1	LG00338	ｽﾌﾟﾘﾝｸﾞ;ｱｯｼｭｸ	SPRING;COMPRESSION	1			
21	1	LPC0222	ｴﾝﾄﾞ ｽﾌﾟｰﾙ	END;SPL	1			
22	1	LBQ0260	O-ﾘﾝｸﾞ JISB2401 1AP2	O-RING	1			
23	1	LK005690	ﾌﾟﾗｸﾞ	PLUG	1			
24	1	LBQ0242	O-ﾘﾝｸﾞ JISB2401 1BP2	O-RING	1			
25	1	LG00339	ｽﾌﾟﾘﾝｸﾞ;ｱｯｼｭｸ	SPRING;COMPRESSION	1			
26	1	LJ014690	ｽﾌﾟｰﾙ ASSY	SPOOL	1			
27	1A	LR015260	ﾌﾟﾚｰﾄ ASS'Y	PLATE;SPL	1			
27.01	2A	-------	ﾌﾟﾚｰﾄ ASS'Y	PLATE;SPL	1			
27.02	3	-------	ﾌﾟﾚｰﾄ	PLATE	1			
27.03	3	-------	ﾌﾟﾚｰﾄ	PLATE	1			
27.04	3	-------	ﾌﾟﾚｰﾄ	PLATE	1			
27.05	3	-------	ｶﾞｽｹｯﾄ	GASKET	2			
27.06	3	-------	ｽﾌﾟｰﾙ	SPOOL	3			
27.07	3	-------	ﾌｲﾙﾀ ﾄｸｼｭ	FILTER;SPL	3			
27.08	3	108R006Z025N	ﾛｯｶｸｱﾅB M6X25-12.9	BOLT;HEX SOC HD	2			
28	1A	LR015270	ﾌﾟﾚｰﾄ ASS'Y	PLATE;SPL	1			
28.01	2A	-------	ﾌﾟﾚｰﾄ ASS'Y	PLATE;SPL	1			
28.02	3	-------	ﾌﾟﾚｰﾄ	PLATE	1			
28.03	3	-------	ﾌﾟﾚｰﾄ	PLATE	1			
28.04	3	-------	ﾌﾟﾚｰﾄ	PLATE	1			
28.05	3	-------	ｶﾞｽｹｯﾄ	GASKET	2			
28.06	3	-------	ｽﾌﾟｰﾙ	SPOOL	4			
28.07	3	-------	ﾌｲﾙﾀ ﾄｸｼｭ	FILTER;SPL	4			
28.08	3	108R006Z025N	ﾛｯｶｸｱﾅB M6X25-12.9	BOLT;HEX SOC HD	2			
29	1	LBQ0162	O-ﾘﾝｸﾞ JISB2401 1BP1	O-RING	1			
30	1	LBB0162	ﾘﾝｸﾞ;ﾊﾞｯｸｱｯﾌﾟ	RING;BACK-UP	2			
31	1	LJ00726	ﾎﾟﾍﾟｯﾄ	POPPET	2			
32	1	LG00340	ｽﾌﾟﾘﾝｸﾞ;ｱｯｼｭｸ	SPRING;COMPRESSION	2			
33	1	LJ00727	ﾎﾟﾍﾟｯﾄ	POPPET	7			

https://truckmanualshub.com/

75 [76]

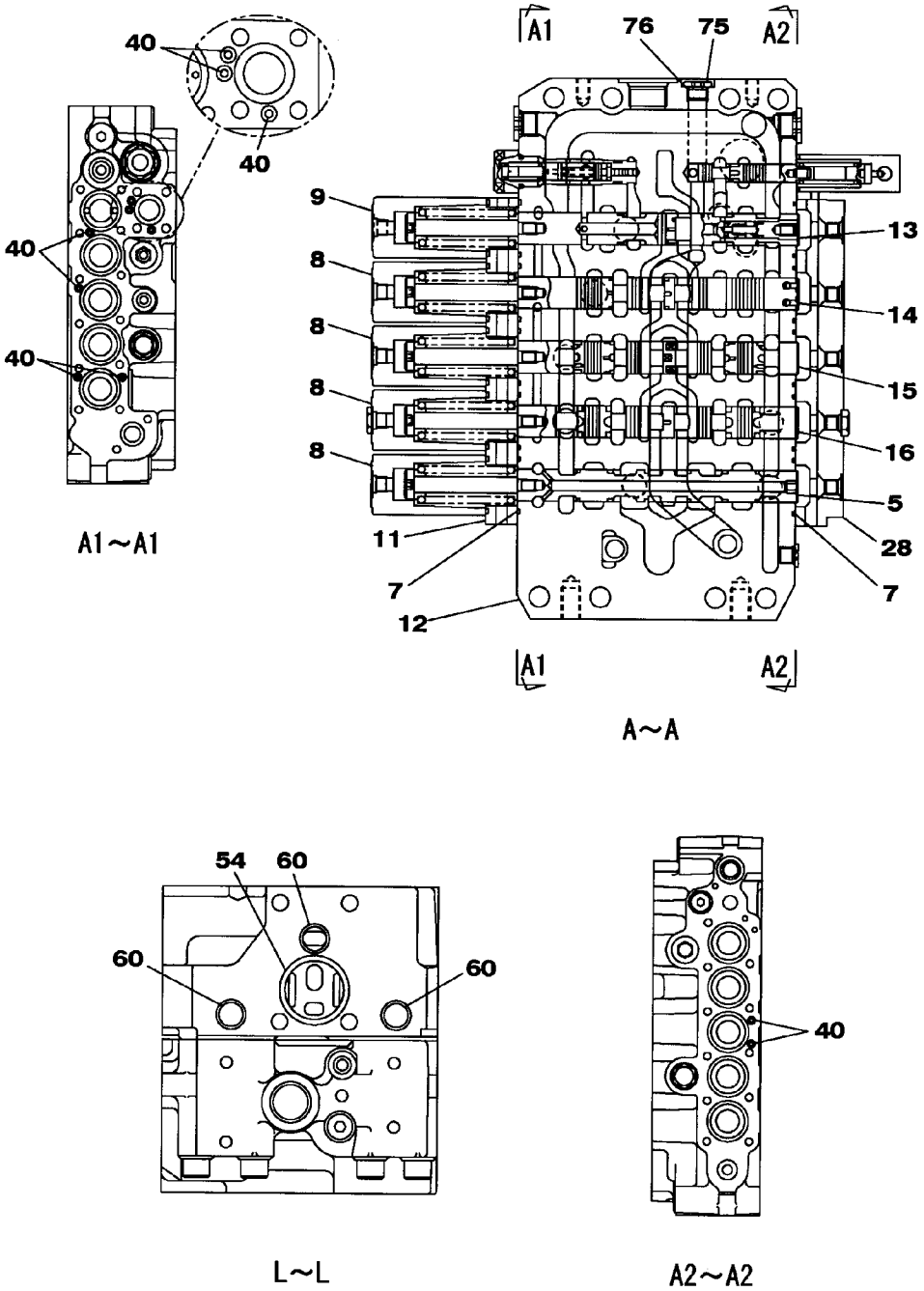

KRJ10310

https://truckmanualshub.com/

VALVE;CONTROL	ﾊﾞﾙﾌﾞ;ｺﾝﾄﾛｰﾙ	ZAJ313L0090 001 4/20	001

符号 ITEM	構成 COMPO	部品番号 PART NO.	部品名	PART NAME	個数 Q'TY	互換 ICA	代替部品 REPLACEABLE PART	備考 MEMO
9	1	LR015220	ｷｬｯﾌﾟ	CAP	1			
10	1A	LR015230	ﾌﾟﾚｰﾄ ASS'Y	PLATE;SPL	1			
10.01	2A	-------	ﾌﾟﾚｰﾄ ASS'Y	PLATE;SPL	1			
10.02	3	-------	ﾌﾟﾚｰﾄ	PLATE	1			
10.03	3	-------	ﾌﾟﾚｰﾄ	PLATE	1			
10.04	3	-------	ﾌﾟﾚｰﾄ	PLATE	1			
10.05	3	-------	ｶﾞｽｹｯﾄ	GASKET	2			
10.06	3	-------	ｽﾌﾟｰﾙ	SPOOL	5			
10.07	3	-------	ﾌｨﾙﾀ ﾄｸｼｭ	FILTER;SPL	4			
10.08	3	LBQ0453	O-ﾘﾝｸﾞ JISB2401 1BG4	O-RING	5			
10.09	3	108R006Z025N	ﾛｯｶｸｱﾅB M6X25-12.9	BOLT;HEX SOC HD	2			
11	1A	LR015240	ﾌﾟﾚｰﾄ ASS'Y	PLATE;SPL	1			
11.01	2A	-------	ﾌﾟﾚｰﾄ ASS'Y	PLATE;SPL	1			
11.02	3	-------	ﾌﾟﾚｰﾄ	PLATE	1			
11.03	3	-------	ﾌﾟﾚｰﾄ	PLATE	1			
11.04	3	-------	ﾌﾟﾚｰﾄ	PLATE	1			
11.05	3	-------	ｶﾞｽｹｯﾄ	GASKET	2			
11.06	3	-------	ｽﾌﾟｰﾙ	SPOOL	5			
11.07	3	-------	ﾌｨﾙﾀ ﾄｸｼｭ	FILTER;SPL	5			
11.08	3	LBQ0453	O-ﾘﾝｸﾞ JISB2401 1BG4	O-RING	5			
11.09	3	108R006Z025N	ﾛｯｶｸｱﾅB M6X25-12.9	BOLT;HEX SOC HD	2			
12	1	-------	ﾊｳｼﾞﾝｸﾞ;ﾊﾞﾙﾌﾞ	HOUSING;VALVE	1			
13	1	-------	ｽﾌﾟｰﾙ ASSY	SPOOL	1			
14	1	-------	ｽﾌﾟｰﾙ ASSY	SPOOL	1			
15	1	-------	ｽﾌﾟｰﾙ ASSY	SPOOL	1			
16	1	-------	ｽﾌﾟｰﾙ ASSY	SPOOL	1			
17	1	LR015250	ｷｬｯﾌﾟ	CAP	1			
18	1	-------	ｽﾌﾟｰﾙ;ﾊﾞﾙﾌﾞ	SPOOL;VALVE	1			
19	1	LSC0158	ｼｰﾄ;ｽﾌﾟﾘﾝｸﾞ	SEAT;SPRING	2			
20	1	LG00338	ｽﾌﾟﾘﾝｸﾞ;ｱｯｼｭｸ	SPRING;COMPRESSION	1			
21	1	LPC0222	ｴﾝﾄﾞ ｽﾌﾟｰﾙ	END;SPL	1			
22	1	LBQ0260	O-ﾘﾝｸﾞ JISB2401 1AP2	O-RING	1			
23	1	LK005690	ﾌﾟﾗｸﾞ	PLUG	1			
24	1	LBQ0242	O-ﾘﾝｸﾞ JISB2401 1BP2	O-RING	1			
25	1	LG00339	ｽﾌﾟﾘﾝｸﾞ;ｱｯｼｭｸ	SPRING;COMPRESSION	1			
26	1	LJ014690	ｽﾌﾟｰﾙ ASSY	SPOOL	1			
27	1A	LR015260	ﾌﾟﾚｰﾄ ASS'Y	PLATE;SPL	1			
27.01	2A	-------	ﾌﾟﾚｰﾄ ASS'Y	PLATE;SPL	1			
27.02	3	-------	ﾌﾟﾚｰﾄ	PLATE	1			
27.03	3	-------	ﾌﾟﾚｰﾄ	PLATE	1			
27.04	3	-------	ﾌﾟﾚｰﾄ	PLATE	1			
27.05	3	-------	ｶﾞｽｹｯﾄ	GASKET	2			
27.06	3	-------	ｽﾌﾟｰﾙ	SPOOL	3			
27.07	3	-------	ﾌｨﾙﾀ ﾄｸｼｭ	FILTER;SPL	3			
27.08	3	108R006Z025N	ﾛｯｶｸｱﾅB M6X25-12.9	BOLT;HEX SOC HD	2			
28	1A	LR015270	ﾌﾟﾚｰﾄ ASS'Y	PLATE;SPL	1			
28.01	2A	-------	ﾌﾟﾚｰﾄ ASS'Y	PLATE;SPL	1			
28.02	3	-------	ﾌﾟﾚｰﾄ	PLATE	1			
28.03	3	-------	ﾌﾟﾚｰﾄ	PLATE	1			
28.04	3	-------	ﾌﾟﾚｰﾄ	PLATE	1			
28.05	3	-------	ｶﾞｽｹｯﾄ	GASKET	2			
28.06	3	-------	ｽﾌﾟｰﾙ	SPOOL	4			
28.07	3	-------	ﾌｨﾙﾀ ﾄｸｼｭ	FILTER;SPL	4			
28.08	3	108R006Z025N	ﾛｯｶｸｱﾅB M6X25-12.9	BOLT;HEX SOC HD	2			
29	1	LBQ0162	O-ﾘﾝｸﾞ JISB2401 1BP1	O-RING	1			
30	1	LBB0162	ﾘﾝｸﾞ;ﾊﾞｯｸｱｯﾌﾟ	RING;BACK-UP	2			
31	1	LJ00726	ﾎﾟﾍﾟｯﾄ	POPPET	2			
32	1	LG00340	ｽﾌﾟﾘﾝｸﾞ;ｱｯｼｭｸ	SPRING;COMPRESSION	2			
33	1	LJ00727	ﾎﾟﾍﾟｯﾄ	POPPET	7			
34	1	LG00341	ｽﾌﾟﾘﾝｸﾞ;ｱｯｼｭｸ	SPRING;COMPRESSION	8			
35	1	LBQ0322	O-ﾘﾝｸﾞ JISB2401 1BP3	O-RING	10			
36	1	LH00248	ﾌﾗﾝｼﾞ	FLANGE;SPL	6			
37	1	LPC0180	ﾎﾟﾍﾟｯﾄ	POPPET	2			
38	1	LSC0227	ｽﾌﾟﾘﾝｸﾞ ﾄｸｼｭ	SPRING;SPL	2			
39	1	LJ00731	ｵﾘﾌｨｽ	ORIFICE	1			
40	1	LBQ0062	O-ﾘﾝｸﾞ JISB2401 1BP6	O-RING	27			
41	1	LR015280	ﾎﾞﾃﾞｨ ASSY	BODY	1			
42	1	LH00249	ﾌﾗﾝｼﾞ	FLANGE;SPL	1			

https://truckmanualshub.com/

64 [65]

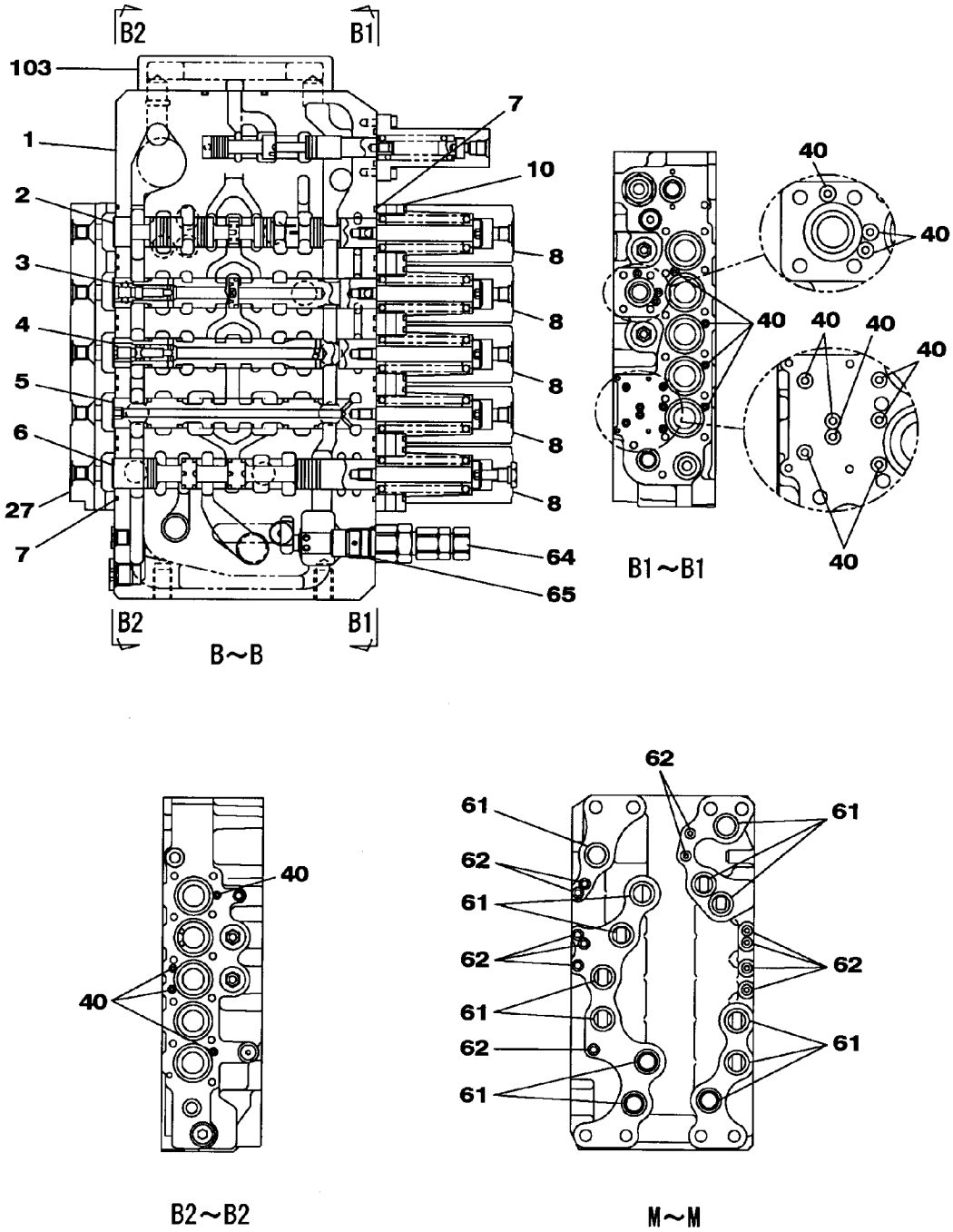

KRJ10310

https://truckmanualshub.com/

符号 ITEM	構成 COMPO	部品番号 PART NO.	部品名	PART NAME	個数 Q'TY	互換 ICA	代替部品 REPLACEABLE PART	備考 MEMO
10.08	3	LBQ0453	O-ﾘﾝｸﾞ JISB2401 1BG4	O-RING	5			
10.09	3	108R006Z025N	ﾛｯｶｸｱﾅB M6X25-12.9	BOLT;HEX SOC HD	2			
11	1A	LR015240	ﾌﾟﾚｰﾄ ASS'Y	PLATE;SPL	1			
11.01	2A	-------	ﾌﾟﾚｰﾄ ASS'Y	PLATE;SPL	1			
11.02	3	-------	ﾌﾟﾚｰﾄ	PLATE	1			
11.03	3	-------	ﾌﾟﾚｰﾄ	PLATE	1			
11.04	3	-------	ﾌﾟﾚｰﾄ	PLATE	1			
11.05	3	-------	ｶﾞｽｹｯﾄ	GASKET	2			
11.06	3	-------	ｽﾌﾟｰﾙ	SPOOL	5			
11.07	3	-------	ﾌｨﾙﾀ ﾄｸｼｭ	FILTER;SPL	5			
11.08	3	LBQ0453	O-ﾘﾝｸﾞ JISB2401 1BG4	O-RING	5			
11.09	3	108R006Z025N	ﾛｯｶｸｱﾅB M6X25-12.9	BOLT;HEX SOC HD	2			
12	1	-------	ﾊｳｼﾞﾝｸﾞ;ﾊﾞﾙﾌﾞ	HOUSING;VALVE	1			
13	1	-------	ｽﾌﾟｰﾙ ASSY	SPOOL	1			
14	1	-------	ｽﾌﾟｰﾙ ASSY	SPOOL	1			
15	1	-------	ｽﾌﾟｰﾙ ASSY	SPOOL	1			
16	1	-------	ｽﾌﾟｰﾙ ASSY	SPOOL	1			
17	1	LR015250	ｷｬｯﾌﾟ	CAP	1			
18	1	-------	ｽﾌﾟｰﾙ;ﾊﾞﾙﾌﾞ	SPOOL;VALVE	1			
19	1	LSC0158	ｼｰﾄ;ｽﾌﾟﾘﾝｸﾞ	SEAT;SPRING	2			
20	1	LG00338	ｽﾌﾟﾘﾝｸﾞ;ｱｯｼｭｸ	SPRING;COMPRESSION	1			
21	1	LPC0222	ｴﾝﾄﾞ ｽﾌﾟｰﾙ	END;SPL	1			
22	1	LBQ0260	O-ﾘﾝｸﾞ JISB2401 1AP2	O-RING	1			
23	1	LK005690	ﾌﾟﾗｸﾞ	PLUG	1			
24	1	LBQ0242	O-ﾘﾝｸﾞ JISB2401 1BP2	O-RING	1			
25	1	LG00339	ｽﾌﾟﾘﾝｸﾞ;ｱｯｼｭｸ	SPRING;COMPRESSION	1			
26	1	LJ014690	ｽﾌﾟｰﾙ ASSY	SPOOL	1			
27	1A	LR015260	ﾌﾟﾚｰﾄ ASS'Y	PLATE;SPL	1			
27.01	2A	-------	ﾌﾟﾚｰﾄ ASS'Y	PLATE;SPL	1			
27.02	3	-------	ﾌﾟﾚｰﾄ	PLATE	1			
27.03	3	-------	ﾌﾟﾚｰﾄ	PLATE	1			
27.04	3	-------	ﾌﾟﾚｰﾄ	PLATE	1			
27.05	3	-------	ｶﾞｽｹｯﾄ	GASKET	2			
27.06	3	-------	ｽﾌﾟｰﾙ	SPOOL	3			
27.07	3	-------	ﾌｨﾙﾀ ﾄｸｼｭ	FILTER;SPL	3			
27.08	3	108R006Z025N	ﾛｯｶｸｱﾅB M6X25-12.9	BOLT;HEX SOC HD	2			
28	1A	LR015270	ﾌﾟﾚｰﾄ ASS'Y	PLATE;SPL	1			
28.01	2A	-------	ﾌﾟﾚｰﾄ ASS'Y	PLATE;SPL	1			
28.02	3	-------	ﾌﾟﾚｰﾄ	PLATE	1			
28.03	3	-------	ﾌﾟﾚｰﾄ	PLATE	1			
28.04	3	-------	ﾌﾟﾚｰﾄ	PLATE	1			
28.05	3	-------	ｶﾞｽｹｯﾄ	GASKET	2			
28.06	3	-------	ｽﾌﾟｰﾙ	SPOOL	4			
28.07	3	-------	ﾌｨﾙﾀ ﾄｸｼｭ	FILTER;SPL	4			
28.08	3	108R006Z025N	ﾛｯｶｸｱﾅB M6X25-12.9	BOLT;HEX SOC HD	2			
29	1	LBQ0162	O-ﾘﾝｸﾞ JISB2401 1BP1	O-RING	1			
30	1	LBB0162	ﾘﾝｸﾞ;ﾊﾞｯｸｱｯﾌﾟ	RING;BACK-UP	2			
31	1	LJ00726	ﾎﾟﾍﾟｯﾄ	POPPET	2			
32	1	LG00340	ｽﾌﾟﾘﾝｸﾞ;ｱｯｼｭｸ	SPRING;COMPRESSION	2			
33	1	LJ00727	ﾎﾟﾍﾟｯﾄ	POPPET	7			
34	1	LG00341	ｽﾌﾟﾘﾝｸﾞ;ｱｯｼｭｸ	SPRING;COMPRESSION	8			
35	1	LBQ0322	O-ﾘﾝｸﾞ JISB2401 1BP3	O-RING	10			
36	1	LH00248	ﾌﾗﾝｼﾞ	FLANGE;SPL	6			
37	1	LPC0180	ﾎﾟﾍﾟｯﾄ	POPPET	2			
38	1	LSC0227	ｽﾌﾟﾘﾝｸﾞ ﾄｸｼｭ	SPRING;SPL	2			
39	1	LJ00731	ｵﾘﾌｨｽ	ORIFICE	1			
40	1	LBQ0062	O-ﾘﾝｸﾞ JISB2401 1BP6	O-RING	27			
41	1	LR015280	ﾎﾞﾃﾞｨ ASSY	BODY	1			
42	1	LH00249	ﾌﾗﾝｼﾞ	FLANGE;SPL	1			
42	1	LH005410	ﾌﾗﾝｼﾞ	FLANGE;SPL	1			
43	1	LJ00728	ﾎﾟﾍﾟｯﾄ	POPPET	1			
43	1	LJ016050	ﾎﾟﾍﾟｯﾄ	POPPET	1			
44	1	LG00342	ｽﾌﾟﾘﾝｸﾞ;ｱｯｼｭｸ	SPRING;COMPRESSION	1			
44	1	LG006510	ｽﾌﾟﾘﾝｸﾞ	SPRING;SPL	1			
45	1	LLC0082	ﾌﾟﾗｸﾞ	PLUG	1			
46	1	LBQ6910	O-ﾘﾝｸﾞ	O-RING	1			
47	1	LSC0094	ｽﾌﾟﾘﾝｸﾞ	SPRING;SPL	1			
48	1	LJ014680	ﾎﾟﾍﾟｯﾄ	POPPET	1			

https://truckmanualshub.com/

66 [67 , 68] 69 [70 , 71] 75 [76]

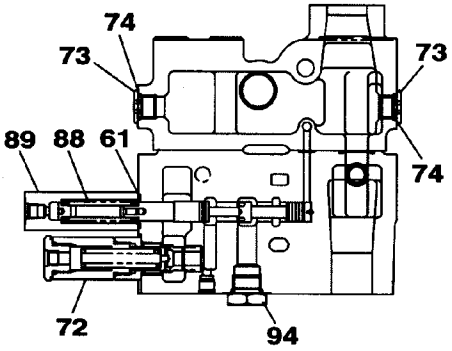

C~C

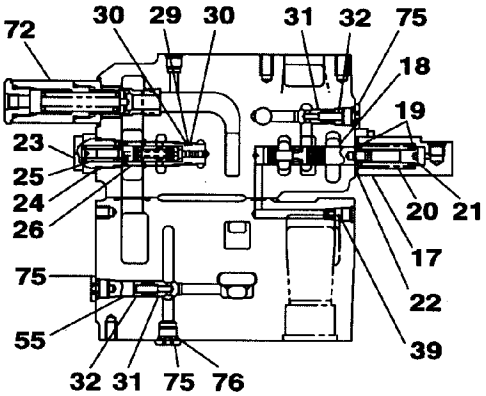

D~D

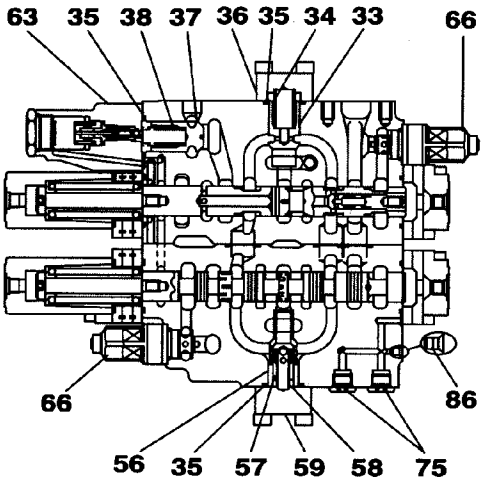

E~E

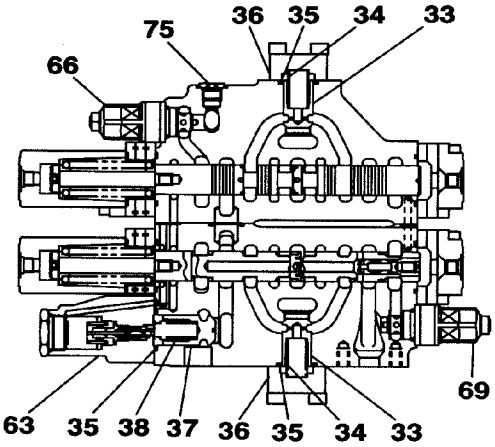

F~F

KRJ10310

https://truckmanualshub.com/

符号 ITEM	構成 COMPO	部品番号 PART NO.	部品名	PART NAME	個数 Q'TY	互換 ICA	代替部品 REPLACEABLE PART	備考 MEMO
11.07	3	-------	ﾌｨﾙﾀ ﾄｸｼｭ	FILTER;SPL	5			
11.08	3	LBQ0453	O-ﾘﾝｸﾞ JISB2401 1BG4	O-RING	5			
11.09	3	108R006Z025N	ﾛｯｶｸｱﾅB M6X25-12.9	BOLT;HEX SOC HD	2			
12	1	-------	ﾊｳｼﾞﾝｸﾞ;ﾊﾞﾙﾌﾞ	HOUSING;VALVE	1			
13	1	-------	ｽﾌﾟｰﾙ ASSY	SPOOL	1			
14	1	-------	ｽﾌﾟｰﾙ ASSY	SPOOL	1			
15	1	-------	ｽﾌﾟｰﾙ ASSY	SPOOL	1			
16	1	-------	ｽﾌﾟｰﾙ ASSY	SPOOL	1			
17	1	LR015250	ｷｬｯﾌﾟ	CAP	1			
18	1	-------	ｽﾌﾟｰﾙ;ﾊﾞﾙﾌﾞ	SPOOL;VALVE	1			
19	1	LSC0158	ｼｰﾄ;ｽﾌﾟﾘﾝｸﾞ	SEAT;SPRING	2			
20	1	LG00338	ｽﾌﾟﾘﾝｸﾞ;ｱｯｼｭｸ	SPRING;COMPRESSION	1			
21	1	LPC0222	ｴﾝﾄﾞ ｽﾌﾟｰﾙ	END;SPL	1			
22	1	LBQ0260	O-ﾘﾝｸﾞ JISB2401 1AP2	O-RING	1			
23	1	LK005690	ﾌﾟﾗｸﾞ	PLUG	1			
24	1	LBQ0242	O-ﾘﾝｸﾞ JISB2401 1BP2	O-RING	1			
25	1	LG00339	ｽﾌﾟﾘﾝｸﾞ;ｱｯｼｭｸ	SPRING;COMPRESSION	1			
26	1	LJ014690	ｽﾌﾟｰﾙ ASSY	SPOOL	1			
27	1A	LR015260	ﾌﾟﾚｰﾄ ASS'Y	PLATE;SPL	1			
27.01	2A	-------	ﾌﾟﾚｰﾄ ASS'Y	PLATE;SPL	1			
27.02	3	-------	ﾌﾟﾚｰﾄ	PLATE	1			
27.03	3	-------	ﾌﾟﾚｰﾄ	PLATE	1			
27.04	3	-------	ﾌﾟﾚｰﾄ	PLATE	1			
27.05	3	-------	ｶﾞｽｹｯﾄ	GASKET	2			
27.06	3	-------	ｽﾌﾟｰﾙ	SPOOL	3			
27.07	3	-------	ﾌｨﾙﾀ ﾄｸｼｭ	FILTER;SPL	3			
27.08	3	108R006Z025N	ﾛｯｶｸｱﾅB M6X25-12.9	BOLT;HEX SOC HD	2			
28	1A	LR015270	ﾌﾟﾚｰﾄ ASS'Y	PLATE;SPL	1			
28.01	2A	-------	ﾌﾟﾚｰﾄ ASS'Y	PLATE;SPL	1			
28.02	3	-------	ﾌﾟﾚｰﾄ	PLATE	1			
28.03	3	-------	ﾌﾟﾚｰﾄ	PLATE	1			
28.04	3	-------	ﾌﾟﾚｰﾄ	PLATE	1			
28.05	3	-------	ｶﾞｽｹｯﾄ	GASKET	2			
28.06	3	-------	ｽﾌﾟｰﾙ	SPOOL	4			
28.07	3	-------	ﾌｨﾙﾀ ﾄｸｼｭ	FILTER;SPL	4			
28.08	3	108R006Z025N	ﾛｯｶｸｱﾅB M6X25-12.9	BOLT;HEX SOC HD	2			
29	1	LBQ0162	O-ﾘﾝｸﾞ JISB2401 1BP1	O-RING	1			
30	1	LBB0162	ﾘﾝｸﾞ;ﾊﾞｯｸｱｯﾌﾟ	RING;BACK-UP	2			
31	1	LJ00726	ﾎﾟﾍﾟｯﾄ	POPPET	2			
32	1	LG00340	ｽﾌﾟﾘﾝｸﾞ;ｱｯｼｭｸ	SPRING;COMPRESSION	2			
33	1	LJ00727	ﾎﾟﾍﾟｯﾄ	POPPET	7			
34	1	LG00341	ｽﾌﾟﾘﾝｸﾞ;ｱｯｼｭｸ	SPRING;COMPRESSION	8			
35	1	LBQ0322	O-ﾘﾝｸﾞ JISB2401 1BP3	O-RING	10			
36	1	LH00248	ﾌﾗﾝｼﾞ	FLANGE;SPL	6			
37	1	LPC0180	ﾎﾟﾍﾟｯﾄ	POPPET	2			
38	1	LSC0227	ｽﾌﾟﾘﾝｸﾞ ﾄｸｼｭ	SPRING;SPL	2			
39	1	LJ00731	ｵﾘﾌｨｽ	ORIFICE	1			
40	1	LBQ0062	O-ﾘﾝｸﾞ JISB2401 1BP6	O-RING	27			
41	1	LR015280	ﾎﾞﾃﾞｨ ASSY	BODY	1			
42	1	LH00249	ﾌﾗﾝｼﾞ	FLANGE;SPL	1			
42	1	LH005410	ﾌﾗﾝｼﾞ	FLANGE;SPL	1			
43	1	LJ00728	ﾎﾟﾍﾟｯﾄ	POPPET	1			
43	1	LJ016050	ﾎﾟﾍﾟｯﾄ	POPPET	1			
44	1	LG00342	ｽﾌﾟﾘﾝｸﾞ;ｱｯｼｭｸ	SPRING;COMPRESSION	1			
44	1	LG006510	ｽﾌﾟﾘﾝｸﾞ	SPRING;SPL	1			
45	1	LLC0082	ﾌﾟﾗｸﾞ	PLUG	1			
46	1	LBQ6910	O-ﾘﾝｸﾞ	O-RING	1			
47	1	LSC0094	ｽﾌﾟﾘﾝｸﾞ	SPRING;SPL	1			
48	1	LJ014680	ﾎﾟﾍﾟｯﾄ	POPPET	1			
49	1	LJ00730	ﾎﾟﾍﾟｯﾄ	POPPET	1			
50	1	LH00250	ﾌﾗﾝｼﾞ	FLANGE;SPL	2			
51	1	LH004960	ｽﾍﾟｰｻ	SPACER	2			
52	1	LBQ0251	O-ﾘﾝｸﾞ JISB2401 1AG2	O-RING	2			
53	1	LBB0253	ﾘﾝｸﾞ;ﾊﾞｯｸｱｯﾌﾟ	RING;BACK-UP	2			
54	1	LBQ0553	O-ﾘﾝｸﾞ JISB2401 1BG5	O-RING	1			
55	1	LH004970	ｽﾍﾟｰｻ	SPACER	1			
56	1	LH004980	ｽﾘｰﾌﾞ	SLEEVE	1			
57	1	LPC0098	ﾎﾟﾍﾟｯﾄ	POPPET	1			

https://truckmanualshub.com/

64 [65] 66 [67 , 68] 75 [76] 77 [78 , 79] 97 [98 ~ 101]

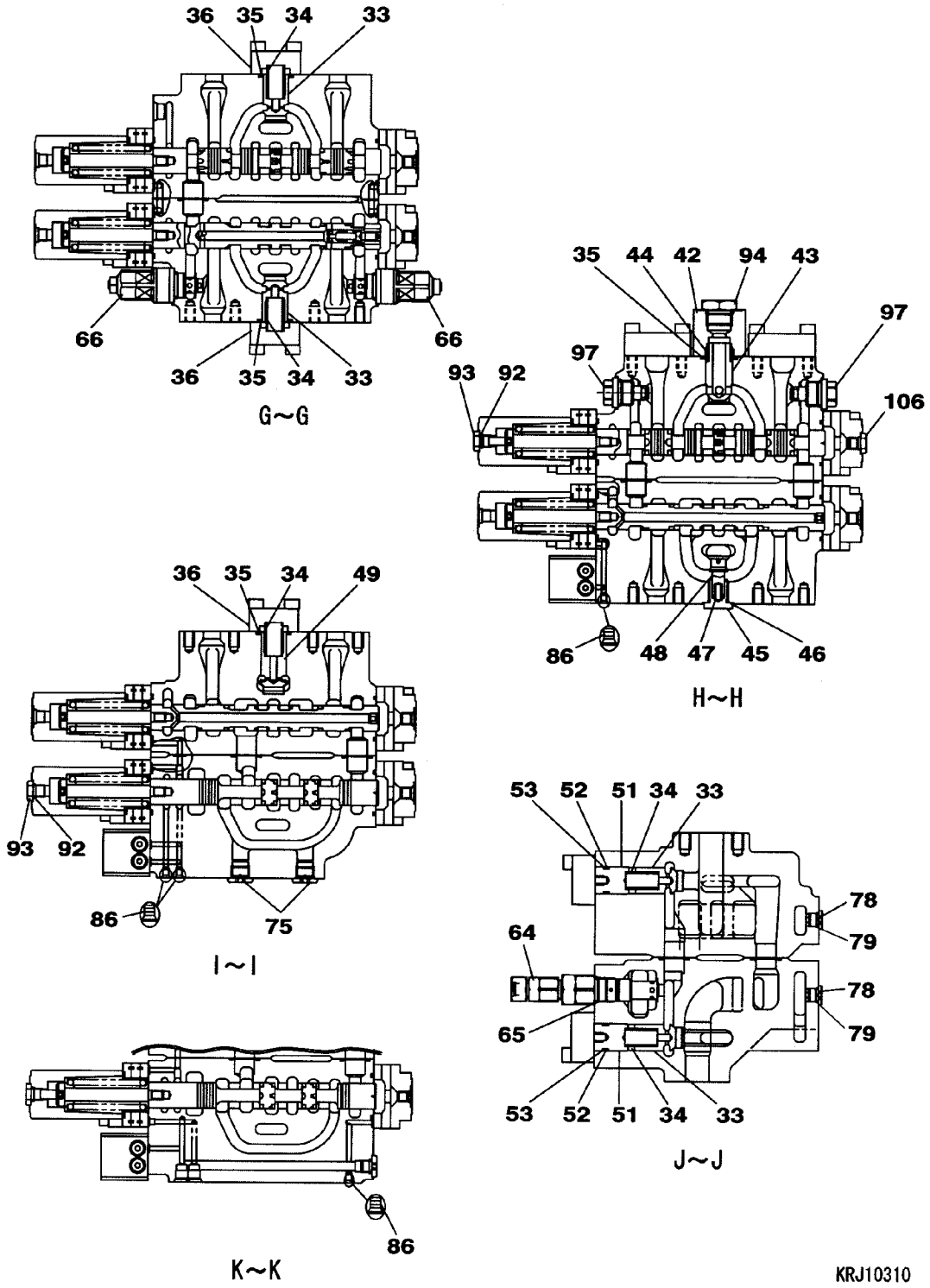

https://truckmanualshub.com/

VALVE;CONTROL	ﾊﾞﾙﾌﾞ;ｺﾝﾄﾛｰﾙ	ZAJ313L0090 001 10/20	001

符号 ITEM	構成 COMPO	部品番号 PART NO.	部品名	PART NAME	個数 Q'TY	互換 ICA	代替部品 REPLACEABLE PART	備考 MEMO
18	1	-------	ｽﾌﾟｰﾙ;ﾊﾞﾙﾌﾞ	SPOOL;VALVE	1			
19	1	LSC0158	ｼｰﾄ;ｽﾌﾟﾘﾝｸﾞ	SEAT;SPRING	2			
20	1	LG00338	ｽﾌﾟﾘﾝｸﾞ;ｱﾂｼｭｸ	SPRING;COMPRESSION	1			
21	1	LPC0222	ｴﾝﾄﾞ ｽﾌﾟｰﾙ	END;SPL	1			
22	1	LBQ0260	O-ﾘﾝｸﾞ JISB2401 1AP2	O-RING	1			
23	1	LK005690	ﾌﾟﾗｸﾞ	PLUG	1			
24	1	LBQ0242	O-ﾘﾝｸﾞ JISB2401 1BP2	O-RING	1			
25	1	LG00339	ｽﾌﾟﾘﾝｸﾞ;ｱﾂｼｭｸ	SPRING;COMPRESSION	1			
26	1	LJ014690	ｽﾌﾟｰﾙ ASSY	SPOOL	1			
27	1A	LR015260	ﾌﾟﾚｰﾄ ASS'Y	PLATE;SPL	1			
27.01	2A	-------	ﾌﾟﾚｰﾄ ASS'Y	PLATE;SPL	1			
27.02	3	-------	ﾌﾟﾚｰﾄ	PLATE	1			
27.03	3	-------	ﾌﾟﾚｰﾄ	PLATE	1			
27.04	3	-------	ﾌﾟﾚｰﾄ	PLATE	1			
27.05	3	-------	ｶﾞｽｹｯﾄ	GASKET	2			
27.06	3	-------	ｽﾌﾟｰﾙ	SPOOL	3			
27.07	3	-------	ﾌｨﾙﾀ ﾄｸｼｭ	FILTER;SPL	3			
27.08	3	108R006Z025N	ﾛｯｶｸｱﾅB M6X25-12.9	BOLT;HEX SOC HD	2			
28	1A	LR015270	ﾌﾟﾚｰﾄ ASS'Y	PLATE;SPL	1			
28.01	2A	-------	ﾌﾟﾚｰﾄ ASS'Y	PLATE;SPL	1			
28.02	3	-------	ﾌﾟﾚｰﾄ	PLATE	1			
28.03	3	-------	ﾌﾟﾚｰﾄ	PLATE	1			
28.04	3	-------	ﾌﾟﾚｰﾄ	PLATE	1			
28.05	3	-------	ｶﾞｽｹｯﾄ	GASKET	2			
28.06	3	-------	ｽﾌﾟｰﾙ	SPOOL	4			
28.07	3	-------	ﾌｨﾙﾀ ﾄｸｼｭ	FILTER;SPL	4			
28.08	3	108R006Z025N	ﾛｯｶｸｱﾅB M6X25-12.9	BOLT;HEX SOC HD	2			
29	1	LBQ0162	O-ﾘﾝｸﾞ JISB2401 1BP1	O-RING	1			
30	1	LBB0162	ﾘﾝｸﾞ;ﾊﾞｯｸｱｯﾌﾟ	RING;BACK-UP	2			
31	1	LJ00726	ﾎﾟﾍﾟｯﾄ	POPPET	2			
32	1	LG00340	ｽﾌﾟﾘﾝｸﾞ;ｱﾂｼｭｸ	SPRING;COMPRESSION	2			
33	1	LJ00727	ﾎﾟﾍﾟｯﾄ	POPPET	7			
34	1	LG00341	ｽﾌﾟﾘﾝｸﾞ;ｱﾂｼｭｸ	SPRING;COMPRESSION	8			
35	1	LBQ0322	O-ﾘﾝｸﾞ JISB2401 1BP3	O-RING	10			
36	1	LH00248	ﾌﾗﾝｼﾞ	FLANGE;SPL	6			
37	1	LPC0180	ﾎﾟﾍﾟｯﾄ	POPPET	2			
38	1	LSC0227	ｽﾌﾟﾘﾝｸﾞ ﾄｸｼｭ	SPRING;SPL	2			
39	1	LJ00731	ｵﾘﾌｨｽ	ORIFICE	1			
40	1	LBQ0062	O-ﾘﾝｸﾞ JISB2401 1BP6	O-RING	27			
41	1	LR015280	ﾎﾞﾃﾞｨ ASSY	BODY	1			
42	1	LH00249	ﾌﾗﾝｼﾞ	FLANGE;SPL	1			
42	1	LH005410	ﾌﾗﾝｼﾞ	FLANGE;SPL	1			
43	1	LJ00728	ﾎﾟﾍﾟｯﾄ	POPPET	1			
43	1	LJ016050	ﾎﾟﾍﾟｯﾄ	POPPET	1			
44	1	LG00342	ｽﾌﾟﾘﾝｸﾞ;ｱﾂｼｭｸ	SPRING;COMPRESSION	1			
44	1	LG006510	ｽﾌﾟﾘﾝｸﾞ	SPRING;SPL	1			
45	1	LLC0082	ﾌﾟﾗｸﾞ	PLUG	1			
46	1	LBQ6910	O-ﾘﾝｸﾞ	O-RING	1			
47	1	LSC0094	ｽﾌﾟﾘﾝｸﾞ	SPRING;SPL	1			
48	1	LJ014680	ﾎﾟﾍﾟｯﾄ	POPPET	1			
49	1	LJ00730	ﾎﾟﾍﾟｯﾄ	POPPET	1			
50	1	LH00250	ﾌﾗﾝｼﾞ	FLANGE;SPL	2			
51	1	LH004960	ｽﾍﾟｰｻ	SPACER	2			
52	1	LBQ0251	O-ﾘﾝｸﾞ JISB2401 1AG2	O-RING	2			
53	1	LBB0253	ﾘﾝｸﾞ;ﾊﾞｯｸｱｯﾌﾟ	RING;BACK-UP	2			
54	1	LBQ0553	O-ﾘﾝｸﾞ JISB2401 1BG5	O-RING	1			
55	1	LH004970	ｽﾍﾟｰｻ	SPACER	1			
56	1	LH004980	ｽﾘｰﾌﾞ	SLEEVE	1			
57	1	LPC0098	ﾎﾟﾍﾟｯﾄ	POPPET	1			
58	1	LSC0187	ｽﾌﾟﾘﾝｸﾞ	SPRING;SPL	1			
59	1	LH004990	ﾌﾗﾝｼﾞ ﾄｸｼｭ	FLANGE;SPL	1			
60	1	LE012520	O-ﾘﾝｸﾞ ﾄｸｼｭ ﾌﾂｿ	O-RING	3			
61	1	LE014890	O-ﾘﾝｸﾞ	O-RING	14			
62	1	LBQ0102	O-ﾘﾝｸﾞ JISB2401 1BP1	O-RING	12			
63	1	LJ014710	ﾊﾞﾙﾌﾞ ｱﾝﾁﾄﾞﾘﾌﾄ ASSY	VALVE;SPL	2			
64	1A	LJ014720	ﾊﾞﾙﾌﾞ;ﾘﾘｰﾌ KIT	VALVE;RELIEF	1			
65	2	LBQ6912	O-ﾘﾝｸﾞ AS568-912-HS9	O-RING	1			
66	1A	LJ014730	ﾊﾞﾙﾌﾞ;ﾘﾘｰﾌ KIT	VALVE;RELIEF	5			

https://truckmanualshub.com/

詳細/DETAIL

64 [65]

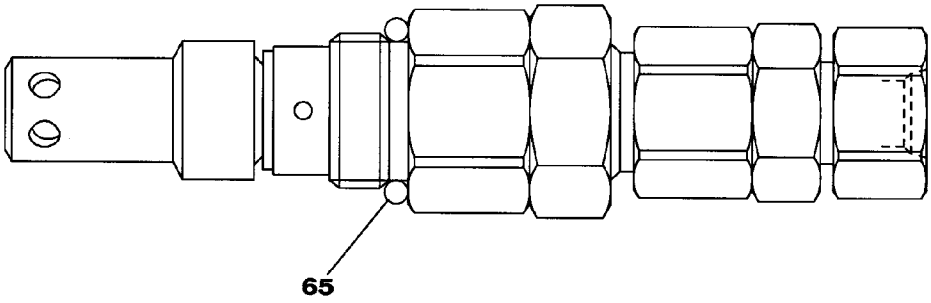

66 [67 , 68]

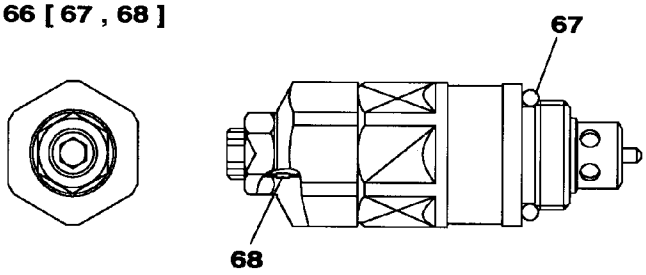

69 [70 , 71]

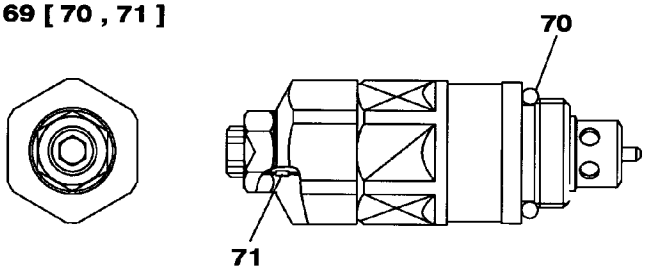

94 [95 , 96]

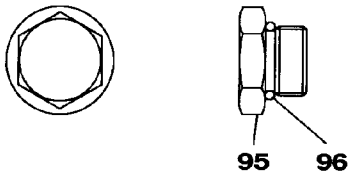

97 [98～101]

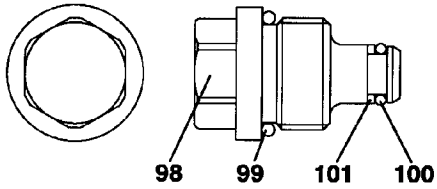

KRJ10310

https://truckmanualshub.com/

VALVE;CONTROL	ﾊﾞﾙﾌﾞ;ｺﾝﾄﾛｰﾙ	ZAJ313L0090 001 12/20	001

符号 ITEM	構成 COMPO	部品番号 PART NO.	部品名	PART NAME	個数 Q'TY	互換 ICA	代替部品 REPLACEABLE PART	備考 MEMO
27	1A	LR015260	ﾌﾟﾚｰﾄ ASS'Y	PLATE;SPL	1			
27.01	2A	-------	ﾌﾟﾚｰﾄ ASS'Y	PLATE;SPL	1			
27.02	3	-------	ﾌﾟﾚｰﾄ	PLATE	1			
27.03	3	-------	ﾌﾟﾚｰﾄ	PLATE	1			
27.04	3	-------	ﾌﾟﾚｰﾄ	PLATE	1			
27.05	3	-------	ｶﾞｽｹｯﾄ	GASKET	2			
27.06	3	-------	ｽﾌﾟｰﾙ	SPOOL	3			
27.07	3	-------	ﾌｲﾙﾀ ﾄｸｼｭ	FILTER;SPL	3			
27.08	3	108R006Z025N	ﾛｯｶｸｱﾅB M6X25-12.9	BOLT;HEX SOC HD	2			
28	1A	LR015270	ﾌﾟﾚｰﾄ ASS'Y	PLATE;SPL	1			
28.01	2A	-------	ﾌﾟﾚｰﾄ ASS'Y	PLATE;SPL	1			
28.02	3	-------	ﾌﾟﾚｰﾄ	PLATE	1			
28.03	3	-------	ﾌﾟﾚｰﾄ	PLATE	1			
28.04	3	-------	ﾌﾟﾚｰﾄ	PLATE	1			
28.05	3	-------	ｶﾞｽｹｯﾄ	GASKET	2			
28.06	3	-------	ｽﾌﾟｰﾙ	SPOOL	4			
28.07	3	-------	ﾌｲﾙﾀ ﾄｸｼｭ	FILTER;SPL	4			
28.08	3	108R006Z025N	ﾛｯｶｸｱﾅB M6X25-12.9	BOLT;HEX SOC HD	2			
29	1	LBQ0162	O-ﾘﾝｸﾞ JISB2401 1BP1	O-RING	1			
30	1	LBB0162	ﾘﾝｸﾞ;ﾊﾞｯｸｱｯﾌﾟ	RING;BACK-UP	2			
31	1	LJ00726	ﾎﾟﾍﾟｯﾄ	POPPET	2			
32	1	LG00340	ｽﾌﾟﾘﾝｸﾞ;ｱｯｼｭｸ	SPRING;COMPRESSION	2			
33	1	LJ00727	ﾎﾟﾍﾟｯﾄ	POPPET	7			
34	1	LG00341	ｽﾌﾟﾘﾝｸﾞ;ｱｯｼｭｸ	SPRING;COMPRESSION	8			
35	1	LBQ0322	O-ﾘﾝｸﾞ JISB2401 1BP3	O-RING	10			
36	1	LH00248	ﾌﾗﾝｼﾞ	FLANGE;SPL	6			
37	1	LPC0180	ﾎﾟﾍﾟｯﾄ	POPPET	2			
38	1	LSC0227	ｽﾌﾟﾘﾝｸﾞ ﾄｸｼｭ	SPRING;SPL	2			
39	1	LJ00731	ｵﾘﾌｲｽ	ORIFICE	1			
40	1	LBQ0062	O-ﾘﾝｸﾞ JISB2401 1BP6	O-RING	27			
41	1	LR015280	ﾎﾞﾃﾞｨ ASSY	BODY	1			
42	1	LH00249	ﾌﾗﾝｼﾞ	FLANGE;SPL	1			
42	1	LH005410	ﾌﾗﾝｼﾞ	FLANGE;SPL	1			
43	1	LJ00728	ﾎﾟﾍﾟｯﾄ	POPPET	1			
43	1	LJ016050	ﾎﾟﾍﾟｯﾄ	POPPET	1			
44	1	LG00342	ｽﾌﾟﾘﾝｸﾞ;ｱｯｼｭｸ	SPRING;COMPRESSION	1			
44	1	LG006510	ｽﾌﾟﾘﾝｸﾞ	SPRING;SPL	1			
45	1	LLC0082	ﾌﾟﾗｸﾞ	PLUG	1			
46	1	LBQ6910	O-ﾘﾝｸﾞ	O-RING	1			
47	1	LSC0094	ｽﾌﾟﾘﾝｸﾞ	SPRING;SPL	1			
48	1	LJ014680	ﾎﾟﾍﾟｯﾄ	POPPET	1			
49	1	LJ00730	ﾎﾟﾍﾟｯﾄ	POPPET	1			
50	1	LH00250	ﾌﾗﾝｼﾞ	FLANGE;SPL	2			
51	1	LH004960	ｽﾍﾟｰｻ	SPACER	2			
52	1	LBQ0251	O-ﾘﾝｸﾞ JISB2401 1AG2	O-RING	2			
53	1	LBB0253	ﾘﾝｸﾞ;ﾊﾞｯｸｱｯﾌﾟ	RING;BACK-UP	2			
54	1	LBQ0553	O-ﾘﾝｸﾞ JISB2401 1BG5	O-RING	1			
55	1	LH004970	ｽﾍﾟｰｻ	SPACER	1			
56	1	LH004980	ｽﾘｰﾌﾞ	SLEEVE	1			
57	1	LPC0098	ﾎﾟﾍﾟｯﾄ	POPPET	1			
58	1	LSC0187	ｽﾌﾟﾘﾝｸﾞ	SPRING;SPL	1			
59	1	LH004990	ﾌﾗﾝｼﾞ ﾄｸｼｭ	FLANGE;SPL	1			
60	1	LE012520	O-ﾘﾝｸﾞ ﾄｸｼｭ ﾌﾂｿ	O-RING	3			
61	1	LE014890	O-ﾘﾝｸﾞ	O-RING	14			
62	1	LBQ0102	O-ﾘﾝｸﾞ JISB2401 1BP1	O-RING	12			
63	1	LJ014710	ﾊﾞﾙﾌﾞ ｱﾝﾁﾄﾞﾘﾌﾄ ASSY	VALVE;SPL	2			
64	1A	LJ014720	ﾊﾞﾙﾌﾞ;ﾘﾘｰﾌ KIT	VALVE;RELIEF	1			
65	2	LBQ6912	O-ﾘﾝｸﾞ AS568-912-HS9	O-RING	1			
66	1A	LJ014730	ﾊﾞﾙﾌﾞ;ﾘﾘｰﾌ KIT	VALVE;RELIEF	5			
67	2	LBQ6912	O-ﾘﾝｸﾞ AS568-912-HS9	O-RING	5			
68	2	LBQ0102	O-ﾘﾝｸﾞ JISB2401 1BP1	O-RING	5			
69	1A	LJ014740	ﾊﾞﾙﾌﾞ;ﾘﾘｰﾌ KIT	VALVE;RELIEF	1			
70	2	LBQ6912	O-ﾘﾝｸﾞ AS568-912-HS9	O-RING	1			
71	2	LBQ0102	O-ﾘﾝｸﾞ JISB2401 1BP1	O-RING	1			
72	1	LJ014700	ﾊﾞﾙﾌﾞ;ﾘﾘｰﾌ ASS'Y	VALVE;RELIEF	2			
73	1A	LNC0218	ﾌﾟﾗｸﾞ S/A	PLUG	3			
74	2	LBQ0182	O-ﾘﾝｸﾞ JISB2401 1BP1	O-RING	3			
75	1A	LNC0217	ﾌﾟﾗｸﾞ S/A	PLUG	10			

https://truckmanualshub.com/

10 [10.01~10.09] 10.01 [10.02 ~ 10.09]

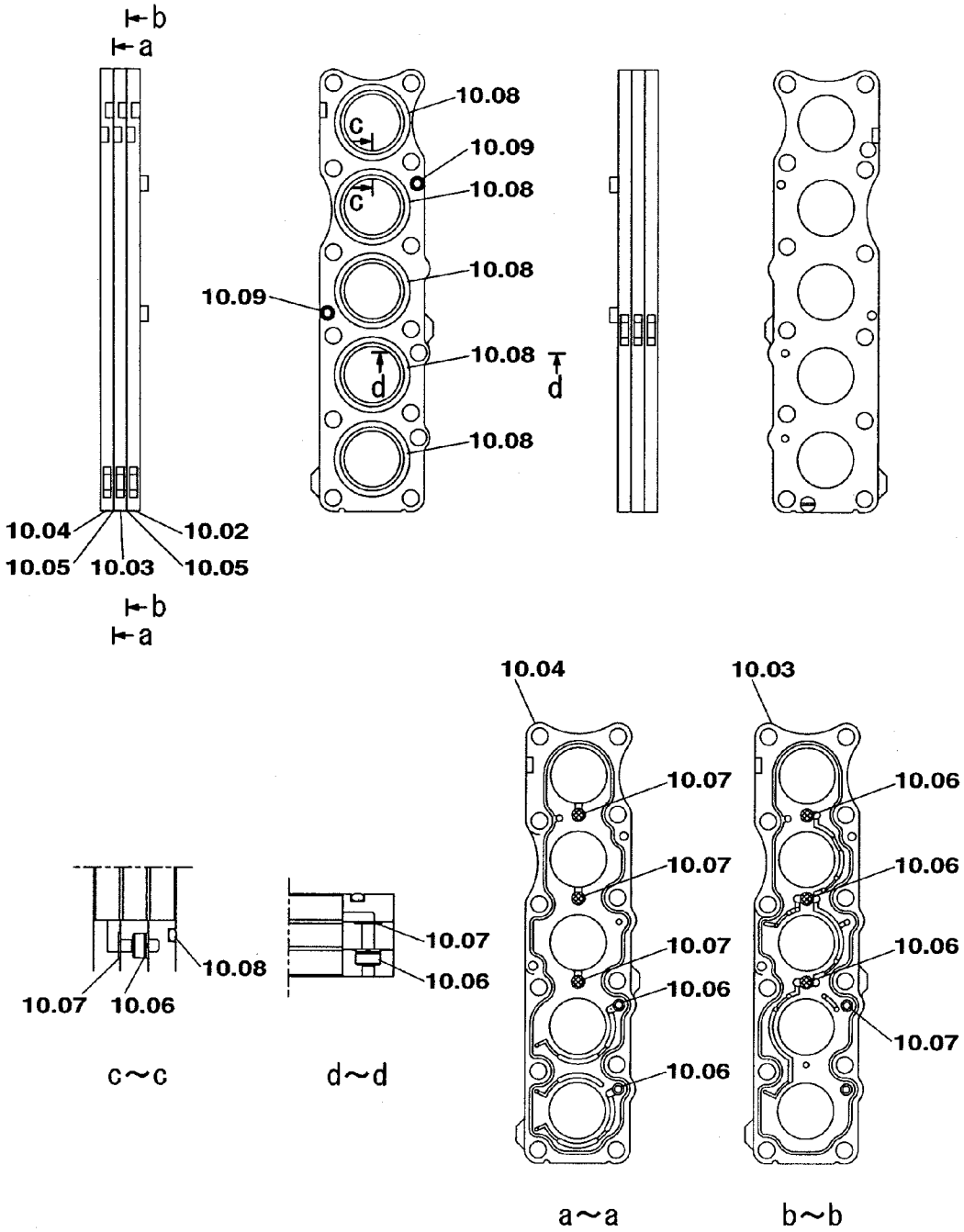

KRJ10310

https://truckmanualshub.com/

符号 ITEM	構成 COMPO	部品番号 PART NO.	部品名	PART NAME	個数 Q'TY	互換 ICA	代替部品 REPLACEABLE PART	備考 MEMO
28	1A	LR015270	ﾌﾟﾚｰﾄ ASS'Y	PLATE;SPL	1			
28.01	2A	-------	ﾌﾟﾚｰﾄ ASS'Y	PLATE;SPL	1			
28.02	3	-------	ﾌﾟﾚｰﾄ	PLATE	1			
28.03	3	-------	ﾌﾟﾚｰﾄ	PLATE	1			
28.04	3	-------	ﾌﾟﾚｰﾄ	PLATE	1			
28.05	3	-------	ｶﾞｽｹｯﾄ	GASKET	2			
28.06	3	-------	ｽﾌﾟｰﾙ	SPOOL	4			
28.07	3	-------	ﾌｲﾙﾀ ﾄｸｼｭ	FILTER;SPL	4			
28.08	3	108R006Z025N	ﾛｯｶｸｱﾅB M6X25-12.9	BOLT;HEX SOC HD	2			
29	1	LBQ0162	O-ﾘﾝｸﾞ JISB2401 1BP1	O-RING	1			
30	1	LBB0162	ﾘﾝｸﾞ;ﾊﾞｯｸｱｯﾌﾟ	RING;BACK-UP	2			
31	1	LJ00726	ﾎﾟﾍﾟｯﾄ	POPPET	2			
32	1	LG00340	ｽﾌﾟﾘﾝｸﾞ;ｱｯｼｭｸ	SPRING;COMPRESSION	2			
33	1	LJ00727	ﾎﾟﾍﾟｯﾄ	POPPET	7			
34	1	LG00341	ｽﾌﾟﾘﾝｸﾞ;ｱｯｼｭｸ	SPRING;COMPRESSION	8			
35	1	LBQ0322	O-ﾘﾝｸﾞ JISB2401 1BP3	O-RING	10			
36	1	LH00248	ﾌﾗﾝｼﾞ	FLANGE;SPL	6			
37	1	LPC0180	ﾎﾟﾍﾟｯﾄ	POPPET	2			
38	1	LSC0227	ｽﾌﾟﾘﾝｸﾞ ﾄｸｼｭ	SPRING;SPL	2			
39	1	LJ00731	ｵﾘﾌｲｽ	ORIFICE	1			
40	1	LBQ0062	O-ﾘﾝｸﾞ JISB2401 1BP6	O-RING	27			
41	1	LR015280	ﾎﾞﾃﾞｨ ASSY	BODY	1			
42	1	LH00249	ﾌﾗﾝｼﾞ	FLANGE;SPL	1			
42	1	LH005410	ﾌﾗﾝｼﾞ	FLANGE;SPL	1			
43	1	LJ00728	ﾎﾟﾍﾟｯﾄ	POPPET	1			
43	1	LJ016050	ﾎﾟﾍﾟｯﾄ	POPPET	1			
44	1	LG00342	ｽﾌﾟﾘﾝｸﾞ;ｱｯｼｭｸ	SPRING;COMPRESSION	1			
44	1	LG006510	ｽﾌﾟﾘﾝｸﾞ	SPRING;SPL	1			
45	1	LLC0082	ﾌﾟﾗｸﾞ	PLUG	1			
46	1	LBQ6910	O-ﾘﾝｸﾞ	O-RING	1			
47	1	LSC0094	ｽﾌﾟﾘﾝｸﾞ	SPRING;SPL	1			
48	1	LJ014680	ﾎﾟﾍﾟｯﾄ	POPPET	1			
49	1	LJ00730	ﾎﾟﾍﾟｯﾄ	POPPET	1			
50	1	LH00250	ﾌﾗﾝｼﾞ	FLANGE;SPL	2			
51	1	LH004960	ｽﾍﾟｰｻ	SPACER	2			
52	1	LBQ0251	O-ﾘﾝｸﾞ JISB2401 1AG2	O-RING	2			
53	1	LBB0253	ﾘﾝｸﾞ;ﾊﾞｯｸｱｯﾌﾟ	RING;BACK-UP	2			
54	1	LBQ0553	O-ﾘﾝｸﾞ JISB2401 1BG5	O-RING	1			
55	1	LH004970	ｽﾍﾟｰｻ	SPACER	1			
56	1	LH004980	ｽﾘｰﾌﾞ	SLEEVE	1			
57	1	LPC0098	ﾎﾟﾍﾟｯﾄ	POPPET	1			
58	1	LSC0187	ｽﾌﾟﾘﾝｸﾞ	SPRING;SPL	1			
59	1	LH004990	ﾌﾗﾝｼﾞ ﾄｸｼｭ	FLANGE;SPL	1			
60	1	LE012520	O-ﾘﾝｸﾞ ﾄｸｼｭ ﾌﾂｿ	O-RING	3			
61	1	LE014890	O-ﾘﾝｸﾞ	O-RING	14			
62	1	LBQ0102	O-ﾘﾝｸﾞ JISB2401 1BP1	O-RING	12			
63	1	LJ014710	ﾊﾞﾙﾌﾞ ｱﾝﾁﾄﾞﾘﾌﾄ ASSY	VALVE;SPL	2			
64	1A	LJ014720	ﾊﾞﾙﾌﾞ;ﾘﾘｰﾌ KIT	VALVE;RELIEF	1			
65	2	LBQ6912	O-ﾘﾝｸﾞ AS568-912-HS9	O-RING	1			
66	1A	LJ014730	ﾊﾞﾙﾌﾞ;ﾘﾘｰﾌ KIT	VALVE;RELIEF	5			
67	2	LBQ6912	O-ﾘﾝｸﾞ AS568-912-HS9	O-RING	5			
68	2	LBQ0102	O-ﾘﾝｸﾞ JISB2401 1BP1	O-RING	5			
69	1A	LJ014740	ﾊﾞﾙﾌﾞ;ﾘﾘｰﾌ KIT	VALVE;RELIEF	1			
70	2	LBQ6912	O-ﾘﾝｸﾞ AS568-912-HS9	O-RING	1			
71	2	LBQ0102	O-ﾘﾝｸﾞ JISB2401 1BP1	O-RING	1			
72	1	LJ014700	ﾊﾞﾙﾌﾞ;ﾘﾘｰﾌ ASS'Y	VALVE;RELIEF	2			
73	1A	LNC0218	ﾌﾟﾗｸﾞ S/A	PLUG	3			
74	2	LBQ0182	O-ﾘﾝｸﾞ JISB2401 1BP1	O-RING	3			
75	1A	LNC0217	ﾌﾟﾗｸﾞ S/A	PLUG	10			
76	2	LBQ0142	O-ﾘﾝｸﾞ JISB2401 1BP1	O-RING	10			
77	1A	LNC0238	ﾌﾟﾗｸﾞ S/A	PLUG	3			
78	2	LK00328	ﾌﾟﾗｸﾞ	PLUG	3			
79	2	LBQ0112	O-ﾘﾝｸﾞ JISB2401 1BP1	O-RING	3			
80	1	108R010Z055B	ﾛｯｶｸｱﾅB JIS B 1180 M	BOLT;HEX SOC HD	24			
80	1	108R010Z055B	ﾛｯｶｸｱﾅB JIS B 1180 M	BOLT;HEX SOC HD	32			
81	1	108R010Z040B	ﾛｯｶｸｱﾅB JIS B1176 M1	BOLT;HEX SOC HD	74			
81	1	108R010Z040B	ﾛｯｶｸｱﾅB JIS B1176 M1	BOLT;HEX SOC HD	66			
82	1	108R016Z130B	ﾛｯｶｸｱﾅB JIS B1180 M1	BOLT;HEX SOC HD	8			

https://truckmanualshub.com/

11 [11.01 ~ 11.09] 11.01 [11.02 ~ 11.09]

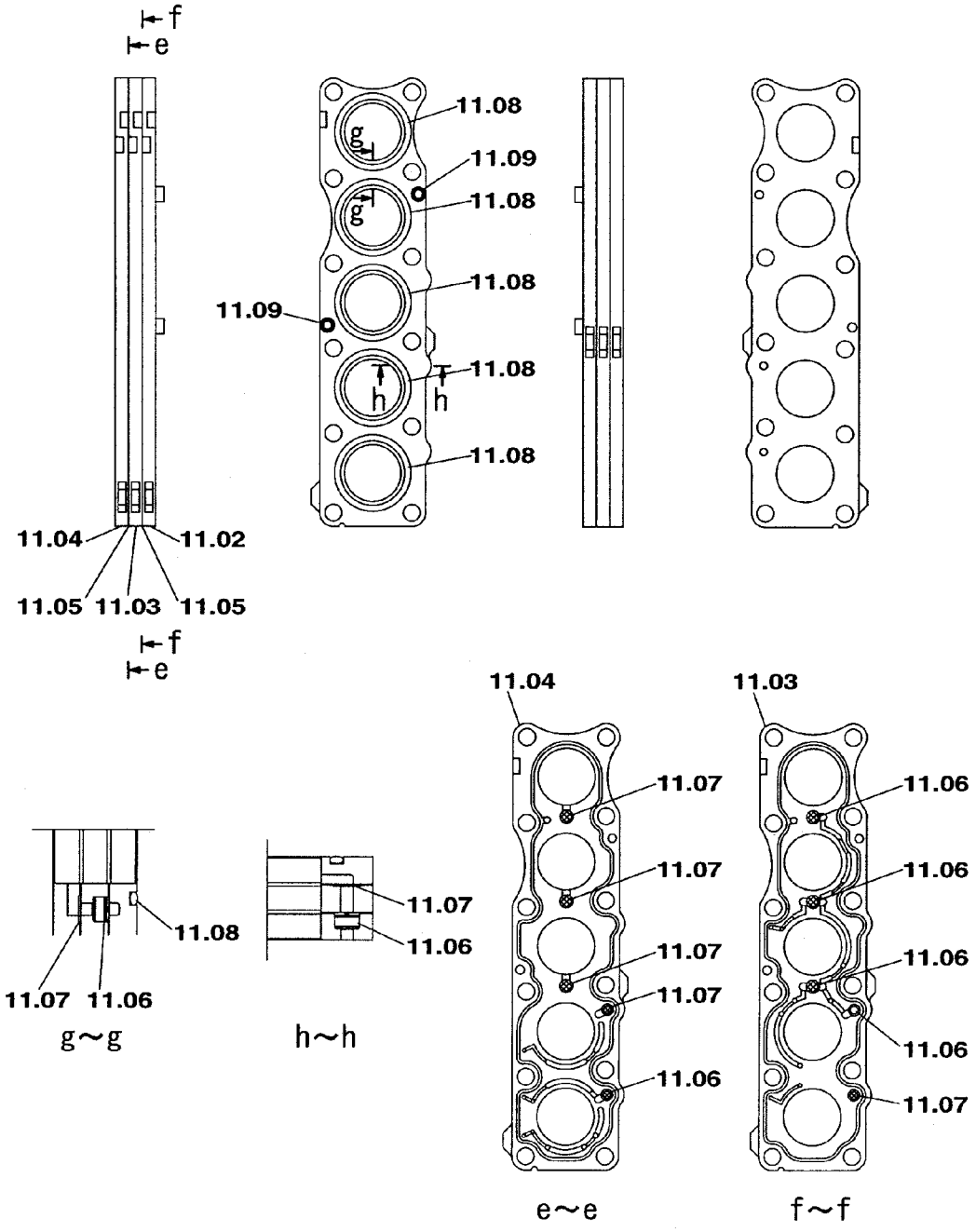

KRJ10310

https://truckmanualshub.com/

符号 ITEM	構成 COMPO	部品番号 PART NO.	部品名	PART NAME	個数 Q'TY	互換 ICA	代替部品 REPLACEABLE PART	備考 MEMO
29	1	LBQ0162	O-ﾘﾝｸﾞ JISB2401 1BP1	O-RING	1			
30	1	LBB0162	ﾘﾝｸﾞ;ﾊﾞｯｸｱｯﾌﾟ	RING;BACK-UP	2			
31	1	LJ00726	ﾎﾟﾍﾟｯﾄ	POPPET	2			
32	1	LG00340	ｽﾌﾟﾘﾝｸﾞ;ｱｯｼｭｸ	SPRING;COMPRESSION	2			
33	1	LJ00727	ﾎﾟﾍﾟｯﾄ	POPPET	7			
34	1	LG00341	ｽﾌﾟﾘﾝｸﾞ;ｱｯｼｭｸ	SPRING;COMPRESSION	8			
35	1	LBQ0322	O-ﾘﾝｸﾞ JISB2401 1BP3	O-RING	10			
36	1	LH00248	ﾌﾗﾝｼﾞ	FLANGE;SPL	6			
37	1	LPC0180	ﾎﾟﾍﾟｯﾄ	POPPET	2			
38	1	LSC0227	ｽﾌﾟﾘﾝｸﾞ ﾄｸｼｭ	SPRING;SPL	2			
39	1	LJ00731	ｵﾘﾌｨｽ	ORIFICE	1			
40	1	LBQ0062	O-ﾘﾝｸﾞ JISB2401 1BP6	O-RING	27			
41	1	LR015280	ﾎﾞﾃﾞｨ ASSY	BODY	1			
42	1	LH00249	ﾌﾗﾝｼﾞ	FLANGE;SPL	1			
42	1	LH005410	ﾌﾗﾝｼﾞ	FLANGE;SPL	1			
43	1	LJ00728	ﾎﾟﾍﾟｯﾄ	POPPET	1			
43	1	LJ016050	ﾎﾟﾍﾟｯﾄ	POPPET	1			
44	1	LG00342	ｽﾌﾟﾘﾝｸﾞ;ｱｯｼｭｸ	SPRING;COMPRESSION	1			
44	1	LG006510	ｽﾌﾟﾘﾝｸﾞ	SPRING;SPL	1			
45	1	LLC0082	ﾌﾟﾗｸﾞ	PLUG	1			
46	1	LBQ6910	O-ﾘﾝｸﾞ	O-RING	1			
47	1	LSC0094	ｽﾌﾟﾘﾝｸﾞ	SPRING;SPL	1			
48	1	LJ014680	ﾎﾟﾍﾟｯﾄ	POPPET	1			
49	1	LJ00730	ﾎﾟﾍﾟｯﾄ	POPPET	1			
50	1	LH00250	ﾌﾗﾝｼﾞ	FLANGE;SPL	2			
51	1	LH004960	ｽﾍﾟｰｻ	SPACER	2			
52	1	LBQ0251	O-ﾘﾝｸﾞ JISB2401 1AG2	O-RING	2			
53	1	LBB0253	ﾘﾝｸﾞ;ﾊﾞｯｸｱｯﾌﾟ	RING;BACK-UP	2			
54	1	LBQ0553	O-ﾘﾝｸﾞ JISB2401 1BG5	O-RING	1			
55	1	LH004970	ｽﾍﾟｰｻ	SPACER	1			
56	1	LH004980	ｽﾘｰﾌﾞ	SLEEVE	1			
57	1	LPC0098	ﾎﾟﾍﾟｯﾄ	POPPET	1			
58	1	LSC0187	ｽﾌﾟﾘﾝｸﾞ	SPRING;SPL	1			
59	1	LH004990	ﾌﾗﾝｼﾞ ﾄｸｼｭ	FLANGE;SPL	1			
60	1	LE012520	O-ﾘﾝｸﾞ ﾄｸｼｭ ﾌﾂｿ	O-RING	3			
61	1	LE014890	O-ﾘﾝｸﾞ	O-RING	14			
62	1	LBQ0102	O-ﾘﾝｸﾞ JISB2401 1BP1	O-RING	12			
63	1	LJ014710	ﾊﾞﾙﾌﾞ ｱﾝﾁﾄﾞﾘﾌﾄ ASSY	VALVE;SPL	2			
64	1A	LJ014720	ﾊﾞﾙﾌﾞ;ﾘﾘｰﾌ KIT	VALVE;RELIEF	1			
65	2	LBQ6912	O-ﾘﾝｸﾞ AS568-912-HS9	O-RING	1			
66	1A	LJ014730	ﾊﾞﾙﾌﾞ;ﾘﾘｰﾌ KIT	VALVE;RELIEF	5			
67	2	LBQ6912	O-ﾘﾝｸﾞ AS568-912-HS9	O-RING	5			
68	2	LBQ0102	O-ﾘﾝｸﾞ JISB2401 1BP1	O-RING	5			
69	1A	LJ014740	ﾊﾞﾙﾌﾞ;ﾘﾘｰﾌ KIT	VALVE;RELIEF	1			
70	2	LBQ6912	O-ﾘﾝｸﾞ AS568-912-HS9	O-RING	1			
71	2	LBQ0102	O-ﾘﾝｸﾞ JISB2401 1BP1	O-RING	1			
72	1	LJ014700	ﾊﾞﾙﾌﾞ;ﾘﾘｰﾌ ASS'Y	VALVE;RELIEF	2			
73	1A	LNC0218	ﾌﾟﾗｸﾞ S/A	PLUG	3			
74	2	LBQ0182	O-ﾘﾝｸﾞ JISB2401 1BP1	O-RING	3			
75	1A	LNC0217	ﾌﾟﾗｸﾞ S/A	PLUG	10			
76	2	LBQ0142	O-ﾘﾝｸﾞ JISB2401 1BP1	O-RING	10			
77	1A	LNC0238	ﾌﾟﾗｸﾞ S/A	PLUG	3			
78	2	LK00328	ﾌﾟﾗｸﾞ	PLUG	3			
79	2	LBQ0112	O-ﾘﾝｸﾞ JISB2401 1BP1	O-RING	3			
80	1	108R010Z055B	ﾛｯｶｸｱﾅB JIS B 1180 M	BOLT;HEX SOC HD	24			
80	1	108R010Z055B	ﾛｯｶｸｱﾅB JIS B 1180 M	BOLT;HEX SOC HD	32			
81	1	108R010Z040B	ﾛｯｶｸｱﾅB JIS B1176 M1	BOLT;HEX SOC HD	74			
81	1	108R010Z040B	ﾛｯｶｸｱﾅB JIS B1176 M1	BOLT;HEX SOC HD	66			
82	1	108R016Z130B	ﾛｯｶｸｱﾅB JIS B1180 M1	BOLT;HEX SOC HD	8			
83	1	LUC0118	ﾛｯｶｸｱﾅB	BOLT;HEX SOC HD	4			
84	1	-------	ﾒｲﾊﾞﾝ;ｷﾊﾞﾝ	NAMEPLATE;SER NO.	1			
85	1	-------	ｽｸﾘｭｰ ﾄﾞﾗｲﾌﾞ	SCREW	2			
86	1	-------	ﾌﾟﾗｸﾞ	PLUG	5			
87	1	LA011120	ﾛｯｶｸｱﾅB	BOLT;HEX SOC HD	4			
88	1	-------	ｽﾌﾟｰﾙ ASS'Y	SPOOL	1			
89	1	LR015290	ｷｬｯﾌﾟ	CAP	1			
90	1	LR00579	ｷｬｯﾌﾟ	CAP	2			
91	1	LBQ5219	O-ﾘﾝｸﾞ	O-RING	2			

https://truckmanualshub.com/

27 [27.01 ~ 27.08] 27.01 [27.02 ~ 27.08]

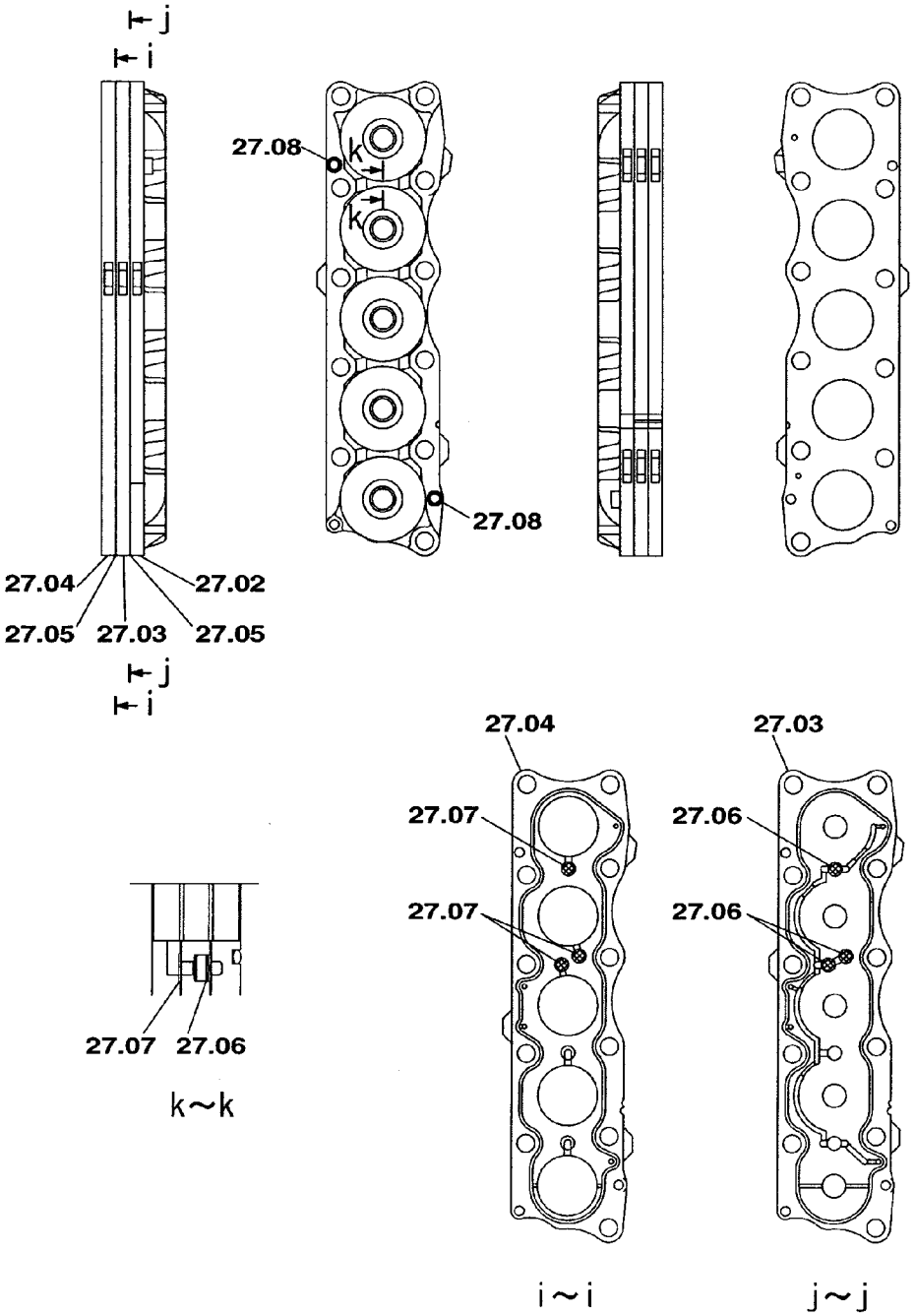

KRJ10310

https://truckmanualshub.com/

VALVE;CONTROL	ﾊﾞﾙﾌﾞ;ｺﾝﾄﾛｰﾙ	ZAJ313L0090 001 18/20	001

符号 ITEM	構成 COMPO	部品番号 PART NO.	部品名	PART NAME	個数 Q'TY	互換 ICA	代替部品 REPLACEABLE PART	備考 MEMO
38	1	LSC0227	ｽﾌﾟﾘﾝｸﾞ ﾄｸｼｭ	SPRING;SPL	2			
39	1	LJ00731	ｵﾘﾌｨｽ	ORIFICE	1			
40	1	LBQ0062	O-ﾘﾝｸﾞ JISB2401 1BP6	O-RING	27			
41	1	LR015280	ﾎﾞﾃﾞｨ ASSY	BODY	1			
42	1	LH00249	ﾌﾗﾝｼﾞ	FLANGE;SPL	1			
42	1	LH005410	ﾌﾗﾝｼﾞ	FLANGE;SPL	1			
43	1	LJ00728	ﾎﾟﾍﾟｯﾄ	POPPET	1			
43	1	LJ016050	ﾎﾟﾍﾟｯﾄ	POPPET	1			
44	1	LG00342	ｽﾌﾟﾘﾝｸﾞ;ｱﾂｼｭｸ	SPRING;COMPRESSION	1			
44	1	LG006510	ｽﾌﾟﾘﾝｸﾞ	SPRING;SPL	1			
45	1	LLC0082	ﾌﾟﾗｸﾞ	PLUG	1			
46	1	LBQ6910	O-ﾘﾝｸﾞ	O-RING	1			
47	1	LSC0094	ｽﾌﾟﾘﾝｸﾞ	SPRING;SPL	1			
48	1	LJ014680	ﾎﾟﾍﾟｯﾄ	POPPET	1			
49	1	LJ00730	ﾎﾟﾍﾟｯﾄ	POPPET	1			
50	1	LH00250	ﾌﾗﾝｼﾞ	FLANGE;SPL	2			
51	1	LH004960	ｽﾍﾟｰｻ	SPACER	2			
52	1	LBQ0251	O-ﾘﾝｸﾞ JISB2401 1AG2	O-RING	2			
53	1	LBB0253	ﾘﾝｸﾞ;ﾊﾞｯｸｱｯﾌﾟ	RING;BACK-UP	2			
54	1	LBQ0553	O-ﾘﾝｸﾞ JISB2401 1BG5	O-RING	1			
55	1	LH004970	ｽﾍﾟｰｻ	SPACER	1			
56	1	LH004980	ｽﾘｰﾌﾞ	SLEEVE	1			
57	1	LPC0098	ﾎﾟﾍﾟｯﾄ	POPPET	1			
58	1	LSC0187	ｽﾌﾟﾘﾝｸﾞ	SPRING;SPL	1			
59	1	LH004990	ﾌﾗﾝｼﾞ ﾄｸｼｭ	FLANGE;SPL	1			
60	1	LE012520	O-ﾘﾝｸﾞ ﾄｸｼｭ ﾌﾂｿ	O-RING	3			
61	1	LE014890	O-ﾘﾝｸﾞ	O-RING	14			
62	1	LBQ0102	O-ﾘﾝｸﾞ JISB2401 1BP1	O-RING	12			
63	1	LJ014710	ﾊﾞﾙﾌﾞ ｱﾝﾁﾄﾞﾘﾌﾄ ASSY	VALVE;SPL	2			
64	1A	LJ014720	ﾊﾞﾙﾌﾞ;ﾘﾘｰﾌ KIT	VALVE;RELIEF	1			
65	2	LBQ6912	O-ﾘﾝｸﾞ AS568-912-HS9	O-RING	1			
66	1A	LJ014730	ﾊﾞﾙﾌﾞ;ﾘﾘｰﾌ KIT	VALVE;RELIEF	5			
67	2	LBQ6912	O-ﾘﾝｸﾞ AS568-912-HS9	O-RING	5			
68	2	LBQ0102	O-ﾘﾝｸﾞ JISB2401 1BP1	O-RING	5			
69	1A	LJ014740	ﾊﾞﾙﾌﾞ;ﾘﾘｰﾌ KIT	VALVE;RELIEF	1			
70	2	LBQ6912	O-ﾘﾝｸﾞ AS568-912-HS9	O-RING	1			
71	2	LBQ0102	O-ﾘﾝｸﾞ JISB2401 1BP1	O-RING	1			
72	1	LJ014700	ﾊﾞﾙﾌﾞ;ﾘﾘｰﾌ ASS'Y	VALVE;RELIEF	2			
73	1A	LNC0218	ﾌﾟﾗｸﾞ S/A	PLUG	3			
74	2	LBQ0182	O-ﾘﾝｸﾞ JISB2401 1BP1	O-RING	3			
75	1A	LNC0217	ﾌﾟﾗｸﾞ S/A	PLUG	10			
76	2	LBQ0142	O-ﾘﾝｸﾞ JISB2401 1BP1	O-RING	10			
77	1A	LNC0238	ﾌﾟﾗｸﾞ S/A	PLUG	3			
78	2	LK00328	ﾌﾟﾗｸﾞ	PLUG	3			
79	2	LBQ0112	O-ﾘﾝｸﾞ JISB2401 1BP1	O-RING	3			
80	1	108R010Z055B	ﾛｯｶｸｱﾅB JIS B 1180 M	BOLT;HEX SOC HD	24			
80	1	108R010Z055B	ﾛｯｶｸｱﾅB JIS B 1180 M	BOLT;HEX SOC HD	32			
81	1	108R010Z040B	ﾛｯｶｸｱﾅB JIS B1176 M1	BOLT;HEX SOC HD	74			
81	1	108R010Z040B	ﾛｯｶｸｱﾅB JIS B1176 M1	BOLT;HEX SOC HD	66			
82	1	108R016Z130B	ﾛｯｶｸｱﾅB JIS B1180 M1	BOLT;HEX SOC HD	8			
83	1	LUC0118	ﾛｯｶｸｱﾅB	BOLT;HEX SOC HD	4			
84	1	-------	ﾒｲﾊﾞﾝ;ｷﾊﾞﾝ	NAMEPLATE;SER NO.	1			
85	1	-------	ｽｸﾘｭｰ ﾄﾞﾗｲﾌﾞ	SCREW	2			
86	1	-------	ﾌﾟﾗｸﾞ	PLUG	5			
87	1	LA011120	ﾛｯｶｸｱﾅB	BOLT;HEX SOC HD	4			
88	1	-------	ｽﾌﾟｰﾙ ASS'Y	SPOOL	1			
89	1	LR015290	ｷｬｯﾌﾟ	CAP	1			
90	1	LR00579	ｷｬｯﾌﾟ	CAP	2			
91	1	LBQ5219	O-ﾘﾝｸﾞ	O-RING	2			
92	1	LBQ0112	O-ﾘﾝｸﾞ JISB2401 1BP1	O-RING	2			
93	1	LK00301	ﾌﾟﾗｸﾞ	PLUG	2			
94	1A	LK00302	ﾌﾟﾗｸﾞ ASSY	PLUG	2			
95	2	LPC0256	ﾌﾟﾗｸﾞ	PLUG	2			
96	2	LBQ0242	O-ﾘﾝｸﾞ JISB2401 1BP2	O-RING	2			
97	1A	LPC0259	ﾌﾟﾗｸﾞ ASSY	PLUG	2			
98	2	LK00327	ﾌﾟﾗｸﾞ	PLUG	2			
99	2	LBQ6912	O-ﾘﾝｸﾞ AS568-912-HS9	O-RING	2			
100	2	LBQ0080	O-ﾘﾝｸﾞ JISB2401 1AP8	O-RING	2			

https://truckmanualshub.com/

28 [28.01 ~ 28.08] 28.01 [28.02 ~ 28.08]

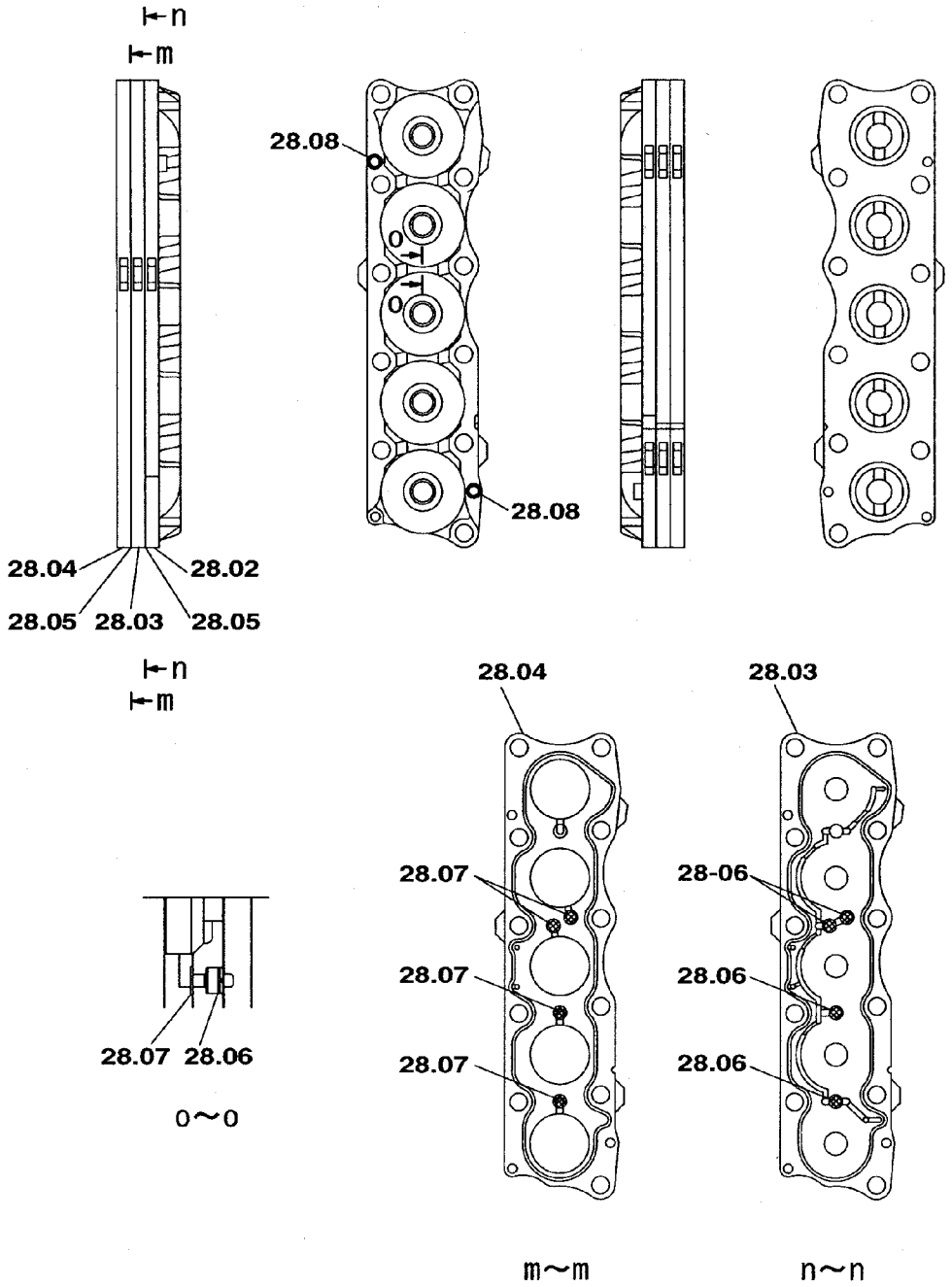

KRJ10310

https://truckmanualshub.com/

符号 ITEM	構成 COMPO	部品番号 PART NO.	部品名	PART NAME	個数 Q'TY	互換 ICA	代替部品 REPLACEABLE PART	備考 MEMO
44	1	LG006510	ｽﾌﾟﾘﾝｸﾞ	SPRING;SPL	1			
45	1	LLC0082	ﾌﾟﾗｸﾞ	PLUG	1			
46	1	LBQ6910	O-ﾘﾝｸﾞ	O-RING	1			
47	1	LSC0094	ｽﾌﾟﾘﾝｸﾞ	SPRING;SPL	1			
48	1	LJ014680	ﾎﾟﾍﾟｯﾄ	POPPET	1			
49	1	LJ00730	ﾎﾟﾍﾟｯﾄ	POPPET	1			
50	1	LH00250	ﾌﾗﾝｼﾞ	FLANGE;SPL	2			
51	1	LH004960	ｽﾍﾟｰｻ	SPACER	2			
52	1	LBQ0251	O-ﾘﾝｸﾞ JISB2401 1AG2	O-RING	2			
53	1	LBB0253	ﾘﾝｸﾞ;ﾊﾞｯｸｱｯﾌﾟ	RING;BACK-UP	2			
54	1	LBQ0553	O-ﾘﾝｸﾞ JISB2401 1BG5	O-RING	1			
55	1	LH004970	ｽﾍﾟｰｻ	SPACER	1			
56	1	LH004980	ｽﾘｰﾌﾞ	SLEEVE	1			
57	1	LPC0098	ﾎﾟﾍﾟｯﾄ	POPPET	1			
58	1	LSC0187	ｽﾌﾟﾘﾝｸﾞ	SPRING;SPL	1			
59	1	LH004990	ﾌﾗﾝｼﾞ ﾄｸｼｭ	FLANGE;SPL	1			
60	1	LE012520	O-ﾘﾝｸﾞ ﾄｸｼｭ ﾌﾂｿ	O-RING	3			
61	1	LE014890	O-ﾘﾝｸﾞ	O-RING	14			
62	1	LBQ0102	O-ﾘﾝｸﾞ JISB2401 1BP1	O-RING	12			
63	1	LJ014710	ﾊﾞﾙﾌﾞ ｱﾝﾁﾄﾞﾘﾌﾄ ASSY	VALVE;SPL	2			
64	1A	LJ014720	ﾊﾞﾙﾌﾞ;ﾘﾘｰﾌ KIT	VALVE;RELIEF	1			
65	2	LBQ6912	O-ﾘﾝｸﾞ AS568-912-HS9	O-RING	1			
66	1A	LJ014730	ﾊﾞﾙﾌﾞ;ﾘﾘｰﾌ KIT	VALVE;RELIEF	5			
67	2	LBQ6912	O-ﾘﾝｸﾞ AS568-912-HS9	O-RING	5			
68	2	LBQ0102	O-ﾘﾝｸﾞ JISB2401 1BP1	O-RING	5			
69	1A	LJ014740	ﾊﾞﾙﾌﾞ;ﾘﾘｰﾌ KIT	VALVE;RELIEF	1			
70	2	LBQ6912	O-ﾘﾝｸﾞ AS568-912-HS9	O-RING	1			
71	2	LBQ0102	O-ﾘﾝｸﾞ JISB2401 1BP1	O-RING	1			
72	1	LJ014700	ﾊﾞﾙﾌﾞ;ﾘﾘｰﾌ ASS'Y	VALVE;RELIEF	2			
73	1A	LNC0218	ﾌﾟﾗｸﾞ S/A	PLUG	3			
74	2	LBQ0182	O-ﾘﾝｸﾞ JISB2401 1BP1	O-RING	3			
75	1A	LNC0217	ﾌﾟﾗｸﾞ S/A	PLUG	10			
76	2	LBQ0142	O-ﾘﾝｸﾞ JISB2401 1BP1	O-RING	10			
77	1A	LNC0238	ﾌﾟﾗｸﾞ S/A	PLUG	3			
78	2	LK00328	ﾌﾟﾗｸﾞ	PLUG	3			
79	2	LBQ0112	O-ﾘﾝｸﾞ JISB2401 1BP1	O-RING	3			
80	1	108R010Z055B	ﾛｯｶｸｱﾅB JIS B 1180 M	BOLT;HEX SOC HD	24			
80	1	108R010Z055B	ﾛｯｶｸｱﾅB JIS B 1180 M	BOLT;HEX SOC HD	32			
81	1	108R010Z040B	ﾛｯｶｸｱﾅB JIS B1176 M1	BOLT;HEX SOC HD	74			
81	1	108R010Z040B	ﾛｯｶｸｱﾅB JIS B1176 M1	BOLT;HEX SOC HD	66			
82	1	108R016Z130B	ﾛｯｶｸｱﾅB JIS B1180 M1	BOLT;HEX SOC HD	8			
83	1	LUC0118	ﾛｯｶｸｱﾅB	BOLT;HEX SOC HD	4			
84	1	-------	ﾒｲﾊﾞﾝ;ｷﾊﾞﾝ	NAMEPLATE;SER NO.	1			
85	1	-------	ｽｸﾘｭｰ ﾄﾞﾗｲﾌﾞ	SCREW	2			
86	1	-------	ﾌﾟﾗｸﾞ	PLUG	5			
87	1	LA011120	ﾛｯｶｸｱﾅB	BOLT;HEX SOC HD	4			
88	1	-------	ｽﾌﾟｰﾙ ASS'Y	SPOOL	1			
89	1	LR015290	ｷｬｯﾌﾟ	CAP	1			
90	1	LR00579	ｷｬｯﾌﾟ	CAP	2			
91	1	LBQ5219	O-ﾘﾝｸﾞ	O-RING	2			
92	1	LBQ0112	O-ﾘﾝｸﾞ JISB2401 1BP1	O-RING	2			
93	1	LK00301	ﾌﾟﾗｸﾞ	PLUG	2			
94	1A	LK00302	ﾌﾟﾗｸﾞ ASSY	PLUG	2			
95	2	LPC0256	ﾌﾟﾗｸﾞ	PLUG	2			
96	2	LBQ0242	O-ﾘﾝｸﾞ JISB2401 1BP2	O-RING	2			
97	1A	LPC0259	ﾌﾟﾗｸﾞ ASSY	PLUG	2			
98	2	LK00327	ﾌﾟﾗｸﾞ	PLUG	2			
99	2	LBQ6912	O-ﾘﾝｸﾞ AS568-912-HS9	O-RING	2			
100	2	LBQ0080	O-ﾘﾝｸﾞ JISB2401 1AP8	O-RING	2			
101	2	LBB6110	ﾘﾝｸﾞ;ﾊﾞｯｸｱｯﾌﾟ	RING;BACK-UP	2			
102	1	LA011130	ﾛｯｶｸｱﾅB	BOLT;HEX SOC HD	2			
103	1	LT001660	ﾊｳｼﾞﾝｸﾞ ｱｳﾄﾚｯﾄ	HOUSING;SPL	1			
104	1	LB011890	ﾀｲﾛｯﾄﾞ	ROD;TIE	4			
105	1	LUC0094	ﾅｯﾄ	NUT;SPL	4			
106	1	LLC0045	ﾌﾟﾗｸﾞ S/A	PLUG	1			

https://truckmanualshub.com/

64 [65] 66 [67 , 68] 69 [70 , 71] 72 [73 , 74] 76 [77] 78 [79]
80 [81 , 82] 97 [98 , 99] 100 [101 ~ 104] 111 [112 , 113]

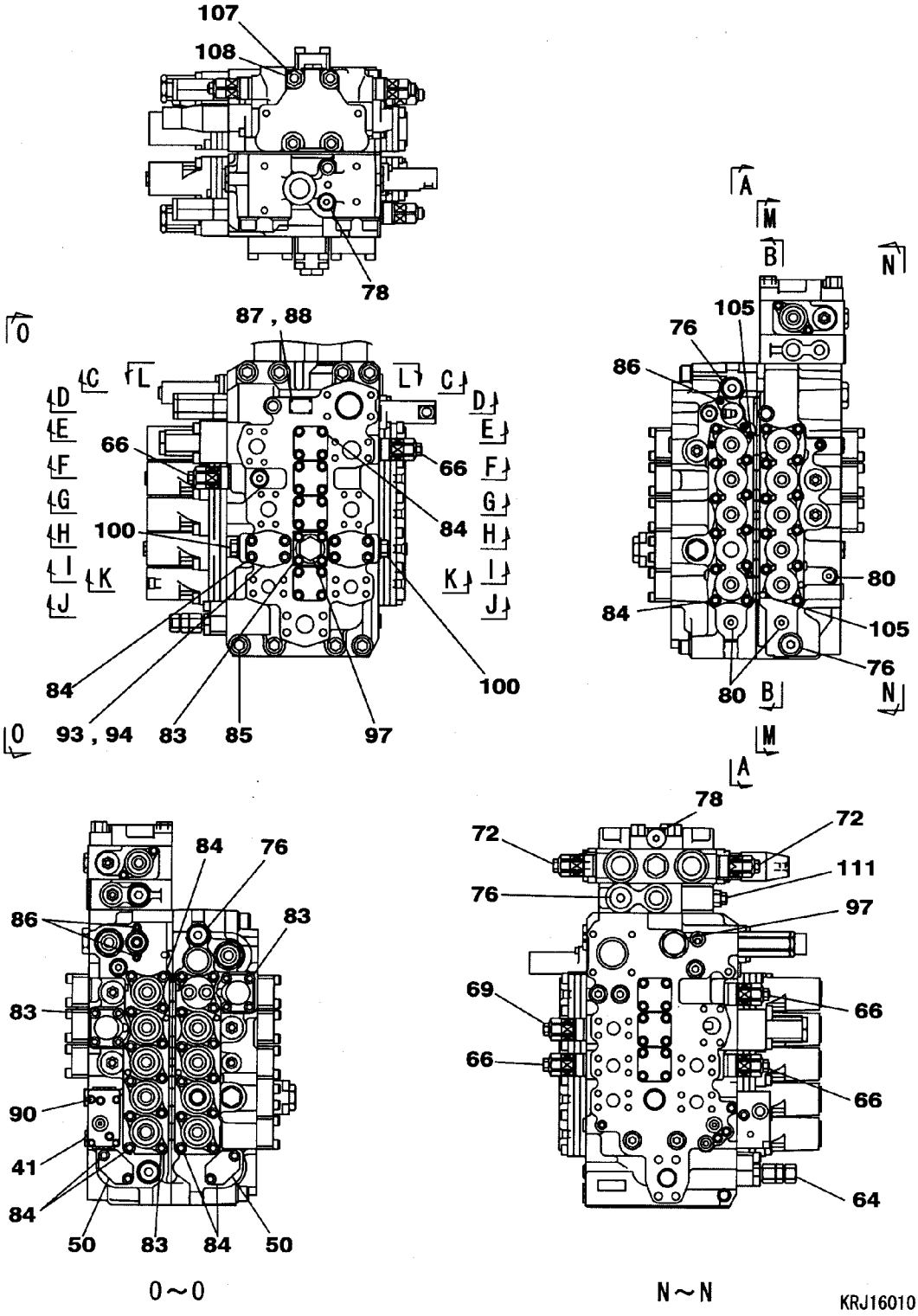

https://truckmanualshub.com/

VALVE;CONTROL	ﾊﾞﾙﾌﾞ;ｺﾝﾄﾛｰﾙ	ZAJ313L0091 001 2/20	001

符号 ITEM	構成 COMPO	部品番号 PART NO.	部品名	PART NAME	個数 Q'TY	互換 ICA	代替部品 REPLACEABLE PART	備考 MEMO
		KRJ16010			1			
1	1	-------	ﾊｳｼﾞﾝｸﾞ;ﾊﾞﾙﾌﾞ	HOUSING;VALVE	1			
2	1	-------	ｽﾌﾟｰﾙ ASSY	SPOOL	1			
3	1	-------	ｽﾌﾟｰﾙ ASSY	SPOOL	1			
4	1	-------	ｽﾌﾟｰﾙ ASSY	SPOOL	1			
5	1	-------	ｽﾌﾟｰﾙ ASSY	SPOOL	2			
6	1	-------	ｽﾌﾟｰﾙ ASSY	SPOOL	1			
7	1	LBQ0453	O-ﾘﾝｸﾞ JISB2401 1BG4	O-RING	20			
8	1	LR015210	ｷｬｯﾌﾟ	CAP	9			
9	1	LR015220	ｷｬｯﾌﾟ	CAP	1			
10	1A	LR015230	ﾌﾟﾚｰﾄ ASS'Y	PLATE;SPL	1			
10.01	2A	-------	ﾌﾟﾚｰﾄ ASS'Y	PLATE;SPL	1			
10.02	3	-------	ﾌﾟﾚｰﾄ	PLATE	1			
10.03	3	-------	ﾌﾟﾚｰﾄ	PLATE	1			
10.04	3	-------	ﾌﾟﾚｰﾄ	PLATE	1			
10.05	3	-------	ｶﾞｽｹｯﾄ	GASKET	2			
10.06	3	-------	ｽﾌﾟｰﾙ	SPOOL	5			
10.07	3	-------	ﾌｲﾙﾀ ﾄｸｼｭ	FILTER;SPL	4			
10.08	3	LBQ0453	O-ﾘﾝｸﾞ JISB2401 1BG4	O-RING	5			
10.09	3	108R006Z025N	ﾛｯｶｸｱﾅB M6X25-12.9	BOLT;HEX SOC HD	2			
11	1A	LR015240	ﾌﾟﾚｰﾄ ASS'Y	PLATE;SPL	1			
11.01	2A	-------	ﾌﾟﾚｰﾄ ASS'Y	PLATE;SPL	1			
11.02	3	-------	ﾌﾟﾚｰﾄ	PLATE	1			
11.03	3	-------	ﾌﾟﾚｰﾄ	PLATE	1			
11.04	3	-------	ﾌﾟﾚｰﾄ	PLATE	1			
11.05	3	-------	ｶﾞｽｹｯﾄ	GASKET	2			
11.06	3	-------	ｽﾌﾟｰﾙ	SPOOL	5			
11.07	3	-------	ﾌｲﾙﾀ ﾄｸｼｭ	FILTER;SPL	5			
11.08	3	LBQ0453	O-ﾘﾝｸﾞ JISB2401 1BG4	O-RING	5			
11.09	3	108R006Z025N	ﾛｯｶｸｱﾅB M6X25-12.9	BOLT;HEX SOC HD	2			
12	1	-------	ﾊｳｼﾞﾝｸﾞ;ﾊﾞﾙﾌﾞ	HOUSING;VALVE	1			
13	1	-------	ｽﾌﾟｰﾙ ASSY	SPOOL	1			
14	1	-------	ｽﾌﾟｰﾙ ASSY	SPOOL	1			
15	1	-------	ｽﾌﾟｰﾙ ASSY	SPOOL	1			
16	1	-------	ｽﾌﾟｰﾙ ASSY	SPOOL	1			
17	1	LR015250	ｷｬｯﾌﾟ	CAP	1			
18	1	-------	ｽﾌﾟｰﾙ;ﾊﾞﾙﾌﾞ	SPOOL;VALVE	1			
19	1	LSC0158	ｼｰﾄ;ｽﾌﾟﾘﾝｸﾞ	SEAT;SPRING	2			
20	1	LG00338	ｽﾌﾟﾘﾝｸﾞ;ｱｯｼｭｸ	SPRING;COMPRESSION	1			
21	1	LPC0222	ｴﾝﾄﾞ ｽﾌﾟｰﾙ	END;SPL	1			
22	1	LBQ0260	O-ﾘﾝｸﾞ JISB2401 1AP2	O-RING	1			
23	1	LK005690	ﾌﾟﾗｸﾞ	PLUG	1			
24	1	LBQ0242	O-ﾘﾝｸﾞ JISB2401 1BP2	O-RING	1			
25	1	LG00339	ｽﾌﾟﾘﾝｸﾞ;ｱｯｼｭｸ	SPRING;COMPRESSION	1			
26	1	LJ014690	ｽﾌﾟｰﾙ ASSY	SPOOL	1			
27	1A	LR015260	ﾌﾟﾚｰﾄ ASS'Y	PLATE;SPL	1			
27.01	2A	-------	ﾌﾟﾚｰﾄ ASS'Y	PLATE;SPL	1			
27.02	3	-------	ﾌﾟﾚｰﾄ	PLATE	1			
27.03	3	-------	ﾌﾟﾚｰﾄ	PLATE	1			
27.04	3	-------	ﾌﾟﾚｰﾄ	PLATE	1			
27.05	3	-------	ｶﾞｽｹｯﾄ	GASKET	2			
27.06	3	-------	ｽﾌﾟｰﾙ	SPOOL	3			
27.07	3	-------	ﾌｲﾙﾀ ﾄｸｼｭ	FILTER;SPL	3			
27.08	3	108R006Z025N	ﾛｯｶｸｱﾅB M6X25-12.9	BOLT;HEX SOC HD	2			
28	1A	LR015270	ﾌﾟﾚｰﾄ ASS'Y	PLATE;SPL	1			
28.01	2A	-------	ﾌﾟﾚｰﾄ ASS'Y	PLATE;SPL	1			
28.02	3	-------	ﾌﾟﾚｰﾄ	PLATE	1			
28.03	3	-------	ﾌﾟﾚｰﾄ	PLATE	1			
28.04	3	-------	ﾌﾟﾚｰﾄ	PLATE	1			
28.05	3	-------	ｶﾞｽｹｯﾄ	GASKET	2			
28.06	3	-------	ｽﾌﾟｰﾙ	SPOOL	4			
28.07	3	-------	ﾌｲﾙﾀ ﾄｸｼｭ	FILTER;SPL	4			
28.08	3	108R006Z025N	ﾛｯｶｸｱﾅB M6X25-12.9	BOLT;HEX SOC HD	2			
29	1	LBQ0162	O-ﾘﾝｸﾞ JISB2401 1BP1	O-RING	1			
30	1	LBB0162	ﾘﾝｸﾞ;ﾊﾞｯｸｱｯﾌﾟ	RING;BACK-UP	2			
31	1	LJ00726	ﾎﾟﾍﾟｯﾄ	POPPET	2			
32	1	LG00340	ｽﾌﾟﾘﾝｸﾞ;ｱｯｼｭｸ	SPRING;COMPRESSION	2			
33	1	LJ00727	ﾎﾟﾍﾟｯﾄ	POPPET	7			

https://truckmanualshub.com/

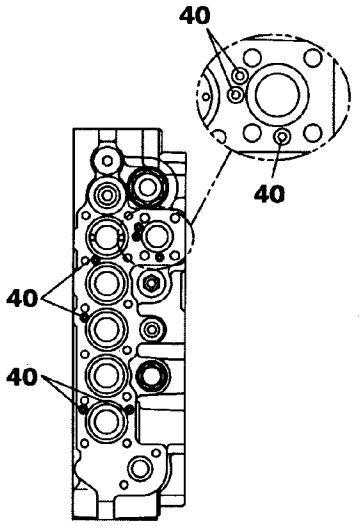

A1～A1

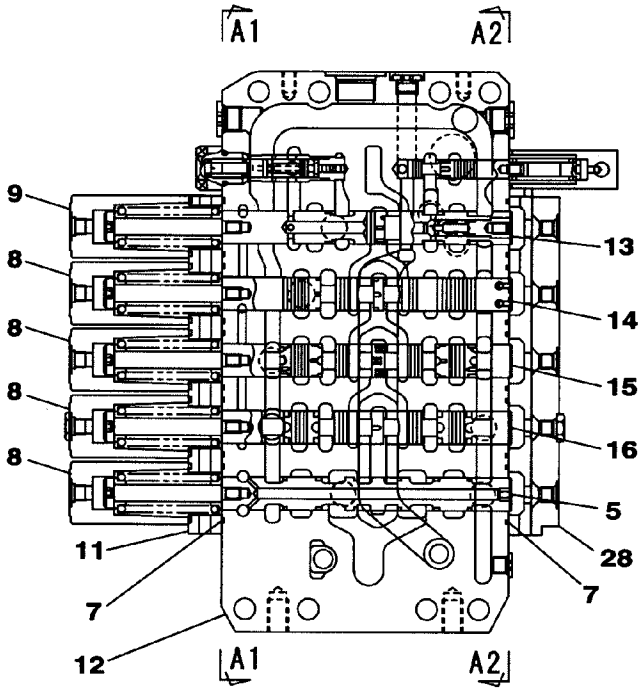

A～A

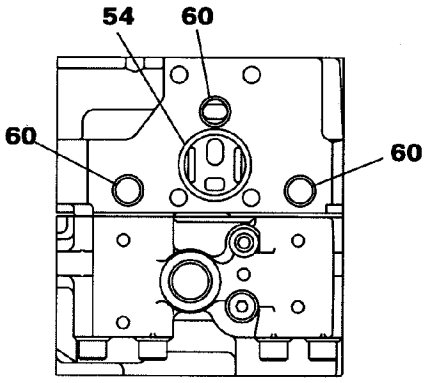

L～L

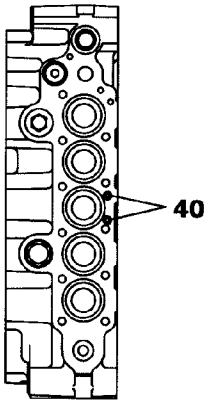

A2～A2

KRJ16010

https://truckmanualshub.com/

VALVE;CONTROL	ﾊﾞﾙﾌﾞ;ｺﾝﾄﾛｰﾙ	ZAJ313L0091 001 4/20	001

符号 ITEM	構成 COMPO	部品番号 PART NO.	部品名	PART NAME	個数 Q'TY	互換 ICA	代替部品 REPLACEABLE PART	備考 MEMO
10	1A	LR015230	ﾌﾟﾚｰﾄ ASS'Y	PLATE;SPL	1			
10.01	2A	-------	ﾌﾟﾚｰﾄ ASS'Y	PLATE;SPL	1			
10.02	3	-------	ﾌﾟﾚｰﾄ	PLATE	1			
10.03	3	-------	ﾌﾟﾚｰﾄ	PLATE	1			
10.04	3	-------	ﾌﾟﾚｰﾄ	PLATE	1			
10.05	3	-------	ｶﾞｽｹｯﾄ	GASKET	2			
10.06	3	-------	ｽﾌﾟｰﾙ	SPOOL	5			
10.07	3	-------	ﾌｨﾙﾀ ﾄｸｼｭ	FILTER;SPL	4			
10.08	3	LBQ0453	O-ﾘﾝｸﾞ JISB2401 1BG4	O-RING	5			
10.09	3	108R006Z025N	ﾛｯｶｸｱﾅB M6X25-12.9	BOLT;HEX SOC HD	2			
11	1A	LR015240	ﾌﾟﾚｰﾄ ASS'Y	PLATE;SPL	1			
11.01	2A	-------	ﾌﾟﾚｰﾄ ASS'Y	PLATE;SPL	1			
11.02	3	-------	ﾌﾟﾚｰﾄ	PLATE	1			
11.03	3	-------	ﾌﾟﾚｰﾄ	PLATE	1			
11.04	3	-------	ﾌﾟﾚｰﾄ	PLATE	1			
11.05	3	-------	ｶﾞｽｹｯﾄ	GASKET	2			
11.06	3	-------	ｽﾌﾟｰﾙ	SPOOL	5			
11.07	3	-------	ﾌｨﾙﾀ ﾄｸｼｭ	FILTER;SPL	5			
11.08	3	LBQ0453	O-ﾘﾝｸﾞ JISB2401 1BG4	O-RING	5			
11.09	3	108R006Z025N	ﾛｯｶｸｱﾅB M6X25-12.9	BOLT;HEX SOC HD	2			
12	1	-------	ﾊｳｼﾞﾝｸﾞ;ﾊﾞﾙﾌﾞ	HOUSING;VALVE	1			
13	1	-------	ｽﾌﾟｰﾙ ASSY	SPOOL	1			
14	1	-------	ｽﾌﾟｰﾙ ASSY	SPOOL	1			
15	1	-------	ｽﾌﾟｰﾙ ASSY	SPOOL	1			
16	1	-------	ｽﾌﾟｰﾙ ASSY	SPOOL	1			
17	1	LR015250	ｷｬｯﾌﾟ	CAP	1			
18	1	-------	ｽﾌﾟｰﾙ;ﾊﾞﾙﾌﾞ	SPOOL;VALVE	1			
19	1	LSC0158	ｼｰﾄ;ｽﾌﾟﾘﾝｸﾞ	SEAT;SPRING	2			
20	1	LG00338	ｽﾌﾟﾘﾝｸﾞ;ｱｯｼｭｸ	SPRING;COMPRESSION	1			
21	1	LPC0222	ｴﾝﾄﾞ ｽﾌﾟｰﾙ	END;SPL	1			
22	1	LBQ0260	O-ﾘﾝｸﾞ JISB2401 1AP2	O-RING	1			
23	1	LK005690	ﾌﾟﾗｸﾞ	PLUG	1			
24	1	LBQ0242	O-ﾘﾝｸﾞ JISB2401 1BP2	O-RING	1			
25	1	LG00339	ｽﾌﾟﾘﾝｸﾞ;ｱｯｼｭｸ	SPRING;COMPRESSION	1			
26	1	LJ014690	ｽﾌﾟｰﾙ ASSY	SPOOL	1			
27	1A	LR015260	ﾌﾟﾚｰﾄ ASS'Y	PLATE;SPL	1			
27.01	2A	-------	ﾌﾟﾚｰﾄ ASS'Y	PLATE;SPL	1			
27.02	3	-------	ﾌﾟﾚｰﾄ	PLATE	1			
27.03	3	-------	ﾌﾟﾚｰﾄ	PLATE	1			
27.04	3	-------	ﾌﾟﾚｰﾄ	PLATE	1			
27.05	3	-------	ｶﾞｽｹｯﾄ	GASKET	2			
27.06	3	-------	ｽﾌﾟｰﾙ	SPOOL	3			
27.07	3	-------	ﾌｨﾙﾀ ﾄｸｼｭ	FILTER;SPL	3			
27.08	3	108R006Z025N	ﾛｯｶｸｱﾅB M6X25-12.9	BOLT;HEX SOC HD	2			
28	1A	LR015270	ﾌﾟﾚｰﾄ ASS'Y	PLATE;SPL	1			
28.01	2A	-------	ﾌﾟﾚｰﾄ ASS'Y	PLATE;SPL	1			
28.02	3	-------	ﾌﾟﾚｰﾄ	PLATE	1			
28.03	3	-------	ﾌﾟﾚｰﾄ	PLATE	1			
28.04	3	-------	ﾌﾟﾚｰﾄ	PLATE	1			
28.05	3	-------	ｶﾞｽｹｯﾄ	GASKET	2			
28.06	3	-------	ｽﾌﾟｰﾙ	SPOOL	4			
28.07	3	-------	ﾌｨﾙﾀ ﾄｸｼｭ	FILTER;SPL	4			
28.08	3	108R006Z025N	ﾛｯｶｸｱﾅB M6X25-12.9	BOLT;HEX SOC HD	2			
29	1	LBQ0162	O-ﾘﾝｸﾞ JISB2401 1BP1	O-RING	1			
30	1	LBB0162	ﾘﾝｸﾞ;ﾊﾞｯｸｱｯﾌﾟ	RING;BACK-UP	2			
31	1	LJ00726	ﾎﾟﾍﾟｯﾄ	POPPET	2			
32	1	LG00340	ｽﾌﾟﾘﾝｸﾞ;ｱｯｼｭｸ	SPRING;COMPRESSION	2			
33	1	LJ00727	ﾎﾟﾍﾟｯﾄ	POPPET	7			
34	1	LG00341	ｽﾌﾟﾘﾝｸﾞ;ｱｯｼｭｸ	SPRING;COMPRESSION	8			
35	1	LBQ0322	O-ﾘﾝｸﾞ JISB2401 1BP3	O-RING	10			
36	1	LH00248	ﾌﾗﾝｼﾞ	FLANGE;SPL	6			
37	1	LPC0180	ﾎﾟﾍﾟｯﾄ	POPPET	2			
38	1	LSC0227	ｽﾌﾟﾘﾝｸﾞ ﾄｸｼｭ	SPRING;SPL	2			
39	1	LJ00731	ｵﾘﾌｨｽ	ORIFICE	1			
40	1	LBQ0062	O-ﾘﾝｸﾞ JISB2401 1BP6	O-RING	27			
41	1	LR015280	ﾎﾞﾃﾞｨ ASSY	BODY	1			
42	1	LH00249	ﾌﾗﾝｼﾞ	FLANGE;SPL	1			
42	1	LH005410	ﾌﾗﾝｼﾞ	FLANGE;SPL	1			

https://truckmanualshub.com/

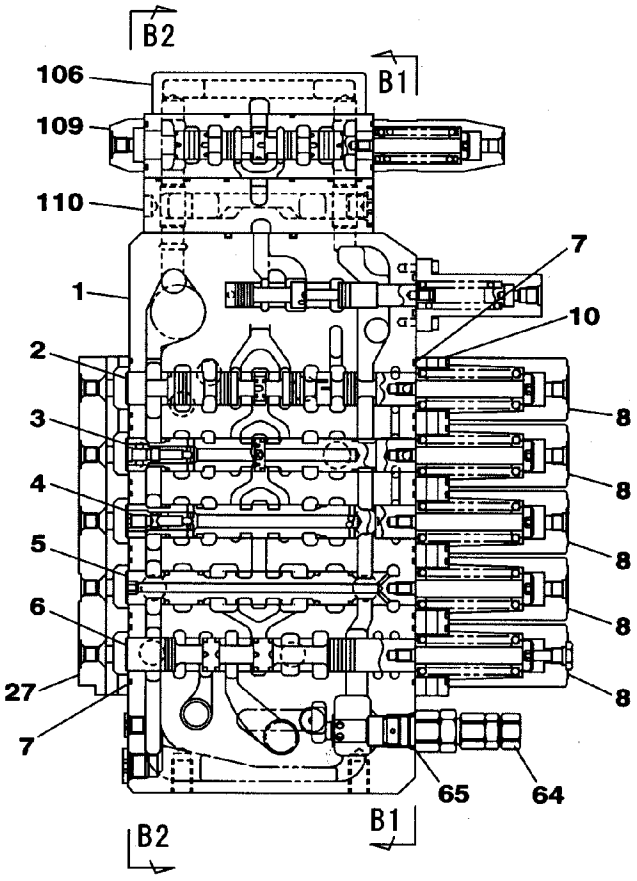

B～B

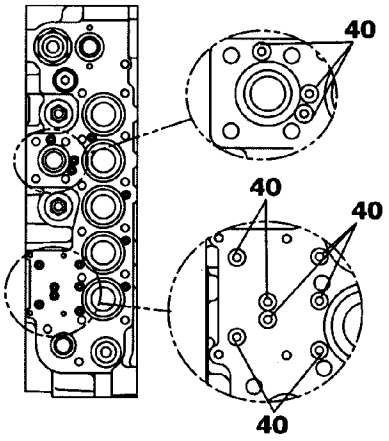

B1～B1

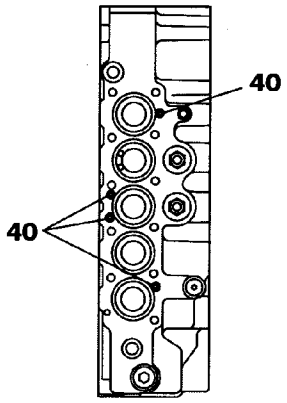

B2～B2

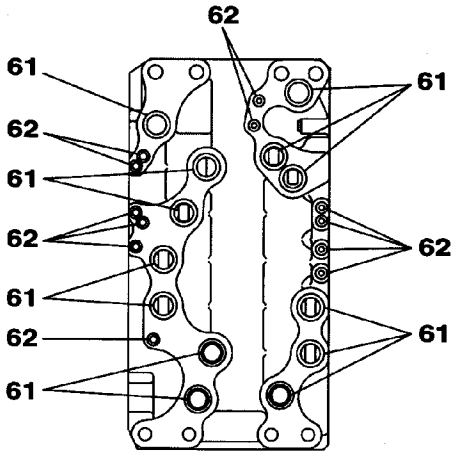

M～M

KRJ16010

https://truckmanualshub.com/

VALVE;CONTROL	ﾊﾞﾙﾌﾞ;ｺﾝﾄﾛｰﾙ	ZAJ313L0091 001 6/20	001

符号 ITEM	構成 COMPO	部品番号 PART NO.	部品名	PART NAME	個数 Q'TY	互換 ICA	代替部品 REPLACEABLE PART	備考 MEMO
11	1A	LR015240	ﾌﾟﾚｰﾄ ASS'Y	PLATE;SPL	1			
11.01	2A	-------	ﾌﾟﾚｰﾄ ASS'Y	PLATE;SPL	1			
11.02	3	-------	ﾌﾟﾚｰﾄ	PLATE	1			
11.03	3	-------	ﾌﾟﾚｰﾄ	PLATE	1			
11.04	3	-------	ﾌﾟﾚｰﾄ	PLATE	1			
11.05	3	-------	ｶﾞｽｹｯﾄ	GASKET	2			
11.06	3	-------	ｽﾌﾟｰﾙ	SPOOL	5			
11.07	3	-------	ﾌｨﾙﾀ ﾄｸｼｭ	FILTER;SPL	5			
11.08	3	LBQ0453	O-ﾘﾝｸﾞ JISB2401 1BG4	O-RING	5			
11.09	3	108R006Z025N	ﾛｯｶｸｱﾅB M6X25-12.9	BOLT;HEX SOC HD	2			
12	1	-------	ﾊｳｼﾞﾝｸﾞ;ﾊﾞﾙﾌﾞ	HOUSING;VALVE	1			
13	1	-------	ｽﾌﾟｰﾙ ASSY	SPOOL	1			
14	1	-------	ｽﾌﾟｰﾙ ASSY	SPOOL	1			
15	1	-------	ｽﾌﾟｰﾙ ASSY	SPOOL	1			
16	1	-------	ｽﾌﾟｰﾙ ASSY	SPOOL	1			
17	1	LR015250	ｷｬｯﾌﾟ	CAP	1			
18	1	-------	ｽﾌﾟｰﾙ;ﾊﾞﾙﾌﾞ	SPOOL;VALVE	1			
19	1	LSC0158	ｼｰﾄ;ｽﾌﾟﾘﾝｸﾞ	SEAT;SPRING	2			
20	1	LG00338	ｽﾌﾟﾘﾝｸﾞ;ｱｯｼｭｸ	SPRING;COMPRESSION	1			
21	1	LPC0222	ｴﾝﾄﾞ ｽﾌﾟｰﾙ	END;SPL	1			
22	1	LBQ0260	O-ﾘﾝｸﾞ JISB2401 1AP2	O-RING	1			
23	1	LK005690	ﾌﾟﾗｸﾞ	PLUG	1			
24	1	LBQ0242	O-ﾘﾝｸﾞ JISB2401 1BP2	O-RING	1			
25	1	LG00339	ｽﾌﾟﾘﾝｸﾞ;ｱｯｼｭｸ	SPRING;COMPRESSION	1			
26	1	LJ014690	ｽﾌﾟｰﾙ ASSY	SPOOL	1			
27	1A	LR015260	ﾌﾟﾚｰﾄ ASS'Y	PLATE;SPL	1			
27.01	2A	-------	ﾌﾟﾚｰﾄ ASS'Y	PLATE;SPL	1			
27.02	3	-------	ﾌﾟﾚｰﾄ	PLATE	1			
27.03	3	-------	ﾌﾟﾚｰﾄ	PLATE	1			
27.04	3	-------	ﾌﾟﾚｰﾄ	PLATE	1			
27.05	3	-------	ｶﾞｽｹｯﾄ	GASKET	2			
27.06	3	-------	ｽﾌﾟｰﾙ	SPOOL	3			
27.07	3	-------	ﾌｨﾙﾀ ﾄｸｼｭ	FILTER;SPL	3			
27.08	3	108R006Z025N	ﾛｯｶｸｱﾅB M6X25-12.9	BOLT;HEX SOC HD	2			
28	1A	LR015270	ﾌﾟﾚｰﾄ ASS'Y	PLATE;SPL	1			
28.01	2A	-------	ﾌﾟﾚｰﾄ ASS'Y	PLATE;SPL	1			
28.02	3	-------	ﾌﾟﾚｰﾄ	PLATE	1			
28.03	3	-------	ﾌﾟﾚｰﾄ	PLATE	1			
28.04	3	-------	ﾌﾟﾚｰﾄ	PLATE	1			
28.05	3	-------	ｶﾞｽｹｯﾄ	GASKET	2			
28.06	3	-------	ｽﾌﾟｰﾙ	SPOOL	4			
28.07	3	-------	ﾌｨﾙﾀ ﾄｸｼｭ	FILTER;SPL	4			
28.08	3	108R006Z025N	ﾛｯｶｸｱﾅB M6X25-12.9	BOLT;HEX SOC HD	2			
29	1	LBQ0162	O-ﾘﾝｸﾞ JISB2401 1BP1	O-RING	1			
30	1	LBB0162	ﾘﾝｸﾞ;ﾊﾞｯｸｱｯﾌﾟ	RING;BACK-UP	2			
31	1	LJ00726	ﾎﾟﾍﾟｯﾄ	POPPET	2			
32	1	LG00340	ｽﾌﾟﾘﾝｸﾞ;ｱｯｼｭｸ	SPRING;COMPRESSION	2			
33	1	LJ00727	ﾎﾟﾍﾟｯﾄ	POPPET	7			
34	1	LG00341	ｽﾌﾟﾘﾝｸﾞ;ｱｯｼｭｸ	SPRING;COMPRESSION	8			
35	1	LBQ0322	O-ﾘﾝｸﾞ JISB2401 1BP3	O-RING	10			
36	1	LH00248	ﾌﾗﾝｼﾞ	FLANGE;SPL	6			
37	1	LPC0180	ﾎﾟﾍﾟｯﾄ	POPPET	2			
38	1	LSC0227	ｽﾌﾟﾘﾝｸﾞ ﾄｸｼｭ	SPRING;SPL	2			
39	1	LJ00731	ｵﾘﾌｨｽ	ORIFICE	1			
40	1	LBQ0062	O-ﾘﾝｸﾞ JISB2401 1BP6	O-RING	27			
41	1	LR015280	ﾎﾞﾃﾞｨ ASSY	BODY	1			
42	1	LH00249	ﾌﾗﾝｼﾞ	FLANGE;SPL	1			
42	1	LH005410	ﾌﾗﾝｼﾞ	FLANGE;SPL	1			
43	1	LJ00728	ﾎﾟﾍﾟｯﾄ	POPPET	1			
43	1	LJ016050	ﾎﾟﾍﾟｯﾄ	POPPET	1			
44	1	LG00342	ｽﾌﾟﾘﾝｸﾞ;ｱｯｼｭｸ	SPRING;COMPRESSION	1			
44	1	LG006510	ｽﾌﾟﾘﾝｸﾞ	SPRING;SPL	1			
45	1	LLC0082	ﾌﾟﾗｸﾞ	PLUG	1			
46	1	LBQ6910	O-ﾘﾝｸﾞ	O-RING	1			
47	1	LSC0094	ｽﾌﾟﾘﾝｸﾞ	SPRING;SPL	1			
48	1	LJ014680	ﾎﾟﾍﾟｯﾄ	POPPET	1			
49	1	LJ00730	ﾎﾟﾍﾟｯﾄ	POPPET	1			
50	1	LH00250	ﾌﾗﾝｼﾞ	FLANGE;SPL	2			

https://truckmanualshub.com/

66 [67 , 68] 69 [70 , 71] 76 [77] 78 [79] 97 [98 , 99]

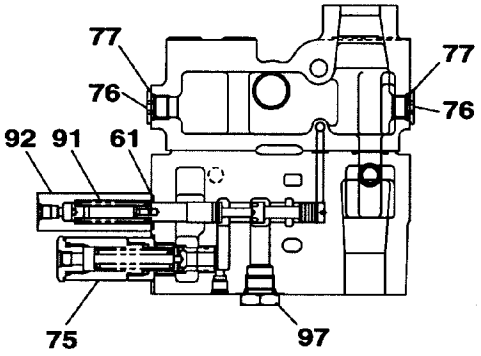

C～C

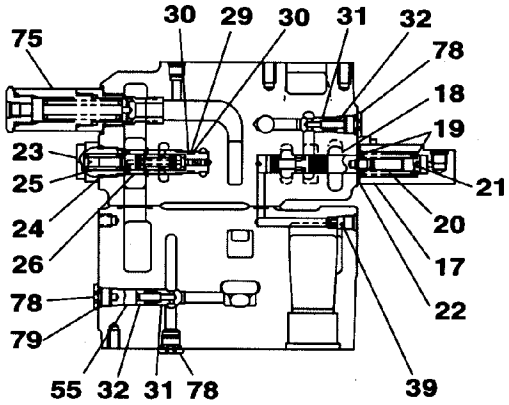

D～D

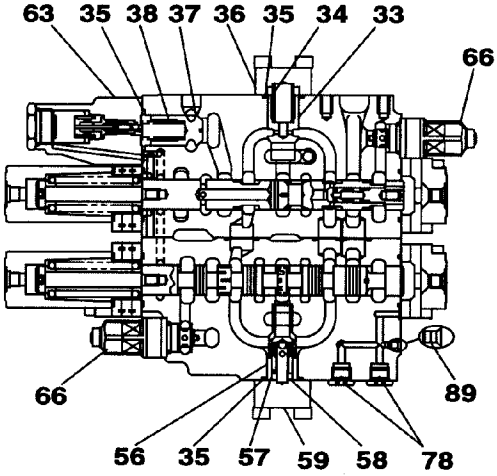

E～E

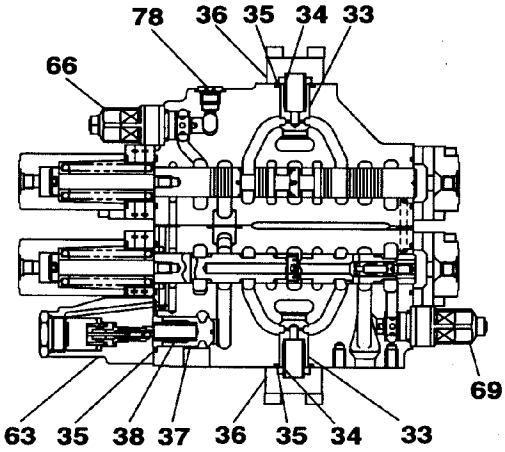

F～F

KRJ16010

https://truckmanualshub.com/

符号 ITEM	構成 COMPO	部品番号 PART NO.	部品名	PART NAME	個数 Q'TY	互換 ICA	代替部品 REPLACEABLE PART	備考 MEMO
12	1	-------	ﾊｳｼﾞﾝｸﾞ;ﾊﾞﾙﾌﾞ	HOUSING;VALVE	1			
13	1	-------	ｽﾌﾟｰﾙ ASSY	SPOOL	1			
14	1	-------	ｽﾌﾟｰﾙ ASSY	SPOOL	1			
15	1	-------	ｽﾌﾟｰﾙ ASSY	SPOOL	1			
16	1	-------	ｽﾌﾟｰﾙ ASSY	SPOOL	1			
17	1	LR015250	ｷｬｯﾌﾟ	CAP	1			
18	1	-------	ｽﾌﾟｰﾙ;ﾊﾞﾙﾌﾞ	SPOOL;VALVE	1			
19	1	LSC0158	ｼｰﾄ;ｽﾌﾟﾘﾝｸﾞ	SEAT;SPRING	2			
20	1	LG00338	ｽﾌﾟﾘﾝｸﾞ;ｱﾂｼｭｸ	SPRING;COMPRESSION	1			
21	1	LPC0222	ｴﾝﾄﾞ ｽﾌﾟｰﾙ	END;SPL	1			
22	1	LBQ0260	O-ﾘﾝｸﾞ JISB2401 1AP2	O-RING	1			
23	1	LK005690	ﾌﾟﾗｸﾞ	PLUG	1			
24	1	LBQ0242	O-ﾘﾝｸﾞ JISB2401 1BP2	O-RING	1			
25	1	LG00339	ｽﾌﾟﾘﾝｸﾞ;ｱﾂｼｭｸ	SPRING;COMPRESSION	1			
26	1	LJ014690	ｽﾌﾟｰﾙ ASSY	SPOOL	1			
27	1A	LR015260	ﾌﾟﾚｰﾄ ASS'Y	PLATE;SPL	1			
27.01	2A	-------	ﾌﾟﾚｰﾄ ASS'Y	PLATE;SPL	1			
27.02	3	-------	ﾌﾟﾚｰﾄ	PLATE	1			
27.03	3	-------	ﾌﾟﾚｰﾄ	PLATE	1			
27.04	3	-------	ﾌﾟﾚｰﾄ	PLATE	1			
27.05	3	-------	ｶﾞｽｹｯﾄ	GASKET	2			
27.06	3	-------	ｽﾌﾟｰﾙ	SPOOL	3			
27.07	3	-------	ﾌｨﾙﾀ ﾄｸｼｭ	FILTER;SPL	3			
27.08	3	108R006Z025N	ﾛｯｶｸｱﾅB M6X25-12.9	BOLT;HEX SOC HD	2			
28	1A	LR015270	ﾌﾟﾚｰﾄ ASS'Y	PLATE;SPL	1			
28.01	2A	-------	ﾌﾟﾚｰﾄ ASS'Y	PLATE;SPL	1			
28.02	3	-------	ﾌﾟﾚｰﾄ	PLATE	1			
28.03	3	-------	ﾌﾟﾚｰﾄ	PLATE	1			
28.04	3	-------	ﾌﾟﾚｰﾄ	PLATE	1			
28.05	3	-------	ｶﾞｽｹｯﾄ	GASKET	2			
28.06	3	-------	ｽﾌﾟｰﾙ	SPOOL	4			
28.07	3	-------	ﾌｨﾙﾀ ﾄｸｼｭ	FILTER;SPL	4			
28.08	3	108R006Z025N	ﾛｯｶｸｱﾅB M6X25-12.9	BOLT;HEX SOC HD	2			
29	1	LBQ0162	O-ﾘﾝｸﾞ JISB2401 1BP1	O-RING	1			
30	1	LBB0162	ﾘﾝｸﾞ;ﾊﾞｯｸｱｯﾌﾟ	RING;BACK-UP	2			
31	1	LJ00726	ﾎﾟﾍﾟｯﾄ	POPPET	2			
32	1	LG00340	ｽﾌﾟﾘﾝｸﾞ;ｱﾂｼｭｸ	SPRING;COMPRESSION	2			
33	1	LJ00727	ﾎﾟﾍﾟｯﾄ	POPPET	7			
34	1	LG00341	ｽﾌﾟﾘﾝｸﾞ;ｱﾂｼｭｸ	SPRING;COMPRESSION	8			
35	1	LBQ0322	O-ﾘﾝｸﾞ JISB2401 1BP3	O-RING	10			
36	1	LH00248	ﾌﾗﾝｼﾞ	FLANGE;SPL	6			
37	1	LPC0180	ﾎﾟﾍﾟｯﾄ	POPPET	2			
38	1	LSC0227	ｽﾌﾟﾘﾝｸﾞ ﾄｸｼｭ	SPRING;SPL	2			
39	1	LJ00731	ｵﾘﾌｨｽ	ORIFICE	1			
40	1	LBQ0062	O-ﾘﾝｸﾞ JISB2401 1BP6	O-RING	27			
41	1	LR015280	ﾎﾞﾃﾞｨ ASSY	BODY	1			
42	1	LH00249	ﾌﾗﾝｼﾞ	FLANGE;SPL	1			
42	1	LH005410	ﾌﾗﾝｼﾞ	FLANGE;SPL	1			
43	1	LJ00728	ﾎﾟﾍﾟｯﾄ	POPPET	1			
43	1	LJ016050	ﾎﾟﾍﾟｯﾄ	POPPET	1			
44	1	LG00342	ｽﾌﾟﾘﾝｸﾞ;ｱﾂｼｭｸ	SPRING;COMPRESSION	1			
44	1	LG006510	ｽﾌﾟﾘﾝｸﾞ	SPRING;SPL	1			
45	1	LLC0082	ﾌﾟﾗｸﾞ	PLUG	1			
46	1	LBQ6910	O-ﾘﾝｸﾞ	O-RING	1			
47	1	LSC0094	ｽﾌﾟﾘﾝｸﾞ	SPRING;SPL	1			
48	1	LJ014680	ﾎﾟﾍﾟｯﾄ	POPPET	1			
49	1	LJ00730	ﾎﾟﾍﾟｯﾄ	POPPET	1			
50	1	LH00250	ﾌﾗﾝｼﾞ	FLANGE;SPL	2			
51	1	LH004960	ｽﾍﾟｰｻ	SPACER	2			
52	1	LBQ0251	O-ﾘﾝｸﾞ JISB2401 1AG2	O-RING	2			
53	1	LBB0253	ﾘﾝｸﾞ;ﾊﾞｯｸｱｯﾌﾟ	RING;BACK-UP	2			
54	1	LBQ0553	O-ﾘﾝｸﾞ JISB2401 1BG5	O-RING	1			
55	1	LH004970	ｽﾍﾟｰｻ	SPACER	1			
56	1	LH004980	ｽﾘｰﾌﾞ	SLEEVE	1			
57	1	LPC0098	ﾎﾟﾍﾟｯﾄ	POPPET	1			
58	1	LSC0187	ｽﾌﾟﾘﾝｸﾞ	SPRING;SPL	1			
59	1	LH004990	ﾌﾗﾝｼﾞ ﾄｸｼｭ	FLANGE;SPL	1			
60	1	LE012520	O-ﾘﾝｸﾞ ﾄｸｼｭ ﾌﾂｿ	O-RING	3			

https://truckmanualshub.com/

66 [67 , 68] 78 [79] 80 [81 , 82] 97 [98 , 99] 100 [101 ~ 104]

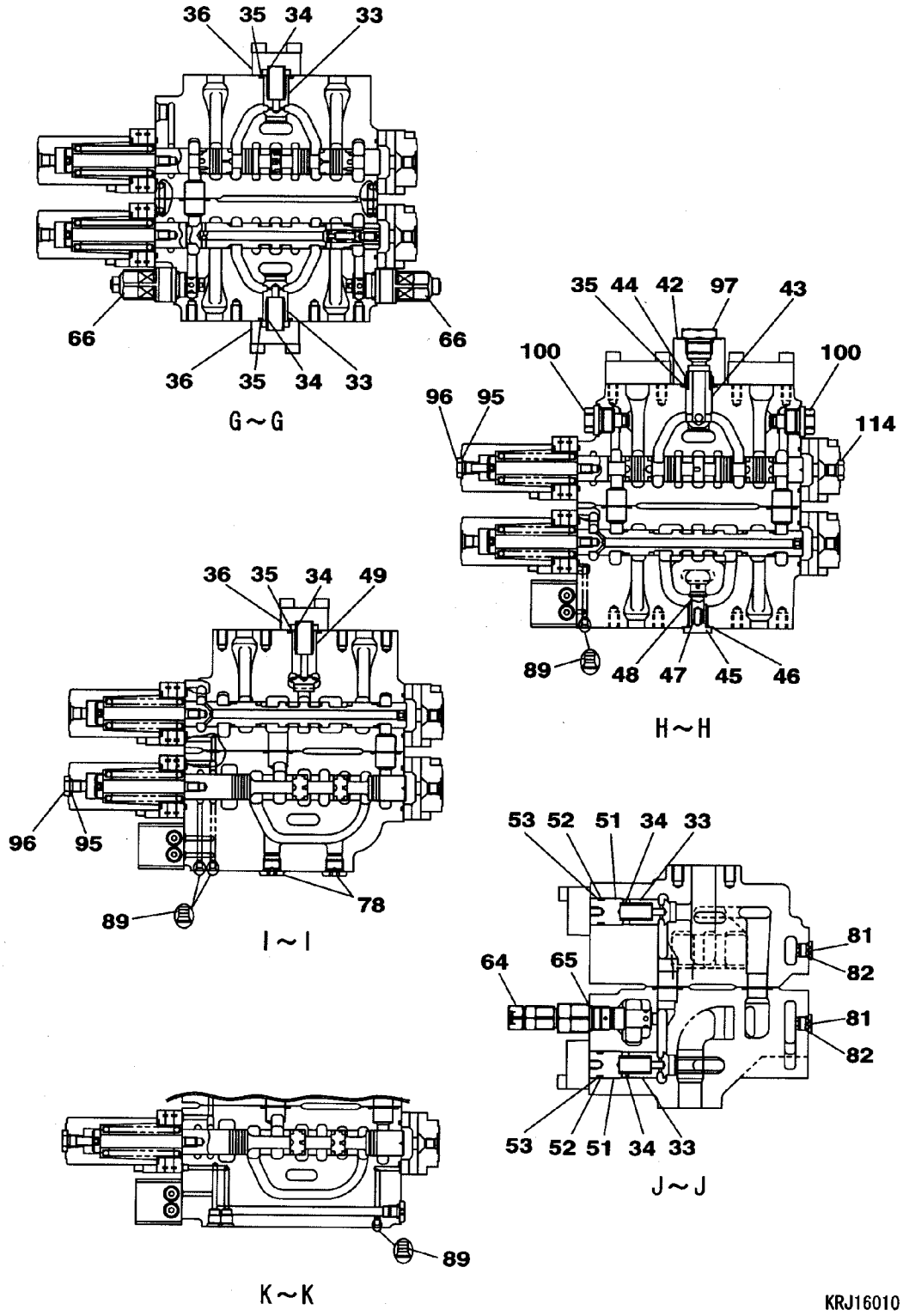

https://truckmanualshub.com/

符号 ITEM	構成 COMPO	部品番号 PART NO.	部品名	PART NAME	個数 Q'TY	互換 ICA	代替部品 REPLACEABLE PART	備考 MEMO
22	1	LBQ0260	O-ﾘﾝｸﾞ JISB2401 1AP2	O-RING	1			
23	1	LK005690	ﾌﾟﾗｸﾞ	PLUG	1			
24	1	LBQ0242	O-ﾘﾝｸﾞ JISB2401 1BP2	O-RING	1			
25	1	LG00339	ｽﾌﾟﾘﾝｸﾞ;ｱﾂｼｭｸ	SPRING;COMPRESSION	1			
26	1	LJ014690	ｽﾌﾟｰﾙ ASSY	SPOOL	1			
27	1A	LR015260	ﾌﾟﾚｰﾄ ASS'Y	PLATE;SPL	1			
27.01	2A	-------	ﾌﾟﾚｰﾄ ASS'Y	PLATE;SPL	1			
27.02	3	-------	ﾌﾟﾚｰﾄ	PLATE	1			
27.03	3	-------	ﾌﾟﾚｰﾄ	PLATE	1			
27.04	3	-------	ﾌﾟﾚｰﾄ	PLATE	1			
27.05	3	-------	ｶﾞｽｹｯﾄ	GASKET	2			
27.06	3	-------	ｽﾌﾟｰﾙ	SPOOL	3			
27.07	3	-------	ﾌｨﾙﾀ ﾄｸｼｭ	FILTER;SPL	3			
27.08	3	108R006Z025N	ﾛｯｶｸｱﾅB M6X25-12.9	BOLT;HEX SOC HD	2			
28	1A	LR015270	ﾌﾟﾚｰﾄ ASS'Y	PLATE;SPL	1			
28.01	2A	-------	ﾌﾟﾚｰﾄ ASS'Y	PLATE;SPL	1			
28.02	3	-------	ﾌﾟﾚｰﾄ	PLATE	1			
28.03	3	-------	ﾌﾟﾚｰﾄ	PLATE	1			
28.04	3	-------	ﾌﾟﾚｰﾄ	PLATE	1			
28.05	3	-------	ｶﾞｽｹｯﾄ	GASKET	2			
28.06	3	-------	ｽﾌﾟｰﾙ	SPOOL	4			
28.07	3	-------	ﾌｨﾙﾀ ﾄｸｼｭ	FILTER;SPL	4			
28.08	3	108R006Z025N	ﾛｯｶｸｱﾅB M6X25-12.9	BOLT;HEX SOC HD	2			
29	1	LBQ0162	O-ﾘﾝｸﾞ JISB2401 1BP1	O-RING	1			
30	1	LBB0162	ﾘﾝｸﾞ;ﾊﾞｯｸｱｯﾌﾟ	RING;BACK-UP	2			
31	1	LJ00726	ﾎﾟﾍﾟｯﾄ	POPPET	2			
32	1	LG00340	ｽﾌﾟﾘﾝｸﾞ;ｱﾂｼｭｸ	SPRING;COMPRESSION	2			
33	1	LJ00727	ﾎﾟﾍﾟｯﾄ	POPPET	7			
34	1	LG00341	ｽﾌﾟﾘﾝｸﾞ;ｱﾂｼｭｸ	SPRING;COMPRESSION	8			
35	1	LBQ0322	O-ﾘﾝｸﾞ JISB2401 1BP3	O-RING	10			
36	1	LH00248	ﾌﾗﾝｼﾞ	FLANGE;SPL	6			
37	1	LPC0180	ﾎﾟﾍﾟｯﾄ	POPPET	2			
38	1	LSC0227	ｽﾌﾟﾘﾝｸﾞ ﾄｸｼｭ	SPRING;SPL	2			
39	1	LJ00731	ｵﾘﾌｨｽ	ORIFICE	1			
40	1	LBQ0062	O-ﾘﾝｸﾞ JISB2401 1BP6	O-RING	27			
41	1	LR015280	ﾎﾞﾃﾞｨ ASSY	BODY	1			
42	1	LH00249	ﾌﾗﾝｼﾞ	FLANGE;SPL	1			
42	1	LH005410	ﾌﾗﾝｼﾞ	FLANGE;SPL	1			
43	1	LJ00728	ﾎﾟﾍﾟｯﾄ	POPPET	1			
43	1	LJ016050	ﾎﾟﾍﾟｯﾄ	POPPET	1			
44	1	LG00342	ｽﾌﾟﾘﾝｸﾞ;ｱﾂｼｭｸ	SPRING;COMPRESSION	1			
44	1	LG006510	ｽﾌﾟﾘﾝｸﾞ	SPRING;SPL	1			
45	1	LLC0082	ﾌﾟﾗｸﾞ	PLUG	1			
46	1	LBQ6910	O-ﾘﾝｸﾞ	O-RING	1			
47	1	LSC0094	ｽﾌﾟﾘﾝｸﾞ	SPRING;SPL	1			
48	1	LJ014680	ﾎﾟﾍﾟｯﾄ	POPPET	1			
49	1	LJ00730	ﾎﾟﾍﾟｯﾄ	POPPET	1			
50	1	LH00250	ﾌﾗﾝｼﾞ	FLANGE;SPL	2			
51	1	LH004960	ｽﾍﾟｰｻ	SPACER	2			
52	1	LBQ0251	O-ﾘﾝｸﾞ JISB2401 1AG2	O-RING	2			
53	1	LBB0253	ﾘﾝｸﾞ;ﾊﾞｯｸｱｯﾌﾟ	RING;BACK-UP	2			
54	1	LBQ0553	O-ﾘﾝｸﾞ JISB2401 1BG5	O-RING	1			
55	1	LH004970	ｽﾍﾟｰｻ	SPACER	1			
56	1	LH004980	ｽﾘｰﾌﾞ	SLEEVE	1			
57	1	LPC0098	ﾎﾟﾍﾟｯﾄ	POPPET	1			
58	1	LSC0187	ｽﾌﾟﾘﾝｸﾞ	SPRING;SPL	1			
59	1	LH004990	ﾌﾗﾝｼﾞ ﾄｸｼｭ	FLANGE;SPL	1			
60	1	LE012520	O-ﾘﾝｸﾞ ﾄｸｼｭ ﾌﾂｿ	O-RING	3			
61	1	LE014890	O-ﾘﾝｸﾞ	O-RING	14			
62	1	LBQ0102	O-ﾘﾝｸﾞ JISB2401 1BP1	O-RING	12			
63	1	LJ014710	ﾊﾞﾙﾌﾞ ｱﾝﾁﾄﾞﾘﾌﾄ ASSY	VALVE;SPL	2			
64	1A	LJ014720	ﾊﾞﾙﾌﾞ;ﾘﾘｰﾌ KIT	VALVE;RELIEF	1			
65	2	LBQ6912	O-ﾘﾝｸﾞ AS568-912-HS9	O-RING	1			
66	1A	LJ014730	ﾊﾞﾙﾌﾞ;ﾘﾘｰﾌ KIT	VALVE;RELIEF	5			
67	2	LBQ6912	O-ﾘﾝｸﾞ AS568-912-HS9	O-RING	5			
68	2	LBQ0102	O-ﾘﾝｸﾞ JISB2401 1BP1	O-RING	5			
69	1A	LJ014740	ﾊﾞﾙﾌﾞ;ﾘﾘｰﾌ KIT	VALVE;RELIEF	1			
70	2	LBQ6912	O-ﾘﾝｸﾞ AS568-912-HS9	O-RING	1			

https://truckmanualshub.com/

詳細/DETAIL

64 [65]

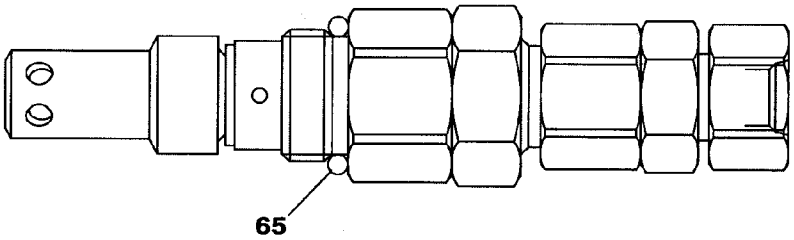

66 [67 , 68]

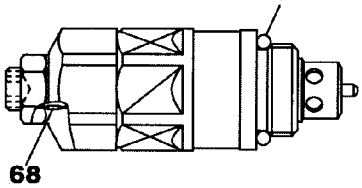

97 [98 , 99]

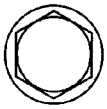

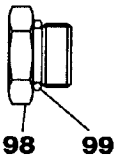

69 [70 , 71]

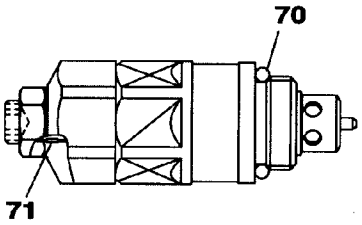

100 [101～104]

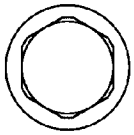

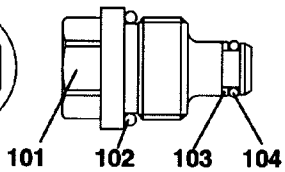

72 [73 , 74]

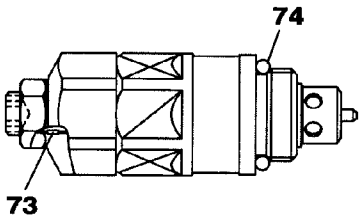

111 [112 , 113]

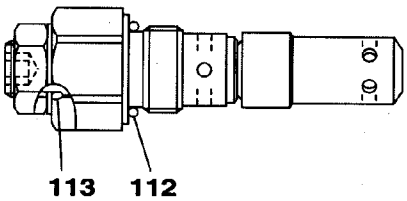

KRJ16010

https://truckmanualshub.com/

VALVE;CONTROL	ﾊﾞﾙﾌﾞ;ｺﾝﾄﾛｰﾙ	ZAJ313L0091 001 12/20	001

符号 ITEM	構成 COMPO	部品番号 PART NO.	部品名	PART NAME	個数 Q'TY	互換 ICA	代替部品 REPLACEABLE PART	備考 MEMO
27.05	3	-------	ｶﾞｽｹｯﾄ	GASKET	2			
27.06	3	-------	ｽﾌﾟｰﾙ	SPOOL	3			
27.07	3	-------	ﾌｲﾙﾀ ﾄｸｼｭ	FILTER;SPL	3			
27.08	3	108R006Z025N	ﾛｯｶｸｱﾅB M6X25-12.9	BOLT;HEX SOC HD	2			
28	1A	LR015270	ﾌﾟﾚｰﾄ ASS'Y	PLATE;SPL	1			
28.01	2A	-------	ﾌﾟﾚｰﾄ ASS'Y	PLATE;SPL	1			
28.02	3	-------	ﾌﾟﾚｰﾄ	PLATE	1			
28.03	3	-------	ﾌﾟﾚｰﾄ	PLATE	1			
28.04	3	-------	ﾌﾟﾚｰﾄ	PLATE	1			
28.05	3	-------	ｶﾞｽｹｯﾄ	GASKET	2			
28.06	3	-------	ｽﾌﾟｰﾙ	SPOOL	4			
28.07	3	-------	ﾌｲﾙﾀ ﾄｸｼｭ	FILTER;SPL	4			
28.08	3	108R006Z025N	ﾛｯｶｸｱﾅB M6X25-12.9	BOLT;HEX SOC HD	2			
29	1	LBQ0162	O-ﾘﾝｸﾞ JISB2401 1BP1	O-RING	1			
30	1	LBB0162	ﾘﾝｸﾞ;ﾊﾞｯｸｱｯﾌﾟ	RING;BACK-UP	2			
31	1	LJ00726	ﾎﾟﾍﾟｯﾄ	POPPET	2			
32	1	LG00340	ｽﾌﾟﾘﾝｸﾞ;ｱｯｼｭｸ	SPRING;COMPRESSION	2			
33	1	LJ00727	ﾎﾟﾍﾟｯﾄ	POPPET	7			
34	1	LG00341	ｽﾌﾟﾘﾝｸﾞ;ｱｯｼｭｸ	SPRING;COMPRESSION	8			
35	1	LBQ0322	O-ﾘﾝｸﾞ JISB2401 1BP3	O-RING	10			
36	1	LH00248	ﾌﾗﾝｼﾞ	FLANGE;SPL	6			
37	1	LPC0180	ﾎﾟﾍﾟｯﾄ	POPPET	2			
38	1	LSC0227	ｽﾌﾟﾘﾝｸﾞ ﾄｸｼｭ	SPRING;SPL	2			
39	1	LJ00731	ｵﾘﾌｲｽ	ORIFICE	1			
40	1	LBQ0062	O-ﾘﾝｸﾞ JISB2401 1BP6	O-RING	27			
41	1	LR015280	ﾎﾞﾃﾞｨ ASSY	BODY	1			
42	1	LH00249	ﾌﾗﾝｼﾞ	FLANGE;SPL	1			
42	1	LH005410	ﾌﾗﾝｼﾞ	FLANGE;SPL	1			
43	1	LJ00728	ﾎﾟﾍﾟｯﾄ	POPPET	1			
43	1	LJ016050	ﾎﾟﾍﾟｯﾄ	POPPET	1			
44	1	LG00342	ｽﾌﾟﾘﾝｸﾞ;ｱｯｼｭｸ	SPRING;COMPRESSION	1			
44	1	LG006510	ｽﾌﾟﾘﾝｸﾞ	SPRING;SPL	1			
45	1	LLC0082	ﾌﾟﾗｸﾞ	PLUG	1			
46	1	LBQ6910	O-ﾘﾝｸﾞ	O-RING	1			
47	1	LSC0094	ｽﾌﾟﾘﾝｸﾞ	SPRING;SPL	1			
48	1	LJ014680	ﾎﾟﾍﾟｯﾄ	POPPET	1			
49	1	LJ00730	ﾎﾟﾍﾟｯﾄ	POPPET	1			
50	1	LH00250	ﾌﾗﾝｼﾞ	FLANGE;SPL	2			
51	1	LH004960	ｽﾍﾟｰｻ	SPACER	2			
52	1	LBQ0251	O-ﾘﾝｸﾞ JISB2401 1AG2	O-RING	2			
53	1	LBB0253	ﾘﾝｸﾞ;ﾊﾞｯｸｱｯﾌﾟ	RING;BACK-UP	2			
54	1	LBQ0553	O-ﾘﾝｸﾞ JISB2401 1BG5	O-RING	1			
55	1	LH004970	ｽﾍﾟｰｻ	SPACER	1			
56	1	LH004980	ｽﾘｰﾌﾞ	SLEEVE	1			
57	1	LPC0098	ﾎﾟﾍﾟｯﾄ	POPPET	1			
58	1	LSC0187	ｽﾌﾟﾘﾝｸﾞ	SPRING;SPL	1			
59	1	LH004990	ﾌﾗﾝｼﾞ ﾄｸｼｭ	FLANGE;SPL	1			
60	1	LE012520	O-ﾘﾝｸﾞ ﾄｸｼｭ ﾌﾂｿ	O-RING	3			
61	1	LE014890	O-ﾘﾝｸﾞ	O-RING	14			
62	1	LBQ0102	O-ﾘﾝｸﾞ JISB2401 1BP1	O-RING	12			
63	1	LJ014710	ﾊﾞﾙﾌﾞ ｱﾝﾁﾄﾞﾘﾌﾄ ASSY	VALVE;SPL	2			
64	1A	LJ014720	ﾊﾞﾙﾌﾞ;ﾘﾘｰﾌ KIT	VALVE;RELIEF	1			
65	2	LBQ6912	O-ﾘﾝｸﾞ AS568-912-HS9	O-RING	1			
66	1A	LJ014730	ﾊﾞﾙﾌﾞ;ﾘﾘｰﾌ KIT	VALVE;RELIEF	5			
67	2	LBQ6912	O-ﾘﾝｸﾞ AS568-912-HS9	O-RING	5			
68	2	LBQ0102	O-ﾘﾝｸﾞ JISB2401 1BP1	O-RING	5			
69	1A	LJ014740	ﾊﾞﾙﾌﾞ;ﾘﾘｰﾌ KIT	VALVE;RELIEF	1			
70	2	LBQ6912	O-ﾘﾝｸﾞ AS568-912-HS9	O-RING	1			
71	2	LBQ0102	O-ﾘﾝｸﾞ JISB2401 1BP1	O-RING	1			
72	1	LJ014750	ﾊﾞﾙﾌﾞ;ﾘﾘｰﾌ KIT	VALVE;RELIEF	1			
72	1A	LJ014750	ﾊﾞﾙﾌﾞ;ﾘﾘｰﾌ KIT	VALVE;RELIEF	2			
73	2	LBQ0102	O-ﾘﾝｸﾞ JISB2401 1BP1	O-RING	1			
73	2	LBQ0102	O-ﾘﾝｸﾞ JISB2401 1BP1	O-RING	2			
74	2	LBQ6912	O-ﾘﾝｸﾞ AS568-912-HS9	O-RING	1			
74	2	LBQ6912	O-ﾘﾝｸﾞ AS568-912-HS9	O-RING	2			
75	1	LJ014700	ﾊﾞﾙﾌﾞ;ﾘﾘｰﾌ ASS'Y	VALVE;RELIEF	2			
76	1A	LNC0218	ﾌﾟﾗｸﾞ S/A	PLUG	4			
77	2	LBQ0182	O-ﾘﾝｸﾞ JISB2401 1BP1	O-RING	4			

https://truckmanualshub.com/

10 [10.01~10.09] 10.01 [10.02 ~ 10.09]

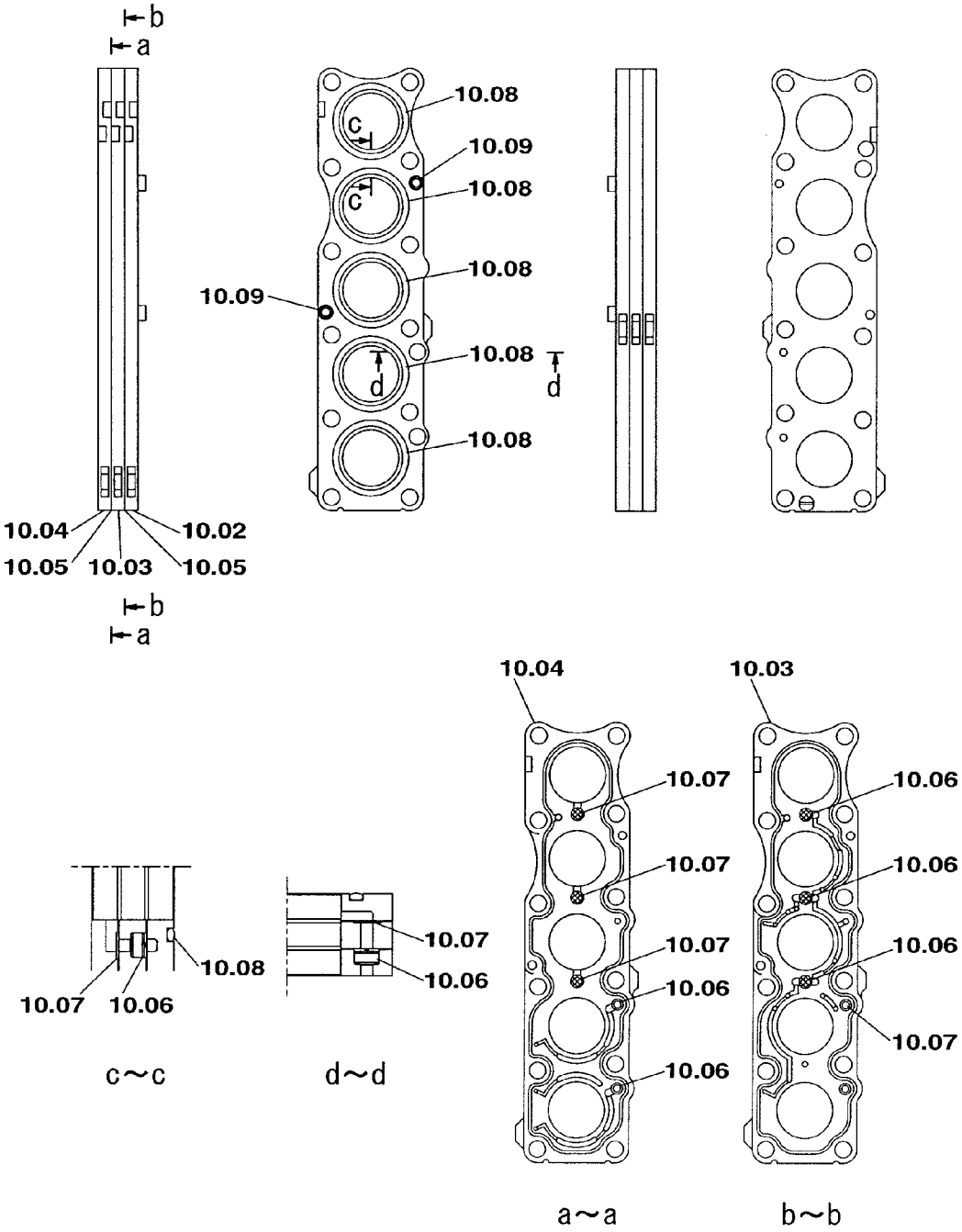

KRJ16010

https://truckmanualshub.com/

符号 ITEM	構成 COMPO	部品番号 PART NO.	部品名	PART NAME	個数 Q'TY	互換 ICA	代替部品 REPLACEABLE PART	備考 MEMO
28.06	3	-------	ｽﾌﾟｰﾙ	SPOOL	4			
28.07	3	-------	ﾌｨﾙﾀ ﾄｸｼｭ	FILTER;SPL	4			
28.08	3	108R006Z025N	ﾛｯｶｸｱﾅB M6X25-12.9	BOLT;HEX SOC HD	2			
29	1	LBQ0162	O-ﾘﾝｸﾞ JISB2401 1BP1	O-RING	1			
30	1	LBB0162	ﾘﾝｸﾞ;ﾊﾞｯｸｱｯﾌﾟ	RING;BACK-UP	2			
31	1	LJ00726	ﾎﾟﾍﾟｯﾄ	POPPET	2			
32	1	LG00340	ｽﾌﾟﾘﾝｸﾞ;ｱｯｼｭｸ	SPRING;COMPRESSION	2			
33	1	LJ00727	ﾎﾟﾍﾟｯﾄ	POPPET	7			
34	1	LG00341	ｽﾌﾟﾘﾝｸﾞ;ｱｯｼｭｸ	SPRING;COMPRESSION	8			
35	1	LBQ0322	O-ﾘﾝｸﾞ JISB2401 1BP3	O-RING	10			
36	1	LH00248	ﾌﾗﾝｼﾞ	FLANGE;SPL	6			
37	1	LPC0180	ﾎﾟﾍﾟｯﾄ	POPPET	2			
38	1	LSC0227	ｽﾌﾟﾘﾝｸﾞ ﾄｸｼｭ	SPRING;SPL	2			
39	1	LJ00731	ｵﾘﾌｨｽ	ORIFICE	1			
40	1	LBQ0062	O-ﾘﾝｸﾞ JISB2401 1BP6	O-RING	27			
41	1	LR015280	ﾎﾞﾃﾞｨ ASSY	BODY	1			
42	1	LH00249	ﾌﾗﾝｼﾞ	FLANGE;SPL	1			
42	1	LH005410	ﾌﾗﾝｼﾞ	FLANGE;SPL	1			
43	1	LJ00728	ﾎﾟﾍﾟｯﾄ	POPPET	1			
43	1	LJ016050	ﾎﾟﾍﾟｯﾄ	POPPET	1			
44	1	LG00342	ｽﾌﾟﾘﾝｸﾞ;ｱｯｼｭｸ	SPRING;COMPRESSION	1			
44	1	LG006510	ｽﾌﾟﾘﾝｸﾞ	SPRING;SPL	1			
45	1	LLC0082	ﾌﾟﾗｸﾞ	PLUG	1			
46	1	LBQ6910	O-ﾘﾝｸﾞ	O-RING	1			
47	1	LSC0094	ｽﾌﾟﾘﾝｸﾞ	SPRING;SPL	1			
48	1	LJ014680	ﾎﾟﾍﾟｯﾄ	POPPET	1			
49	1	LJ00730	ﾎﾟﾍﾟｯﾄ	POPPET	1			
50	1	LH00250	ﾌﾗﾝｼﾞ	FLANGE;SPL	2			
51	1	LH004960	ｽﾍﾟｰｻ	SPACER	2			
52	1	LBQ0251	O-ﾘﾝｸﾞ JISB2401 1AG2	O-RING	2			
53	1	LBB0253	ﾘﾝｸﾞ;ﾊﾞｯｸｱｯﾌﾟ	RING;BACK-UP	2			
54	1	LBQ0553	O-ﾘﾝｸﾞ JISB2401 1BG5	O-RING	1			
55	1	LH004970	ｽﾍﾟｰｻ	SPACER	1			
56	1	LH004980	ｽﾘｰﾌﾞ	SLEEVE	1			
57	1	LPC0098	ﾎﾟﾍﾟｯﾄ	POPPET	1			
58	1	LSC0187	ｽﾌﾟﾘﾝｸﾞ	SPRING;SPL	1			
59	1	LH004990	ﾌﾗﾝｼﾞ ﾄｸｼｭ	FLANGE;SPL	1			
60	1	LE012520	O-ﾘﾝｸﾞ ﾄｸｼｭ ﾌﾂｿ	O-RING	3			
61	1	LE014890	O-ﾘﾝｸﾞ	O-RING	14			
62	1	LBQ0102	O-ﾘﾝｸﾞ JISB2401 1BP1	O-RING	12			
63	1	LJ014710	ﾊﾞﾙﾌﾞ ｱﾝﾁﾄﾞﾘﾌﾄ ASSY	VALVE;SPL	2			
64	1A	LJ014720	ﾊﾞﾙﾌﾞ;ﾘﾘｰﾌ KIT	VALVE;RELIEF	1			
65	2	LBQ6912	O-ﾘﾝｸﾞ AS568-912-HS9	O-RING	1			
66	1A	LJ014730	ﾊﾞﾙﾌﾞ;ﾘﾘｰﾌ KIT	VALVE;RELIEF	5			
67	2	LBQ6912	O-ﾘﾝｸﾞ AS568-912-HS9	O-RING	5			
68	2	LBQ0102	O-ﾘﾝｸﾞ JISB2401 1BP1	O-RING	5			
69	1A	LJ014740	ﾊﾞﾙﾌﾞ;ﾘﾘｰﾌ KIT	VALVE;RELIEF	1			
70	2	LBQ6912	O-ﾘﾝｸﾞ AS568-912-HS9	O-RING	1			
71	2	LBQ0102	O-ﾘﾝｸﾞ JISB2401 1BP1	O-RING	1			
72	1	LJ014750	ﾊﾞﾙﾌﾞ;ﾘﾘｰﾌ KIT	VALVE;RELIEF	1			
72	1A	LJ014750	ﾊﾞﾙﾌﾞ;ﾘﾘｰﾌ KIT	VALVE;RELIEF	2			
73	2	LBQ0102	O-ﾘﾝｸﾞ JISB2401 1BP1	O-RING	1			
73	2	LBQ0102	O-ﾘﾝｸﾞ JISB2401 1BP1	O-RING	2			
74	2	LBQ6912	O-ﾘﾝｸﾞ AS568-912-HS9	O-RING	1			
74	2	LBQ6912	O-ﾘﾝｸﾞ AS568-912-HS9	O-RING	2			
75	1	LJ014700	ﾊﾞﾙﾌﾞ;ﾘﾘｰﾌ ASS'Y	VALVE;RELIEF	2			
76	1A	LNC0218	ﾌﾟﾗｸﾞ S/A	PLUG	4			
77	2	LBQ0182	O-ﾘﾝｸﾞ JISB2401 1BP1	O-RING	4			
78	1A	LNC0217	ﾌﾟﾗｸﾞ S/A	PLUG	10			
79	2	LBQ0142	O-ﾘﾝｸﾞ JISB2401 1BP1	O-RING	10			
80	1A	LNC0238	ﾌﾟﾗｸﾞ S/A	PLUG	3			
81	2	LK00328	ﾌﾟﾗｸﾞ	PLUG	3			
82	2	LBQ0112	O-ﾘﾝｸﾞ JISB2401 1BP1	O-RING	3			
83	1	108R010Z055B	ﾛｯｶｸｱﾅB JIS B 1180 M	BOLT;HEX SOC HD	24			
83	1	108R010Z055B	ﾛｯｶｸｱﾅB JIS B 1180 M	BOLT;HEX SOC HD	32			
84	1	108R010Z040B	ﾛｯｶｸｱﾅB JIS B1176 M1	BOLT;HEX SOC HD	74			
84	1	108R010Z040B	ﾛｯｶｸｱﾅB JIS B1176 M1	BOLT;HEX SOC HD	66			
85	1	108R016Z130B	ﾛｯｶｸｱﾅB JIS B1180 M1	BOLT;HEX SOC HD	8			

https://truckmanualshub.com/

11 [11.01 ~ 11.09] 11.01 [11.02 ~ 11.09]

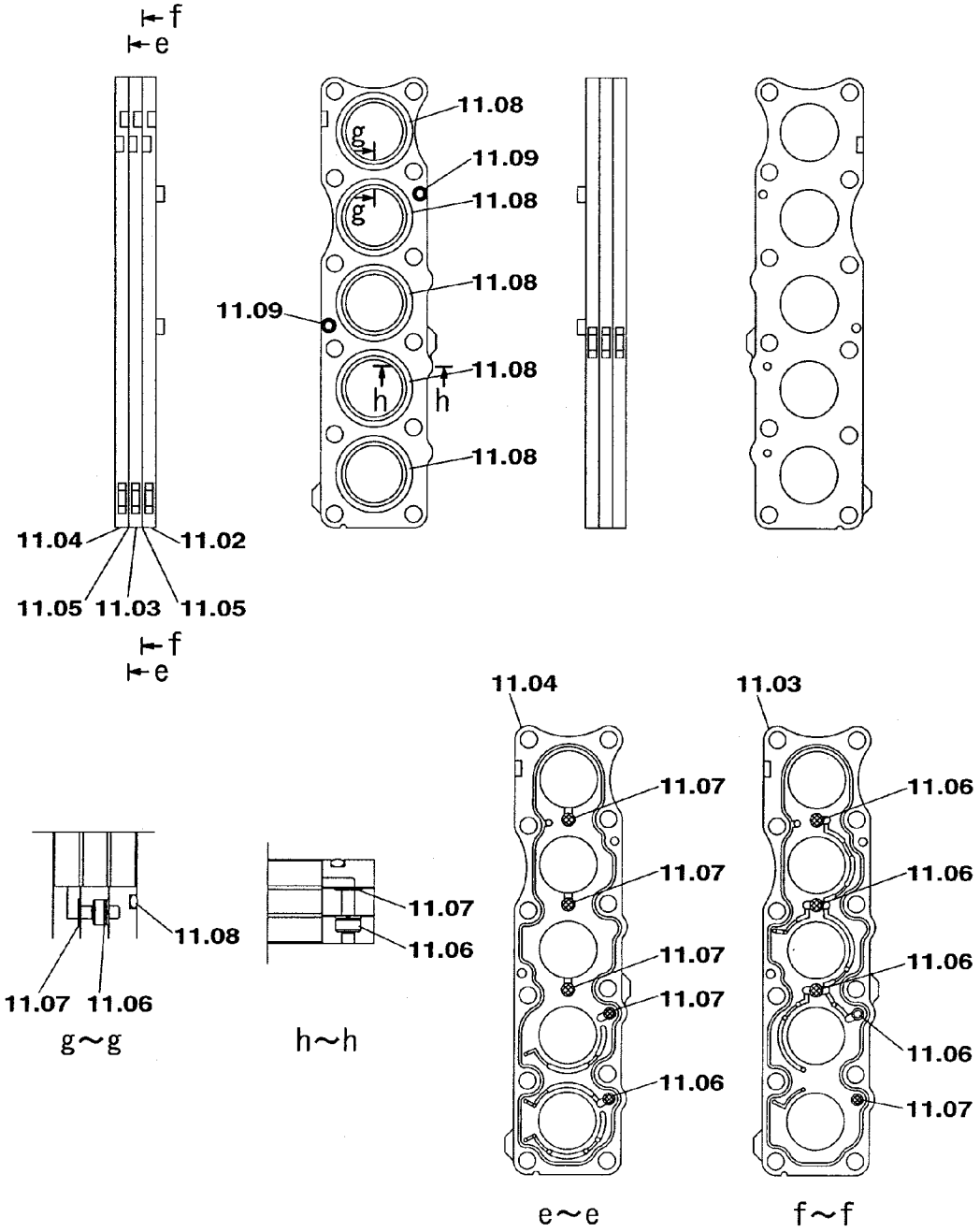

KRJ16010

https://truckmanualshub.com/

符号 ITEM	構成 COMPO	部品番号 PART NO.	部品名	PART NAME	個数 Q'TY	互換 ICA	代替部品 REPLACEABLE PART	備考 MEMO
36	1	LH00248	ﾌﾗﾝｼﾞ	FLANGE;SPL	6			
37	1	LPC0180	ﾎﾟﾍﾟｯﾄ	POPPET	2			
38	1	LSC0227	ｽﾌﾟﾘﾝｸﾞ ﾄｸｼｭ	SPRING;SPL	2			
39	1	LJ00731	ｵﾘﾌｨｽ	ORIFICE	1			
40	1	LBQ0062	O-ﾘﾝｸﾞ JISB2401 1BP6	O-RING	27			
41	1	LR015280	ﾎﾞﾃﾞｨ ASSY	BODY	1			
42	1	LH00249	ﾌﾗﾝｼﾞ	FLANGE;SPL	1			
42	1	LH005410	ﾌﾗﾝｼﾞ	FLANGE;SPL	1			
43	1	LJ00728	ﾎﾟﾍﾟｯﾄ	POPPET	1			
43	1	LJ016050	ﾎﾟﾍﾟｯﾄ	POPPET	1			
44	1	LG00342	ｽﾌﾟﾘﾝｸﾞ;ｱｯｼｭｸ	SPRING;COMPRESSION	1			
44	1	LG006510	ｽﾌﾟﾘﾝｸﾞ	SPRING;SPL	1			
45	1	LLC0082	ﾌﾟﾗｸﾞ	PLUG	1			
46	1	LBQ6910	O-ﾘﾝｸﾞ	O-RING	1			
47	1	LSC0094	ｽﾌﾟﾘﾝｸﾞ	SPRING;SPL	1			
48	1	LJ014680	ﾎﾟﾍﾟｯﾄ	POPPET	1			
49	1	LJ00730	ﾎﾟﾍﾟｯﾄ	POPPET	1			
50	1	LH00250	ﾌﾗﾝｼﾞ	FLANGE;SPL	2			
51	1	LH004960	ｽﾍﾟｰｻ	SPACER	2			
52	1	LBQ0251	O-ﾘﾝｸﾞ JISB2401 1AG2	O-RING	2			
53	1	LBB0253	ﾘﾝｸﾞ;ﾊﾞｯｸｱｯﾌﾟ	RING;BACK-UP	2			
54	1	LBQ0553	O-ﾘﾝｸﾞ JISB2401 1BG5	O-RING	1			
55	1	LH004970	ｽﾍﾟｰｻ	SPACER	1			
56	1	LH004980	ｽﾘｰﾌﾞ	SLEEVE	1			
57	1	LPC0098	ﾎﾟﾍﾟｯﾄ	POPPET	1			
58	1	LSC0187	ｽﾌﾟﾘﾝｸﾞ	SPRING;SPL	1			
59	1	LH004990	ﾌﾗﾝｼﾞ ﾄｸｼｭ	FLANGE;SPL	1			
60	1	LE012520	O-ﾘﾝｸﾞ ﾄｸｼｭ ﾌﾂｿ	O-RING	3			
61	1	LE014890	O-ﾘﾝｸﾞ	O-RING	14			
62	1	LBQ0102	O-ﾘﾝｸﾞ JISB2401 1BP1	O-RING	12			
63	1	LJ014710	ﾊﾞﾙﾌﾞ ｱﾝﾁﾄﾞﾘﾌﾄ ASSY	VALVE;SPL	2			
64	1A	LJ014720	ﾊﾞﾙﾌﾞ;ﾘﾘｰﾌ KIT	VALVE;RELIEF	1			
65	2	LBQ6912	O-ﾘﾝｸﾞ AS568-912-HS9	O-RING	1			
66	1A	LJ014730	ﾊﾞﾙﾌﾞ;ﾘﾘｰﾌ KIT	VALVE;RELIEF	5			
67	2	LBQ6912	O-ﾘﾝｸﾞ AS568-912-HS9	O-RING	5			
68	2	LBQ0102	O-ﾘﾝｸﾞ JISB2401 1BP1	O-RING	5			
69	1A	LJ014740	ﾊﾞﾙﾌﾞ;ﾘﾘｰﾌ KIT	VALVE;RELIEF	1			
70	2	LBQ6912	O-ﾘﾝｸﾞ AS568-912-HS9	O-RING	1			
71	2	LBQ0102	O-ﾘﾝｸﾞ JISB2401 1BP1	O-RING	1			
72	1	LJ014750	ﾊﾞﾙﾌﾞ;ﾘﾘｰﾌ KIT	VALVE;RELIEF	1			
72	1A	LJ014750	ﾊﾞﾙﾌﾞ;ﾘﾘｰﾌ KIT	VALVE;RELIEF	2			
73	2	LBQ0102	O-ﾘﾝｸﾞ JISB2401 1BP1	O-RING	1			
73	2	LBQ0102	O-ﾘﾝｸﾞ JISB2401 1BP1	O-RING	2			
74	2	LBQ6912	O-ﾘﾝｸﾞ AS568-912-HS9	O-RING	1			
74	2	LBQ6912	O-ﾘﾝｸﾞ AS568-912-HS9	O-RING	2			
75	1	LJ014700	ﾊﾞﾙﾌﾞ;ﾘﾘｰﾌ ASS'Y	VALVE;RELIEF	2			
76	1A	LNC0218	ﾌﾟﾗｸﾞ S/A	PLUG	4			
77	2	LBQ0182	O-ﾘﾝｸﾞ JISB2401 1BP1	O-RING	4			
78	1A	LNC0217	ﾌﾟﾗｸﾞ S/A	PLUG	10			
79	2	LBQ0142	O-ﾘﾝｸﾞ JISB2401 1BP1	O-RING	10			
80	1A	LNC0238	ﾌﾟﾗｸﾞ S/A	PLUG	3			
81	2	LK00328	ﾌﾟﾗｸﾞ	PLUG	3			
82	2	LBQ0112	O-ﾘﾝｸﾞ JISB2401 1BP1	O-RING	3			
83	1	108R010Z055B	ﾛｯｶｸｱﾅB JIS B 1180 M	BOLT;HEX SOC HD	24			
83	1	108R010Z055B	ﾛｯｶｸｱﾅB JIS B 1180 M	BOLT;HEX SOC HD	32			
84	1	108R010Z040B	ﾛｯｶｸｱﾅB JIS B1176 M1	BOLT;HEX SOC HD	74			
84	1	108R010Z040B	ﾛｯｶｸｱﾅB JIS B1176 M1	BOLT;HEX SOC HD	66			
85	1	108R016Z130B	ﾛｯｶｸｱﾅB JIS B1180 M1	BOLT;HEX SOC HD	8			
86	1	LUC0118	ﾛｯｶｸｱﾅB	BOLT;HEX SOC HD	4			
87	1	-------	ﾒｲﾊﾞﾝ;ｷﾊﾞﾝ	NAMEPLATE;SER NO.	1			
88	1	-------	ｽｸﾘｭｰ ﾄﾞﾗｲﾌﾞ	SCREW	2			
89	1	-------	ﾌﾟﾗｸﾞ	PLUG	5			
90	1	LA011120	ﾛｯｶｸｱﾅB	BOLT;HEX SOC HD	4			
91	1	-------	ｽﾌﾟｰﾙ ASS'Y	SPOOL	1			
92	1	LR015290	ｷｬｯﾌﾟ	CAP	1			
93	1	LR00579	ｷｬｯﾌﾟ	CAP	2			
94	1	LBQ5219	O-ﾘﾝｸﾞ	O-RING	2			
95	1	LBQ0112	O-ﾘﾝｸﾞ JISB2401 1BP1	O-RING	2			

https://truckmanualshub.com/

27 [27.01 ~ 27.08] 27.01 [27.02 ~ 27.08]

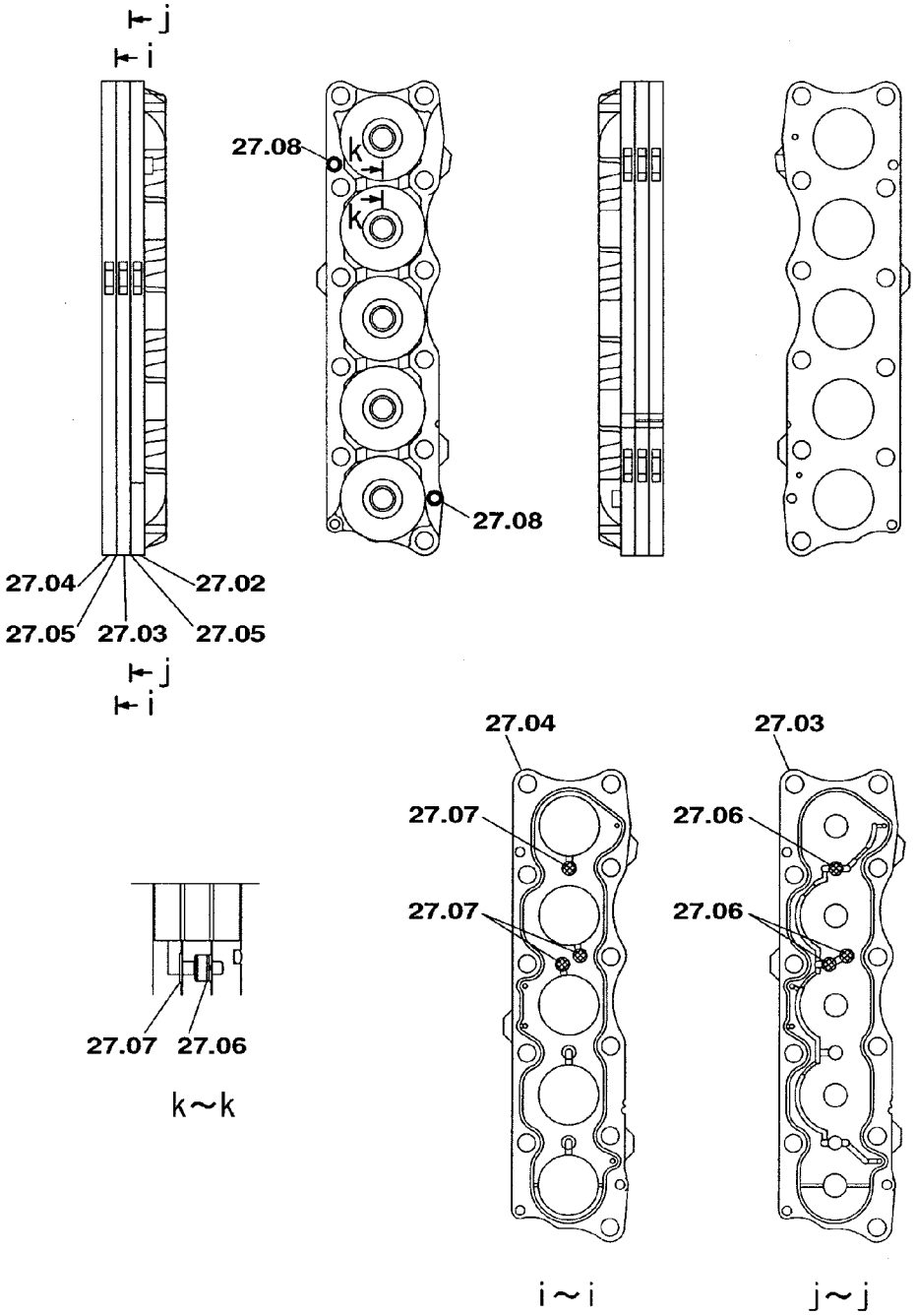

KRJ16010

https://truckmanualshub.com/

VALVE;CONTROL	ﾊﾞﾙﾌﾞ;ｺﾝﾄﾛｰﾙ	ZAJ313L0091 001 18/20	001

符号 ITEM	構成 COMPO	部品番号 PART NO.	部品名	PART NAME	個数 Q'TY	互換 ICA	代替部品 REPLACEABLE PART	備考 MEMO
44	1	LG00342	ｽﾌﾟﾘﾝｸﾞ;ｱﾂｼｭｸ	SPRING;COMPRESSION	1			
44	1	LG006510	ｽﾌﾟﾘﾝｸﾞ	SPRING;SPL	1			
45	1	LLC0082	ﾌﾟﾗｸﾞ	PLUG	1			
46	1	LBQ6910	O-ﾘﾝｸﾞ	O-RING	1			
47	1	LSC0094	ｽﾌﾟﾘﾝｸﾞ	SPRING;SPL	1			
48	1	LJ014680	ﾎﾟﾍﾟｯﾄ	POPPET	1			
49	1	LJ00730	ﾎﾟﾍﾟｯﾄ	POPPET	1			
50	1	LH00250	ﾌﾗﾝｼﾞ	FLANGE;SPL	2			
51	1	LH004960	ｽﾍﾟｰｻ	SPACER	2			
52	1	LBQ0251	O-ﾘﾝｸﾞ JISB2401 1AG2	O-RING	2			
53	1	LBB0253	ﾘﾝｸﾞ;ﾊﾞｯｸｱｯﾌﾟ	RING;BACK-UP	2			
54	1	LBQ0553	O-ﾘﾝｸﾞ JISB2401 1BG5	O-RING	1			
55	1	LH004970	ｽﾍﾟｰｻ	SPACER	1			
56	1	LH004980	ｽﾘｰﾌﾞ	SLEEVE	1			
57	1	LPC0098	ﾎﾟﾍﾟｯﾄ	POPPET	1			
58	1	LSC0187	ｽﾌﾟﾘﾝｸﾞ	SPRING;SPL	1			
59	1	LH004990	ﾌﾗﾝｼﾞ ﾄｸｼｭ	FLANGE;SPL	1			
60	1	LE012520	O-ﾘﾝｸﾞ ﾄｸｼｭ ﾌﾂｿ	O-RING	3			
61	1	LE014890	O-ﾘﾝｸﾞ	O-RING	14			
62	1	LBQ0102	O-ﾘﾝｸﾞ JISB2401 1BP1	O-RING	12			
63	1	LJ014710	ﾊﾞﾙﾌﾞ ｱﾝﾁﾄﾞﾘﾌﾄ ASSY	VALVE;SPL	2			
64	1A	LJ014720	ﾊﾞﾙﾌﾞ;ﾘﾘｰﾌ KIT	VALVE;RELIEF	1			
65	2	LBQ6912	O-ﾘﾝｸﾞ AS568-912-HS9	O-RING	1			
66	1A	LJ014730	ﾊﾞﾙﾌﾞ;ﾘﾘｰﾌ KIT	VALVE;RELIEF	5			
67	2	LBQ6912	O-ﾘﾝｸﾞ AS568-912-HS9	O-RING	5			
68	2	LBQ0102	O-ﾘﾝｸﾞ JISB2401 1BP1	O-RING	5			
69	1A	LJ014740	ﾊﾞﾙﾌﾞ;ﾘﾘｰﾌ KIT	VALVE;RELIEF	1			
70	2	LBQ6912	O-ﾘﾝｸﾞ AS568-912-HS9	O-RING	1			
71	2	LBQ0102	O-ﾘﾝｸﾞ JISB2401 1BP1	O-RING	1			
72	1	LJ014750	ﾊﾞﾙﾌﾞ;ﾘﾘｰﾌ KIT	VALVE;RELIEF	1			
72	1A	LJ014750	ﾊﾞﾙﾌﾞ;ﾘﾘｰﾌ KIT	VALVE;RELIEF	2			
73	2	LBQ0102	O-ﾘﾝｸﾞ JISB2401 1BP1	O-RING	1			
73	2	LBQ0102	O-ﾘﾝｸﾞ JISB2401 1BP1	O-RING	2			
74	2	LBQ6912	O-ﾘﾝｸﾞ AS568-912-HS9	O-RING	1			
74	2	LBQ6912	O-ﾘﾝｸﾞ AS568-912-HS9	O-RING	2			
75	1	LJ014700	ﾊﾞﾙﾌﾞ;ﾘﾘｰﾌ ASS'Y	VALVE;RELIEF	2			
76	1A	LNC0218	ﾌﾟﾗｸﾞ S/A	PLUG	4			
77	2	LBQ0182	O-ﾘﾝｸﾞ JISB2401 1BP1	O-RING	4			
78	1A	LNC0217	ﾌﾟﾗｸﾞ S/A	PLUG	10			
79	2	LBQ0142	O-ﾘﾝｸﾞ JISB2401 1BP1	O-RING	10			
80	1A	LNC0238	ﾌﾟﾗｸﾞ S/A	PLUG	3			
81	2	LK00328	ﾌﾟﾗｸﾞ	PLUG	3			
82	2	LBQ0112	O-ﾘﾝｸﾞ JISB2401 1BP1	O-RING	3			
83	1	108R010Z055B	ﾛｯｶｸｱﾅB JIS B 1180 M	BOLT;HEX SOC HD	24			
83	1	108R010Z055B	ﾛｯｶｸｱﾅB JIS B 1180 M	BOLT;HEX SOC HD	32			
84	1	108R010Z040B	ﾛｯｶｸｱﾅB JIS B1176 M1	BOLT;HEX SOC HD	74			
84	1	108R010Z040B	ﾛｯｶｸｱﾅB JIS B1176 M1	BOLT;HEX SOC HD	66			
85	1	108R016Z130B	ﾛｯｶｸｱﾅB JIS B1180 M1	BOLT;HEX SOC HD	8			
86	1	LUC0118	ﾛｯｶｸｱﾅB	BOLT;HEX SOC HD	4			
87	1	-------	ﾒｲﾊﾞﾝ;ｷﾊﾞﾝ	NAMEPLATE;SER NO.	1			
88	1	-------	ｽｸﾘｭｰ ﾄﾞﾗｲﾌﾞ	SCREW	2			
89	1	-------	ﾌﾟﾗｸﾞ	PLUG	5			
90	1	LA011120	ﾛｯｶｸｱﾅB	BOLT;HEX SOC HD	4			
91	1	-------	ｽﾌﾟｰﾙ ASS'Y	SPOOL	1			
92	1	LR015290	ｷｬｯﾌﾟ	CAP	1			
93	1	LR00579	ｷｬｯﾌﾟ	CAP	2			
94	1	LBQ5219	O-ﾘﾝｸﾞ	O-RING	2			
95	1	LBQ0112	O-ﾘﾝｸﾞ JISB2401 1BP1	O-RING	2			
96	1	LK00301	ﾌﾟﾗｸﾞ	PLUG	2			
97	1A	LK00302	ﾌﾟﾗｸﾞ ASSY	PLUG	2			
98	2	LPC0256	ﾌﾟﾗｸﾞ	PLUG	2			
99	2	LBQ0242	O-ﾘﾝｸﾞ JISB2401 1BP2	O-RING	2			
100	1A	LPC0259	ﾌﾟﾗｸﾞ ASSY	PLUG	2			
101	2	LK00327	ﾌﾟﾗｸﾞ	PLUG	2			
102	2	LBQ6912	O-ﾘﾝｸﾞ AS568-912-HS9	O-RING	2			
103	2	LBQ0080	O-ﾘﾝｸﾞ JISB2401 1AP8	O-RING	2			
104	2	LBB6110	ﾘﾝｸﾞ;ﾊﾞｯｸｱｯﾌﾟ	RING;BACK-UP	2			
105	1	LA011130	ﾛｯｶｸｱﾅB	BOLT;HEX SOC HD	2			

https://truckmanualshub.com/

28 [28.01 ~ 28.08] 28.01 [28.02 ~ 28.08]

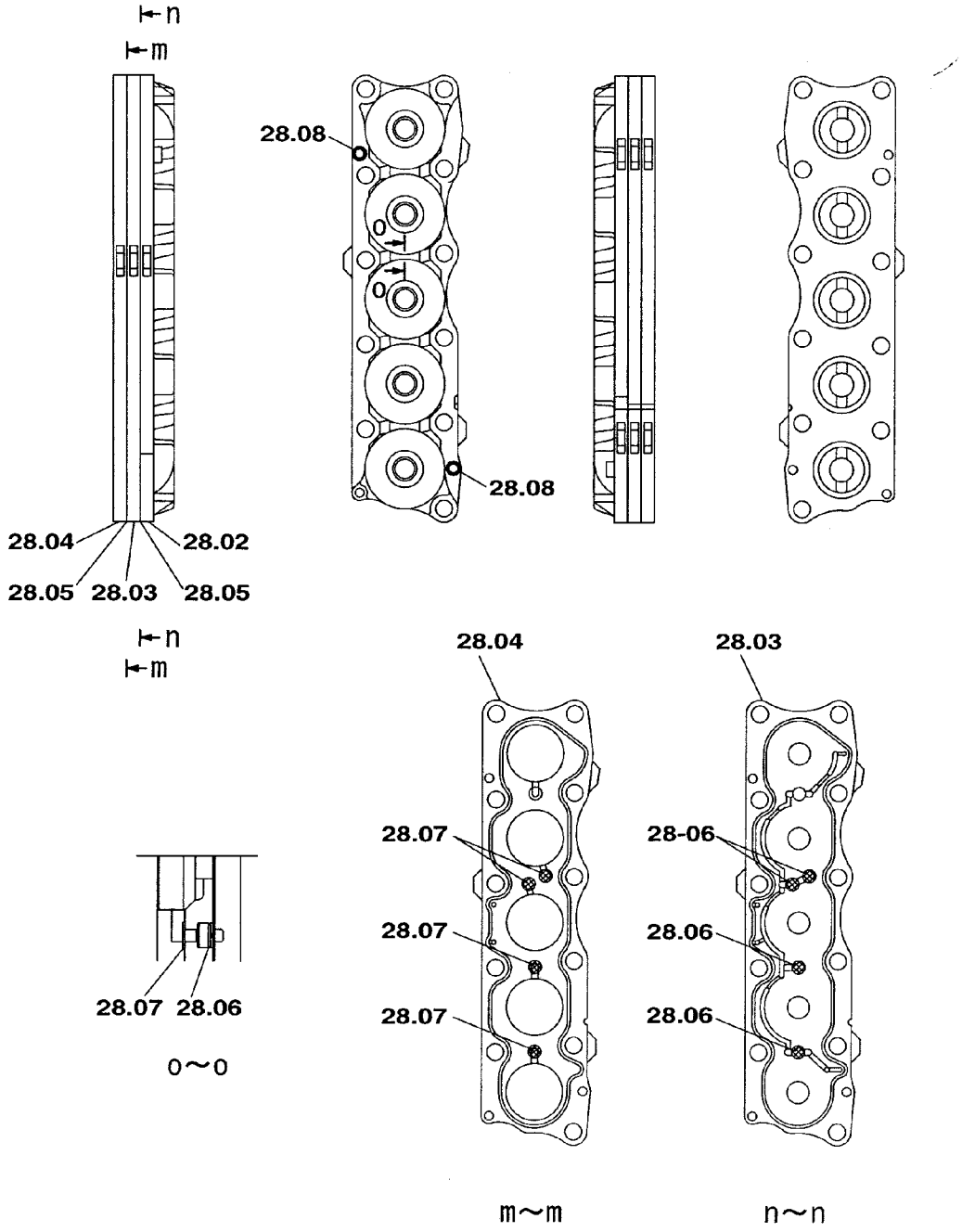

KRJ16010

https://truckmanualshub.com/

符号 ITEM	構成 COMPO	部品番号 PART NO.	部品名	PART NAME	個数 Q'TY	互換 ICA	代替部品 REPLACEABLE PART	備考 MEMO
53	1	LBB0253	ﾘﾝｸﾞ;ﾊﾞｯｸｱｯﾌﾟ	RING;BACK-UP	2			
54	1	LBQ0553	O-ﾘﾝｸﾞ JISB2401 1BG5	O-RING	1			
55	1	LH004970	ｽﾍﾟｰｻ	SPACER	1			
56	1	LH004980	ｽﾘｰﾌﾞ	SLEEVE	1			
57	1	LPC0098	ﾎﾟﾍﾟｯﾄ	POPPET	1			
58	1	LSC0187	ｽﾌﾟﾘﾝｸﾞ	SPRING;SPL	1			
59	1	LH004990	ﾌﾗﾝｼﾞ ﾄｸｼｭ	FLANGE;SPL	1			
60	1	LE012520	O-ﾘﾝｸﾞ ﾄｸｼｭ ﾌﾂｿ	O-RING	3			
61	1	LE014890	O-ﾘﾝｸﾞ	O-RING	14			
62	1	LBQ0102	O-ﾘﾝｸﾞ JISB2401 1BP1	O-RING	12			
63	1	LJ014710	ﾊﾞﾙﾌﾞ ｱﾝﾁﾄﾞﾘﾌﾄ ASSY	VALVE;SPL	2			
64	1A	LJ014720	ﾊﾞﾙﾌﾞ;ﾘﾘｰﾌ KIT	VALVE;RELIEF	1			
65	2	LBQ6912	O-ﾘﾝｸﾞ AS568-912-HS9	O-RING	1			
66	1A	LJ014730	ﾊﾞﾙﾌﾞ;ﾘﾘｰﾌ KIT	VALVE;RELIEF	5			
67	2	LBQ6912	O-ﾘﾝｸﾞ AS568-912-HS9	O-RING	5			
68	2	LBQ0102	O-ﾘﾝｸﾞ JISB2401 1BP1	O-RING	5			
69	1A	LJ014740	ﾊﾞﾙﾌﾞ;ﾘﾘｰﾌ KIT	VALVE;RELIEF	1			
70	2	LBQ6912	O-ﾘﾝｸﾞ AS568-912-HS9	O-RING	1			
71	2	LBQ0102	O-ﾘﾝｸﾞ JISB2401 1BP1	O-RING	1			
72	1	LJ014750	ﾊﾞﾙﾌﾞ;ﾘﾘｰﾌ KIT	VALVE;RELIEF	1			
72	1A	LJ014750	ﾊﾞﾙﾌﾞ;ﾘﾘｰﾌ KIT	VALVE;RELIEF	2			
73	2	LBQ0102	O-ﾘﾝｸﾞ JISB2401 1BP1	O-RING	1			
73	2	LBQ0102	O-ﾘﾝｸﾞ JISB2401 1BP1	O-RING	2			
74	2	LBQ6912	O-ﾘﾝｸﾞ AS568-912-HS9	O-RING	1			
74	2	LBQ6912	O-ﾘﾝｸﾞ AS568-912-HS9	O-RING	2			
75	1	LJ014700	ﾊﾞﾙﾌﾞ;ﾘﾘｰﾌ ASS'Y	VALVE;RELIEF	2			
76	1A	LNC0218	ﾌﾟﾗｸﾞ S/A	PLUG	4			
77	2	LBQ0182	O-ﾘﾝｸﾞ JISB2401 1BP1	O-RING	4			
78	1A	LNC0217	ﾌﾟﾗｸﾞ S/A	PLUG	10			
79	2	LBQ0142	O-ﾘﾝｸﾞ JISB2401 1BP1	O-RING	10			
80	1A	LNC0238	ﾌﾟﾗｸﾞ S/A	PLUG	3			
81	2	LK00328	ﾌﾟﾗｸﾞ	PLUG	3			
82	2	LBQ0112	O-ﾘﾝｸﾞ JISB2401 1BP1	O-RING	3			
83	1	108R010Z055B	ﾛｯｶｸｱﾅB JIS B 1180 M	BOLT;HEX SOC HD	24			
83	1	108R010Z055B	ﾛｯｶｸｱﾅB JIS B 1180 M	BOLT;HEX SOC HD	32			
84	1	108R010Z040B	ﾛｯｶｸｱﾅB JIS B1176 M1	BOLT;HEX SOC HD	74			
84	1	108R010Z040B	ﾛｯｶｸｱﾅB JIS B1176 M1	BOLT;HEX SOC HD	66			
85	1	108R016Z130B	ﾛｯｶｸｱﾅB JIS B1180 M1	BOLT;HEX SOC HD	8			
86	1	LUC0118	ﾛｯｶｸｱﾅB	BOLT;HEX SOC HD	4			
87	1	-------	ﾒｲﾊﾞﾝ;ｷﾊﾞﾝ	NAMEPLATE;SER NO.	1			
88	1	-------	ｽｸﾘｭｰ ﾄﾞﾗｲﾌﾞ	SCREW	2			
89	1	-------	ﾌﾟﾗｸﾞ	PLUG	5			
90	1	LA011120	ﾛｯｶｸｱﾅB	BOLT;HEX SOC HD	4			
91	1	-------	ｽﾌﾟｰﾙ ASS'Y	SPOOL	1			
92	1	LR015290	ｷｬｯﾌﾟ	CAP	1			
93	1	LR00579	ｷｬｯﾌﾟ	CAP	2			
94	1	LBQ5219	O-ﾘﾝｸﾞ	O-RING	2			
95	1	LBQ0112	O-ﾘﾝｸﾞ JISB2401 1BP1	O-RING	2			
96	1	LK00301	ﾌﾟﾗｸﾞ	PLUG	2			
97	1A	LK00302	ﾌﾟﾗｸﾞ ASSY	PLUG	2			
98	2	LPC0256	ﾌﾟﾗｸﾞ	PLUG	2			
99	2	LBQ0242	O-ﾘﾝｸﾞ JISB2401 1BP2	O-RING	2			
100	1A	LPC0259	ﾌﾟﾗｸﾞ ASSY	PLUG	2			
101	2	LK00327	ﾌﾟﾗｸﾞ	PLUG	2			
102	2	LBQ6912	O-ﾘﾝｸﾞ AS568-912-HS9	O-RING	2			
103	2	LBQ0080	O-ﾘﾝｸﾞ JISB2401 1AP8	O-RING	2			
104	2	LBB6110	ﾘﾝｸﾞ;ﾊﾞｯｸｱｯﾌﾟ	RING;BACK-UP	2			
105	1	LA011130	ﾛｯｶｸｱﾅB	BOLT;HEX SOC HD	2			
106	1	LT001660	ﾊｳｼﾞﾝｸﾞ ｱｳﾄﾚｯﾄ	HOUSING;SPL	1			
107	1	LB011900	ﾀｲﾛｯﾄﾞ	ROD;TIE	4			
108	1	LUC0094	ﾅｯﾄ	NUT;SPL	4			
109	1	LJ014760	ｽﾌﾟｰﾙ ｾｸｼｮﾝ S/A	SPOOL	1			
110	1	LJ014770	ｲﾝﾚｯﾄｾｸｼｮﾝ;ﾊﾞﾙﾌﾞ S/A	INLET-SECTION;VALVE	1			
111	1A	LJ014780	ﾊﾞﾙﾌﾞ;ﾘﾘｰﾌ KIT	VALVE;RELIEF	1			
112	2	LBQ6908	O-ﾘﾝｸﾞ	O-RING	1			
113	2	LBQ0102	O-ﾘﾝｸﾞ JISB2401 1BP1	O-RING	1			
114	1	LLC0045	ﾌﾟﾗｸﾞ S/A	PLUG	1			

https://truckmanualshub.com/

64 [65] 66 [67 , 68] 69 [70 , 71] 73 [74] 76 [77] 78 [79]
80 [81 , 82] 97 [98 , 99] 100 [101～104]

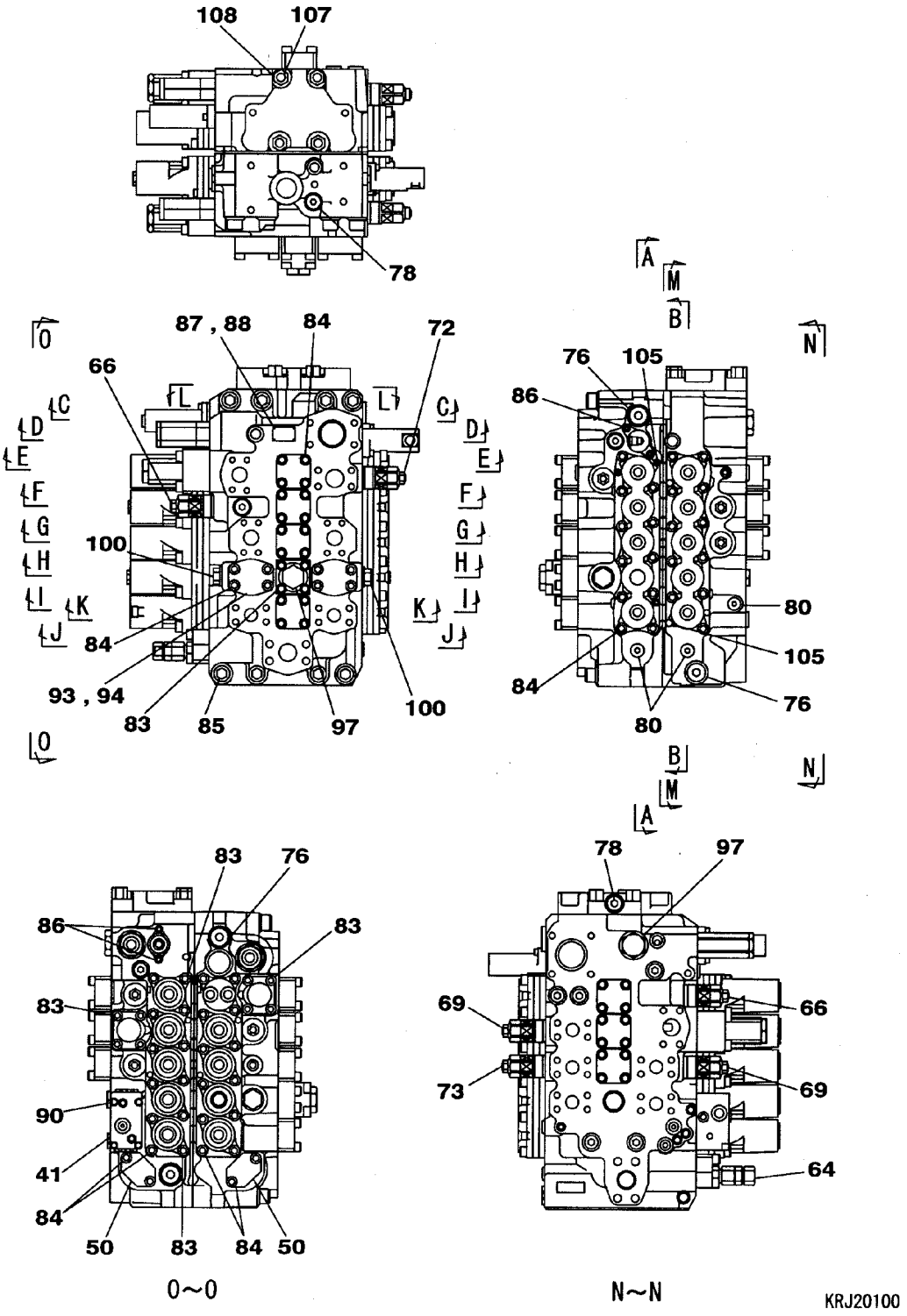

https://truckmanualshub.com/

VALVE;CONTROL	ﾊﾞﾙﾌﾞ;ｺﾝﾄﾛｰﾙ SH200-5LR	ZAJ313L0110 000 2/12	000

符号 ITEM	構成 COMPO	部品番号 PART NO.	部品名	PART NAME	個数 Q'TY	互換 ICA	代替部品 REPLACEABLE PART	備考 MEMO
		KRJ20100			1			
1	1	-------	ﾊｳｼﾞﾝｸﾞ;ﾊﾞﾙﾌﾞ	HOUSING;VALVE	1			
2	1	-------	ｽﾌﾟｰﾙ ASSY	SPOOL	1			
3	1	-------	ｽﾌﾟｰﾙ ASSY	SPOOL	1			
4	1	-------	ｽﾌﾟｰﾙ ASSY	SPOOL	1			
5	1	-------	ｽﾌﾟｰﾙ ASSY	SPOOL	2			
6	1	-------	ｽﾌﾟｰﾙ ASSY	SPOOL	1			
7	1	LBQ0453	O-ﾘﾝｸﾞ JISB2401 1BG4	O-RING	20			
8	1	LR015210	ｷｬｯﾌﾟ	CAP	9			
9	1	LR015220	ｷｬｯﾌﾟ	CAP	1			
10	1	LR015230	ﾌﾟﾚｰﾄ ASS'Y	PLATE;SPL	1			
11	1	LR015240	ﾌﾟﾚｰﾄ ASS'Y	PLATE;SPL	1			
12	1	-------	ﾊｳｼﾞﾝｸﾞ;ﾊﾞﾙﾌﾞ	HOUSING;VALVE	1			
13	1	-------	ｽﾌﾟｰﾙ ASSY	SPOOL	1			
14	1	-------	ｽﾌﾟｰﾙ ASSY	SPOOL	1			
15	1	-------	ｽﾌﾟｰﾙ ASSY	SPOOL	1			
16	1	-------	ｽﾌﾟｰﾙ ASSY	SPOOL	1			
17	1	LR015250	ｷｬｯﾌﾟ	CAP	1			
18	1	-------	ｽﾌﾟｰﾙ;ﾊﾞﾙﾌﾞ	SPOOL;VALVE	1			
19	1	LSC0158	ｼｰﾄ;ｽﾌﾟﾘﾝｸﾞ	SEAT;SPRING	2			
20	1	LG00338	ｽﾌﾟﾘﾝｸﾞ;ｱﾂｼｭｸ	SPRING;COMPRESSION	1			
21	1	LPC0222	ｴﾝﾄﾞ ｽﾌﾟｰﾙ	END;SPL	1			
22	1	LBQ0260	O-ﾘﾝｸﾞ JISB2401 1AP2	O-RING	1			
23	1	LK005690	ﾌﾟﾗｸﾞ	PLUG	1			
24	1	LBQ0242	O-ﾘﾝｸﾞ JISB2401 1BP2	O-RING	1			
25	1	LG00339	ｽﾌﾟﾘﾝｸﾞ;ｱﾂｼｭｸ	SPRING;COMPRESSION	1			
26	1	LJ014690	ｽﾌﾟｰﾙ ASSY	SPOOL	1			
27	1	LR015260	ﾌﾟﾚｰﾄ ASS'Y	PLATE;SPL	1			
28	1	LR015270	ﾌﾟﾚｰﾄ ASS'Y	PLATE;SPL	1			
29	1	LBQ0162	O-ﾘﾝｸﾞ JISB2401 1BP1	O-RING	1			
30	1	LBB0162	ﾘﾝｸﾞ;ﾊﾞｯｸｱｯﾌﾟ	RING;BACK-UP	2			
31	1	LJ00726	ﾎﾟﾍﾟｯﾄ	POPPET	2			
32	1	LG00340	ｽﾌﾟﾘﾝｸﾞ;ｱﾂｼｭｸ	SPRING;COMPRESSION	2			
33	1	LJ00727	ﾎﾟﾍﾟｯﾄ	POPPET	7			
34	1	LG00341	ｽﾌﾟﾘﾝｸﾞ;ｱﾂｼｭｸ	SPRING;COMPRESSION	8			
35	1	LBQ0322	O-ﾘﾝｸﾞ JISB2401 1BP3	O-RING	10			
36	1	LH00248	ﾌﾗﾝｼﾞ	FLANGE;SPL	6			
37	1	LPC0180	ﾎﾟﾍﾟｯﾄ	POPPET	2			
38	1	LSC0227	ｽﾌﾟﾘﾝｸﾞ ﾄｸｼｭ	SPRING;SPL	2			
39	1	LJ00731	ｵﾘﾌｨｽ	ORIFICE	1			
40	1	LBQ0062	O-ﾘﾝｸﾞ JISB2401 1BP6	O-RING	27			
41	1	LR015280	ﾎﾞﾃﾞｨ ASSY	BODY	1			
42	1	LH00249	ﾌﾗﾝｼﾞ	FLANGE;SPL	1			
43	1	LJ00728	ﾎﾟﾍﾟｯﾄ	POPPET	1			
44	1	LG00342	ｽﾌﾟﾘﾝｸﾞ;ｱﾂｼｭｸ	SPRING;COMPRESSION	1			
45	1	LLC0082	ﾌﾟﾗｸﾞ	PLUG	1			
46	1	LBQ6910	O-ﾘﾝｸﾞ	O-RING	1			
47	1	LSC0094	ｽﾌﾟﾘﾝｸﾞ	SPRING;SPL	1			
48	1	LJ014680	ﾎﾟﾍﾟｯﾄ	POPPET	1			
49	1	LJ00730	ﾎﾟﾍﾟｯﾄ	POPPET	1			
50	1	LH00250	ﾌﾗﾝｼﾞ	FLANGE;SPL	2			
51	1	LH004960	ｽﾍﾟｰｻ	SPACER	2			
52	1	LBQ0251	O-ﾘﾝｸﾞ JISB2401 1AG2	O-RING	2			
53	1	LBB0253	ﾘﾝｸﾞ;ﾊﾞｯｸｱｯﾌﾟ	RING;BACK-UP	2			
54	1	LBQ0553	O-ﾘﾝｸﾞ JISB2401 1BG5	O-RING	1			
55	1	LH004970	ｽﾍﾟｰｻ	SPACER	1			
56	1	LH004980	ｽﾘｰﾌﾞ	SLEEVE	1			
57	1	LPC0098	ﾎﾟﾍﾟｯﾄ	POPPET	1			
58	1	LSC0187	ｽﾌﾟﾘﾝｸﾞ	SPRING;SPL	1			
59	1	LH004990	ﾌﾗﾝｼﾞ ﾄｸｼｭ	FLANGE;SPL	1			
60	1	LE012520	O-ﾘﾝｸﾞ ﾄｸｼｭ ﾌﾂｿ	O-RING	3			
61	1	LE014890	O-ﾘﾝｸﾞ	O-RING	14			
62	1	LBQ0102	O-ﾘﾝｸﾞ JISB2401 1BP1	O-RING	12			
63	1	LJ014710	ﾊﾞﾙﾌﾞ ｱﾝﾁﾄﾞﾘﾌﾄ ASSY	VALVE;SPL	2			
64	1A	LJ014720	ﾊﾞﾙﾌﾞ;ﾘﾘｰﾌ KIT	VALVE;RELIEF	1			
65	2	LBQ6912	O-ﾘﾝｸﾞ AS568-912-HS9	O-RING	1			
66	1A	LJ014730	ﾊﾞﾙﾌﾞ;ﾘﾘｰﾌ KIT	VALVE;RELIEF	2			
67	2	LBQ6912	O-ﾘﾝｸﾞ AS568-912-HS9	O-RING	2			

https://truckmanualshub.com/

78 [79]

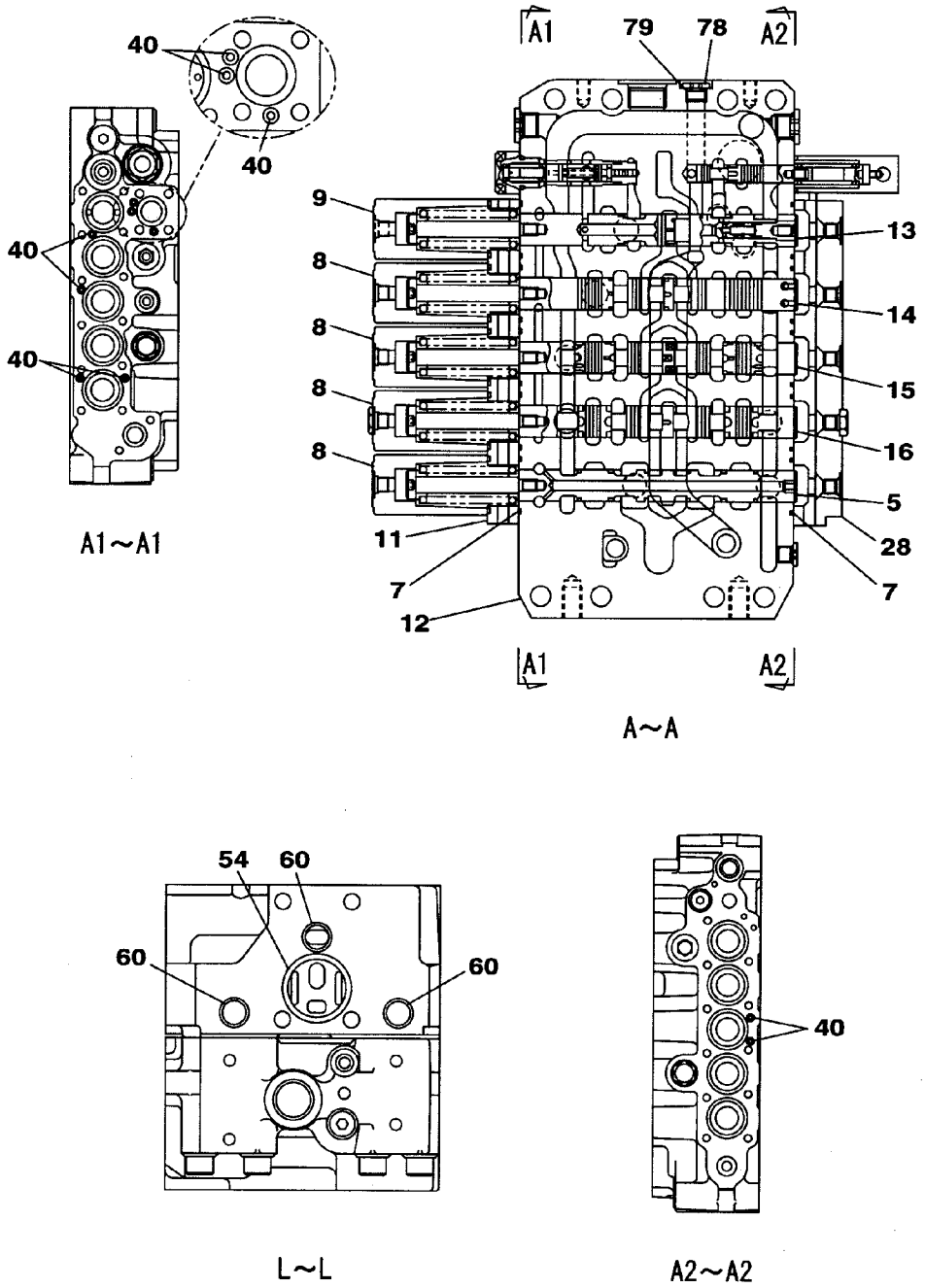

KRJ20100

https://truckmanualshub.com/

符号 ITEM	構成 COMPO	部品番号 PART NO.	部品名	PART NAME	個数 Q'TY	互換 ICA	代替部品 REPLACEABLE PART	備考 MEMO
9	1	LR015220	ｷｬｯﾌﾟ	CAP	1			
10	1	LR015230	ﾌﾟﾚｰﾄ ASS'Y	PLATE;SPL	1			
11	1	LR015240	ﾌﾟﾚｰﾄ ASS'Y	PLATE;SPL	1			
12	1	-------	ﾊｳｼﾞﾝｸﾞ;ﾊﾞﾙﾌﾞ	HOUSING;VALVE	1			
13	1	-------	ｽﾌﾟｰﾙ ASSY	SPOOL	1			
14	1	-------	ｽﾌﾟｰﾙ ASSY	SPOOL	1			
15	1	-------	ｽﾌﾟｰﾙ ASSY	SPOOL	1			
16	1	-------	ｽﾌﾟｰﾙ ASSY	SPOOL	1			
17	1	LR015250	ｷｬｯﾌﾟ	CAP	1			
18	1	-------	ｽﾌﾟｰﾙ;ﾊﾞﾙﾌﾞ	SPOOL;VALVE	1			
19	1	LSC0158	ｼｰﾄ;ｽﾌﾟﾘﾝｸﾞ	SEAT;SPRING	2			
20	1	LG00338	ｽﾌﾟﾘﾝｸﾞ;ｱﾂｼｭｸ	SPRING;COMPRESSION	1			
21	1	LPC0222	ｴﾝﾄﾞ ｽﾌﾟｰﾙ	END;SPL	1			
22	1	LBQ0260	O-ﾘﾝｸﾞ JISB2401 1AP2	O-RING	1			
23	1	LK005690	ﾌﾟﾗｸﾞ	PLUG	1			
24	1	LBQ0242	O-ﾘﾝｸﾞ JISB2401 1BP2	O-RING	1			
25	1	LG00339	ｽﾌﾟﾘﾝｸﾞ;ｱﾂｼｭｸ	SPRING;COMPRESSION	1			
26	1	LJ014690	ｽﾌﾟｰﾙ ASSY	SPOOL	1			
27	1	LR015260	ﾌﾟﾚｰﾄ ASS'Y	PLATE;SPL	1			
28	1	LR015270	ﾌﾟﾚｰﾄ ASS'Y	PLATE;SPL	1			
29	1	LBQ0162	O-ﾘﾝｸﾞ JISB2401 1BP1	O-RING	1			
30	1	LBB0162	ﾘﾝｸﾞ;ﾊﾞｯｸｱｯﾌﾟ	RING;BACK-UP	2			
31	1	LJ00726	ﾎﾟﾍﾟｯﾄ	POPPET	2			
32	1	LG00340	ｽﾌﾟﾘﾝｸﾞ;ｱﾂｼｭｸ	SPRING;COMPRESSION	2			
33	1	LJ00727	ﾎﾟﾍﾟｯﾄ	POPPET	7			
34	1	LG00341	ｽﾌﾟﾘﾝｸﾞ;ｱﾂｼｭｸ	SPRING;COMPRESSION	8			
35	1	LBQ0322	O-ﾘﾝｸﾞ JISB2401 1BP3	O-RING	10			
36	1	LH00248	ﾌﾗﾝｼﾞ	FLANGE;SPL	6			
37	1	LPC0180	ﾎﾟﾍﾟｯﾄ	POPPET	2			
38	1	LSC0227	ｽﾌﾟﾘﾝｸﾞ ﾄｸｼｭ	SPRING;SPL	2			
39	1	LJ00731	ｵﾘﾌｨｽ	ORIFICE	1			
40	1	LBQ0062	O-ﾘﾝｸﾞ JISB2401 1BP6	O-RING	27			
41	1	LR015280	ﾎﾞﾃﾞｨ ASSY	BODY	1			
42	1	LH00249	ﾌﾗﾝｼﾞ	FLANGE;SPL	1			
43	1	LJ00728	ﾎﾟﾍﾟｯﾄ	POPPET	1			
44	1	LG00342	ｽﾌﾟﾘﾝｸﾞ;ｱﾂｼｭｸ	SPRING;COMPRESSION	1			
45	1	LLC0082	ﾌﾟﾗｸﾞ	PLUG	1			
46	1	LBQ6910	O-ﾘﾝｸﾞ	O-RING	1			
47	1	LSC0094	ｽﾌﾟﾘﾝｸﾞ	SPRING;SPL	1			
48	1	LJ014680	ﾎﾟﾍﾟｯﾄ	POPPET	1			
49	1	LJ00730	ﾎﾟﾍﾟｯﾄ	POPPET	1			
50	1	LH00250	ﾌﾗﾝｼﾞ	FLANGE;SPL	2			
51	1	LH004960	ｽﾍﾟｰｻ	SPACER	2			
52	1	LBQ0251	O-ﾘﾝｸﾞ JISB2401 1AG2	O-RING	2			
53	1	LBB0253	ﾘﾝｸﾞ;ﾊﾞｯｸｱｯﾌﾟ	RING;BACK-UP	2			
54	1	LBQ0553	O-ﾘﾝｸﾞ JISB2401 1BG5	O-RING	1			
55	1	LH004970	ｽﾍﾟｰｻ	SPACER	1			
56	1	LH004980	ｽﾘｰﾌﾞ	SLEEVE	1			
57	1	LPC0098	ﾎﾟﾍﾟｯﾄ	POPPET	1			
58	1	LSC0187	ｽﾌﾟﾘﾝｸﾞ	SPRING;SPL	1			
59	1	LH004990	ﾌﾗﾝｼﾞ ﾄｸｼｭ	FLANGE;SPL	1			
60	1	LE012520	O-ﾘﾝｸﾞ ﾄｸｼｭ ﾌﾂｿ	O-RING	3			
61	1	LE014890	O-ﾘﾝｸﾞ	O-RING	14			
62	1	LBQ0102	O-ﾘﾝｸﾞ JISB2401 1BP1	O-RING	12			
63	1	LJ014710	ﾊﾞﾙﾌﾞ ｱﾝﾁﾄﾞﾘﾌﾄ ASSY	VALVE;SPL	2			
64	1A	LJ014720	ﾊﾞﾙﾌﾞ;ﾘﾘｰﾌ KIT	VALVE;RELIEF	1			
65	2	LBQ6912	O-ﾘﾝｸﾞ AS568-912-HS9	O-RING	1			
66	1A	LJ014730	ﾊﾞﾙﾌﾞ;ﾘﾘｰﾌ KIT	VALVE;RELIEF	2			
67	2	LBQ6912	O-ﾘﾝｸﾞ AS568-912-HS9	O-RING	2			
68	2	LBQ0102	O-ﾘﾝｸﾞ JISB2401 1BP1	O-RING	2			
69	1A	LJ014740	ﾊﾞﾙﾌﾞ;ﾘﾘｰﾌ KIT	VALVE;RELIEF	1			
70	2	LBQ6912	O-ﾘﾝｸﾞ AS568-912-HS9	O-RING	1			
71	2	LBQ0102	O-ﾘﾝｸﾞ JISB2401 1BP1	O-RING	1			
72	1	LJ015460	ﾊﾞﾙﾌﾞ;ﾘﾘｰﾌ 23MPA 216	VALVE;RELIEF	1			
73	1A	LJ01196	ﾊﾞﾙﾌﾞ;ﾘﾘｰﾌ 25MPA 181	VALVE;RELIEF	2			
74	2	LBQ6912	O-ﾘﾝｸﾞ AS568-912-HS9	O-RING	2			
75	1	LJ014700	ﾊﾞﾙﾌﾞ;ﾘﾘｰﾌ ASS'Y	VALVE;RELIEF	2			
76	1A	LNC0218	ﾌﾟﾗｸﾞ S/A	PLUG	3			

https://truckmanualshub.com/

64 [65]

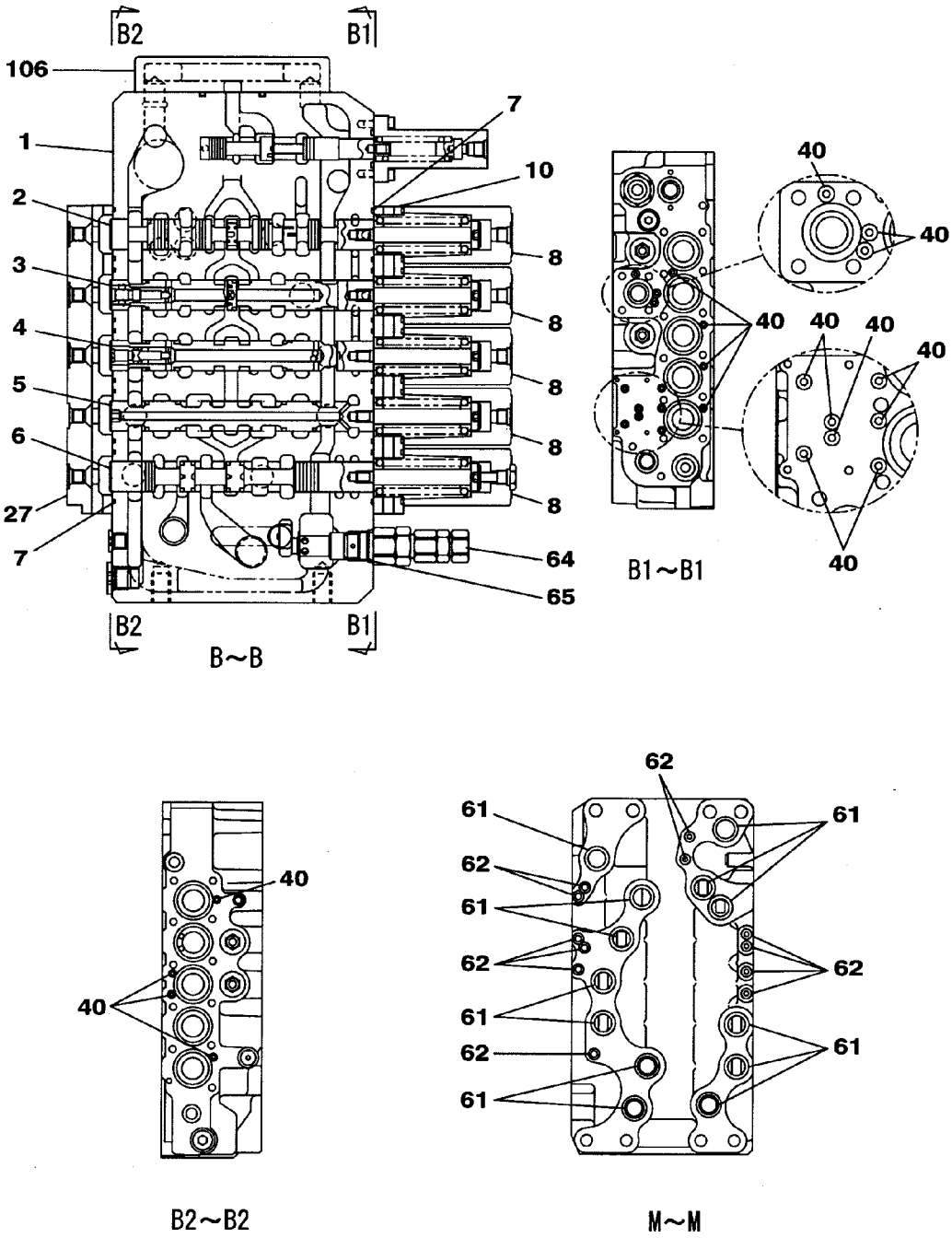

KRJ20100

https://truckmanualshub.com/

符号 ITEM	構成 COMPO	部品番号 PART NO.	部品名	PART NAME	個数 Q'TY	互換 ICA	代替部品 REPLACEABLE PART	備考 MEMO
18	1	-------	ｽﾌﾟｰﾙ;ﾊﾞﾙﾌﾞ	SPOOL;VALVE	1			
19	1	LSC0158	ｼｰﾄ;ｽﾌﾟﾘﾝｸﾞ	SEAT;SPRING	2			
20	1	LG00338	ｽﾌﾟﾘﾝｸﾞ;ｱﾂｼｭｸ	SPRING;COMPRESSION	1			
21	1	LPC0222	ｴﾝﾄﾞ ｽﾌﾟｰﾙ	END;SPL	1			
22	1	LBQ0260	O-ﾘﾝｸﾞ JISB2401 1AP2	O-RING	1			
23	1	LK005690	ﾌﾟﾗｸﾞ	PLUG	1			
24	1	LBQ0242	O-ﾘﾝｸﾞ JISB2401 1BP2	O-RING	1			
25	1	LG00339	ｽﾌﾟﾘﾝｸﾞ;ｱﾂｼｭｸ	SPRING;COMPRESSION	1			
26	1	LJ014690	ｽﾌﾟｰﾙ ASSY	SPOOL	1			
27	1	LR015260	ﾌﾟﾚｰﾄ ASS'Y	PLATE;SPL	1			
28	1	LR015270	ﾌﾟﾚｰﾄ ASS'Y	PLATE;SPL	1			
29	1	LBQ0162	O-ﾘﾝｸﾞ JISB2401 1BP1	O-RING	1			
30	1	LBB0162	ﾘﾝｸﾞ;ﾊﾞｯｸｱｯﾌﾟ	RING;BACK-UP	2			
31	1	LJ00726	ﾎﾟﾍﾟｯﾄ	POPPET	2			
32	1	LG00340	ｽﾌﾟﾘﾝｸﾞ;ｱﾂｼｭｸ	SPRING;COMPRESSION	2			
33	1	LJ00727	ﾎﾟﾍﾟｯﾄ	POPPET	7			
34	1	LG00341	ｽﾌﾟﾘﾝｸﾞ;ｱﾂｼｭｸ	SPRING;COMPRESSION	8			
35	1	LBQ0322	O-ﾘﾝｸﾞ JISB2401 1BP3	O-RING	10			
36	1	LH00248	ﾌﾗﾝｼﾞ	FLANGE;SPL	6			
37	1	LPC0180	ﾎﾟﾍﾟｯﾄ	POPPET	2			
38	1	LSC0227	ｽﾌﾟﾘﾝｸﾞ ﾄｸｼｭ	SPRING;SPL	2			
39	1	LJ00731	ｵﾘﾌｨｽ	ORIFICE	1			
40	1	LBQ0062	O-ﾘﾝｸﾞ JISB2401 1BP6	O-RING	27			
41	1	LR015280	ﾎﾞﾃﾞｨ ASSY	BODY	1			
42	1	LH00249	ﾌﾗﾝｼﾞ	FLANGE;SPL	1			
43	1	LJ00728	ﾎﾟﾍﾟｯﾄ	POPPET	1			
44	1	LG00342	ｽﾌﾟﾘﾝｸﾞ;ｱﾂｼｭｸ	SPRING;COMPRESSION	1			
45	1	LLC0082	ﾌﾟﾗｸﾞ	PLUG	1			
46	1	LBQ6910	O-ﾘﾝｸﾞ	O-RING	1			
47	1	LSC0094	ｽﾌﾟﾘﾝｸﾞ	SPRING;SPL	1			
48	1	LJ014680	ﾎﾟﾍﾟｯﾄ	POPPET	1			
49	1	LJ00730	ﾎﾟﾍﾟｯﾄ	POPPET	1			
50	1	LH00250	ﾌﾗﾝｼﾞ	FLANGE;SPL	2			
51	1	LH004960	ｽﾍﾟｰｻ	SPACER	2			
52	1	LBQ0251	O-ﾘﾝｸﾞ JISB2401 1AG2	O-RING	2			
53	1	LBB0253	ﾘﾝｸﾞ;ﾊﾞｯｸｱｯﾌﾟ	RING;BACK-UP	2			
54	1	LBQ0553	O-ﾘﾝｸﾞ JISB2401 1BG5	O-RING	1			
55	1	LH004970	ｽﾍﾟｰｻ	SPACER	1			
56	1	LH004980	ｽﾘｰﾌﾞ	SLEEVE	1			
57	1	LPC0098	ﾎﾟﾍﾟｯﾄ	POPPET	1			
58	1	LSC0187	ｽﾌﾟﾘﾝｸﾞ	SPRING;SPL	1			
59	1	LH004990	ﾌﾗﾝｼﾞ ﾄｸｼｭ	FLANGE;SPL	1			
60	1	LE012520	O-ﾘﾝｸﾞ ﾄｸｼｭ ﾌﾂｿ	O-RING	3			
61	1	LE014890	O-ﾘﾝｸﾞ	O-RING	14			
62	1	LBQ0102	O-ﾘﾝｸﾞ JISB2401 1BP1	O-RING	12			
63	1	LJ014710	ﾊﾞﾙﾌﾞ ｱﾝﾁﾄﾞﾘﾌﾄ ASSY	VALVE;SPL	2			
64	1A	LJ014720	ﾊﾞﾙﾌﾞ;ﾘﾘｰﾌ KIT	VALVE;RELIEF	1			
65	2	LBQ6912	O-ﾘﾝｸﾞ AS568-912-HS9	O-RING	1			
66	1A	LJ014730	ﾊﾞﾙﾌﾞ;ﾘﾘｰﾌ KIT	VALVE;RELIEF	2			
67	2	LBQ6912	O-ﾘﾝｸﾞ AS568-912-HS9	O-RING	2			
68	2	LBQ0102	O-ﾘﾝｸﾞ JISB2401 1BP1	O-RING	2			
69	1A	LJ014740	ﾊﾞﾙﾌﾞ;ﾘﾘｰﾌ KIT	VALVE;RELIEF	1			
70	2	LBQ6912	O-ﾘﾝｸﾞ AS568-912-HS9	O-RING	1			
71	2	LBQ0102	O-ﾘﾝｸﾞ JISB2401 1BP1	O-RING	1			
72	1	LJ015460	ﾊﾞﾙﾌﾞ;ﾘﾘｰﾌ 23MPA 216	VALVE;RELIEF	1			
73	1A	LJ01196	ﾊﾞﾙﾌﾞ;ﾘﾘｰﾌ 25MPA 181	VALVE;RELIEF	2			
74	2	LBQ6912	O-ﾘﾝｸﾞ AS568-912-HS9	O-RING	2			
75	1	LJ014700	ﾊﾞﾙﾌﾞ;ﾘﾘｰﾌ ASS'Y	VALVE;RELIEF	2			
76	1A	LNC0218	ﾌﾟﾗｸﾞ S/A	PLUG	3			
77	2	LBQ0182	O-ﾘﾝｸﾞ JISB2401 1BP1	O-RING	3			
78	1A	LNC0217	ﾌﾟﾗｸﾞ S/A	PLUG	10			
79	2	LBQ0142	O-ﾘﾝｸﾞ JISB2401 1BP1	O-RING	10			
80	1A	LNC0238	ﾌﾟﾗｸﾞ S/A	PLUG	3			
81	2	LK00328	ﾌﾟﾗｸﾞ	PLUG	3			
82	2	LBQ0112	O-ﾘﾝｸﾞ JISB2401 1BP1	O-RING	3			
83	1	108R010Z055B	ﾛｯｶｸｱﾅB JIS B 1180 M	BOLT;HEX SOC HD	32			
84	1	108R010Z040B	ﾛｯｶｸｱﾅB JIS B1176 M1	BOLT;HEX SOC HD	66			
85	1	108R016Z130B	ﾛｯｶｸｱﾅB JIS B1180 M1	BOLT;HEX SOC HD	8			

https://truckmanualshub.com/

66 [67 , 68] 69 [70 , 71] 72 [73] 76 [77] 78 [79] 97 [98 , 99]

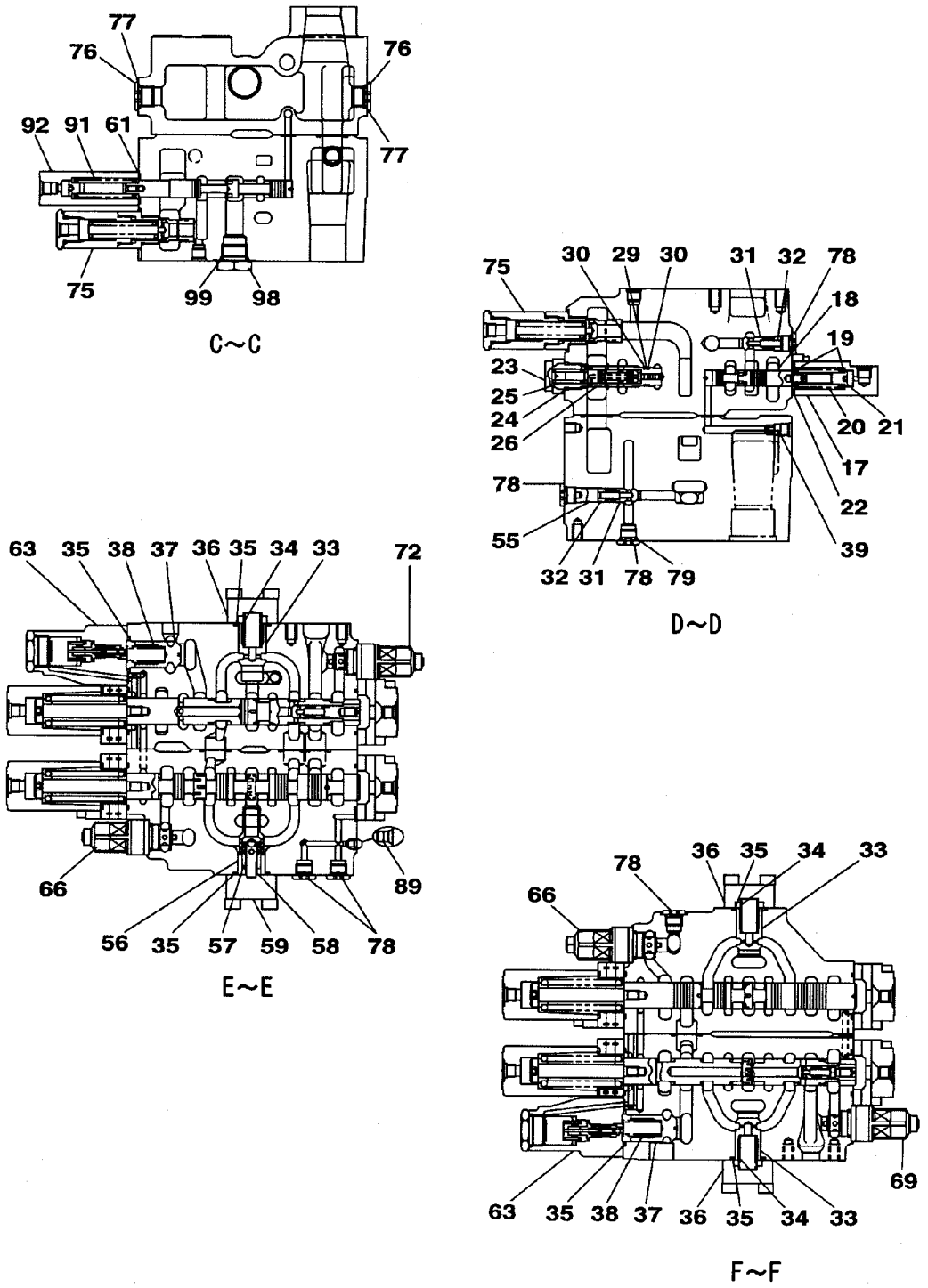

KRJ20100

https://truckmanualshub.com/

符号 ITEM	構成 COMPO	部品番号 PART NO.	部品名	PART NAME	個数 Q'TY	互換 ICA	代替部品 REPLACEABLE PART	備考 MEMO
27	1	LR015260	ﾌﾟﾚｰﾄ ASS'Y	PLATE;SPL	1			
28	1	LR015270	ﾌﾟﾚｰﾄ ASS'Y	PLATE;SPL	1			
29	1	LBQ0162	O-ﾘﾝｸﾞ JISB2401 1BP1	O-RING	1			
30	1	LBB0162	ﾘﾝｸﾞ;ﾊﾞｯｸｱｯﾌﾟ	RING;BACK-UP	2			
31	1	LJ00726	ﾎﾟﾍﾟｯﾄ	POPPET	2			
32	1	LG00340	ｽﾌﾟﾘﾝｸﾞ;ｱｯｼｭｸ	SPRING;COMPRESSION	2			
33	1	LJ00727	ﾎﾟﾍﾟｯﾄ	POPPET	7			
34	1	LG00341	ｽﾌﾟﾘﾝｸﾞ;ｱｯｼｭｸ	SPRING;COMPRESSION	8			
35	1	LBQ0322	O-ﾘﾝｸﾞ JISB2401 1BP3	O-RING	10			
36	1	LH00248	ﾌﾗﾝｼﾞ	FLANGE;SPL	6			
37	1	LPC0180	ﾎﾟﾍﾟｯﾄ	POPPET	2			
38	1	LSC0227	ｽﾌﾟﾘﾝｸﾞ ﾄｸｼｭ	SPRING;SPL	2			
39	1	LJ00731	ｵﾘﾌｨｽ	ORIFICE	1			
40	1	LBQ0062	O-ﾘﾝｸﾞ JISB2401 1BP6	O-RING	27			
41	1	LR015280	ﾎﾞﾃﾞｨ ASSY	BODY	1			
42	1	LH00249	ﾌﾗﾝｼﾞ	FLANGE;SPL	1			
43	1	LJ00728	ﾎﾟﾍﾟｯﾄ	POPPET	1			
44	1	LG00342	ｽﾌﾟﾘﾝｸﾞ;ｱｯｼｭｸ	SPRING;COMPRESSION	1			
45	1	LLC0082	ﾌﾟﾗｸﾞ	PLUG	1			
46	1	LBQ6910	O-ﾘﾝｸﾞ	O-RING	1			
47	1	LSC0094	ｽﾌﾟﾘﾝｸﾞ	SPRING;SPL	1			
48	1	LJ014680	ﾎﾟﾍﾟｯﾄ	POPPET	1			
49	1	LJ00730	ﾎﾟﾍﾟｯﾄ	POPPET	1			
50	1	LH00250	ﾌﾗﾝｼﾞ	FLANGE;SPL	2			
51	1	LH004960	ｽﾍﾟｰｻ	SPACER	2			
52	1	LBQ0251	O-ﾘﾝｸﾞ JISB2401 1AG2	O-RING	2			
53	1	LBB0253	ﾘﾝｸﾞ;ﾊﾞｯｸｱｯﾌﾟ	RING;BACK-UP	2			
54	1	LBQ0553	O-ﾘﾝｸﾞ JISB2401 1BG5	O-RING	1			
55	1	LH004970	ｽﾍﾟｰｻ	SPACER	1			
56	1	LH004980	ｽﾘｰﾌﾞ	SLEEVE	1			
57	1	LPC0098	ﾎﾟﾍﾟｯﾄ	POPPET	1			
58	1	LSC0187	ｽﾌﾟﾘﾝｸﾞ	SPRING;SPL	1			
59	1	LH004990	ﾌﾗﾝｼﾞ ﾄｸｼｭ	FLANGE;SPL	1			
60	1	LE012520	O-ﾘﾝｸﾞ ﾄｸｼｭ ﾌﾂｿ	O-RING	3			
61	1	LE014890	O-ﾘﾝｸﾞ	O-RING	14			
62	1	LBQ0102	O-ﾘﾝｸﾞ JISB2401 1BP1	O-RING	12			
63	1	LJ014710	ﾊﾞﾙﾌﾞ ｱﾝﾁﾄﾞﾘﾌﾄ ASSY	VALVE;SPL	2			
64	1A	LJ014720	ﾊﾞﾙﾌﾞ;ﾘﾘｰﾌ KIT	VALVE;RELIEF	1			
65	2	LBQ6912	O-ﾘﾝｸﾞ AS568-912-HS9	O-RING	1			
66	1A	LJ014730	ﾊﾞﾙﾌﾞ;ﾘﾘｰﾌ KIT	VALVE;RELIEF	2			
67	2	LBQ6912	O-ﾘﾝｸﾞ AS568-912-HS9	O-RING	2			
68	2	LBQ0102	O-ﾘﾝｸﾞ JISB2401 1BP1	O-RING	2			
69	1A	LJ014740	ﾊﾞﾙﾌﾞ;ﾘﾘｰﾌ KIT	VALVE;RELIEF	1			
70	2	LBQ6912	O-ﾘﾝｸﾞ AS568-912-HS9	O-RING	1			
71	2	LBQ0102	O-ﾘﾝｸﾞ JISB2401 1BP1	O-RING	1			
72	1	LJ015460	ﾊﾞﾙﾌﾞ;ﾘﾘｰﾌ 23MPA 216	VALVE;RELIEF	1			
73	1A	LJ01196	ﾊﾞﾙﾌﾞ;ﾘﾘｰﾌ 25MPA 181	VALVE;RELIEF	2			
74	2	LBQ6912	O-ﾘﾝｸﾞ AS568-912-HS9	O-RING	2			
75	1	LJ014700	ﾊﾞﾙﾌﾞ;ﾘﾘｰﾌ ASS'Y	VALVE;RELIEF	2			
76	1A	LNC0218	ﾌﾟﾗｸﾞ S/A	PLUG	3			
77	2	LBQ0182	O-ﾘﾝｸﾞ JISB2401 1BP1	O-RING	3			
78	1A	LNC0217	ﾌﾟﾗｸﾞ S/A	PLUG	10			
79	2	LBQ0142	O-ﾘﾝｸﾞ JISB2401 1BP1	O-RING	10			
80	1A	LNC0238	ﾌﾟﾗｸﾞ S/A	PLUG	3			
81	2	LK00328	ﾌﾟﾗｸﾞ	PLUG	3			
82	2	LBQ0112	O-ﾘﾝｸﾞ JISB2401 1BP1	O-RING	3			
83	1	108R010Z055B	ﾛｯｶｸｱﾅB JIS B 1180 M	BOLT;HEX SOC HD	32			
84	1	108R010Z040B	ﾛｯｶｸｱﾅB JIS B1176 M1	BOLT;HEX SOC HD	66			
85	1	108R016Z130B	ﾛｯｶｸｱﾅB JIS B1180 M1	BOLT;HEX SOC HD	8			
86	1	LUC0118	ﾛｯｶｸｱﾅB	BOLT;HEX SOC HD	4			
87	1	-------	ﾒｲﾊﾞﾝ;ｷﾊﾞﾝ	NAMEPLATE;SER NO.	1			
88	1	-------	ｽｸﾘｭｰ ﾄﾞﾗｲﾌﾞ	SCREW	2			
89	1	-------	ﾌﾟﾗｸﾞ	PLUG	5			
90	1	LA011120	ﾛｯｶｸｱﾅB	BOLT;HEX SOC HD	4			
91	1	-------	ｽﾌﾟｰﾙ ASS'Y	SPOOL	1			
92	1	LR015290	ｷｬｯﾌﾟ	CAP	1			
93	1	LR00579	ｷｬｯﾌﾟ	CAP	2			
94	1	LBQ5219	O-ﾘﾝｸﾞ	O-RING	2			

https://truckmanualshub.com/

64 [65] 73 [74] 78 [79] 80 [81 , 82] 97 [98 , 99] 100 [101 ~ 104]

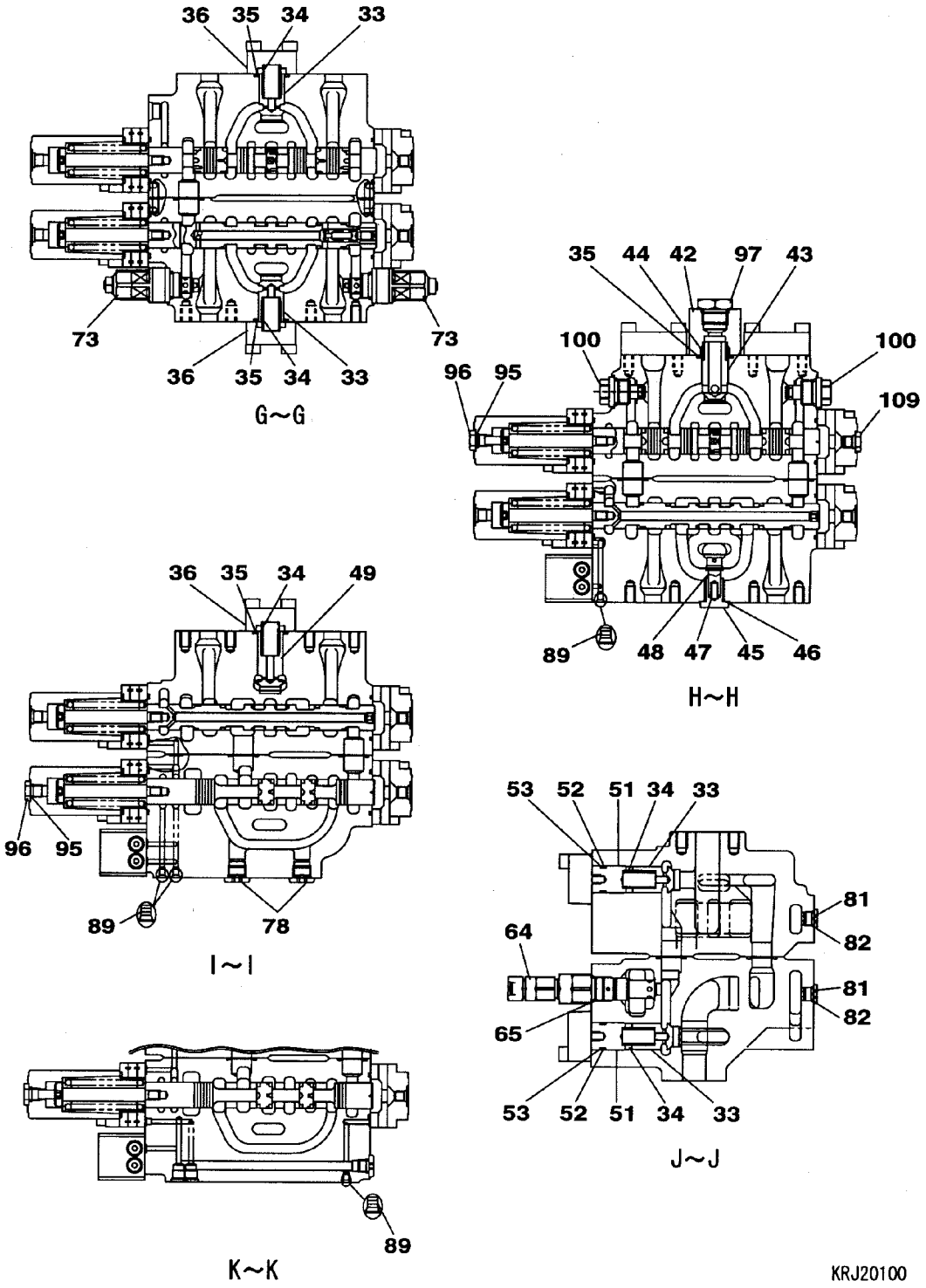

https://truckmanualshub.com/

符号 ITEM	構成 COMPO	部品番号 PART NO.	部品名	PART NAME	個数 Q'TY	互換 ICA	代替部品 REPLACEABLE PART	備考 MEMO
36	1	LH00248	ﾌﾗﾝｼﾞ	FLANGE;SPL	6			
37	1	LPC0180	ﾎﾟﾍﾟｯﾄ	POPPET	2			
38	1	LSC0227	ｽﾌﾟﾘﾝｸﾞ ﾄｸｼｭ	SPRING;SPL	2			
39	1	LJ00731	ｵﾘﾌｨｽ	ORIFICE	1			
40	1	LBQ0062	O-ﾘﾝｸﾞ JISB2401 1BP6	O-RING	27			
41	1	LR015280	ﾎﾞﾃﾞｨ ASSY	BODY	1			
42	1	LH00249	ﾌﾗﾝｼﾞ	FLANGE;SPL	1			
43	1	LJ00728	ﾎﾟﾍﾟｯﾄ	POPPET	1			
44	1	LG00342	ｽﾌﾟﾘﾝｸﾞ;ｱﾂｼｭｸ	SPRING;COMPRESSION	1			
45	1	LLC0082	ﾌﾟﾗｸﾞ	PLUG	1			
46	1	LBQ6910	O-ﾘﾝｸﾞ	O-RING	1			
47	1	LSC0094	ｽﾌﾟﾘﾝｸﾞ	SPRING;SPL	1			
48	1	LJ014680	ﾎﾟﾍﾟｯﾄ	POPPET	1			
49	1	LJ00730	ﾎﾟﾍﾟｯﾄ	POPPET	1			
50	1	LH00250	ﾌﾗﾝｼﾞ	FLANGE;SPL	2			
51	1	LH004960	ｽﾍﾟｰｻ	SPACER	2			
52	1	LBQ0251	O-ﾘﾝｸﾞ JISB2401 1AG2	O-RING	2			
53	1	LBB0253	ﾘﾝｸﾞ;ﾊﾞｯｸｱｯﾌﾟ	RING;BACK-UP	2			
54	1	LBQ0553	O-ﾘﾝｸﾞ JISB2401 1BG5	O-RING	1			
55	1	LH004970	ｽﾍﾟｰｻ	SPACER	1			
56	1	LH004980	ｽﾘｰﾌﾞ	SLEEVE	1			
57	1	LPC0098	ﾎﾟﾍﾟｯﾄ	POPPET	1			
58	1	LSC0187	ｽﾌﾟﾘﾝｸﾞ	SPRING;SPL	1			
59	1	LH004990	ﾌﾗﾝｼﾞ ﾄｸｼｭ	FLANGE;SPL	1			
60	1	LE012520	O-ﾘﾝｸﾞ ﾄｸｼｭ ﾌﾂﾂ	O-RING	3			
61	1	LE014890	O-ﾘﾝｸﾞ	O-RING	14			
62	1	LBQ0102	O-ﾘﾝｸﾞ JISB2401 1BP1	O-RING	12			
63	1	LJ014710	ﾊﾞﾙﾌﾞ ｱﾝﾁﾄﾞﾘﾌﾄ ASSY	VALVE;SPL	2			
64	1A	LJ014720	ﾊﾞﾙﾌﾞ;ﾘﾘｰﾌ KIT	VALVE;RELIEF	1			
65	2	LBQ6912	O-ﾘﾝｸﾞ AS568-912-HS9	O-RING	1			
66	1A	LJ014730	ﾊﾞﾙﾌﾞ;ﾘﾘｰﾌ KIT	VALVE;RELIEF	2			
67	2	LBQ6912	O-ﾘﾝｸﾞ AS568-912-HS9	O-RING	2			
68	2	LBQ0102	O-ﾘﾝｸﾞ JISB2401 1BP1	O-RING	2			
69	1A	LJ014740	ﾊﾞﾙﾌﾞ;ﾘﾘｰﾌ KIT	VALVE;RELIEF	1			
70	2	LBQ6912	O-ﾘﾝｸﾞ AS568-912-HS9	O-RING	1			
71	2	LBQ0102	O-ﾘﾝｸﾞ JISB2401 1BP1	O-RING	1			
72	1	LJ015460	ﾊﾞﾙﾌﾞ;ﾘﾘｰﾌ 23MPA 216	VALVE;RELIEF	1			
73	1A	LJ01196	ﾊﾞﾙﾌﾞ;ﾘﾘｰﾌ 25MPA 181	VALVE;RELIEF	2			
74	2	LBQ6912	O-ﾘﾝｸﾞ AS568-912-HS9	O-RING	2			
75	1	LJ014700	ﾊﾞﾙﾌﾞ;ﾘﾘｰﾌ ASS'Y	VALVE;RELIEF	2			
76	1A	LNC0218	ﾌﾟﾗｸﾞ S/A	PLUG	3			
77	2	LBQ0182	O-ﾘﾝｸﾞ JISB2401 1BP1	O-RING	3			
78	1A	LNC0217	ﾌﾟﾗｸﾞ S/A	PLUG	10			
79	2	LBQ0142	O-ﾘﾝｸﾞ JISB2401 1BP1	O-RING	10			
80	1A	LNC0238	ﾌﾟﾗｸﾞ S/A	PLUG	3			
81	2	LK00328	ﾌﾟﾗｸﾞ	PLUG	3			
82	2	LBQ0112	O-ﾘﾝｸﾞ JISB2401 1BP1	O-RING	3			
83	1	108R010Z055B	ﾛｯｶｸｱﾅB JIS B 1180 M	BOLT;HEX SOC HD	32			
84	1	108R010Z040B	ﾛｯｶｸｱﾅB JIS B1176 M1	BOLT;HEX SOC HD	66			
85	1	108R016Z130B	ﾛｯｶｸｱﾅB JIS B1180 M1	BOLT;HEX SOC HD	8			
86	1	LUC0118	ﾛｯｶｸｱﾅB	BOLT;HEX SOC HD	4			
87	1	-------	ﾒｲﾊﾞﾝ;ｷﾊﾞﾝ	NAMEPLATE;SER NO.	1			
88	1	-------	ｽｸﾘｭｰ ﾄﾞﾗｲﾌﾞ	SCREW	2			
89	1	-------	ﾌﾟﾗｸﾞ	PLUG	5			
90	1	LA011120	ﾛｯｶｸｱﾅB	BOLT;HEX SOC HD	4			
91	1	-------	ｽﾌﾟｰﾙ ASS'Y	SPOOL	1			
92	1	LR015290	ｷｬｯﾌﾟ	CAP	1			
93	1	LR00579	ｷｬｯﾌﾟ	CAP	2			
94	1	LBQ5219	O-ﾘﾝｸﾞ	O-RING	2			
95	1	LBQ0112	O-ﾘﾝｸﾞ JISB2401 1BP1	O-RING	2			
96	1	LK00301	ﾌﾟﾗｸﾞ	PLUG	2			
97	1A	LK00302	ﾌﾟﾗｸﾞ ASSY	PLUG	2			
98	2	LPC0256	ﾌﾟﾗｸﾞ	PLUG	2			
99	2	LBQ0242	O-ﾘﾝｸﾞ JISB2401 1BP2	O-RING	2			
100	1A	LPC0259	ﾌﾟﾗｸﾞ ASSY	PLUG	2			
101	2	LK00327	ﾌﾟﾗｸﾞ	PLUG	2			
102	2	LBQ6912	O-ﾘﾝｸﾞ AS568-912-HS9	O-RING	2			
103	2	LBQ0080	O-ﾘﾝｸﾞ JISB2401 1AP8	O-RING	2			

https://truckmanualshub.com/

詳細/DETAIL

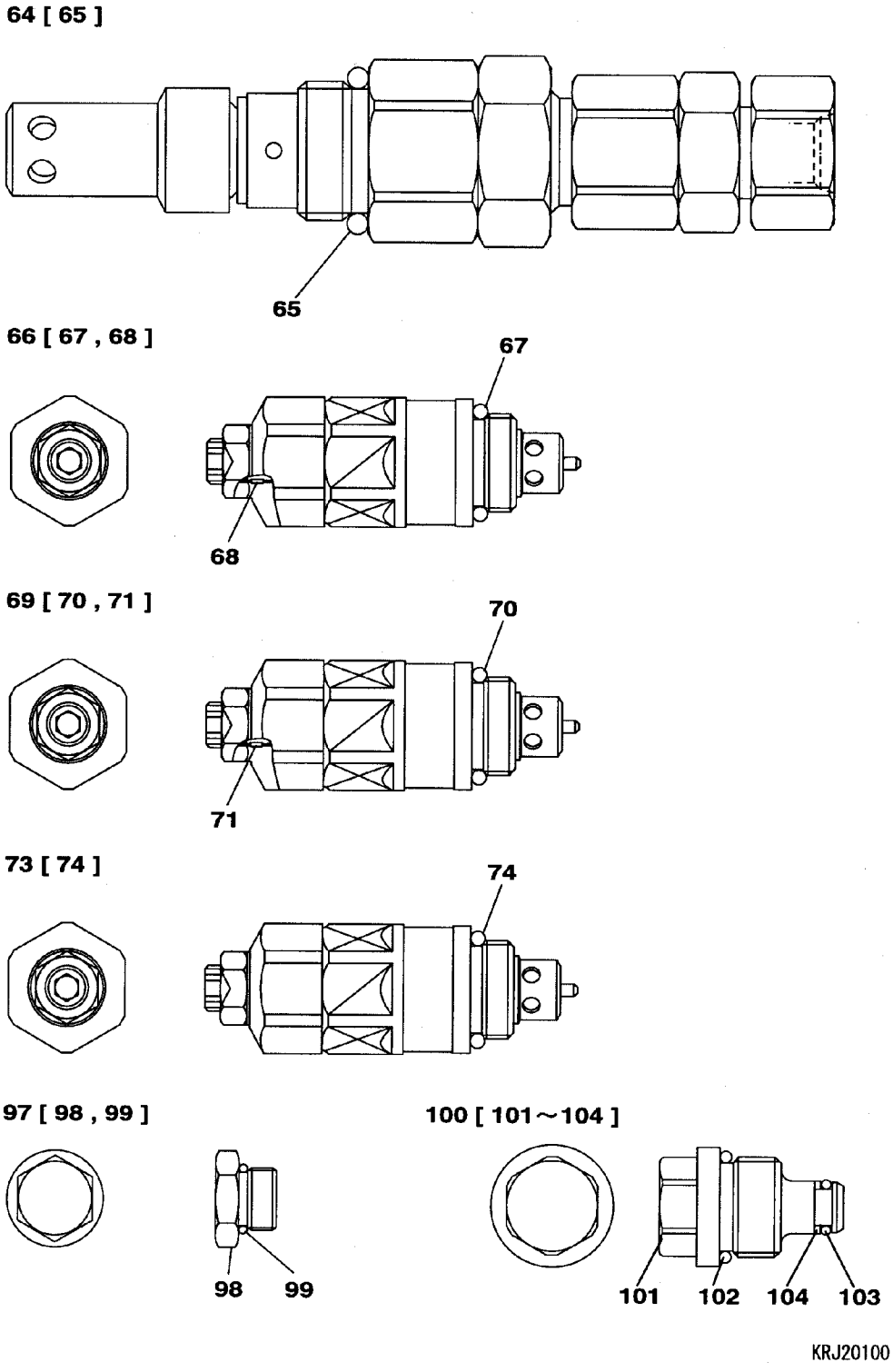

https://truckmanualshub.com/

符号 ITEM	構成 COMPO	部品番号 PART NO.	部品名	PART NAME	個数 Q'TY	互換 ICA	代替部品 REPLACEABLE PART	備考 MEMO
45	1	LLC0082	ﾌﾟﾗｸﾞ	PLUG	1			
46	1	LBQ6910	O-ﾘﾝｸﾞ	O-RING	1			
47	1	LSC0094	ｽﾌﾟﾘﾝｸﾞ	SPRING;SPL	1			
48	1	LJ014680	ﾎﾟﾍﾟｯﾄ	POPPET	1			
49	1	LJ00730	ﾎﾟﾍﾟｯﾄ	POPPET	1			
50	1	LH00250	ﾌﾗﾝｼﾞ	FLANGE;SPL	2			
51	1	LH004960	ｽﾍﾟｰｻ	SPACER	2			
52	1	LBQ0251	O-ﾘﾝｸﾞ JISB2401 1AG2	O-RING	2			
53	1	LBB0253	ﾘﾝｸﾞ;ﾊﾞｯｸｱｯﾌﾟ	RING;BACK-UP	2			
54	1	LBQ0553	O-ﾘﾝｸﾞ JISB2401 1BG5	O-RING	1			
55	1	LH004970	ｽﾍﾟｰｻ	SPACER	1			
56	1	LH004980	ｽﾘｰﾌﾞ	SLEEVE	1			
57	1	LPC0098	ﾎﾟﾍﾟｯﾄ	POPPET	1			
58	1	LSC0187	ｽﾌﾟﾘﾝｸﾞ	SPRING;SPL	1			
59	1	LH004990	ﾌﾗﾝｼﾞ ﾄｸｼｭ	FLANGE;SPL	1			
60	1	LE012520	O-ﾘﾝｸﾞ ﾄｸｼｭ ﾌﾂｿ	O-RING	3			
61	1	LE014890	O-ﾘﾝｸﾞ	O-RING	14			
62	1	LBQ0102	O-ﾘﾝｸﾞ JISB2401 1BP1	O-RING	12			
63	1	LJ014710	ﾊﾞﾙﾌﾞ ｱﾝﾁﾄﾞﾘﾌﾄ ASSY	VALVE;SPL	2			
64	1A	LJ014720	ﾊﾞﾙﾌﾞ;ﾘﾘｰﾌ KIT	VALVE;RELIEF	1			
65	2	LBQ6912	O-ﾘﾝｸﾞ AS568-912-HS9	O-RING	1			
66	1A	LJ014730	ﾊﾞﾙﾌﾞ;ﾘﾘｰﾌ KIT	VALVE;RELIEF	2			
67	2	LBQ6912	O-ﾘﾝｸﾞ AS568-912-HS9	O-RING	2			
68	2	LBQ0102	O-ﾘﾝｸﾞ JISB2401 1BP1	O-RING	2			
69	1A	LJ014740	ﾊﾞﾙﾌﾞ;ﾘﾘｰﾌ KIT	VALVE;RELIEF	1			
70	2	LBQ6912	O-ﾘﾝｸﾞ AS568-912-HS9	O-RING	1			
71	2	LBQ0102	O-ﾘﾝｸﾞ JISB2401 1BP1	O-RING	1			
72	1	LJ015460	ﾊﾞﾙﾌﾞ;ﾘﾘｰﾌ 23MPA 216	VALVE;RELIEF	1			
73	1A	LJ01196	ﾊﾞﾙﾌﾞ;ﾘﾘｰﾌ 25MPA 181	VALVE;RELIEF	2			
74	2	LBQ6912	O-ﾘﾝｸﾞ AS568-912-HS9	O-RING	2			
75	1	LJ014700	ﾊﾞﾙﾌﾞ;ﾘﾘｰﾌ ASS'Y	VALVE;RELIEF	2			
76	1A	LNC0218	ﾌﾟﾗｸﾞ S/A	PLUG	3			
77	2	LBQ0182	O-ﾘﾝｸﾞ JISB2401 1BP1	O-RING	3			
78	1A	LNC0217	ﾌﾟﾗｸﾞ S/A	PLUG	10			
79	2	LBQ0142	O-ﾘﾝｸﾞ JISB2401 1BP1	O-RING	10			
80	1A	LNC0238	ﾌﾟﾗｸﾞ S/A	PLUG	3			
81	2	LK00328	ﾌﾟﾗｸﾞ	PLUG	3			
82	2	LBQ0112	O-ﾘﾝｸﾞ JISB2401 1BP1	O-RING	3			
83	1	108R010Z055B	ﾛｯｶｸｱﾅB JIS B 1180 M	BOLT;HEX SOC HD	32			
84	1	108R010Z040B	ﾛｯｶｸｱﾅB JIS B1176 M1	BOLT;HEX SOC HD	66			
85	1	108R016Z130B	ﾛｯｶｸｱﾅB JIS B1180 M1	BOLT;HEX SOC HD	8			
86	1	LUC0118	ﾛｯｶｸｱﾅB	BOLT;HEX SOC HD	4			
87	1	-------	ﾒｲﾊﾞﾝ;ｷﾊﾞﾝ	NAMEPLATE;SER NO.	1			
88	1	-------	ｽｸﾘｭｰ ﾄﾞﾗｲﾌﾞ	SCREW	2			
89	1	-------	ﾌﾟﾗｸﾞ	PLUG	5			
90	1	LA011120	ﾛｯｶｸｱﾅB	BOLT;HEX SOC HD	4			
91	1	-------	ｽﾌﾟｰﾙ ASS'Y	SPOOL	1			
92	1	LR015290	ｷｬｯﾌﾟ	CAP	1			
93	1	LR00579	ｷｬｯﾌﾟ	CAP	2			
94	1	LBQ5219	O-ﾘﾝｸﾞ	O-RING	2			
95	1	LBQ0112	O-ﾘﾝｸﾞ JISB2401 1BP1	O-RING	2			
96	1	LK00301	ﾌﾟﾗｸﾞ	PLUG	2			
97	1A	LK00302	ﾌﾟﾗｸﾞ ASSY	PLUG	2			
98	2	LPC0256	ﾌﾟﾗｸﾞ	PLUG	2			
99	2	LBQ0242	O-ﾘﾝｸﾞ JISB2401 1BP2	O-RING	2			
100	1A	LPC0259	ﾌﾟﾗｸﾞ ASSY	PLUG	2			
101	2	LK00327	ﾌﾟﾗｸﾞ	PLUG	2			
102	2	LBQ6912	O-ﾘﾝｸﾞ AS568-912-HS9	O-RING	2			
103	2	LBQ0080	O-ﾘﾝｸﾞ JISB2401 1AP8	O-RING	2			
104	2	LBB6110	ﾘﾝｸﾞ;ﾊﾞｯｸｱｯﾌﾟ	RING;BACK-UP	2			
105	1	LA011130	ﾛｯｶｸｱﾅB	BOLT;HEX SOC HD	2			
106	1	LT001660	ﾊｳｼﾞﾝｸﾞ ｱｳﾄﾚｯﾄ	HOUSING;SPL	1			
107	1	LB011890	ﾀｲﾛｯﾄﾞ	ROD;TIE	4			
108	1	LUC0094	ﾅｯﾄ	NUT;SPL	4			
109	1	LLC0045	ﾌﾟﾗｸﾞ S/A	PLUG	1			

https://truckmanualshub.com/

98 [99]
107 [108]

100 [101 , 102]
109 [110]

103 [104 , 105]
111 [112 , 113]

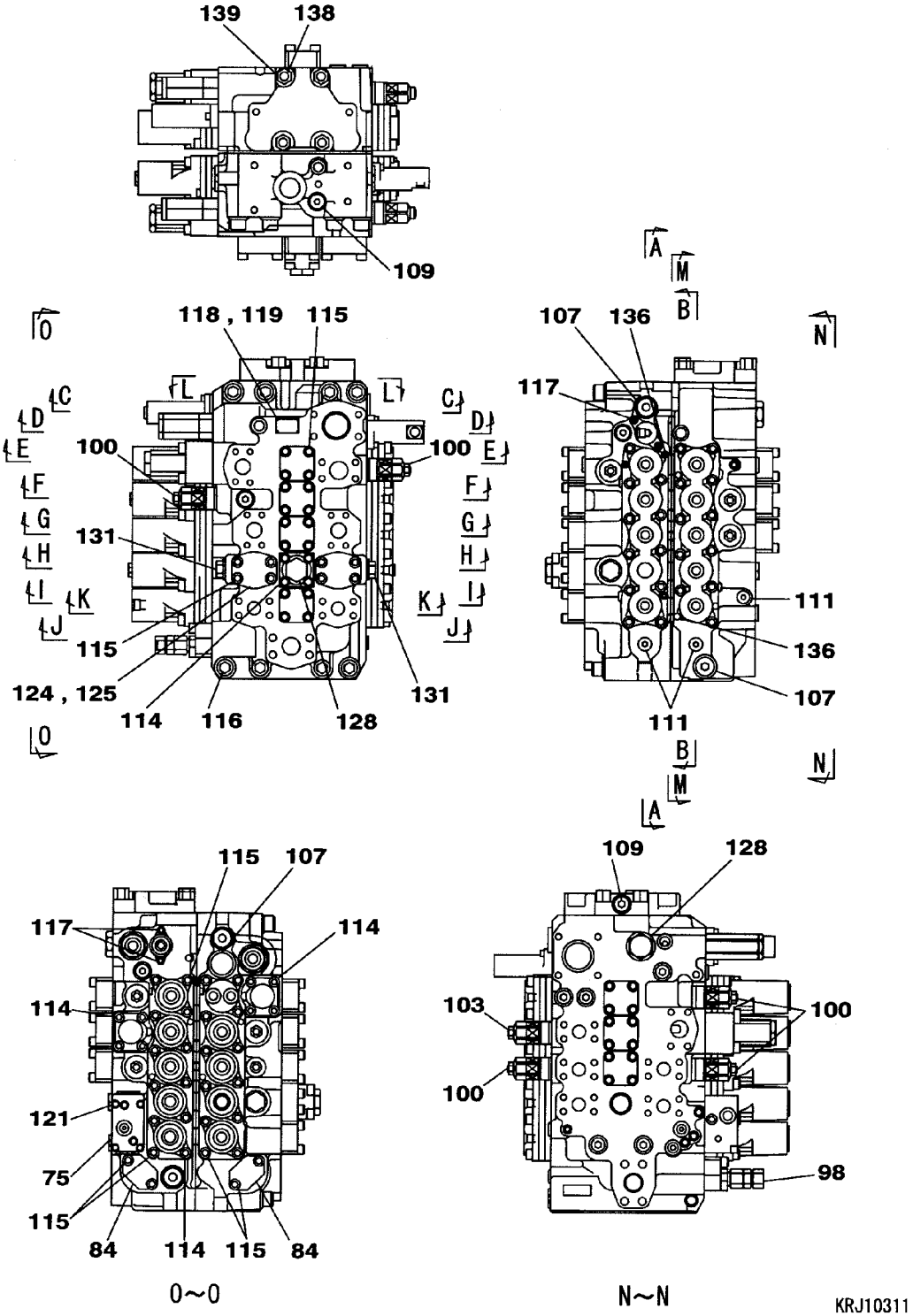

0~0

N~N

KRJ10311

https://truckmanualshub.com/

VALVE;CONTROL	ﾊﾞﾙﾌﾞ;ｺﾝﾄﾛｰﾙ	ZAJ313L0117 000 2/20	000

符号 ITEM	構成 COMPO	部品番号 PART NO.	部品名	PART NAME	個数 Q'TY	互換 ICA	代替部品 REPLACEABLE PART	備考 MEMO
		KRJ10311			1			
1	1	-------	ﾊｳｼﾞﾝｸﾞ;ﾊﾞﾙﾌﾞ	HOUSING;VALVE	1			
2	1	-------	ｽﾌﾟｰﾙ ASSY	SPOOL	1			
3	1	-------	ｽﾌﾟｰﾙ ASSY	SPOOL	1			
4	1	-------	ｽﾌﾟｰﾙ ASSY	SPOOL	1			
5	1	-------	ｽﾌﾟｰﾙ ASSY	SPOOL	2			
6	1	-------	ｽﾌﾟｰﾙ ASSY	SPOOL	1			
7	1	LBQ0453	O-ﾘﾝｸﾞ JISB2401 1BG4	O-RING	20			
8	1	LR015210	ｷｬｯﾌﾟ	CAP	9			
9	1	LR015220	ｷｬｯﾌﾟ	CAP	1			
10	1A	-------	ﾌﾟﾚｰﾄ ASS'Y	PLATE;SPL	1			
11	2A	-------	ﾌﾟﾚｰﾄ KIT	PLATE;SPL	1			
12	3	-------	ﾌﾟﾚｰﾄ	PLATE	1			
13	3	-------	ﾌﾟﾚｰﾄ	PLATE	1			
14	3	-------	ﾌﾟﾚｰﾄ	PLATE	1			
15	3	-------	ｶﾞｽｹｯﾄ	GASKET	2			
16	3	-------	ｽﾌﾟｰﾙ	SPOOL	5			
17	3	-------	ﾌｨﾙﾀ ﾄｸｼｭ	FILTER;SPL	4			
18	3	LBQ0453	O-ﾘﾝｸﾞ JISB2401 1BG4	O-RING	5			
19	3	108R006Z025N	ﾛｯｶｸｱﾅB M6X25-12.9	BOLT;HEX SOC HD	2			
20	1A	-------	ﾌﾟﾚｰﾄ ASS'Y	PLATE;SPL	1			
21	2A	-------	ﾌﾟﾚｰﾄ KIT	PLATE;SPL	1			
22	3	-------	ﾌﾟﾚｰﾄ	PLATE	1			
23	3	-------	ﾌﾟﾚｰﾄ	PLATE	1			
24	3	-------	ﾌﾟﾚｰﾄ	PLATE	1			
25	3	-------	ｶﾞｽｹｯﾄ	GASKET	2			
26	3	-------	ｽﾌﾟｰﾙ	SPOOL	5			
27	3	-------	ﾌｨﾙﾀ ﾄｸｼｭ	FILTER;SPL	5			
28	3	LBQ0453	O-ﾘﾝｸﾞ JISB2401 1BG4	O-RING	5			
29	3	108R006Z025N	ﾛｯｶｸｱﾅB M6X25-12.9	BOLT;HEX SOC HD	2			
30	1	-------	ﾊｳｼﾞﾝｸﾞ;ﾊﾞﾙﾌﾞ	HOUSING;VALVE	1			
31	1	-------	ｽﾌﾟｰﾙ ASSY	SPOOL	1			
32	1	-------	ｽﾌﾟｰﾙ ASSY	SPOOL	1			
33	1	-------	ｽﾌﾟｰﾙ ASSY	SPOOL	1			
34	1	-------	ｽﾌﾟｰﾙ ASSY	SPOOL	1			
35	1	LR015250	ｷｬｯﾌﾟ	CAP	1			
36	1	-------	ｽﾌﾟｰﾙ;ﾊﾞﾙﾌﾞ	SPOOL;VALVE	1			
37	1	LSC0158	ｼｰﾄ;ｽﾌﾟﾘﾝｸﾞ	SEAT;SPRING	2			
38	1	LG00338	ｽﾌﾟﾘﾝｸﾞ;ｱｯｼｭｸ	SPRING;COMPRESSION	1			
39	1	LPC0222	ｴﾝﾄﾞ ｽﾌﾟｰﾙ	END;SPL	1			
40	1	LBQ0260	O-ﾘﾝｸﾞ JISB2401 1AP2	O-RING	1			
41	1	LK005690	ﾌﾟﾗｸﾞ	PLUG	1			
42	1	LBQ0242	O-ﾘﾝｸﾞ JISB2401 1BP2	O-RING	1			
43	1	LG00339	ｽﾌﾟﾘﾝｸﾞ;ｱｯｼｭｸ	SPRING;COMPRESSION	1			
44	1	LJ014690	ｽﾌﾟｰﾙ ASSY	SPOOL	1			
45	1A	-------	ﾌﾟﾚｰﾄ ASS'Y	PLATE;SPL	1			
46	2A	-------	ﾌﾟﾚｰﾄ KIT	PLATE;SPL	1			
47	3	-------	ﾌﾟﾚｰﾄ	PLATE	1			
48	3	-------	ﾌﾟﾚｰﾄ	PLATE	1			
49	3	-------	ﾌﾟﾚｰﾄ	PLATE	1			
50	3	-------	ｶﾞｽｹｯﾄ	GASKET	2			
51	3	-------	ｽﾌﾟｰﾙ	SPOOL	3			
52	3	-------	ﾌｨﾙﾀ ﾄｸｼｭ	FILTER;SPL	3			
53	3	108R006Z025N	ﾛｯｶｸｱﾅB M6X25-12.9	BOLT;HEX SOC HD	2			
54	1A	-------	ﾌﾟﾚｰﾄ ASS'Y	PLATE;SPL	1			
55	2A	-------	ﾌﾟﾚｰﾄ KIT	PLATE;SPL	1			
56	3	-------	ﾌﾟﾚｰﾄ	PLATE	1			
57	3	-------	ﾌﾟﾚｰﾄ	PLATE	1			
58	3	-------	ﾌﾟﾚｰﾄ	PLATE	1			
59	3	-------	ｶﾞｽｹｯﾄ	GASKET	2			
60	3	-------	ｽﾌﾟｰﾙ	SPOOL	4			
61	3	-------	ﾌｨﾙﾀ ﾄｸｼｭ	FILTER;SPL	4			
62	3	108R006Z025N	ﾛｯｶｸｱﾅB M6X25-12.9	BOLT;HEX SOC HD	2			
63	1	LBQ0162	O-ﾘﾝｸﾞ JISB2401 1BP1	O-RING	1			
64	1	LBB0162	ﾘﾝｸﾞ;ﾊﾞｯｸｱｯﾌﾟ	RING;BACK-UP	2			
65	1	LJ00726	ﾎﾟﾍﾟｯﾄ	POPPET	2			
66	1	LG00340	ｽﾌﾟﾘﾝｸﾞ;ｱｯｼｭｸ	SPRING;COMPRESSION	2			
67	1	LJ00727	ﾎﾟﾍﾟｯﾄ	POPPET	7			

https://truckmanualshub.com/

109 [110]

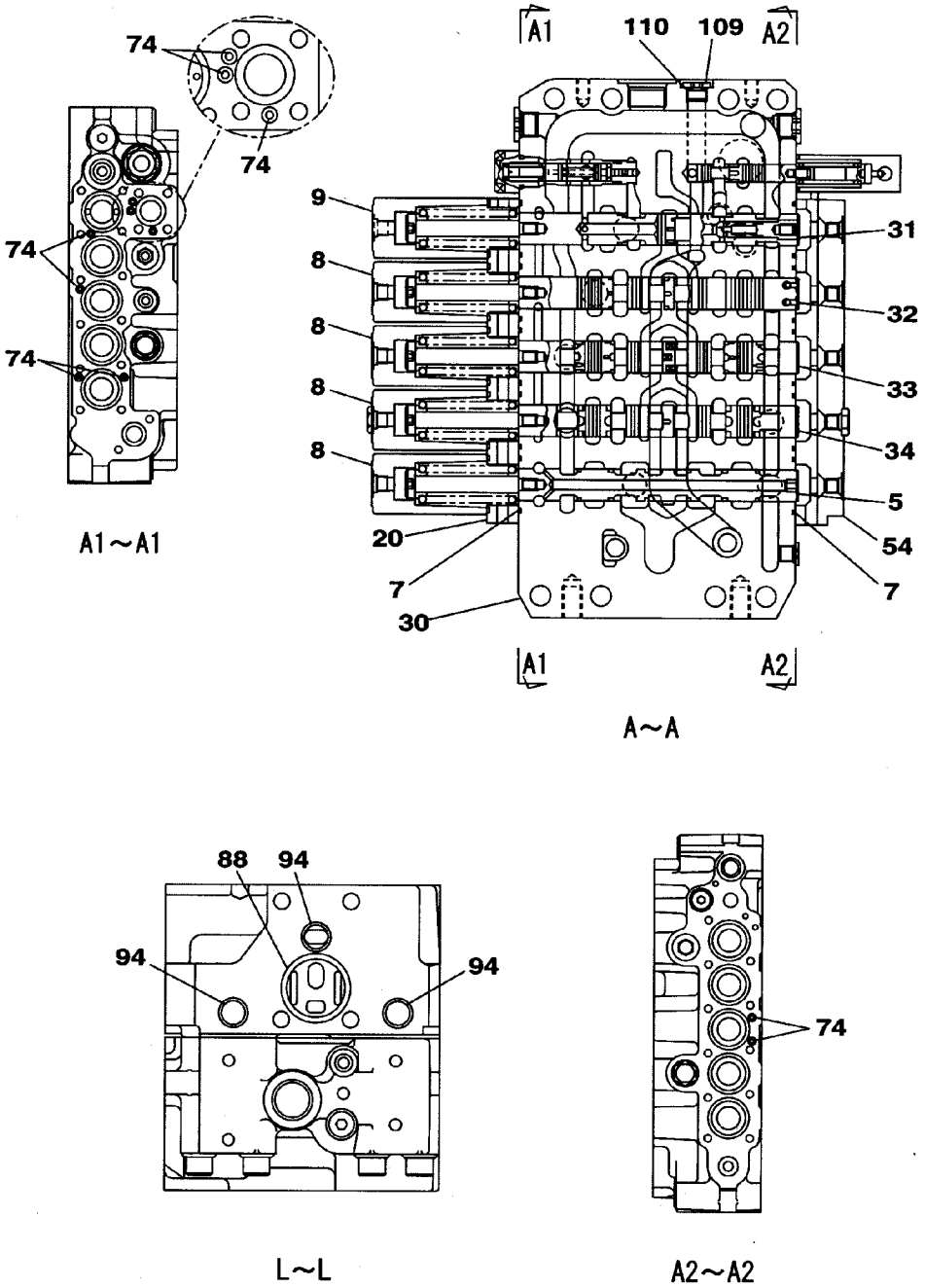

KRJ10311

https://truckmanualshub.com/

VALVE;CONTROL	ﾊﾞﾙﾌﾞ;ｺﾝﾄﾛｰﾙ	ZAJ313L0117 000 4/20	000

符号 ITEM	構成 COMPO	部品番号 PART NO.	部品名	PART NAME	個数 Q'TY	互換 ICA	代替部品 REPLACEABLE PART	備考 MEMO
9	1	LR015220	ｷｬｯﾌﾟ	CAP	1			
10	1A	-------	ﾌﾟﾚｰﾄ ASS'Y	PLATE;SPL	1			
11	2A	-------	ﾌﾟﾚｰﾄ KIT	PLATE;SPL	1			
12	3	-------	ﾌﾟﾚｰﾄ	PLATE	1			
13	3	-------	ﾌﾟﾚｰﾄ	PLATE	1			
14	3	-------	ﾌﾟﾚｰﾄ	PLATE	1			
15	3	-------	ｶﾞｽｹｯﾄ	GASKET	2			
16	3	-------	ｽﾌﾟｰﾙ	SPOOL	5			
17	3	-------	ﾌｨﾙﾀ ﾄｸｼｭ	FILTER;SPL	4			
18	3	LBQ0453	O-ﾘﾝｸﾞ JISB2401 1BG4	O-RING	5			
19	3	108R006Z025N	ﾛｯｶｸｱﾅB M6X25-12.9	BOLT;HEX SOC HD	2			
20	1A	-------	ﾌﾟﾚｰﾄ ASS'Y	PLATE;SPL	1			
21	2A	-------	ﾌﾟﾚｰﾄ KIT	PLATE;SPL	1			
22	3	-------	ﾌﾟﾚｰﾄ	PLATE	1			
23	3	-------	ﾌﾟﾚｰﾄ	PLATE	1			
24	3	-------	ﾌﾟﾚｰﾄ	PLATE	1			
25	3	-------	ｶﾞｽｹｯﾄ	GASKET	2			
26	3	-------	ｽﾌﾟｰﾙ	SPOOL	5			
27	3	-------	ﾌｨﾙﾀ ﾄｸｼｭ	FILTER;SPL	5			
28	3	LBQ0453	O-ﾘﾝｸﾞ JISB2401 1BG4	O-RING	5			
29	3	108R006Z025N	ﾛｯｶｸｱﾅB M6X25-12.9	BOLT;HEX SOC HD	2			
30	1	-------	ﾊｳｼﾞﾝｸﾞ;ﾊﾞﾙﾌﾞ	HOUSING;VALVE	1			
31	1	-------	ｽﾌﾟｰﾙ ASSY	SPOOL	1			
32	1	-------	ｽﾌﾟｰﾙ ASSY	SPOOL	1			
33	1	-------	ｽﾌﾟｰﾙ ASSY	SPOOL	1			
34	1	-------	ｽﾌﾟｰﾙ ASSY	SPOOL	1			
35	1	LR015250	ｷｬｯﾌﾟ	CAP	1			
36	1	-------	ｽﾌﾟｰﾙ;ﾊﾞﾙﾌﾞ	SPOOL;VALVE	1			
37	1	LSC0158	ｼｰﾄ;ｽﾌﾟﾘﾝｸﾞ	SEAT;SPRING	2			
38	1	LG00338	ｽﾌﾟﾘﾝｸﾞ;ｱｯｼｭｸ	SPRING;COMPRESSION	1			
39	1	LPC0222	ｴﾝﾄﾞ ｽﾌﾟｰﾙ	END;SPL	1			
40	1	LBQ0260	O-ﾘﾝｸﾞ JISB2401 1AP2	O-RING	1			
41	1	LK005690	ﾌﾟﾗｸﾞ	PLUG	1			
42	1	LBQ0242	O-ﾘﾝｸﾞ JISB2401 1BP2	O-RING	1			
43	1	LG00339	ｽﾌﾟﾘﾝｸﾞ;ｱｯｼｭｸ	SPRING;COMPRESSION	1			
44	1	LJ014690	ｽﾌﾟｰﾙ ASSY	SPOOL	1			
45	1A	-------	ﾌﾟﾚｰﾄ ASS'Y	PLATE;SPL	1			
46	2A	-------	ﾌﾟﾚｰﾄ KIT	PLATE;SPL	1			
47	3	-------	ﾌﾟﾚｰﾄ	PLATE	1			
48	3	-------	ﾌﾟﾚｰﾄ	PLATE	1			
49	3	-------	ﾌﾟﾚｰﾄ	PLATE	1			
50	3	-------	ｶﾞｽｹｯﾄ	GASKET	2			
51	3	-------	ｽﾌﾟｰﾙ	SPOOL	3			
52	3	-------	ﾌｨﾙﾀ ﾄｸｼｭ	FILTER;SPL	3			
53	3	108R006Z025N	ﾛｯｶｸｱﾅB M6X25-12.9	BOLT;HEX SOC HD	2			
54	1A	-------	ﾌﾟﾚｰﾄ ASS'Y	PLATE;SPL	1			
55	2A	-------	ﾌﾟﾚｰﾄ KIT	PLATE;SPL	1			
56	3	-------	ﾌﾟﾚｰﾄ	PLATE	1			
57	3	-------	ﾌﾟﾚｰﾄ	PLATE	1			
58	3	-------	ﾌﾟﾚｰﾄ	PLATE	1			
59	3	-------	ｶﾞｽｹｯﾄ	GASKET	2			
60	3	-------	ｽﾌﾟｰﾙ	SPOOL	4			
61	3	-------	ﾌｨﾙﾀ ﾄｸｼｭ	FILTER;SPL	4			
62	3	108R006Z025N	ﾛｯｶｸｱﾅB M6X25-12.9	BOLT;HEX SOC HD	2			
63	1	LBQ0162	O-ﾘﾝｸﾞ JISB2401 1BP1	O-RING	1			
64	1	LBB0162	ﾘﾝｸﾞ;ﾊﾞｯｸｱｯﾌﾟ	RING;BACK-UP	2			
65	1	LJ00726	ﾎﾟﾍﾟｯﾄ	POPPET	2			
66	1	LG00340	ｽﾌﾟﾘﾝｸﾞ;ｱｯｼｭｸ	SPRING;COMPRESSION	2			
67	1	LJ00727	ﾎﾟﾍﾟｯﾄ	POPPET	7			
68	1	LG00341	ｽﾌﾟﾘﾝｸﾞ;ｱｯｼｭｸ	SPRING;COMPRESSION	8			
69	1	LBQ0322	O-ﾘﾝｸﾞ JISB2401 1BP3	O-RING	10			
70	1	LH00248	ﾌﾗﾝｼﾞ	FLANGE;SPL	6			
71	1	LPC0180	ﾎﾟﾍﾟｯﾄ	POPPET	2			
72	1	LSC0227	ｽﾌﾟﾘﾝｸﾞ ﾄｸｼｭ	SPRING;SPL	2			
73	1	LJ00731	ｵﾘﾌｨｽ	ORIFICE	1			
74	1	LBQ0062	O-ﾘﾝｸﾞ JISB2401 1BP6	O-RING	27			
75	1	LR015280	ﾎﾞﾃﾞｨ ASSY	BODY	1			
76	1	LH005410	ﾌﾗﾝｼﾞ	FLANGE;SPL	1			

https://truckmanualshub.com/

98 [99]

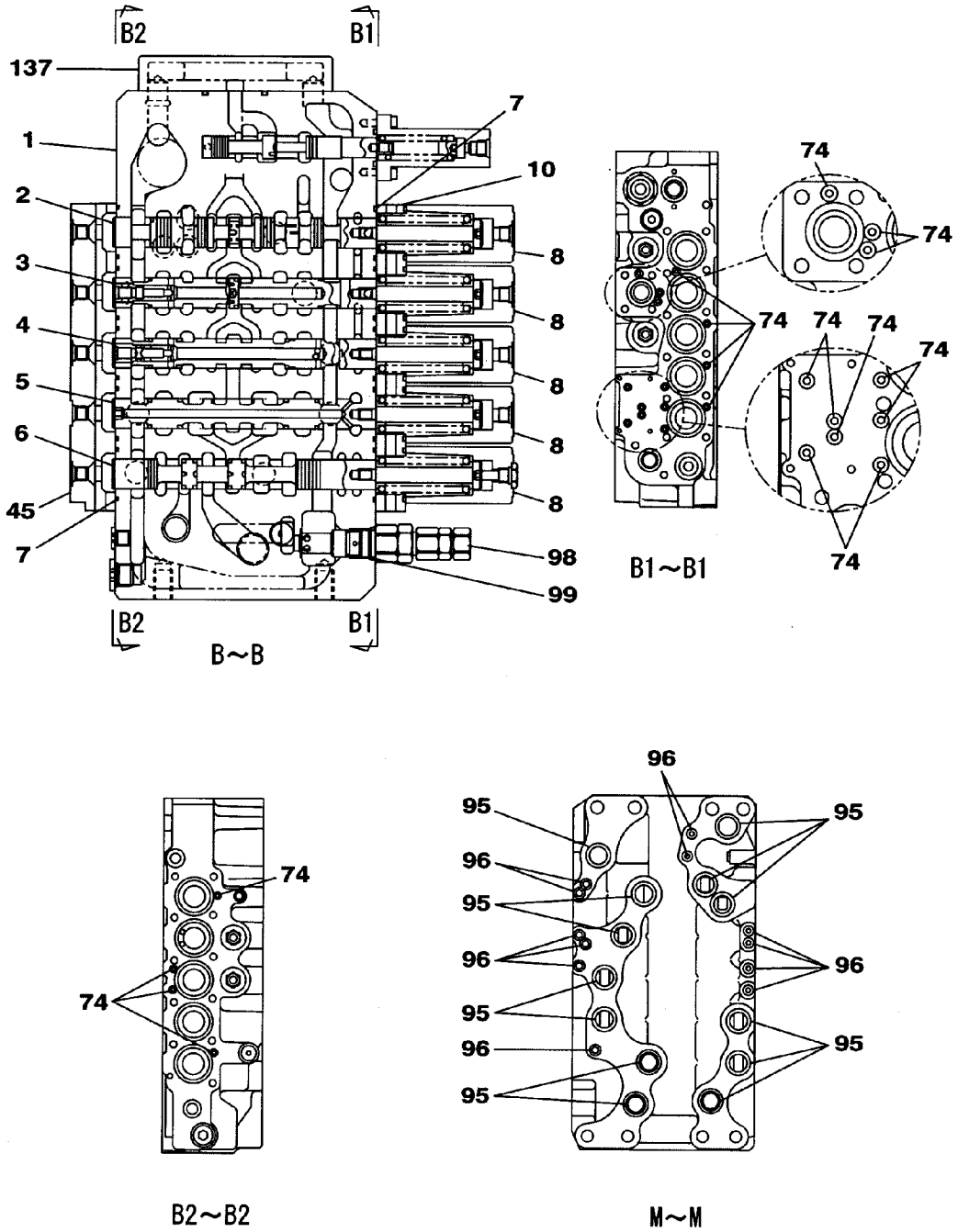

KRJ10311

https://truckmanualshub.com/

VALVE;CONTROL	ﾊﾞﾙﾌﾞ;ｺﾝﾄﾛｰﾙ	ZAJ313L0117 000 6/20	000

符号 ITEM	構成 COMPO	部品番号 PART NO.	部品名	PART NAME	個数 Q'TY	互換 ICA	代替部品 REPLACEABLE PART	備考 MEMO
18	3	LBQ0453	O-ﾘﾝｸﾞ JISB2401 1BG4	O-RING	5			
19	3	108R006Z025N	ﾛｯｶｸｱﾅB M6X25-12.9	BOLT;HEX SOC HD	2			
20	1A	-------	ﾌﾟﾚｰﾄ ASS'Y	PLATE;SPL	1			
21	2A	-------	ﾌﾟﾚｰﾄ KIT	PLATE;SPL	1			
22	3	-------	ﾌﾟﾚｰﾄ	PLATE	1			
23	3	-------	ﾌﾟﾚｰﾄ	PLATE	1			
24	3	-------	ﾌﾟﾚｰﾄ	PLATE	1			
25	3	-------	ｶﾞｽｹｯﾄ	GASKET	2			
26	3	-------	ｽﾌﾟｰﾙ	SPOOL	5			
27	3	-------	ﾌｨﾙﾀ ﾄｸｼｭ	FILTER;SPL	5			
28	3	LBQ0453	O-ﾘﾝｸﾞ JISB2401 1BG4	O-RING	5			
29	3	108R006Z025N	ﾛｯｶｸｱﾅB M6X25-12.9	BOLT;HEX SOC HD	2			
30	1	-------	ﾊｳｼﾞﾝｸﾞ;ﾊﾞﾙﾌﾞ	HOUSING;VALVE	1			
31	1	-------	ｽﾌﾟｰﾙ ASSY	SPOOL	1			
32	1	-------	ｽﾌﾟｰﾙ ASSY	SPOOL	1			
33	1	-------	ｽﾌﾟｰﾙ ASSY	SPOOL	1			
34	1	-------	ｽﾌﾟｰﾙ ASSY	SPOOL	1			
35	1	LR015250	ｷｬｯﾌﾟ	CAP	1			
36	1	-------	ｽﾌﾟｰﾙ;ﾊﾞﾙﾌﾞ	SPOOL;VALVE	1			
37	1	LSC0158	ｼｰﾄ;ｽﾌﾟﾘﾝｸﾞ	SEAT;SPRING	2			
38	1	LG00338	ｽﾌﾟﾘﾝｸﾞ;ｱｯｼｭｸ	SPRING;COMPRESSION	1			
39	1	LPC0222	ｴﾝﾄﾞ ｽﾌﾟｰﾙ	END;SPL	1			
40	1	LBQ0260	O-ﾘﾝｸﾞ JISB2401 1AP2	O-RING	1			
41	1	LK005690	ﾌﾟﾗｸﾞ	PLUG	1			
42	1	LBQ0242	O-ﾘﾝｸﾞ JISB2401 1BP2	O-RING	1			
43	1	LG00339	ｽﾌﾟﾘﾝｸﾞ;ｱｯｼｭｸ	SPRING;COMPRESSION	1			
44	1	LJ014690	ｽﾌﾟｰﾙ ASSY	SPOOL	1			
45	1A	-------	ﾌﾟﾚｰﾄ ASS'Y	PLATE;SPL	1			
46	2A	-------	ﾌﾟﾚｰﾄ KIT	PLATE;SPL	1			
47	3	-------	ﾌﾟﾚｰﾄ	PLATE	1			
48	3	-------	ﾌﾟﾚｰﾄ	PLATE	1			
49	3	-------	ﾌﾟﾚｰﾄ	PLATE	1			
50	3	-------	ｶﾞｽｹｯﾄ	GASKET	2			
51	3	-------	ｽﾌﾟｰﾙ	SPOOL	3			
52	3	-------	ﾌｨﾙﾀ ﾄｸｼｭ	FILTER;SPL	3			
53	3	108R006Z025N	ﾛｯｶｸｱﾅB M6X25-12.9	BOLT;HEX SOC HD	2			
54	1A	-------	ﾌﾟﾚｰﾄ ASS'Y	PLATE;SPL	1			
55	2A	-------	ﾌﾟﾚｰﾄ KIT	PLATE;SPL	1			
56	3	-------	ﾌﾟﾚｰﾄ	PLATE	1			
57	3	-------	ﾌﾟﾚｰﾄ	PLATE	1			
58	3	-------	ﾌﾟﾚｰﾄ	PLATE	1			
59	3	-------	ｶﾞｽｹｯﾄ	GASKET	2			
60	3	-------	ｽﾌﾟｰﾙ	SPOOL	4			
61	3	-------	ﾌｨﾙﾀ ﾄｸｼｭ	FILTER;SPL	4			
62	3	108R006Z025N	ﾛｯｶｸｱﾅB M6X25-12.9	BOLT;HEX SOC HD	2			
63	1	LBQ0162	O-ﾘﾝｸﾞ JISB2401 1BP1	O-RING	1			
64	1	LBB0162	ﾘﾝｸﾞ;ﾊﾞｯｸｱｯﾌﾟ	RING;BACK-UP	2			
65	1	LJ00726	ﾎﾟﾍﾟｯﾄ	POPPET	2			
66	1	LG00340	ｽﾌﾟﾘﾝｸﾞ;ｱｯｼｭｸ	SPRING;COMPRESSION	2			
67	1	LJ00727	ﾎﾟﾍﾟｯﾄ	POPPET	7			
68	1	LG00341	ｽﾌﾟﾘﾝｸﾞ;ｱｯｼｭｸ	SPRING;COMPRESSION	8			
69	1	LBQ0322	O-ﾘﾝｸﾞ JISB2401 1BP3	O-RING	10			
70	1	LH00248	ﾌﾗﾝｼﾞ	FLANGE;SPL	6			
71	1	LPC0180	ﾎﾟﾍﾟｯﾄ	POPPET	2			
72	1	LSC0227	ｽﾌﾟﾘﾝｸﾞ ﾄｸｼｭ	SPRING;SPL	2			
73	1	LJ00731	ｵﾘﾌｨｽ	ORIFICE	1			
74	1	LBQ0062	O-ﾘﾝｸﾞ JISB2401 1BP6	O-RING	27			
75	1	LR015280	ﾎﾞﾃﾞｨ ASSY	BODY	1			
76	1	LH005410	ﾌﾗﾝｼﾞ	FLANGE;SPL	1			
77	1	LJ016050	ﾎﾟﾍﾟｯﾄ	POPPET	1			
78	1	LG006510	ｽﾌﾟﾘﾝｸﾞ	SPRING;SPL	1			
79	1	LLC0082	ﾌﾟﾗｸﾞ	PLUG	1			
80	1	LBQ6910	O-ﾘﾝｸﾞ	O-RING	1			
81	1	LSC0094	ｽﾌﾟﾘﾝｸﾞ	SPRING;SPL	1			
82	1	LJ014680	ﾎﾟﾍﾟｯﾄ	POPPET	1			
83	1	LJ00730	ﾎﾟﾍﾟｯﾄ	POPPET	1			
84	1	LH00250	ﾌﾗﾝｼﾞ	FLANGE;SPL	2			
85	1	LH004960	ｽﾍﾟｰｻ	SPACER	2			

https://truckmanualshub.com/

100 [101 , 102] 103 [104 , 105] 107 [108]

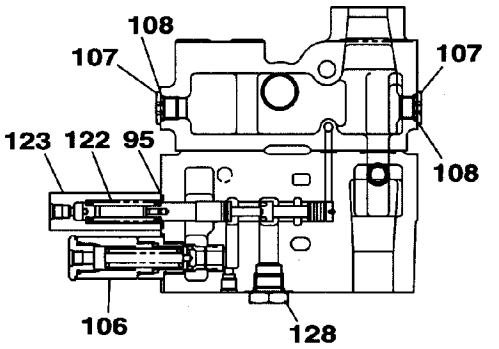

C~C

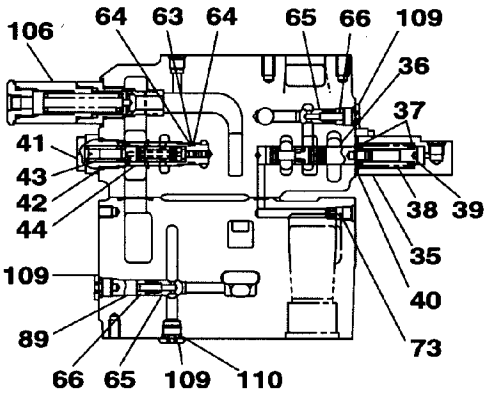

D~D

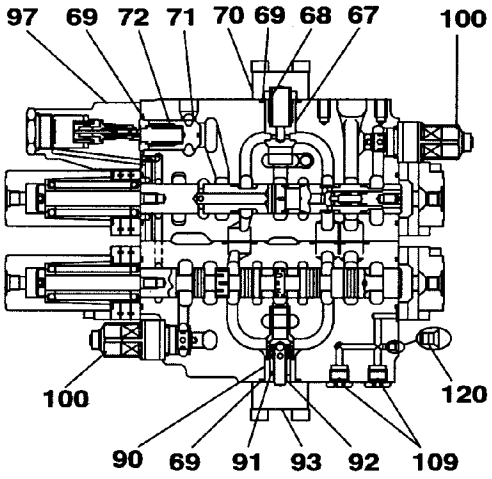

E~E

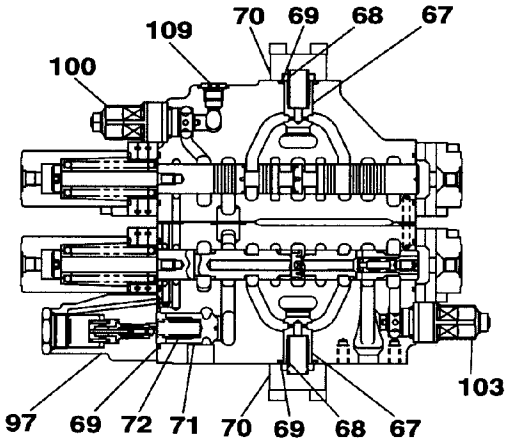

F~F

KRJ10311

https://truckmanualshub.com/

符号 ITEM	構成 COMPO	部品番号 PART NO.	部品名	PART NAME	個数 Q'TY	互換 ICA	代替部品 REPLACEABLE PART	備考 MEMO
27	3	-------	ﾌｨﾙﾀ ﾄｸｼｭ	FILTER;SPL	5			
28	3	LBQ0453	O-ﾘﾝｸﾞ JISB2401 1BG4	O-RING	5			
29	3	108R006Z025N	ﾛｯｶｸｱﾅB M6X25-12.9	BOLT;HEX SOC HD	2			
30	1	-------	ﾊｳｼﾞﾝｸﾞ;ﾊﾞﾙﾌﾞ	HOUSING;VALVE	1			
31	1	-------	ｽﾌﾟｰﾙ ASSY	SPOOL	1			
32	1	-------	ｽﾌﾟｰﾙ ASSY	SPOOL	1			
33	1	-------	ｽﾌﾟｰﾙ ASSY	SPOOL	1			
34	1	-------	ｽﾌﾟｰﾙ ASSY	SPOOL	1			
35	1	LR015250	ｷｬｯﾌﾟ	CAP	1			
36	1	-------	ｽﾌﾟｰﾙ;ﾊﾞﾙﾌﾞ	SPOOL;VALVE	1			
37	1	LSC0158	ｼｰﾄ;ｽﾌﾟﾘﾝｸﾞ	SEAT;SPRING	2			
38	1	LG00338	ｽﾌﾟﾘﾝｸﾞ;ｱｯｼｭｸ	SPRING;COMPRESSION	1			
39	1	LPC0222	ｴﾝﾄﾞ ｽﾌﾟｰﾙ	END;SPL	1			
40	1	LBQ0260	O-ﾘﾝｸﾞ JISB2401 1AP2	O-RING	1			
41	1	LK005690	ﾌﾟﾗｸﾞ	PLUG	1			
42	1	LBQ0242	O-ﾘﾝｸﾞ JISB2401 1BP2	O-RING	1			
43	1	LG00339	ｽﾌﾟﾘﾝｸﾞ;ｱｯｼｭｸ	SPRING;COMPRESSION	1			
44	1	LJ014690	ｽﾌﾟｰﾙ ASSY	SPOOL	1			
45	1A	-------	ﾌﾟﾚｰﾄ ASS'Y	PLATE;SPL	1			
46	2A	-------	ﾌﾟﾚｰﾄ KIT	PLATE;SPL	1			
47	3	-------	ﾌﾟﾚｰﾄ	PLATE	1			
48	3	-------	ﾌﾟﾚｰﾄ	PLATE	1			
49	3	-------	ﾌﾟﾚｰﾄ	PLATE	1			
50	3	-------	ｶﾞｽｹｯﾄ	GASKET	2			
51	3	-------	ｽﾌﾟｰﾙ	SPOOL	3			
52	3	-------	ﾌｨﾙﾀ ﾄｸｼｭ	FILTER;SPL	3			
53	3	108R006Z025N	ﾛｯｶｸｱﾅB M6X25-12.9	BOLT;HEX SOC HD	2			
54	1A	-------	ﾌﾟﾚｰﾄ ASS'Y	PLATE;SPL	1			
55	2A	-------	ﾌﾟﾚｰﾄ KIT	PLATE;SPL	1			
56	3	-------	ﾌﾟﾚｰﾄ	PLATE	1			
57	3	-------	ﾌﾟﾚｰﾄ	PLATE	1			
58	3	-------	ﾌﾟﾚｰﾄ	PLATE	1			
59	3	-------	ｶﾞｽｹｯﾄ	GASKET	2			
60	3	-------	ｽﾌﾟｰﾙ	SPOOL	4			
61	3	-------	ﾌｨﾙﾀ ﾄｸｼｭ	FILTER;SPL	4			
62	3	108R006Z025N	ﾛｯｶｸｱﾅB M6X25-12.9	BOLT;HEX SOC HD	2			
63	1	LBQ0162	O-ﾘﾝｸﾞ JISB2401 1BP1	O-RING	1			
64	1	LBB0162	ﾘﾝｸﾞ;ﾊﾞｯｸｱｯﾌﾟ	RING;BACK-UP	2			
65	1	LJ00726	ﾎﾟﾍﾟｯﾄ	POPPET	2			
66	1	LG00340	ｽﾌﾟﾘﾝｸﾞ;ｱｯｼｭｸ	SPRING;COMPRESSION	2			
67	1	LJ00727	ﾎﾟﾍﾟｯﾄ	POPPET	7			
68	1	LG00341	ｽﾌﾟﾘﾝｸﾞ;ｱｯｼｭｸ	SPRING;COMPRESSION	8			
69	1	LBQ0322	O-ﾘﾝｸﾞ JISB2401 1BP3	O-RING	10			
70	1	LH00248	ﾌﾗﾝｼﾞ	FLANGE;SPL	6			
71	1	LPC0180	ﾎﾟﾍﾟｯﾄ	POPPET	2			
72	1	LSC0227	ｽﾌﾟﾘﾝｸﾞ ﾄｸｼｭ	SPRING;SPL	2			
73	1	LJ00731	ｵﾘﾌｨｽ	ORIFICE	1			
74	1	LBQ0062	O-ﾘﾝｸﾞ JISB2401 1BP6	O-RING	27			
75	1	LR015280	ﾎﾞﾃﾞｨ ASSY	BODY	1			
76	1	LH005410	ﾌﾗﾝｼﾞ	FLANGE;SPL	1			
77	1	LJ016050	ﾎﾟﾍﾟｯﾄ	POPPET	1			
78	1	LG006510	ｽﾌﾟﾘﾝｸﾞ	SPRING;SPL	1			
79	1	LLC0082	ﾌﾟﾗｸﾞ	PLUG	1			
80	1	LBQ6910	O-ﾘﾝｸﾞ	O-RING	1			
81	1	LSC0094	ｽﾌﾟﾘﾝｸﾞ	SPRING;SPL	1			
82	1	LJ014680	ﾎﾟﾍﾟｯﾄ	POPPET	1			
83	1	LJ00730	ﾎﾟﾍﾟｯﾄ	POPPET	1			
84	1	LH00250	ﾌﾗﾝｼﾞ	FLANGE;SPL	2			
85	1	LH004960	ｽﾍﾟｰｻ	SPACER	2			
86	1	LBQ0251	O-ﾘﾝｸﾞ JISB2401 1AG2	O-RING	2			
87	1	LBB0253	ﾘﾝｸﾞ;ﾊﾞｯｸｱｯﾌﾟ	RING;BACK-UP	2			
88	1	LBQ0553	O-ﾘﾝｸﾞ JISB2401 1BG5	O-RING	1			
89	1	LH004970	ｽﾍﾟｰｻ	SPACER	1			
90	1	LH004980	ｽﾘｰﾌﾞ	SLEEVE	1			
91	1	LPC0098	ﾎﾟﾍﾟｯﾄ	POPPET	1			
92	1	LSC0187	ｽﾌﾟﾘﾝｸﾞ	SPRING;SPL	1			
93	1	LH004990	ﾌﾗﾝｼﾞ ﾄｸｼｭ	FLANGE;SPL	1			
94	1	LE012520	O-ﾘﾝｸﾞ ﾄｸｼｭ ﾌﾂｿ	O-RING	3			

https://truckmanualshub.com/

98 [99]
111 [112 , 113]
100 [101 , 102]
131 [132 ~ 135]
109 [110]

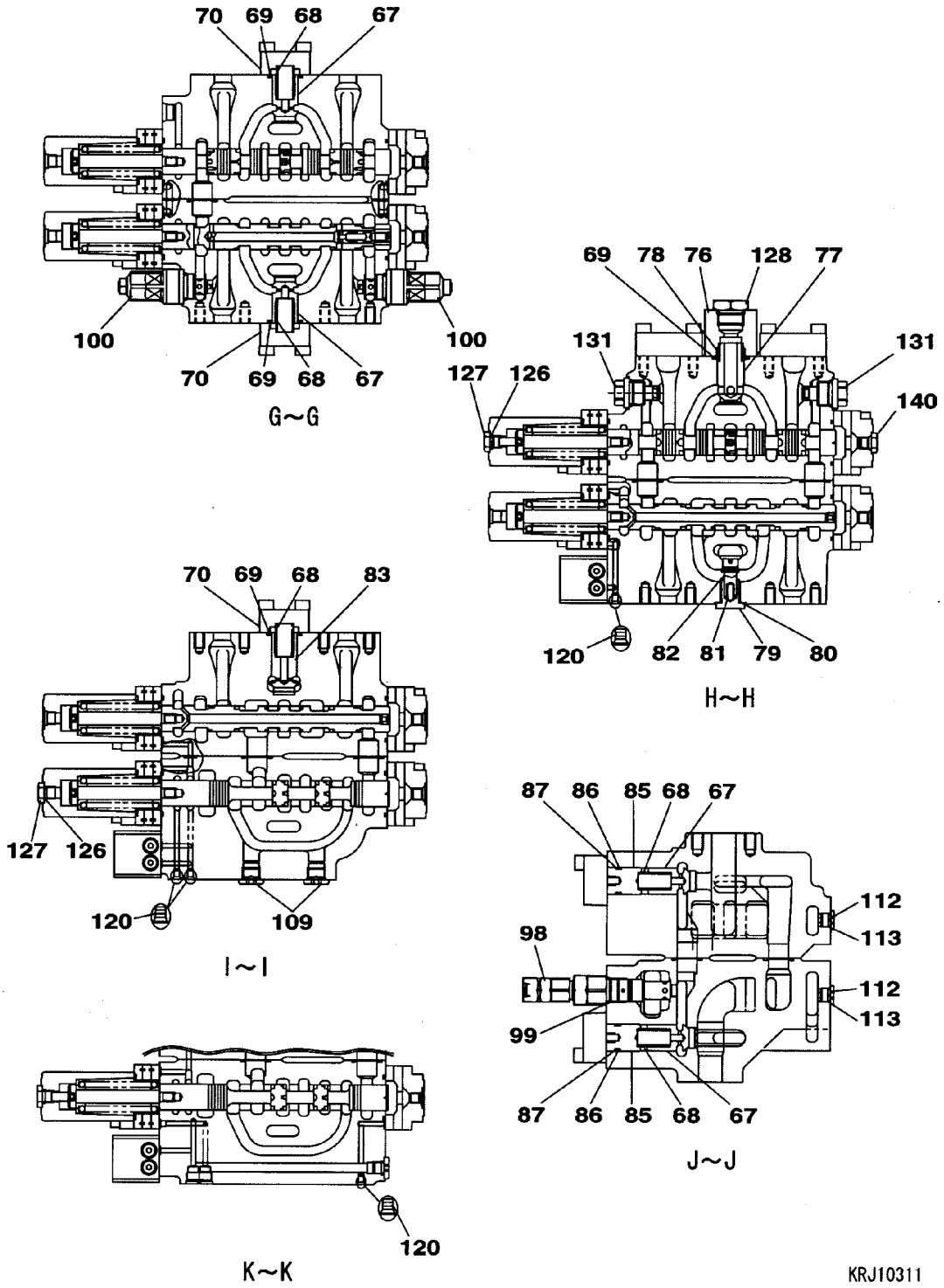

https://truckmanualshub.com/

VALVE;CONTROL	ﾊﾞﾙﾌﾞ;ｺﾝﾄﾛｰﾙ	ZAJ313L0117 000 10/20	000

符号 ITEM	構成 COMPO	部品番号 PART NO.	部品名	PART NAME	個数 Q'TY	互換 ICA	代替部品 REPLACEABLE PART	備考 MEMO
36	1	-------	ｽﾌﾟｰﾙ;ﾊﾞﾙﾌﾞ	SPOOL;VALVE	1			
37	1	LSC0158	ｼｰﾄ;ｽﾌﾟﾘﾝｸﾞ	SEAT;SPRING	2			
38	1	LG00338	ｽﾌﾟﾘﾝｸﾞ;ｱﾂｼｭｸ	SPRING;COMPRESSION	1			
39	1	LPC0222	ｴﾝﾄﾞ ｽﾌﾟｰﾙ	END;SPL	1			
40	1	LBQ0260	O-ﾘﾝｸﾞ JISB2401 1AP2	O-RING	1			
41	1	LK005690	ﾌﾟﾗｸﾞ	PLUG	1			
42	1	LBQ0242	O-ﾘﾝｸﾞ JISB2401 1BP2	O-RING	1			
43	1	LG00339	ｽﾌﾟﾘﾝｸﾞ;ｱﾂｼｭｸ	SPRING;COMPRESSION	1			
44	1	LJ014690	ｽﾌﾟｰﾙ ASSY	SPOOL	1			
45	1A	-------	ﾌﾟﾚｰﾄ ASS'Y	PLATE;SPL	1			
46	2A	-------	ﾌﾟﾚｰﾄ KIT	PLATE;SPL	1			
47	3	-------	ﾌﾟﾚｰﾄ	PLATE	1			
48	3	-------	ﾌﾟﾚｰﾄ	PLATE	1			
49	3	-------	ﾌﾟﾚｰﾄ	PLATE	1			
50	3	-------	ｶﾞｽｹｯﾄ	GASKET	2			
51	3	-------	ｽﾌﾟｰﾙ	SPOOL	3			
52	3	-------	ﾌｨﾙﾀ ﾄｸｼｭ	FILTER;SPL	3			
53	3	108R006Z025N	ﾛｯｶｸｱﾅB M6X25-12.9	BOLT;HEX SOC HD	2			
54	1A	-------	ﾌﾟﾚｰﾄ ASS'Y	PLATE;SPL	1			
55	2A	-------	ﾌﾟﾚｰﾄ KIT	PLATE;SPL	1			
56	3	-------	ﾌﾟﾚｰﾄ	PLATE	1			
57	3	-------	ﾌﾟﾚｰﾄ	PLATE	1			
58	3	-------	ﾌﾟﾚｰﾄ	PLATE	1			
59	3	-------	ｶﾞｽｹｯﾄ	GASKET	2			
60	3	-------	ｽﾌﾟｰﾙ	SPOOL	4			
61	3	-------	ﾌｨﾙﾀ ﾄｸｼｭ	FILTER;SPL	4			
62	3	108R006Z025N	ﾛｯｶｸｱﾅB M6X25-12.9	BOLT;HEX SOC HD	2			
63	1	LBQ0162	O-ﾘﾝｸﾞ JISB2401 1BP1	O-RING	1			
64	1	LBB0162	ﾘﾝｸﾞ;ﾊﾞｯｸｱｯﾌﾟ	RING;BACK-UP	2			
65	1	LJ00726	ﾎﾟﾍﾟｯﾄ	POPPET	2			
66	1	LG00340	ｽﾌﾟﾘﾝｸﾞ;ｱﾂｼｭｸ	SPRING;COMPRESSION	2			
67	1	LJ00727	ﾎﾟﾍﾟｯﾄ	POPPET	7			
68	1	LG00341	ｽﾌﾟﾘﾝｸﾞ;ｱﾂｼｭｸ	SPRING;COMPRESSION	8			
69	1	LBQ0322	O-ﾘﾝｸﾞ JISB2401 1BP3	O-RING	10			
70	1	LH00248	ﾌﾗﾝｼﾞ	FLANGE;SPL	6			
71	1	LPC0180	ﾎﾟﾍﾟｯﾄ	POPPET	2			
72	1	LSC0227	ｽﾌﾟﾘﾝｸﾞ ﾄｸｼｭ	SPRING;SPL	2			
73	1	LJ00731	ｵﾘﾌｨｽ	ORIFICE	1			
74	1	LBQ0062	O-ﾘﾝｸﾞ JISB2401 1BP6	O-RING	27			
75	1	LR015280	ﾎﾞﾃﾞｨ ASSY	BODY	1			
76	1	LH005410	ﾌﾗﾝｼﾞ	FLANGE;SPL	1			
77	1	LJ016050	ﾎﾟﾍﾟｯﾄ	POPPET	1			
78	1	LG006510	ｽﾌﾟﾘﾝｸﾞ	SPRING;SPL	1			
79	1	LLC0082	ﾌﾟﾗｸﾞ	PLUG	1			
80	1	LBQ6910	O-ﾘﾝｸﾞ	O-RING	1			
81	1	LSC0094	ｽﾌﾟﾘﾝｸﾞ	SPRING;SPL	1			
82	1	LJ014680	ﾎﾟﾍﾟｯﾄ	POPPET	1			
83	1	LJ00730	ﾎﾟﾍﾟｯﾄ	POPPET	1			
84	1	LH00250	ﾌﾗﾝｼﾞ	FLANGE;SPL	2			
85	1	LH004960	ｽﾍﾟｰｻ	SPACER	2			
86	1	LBQ0251	O-ﾘﾝｸﾞ JISB2401 1AG2	O-RING	2			
87	1	LBB0253	ﾘﾝｸﾞ;ﾊﾞｯｸｱｯﾌﾟ	RING;BACK-UP	2			
88	1	LBQ0553	O-ﾘﾝｸﾞ JISB2401 1BG5	O-RING	1			
89	1	LH004970	ｽﾍﾟｰｻ	SPACER	1			
90	1	LH004980	ｽﾘｰﾌﾞ	SLEEVE	1			
91	1	LPC0098	ﾎﾟﾍﾟｯﾄ	POPPET	1			
92	1	LSC0187	ｽﾌﾟﾘﾝｸﾞ	SPRING;SPL	1			
93	1	LH004990	ﾌﾗﾝｼﾞ ﾄｸｼｭ	FLANGE;SPL	1			
94	1	LE012520	O-ﾘﾝｸﾞ ﾄｸｼｭ ﾌﾂｿ	O-RING	3			
95	1	LE014890	O-ﾘﾝｸﾞ	O-RING	14			
96	1	LBQ0102	O-ﾘﾝｸﾞ JISB2401 1BP1	O-RING	12			
97	1	LJ014710	ﾊﾞﾙﾌﾞ ｱﾝﾁﾄﾞﾘﾌﾄ ASSY	VALVE;SPL	2			
98	1A	LJ014720	ﾊﾞﾙﾌﾞ;ﾘﾘｰﾌ KIT	VALVE;RELIEF	1			
99	2	LBQ6912	O-ﾘﾝｸﾞ AS568-912-HS9	O-RING	1			
100	1A	LJ014730	ﾊﾞﾙﾌﾞ;ﾘﾘｰﾌ KIT	VALVE;RELIEF	5			
101	2	LBQ6912	O-ﾘﾝｸﾞ AS568-912-HS9	O-RING	5			
102	2	LBQ0102	O-ﾘﾝｸﾞ JISB2401 1BP1	O-RING	5			
103	1A	LJ014740	ﾊﾞﾙﾌﾞ;ﾘﾘｰﾌ KIT	VALVE;RELIEF	1			

https://truckmanualshub.com/

詳細/DETAIL

98 [99]

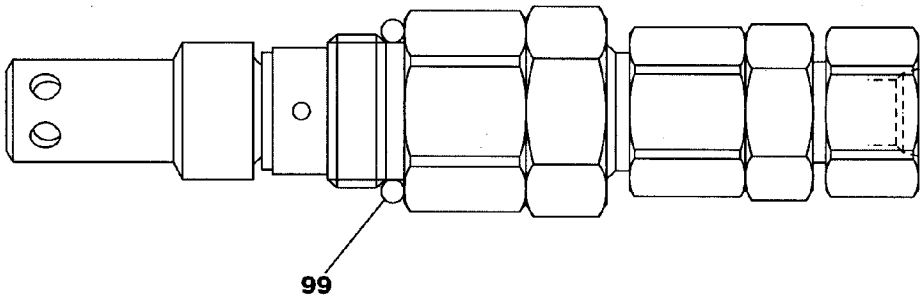

100 [101 , 102]

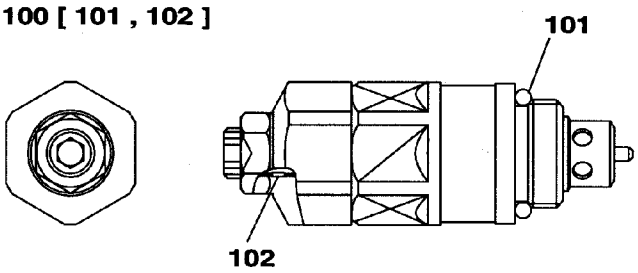

103 [104 , 105]

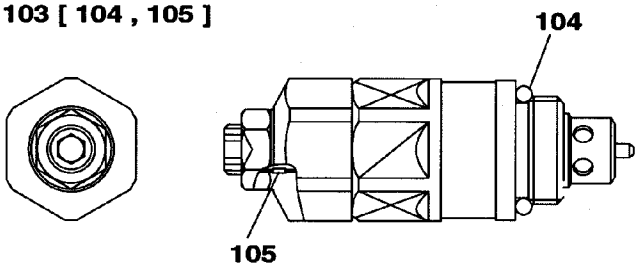

128 [129 , 130]

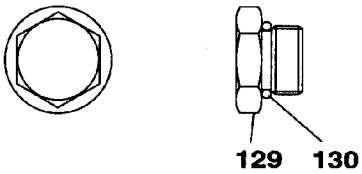

131 [132～135]

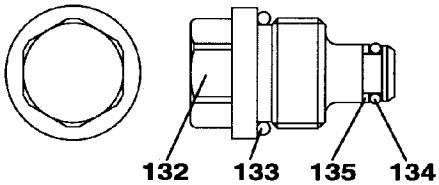

KRJ10311

https://truckmanualshub.com/

VALVE;CONTROL	ﾊﾞﾙﾌﾞ;ｺﾝﾄﾛｰﾙ	ZAJ313L0117 000 12/20	000

符号 ITEM	構成 COMPO	部品番号 PART NO.	部品名	PART NAME	個数 Q'TY	互換 ICA	代替部品 REPLACEABLE PART	備考 MEMO
45	1A	-------	ﾌﾟﾚｰﾄ ASS'Y	PLATE;SPL	1			
46	2A	-------	ﾌﾟﾚｰﾄ KIT	PLATE;SPL	1			
47	3	-------	ﾌﾟﾚｰﾄ	PLATE	1			
48	3	-------	ﾌﾟﾚｰﾄ	PLATE	1			
49	3	-------	ﾌﾟﾚｰﾄ	PLATE	1			
50	3	-------	ｶﾞｽｹｯﾄ	GASKET	2			
51	3	-------	ｽﾌﾟｰﾙ	SPOOL	3			
52	3	-------	ﾌｨﾙﾀ ﾄｸｼｭ	FILTER;SPL	3			
53	3	108R006Z025N	ﾛｯｶｸｱﾅB M6X25-12.9	BOLT;HEX SOC HD	2			
54	1A	-------	ﾌﾟﾚｰﾄ ASS'Y	PLATE;SPL	1			
55	2A	-------	ﾌﾟﾚｰﾄ KIT	PLATE;SPL	1			
56	3	-------	ﾌﾟﾚｰﾄ	PLATE	1			
57	3	-------	ﾌﾟﾚｰﾄ	PLATE	1			
58	3	-------	ﾌﾟﾚｰﾄ	PLATE	1			
59	3	-------	ｶﾞｽｹｯﾄ	GASKET	2			
60	3	-------	ｽﾌﾟｰﾙ	SPOOL	4			
61	3	-------	ﾌｨﾙﾀ ﾄｸｼｭ	FILTER;SPL	4			
62	3	108R006Z025N	ﾛｯｶｸｱﾅB M6X25-12.9	BOLT;HEX SOC HD	2			
63	1	LBQ0162	O-ﾘﾝｸﾞ JISB2401 1BP1	O-RING	1			
64	1	LBB0162	ﾘﾝｸﾞ;ﾊﾞｯｸｱｯﾌﾟ	RING;BACK-UP	2			
65	1	LJ00726	ﾎﾟﾍﾟｯﾄ	POPPET	2			
66	1	LG00340	ｽﾌﾟﾘﾝｸﾞ;ｱｯｼｭｸ	SPRING;COMPRESSION	2			
67	1	LJ00727	ﾎﾟﾍﾟｯﾄ	POPPET	7			
68	1	LG00341	ｽﾌﾟﾘﾝｸﾞ;ｱｯｼｭｸ	SPRING;COMPRESSION	8			
69	1	LBQ0322	O-ﾘﾝｸﾞ JISB2401 1BP3	O-RING	10			
70	1	LH00248	ﾌﾗﾝｼﾞ	FLANGE;SPL	6			
71	1	LPC0180	ﾎﾟﾍﾟｯﾄ	POPPET	2			
72	1	LSC0227	ｽﾌﾟﾘﾝｸﾞ ﾄｸｼｭ	SPRING;SPL	2			
73	1	LJ00731	ｵﾘﾌｨｽ	ORIFICE	1			
74	1	LBQ0062	O-ﾘﾝｸﾞ JISB2401 1BP6	O-RING	27			
75	1	LR015280	ﾎﾞﾃﾞｨ ASSY	BODY	1			
76	1	LH005410	ﾌﾗﾝｼﾞ	FLANGE;SPL	1			
77	1	LJ016050	ﾎﾟﾍﾟｯﾄ	POPPET	1			
78	1	LG006510	ｽﾌﾟﾘﾝｸﾞ	SPRING;SPL	1			
79	1	LLC0082	ﾌﾟﾗｸﾞ	PLUG	1			
80	1	LBQ6910	O-ﾘﾝｸﾞ	O-RING	1			
81	1	LSC0094	ｽﾌﾟﾘﾝｸﾞ	SPRING;SPL	1			
82	1	LJ014680	ﾎﾟﾍﾟｯﾄ	POPPET	1			
83	1	LJ00730	ﾎﾟﾍﾟｯﾄ	POPPET	1			
84	1	LH00250	ﾌﾗﾝｼﾞ	FLANGE;SPL	2			
85	1	LH004960	ｽﾍﾟｰｻ	SPACER	2			
86	1	LBQ0251	O-ﾘﾝｸﾞ JISB2401 1AG2	O-RING	2			
87	1	LBB0253	ﾘﾝｸﾞ;ﾊﾞｯｸｱｯﾌﾟ	RING;BACK-UP	2			
88	1	LBQ0553	O-ﾘﾝｸﾞ JISB2401 1BG5	O-RING	1			
89	1	LH004970	ｽﾍﾟｰｻ	SPACER	1			
90	1	LH004980	ｽﾘｰﾌﾞ	SLEEVE	1			
91	1	LPC0098	ﾎﾟﾍﾟｯﾄ	POPPET	1			
92	1	LSC0187	ｽﾌﾟﾘﾝｸﾞ	SPRING;SPL	1			
93	1	LH004990	ﾌﾗﾝｼﾞ ﾄｸｼｭ	FLANGE;SPL	1			
94	1	LE012520	O-ﾘﾝｸﾞ ﾄｸｼｭ ﾌﾂｿ	O-RING	3			
95	1	LE014890	O-ﾘﾝｸﾞ	O-RING	14			
96	1	LBQ0102	O-ﾘﾝｸﾞ JISB2401 1BP1	O-RING	12			
97	1	LJ014710	ﾊﾞﾙﾌﾞ ｱﾝﾁﾄﾞﾘﾌﾄ ASSY	VALVE;SPL	2			
98	1A	LJ014720	ﾊﾞﾙﾌﾞ;ﾘﾘｰﾌ KIT	VALVE;RELIEF	1			
99	2	LBQ6912	O-ﾘﾝｸﾞ AS568-912-HS9	O-RING	1			
100	1A	LJ014730	ﾊﾞﾙﾌﾞ;ﾘﾘｰﾌ KIT	VALVE;RELIEF	5			
101	2	LBQ6912	O-ﾘﾝｸﾞ AS568-912-HS9	O-RING	5			
102	2	LBQ0102	O-ﾘﾝｸﾞ JISB2401 1BP1	O-RING	5			
103	1A	LJ014740	ﾊﾞﾙﾌﾞ;ﾘﾘｰﾌ KIT	VALVE;RELIEF	1			
104	2	LBQ6912	O-ﾘﾝｸﾞ AS568-912-HS9	O-RING	1			
105	2	LBQ0102	O-ﾘﾝｸﾞ JISB2401 1BP1	O-RING	1			
106	1	LJ014700	ﾊﾞﾙﾌﾞ;ﾘﾘｰﾌ ASS'Y	VALVE;RELIEF	2			
107	1A	LNC0218	ﾌﾟﾗｸﾞ S/A	PLUG	3			
108	2	LBQ0182	O-ﾘﾝｸﾞ JISB2401 1BP1	O-RING	3			
109	1A	LNC0217	ﾌﾟﾗｸﾞ S/A	PLUG	10			
110	2	LBQ0142	O-ﾘﾝｸﾞ JISB2401 1BP1	O-RING	10			
111	1A	LNC0238	ﾌﾟﾗｸﾞ S/A	PLUG	3			
112	2	LK00328	ﾌﾟﾗｸﾞ	PLUG	3			

https://truckmanualshub.com/

10 [11 ~ 19] 11 [12 ~ 19]

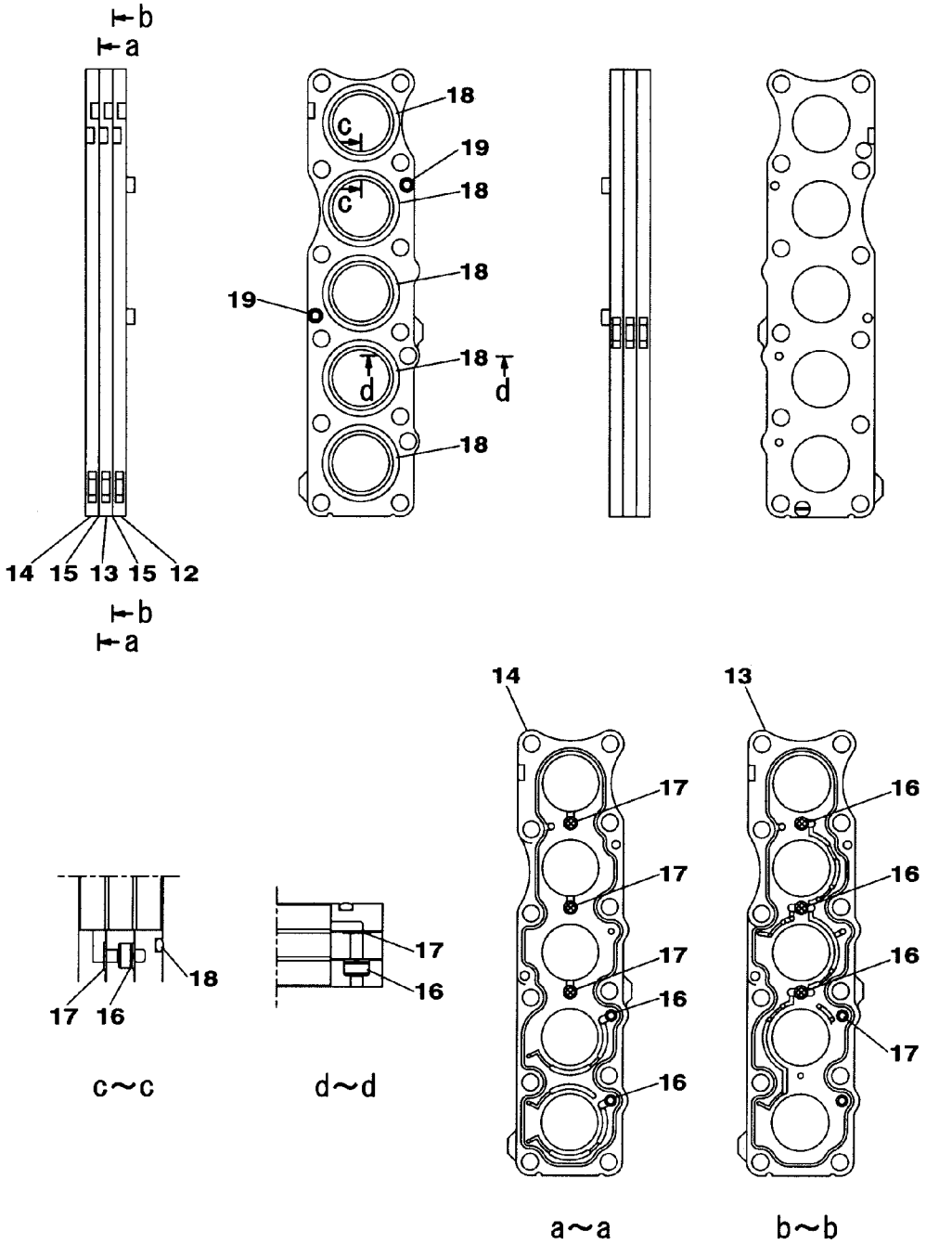

KRJ10311

https://truckmanualshub.com/

符号 ITEM	構成 COMPO	部品番号 PART NO.	部品名	PART NAME	個数 Q'TY	互換 ICA	代替部品 REPLACEABLE PART	備考 MEMO
54	1A	-------	ﾌﾟﾚｰﾄ ASS'Y	PLATE;SPL	1			
55	2A	-------	ﾌﾟﾚｰﾄ KIT	PLATE;SPL	1			
56	3	-------	ﾌﾟﾚｰﾄ	PLATE	1			
57	3	-------	ﾌﾟﾚｰﾄ	PLATE	1			
58	3	-------	ﾌﾟﾚｰﾄ	PLATE	1			
59	3	-------	ｶﾞｽｹｯﾄ	GASKET	2			
60	3	-------	ｽﾌﾟｰﾙ	SPOOL	4			
61	3	-------	ﾌｨﾙﾀ ﾄｸｼｭ	FILTER;SPL	4			
62	3	108R006Z025N	ﾛｯｶｸｱﾅB M6X25-12.9	BOLT;HEX SOC HD	2			
63	1	LBQ0162	O-ﾘﾝｸﾞ JISB2401 1BP1	O-RING	1			
64	1	LBB0162	ﾘﾝｸﾞ;ﾊﾞｯｸｱｯﾌﾟ	RING;BACK-UP	2			
65	1	LJ00726	ﾎﾟﾍﾟｯﾄ	POPPET	2			
66	1	LG00340	ｽﾌﾟﾘﾝｸﾞ;ｱｯｼｭｸ	SPRING;COMPRESSION	2			
67	1	LJ00727	ﾎﾟﾍﾟｯﾄ	POPPET	7			
68	1	LG00341	ｽﾌﾟﾘﾝｸﾞ;ｱｯｼｭｸ	SPRING;COMPRESSION	8			
69	1	LBQ0322	O-ﾘﾝｸﾞ JISB2401 1BP3	O-RING	10			
70	1	LH00248	ﾌﾗﾝｼﾞ	FLANGE;SPL	6			
71	1	LPC0180	ﾎﾟﾍﾟｯﾄ	POPPET	2			
72	1	LSC0227	ｽﾌﾟﾘﾝｸﾞ ﾄｸｼｭ	SPRING;SPL	2			
73	1	LJ00731	ｵﾘﾌｨｽ	ORIFICE	1			
74	1	LBQ0062	O-ﾘﾝｸﾞ JISB2401 1BP6	O-RING	27			
75	1	LR015280	ﾎﾞﾃﾞｨ ASSY	BODY	1			
76	1	LH005410	ﾌﾗﾝｼﾞ	FLANGE;SPL	1			
77	1	LJ016050	ﾎﾟﾍﾟｯﾄ	POPPET	1			
78	1	LG006510	ｽﾌﾟﾘﾝｸﾞ	SPRING;SPL	1			
79	1	LLC0082	ﾌﾟﾗｸﾞ	PLUG	1			
80	1	LBQ6910	O-ﾘﾝｸﾞ	O-RING	1			
81	1	LSC0094	ｽﾌﾟﾘﾝｸﾞ	SPRING;SPL	1			
82	1	LJ014680	ﾎﾟﾍﾟｯﾄ	POPPET	1			
83	1	LJ00730	ﾎﾟﾍﾟｯﾄ	POPPET	1			
84	1	LH00250	ﾌﾗﾝｼﾞ	FLANGE;SPL	2			
85	1	LH004960	ｽﾍﾟｰｻ	SPACER	2			
86	1	LBQ0251	O-ﾘﾝｸﾞ JISB2401 1AG2	O-RING	2			
87	1	LBB0253	ﾘﾝｸﾞ;ﾊﾞｯｸｱｯﾌﾟ	RING;BACK-UP	2			
88	1	LBQ0553	O-ﾘﾝｸﾞ JISB2401 1BG5	O-RING	1			
89	1	LH004970	ｽﾍﾟｰｻ	SPACER	1			
90	1	LH004980	ｽﾘｰﾌﾞ	SLEEVE	1			
91	1	LPC0098	ﾎﾟﾍﾟｯﾄ	POPPET	1			
92	1	LSC0187	ｽﾌﾟﾘﾝｸﾞ	SPRING;SPL	1			
93	1	LH004990	ﾌﾗﾝｼﾞ ﾄｸｼｭ	FLANGE;SPL	1			
94	1	LE012520	O-ﾘﾝｸﾞ ﾄｸｼｭ ﾌﾂｿ	O-RING	3			
95	1	LE014890	O-ﾘﾝｸﾞ	O-RING	14			
96	1	LBQ0102	O-ﾘﾝｸﾞ JISB2401 1BP1	O-RING	12			
97	1	LJ014710	ﾊﾞﾙﾌﾞ ｱﾝﾁﾄﾞﾘﾌﾄ ASSY	VALVE;SPL	2			
98	1A	LJ014720	ﾊﾞﾙﾌﾞ;ﾘﾘｰﾌ KIT	VALVE;RELIEF	1			
99	2	LBQ6912	O-ﾘﾝｸﾞ AS568-912-HS9	O-RING	1			
100	1A	LJ014730	ﾊﾞﾙﾌﾞ;ﾘﾘｰﾌ KIT	VALVE;RELIEF	5			
101	2	LBQ6912	O-ﾘﾝｸﾞ AS568-912-HS9	O-RING	5			
102	2	LBQ0102	O-ﾘﾝｸﾞ JISB2401 1BP1	O-RING	5			
103	1A	LJ014740	ﾊﾞﾙﾌﾞ;ﾘﾘｰﾌ KIT	VALVE;RELIEF	1			
104	2	LBQ6912	O-ﾘﾝｸﾞ AS568-912-HS9	O-RING	1			
105	2	LBQ0102	O-ﾘﾝｸﾞ JISB2401 1BP1	O-RING	1			
106	1	LJ014700	ﾊﾞﾙﾌﾞ;ﾘﾘｰﾌ ASS'Y	VALVE;RELIEF	2			
107	1A	LNC0218	ﾌﾟﾗｸﾞ S/A	PLUG	3			
108	2	LBQ0182	O-ﾘﾝｸﾞ JISB2401 1BP1	O-RING	3			
109	1A	LNC0217	ﾌﾟﾗｸﾞ S/A	PLUG	10			
110	2	LBQ0142	O-ﾘﾝｸﾞ JISB2401 1BP1	O-RING	10			
111	1A	LNC0238	ﾌﾟﾗｸﾞ S/A	PLUG	3			
112	2	LK00328	ﾌﾟﾗｸﾞ	PLUG	3			
113	2	LBQ0112	O-ﾘﾝｸﾞ JISB2401 1BP1	O-RING	3			
114	1	108R010Z055B	ﾛｯｶｸｱﾅB JIS B 1180 M	BOLT;HEX SOC HD	32			
115	1	108R010Z040B	ﾛｯｶｸｱﾅB JIS B1176 M1	BOLT;HEX SOC HD	66			
116	1	108R016Z130B	ﾛｯｶｸｱﾅB JIS B1180 M1	BOLT;HEX SOC HD	8			
117	1	LUC0118	ﾛｯｶｸｱﾅB	BOLT;HEX SOC HD	4			
118	1	-------	ﾒｲﾊﾞﾝ;ｷﾊﾞﾝ	NAMEPLATE;SER NO.	1			
119	1	-------	ｽｸﾘｭｰ ﾄﾞﾗｲﾌﾞ	SCREW	2			
120	1	-------	ﾌﾟﾗｸﾞ	PLUG	5			
121	1	LA011120	ﾛｯｶｸｱﾅB	BOLT;HEX SOC HD	4			

https://truckmanualshub.com/

20 [21 ~ 29] 21 [22 ~ 29]

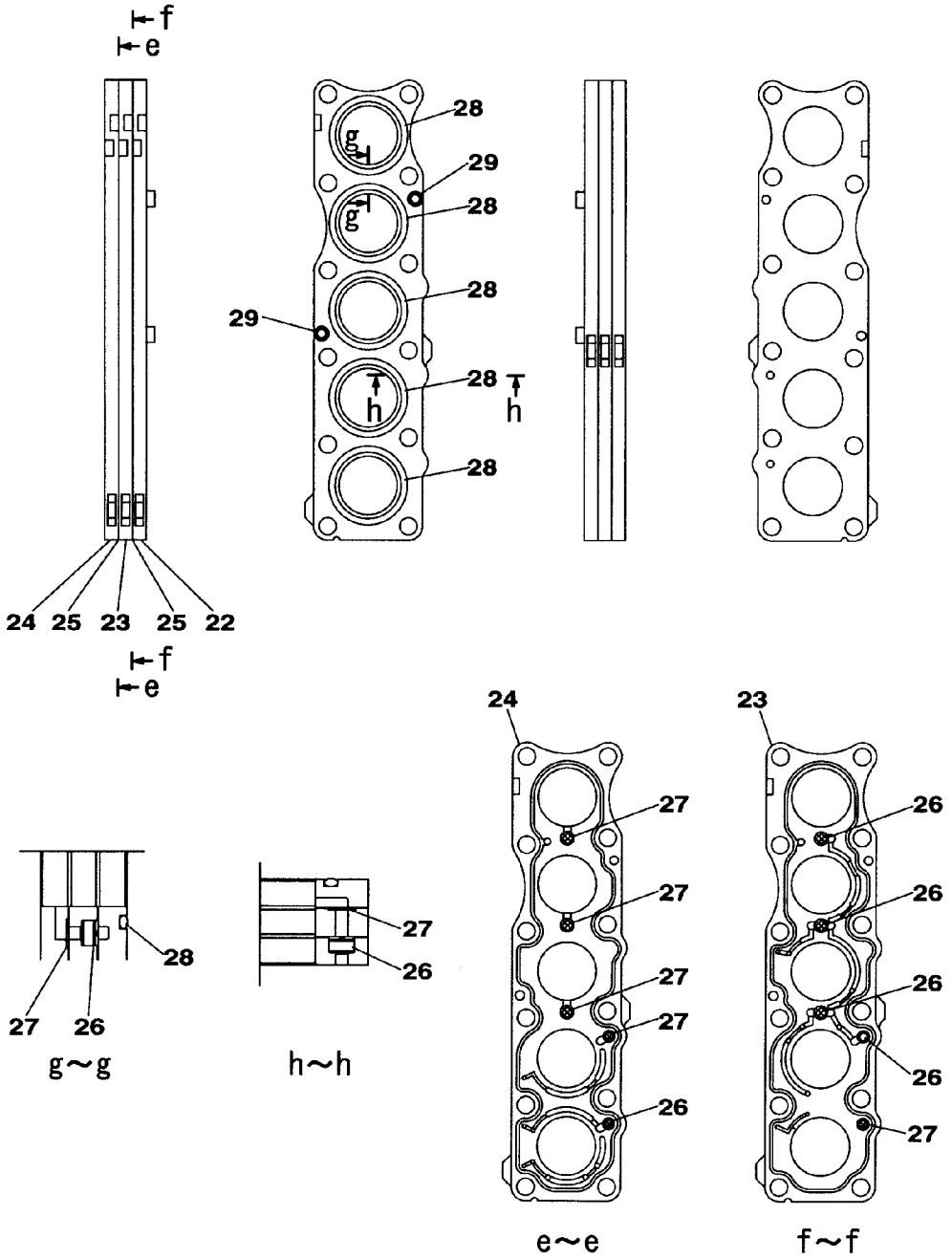

KRJ10311

https://truckmanualshub.com/

符号 ITEM	構成 COMPO	部品番号 PART NO.	部品名	PART NAME	個数 Q'TY	互換 ICA	代替部品 REPLACEABLE PART	備考 MEMO
63	1	LBQ0162	O-ﾘﾝｸﾞ JISB2401 1BP1	O-RING	1			
64	1	LBB0162	ﾘﾝｸﾞ;ﾊﾞｯｸｱｯﾌﾟ	RING;BACK-UP	2			
65	1	LJ00726	ﾎﾟﾍﾟｯﾄ	POPPET	2			
66	1	LG00340	ｽﾌﾟﾘﾝｸﾞ;ｱｯｼｭｸ	SPRING;COMPRESSION	2			
67	1	LJ00727	ﾎﾟﾍﾟｯﾄ	POPPET	7			
68	1	LG00341	ｽﾌﾟﾘﾝｸﾞ;ｱｯｼｭｸ	SPRING;COMPRESSION	8			
69	1	LBQ0322	O-ﾘﾝｸﾞ JISB2401 1BP3	O-RING	10			
70	1	LH00248	ﾌﾗﾝｼﾞ	FLANGE;SPL	6			
71	1	LPC0180	ﾎﾟﾍﾟｯﾄ	POPPET	2			
72	1	LSC0227	ｽﾌﾟﾘﾝｸﾞ ﾄｸｼｭ	SPRING;SPL	2			
73	1	LJ00731	ｵﾘﾌｨｽ	ORIFICE	1			
74	1	LBQ0062	O-ﾘﾝｸﾞ JISB2401 1BP6	O-RING	27			
75	1	LR015280	ﾎﾞﾃﾞｨ ASSY	BODY	1			
76	1	LH005410	ﾌﾗﾝｼﾞ	FLANGE;SPL	1			
77	1	LJ016050	ﾎﾟﾍﾟｯﾄ	POPPET	1			
78	1	LG006510	ｽﾌﾟﾘﾝｸﾞ	SPRING;SPL	1			
79	1	LLC0082	ﾌﾟﾗｸﾞ	PLUG	1			
80	1	LBQ6910	O-ﾘﾝｸﾞ	O-RING	1			
81	1	LSC0094	ｽﾌﾟﾘﾝｸﾞ	SPRING;SPL	1			
82	1	LJ014680	ﾎﾟﾍﾟｯﾄ	POPPET	1			
83	1	LJ00730	ﾎﾟﾍﾟｯﾄ	POPPET	1			
84	1	LH00250	ﾌﾗﾝｼﾞ	FLANGE;SPL	2			
85	1	LH004960	ｽﾍﾟｰｻ	SPACER	2			
86	1	LBQ0251	O-ﾘﾝｸﾞ JISB2401 1AG2	O-RING	2			
87	1	LBB0253	ﾘﾝｸﾞ;ﾊﾞｯｸｱｯﾌﾟ	RING;BACK-UP	2			
88	1	LBQ0553	O-ﾘﾝｸﾞ JISB2401 1BG5	O-RING	1			
89	1	LH004970	ｽﾍﾟｰｻ	SPACER	1			
90	1	LH004980	ｽﾘｰﾌﾞ	SLEEVE	1			
91	1	LPC0098	ﾎﾟﾍﾟｯﾄ	POPPET	1			
92	1	LSC0187	ｽﾌﾟﾘﾝｸﾞ	SPRING;SPL	1			
93	1	LH004990	ﾌﾗﾝｼﾞ ﾄｸｼｭ	FLANGE;SPL	1			
94	1	LE012520	O-ﾘﾝｸﾞ ﾄｸｼｭ ﾌﾂｿ	O-RING	3			
95	1	LE014890	O-ﾘﾝｸﾞ	O-RING	14			
96	1	LBQ0102	O-ﾘﾝｸﾞ JISB2401 1BP1	O-RING	12			
97	1	LJ014710	ﾊﾞﾙﾌﾞ ｱﾝﾁﾄﾞﾘﾌﾄ ASSY	VALVE;SPL	2			
98	1A	LJ014720	ﾊﾞﾙﾌﾞ;ﾘﾘｰﾌ KIT	VALVE;RELIEF	1			
99	2	LBQ6912	O-ﾘﾝｸﾞ AS568-912-HS9	O-RING	1			
100	1A	LJ014730	ﾊﾞﾙﾌﾞ;ﾘﾘｰﾌ KIT	VALVE;RELIEF	5			
101	2	LBQ6912	O-ﾘﾝｸﾞ AS568-912-HS9	O-RING	5			
102	2	LBQ0102	O-ﾘﾝｸﾞ JISB2401 1BP1	O-RING	5			
103	1A	LJ014740	ﾊﾞﾙﾌﾞ;ﾘﾘｰﾌ KIT	VALVE;RELIEF	1			
104	2	LBQ6912	O-ﾘﾝｸﾞ AS568-912-HS9	O-RING	1			
105	2	LBQ0102	O-ﾘﾝｸﾞ JISB2401 1BP1	O-RING	1			
106	1	LJ014700	ﾊﾞﾙﾌﾞ;ﾘﾘｰﾌ ASS'Y	VALVE;RELIEF	2			
107	1A	LNC0218	ﾌﾟﾗｸﾞ S/A	PLUG	3			
108	2	LBQ0182	O-ﾘﾝｸﾞ JISB2401 1BP1	O-RING	3			
109	1A	LNC0217	ﾌﾟﾗｸﾞ S/A	PLUG	10			
110	2	LBQ0142	O-ﾘﾝｸﾞ JISB2401 1BP1	O-RING	10			
111	1A	LNC0238	ﾌﾟﾗｸﾞ S/A	PLUG	3			
112	2	LK00328	ﾌﾟﾗｸﾞ	PLUG	3			
113	2	LBQ0112	O-ﾘﾝｸﾞ JISB2401 1BP1	O-RING	3			
114	1	108R010Z055B	ﾛｯｶｸｱﾅB JIS B 1180 M	BOLT;HEX SOC HD	32			
115	1	108R010Z040B	ﾛｯｶｸｱﾅB JIS B1176 M1	BOLT;HEX SOC HD	66			
116	1	108R016Z130B	ﾛｯｶｸｱﾅB JIS B1180 M1	BOLT;HEX SOC HD	8			
117	1	LUC0118	ﾛｯｶｸｱﾅB	BOLT;HEX SOC HD	4			
118	1	-------	ﾒｲﾊﾞﾝ;ｷﾊﾞﾝ	NAMEPLATE;SER NO.	1			
119	1	-------	ｽｸﾘｭｰ ﾄﾞﾗｲﾌﾞ	SCREW	2			
120	1	-------	ﾌﾟﾗｸﾞ	PLUG	5			
121	1	LA011120	ﾛｯｶｸｱﾅB	BOLT;HEX SOC HD	4			
122	1	-------	ｽﾌﾟｰﾙ ASS'Y	SPOOL	1			
123	1	LR015290	ｷｬｯﾌﾟ	CAP	1			
124	1	LR00579	ｷｬｯﾌﾟ	CAP	2			
125	1	LBQ5219	O-ﾘﾝｸﾞ	O-RING	2			
126	1	LBQ0112	O-ﾘﾝｸﾞ JISB2401 1BP1	O-RING	2			
127	1	LK00301	ﾌﾟﾗｸﾞ	PLUG	2			
128	1A	LK00302	ﾌﾟﾗｸﾞ ASSY	PLUG	2			
129	2	LPC0256	ﾌﾟﾗｸﾞ	PLUG	2			
130	2	LBQ0242	O-ﾘﾝｸﾞ JISB2401 1BP2	O-RING	2			

https://truckmanualshub.com/

45 [46 ~ 53] 46 [47 ~ 53]

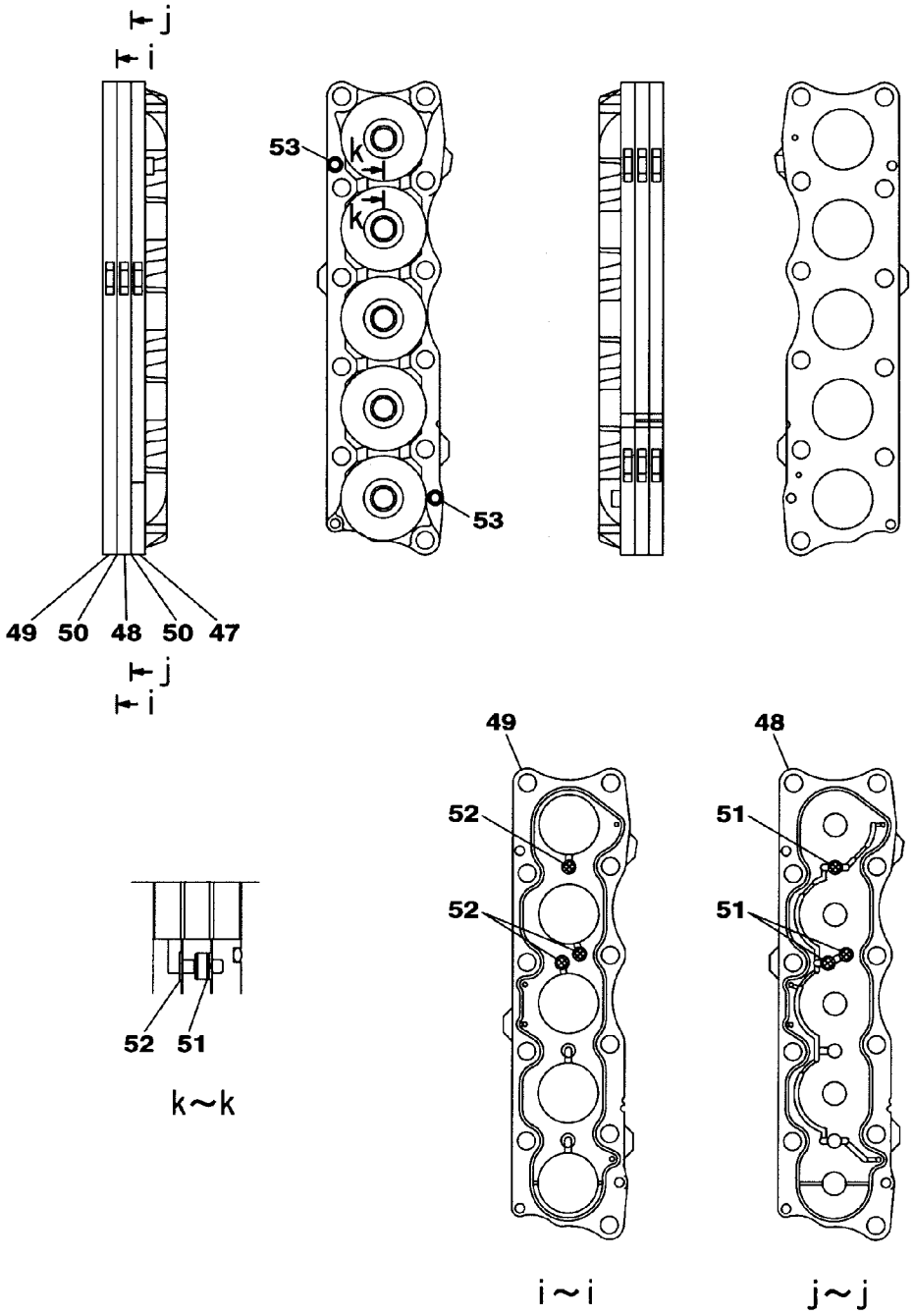

KRJ10311

https://truckmanualshub.com/

VALVE;CONTROL	ﾊﾞﾙﾌﾞ;ｺﾝﾄﾛｰﾙ	ZAJ313L0117 000 18/20	000

符号 ITEM	構成 COMPO	部品番号 PART NO.	部品名	PART NAME	個数 Q'TY	互換 ICA	代替部品 REPLACEABLE PART	備考 MEMO
72	1	LSC0227	ｽﾌﾟﾘﾝｸﾞ ﾄｸｼｭ	SPRING;SPL	2			
73	1	LJ00731	ｵﾘﾌｲｽ	ORIFICE	1			
74	1	LBQ0062	O-ﾘﾝｸﾞ JISB2401 1BP6	O-RING	27			
75	1	LR015280	ﾎﾞﾃﾞｨ ASSY	BODY	1			
76	1	LH005410	ﾌﾗﾝｼﾞ	FLANGE;SPL	1			
77	1	LJ016050	ﾎﾟﾍﾟｯﾄ	POPPET	1			
78	1	LG006510	ｽﾌﾟﾘﾝｸﾞ	SPRING;SPL	1			
79	1	LLC0082	ﾌﾟﾗｸﾞ	PLUG	1			
80	1	LBQ6910	O-ﾘﾝｸﾞ	O-RING	1			
81	1	LSC0094	ｽﾌﾟﾘﾝｸﾞ	SPRING;SPL	1			
82	1	LJ014680	ﾎﾟﾍﾟｯﾄ	POPPET	1			
83	1	LJ00730	ﾎﾟﾍﾟｯﾄ	POPPET	1			
84	1	LH00250	ﾌﾗﾝｼﾞ	FLANGE;SPL	2			
85	1	LH004960	ｽﾍﾟｰｻ	SPACER	2			
86	1	LBQ0251	O-ﾘﾝｸﾞ JISB2401 1AG2	O-RING	2			
87	1	LBB0253	ﾘﾝｸﾞ;ﾊﾞｯｸｱｯﾌﾟ	RING;BACK-UP	2			
88	1	LBQ0553	O-ﾘﾝｸﾞ JISB2401 1BG5	O-RING	1			
89	1	LH004970	ｽﾍﾟｰｻ	SPACER	1			
90	1	LH004980	ｽﾘｰﾌﾞ	SLEEVE	1			
91	1	LPC0098	ﾎﾟﾍﾟｯﾄ	POPPET	1			
92	1	LSC0187	ｽﾌﾟﾘﾝｸﾞ	SPRING;SPL	1			
93	1	LH004990	ﾌﾗﾝｼﾞ ﾄｸｼｭ	FLANGE;SPL	1			
94	1	LE012520	O-ﾘﾝｸﾞ ﾄｸｼｭ ﾌﾂｿ	O-RING	3			
95	1	LE014890	O-ﾘﾝｸﾞ	O-RING	14			
96	1	LBQ0102	O-ﾘﾝｸﾞ JISB2401 1BP1	O-RING	12			
97	1	LJ014710	ﾊﾞﾙﾌﾞ ｱﾝﾁﾄﾞﾘﾌﾄ ASSY	VALVE;SPL	2			
98	1A	LJ014720	ﾊﾞﾙﾌﾞ;ﾘﾘｰﾌ KIT	VALVE;RELIEF	1			
99	2	LBQ6912	O-ﾘﾝｸﾞ AS568-912-HS9	O-RING	1			
100	1A	LJ014730	ﾊﾞﾙﾌﾞ;ﾘﾘｰﾌ KIT	VALVE;RELIEF	5			
101	2	LBQ6912	O-ﾘﾝｸﾞ AS568-912-HS9	O-RING	5			
102	2	LBQ0102	O-ﾘﾝｸﾞ JISB2401 1BP1	O-RING	5			
103	1A	LJ014740	ﾊﾞﾙﾌﾞ;ﾘﾘｰﾌ KIT	VALVE;RELIEF	1			
104	2	LBQ6912	O-ﾘﾝｸﾞ AS568-912-HS9	O-RING	1			
105	2	LBQ0102	O-ﾘﾝｸﾞ JISB2401 1BP1	O-RING	1			
106	1	LJ014700	ﾊﾞﾙﾌﾞ;ﾘﾘｰﾌ ASS'Y	VALVE;RELIEF	2			
107	1A	LNC0218	ﾌﾟﾗｸﾞ S/A	PLUG	3			
108	2	LBQ0182	O-ﾘﾝｸﾞ JISB2401 1BP1	O-RING	3			
109	1A	LNC0217	ﾌﾟﾗｸﾞ S/A	PLUG	10			
110	2	LBQ0142	O-ﾘﾝｸﾞ JISB2401 1BP1	O-RING	10			
111	1A	LNC0238	ﾌﾟﾗｸﾞ S/A	PLUG	3			
112	2	LK00328	ﾌﾟﾗｸﾞ	PLUG	3			
113	2	LBQ0112	O-ﾘﾝｸﾞ JISB2401 1BP1	O-RING	3			
114	1	108R010Z055B	ﾛｯｶｸｱﾅB JIS B 1180 M	BOLT;HEX SOC HD	32			
115	1	108R010Z040B	ﾛｯｶｸｱﾅB JIS B1176 M1	BOLT;HEX SOC HD	66			
116	1	108R016Z130B	ﾛｯｶｸｱﾅB JIS B1180 M1	BOLT;HEX SOC HD	8			
117	1	LUC0118	ﾛｯｶｸｱﾅB	BOLT;HEX SOC HD	4			
118	1	-------	ﾒｲﾊﾞﾝ;ｷﾊﾞﾝ	NAMEPLATE;SER NO.	1			
119	1	-------	ｽｸﾘｭｰ ﾄﾞﾗｲﾌﾞ	SCREW	2			
120	1	-------	ﾌﾟﾗｸﾞ	PLUG	5			
121	1	LA011120	ﾛｯｶｸｱﾅB	BOLT;HEX SOC HD	4			
122	1	-------	ｽﾌﾟｰﾙ ASS'Y	SPOOL	1			
123	1	LR015290	ｷｬｯﾌﾟ	CAP	1			
124	1	LR00579	ｷｬｯﾌﾟ	CAP	2			
125	1	LBQ5219	O-ﾘﾝｸﾞ	O-RING	2			
126	1	LBQ0112	O-ﾘﾝｸﾞ JISB2401 1BP1	O-RING	2			
127	1	LK00301	ﾌﾟﾗｸﾞ	PLUG	2			
128	1A	LK00302	ﾌﾟﾗｸﾞ ASSY	PLUG	2			
129	2	LPC0256	ﾌﾟﾗｸﾞ	PLUG	2			
130	2	LBQ0242	O-ﾘﾝｸﾞ JISB2401 1BP2	O-RING	2			
131	1A	LPC0259	ﾌﾟﾗｸﾞ ASSY	PLUG	2			
132	2	LK00327	ﾌﾟﾗｸﾞ	PLUG	2			
133	2	LBQ6912	O-ﾘﾝｸﾞ AS568-912-HS9	O-RING	2			
134	2	LBQ0080	O-ﾘﾝｸﾞ JISB2401 1AP8	O-RING	2			
135	2	LBB6110	ﾘﾝｸﾞ;ﾊﾞｯｸｱｯﾌﾟ	RING;BACK-UP	2			
136	1	LA011130	ﾛｯｶｸｱﾅB	BOLT;HEX SOC HD	2			
137	1	LT001660	ﾊｳｼﾞﾝｸﾞ ｱｳﾄﾚｯﾄ	HOUSING;SPL	1			
138	1	LB011890	ﾀｲﾛｯﾄﾞ	ROD;TIE	4			
139	1	LUC0094	ﾅｯﾄ	NUT;SPL	4			

https://truckmanualshub.com/

54 [55 ~ 62] 55 [56 ~ 62]

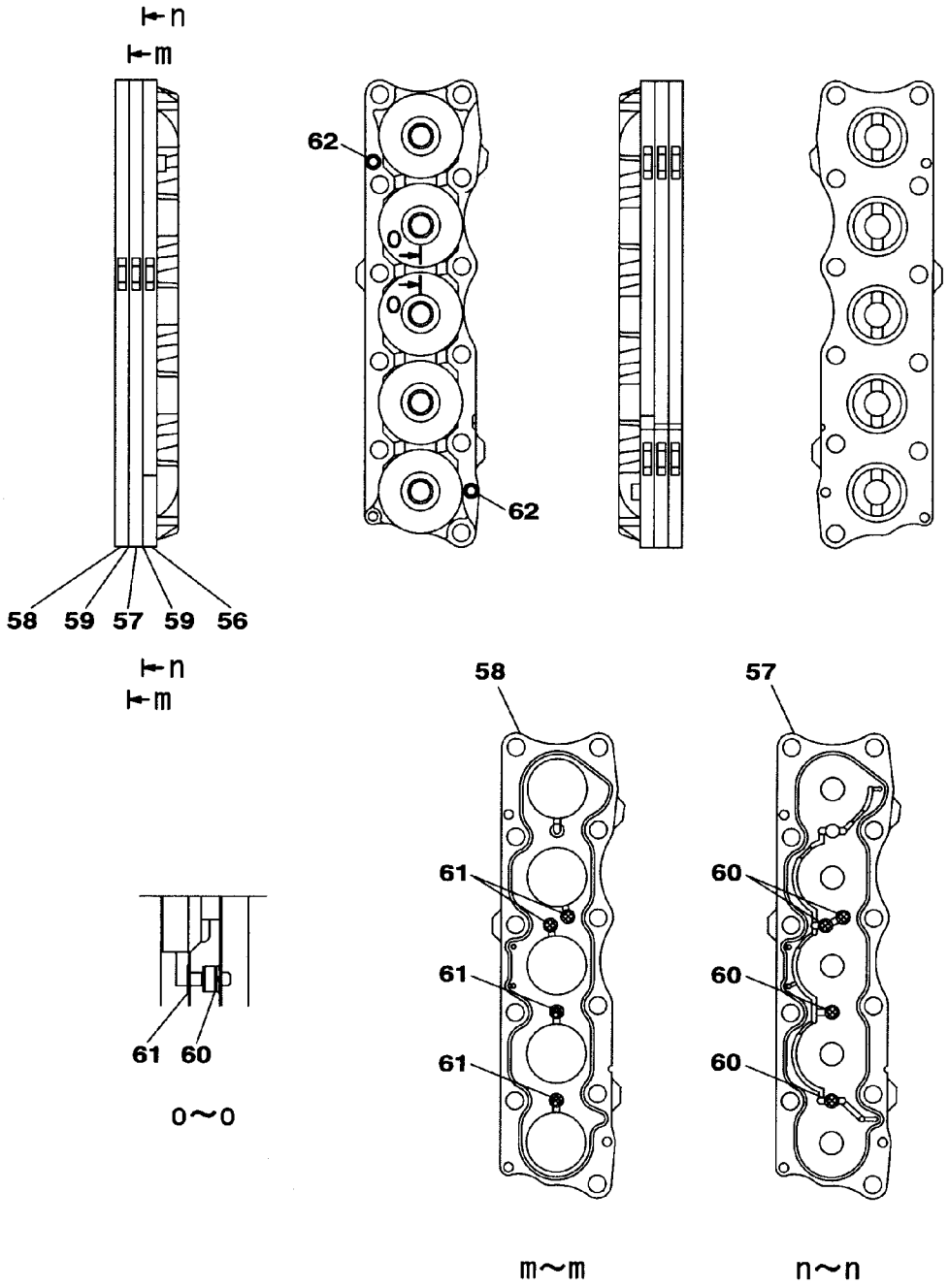

KRJ10311

https://truckmanualshub.com/

VALVE;CONTROL	ﾊﾞﾙﾌﾞ;ｺﾝﾄﾛｰﾙ	ZAJ313L0117 000 20/20	000

符号 ITEM	構成 COMPO	部品番号 PART NO.	部品名	PART NAME	個数 Q'TY	互換 ICA	代替部品 REPLACEABLE PART	備考 MEMO
81	1	LSC0094	ｽﾌﾟﾘﾝｸﾞ	SPRING;SPL	1			
82	1	LJ014680	ﾎﾟﾍﾟｯﾄ	POPPET	1			
83	1	LJ00730	ﾎﾟﾍﾟｯﾄ	POPPET	1			
84	1	LH00250	ﾌﾗﾝｼﾞ	FLANGE;SPL	2			
85	1	LH004960	ｽﾍﾟｰｻ	SPACER	2			
86	1	LBQ0251	O-ﾘﾝｸﾞ JISB2401 1AG2	O-RING	2			
87	1	LBB0253	ﾘﾝｸﾞ;ﾊﾞｯｸｱｯﾌﾟ	RING;BACK-UP	2			
88	1	LBQ0553	O-ﾘﾝｸﾞ JISB2401 1BG5	O-RING	1			
89	1	LH004970	ｽﾍﾟｰｻ	SPACER	1			
90	1	LH004980	ｽﾘｰﾌﾞ	SLEEVE	1			
91	1	LPC0098	ﾎﾟﾍﾟｯﾄ	POPPET	1			
92	1	LSC0187	ｽﾌﾟﾘﾝｸﾞ	SPRING;SPL	1			
93	1	LH004990	ﾌﾗﾝｼﾞ ﾄｸｼｭ	FLANGE;SPL	1			
94	1	LE012520	O-ﾘﾝｸﾞ ﾄｸｼｭ ﾌﾂｿ	O-RING	3			
95	1	LE014890	O-ﾘﾝｸﾞ	O-RING	14			
96	1	LBQ0102	O-ﾘﾝｸﾞ JISB2401 1BP1	O-RING	12			
97	1	LJ014710	ﾊﾞﾙﾌﾞ ｱﾝﾁﾄﾞﾘﾌﾄ ASSY	VALVE;SPL	2			
98	1A	LJ014720	ﾊﾞﾙﾌﾞ;ﾘﾘｰﾌ KIT	VALVE;RELIEF	1			
99	2	LBQ6912	O-ﾘﾝｸﾞ AS568-912-HS9	O-RING	1			
100	1A	LJ014730	ﾊﾞﾙﾌﾞ;ﾘﾘｰﾌ KIT	VALVE;RELIEF	5			
101	2	LBQ6912	O-ﾘﾝｸﾞ AS568-912-HS9	O-RING	5			
102	2	LBQ0102	O-ﾘﾝｸﾞ JISB2401 1BP1	O-RING	5			
103	1A	LJ014740	ﾊﾞﾙﾌﾞ;ﾘﾘｰﾌ KIT	VALVE;RELIEF	1			
104	2	LBQ6912	O-ﾘﾝｸﾞ AS568-912-HS9	O-RING	1			
105	2	LBQ0102	O-ﾘﾝｸﾞ JISB2401 1BP1	O-RING	1			
106	1	LJ014700	ﾊﾞﾙﾌﾞ;ﾘﾘｰﾌ ASS'Y	VALVE;RELIEF	2			
107	1A	LNC0218	ﾌﾟﾗｸﾞ S/A	PLUG	3			
108	2	LBQ0182	O-ﾘﾝｸﾞ JISB2401 1BP1	O-RING	3			
109	1A	LNC0217	ﾌﾟﾗｸﾞ S/A	PLUG	10			
110	2	LBQ0142	O-ﾘﾝｸﾞ JISB2401 1BP1	O-RING	10			
111	1A	LNC0238	ﾌﾟﾗｸﾞ S/A	PLUG	3			
112	2	LK00328	ﾌﾟﾗｸﾞ	PLUG	3			
113	2	LBQ0112	O-ﾘﾝｸﾞ JISB2401 1BP1	O-RING	3			
114	1	108R010Z055B	ﾛｯｶｸｱﾅB JIS B 1180 M	BOLT;HEX SOC HD	32			
115	1	108R010Z040B	ﾛｯｶｸｱﾅB JIS B1176 M1	BOLT;HEX SOC HD	66			
116	1	108R016Z130B	ﾛｯｶｸｱﾅB JIS B1180 M1	BOLT;HEX SOC HD	8			
117	1	LUC0118	ﾛｯｶｸｱﾅB	BOLT;HEX SOC HD	4			
118	1	-------	ﾒｲﾊﾞﾝ;ｷﾊﾞﾝ	NAMEPLATE;SER NO.	1			
119	1	-------	ｽｸﾘｭｰ ﾄﾞﾗｲﾌﾞ	SCREW	2			
120	1	-------	ﾌﾟﾗｸﾞ	PLUG	5			
121	1	LA011120	ﾛｯｶｸｱﾅB	BOLT;HEX SOC HD	4			
122	1	-------	ｽﾌﾟｰﾙ ASS'Y	SPOOL	1			
123	1	LR015290	ｷｬｯﾌﾟ	CAP	1			
124	1	LR00579	ｷｬｯﾌﾟ	CAP	2			
125	1	LBQ5219	O-ﾘﾝｸﾞ	O-RING	2			
126	1	LBQ0112	O-ﾘﾝｸﾞ JISB2401 1BP1	O-RING	2			
127	1	LK00301	ﾌﾟﾗｸﾞ	PLUG	2			
128	1A	LK00302	ﾌﾟﾗｸﾞ ASSY	PLUG	2			
129	2	LPC0256	ﾌﾟﾗｸﾞ	PLUG	2			
130	2	LBQ0242	O-ﾘﾝｸﾞ JISB2401 1BP2	O-RING	2			
131	1A	LPC0259	ﾌﾟﾗｸﾞ ASSY	PLUG	2			
132	2	LK00327	ﾌﾟﾗｸﾞ	PLUG	2			
133	2	LBQ6912	O-ﾘﾝｸﾞ AS568-912-HS9	O-RING	2			
134	2	LBQ0080	O-ﾘﾝｸﾞ JISB2401 1AP8	O-RING	2			
135	2	LBB6110	ﾘﾝｸﾞ;ﾊﾞｯｸｱｯﾌﾟ	RING;BACK-UP	2			
136	1	LA011130	ﾛｯｶｸｱﾅB	BOLT;HEX SOC HD	2			
137	1	LT001660	ﾊｳｼﾞﾝｸﾞ ｱｳﾄﾚｯﾄ	HOUSING;SPL	1			
138	1	LB011890	ﾀｲﾛｯﾄﾞ	ROD;TIE	4			
139	1	LUC0094	ﾅｯﾄ	NUT;SPL	4			
140	1	LLC0045	ﾌﾟﾗｸﾞ S/A	PLUG	1			

https://truckmanualshub.com/

98 [99] 100 [101 , 102] 103 [104 , 105] 106 [107 , 108]
110 [111] 112 [113] 114 [115 , 116] 131 [132 , 133]
134 [135 ~ 138] 145 [146 , 147]

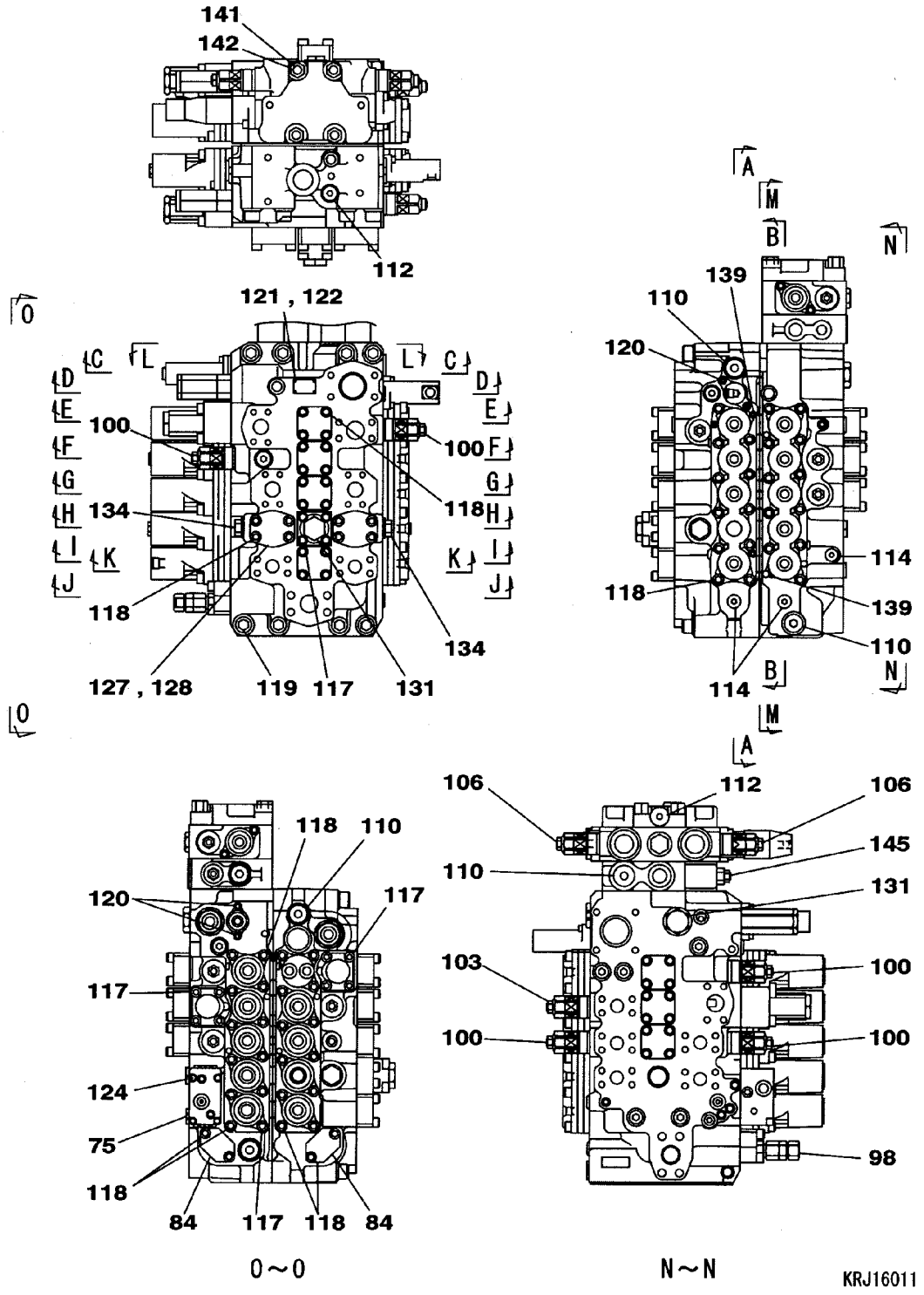

https://truckmanualshub.com/

VALVE;CONTROL	ﾊﾞﾙﾌﾞ;ｺﾝﾄﾛｰﾙ	ZAJ313L0120 000 2/20	000

符号 ITEM	構成 COMPO	部品番号 PART NO.	部品名	PART NAME	個数 Q'TY	互換 ICA	代替部品 REPLACEABLE PART	備考 MEMO
		KRJ16011			1			
1	1	-------	ﾊｳｼﾞﾝｸﾞ;ﾊﾞﾙﾌﾞ	HOUSING;VALVE	1			
2	1	-------	ｽﾌﾟｰﾙ ASSY	SPOOL	1			
3	1	-------	ｽﾌﾟｰﾙ ASSY	SPOOL	1			
4	1	-------	ｽﾌﾟｰﾙ ASSY	SPOOL	1			
5	1	-------	ｽﾌﾟｰﾙ ASSY	SPOOL	2			
6	1	-------	ｽﾌﾟｰﾙ ASSY	SPOOL	1			
7	1	LBQ0453	O-ﾘﾝｸﾞ JISB2401 1BG4	O-RING	20			
8	1	LR015210	ｷｬｯﾌﾟ	CAP	9			
9	1	LR015220	ｷｬｯﾌﾟ	CAP	1			
10	1A	-------	ﾌﾟﾚｰﾄ ASS'Y	PLATE;SPL	1			
11	2A	-------	ﾌﾟﾚｰﾄ KIT	PLATE;SPL	1			
12	3	-------	ﾌﾟﾚｰﾄ	PLATE	1			
13	3	-------	ﾌﾟﾚｰﾄ	PLATE	1			
14	3	-------	ﾌﾟﾚｰﾄ	PLATE	1			
15	3	-------	ｶﾞｽｹｯﾄ	GASKET	2			
16	3	-------	ｽﾌﾟｰﾙ	SPOOL	5			
17	3	-------	ﾌｲﾙﾀ ﾄｸｼｭ	FILTER;SPL	4			
18	3	LBQ0453	O-ﾘﾝｸﾞ JISB2401 1BG4	O-RING	5			
19	3	108R006Z025N	ﾛｯｶｸｱﾅB M6X25-12.9	BOLT;HEX SOC HD	2			
20	1A	-------	ﾌﾟﾚｰﾄ ASS'Y	PLATE;SPL	1			
21	2A	-------	ﾌﾟﾚｰﾄ KIT	PLATE;SPL	1			
22	3	-------	ﾌﾟﾚｰﾄ	PLATE	1			
23	3	-------	ﾌﾟﾚｰﾄ	PLATE	1			
24	3	-------	ﾌﾟﾚｰﾄ	PLATE	1			
25	3	-------	ｶﾞｽｹｯﾄ	GASKET	2			
26	3	-------	ｽﾌﾟｰﾙ	SPOOL	5			
27	3	-------	ﾌｲﾙﾀ ﾄｸｼｭ	FILTER;SPL	5			
28	3	LBQ0453	O-ﾘﾝｸﾞ JISB2401 1BG4	O-RING	5			
29	3	108R006Z025N	ﾛｯｶｸｱﾅB M6X25-12.9	BOLT;HEX SOC HD	2			
30	1	-------	ﾊｳｼﾞﾝｸﾞ;ﾊﾞﾙﾌﾞ	HOUSING;VALVE	1			
31	1	-------	ｽﾌﾟｰﾙ ASSY	SPOOL	1			
32	1	-------	ｽﾌﾟｰﾙ ASSY	SPOOL	1			
33	1	-------	ｽﾌﾟｰﾙ ASSY	SPOOL	1			
34	1	-------	ｽﾌﾟｰﾙ ASSY	SPOOL	1			
35	1	LR015250	ｷｬｯﾌﾟ	CAP	1			
36	1	-------	ｽﾌﾟｰﾙ;ﾊﾞﾙﾌﾞ	SPOOL;VALVE	1			
37	1	LSC0158	ｼｰﾄ;ｽﾌﾟﾘﾝｸﾞ	SEAT;SPRING	2			
38	1	LG00338	ｽﾌﾟﾘﾝｸﾞ;ｱｯｼｭｸ	SPRING;COMPRESSION	1			
39	1	LPC0222	ｴﾝﾄﾞ ｽﾌﾟｰﾙ	END;SPL	1			
40	1	LBQ0260	O-ﾘﾝｸﾞ JISB2401 1AP2	O-RING	1			
41	1	LK005690	ﾌﾟﾗｸﾞ	PLUG	1			
42	1	LBQ0242	O-ﾘﾝｸﾞ JISB2401 1BP2	O-RING	1			
43	1	LG00339	ｽﾌﾟﾘﾝｸﾞ;ｱｯｼｭｸ	SPRING;COMPRESSION	1			
44	1	LJ014690	ｽﾌﾟｰﾙ ASSY	SPOOL	1			
45	1A	-------	ﾌﾟﾚｰﾄ ASS'Y	PLATE;SPL	1			
46	2A	-------	ﾌﾟﾚｰﾄ KIT	PLATE;SPL	1			
47	3	-------	ﾌﾟﾚｰﾄ	PLATE	1			
48	3	-------	ﾌﾟﾚｰﾄ	PLATE	1			
49	3	-------	ﾌﾟﾚｰﾄ	PLATE	1			
50	3	-------	ｶﾞｽｹｯﾄ	GASKET	2			
51	3	-------	ｽﾌﾟｰﾙ	SPOOL	3			
52	3	-------	ﾌｲﾙﾀ ﾄｸｼｭ	FILTER;SPL	3			
53	3	108R006Z025N	ﾛｯｶｸｱﾅB M6X25-12.9	BOLT;HEX SOC HD	2			
54	1A	-------	ﾌﾟﾚｰﾄ ASS'Y	PLATE;SPL	1			
55	2A	-------	ﾌﾟﾚｰﾄ KIT	PLATE;SPL	1			
56	3	-------	ﾌﾟﾚｰﾄ	PLATE	1			
57	3	-------	ﾌﾟﾚｰﾄ	PLATE	1			
58	3	-------	ﾌﾟﾚｰﾄ	PLATE	1			
59	3	-------	ｶﾞｽｹｯﾄ	GASKET	2			
60	3	-------	ｽﾌﾟｰﾙ	SPOOL	4			
61	3	-------	ﾌｲﾙﾀ ﾄｸｼｭ	FILTER;SPL	4			
62	3	108R006Z025N	ﾛｯｶｸｱﾅB M6X25-12.9	BOLT;HEX SOC HD	2			
63	1	LBQ0162	O-ﾘﾝｸﾞ JISB2401 1BP1	O-RING	1			
64	1	LBB0162	ﾘﾝｸﾞ;ﾊﾞｯｸｱｯﾌﾟ	RING;BACK-UP	2			
65	1	LJ00726	ﾎﾟﾍﾟｯﾄ	POPPET	2			
66	1	LG00340	ｽﾌﾟﾘﾝｸﾞ;ｱｯｼｭｸ	SPRING;COMPRESSION	2			
67	1	LJ00727	ﾎﾟﾍﾟｯﾄ	POPPET	7			

https://truckmanualshub.com/

20 [21～29]　21 [22～29]　54 [55～62]　55 [53～62]

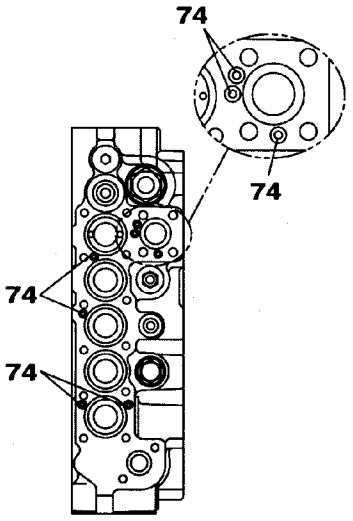

A1～A1

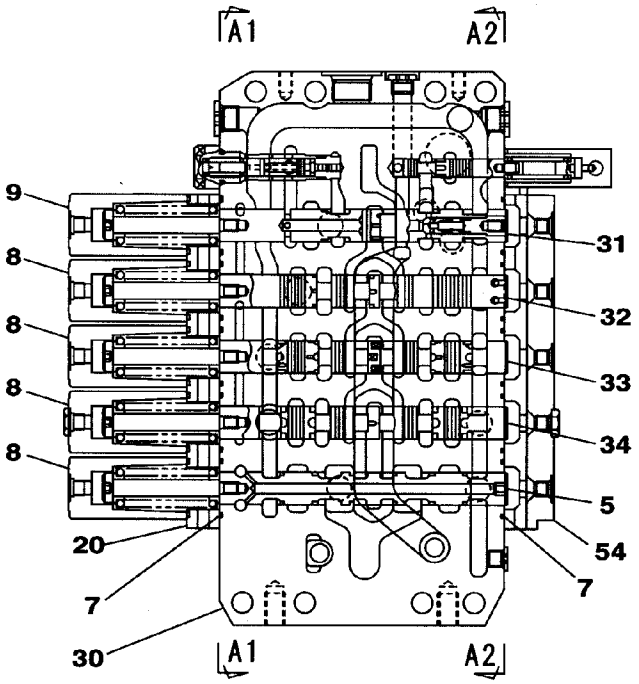

A～A

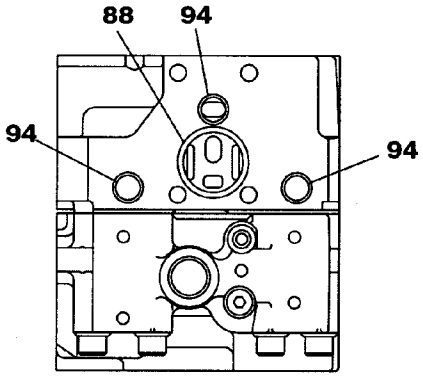

L～L

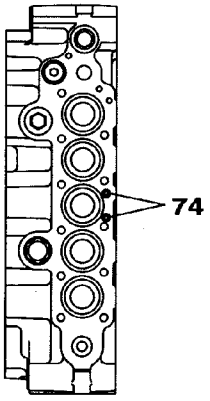

A2～A2

KRJ16011

https://truckmanualshub.com/

VALVE;CONTROL	ﾊﾞﾙﾌﾞ;ｺﾝﾄﾛｰﾙ	ZAJ313L0120 000 4/20	000

符号 ITEM	構成 COMPO	部品番号 PART NO.	部品名	PART NAME	個数 Q'TY	互換 ICA	代替部品 REPLACEABLE PART	備考 MEMO
9	1	LR015220	ｷｬｯﾌﾟ	CAP	1			
10	1A	-------	ﾌﾟﾚｰﾄ ASS'Y	PLATE;SPL	1			
11	2A	-------	ﾌﾟﾚｰﾄ KIT	PLATE;SPL	1			
12	3	-------	ﾌﾟﾚｰﾄ	PLATE	1			
13	3	-------	ﾌﾟﾚｰﾄ	PLATE	1			
14	3	-------	ﾌﾟﾚｰﾄ	PLATE	1			
15	3	-------	ｶﾞｽｹｯﾄ	GASKET	2			
16	3	-------	ｽﾌﾟｰﾙ	SPOOL	5			
17	3	-------	ﾌｨﾙﾀ ﾄｸｼｭ	FILTER;SPL	4			
18	3	LBQ0453	O-ﾘﾝｸﾞ JISB2401 1BG4	O-RING	5			
19	3	108R006Z025N	ﾛｯｶｸｱﾅB M6X25-12.9	BOLT;HEX SOC HD	2			
20	1A	-------	ﾌﾟﾚｰﾄ ASS'Y	PLATE;SPL	1			
21	2A	-------	ﾌﾟﾚｰﾄ KIT	PLATE;SPL	1			
22	3	-------	ﾌﾟﾚｰﾄ	PLATE	1			
23	3	-------	ﾌﾟﾚｰﾄ	PLATE	1			
24	3	-------	ﾌﾟﾚｰﾄ	PLATE	1			
25	3	-------	ｶﾞｽｹｯﾄ	GASKET	2			
26	3	-------	ｽﾌﾟｰﾙ	SPOOL	5			
27	3	-------	ﾌｨﾙﾀ ﾄｸｼｭ	FILTER;SPL	5			
28	3	LBQ0453	O-ﾘﾝｸﾞ JISB2401 1BG4	O-RING	5			
29	3	108R006Z025N	ﾛｯｶｸｱﾅB M6X25-12.9	BOLT;HEX SOC HD	2			
30	1	-------	ﾊｳｼﾞﾝｸﾞ;ﾊﾞﾙﾌﾞ	HOUSING;VALVE	1			
31	1	-------	ｽﾌﾟｰﾙ ASSY	SPOOL	1			
32	1	-------	ｽﾌﾟｰﾙ ASSY	SPOOL	1			
33	1	-------	ｽﾌﾟｰﾙ ASSY	SPOOL	1			
34	1	-------	ｽﾌﾟｰﾙ ASSY	SPOOL	1			
35	1	LR015250	ｷｬｯﾌﾟ	CAP	1			
36	1	-------	ｽﾌﾟｰﾙ;ﾊﾞﾙﾌﾞ	SPOOL;VALVE	1			
37	1	LSC0158	ｼｰﾄ;ｽﾌﾟﾘﾝｸﾞ	SEAT;SPRING	2			
38	1	LG00338	ｽﾌﾟﾘﾝｸﾞ;ｱｯｼｭｸ	SPRING;COMPRESSION	1			
39	1	LPC0222	ｴﾝﾄﾞ ｽﾌﾟｰﾙ	END;SPL	1			
40	1	LBQ0260	O-ﾘﾝｸﾞ JISB2401 1AP2	O-RING	1			
41	1	LK005690	ﾌﾟﾗｸﾞ	PLUG	1			
42	1	LBQ0242	O-ﾘﾝｸﾞ JISB2401 1BP2	O-RING	1			
43	1	LG00339	ｽﾌﾟﾘﾝｸﾞ;ｱｯｼｭｸ	SPRING;COMPRESSION	1			
44	1	LJ014690	ｽﾌﾟｰﾙ ASSY	SPOOL	1			
45	1A	-------	ﾌﾟﾚｰﾄ ASS'Y	PLATE;SPL	1			
46	2A	-------	ﾌﾟﾚｰﾄ KIT	PLATE;SPL	1			
47	3	-------	ﾌﾟﾚｰﾄ	PLATE	1			
48	3	-------	ﾌﾟﾚｰﾄ	PLATE	1			
49	3	-------	ﾌﾟﾚｰﾄ	PLATE	1			
50	3	-------	ｶﾞｽｹｯﾄ	GASKET	2			
51	3	-------	ｽﾌﾟｰﾙ	SPOOL	3			
52	3	-------	ﾌｨﾙﾀ ﾄｸｼｭ	FILTER;SPL	3			
53	3	108R006Z025N	ﾛｯｶｸｱﾅB M6X25-12.9	BOLT;HEX SOC HD	2			
54	1A	-------	ﾌﾟﾚｰﾄ ASS'Y	PLATE;SPL	1			
55	2A	-------	ﾌﾟﾚｰﾄ KIT	PLATE;SPL	1			
56	3	-------	ﾌﾟﾚｰﾄ	PLATE	1			
57	3	-------	ﾌﾟﾚｰﾄ	PLATE	1			
58	3	-------	ﾌﾟﾚｰﾄ	PLATE	1			
59	3	-------	ｶﾞｽｹｯﾄ	GASKET	2			
60	3	-------	ｽﾌﾟｰﾙ	SPOOL	4			
61	3	-------	ﾌｨﾙﾀ ﾄｸｼｭ	FILTER;SPL	4			
62	3	108R006Z025N	ﾛｯｶｸｱﾅB M6X25-12.9	BOLT;HEX SOC HD	2			
63	1	LBQ0162	O-ﾘﾝｸﾞ JISB2401 1BP1	O-RING	1			
64	1	LBB0162	ﾘﾝｸﾞ;ﾊﾞｯｸｱｯﾌﾟ	RING;BACK-UP	2			
65	1	LJ00726	ﾎﾟﾍﾟｯﾄ	POPPET	2			
66	1	LG00340	ｽﾌﾟﾘﾝｸﾞ;ｱｯｼｭｸ	SPRING;COMPRESSION	2			
67	1	LJ00727	ﾎﾟﾍﾟｯﾄ	POPPET	7			
68	1	LG00341	ｽﾌﾟﾘﾝｸﾞ;ｱｯｼｭｸ	SPRING;COMPRESSION	8			
69	1	LBQ0322	O-ﾘﾝｸﾞ JISB2401 1BP3	O-RING	10			
70	1	LH00248	ﾌﾗﾝｼﾞ	FLANGE;SPL	6			
71	1	LPC0180	ﾎﾟﾍﾟｯﾄ	POPPET	2			
72	1	LSC0227	ｽﾌﾟﾘﾝｸﾞ ﾄｸｼｭ	SPRING;SPL	2			
73	1	LJ00731	ｵﾘﾌｨｽ	ORIFICE	1			
74	1	LBQ0062	O-ﾘﾝｸﾞ JISB2401 1BP6	O-RING	27			
75	1	LR015280	ﾎﾞﾃﾞｨ ASSY	BODY	1			
76	1	LH005410	ﾌﾗﾝｼﾞ	FLANGE;SPL	1			

https://truckmanualshub.com/

10 [11～19]　11 [12～19]　45 [46～53]　46 [47～53]

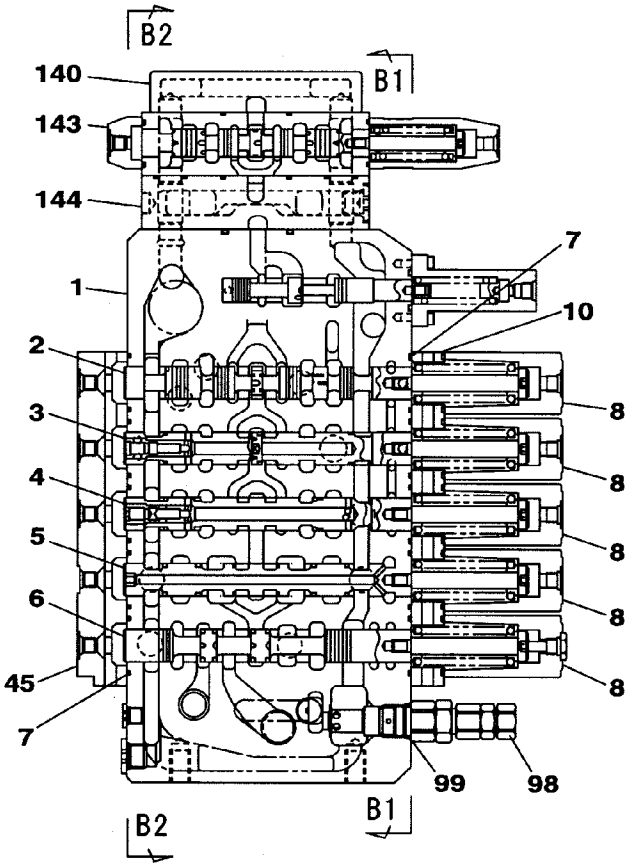

B～B

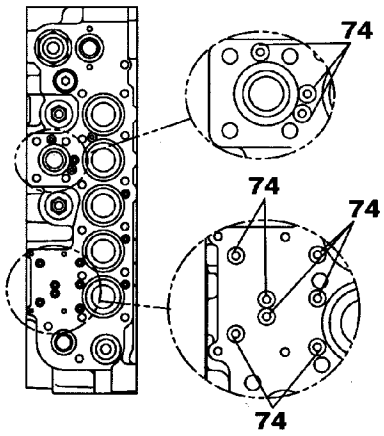

B1～B1

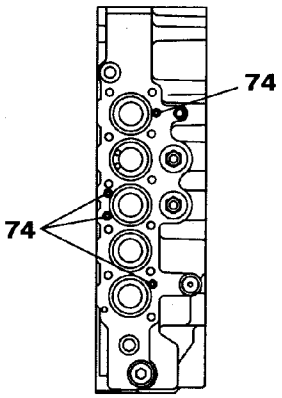

B2～B2

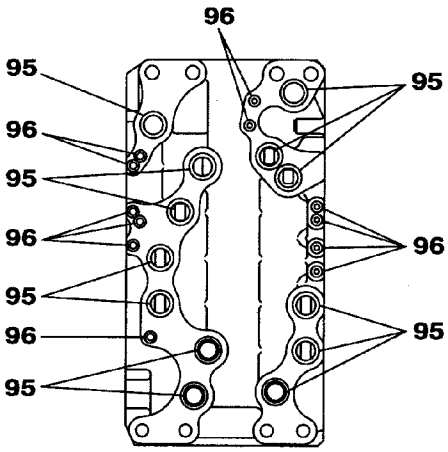

M～M

KRJ16011

https://truckmanualshub.com/

VALVE;CONTROL	ﾊﾞﾙﾌﾞ;ｺﾝﾄﾛｰﾙ	ZAJ313L0120 000 6/20	000

符号 ITEM	構成 COMPO	部品番号 PART NO.	部品名	PART NAME	個数 Q'TY	互換 ICA	代替部品 REPLACEABLE PART	備考 MEMO
18	3	LBQ0453	O-ﾘﾝｸﾞ JISB2401 1BG4	O-RING	5			
19	3	108R006Z025N	ﾛｯｶｸｱﾅB M6X25-12.9	BOLT;HEX SOC HD	2			
20	1A	-------	ﾌﾟﾚｰﾄ ASS'Y	PLATE;SPL	1			
21	2A	-------	ﾌﾟﾚｰﾄ KIT	PLATE;SPL	1			
22	3	-------	ﾌﾟﾚｰﾄ	PLATE	1			
23	3	-------	ﾌﾟﾚｰﾄ	PLATE	1			
24	3	-------	ﾌﾟﾚｰﾄ	PLATE	1			
25	3	-------	ｶﾞｽｹｯﾄ	GASKET	2			
26	3	-------	ｽﾌﾟｰﾙ	SPOOL	5			
27	3	-------	ﾌｨﾙﾀ ﾄｸｼｭ	FILTER;SPL	5			
28	3	LBQ0453	O-ﾘﾝｸﾞ JISB2401 1BG4	O-RING	5			
29	3	108R006Z025N	ﾛｯｶｸｱﾅB M6X25-12.9	BOLT;HEX SOC HD	2			
30	1	-------	ﾊｳｼﾞﾝｸﾞ;ﾊﾞﾙﾌﾞ	HOUSING;VALVE	1			
31	1	-------	ｽﾌﾟｰﾙ ASSY	SPOOL	1			
32	1	-------	ｽﾌﾟｰﾙ ASSY	SPOOL	1			
33	1	-------	ｽﾌﾟｰﾙ ASSY	SPOOL	1			
34	1	-------	ｽﾌﾟｰﾙ ASSY	SPOOL	1			
35	1	LR015250	ｷｬｯﾌﾟ	CAP	1			
36	1	-------	ｽﾌﾟｰﾙ;ﾊﾞﾙﾌﾞ	SPOOL;VALVE	1			
37	1	LSC0158	ｼｰﾄ;ｽﾌﾟﾘﾝｸﾞ	SEAT;SPRING	2			
38	1	LG00338	ｽﾌﾟﾘﾝｸﾞ;ｱｯｼｭｸ	SPRING;COMPRESSION	1			
39	1	LPC0222	ｴﾝﾄﾞ ｽﾌﾟｰﾙ	END;SPL	1			
40	1	LBQ0260	O-ﾘﾝｸﾞ JISB2401 1AP2	O-RING	1			
41	1	LK005690	ﾌﾟﾗｸﾞ	PLUG	1			
42	1	LBQ0242	O-ﾘﾝｸﾞ JISB2401 1BP2	O-RING	1			
43	1	LG00339	ｽﾌﾟﾘﾝｸﾞ;ｱｯｼｭｸ	SPRING;COMPRESSION	1			
44	1	LJ014690	ｽﾌﾟｰﾙ ASSY	SPOOL	1			
45	1A	-------	ﾌﾟﾚｰﾄ ASS'Y	PLATE;SPL	1			
46	2A	-------	ﾌﾟﾚｰﾄ KIT	PLATE;SPL	1			
47	3	-------	ﾌﾟﾚｰﾄ	PLATE	1			
48	3	-------	ﾌﾟﾚｰﾄ	PLATE	1			
49	3	-------	ﾌﾟﾚｰﾄ	PLATE	1			
50	3	-------	ｶﾞｽｹｯﾄ	GASKET	2			
51	3	-------	ｽﾌﾟｰﾙ	SPOOL	3			
52	3	-------	ﾌｨﾙﾀ ﾄｸｼｭ	FILTER;SPL	3			
53	3	108R006Z025N	ﾛｯｶｸｱﾅB M6X25-12.9	BOLT;HEX SOC HD	2			
54	1A	-------	ﾌﾟﾚｰﾄ ASS'Y	PLATE;SPL	1			
55	2A	-------	ﾌﾟﾚｰﾄ KIT	PLATE;SPL	1			
56	3	-------	ﾌﾟﾚｰﾄ	PLATE	1			
57	3	-------	ﾌﾟﾚｰﾄ	PLATE	1			
58	3	-------	ﾌﾟﾚｰﾄ	PLATE	1			
59	3	-------	ｶﾞｽｹｯﾄ	GASKET	2			
60	3	-------	ｽﾌﾟｰﾙ	SPOOL	4			
61	3	-------	ﾌｨﾙﾀ ﾄｸｼｭ	FILTER;SPL	4			
62	3	108R006Z025N	ﾛｯｶｸｱﾅB M6X25-12.9	BOLT;HEX SOC HD	2			
63	1	LBQ0162	O-ﾘﾝｸﾞ JISB2401 1BP1	O-RING	1			
64	1	LBB0162	ﾘﾝｸﾞ;ﾊﾞｯｸｱｯﾌﾟ	RING;BACK-UP	2			
65	1	LJ00726	ﾎﾟﾍﾟｯﾄ	POPPET	2			
66	1	LG00340	ｽﾌﾟﾘﾝｸﾞ;ｱｯｼｭｸ	SPRING;COMPRESSION	2			
67	1	LJ00727	ﾎﾟﾍﾟｯﾄ	POPPET	7			
68	1	LG00341	ｽﾌﾟﾘﾝｸﾞ;ｱｯｼｭｸ	SPRING;COMPRESSION	8			
69	1	LBQ0322	O-ﾘﾝｸﾞ JISB2401 1BP3	O-RING	10			
70	1	LH00248	ﾌﾗﾝｼﾞ	FLANGE;SPL	6			
71	1	LPC0180	ﾎﾟﾍﾟｯﾄ	POPPET	2			
72	1	LSC0227	ｽﾌﾟﾘﾝｸﾞ ﾄｸｼｭ	SPRING;SPL	2			
73	1	LJ00731	ｵﾘﾌｨｽ	ORIFICE	1			
74	1	LBQ0062	O-ﾘﾝｸﾞ JISB2401 1BP6	O-RING	27			
75	1	LR015280	ﾎﾞﾃﾞｨ ASSY	BODY	1			
76	1	LH005410	ﾌﾗﾝｼﾞ	FLANGE;SPL	1			
77	1	LJ016050	ﾎﾟﾍﾟｯﾄ	POPPET	1			
78	1	LG006510	ｽﾌﾟﾘﾝｸﾞ	SPRING;SPL	1			
79	1	LLC0082	ﾌﾟﾗｸﾞ	PLUG	1			
80	1	LBQ6910	O-ﾘﾝｸﾞ	O-RING	1			
81	1	LSC0094	ｽﾌﾟﾘﾝｸﾞ	SPRING;SPL	1			
82	1	LJ014680	ﾎﾟﾍﾟｯﾄ	POPPET	1			
83	1	LJ00730	ﾎﾟﾍﾟｯﾄ	POPPET	1			
84	1	LH00250	ﾌﾗﾝｼﾞ	FLANGE;SPL	2			
85	1	LH004960	ｽﾍﾟｰｻ	SPACER	2			

https://truckmanualshub.com/

100 [101 , 102] 103 [104 , 105] 110 [111] 112 [113] 131 [132 , 133]

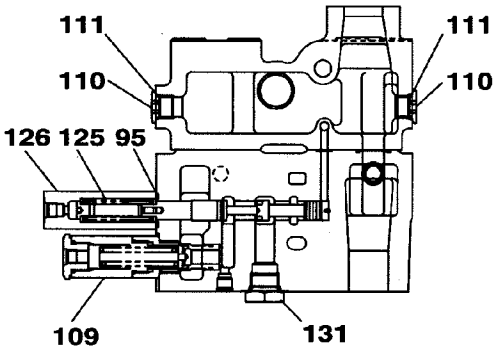

C～C

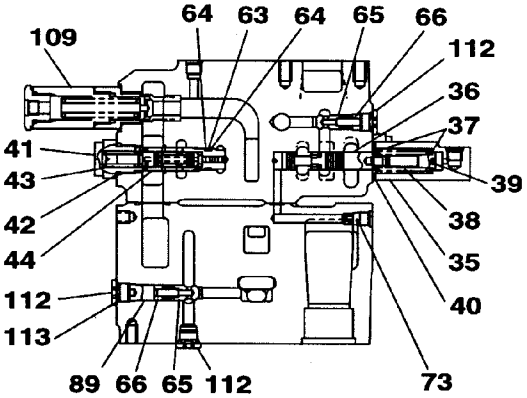

D～D

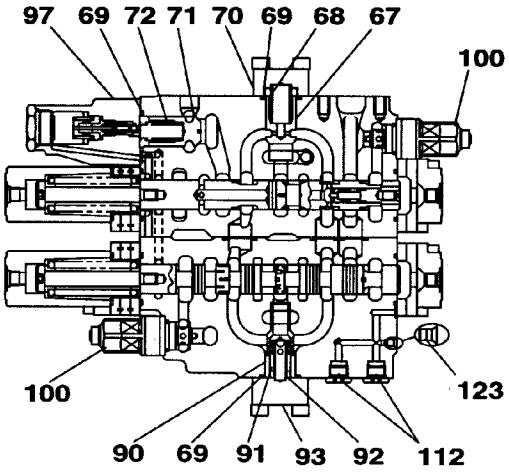

E～E

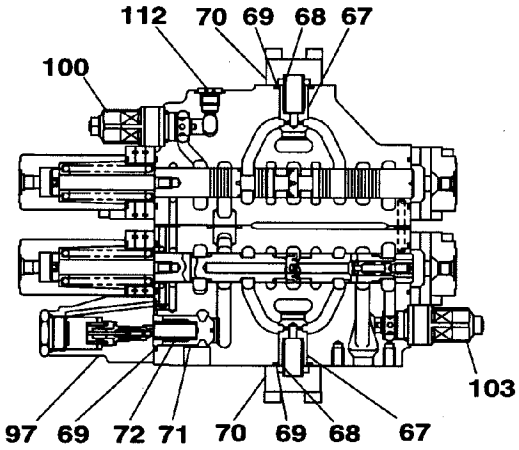

F～F

KRJ16011

https://truckmanualshub.com/

VALVE;CONTROL	ﾊﾞﾙﾌﾞ;ｺﾝﾄﾛｰﾙ	ZAJ313L0120 000 8/20	000

符号 ITEM	構成 COMPO	部品番号 PART NO.	部品名	PART NAME	個数 Q'TY	互換 ICA	代替部品 REPLACEABLE PART	備考 MEMO
27	3	-------	ﾌｨﾙﾀ ﾄｸｼｭ	FILTER;SPL	5			
28	3	LBQ0453	O-ﾘﾝｸﾞ JISB2401 1BG4	O-RING	5			
29	3	108R006Z025N	ﾛｯｶｸｱﾅB M6X25-12.9	BOLT;HEX SOC HD	2			
30	1	-------	ﾊｳｼﾞﾝｸﾞ;ﾊﾞﾙﾌﾞ	HOUSING;VALVE	1			
31	1	-------	ｽﾌﾟｰﾙ ASSY	SPOOL	1			
32	1	-------	ｽﾌﾟｰﾙ ASSY	SPOOL	1			
33	1	-------	ｽﾌﾟｰﾙ ASSY	SPOOL	1			
34	1	-------	ｽﾌﾟｰﾙ ASSY	SPOOL	1			
35	1	LR015250	ｷｬｯﾌﾟ	CAP	1			
36	1	-------	ｽﾌﾟｰﾙ;ﾊﾞﾙﾌﾞ	SPOOL;VALVE	1			
37	1	LSC0158	ｼｰﾄ;ｽﾌﾟﾘﾝｸﾞ	SEAT;SPRING	2			
38	1	LG00338	ｽﾌﾟﾘﾝｸﾞ;ｱｯｼｭｸ	SPRING;COMPRESSION	1			
39	1	LPC0222	ｴﾝﾄﾞ ｽﾌﾟｰﾙ	END;SPL	1			
40	1	LBQ0260	O-ﾘﾝｸﾞ JISB2401 1AP2	O-RING	1			
41	1	LK005690	ﾌﾟﾗｸﾞ	PLUG	1			
42	1	LBQ0242	O-ﾘﾝｸﾞ JISB2401 1BP2	O-RING	1			
43	1	LG00339	ｽﾌﾟﾘﾝｸﾞ;ｱｯｼｭｸ	SPRING;COMPRESSION	1			
44	1	LJ014690	ｽﾌﾟｰﾙ ASSY	SPOOL	1			
45	1A	-------	ﾌﾟﾚｰﾄ ASS'Y	PLATE;SPL	1			
46	2A	-------	ﾌﾟﾚｰﾄ KIT	PLATE;SPL	1			
47	3	-------	ﾌﾟﾚｰﾄ	PLATE	1			
48	3	-------	ﾌﾟﾚｰﾄ	PLATE	1			
49	3	-------	ﾌﾟﾚｰﾄ	PLATE	1			
50	3	-------	ｶﾞｽｹｯﾄ	GASKET	2			
51	3	-------	ｽﾌﾟｰﾙ	SPOOL	3			
52	3	-------	ﾌｨﾙﾀ ﾄｸｼｭ	FILTER;SPL	3			
53	3	108R006Z025N	ﾛｯｶｸｱﾅB M6X25-12.9	BOLT;HEX SOC HD	2			
54	1A	-------	ﾌﾟﾚｰﾄ ASS'Y	PLATE;SPL	1			
55	2A	-------	ﾌﾟﾚｰﾄ KIT	PLATE;SPL	1			
56	3	-------	ﾌﾟﾚｰﾄ	PLATE	1			
57	3	-------	ﾌﾟﾚｰﾄ	PLATE	1			
58	3	-------	ﾌﾟﾚｰﾄ	PLATE	1			
59	3	-------	ｶﾞｽｹｯﾄ	GASKET	2			
60	3	-------	ｽﾌﾟｰﾙ	SPOOL	4			
61	3	-------	ﾌｨﾙﾀ ﾄｸｼｭ	FILTER;SPL	4			
62	3	108R006Z025N	ﾛｯｶｸｱﾅB M6X25-12.9	BOLT;HEX SOC HD	2			
63	1	LBQ0162	O-ﾘﾝｸﾞ JISB2401 1BP1	O-RING	1			
64	1	LBB0162	ﾘﾝｸﾞ;ﾊﾞｯｸｱｯﾌﾟ	RING;BACK-UP	2			
65	1	LJ00726	ﾎﾟﾍﾟｯﾄ	POPPET	2			
66	1	LG00340	ｽﾌﾟﾘﾝｸﾞ;ｱｯｼｭｸ	SPRING;COMPRESSION	2			
67	1	LJ00727	ﾎﾟﾍﾟｯﾄ	POPPET	7			
68	1	LG00341	ｽﾌﾟﾘﾝｸﾞ;ｱｯｼｭｸ	SPRING;COMPRESSION	8			
69	1	LBQ0322	O-ﾘﾝｸﾞ JISB2401 1BP3	O-RING	10			
70	1	LH00248	ﾌﾗﾝｼﾞ	FLANGE;SPL	6			
71	1	LPC0180	ﾎﾟﾍﾟｯﾄ	POPPET	2			
72	1	LSC0227	ｽﾌﾟﾘﾝｸﾞ ﾄｸｼｭ	SPRING;SPL	2			
73	1	LJ00731	ｵﾘﾌｨｽ	ORIFICE	1			
74	1	LBQ0062	O-ﾘﾝｸﾞ JISB2401 1BP6	O-RING	27			
75	1	LR015280	ﾎﾞﾃﾞｨ ASSY	BODY	1			
76	1	LH005410	ﾌﾗﾝｼﾞ	FLANGE;SPL	1			
77	1	LJ016050	ﾎﾟﾍﾟｯﾄ	POPPET	1			
78	1	LG006510	ｽﾌﾟﾘﾝｸﾞ	SPRING;SPL	1			
79	1	LLC0082	ﾌﾟﾗｸﾞ	PLUG	1			
80	1	LBQ6910	O-ﾘﾝｸﾞ	O-RING	1			
81	1	LSC0094	ｽﾌﾟﾘﾝｸﾞ	SPRING;SPL	1			
82	1	LJ014680	ﾎﾟﾍﾟｯﾄ	POPPET	1			
83	1	LJ00730	ﾎﾟﾍﾟｯﾄ	POPPET	1			
84	1	LH00250	ﾌﾗﾝｼﾞ	FLANGE;SPL	2			
85	1	LH004960	ｽﾍﾟｰｻ	SPACER	2			
86	1	LBQ0251	O-ﾘﾝｸﾞ JISB2401 1AG2	O-RING	2			
87	1	LBB0253	ﾘﾝｸﾞ;ﾊﾞｯｸｱｯﾌﾟ	RING;BACK-UP	2			
88	1	LBQ0553	O-ﾘﾝｸﾞ JISB2401 1BG5	O-RING	1			
89	1	LH004970	ｽﾍﾟｰｻ	SPACER	1			
90	1	LH004980	ｽﾘｰﾌﾞ	SLEEVE	1			
91	1	LPC0098	ﾎﾟﾍﾟｯﾄ	POPPET	1			
92	1	LSC0187	ｽﾌﾟﾘﾝｸﾞ	SPRING;SPL	1			
93	1	LH004990	ﾌﾗﾝｼﾞ ﾄｸｼｭ	FLANGE;SPL	1			
94	1	LE012520	O-ﾘﾝｸﾞ ﾄｸｼｭ ﾌﾂｿ	O-RING	3			

https://truckmanualshub.com/

100 [101 , 102]
131 [132 , 133]
112 [113]
134 [135 ~ 138]
114 [115 , 116]

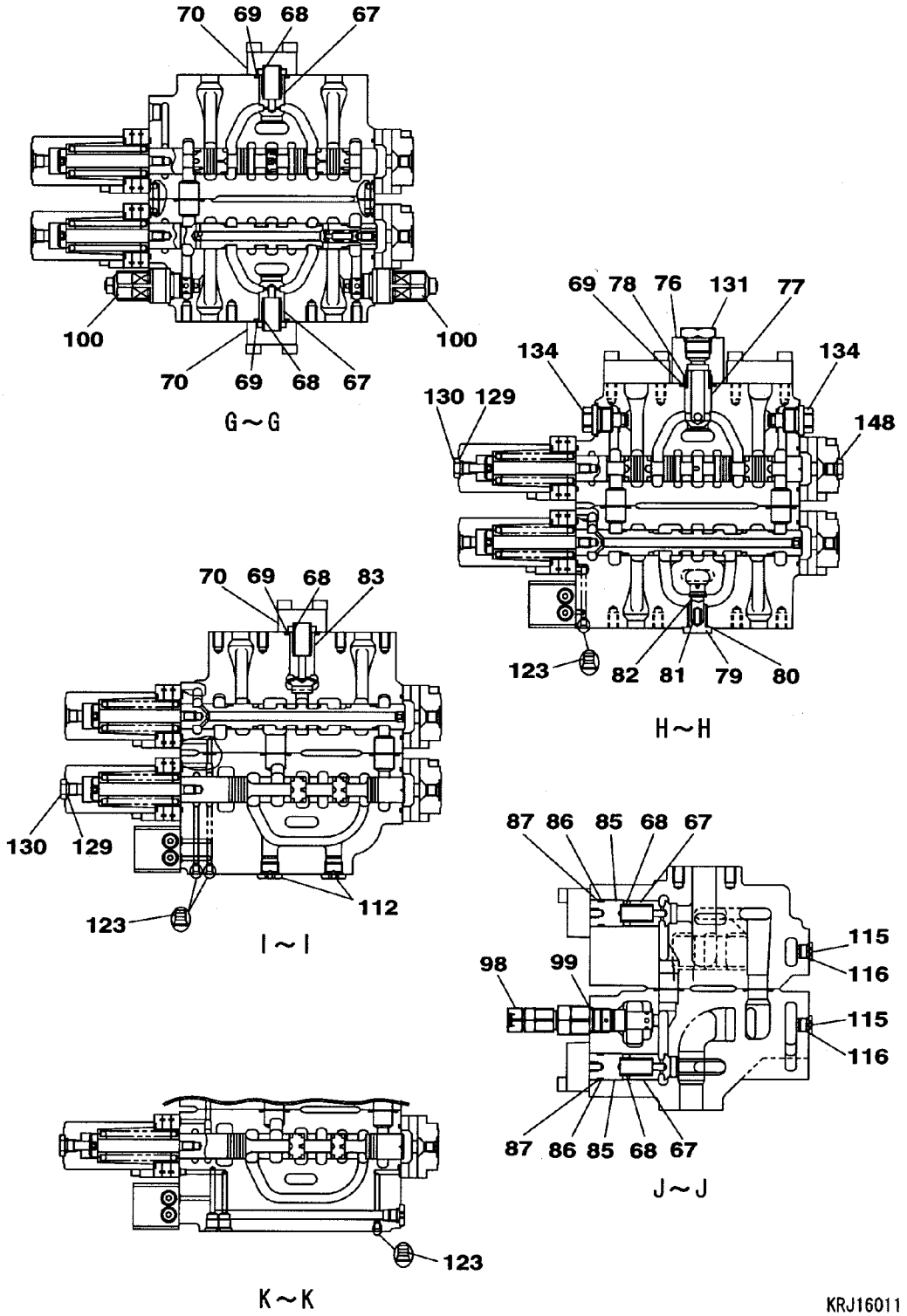

https://truckmanualshub.com/

VALVE;CONTROL	ﾊﾞﾙﾌﾞ;ｺﾝﾄﾛｰﾙ	ZAJ313L0120 000 10/20	000

符号 ITEM	構成 COMPO	部品番号 PART NO.	部品名	PART NAME	個数 Q'TY	互換 ICA	代替部品 REPLACEABLE PART	備考 MEMO
36	1	-------	ｽﾌﾟｰﾙ;ﾊﾞﾙﾌﾞ	SPOOL;VALVE	1			
37	1	LSC0158	ｼｰﾄ;ｽﾌﾟﾘﾝｸﾞ	SEAT;SPRING	2			
38	1	LG00338	ｽﾌﾟﾘﾝｸﾞ;ｱﾂｼｭｸ	SPRING;COMPRESSION	1			
39	1	LPC0222	ｴﾝﾄﾞ ｽﾌﾟｰﾙ	END;SPL	1			
40	1	LBQ0260	O-ﾘﾝｸﾞ JISB2401 1AP2	O-RING	1			
41	1	LK005690	ﾌﾟﾗｸﾞ	PLUG	1			
42	1	LBQ0242	O-ﾘﾝｸﾞ JISB2401 1BP2	O-RING	1			
43	1	LG00339	ｽﾌﾟﾘﾝｸﾞ;ｱﾂｼｭｸ	SPRING;COMPRESSION	1			
44	1	LJ014690	ｽﾌﾟｰﾙ ASSY	SPOOL	1			
45	1A	-------	ﾌﾟﾚｰﾄ ASS'Y	PLATE;SPL	1			
46	2A	-------	ﾌﾟﾚｰﾄ KIT	PLATE;SPL	1			
47	3	-------	ﾌﾟﾚｰﾄ	PLATE	1			
48	3	-------	ﾌﾟﾚｰﾄ	PLATE	1			
49	3	-------	ﾌﾟﾚｰﾄ	PLATE	1			
50	3	-------	ｶﾞｽｹｯﾄ	GASKET	2			
51	3	-------	ｽﾌﾟｰﾙ	SPOOL	3			
52	3	-------	ﾌｨﾙﾀ ﾄｸｼｭ	FILTER;SPL	3			
53	3	108R006Z025N	ﾛｯｶｸｱﾅB M6X25-12.9	BOLT;HEX SOC HD	2			
54	1A	-------	ﾌﾟﾚｰﾄ ASS'Y	PLATE;SPL	1			
55	2A	-------	ﾌﾟﾚｰﾄ KIT	PLATE;SPL	1			
56	3	-------	ﾌﾟﾚｰﾄ	PLATE	1			
57	3	-------	ﾌﾟﾚｰﾄ	PLATE	1			
58	3	-------	ﾌﾟﾚｰﾄ	PLATE	1			
59	3	-------	ｶﾞｽｹｯﾄ	GASKET	2			
60	3	-------	ｽﾌﾟｰﾙ	SPOOL	4			
61	3	-------	ﾌｨﾙﾀ ﾄｸｼｭ	FILTER;SPL	4			
62	3	108R006Z025N	ﾛｯｶｸｱﾅB M6X25-12.9	BOLT;HEX SOC HD	2			
63	1	LBQ0162	O-ﾘﾝｸﾞ JISB2401 1BP1	O-RING	1			
64	1	LBB0162	ﾘﾝｸﾞ;ﾊﾞｯｸｱｯﾌﾟ	RING;BACK-UP	2			
65	1	LJ00726	ﾎﾟﾍﾟｯﾄ	POPPET	2			
66	1	LG00340	ｽﾌﾟﾘﾝｸﾞ;ｱﾂｼｭｸ	SPRING;COMPRESSION	2			
67	1	LJ00727	ﾎﾟﾍﾟｯﾄ	POPPET	7			
68	1	LG00341	ｽﾌﾟﾘﾝｸﾞ;ｱﾂｼｭｸ	SPRING;COMPRESSION	8			
69	1	LBQ0322	O-ﾘﾝｸﾞ JISB2401 1BP3	O-RING	10			
70	1	LH00248	ﾌﾗﾝｼﾞ	FLANGE;SPL	6			
71	1	LPC0180	ﾎﾟﾍﾟｯﾄ	POPPET	2			
72	1	LSC0227	ｽﾌﾟﾘﾝｸﾞ ﾄｸｼｭ	SPRING;SPL	2			
73	1	LJ00731	ｵﾘﾌｨｽ	ORIFICE	1			
74	1	LBQ0062	O-ﾘﾝｸﾞ JISB2401 1BP6	O-RING	27			
75	1	LR015280	ﾎﾞﾃﾞｨ ASSY	BODY	1			
76	1	LH005410	ﾌﾗﾝｼﾞ	FLANGE;SPL	1			
77	1	LJ016050	ﾎﾟﾍﾟｯﾄ	POPPET	1			
78	1	LG006510	ｽﾌﾟﾘﾝｸﾞ	SPRING;SPL	1			
79	1	LLC0082	ﾌﾟﾗｸﾞ	PLUG	1			
80	1	LBQ6910	O-ﾘﾝｸﾞ	O-RING	1			
81	1	LSC0094	ｽﾌﾟﾘﾝｸﾞ	SPRING;SPL	1			
82	1	LJ014680	ﾎﾟﾍﾟｯﾄ	POPPET	1			
83	1	LJ00730	ﾎﾟﾍﾟｯﾄ	POPPET	1			
84	1	LH00250	ﾌﾗﾝｼﾞ	FLANGE;SPL	2			
85	1	LH004960	ｽﾍﾟｰｻ	SPACER	2			
86	1	LBQ0251	O-ﾘﾝｸﾞ JISB2401 1AG2	O-RING	2			
87	1	LBB0253	ﾘﾝｸﾞ;ﾊﾞｯｸｱｯﾌﾟ	RING;BACK-UP	2			
88	1	LBQ0553	O-ﾘﾝｸﾞ JISB2401 1BG5	O-RING	1			
89	1	LH004970	ｽﾍﾟｰｻ	SPACER	1			
90	1	LH004980	ｽﾘｰﾌﾞ	SLEEVE	1			
91	1	LPC0098	ﾎﾟﾍﾟｯﾄ	POPPET	1			
92	1	LSC0187	ｽﾌﾟﾘﾝｸﾞ	SPRING;SPL	1			
93	1	LH004990	ﾌﾗﾝｼﾞ ﾄｸｼｭ	FLANGE;SPL	1			
94	1	LE012520	O-ﾘﾝｸﾞ ﾄｸｼｭ ﾌﾂｿ	O-RING	3			
95	1	LE014890	O-ﾘﾝｸﾞ	O-RING	14			
96	1	LBQ0102	O-ﾘﾝｸﾞ JISB2401 1BP1	O-RING	12			
97	1	LJ014710	ﾊﾞﾙﾌﾞ ｱﾝﾁﾄﾞﾘﾌﾄ ASSY	VALVE;SPL	2			
98	1A	LJ014720	ﾊﾞﾙﾌﾞ;ﾘﾘｰﾌ KIT	VALVE;RELIEF	1			
99	2	LBQ6912	O-ﾘﾝｸﾞ AS568-912-HS9	O-RING	1			
100	1A	LJ014730	ﾊﾞﾙﾌﾞ;ﾘﾘｰﾌ KIT	VALVE;RELIEF	5			
101	2	LBQ6912	O-ﾘﾝｸﾞ AS568-912-HS9	O-RING	5			
102	2	LBQ0102	O-ﾘﾝｸﾞ JISB2401 1BP1	O-RING	5			
103	1A	LJ014740	ﾊﾞﾙﾌﾞ;ﾘﾘｰﾌ KIT	VALVE;RELIEF	1			

https://truckmanualshub.com/

詳細/DETAIL

98 [99]

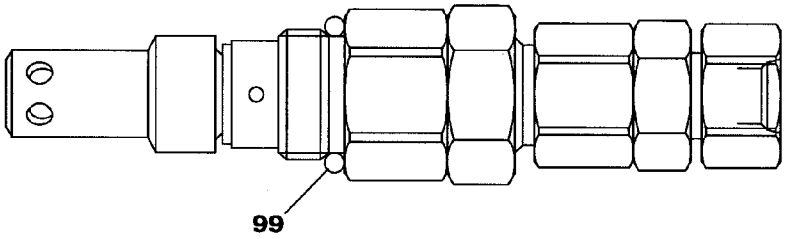

106 [107 , 108]

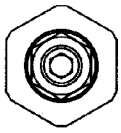

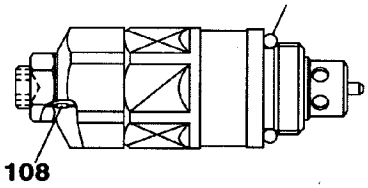

131 [132 , 133]

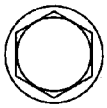

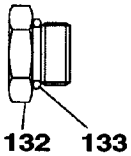

100 [101 , 102]

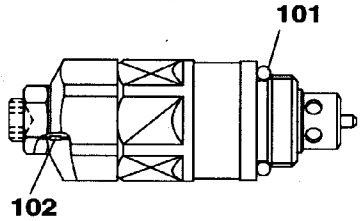

134 [135～138]

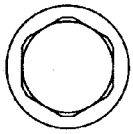

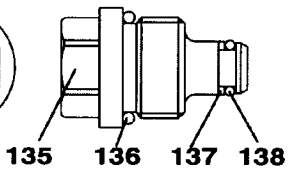

103 [104 , 105]

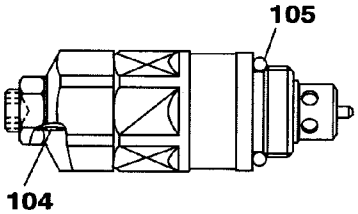

145 [146 , 147]

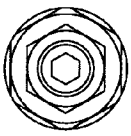

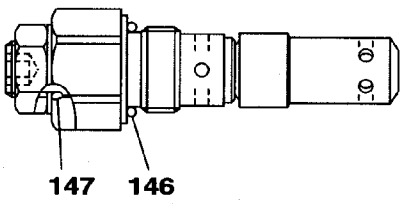

KRJ16011

https://truckmanualshub.com/

VALVE;CONTROL	ﾊﾞﾙﾌﾞ;ｺﾝﾄﾛｰﾙ	ZAJ313L0120 000 12/20	000

符号 ITEM	構成 COMPO	部品番号 PART NO.	部品名	PART NAME	個数 Q'TY	互換 ICA	代替部品 REPLACEABLE PART	備考 MEMO
45	1A	-------	ﾌﾟﾚｰﾄ ASS'Y	PLATE;SPL	1			
46	2A	-------	ﾌﾟﾚｰﾄ KIT	PLATE;SPL	1			
47	3	-------	ﾌﾟﾚｰﾄ	PLATE	1			
48	3	-------	ﾌﾟﾚｰﾄ	PLATE	1			
49	3	-------	ﾌﾟﾚｰﾄ	PLATE	1			
50	3	-------	ｶﾞｽｹｯﾄ	GASKET	2			
51	3	-------	ｽﾌﾟｰﾙ	SPOOL	3			
52	3	-------	ﾌｨﾙﾀ ﾄｸｼｭ	FILTER;SPL	3			
53	3	108R006Z025N	ﾛｯｶｸｱﾅB M6X25-12.9	BOLT;HEX SOC HD	2			
54	1A	-------	ﾌﾟﾚｰﾄ ASS'Y	PLATE;SPL	1			
55	2A	-------	ﾌﾟﾚｰﾄ KIT	PLATE;SPL	1			
56	3	-------	ﾌﾟﾚｰﾄ	PLATE	1			
57	3	-------	ﾌﾟﾚｰﾄ	PLATE	1			
58	3	-------	ﾌﾟﾚｰﾄ	PLATE	1			
59	3	-------	ｶﾞｽｹｯﾄ	GASKET	2			
60	3	-------	ｽﾌﾟｰﾙ	SPOOL	4			
61	3	-------	ﾌｨﾙﾀ ﾄｸｼｭ	FILTER;SPL	4			
62	3	108R006Z025N	ﾛｯｶｸｱﾅB M6X25-12.9	BOLT;HEX SOC HD	2			
63	1	LBQ0162	O-ﾘﾝｸﾞ JISB2401 1BP1	O-RING	1			
64	1	LBB0162	ﾘﾝｸﾞ;ﾊﾞｯｸｱｯﾌﾟ	RING;BACK-UP	2			
65	1	LJ00726	ﾎﾟﾍﾟｯﾄ	POPPET	2			
66	1	LG00340	ｽﾌﾟﾘﾝｸﾞ;ｱｯｼｭｸ	SPRING;COMPRESSION	2			
67	1	LJ00727	ﾎﾟﾍﾟｯﾄ	POPPET	7			
68	1	LG00341	ｽﾌﾟﾘﾝｸﾞ;ｱｯｼｭｸ	SPRING;COMPRESSION	8			
69	1	LBQ0322	O-ﾘﾝｸﾞ JISB2401 1BP3	O-RING	10			
70	1	LH00248	ﾌﾗﾝｼﾞ	FLANGE;SPL	6			
71	1	LPC0180	ﾎﾟﾍﾟｯﾄ	POPPET	2			
72	1	LSC0227	ｽﾌﾟﾘﾝｸﾞ ﾄｸｼｭ	SPRING;SPL	2			
73	1	LJ00731	ｵﾘﾌｨｽ	ORIFICE	1			
74	1	LBQ0062	O-ﾘﾝｸﾞ JISB2401 1BP6	O-RING	27			
75	1	LR015280	ﾎﾞﾃﾞｨ ASSY	BODY	1			
76	1	LH005410	ﾌﾗﾝｼﾞ	FLANGE;SPL	1			
77	1	LJ016050	ﾎﾟﾍﾟｯﾄ	POPPET	1			
78	1	LG006510	ｽﾌﾟﾘﾝｸﾞ	SPRING;SPL	1			
79	1	LLC0082	ﾌﾟﾗｸﾞ	PLUG	1			
80	1	LBQ6910	O-ﾘﾝｸﾞ	O-RING	1			
81	1	LSC0094	ｽﾌﾟﾘﾝｸﾞ	SPRING;SPL	1			
82	1	LJ014680	ﾎﾟﾍﾟｯﾄ	POPPET	1			
83	1	LJ00730	ﾎﾟﾍﾟｯﾄ	POPPET	1			
84	1	LH00250	ﾌﾗﾝｼﾞ	FLANGE;SPL	2			
85	1	LH004960	ｽﾍﾟｰｻ	SPACER	2			
86	1	LBQ0251	O-ﾘﾝｸﾞ JISB2401 1AG2	O-RING	2			
87	1	LBB0253	ﾘﾝｸﾞ;ﾊﾞｯｸｱｯﾌﾟ	RING;BACK-UP	2			
88	1	LBQ0553	O-ﾘﾝｸﾞ JISB2401 1BG5	O-RING	1			
89	1	LH004970	ｽﾍﾟｰｻ	SPACER	1			
90	1	LH004980	ｽﾘｰﾌﾞ	SLEEVE	1			
91	1	LPC0098	ﾎﾟﾍﾟｯﾄ	POPPET	1			
92	1	LSC0187	ｽﾌﾟﾘﾝｸﾞ	SPRING;SPL	1			
93	1	LH004990	ﾌﾗﾝｼﾞ ﾄｸｼｭ	FLANGE;SPL	1			
94	1	LE012520	O-ﾘﾝｸﾞ ﾄｸｼｭ ﾌﾂｿ	O-RING	3			
95	1	LE014890	O-ﾘﾝｸﾞ	O-RING	14			
96	1	LBQ0102	O-ﾘﾝｸﾞ JISB2401 1BP1	O-RING	12			
97	1	LJ014710	ﾊﾞﾙﾌﾞ ｱﾝﾁﾄﾞﾘﾌﾄ ASSY	VALVE;SPL	2			
98	1A	LJ014720	ﾊﾞﾙﾌﾞ;ﾘﾘｰﾌ KIT	VALVE;RELIEF	1			
99	2	LBQ6912	O-ﾘﾝｸﾞ AS568-912-HS9	O-RING	1			
100	1A	LJ014730	ﾊﾞﾙﾌﾞ;ﾘﾘｰﾌ KIT	VALVE;RELIEF	5			
101	2	LBQ6912	O-ﾘﾝｸﾞ AS568-912-HS9	O-RING	5			
102	2	LBQ0102	O-ﾘﾝｸﾞ JISB2401 1BP1	O-RING	5			
103	1A	LJ014740	ﾊﾞﾙﾌﾞ;ﾘﾘｰﾌ KIT	VALVE;RELIEF	1			
104	2	LBQ6912	O-ﾘﾝｸﾞ AS568-912-HS9	O-RING	1			
105	2	LBQ0102	O-ﾘﾝｸﾞ JISB2401 1BP1	O-RING	1			
106	1A	LJ014750	ﾊﾞﾙﾌﾞ;ﾘﾘｰﾌ KIT	VALVE;RELIEF	2			
107	2	LBQ0102	O-ﾘﾝｸﾞ JISB2401 1BP1	O-RING	2			
108	2	LBQ6912	O-ﾘﾝｸﾞ AS568-912-HS9	O-RING	2			
109	1	LJ014700	ﾊﾞﾙﾌﾞ;ﾘﾘｰﾌ ASS'Y	VALVE;RELIEF	2			
110	1A	LNC0218	ﾌﾟﾗｸﾞ S/A	PLUG	4			
111	2	LBQ0182	O-ﾘﾝｸﾞ JISB2401 1BP1	O-RING	4			
112	1A	LNC0217	ﾌﾟﾗｸﾞ S/A	PLUG	10			

https://truckmanualshub.com/

10 [11 ~ 19] 11 [12 ~ 19]

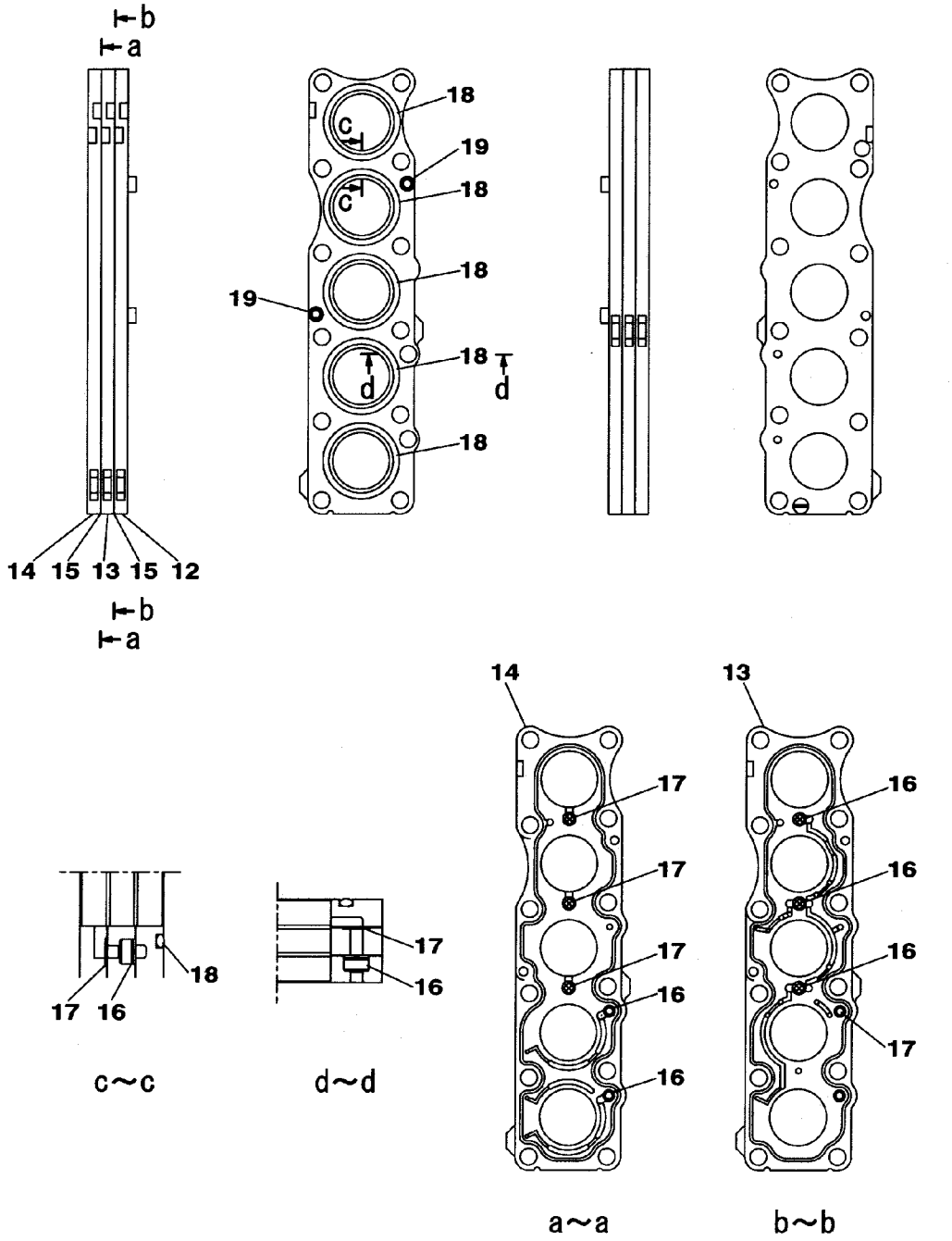

KRJ16011

https://truckmanualshub.com/

VALVE;CONTROL	ﾊﾞﾙﾌﾞ;ｺﾝﾄﾛｰﾙ	ZAJ313L0120 000 14/20	000

符号 ITEM	構成 COMPO	部品番号 PART NO.	部品名	PART NAME	個数 Q'TY	互換 ICA	代替部品 REPLACEABLE PART	備考 MEMO
54	1A	-------	ﾌﾟﾚｰﾄ ASS'Y	PLATE;SPL	1			
55	2A	-------	ﾌﾟﾚｰﾄ KIT	PLATE;SPL	1			
56	3	-------	ﾌﾟﾚｰﾄ	PLATE	1			
57	3	-------	ﾌﾟﾚｰﾄ	PLATE	1			
58	3	-------	ﾌﾟﾚｰﾄ	PLATE	1			
59	3	-------	ｶﾞｽｹｯﾄ	GASKET	2			
60	3	-------	ｽﾌﾟｰﾙ	SPOOL	4			
61	3	-------	ﾌｨﾙﾀ ﾄｸｼｭ	FILTER;SPL	4			
62	3	108R006Z025N	ﾛｯｶｸｱﾅB M6X25-12.9	BOLT;HEX SOC HD	2			
63	1	LBQ0162	O-ﾘﾝｸﾞ JISB2401 1BP1	O-RING	1			
64	1	LBB0162	ﾘﾝｸﾞ;ﾊﾞｯｸｱｯﾌﾟ	RING;BACK-UP	2			
65	1	LJ00726	ﾎﾟﾍﾟｯﾄ	POPPET	2			
66	1	LG00340	ｽﾌﾟﾘﾝｸﾞ;ｱｯｼｭｸ	SPRING;COMPRESSION	2			
67	1	LJ00727	ﾎﾟﾍﾟｯﾄ	POPPET	7			
68	1	LG00341	ｽﾌﾟﾘﾝｸﾞ;ｱｯｼｭｸ	SPRING;COMPRESSION	8			
69	1	LBQ0322	O-ﾘﾝｸﾞ JISB2401 1BP3	O-RING	10			
70	1	LH00248	ﾌﾗﾝｼﾞ	FLANGE;SPL	6			
71	1	LPC0180	ﾎﾟﾍﾟｯﾄ	POPPET	2			
72	1	LSC0227	ｽﾌﾟﾘﾝｸﾞ ﾄｸｼｭ	SPRING;SPL	2			
73	1	LJ00731	ｵﾘﾌｨｽ	ORIFICE	1			
74	1	LBQ0062	O-ﾘﾝｸﾞ JISB2401 1BP6	O-RING	27			
75	1	LR015280	ﾎﾞﾃﾞｨ ASSY	BODY	1			
76	1	LH005410	ﾌﾗﾝｼﾞ	FLANGE;SPL	1			
77	1	LJ016050	ﾎﾟﾍﾟｯﾄ	POPPET	1			
78	1	LG006510	ｽﾌﾟﾘﾝｸﾞ	SPRING;SPL	1			
79	1	LLC0082	ﾌﾟﾗｸﾞ	PLUG	1			
80	1	LBQ6910	O-ﾘﾝｸﾞ	O-RING	1			
81	1	LSC0094	ｽﾌﾟﾘﾝｸﾞ	SPRING;SPL	1			
82	1	LJ014680	ﾎﾟﾍﾟｯﾄ	POPPET	1			
83	1	LJ00730	ﾎﾟﾍﾟｯﾄ	POPPET	1			
84	1	LH00250	ﾌﾗﾝｼﾞ	FLANGE;SPL	2			
85	1	LH004960	ｽﾍﾟｰｻ	SPACER	2			
86	1	LBQ0251	O-ﾘﾝｸﾞ JISB2401 1AG2	O-RING	2			
87	1	LBB0253	ﾘﾝｸﾞ;ﾊﾞｯｸｱｯﾌﾟ	RING;BACK-UP	2			
88	1	LBQ0553	O-ﾘﾝｸﾞ JISB2401 1BG5	O-RING	1			
89	1	LH004970	ｽﾍﾟｰｻ	SPACER	1			
90	1	LH004980	ｽﾘｰﾌﾞ	SLEEVE	1			
91	1	LPC0098	ﾎﾟﾍﾟｯﾄ	POPPET	1			
92	1	LSC0187	ｽﾌﾟﾘﾝｸﾞ	SPRING;SPL	1			
93	1	LH004990	ﾌﾗﾝｼﾞ ﾄｸｼｭ	FLANGE;SPL	1			
94	1	LE012520	O-ﾘﾝｸﾞ ﾄｸｼｭ ﾌﾂｿ	O-RING	3			
95	1	LE014890	O-ﾘﾝｸﾞ	O-RING	14			
96	1	LBQ0102	O-ﾘﾝｸﾞ JISB2401 1BP1	O-RING	12			
97	1	LJ014710	ﾊﾞﾙﾌﾞ ｱﾝﾁﾄﾞﾘﾌﾄ ASSY	VALVE;SPL	2			
98	1A	LJ014720	ﾊﾞﾙﾌﾞ;ﾘﾘｰﾌ KIT	VALVE;RELIEF	1			
99	2	LBQ6912	O-ﾘﾝｸﾞ AS568-912-HS9	O-RING	1			
100	1A	LJ014730	ﾊﾞﾙﾌﾞ;ﾘﾘｰﾌ KIT	VALVE;RELIEF	5			
101	2	LBQ6912	O-ﾘﾝｸﾞ AS568-912-HS9	O-RING	5			
102	2	LBQ0102	O-ﾘﾝｸﾞ JISB2401 1BP1	O-RING	5			
103	1A	LJ014740	ﾊﾞﾙﾌﾞ;ﾘﾘｰﾌ KIT	VALVE;RELIEF	1			
104	2	LBQ6912	O-ﾘﾝｸﾞ AS568-912-HS9	O-RING	1			
105	2	LBQ0102	O-ﾘﾝｸﾞ JISB2401 1BP1	O-RING	1			
106	1A	LJ014750	ﾊﾞﾙﾌﾞ;ﾘﾘｰﾌ KIT	VALVE;RELIEF	2			
107	2	LBQ0102	O-ﾘﾝｸﾞ JISB2401 1BP1	O-RING	2			
108	2	LBQ6912	O-ﾘﾝｸﾞ AS568-912-HS9	O-RING	2			
109	1	LJ014700	ﾊﾞﾙﾌﾞ;ﾘﾘｰﾌ ASS'Y	VALVE;RELIEF	2			
110	1A	LNC0218	ﾌﾟﾗｸﾞ S/A	PLUG	4			
111	2	LBQ0182	O-ﾘﾝｸﾞ JISB2401 1BP1	O-RING	4			
112	1A	LNC0217	ﾌﾟﾗｸﾞ S/A	PLUG	10			
113	2	LBQ0142	O-ﾘﾝｸﾞ JISB2401 1BP1	O-RING	10			
114	1A	LNC0238	ﾌﾟﾗｸﾞ S/A	PLUG	3			
115	2	LK00328	ﾌﾟﾗｸﾞ	PLUG	3			
116	2	LBQ0112	O-ﾘﾝｸﾞ JISB2401 1BP1	O-RING	3			
117	1	108R010Z055B	ﾛｯｶｸｱﾅB JIS B 1180 M	BOLT;HEX SOC HD	32			
118	1	108R010Z040B	ﾛｯｶｸｱﾅB JIS B1176 M1	BOLT;HEX SOC HD	66			
119	1	108R016Z130B	ﾛｯｶｸｱﾅB JIS B1180 M1	BOLT;HEX SOC HD	8			
120	1	LUC0118	ﾛｯｶｸｱﾅB	BOLT;HEX SOC HD	4			
121	1	-------	ﾒｲﾊﾞﾝ;ｷﾊﾞﾝ	NAMEPLATE;SER NO.	1			

https://truckmanualshub.com/

20 [21 ~ 29] 21 [22 ~ 29]

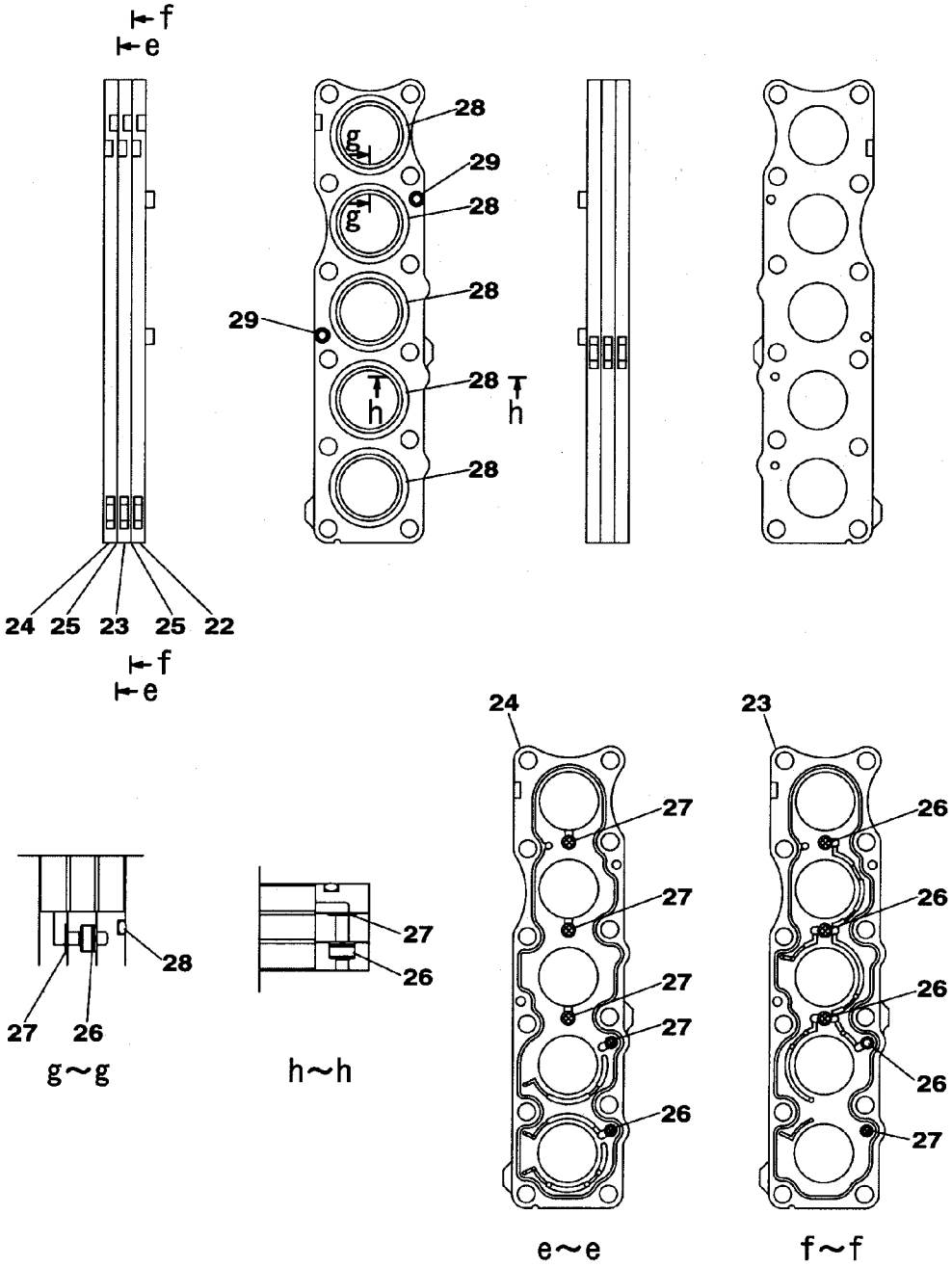

KRJ16011

https://truckmanualshub.com/

符号 ITEM	構成 COMPO	部品番号 PART NO.	部品名	PART NAME	個数 Q'TY	互換 ICA	代替部品 REPLACEABLE PART	備考 MEMO
63	1	LBQ0162	O-ﾘﾝｸﾞ JISB2401 1BP1	O-RING	1			
64	1	LBB0162	ﾘﾝｸﾞ;ﾊﾞｯｸｱｯﾌﾟ	RING;BACK-UP	2			
65	1	LJ00726	ﾎﾟﾍﾟｯﾄ	POPPET	2			
66	1	LG00340	ｽﾌﾟﾘﾝｸﾞ;ｱｯｼｭｸ	SPRING;COMPRESSION	2			
67	1	LJ00727	ﾎﾟﾍﾟｯﾄ	POPPET	7			
68	1	LG00341	ｽﾌﾟﾘﾝｸﾞ;ｱｯｼｭｸ	SPRING;COMPRESSION	8			
69	1	LBQ0322	O-ﾘﾝｸﾞ JISB2401 1BP3	O-RING	10			
70	1	LH00248	ﾌﾗﾝｼﾞ	FLANGE;SPL	6			
71	1	LPC0180	ﾎﾟﾍﾟｯﾄ	POPPET	2			
72	1	LSC0227	ｽﾌﾟﾘﾝｸﾞ ﾄｸｼｭ	SPRING;SPL	2			
73	1	LJ00731	ｵﾘﾌｨｽ	ORIFICE	1			
74	1	LBQ0062	O-ﾘﾝｸﾞ JISB2401 1BP6	O-RING	27			
75	1	LR015280	ﾎﾞﾃﾞｨ ASSY	BODY	1			
76	1	LH005410	ﾌﾗﾝｼﾞ	FLANGE;SPL	1			
77	1	LJ016050	ﾎﾟﾍﾟｯﾄ	POPPET	1			
78	1	LG006510	ｽﾌﾟﾘﾝｸﾞ	SPRING;SPL	1			
79	1	LLC0082	ﾌﾟﾗｸﾞ	PLUG	1			
80	1	LBQ6910	O-ﾘﾝｸﾞ	O-RING	1			
81	1	LSC0094	ｽﾌﾟﾘﾝｸﾞ	SPRING;SPL	1			
82	1	LJ014680	ﾎﾟﾍﾟｯﾄ	POPPET	1			
83	1	LJ00730	ﾎﾟﾍﾟｯﾄ	POPPET	1			
84	1	LH00250	ﾌﾗﾝｼﾞ	FLANGE;SPL	2			
85	1	LH004960	ｽﾍﾟｰｻ	SPACER	2			
86	1	LBQ0251	O-ﾘﾝｸﾞ JISB2401 1AG2	O-RING	2			
87	1	LBB0253	ﾘﾝｸﾞ;ﾊﾞｯｸｱｯﾌﾟ	RING;BACK-UP	2			
88	1	LBQ0553	O-ﾘﾝｸﾞ JISB2401 1BG5	O-RING	1			
89	1	LH004970	ｽﾍﾟｰｻ	SPACER	1			
90	1	LH004980	ｽﾘｰﾌﾞ	SLEEVE	1			
91	1	LPC0098	ﾎﾟﾍﾟｯﾄ	POPPET	1			
92	1	LSC0187	ｽﾌﾟﾘﾝｸﾞ	SPRING;SPL	1			
93	1	LH004990	ﾌﾗﾝｼﾞ ﾄｸｼｭ	FLANGE;SPL	1			
94	1	LE012520	O-ﾘﾝｸﾞ ﾄｸｼｭ ﾌﾂｿ	O-RING	3			
95	1	LE014890	O-ﾘﾝｸﾞ	O-RING	14			
96	1	LBQ0102	O-ﾘﾝｸﾞ JISB2401 1BP1	O-RING	12			
97	1	LJ014710	ﾊﾞﾙﾌﾞ ｱﾝﾁﾄﾞﾘﾌﾄ ASSY	VALVE;SPL	2			
98	1A	LJ014720	ﾊﾞﾙﾌﾞ;ﾘﾘｰﾌ KIT	VALVE;RELIEF	1			
99	2	LBQ6912	O-ﾘﾝｸﾞ AS568-912-HS9	O-RING	1			
100	1A	LJ014730	ﾊﾞﾙﾌﾞ;ﾘﾘｰﾌ KIT	VALVE;RELIEF	5			
101	2	LBQ6912	O-ﾘﾝｸﾞ AS568-912-HS9	O-RING	5			
102	2	LBQ0102	O-ﾘﾝｸﾞ JISB2401 1BP1	O-RING	5			
103	1A	LJ014740	ﾊﾞﾙﾌﾞ;ﾘﾘｰﾌ KIT	VALVE;RELIEF	1			
104	2	LBQ6912	O-ﾘﾝｸﾞ AS568-912-HS9	O-RING	1			
105	2	LBQ0102	O-ﾘﾝｸﾞ JISB2401 1BP1	O-RING	1			
106	1A	LJ014750	ﾊﾞﾙﾌﾞ;ﾘﾘｰﾌ KIT	VALVE;RELIEF	2			
107	2	LBQ0102	O-ﾘﾝｸﾞ JISB2401 1BP1	O-RING	2			
108	2	LBQ6912	O-ﾘﾝｸﾞ AS568-912-HS9	O-RING	2			
109	1	LJ014700	ﾊﾞﾙﾌﾞ;ﾘﾘｰﾌ ASS'Y	VALVE;RELIEF	2			
110	1A	LNC0218	ﾌﾟﾗｸﾞ S/A	PLUG	4			
111	2	LBQ0182	O-ﾘﾝｸﾞ JISB2401 1BP1	O-RING	4			
112	1A	LNC0217	ﾌﾟﾗｸﾞ S/A	PLUG	10			
113	2	LBQ0142	O-ﾘﾝｸﾞ JISB2401 1BP1	O-RING	10			
114	1A	LNC0238	ﾌﾟﾗｸﾞ S/A	PLUG	3			
115	2	LK00328	ﾌﾟﾗｸﾞ	PLUG	3			
116	2	LBQ0112	O-ﾘﾝｸﾞ JISB2401 1BP1	O-RING	3			
117	1	108R010Z055B	ﾛｯｶｸｱﾅB JIS B 1180 M	BOLT;HEX SOC HD	32			
118	1	108R010Z040B	ﾛｯｶｸｱﾅB JIS B1176 M1	BOLT;HEX SOC HD	66			
119	1	108R016Z130B	ﾛｯｶｸｱﾅB JIS B1180 M1	BOLT;HEX SOC HD	8			
120	1	LUC0118	ﾛｯｶｸｱﾅB	BOLT;HEX SOC HD	4			
121	1	-------	ﾒｲﾊﾞﾝ;ｷﾊﾞﾝ	NAMEPLATE;SER NO.	1			
122	1	-------	ｽｸﾘｭｰ ﾄﾞﾗｲﾌﾞ	SCREW	2			
123	1	-------	ﾌﾟﾗｸﾞ	PLUG	5			
124	1	LA011120	ﾛｯｶｸｱﾅB	BOLT;HEX SOC HD	4			
125	1	-------	ｽﾌﾟｰﾙ ASS'Y	SPOOL	1			
126	1	LR015290	ｷｬｯﾌﾟ	CAP	1			
127	1	LR00579	ｷｬｯﾌﾟ	CAP	2			
128	1	LBQ5219	O-ﾘﾝｸﾞ	O-RING	2			
129	1	LBQ0112	O-ﾘﾝｸﾞ JISB2401 1BP1	O-RING	2			
130	1	LK00301	ﾌﾟﾗｸﾞ	PLUG	2			

https://truckmanualshub.com/

45 [46 ~ 53] 46 [47 ~ 53]

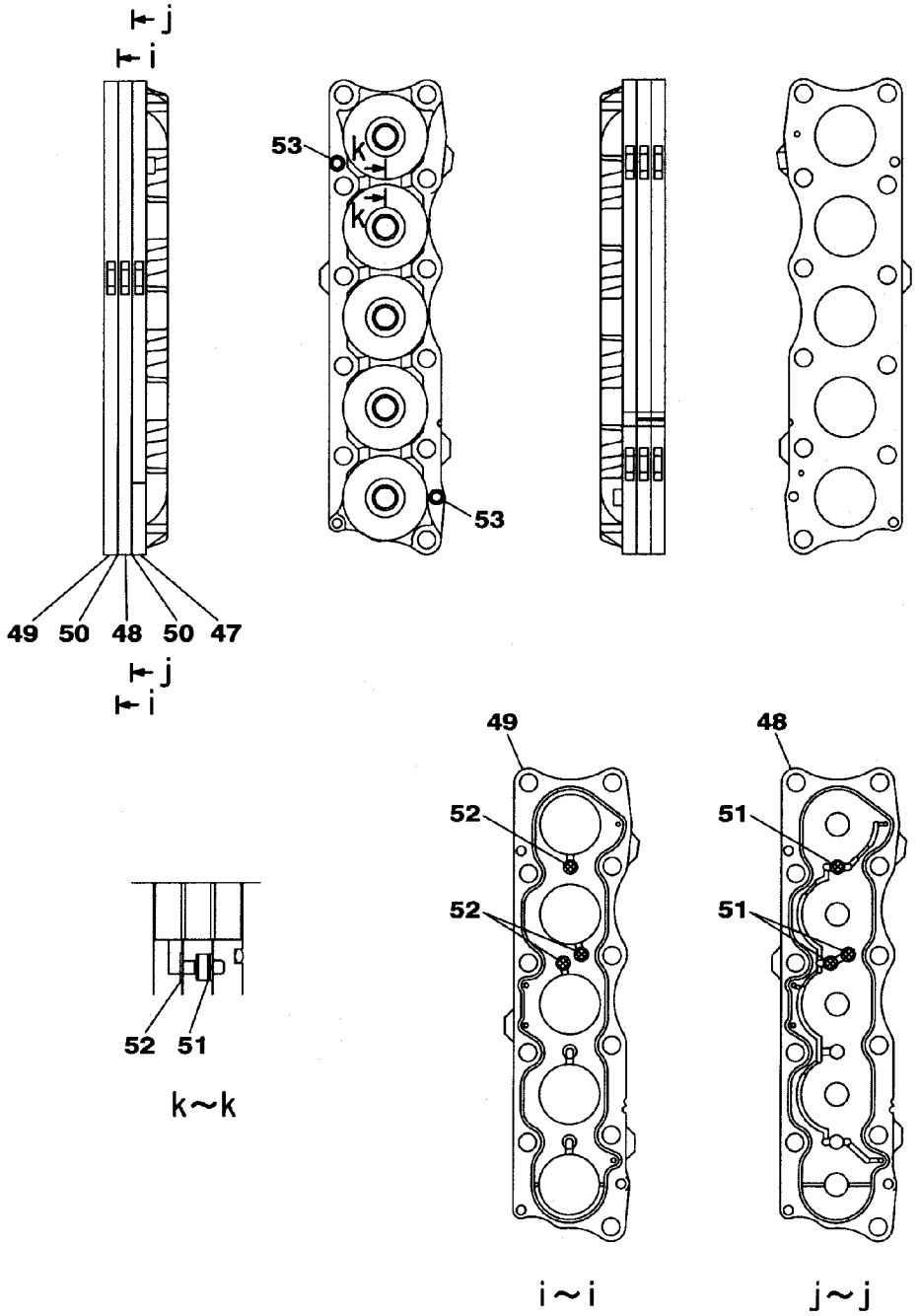

KRJ16011

https://truckmanualshub.com/

VALVE;CONTROL	ﾊﾞﾙﾌﾞ;ｺﾝﾄﾛｰﾙ	ZAJ313L0120 000 18/20	000

符号 ITEM	構成 COMPO	部品番号 PART NO.	部品名	PART NAME	個数 Q'TY	互換 ICA	代替部品 REPLACEABLE PART	備考 MEMO
72	1	LSC0227	ｽﾌﾟﾘﾝｸﾞ ﾄｸｼｭ	SPRING;SPL	2			
73	1	LJ00731	ｵﾘﾌｲｽ	ORIFICE	1			
74	1	LBQ0062	O-ﾘﾝｸﾞ JISB2401 1BP6	O-RING	27			
75	1	LR015280	ﾎﾞﾃﾞｨ ASSY	BODY	1			
76	1	LH005410	ﾌﾗﾝｼﾞ	FLANGE;SPL	1			
77	1	LJ016050	ﾎﾟﾍﾟｯﾄ	POPPET	1			
78	1	LG006510	ｽﾌﾟﾘﾝｸﾞ	SPRING;SPL	1			
79	1	LLC0082	ﾌﾟﾗｸﾞ	PLUG	1			
80	1	LBQ6910	O-ﾘﾝｸﾞ	O-RING	1			
81	1	LSC0094	ｽﾌﾟﾘﾝｸﾞ	SPRING;SPL	1			
82	1	LJ014680	ﾎﾟﾍﾟｯﾄ	POPPET	1			
83	1	LJ00730	ﾎﾟﾍﾟｯﾄ	POPPET	1			
84	1	LH00250	ﾌﾗﾝｼﾞ	FLANGE;SPL	2			
85	1	LH004960	ｽﾍﾟｰｻ	SPACER	2			
86	1	LBQ0251	O-ﾘﾝｸﾞ JISB2401 1AG2	O-RING	2			
87	1	LBB0253	ﾘﾝｸﾞ;ﾊﾞｯｸｱｯﾌﾟ	RING;BACK-UP	2			
88	1	LBQ0553	O-ﾘﾝｸﾞ JISB2401 1BG5	O-RING	1			
89	1	LH004970	ｽﾍﾟｰｻ	SPACER	1			
90	1	LH004980	ｽﾘｰﾌﾞ	SLEEVE	1			
91	1	LPC0098	ﾎﾟﾍﾟｯﾄ	POPPET	1			
92	1	LSC0187	ｽﾌﾟﾘﾝｸﾞ	SPRING;SPL	1			
93	1	LH004990	ﾌﾗﾝｼﾞ ﾄｸｼｭ	FLANGE;SPL	1			
94	1	LE012520	O-ﾘﾝｸﾞ ﾄｸｼｭ ﾌﾂｿ	O-RING	3			
95	1	LE014890	O-ﾘﾝｸﾞ	O-RING	14			
96	1	LBQ0102	O-ﾘﾝｸﾞ JISB2401 1BP1	O-RING	12			
97	1	LJ014710	ﾊﾞﾙﾌﾞ ｱﾝﾁﾄﾞﾘﾌﾄ ASSY	VALVE;SPL	2			
98	1A	LJ014720	ﾊﾞﾙﾌﾞ;ﾘﾘｰﾌ KIT	VALVE;RELIEF	1			
99	2	LBQ6912	O-ﾘﾝｸﾞ AS568-912-HS9	O-RING	1			
100	1A	LJ014730	ﾊﾞﾙﾌﾞ;ﾘﾘｰﾌ KIT	VALVE;RELIEF	5			
101	2	LBQ6912	O-ﾘﾝｸﾞ AS568-912-HS9	O-RING	5			
102	2	LBQ0102	O-ﾘﾝｸﾞ JISB2401 1BP1	O-RING	5			
103	1A	LJ014740	ﾊﾞﾙﾌﾞ;ﾘﾘｰﾌ KIT	VALVE;RELIEF	1			
104	2	LBQ6912	O-ﾘﾝｸﾞ AS568-912-HS9	O-RING	1			
105	2	LBQ0102	O-ﾘﾝｸﾞ JISB2401 1BP1	O-RING	1			
106	1A	LJ014750	ﾊﾞﾙﾌﾞ;ﾘﾘｰﾌ KIT	VALVE;RELIEF	2			
107	2	LBQ0102	O-ﾘﾝｸﾞ JISB2401 1BP1	O-RING	2			
108	2	LBQ6912	O-ﾘﾝｸﾞ AS568-912-HS9	O-RING	2			
109	1	LJ014700	ﾊﾞﾙﾌﾞ;ﾘﾘｰﾌ ASS'Y	VALVE;RELIEF	2			
110	1A	LNC0218	ﾌﾟﾗｸﾞ S/A	PLUG	4			
111	2	LBQ0182	O-ﾘﾝｸﾞ JISB2401 1BP1	O-RING	4			
112	1A	LNC0217	ﾌﾟﾗｸﾞ S/A	PLUG	10			
113	2	LBQ0142	O-ﾘﾝｸﾞ JISB2401 1BP1	O-RING	10			
114	1A	LNC0238	ﾌﾟﾗｸﾞ S/A	PLUG	3			
115	2	LK00328	ﾌﾟﾗｸﾞ	PLUG	3			
116	2	LBQ0112	O-ﾘﾝｸﾞ JISB2401 1BP1	O-RING	3			
117	1	108R010Z055B	ﾛｯｶｸｱﾅB JIS B 1180 M	BOLT;HEX SOC HD	32			
118	1	108R010Z040B	ﾛｯｶｸｱﾅB JIS B1176 M1	BOLT;HEX SOC HD	66			
119	1	108R016Z130B	ﾛｯｶｸｱﾅB JIS B1180 M1	BOLT;HEX SOC HD	8			
120	1	LUC0118	ﾛｯｶｸｱﾅB	BOLT;HEX SOC HD	4			
121	1	-------	ﾒｲﾊﾞﾝ;ｷﾊﾞﾝ	NAMEPLATE;SER NO.	1			
122	1	-------	ｽｸﾘｭｰ ﾄﾞﾗｲﾌﾞ	SCREW	2			
123	1	-------	ﾌﾟﾗｸﾞ	PLUG	5			
124	1	LA011120	ﾛｯｶｸｱﾅB	BOLT;HEX SOC HD	4			
125	1	-------	ｽﾌﾟｰﾙ ASS'Y	SPOOL	1			
126	1	LR015290	ｷｬｯﾌﾟ	CAP	1			
127	1	LR00579	ｷｬｯﾌﾟ	CAP	2			
128	1	LBQ5219	O-ﾘﾝｸﾞ	O-RING	2			
129	1	LBQ0112	O-ﾘﾝｸﾞ JISB2401 1BP1	O-RING	2			
130	1	LK00301	ﾌﾟﾗｸﾞ	PLUG	2			
131	1A	LK00302	ﾌﾟﾗｸﾞ ASSY	PLUG	2			
132	2	LPC0256	ﾌﾟﾗｸﾞ	PLUG	2			
133	2	LBQ0242	O-ﾘﾝｸﾞ JISB2401 1BP2	O-RING	2			
134	1A	LPC0259	ﾌﾟﾗｸﾞ ASSY	PLUG	2			
135	2	LK00327	ﾌﾟﾗｸﾞ	PLUG	2			
136	2	LBQ6912	O-ﾘﾝｸﾞ AS568-912-HS9	O-RING	2			
137	2	LBQ0080	O-ﾘﾝｸﾞ JISB2401 1AP8	O-RING	2			
138	2	LBB6110	ﾘﾝｸﾞ;ﾊﾞｯｸｱｯﾌﾟ	RING;BACK-UP	2			
139	1	LA011130	ﾛｯｶｸｱﾅB	BOLT;HEX SOC HD	2			

https://truckmanualshub.com/

54 [55 ~ 62] 55 [56 ~ 62]

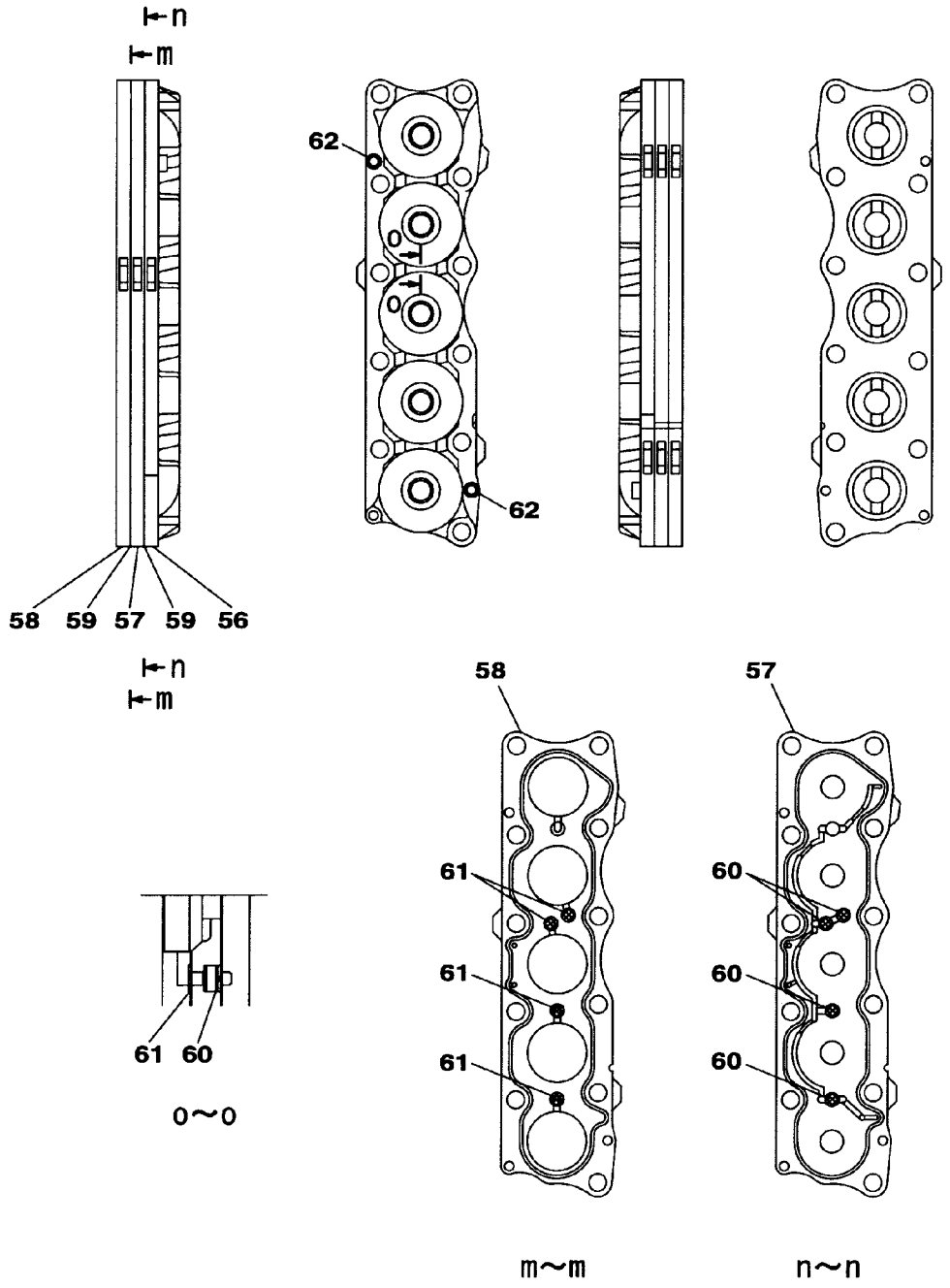

KRJ16011

https://truckmanualshub.com/

VALVE;CONTROL	ﾊﾞﾙﾌﾞ;ｺﾝﾄﾛｰﾙ	ZAJ313L0120 000 20/20	000

符号 ITEM	構成 COMPO	部品番号 PART NO.	部品名	PART NAME	個数 Q'TY	互換 ICA	代替部品 REPLACEABLE PART	備考 MEMO
81	1	LSC0094	ｽﾌﾟﾘﾝｸﾞ	SPRING;SPL	1			
82	1	LJ014680	ﾎﾟﾍﾟｯﾄ	POPPET	1			
83	1	LJ00730	ﾎﾟﾍﾟｯﾄ	POPPET	1			
84	1	LH00250	ﾌﾗﾝｼﾞ	FLANGE;SPL	2			
85	1	LH004960	ｽﾍﾟｰｻ	SPACER	2			
86	1	LBQ0251	O-ﾘﾝｸﾞ JISB2401 1AG2	O-RING	2			
87	1	LBB0253	ﾘﾝｸﾞ;ﾊﾞｯｸｱｯﾌﾟ	RING;BACK-UP	2			
88	1	LBQ0553	O-ﾘﾝｸﾞ JISB2401 1BG5	O-RING	1			
89	1	LH004970	ｽﾍﾟｰｻ	SPACER	1			
90	1	LH004980	ｽﾘｰﾌﾞ	SLEEVE	1			
91	1	LPC0098	ﾎﾟﾍﾟｯﾄ	POPPET	1			
92	1	LSC0187	ｽﾌﾟﾘﾝｸﾞ	SPRING;SPL	1			
93	1	LH004990	ﾌﾗﾝｼﾞ ﾄｸｼｭ	FLANGE;SPL	1			
94	1	LE012520	O-ﾘﾝｸﾞ ﾄｸｼｭ ﾌﾂｿ	O-RING	3			
95	1	LE014890	O-ﾘﾝｸﾞ	O-RING	14			
96	1	LBQ0102	O-ﾘﾝｸﾞ JISB2401 1BP1	O-RING	12			
97	1	LJ014710	ﾊﾞﾙﾌﾞ ｱﾝﾁﾄﾞﾘﾌﾄ ASSY	VALVE;SPL	2			
98	1A	LJ014720	ﾊﾞﾙﾌﾞ;ﾘﾘｰﾌ KIT	VALVE;RELIEF	1			
99	2	LBQ6912	O-ﾘﾝｸﾞ AS568-912-HS9	O-RING	1			
100	1A	LJ014730	ﾊﾞﾙﾌﾞ;ﾘﾘｰﾌ KIT	VALVE;RELIEF	5			
101	2	LBQ6912	O-ﾘﾝｸﾞ AS568-912-HS9	O-RING	5			
102	2	LBQ0102	O-ﾘﾝｸﾞ JISB2401 1BP1	O-RING	5			
103	1A	LJ014740	ﾊﾞﾙﾌﾞ;ﾘﾘｰﾌ KIT	VALVE;RELIEF	1			
104	2	LBQ6912	O-ﾘﾝｸﾞ AS568-912-HS9	O-RING	1			
105	2	LBQ0102	O-ﾘﾝｸﾞ JISB2401 1BP1	O-RING	1			
106	1A	LJ014750	ﾊﾞﾙﾌﾞ;ﾘﾘｰﾌ KIT	VALVE;RELIEF	2			
107	2	LBQ0102	O-ﾘﾝｸﾞ JISB2401 1BP1	O-RING	2			
108	2	LBQ6912	O-ﾘﾝｸﾞ AS568-912-HS9	O-RING	2			
109	1	LJ014700	ﾊﾞﾙﾌﾞ;ﾘﾘｰﾌ ASS'Y	VALVE;RELIEF	2			
110	1A	LNC0218	ﾌﾟﾗｸﾞ S/A	PLUG	4			
111	2	LBQ0182	O-ﾘﾝｸﾞ JISB2401 1BP1	O-RING	4			
112	1A	LNC0217	ﾌﾟﾗｸﾞ S/A	PLUG	10			
113	2	LBQ0142	O-ﾘﾝｸﾞ JISB2401 1BP1	O-RING	10			
114	1A	LNC0238	ﾌﾟﾗｸﾞ S/A	PLUG	3			
115	2	LK00328	ﾌﾟﾗｸﾞ	PLUG	3			
116	2	LBQ0112	O-ﾘﾝｸﾞ JISB2401 1BP1	O-RING	3			
117	1	108R010Z055B	ﾛｯｶｸｱﾅB JIS B 1180 M	BOLT;HEX SOC HD	32			
118	1	108R010Z040B	ﾛｯｶｸｱﾅB JIS B1176 M1	BOLT;HEX SOC HD	66			
119	1	108R016Z130B	ﾛｯｶｸｱﾅB JIS B1180 M1	BOLT;HEX SOC HD	8			
120	1	LUC0118	ﾛｯｶｸｱﾅB	BOLT;HEX SOC HD	4			
121	1	-------	ﾒｲﾊﾞﾝ;ｷﾊﾞﾝ	NAMEPLATE;SER NO.	1			
122	1	-------	ｽｸﾘｭｰ ﾄﾞﾗｲﾌﾞ	SCREW	2			
123	1	-------	ﾌﾟﾗｸﾞ	PLUG	5			
124	1	LA011120	ﾛｯｶｸｱﾅB	BOLT;HEX SOC HD	4			
125	1	-------	ｽﾌﾟｰﾙ ASS'Y	SPOOL	1			
126	1	LR015290	ｷｬｯﾌﾟ	CAP	1			
127	1	LR00579	ｷｬｯﾌﾟ	CAP	2			
128	1	LBQ5219	O-ﾘﾝｸﾞ	O-RING	2			
129	1	LBQ0112	O-ﾘﾝｸﾞ JISB2401 1BP1	O-RING	2			
130	1	LK00301	ﾌﾟﾗｸﾞ	PLUG	2			
131	1A	LK00302	ﾌﾟﾗｸﾞ ASSY	PLUG	2			
132	2	LPC0256	ﾌﾟﾗｸﾞ	PLUG	2			
133	2	LBQ0242	O-ﾘﾝｸﾞ JISB2401 1BP2	O-RING	2			
134	1A	LPC0259	ﾌﾟﾗｸﾞ ASSY	PLUG	2			
135	2	LK00327	ﾌﾟﾗｸﾞ	PLUG	2			
136	2	LBQ6912	O-ﾘﾝｸﾞ AS568-912-HS9	O-RING	2			
137	2	LBQ0080	O-ﾘﾝｸﾞ JISB2401 1AP8	O-RING	2			
138	2	LBB6110	ﾘﾝｸﾞ;ﾊﾞｯｸｱｯﾌﾟ	RING;BACK-UP	2			
139	1	LA011130	ﾛｯｶｸｱﾅB	BOLT;HEX SOC HD	2			
140	1	LT001660	ﾊｳｼﾞﾝｸﾞ ｱｳﾄﾚｯﾄ	HOUSING;SPL	1			
141	1	LB011900	ﾀｲﾛｯﾄﾞ	ROD;TIE	4			
142	1	LUC0094	ﾅｯﾄ	NUT;SPL	4			
143	1	LJ014760	ｽﾌﾟｰﾙ ｾｸｼｮﾝ S/A	SPOOL	1			
144	1	LJ014770	ｲﾝﾚｯﾄｾｸｼｮﾝ;ﾊﾞﾙﾌﾞ S/A	INLET-SECTION;VALVE	1			
145	1A	LJ014780	ﾊﾞﾙﾌﾞ;ﾘﾘｰﾌ KIT	VALVE;RELIEF	1			
146	2	LBQ6908	O-ﾘﾝｸﾞ	O-RING	1			
147	2	LBQ0102	O-ﾘﾝｸﾞ JISB2401 1BP1	O-RING	1			
148	1	LLC0045	ﾌﾟﾗｸﾞ S/A	PLUG	1			

https://truckmanualshub.com/

98 [99] 100 [101 , 102] 103 [104 , 105] 107 [108] 110 [111]
112 [113] 114 [115 , 116] 131 [132 , 133] 134 [135～138]

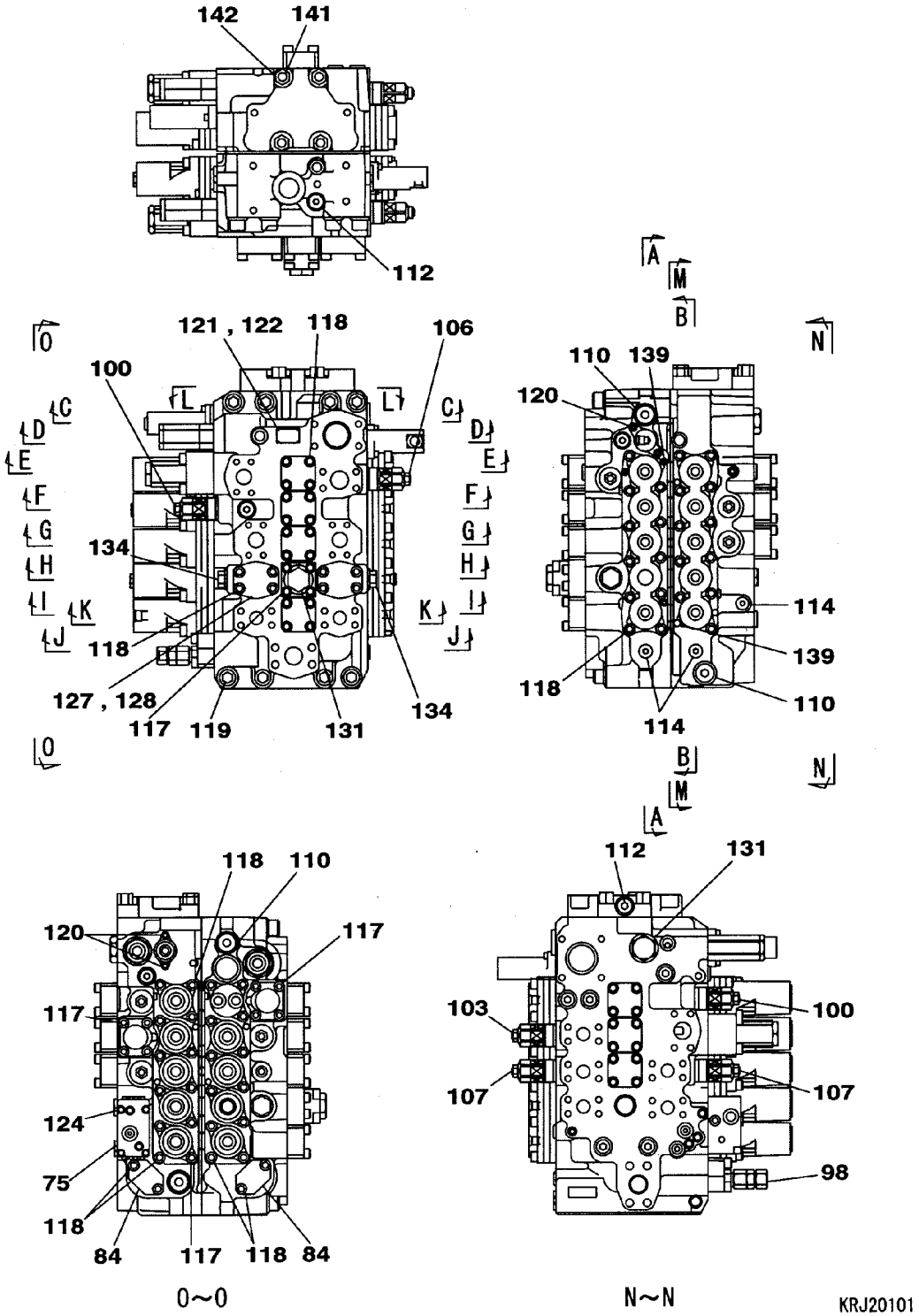

https://truckmanualshub.com/

VALVE;CONTROL	ﾊﾞﾙﾌﾞ;ｺﾝﾄﾛｰﾙ SH200-5LR	ZAJ313L0121 000 2/20	000

符号 ITEM	構成 COMPO	部品番号 PART NO.	部品名	PART NAME	個数 Q'TY	互換 ICA	代替部品 REPLACEABLE PART	備考 MEMO
		KRJ20101			1			
1	1	-------	ﾊｳｼﾞﾝｸﾞ;ﾊﾞﾙﾌﾞ	HOUSING;VALVE	1			
2	1	-------	ｽﾌﾟｰﾙ ASSY	SPOOL	1			
3	1	-------	ｽﾌﾟｰﾙ ASSY	SPOOL	1			
4	1	-------	ｽﾌﾟｰﾙ ASSY	SPOOL	1			
5	1	-------	ｽﾌﾟｰﾙ ASSY	SPOOL	2			
6	1	-------	ｽﾌﾟｰﾙ ASSY	SPOOL	1			
7	1	LBQ0453	O-ﾘﾝｸﾞ JISB2401 1BG4	O-RING	20			
8	1	LR015210	ｷｬｯﾌﾟ	CAP	9			
9	1	LR015220	ｷｬｯﾌﾟ	CAP	1			
10	1A	-------	ﾌﾟﾚｰﾄ ASS'Y	PLATE;SPL	1			
11	2A	-------	ﾌﾟﾚｰﾄ KIT	PLATE;SPL	1			
12	3	-------	ﾌﾟﾚｰﾄ	PLATE	1			
13	3	-------	ﾌﾟﾚｰﾄ	PLATE	1			
14	3	-------	ﾌﾟﾚｰﾄ	PLATE	1			
15	3	-------	ｶﾞｽｹｯﾄ	GASKET	2			
16	3	-------	ｽﾌﾟｰﾙ	SPOOL	5			
17	3	-------	ﾌｲﾙﾀ ﾄｸｼｭ	FILTER;SPL	4			
18	3	LBQ0453	O-ﾘﾝｸﾞ JISB2401 1BG4	O-RING	5			
19	3	108R006Z025N	ﾛｯｶｸｱﾅB M6X25-12.9	BOLT;HEX SOC HD	2			
20	1A	-------	ﾌﾟﾚｰﾄ ASS'Y	PLATE;SPL	1			
21	2A	-------	ﾌﾟﾚｰﾄ KIT	PLATE;SPL	1			
22	3	-------	ﾌﾟﾚｰﾄ	PLATE	1			
23	3	-------	ﾌﾟﾚｰﾄ	PLATE	1			
24	3	-------	ﾌﾟﾚｰﾄ	PLATE	1			
25	3	-------	ｶﾞｽｹｯﾄ	GASKET	2			
26	3	-------	ｽﾌﾟｰﾙ	SPOOL	5			
27	3	-------	ﾌｲﾙﾀ ﾄｸｼｭ	FILTER;SPL	5			
28	3	LBQ0453	O-ﾘﾝｸﾞ JISB2401 1BG4	O-RING	5			
29	3	108R006Z025N	ﾛｯｶｸｱﾅB M6X25-12.9	BOLT;HEX SOC HD	2			
30	1	-------	ﾊｳｼﾞﾝｸﾞ;ﾊﾞﾙﾌﾞ	HOUSING;VALVE	1			
31	1	-------	ｽﾌﾟｰﾙ ASSY	SPOOL	1			
32	1	-------	ｽﾌﾟｰﾙ ASSY	SPOOL	1			
33	1	-------	ｽﾌﾟｰﾙ ASSY	SPOOL	1			
34	1	-------	ｽﾌﾟｰﾙ ASSY	SPOOL	1			
35	1	LR015250	ｷｬｯﾌﾟ	CAP	1			
36	1	-------	ｽﾌﾟｰﾙ;ﾊﾞﾙﾌﾞ	SPOOL;VALVE	1			
37	1	LSC0158	ｼｰﾄ;ｽﾌﾟﾘﾝｸﾞ	SEAT;SPRING	2			
38	1	LG00338	ｽﾌﾟﾘﾝｸﾞ;ｱｯｼｭｸ	SPRING;COMPRESSION	1			
39	1	LPC0222	ｴﾝﾄﾞ ｽﾌﾟｰﾙ	END;SPL	1			
40	1	LBQ0260	O-ﾘﾝｸﾞ JISB2401 1AP2	O-RING	1			
41	1	LK005690	ﾌﾟﾗｸﾞ	PLUG	1			
42	1	LBQ0242	O-ﾘﾝｸﾞ JISB2401 1BP2	O-RING	1			
43	1	LG00339	ｽﾌﾟﾘﾝｸﾞ;ｱｯｼｭｸ	SPRING;COMPRESSION	1			
44	1	LJ014690	ｽﾌﾟｰﾙ ASSY	SPOOL	1			
45	1A	-------	ﾌﾟﾚｰﾄ ASS'Y	PLATE;SPL	1			
46	2A	-------	ﾌﾟﾚｰﾄ KIT	PLATE;SPL	1			
47	3	-------	ﾌﾟﾚｰﾄ	PLATE	1			
48	3	-------	ﾌﾟﾚｰﾄ	PLATE	1			
49	3	-------	ﾌﾟﾚｰﾄ	PLATE	1			
50	3	-------	ｶﾞｽｹｯﾄ	GASKET	2			
51	3	-------	ｽﾌﾟｰﾙ	SPOOL	3			
52	3	-------	ﾌｲﾙﾀ ﾄｸｼｭ	FILTER;SPL	3			
53	3	108R006Z025N	ﾛｯｶｸｱﾅB M6X25-12.9	BOLT;HEX SOC HD	2			
54	1A	-------	ﾌﾟﾚｰﾄ ASS'Y	PLATE;SPL	1			
55	2A	-------	ﾌﾟﾚｰﾄ KIT	PLATE;SPL	1			
56	3	-------	ﾌﾟﾚｰﾄ	PLATE	1			
57	3	-------	ﾌﾟﾚｰﾄ	PLATE	1			
58	3	-------	ﾌﾟﾚｰﾄ	PLATE	1			
59	3	-------	ｶﾞｽｹｯﾄ	GASKET	2			
60	3	-------	ｽﾌﾟｰﾙ	SPOOL	4			
61	3	-------	ﾌｲﾙﾀ ﾄｸｼｭ	FILTER;SPL	4			
62	3	108R006Z025N	ﾛｯｶｸｱﾅB M6X25-12.9	BOLT;HEX SOC HD	2			
63	1	LBQ0162	O-ﾘﾝｸﾞ JISB2401 1BP1	O-RING	1			
64	1	LBB0162	ﾘﾝｸﾞ;ﾊﾞｯｸｱｯﾌﾟ	RING;BACK-UP	2			
65	1	LJ00726	ﾎﾟﾍﾟｯﾄ	POPPET	2			
66	1	LG00340	ｽﾌﾟﾘﾝｸﾞ;ｱｯｼｭｸ	SPRING;COMPRESSION	2			
67	1	LJ00727	ﾎﾟﾍﾟｯﾄ	POPPET	7			

https://truckmanualshub.com/

20 [21～29]　21 [22～29]　54 [55～62]　55 [53～62]
112 [113]

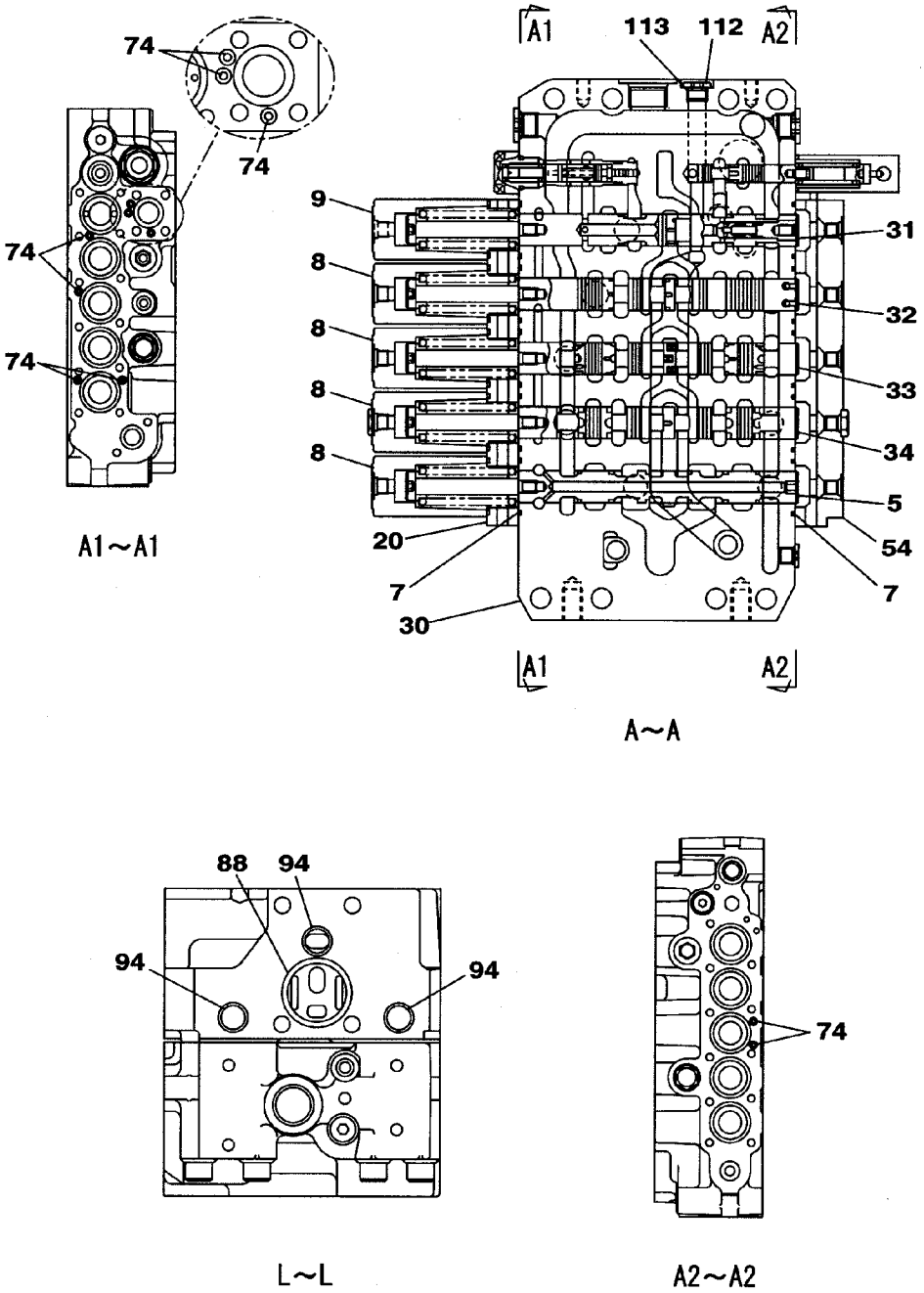

KRJ20101

https://truckmanualshub.com/

符号 ITEM	構成 COMPO	部品番号 PART NO.	部品名	PART NAME	個数 Q'TY	互換 ICA	代替部品 REPLACEABLE PART	備考 MEMO
9	1	LR015220	ｷｬｯﾌﾟ	CAP	1			
10	1A	-------	ﾌﾟﾚｰﾄ ASS'Y	PLATE;SPL	1			
11	2A	-------	ﾌﾟﾚｰﾄ KIT	PLATE;SPL	1			
12	3	-------	ﾌﾟﾚｰﾄ	PLATE	1			
13	3	-------	ﾌﾟﾚｰﾄ	PLATE	1			
14	3	-------	ﾌﾟﾚｰﾄ	PLATE	1			
15	3	-------	ｶﾞｽｹｯﾄ	GASKET	2			
16	3	-------	ｽﾌﾟｰﾙ	SPOOL	5			
17	3	-------	ﾌｨﾙﾀ ﾄｸｼｭ	FILTER;SPL	4			
18	3	LBQ0453	O-ﾘﾝｸﾞ JISB2401 1BG4	O-RING	5			
19	3	108R006Z025N	ﾛｯｶｸｱﾅB M6X25-12.9	BOLT;HEX SOC HD	2			
20	1A	-------	ﾌﾟﾚｰﾄ ASS'Y	PLATE;SPL	1			
21	2A	-------	ﾌﾟﾚｰﾄ KIT	PLATE;SPL	1			
22	3	-------	ﾌﾟﾚｰﾄ	PLATE	1			
23	3	-------	ﾌﾟﾚｰﾄ	PLATE	1			
24	3	-------	ﾌﾟﾚｰﾄ	PLATE	1			
25	3	-------	ｶﾞｽｹｯﾄ	GASKET	2			
26	3	-------	ｽﾌﾟｰﾙ	SPOOL	5			
27	3	-------	ﾌｨﾙﾀ ﾄｸｼｭ	FILTER;SPL	5			
28	3	LBQ0453	O-ﾘﾝｸﾞ JISB2401 1BG4	O-RING	5			
29	3	108R006Z025N	ﾛｯｶｸｱﾅB M6X25-12.9	BOLT;HEX SOC HD	2			
30	1	-------	ﾊｳｼﾞﾝｸﾞ;ﾊﾞﾙﾌﾞ	HOUSING;VALVE	1			
31	1	-------	ｽﾌﾟｰﾙ ASSY	SPOOL	1			
32	1	-------	ｽﾌﾟｰﾙ ASSY	SPOOL	1			
33	1	-------	ｽﾌﾟｰﾙ ASSY	SPOOL	1			
34	1	-------	ｽﾌﾟｰﾙ ASSY	SPOOL	1			
35	1	LR015250	ｷｬｯﾌﾟ	CAP	1			
36	1	-------	ｽﾌﾟｰﾙ;ﾊﾞﾙﾌﾞ	SPOOL;VALVE	1			
37	1	LSC0158	ｼｰﾄ;ｽﾌﾟﾘﾝｸﾞ	SEAT;SPRING	2			
38	1	LG00338	ｽﾌﾟﾘﾝｸﾞ;ｱｯｼｭｸ	SPRING;COMPRESSION	1			
39	1	LPC0222	ｴﾝﾄﾞ ｽﾌﾟｰﾙ	END;SPL	1			
40	1	LBQ0260	O-ﾘﾝｸﾞ JISB2401 1AP2	O-RING	1			
41	1	LK005690	ﾌﾟﾗｸﾞ	PLUG	1			
42	1	LBQ0242	O-ﾘﾝｸﾞ JISB2401 1BP2	O-RING	1			
43	1	LG00339	ｽﾌﾟﾘﾝｸﾞ;ｱｯｼｭｸ	SPRING;COMPRESSION	1			
44	1	LJ014690	ｽﾌﾟｰﾙ ASSY	SPOOL	1			
45	1A	-------	ﾌﾟﾚｰﾄ ASS'Y	PLATE;SPL	1			
46	2A	-------	ﾌﾟﾚｰﾄ KIT	PLATE;SPL	1			
47	3	-------	ﾌﾟﾚｰﾄ	PLATE	1			
48	3	-------	ﾌﾟﾚｰﾄ	PLATE	1			
49	3	-------	ﾌﾟﾚｰﾄ	PLATE	1			
50	3	-------	ｶﾞｽｹｯﾄ	GASKET	2			
51	3	-------	ｽﾌﾟｰﾙ	SPOOL	3			
52	3	-------	ﾌｨﾙﾀ ﾄｸｼｭ	FILTER;SPL	3			
53	3	108R006Z025N	ﾛｯｶｸｱﾅB M6X25-12.9	BOLT;HEX SOC HD	2			
54	1A	-------	ﾌﾟﾚｰﾄ ASS'Y	PLATE;SPL	1			
55	2A	-------	ﾌﾟﾚｰﾄ KIT	PLATE;SPL	1			
56	3	-------	ﾌﾟﾚｰﾄ	PLATE	1			
57	3	-------	ﾌﾟﾚｰﾄ	PLATE	1			
58	3	-------	ﾌﾟﾚｰﾄ	PLATE	1			
59	3	-------	ｶﾞｽｹｯﾄ	GASKET	2			
60	3	-------	ｽﾌﾟｰﾙ	SPOOL	4			
61	3	-------	ﾌｨﾙﾀ ﾄｸｼｭ	FILTER;SPL	4			
62	3	108R006Z025N	ﾛｯｶｸｱﾅB M6X25-12.9	BOLT;HEX SOC HD	2			
63	1	LBQ0162	O-ﾘﾝｸﾞ JISB2401 1BP1	O-RING	1			
64	1	LBB0162	ﾘﾝｸﾞ;ﾊﾞｯｸｱｯﾌﾟ	RING;BACK-UP	2			
65	1	LJ00726	ﾎﾟﾍﾟｯﾄ	POPPET	2			
66	1	LG00340	ｽﾌﾟﾘﾝｸﾞ;ｱｯｼｭｸ	SPRING;COMPRESSION	2			
67	1	LJ00727	ﾎﾟﾍﾟｯﾄ	POPPET	7			
68	1	LG00341	ｽﾌﾟﾘﾝｸﾞ;ｱｯｼｭｸ	SPRING;COMPRESSION	8			
69	1	LBQ0322	O-ﾘﾝｸﾞ JISB2401 1BP3	O-RING	10			
70	1	LH00248	ﾌﾗﾝｼﾞ	FLANGE;SPL	6			
71	1	LPC0180	ﾎﾟﾍﾟｯﾄ	POPPET	2			
72	1	LSC0227	ｽﾌﾟﾘﾝｸﾞ ﾄｸｼｭ	SPRING;SPL	2			
73	1	LJ00731	ｵﾘﾌｨｽ	ORIFICE	1			
74	1	LBQ0062	O-ﾘﾝｸﾞ JISB2401 1BP6	O-RING	27			
75	1	LR015280	ﾎﾞﾃﾞｨ ASSY	BODY	1			
76	1	LH005410	ﾌﾗﾝｼﾞ	FLANGE;SPL	1			

https://truckmanualshub.com/

10 [11～19]　11 [12～19]　45 [46～53]　46 [47～53]
98 [99]

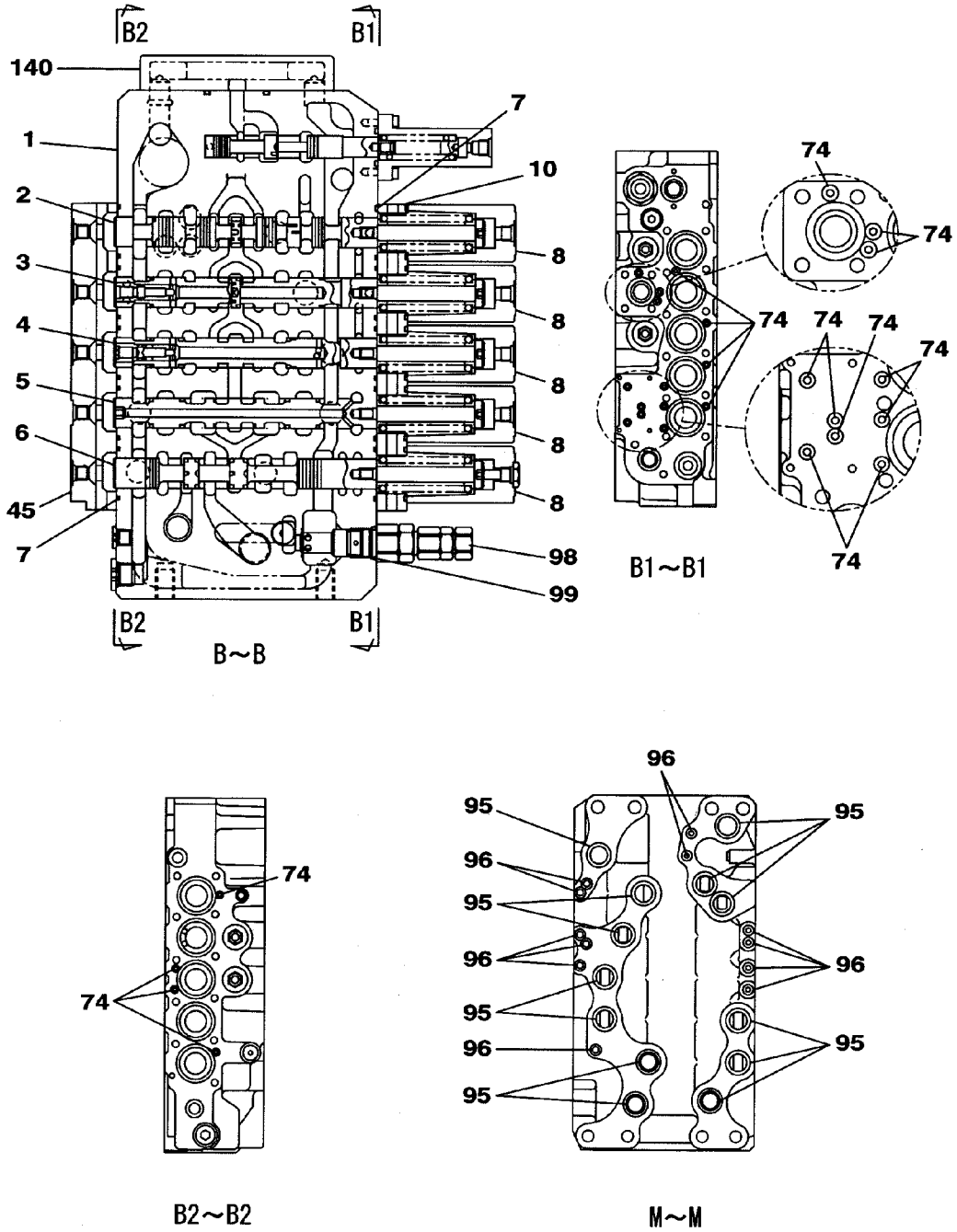

KRJ20101

https://truckmanualshub.com/

符号 ITEM	構成 COMPO	部品番号 PART NO.	部品名	PART NAME	個数 Q'TY	互換 ICA	代替部品 REPLACEABLE PART	備考 MEMO
18	3	LBQ0453	O-ﾘﾝｸﾞ JISB2401 1BG4	O-RING	5			
19	3	108R006Z025N	ﾛｯｶｸｱﾅB M6X25-12.9	BOLT;HEX SOC HD	2			
20	1A	-------	ﾌﾟﾚｰﾄ ASS'Y	PLATE;SPL	1			
21	2A	-------	ﾌﾟﾚｰﾄ KIT	PLATE;SPL	1			
22	3	-------	ﾌﾟﾚｰﾄ	PLATE	1			
23	3	-------	ﾌﾟﾚｰﾄ	PLATE	1			
24	3	-------	ﾌﾟﾚｰﾄ	PLATE	1			
25	3	-------	ｶﾞｽｹｯﾄ	GASKET	2			
26	3	-------	ｽﾌﾟｰﾙ	SPOOL	5			
27	3	-------	ﾌｨﾙﾀ ﾄｸｼｭ	FILTER;SPL	5			
28	3	LBQ0453	O-ﾘﾝｸﾞ JISB2401 1BG4	O-RING	5			
29	3	108R006Z025N	ﾛｯｶｸｱﾅB M6X25-12.9	BOLT;HEX SOC HD	2			
30	1	-------	ﾊｳｼﾞﾝｸﾞ;ﾊﾞﾙﾌﾞ	HOUSING;VALVE	1			
31	1	-------	ｽﾌﾟｰﾙ ASSY	SPOOL	1			
32	1	-------	ｽﾌﾟｰﾙ ASSY	SPOOL	1			
33	1	-------	ｽﾌﾟｰﾙ ASSY	SPOOL	1			
34	1	-------	ｽﾌﾟｰﾙ ASSY	SPOOL	1			
35	1	LR015250	ｷｬｯﾌﾟ	CAP	1			
36	1	-------	ｽﾌﾟｰﾙ;ﾊﾞﾙﾌﾞ	SPOOL;VALVE	1			
37	1	LSC0158	ｼｰﾄ;ｽﾌﾟﾘﾝｸﾞ	SEAT;SPRING	2			
38	1	LG00338	ｽﾌﾟﾘﾝｸﾞ;ｱｯｼｭｸ	SPRING;COMPRESSION	1			
39	1	LPC0222	ｴﾝﾄﾞ ｽﾌﾟｰﾙ	END;SPL	1			
40	1	LBQ0260	O-ﾘﾝｸﾞ JISB2401 1AP2	O-RING	1			
41	1	LK005690	ﾌﾟﾗｸﾞ	PLUG	1			
42	1	LBQ0242	O-ﾘﾝｸﾞ JISB2401 1BP2	O-RING	1			
43	1	LG00339	ｽﾌﾟﾘﾝｸﾞ;ｱｯｼｭｸ	SPRING;COMPRESSION	1			
44	1	LJ014690	ｽﾌﾟｰﾙ ASSY	SPOOL	1			
45	1A	-------	ﾌﾟﾚｰﾄ ASS'Y	PLATE;SPL	1			
46	2A	-------	ﾌﾟﾚｰﾄ KIT	PLATE;SPL	1			
47	3	-------	ﾌﾟﾚｰﾄ	PLATE	1			
48	3	-------	ﾌﾟﾚｰﾄ	PLATE	1			
49	3	-------	ﾌﾟﾚｰﾄ	PLATE	1			
50	3	-------	ｶﾞｽｹｯﾄ	GASKET	2			
51	3	-------	ｽﾌﾟｰﾙ	SPOOL	3			
52	3	-------	ﾌｨﾙﾀ ﾄｸｼｭ	FILTER;SPL	3			
53	3	108R006Z025N	ﾛｯｶｸｱﾅB M6X25-12.9	BOLT;HEX SOC HD	2			
54	1A	-------	ﾌﾟﾚｰﾄ ASS'Y	PLATE;SPL	1			
55	2A	-------	ﾌﾟﾚｰﾄ KIT	PLATE;SPL	1			
56	3	-------	ﾌﾟﾚｰﾄ	PLATE	1			
57	3	-------	ﾌﾟﾚｰﾄ	PLATE	1			
58	3	-------	ﾌﾟﾚｰﾄ	PLATE	1			
59	3	-------	ｶﾞｽｹｯﾄ	GASKET	2			
60	3	-------	ｽﾌﾟｰﾙ	SPOOL	4			
61	3	-------	ﾌｨﾙﾀ ﾄｸｼｭ	FILTER;SPL	4			
62	3	108R006Z025N	ﾛｯｶｸｱﾅB M6X25-12.9	BOLT;HEX SOC HD	2			
63	1	LBQ0162	O-ﾘﾝｸﾞ JISB2401 1BP1	O-RING	1			
64	1	LBB0162	ﾘﾝｸﾞ;ﾊﾞｯｸｱｯﾌﾟ	RING;BACK-UP	2			
65	1	LJ00726	ﾎﾟﾍﾟｯﾄ	POPPET	2			
66	1	LG00340	ｽﾌﾟﾘﾝｸﾞ;ｱｯｼｭｸ	SPRING;COMPRESSION	2			
67	1	LJ00727	ﾎﾟﾍﾟｯﾄ	POPPET	7			
68	1	LG00341	ｽﾌﾟﾘﾝｸﾞ;ｱｯｼｭｸ	SPRING;COMPRESSION	8			
69	1	LBQ0322	O-ﾘﾝｸﾞ JISB2401 1BP3	O-RING	10			
70	1	LH00248	ﾌﾗﾝｼﾞ	FLANGE;SPL	6			
71	1	LPC0180	ﾎﾟﾍﾟｯﾄ	POPPET	2			
72	1	LSC0227	ｽﾌﾟﾘﾝｸﾞ ﾄｸｼｭ	SPRING;SPL	2			
73	1	LJ00731	ｵﾘﾌｨｽ	ORIFICE	1			
74	1	LBQ0062	O-ﾘﾝｸﾞ JISB2401 1BP6	O-RING	27			
75	1	LR015280	ﾎﾞﾃﾞｨ ASSY	BODY	1			
76	1	LH005410	ﾌﾗﾝｼﾞ	FLANGE;SPL	1			
77	1	LJ016050	ﾎﾟﾍﾟｯﾄ	POPPET	1			
78	1	LG006510	ｽﾌﾟﾘﾝｸﾞ	SPRING;SPL	1			
79	1	LLC0082	ﾌﾟﾗｸﾞ	PLUG	1			
80	1	LBQ6910	O-ﾘﾝｸﾞ	O-RING	1			
81	1	LSC0094	ｽﾌﾟﾘﾝｸﾞ	SPRING;SPL	1			
82	1	LJ014680	ﾎﾟﾍﾟｯﾄ	POPPET	1			
83	1	LJ00730	ﾎﾟﾍﾟｯﾄ	POPPET	1			
84	1	LH00250	ﾌﾗﾝｼﾞ	FLANGE;SPL	2			
85	1	LH004960	ｽﾍﾟｰｻ	SPACER	2			

https://truckmanualshub.com/

100 [101 , 102] 103 [104 , 105] 110 [111] 112 [113] 131 [132 , 133]

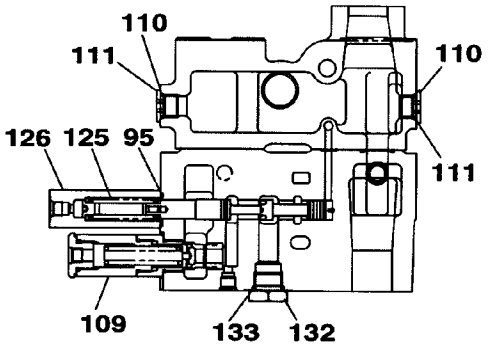

C~C

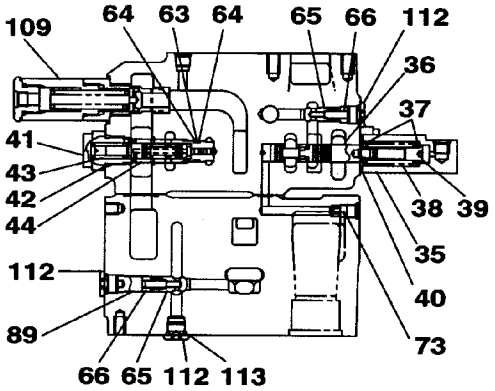

D~D

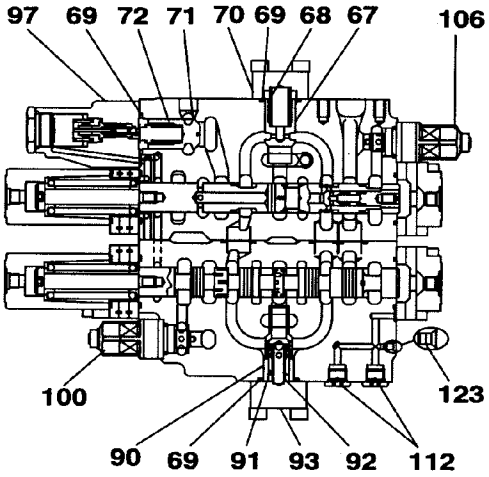

E~E

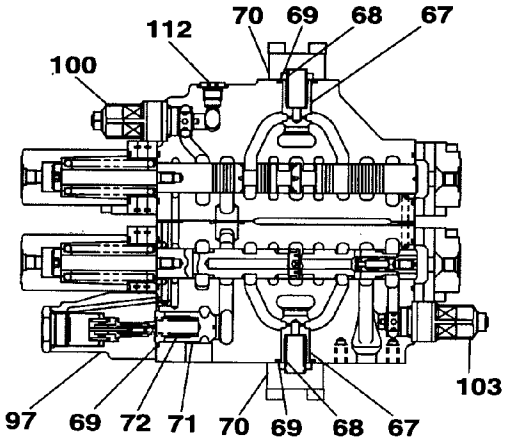

F~F

KRJ20101

https://truckmanualshub.com/

符号 ITEM	構成 COMPO	部品番号 PART NO.	部品名	PART NAME	個数 Q'TY	互換 ICA	代替部品 REPLACEABLE PART	備考 MEMO
27	3	-------	ﾌｨﾙﾀ ﾄｸｼｭ	FILTER;SPL	5			
28	3	LBQ0453	O-ﾘﾝｸﾞ JISB2401 1BG4	O-RING	5			
29	3	108R006Z025N	ﾛｯｶｸｱﾅB M6X25-12.9	BOLT;HEX SOC HD	2			
30	1	-------	ﾊｳｼﾞﾝｸﾞ;ﾊﾞﾙﾌﾞ	HOUSING;VALVE	1			
31	1	-------	ｽﾌﾟｰﾙ ASSY	SPOOL	1			
32	1	-------	ｽﾌﾟｰﾙ ASSY	SPOOL	1			
33	1	-------	ｽﾌﾟｰﾙ ASSY	SPOOL	1			
34	1	-------	ｽﾌﾟｰﾙ ASSY	SPOOL	1			
35	1	LR015250	ｷｬｯﾌﾟ	CAP	1			
36	1	-------	ｽﾌﾟｰﾙ;ﾊﾞﾙﾌﾞ	SPOOL;VALVE	1			
37	1	LSC0158	ｼｰﾄ;ｽﾌﾟﾘﾝｸﾞ	SEAT;SPRING	2			
38	1	LG00338	ｽﾌﾟﾘﾝｸﾞ;ｱｯｼｭｸ	SPRING;COMPRESSION	1			
39	1	LPC0222	ｴﾝﾄﾞ ｽﾌﾟｰﾙ	END;SPL	1			
40	1	LBQ0260	O-ﾘﾝｸﾞ JISB2401 1AP2	O-RING	1			
41	1	LK005690	ﾌﾟﾗｸﾞ	PLUG	1			
42	1	LBQ0242	O-ﾘﾝｸﾞ JISB2401 1BP2	O-RING	1			
43	1	LG00339	ｽﾌﾟﾘﾝｸﾞ;ｱｯｼｭｸ	SPRING;COMPRESSION	1			
44	1	LJ014690	ｽﾌﾟｰﾙ ASSY	SPOOL	1			
45	1A	-------	ﾌﾟﾚｰﾄ ASS'Y	PLATE;SPL	1			
46	2A	-------	ﾌﾟﾚｰﾄ KIT	PLATE;SPL	1			
47	3	-------	ﾌﾟﾚｰﾄ	PLATE	1			
48	3	-------	ﾌﾟﾚｰﾄ	PLATE	1			
49	3	-------	ﾌﾟﾚｰﾄ	PLATE	1			
50	3	-------	ｶﾞｽｹｯﾄ	GASKET	2			
51	3	-------	ｽﾌﾟｰﾙ	SPOOL	3			
52	3	-------	ﾌｨﾙﾀ ﾄｸｼｭ	FILTER;SPL	3			
53	3	108R006Z025N	ﾛｯｶｸｱﾅB M6X25-12.9	BOLT;HEX SOC HD	2			
54	1A	-------	ﾌﾟﾚｰﾄ ASS'Y	PLATE;SPL	1			
55	2A	-------	ﾌﾟﾚｰﾄ KIT	PLATE;SPL	1			
56	3	-------	ﾌﾟﾚｰﾄ	PLATE	1			
57	3	-------	ﾌﾟﾚｰﾄ	PLATE	1			
58	3	-------	ﾌﾟﾚｰﾄ	PLATE	1			
59	3	-------	ｶﾞｽｹｯﾄ	GASKET	2			
60	3	-------	ｽﾌﾟｰﾙ	SPOOL	4			
61	3	-------	ﾌｨﾙﾀ ﾄｸｼｭ	FILTER;SPL	4			
62	3	108R006Z025N	ﾛｯｶｸｱﾅB M6X25-12.9	BOLT;HEX SOC HD	2			
63	1	LBQ0162	O-ﾘﾝｸﾞ JISB2401 1BP1	O-RING	1			
64	1	LBB0162	ﾘﾝｸﾞ;ﾊﾞｯｸｱｯﾌﾟ	RING;BACK-UP	2			
65	1	LJ00726	ﾎﾟﾍﾟｯﾄ	POPPET	2			
66	1	LG00340	ｽﾌﾟﾘﾝｸﾞ;ｱｯｼｭｸ	SPRING;COMPRESSION	2			
67	1	LJ00727	ﾎﾟﾍﾟｯﾄ	POPPET	7			
68	1	LG00341	ｽﾌﾟﾘﾝｸﾞ;ｱｯｼｭｸ	SPRING;COMPRESSION	8			
69	1	LBQ0322	O-ﾘﾝｸﾞ JISB2401 1BP3	O-RING	10			
70	1	LH00248	ﾌﾗﾝｼﾞ	FLANGE;SPL	6			
71	1	LPC0180	ﾎﾟﾍﾟｯﾄ	POPPET	2			
72	1	LSC0227	ｽﾌﾟﾘﾝｸﾞ ﾄｸｼｭ	SPRING;SPL	2			
73	1	LJ00731	ｵﾘﾌｨｽ	ORIFICE	1			
74	1	LBQ0062	O-ﾘﾝｸﾞ JISB2401 1BP6	O-RING	27			
75	1	LR015280	ﾎﾞﾃﾞｨ ASSY	BODY	1			
76	1	LH005410	ﾌﾗﾝｼﾞ	FLANGE;SPL	1			
77	1	LJ016050	ﾎﾟﾍﾟｯﾄ	POPPET	1			
78	1	LG006510	ｽﾌﾟﾘﾝｸﾞ	SPRING;SPL	1			
79	1	LLC0082	ﾌﾟﾗｸﾞ	PLUG	1			
80	1	LBQ6910	O-ﾘﾝｸﾞ	O-RING	1			
81	1	LSC0094	ｽﾌﾟﾘﾝｸﾞ	SPRING;SPL	1			
82	1	LJ014680	ﾎﾟﾍﾟｯﾄ	POPPET	1			
83	1	LJ00730	ﾎﾟﾍﾟｯﾄ	POPPET	1			
84	1	LH00250	ﾌﾗﾝｼﾞ	FLANGE;SPL	2			
85	1	LH004960	ｽﾍﾟｰｻ	SPACER	2			
86	1	LBQ0251	O-ﾘﾝｸﾞ JISB2401 1AG2	O-RING	2			
87	1	LBB0253	ﾘﾝｸﾞ;ﾊﾞｯｸｱｯﾌﾟ	RING;BACK-UP	2			
88	1	LBQ0553	O-ﾘﾝｸﾞ JISB2401 1BG5	O-RING	1			
89	1	LH004970	ｽﾍﾟｰｻ	SPACER	1			
90	1	LH004980	ｽﾘｰﾌﾞ	SLEEVE	1			
91	1	LPC0098	ﾎﾟﾍﾟｯﾄ	POPPET	1			
92	1	LSC0187	ｽﾌﾟﾘﾝｸﾞ	SPRING;SPL	1			
93	1	LH004990	ﾌﾗﾝｼﾞ ﾄｸｼｭ	FLANGE;SPL	1			
94	1	LE012520	O-ﾘﾝｸﾞ ﾄｸｼｭ ﾌﾂｿ	O-RING	3			

https://truckmanualshub.com/

98 [99]
114 [115 , 116]

107 [108]
131 [132 , 133]

112 [113]
134 [135 ~ 138]

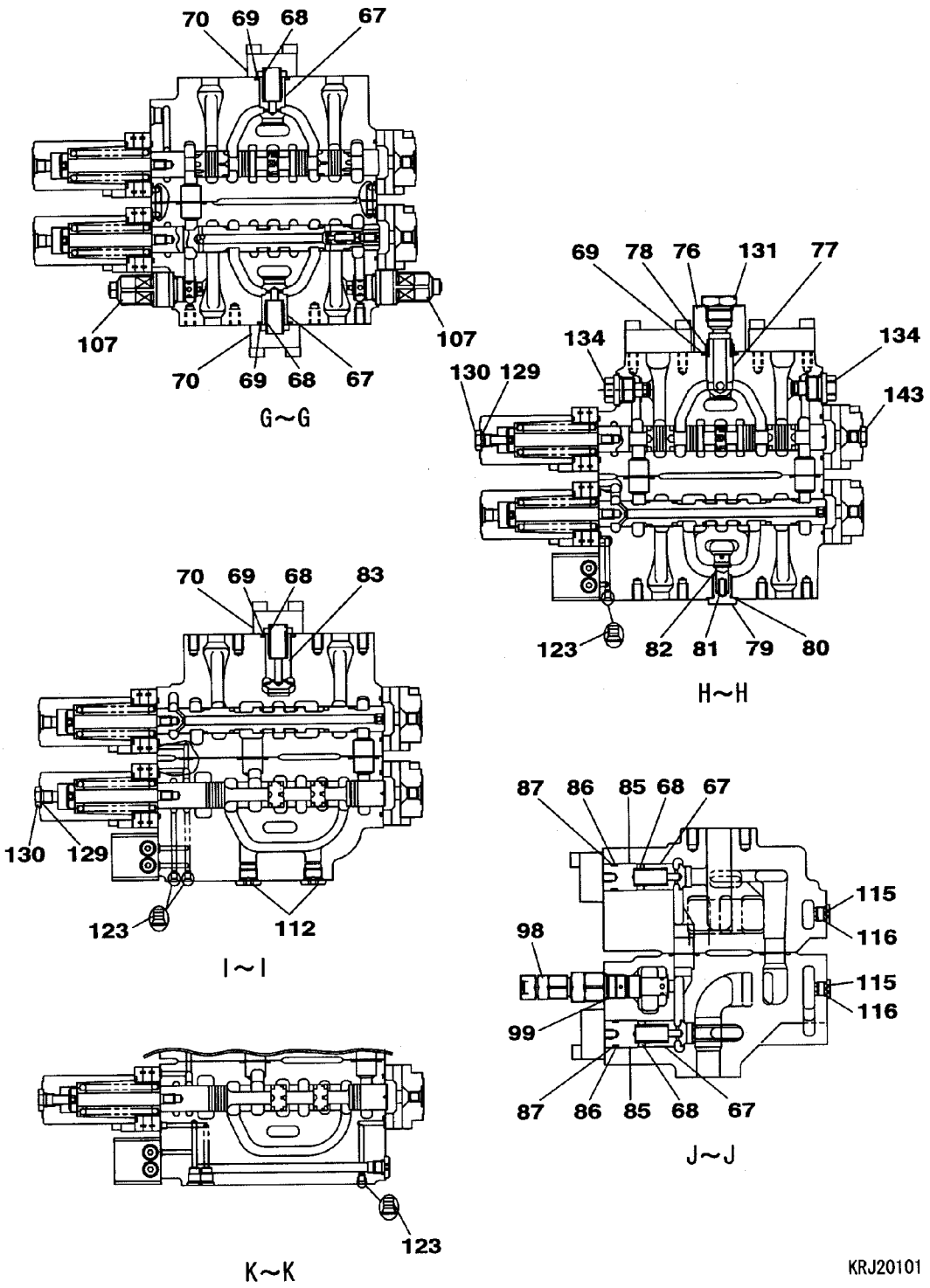

https://truckmanualshub.com/

VALVE;CONTROL	ﾊﾞﾙﾌﾞ;ｺﾝﾄﾛｰﾙ SH200-5LR	ZAJ313L0121 000 10/20	000

符号 ITEM	構成 COMPO	部品番号 PART NO.	部品名	PART NAME	個数 Q'TY	互換 ICA	代替部品 REPLACEABLE PART	備考 MEMO
36	1	-------	ｽﾌﾟｰﾙ;ﾊﾞﾙﾌﾞ	SPOOL;VALVE	1			
37	1	LSC0158	ｼｰﾄ;ｽﾌﾟﾘﾝｸﾞ	SEAT;SPRING	2			
38	1	LG00338	ｽﾌﾟﾘﾝｸﾞ;ｱﾂｼｭｸ	SPRING;COMPRESSION	1			
39	1	LPC0222	ｴﾝﾄﾞ ｽﾌﾟｰﾙ	END;SPL	1			
40	1	LBQ0260	O-ﾘﾝｸﾞ JISB2401 1AP2	O-RING	1			
41	1	LK005690	ﾌﾟﾗｸﾞ	PLUG	1			
42	1	LBQ0242	O-ﾘﾝｸﾞ JISB2401 1BP2	O-RING	1			
43	1	LG00339	ｽﾌﾟﾘﾝｸﾞ;ｱﾂｼｭｸ	SPRING;COMPRESSION	1			
44	1	LJ014690	ｽﾌﾟｰﾙ ASSY	SPOOL	1			
45	1A	-------	ﾌﾟﾚｰﾄ ASS'Y	PLATE;SPL	1			
46	2A	-------	ﾌﾟﾚｰﾄ KIT	PLATE;SPL	1			
47	3	-------	ﾌﾟﾚｰﾄ	PLATE	1			
48	3	-------	ﾌﾟﾚｰﾄ	PLATE	1			
49	3	-------	ﾌﾟﾚｰﾄ	PLATE	1			
50	3	-------	ｶﾞｽｹｯﾄ	GASKET	2			
51	3	-------	ｽﾌﾟｰﾙ	SPOOL	3			
52	3	-------	ﾌｨﾙﾀ ﾄｸｼｭ	FILTER;SPL	3			
53	3	108R006Z025N	ﾛｯｶｸｱﾅB M6X25-12.9	BOLT;HEX SOC HD	2			
54	1A	-------	ﾌﾟﾚｰﾄ ASS'Y	PLATE;SPL	1			
55	2A	-------	ﾌﾟﾚｰﾄ KIT	PLATE;SPL	1			
56	3	-------	ﾌﾟﾚｰﾄ	PLATE	1			
57	3	-------	ﾌﾟﾚｰﾄ	PLATE	1			
58	3	-------	ﾌﾟﾚｰﾄ	PLATE	1			
59	3	-------	ｶﾞｽｹｯﾄ	GASKET	2			
60	3	-------	ｽﾌﾟｰﾙ	SPOOL	4			
61	3	-------	ﾌｨﾙﾀ ﾄｸｼｭ	FILTER;SPL	4			
62	3	108R006Z025N	ﾛｯｶｸｱﾅB M6X25-12.9	BOLT;HEX SOC HD	2			
63	1	LBQ0162	O-ﾘﾝｸﾞ JISB2401 1BP1	O-RING	1			
64	1	LBB0162	ﾘﾝｸﾞ;ﾊﾞｯｸｱｯﾌﾟ	RING;BACK-UP	2			
65	1	LJ00726	ﾎﾟﾍﾟｯﾄ	POPPET	2			
66	1	LG00340	ｽﾌﾟﾘﾝｸﾞ;ｱﾂｼｭｸ	SPRING;COMPRESSION	2			
67	1	LJ00727	ﾎﾟﾍﾟｯﾄ	POPPET	7			
68	1	LG00341	ｽﾌﾟﾘﾝｸﾞ;ｱﾂｼｭｸ	SPRING;COMPRESSION	8			
69	1	LBQ0322	O-ﾘﾝｸﾞ JISB2401 1BP3	O-RING	10			
70	1	LH00248	ﾌﾗﾝｼﾞ	FLANGE;SPL	6			
71	1	LPC0180	ﾎﾟﾍﾟｯﾄ	POPPET	2			
72	1	LSC0227	ｽﾌﾟﾘﾝｸﾞ ﾄｸｼｭ	SPRING;SPL	2			
73	1	LJ00731	ｵﾘﾌｨｽ	ORIFICE	1			
74	1	LBQ0062	O-ﾘﾝｸﾞ JISB2401 1BP6	O-RING	27			
75	1	LR015280	ﾎﾞﾃﾞｨ ASSY	BODY	1			
76	1	LH005410	ﾌﾗﾝｼﾞ	FLANGE;SPL	1			
77	1	LJ016050	ﾎﾟﾍﾟｯﾄ	POPPET	1			
78	1	LG006510	ｽﾌﾟﾘﾝｸﾞ	SPRING;SPL	1			
79	1	LLC0082	ﾌﾟﾗｸﾞ	PLUG	1			
80	1	LBQ6910	O-ﾘﾝｸﾞ	O-RING	1			
81	1	LSC0094	ｽﾌﾟﾘﾝｸﾞ	SPRING;SPL	1			
82	1	LJ014680	ﾎﾟﾍﾟｯﾄ	POPPET	1			
83	1	LJ00730	ﾎﾟﾍﾟｯﾄ	POPPET	1			
84	1	LH00250	ﾌﾗﾝｼﾞ	FLANGE;SPL	2			
85	1	LH004960	ｽﾍﾟｰｻ	SPACER	2			
86	1	LBQ0251	O-ﾘﾝｸﾞ JISB2401 1AG2	O-RING	2			
87	1	LBB0253	ﾘﾝｸﾞ;ﾊﾞｯｸｱｯﾌﾟ	RING;BACK-UP	2			
88	1	LBQ0553	O-ﾘﾝｸﾞ JISB2401 1BG5	O-RING	1			
89	1	LH004970	ｽﾍﾟｰｻ	SPACER	1			
90	1	LH004980	ｽﾘｰﾌﾞ	SLEEVE	1			
91	1	LPC0098	ﾎﾟﾍﾟｯﾄ	POPPET	1			
92	1	LSC0187	ｽﾌﾟﾘﾝｸﾞ	SPRING;SPL	1			
93	1	LH004990	ﾌﾗﾝｼﾞ ﾄｸｼｭ	FLANGE;SPL	1			
94	1	LE012520	O-ﾘﾝｸﾞ ﾄｸｼｭ ﾌﾂｿ	O-RING	3			
95	1	LE014890	O-ﾘﾝｸﾞ	O-RING	14			
96	1	LBQ0102	O-ﾘﾝｸﾞ JISB2401 1BP1	O-RING	12			
97	1	LJ014710	ﾊﾞﾙﾌﾞ ｱﾝﾁﾄﾞﾘﾌﾄ ASSY	VALVE;SPL	2			
98	1A	LJ014720	ﾊﾞﾙﾌﾞ;ﾘﾘｰﾌ KIT	VALVE;RELIEF	1			
99	2	LBQ6912	O-ﾘﾝｸﾞ AS568-912-HS9	O-RING	1			
100	1A	LJ014730	ﾊﾞﾙﾌﾞ;ﾘﾘｰﾌ KIT	VALVE;RELIEF	2			
101	2	LBQ6912	O-ﾘﾝｸﾞ AS568-912-HS9	O-RING	2			
102	2	LBQ0102	O-ﾘﾝｸﾞ JISB2401 1BP1	O-RING	2			
103	1A	LJ014740	ﾊﾞﾙﾌﾞ;ﾘﾘｰﾌ KIT	VALVE;RELIEF	1			

https://truckmanualshub.com/

詳細/DETAIL

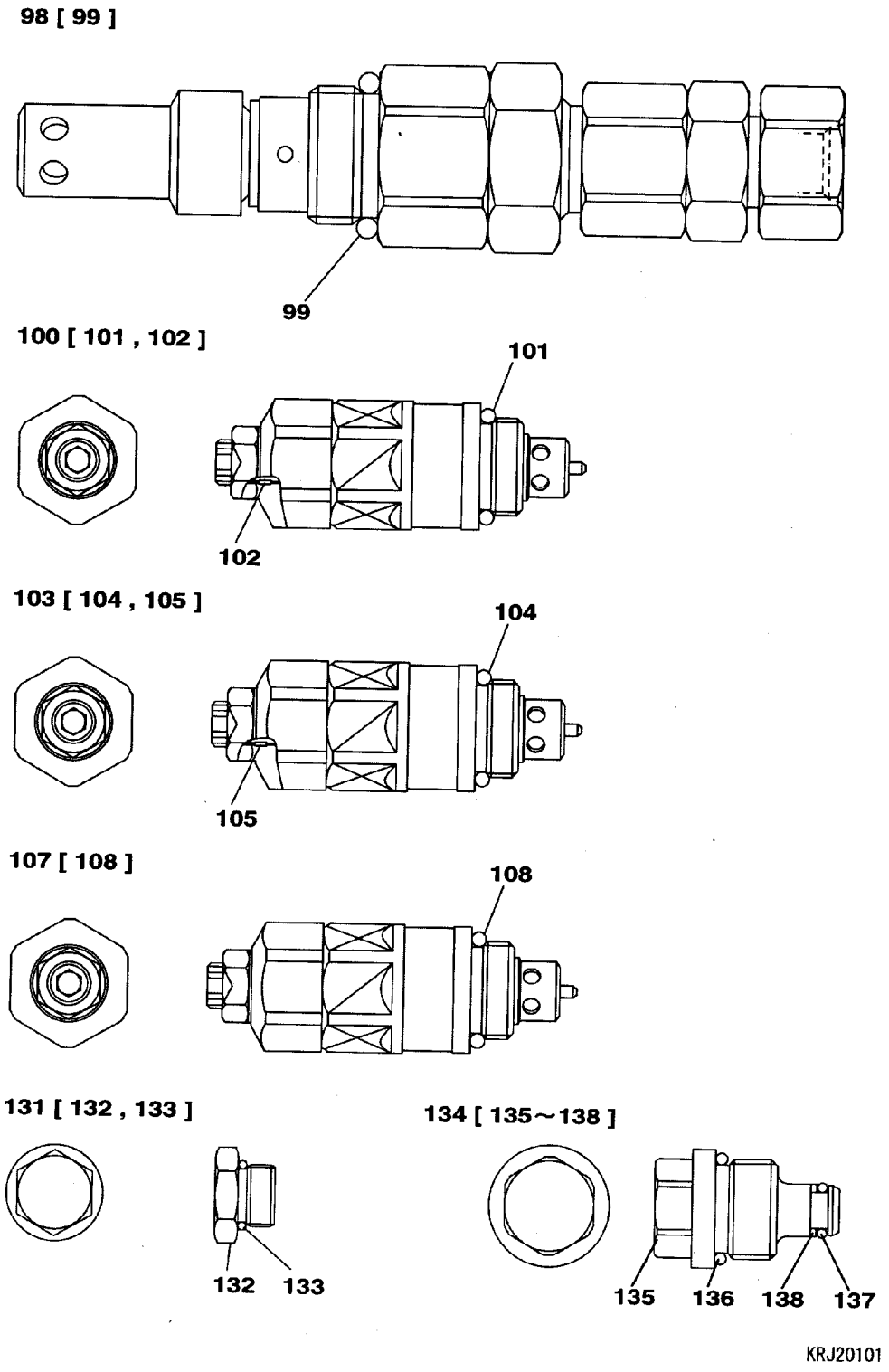

https://truckmanualshub.com/

符号 ITEM	構成 COMPO	部品番号 PART NO.	部品名	PART NAME	個数 Q'TY	互換 ICA	代替部品 REPLACEABLE PART	備考 MEMO
45	1A	-------	ﾌﾟﾚｰﾄ ASS'Y	PLATE;SPL	1			
46	2A	-------	ﾌﾟﾚｰﾄ KIT	PLATE;SPL	1			
47	3	-------	ﾌﾟﾚｰﾄ	PLATE	1			
48	3	-------	ﾌﾟﾚｰﾄ	PLATE	1			
49	3	-------	ﾌﾟﾚｰﾄ	PLATE	1			
50	3	-------	ｶﾞｽｹｯﾄ	GASKET	2			
51	3	-------	ｽﾌﾟｰﾙ	SPOOL	3			
52	3	-------	ﾌｨﾙﾀ ﾄｸｼｭ	FILTER;SPL	3			
53	3	108R006Z025N	ﾛｯｶｸｱﾅB M6X25-12.9	BOLT;HEX SOC HD	2			
54	1A	-------	ﾌﾟﾚｰﾄ ASS'Y	PLATE;SPL	1			
55	2A	-------	ﾌﾟﾚｰﾄ KIT	PLATE;SPL	1			
56	3	-------	ﾌﾟﾚｰﾄ	PLATE	1			
57	3	-------	ﾌﾟﾚｰﾄ	PLATE	1			
58	3	-------	ﾌﾟﾚｰﾄ	PLATE	1			
59	3	-------	ｶﾞｽｹｯﾄ	GASKET	2			
60	3	-------	ｽﾌﾟｰﾙ	SPOOL	4			
61	3	-------	ﾌｨﾙﾀ ﾄｸｼｭ	FILTER;SPL	4			
62	3	108R006Z025N	ﾛｯｶｸｱﾅB M6X25-12.9	BOLT;HEX SOC HD	2			
63	1	LBQ0162	O-ﾘﾝｸﾞ JISB2401 1BP1	O-RING	1			
64	1	LBB0162	ﾘﾝｸﾞ;ﾊﾞｯｸｱｯﾌﾟ	RING;BACK-UP	2			
65	1	LJ00726	ﾎﾟﾍﾟｯﾄ	POPPET	2			
66	1	LG00340	ｽﾌﾟﾘﾝｸﾞ;ｱｯｼｭｸ	SPRING;COMPRESSION	2			
67	1	LJ00727	ﾎﾟﾍﾟｯﾄ	POPPET	7			
68	1	LG00341	ｽﾌﾟﾘﾝｸﾞ;ｱｯｼｭｸ	SPRING;COMPRESSION	8			
69	1	LBQ0322	O-ﾘﾝｸﾞ JISB2401 1BP3	O-RING	10			
70	1	LH00248	ﾌﾗﾝｼﾞ	FLANGE;SPL	6			
71	1	LPC0180	ﾎﾟﾍﾟｯﾄ	POPPET	2			
72	1	LSC0227	ｽﾌﾟﾘﾝｸﾞ ﾄｸｼｭ	SPRING;SPL	2			
73	1	LJ00731	ｵﾘﾌｨｽ	ORIFICE	1			
74	1	LBQ0062	O-ﾘﾝｸﾞ JISB2401 1BP6	O-RING	27			
75	1	LR015280	ﾎﾞﾃﾞｨ ASSY	BODY	1			
76	1	LH005410	ﾌﾗﾝｼﾞ	FLANGE;SPL	1			
77	1	LJ016050	ﾎﾟﾍﾟｯﾄ	POPPET	1			
78	1	LG006510	ｽﾌﾟﾘﾝｸﾞ	SPRING;SPL	1			
79	1	LLC0082	ﾌﾟﾗｸﾞ	PLUG	1			
80	1	LBQ6910	O-ﾘﾝｸﾞ	O-RING	1			
81	1	LSC0094	ｽﾌﾟﾘﾝｸﾞ	SPRING;SPL	1			
82	1	LJ014680	ﾎﾟﾍﾟｯﾄ	POPPET	1			
83	1	LJ00730	ﾎﾟﾍﾟｯﾄ	POPPET	1			
84	1	LH00250	ﾌﾗﾝｼﾞ	FLANGE;SPL	2			
85	1	LH004960	ｽﾍﾟｰｻ	SPACER	2			
86	1	LBQ0251	O-ﾘﾝｸﾞ JISB2401 1AG2	O-RING	2			
87	1	LBB0253	ﾘﾝｸﾞ;ﾊﾞｯｸｱｯﾌﾟ	RING;BACK-UP	2			
88	1	LBQ0553	O-ﾘﾝｸﾞ JISB2401 1BG5	O-RING	1			
89	1	LH004970	ｽﾍﾟｰｻ	SPACER	1			
90	1	LH004980	ｽﾘｰﾌﾞ	SLEEVE	1			
91	1	LPC0098	ﾎﾟﾍﾟｯﾄ	POPPET	1			
92	1	LSC0187	ｽﾌﾟﾘﾝｸﾞ	SPRING;SPL	1			
93	1	LH004990	ﾌﾗﾝｼﾞ ﾄｸｼｭ	FLANGE;SPL	1			
94	1	LE012520	O-ﾘﾝｸﾞ ﾄｸｼｭ ﾌﾂｿ	O-RING	3			
95	1	LE014890	O-ﾘﾝｸﾞ	O-RING	14			
96	1	LBQ0102	O-ﾘﾝｸﾞ JISB2401 1BP1	O-RING	12			
97	1	LJ014710	ﾊﾞﾙﾌﾞ ｱﾝﾁﾄﾞﾘﾌﾄ ASSY	VALVE;SPL	2			
98	1A	LJ014720	ﾊﾞﾙﾌﾞ;ﾘﾘｰﾌ KIT	VALVE;RELIEF	1			
99	2	LBQ6912	O-ﾘﾝｸﾞ AS568-912-HS9	O-RING	1			
100	1A	LJ014730	ﾊﾞﾙﾌﾞ;ﾘﾘｰﾌ KIT	VALVE;RELIEF	2			
101	2	LBQ6912	O-ﾘﾝｸﾞ AS568-912-HS9	O-RING	2			
102	2	LBQ0102	O-ﾘﾝｸﾞ JISB2401 1BP1	O-RING	2			
103	1A	LJ014740	ﾊﾞﾙﾌﾞ;ﾘﾘｰﾌ KIT	VALVE;RELIEF	1			
104	2	LBQ6912	O-ﾘﾝｸﾞ AS568-912-HS9	O-RING	1			
105	2	LBQ0102	O-ﾘﾝｸﾞ JISB2401 1BP1	O-RING	1			
106	1	LJ015460	ﾊﾞﾙﾌﾞ;ﾘﾘｰﾌ 23MPA 216	VALVE;RELIEF	1			
107	1A	LJ01196	ﾊﾞﾙﾌﾞ;ﾘﾘｰﾌ 25MPA 181	VALVE;RELIEF	2			
108	2	LBQ6912	O-ﾘﾝｸﾞ AS568-912-HS9	O-RING	2			
109	1	LJ014700	ﾊﾞﾙﾌﾞ;ﾘﾘｰﾌ ASS'Y	VALVE;RELIEF	2			
110	1A	LNC0218	ﾌﾟﾗｸﾞ S/A	PLUG	3			
111	2	LBQ0182	O-ﾘﾝｸﾞ JISB2401 1BP1	O-RING	3			
112	1A	LNC0217	ﾌﾟﾗｸﾞ S/A	PLUG	10			

https://truckmanualshub.com/

10 [11 ~ 19] 11 [12 ~ 19]

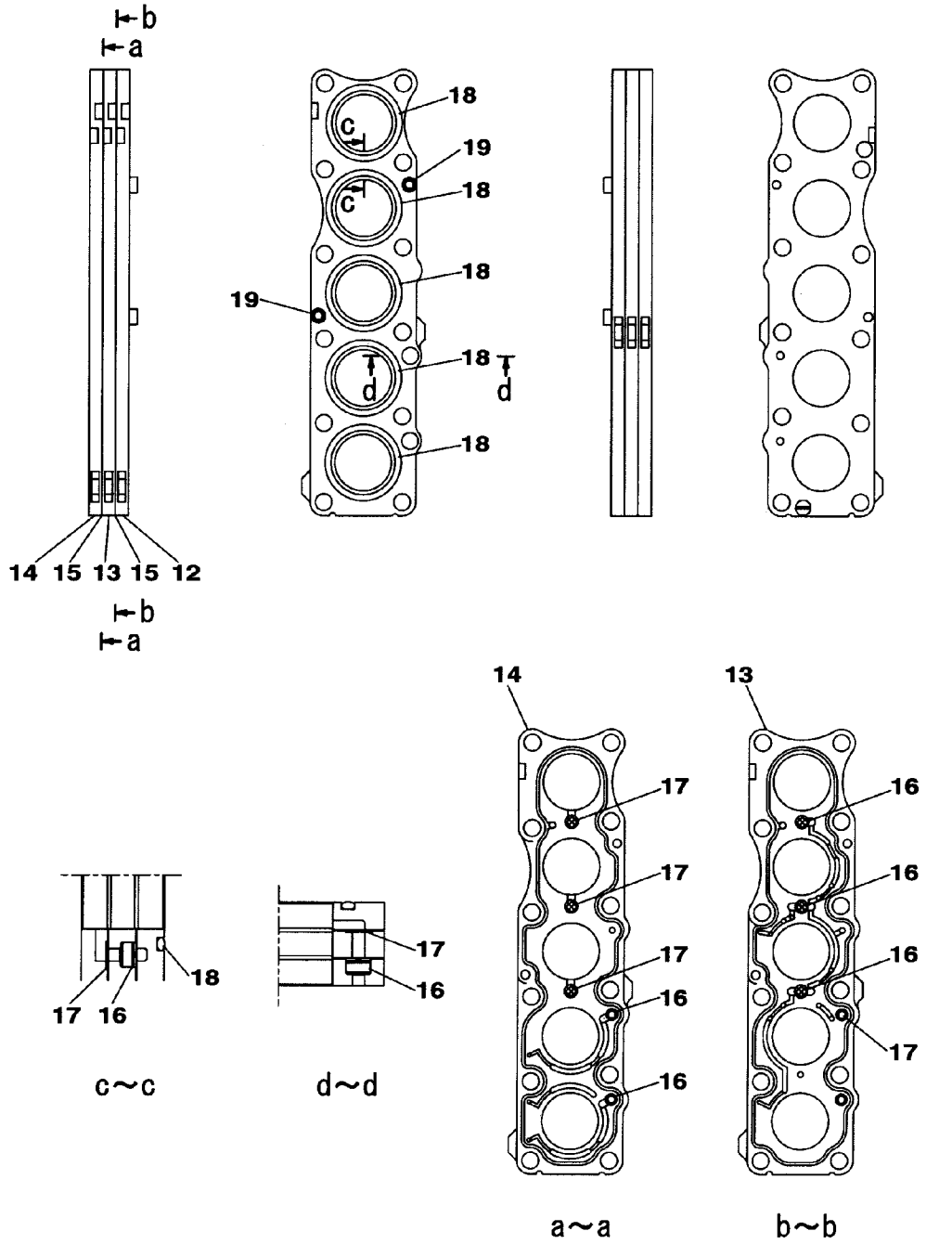

KRJ20101

https://truckmanualshub.com/

VALVE;CONTROL	ﾊﾞﾙﾌﾞ;ｺﾝﾄﾛｰﾙ SH200-5LR	ZAJ313L0121 000 14/20	000

符号 ITEM	構成 COMPO	部品番号 PART NO.	部品名	PART NAME	個数 Q'TY	互換 ICA	代替部品 REPLACEABLE PART	備考 MEMO
54	1A	-------	ﾌﾟﾚｰﾄ ASS'Y	PLATE;SPL	1			
55	2A	-------	ﾌﾟﾚｰﾄ KIT	PLATE;SPL	1			
56	3	-------	ﾌﾟﾚｰﾄ	PLATE	1			
57	3	-------	ﾌﾟﾚｰﾄ	PLATE	1			
58	3	-------	ﾌﾟﾚｰﾄ	PLATE	1			
59	3	-------	ｶﾞｽｹｯﾄ	GASKET	2			
60	3	-------	ｽﾌﾟｰﾙ	SPOOL	4			
61	3	-------	ﾌｨﾙﾀ ﾄｸｼｭ	FILTER;SPL	4			
62	3	108R006Z025N	ﾛｯｶｸｱﾅB M6X25-12.9	BOLT;HEX SOC HD	2			
63	1	LBQ0162	O-ﾘﾝｸﾞ JISB2401 1BP1	O-RING	1			
64	1	LBB0162	ﾘﾝｸﾞ;ﾊﾞｯｸｱｯﾌﾟ	RING;BACK-UP	2			
65	1	LJ00726	ﾎﾟﾍﾟｯﾄ	POPPET	2			
66	1	LG00340	ｽﾌﾟﾘﾝｸﾞ;ｱｯｼｭｸ	SPRING;COMPRESSION	2			
67	1	LJ00727	ﾎﾟﾍﾟｯﾄ	POPPET	7			
68	1	LG00341	ｽﾌﾟﾘﾝｸﾞ;ｱｯｼｭｸ	SPRING;COMPRESSION	8			
69	1	LBQ0322	O-ﾘﾝｸﾞ JISB2401 1BP3	O-RING	10			
70	1	LH00248	ﾌﾗﾝｼﾞ	FLANGE;SPL	6			
71	1	LPC0180	ﾎﾟﾍﾟｯﾄ	POPPET	2			
72	1	LSC0227	ｽﾌﾟﾘﾝｸﾞ ﾄｸｼｭ	SPRING;SPL	2			
73	1	LJ00731	ｵﾘﾌｨｽ	ORIFICE	1			
74	1	LBQ0062	O-ﾘﾝｸﾞ JISB2401 1BP6	O-RING	27			
75	1	LR015280	ﾎﾞﾃﾞｨ ASSY	BODY	1			
76	1	LH005410	ﾌﾗﾝｼﾞ	FLANGE;SPL	1			
77	1	LJ016050	ﾎﾟﾍﾟｯﾄ	POPPET	1			
78	1	LG006510	ｽﾌﾟﾘﾝｸﾞ	SPRING;SPL	1			
79	1	LLC0082	ﾌﾟﾗｸﾞ	PLUG	1			
80	1	LBQ6910	O-ﾘﾝｸﾞ	O-RING	1			
81	1	LSC0094	ｽﾌﾟﾘﾝｸﾞ	SPRING;SPL	1			
82	1	LJ014680	ﾎﾟﾍﾟｯﾄ	POPPET	1			
83	1	LJ00730	ﾎﾟﾍﾟｯﾄ	POPPET	1			
84	1	LH00250	ﾌﾗﾝｼﾞ	FLANGE;SPL	2			
85	1	LH004960	ｽﾍﾟｰｻ	SPACER	2			
86	1	LBQ0251	O-ﾘﾝｸﾞ JISB2401 1AG2	O-RING	2			
87	1	LBB0253	ﾘﾝｸﾞ;ﾊﾞｯｸｱｯﾌﾟ	RING;BACK-UP	2			
88	1	LBQ0553	O-ﾘﾝｸﾞ JISB2401 1BG5	O-RING	1			
89	1	LH004970	ｽﾍﾟｰｻ	SPACER	1			
90	1	LH004980	ｽﾘｰﾌﾞ	SLEEVE	1			
91	1	LPC0098	ﾎﾟﾍﾟｯﾄ	POPPET	1			
92	1	LSC0187	ｽﾌﾟﾘﾝｸﾞ	SPRING;SPL	1			
93	1	LH004990	ﾌﾗﾝｼﾞ ﾄｸｼｭ	FLANGE;SPL	1			
94	1	LE012520	O-ﾘﾝｸﾞ ﾄｸｼｭ ﾌﾂｿ	O-RING	3			
95	1	LE014890	O-ﾘﾝｸﾞ	O-RING	14			
96	1	LBQ0102	O-ﾘﾝｸﾞ JISB2401 1BP1	O-RING	12			
97	1	LJ014710	ﾊﾞﾙﾌﾞ ｱﾝﾁﾄﾞﾘﾌﾄ ASSY	VALVE;SPL	2			
98	1A	LJ014720	ﾊﾞﾙﾌﾞ;ﾘﾘｰﾌ KIT	VALVE;RELIEF	1			
99	2	LBQ6912	O-ﾘﾝｸﾞ AS568-912-HS9	O-RING	1			
100	1A	LJ014730	ﾊﾞﾙﾌﾞ;ﾘﾘｰﾌ KIT	VALVE;RELIEF	2			
101	2	LBQ6912	O-ﾘﾝｸﾞ AS568-912-HS9	O-RING	2			
102	2	LBQ0102	O-ﾘﾝｸﾞ JISB2401 1BP1	O-RING	2			
103	1A	LJ014740	ﾊﾞﾙﾌﾞ;ﾘﾘｰﾌ KIT	VALVE;RELIEF	1			
104	2	LBQ6912	O-ﾘﾝｸﾞ AS568-912-HS9	O-RING	1			
105	2	LBQ0102	O-ﾘﾝｸﾞ JISB2401 1BP1	O-RING	1			
106	1	LJ015460	ﾊﾞﾙﾌﾞ;ﾘﾘｰﾌ 23MPA 216	VALVE;RELIEF	1			
107	1A	LJ01196	ﾊﾞﾙﾌﾞ;ﾘﾘｰﾌ 25MPA 181	VALVE;RELIEF	2			
108	2	LBQ6912	O-ﾘﾝｸﾞ AS568-912-HS9	O-RING	2			
109	1	LJ014700	ﾊﾞﾙﾌﾞ;ﾘﾘｰﾌ ASS'Y	VALVE;RELIEF	2			
110	1A	LNC0218	ﾌﾟﾗｸﾞ S/A	PLUG	3			
111	2	LBQ0182	O-ﾘﾝｸﾞ JISB2401 1BP1	O-RING	3			
112	1A	LNC0217	ﾌﾟﾗｸﾞ S/A	PLUG	10			
113	2	LBQ0142	O-ﾘﾝｸﾞ JISB2401 1BP1	O-RING	10			
114	1A	LNC0238	ﾌﾟﾗｸﾞ S/A	PLUG	3			
115	2	LK00328	ﾌﾟﾗｸﾞ	PLUG	3			
116	2	LBQ0112	O-ﾘﾝｸﾞ JISB2401 1BP1	O-RING	3			
117	1	108R010Z055B	ﾛｯｶｸｱﾅB JIS B 1180 M	BOLT;HEX SOC HD	32			
118	1	108R010Z040B	ﾛｯｶｸｱﾅB JIS B1176 M1	BOLT;HEX SOC HD	66			
119	1	108R016Z130B	ﾛｯｶｸｱﾅB JIS B1180 M1	BOLT;HEX SOC HD	8			
120	1	LUC0118	ﾛｯｶｸｱﾅB	BOLT;HEX SOC HD	4			
121	1	-------	ﾒｲﾊﾞﾝ;ｷﾊﾞﾝ	NAMEPLATE;SER NO.	1			

https://truckmanualshub.com/

20 [21 ~ 29] 21 [22 ~ 29]

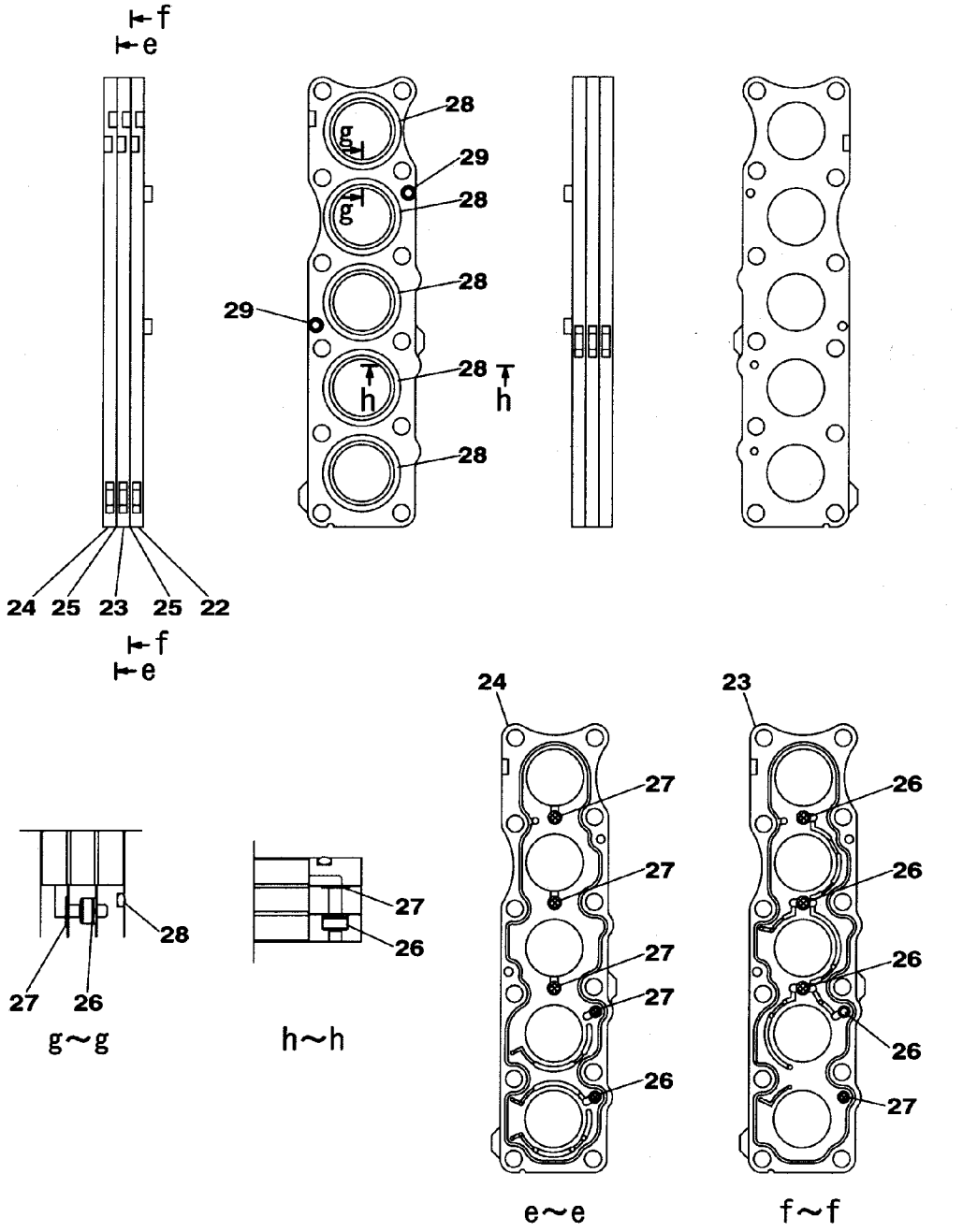

KRJ20101

https://truckmanualshub.com/

符号 ITEM	構成 COMPO	部品番号 PART NO.	部品名	PART NAME	個数 Q'TY	互換 ICA	代替部品 REPLACEABLE PART	備考 MEMO
63	1	LBQ0162	O-ﾘﾝｸﾞ JISB2401 1BP1	O-RING	1			
64	1	LBB0162	ﾘﾝｸﾞ;ﾊﾞｯｸｱｯﾌﾟ	RING;BACK-UP	2			
65	1	LJ00726	ﾎﾟﾍﾟｯﾄ	POPPET	2			
66	1	LG00340	ｽﾌﾟﾘﾝｸﾞ;ｱｯｼｭｸ	SPRING;COMPRESSION	2			
67	1	LJ00727	ﾎﾟﾍﾟｯﾄ	POPPET	7			
68	1	LG00341	ｽﾌﾟﾘﾝｸﾞ;ｱｯｼｭｸ	SPRING;COMPRESSION	8			
69	1	LBQ0322	O-ﾘﾝｸﾞ JISB2401 1BP3	O-RING	10			
70	1	LH00248	ﾌﾗﾝｼﾞ	FLANGE;SPL	6			
71	1	LPC0180	ﾎﾟﾍﾟｯﾄ	POPPET	2			
72	1	LSC0227	ｽﾌﾟﾘﾝｸﾞ ﾄｸｼｭ	SPRING;SPL	2			
73	1	LJ00731	ｵﾘﾌｨｽ	ORIFICE	1			
74	1	LBQ0062	O-ﾘﾝｸﾞ JISB2401 1BP6	O-RING	27			
75	1	LR015280	ﾎﾞﾃﾞｨ ASSY	BODY	1			
76	1	LH005410	ﾌﾗﾝｼﾞ	FLANGE;SPL	1			
77	1	LJ016050	ﾎﾟﾍﾟｯﾄ	POPPET	1			
78	1	LG006510	ｽﾌﾟﾘﾝｸﾞ	SPRING;SPL	1			
79	1	LLC0082	ﾌﾟﾗｸﾞ	PLUG	1			
80	1	LBQ6910	O-ﾘﾝｸﾞ	O-RING	1			
81	1	LSC0094	ｽﾌﾟﾘﾝｸﾞ	SPRING;SPL	1			
82	1	LJ014680	ﾎﾟﾍﾟｯﾄ	POPPET	1			
83	1	LJ00730	ﾎﾟﾍﾟｯﾄ	POPPET	1			
84	1	LH00250	ﾌﾗﾝｼﾞ	FLANGE;SPL	2			
85	1	LH004960	ｽﾍﾟｰｻ	SPACER	2			
86	1	LBQ0251	O-ﾘﾝｸﾞ JISB2401 1AG2	O-RING	2			
87	1	LBB0253	ﾘﾝｸﾞ;ﾊﾞｯｸｱｯﾌﾟ	RING;BACK-UP	2			
88	1	LBQ0553	O-ﾘﾝｸﾞ JISB2401 1BG5	O-RING	1			
89	1	LH004970	ｽﾍﾟｰｻ	SPACER	1			
90	1	LH004980	ｽﾘｰﾌﾞ	SLEEVE	1			
91	1	LPC0098	ﾎﾟﾍﾟｯﾄ	POPPET	1			
92	1	LSC0187	ｽﾌﾟﾘﾝｸﾞ	SPRING;SPL	1			
93	1	LH004990	ﾌﾗﾝｼﾞ ﾄｸｼｭ	FLANGE;SPL	1			
94	1	LE012520	O-ﾘﾝｸﾞ ﾄｸｼｭ ﾌﾂｿ	O-RING	3			
95	1	LE014890	O-ﾘﾝｸﾞ	O-RING	14			
96	1	LBQ0102	O-ﾘﾝｸﾞ JISB2401 1BP1	O-RING	12			
97	1	LJ014710	ﾊﾞﾙﾌﾞ ｱﾝﾁﾄﾞﾘﾌﾄ ASSY	VALVE;SPL	2			
98	1A	LJ014720	ﾊﾞﾙﾌﾞ;ﾘﾘｰﾌ KIT	VALVE;RELIEF	1			
99	2	LBQ6912	O-ﾘﾝｸﾞ AS568-912-HS9	O-RING	1			
100	1A	LJ014730	ﾊﾞﾙﾌﾞ;ﾘﾘｰﾌ KIT	VALVE;RELIEF	2			
101	2	LBQ6912	O-ﾘﾝｸﾞ AS568-912-HS9	O-RING	2			
102	2	LBQ0102	O-ﾘﾝｸﾞ JISB2401 1BP1	O-RING	2			
103	1A	LJ014740	ﾊﾞﾙﾌﾞ;ﾘﾘｰﾌ KIT	VALVE;RELIEF	1			
104	2	LBQ6912	O-ﾘﾝｸﾞ AS568-912-HS9	O-RING	1			
105	2	LBQ0102	O-ﾘﾝｸﾞ JISB2401 1BP1	O-RING	1			
106	1	LJ015460	ﾊﾞﾙﾌﾞ;ﾘﾘｰﾌ 23MPA 216	VALVE;RELIEF	1			
107	1A	LJ01196	ﾊﾞﾙﾌﾞ;ﾘﾘｰﾌ 25MPA 181	VALVE;RELIEF	2			
108	2	LBQ6912	O-ﾘﾝｸﾞ AS568-912-HS9	O-RING	2			
109	1	LJ014700	ﾊﾞﾙﾌﾞ;ﾘﾘｰﾌ ASS'Y	VALVE;RELIEF	2			
110	1A	LNC0218	ﾌﾟﾗｸﾞ S/A	PLUG	3			
111	2	LBQ0182	O-ﾘﾝｸﾞ JISB2401 1BP1	O-RING	3			
112	1A	LNC0217	ﾌﾟﾗｸﾞ S/A	PLUG	10			
113	2	LBQ0142	O-ﾘﾝｸﾞ JISB2401 1BP1	O-RING	10			
114	1A	LNC0238	ﾌﾟﾗｸﾞ S/A	PLUG	3			
115	2	LK00328	ﾌﾟﾗｸﾞ	PLUG	3			
116	2	LBQ0112	O-ﾘﾝｸﾞ JISB2401 1BP1	O-RING	3			
117	1	108R010Z055B	ﾛｯｶｸｱﾅB JIS B 1180 M	BOLT;HEX SOC HD	32			
118	1	108R010Z040B	ﾛｯｶｸｱﾅB JIS B1176 M1	BOLT;HEX SOC HD	66			
119	1	108R016Z130B	ﾛｯｶｸｱﾅB JIS B1180 M1	BOLT;HEX SOC HD	8			
120	1	LUC0118	ﾛｯｶｸｱﾅB	BOLT;HEX SOC HD	4			
121	1	-------	ﾒｲﾊﾞﾝ;ｷﾊﾞﾝ	NAMEPLATE;SER NO.	1			
122	1	-------	ｽｸﾘｭｰ ﾄﾞﾗｲﾌﾞ	SCREW	2			
123	1	-------	ﾌﾟﾗｸﾞ	PLUG	5			
124	1	LA011120	ﾛｯｶｸｱﾅB	BOLT;HEX SOC HD	4			
125	1	-------	ｽﾌﾟｰﾙ ASS'Y	SPOOL	1			
126	1	LR015290	ｷｬｯﾌﾟ	CAP	1			
127	1	LR00579	ｷｬｯﾌﾟ	CAP	2			
128	1	LBQ5219	O-ﾘﾝｸﾞ	O-RING	2			
129	1	LBQ0112	O-ﾘﾝｸﾞ JISB2401 1BP1	O-RING	2			
130	1	LK00301	ﾌﾟﾗｸﾞ	PLUG	2			

https://truckmanualshub.com/

45 [46 ~ 53] 46 [47 ~ 53]

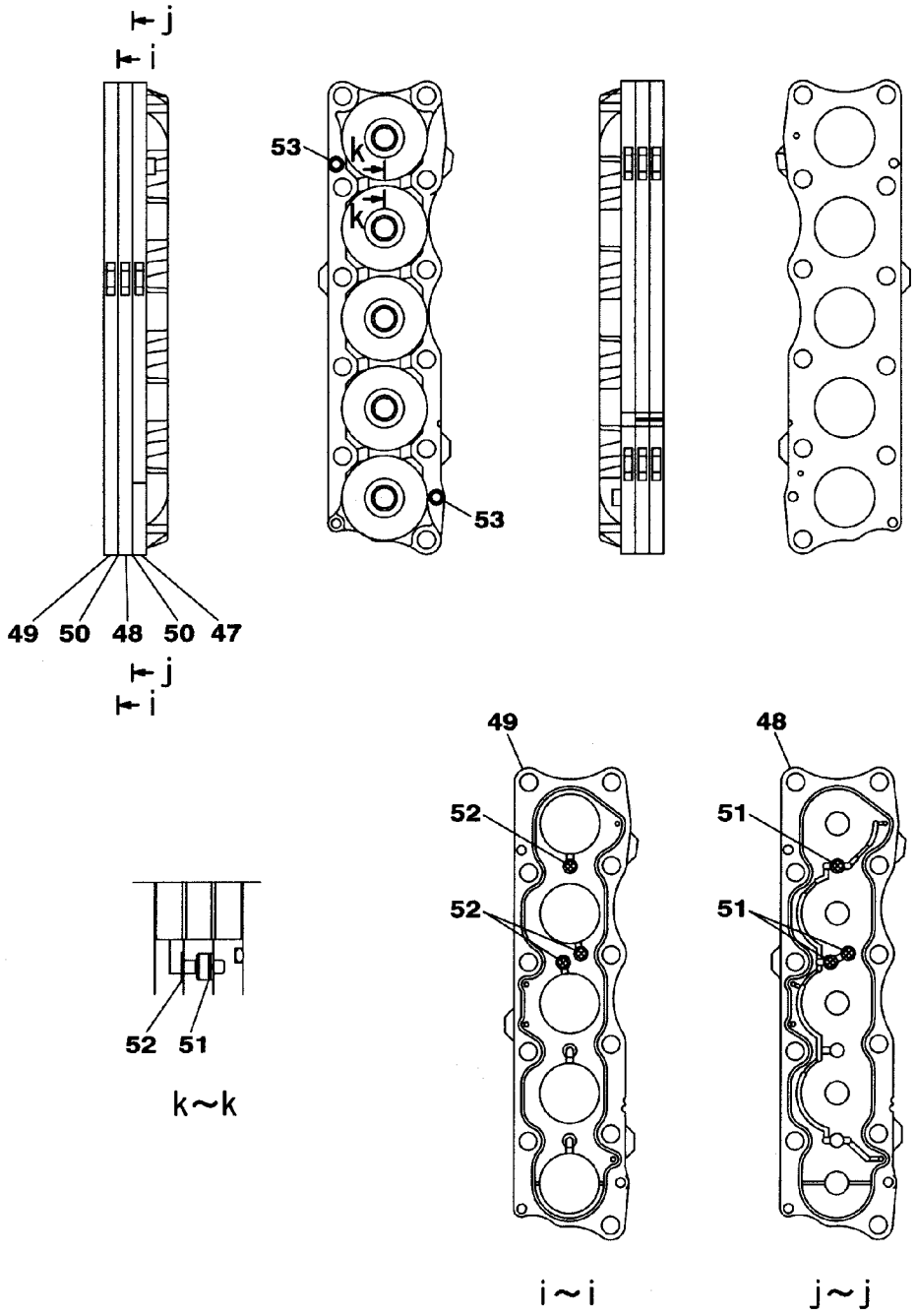

KRJ20101

https://truckmanualshub.com/

VALVE;CONTROL	ﾊﾞﾙﾌﾞ;ｺﾝﾄﾛｰﾙ SH200-5LR	ZAJ313L0121 000 18/20	000

符号 ITEM	構成 COMPO	部品番号 PART NO.	部品名	PART NAME	個数 Q'TY	互換 ICA	代替部品 REPLACEABLE PART	備考 MEMO
72	1	LSC0227	ｽﾌﾟﾘﾝｸﾞ ﾄｸｼｭ	SPRING;SPL	2			
73	1	LJ00731	ｵﾘﾌｨｽ	ORIFICE	1			
74	1	LBQ0062	O-ﾘﾝｸﾞ JISB2401 1BP6	O-RING	27			
75	1	LR015280	ﾎﾞﾃﾞｨ ASSY	BODY	1			
76	1	LH005410	ﾌﾗﾝｼﾞ	FLANGE;SPL	1			
77	1	LJ016050	ﾎﾟﾍﾟｯﾄ	POPPET	1			
78	1	LG006510	ｽﾌﾟﾘﾝｸﾞ	SPRING;SPL	1			
79	1	LLC0082	ﾌﾟﾗｸﾞ	PLUG	1			
80	1	LBQ6910	O-ﾘﾝｸﾞ	O-RING	1			
81	1	LSC0094	ｽﾌﾟﾘﾝｸﾞ	SPRING;SPL	1			
82	1	LJ014680	ﾎﾟﾍﾟｯﾄ	POPPET	1			
83	1	LJ00730	ﾎﾟﾍﾟｯﾄ	POPPET	1			
84	1	LH00250	ﾌﾗﾝｼﾞ	FLANGE;SPL	2			
85	1	LH004960	ｽﾍﾟｰｻ	SPACER	2			
86	1	LBQ0251	O-ﾘﾝｸﾞ JISB2401 1AG2	O-RING	2			
87	1	LBB0253	ﾘﾝｸﾞ;ﾊﾞｯｸｱｯﾌﾟ	RING;BACK-UP	2			
88	1	LBQ0553	O-ﾘﾝｸﾞ JISB2401 1BG5	O-RING	1			
89	1	LH004970	ｽﾍﾟｰｻ	SPACER	1			
90	1	LH004980	ｽﾘｰﾌﾞ	SLEEVE	1			
91	1	LPC0098	ﾎﾟﾍﾟｯﾄ	POPPET	1			
92	1	LSC0187	ｽﾌﾟﾘﾝｸﾞ	SPRING;SPL	1			
93	1	LH004990	ﾌﾗﾝｼﾞ ﾄｸｼｭ	FLANGE;SPL	1			
94	1	LE012520	O-ﾘﾝｸﾞ ﾄｸｼｭ ﾌﾂｿ	O-RING	3			
95	1	LE014890	O-ﾘﾝｸﾞ	O-RING	14			
96	1	LBQ0102	O-ﾘﾝｸﾞ JISB2401 1BP1	O-RING	12			
97	1	LJ014710	ﾊﾞﾙﾌﾞ ｱﾝﾁﾄﾞﾘﾌﾄ ASSY	VALVE;SPL	2			
98	1A	LJ014720	ﾊﾞﾙﾌﾞ;ﾘﾘｰﾌ KIT	VALVE;RELIEF	1			
99	2	LBQ6912	O-ﾘﾝｸﾞ AS568-912-HS9	O-RING	1			
100	1A	LJ014730	ﾊﾞﾙﾌﾞ;ﾘﾘｰﾌ KIT	VALVE;RELIEF	2			
101	2	LBQ6912	O-ﾘﾝｸﾞ AS568-912-HS9	O-RING	2			
102	2	LBQ0102	O-ﾘﾝｸﾞ JISB2401 1BP1	O-RING	2			
103	1A	LJ014740	ﾊﾞﾙﾌﾞ;ﾘﾘｰﾌ KIT	VALVE;RELIEF	1			
104	2	LBQ6912	O-ﾘﾝｸﾞ AS568-912-HS9	O-RING	1			
105	2	LBQ0102	O-ﾘﾝｸﾞ JISB2401 1BP1	O-RING	1			
106	1	LJ015460	ﾊﾞﾙﾌﾞ;ﾘﾘｰﾌ 23MPA 216	VALVE;RELIEF	1			
107	1A	LJ01196	ﾊﾞﾙﾌﾞ;ﾘﾘｰﾌ 25MPA 181	VALVE;RELIEF	2			
108	2	LBQ6912	O-ﾘﾝｸﾞ AS568-912-HS9	O-RING	2			
109	1	LJ014700	ﾊﾞﾙﾌﾞ;ﾘﾘｰﾌ ASS'Y	VALVE;RELIEF	2			
110	1A	LNC0218	ﾌﾟﾗｸﾞ S/A	PLUG	3			
111	2	LBQ0182	O-ﾘﾝｸﾞ JISB2401 1BP1	O-RING	3			
112	1A	LNC0217	ﾌﾟﾗｸﾞ S/A	PLUG	10			
113	2	LBQ0142	O-ﾘﾝｸﾞ JISB2401 1BP1	O-RING	10			
114	1A	LNC0238	ﾌﾟﾗｸﾞ S/A	PLUG	3			
115	2	LK00328	ﾌﾟﾗｸﾞ	PLUG	3			
116	2	LBQ0112	O-ﾘﾝｸﾞ JISB2401 1BP1	O-RING	3			
117	1	108R010Z055B	ﾛｯｶｸｱﾅB JIS B 1180 M	BOLT;HEX SOC HD	32			
118	1	108R010Z040B	ﾛｯｶｸｱﾅB JIS B1176 M1	BOLT;HEX SOC HD	66			
119	1	108R016Z130B	ﾛｯｶｸｱﾅB JIS B1180 M1	BOLT;HEX SOC HD	8			
120	1	LUC0118	ﾛｯｶｸｱﾅB	BOLT;HEX SOC HD	4			
121	1	-------	ﾒｲﾊﾞﾝ;ｷﾊﾞﾝ	NAMEPLATE;SER NO.	1			
122	1	-------	ｽｸﾘｭｰ ﾄﾞﾗｲﾌﾞ	SCREW	2			
123	1	-------	ﾌﾟﾗｸﾞ	PLUG	5			
124	1	LA011120	ﾛｯｶｸｱﾅB	BOLT;HEX SOC HD	4			
125	1	-------	ｽﾌﾟｰﾙ ASS'Y	SPOOL	1			
126	1	LR015290	ｷｬｯﾌﾟ	CAP	1			
127	1	LR00579	ｷｬｯﾌﾟ	CAP	2			
128	1	LBQ5219	O-ﾘﾝｸﾞ	O-RING	2			
129	1	LBQ0112	O-ﾘﾝｸﾞ JISB2401 1BP1	O-RING	2			
130	1	LK00301	ﾌﾟﾗｸﾞ	PLUG	2			
131	1A	LK00302	ﾌﾟﾗｸﾞ ASSY	PLUG	2			
132	2	LPC0256	ﾌﾟﾗｸﾞ	PLUG	2			
133	2	LBQ0242	O-ﾘﾝｸﾞ JISB2401 1BP2	O-RING	2			
134	1A	LPC0259	ﾌﾟﾗｸﾞ ASSY	PLUG	2			
135	2	LK00327	ﾌﾟﾗｸﾞ	PLUG	2			
136	2	LBQ6912	O-ﾘﾝｸﾞ AS568-912-HS9	O-RING	2			
137	2	LBQ0080	O-ﾘﾝｸﾞ JISB2401 1AP8	O-RING	2			
138	2	LBB6110	ﾘﾝｸﾞ;ﾊﾞｯｸｱｯﾌﾟ	RING;BACK-UP	2			
139	1	LA011130	ﾛｯｶｸｱﾅB	BOLT;HEX SOC HD	2			

https://truckmanualshub.com/

54 [55 ~ 62] 55 [56 ~ 62]

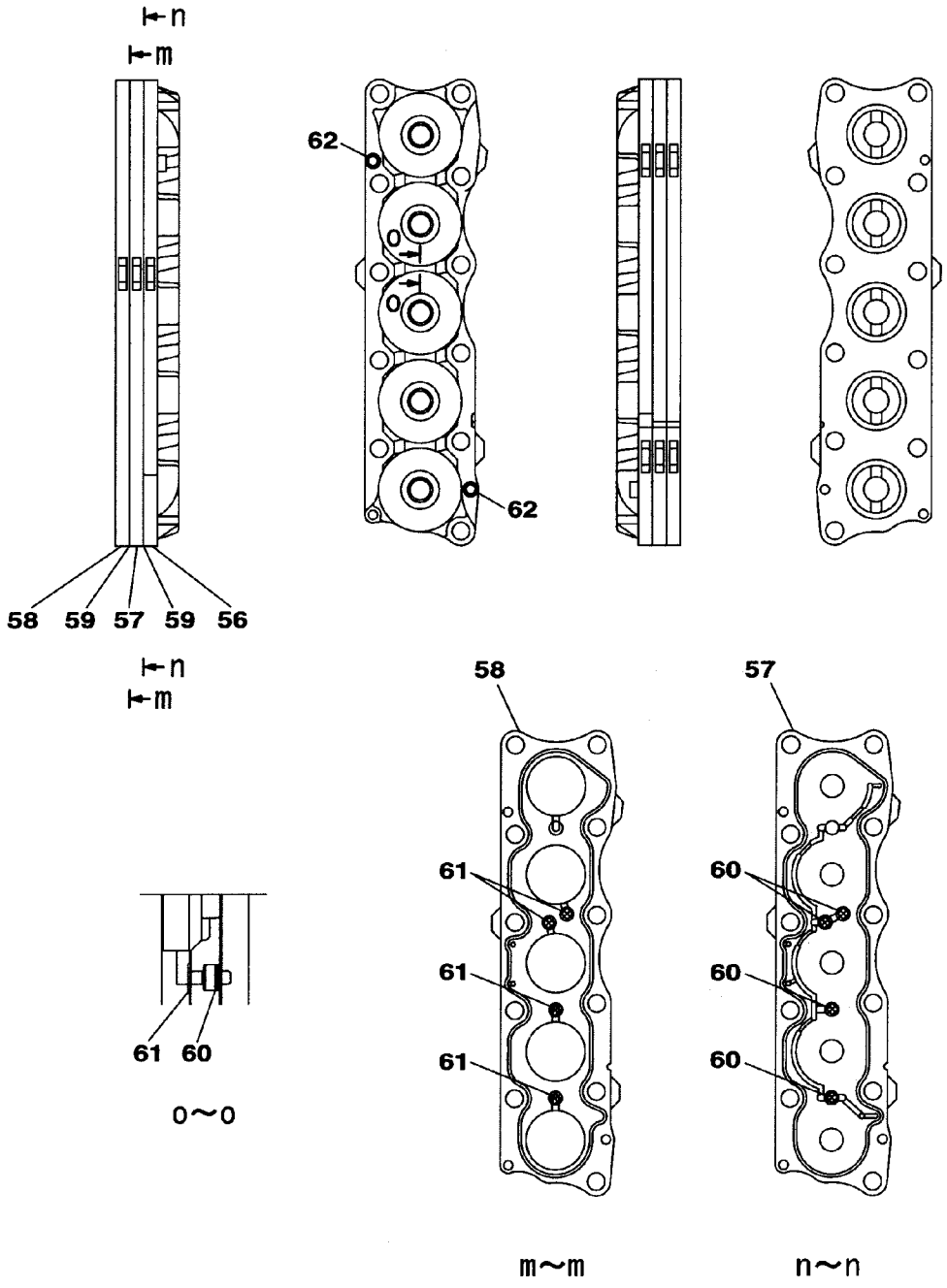

KRJ20101

https://truckmanualshub.com/

符号 ITEM	構成 COMPO	部品番号 PART NO.	部品名	PART NAME	個数 Q'TY	互換 ICA	代替部品 REPLACEABLE PART	備考 MEMO
81	1	LSC0094	ｽﾌﾟﾘﾝｸﾞ	SPRING;SPL	1			
82	1	LJ014680	ﾎﾟﾍﾟｯﾄ	POPPET	1			
83	1	LJ00730	ﾎﾟﾍﾟｯﾄ	POPPET	1			
84	1	LH00250	ﾌﾗﾝｼﾞ	FLANGE;SPL	2			
85	1	LH004960	ｽﾍﾟｰｻ	SPACER	2			
86	1	LBQ0251	O-ﾘﾝｸﾞ JISB2401 1AG2	O-RING	2			
87	1	LBB0253	ﾘﾝｸﾞ;ﾊﾞｯｸｱｯﾌﾟ	RING;BACK-UP	2			
88	1	LBQ0553	O-ﾘﾝｸﾞ JISB2401 1BG5	O-RING	1			
89	1	LH004970	ｽﾍﾟｰｻ	SPACER	1			
90	1	LH004980	ｽﾘｰﾌﾞ	SLEEVE	1			
91	1	LPC0098	ﾎﾟﾍﾟｯﾄ	POPPET	1			
92	1	LSC0187	ｽﾌﾟﾘﾝｸﾞ	SPRING;SPL	1			
93	1	LH004990	ﾌﾗﾝｼﾞ ﾄｸｼｭ	FLANGE;SPL	1			
94	1	LE012520	O-ﾘﾝｸﾞ ﾄｸｼｭ ﾌﾂｿ	O-RING	3			
95	1	LE014890	O-ﾘﾝｸﾞ	O-RING	14			
96	1	LBQ0102	O-ﾘﾝｸﾞ JISB2401 1BP1	O-RING	12			
97	1	LJ014710	ﾊﾞﾙﾌﾞ ｱﾝﾁﾄﾞﾘﾌﾄ ASSY	VALVE;SPL	2			
98	1A	LJ014720	ﾊﾞﾙﾌﾞ;ﾘﾘｰﾌ KIT	VALVE;RELIEF	1			
99	2	LBQ6912	O-ﾘﾝｸﾞ AS568-912-HS9	O-RING	1			
100	1A	LJ014730	ﾊﾞﾙﾌﾞ;ﾘﾘｰﾌ KIT	VALVE;RELIEF	2			
101	2	LBQ6912	O-ﾘﾝｸﾞ AS568-912-HS9	O-RING	2			
102	2	LBQ0102	O-ﾘﾝｸﾞ JISB2401 1BP1	O-RING	2			
103	1A	LJ014740	ﾊﾞﾙﾌﾞ;ﾘﾘｰﾌ KIT	VALVE;RELIEF	1			
104	2	LBQ6912	O-ﾘﾝｸﾞ AS568-912-HS9	O-RING	1			
105	2	LBQ0102	O-ﾘﾝｸﾞ JISB2401 1BP1	O-RING	1			
106	1	LJ015460	ﾊﾞﾙﾌﾞ;ﾘﾘｰﾌ 23MPA 216	VALVE;RELIEF	1			
107	1A	LJ01196	ﾊﾞﾙﾌﾞ;ﾘﾘｰﾌ 25MPA 181	VALVE;RELIEF	2			
108	2	LBQ6912	O-ﾘﾝｸﾞ AS568-912-HS9	O-RING	2			
109	1	LJ014700	ﾊﾞﾙﾌﾞ;ﾘﾘｰﾌ ASS'Y	VALVE;RELIEF	2			
110	1A	LNC0218	ﾌﾟﾗｸﾞ S/A	PLUG	3			
111	2	LBQ0182	O-ﾘﾝｸﾞ JISB2401 1BP1	O-RING	3			
112	1A	LNC0217	ﾌﾟﾗｸﾞ S/A	PLUG	10			
113	2	LBQ0142	O-ﾘﾝｸﾞ JISB2401 1BP1	O-RING	10			
114	1A	LNC0238	ﾌﾟﾗｸﾞ S/A	PLUG	3			
115	2	LK00328	ﾌﾟﾗｸﾞ	PLUG	3			
116	2	LBQ0112	O-ﾘﾝｸﾞ JISB2401 1BP1	O-RING	3			
117	1	108R010Z055B	ﾛｯｶｸｱﾅB JIS B 1180 M	BOLT;HEX SOC HD	32			
118	1	108R010Z040B	ﾛｯｶｸｱﾅB JIS B1176 M1	BOLT;HEX SOC HD	66			
119	1	108R016Z130B	ﾛｯｶｸｱﾅB JIS B1180 M1	BOLT;HEX SOC HD	8			
120	1	LUC0118	ﾛｯｶｸｱﾅB	BOLT;HEX SOC HD	4			
121	1	-------	ﾒｲﾊﾞﾝ;ｷﾊﾞﾝ	NAMEPLATE;SER NO.	1			
122	1	-------	ｽｸﾘｭｰ ﾄﾞﾗｲﾌﾞ	SCREW	2			
123	1	-------	ﾌﾟﾗｸﾞ	PLUG	5			
124	1	LA011120	ﾛｯｶｸｱﾅB	BOLT;HEX SOC HD	4			
125	1	-------	ｽﾌﾟｰﾙ ASS'Y	SPOOL	1			
126	1	LR015290	ｷｬｯﾌﾟ	CAP	1			
127	1	LR00579	ｷｬｯﾌﾟ	CAP	2			
128	1	LBQ5219	O-ﾘﾝｸﾞ	O-RING	2			
129	1	LBQ0112	O-ﾘﾝｸﾞ JISB2401 1BP1	O-RING	2			
130	1	LK00301	ﾌﾟﾗｸﾞ	PLUG	2			
131	1A	LK00302	ﾌﾟﾗｸﾞ ASSY	PLUG	2			
132	2	LPC0256	ﾌﾟﾗｸﾞ	PLUG	2			
133	2	LBQ0242	O-ﾘﾝｸﾞ JISB2401 1BP2	O-RING	2			
134	1A	LPC0259	ﾌﾟﾗｸﾞ ASSY	PLUG	2			
135	2	LK00327	ﾌﾟﾗｸﾞ	PLUG	2			
136	2	LBQ6912	O-ﾘﾝｸﾞ AS568-912-HS9	O-RING	2			
137	2	LBQ0080	O-ﾘﾝｸﾞ JISB2401 1AP8	O-RING	2			
138	2	LBB6110	ﾘﾝｸﾞ;ﾊﾞｯｸｱｯﾌﾟ	RING;BACK-UP	2			
139	1	LA011130	ﾛｯｶｸｱﾅB	BOLT;HEX SOC HD	2			
140	1	LT001660	ﾊｳｼﾞﾝｸﾞ ｱｳﾄﾚｯﾄ	HOUSING;SPL	1			
141	1	LB011890	ﾀｲﾛｯﾄﾞ	ROD;TIE	4			
142	1	LUC0094	ﾅｯﾄ	NUT;SPL	4			
143	1	LLC0045	ﾌﾟﾗｸﾞ S/A	PLUG	1			

https://truckmanualshub.com/

98 [99]
107 [108]

100 [101 , 102]
109 [110]

103 [104 , 105]
111 [112 , 113]

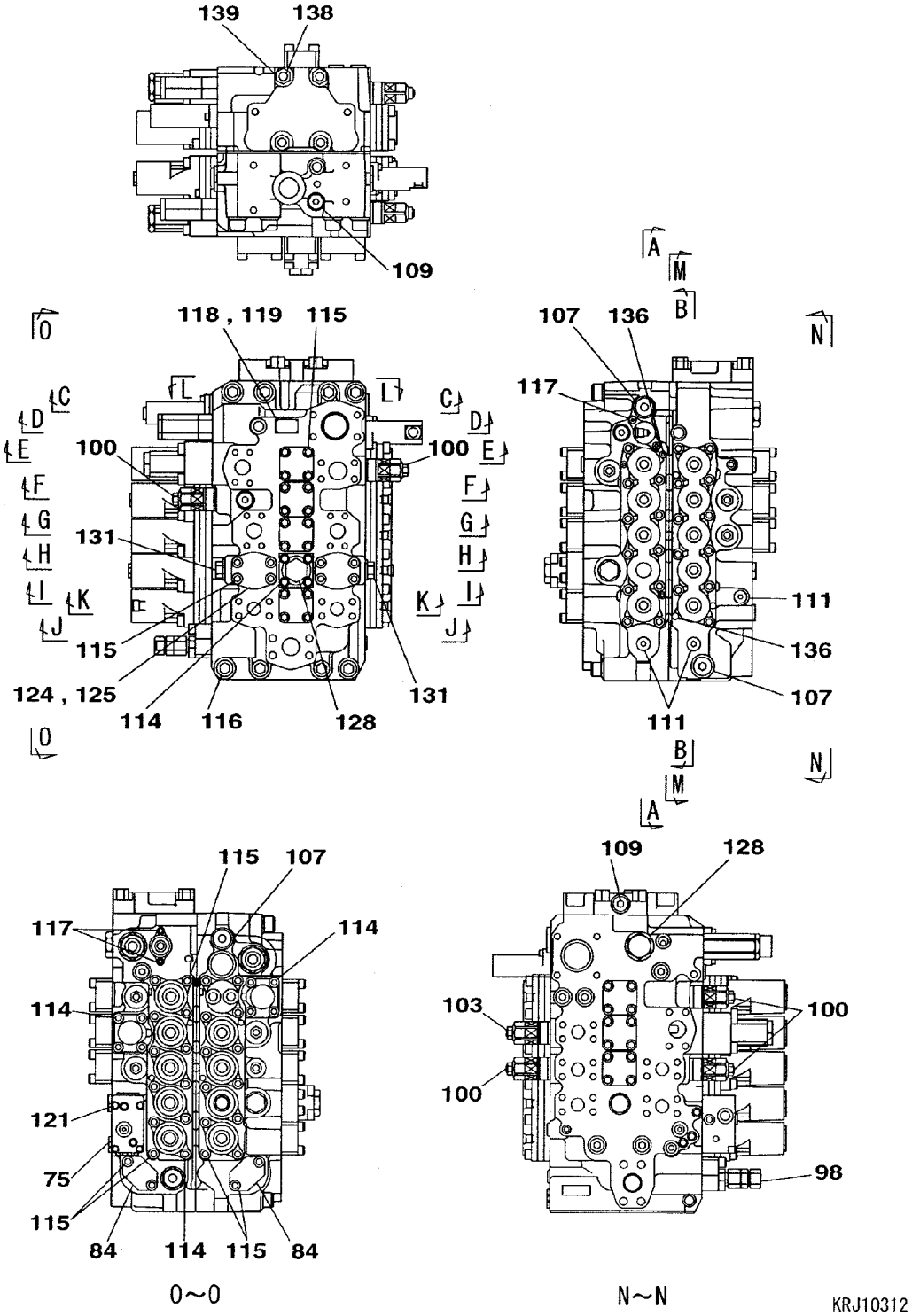

https://truckmanualshub.com/

VALVE;CONTROL	ﾊﾞﾙﾌﾞ;ｺﾝﾄﾛｰﾙ	ZAJ313L0150 000 2/20	000

符号 ITEM	構成 COMPO	部品番号 PART NO.	部品名	PART NAME	個数 Q'TY	互換 ICA	代替部品 REPLACEABLE PART	備考 MEMO
		KRJ10312						
1	1	-------	ﾊｳｼﾞﾝｸﾞ;ﾊﾞﾙﾌﾞ	HOUSING;VALVE	1			
2	1	-------	ｽﾌﾟｰﾙ ASSY	SPOOL	1			
3	1	-------	ｽﾌﾟｰﾙ ASSY	SPOOL	1			
4	1	-------	ｽﾌﾟｰﾙ ASSY	SPOOL	1			
5	1	-------	ｽﾌﾟｰﾙ ASSY	SPOOL	2			
6	1	-------	ｽﾌﾟｰﾙ ASSY	SPOOL	1			
7	1	LBQ0453	O-ﾘﾝｸﾞ JISB2401 1BG4	O-RING	20			
8	1	LR015210	ｷｬｯﾌﾟ	CAP	9			
9	1	LR015220	ｷｬｯﾌﾟ	CAP	1			
10	1A	LR015230	ﾌﾟﾚｰﾄ KIT	PLATE;SPL	1			
11	2A	-------	ﾌﾟﾚｰﾄ KIT	PLATE;SPL	1			
12	3	-------	ﾌﾟﾚｰﾄ	PLATE	1			
13	3	-------	ﾌﾟﾚｰﾄ	PLATE	1			
14	3	-------	ﾌﾟﾚｰﾄ	PLATE	1			
15	3	-------	ｶﾞｽｹｯﾄ	GASKET	2			
16	3	-------	ｽﾌﾟｰﾙ	SPOOL	5			
17	3	-------	ﾌｲﾙﾀ ﾄｸｼｭ	FILTER;SPL	4			
18	3	LBQ0453	O-ﾘﾝｸﾞ JISB2401 1BG4	O-RING	5			
19	3	108R006Z025N	ﾛｯｶｸｱﾅB M6X25-12.9	BOLT;HEX SOC HD	2			
20	1A	LR015240	ﾌﾟﾚｰﾄ KIT	PLATE;SPL	1			
21	2A	-------	ﾌﾟﾚｰﾄ KIT	PLATE;SPL	1			
22	3	-------	ﾌﾟﾚｰﾄ	PLATE	1			
23	3	-------	ﾌﾟﾚｰﾄ	PLATE	1			
24	3	-------	ﾌﾟﾚｰﾄ	PLATE	1			
25	3	-------	ｶﾞｽｹｯﾄ	GASKET	2			
26	3	-------	ｽﾌﾟｰﾙ	SPOOL	5			
27	3	-------	ﾌｲﾙﾀ ﾄｸｼｭ	FILTER;SPL	5			
28	3	LBQ0453	O-ﾘﾝｸﾞ JISB2401 1BG4	O-RING	5			
29	3	108R006Z025N	ﾛｯｶｸｱﾅB M6X25-12.9	BOLT;HEX SOC HD	2			
30	1	-------	ﾊｳｼﾞﾝｸﾞ;ﾊﾞﾙﾌﾞ	HOUSING;VALVE	1			
31	1	-------	ｽﾌﾟｰﾙ ASSY	SPOOL	1			
32	1	-------	ｽﾌﾟｰﾙ ASSY	SPOOL	1			
33	1	-------	ｽﾌﾟｰﾙ ASSY	SPOOL	1			
34	1	-------	ｽﾌﾟｰﾙ ASSY	SPOOL	1			
35	1	LR015250	ｷｬｯﾌﾟ	CAP	1			
36	1	-------	ｽﾌﾟｰﾙ;ﾊﾞﾙﾌﾞ	SPOOL;VALVE	1			
37	1	LSC0158	ｼｰﾄ;ｽﾌﾟﾘﾝｸﾞ	SEAT;SPRING	2			
38	1	LG00338	ｽﾌﾟﾘﾝｸﾞ;ｱｯｼｭｸ	SPRING;COMPRESSION	1			
39	1	LPC0222	ｴﾝﾄﾞ ｽﾌﾟｰﾙ	END;SPL	1			
40	1	LBQ0260	O-ﾘﾝｸﾞ JISB2401 1AP2	O-RING	1			
41	1	LK005690	ﾌﾟﾗｸﾞ	PLUG	1			
42	1	LBQ0242	O-ﾘﾝｸﾞ JISB2401 1BP2	O-RING	1			
43	1	LG00339	ｽﾌﾟﾘﾝｸﾞ;ｱｯｼｭｸ	SPRING;COMPRESSION	1			
44	1	LJ014690	ｽﾌﾟｰﾙ ASSY	SPOOL	1			
45	1A	LR015260	ﾌﾟﾚｰﾄ KIT	PLATE;SPL	1			
46	2A	-------	ﾌﾟﾚｰﾄ KIT	PLATE;SPL	1			
47	3	-------	ﾌﾟﾚｰﾄ	PLATE	1			
48	3	-------	ﾌﾟﾚｰﾄ	PLATE	1			
49	3	-------	ﾌﾟﾚｰﾄ	PLATE	1			
50	3	-------	ｶﾞｽｹｯﾄ	GASKET	2			
51	3	-------	ｽﾌﾟｰﾙ	SPOOL	3			
52	3	-------	ﾌｲﾙﾀ ﾄｸｼｭ	FILTER;SPL	3			
53	3	108R006Z025N	ﾛｯｶｸｱﾅB M6X25-12.9	BOLT;HEX SOC HD	2			
54	1A	LR015270	ﾌﾟﾚｰﾄ KIT	PLATE;SPL	1			
55	2A	-------	ﾌﾟﾚｰﾄ KIT	PLATE;SPL	1			
56	3	-------	ﾌﾟﾚｰﾄ	PLATE	1			
57	3	-------	ﾌﾟﾚｰﾄ	PLATE	1			
58	3	-------	ﾌﾟﾚｰﾄ	PLATE	1			
59	3	-------	ｶﾞｽｹｯﾄ	GASKET	2			
60	3	-------	ｽﾌﾟｰﾙ	SPOOL	4			
61	3	-------	ﾌｲﾙﾀ ﾄｸｼｭ	FILTER;SPL	4			
62	3	108R006Z025N	ﾛｯｶｸｱﾅB M6X25-12.9	BOLT;HEX SOC HD	2			
63	1	LBQ0162	O-ﾘﾝｸﾞ JISB2401 1BP1	O-RING	1			
64	1	LBB0162	ﾘﾝｸﾞ;ﾊﾞｯｸｱｯﾌﾟ	RING;BACK-UP	2			
65	1	LJ00726	ﾎﾟﾍﾟｯﾄ	POPPET	2			
66	1	LG00340	ｽﾌﾟﾘﾝｸﾞ;ｱｯｼｭｸ	SPRING;COMPRESSION	2			
67	1	LJ00727	ﾎﾟﾍﾟｯﾄ	POPPET	7			

https://truckmanualshub.com/

109 [110]

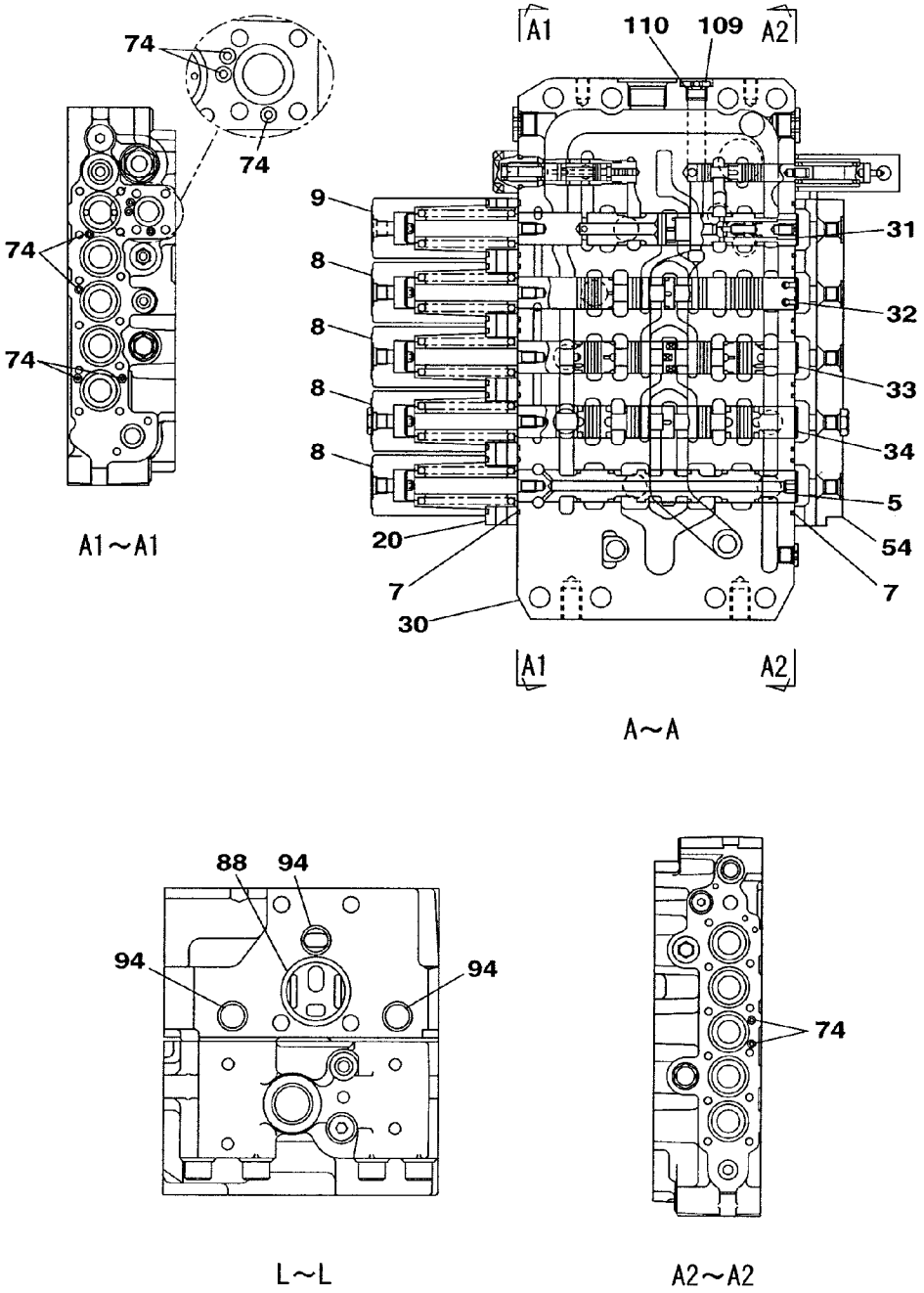

KRJ10312

https://truckmanualshub.com/

VALVE;CONTROL	ﾊﾞﾙﾌﾞ;ｺﾝﾄﾛｰﾙ	ZAJ313L0150 000 4/20	000

符号 ITEM	構成 COMPO	部品番号 PART NO.	部品名	PART NAME	個数 Q'TY	互換 ICA	代替部品 REPLACEABLE PART	備考 MEMO
9	1	LR015220	ｷｬｯﾌﾟ	CAP	1			
10	1A	LR015230	ﾌﾟﾚｰﾄ KIT	PLATE;SPL	1			
11	2A	-------	ﾌﾟﾚｰﾄ KIT	PLATE;SPL	1			
12	3	-------	ﾌﾟﾚｰﾄ	PLATE	1			
13	3	-------	ﾌﾟﾚｰﾄ	PLATE	1			
14	3	-------	ﾌﾟﾚｰﾄ	PLATE	1			
15	3	-------	ｶﾞｽｹｯﾄ	GASKET	2			
16	3	-------	ｽﾌﾟｰﾙ	SPOOL	5			
17	3	-------	ﾌｨﾙﾀ ﾄｸｼｭ	FILTER;SPL	4			
18	3	LBQ0453	O-ﾘﾝｸﾞ JISB2401 1BG4	O-RING	5			
19	3	108R006Z025N	ﾛｯｶｸｱﾅB M6X25-12.9	BOLT;HEX SOC HD	2			
20	1A	LR015240	ﾌﾟﾚｰﾄ KIT	PLATE;SPL	1			
21	2A	-------	ﾌﾟﾚｰﾄ KIT	PLATE;SPL	1			
22	3	-------	ﾌﾟﾚｰﾄ	PLATE	1			
23	3	-------	ﾌﾟﾚｰﾄ	PLATE	1			
24	3	-------	ﾌﾟﾚｰﾄ	PLATE	1			
25	3	-------	ｶﾞｽｹｯﾄ	GASKET	2			
26	3	-------	ｽﾌﾟｰﾙ	SPOOL	5			
27	3	-------	ﾌｨﾙﾀ ﾄｸｼｭ	FILTER;SPL	5			
28	3	LBQ0453	O-ﾘﾝｸﾞ JISB2401 1BG4	O-RING	5			
29	3	108R006Z025N	ﾛｯｶｸｱﾅB M6X25-12.9	BOLT;HEX SOC HD	2			
30	1	-------	ﾊｳｼﾞﾝｸﾞ;ﾊﾞﾙﾌﾞ	HOUSING;VALVE	1			
31	1	-------	ｽﾌﾟｰﾙ ASSY	SPOOL	1			
32	1	-------	ｽﾌﾟｰﾙ ASSY	SPOOL	1			
33	1	-------	ｽﾌﾟｰﾙ ASSY	SPOOL	1			
34	1	-------	ｽﾌﾟｰﾙ ASSY	SPOOL	1			
35	1	LR015250	ｷｬｯﾌﾟ	CAP	1			
36	1	-------	ｽﾌﾟｰﾙ;ﾊﾞﾙﾌﾞ	SPOOL;VALVE	1			
37	1	LSC0158	ｼｰﾄ;ｽﾌﾟﾘﾝｸﾞ	SEAT;SPRING	2			
38	1	LG00338	ｽﾌﾟﾘﾝｸﾞ;ｱﾂｼｭｸ	SPRING;COMPRESSION	1			
39	1	LPC0222	ｴﾝﾄﾞ ｽﾌﾟｰﾙ	END;SPL	1			
40	1	LBQ0260	O-ﾘﾝｸﾞ JISB2401 1AP2	O-RING	1			
41	1	LK005690	ﾌﾟﾗｸﾞ	PLUG	1			
42	1	LBQ0242	O-ﾘﾝｸﾞ JISB2401 1BP2	O-RING	1			
43	1	LG00339	ｽﾌﾟﾘﾝｸﾞ;ｱﾂｼｭｸ	SPRING;COMPRESSION	1			
44	1	LJ014690	ｽﾌﾟｰﾙ ASSY	SPOOL	1			
45	1A	LR015260	ﾌﾟﾚｰﾄ KIT	PLATE;SPL	1			
46	2A	-------	ﾌﾟﾚｰﾄ KIT	PLATE;SPL	1			
47	3	-------	ﾌﾟﾚｰﾄ	PLATE	1			
48	3	-------	ﾌﾟﾚｰﾄ	PLATE	1			
49	3	-------	ﾌﾟﾚｰﾄ	PLATE	1			
50	3	-------	ｶﾞｽｹｯﾄ	GASKET	2			
51	3	-------	ｽﾌﾟｰﾙ	SPOOL	3			
52	3	-------	ﾌｨﾙﾀ ﾄｸｼｭ	FILTER;SPL	3			
53	3	108R006Z025N	ﾛｯｶｸｱﾅB M6X25-12.9	BOLT;HEX SOC HD	2			
54	1A	LR015270	ﾌﾟﾚｰﾄ KIT	PLATE;SPL	1			
55	2A	-------	ﾌﾟﾚｰﾄ KIT	PLATE;SPL	1			
56	3	-------	ﾌﾟﾚｰﾄ	PLATE	1			
57	3	-------	ﾌﾟﾚｰﾄ	PLATE	1			
58	3	-------	ﾌﾟﾚｰﾄ	PLATE	1			
59	3	-------	ｶﾞｽｹｯﾄ	GASKET	2			
60	3	-------	ｽﾌﾟｰﾙ	SPOOL	4			
61	3	-------	ﾌｨﾙﾀ ﾄｸｼｭ	FILTER;SPL	4			
62	3	108R006Z025N	ﾛｯｶｸｱﾅB M6X25-12.9	BOLT;HEX SOC HD	2			
63	1	LBQ0162	O-ﾘﾝｸﾞ JISB2401 1BP1	O-RING	1			
64	1	LBB0162	ﾘﾝｸﾞ;ﾊﾞｯｸｱｯﾌﾟ	RING;BACK-UP	2			
65	1	LJ00726	ﾎﾟﾍﾟｯﾄ	POPPET	2			
66	1	LG00340	ｽﾌﾟﾘﾝｸﾞ;ｱﾂｼｭｸ	SPRING;COMPRESSION	2			
67	1	LJ00727	ﾎﾟﾍﾟｯﾄ	POPPET	7			
68	1	LG00341	ｽﾌﾟﾘﾝｸﾞ;ｱﾂｼｭｸ	SPRING;COMPRESSION	8			
69	1	LBQ0322	O-ﾘﾝｸﾞ JISB2401 1BP3	O-RING	10			
70	1	LH00248	ﾌﾗﾝｼﾞ	FLANGE;SPL	6			
71	1	LPC0180	ﾎﾟﾍﾟｯﾄ	POPPET	2			
72	1	LSC0227	ｽﾌﾟﾘﾝｸﾞ ﾄｸｼｭ	SPRING;SPL	2			
73	1	LJ00731	ｵﾘﾌｨｽ	ORIFICE	1			
74	1	LBQ0062	O-ﾘﾝｸﾞ JISB2401 1BP6	O-RING	27			
75	1	LR015280	ﾎﾞﾃﾞｨ ASSY	BODY	1			
76	1	LH005410	ﾌﾗﾝｼﾞ	FLANGE;SPL	1			

https://truckmanualshub.com/

98 [99]

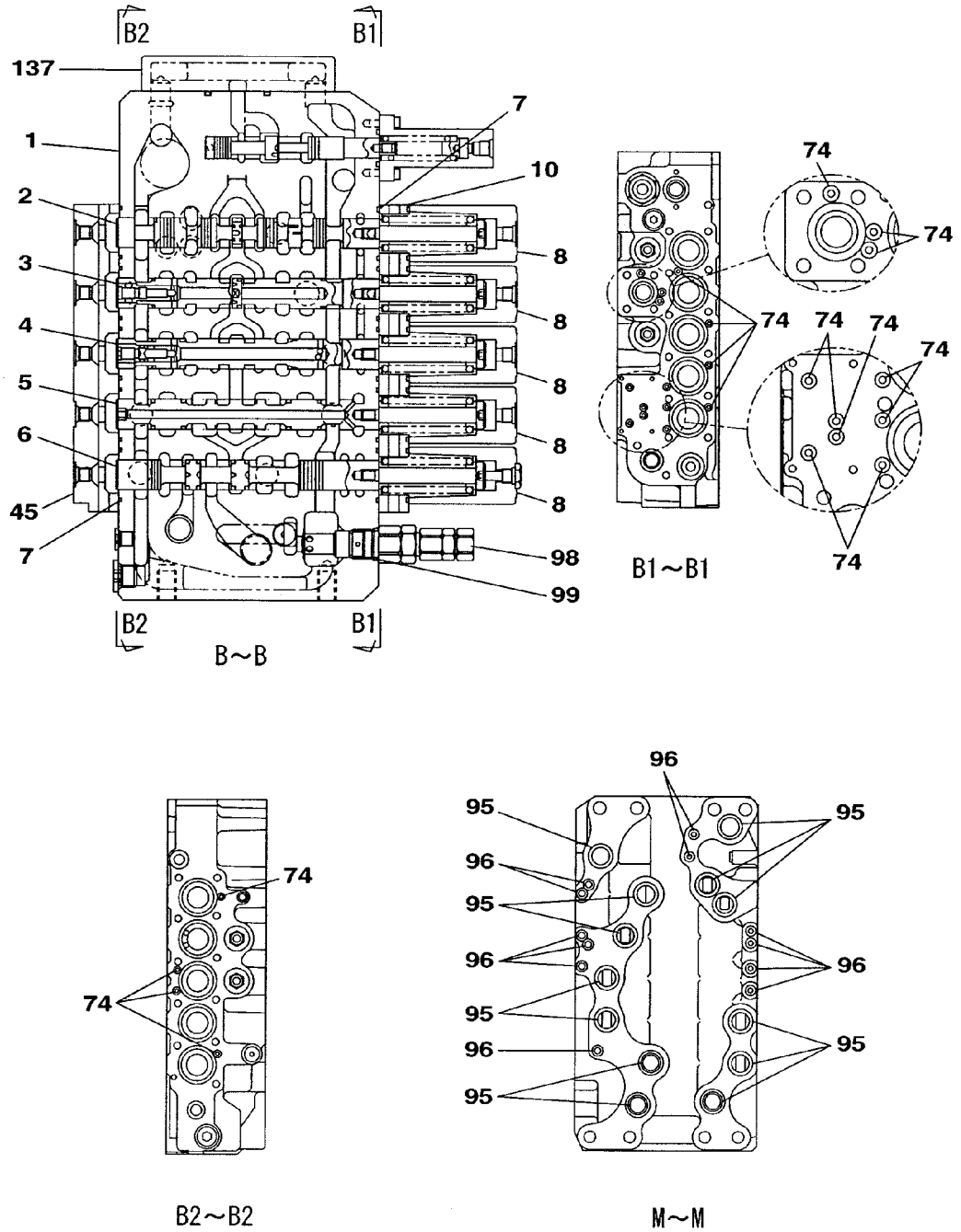

KRJ10312

https://truckmanualshub.com/

VALVE;CONTROL	ﾊﾞﾙﾌﾞ;ｺﾝﾄﾛｰﾙ	ZAJ313L0150 000 6/20	000

符号 ITEM	構成 COMPO	部品番号 PART NO.	部品名	PART NAME	個数 Q'TY	互換 ICA	代替部品 REPLACEABLE PART	備考 MEMO
18	3	LBQ0453	O-ﾘﾝｸﾞ JISB2401 1BG4	O-RING	5			
19	3	108R006Z025N	ﾛｯｶｸｱﾅB M6X25-12.9	BOLT;HEX SOC HD	2			
20	1A	LR015240	ﾌﾟﾚｰﾄ KIT	PLATE;SPL	1			
21	2A	-------	ﾌﾟﾚｰﾄ KIT	PLATE;SPL	1			
22	3	-------	ﾌﾟﾚｰﾄ	PLATE	1			
23	3	-------	ﾌﾟﾚｰﾄ	PLATE	1			
24	3	-------	ﾌﾟﾚｰﾄ	PLATE	1			
25	3	-------	ｶﾞｽｹｯﾄ	GASKET	2			
26	3	-------	ｽﾌﾟｰﾙ	SPOOL	5			
27	3	-------	ﾌｨﾙﾀ ﾄｸｼｭ	FILTER;SPL	5			
28	3	LBQ0453	O-ﾘﾝｸﾞ JISB2401 1BG4	O-RING	5			
29	3	108R006Z025N	ﾛｯｶｸｱﾅB M6X25-12.9	BOLT;HEX SOC HD	2			
30	1	-------	ﾊｳｼﾞﾝｸﾞ;ﾊﾞﾙﾌﾞ	HOUSING;VALVE	1			
31	1	-------	ｽﾌﾟｰﾙ ASSY	SPOOL	1			
32	1	-------	ｽﾌﾟｰﾙ ASSY	SPOOL	1			
33	1	-------	ｽﾌﾟｰﾙ ASSY	SPOOL	1			
34	1	-------	ｽﾌﾟｰﾙ ASSY	SPOOL	1			
35	1	LR015250	ｷｬｯﾌﾟ	CAP	1			
36	1	-------	ｽﾌﾟｰﾙ;ﾊﾞﾙﾌﾞ	SPOOL;VALVE	1			
37	1	LSC0158	ｼｰﾄ;ｽﾌﾟﾘﾝｸﾞ	SEAT;SPRING	2			
38	1	LG00338	ｽﾌﾟﾘﾝｸﾞ;ｱｯｼｭｸ	SPRING;COMPRESSION	1			
39	1	LPC0222	ｴﾝﾄﾞ ｽﾌﾟｰﾙ	END;SPL	1			
40	1	LBQ0260	O-ﾘﾝｸﾞ JISB2401 1AP2	O-RING	1			
41	1	LK005690	ﾌﾟﾗｸﾞ	PLUG	1			
42	1	LBQ0242	O-ﾘﾝｸﾞ JISB2401 1BP2	O-RING	1			
43	1	LG00339	ｽﾌﾟﾘﾝｸﾞ;ｱｯｼｭｸ	SPRING;COMPRESSION	1			
44	1	LJ014690	ｽﾌﾟｰﾙ ASSY	SPOOL	1			
45	1A	LR015260	ﾌﾟﾚｰﾄ KIT	PLATE;SPL	1			
46	2A	-------	ﾌﾟﾚｰﾄ KIT	PLATE;SPL	1			
47	3	-------	ﾌﾟﾚｰﾄ	PLATE	1			
48	3	-------	ﾌﾟﾚｰﾄ	PLATE	1			
49	3	-------	ﾌﾟﾚｰﾄ	PLATE	1			
50	3	-------	ｶﾞｽｹｯﾄ	GASKET	2			
51	3	-------	ｽﾌﾟｰﾙ	SPOOL	3			
52	3	-------	ﾌｨﾙﾀ ﾄｸｼｭ	FILTER;SPL	3			
53	3	108R006Z025N	ﾛｯｶｸｱﾅB M6X25-12.9	BOLT;HEX SOC HD	2			
54	1A	LR015270	ﾌﾟﾚｰﾄ KIT	PLATE;SPL	1			
55	2A	-------	ﾌﾟﾚｰﾄ KIT	PLATE;SPL	1			
56	3	-------	ﾌﾟﾚｰﾄ	PLATE	1			
57	3	-------	ﾌﾟﾚｰﾄ	PLATE	1			
58	3	-------	ﾌﾟﾚｰﾄ	PLATE	1			
59	3	-------	ｶﾞｽｹｯﾄ	GASKET	2			
60	3	-------	ｽﾌﾟｰﾙ	SPOOL	4			
61	3	-------	ﾌｨﾙﾀ ﾄｸｼｭ	FILTER;SPL	4			
62	3	108R006Z025N	ﾛｯｶｸｱﾅB M6X25-12.9	BOLT;HEX SOC HD	2			
63	1	LBQ0162	O-ﾘﾝｸﾞ JISB2401 1BP1	O-RING	1			
64	1	LBB0162	ﾘﾝｸﾞ;ﾊﾞｯｸｱｯﾌﾟ	RING;BACK-UP	2			
65	1	LJ00726	ﾎﾟﾍﾟｯﾄ	POPPET	2			
66	1	LG00340	ｽﾌﾟﾘﾝｸﾞ;ｱｯｼｭｸ	SPRING;COMPRESSION	2			
67	1	LJ00727	ﾎﾟﾍﾟｯﾄ	POPPET	7			
68	1	LG00341	ｽﾌﾟﾘﾝｸﾞ;ｱｯｼｭｸ	SPRING;COMPRESSION	8			
69	1	LBQ0322	O-ﾘﾝｸﾞ JISB2401 1BP3	O-RING	10			
70	1	LH00248	ﾌﾗﾝｼﾞ	FLANGE;SPL	6			
71	1	LPC0180	ﾎﾟﾍﾟｯﾄ	POPPET	2			
72	1	LSC0227	ｽﾌﾟﾘﾝｸﾞ ﾄｸｼｭ	SPRING;SPL	2			
73	1	LJ00731	ｵﾘﾌｨｽ	ORIFICE	1			
74	1	LBQ0062	O-ﾘﾝｸﾞ JISB2401 1BP6	O-RING	27			
75	1	LR015280	ﾎﾞﾃﾞｨ ASSY	BODY	1			
76	1	LH005410	ﾌﾗﾝｼﾞ	FLANGE;SPL	1			
77	1	LJ016050	ﾎﾟﾍﾟｯﾄ	POPPET	1			
78	1	LG006510	ｽﾌﾟﾘﾝｸﾞ	SPRING;SPL	1			
79	1	LLC0082	ﾌﾟﾗｸﾞ	PLUG	1			
80	1	LBQ6910	O-ﾘﾝｸﾞ	O-RING	1			
81	1	LSC0094	ｽﾌﾟﾘﾝｸﾞ	SPRING;SPL	1			
82	1	LJ014680	ﾎﾟﾍﾟｯﾄ	POPPET	1			
83	1	LJ00730	ﾎﾟﾍﾟｯﾄ	POPPET	1			
84	1	LH00250	ﾌﾗﾝｼﾞ	FLANGE;SPL	2			
85	1	LH004960	ｽﾍﾟｰｻ	SPACER	2			

https://truckmanualshub.com/

100 [101 , 102] 103 [104 , 105] 107 [108]

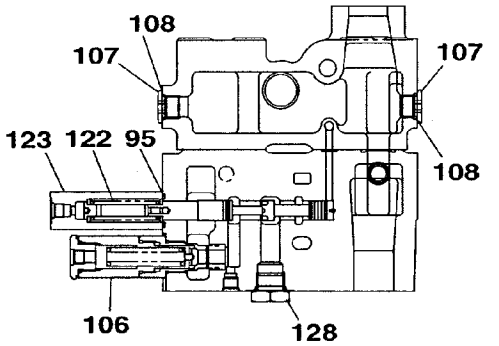

C~C

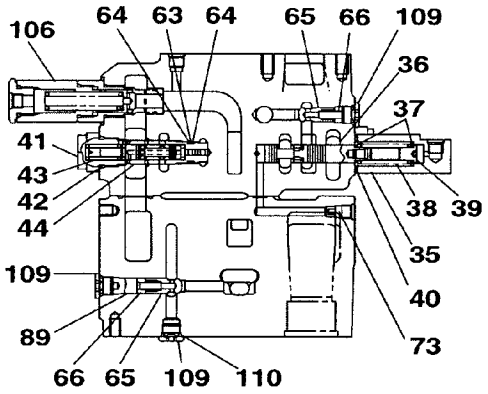

D~D

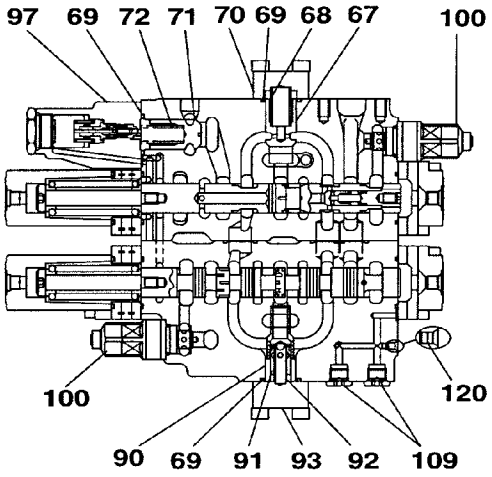

E~E

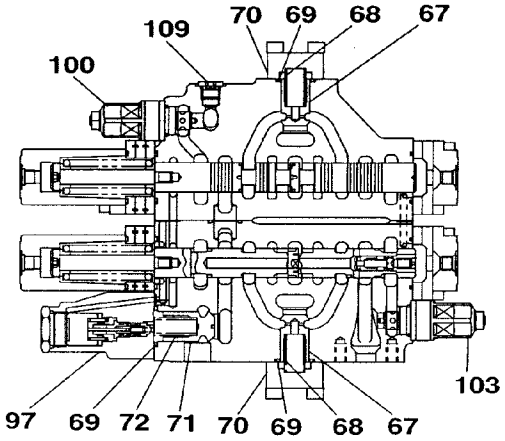

F~F

KRJ10312

https://truckmanualshub.com/

VALVE;CONTROL	ﾊﾞﾙﾌﾞ;ｺﾝﾄﾛｰﾙ	ZAJ313L0150 000 8/20	000

符号 ITEM	構成 COMPO	部品番号 PART NO.	部品名	PART NAME	個数 Q'TY	互換 ICA	代替部品 REPLACEABLE PART	備考 MEMO
27	3	-------	ﾌｨﾙﾀ ﾄｸｼｭ	FILTER;SPL	5			
28	3	LBQ0453	O-ﾘﾝｸﾞ JISB2401 1BG4	O-RING	5			
29	3	108R006Z025N	ﾛｯｶｸｱﾅB M6X25-12.9	BOLT;HEX SOC HD	2			
30	1	-------	ﾊｳｼﾞﾝｸﾞ;ﾊﾞﾙﾌﾞ	HOUSING;VALVE	1			
31	1	-------	ｽﾌﾟｰﾙ ASSY	SPOOL	1			
32	1	-------	ｽﾌﾟｰﾙ ASSY	SPOOL	1			
33	1	-------	ｽﾌﾟｰﾙ ASSY	SPOOL	1			
34	1	-------	ｽﾌﾟｰﾙ ASSY	SPOOL	1			
35	1	LR015250	ｷｬｯﾌﾟ	CAP	1			
36	1	-------	ｽﾌﾟｰﾙ;ﾊﾞﾙﾌﾞ	SPOOL;VALVE	1			
37	1	LSC0158	ｼｰﾄ;ｽﾌﾟﾘﾝｸﾞ	SEAT;SPRING	2			
38	1	LG00338	ｽﾌﾟﾘﾝｸﾞ;ｱｯｼｭｸ	SPRING;COMPRESSION	1			
39	1	LPC0222	ｴﾝﾄﾞ ｽﾌﾟｰﾙ	END;SPL	1			
40	1	LBQ0260	O-ﾘﾝｸﾞ JISB2401 1AP2	O-RING	1			
41	1	LK005690	ﾌﾟﾗｸﾞ	PLUG	1			
42	1	LBQ0242	O-ﾘﾝｸﾞ JISB2401 1BP2	O-RING	1			
43	1	LG00339	ｽﾌﾟﾘﾝｸﾞ;ｱｯｼｭｸ	SPRING;COMPRESSION	1			
44	1	LJ014690	ｽﾌﾟｰﾙ ASSY	SPOOL	1			
45	1A	LR015260	ﾌﾟﾚｰﾄ KIT	PLATE;SPL	1			
46	2A	-------	ﾌﾟﾚｰﾄ KIT	PLATE;SPL	1			
47	3	-------	ﾌﾟﾚｰﾄ	PLATE	1			
48	3	-------	ﾌﾟﾚｰﾄ	PLATE	1			
49	3	-------	ﾌﾟﾚｰﾄ	PLATE	1			
50	3	-------	ｶﾞｽｹｯﾄ	GASKET	2			
51	3	-------	ｽﾌﾟｰﾙ	SPOOL	3			
52	3	-------	ﾌｨﾙﾀ ﾄｸｼｭ	FILTER;SPL	3			
53	3	108R006Z025N	ﾛｯｶｸｱﾅB M6X25-12.9	BOLT;HEX SOC HD	2			
54	1A	LR015270	ﾌﾟﾚｰﾄ KIT	PLATE;SPL	1			
55	2A	-------	ﾌﾟﾚｰﾄ KIT	PLATE;SPL	1			
56	3	-------	ﾌﾟﾚｰﾄ	PLATE	1			
57	3	-------	ﾌﾟﾚｰﾄ	PLATE	1			
58	3	-------	ﾌﾟﾚｰﾄ	PLATE	1			
59	3	-------	ｶﾞｽｹｯﾄ	GASKET	2			
60	3	-------	ｽﾌﾟｰﾙ	SPOOL	4			
61	3	-------	ﾌｨﾙﾀ ﾄｸｼｭ	FILTER;SPL	4			
62	3	108R006Z025N	ﾛｯｶｸｱﾅB M6X25-12.9	BOLT;HEX SOC HD	2			
63	1	LBQ0162	O-ﾘﾝｸﾞ JISB2401 1BP1	O-RING	1			
64	1	LBB0162	ﾘﾝｸﾞ;ﾊﾞｯｸｱｯﾌﾟ	RING;BACK-UP	2			
65	1	LJ00726	ﾎﾟﾍﾟｯﾄ	POPPET	2			
66	1	LG00340	ｽﾌﾟﾘﾝｸﾞ;ｱｯｼｭｸ	SPRING;COMPRESSION	2			
67	1	LJ00727	ﾎﾟﾍﾟｯﾄ	POPPET	7			
68	1	LG00341	ｽﾌﾟﾘﾝｸﾞ;ｱｯｼｭｸ	SPRING;COMPRESSION	8			
69	1	LBQ0322	O-ﾘﾝｸﾞ JISB2401 1BP3	O-RING	10			
70	1	LH00248	ﾌﾗﾝｼﾞ	FLANGE;SPL	6			
71	1	LPC0180	ﾎﾟﾍﾟｯﾄ	POPPET	2			
72	1	LSC0227	ｽﾌﾟﾘﾝｸﾞ ﾄｸｼｭ	SPRING;SPL	2			
73	1	LJ00731	ｵﾘﾌｨｽ	ORIFICE	1			
74	1	LBQ0062	O-ﾘﾝｸﾞ JISB2401 1BP6	O-RING	27			
75	1	LR015280	ﾎﾞﾃﾞｨ ASSY	BODY	1			
76	1	LH005410	ﾌﾗﾝｼﾞ	FLANGE;SPL	1			
77	1	LJ016050	ﾎﾟﾍﾟｯﾄ	POPPET	1			
78	1	LG006510	ｽﾌﾟﾘﾝｸﾞ	SPRING;SPL	1			
79	1	LLC0082	ﾌﾟﾗｸﾞ	PLUG	1			
80	1	LBQ6910	O-ﾘﾝｸﾞ	O-RING	1			
81	1	LSC0094	ｽﾌﾟﾘﾝｸﾞ	SPRING;SPL	1			
82	1	LJ014680	ﾎﾟﾍﾟｯﾄ	POPPET	1			
83	1	LJ00730	ﾎﾟﾍﾟｯﾄ	POPPET	1			
84	1	LH00250	ﾌﾗﾝｼﾞ	FLANGE;SPL	2			
85	1	LH004960	ｽﾍﾟｰｻ	SPACER	2			
86	1	LBQ0251	O-ﾘﾝｸﾞ JISB2401 1AG2	O-RING	2			
87	1	LBB0253	ﾘﾝｸﾞ;ﾊﾞｯｸｱｯﾌﾟ	RING;BACK-UP	2			
88	1	LBQ0553	O-ﾘﾝｸﾞ JISB2401 1BG5	O-RING	1			
89	1	LH004970	ｽﾍﾟｰｻ	SPACER	1			
90	1	LH004980	ｽﾘｰﾌﾞ	SLEEVE	1			
91	1	LPC0098	ﾎﾟﾍﾟｯﾄ	POPPET	1			
92	1	LSC0187	ｽﾌﾟﾘﾝｸﾞ	SPRING;SPL	1			
93	1	LH004990	ﾌﾗﾝｼﾞ ﾄｸｼｭ	FLANGE;SPL	1			
94	1	LE012520	O-ﾘﾝｸﾞ ﾄｸｼｭ ﾌﾂｿ	O-RING	3			

https://truckmanualshub.com/

98 [99]
111 [112 , 113]
100 [101 , 102]
131 [132 ~ 135]
109 [110]

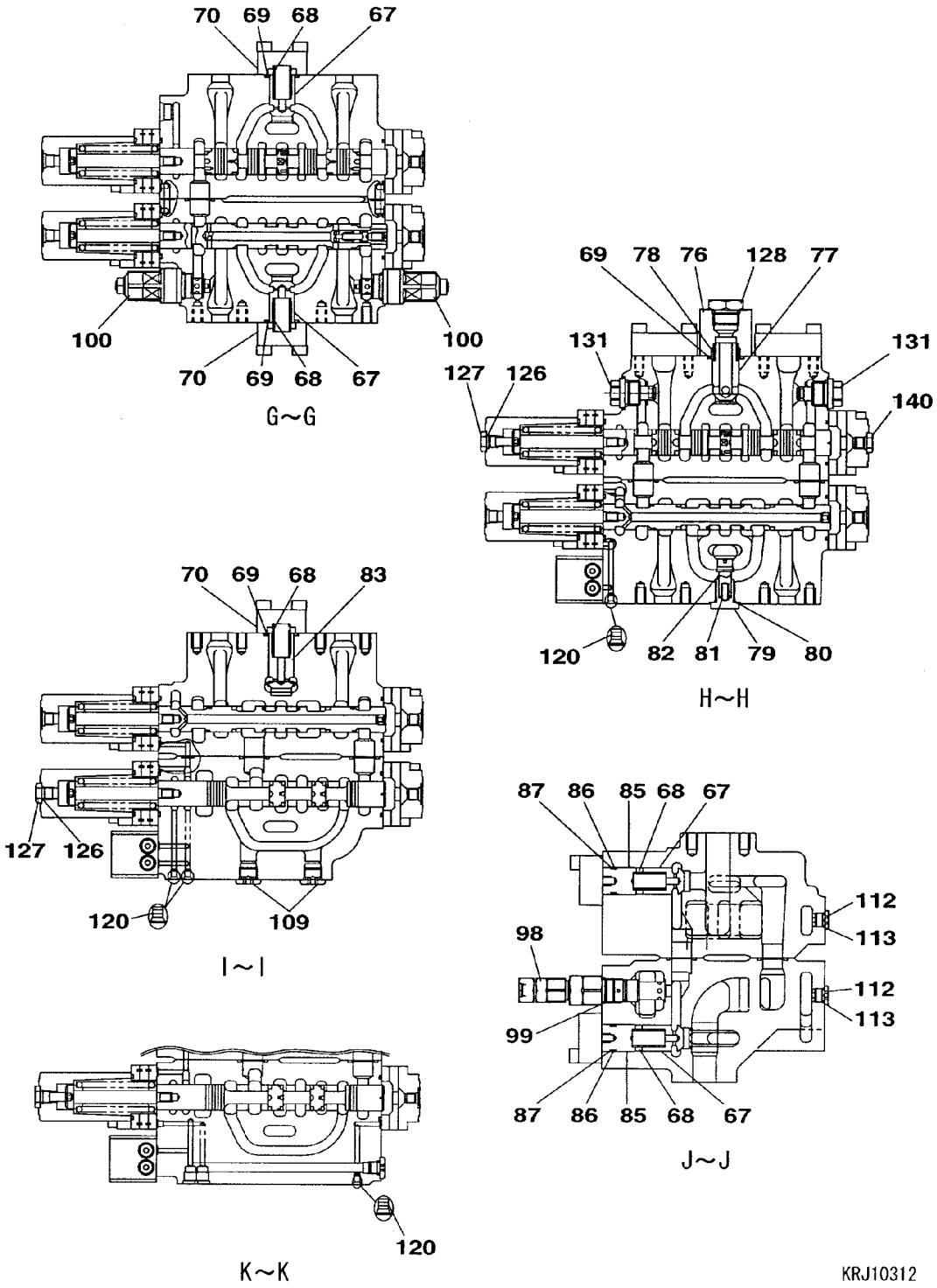

https://truckmanualshub.com/

VALVE;CONTROL	ﾊﾞﾙﾌﾞ;ｺﾝﾄﾛｰﾙ	ZAJ313L0150 000 10/20	000

符号 ITEM	構成 COMPO	部品番号 PART NO.	部品名	PART NAME	個数 Q'TY	互換 ICA	代替部品 REPLACEABLE PART	備考 MEMO
36	1	-------	ｽﾌﾟｰﾙ;ﾊﾞﾙﾌﾞ	SPOOL;VALVE	1			
37	1	LSC0158	ｼｰﾄ;ｽﾌﾟﾘﾝｸﾞ	SEAT;SPRING	2			
38	1	LG00338	ｽﾌﾟﾘﾝｸﾞ;ｱﾂｼｭｸ	SPRING;COMPRESSION	1			
39	1	LPC0222	ｴﾝﾄﾞ ｽﾌﾟｰﾙ	END;SPL	1			
40	1	LBQ0260	O-ﾘﾝｸﾞ JISB2401 1AP2	O-RING	1			
41	1	LK005690	ﾌﾟﾗｸﾞ	PLUG	1			
42	1	LBQ0242	O-ﾘﾝｸﾞ JISB2401 1BP2	O-RING	1			
43	1	LG00339	ｽﾌﾟﾘﾝｸﾞ;ｱﾂｼｭｸ	SPRING;COMPRESSION	1			
44	1	LJ014690	ｽﾌﾟｰﾙ ASSY	SPOOL	1			
45	1A	LR015260	ﾌﾟﾚｰﾄ KIT	PLATE;SPL	1			
46	2A	-------	ﾌﾟﾚｰﾄ KIT	PLATE;SPL	1			
47	3	-------	ﾌﾟﾚｰﾄ	PLATE	1			
48	3	-------	ﾌﾟﾚｰﾄ	PLATE	1			
49	3	-------	ﾌﾟﾚｰﾄ	PLATE	1			
50	3	-------	ｶﾞｽｹｯﾄ	GASKET	2			
51	3	-------	ｽﾌﾟｰﾙ	SPOOL	3			
52	3	-------	ﾌｨﾙﾀ ﾄｸｼｭ	FILTER;SPL	3			
53	3	108R006Z025N	ﾛｯｶｸｱﾅB M6X25-12.9	BOLT;HEX SOC HD	2			
54	1A	LR015270	ﾌﾟﾚｰﾄ KIT	PLATE;SPL	1			
55	2A	-------	ﾌﾟﾚｰﾄ KIT	PLATE;SPL	1			
56	3	-------	ﾌﾟﾚｰﾄ	PLATE	1			
57	3	-------	ﾌﾟﾚｰﾄ	PLATE	1			
58	3	-------	ﾌﾟﾚｰﾄ	PLATE	1			
59	3	-------	ｶﾞｽｹｯﾄ	GASKET	2			
60	3	-------	ｽﾌﾟｰﾙ	SPOOL	4			
61	3	-------	ﾌｨﾙﾀ ﾄｸｼｭ	FILTER;SPL	4			
62	3	108R006Z025N	ﾛｯｶｸｱﾅB M6X25-12.9	BOLT;HEX SOC HD	2			
63	1	LBQ0162	O-ﾘﾝｸﾞ JISB2401 1BP1	O-RING	1			
64	1	LBB0162	ﾘﾝｸﾞ;ﾊﾞｯｸｱｯﾌﾟ	RING;BACK-UP	2			
65	1	LJ00726	ﾎﾟﾍﾟｯﾄ	POPPET	2			
66	1	LG00340	ｽﾌﾟﾘﾝｸﾞ;ｱﾂｼｭｸ	SPRING;COMPRESSION	2			
67	1	LJ00727	ﾎﾟﾍﾟｯﾄ	POPPET	7			
68	1	LG00341	ｽﾌﾟﾘﾝｸﾞ;ｱﾂｼｭｸ	SPRING;COMPRESSION	8			
69	1	LBQ0322	O-ﾘﾝｸﾞ JISB2401 1BP3	O-RING	10			
70	1	LH00248	ﾌﾗﾝｼﾞ	FLANGE;SPL	6			
71	1	LPC0180	ﾎﾟﾍﾟｯﾄ	POPPET	2			
72	1	LSC0227	ｽﾌﾟﾘﾝｸﾞ ﾄｸｼｭ	SPRING;SPL	2			
73	1	LJ00731	ｵﾘﾌｨｽ	ORIFICE	1			
74	1	LBQ0062	O-ﾘﾝｸﾞ JISB2401 1BP6	O-RING	27			
75	1	LR015280	ﾎﾞﾃﾞｨ ASSY	BODY	1			
76	1	LH005410	ﾌﾗﾝｼﾞ	FLANGE;SPL	1			
77	1	LJ016050	ﾎﾟﾍﾟｯﾄ	POPPET	1			
78	1	LG006510	ｽﾌﾟﾘﾝｸﾞ	SPRING;SPL	1			
79	1	LLC0082	ﾌﾟﾗｸﾞ	PLUG	1			
80	1	LBQ6910	O-ﾘﾝｸﾞ	O-RING	1			
81	1	LSC0094	ｽﾌﾟﾘﾝｸﾞ	SPRING;SPL	1			
82	1	LJ014680	ﾎﾟﾍﾟｯﾄ	POPPET	1			
83	1	LJ00730	ﾎﾟﾍﾟｯﾄ	POPPET	1			
84	1	LH00250	ﾌﾗﾝｼﾞ	FLANGE;SPL	2			
85	1	LH004960	ｽﾍﾟｰｻ	SPACER	2			
86	1	LBQ0251	O-ﾘﾝｸﾞ JISB2401 1AG2	O-RING	2			
87	1	LBB0253	ﾘﾝｸﾞ;ﾊﾞｯｸｱｯﾌﾟ	RING;BACK-UP	2			
88	1	LBQ0553	O-ﾘﾝｸﾞ JISB2401 1BG5	O-RING	1			
89	1	LH004970	ｽﾍﾟｰｻ	SPACER	1			
90	1	LH004980	ｽﾘｰﾌﾞ	SLEEVE	1			
91	1	LPC0098	ﾎﾟﾍﾟｯﾄ	POPPET	1			
92	1	LSC0187	ｽﾌﾟﾘﾝｸﾞ	SPRING;SPL	1			
93	1	LH004990	ﾌﾗﾝｼﾞ ﾄｸｼｭ	FLANGE;SPL	1			
94	1	LE012520	O-ﾘﾝｸﾞ ﾄｸｼｭ ﾌﾂｿ	O-RING	3			
95	1	LE014890	O-ﾘﾝｸﾞ	O-RING	14			
96	1	LBQ0102	O-ﾘﾝｸﾞ JISB2401 1BP1	O-RING	12			
97	1	LJ014710	ﾊﾞﾙﾌﾞ ｱﾝﾁﾄﾞﾘﾌﾄ ASSY	VALVE;SPL	2			
98	1A	LJ014720	ﾊﾞﾙﾌﾞ;ﾘﾘｰﾌ KIT	VALVE;RELIEF	1			
99	2	LBQ6912	O-ﾘﾝｸﾞ AS568-912-HS9	O-RING	1			
100	1A	LJ014730	ﾊﾞﾙﾌﾞ;ﾘﾘｰﾌ KIT	VALVE;RELIEF	5			
101	2	LBQ6912	O-ﾘﾝｸﾞ AS568-912-HS9	O-RING	5			
102	2	LBQ0102	O-ﾘﾝｸﾞ JISB2401 1BP1	O-RING	5			
103	1A	LJ014740	ﾊﾞﾙﾌﾞ;ﾘﾘｰﾌ KIT	VALVE;RELIEF	1			

https://truckmanualshub.com/

詳細/DETAIL

98 [99]

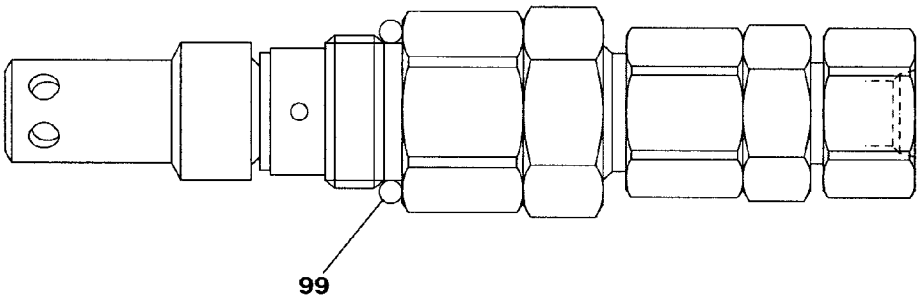

100 [101 , 102]

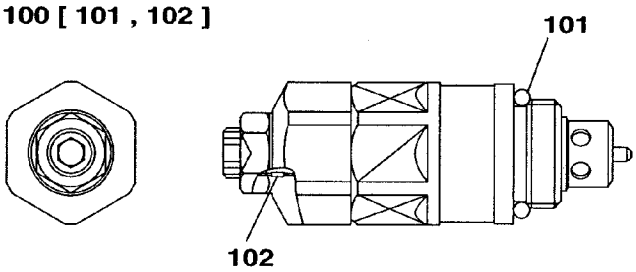

103 [104 , 105]

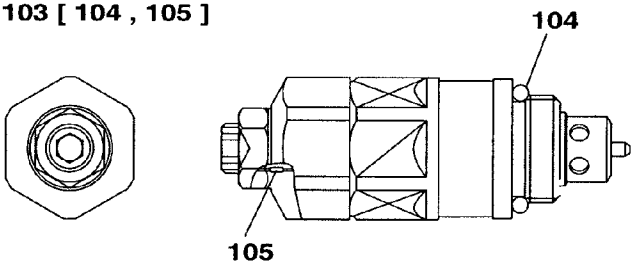

128 [129 , 130]

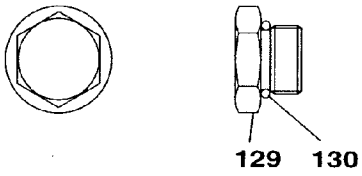

131 [132～135]

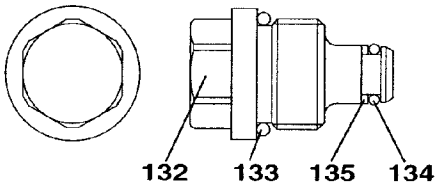

KRJ10312

https://truckmanualshub.com/

符号 ITEM	構成 COMPO	部品番号 PART NO.	部品名	PART NAME	個数 Q'TY	互換 ICA	代替部品 REPLACEABLE PART	備考 MEMO
45	1A	LR015260	ﾌﾟﾚｰﾄ KIT	PLATE;SPL	1			
46	2A	-------	ﾌﾟﾚｰﾄ KIT	PLATE;SPL	1			
47	3	-------	ﾌﾟﾚｰﾄ	PLATE	1			
48	3	-------	ﾌﾟﾚｰﾄ	PLATE	1			
49	3	-------	ﾌﾟﾚｰﾄ	PLATE	1			
50	3	-------	ｶﾞｽｹｯﾄ	GASKET	2			
51	3	-------	ｽﾌﾟｰﾙ	SPOOL	3			
52	3	-------	ﾌｨﾙﾀ ﾄｸｼｭ	FILTER;SPL	3			
53	3	108R006Z025N	ﾛｯｶｸｱﾅB M6X25-12.9	BOLT;HEX SOC HD	2			
54	1A	LR015270	ﾌﾟﾚｰﾄ KIT	PLATE;SPL	1			
55	2A	-------	ﾌﾟﾚｰﾄ KIT	PLATE;SPL	1			
56	3	-------	ﾌﾟﾚｰﾄ	PLATE	1			
57	3	-------	ﾌﾟﾚｰﾄ	PLATE	1			
58	3	-------	ﾌﾟﾚｰﾄ	PLATE	1			
59	3	-------	ｶﾞｽｹｯﾄ	GASKET	2			
60	3	-------	ｽﾌﾟｰﾙ	SPOOL	4			
61	3	-------	ﾌｨﾙﾀ ﾄｸｼｭ	FILTER;SPL	4			
62	3	108R006Z025N	ﾛｯｶｸｱﾅB M6X25-12.9	BOLT;HEX SOC HD	2			
63	1	LBQ0162	O-ﾘﾝｸﾞ JISB2401 1BP1	O-RING	1			
64	1	LBB0162	ﾘﾝｸﾞ;ﾊﾞｯｸｱｯﾌﾟ	RING;BACK-UP	2			
65	1	LJ00726	ﾎﾟﾍﾟｯﾄ	POPPET	2			
66	1	LG00340	ｽﾌﾟﾘﾝｸﾞ;ｱｯｼｭｸ	SPRING;COMPRESSION	2			
67	1	LJ00727	ﾎﾟﾍﾟｯﾄ	POPPET	7			
68	1	LG00341	ｽﾌﾟﾘﾝｸﾞ;ｱｯｼｭｸ	SPRING;COMPRESSION	8			
69	1	LBQ0322	O-ﾘﾝｸﾞ JISB2401 1BP3	O-RING	10			
70	1	LH00248	ﾌﾗﾝｼﾞ	FLANGE;SPL	6			
71	1	LPC0180	ﾎﾟﾍﾟｯﾄ	POPPET	2			
72	1	LSC0227	ｽﾌﾟﾘﾝｸﾞ ﾄｸｼｭ	SPRING;SPL	2			
73	1	LJ00731	ｵﾘﾌｨｽ	ORIFICE	1			
74	1	LBQ0062	O-ﾘﾝｸﾞ JISB2401 1BP6	O-RING	27			
75	1	LR015280	ﾎﾞﾃﾞｨ ASSY	BODY	1			
76	1	LH005410	ﾌﾗﾝｼﾞ	FLANGE;SPL	1			
77	1	LJ016050	ﾎﾟﾍﾟｯﾄ	POPPET	1			
78	1	LG006510	ｽﾌﾟﾘﾝｸﾞ	SPRING;SPL	1			
79	1	LLC0082	ﾌﾟﾗｸﾞ	PLUG	1			
80	1	LBQ6910	O-ﾘﾝｸﾞ	O-RING	1			
81	1	LSC0094	ｽﾌﾟﾘﾝｸﾞ	SPRING;SPL	1			
82	1	LJ014680	ﾎﾟﾍﾟｯﾄ	POPPET	1			
83	1	LJ00730	ﾎﾟﾍﾟｯﾄ	POPPET	1			
84	1	LH00250	ﾌﾗﾝｼﾞ	FLANGE;SPL	2			
85	1	LH004960	ｽﾍﾟｰｻ	SPACER	2			
86	1	LBQ0251	O-ﾘﾝｸﾞ JISB2401 1AG2	O-RING	2			
87	1	LBB0253	ﾘﾝｸﾞ;ﾊﾞｯｸｱｯﾌﾟ	RING;BACK-UP	2			
88	1	LBQ0553	O-ﾘﾝｸﾞ JISB2401 1BG5	O-RING	1			
89	1	LH004970	ｽﾍﾟｰｻ	SPACER	1			
90	1	LH004980	ｽﾘｰﾌﾞ	SLEEVE	1			
91	1	LPC0098	ﾎﾟﾍﾟｯﾄ	POPPET	1			
92	1	LSC0187	ｽﾌﾟﾘﾝｸﾞ	SPRING;SPL	1			
93	1	LH004990	ﾌﾗﾝｼﾞ ﾄｸｼｭ	FLANGE;SPL	1			
94	1	LE012520	O-ﾘﾝｸﾞ ﾄｸｼｭ ﾌﾂｿ	O-RING	3			
95	1	LE014890	O-ﾘﾝｸﾞ	O-RING	14			
96	1	LBQ0102	O-ﾘﾝｸﾞ JISB2401 1BP1	O-RING	12			
97	1	LJ014710	ﾊﾞﾙﾌﾞ ｱﾝﾁﾄﾞﾘﾌﾄ ASSY	VALVE;SPL	2			
98	1A	LJ014720	ﾊﾞﾙﾌﾞ;ﾘﾘｰﾌ KIT	VALVE;RELIEF	1			
99	2	LBQ6912	O-ﾘﾝｸﾞ AS568-912-HS9	O-RING	1			
100	1A	LJ014730	ﾊﾞﾙﾌﾞ;ﾘﾘｰﾌ KIT	VALVE;RELIEF	5			
101	2	LBQ6912	O-ﾘﾝｸﾞ AS568-912-HS9	O-RING	5			
102	2	LBQ0102	O-ﾘﾝｸﾞ JISB2401 1BP1	O-RING	5			
103	1A	LJ014740	ﾊﾞﾙﾌﾞ;ﾘﾘｰﾌ KIT	VALVE;RELIEF	1			
104	2	LBQ6912	O-ﾘﾝｸﾞ AS568-912-HS9	O-RING	1			
105	2	LBQ0102	O-ﾘﾝｸﾞ JISB2401 1BP1	O-RING	1			
106	1	LJ014700	ﾊﾞﾙﾌﾞ;ﾘﾘｰﾌ ASS'Y	VALVE;RELIEF	2			
107	1A	LNC0218	ﾌﾟﾗｸﾞ S/A	PLUG	3			
108	2	LBQ0182	O-ﾘﾝｸﾞ JISB2401 1BP1	O-RING	3			
109	1A	LNC0217	ﾌﾟﾗｸﾞ S/A	PLUG	10			
110	2	LBQ0142	O-ﾘﾝｸﾞ JISB2401 1BP1	O-RING	10			
111	1A	LNC0238	ﾌﾟﾗｸﾞ S/A	PLUG	3			
112	2	LK00328	ﾌﾟﾗｸﾞ	PLUG	3			

https://truckmanualshub.com/

10 [11 ~ 19] 11 [12 ~ 19]

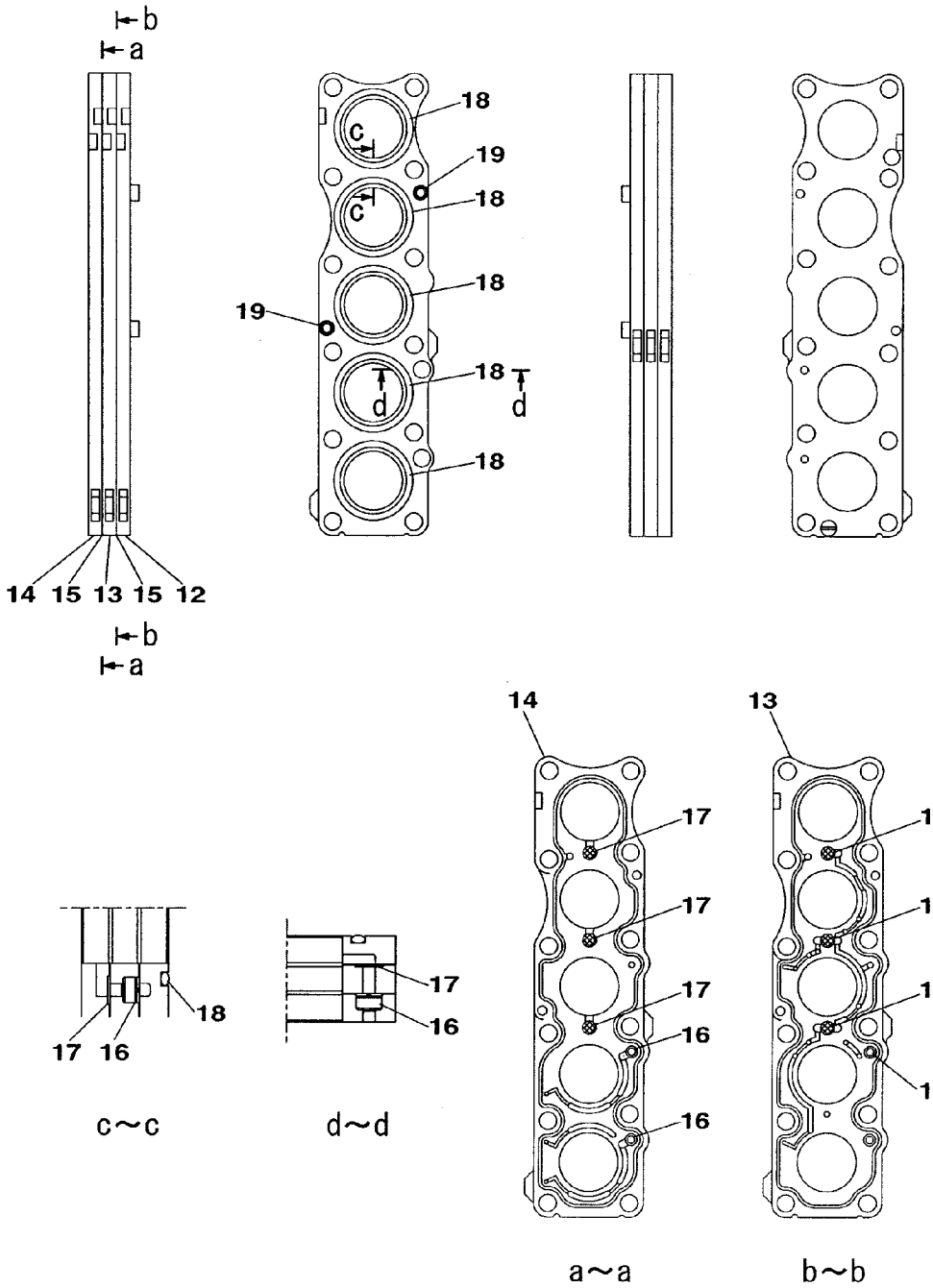

KRJ10312

https://truckmanualshub.com/

符号 ITEM	構成 COMPO	部品番号 PART NO.	部品名	PART NAME	個数 Q'TY	互換 ICA	代替部品 REPLACEABLE PART	備考 MEMO
54	1A	LR015270	ﾌﾟﾚｰﾄ KIT	PLATE;SPL	1			
55	2A	-------	ﾌﾟﾚｰﾄ KIT	PLATE;SPL	1			
56	3	-------	ﾌﾟﾚｰﾄ	PLATE	1			
57	3	-------	ﾌﾟﾚｰﾄ	PLATE	1			
58	3	-------	ﾌﾟﾚｰﾄ	PLATE	1			
59	3	-------	ｶﾞｽｹｯﾄ	GASKET	2			
60	3	-------	ｽﾌﾟｰﾙ	SPOOL	4			
61	3	-------	ﾌｨﾙﾀ ﾄｸｼｭ	FILTER;SPL	4			
62	3	108R006Z025N	ﾛｯｶｸｱﾅB M6X25-12.9	BOLT;HEX SOC HD	2			
63	1	LBQ0162	O-ﾘﾝｸﾞ JISB2401 1BP1	O-RING	1			
64	1	LBB0162	ﾘﾝｸﾞ;ﾊﾞｯｸｱｯﾌﾟ	RING;BACK-UP	2			
65	1	LJ00726	ﾎﾟﾍﾟｯﾄ	POPPET	2			
66	1	LG00340	ｽﾌﾟﾘﾝｸﾞ;ｱｯｼｭｸ	SPRING;COMPRESSION	2			
67	1	LJ00727	ﾎﾟﾍﾟｯﾄ	POPPET	7			
68	1	LG00341	ｽﾌﾟﾘﾝｸﾞ;ｱｯｼｭｸ	SPRING;COMPRESSION	8			
69	1	LBQ0322	O-ﾘﾝｸﾞ JISB2401 1BP3	O-RING	10			
70	1	LH00248	ﾌﾗﾝｼﾞ	FLANGE;SPL	6			
71	1	LPC0180	ﾎﾟﾍﾟｯﾄ	POPPET	2			
72	1	LSC0227	ｽﾌﾟﾘﾝｸﾞ ﾄｸｼｭ	SPRING;SPL	2			
73	1	LJ00731	ｵﾘﾌｨｽ	ORIFICE	1			
74	1	LBQ0062	O-ﾘﾝｸﾞ JISB2401 1BP6	O-RING	27			
75	1	LR015280	ﾎﾞﾃﾞｨ ASSY	BODY	1			
76	1	LH005410	ﾌﾗﾝｼﾞ	FLANGE;SPL	1			
77	1	LJ016050	ﾎﾟﾍﾟｯﾄ	POPPET	1			
78	1	LG006510	ｽﾌﾟﾘﾝｸﾞ	SPRING;SPL	1			
79	1	LLC0082	ﾌﾟﾗｸﾞ	PLUG	1			
80	1	LBQ6910	O-ﾘﾝｸﾞ	O-RING	1			
81	1	LSC0094	ｽﾌﾟﾘﾝｸﾞ	SPRING;SPL	1			
82	1	LJ014680	ﾎﾟﾍﾟｯﾄ	POPPET	1			
83	1	LJ00730	ﾎﾟﾍﾟｯﾄ	POPPET	1			
84	1	LH00250	ﾌﾗﾝｼﾞ	FLANGE;SPL	2			
85	1	LH004960	ｽﾍﾟｰｻ	SPACER	2			
86	1	LBQ0251	O-ﾘﾝｸﾞ JISB2401 1AG2	O-RING	2			
87	1	LBB0253	ﾘﾝｸﾞ;ﾊﾞｯｸｱｯﾌﾟ	RING;BACK-UP	2			
88	1	LBQ0553	O-ﾘﾝｸﾞ JISB2401 1BG5	O-RING	1			
89	1	LH004970	ｽﾍﾟｰｻ	SPACER	1			
90	1	LH004980	ｽﾘｰﾌﾞ	SLEEVE	1			
91	1	LPC0098	ﾎﾟﾍﾟｯﾄ	POPPET	1			
92	1	LSC0187	ｽﾌﾟﾘﾝｸﾞ	SPRING;SPL	1			
93	1	LH004990	ﾌﾗﾝｼﾞ ﾄｸｼｭ	FLANGE;SPL	1			
94	1	LE012520	O-ﾘﾝｸﾞ ﾄｸｼｭ ﾌﾂｿ	O-RING	3			
95	1	LE014890	O-ﾘﾝｸﾞ	O-RING	14			
96	1	LBQ0102	O-ﾘﾝｸﾞ JISB2401 1BP1	O-RING	12			
97	1	LJ014710	ﾊﾞﾙﾌﾞ ｱﾝﾁﾄﾞﾘﾌﾄ ASSY	VALVE;SPL	2			
98	1A	LJ014720	ﾊﾞﾙﾌﾞ;ﾘﾘｰﾌ KIT	VALVE;RELIEF	1			
99	2	LBQ6912	O-ﾘﾝｸﾞ AS568-912-HS9	O-RING	1			
100	1A	LJ014730	ﾊﾞﾙﾌﾞ;ﾘﾘｰﾌ KIT	VALVE;RELIEF	5			
101	2	LBQ6912	O-ﾘﾝｸﾞ AS568-912-HS9	O-RING	5			
102	2	LBQ0102	O-ﾘﾝｸﾞ JISB2401 1BP1	O-RING	5			
103	1A	LJ014740	ﾊﾞﾙﾌﾞ;ﾘﾘｰﾌ KIT	VALVE;RELIEF	1			
104	2	LBQ6912	O-ﾘﾝｸﾞ AS568-912-HS9	O-RING	1			
105	2	LBQ0102	O-ﾘﾝｸﾞ JISB2401 1BP1	O-RING	1			
106	1	LJ014700	ﾊﾞﾙﾌﾞ;ﾘﾘｰﾌ ASS'Y	VALVE;RELIEF	2			
107	1A	LNC0218	ﾌﾟﾗｸﾞ S/A	PLUG	3			
108	2	LBQ0182	O-ﾘﾝｸﾞ JISB2401 1BP1	O-RING	3			
109	1A	LNC0217	ﾌﾟﾗｸﾞ S/A	PLUG	10			
110	2	LBQ0142	O-ﾘﾝｸﾞ JISB2401 1BP1	O-RING	10			
111	1A	LNC0238	ﾌﾟﾗｸﾞ S/A	PLUG	3			
112	2	LK00328	ﾌﾟﾗｸﾞ	PLUG	3			
113	2	LBQ0112	O-ﾘﾝｸﾞ JISB2401 1BP1	O-RING	3			
114	1	108R010Z055B	ﾛｯｶｸｱﾅB JIS B 1180 M	BOLT;HEX SOC HD	32			
115	1	108R010Z040B	ﾛｯｶｸｱﾅB JIS B1176 M1	BOLT;HEX SOC HD	66			
116	1	108R016Z130B	ﾛｯｶｸｱﾅB JIS B1180 M1	BOLT;HEX SOC HD	8			
117	1	LUC0118	ﾛｯｶｸｱﾅB	BOLT;HEX SOC HD	4			
118	1	-------	ﾒｲﾊﾞﾝ;ｷﾊﾞﾝ	NAMEPLATE;SER NO.	1			
119	1	-------	ｽｸﾘｭｰ ﾄﾞﾗｲﾌﾞ	SCREW	2			
120	1	-------	ﾌﾟﾗｸﾞ	PLUG	5			
121	1	LA011120	ﾛｯｶｸｱﾅB	BOLT;HEX SOC HD	4			

https://truckmanualshub.com/

20 [21 ~ 29] 21 [22 ~ 29]

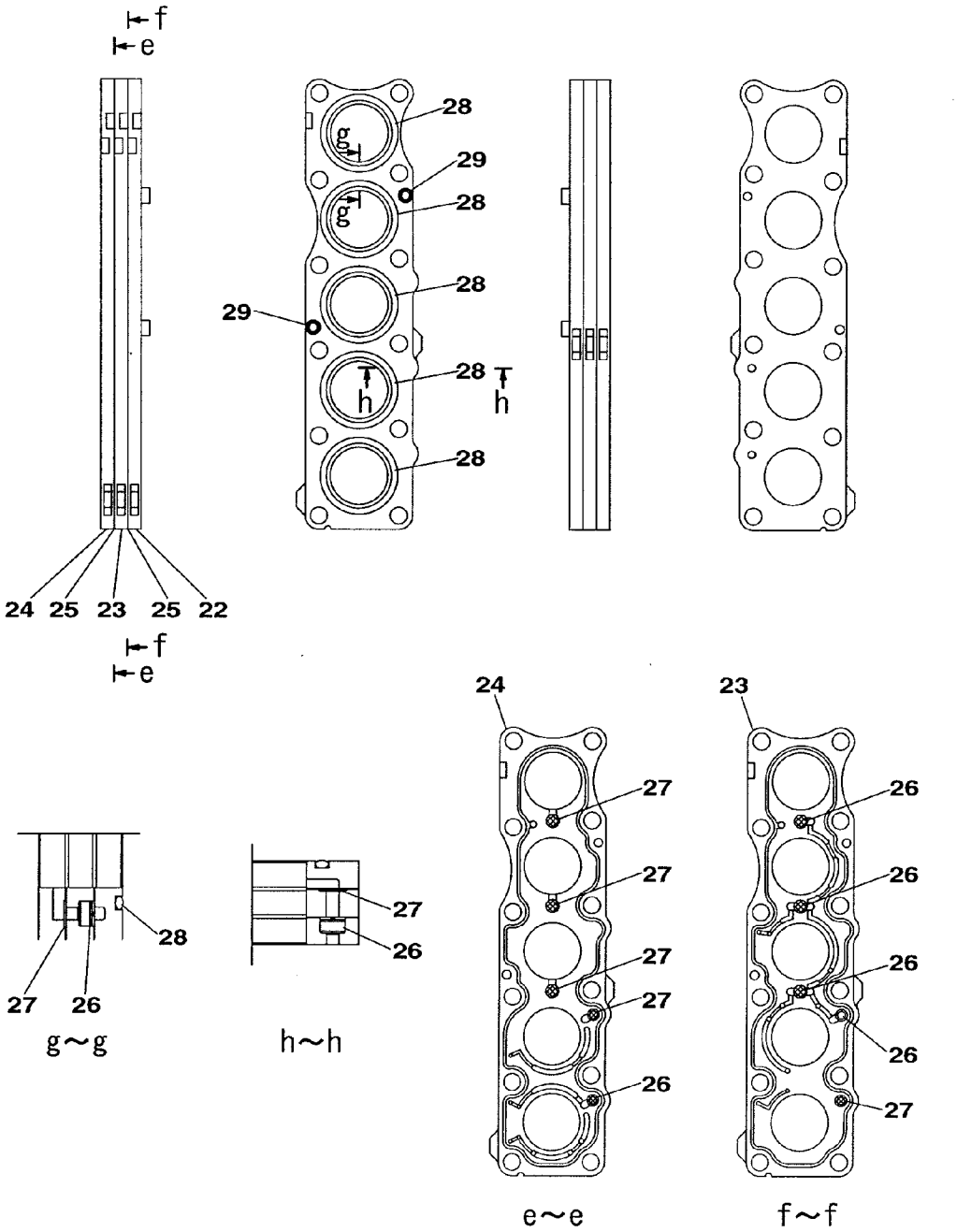

KRJ10312

https://truckmanualshub.com/

VALVE;CONTROL	ﾊﾞﾙﾌﾞ;ｺﾝﾄﾛｰﾙ	ZAJ313L0150 000 16/20	000

符号 ITEM	構成 COMPO	部品番号 PART NO.	部品名	PART NAME	個数 Q'TY	互換 ICA	代替部品 REPLACEABLE PART	備考 MEMO
63	1	LBQ0162	O-ﾘﾝｸﾞ JISB2401 1BP1	O-RING	1			
64	1	LBB0162	ﾘﾝｸﾞ;ﾊﾞｯｸｱｯﾌﾟ	RING;BACK-UP	2			
65	1	LJ00726	ﾎﾟﾍﾟｯﾄ	POPPET	2			
66	1	LG00340	ｽﾌﾟﾘﾝｸﾞ;ｱｯｼｭｸ	SPRING;COMPRESSION	2			
67	1	LJ00727	ﾎﾟﾍﾟｯﾄ	POPPET	7			
68	1	LG00341	ｽﾌﾟﾘﾝｸﾞ;ｱｯｼｭｸ	SPRING;COMPRESSION	8			
69	1	LBQ0322	O-ﾘﾝｸﾞ JISB2401 1BP3	O-RING	10			
70	1	LH00248	ﾌﾗﾝｼﾞ	FLANGE;SPL	6			
71	1	LPC0180	ﾎﾟﾍﾟｯﾄ	POPPET	2			
72	1	LSC0227	ｽﾌﾟﾘﾝｸﾞ ﾄｸｼｭ	SPRING;SPL	2			
73	1	LJ00731	ｵﾘﾌｨｽ	ORIFICE	1			
74	1	LBQ0062	O-ﾘﾝｸﾞ JISB2401 1BP6	O-RING	27			
75	1	LR015280	ﾎﾞﾃﾞｨ ASSY	BODY	1			
76	1	LH005410	ﾌﾗﾝｼﾞ	FLANGE;SPL	1			
77	1	LJ016050	ﾎﾟﾍﾟｯﾄ	POPPET	1			
78	1	LG006510	ｽﾌﾟﾘﾝｸﾞ	SPRING;SPL	1			
79	1	LLC0082	ﾌﾟﾗｸﾞ	PLUG	1			
80	1	LBQ6910	O-ﾘﾝｸﾞ	O-RING	1			
81	1	LSC0094	ｽﾌﾟﾘﾝｸﾞ	SPRING;SPL	1			
82	1	LJ014680	ﾎﾟﾍﾟｯﾄ	POPPET	1			
83	1	LJ00730	ﾎﾟﾍﾟｯﾄ	POPPET	1			
84	1	LH00250	ﾌﾗﾝｼﾞ	FLANGE;SPL	2			
85	1	LH004960	ｽﾍﾟｰｻ	SPACER	2			
86	1	LBQ0251	O-ﾘﾝｸﾞ JISB2401 1AG2	O-RING	2			
87	1	LBB0253	ﾘﾝｸﾞ;ﾊﾞｯｸｱｯﾌﾟ	RING;BACK-UP	2			
88	1	LBQ0553	O-ﾘﾝｸﾞ JISB2401 1BG5	O-RING	1			
89	1	LH004970	ｽﾍﾟｰｻ	SPACER	1			
90	1	LH004980	ｽﾘｰﾌﾞ	SLEEVE	1			
91	1	LPC0098	ﾎﾟﾍﾟｯﾄ	POPPET	1			
92	1	LSC0187	ｽﾌﾟﾘﾝｸﾞ	SPRING;SPL	1			
93	1	LH004990	ﾌﾗﾝｼﾞ ﾄｸｼｭ	FLANGE;SPL	1			
94	1	LE012520	O-ﾘﾝｸﾞ ﾄｸｼｭ ﾌﾂｿ	O-RING	3			
95	1	LE014890	O-ﾘﾝｸﾞ	O-RING	14			
96	1	LBQ0102	O-ﾘﾝｸﾞ JISB2401 1BP1	O-RING	12			
97	1	LJ014710	ﾊﾞﾙﾌﾞ ｱﾝﾁﾄﾞﾘﾌﾄ ASSY	VALVE;SPL	2			
98	1A	LJ014720	ﾊﾞﾙﾌﾞ;ﾘﾘｰﾌ KIT	VALVE;RELIEF	1			
99	2	LBQ6912	O-ﾘﾝｸﾞ AS568-912-HS9	O-RING	1			
100	1A	LJ014730	ﾊﾞﾙﾌﾞ;ﾘﾘｰﾌ KIT	VALVE;RELIEF	5			
101	2	LBQ6912	O-ﾘﾝｸﾞ AS568-912-HS9	O-RING	5			
102	2	LBQ0102	O-ﾘﾝｸﾞ JISB2401 1BP1	O-RING	5			
103	1A	LJ014740	ﾊﾞﾙﾌﾞ;ﾘﾘｰﾌ KIT	VALVE;RELIEF	1			
104	2	LBQ6912	O-ﾘﾝｸﾞ AS568-912-HS9	O-RING	1			
105	2	LBQ0102	O-ﾘﾝｸﾞ JISB2401 1BP1	O-RING	1			
106	1	LJ014700	ﾊﾞﾙﾌﾞ;ﾘﾘｰﾌ ASS'Y	VALVE;RELIEF	2			
107	1A	LNC0218	ﾌﾟﾗｸﾞ S/A	PLUG	3			
108	2	LBQ0182	O-ﾘﾝｸﾞ JISB2401 1BP1	O-RING	3			
109	1A	LNC0217	ﾌﾟﾗｸﾞ S/A	PLUG	10			
110	2	LBQ0142	O-ﾘﾝｸﾞ JISB2401 1BP1	O-RING	10			
111	1A	LNC0238	ﾌﾟﾗｸﾞ S/A	PLUG	3			
112	2	LK00328	ﾌﾟﾗｸﾞ	PLUG	3			
113	2	LBQ0112	O-ﾘﾝｸﾞ JISB2401 1BP1	O-RING	3			
114	1	108R010Z055B	ﾛｯｶｸｱﾅB JIS B 1180 M	BOLT;HEX SOC HD	32			
115	1	108R010Z040B	ﾛｯｶｸｱﾅB JIS B1176 M1	BOLT;HEX SOC HD	66			
116	1	108R016Z130B	ﾛｯｶｸｱﾅB JIS B1180 M1	BOLT;HEX SOC HD	8			
117	1	LUC0118	ﾛｯｶｸｱﾅB	BOLT;HEX SOC HD	4			
118	1	-------	ﾒｲﾊﾞﾝ;ｷﾊﾞﾝ	NAMEPLATE;SER NO.	1			
119	1	-------	ｽｸﾘｭｰ ﾄﾞﾗｲﾌﾞ	SCREW	2			
120	1	-------	ﾌﾟﾗｸﾞ	PLUG	5			
121	1	LA011120	ﾛｯｶｸｱﾅB	BOLT;HEX SOC HD	4			
122	1	-------	ｽﾌﾟｰﾙ ASS'Y	SPOOL	1			
123	1	LR015290	ｷｬｯﾌﾟ	CAP	1			
124	1	LR00579	ｷｬｯﾌﾟ	CAP	2			
125	1	LBQ5219	O-ﾘﾝｸﾞ	O-RING	2			
126	1	LBQ0112	O-ﾘﾝｸﾞ JISB2401 1BP1	O-RING	2			
127	1	LK00301	ﾌﾟﾗｸﾞ	PLUG	2			
128	1A	LK00302	ﾌﾟﾗｸﾞ ASSY	PLUG	2			
129	2	LPC0256	ﾌﾟﾗｸﾞ	PLUG	2			
130	2	LBQ0242	O-ﾘﾝｸﾞ JISB2401 1BP2	O-RING	2			

https://truckmanualshub.com/

45 [46 ~ 53] 46 [47 ~ 53]

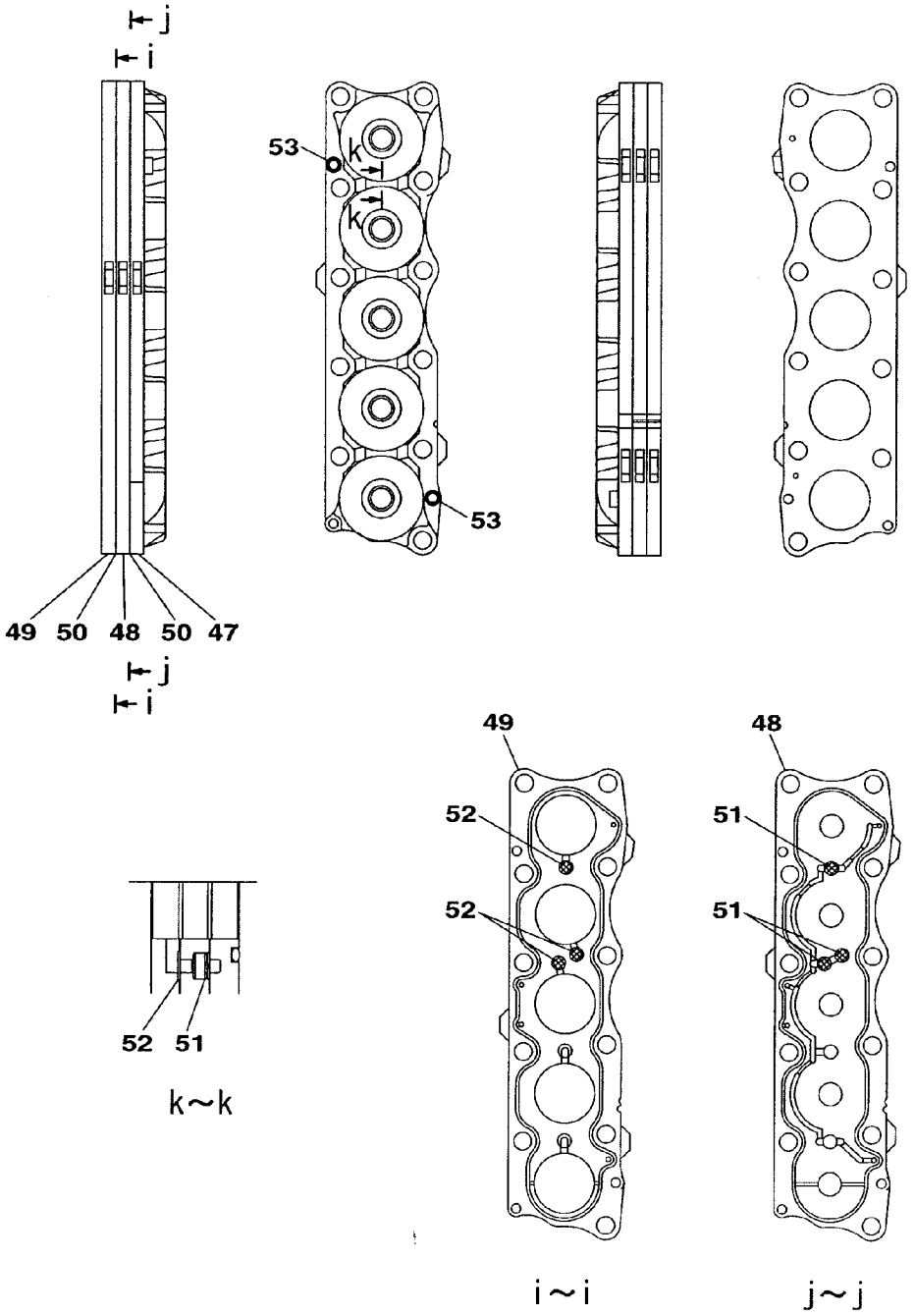

KRJ10312

https://truckmanualshub.com/

VALVE;CONTROL	ﾊﾞﾙﾌﾞ;ｺﾝﾄﾛｰﾙ	ZAJ313L0150 000 18/20	000

符号 ITEM	構成 COMPO	部品番号 PART NO.	部品名	PART NAME	個数 Q'TY	互換 ICA	代替部品 REPLACEABLE PART	備考 MEMO
72	1	LSC0227	ｽﾌﾟﾘﾝｸﾞ ﾄｸｼｭ	SPRING;SPL	2			
73	1	LJ00731	ｵﾘﾌｨｽ	ORIFICE	1			
74	1	LBQ0062	O-ﾘﾝｸﾞ JISB2401 1BP6	O-RING	27			
75	1	LR015280	ﾎﾞﾃﾞｨ ASSY	BODY	1			
76	1	LH005410	ﾌﾗﾝｼﾞ	FLANGE;SPL	1			
77	1	LJ016050	ﾎﾟﾍﾟｯﾄ	POPPET	1			
78	1	LG006510	ｽﾌﾟﾘﾝｸﾞ	SPRING;SPL	1			
79	1	LLC0082	ﾌﾟﾗｸﾞ	PLUG	1			
80	1	LBQ6910	O-ﾘﾝｸﾞ	O-RING	1			
81	1	LSC0094	ｽﾌﾟﾘﾝｸﾞ	SPRING;SPL	1			
82	1	LJ014680	ﾎﾟﾍﾟｯﾄ	POPPET	1			
83	1	LJ00730	ﾎﾟﾍﾟｯﾄ	POPPET	1			
84	1	LH00250	ﾌﾗﾝｼﾞ	FLANGE;SPL	2			
85	1	LH004960	ｽﾍﾟｰｻ	SPACER	2			
86	1	LBQ0251	O-ﾘﾝｸﾞ JISB2401 1AG2	O-RING	2			
87	1	LBB0253	ﾘﾝｸﾞ;ﾊﾞｯｸｱｯﾌﾟ	RING;BACK-UP	2			
88	1	LBQ0553	O-ﾘﾝｸﾞ JISB2401 1BG5	O-RING	1			
89	1	LH004970	ｽﾍﾟｰｻ	SPACER	1			
90	1	LH004980	ｽﾘｰﾌﾞ	SLEEVE	1			
91	1	LPC0098	ﾎﾟﾍﾟｯﾄ	POPPET	1			
92	1	LSC0187	ｽﾌﾟﾘﾝｸﾞ	SPRING;SPL	1			
93	1	LH004990	ﾌﾗﾝｼﾞ ﾄｸｼｭ	FLANGE;SPL	1			
94	1	LE012520	O-ﾘﾝｸﾞ ﾄｸｼｭ ﾌﾂｿ	O-RING	3			
95	1	LE014890	O-ﾘﾝｸﾞ	O-RING	14			
96	1	LBQ0102	O-ﾘﾝｸﾞ JISB2401 1BP1	O-RING	12			
97	1	LJ014710	ﾊﾞﾙﾌﾞ ｱﾝﾁﾄﾞﾘﾌﾄ ASSY	VALVE;SPL	2			
98	1A	LJ014720	ﾊﾞﾙﾌﾞ;ﾘﾘｰﾌ KIT	VALVE;RELIEF	1			
99	2	LBQ6912	O-ﾘﾝｸﾞ AS568-912-HS9	O-RING	1			
100	1A	LJ014730	ﾊﾞﾙﾌﾞ;ﾘﾘｰﾌ KIT	VALVE;RELIEF	5			
101	2	LBQ6912	O-ﾘﾝｸﾞ AS568-912-HS9	O-RING	5			
102	2	LBQ0102	O-ﾘﾝｸﾞ JISB2401 1BP1	O-RING	5			
103	1A	LJ014740	ﾊﾞﾙﾌﾞ;ﾘﾘｰﾌ KIT	VALVE;RELIEF	1			
104	2	LBQ6912	O-ﾘﾝｸﾞ AS568-912-HS9	O-RING	1			
105	2	LBQ0102	O-ﾘﾝｸﾞ JISB2401 1BP1	O-RING	1			
106	1	LJ014700	ﾊﾞﾙﾌﾞ;ﾘﾘｰﾌ ASS'Y	VALVE;RELIEF	2			
107	1A	LNC0218	ﾌﾟﾗｸﾞ S/A	PLUG	3			
108	2	LBQ0182	O-ﾘﾝｸﾞ JISB2401 1BP1	O-RING	3			
109	1A	LNC0217	ﾌﾟﾗｸﾞ S/A	PLUG	10			
110	2	LBQ0142	O-ﾘﾝｸﾞ JISB2401 1BP1	O-RING	10			
111	1A	LNC0238	ﾌﾟﾗｸﾞ S/A	PLUG	3			
112	2	LK00328	ﾌﾟﾗｸﾞ	PLUG	3			
113	2	LBQ0112	O-ﾘﾝｸﾞ JISB2401 1BP1	O-RING	3			
114	1	108R010Z055B	ﾛｯｶｸｱﾅB JIS B 1180 M	BOLT;HEX SOC HD	32			
115	1	108R010Z040B	ﾛｯｶｸｱﾅB JIS B1176 M1	BOLT;HEX SOC HD	66			
116	1	108R016Z130B	ﾛｯｶｸｱﾅB JIS B1180 M1	BOLT;HEX SOC HD	8			
117	1	LUC0118	ﾛｯｶｸｱﾅB	BOLT;HEX SOC HD	4			
118	1	-------	ﾒｲﾊﾞﾝ;ｷﾊﾞﾝ	NAMEPLATE;SER NO.	1			
119	1	-------	ｽｸﾘｭｰ ﾄﾞﾗｲﾌﾞ	SCREW	2			
120	1	-------	ﾌﾟﾗｸﾞ	PLUG	5			
121	1	LA011120	ﾛｯｶｸｱﾅB	BOLT;HEX SOC HD	4			
122	1	-------	ｽﾌﾟｰﾙ ASS'Y	SPOOL	1			
123	1	LR015290	ｷｬｯﾌﾟ	CAP	1			
124	1	LR00579	ｷｬｯﾌﾟ	CAP	2			
125	1	LBQ5219	O-ﾘﾝｸﾞ	O-RING	2			
126	1	LBQ0112	O-ﾘﾝｸﾞ JISB2401 1BP1	O-RING	2			
127	1	LK00301	ﾌﾟﾗｸﾞ	PLUG	2			
128	1A	LK00302	ﾌﾟﾗｸﾞ ASSY	PLUG	2			
129	2	LPC0256	ﾌﾟﾗｸﾞ	PLUG	2			
130	2	LBQ0242	O-ﾘﾝｸﾞ JISB2401 1BP2	O-RING	2			
131	1A	LPC0259	ﾌﾟﾗｸﾞ ASSY	PLUG	2			
132	2	LK00327	ﾌﾟﾗｸﾞ	PLUG	2			
133	2	LBQ6912	O-ﾘﾝｸﾞ AS568-912-HS9	O-RING	2			
134	2	LBQ0080	O-ﾘﾝｸﾞ JISB2401 1AP8	O-RING	2			
135	2	LBB6110	ﾘﾝｸﾞ;ﾊﾞｯｸｱｯﾌﾟ	RING;BACK-UP	2			
136	1	LA011130	ﾛｯｶｸｱﾅB	BOLT;HEX SOC HD	2			
137	1	LT001660	ﾊｳｼﾞﾝｸﾞ ｱｳﾄﾚｯﾄ	HOUSING;SPL	1			
138	1	LB011890	ﾀｲﾛｯﾄﾞ	ROD;TIE	4			
139	1	LUC0094	ﾅｯﾄ	NUT;SPL	4			

https://truckmanualshub.com/

54 [55 ~ 62] 55 [56 ~ 62]

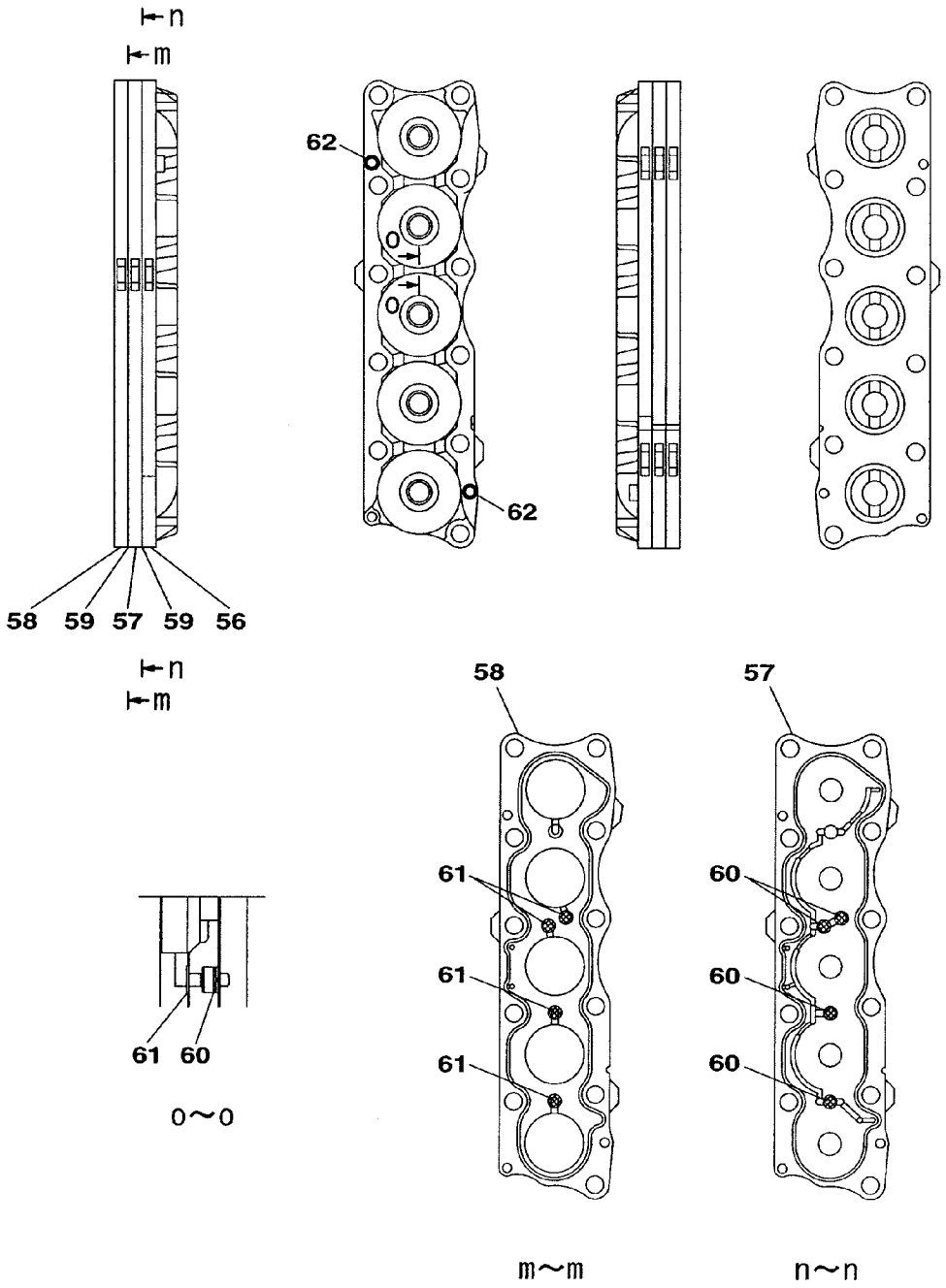

KRJ10312

https://truckmanualshub.com/

VALVE;CONTROL	ﾊﾞﾙﾌﾞ;ｺﾝﾄﾛｰﾙ	ZAJ313L0150 000 20/20	000

符号 ITEM	構成 COMPO	部品番号 PART NO.	部品名	PART NAME	個数 Q'TY	互換 ICA	代替部品 REPLACEABLE PART	備考 MEMO
81	1	LSC0094	ｽﾌﾟﾘﾝｸﾞ	SPRING;SPL	1			
82	1	LJ014680	ﾎﾟﾍﾟｯﾄ	POPPET	1			
83	1	LJ00730	ﾎﾟﾍﾟｯﾄ	POPPET	1			
84	1	LH00250	ﾌﾗﾝｼﾞ	FLANGE;SPL	2			
85	1	LH004960	ｽﾍﾟｰｻ	SPACER	2			
86	1	LBQ0251	O-ﾘﾝｸﾞ JISB2401 1AG2	O-RING	2			
87	1	LBB0253	ﾘﾝｸﾞ;ﾊﾞｯｸｱｯﾌﾟ	RING;BACK-UP	2			
88	1	LBQ0553	O-ﾘﾝｸﾞ JISB2401 1BG5	O-RING	1			
89	1	LH004970	ｽﾍﾟｰｻ	SPACER	1			
90	1	LH004980	ｽﾘｰﾌﾞ	SLEEVE	1			
91	1	LPC0098	ﾎﾟﾍﾟｯﾄ	POPPET	1			
92	1	LSC0187	ｽﾌﾟﾘﾝｸﾞ	SPRING;SPL	1			
93	1	LH004990	ﾌﾗﾝｼﾞ ﾄｸｼｭ	FLANGE;SPL	1			
94	1	LE012520	O-ﾘﾝｸﾞ ﾄｸｼｭ ﾌﾂｿ	O-RING	3			
95	1	LE014890	O-ﾘﾝｸﾞ	O-RING	14			
96	1	LBQ0102	O-ﾘﾝｸﾞ JISB2401 1BP1	O-RING	12			
97	1	LJ014710	ﾊﾞﾙﾌﾞ ｱﾝﾁﾄﾞﾘﾌﾄ ASSY	VALVE;SPL	2			
98	1A	LJ014720	ﾊﾞﾙﾌﾞ;ﾘﾘｰﾌ KIT	VALVE;RELIEF	1			
99	2	LBQ6912	O-ﾘﾝｸﾞ AS568-912-HS9	O-RING	1			
100	1A	LJ014730	ﾊﾞﾙﾌﾞ;ﾘﾘｰﾌ KIT	VALVE;RELIEF	5			
101	2	LBQ6912	O-ﾘﾝｸﾞ AS568-912-HS9	O-RING	5			
102	2	LBQ0102	O-ﾘﾝｸﾞ JISB2401 1BP1	O-RING	5			
103	1A	LJ014740	ﾊﾞﾙﾌﾞ;ﾘﾘｰﾌ KIT	VALVE;RELIEF	1			
104	2	LBQ6912	O-ﾘﾝｸﾞ AS568-912-HS9	O-RING	1			
105	2	LBQ0102	O-ﾘﾝｸﾞ JISB2401 1BP1	O-RING	1			
106	1	LJ014700	ﾊﾞﾙﾌﾞ;ﾘﾘｰﾌ ASS'Y	VALVE;RELIEF	2			
107	1A	LNC0218	ﾌﾟﾗｸﾞ S/A	PLUG	3			
108	2	LBQ0182	O-ﾘﾝｸﾞ JISB2401 1BP1	O-RING	3			
109	1A	LNC0217	ﾌﾟﾗｸﾞ S/A	PLUG	10			
110	2	LBQ0142	O-ﾘﾝｸﾞ JISB2401 1BP1	O-RING	10			
111	1A	LNC0238	ﾌﾟﾗｸﾞ S/A	PLUG	3			
112	2	LK00328	ﾌﾟﾗｸﾞ	PLUG	3			
113	2	LBQ0112	O-ﾘﾝｸﾞ JISB2401 1BP1	O-RING	3			
114	1	108R010Z055B	ﾛｯｶｸｱﾅB JIS B 1180 M	BOLT;HEX SOC HD	32			
115	1	108R010Z040B	ﾛｯｶｸｱﾅB JIS B1176 M1	BOLT;HEX SOC HD	66			
116	1	108R016Z130B	ﾛｯｶｸｱﾅB JIS B1180 M1	BOLT;HEX SOC HD	8			
117	1	LUC0118	ﾛｯｶｸｱﾅB	BOLT;HEX SOC HD	4			
118	1	-------	ﾒｲﾊﾞﾝ;ｷﾊﾞﾝ	NAMEPLATE;SER NO.	1			
119	1	-------	ｽｸﾘｭｰ ﾄﾞﾗｲﾌﾞ	SCREW	2			
120	1	-------	ﾌﾟﾗｸﾞ	PLUG	5			
121	1	LA011120	ﾛｯｶｸｱﾅB	BOLT;HEX SOC HD	4			
122	1	-------	ｽﾌﾟｰﾙ ASS'Y	SPOOL	1			
123	1	LR015290	ｷｬｯﾌﾟ	CAP	1			
124	1	LR00579	ｷｬｯﾌﾟ	CAP	2			
125	1	LBQ5219	O-ﾘﾝｸﾞ	O-RING	2			
126	1	LBQ0112	O-ﾘﾝｸﾞ JISB2401 1BP1	O-RING	2			
127	1	LK00301	ﾌﾟﾗｸﾞ	PLUG	2			
128	1A	LK00302	ﾌﾟﾗｸﾞ ASSY	PLUG	2			
129	2	LPC0256	ﾌﾟﾗｸﾞ	PLUG	2			
130	2	LBQ0242	O-ﾘﾝｸﾞ JISB2401 1BP2	O-RING	2			
131	1A	LPC0259	ﾌﾟﾗｸﾞ ASSY	PLUG	2			
132	2	LK00327	ﾌﾟﾗｸﾞ	PLUG	2			
133	2	LBQ6912	O-ﾘﾝｸﾞ AS568-912-HS9	O-RING	2			
134	2	LBQ0080	O-ﾘﾝｸﾞ JISB2401 1AP8	O-RING	2			
135	2	LBB6110	ﾘﾝｸﾞ;ﾊﾞｯｸｱｯﾌﾟ	RING;BACK-UP	2			
136	1	LA011130	ﾛｯｶｸｱﾅB	BOLT;HEX SOC HD	2			
137	1	LT001660	ﾊｳｼﾞﾝｸﾞ ｱｳﾄﾚｯﾄ	HOUSING;SPL	1			
138	1	LB011890	ﾀｲﾛｯﾄﾞ	ROD;TIE	4			
139	1	LUC0094	ﾅｯﾄ	NUT;SPL	4			
140	1	LLC0045	ﾌﾟﾗｸﾞ S/A	PLUG	1			

https://truckmanualshub.com/

98 [99] 100 [101 , 102] 103 [104 , 105] 107 [108]
110 [111] 112 [113] 114 [115 , 116] 131 [132 , 133]
134 [135～138]

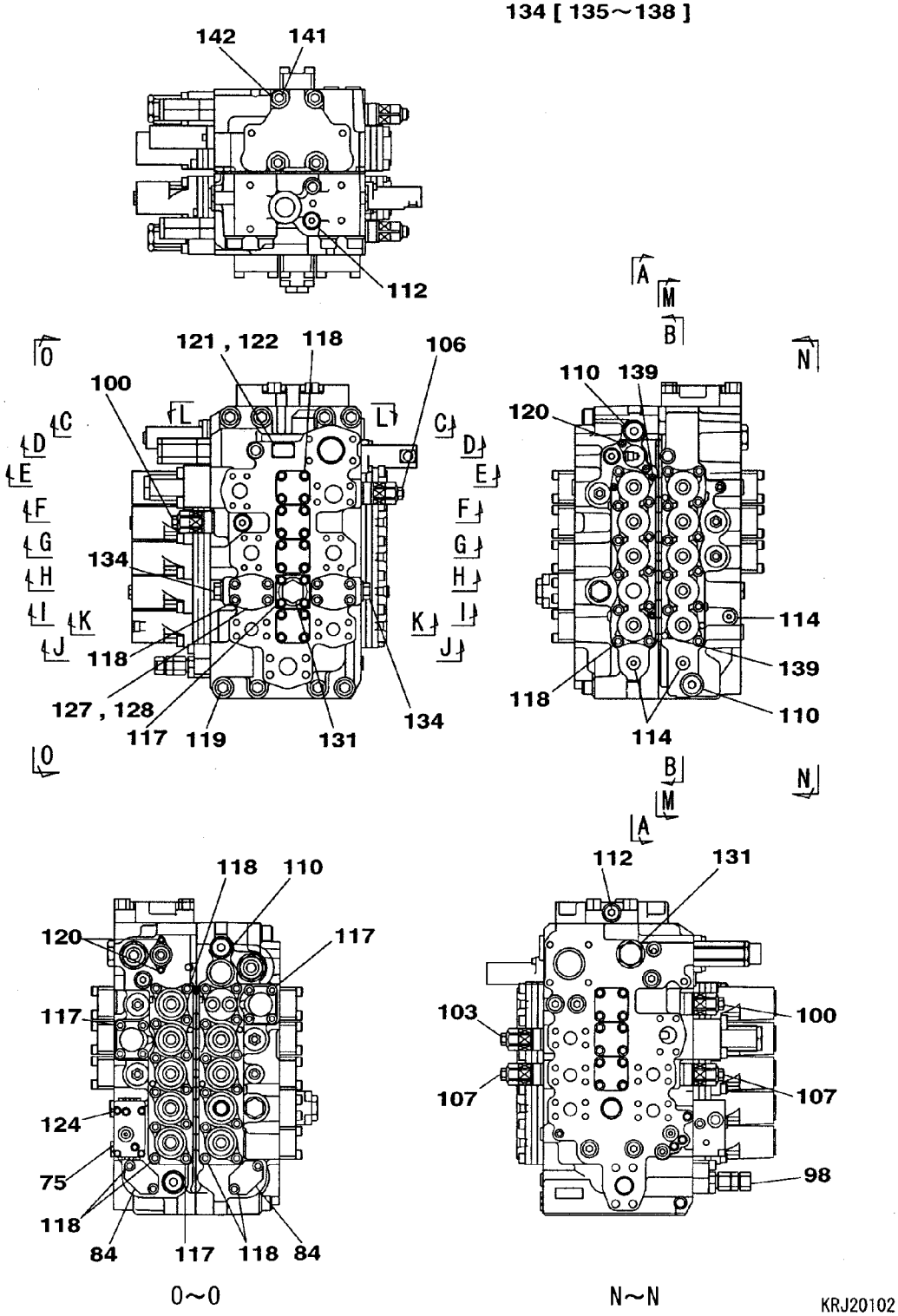

https://truckmanualshub.com/

VALVE;CONTROL	ﾊﾞﾙﾌﾞ;ｺﾝﾄﾛｰﾙ	ZAJ313L0151 000 2/20	000

符号 ITEM	構成 COMPO	部品番号 PART NO.	部品名	PART NAME	個数 Q'TY	互換 ICA	代替部品 REPLACEABLE PART	備考 MEMO
		KRJ20102						
1	1	-------	ﾊｳｼﾞﾝｸﾞ;ﾊﾞﾙﾌﾞ	HOUSING;VALVE	1			
2	1	-------	ｽﾌﾟｰﾙ ASSY	SPOOL	1			
3	1	-------	ｽﾌﾟｰﾙ ASSY	SPOOL	1			
4	1	-------	ｽﾌﾟｰﾙ ASSY	SPOOL	1			
5	1	-------	ｽﾌﾟｰﾙ ASSY	SPOOL	2			
6	1	-------	ｽﾌﾟｰﾙ ASSY	SPOOL	1			
7	1	LBQ0453	O-ﾘﾝｸﾞ JISB2401 1BG4	O-RING	20			
8	1	LR015210	ｷｬｯﾌﾟ	CAP	9			
9	1	LR015220	ｷｬｯﾌﾟ	CAP	1			
10	1A	LR015230	ﾌﾟﾚｰﾄ KIT	PLATE;SPL	1			
11	2A	-------	ﾌﾟﾚｰﾄ KIT	PLATE;SPL	1			
12	3	-------	ﾌﾟﾚｰﾄ	PLATE	1			
13	3	-------	ﾌﾟﾚｰﾄ	PLATE	1			
14	3	-------	ﾌﾟﾚｰﾄ	PLATE	1			
15	3	-------	ｶﾞｽｹｯﾄ	GASKET	2			
16	3	-------	ｽﾌﾟｰﾙ	SPOOL	5			
17	3	-------	ﾌｲﾙﾀ ﾄｸｼｭ	FILTER;SPL	4			
18	3	LBQ0453	O-ﾘﾝｸﾞ JISB2401 1BG4	O-RING	5			
19	3	108R006Z025N	ﾛｯｶｸｱﾅB M6X25-12.9	BOLT;HEX SOC HD	2			
20	1A	LR015240	ﾌﾟﾚｰﾄ KIT	PLATE;SPL	1			
21	2A	-------	ﾌﾟﾚｰﾄ KIT	PLATE;SPL	1			
22	3	-------	ﾌﾟﾚｰﾄ	PLATE	1			
23	3	-------	ﾌﾟﾚｰﾄ	PLATE	1			
24	3	-------	ﾌﾟﾚｰﾄ	PLATE	1			
25	3	-------	ｶﾞｽｹｯﾄ	GASKET	2			
26	3	-------	ｽﾌﾟｰﾙ	SPOOL	5			
27	3	-------	ﾌｲﾙﾀ ﾄｸｼｭ	FILTER;SPL	5			
28	3	LBQ0453	O-ﾘﾝｸﾞ JISB2401 1BG4	O-RING	5			
29	3	108R006Z025N	ﾛｯｶｸｱﾅB M6X25-12.9	BOLT;HEX SOC HD	2			
30	1	-------	ﾊｳｼﾞﾝｸﾞ;ﾊﾞﾙﾌﾞ	HOUSING;VALVE	1			
31	1	-------	ｽﾌﾟｰﾙ ASSY	SPOOL	1			
32	1	-------	ｽﾌﾟｰﾙ ASSY	SPOOL	1			
33	1	-------	ｽﾌﾟｰﾙ ASSY	SPOOL	1			
34	1	-------	ｽﾌﾟｰﾙ ASSY	SPOOL	1			
35	1	LR015250	ｷｬｯﾌﾟ	CAP	1			
36	1	-------	ｽﾌﾟｰﾙ;ﾊﾞﾙﾌﾞ	SPOOL;VALVE	1			
37	1	LSC0158	ｼｰﾄ;ｽﾌﾟﾘﾝｸﾞ	SEAT;SPRING	2			
38	1	LG00338	ｽﾌﾟﾘﾝｸﾞ;ｱｯｼｭｸ	SPRING;COMPRESSION	1			
39	1	LPC0222	ｴﾝﾄﾞ ｽﾌﾟｰﾙ	END;SPL	1			
40	1	LBQ0260	O-ﾘﾝｸﾞ JISB2401 1AP2	O-RING	1			
41	1	LK005690	ﾌﾟﾗｸﾞ	PLUG	1			
42	1	LBQ0242	O-ﾘﾝｸﾞ JISB2401 1BP2	O-RING	1			
43	1	LG00339	ｽﾌﾟﾘﾝｸﾞ;ｱｯｼｭｸ	SPRING;COMPRESSION	1			
44	1	LJ014690	ｽﾌﾟｰﾙ ASSY	SPOOL	1			
45	1A	LR015260	ﾌﾟﾚｰﾄ KIT	PLATE;SPL	1			
46	2A	-------	ﾌﾟﾚｰﾄ KIT	PLATE;SPL	1			
47	3	-------	ﾌﾟﾚｰﾄ	PLATE	1			
48	3	-------	ﾌﾟﾚｰﾄ	PLATE	1			
49	3	-------	ﾌﾟﾚｰﾄ	PLATE	1			
50	3	-------	ｶﾞｽｹｯﾄ	GASKET	2			
51	3	-------	ｽﾌﾟｰﾙ	SPOOL	3			
52	3	-------	ﾌｲﾙﾀ ﾄｸｼｭ	FILTER;SPL	3			
53	3	108R006Z025N	ﾛｯｶｸｱﾅB M6X25-12.9	BOLT;HEX SOC HD	2			
54	1A	LR015270	ﾌﾟﾚｰﾄ KIT	PLATE;SPL	1			
55	2A	-------	ﾌﾟﾚｰﾄ KIT	PLATE;SPL	1			
56	3	-------	ﾌﾟﾚｰﾄ	PLATE	1			
57	3	-------	ﾌﾟﾚｰﾄ	PLATE	1			
58	3	-------	ﾌﾟﾚｰﾄ	PLATE	1			
59	3	-------	ｶﾞｽｹｯﾄ	GASKET	2			
60	3	-------	ｽﾌﾟｰﾙ	SPOOL	4			
61	3	-------	ﾌｲﾙﾀ ﾄｸｼｭ	FILTER;SPL	4			
62	3	108R006Z025N	ﾛｯｶｸｱﾅB M6X25-12.9	BOLT;HEX SOC HD	2			
63	1	LBQ0162	O-ﾘﾝｸﾞ JISB2401 1BP1	O-RING	1			
64	1	LBB0162	ﾘﾝｸﾞ;ﾊﾞｯｸｱｯﾌﾟ	RING;BACK-UP	2			
65	1	LJ00726	ﾎﾟﾍﾟｯﾄ	POPPET	2			
66	1	LG00340	ｽﾌﾟﾘﾝｸﾞ;ｱｯｼｭｸ	SPRING;COMPRESSION	2			
67	1	LJ00727	ﾎﾟﾍﾟｯﾄ	POPPET	7			

https://truckmanualshub.com/

112 [113]

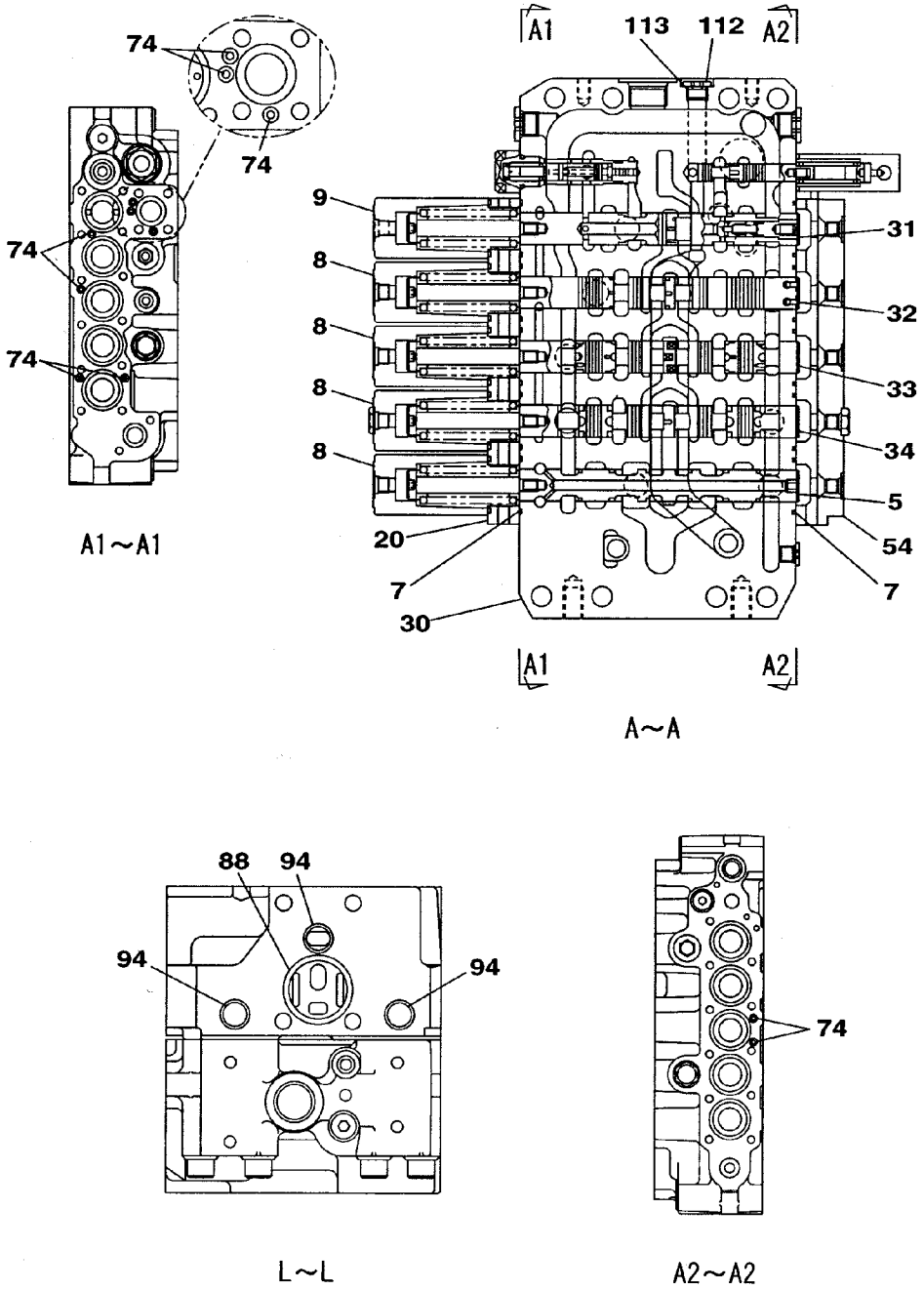

KRJ20102

https://truckmanualshub.com/

VALVE;CONTROL	ﾊﾞﾙﾌﾞ;ｺﾝﾄﾛｰﾙ	ZAJ313L0151 000 4/20	000

符号 ITEM	構成 COMPO	部品番号 PART NO.	部品名	PART NAME	個数 Q'TY	互換 ICA	代替部品 REPLACEABLE PART	備考 MEMO
9	1	LR015220	ｷｬｯﾌﾟ	CAP	1			
10	1A	LR015230	ﾌﾟﾚｰﾄ KIT	PLATE;SPL	1			
11	2A	-------	ﾌﾟﾚｰﾄ KIT	PLATE;SPL	1			
12	3	-------	ﾌﾟﾚｰﾄ	PLATE	1			
13	3	-------	ﾌﾟﾚｰﾄ	PLATE	1			
14	3	-------	ﾌﾟﾚｰﾄ	PLATE	1			
15	3	-------	ｶﾞｽｹｯﾄ	GASKET	2			
16	3	-------	ｽﾌﾟｰﾙ	SPOOL	5			
17	3	-------	ﾌｨﾙﾀ ﾄｸｼｭ	FILTER;SPL	4			
18	3	LBQ0453	O-ﾘﾝｸﾞ JISB2401 1BG4	O-RING	5			
19	3	108R006Z025N	ﾛｯｶｸｱﾅB M6X25-12.9	BOLT;HEX SOC HD	2			
20	1A	LR015240	ﾌﾟﾚｰﾄ KIT	PLATE;SPL	1			
21	2A	-------	ﾌﾟﾚｰﾄ KIT	PLATE;SPL	1			
22	3	-------	ﾌﾟﾚｰﾄ	PLATE	1			
23	3	-------	ﾌﾟﾚｰﾄ	PLATE	1			
24	3	-------	ﾌﾟﾚｰﾄ	PLATE	1			
25	3	-------	ｶﾞｽｹｯﾄ	GASKET	2			
26	3	-------	ｽﾌﾟｰﾙ	SPOOL	5			
27	3	-------	ﾌｨﾙﾀ ﾄｸｼｭ	FILTER;SPL	5			
28	3	LBQ0453	O-ﾘﾝｸﾞ JISB2401 1BG4	O-RING	5			
29	3	108R006Z025N	ﾛｯｶｸｱﾅB M6X25-12.9	BOLT;HEX SOC HD	2			
30	1	-------	ﾊｳｼﾞﾝｸﾞ;ﾊﾞﾙﾌﾞ	HOUSING;VALVE	1			
31	1	-------	ｽﾌﾟｰﾙ ASSY	SPOOL	1			
32	1	-------	ｽﾌﾟｰﾙ ASSY	SPOOL	1			
33	1	-------	ｽﾌﾟｰﾙ ASSY	SPOOL	1			
34	1	-------	ｽﾌﾟｰﾙ ASSY	SPOOL	1			
35	1	LR015250	ｷｬｯﾌﾟ	CAP	1			
36	1	-------	ｽﾌﾟｰﾙ;ﾊﾞﾙﾌﾞ	SPOOL;VALVE	1			
37	1	LSC0158	ｼｰﾄ;ｽﾌﾟﾘﾝｸﾞ	SEAT;SPRING	2			
38	1	LG00338	ｽﾌﾟﾘﾝｸﾞ;ｱｯｼｭｸ	SPRING;COMPRESSION	1			
39	1	LPC0222	ｴﾝﾄﾞ ｽﾌﾟｰﾙ	END;SPL	1			
40	1	LBQ0260	O-ﾘﾝｸﾞ JISB2401 1AP2	O-RING	1			
41	1	LK005690	ﾌﾟﾗｸﾞ	PLUG	1			
42	1	LBQ0242	O-ﾘﾝｸﾞ JISB2401 1BP2	O-RING	1			
43	1	LG00339	ｽﾌﾟﾘﾝｸﾞ;ｱｯｼｭｸ	SPRING;COMPRESSION	1			
44	1	LJ014690	ｽﾌﾟｰﾙ ASSY	SPOOL	1			
45	1A	LR015260	ﾌﾟﾚｰﾄ KIT	PLATE;SPL	1			
46	2A	-------	ﾌﾟﾚｰﾄ KIT	PLATE;SPL	1			
47	3	-------	ﾌﾟﾚｰﾄ	PLATE	1			
48	3	-------	ﾌﾟﾚｰﾄ	PLATE	1			
49	3	-------	ﾌﾟﾚｰﾄ	PLATE	1			
50	3	-------	ｶﾞｽｹｯﾄ	GASKET	2			
51	3	-------	ｽﾌﾟｰﾙ	SPOOL	3			
52	3	-------	ﾌｨﾙﾀ ﾄｸｼｭ	FILTER;SPL	3			
53	3	108R006Z025N	ﾛｯｶｸｱﾅB M6X25-12.9	BOLT;HEX SOC HD	2			
54	1A	LR015270	ﾌﾟﾚｰﾄ KIT	PLATE;SPL	1			
55	2A	-------	ﾌﾟﾚｰﾄ KIT	PLATE;SPL	1			
56	3	-------	ﾌﾟﾚｰﾄ	PLATE	1			
57	3	-------	ﾌﾟﾚｰﾄ	PLATE	1			
58	3	-------	ﾌﾟﾚｰﾄ	PLATE	1			
59	3	-------	ｶﾞｽｹｯﾄ	GASKET	2			
60	3	-------	ｽﾌﾟｰﾙ	SPOOL	4			
61	3	-------	ﾌｨﾙﾀ ﾄｸｼｭ	FILTER;SPL	4			
62	3	108R006Z025N	ﾛｯｶｸｱﾅB M6X25-12.9	BOLT;HEX SOC HD	2			
63	1	LBQ0162	O-ﾘﾝｸﾞ JISB2401 1BP1	O-RING	1			
64	1	LBB0162	ﾘﾝｸﾞ;ﾊﾞｯｸｱｯﾌﾟ	RING;BACK-UP	2			
65	1	LJ00726	ﾎﾟﾍﾟｯﾄ	POPPET	2			
66	1	LG00340	ｽﾌﾟﾘﾝｸﾞ;ｱｯｼｭｸ	SPRING;COMPRESSION	2			
67	1	LJ00727	ﾎﾟﾍﾟｯﾄ	POPPET	7			
68	1	LG00341	ｽﾌﾟﾘﾝｸﾞ;ｱｯｼｭｸ	SPRING;COMPRESSION	8			
69	1	LBQ0322	O-ﾘﾝｸﾞ JISB2401 1BP3	O-RING	10			
70	1	LH00248	ﾌﾗﾝｼﾞ	FLANGE;SPL	6			
71	1	LPC0180	ﾎﾟﾍﾟｯﾄ	POPPET	2			
72	1	LSC0227	ｽﾌﾟﾘﾝｸﾞ ﾄｸｼｭ	SPRING;SPL	2			
73	1	LJ00731	ｵﾘﾌｨｽ	ORIFICE	1			
74	1	LBQ0062	O-ﾘﾝｸﾞ JISB2401 1BP6	O-RING	27			
75	1	LR015280	ﾎﾞﾃﾞｨ ASSY	BODY	1			
76	1	LH005410	ﾌﾗﾝｼﾞ	FLANGE;SPL	1			

https://truckmanualshub.com/

98 [99]

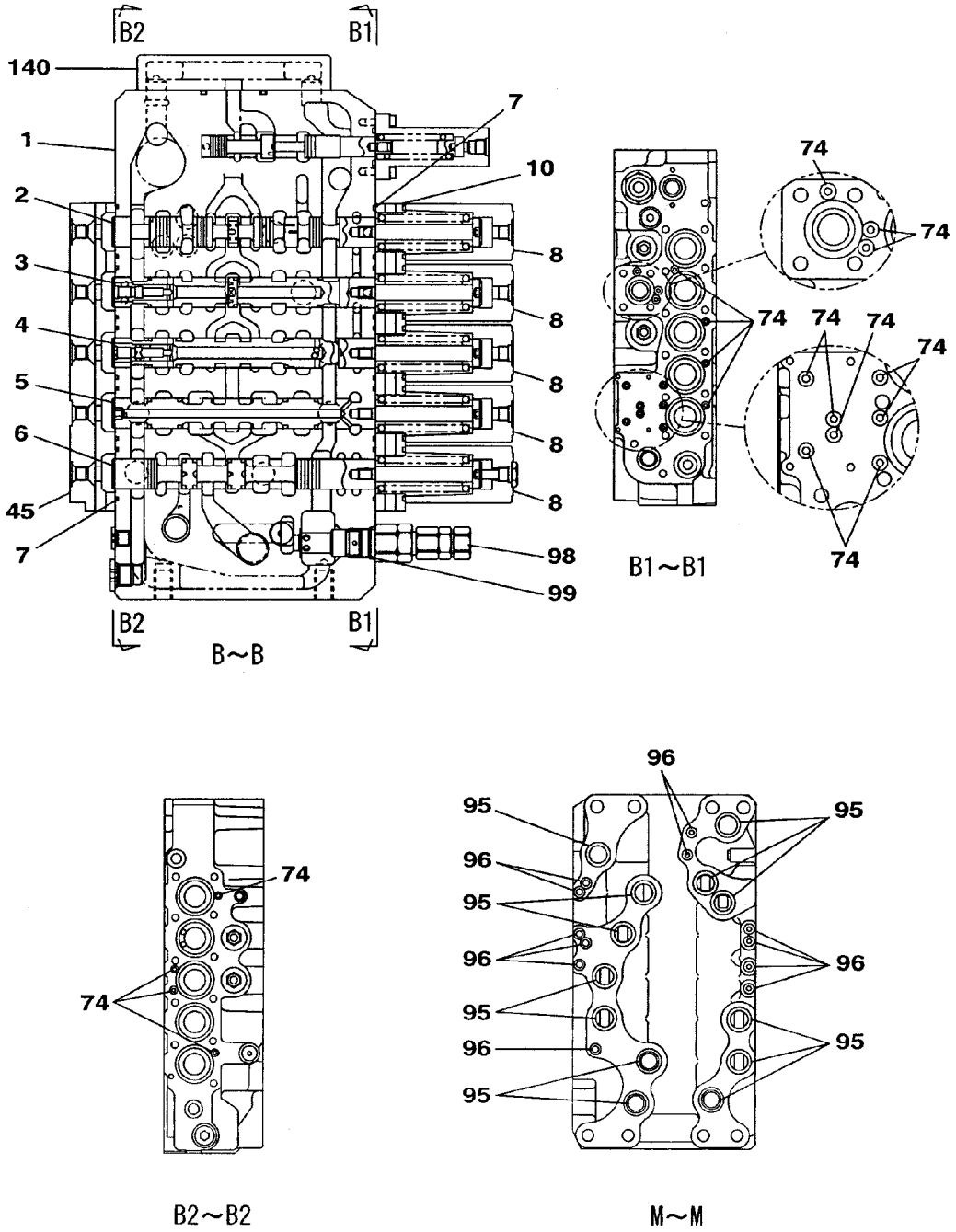

KRJ20102

https://truckmanualshub.com/

VALVE;CONTROL	ﾊﾞﾙﾌﾞ;ｺﾝﾄﾛｰﾙ	ZAJ313L0151 000 6/20	000

符号 ITEM	構成 COMPO	部品番号 PART NO.	部品名	PART NAME	個数 Q'TY	互換 ICA	代替部品 REPLACEABLE PART	備考 MEMO
18	3	LBQ0453	O-ﾘﾝｸﾞ JISB2401 1BG4	O-RING	5			
19	3	108R006Z025N	ﾛｯｶｸｱﾅB M6X25-12.9	BOLT;HEX SOC HD	2			
20	1A	LR015240	ﾌﾟﾚｰﾄ KIT	PLATE;SPL	1			
21	2A	-------	ﾌﾟﾚｰﾄ KIT	PLATE;SPL	1			
22	3	-------	ﾌﾟﾚｰﾄ	PLATE	1			
23	3	-------	ﾌﾟﾚｰﾄ	PLATE	1			
24	3	-------	ﾌﾟﾚｰﾄ	PLATE	1			
25	3	-------	ｶﾞｽｹｯﾄ	GASKET	2			
26	3	-------	ｽﾌﾟｰﾙ	SPOOL	5			
27	3	-------	ﾌｨﾙﾀ ﾄｸｼｭ	FILTER;SPL	5			
28	3	LBQ0453	O-ﾘﾝｸﾞ JISB2401 1BG4	O-RING	5			
29	3	108R006Z025N	ﾛｯｶｸｱﾅB M6X25-12.9	BOLT;HEX SOC HD	2			
30	1	-------	ﾊｳｼﾞﾝｸﾞ;ﾊﾞﾙﾌﾞ	HOUSING;VALVE	1			
31	1	-------	ｽﾌﾟｰﾙ ASSY	SPOOL	1			
32	1	-------	ｽﾌﾟｰﾙ ASSY	SPOOL	1			
33	1	-------	ｽﾌﾟｰﾙ ASSY	SPOOL	1			
34	1	-------	ｽﾌﾟｰﾙ ASSY	SPOOL	1			
35	1	LR015250	ｷｬｯﾌﾟ	CAP	1			
36	1	-------	ｽﾌﾟｰﾙ;ﾊﾞﾙﾌﾞ	SPOOL;VALVE	1			
37	1	LSC0158	ｼｰﾄ;ｽﾌﾟﾘﾝｸﾞ	SEAT;SPRING	2			
38	1	LG00338	ｽﾌﾟﾘﾝｸﾞ;ｱｯｼｭｸ	SPRING;COMPRESSION	1			
39	1	LPC0222	ｴﾝﾄﾞ ｽﾌﾟｰﾙ	END;SPL	1			
40	1	LBQ0260	O-ﾘﾝｸﾞ JISB2401 1AP2	O-RING	1			
41	1	LK005690	ﾌﾟﾗｸﾞ	PLUG	1			
42	1	LBQ0242	O-ﾘﾝｸﾞ JISB2401 1BP2	O-RING	1			
43	1	LG00339	ｽﾌﾟﾘﾝｸﾞ;ｱｯｼｭｸ	SPRING;COMPRESSION	1			
44	1	LJ014690	ｽﾌﾟｰﾙ ASSY	SPOOL	1			
45	1A	LR015260	ﾌﾟﾚｰﾄ KIT	PLATE;SPL	1			
46	2A	-------	ﾌﾟﾚｰﾄ KIT	PLATE;SPL	1			
47	3	-------	ﾌﾟﾚｰﾄ	PLATE	1			
48	3	-------	ﾌﾟﾚｰﾄ	PLATE	1			
49	3	-------	ﾌﾟﾚｰﾄ	PLATE	1			
50	3	-------	ｶﾞｽｹｯﾄ	GASKET	2			
51	3	-------	ｽﾌﾟｰﾙ	SPOOL	3			
52	3	-------	ﾌｨﾙﾀ ﾄｸｼｭ	FILTER;SPL	3			
53	3	108R006Z025N	ﾛｯｶｸｱﾅB M6X25-12.9	BOLT;HEX SOC HD	2			
54	1A	LR015270	ﾌﾟﾚｰﾄ KIT	PLATE;SPL	1			
55	2A	-------	ﾌﾟﾚｰﾄ KIT	PLATE;SPL	1			
56	3	-------	ﾌﾟﾚｰﾄ	PLATE	1			
57	3	-------	ﾌﾟﾚｰﾄ	PLATE	1			
58	3	-------	ﾌﾟﾚｰﾄ	PLATE	1			
59	3	-------	ｶﾞｽｹｯﾄ	GASKET	2			
60	3	-------	ｽﾌﾟｰﾙ	SPOOL	4			
61	3	-------	ﾌｨﾙﾀ ﾄｸｼｭ	FILTER;SPL	4			
62	3	108R006Z025N	ﾛｯｶｸｱﾅB M6X25-12.9	BOLT;HEX SOC HD	2			
63	1	LBQ0162	O-ﾘﾝｸﾞ JISB2401 1BP1	O-RING	1			
64	1	LBB0162	ﾘﾝｸﾞ;ﾊﾞｯｸｱｯﾌﾟ	RING;BACK-UP	2			
65	1	LJ00726	ﾎﾟﾍﾟｯﾄ	POPPET	2			
66	1	LG00340	ｽﾌﾟﾘﾝｸﾞ;ｱｯｼｭｸ	SPRING;COMPRESSION	2			
67	1	LJ00727	ﾎﾟﾍﾟｯﾄ	POPPET	7			
68	1	LG00341	ｽﾌﾟﾘﾝｸﾞ;ｱｯｼｭｸ	SPRING;COMPRESSION	8			
69	1	LBQ0322	O-ﾘﾝｸﾞ JISB2401 1BP3	O-RING	10			
70	1	LH00248	ﾌﾗﾝｼﾞ	FLANGE;SPL	6			
71	1	LPC0180	ﾎﾟﾍﾟｯﾄ	POPPET	2			
72	1	LSC0227	ｽﾌﾟﾘﾝｸﾞ ﾄｸｼｭ	SPRING;SPL	2			
73	1	LJ00731	ｵﾘﾌｨｽ	ORIFICE	1			
74	1	LBQ0062	O-ﾘﾝｸﾞ JISB2401 1BP6	O-RING	27			
75	1	LR015280	ﾎﾞﾃﾞｨ ASSY	BODY	1			
76	1	LH005410	ﾌﾗﾝｼﾞ	FLANGE;SPL	1			
77	1	LJ016050	ﾎﾟﾍﾟｯﾄ	POPPET	1			
78	1	LG006510	ｽﾌﾟﾘﾝｸﾞ	SPRING;SPL	1			
79	1	LLC0082	ﾌﾟﾗｸﾞ	PLUG	1			
80	1	LBQ6910	O-ﾘﾝｸﾞ	O-RING	1			
81	1	LSC0094	ｽﾌﾟﾘﾝｸﾞ	SPRING;SPL	1			
82	1	LJ014680	ﾎﾟﾍﾟｯﾄ	POPPET	1			
83	1	LJ00730	ﾎﾟﾍﾟｯﾄ	POPPET	1			
84	1	LH00250	ﾌﾗﾝｼﾞ	FLANGE;SPL	2			
85	1	LH004960	ｽﾍﾟｰｻ	SPACER	2			

https://truckmanualshub.com/

100 [101 , 102] 103 [104 , 105] 110 [111] 112 [113] 131 [132 , 133]

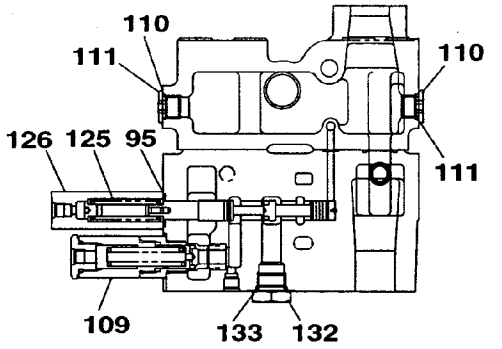

C~C

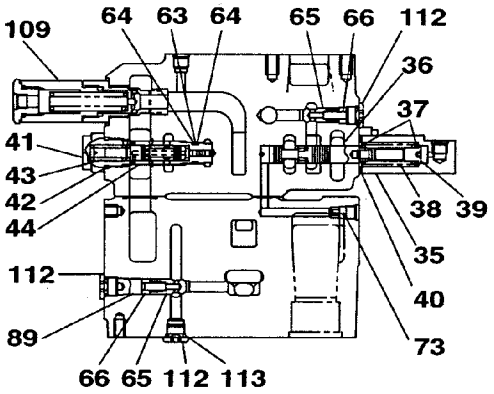

D~D

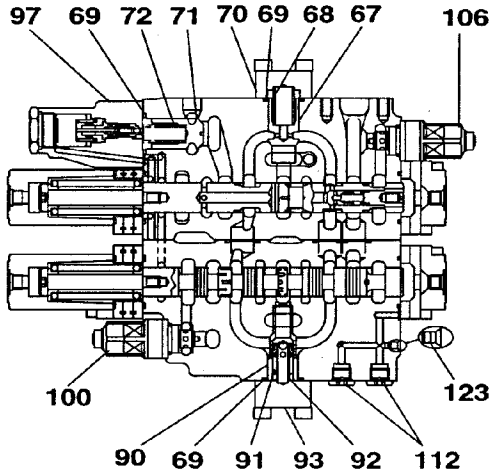

E~E

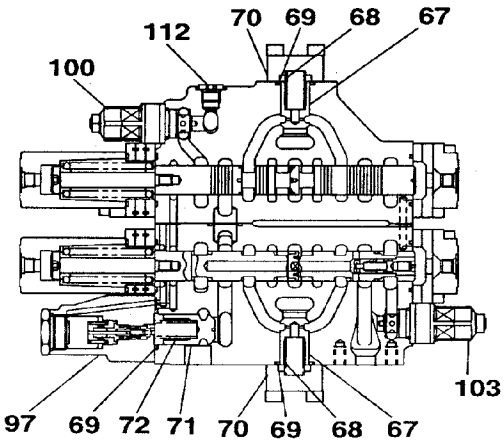

F~F

KRJ20102

https://truckmanualshub.com/

VALVE;CONTROL	ﾊﾞﾙﾌﾞ;ｺﾝﾄﾛｰﾙ	ZAJ313L0151 000 8/20	000

符号 ITEM	構成 COMPO	部品番号 PART NO.	部品名	PART NAME	個数 Q'TY	互換 ICA	代替部品 REPLACEABLE PART	備考 MEMO
27	3	-------	ﾌｨﾙﾀ ﾄｸｼｭ	FILTER;SPL	5			
28	3	LBQ0453	O-ﾘﾝｸﾞ JISB2401 1BG4	O-RING	5			
29	3	108R006Z025N	ﾛｯｶｸｱﾅB M6X25-12.9	BOLT;HEX SOC HD	2			
30	1	-------	ﾊｳｼﾞﾝｸﾞ;ﾊﾞﾙﾌﾞ	HOUSING;VALVE	1			
31	1	-------	ｽﾌﾟｰﾙ ASSY	SPOOL	1			
32	1	-------	ｽﾌﾟｰﾙ ASSY	SPOOL	1			
33	1	-------	ｽﾌﾟｰﾙ ASSY	SPOOL	1			
34	1	-------	ｽﾌﾟｰﾙ ASSY	SPOOL	1			
35	1	LR015250	ｷｬｯﾌﾟ	CAP	1			
36	1	-------	ｽﾌﾟｰﾙ;ﾊﾞﾙﾌﾞ	SPOOL;VALVE	1			
37	1	LSC0158	ｼｰﾄ;ｽﾌﾟﾘﾝｸﾞ	SEAT;SPRING	2			
38	1	LG00338	ｽﾌﾟﾘﾝｸﾞ;ｱｯｼｭｸ	SPRING;COMPRESSION	1			
39	1	LPC0222	ｴﾝﾄﾞ ｽﾌﾟｰﾙ	END;SPL	1			
40	1	LBQ0260	O-ﾘﾝｸﾞ JISB2401 1AP2	O-RING	1			
41	1	LK005690	ﾌﾟﾗｸﾞ	PLUG	1			
42	1	LBQ0242	O-ﾘﾝｸﾞ JISB2401 1BP2	O-RING	1			
43	1	LG00339	ｽﾌﾟﾘﾝｸﾞ;ｱｯｼｭｸ	SPRING;COMPRESSION	1			
44	1	LJ014690	ｽﾌﾟｰﾙ ASSY	SPOOL	1			
45	1A	LR015260	ﾌﾟﾚｰﾄ KIT	PLATE;SPL	1			
46	2A	-------	ﾌﾟﾚｰﾄ KIT	PLATE;SPL	1			
47	3	-------	ﾌﾟﾚｰﾄ	PLATE	1			
48	3	-------	ﾌﾟﾚｰﾄ	PLATE	1			
49	3	-------	ﾌﾟﾚｰﾄ	PLATE	1			
50	3	-------	ｶﾞｽｹｯﾄ	GASKET	2			
51	3	-------	ｽﾌﾟｰﾙ	SPOOL	3			
52	3	-------	ﾌｨﾙﾀ ﾄｸｼｭ	FILTER;SPL	3			
53	3	108R006Z025N	ﾛｯｶｸｱﾅB M6X25-12.9	BOLT;HEX SOC HD	2			
54	1A	LR015270	ﾌﾟﾚｰﾄ KIT	PLATE;SPL	1			
55	2A	-------	ﾌﾟﾚｰﾄ KIT	PLATE;SPL	1			
56	3	-------	ﾌﾟﾚｰﾄ	PLATE	1			
57	3	-------	ﾌﾟﾚｰﾄ	PLATE	1			
58	3	-------	ﾌﾟﾚｰﾄ	PLATE	1			
59	3	-------	ｶﾞｽｹｯﾄ	GASKET	2			
60	3	-------	ｽﾌﾟｰﾙ	SPOOL	4			
61	3	-------	ﾌｨﾙﾀ ﾄｸｼｭ	FILTER;SPL	4			
62	3	108R006Z025N	ﾛｯｶｸｱﾅB M6X25-12.9	BOLT;HEX SOC HD	2			
63	1	LBQ0162	O-ﾘﾝｸﾞ JISB2401 1BP1	O-RING	1			
64	1	LBB0162	ﾘﾝｸﾞ;ﾊﾞｯｸｱｯﾌﾟ	RING;BACK-UP	2			
65	1	LJ00726	ﾎﾟﾍﾟｯﾄ	POPPET	2			
66	1	LG00340	ｽﾌﾟﾘﾝｸﾞ;ｱｯｼｭｸ	SPRING;COMPRESSION	2			
67	1	LJ00727	ﾎﾟﾍﾟｯﾄ	POPPET	7			
68	1	LG00341	ｽﾌﾟﾘﾝｸﾞ;ｱｯｼｭｸ	SPRING;COMPRESSION	8			
69	1	LBQ0322	O-ﾘﾝｸﾞ JISB2401 1BP3	O-RING	10			
70	1	LH00248	ﾌﾗﾝｼﾞ	FLANGE;SPL	6			
71	1	LPC0180	ﾎﾟﾍﾟｯﾄ	POPPET	2			
72	1	LSC0227	ｽﾌﾟﾘﾝｸﾞ ﾄｸｼｭ	SPRING;SPL	2			
73	1	LJ00731	ｵﾘﾌｨｽ	ORIFICE	1			
74	1	LBQ0062	O-ﾘﾝｸﾞ JISB2401 1BP6	O-RING	27			
75	1	LR015280	ﾎﾞﾃﾞｨ ASSY	BODY	1			
76	1	LH005410	ﾌﾗﾝｼﾞ	FLANGE;SPL	1			
77	1	LJ016050	ﾎﾟﾍﾟｯﾄ	POPPET	1			
78	1	LG006510	ｽﾌﾟﾘﾝｸﾞ	SPRING;SPL	1			
79	1	LLC0082	ﾌﾟﾗｸﾞ	PLUG	1			
80	1	LBQ6910	O-ﾘﾝｸﾞ	O-RING	1			
81	1	LSC0094	ｽﾌﾟﾘﾝｸﾞ	SPRING;SPL	1			
82	1	LJ014680	ﾎﾟﾍﾟｯﾄ	POPPET	1			
83	1	LJ00730	ﾎﾟﾍﾟｯﾄ	POPPET	1			
84	1	LH00250	ﾌﾗﾝｼﾞ	FLANGE;SPL	2			
85	1	LH004960	ｽﾍﾟｰｻ	SPACER	2			
86	1	LBQ0251	O-ﾘﾝｸﾞ JISB2401 1AG2	O-RING	2			
87	1	LBB0253	ﾘﾝｸﾞ;ﾊﾞｯｸｱｯﾌﾟ	RING;BACK-UP	2			
88	1	LBQ0553	O-ﾘﾝｸﾞ JISB2401 1BG5	O-RING	1			
89	1	LH004970	ｽﾍﾟｰｻ	SPACER	1			
90	1	LH004980	ｽﾘｰﾌﾞ	SLEEVE	1			
91	1	LPC0098	ﾎﾟﾍﾟｯﾄ	POPPET	1			
92	1	LSC0187	ｽﾌﾟﾘﾝｸﾞ	SPRING;SPL	1			
93	1	LH004990	ﾌﾗﾝｼﾞ ﾄｸｼｭ	FLANGE;SPL	1			
94	1	LE012520	O-ﾘﾝｸﾞ ﾄｸｼｭ ﾌﾂｿ	O-RING	3			

https://truckmanualshub.com/

98 [99]
114 [115 , 116]
107 [108]
131 [132 , 133]
112 [113]
134 [135 ~ 138]

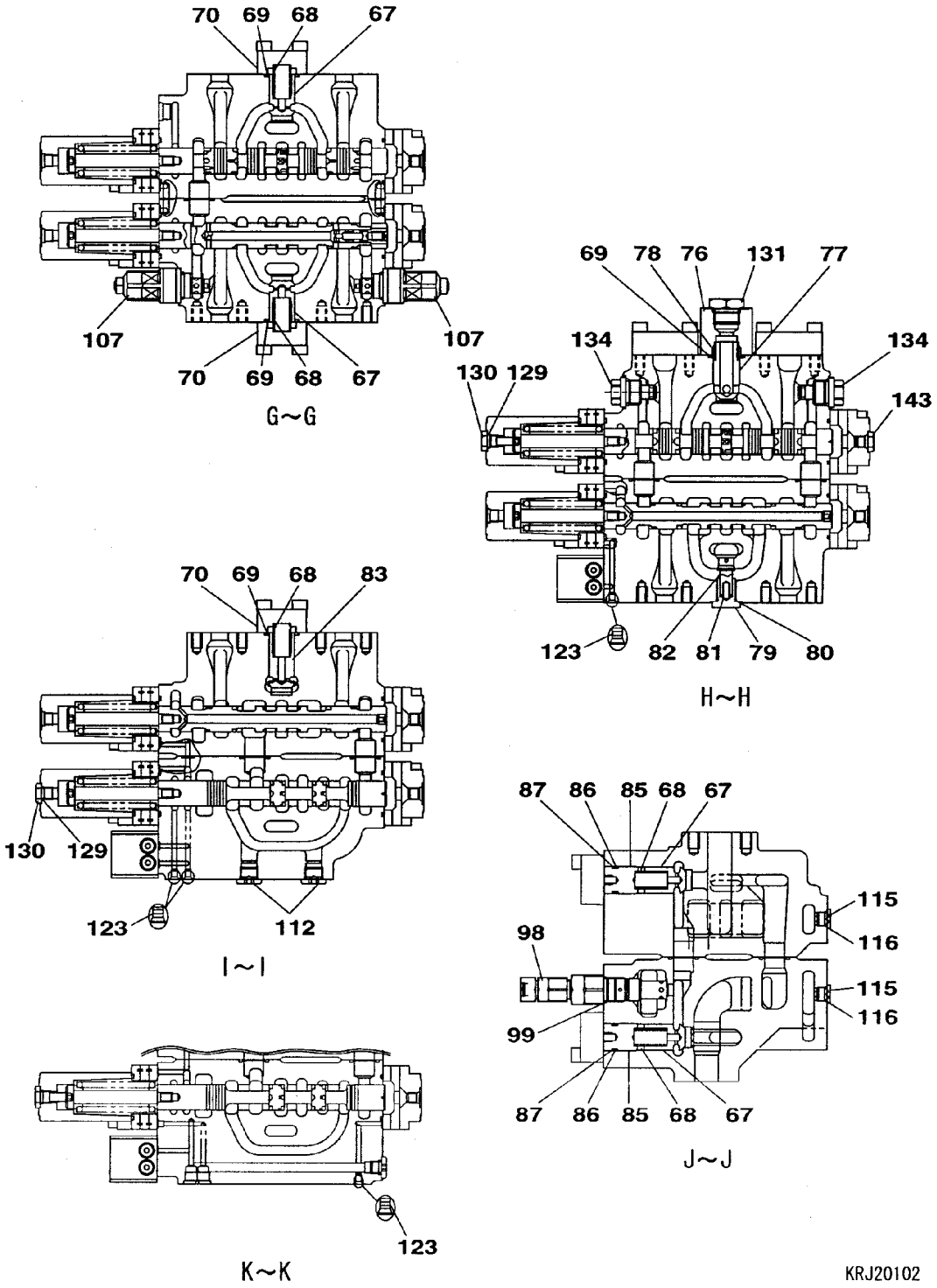

https://truckmanualshub.com/

VALVE;CONTROL	ﾊﾞﾙﾌﾞ;ｺﾝﾄﾛｰﾙ	ZAJ313L0151 000 10/20	000

符号 ITEM	構成 COMPO	部品番号 PART NO.	部品名	PART NAME	個数 Q'TY	互換 ICA	代替部品 REPLACEABLE PART	備考 MEMO
36	1	-------	ｽﾌﾟｰﾙ;ﾊﾞﾙﾌﾞ	SPOOL;VALVE	1			
37	1	LSC0158	ｼｰﾄ;ｽﾌﾟﾘﾝｸﾞ	SEAT;SPRING	2			
38	1	LG00338	ｽﾌﾟﾘﾝｸﾞ;ｱﾂｼｭｸ	SPRING;COMPRESSION	1			
39	1	LPC0222	ｴﾝﾄﾞ ｽﾌﾟｰﾙ	END;SPL	1			
40	1	LBQ0260	O-ﾘﾝｸﾞ JISB2401 1AP2	O-RING	1			
41	1	LK005690	ﾌﾟﾗｸﾞ	PLUG	1			
42	1	LBQ0242	O-ﾘﾝｸﾞ JISB2401 1BP2	O-RING	1			
43	1	LG00339	ｽﾌﾟﾘﾝｸﾞ;ｱﾂｼｭｸ	SPRING;COMPRESSION	1			
44	1	LJ014690	ｽﾌﾟｰﾙ ASSY	SPOOL	1			
45	1A	LR015260	ﾌﾟﾚｰﾄ KIT	PLATE;SPL	1			
46	2A	-------	ﾌﾟﾚｰﾄ KIT	PLATE;SPL	1			
47	3	-------	ﾌﾟﾚｰﾄ	PLATE	1			
48	3	-------	ﾌﾟﾚｰﾄ	PLATE	1			
49	3	-------	ﾌﾟﾚｰﾄ	PLATE	1			
50	3	-------	ｶﾞｽｹｯﾄ	GASKET	2			
51	3	-------	ｽﾌﾟｰﾙ	SPOOL	3			
52	3	-------	ﾌｨﾙﾀ ﾄｸｼｭ	FILTER;SPL	3			
53	3	108R006Z025N	ﾛｯｶｸｱﾅB M6X25-12.9	BOLT;HEX SOC HD	2			
54	1A	LR015270	ﾌﾟﾚｰﾄ KIT	PLATE;SPL	1			
55	2A	-------	ﾌﾟﾚｰﾄ KIT	PLATE;SPL	1			
56	3	-------	ﾌﾟﾚｰﾄ	PLATE	1			
57	3	-------	ﾌﾟﾚｰﾄ	PLATE	1			
58	3	-------	ﾌﾟﾚｰﾄ	PLATE	1			
59	3	-------	ｶﾞｽｹｯﾄ	GASKET	2			
60	3	-------	ｽﾌﾟｰﾙ	SPOOL	4			
61	3	-------	ﾌｨﾙﾀ ﾄｸｼｭ	FILTER;SPL	4			
62	3	108R006Z025N	ﾛｯｶｸｱﾅB M6X25-12.9	BOLT;HEX SOC HD	2			
63	1	LBQ0162	O-ﾘﾝｸﾞ JISB2401 1BP1	O-RING	1			
64	1	LBB0162	ﾘﾝｸﾞ;ﾊﾞｯｸｱｯﾌﾟ	RING;BACK-UP	2			
65	1	LJ00726	ﾎﾟﾍﾟｯﾄ	POPPET	2			
66	1	LG00340	ｽﾌﾟﾘﾝｸﾞ;ｱﾂｼｭｸ	SPRING;COMPRESSION	2			
67	1	LJ00727	ﾎﾟﾍﾟｯﾄ	POPPET	7			
68	1	LG00341	ｽﾌﾟﾘﾝｸﾞ;ｱﾂｼｭｸ	SPRING;COMPRESSION	8			
69	1	LBQ0322	O-ﾘﾝｸﾞ JISB2401 1BP3	O-RING	10			
70	1	LH00248	ﾌﾗﾝｼﾞ	FLANGE;SPL	6			
71	1	LPC0180	ﾎﾟﾍﾟｯﾄ	POPPET	2			
72	1	LSC0227	ｽﾌﾟﾘﾝｸﾞ ﾄｸｼｭ	SPRING;SPL	2			
73	1	LJ00731	ｵﾘﾌｨｽ	ORIFICE	1			
74	1	LBQ0062	O-ﾘﾝｸﾞ JISB2401 1BP6	O-RING	27			
75	1	LR015280	ﾎﾞﾃﾞｨ ASSY	BODY	1			
76	1	LH005410	ﾌﾗﾝｼﾞ	FLANGE;SPL	1			
77	1	LJ016050	ﾎﾟﾍﾟｯﾄ	POPPET	1			
78	1	LG006510	ｽﾌﾟﾘﾝｸﾞ	SPRING;SPL	1			
79	1	LLC0082	ﾌﾟﾗｸﾞ	PLUG	1			
80	1	LBQ6910	O-ﾘﾝｸﾞ	O-RING	1			
81	1	LSC0094	ｽﾌﾟﾘﾝｸﾞ	SPRING;SPL	1			
82	1	LJ014680	ﾎﾟﾍﾟｯﾄ	POPPET	1			
83	1	LJ00730	ﾎﾟﾍﾟｯﾄ	POPPET	1			
84	1	LH00250	ﾌﾗﾝｼﾞ	FLANGE;SPL	2			
85	1	LH004960	ｽﾍﾟｰｻ	SPACER	2			
86	1	LBQ0251	O-ﾘﾝｸﾞ JISB2401 1AG2	O-RING	2			
87	1	LBB0253	ﾘﾝｸﾞ;ﾊﾞｯｸｱｯﾌﾟ	RING;BACK-UP	2			
88	1	LBQ0553	O-ﾘﾝｸﾞ JISB2401 1BG5	O-RING	1			
89	1	LH004970	ｽﾍﾟｰｻ	SPACER	1			
90	1	LH004980	ｽﾘｰﾌﾞ	SLEEVE	1			
91	1	LPC0098	ﾎﾟﾍﾟｯﾄ	POPPET	1			
92	1	LSC0187	ｽﾌﾟﾘﾝｸﾞ	SPRING;SPL	1			
93	1	LH004990	ﾌﾗﾝｼﾞ ﾄｸｼｭ	FLANGE;SPL	1			
94	1	LE012520	O-ﾘﾝｸﾞ ﾄｸｼｭ ﾌﾂｿ	O-RING	3			
95	1	LE014890	O-ﾘﾝｸﾞ	O-RING	14			
96	1	LBQ0102	O-ﾘﾝｸﾞ JISB2401 1BP1	O-RING	12			
97	1	LJ014710	ﾊﾞﾙﾌﾞ ｱﾝﾁﾄﾞﾘﾌﾄ ASSY	VALVE;SPL	2			
98	1A	LJ014720	ﾊﾞﾙﾌﾞ;ﾘﾘｰﾌ KIT	VALVE;RELIEF	1			
99	2	LBQ6912	O-ﾘﾝｸﾞ AS568-912-HS9	O-RING	1			
100	1A	LJ014730	ﾊﾞﾙﾌﾞ;ﾘﾘｰﾌ KIT	VALVE;RELIEF	2			
101	2	LBQ6912	O-ﾘﾝｸﾞ AS568-912-HS9	O-RING	2			
102	2	LBQ0102	O-ﾘﾝｸﾞ JISB2401 1BP1	O-RING	2			
103	1A	LJ014740	ﾊﾞﾙﾌﾞ;ﾘﾘｰﾌ KIT	VALVE;RELIEF	1			

https://truckmanualshub.com/

詳細/DETAIL

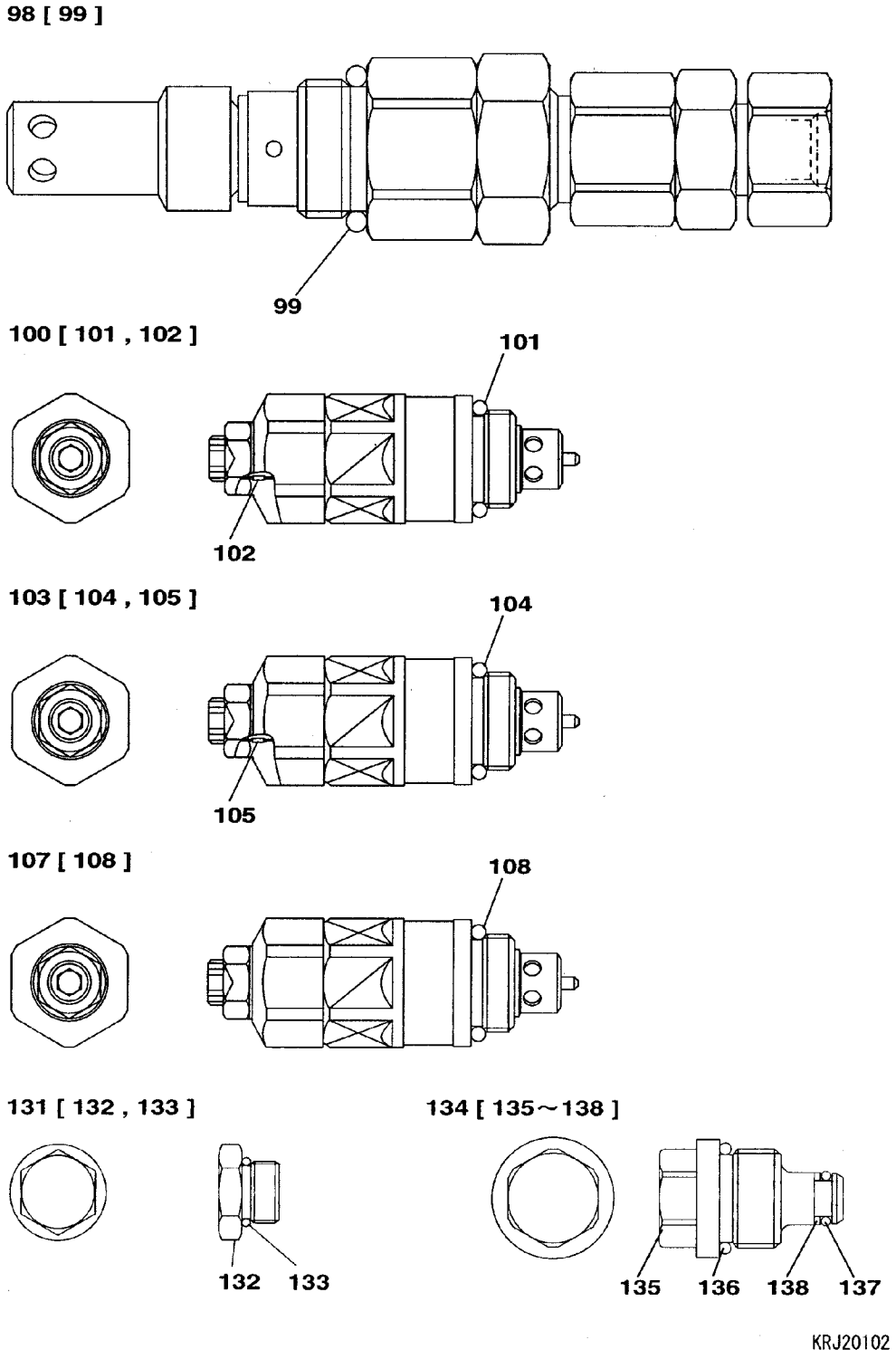

https://truckmanualshub.com/

VALVE;CONTROL	ﾊﾞﾙﾌﾞ;ｺﾝﾄﾛｰﾙ	ZAJ313L0151 000 12/20	000

符号 ITEM	構成 COMPO	部品番号 PART NO.	部品名	PART NAME	個数 Q'TY	互換 ICA	代替部品 REPLACEABLE PART	備考 MEMO
45	1A	LR015260	ﾌﾟﾚｰﾄ KIT	PLATE;SPL	1			
46	2A	-------	ﾌﾟﾚｰﾄ KIT	PLATE;SPL	1			
47	3	-------	ﾌﾟﾚｰﾄ	PLATE	1			
48	3	-------	ﾌﾟﾚｰﾄ	PLATE	1			
49	3	-------	ﾌﾟﾚｰﾄ	PLATE	1			
50	3	-------	ｶﾞｽｹｯﾄ	GASKET	2			
51	3	-------	ｽﾌﾟｰﾙ	SPOOL	3			
52	3	-------	ﾌｲﾙﾀ ﾄｸｼｭ	FILTER;SPL	3			
53	3	108R006Z025N	ﾛｯｶｸｱﾅB M6X25-12.9	BOLT;HEX SOC HD	2			
54	1A	LR015270	ﾌﾟﾚｰﾄ KIT	PLATE;SPL	1			
55	2A	-------	ﾌﾟﾚｰﾄ KIT	PLATE;SPL	1			
56	3	-------	ﾌﾟﾚｰﾄ	PLATE	1			
57	3	-------	ﾌﾟﾚｰﾄ	PLATE	1			
58	3	-------	ﾌﾟﾚｰﾄ	PLATE	1			
59	3	-------	ｶﾞｽｹｯﾄ	GASKET	2			
60	3	-------	ｽﾌﾟｰﾙ	SPOOL	4			
61	3	-------	ﾌｲﾙﾀ ﾄｸｼｭ	FILTER;SPL	4			
62	3	108R006Z025N	ﾛｯｶｸｱﾅB M6X25-12.9	BOLT;HEX SOC HD	2			
63	1	LBQ0162	O-ﾘﾝｸﾞ JISB2401 1BP1	O-RING	1			
64	1	LBB0162	ﾘﾝｸﾞ;ﾊﾞｯｸｱｯﾌﾟ	RING;BACK-UP	2			
65	1	LJ00726	ﾎﾟﾍﾟｯﾄ	POPPET	2			
66	1	LG00340	ｽﾌﾟﾘﾝｸﾞ;ｱｯｼｭｸ	SPRING;COMPRESSION	2			
67	1	LJ00727	ﾎﾟﾍﾟｯﾄ	POPPET	7			
68	1	LG00341	ｽﾌﾟﾘﾝｸﾞ;ｱｯｼｭｸ	SPRING;COMPRESSION	8			
69	1	LBQ0322	O-ﾘﾝｸﾞ JISB2401 1BP3	O-RING	10			
70	1	LH00248	ﾌﾗﾝｼﾞ	FLANGE;SPL	6			
71	1	LPC0180	ﾎﾟﾍﾟｯﾄ	POPPET	2			
72	1	LSC0227	ｽﾌﾟﾘﾝｸﾞ ﾄｸｼｭ	SPRING;SPL	2			
73	1	LJ00731	ｵﾘﾌｲｽ	ORIFICE	1			
74	1	LBQ0062	O-ﾘﾝｸﾞ JISB2401 1BP6	O-RING	27			
75	1	LR015280	ﾎﾞﾃﾞｨ ASSY	BODY	1			
76	1	LH005410	ﾌﾗﾝｼﾞ	FLANGE;SPL	1			
77	1	LJ016050	ﾎﾟﾍﾟｯﾄ	POPPET	1			
78	1	LG006510	ｽﾌﾟﾘﾝｸﾞ	SPRING;SPL	1			
79	1	LLC0082	ﾌﾟﾗｸﾞ	PLUG	1			
80	1	LBQ6910	O-ﾘﾝｸﾞ	O-RING	1			
81	1	LSC0094	ｽﾌﾟﾘﾝｸﾞ	SPRING;SPL	1			
82	1	LJ014680	ﾎﾟﾍﾟｯﾄ	POPPET	1			
83	1	LJ00730	ﾎﾟﾍﾟｯﾄ	POPPET	1			
84	1	LH00250	ﾌﾗﾝｼﾞ	FLANGE;SPL	2			
85	1	LH004960	ｽﾍﾟｰｻ	SPACER	2			
86	1	LBQ0251	O-ﾘﾝｸﾞ JISB2401 1AG2	O-RING	2			
87	1	LBB0253	ﾘﾝｸﾞ;ﾊﾞｯｸｱｯﾌﾟ	RING;BACK-UP	2			
88	1	LBQ0553	O-ﾘﾝｸﾞ JISB2401 1BG5	O-RING	1			
89	1	LH004970	ｽﾍﾟｰｻ	SPACER	1			
90	1	LH004980	ｽﾘｰﾌﾞ	SLEEVE	1			
91	1	LPC0098	ﾎﾟﾍﾟｯﾄ	POPPET	1			
92	1	LSC0187	ｽﾌﾟﾘﾝｸﾞ	SPRING;SPL	1			
93	1	LH004990	ﾌﾗﾝｼﾞ ﾄｸｼｭ	FLANGE;SPL	1			
94	1	LE012520	O-ﾘﾝｸﾞ ﾄｸｼｭ ﾌﾂｿ	O-RING	3			
95	1	LE014890	O-ﾘﾝｸﾞ	O-RING	14			
96	1	LBQ0102	O-ﾘﾝｸﾞ JISB2401 1BP1	O-RING	12			
97	1	LJ014710	ﾊﾞﾙﾌﾞ ｱﾝﾁﾄﾞﾘﾌﾄ ASSY	VALVE;SPL	2			
98	1A	LJ014720	ﾊﾞﾙﾌﾞ;ﾘﾘｰﾌ KIT	VALVE;RELIEF	1			
99	2	LBQ6912	O-ﾘﾝｸﾞ AS568-912-HS9	O-RING	1			
100	1A	LJ014730	ﾊﾞﾙﾌﾞ;ﾘﾘｰﾌ KIT	VALVE;RELIEF	2			
101	2	LBQ6912	O-ﾘﾝｸﾞ AS568-912-HS9	O-RING	2			
102	2	LBQ0102	O-ﾘﾝｸﾞ JISB2401 1BP1	O-RING	2			
103	1A	LJ014740	ﾊﾞﾙﾌﾞ;ﾘﾘｰﾌ KIT	VALVE;RELIEF	1			
104	2	LBQ6912	O-ﾘﾝｸﾞ AS568-912-HS9	O-RING	1			
105	2	LBQ0102	O-ﾘﾝｸﾞ JISB2401 1BP1	O-RING	1			
106	1	LJ015460	ﾊﾞﾙﾌﾞ;ﾘﾘｰﾌ 23MPA 216	VALVE;RELIEF	1			
107	1A	LJ01196	ﾊﾞﾙﾌﾞ;ﾘﾘｰﾌ 25MPA 181	VALVE;RELIEF	2			
108	2	LBQ6912	O-ﾘﾝｸﾞ AS568-912-HS9	O-RING	2			
109	1	LJ014700	ﾊﾞﾙﾌﾞ;ﾘﾘｰﾌ ASS'Y	VALVE;RELIEF	2			
110	1A	LNC0218	ﾌﾟﾗｸﾞ S/A	PLUG	3			
111	2	LBQ0182	O-ﾘﾝｸﾞ JISB2401 1BP1	O-RING	3			
112	1A	LNC0217	ﾌﾟﾗｸﾞ S/A	PLUG	10			

https://truckmanualshub.com/

10 [11 ~ 19] 11 [12 ~ 19]

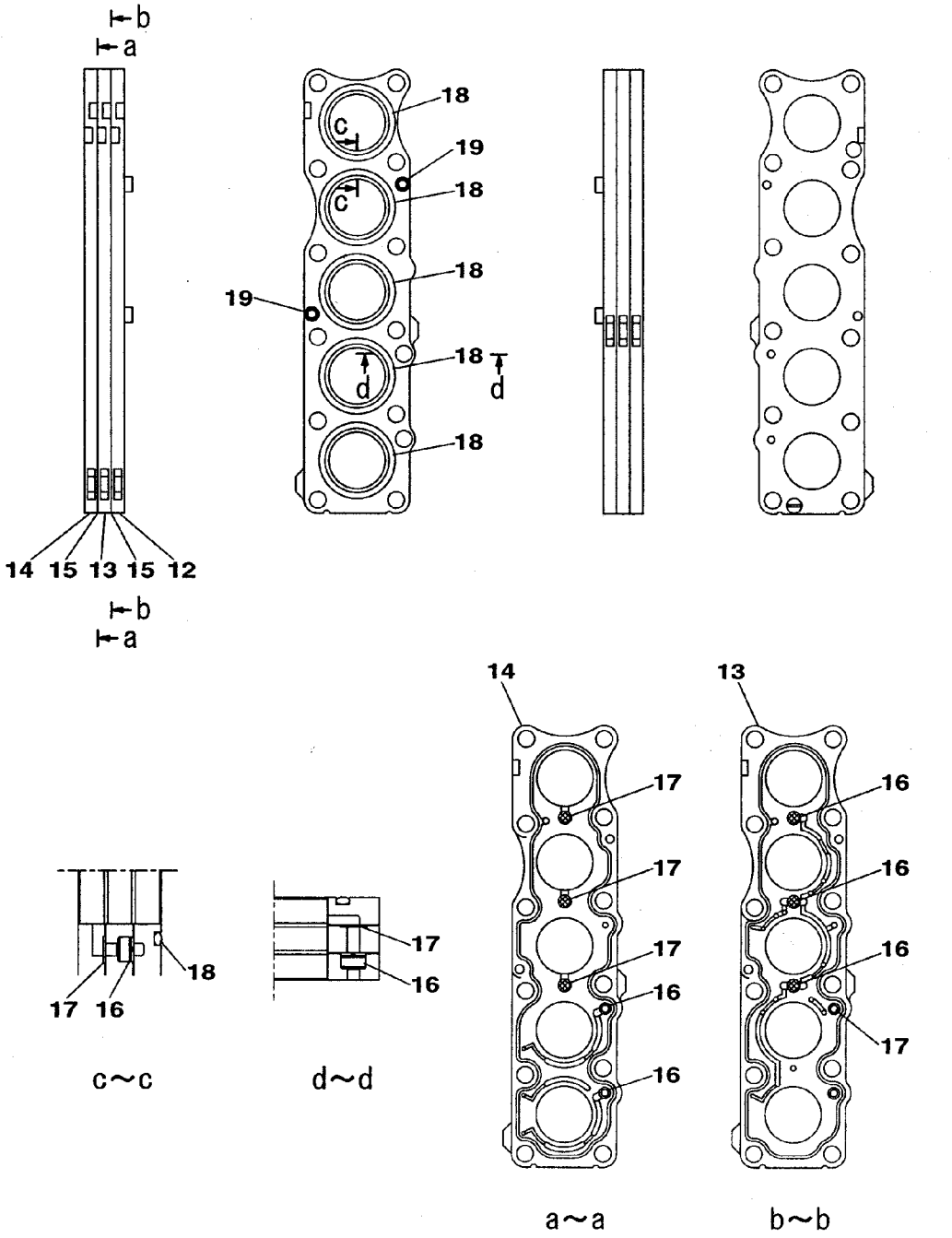

KRJ20102

https://truckmanualshub.com/

符号 ITEM	構成 COMPO	部品番号 PART NO.	部品名	PART NAME	個数 Q'TY	互換 ICA	代替部品 REPLACEABLE PART	備考 MEMO
54	1A	LR015270	ﾌﾟﾚｰﾄ KIT	PLATE;SPL	1			
55	2A	-------	ﾌﾟﾚｰﾄ KIT	PLATE;SPL	1			
56	3	-------	ﾌﾟﾚｰﾄ	PLATE	1			
57	3	-------	ﾌﾟﾚｰﾄ	PLATE	1			
58	3	-------	ﾌﾟﾚｰﾄ	PLATE	1			
59	3	-------	ｶﾞｽｹｯﾄ	GASKET	2			
60	3	-------	ｽﾌﾟｰﾙ	SPOOL	4			
61	3	-------	ﾌｨﾙﾀ ﾄｸｼｭ	FILTER;SPL	4			
62	3	108R006Z025N	ﾛｯｶｸｱﾅB M6X25-12.9	BOLT;HEX SOC HD	2			
63	1	LBQ0162	O-ﾘﾝｸﾞ JISB2401 1BP1	O-RING	1			
64	1	LBB0162	ﾘﾝｸﾞ;ﾊﾞｯｸｱｯﾌﾟ	RING;BACK-UP	2			
65	1	LJ00726	ﾎﾟﾍﾟｯﾄ	POPPET	2			
66	1	LG00340	ｽﾌﾟﾘﾝｸﾞ;ｱｯｼｭｸ	SPRING;COMPRESSION	2			
67	1	LJ00727	ﾎﾟﾍﾟｯﾄ	POPPET	7			
68	1	LG00341	ｽﾌﾟﾘﾝｸﾞ;ｱｯｼｭｸ	SPRING;COMPRESSION	8			
69	1	LBQ0322	O-ﾘﾝｸﾞ JISB2401 1BP3	O-RING	10			
70	1	LH00248	ﾌﾗﾝｼﾞ	FLANGE;SPL	6			
71	1	LPC0180	ﾎﾟﾍﾟｯﾄ	POPPET	2			
72	1	LSC0227	ｽﾌﾟﾘﾝｸﾞ ﾄｸｼｭ	SPRING;SPL	2			
73	1	LJ00731	ｵﾘﾌｨｽ	ORIFICE	1			
74	1	LBQ0062	O-ﾘﾝｸﾞ JISB2401 1BP6	O-RING	27			
75	1	LR015280	ﾎﾞﾃﾞｨ ASSY	BODY	1			
76	1	LH005410	ﾌﾗﾝｼﾞ	FLANGE;SPL	1			
77	1	LJ016050	ﾎﾟﾍﾟｯﾄ	POPPET	1			
78	1	LG006510	ｽﾌﾟﾘﾝｸﾞ	SPRING;SPL	1			
79	1	LLC0082	ﾌﾟﾗｸﾞ	PLUG	1			
80	1	LBQ6910	O-ﾘﾝｸﾞ	O-RING	1			
81	1	LSC0094	ｽﾌﾟﾘﾝｸﾞ	SPRING;SPL	1			
82	1	LJ014680	ﾎﾟﾍﾟｯﾄ	POPPET	1			
83	1	LJ00730	ﾎﾟﾍﾟｯﾄ	POPPET	1			
84	1	LH00250	ﾌﾗﾝｼﾞ	FLANGE;SPL	2			
85	1	LH004960	ｽﾍﾟｰｻ	SPACER	2			
86	1	LBQ0251	O-ﾘﾝｸﾞ JISB2401 1AG2	O-RING	2			
87	1	LBB0253	ﾘﾝｸﾞ;ﾊﾞｯｸｱｯﾌﾟ	RING;BACK-UP	2			
88	1	LBQ0553	O-ﾘﾝｸﾞ JISB2401 1BG5	O-RING	1			
89	1	LH004970	ｽﾍﾟｰｻ	SPACER	1			
90	1	LH004980	ｽﾘｰﾌﾞ	SLEEVE	1			
91	1	LPC0098	ﾎﾟﾍﾟｯﾄ	POPPET	1			
92	1	LSC0187	ｽﾌﾟﾘﾝｸﾞ	SPRING;SPL	1			
93	1	LH004990	ﾌﾗﾝｼﾞ ﾄｸｼｭ	FLANGE;SPL	1			
94	1	LE012520	O-ﾘﾝｸﾞ ﾄｸｼｭ ﾌﾂｿ	O-RING	3			
95	1	LE014890	O-ﾘﾝｸﾞ	O-RING	14			
96	1	LBQ0102	O-ﾘﾝｸﾞ JISB2401 1BP1	O-RING	12			
97	1	LJ014710	ﾊﾞﾙﾌﾞ ｱﾝﾁﾄﾞﾘﾌﾄ ASSY	VALVE;SPL	2			
98	1A	LJ014720	ﾊﾞﾙﾌﾞ;ﾘﾘｰﾌ KIT	VALVE;RELIEF	1			
99	2	LBQ6912	O-ﾘﾝｸﾞ AS568-912-HS9	O-RING	1			
100	1A	LJ014730	ﾊﾞﾙﾌﾞ;ﾘﾘｰﾌ KIT	VALVE;RELIEF	2			
101	2	LBQ6912	O-ﾘﾝｸﾞ AS568-912-HS9	O-RING	2			
102	2	LBQ0102	O-ﾘﾝｸﾞ JISB2401 1BP1	O-RING	2			
103	1A	LJ014740	ﾊﾞﾙﾌﾞ;ﾘﾘｰﾌ KIT	VALVE;RELIEF	1			
104	2	LBQ6912	O-ﾘﾝｸﾞ AS568-912-HS9	O-RING	1			
105	2	LBQ0102	O-ﾘﾝｸﾞ JISB2401 1BP1	O-RING	1			
106	1	LJ015460	ﾊﾞﾙﾌﾞ;ﾘﾘｰﾌ 23MPA 216	VALVE;RELIEF	1			
107	1A	LJ01196	ﾊﾞﾙﾌﾞ;ﾘﾘｰﾌ 25MPA 181	VALVE;RELIEF	2			
108	2	LBQ6912	O-ﾘﾝｸﾞ AS568-912-HS9	O-RING	2			
109	1	LJ014700	ﾊﾞﾙﾌﾞ;ﾘﾘｰﾌ ASS'Y	VALVE;RELIEF	2			
110	1A	LNC0218	ﾌﾟﾗｸﾞ S/A	PLUG	3			
111	2	LBQ0182	O-ﾘﾝｸﾞ JISB2401 1BP1	O-RING	3			
112	1A	LNC0217	ﾌﾟﾗｸﾞ S/A	PLUG	10			
113	2	LBQ0142	O-ﾘﾝｸﾞ JISB2401 1BP1	O-RING	10			
114	1A	LNC0238	ﾌﾟﾗｸﾞ S/A	PLUG	3			
115	2	LK00328	ﾌﾟﾗｸﾞ	PLUG	3			
116	2	LBQ0112	O-ﾘﾝｸﾞ JISB2401 1BP1	O-RING	3			
117	1	108R010Z055B	ﾛｯｶｸｱﾅB JIS B 1180 M	BOLT;HEX SOC HD	32			
118	1	108R010Z040B	ﾛｯｶｸｱﾅB JIS B1176 M1	BOLT;HEX SOC HD	66			
119	1	108R016Z130B	ﾛｯｶｸｱﾅB JIS B1180 M1	BOLT;HEX SOC HD	8			
120	1	LUC0118	ﾛｯｶｸｱﾅB	BOLT;HEX SOC HD	4			
121	1	-------	ﾒｲﾊﾞﾝ;ｷﾊﾞﾝ	NAMEPLATE;SER NO.	1			

https://truckmanualshub.com/

20 [21 ~ 29] 21 [22 ~ 29]

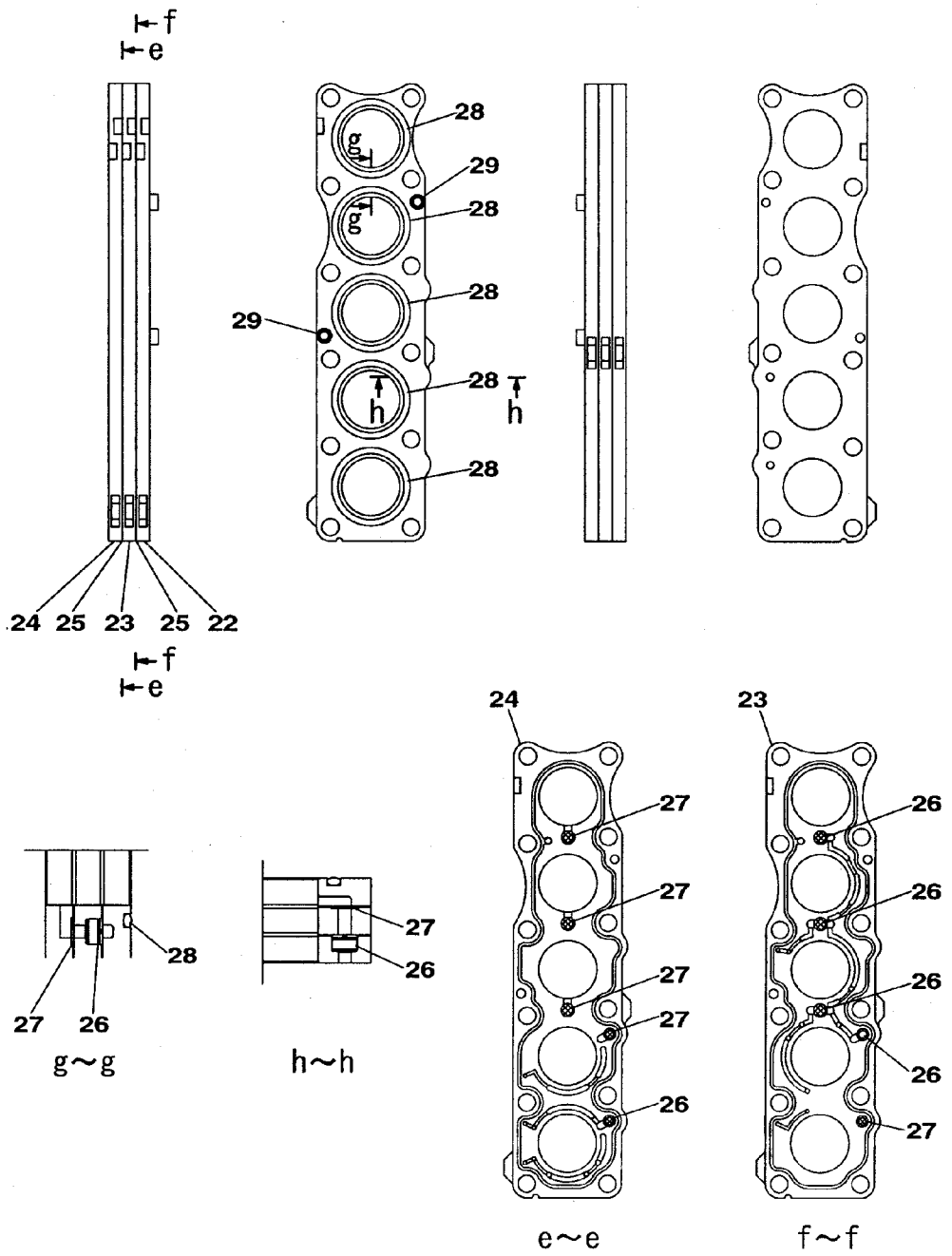

KRJ20102

https://truckmanualshub.com/

符号 ITEM	構成 COMPO	部品番号 PART NO.	部品名	PART NAME	個数 Q'TY	互換 ICA	代替部品 REPLACEABLE PART	備考 MEMO
63	1	LBQ0162	O-ﾘﾝｸﾞ JISB2401 1BP1	O-RING	1			
64	1	LBB0162	ﾘﾝｸﾞ;ﾊﾞｯｸｱｯﾌﾟ	RING;BACK-UP	2			
65	1	LJ00726	ﾎﾟﾍﾟｯﾄ	POPPET	2			
66	1	LG00340	ｽﾌﾟﾘﾝｸﾞ;ｱｯｼｭｸ	SPRING;COMPRESSION	2			
67	1	LJ00727	ﾎﾟﾍﾟｯﾄ	POPPET	7			
68	1	LG00341	ｽﾌﾟﾘﾝｸﾞ;ｱｯｼｭｸ	SPRING;COMPRESSION	8			
69	1	LBQ0322	O-ﾘﾝｸﾞ JISB2401 1BP3	O-RING	10			
70	1	LH00248	ﾌﾗﾝｼﾞ	FLANGE;SPL	6			
71	1	LPC0180	ﾎﾟﾍﾟｯﾄ	POPPET	2			
72	1	LSC0227	ｽﾌﾟﾘﾝｸﾞ ﾄｸｼｭ	SPRING;SPL	2			
73	1	LJ00731	ｵﾘﾌｨｽ	ORIFICE	1			
74	1	LBQ0062	O-ﾘﾝｸﾞ JISB2401 1BP6	O-RING	27			
75	1	LR015280	ﾎﾞﾃﾞｨ ASSY	BODY	1			
76	1	LH005410	ﾌﾗﾝｼﾞ	FLANGE;SPL	1			
77	1	LJ016050	ﾎﾟﾍﾟｯﾄ	POPPET	1			
78	1	LG006510	ｽﾌﾟﾘﾝｸﾞ	SPRING;SPL	1			
79	1	LLC0082	ﾌﾟﾗｸﾞ	PLUG	1			
80	1	LBQ6910	O-ﾘﾝｸﾞ	O-RING	1			
81	1	LSC0094	ｽﾌﾟﾘﾝｸﾞ	SPRING;SPL	1			
82	1	LJ014680	ﾎﾟﾍﾟｯﾄ	POPPET	1			
83	1	LJ00730	ﾎﾟﾍﾟｯﾄ	POPPET	1			
84	1	LH00250	ﾌﾗﾝｼﾞ	FLANGE;SPL	2			
85	1	LH004960	ｽﾍﾟｰｻ	SPACER	2			
86	1	LBQ0251	O-ﾘﾝｸﾞ JISB2401 1AG2	O-RING	2			
87	1	LBB0253	ﾘﾝｸﾞ;ﾊﾞｯｸｱｯﾌﾟ	RING;BACK-UP	2			
88	1	LBQ0553	O-ﾘﾝｸﾞ JISB2401 1BG5	O-RING	1			
89	1	LH004970	ｽﾍﾟｰｻ	SPACER	1			
90	1	LH004980	ｽﾘｰﾌﾞ	SLEEVE	1			
91	1	LPC0098	ﾎﾟﾍﾟｯﾄ	POPPET	1			
92	1	LSC0187	ｽﾌﾟﾘﾝｸﾞ	SPRING;SPL	1			
93	1	LH004990	ﾌﾗﾝｼﾞ ﾄｸｼｭ	FLANGE;SPL	1			
94	1	LE012520	O-ﾘﾝｸﾞ ﾄｸｼｭ ﾌﾂｿ	O-RING	3			
95	1	LE014890	O-ﾘﾝｸﾞ	O-RING	14			
96	1	LBQ0102	O-ﾘﾝｸﾞ JISB2401 1BP1	O-RING	12			
97	1	LJ014710	ﾊﾞﾙﾌﾞ ｱﾝﾁﾄﾞﾘﾌﾄ ASSY	VALVE;SPL	2			
98	1A	LJ014720	ﾊﾞﾙﾌﾞ;ﾘﾘｰﾌ KIT	VALVE;RELIEF	1			
99	2	LBQ6912	O-ﾘﾝｸﾞ AS568-912-HS9	O-RING	1			
100	1A	LJ014730	ﾊﾞﾙﾌﾞ;ﾘﾘｰﾌ KIT	VALVE;RELIEF	2			
101	2	LBQ6912	O-ﾘﾝｸﾞ AS568-912-HS9	O-RING	2			
102	2	LBQ0102	O-ﾘﾝｸﾞ JISB2401 1BP1	O-RING	2			
103	1A	LJ014740	ﾊﾞﾙﾌﾞ;ﾘﾘｰﾌ KIT	VALVE;RELIEF	1			
104	2	LBQ6912	O-ﾘﾝｸﾞ AS568-912-HS9	O-RING	1			
105	2	LBQ0102	O-ﾘﾝｸﾞ JISB2401 1BP1	O-RING	1			
106	1	LJ015460	ﾊﾞﾙﾌﾞ;ﾘﾘｰﾌ 23MPA 216	VALVE;RELIEF	1			
107	1A	LJ01196	ﾊﾞﾙﾌﾞ;ﾘﾘｰﾌ 25MPA 181	VALVE;RELIEF	2			
108	2	LBQ6912	O-ﾘﾝｸﾞ AS568-912-HS9	O-RING	2			
109	1	LJ014700	ﾊﾞﾙﾌﾞ;ﾘﾘｰﾌ ASS'Y	VALVE;RELIEF	2			
110	1A	LNC0218	ﾌﾟﾗｸﾞ S/A	PLUG	3			
111	2	LBQ0182	O-ﾘﾝｸﾞ JISB2401 1BP1	O-RING	3			
112	1A	LNC0217	ﾌﾟﾗｸﾞ S/A	PLUG	10			
113	2	LBQ0142	O-ﾘﾝｸﾞ JISB2401 1BP1	O-RING	10			
114	1A	LNC0238	ﾌﾟﾗｸﾞ S/A	PLUG	3			
115	2	LK00328	ﾌﾟﾗｸﾞ	PLUG	3			
116	2	LBQ0112	O-ﾘﾝｸﾞ JISB2401 1BP1	O-RING	3			
117	1	108R010Z055B	ﾛｯｶｸｱﾅB JIS B 1180 M	BOLT;HEX SOC HD	32			
118	1	108R010Z040B	ﾛｯｶｸｱﾅB JIS B1176 M1	BOLT;HEX SOC HD	66			
119	1	108R016Z130B	ﾛｯｶｸｱﾅB JIS B1180 M1	BOLT;HEX SOC HD	8			
120	1	LUC0118	ﾛｯｶｸｱﾅB	BOLT;HEX SOC HD	4			
121	1	-------	ﾒｲﾊﾞﾝ;ｷﾊﾞﾝ	NAMEPLATE;SER NO.	1			
122	1	-------	ｽｸﾘｭｰ ﾄﾞﾗｲﾌﾞ	SCREW	2			
123	1	-------	ﾌﾟﾗｸﾞ	PLUG	5			
124	1	LA011120	ﾛｯｶｸｱﾅB	BOLT;HEX SOC HD	4			
125	1	-------	ｽﾌﾟｰﾙ ASS'Y	SPOOL	1			
126	1	LR015290	ｷｬｯﾌﾟ	CAP	1			
127	1	LR00579	ｷｬｯﾌﾟ	CAP	2			
128	1	LBQ5219	O-ﾘﾝｸﾞ	O-RING	2			
129	1	LBQ0112	O-ﾘﾝｸﾞ JISB2401 1BP1	O-RING	2			
130	1	LK00301	ﾌﾟﾗｸﾞ	PLUG	2			

https://truckmanualshub.com/

45 [46 ~ 53] 46 [47 ~ 53]

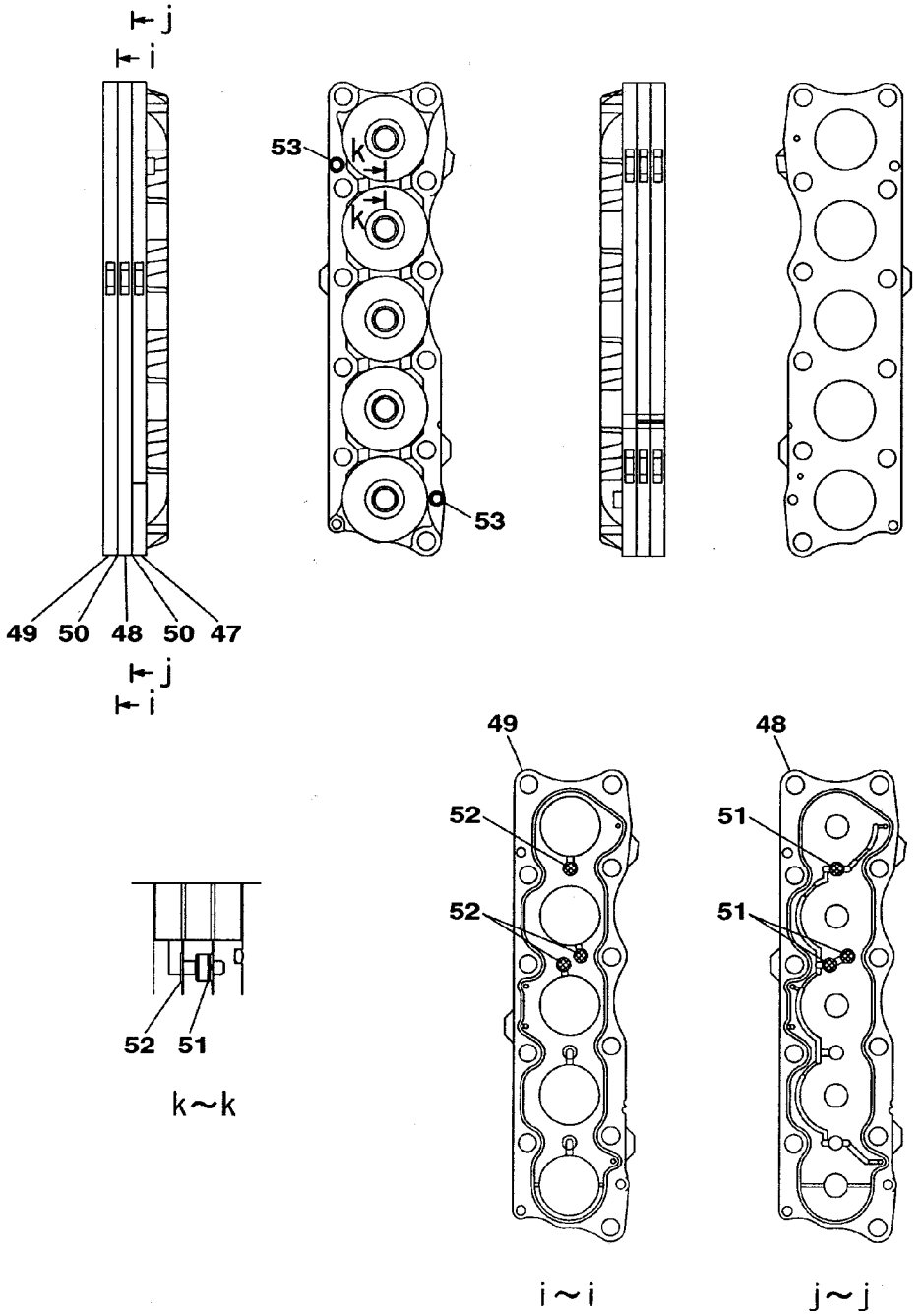

KRJ20102

https://truckmanualshub.com/

VALVE;CONTROL	ﾊﾞﾙﾌﾞ;ｺﾝﾄﾛｰﾙ	ZAJ313L0151 000 18/20	000

符号 ITEM	構成 COMPO	部品番号 PART NO.	部品名	PART NAME	個数 Q'TY	互換 ICA	代替部品 REPLACEABLE PART	備考 MEMO
72	1	LSC0227	ｽﾌﾟﾘﾝｸﾞ ﾄｸｼｭ	SPRING;SPL	2			
73	1	LJ00731	ｵﾘﾌｨｽ	ORIFICE	1			
74	1	LBQ0062	O-ﾘﾝｸﾞ JISB2401 1BP6	O-RING	27			
75	1	LR015280	ﾎﾞﾃﾞｨ ASSY	BODY	1			
76	1	LH005410	ﾌﾗﾝｼﾞ	FLANGE;SPL	1			
77	1	LJ016050	ﾎﾟﾍﾟｯﾄ	POPPET	1			
78	1	LG006510	ｽﾌﾟﾘﾝｸﾞ	SPRING;SPL	1			
79	1	LLC0082	ﾌﾟﾗｸﾞ	PLUG	1			
80	1	LBQ6910	O-ﾘﾝｸﾞ	O-RING	1			
81	1	LSC0094	ｽﾌﾟﾘﾝｸﾞ	SPRING;SPL	1			
82	1	LJ014680	ﾎﾟﾍﾟｯﾄ	POPPET	1			
83	1	LJ00730	ﾎﾟﾍﾟｯﾄ	POPPET	1			
84	1	LH00250	ﾌﾗﾝｼﾞ	FLANGE;SPL	2			
85	1	LH004960	ｽﾍﾟｰｻ	SPACER	2			
86	1	LBQ0251	O-ﾘﾝｸﾞ JISB2401 1AG2	O-RING	2			
87	1	LBB0253	ﾘﾝｸﾞ;ﾊﾞｯｸｱｯﾌﾟ	RING;BACK-UP	2			
88	1	LBQ0553	O-ﾘﾝｸﾞ JISB2401 1BG5	O-RING	1			
89	1	LH004970	ｽﾍﾟｰｻ	SPACER	1			
90	1	LH004980	ｽﾘｰﾌﾞ	SLEEVE	1			
91	1	LPC0098	ﾎﾟﾍﾟｯﾄ	POPPET	1			
92	1	LSC0187	ｽﾌﾟﾘﾝｸﾞ	SPRING;SPL	1			
93	1	LH004990	ﾌﾗﾝｼﾞ ﾄｸｼｭ	FLANGE;SPL	1			
94	1	LE012520	O-ﾘﾝｸﾞ ﾄｸｼｭ ﾌﾂｿ	O-RING	3			
95	1	LE014890	O-ﾘﾝｸﾞ	O-RING	14			
96	1	LBQ0102	O-ﾘﾝｸﾞ JISB2401 1BP1	O-RING	12			
97	1	LJ014710	ﾊﾞﾙﾌﾞ ｱﾝﾁﾄﾞﾘﾌﾄ ASSY	VALVE;SPL	2			
98	1A	LJ014720	ﾊﾞﾙﾌﾞ;ﾘﾘｰﾌ KIT	VALVE;RELIEF	1			
99	2	LBQ6912	O-ﾘﾝｸﾞ AS568-912-HS9	O-RING	1			
100	1A	LJ014730	ﾊﾞﾙﾌﾞ;ﾘﾘｰﾌ KIT	VALVE;RELIEF	2			
101	2	LBQ6912	O-ﾘﾝｸﾞ AS568-912-HS9	O-RING	2			
102	2	LBQ0102	O-ﾘﾝｸﾞ JISB2401 1BP1	O-RING	2			
103	1A	LJ014740	ﾊﾞﾙﾌﾞ;ﾘﾘｰﾌ KIT	VALVE;RELIEF	1			
104	2	LBQ6912	O-ﾘﾝｸﾞ AS568-912-HS9	O-RING	1			
105	2	LBQ0102	O-ﾘﾝｸﾞ JISB2401 1BP1	O-RING	1			
106	1	LJ015460	ﾊﾞﾙﾌﾞ;ﾘﾘｰﾌ 23MPA 216	VALVE;RELIEF	1			
107	1A	LJ01196	ﾊﾞﾙﾌﾞ;ﾘﾘｰﾌ 25MPA 181	VALVE;RELIEF	2			
108	2	LBQ6912	O-ﾘﾝｸﾞ AS568-912-HS9	O-RING	2			
109	1	LJ014700	ﾊﾞﾙﾌﾞ;ﾘﾘｰﾌ ASS'Y	VALVE;RELIEF	2			
110	1A	LNC0218	ﾌﾟﾗｸﾞ S/A	PLUG	3			
111	2	LBQ0182	O-ﾘﾝｸﾞ JISB2401 1BP1	O-RING	3			
112	1A	LNC0217	ﾌﾟﾗｸﾞ S/A	PLUG	10			
113	2	LBQ0142	O-ﾘﾝｸﾞ JISB2401 1BP1	O-RING	10			
114	1A	LNC0238	ﾌﾟﾗｸﾞ S/A	PLUG	3			
115	2	LK00328	ﾌﾟﾗｸﾞ	PLUG	3			
116	2	LBQ0112	O-ﾘﾝｸﾞ JISB2401 1BP1	O-RING	3			
117	1	108R010Z055B	ﾛｯｶｸｱﾅB JIS B 1180 M	BOLT;HEX SOC HD	32			
118	1	108R010Z040B	ﾛｯｶｸｱﾅB JIS B1176 M1	BOLT;HEX SOC HD	66			
119	1	108R016Z130B	ﾛｯｶｸｱﾅB JIS B1180 M1	BOLT;HEX SOC HD	8			
120	1	LUC0118	ﾛｯｶｸｱﾅB	BOLT;HEX SOC HD	4			
121	1	-------	ﾒｲﾊﾞﾝ;ｷﾊﾞﾝ	NAMEPLATE;SER NO.	1			
122	1	-------	ｽｸﾘｭｰ ﾄﾞﾗｲﾌﾞ	SCREW	2			
123	1	-------	ﾌﾟﾗｸﾞ	PLUG	5			
124	1	LA011120	ﾛｯｶｸｱﾅB	BOLT;HEX SOC HD	4			
125	1	-------	ｽﾌﾟｰﾙ ASS'Y	SPOOL	1			
126	1	LR015290	ｷｬｯﾌﾟ	CAP	1			
127	1	LR00579	ｷｬｯﾌﾟ	CAP	2			
128	1	LBQ5219	O-ﾘﾝｸﾞ	O-RING	2			
129	1	LBQ0112	O-ﾘﾝｸﾞ JISB2401 1BP1	O-RING	2			
130	1	LK00301	ﾌﾟﾗｸﾞ	PLUG	2			
131	1A	LK00302	ﾌﾟﾗｸﾞ ASSY	PLUG	2			
132	2	LPC0256	ﾌﾟﾗｸﾞ	PLUG	2			
133	2	LBQ0242	O-ﾘﾝｸﾞ JISB2401 1BP2	O-RING	2			
134	1A	LPC0259	ﾌﾟﾗｸﾞ ASSY	PLUG	2			
135	2	LK00327	ﾌﾟﾗｸﾞ	PLUG	2			
136	2	LBQ6912	O-ﾘﾝｸﾞ AS568-912-HS9	O-RING	2			
137	2	LBQ0080	O-ﾘﾝｸﾞ JISB2401 1AP8	O-RING	2			
138	2	LBB6110	ﾘﾝｸﾞ;ﾊﾞｯｸｱｯﾌﾟ	RING;BACK-UP	2			
139	1	LA011130	ﾛｯｶｸｱﾅB	BOLT;HEX SOC HD	2			

https://truckmanualshub.com/

54 [55 ~ 62] 55 [56 ~ 62]

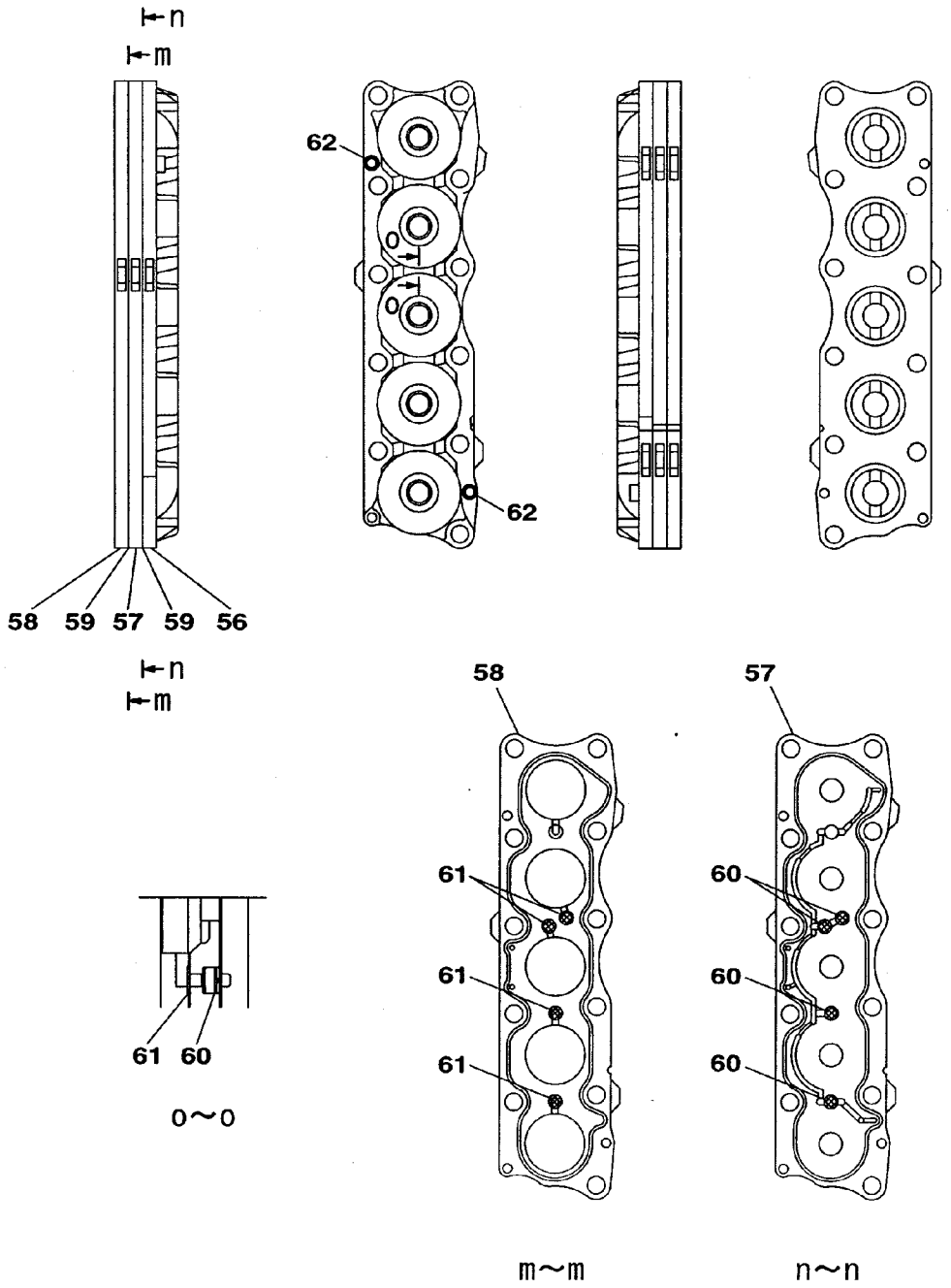

KRJ20102

https://truckmanualshub.com/

VALVE;CONTROL	ﾊﾞﾙﾌﾞ;ｺﾝﾄﾛｰﾙ	ZAJ313L0151 000 20/20	000

符号 ITEM	構成 COMPO	部品番号 PART NO.	部品名	PART NAME	個数 Q'TY	互換 ICA	代替部品 REPLACEABLE PART	備考 MEMO
81	1	LSC0094	ｽﾌﾟﾘﾝｸﾞ	SPRING;SPL	1			
82	1	LJ014680	ﾎﾟﾍﾟｯﾄ	POPPET	1			
83	1	LJ00730	ﾎﾟﾍﾟｯﾄ	POPPET	1			
84	1	LH00250	ﾌﾗﾝｼﾞ	FLANGE;SPL	2			
85	1	LH004960	ｽﾍﾟｰｻ	SPACER	2			
86	1	LBQ0251	O-ﾘﾝｸﾞ JISB2401 1AG2	O-RING	2			
87	1	LBB0253	ﾘﾝｸﾞ;ﾊﾞｯｸｱｯﾌﾟ	RING;BACK-UP	2			
88	1	LBQ0553	O-ﾘﾝｸﾞ JISB2401 1BG5	O-RING	1			
89	1	LH004970	ｽﾍﾟｰｻ	SPACER	1			
90	1	LH004980	ｽﾘｰﾌﾞ	SLEEVE	1			
91	1	LPC0098	ﾎﾟﾍﾟｯﾄ	POPPET	1			
92	1	LSC0187	ｽﾌﾟﾘﾝｸﾞ	SPRING;SPL	1			
93	1	LH004990	ﾌﾗﾝｼﾞ ﾄｸｼｭ	FLANGE;SPL	1			
94	1	LE012520	O-ﾘﾝｸﾞ ﾄｸｼｭ ﾌﾂｿ	O-RING	3			
95	1	LE014890	O-ﾘﾝｸﾞ	O-RING	14			
96	1	LBQ0102	O-ﾘﾝｸﾞ JISB2401 1BP1	O-RING	12			
97	1	LJ014710	ﾊﾞﾙﾌﾞ ｱﾝﾁﾄﾞﾘﾌﾄ ASSY	VALVE;SPL	2			
98	1A	LJ014720	ﾊﾞﾙﾌﾞ;ﾘﾘｰﾌ KIT	VALVE;RELIEF	1			
99	2	LBQ6912	O-ﾘﾝｸﾞ AS568-912-HS9	O-RING	1			
100	1A	LJ014730	ﾊﾞﾙﾌﾞ;ﾘﾘｰﾌ KIT	VALVE;RELIEF	2			
101	2	LBQ6912	O-ﾘﾝｸﾞ AS568-912-HS9	O-RING	2			
102	2	LBQ0102	O-ﾘﾝｸﾞ JISB2401 1BP1	O-RING	2			
103	1A	LJ014740	ﾊﾞﾙﾌﾞ;ﾘﾘｰﾌ KIT	VALVE;RELIEF	1			
104	2	LBQ6912	O-ﾘﾝｸﾞ AS568-912-HS9	O-RING	1			
105	2	LBQ0102	O-ﾘﾝｸﾞ JISB2401 1BP1	O-RING	1			
106	1	LJ015460	ﾊﾞﾙﾌﾞ;ﾘﾘｰﾌ 23MPA 216	VALVE;RELIEF	1			
107	1A	LJ01196	ﾊﾞﾙﾌﾞ;ﾘﾘｰﾌ 25MPA 181	VALVE;RELIEF	2			
108	2	LBQ6912	O-ﾘﾝｸﾞ AS568-912-HS9	O-RING	2			
109	1	LJ014700	ﾊﾞﾙﾌﾞ;ﾘﾘｰﾌ ASS'Y	VALVE;RELIEF	2			
110	1A	LNC0218	ﾌﾟﾗｸﾞ S/A	PLUG	3			
111	2	LBQ0182	O-ﾘﾝｸﾞ JISB2401 1BP1	O-RING	3			
112	1A	LNC0217	ﾌﾟﾗｸﾞ S/A	PLUG	10			
113	2	LBQ0142	O-ﾘﾝｸﾞ JISB2401 1BP1	O-RING	10			
114	1A	LNC0238	ﾌﾟﾗｸﾞ S/A	PLUG	3			
115	2	LK00328	ﾌﾟﾗｸﾞ	PLUG	3			
116	2	LBQ0112	O-ﾘﾝｸﾞ JISB2401 1BP1	O-RING	3			
117	1	108R010Z055B	ﾛｯｶｸｱﾅB JIS B 1180 M	BOLT;HEX SOC HD	32			
118	1	108R010Z040B	ﾛｯｶｸｱﾅB JIS B1176 M1	BOLT;HEX SOC HD	66			
119	1	108R016Z130B	ﾛｯｶｸｱﾅB JIS B1180 M1	BOLT;HEX SOC HD	8			
120	1	LUC0118	ﾛｯｶｸｱﾅB	BOLT;HEX SOC HD	4			
121	1	-------	ﾒｲﾊﾞﾝ;ｷﾊﾞﾝ	NAMEPLATE;SER NO.	1			
122	1	-------	ｽｸﾘｭｰ ﾄﾞﾗｲﾌﾞ	SCREW	2			
123	1	-------	ﾌﾟﾗｸﾞ	PLUG	5			
124	1	LA011120	ﾛｯｶｸｱﾅB	BOLT;HEX SOC HD	4			
125	1	-------	ｽﾌﾟｰﾙ ASS'Y	SPOOL	1			
126	1	LR015290	ｷｬｯﾌﾟ	CAP	1			
127	1	LR00579	ｷｬｯﾌﾟ	CAP	2			
128	1	LBQ5219	O-ﾘﾝｸﾞ	O-RING	2			
129	1	LBQ0112	O-ﾘﾝｸﾞ JISB2401 1BP1	O-RING	2			
130	1	LK00301	ﾌﾟﾗｸﾞ	PLUG	2			
131	1A	LK00302	ﾌﾟﾗｸﾞ ASSY	PLUG	2			
132	2	LPC0256	ﾌﾟﾗｸﾞ	PLUG	2			
133	2	LBQ0242	O-ﾘﾝｸﾞ JISB2401 1BP2	O-RING	2			
134	1A	LPC0259	ﾌﾟﾗｸﾞ ASSY	PLUG	2			
135	2	LK00327	ﾌﾟﾗｸﾞ	PLUG	2			
136	2	LBQ6912	O-ﾘﾝｸﾞ AS568-912-HS9	O-RING	2			
137	2	LBQ0080	O-ﾘﾝｸﾞ JISB2401 1AP8	O-RING	2			
138	2	LBB6110	ﾘﾝｸﾞ;ﾊﾞｯｸｱｯﾌﾟ	RING;BACK-UP	2			
139	1	LA011130	ﾛｯｶｸｱﾅB	BOLT;HEX SOC HD	2			
140	1	LT001660	ﾊｳｼﾞﾝｸﾞ ｱｳﾄﾚｯﾄ	HOUSING;SPL	1			
141	1	LB011890	ﾀｲﾛｯﾄﾞ	ROD;TIE	4			
142	1	LUC0094	ﾅｯﾄ	NUT;SPL	4			
143	1	LLC0045	ﾌﾟﾗｸﾞ S/A	PLUG	1			

https://truckmanualshub.com/

98 [99] 100 [101 , 102] 103 [104 , 105] 106 [107 , 108]
110 [111] 112 [113] 114 [115 , 116] 131 [132 , 133]
134 [135 ~ 138] 149 [150 , 151]

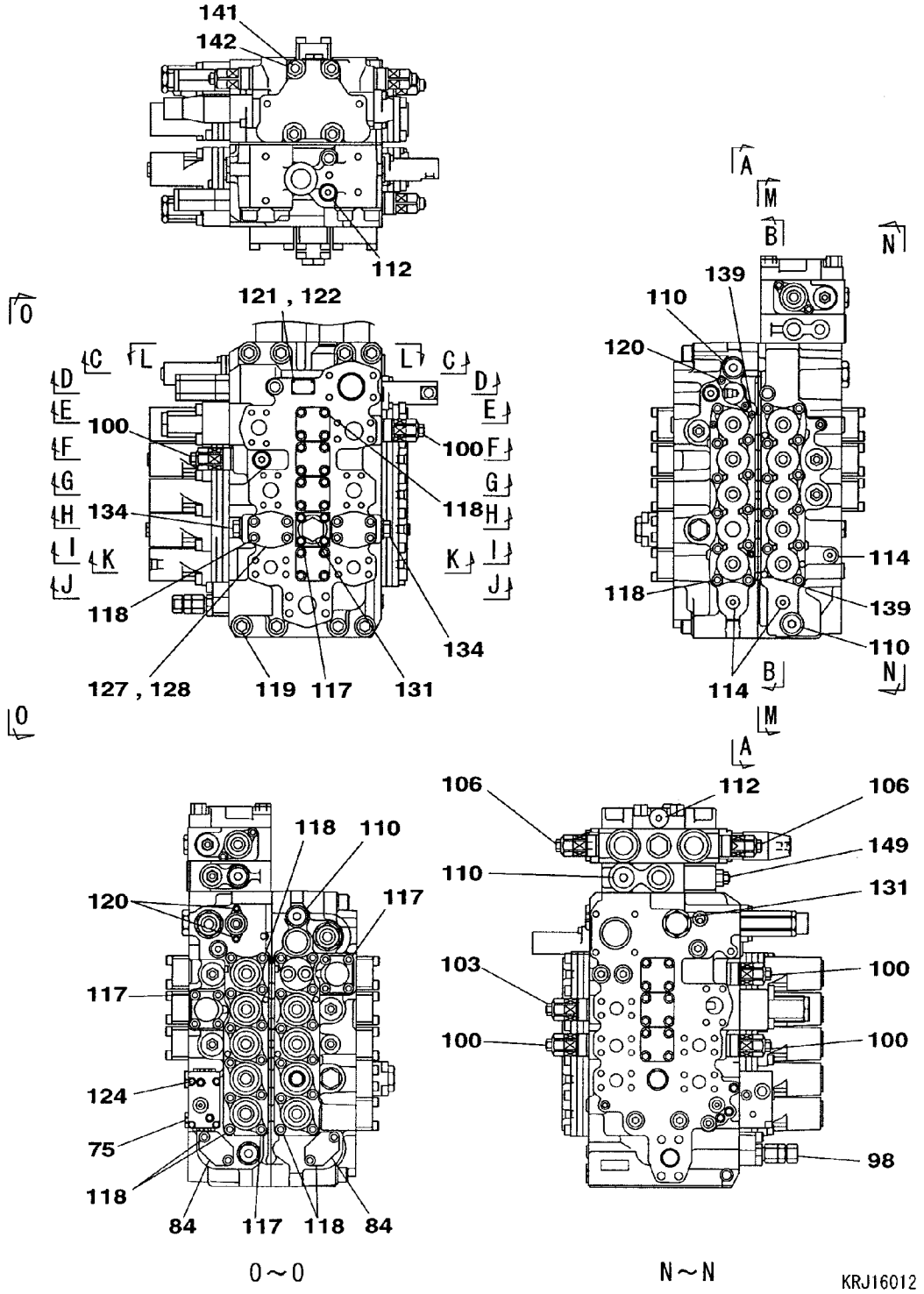

https://truckmanualshub.com/

VALVE;CONTROL	ﾊﾞﾙﾌﾞ;ｺﾝﾄﾛｰﾙ	ZAJ313L0154 000 2/20	000

符号 ITEM	構成 COMPO	部品番号 PART NO.	部品名	PART NAME	個数 Q'TY	互換 ICA	代替部品 REPLACEABLE PART	備考 MEMO
		KRJ16012						
1	1	-------	ﾊｳｼﾞﾝｸﾞ;ﾊﾞﾙﾌﾞ	HOUSING;VALVE	1			
2	1	-------	ｽﾌﾟｰﾙ ASSY	SPOOL	1			
3	1	-------	ｽﾌﾟｰﾙ ASSY	SPOOL	1			
4	1	-------	ｽﾌﾟｰﾙ ASSY	SPOOL	1			
5	1	-------	ｽﾌﾟｰﾙ ASSY	SPOOL	2			
6	1	-------	ｽﾌﾟｰﾙ ASSY	SPOOL	1			
7	1	LBQ0453	O-ﾘﾝｸﾞ JISB2401 1BG4	O-RING	20			
8	1	LR015210	ｷｬｯﾌﾟ	CAP	9			
9	1	LR015220	ｷｬｯﾌﾟ	CAP	1			
10	1A	LR015230	ﾌﾟﾚｰﾄ KIT	PLATE;SPL	1			
11	2A	-------	ﾌﾟﾚｰﾄ KIT	PLATE;SPL	1			
12	3	-------	ﾌﾟﾚｰﾄ	PLATE	1			
13	3	-------	ﾌﾟﾚｰﾄ	PLATE	1			
14	3	-------	ﾌﾟﾚｰﾄ	PLATE	1			
15	3	-------	ｶﾞｽｹｯﾄ	GASKET	2			
16	3	-------	ｽﾌﾟｰﾙ	SPOOL	5			
17	3	-------	ﾌｲﾙﾀ ﾄｸｼｭ	FILTER;SPL	4			
18	3	LBQ0453	O-ﾘﾝｸﾞ JISB2401 1BG4	O-RING	5			
19	3	108R006Z025N	ﾛｯｶｸｱﾅB M6X25-12.9	BOLT;HEX SOC HD	2			
20	1A	LR015240	ﾌﾟﾚｰﾄ KIT	PLATE;SPL	1			
21	2A	-------	ﾌﾟﾚｰﾄ KIT	PLATE;SPL	1			
22	3	-------	ﾌﾟﾚｰﾄ	PLATE	1			
23	3	-------	ﾌﾟﾚｰﾄ	PLATE	1			
24	3	-------	ﾌﾟﾚｰﾄ	PLATE	1			
25	3	-------	ｶﾞｽｹｯﾄ	GASKET	2			
26	3	-------	ｽﾌﾟｰﾙ	SPOOL	5			
27	3	-------	ﾌｲﾙﾀ ﾄｸｼｭ	FILTER;SPL	5			
28	3	LBQ0453	O-ﾘﾝｸﾞ JISB2401 1BG4	O-RING	5			
29	3	108R006Z025N	ﾛｯｶｸｱﾅB M6X25-12.9	BOLT;HEX SOC HD	2			
30	1	-------	ﾊｳｼﾞﾝｸﾞ;ﾊﾞﾙﾌﾞ	HOUSING;VALVE	1			
31	1	-------	ｽﾌﾟｰﾙ ASSY	SPOOL	1			
32	1	-------	ｽﾌﾟｰﾙ ASSY	SPOOL	1			
33	1	-------	ｽﾌﾟｰﾙ ASSY	SPOOL	1			
34	1	-------	ｽﾌﾟｰﾙ ASSY	SPOOL	1			
35	1	LR015250	ｷｬｯﾌﾟ	CAP	1			
36	1	-------	ｽﾌﾟｰﾙ;ﾊﾞﾙﾌﾞ	SPOOL;VALVE	1			
37	1	LSC0158	ｼｰﾄ;ｽﾌﾟﾘﾝｸﾞ	SEAT;SPRING	2			
38	1	LG00338	ｽﾌﾟﾘﾝｸﾞ;ｱｯｼｭｸ	SPRING;COMPRESSION	1			
39	1	LPC0222	ｴﾝﾄﾞ ｽﾌﾟｰﾙ	END;SPL	1			
40	1	LBQ0260	O-ﾘﾝｸﾞ JISB2401 1AP2	O-RING	1			
41	1	LK005690	ﾌﾟﾗｸﾞ	PLUG	1			
42	1	LBQ0242	O-ﾘﾝｸﾞ JISB2401 1BP2	O-RING	1			
43	1	LG00339	ｽﾌﾟﾘﾝｸﾞ;ｱｯｼｭｸ	SPRING;COMPRESSION	1			
44	1	LJ014690	ｽﾌﾟｰﾙ ASSY	SPOOL	1			
45	1A	LR015260	ﾌﾟﾚｰﾄ KIT	PLATE;SPL	1			
46	2A	-------	ﾌﾟﾚｰﾄ KIT	PLATE;SPL	1			
47	3	-------	ﾌﾟﾚｰﾄ	PLATE	1			
48	3	-------	ﾌﾟﾚｰﾄ	PLATE	1			
49	3	-------	ﾌﾟﾚｰﾄ	PLATE	1			
50	3	-------	ｶﾞｽｹｯﾄ	GASKET	2			
51	3	-------	ｽﾌﾟｰﾙ	SPOOL	3			
52	3	-------	ﾌｲﾙﾀ ﾄｸｼｭ	FILTER;SPL	3			
53	3	108R006Z025N	ﾛｯｶｸｱﾅB M6X25-12.9	BOLT;HEX SOC HD	2			
54	1A	LR015270	ﾌﾟﾚｰﾄ KIT	PLATE;SPL	1			
55	2A	-------	ﾌﾟﾚｰﾄ KIT	PLATE;SPL	1			
56	3	-------	ﾌﾟﾚｰﾄ	PLATE	1			
57	3	-------	ﾌﾟﾚｰﾄ	PLATE	1			
58	3	-------	ﾌﾟﾚｰﾄ	PLATE	1			
59	3	-------	ｶﾞｽｹｯﾄ	GASKET	2			
60	3	-------	ｽﾌﾟｰﾙ	SPOOL	4			
61	3	-------	ﾌｲﾙﾀ ﾄｸｼｭ	FILTER;SPL	4			
62	3	108R006Z025N	ﾛｯｶｸｱﾅB M6X25-12.9	BOLT;HEX SOC HD	2			
63	1	LBQ0162	O-ﾘﾝｸﾞ JISB2401 1BP1	O-RING	1			
64	1	LBB0162	ﾘﾝｸﾞ;ﾊﾞｯｸｱｯﾌﾟ	RING;BACK-UP	2			
65	1	LJ00726	ﾎﾟﾍﾟｯﾄ	POPPET	2			
66	1	LG00340	ｽﾌﾟﾘﾝｸﾞ;ｱｯｼｭｸ	SPRING;COMPRESSION	2			
67	1	LJ00727	ﾎﾟﾍﾟｯﾄ	POPPET	7			

https://truckmanualshub.com/

20 [21～29]　21 [22～29]　54 [55～62]　55 [53～62]

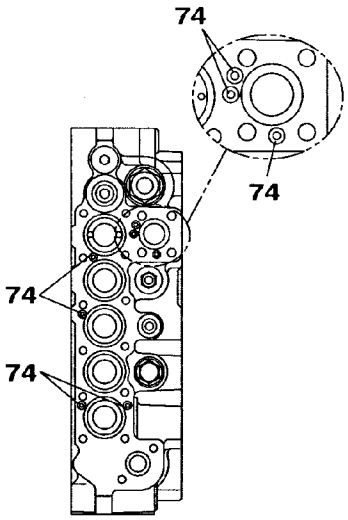

A1～A1

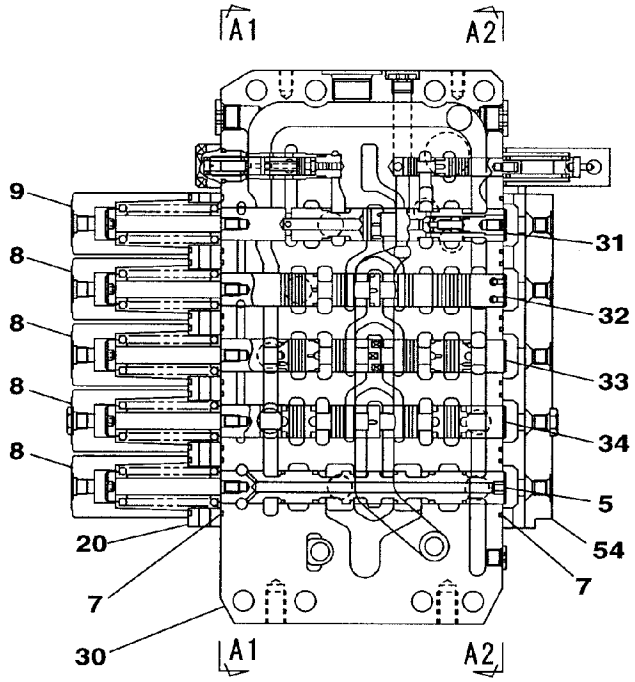

A～A

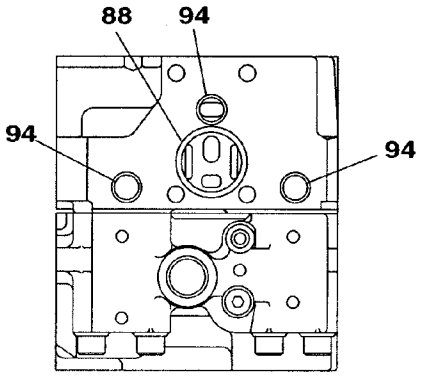

L～L

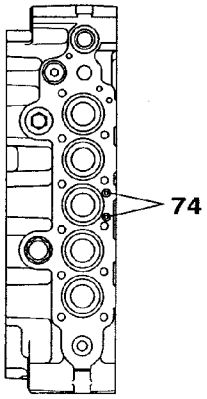

A2～A2

KRJ16012

https://truckmanualshub.com/

VALVE;CONTROL	ﾊﾞﾙﾌﾞ;ｺﾝﾄﾛｰﾙ	ZAJ313L0154 000 4/20	000

符号 ITEM	構成 COMPO	部品番号 PART NO.	部品名	PART NAME	個数 Q'TY	互換 ICA	代替部品 REPLACEABLE PART	備考 MEMO
10	1A	LR015230	ﾌﾟﾚｰﾄ KIT	PLATE;SPL	1			
11	2A	-------	ﾌﾟﾚｰﾄ KIT	PLATE;SPL	1			
12	3	-------	ﾌﾟﾚｰﾄ	PLATE	1			
13	3	-------	ﾌﾟﾚｰﾄ	PLATE	1			
14	3	-------	ﾌﾟﾚｰﾄ	PLATE	1			
15	3	-------	ｶﾞｽｹｯﾄ	GASKET	2			
16	3	-------	ｽﾌﾟｰﾙ	SPOOL	5			
17	3	-------	ﾌｨﾙﾀ ﾄｸｼｭ	FILTER;SPL	4			
18	3	LBQ0453	O-ﾘﾝｸﾞ JISB2401 1BG4	O-RING	5			
19	3	108R006Z025N	ﾛｯｶｸｱﾅB M6X25-12.9	BOLT;HEX SOC HD	2			
20	1A	LR015240	ﾌﾟﾚｰﾄ KIT	PLATE;SPL	1			
21	2A	-------	ﾌﾟﾚｰﾄ KIT	PLATE;SPL	1			
22	3	-------	ﾌﾟﾚｰﾄ	PLATE	1			
23	3	-------	ﾌﾟﾚｰﾄ	PLATE	1			
24	3	-------	ﾌﾟﾚｰﾄ	PLATE	1			
25	3	-------	ｶﾞｽｹｯﾄ	GASKET	2			
26	3	-------	ｽﾌﾟｰﾙ	SPOOL	5			
27	3	-------	ﾌｨﾙﾀ ﾄｸｼｭ	FILTER;SPL	5			
28	3	LBQ0453	O-ﾘﾝｸﾞ JISB2401 1BG4	O-RING	5			
29	3	108R006Z025N	ﾛｯｶｸｱﾅB M6X25-12.9	BOLT;HEX SOC HD	2			
30	1	-------	ﾊｳｼﾞﾝｸﾞ;ﾊﾞﾙﾌﾞ	HOUSING;VALVE	1			
31	1	-------	ｽﾌﾟｰﾙ ASSY	SPOOL	1			
32	1	-------	ｽﾌﾟｰﾙ ASSY	SPOOL	1			
33	1	-------	ｽﾌﾟｰﾙ ASSY	SPOOL	1			
34	1	-------	ｽﾌﾟｰﾙ ASSY	SPOOL	1			
35	1	LR015250	ｷｬｯﾌﾟ	CAP	1			
36	1	-------	ｽﾌﾟｰﾙ;ﾊﾞﾙﾌﾞ	SPOOL;VALVE	1			
37	1	LSC0158	ｼｰﾄ;ｽﾌﾟﾘﾝｸﾞ	SEAT;SPRING	2			
38	1	LG00338	ｽﾌﾟﾘﾝｸﾞ;ｱｯｼｭｸ	SPRING;COMPRESSION	1			
39	1	LPC0222	ｴﾝﾄﾞ ｽﾌﾟｰﾙ	END;SPL	1			
40	1	LBQ0260	O-ﾘﾝｸﾞ JISB2401 1AP2	O-RING	1			
41	1	LK005690	ﾌﾟﾗｸﾞ	PLUG	1			
42	1	LBQ0242	O-ﾘﾝｸﾞ JISB2401 1BP2	O-RING	1			
43	1	LG00339	ｽﾌﾟﾘﾝｸﾞ;ｱｯｼｭｸ	SPRING;COMPRESSION	1			
44	1	LJ014690	ｽﾌﾟｰﾙ ASSY	SPOOL	1			
45	1A	LR015260	ﾌﾟﾚｰﾄ KIT	PLATE;SPL	1			
46	2A	-------	ﾌﾟﾚｰﾄ KIT	PLATE;SPL	1			
47	3	-------	ﾌﾟﾚｰﾄ	PLATE	1			
48	3	-------	ﾌﾟﾚｰﾄ	PLATE	1			
49	3	-------	ﾌﾟﾚｰﾄ	PLATE	1			
50	3	-------	ｶﾞｽｹｯﾄ	GASKET	2			
51	3	-------	ｽﾌﾟｰﾙ	SPOOL	3			
52	3	-------	ﾌｨﾙﾀ ﾄｸｼｭ	FILTER;SPL	3			
53	3	108R006Z025N	ﾛｯｶｸｱﾅB M6X25-12.9	BOLT;HEX SOC HD	2			
54	1A	LR015270	ﾌﾟﾚｰﾄ KIT	PLATE;SPL	1			
55	2A	-------	ﾌﾟﾚｰﾄ KIT	PLATE;SPL	1			
56	3	-------	ﾌﾟﾚｰﾄ	PLATE	1			
57	3	-------	ﾌﾟﾚｰﾄ	PLATE	1			
58	3	-------	ﾌﾟﾚｰﾄ	PLATE	1			
59	3	-------	ｶﾞｽｹｯﾄ	GASKET	2			
60	3	-------	ｽﾌﾟｰﾙ	SPOOL	4			
61	3	-------	ﾌｨﾙﾀ ﾄｸｼｭ	FILTER;SPL	4			
62	3	108R006Z025N	ﾛｯｶｸｱﾅB M6X25-12.9	BOLT;HEX SOC HD	2			
63	1	LBQ0162	O-ﾘﾝｸﾞ JISB2401 1BP1	O-RING	1			
64	1	LBB0162	ﾘﾝｸﾞ;ﾊﾞｯｸｱｯﾌﾟ	RING;BACK-UP	2			
65	1	LJ00726	ﾎﾟﾍﾟｯﾄ	POPPET	2			
66	1	LG00340	ｽﾌﾟﾘﾝｸﾞ;ｱｯｼｭｸ	SPRING;COMPRESSION	2			
67	1	LJ00727	ﾎﾟﾍﾟｯﾄ	POPPET	7			
68	1	LG00341	ｽﾌﾟﾘﾝｸﾞ;ｱｯｼｭｸ	SPRING;COMPRESSION	8			
69	1	LBQ0322	O-ﾘﾝｸﾞ JISB2401 1BP3	O-RING	10			
70	1	LH00248	ﾌﾗﾝｼﾞ	FLANGE;SPL	6			
71	1	LPC0180	ﾎﾟﾍﾟｯﾄ	POPPET	2			
72	1	LSC0227	ｽﾌﾟﾘﾝｸﾞ ﾄｸｼｭ	SPRING;SPL	2			
73	1	LJ00731	ｵﾘﾌｨｽ	ORIFICE	1			
74	1	LBQ0062	O-ﾘﾝｸﾞ JISB2401 1BP6	O-RING	27			
75	1	LR015280	ﾎﾞﾃﾞｨ ASSY	BODY	1			
76	1	LH005410	ﾌﾗﾝｼﾞ	FLANGE;SPL	1			
77	1	LJ016050	ﾎﾟﾍﾟｯﾄ	POPPET	1			

https://truckmanualshub.com/

10 [11～19]　11 [12～19]　45 [46～53]　46 [47～53]
143 [144 , 145]　146 [147 , 148]

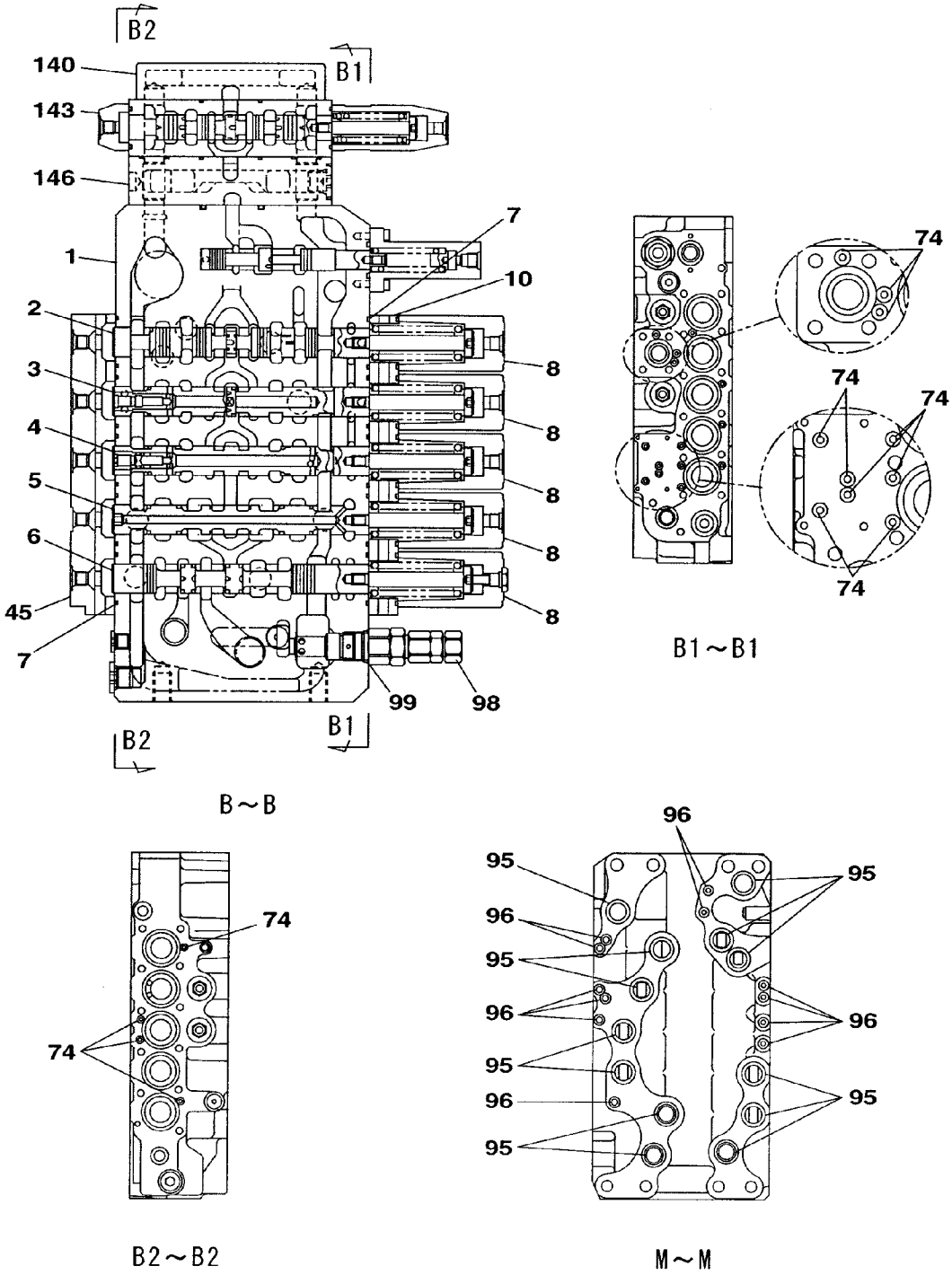

KRJ16012

https://truckmanualshub.com/

VALVE;CONTROL	ﾊﾞﾙﾌﾞ;ｺﾝﾄﾛｰﾙ	ZAJ313L0154 000 6/20	000

符号 ITEM	構成 COMPO	部品番号 PART NO.	部品名	PART NAME	個数 Q'TY	互換 ICA	代替部品 REPLACEABLE PART	備考 MEMO
20	1A	LR015240	ﾌﾟﾚｰﾄ KIT	PLATE;SPL	1			
21	2A	-------	ﾌﾟﾚｰﾄ KIT	PLATE;SPL	1			
22	3	-------	ﾌﾟﾚｰﾄ	PLATE	1			
23	3	-------	ﾌﾟﾚｰﾄ	PLATE	1			
24	3	-------	ﾌﾟﾚｰﾄ	PLATE	1			
25	3	-------	ｶﾞｽｹｯﾄ	GASKET	2			
26	3	-------	ｽﾌﾟｰﾙ	SPOOL	5			
27	3	-------	ﾌｨﾙﾀ ﾄｸｼｭ	FILTER;SPL	5			
28	3	LBQ0453	O-ﾘﾝｸﾞ JISB2401 1BG4	O-RING	5			
29	3	108R006Z025N	ﾛｯｶｸｱﾅB M6X25-12.9	BOLT;HEX SOC HD	2			
30	1	-------	ﾊｳｼﾞﾝｸﾞ;ﾊﾞﾙﾌﾞ	HOUSING;VALVE	1			
31	1	-------	ｽﾌﾟｰﾙ ASSY	SPOOL	1			
32	1	-------	ｽﾌﾟｰﾙ ASSY	SPOOL	1			
33	1	-------	ｽﾌﾟｰﾙ ASSY	SPOOL	1			
34	1	-------	ｽﾌﾟｰﾙ ASSY	SPOOL	1			
35	1	LR015250	ｷｬｯﾌﾟ	CAP	1			
36	1	-------	ｽﾌﾟｰﾙ;ﾊﾞﾙﾌﾞ	SPOOL;VALVE	1			
37	1	LSC0158	ｼｰﾄ;ｽﾌﾟﾘﾝｸﾞ	SEAT;SPRING	2			
38	1	LG00338	ｽﾌﾟﾘﾝｸﾞ;ｱｯｼｭｸ	SPRING;COMPRESSION	1			
39	1	LPC0222	ｴﾝﾄﾞ ｽﾌﾟｰﾙ	END;SPL	1			
40	1	LBQ0260	O-ﾘﾝｸﾞ JISB2401 1AP2	O-RING	1			
41	1	LK005690	ﾌﾟﾗｸﾞ	PLUG	1			
42	1	LBQ0242	O-ﾘﾝｸﾞ JISB2401 1BP2	O-RING	1			
43	1	LG00339	ｽﾌﾟﾘﾝｸﾞ;ｱｯｼｭｸ	SPRING;COMPRESSION	1			
44	1	LJ014690	ｽﾌﾟｰﾙ ASSY	SPOOL	1			
45	1A	LR015260	ﾌﾟﾚｰﾄ KIT	PLATE;SPL	1			
46	2A	-------	ﾌﾟﾚｰﾄ KIT	PLATE;SPL	1			
47	3	-------	ﾌﾟﾚｰﾄ	PLATE	1			
48	3	-------	ﾌﾟﾚｰﾄ	PLATE	1			
49	3	-------	ﾌﾟﾚｰﾄ	PLATE	1			
50	3	-------	ｶﾞｽｹｯﾄ	GASKET	2			
51	3	-------	ｽﾌﾟｰﾙ	SPOOL	3			
52	3	-------	ﾌｨﾙﾀ ﾄｸｼｭ	FILTER;SPL	3			
53	3	108R006Z025N	ﾛｯｶｸｱﾅB M6X25-12.9	BOLT;HEX SOC HD	2			
54	1A	LR015270	ﾌﾟﾚｰﾄ KIT	PLATE;SPL	1			
55	2A	-------	ﾌﾟﾚｰﾄ KIT	PLATE;SPL	1			
56	3	-------	ﾌﾟﾚｰﾄ	PLATE	1			
57	3	-------	ﾌﾟﾚｰﾄ	PLATE	1			
58	3	-------	ﾌﾟﾚｰﾄ	PLATE	1			
59	3	-------	ｶﾞｽｹｯﾄ	GASKET	2			
60	3	-------	ｽﾌﾟｰﾙ	SPOOL	4			
61	3	-------	ﾌｨﾙﾀ ﾄｸｼｭ	FILTER;SPL	4			
62	3	108R006Z025N	ﾛｯｶｸｱﾅB M6X25-12.9	BOLT;HEX SOC HD	2			
63	1	LBQ0162	O-ﾘﾝｸﾞ JISB2401 1BP1	O-RING	1			
64	1	LBB0162	ﾘﾝｸﾞ;ﾊﾞｯｸｱｯﾌﾟ	RING;BACK-UP	2			
65	1	LJ00726	ﾎﾟﾍﾟｯﾄ	POPPET	2			
66	1	LG00340	ｽﾌﾟﾘﾝｸﾞ;ｱｯｼｭｸ	SPRING;COMPRESSION	2			
67	1	LJ00727	ﾎﾟﾍﾟｯﾄ	POPPET	7			
68	1	LG00341	ｽﾌﾟﾘﾝｸﾞ;ｱｯｼｭｸ	SPRING;COMPRESSION	8			
69	1	LBQ0322	O-ﾘﾝｸﾞ JISB2401 1BP3	O-RING	10			
70	1	LH00248	ﾌﾗﾝｼﾞ	FLANGE;SPL	6			
71	1	LPC0180	ﾎﾟﾍﾟｯﾄ	POPPET	2			
72	1	LSC0227	ｽﾌﾟﾘﾝｸﾞ ﾄｸｼｭ	SPRING;SPL	2			
73	1	LJ00731	ｵﾘﾌｨｽ	ORIFICE	1			
74	1	LBQ0062	O-ﾘﾝｸﾞ JISB2401 1BP6	O-RING	27			
75	1	LR015280	ﾎﾞﾃﾞｨ ASSY	BODY	1			
76	1	LH005410	ﾌﾗﾝｼﾞ	FLANGE;SPL	1			
77	1	LJ016050	ﾎﾟﾍﾟｯﾄ	POPPET	1			
78	1	LG006510	ｽﾌﾟﾘﾝｸﾞ	SPRING;SPL	1			
79	1	LLC0082	ﾌﾟﾗｸﾞ	PLUG	1			
80	1	LBQ6910	O-ﾘﾝｸﾞ	O-RING	1			
81	1	LSC0094	ｽﾌﾟﾘﾝｸﾞ	SPRING;SPL	1			
82	1	LJ014680	ﾎﾟﾍﾟｯﾄ	POPPET	1			
83	1	LJ00730	ﾎﾟﾍﾟｯﾄ	POPPET	1			
84	1	LH00250	ﾌﾗﾝｼﾞ	FLANGE;SPL	2			
85	1	LH004960	ｽﾍﾟｰｻ	SPACER	2			
86	1	LBQ0251	O-ﾘﾝｸﾞ JISB2401 1AG2	O-RING	2			
87	1	LBB0253	ﾘﾝｸﾞ;ﾊﾞｯｸｱｯﾌﾟ	RING;BACK-UP	2			

https://truckmanualshub.com/

100 [101 , 102] 103 [104 , 105] 110 [111] 112 [113] 131 [132 , 133]

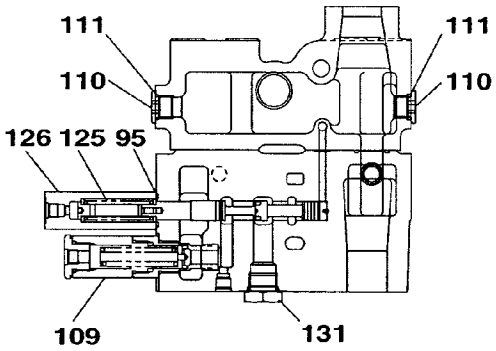

C～C

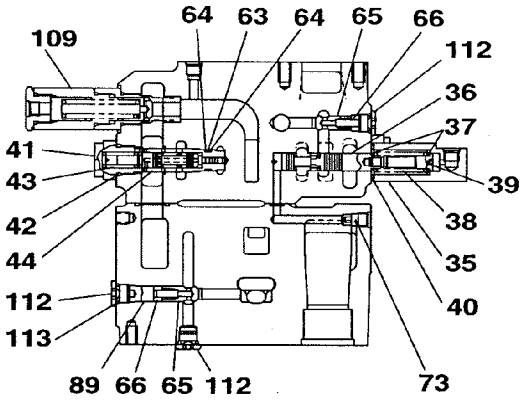

D～D

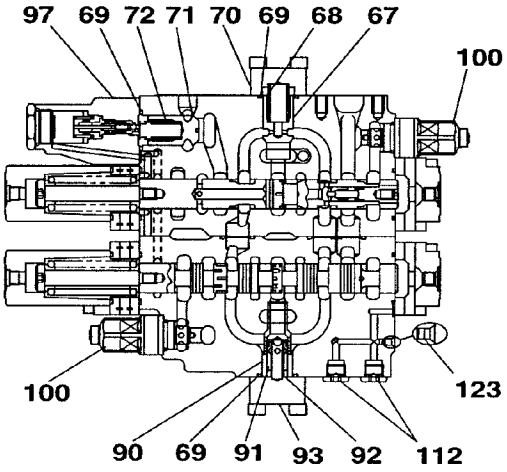

E～E

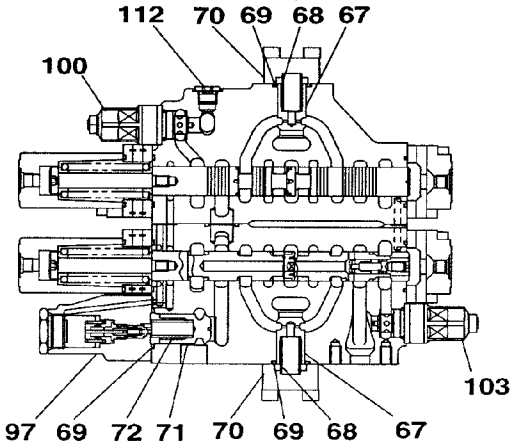

F～F

KRJ16012

https://truckmanualshub.com/

符号 ITEM	構成 COMPO	部品番号 PART NO.	部品名	PART NAME	個数 Q'TY	互換 ICA	代替部品 REPLACEABLE PART	備考 MEMO
30	1	-------	ﾊｳｼﾞﾝｸﾞ;ﾊﾞﾙﾌﾞ	HOUSING;VALVE	1			
31	1	-------	ｽﾌﾟｰﾙ ASSY	SPOOL	1			
32	1	-------	ｽﾌﾟｰﾙ ASSY	SPOOL	1			
33	1	-------	ｽﾌﾟｰﾙ ASSY	SPOOL	1			
34	1	-------	ｽﾌﾟｰﾙ ASSY	SPOOL	1			
35	1	LR015250	ｷｬｯﾌﾟ	CAP	1			
36	1	-------	ｽﾌﾟｰﾙ;ﾊﾞﾙﾌﾞ	SPOOL;VALVE	1			
37	1	LSC0158	ｼｰﾄ;ｽﾌﾟﾘﾝｸﾞ	SEAT;SPRING	2			
38	1	LG00338	ｽﾌﾟﾘﾝｸﾞ;ｱｯｼｭｸ	SPRING;COMPRESSION	1			
39	1	LPC0222	ｴﾝﾄﾞ ｽﾌﾟｰﾙ	END;SPL	1			
40	1	LBQ0260	O-ﾘﾝｸﾞ JISB2401 1AP2	O-RING	1			
41	1	LK005690	ﾌﾟﾗｸﾞ	PLUG	1			
42	1	LBQ0242	O-ﾘﾝｸﾞ JISB2401 1BP2	O-RING	1			
43	1	LG00339	ｽﾌﾟﾘﾝｸﾞ;ｱｯｼｭｸ	SPRING;COMPRESSION	1			
44	1	LJ014690	ｽﾌﾟｰﾙ ASSY	SPOOL	1			
45	1A	LR015260	ﾌﾟﾚｰﾄ KIT	PLATE;SPL	1			
46	2A	-------	ﾌﾟﾚｰﾄ KIT	PLATE;SPL	1			
47	3	-------	ﾌﾟﾚｰﾄ	PLATE	1			
48	3	-------	ﾌﾟﾚｰﾄ	PLATE	1			
49	3	-------	ﾌﾟﾚｰﾄ	PLATE	1			
50	3	-------	ｶﾞｽｹｯﾄ	GASKET	2			
51	3	-------	ｽﾌﾟｰﾙ	SPOOL	3			
52	3	-------	ﾌｨﾙﾀ ﾄｸｼｭ	FILTER;SPL	3			
53	3	108R006Z025N	ﾛｯｶｸｱﾅB M6X25-12.9	BOLT;HEX SOC HD	2			
54	1A	LR015270	ﾌﾟﾚｰﾄ KIT	PLATE;SPL	1			
55	2A	-------	ﾌﾟﾚｰﾄ KIT	PLATE;SPL	1			
56	3	-------	ﾌﾟﾚｰﾄ	PLATE	1			
57	3	-------	ﾌﾟﾚｰﾄ	PLATE	1			
58	3	-------	ﾌﾟﾚｰﾄ	PLATE	1			
59	3	-------	ｶﾞｽｹｯﾄ	GASKET	2			
60	3	-------	ｽﾌﾟｰﾙ	SPOOL	4			
61	3	-------	ﾌｨﾙﾀ ﾄｸｼｭ	FILTER;SPL	4			
62	3	108R006Z025N	ﾛｯｶｸｱﾅB M6X25-12.9	BOLT;HEX SOC HD	2			
63	1	LBQ0162	O-ﾘﾝｸﾞ JISB2401 1BP1	O-RING	1			
64	1	LBB0162	ﾘﾝｸﾞ;ﾊﾞｯｸｱｯﾌﾟ	RING;BACK-UP	2			
65	1	LJ00726	ﾎﾟﾍﾟｯﾄ	POPPET	2			
66	1	LG00340	ｽﾌﾟﾘﾝｸﾞ;ｱｯｼｭｸ	SPRING;COMPRESSION	2			
67	1	LJ00727	ﾎﾟﾍﾟｯﾄ	POPPET	7			
68	1	LG00341	ｽﾌﾟﾘﾝｸﾞ;ｱｯｼｭｸ	SPRING;COMPRESSION	8			
69	1	LBQ0322	O-ﾘﾝｸﾞ JISB2401 1BP3	O-RING	10			
70	1	LH00248	ﾌﾗﾝｼﾞ	FLANGE;SPL	6			
71	1	LPC0180	ﾎﾟﾍﾟｯﾄ	POPPET	2			
72	1	LSC0227	ｽﾌﾟﾘﾝｸﾞ ﾄｸｼｭ	SPRING;SPL	2			
73	1	LJ00731	ｵﾘﾌｨｽ	ORIFICE	1			
74	1	LBQ0062	O-ﾘﾝｸﾞ JISB2401 1BP6	O-RING	27			
75	1	LR015280	ﾎﾞﾃﾞｨ ASSY	BODY	1			
76	1	LH005410	ﾌﾗﾝｼﾞ	FLANGE;SPL	1			
77	1	LJ016050	ﾎﾟﾍﾟｯﾄ	POPPET	1			
78	1	LG006510	ｽﾌﾟﾘﾝｸﾞ	SPRING;SPL	1			
79	1	LLC0082	ﾌﾟﾗｸﾞ	PLUG	1			
80	1	LBQ6910	O-ﾘﾝｸﾞ	O-RING	1			
81	1	LSC0094	ｽﾌﾟﾘﾝｸﾞ	SPRING;SPL	1			
82	1	LJ014680	ﾎﾟﾍﾟｯﾄ	POPPET	1			
83	1	LJ00730	ﾎﾟﾍﾟｯﾄ	POPPET	1			
84	1	LH00250	ﾌﾗﾝｼﾞ	FLANGE;SPL	2			
85	1	LH004960	ｽﾍﾟｰｻ	SPACER	2			
86	1	LBQ0251	O-ﾘﾝｸﾞ JISB2401 1AG2	O-RING	2			
87	1	LBB0253	ﾘﾝｸﾞ;ﾊﾞｯｸｱｯﾌﾟ	RING;BACK-UP	2			
88	1	LBQ0553	O-ﾘﾝｸﾞ JISB2401 1BG5	O-RING	1			
89	1	LH004970	ｽﾍﾟｰｻ	SPACER	1			
90	1	LH004980	ｽﾘｰﾌﾞ	SLEEVE	1			
91	1	LPC0098	ﾎﾟﾍﾟｯﾄ	POPPET	1			
92	1	LSC0187	ｽﾌﾟﾘﾝｸﾞ	SPRING;SPL	1			
93	1	LH004990	ﾌﾗﾝｼﾞ ﾄｸｼｭ	FLANGE;SPL	1			
94	1	LE012520	O-ﾘﾝｸﾞ ﾄｸｼｭ ﾌﾂｿ	O-RING	3			
95	1	LE014890	O-ﾘﾝｸﾞ	O-RING	14			
96	1	LBQ0102	O-ﾘﾝｸﾞ JISB2401 1BP1	O-RING	12			
97	1	LJ014710	ﾊﾞﾙﾌﾞ ｱﾝﾁﾄﾞﾘﾌﾄ ASSY	VALVE;SPL	2			

https://truckmanualshub.com/

100 [101 , 102]
131 [132 , 133]
112 [113]
134 [135 ~ 138]
114 [115 , 116]

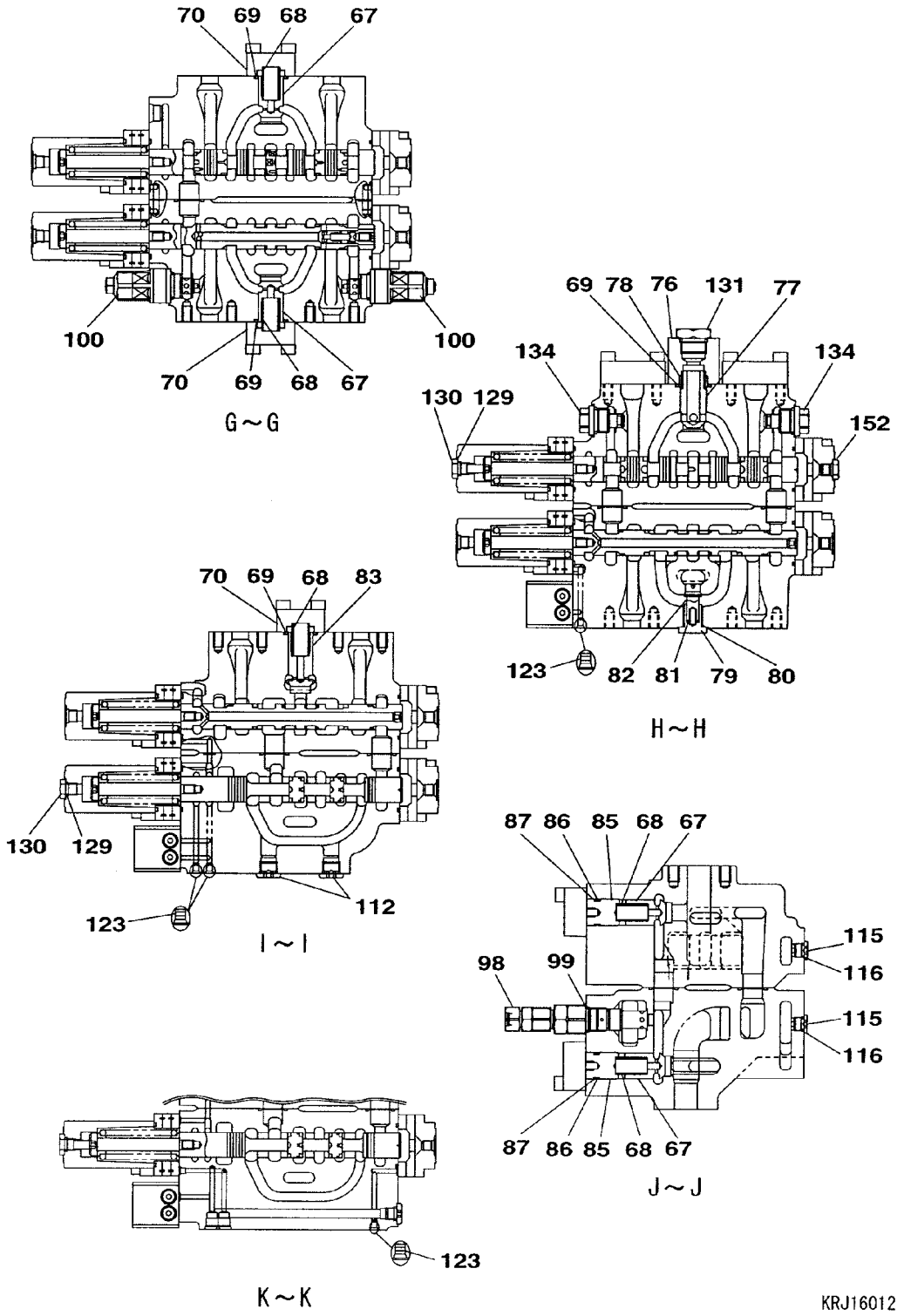

https://truckmanualshub.com/

VALVE;CONTROL	ﾊﾞﾙﾌﾞ;ｺﾝﾄﾛｰﾙ	ZAJ313L0154 000 10/20	000

符号 ITEM	構成 COMPO	部品番号 PART NO.	部品名	PART NAME	個数 Q'TY	互換 ICA	代替部品 REPLACEABLE PART	備考 MEMO
40	1	LBQ0260	O-ﾘﾝｸﾞ JISB2401 1AP2	O-RING	1			
41	1	LK005690	ﾌﾟﾗｸﾞ	PLUG	1			
42	1	LBQ0242	O-ﾘﾝｸﾞ JISB2401 1BP2	O-RING	1			
43	1	LG00339	ｽﾌﾟﾘﾝｸﾞ;ｱﾂｼｭｸ	SPRING;COMPRESSION	1			
44	1	LJ014690	ｽﾌﾟｰﾙ ASSY	SPOOL	1			
45	1A	LR015260	ﾌﾟﾚｰﾄ KIT	PLATE;SPL	1			
46	2A	-------	ﾌﾟﾚｰﾄ KIT	PLATE;SPL	1			
47	3	-------	ﾌﾟﾚｰﾄ	PLATE	1			
48	3	-------	ﾌﾟﾚｰﾄ	PLATE	1			
49	3	-------	ﾌﾟﾚｰﾄ	PLATE	1			
50	3	-------	ｶﾞｽｹｯﾄ	GASKET	2			
51	3	-------	ｽﾌﾟｰﾙ	SPOOL	3			
52	3	-------	ﾌｨﾙﾀ ﾄｸｼｭ	FILTER;SPL	3			
53	3	108R006Z025N	ﾛｯｶｸｱﾅB M6X25-12.9	BOLT;HEX SOC HD	2			
54	1A	LR015270	ﾌﾟﾚｰﾄ KIT	PLATE;SPL	1			
55	2A	-------	ﾌﾟﾚｰﾄ KIT	PLATE;SPL	1			
56	3	-------	ﾌﾟﾚｰﾄ	PLATE	1			
57	3	-------	ﾌﾟﾚｰﾄ	PLATE	1			
58	3	-------	ﾌﾟﾚｰﾄ	PLATE	1			
59	3	-------	ｶﾞｽｹｯﾄ	GASKET	2			
60	3	-------	ｽﾌﾟｰﾙ	SPOOL	4			
61	3	-------	ﾌｨﾙﾀ ﾄｸｼｭ	FILTER;SPL	4			
62	3	108R006Z025N	ﾛｯｶｸｱﾅB M6X25-12.9	BOLT;HEX SOC HD	2			
63	1	LBQ0162	O-ﾘﾝｸﾞ JISB2401 1BP1	O-RING	1			
64	1	LBB0162	ﾘﾝｸﾞ;ﾊﾞｯｸｱｯﾌﾟ	RING;BACK-UP	2			
65	1	LJ00726	ﾎﾟﾍﾟｯﾄ	POPPET	2			
66	1	LG00340	ｽﾌﾟﾘﾝｸﾞ;ｱﾂｼｭｸ	SPRING;COMPRESSION	2			
67	1	LJ00727	ﾎﾟﾍﾟｯﾄ	POPPET	7			
68	1	LG00341	ｽﾌﾟﾘﾝｸﾞ;ｱﾂｼｭｸ	SPRING;COMPRESSION	8			
69	1	LBQ0322	O-ﾘﾝｸﾞ JISB2401 1BP3	O-RING	10			
70	1	LH00248	ﾌﾗﾝｼﾞ	FLANGE;SPL	6			
71	1	LPC0180	ﾎﾟﾍﾟｯﾄ	POPPET	2			
72	1	LSC0227	ｽﾌﾟﾘﾝｸﾞ ﾄｸｼｭ	SPRING;SPL	2			
73	1	LJ00731	ｵﾘﾌｨｽ	ORIFICE	1			
74	1	LBQ0062	O-ﾘﾝｸﾞ JISB2401 1BP6	O-RING	27			
75	1	LR015280	ﾎﾞﾃﾞｨ ASSY	BODY	1			
76	1	LH005410	ﾌﾗﾝｼﾞ	FLANGE;SPL	1			
77	1	LJ016050	ﾎﾟﾍﾟｯﾄ	POPPET	1			
78	1	LG006510	ｽﾌﾟﾘﾝｸﾞ	SPRING;SPL	1			
79	1	LLC0082	ﾌﾟﾗｸﾞ	PLUG	1			
80	1	LBQ6910	O-ﾘﾝｸﾞ	O-RING	1			
81	1	LSC0094	ｽﾌﾟﾘﾝｸﾞ	SPRING;SPL	1			
82	1	LJ014680	ﾎﾟﾍﾟｯﾄ	POPPET	1			
83	1	LJ00730	ﾎﾟﾍﾟｯﾄ	POPPET	1			
84	1	LH00250	ﾌﾗﾝｼﾞ	FLANGE;SPL	2			
85	1	LH004960	ｽﾍﾟｰｻ	SPACER	2			
86	1	LBQ0251	O-ﾘﾝｸﾞ JISB2401 1AG2	O-RING	2			
87	1	LBB0253	ﾘﾝｸﾞ;ﾊﾞｯｸｱｯﾌﾟ	RING;BACK-UP	2			
88	1	LBQ0553	O-ﾘﾝｸﾞ JISB2401 1BG5	O-RING	1			
89	1	LH004970	ｽﾍﾟｰｻ	SPACER	1			
90	1	LH004980	ｽﾘｰﾌﾞ	SLEEVE	1			
91	1	LPC0098	ﾎﾟﾍﾟｯﾄ	POPPET	1			
92	1	LSC0187	ｽﾌﾟﾘﾝｸﾞ	SPRING;SPL	1			
93	1	LH004990	ﾌﾗﾝｼﾞ ﾄｸｼｭ	FLANGE;SPL	1			
94	1	LE012520	O-ﾘﾝｸﾞ ﾄｸｼｭ ﾌﾂｿ	O-RING	3			
95	1	LE014890	O-ﾘﾝｸﾞ	O-RING	14			
96	1	LBQ0102	O-ﾘﾝｸﾞ JISB2401 1BP1	O-RING	12			
97	1	LJ014710	ﾊﾞﾙﾌﾞ ｱﾝﾁﾄﾞﾘﾌﾄ ASSY	VALVE;SPL	2			
98	1A	LJ014720	ﾊﾞﾙﾌﾞ;ﾘﾘｰﾌ KIT	VALVE;RELIEF	1			
99	2	LBQ6912	O-ﾘﾝｸﾞ AS568-912-HS9	O-RING	1			
100	1A	LJ014730	ﾊﾞﾙﾌﾞ;ﾘﾘｰﾌ KIT	VALVE;RELIEF	5			
101	2	LBQ6912	O-ﾘﾝｸﾞ AS568-912-HS9	O-RING	5			
102	2	LBQ0102	O-ﾘﾝｸﾞ JISB2401 1BP1	O-RING	5			
103	1A	LJ014740	ﾊﾞﾙﾌﾞ;ﾘﾘｰﾌ KIT	VALVE;RELIEF	1			
104	2	LBQ6912	O-ﾘﾝｸﾞ AS568-912-HS9	O-RING	1			
105	2	LBQ0102	O-ﾘﾝｸﾞ JISB2401 1BP1	O-RING	1			
106	1A	LJ014750	ﾊﾞﾙﾌﾞ;ﾘﾘｰﾌ KIT	VALVE;RELIEF	2			
107	2	LBQ0102	O-ﾘﾝｸﾞ JISB2401 1BP1	O-RING	2			

https://truckmanualshub.com/

詳細/DETAIL

98 [99]

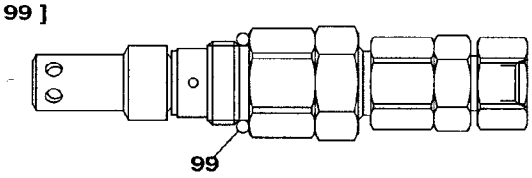

100 [101 , 102]

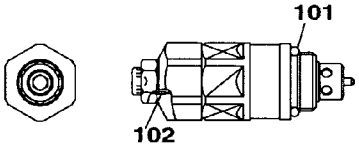

103 [104 , 105]

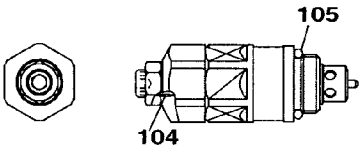

131 [132 , 133]

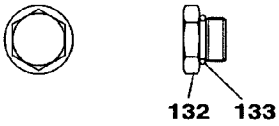

134 [135～138]

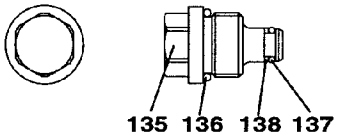

143 [144 , 145]　106 [107 , 108]

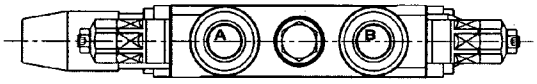

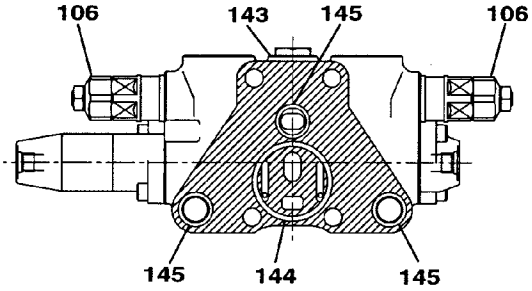

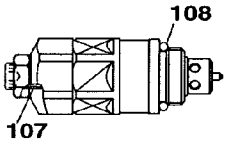

146 [147 , 148]　149 [150 , 151]

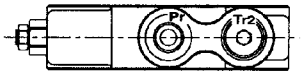

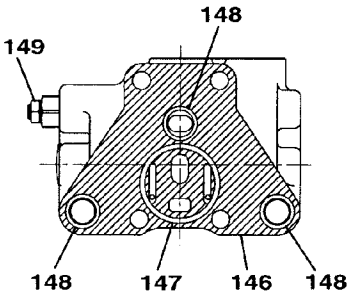

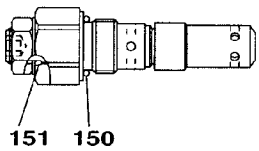

KRJ16012

https://truckmanualshub.com/

VALVE;CONTROL	ﾊﾞﾙﾌﾞ;ｺﾝﾄﾛｰﾙ	ZAJ313L0154 000 12/20	000

符号 ITEM	構成 COMPO	部品番号 PART NO.	部品名	PART NAME	個数 Q'TY	互換 ICA	代替部品 REPLACEABLE PART	備考 MEMO
50	3	-------	ｶﾞｽｹｯﾄ	GASKET	2			
51	3	-------	ｽﾌﾟｰﾙ	SPOOL	3			
52	3	-------	ﾌｨﾙﾀ ﾄｸｼｭ	FILTER;SPL	3			
53	3	108R006Z025N	ﾛｯｶｸｱﾅB M6X25-12.9	BOLT;HEX SOC HD	2			
54	1A	LR015270	ﾌﾟﾚｰﾄ KIT	PLATE;SPL	1			
55	2A	-------	ﾌﾟﾚｰﾄ KIT	PLATE;SPL	1			
56	3	-------	ﾌﾟﾚｰﾄ	PLATE	1			
57	3	-------	ﾌﾟﾚｰﾄ	PLATE	1			
58	3	-------	ﾌﾟﾚｰﾄ	PLATE	1			
59	3	-------	ｶﾞｽｹｯﾄ	GASKET	2			
60	3	-------	ｽﾌﾟｰﾙ	SPOOL	4			
61	3	-------	ﾌｨﾙﾀ ﾄｸｼｭ	FILTER;SPL	4			
62	3	108R006Z025N	ﾛｯｶｸｱﾅB M6X25-12.9	BOLT;HEX SOC HD	2			
63	1	LBQ0162	O-ﾘﾝｸﾞ JISB2401 1BP1	O-RING	1			
64	1	LBB0162	ﾘﾝｸﾞ;ﾊﾞｯｸｱｯﾌﾟ	RING;BACK-UP	2			
65	1	LJ00726	ﾎﾟﾍﾟｯﾄ	POPPET	2			
66	1	LG00340	ｽﾌﾟﾘﾝｸﾞ;ｱｯｼｭｸ	SPRING;COMPRESSION	2			
67	1	LJ00727	ﾎﾟﾍﾟｯﾄ	POPPET	7			
68	1	LG00341	ｽﾌﾟﾘﾝｸﾞ;ｱｯｼｭｸ	SPRING;COMPRESSION	8			
69	1	LBQ0322	O-ﾘﾝｸﾞ JISB2401 1BP3	O-RING	10			
70	1	LH00248	ﾌﾗﾝｼﾞ	FLANGE;SPL	6			
71	1	LPC0180	ﾎﾟﾍﾟｯﾄ	POPPET	2			
72	1	LSC0227	ｽﾌﾟﾘﾝｸﾞ ﾄｸｼｭ	SPRING;SPL	2			
73	1	LJ00731	ｵﾘﾌｨｽ	ORIFICE	1			
74	1	LBQ0062	O-ﾘﾝｸﾞ JISB2401 1BP6	O-RING	27			
75	1	LR015280	ﾎﾞﾃﾞｨ ASSY	BODY	1			
76	1	LH005410	ﾌﾗﾝｼﾞ	FLANGE;SPL	1			
77	1	LJ016050	ﾎﾟﾍﾟｯﾄ	POPPET	1			
78	1	LG006510	ｽﾌﾟﾘﾝｸﾞ	SPRING;SPL	1			
79	1	LLC0082	ﾌﾟﾗｸﾞ	PLUG	1			
80	1	LBQ6910	O-ﾘﾝｸﾞ	O-RING	1			
81	1	LSC0094	ｽﾌﾟﾘﾝｸﾞ	SPRING;SPL	1			
82	1	LJ014680	ﾎﾟﾍﾟｯﾄ	POPPET	1			
83	1	LJ00730	ﾎﾟﾍﾟｯﾄ	POPPET	1			
84	1	LH00250	ﾌﾗﾝｼﾞ	FLANGE;SPL	2			
85	1	LH004960	ｽﾍﾟｰｻ	SPACER	2			
86	1	LBQ0251	O-ﾘﾝｸﾞ JISB2401 1AG2	O-RING	2			
87	1	LBB0253	ﾘﾝｸﾞ;ﾊﾞｯｸｱｯﾌﾟ	RING;BACK-UP	2			
88	1	LBQ0553	O-ﾘﾝｸﾞ JISB2401 1BG5	O-RING	1			
89	1	LH004970	ｽﾍﾟｰｻ	SPACER	1			
90	1	LH004980	ｽﾘｰﾌﾞ	SLEEVE	1			
91	1	LPC0098	ﾎﾟﾍﾟｯﾄ	POPPET	1			
92	1	LSC0187	ｽﾌﾟﾘﾝｸﾞ	SPRING;SPL	1			
93	1	LH004990	ﾌﾗﾝｼﾞ ﾄｸｼｭ	FLANGE;SPL	1			
94	1	LE012520	O-ﾘﾝｸﾞ ﾄｸｼｭ ﾌﾂｿ	O-RING	3			
95	1	LE014890	O-ﾘﾝｸﾞ	O-RING	14			
96	1	LBQ0102	O-ﾘﾝｸﾞ JISB2401 1BP1	O-RING	12			
97	1	LJ014710	ﾊﾞﾙﾌﾞ ｱﾝﾁﾄﾞﾘﾌﾄ ASSY	VALVE;SPL	2			
98	1A	LJ014720	ﾊﾞﾙﾌﾞ;ﾘﾘｰﾌ KIT	VALVE;RELIEF	1			
99	2	LBQ6912	O-ﾘﾝｸﾞ AS568-912-HS9	O-RING	1			
100	1A	LJ014730	ﾊﾞﾙﾌﾞ;ﾘﾘｰﾌ KIT	VALVE;RELIEF	5			
101	2	LBQ6912	O-ﾘﾝｸﾞ AS568-912-HS9	O-RING	5			
102	2	LBQ0102	O-ﾘﾝｸﾞ JISB2401 1BP1	O-RING	5			
103	1A	LJ014740	ﾊﾞﾙﾌﾞ;ﾘﾘｰﾌ KIT	VALVE;RELIEF	1			
104	2	LBQ6912	O-ﾘﾝｸﾞ AS568-912-HS9	O-RING	1			
105	2	LBQ0102	O-ﾘﾝｸﾞ JISB2401 1BP1	O-RING	1			
106	1A	LJ014750	ﾊﾞﾙﾌﾞ;ﾘﾘｰﾌ KIT	VALVE;RELIEF	2			
107	2	LBQ0102	O-ﾘﾝｸﾞ JISB2401 1BP1	O-RING	2			
108	2	LBQ6912	O-ﾘﾝｸﾞ AS568-912-HS9	O-RING	2			
109	1	LJ014700	ﾊﾞﾙﾌﾞ;ﾘﾘｰﾌ ASS'Y	VALVE;RELIEF	2			
110	1A	LNC0218	ﾌﾟﾗｸﾞ S/A	PLUG	4			
111	2	LBQ0182	O-ﾘﾝｸﾞ JISB2401 1BP1	O-RING	4			
112	1A	LNC0217	ﾌﾟﾗｸﾞ S/A	PLUG	10			
113	2	LBQ0142	O-ﾘﾝｸﾞ JISB2401 1BP1	O-RING	10			
114	1A	LNC0238	ﾌﾟﾗｸﾞ S/A	PLUG	3			
115	2	LK00328	ﾌﾟﾗｸﾞ	PLUG	3			
116	2	LBQ0112	O-ﾘﾝｸﾞ JISB2401 1BP1	O-RING	3			
117	1	108R010Z055B	ﾛｯｶｸｱﾅB JIS B 1180 M	BOLT;HEX SOC HD	32			

https://truckmanualshub.com/

10 [11 ~ 19] 11 [12 ~ 19]

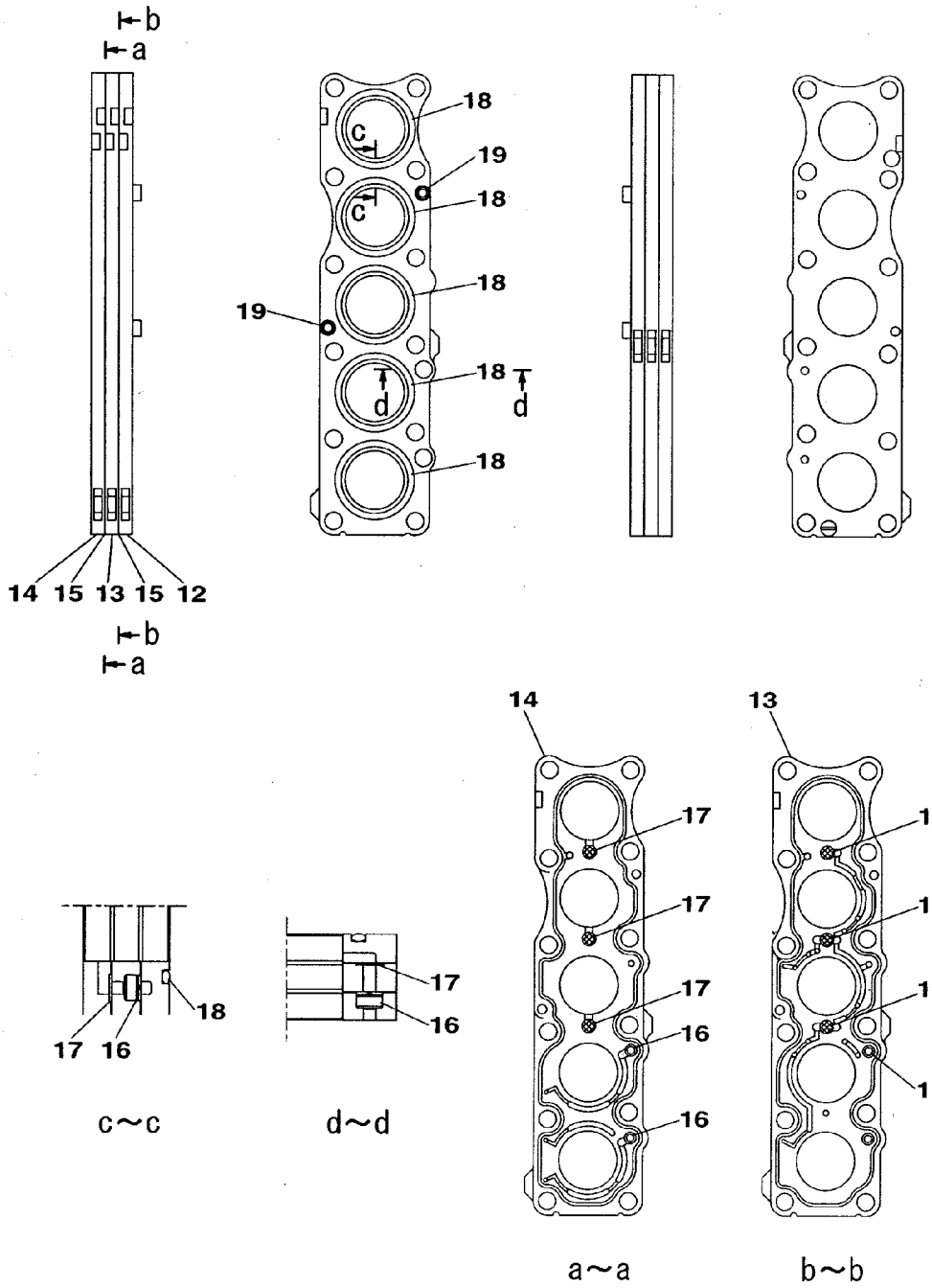

KRJ16012

https://truckmanualshub.com/

符号 ITEM	構成 COMPO	部品番号 PART NO.	部品名	PART NAME	個数 Q'TY	互換 ICA	代替部品 REPLACEABLE PART	備考 MEMO
60	3	-------	ｽﾌﾟｰﾙ	SPOOL	4			
61	3	-------	ﾌｨﾙﾀ ﾄｸｼｭ	FILTER;SPL	4			
62	3	108R006Z025N	ﾛｯｶｸｱﾅB M6X25-12.9	BOLT;HEX SOC HD	2			
63	1	LBQ0162	O-ﾘﾝｸﾞ JISB2401 1BP1	O-RING	1			
64	1	LBB0162	ﾘﾝｸﾞ;ﾊﾞｯｸｱｯﾌﾟ	RING;BACK-UP	2			
65	1	LJ00726	ﾎﾟﾍﾟｯﾄ	POPPET	2			
66	1	LG00340	ｽﾌﾟﾘﾝｸﾞ;ｱｯｼｭｸ	SPRING;COMPRESSION	2			
67	1	LJ00727	ﾎﾟﾍﾟｯﾄ	POPPET	7			
68	1	LG00341	ｽﾌﾟﾘﾝｸﾞ;ｱｯｼｭｸ	SPRING;COMPRESSION	8			
69	1	LBQ0322	O-ﾘﾝｸﾞ JISB2401 1BP3	O-RING	10			
70	1	LH00248	ﾌﾗﾝｼﾞ	FLANGE;SPL	6			
71	1	LPC0180	ﾎﾟﾍﾟｯﾄ	POPPET	2			
72	1	LSC0227	ｽﾌﾟﾘﾝｸﾞ ﾄｸｼｭ	SPRING;SPL	2			
73	1	LJ00731	ｵﾘﾌｨｽ	ORIFICE	1			
74	1	LBQ0062	O-ﾘﾝｸﾞ JISB2401 1BP6	O-RING	27			
75	1	LR015280	ﾎﾞﾃﾞｨ ASSY	BODY	1			
76	1	LH005410	ﾌﾗﾝｼﾞ	FLANGE;SPL	1			
77	1	LJ016050	ﾎﾟﾍﾟｯﾄ	POPPET	1			
78	1	LG006510	ｽﾌﾟﾘﾝｸﾞ	SPRING;SPL	1			
79	1	LLC0082	ﾌﾟﾗｸﾞ	PLUG	1			
80	1	LBQ6910	O-ﾘﾝｸﾞ	O-RING	1			
81	1	LSC0094	ｽﾌﾟﾘﾝｸﾞ	SPRING;SPL	1			
82	1	LJ014680	ﾎﾟﾍﾟｯﾄ	POPPET	1			
83	1	LJ00730	ﾎﾟﾍﾟｯﾄ	POPPET	1			
84	1	LH00250	ﾌﾗﾝｼﾞ	FLANGE;SPL	2			
85	1	LH004960	ｽﾍﾟｰｻ	SPACER	2			
86	1	LBQ0251	O-ﾘﾝｸﾞ JISB2401 1AG2	O-RING	2			
87	1	LBB0253	ﾘﾝｸﾞ;ﾊﾞｯｸｱｯﾌﾟ	RING;BACK-UP	2			
88	1	LBQ0553	O-ﾘﾝｸﾞ JISB2401 1BG5	O-RING	1			
89	1	LH004970	ｽﾍﾟｰｻ	SPACER	1			
90	1	LH004980	ｽﾘｰﾌﾞ	SLEEVE	1			
91	1	LPC0098	ﾎﾟﾍﾟｯﾄ	POPPET	1			
92	1	LSC0187	ｽﾌﾟﾘﾝｸﾞ	SPRING;SPL	1			
93	1	LH004990	ﾌﾗﾝｼﾞ ﾄｸｼｭ	FLANGE;SPL	1			
94	1	LE012520	O-ﾘﾝｸﾞ ﾄｸｼｭ ﾌﾂｿ	O-RING	3			
95	1	LE014890	O-ﾘﾝｸﾞ	O-RING	14			
96	1	LBQ0102	O-ﾘﾝｸﾞ JISB2401 1BP1	O-RING	12			
97	1	LJ014710	ﾊﾞﾙﾌﾞ ｱﾝﾁﾄﾞﾘﾌﾄ ASSY	VALVE;SPL	2			
98	1A	LJ014720	ﾊﾞﾙﾌﾞ;ﾘﾘｰﾌ KIT	VALVE;RELIEF	1			
99	2	LBQ6912	O-ﾘﾝｸﾞ AS568-912-HS9	O-RING	1			
100	1A	LJ014730	ﾊﾞﾙﾌﾞ;ﾘﾘｰﾌ KIT	VALVE;RELIEF	5			
101	2	LBQ6912	O-ﾘﾝｸﾞ AS568-912-HS9	O-RING	5			
102	2	LBQ0102	O-ﾘﾝｸﾞ JISB2401 1BP1	O-RING	5			
103	1A	LJ014740	ﾊﾞﾙﾌﾞ;ﾘﾘｰﾌ KIT	VALVE;RELIEF	1			
104	2	LBQ6912	O-ﾘﾝｸﾞ AS568-912-HS9	O-RING	1			
105	2	LBQ0102	O-ﾘﾝｸﾞ JISB2401 1BP1	O-RING	1			
106	1A	LJ014750	ﾊﾞﾙﾌﾞ;ﾘﾘｰﾌ KIT	VALVE;RELIEF	2			
107	2	LBQ0102	O-ﾘﾝｸﾞ JISB2401 1BP1	O-RING	2			
108	2	LBQ6912	O-ﾘﾝｸﾞ AS568-912-HS9	O-RING	2			
109	1	LJ014700	ﾊﾞﾙﾌﾞ;ﾘﾘｰﾌ ASS'Y	VALVE;RELIEF	2			
110	1A	LNC0218	ﾌﾟﾗｸﾞ S/A	PLUG	4			
111	2	LBQ0182	O-ﾘﾝｸﾞ JISB2401 1BP1	O-RING	4			
112	1A	LNC0217	ﾌﾟﾗｸﾞ S/A	PLUG	10			
113	2	LBQ0142	O-ﾘﾝｸﾞ JISB2401 1BP1	O-RING	10			
114	1A	LNC0238	ﾌﾟﾗｸﾞ S/A	PLUG	3			
115	2	LK00328	ﾌﾟﾗｸﾞ	PLUG	3			
116	2	LBQ0112	O-ﾘﾝｸﾞ JISB2401 1BP1	O-RING	3			
117	1	108R010Z055B	ﾛｯｶｸｱﾅB JIS B 1180 M	BOLT;HEX SOC HD	32			
118	1	108R010Z040B	ﾛｯｶｸｱﾅB JIS B1176 M1	BOLT;HEX SOC HD	66			
119	1	108R016Z130B	ﾛｯｶｸｱﾅB JIS B1180 M1	BOLT;HEX SOC HD	8			
120	1	LUC0118	ﾛｯｶｸｱﾅB	BOLT;HEX SOC HD	4			
121	1	-------	ﾒｲﾊﾞﾝ;ｷﾊﾞﾝ	NAMEPLATE;SER NO.	1			
122	1	-------	ｽｸﾘｭｰ ﾄﾞﾗｲﾌﾞ	SCREW	2			
123	1	-------	ﾌﾟﾗｸﾞ	PLUG	5			
124	1	LA011120	ﾛｯｶｸｱﾅB	BOLT;HEX SOC HD	4			
125	1	-------	ｽﾌﾟｰﾙ ASS'Y	SPOOL	1			
126	1	LR015290	ｷｬｯﾌﾟ	CAP	1			
127	1	LR00579	ｷｬｯﾌﾟ	CAP	2			

https://truckmanualshub.com/

20 [21 ~ 29] 21 [22 ~ 29]

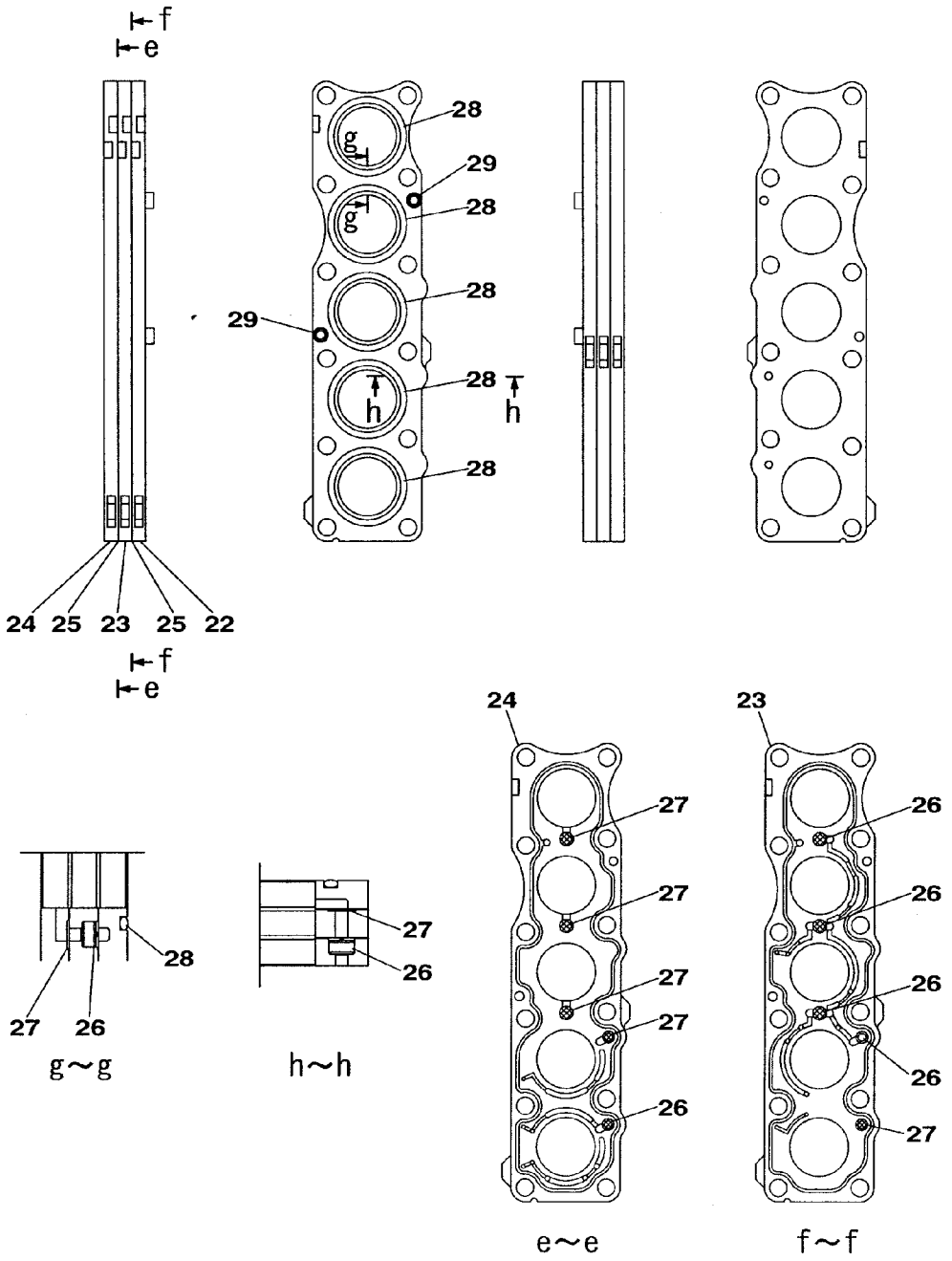

KRJ16012

https://truckmanualshub.com/

VALVE;CONTROL	ﾊﾞﾙﾌﾞ;ｺﾝﾄﾛｰﾙ	ZAJ313L0154 000 16/20	000

符号 ITEM	構成 COMPO	部品番号 PART NO.	部品名	PART NAME	個数 Q'TY	互換 ICA	代替部品 REPLACEABLE PART	備考 MEMO
70	1	LH00248	ﾌﾗﾝｼﾞ	FLANGE;SPL	6			
71	1	LPC0180	ﾎﾟﾍﾟｯﾄ	POPPET	2			
72	1	LSC0227	ｽﾌﾟﾘﾝｸﾞ ﾄｸｼｭ	SPRING;SPL	2			
73	1	LJ00731	ｵﾘﾌｨｽ	ORIFICE	1			
74	1	LBQ0062	O-ﾘﾝｸﾞ JISB2401 1BP6	O-RING	27			
75	1	LR015280	ﾎﾞﾃﾞｨ ASSY	BODY	1			
76	1	LH005410	ﾌﾗﾝｼﾞ	FLANGE;SPL	1			
77	1	LJ016050	ﾎﾟﾍﾟｯﾄ	POPPET	1			
78	1	LG006510	ｽﾌﾟﾘﾝｸﾞ	SPRING;SPL	1			
79	1	LLC0082	ﾌﾟﾗｸﾞ	PLUG	1			
80	1	LBQ6910	O-ﾘﾝｸﾞ	O-RING	1			
81	1	LSC0094	ｽﾌﾟﾘﾝｸﾞ	SPRING;SPL	1			
82	1	LJ014680	ﾎﾟﾍﾟｯﾄ	POPPET	1			
83	1	LJ00730	ﾎﾟﾍﾟｯﾄ	POPPET	1			
84	1	LH00250	ﾌﾗﾝｼﾞ	FLANGE;SPL	2			
85	1	LH004960	ｽﾍﾟｰｻ	SPACER	2			
86	1	LBQ0251	O-ﾘﾝｸﾞ JISB2401 1AG2	O-RING	2			
87	1	LBB0253	ﾘﾝｸﾞ;ﾊﾞｯｸｱｯﾌﾟ	RING;BACK-UP	2			
88	1	LBQ0553	O-ﾘﾝｸﾞ JISB2401 1BG5	O-RING	1			
89	1	LH004970	ｽﾍﾟｰｻ	SPACER	1			
90	1	LH004980	ｽﾘｰﾌﾞ	SLEEVE	1			
91	1	LPC0098	ﾎﾟﾍﾟｯﾄ	POPPET	1			
92	1	LSC0187	ｽﾌﾟﾘﾝｸﾞ	SPRING;SPL	1			
93	1	LH004990	ﾌﾗﾝｼﾞ ﾄｸｼｭ	FLANGE;SPL	1			
94	1	LE012520	O-ﾘﾝｸﾞ ﾄｸｼｭ ﾌﾂｿ	O-RING	3			
95	1	LE014890	O-ﾘﾝｸﾞ	O-RING	14			
96	1	LBQ0102	O-ﾘﾝｸﾞ JISB2401 1BP1	O-RING	12			
97	1	LJ014710	ﾊﾞﾙﾌﾞ ｱﾝﾁﾄﾞﾘﾌﾄ ASSY	VALVE;SPL	2			
98	1A	LJ014720	ﾊﾞﾙﾌﾞ;ﾘﾘｰﾌ KIT	VALVE;RELIEF	1			
99	2	LBQ6912	O-ﾘﾝｸﾞ AS568-912-HS9	O-RING	1			
100	1A	LJ014730	ﾊﾞﾙﾌﾞ;ﾘﾘｰﾌ KIT	VALVE;RELIEF	5			
101	2	LBQ6912	O-ﾘﾝｸﾞ AS568-912-HS9	O-RING	5			
102	2	LBQ0102	O-ﾘﾝｸﾞ JISB2401 1BP1	O-RING	5			
103	1A	LJ014740	ﾊﾞﾙﾌﾞ;ﾘﾘｰﾌ KIT	VALVE;RELIEF	1			
104	2	LBQ6912	O-ﾘﾝｸﾞ AS568-912-HS9	O-RING	1			
105	2	LBQ0102	O-ﾘﾝｸﾞ JISB2401 1BP1	O-RING	1			
106	1A	LJ014750	ﾊﾞﾙﾌﾞ;ﾘﾘｰﾌ KIT	VALVE;RELIEF	2			
107	2	LBQ0102	O-ﾘﾝｸﾞ JISB2401 1BP1	O-RING	2			
108	2	LBQ6912	O-ﾘﾝｸﾞ AS568-912-HS9	O-RING	2			
109	1	LJ014700	ﾊﾞﾙﾌﾞ;ﾘﾘｰﾌ ASS'Y	VALVE;RELIEF	2			
110	1A	LNC0218	ﾌﾟﾗｸﾞ S/A	PLUG	4			
111	2	LBQ0182	O-ﾘﾝｸﾞ JISB2401 1BP1	O-RING	4			
112	1A	LNC0217	ﾌﾟﾗｸﾞ S/A	PLUG	10			
113	2	LBQ0142	O-ﾘﾝｸﾞ JISB2401 1BP1	O-RING	10			
114	1A	LNC0238	ﾌﾟﾗｸﾞ S/A	PLUG	3			
115	2	LK00328	ﾌﾟﾗｸﾞ	PLUG	3			
116	2	LBQ0112	O-ﾘﾝｸﾞ JISB2401 1BP1	O-RING	3			
117	1	108R010Z055B	ﾛｯｶｸｱﾅB JIS B 1180 M	BOLT;HEX SOC HD	32			
118	1	108R010Z040B	ﾛｯｶｸｱﾅB JIS B1176 M1	BOLT;HEX SOC HD	66			
119	1	108R016Z130B	ﾛｯｶｸｱﾅB JIS B1180 M1	BOLT;HEX SOC HD	8			
120	1	LUC0118	ﾛｯｶｸｱﾅB	BOLT;HEX SOC HD	4			
121	1	-------	ﾒｲﾊﾞﾝ;ｷﾊﾞﾝ	NAMEPLATE;SER NO.	1			
122	1	-------	ｽｸﾘｭｰ ﾄﾞﾗｲﾌﾞ	SCREW	2			
123	1	-------	ﾌﾟﾗｸﾞ	PLUG	5			
124	1	LA011120	ﾛｯｶｸｱﾅB	BOLT;HEX SOC HD	4			
125	1	-------	ｽﾌﾟｰﾙ ASS'Y	SPOOL	1			
126	1	LR015290	ｷｬｯﾌﾟ	CAP	1			
127	1	LR00579	ｷｬｯﾌﾟ	CAP	2			
128	1	LBQ5219	O-ﾘﾝｸﾞ	O-RING	2			
129	1	LBQ0112	O-ﾘﾝｸﾞ JISB2401 1BP1	O-RING	2			
130	1	LK00301	ﾌﾟﾗｸﾞ	PLUG	2			
131	1A	LK00302	ﾌﾟﾗｸﾞ ASSY	PLUG	2			
132	2	LPC0256	ﾌﾟﾗｸﾞ	PLUG	2			
133	2	LBQ0242	O-ﾘﾝｸﾞ JISB2401 1BP2	O-RING	2			
134	1A	LPC0259	ﾌﾟﾗｸﾞ ASSY	PLUG	2			
135	2	LK00327	ﾌﾟﾗｸﾞ	PLUG	2			
136	2	LBQ6912	O-ﾘﾝｸﾞ AS568-912-HS9	O-RING	2			
137	2	LBQ0080	O-ﾘﾝｸﾞ JISB2401 1AP8	O-RING	2			

https://truckmanualshub.com/

45 [46 ~ 53] 46 [47 ~ 53]

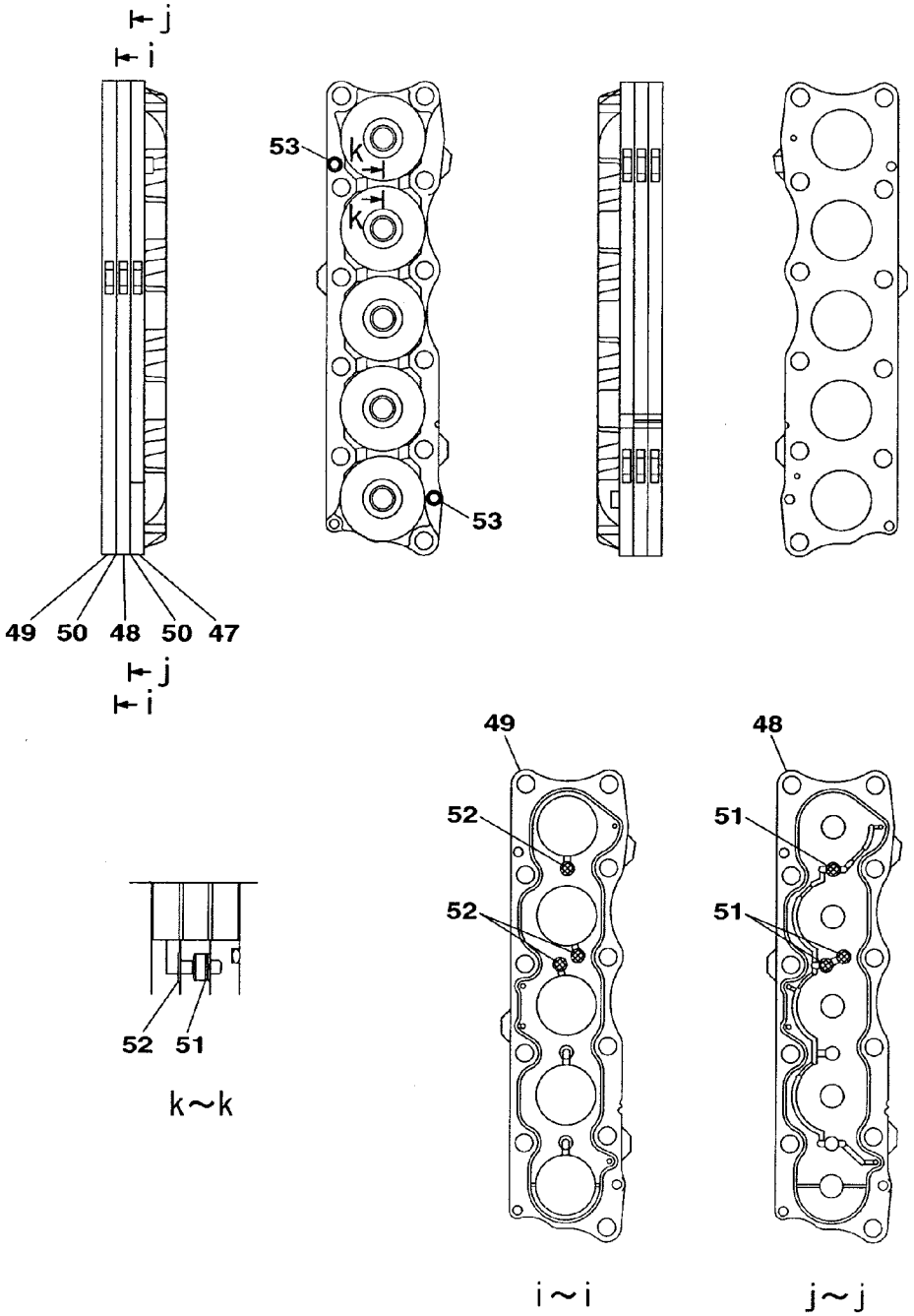

KRJ16012

https://truckmanualshub.com/

VALVE;CONTROL	ﾊﾞﾙﾌﾞ;ｺﾝﾄﾛｰﾙ	ZAJ313L0154 000 18/20	000

符号 ITEM	構成 COMPO	部品番号 PART NO.	部品名	PART NAME	個数 Q'TY	互換 ICA	代替部品 REPLACEABLE PART	備考 MEMO
80	1	LBQ6910	O-ﾘﾝｸﾞ	O-RING	1			
81	1	LSC0094	ｽﾌﾟﾘﾝｸﾞ	SPRING;SPL	1			
82	1	LJ014680	ﾎﾟﾍﾟｯﾄ	POPPET	1			
83	1	LJ00730	ﾎﾟﾍﾟｯﾄ	POPPET	1			
84	1	LH00250	ﾌﾗﾝｼﾞ	FLANGE;SPL	2			
85	1	LH004960	ｽﾍﾟｰｻ	SPACER	2			
86	1	LBQ0251	O-ﾘﾝｸﾞ JISB2401 1AG2	O-RING	2			
87	1	LBB0253	ﾘﾝｸﾞ;ﾊﾞｯｸｱｯﾌﾟ	RING;BACK-UP	2			
88	1	LBQ0553	O-ﾘﾝｸﾞ JISB2401 1BG5	O-RING	1			
89	1	LH004970	ｽﾍﾟｰｻ	SPACER	1			
90	1	LH004980	ｽﾘｰﾌﾞ	SLEEVE	1			
91	1	LPC0098	ﾎﾟﾍﾟｯﾄ	POPPET	1			
92	1	LSC0187	ｽﾌﾟﾘﾝｸﾞ	SPRING;SPL	1			
93	1	LH004990	ﾌﾗﾝｼﾞ ﾄｸｼｭ	FLANGE;SPL	1			
94	1	LE012520	O-ﾘﾝｸﾞ ﾄｸｼｭ ﾌﾂﾂ	O-RING	3			
95	1	LE014890	O-ﾘﾝｸﾞ	O-RING	14			
96	1	LBQ0102	O-ﾘﾝｸﾞ JISB2401 1BP1	O-RING	12			
97	1	LJ014710	ﾊﾞﾙﾌﾞ ｱﾝﾁﾄﾞﾘﾌﾄ ASSY	VALVE;SPL	2			
98	1A	LJ014720	ﾊﾞﾙﾌﾞ;ﾘﾘｰﾌ KIT	VALVE;RELIEF	1			
99	2	LBQ6912	O-ﾘﾝｸﾞ AS568-912-HS9	O-RING	1			
100	1A	LJ014730	ﾊﾞﾙﾌﾞ;ﾘﾘｰﾌ KIT	VALVE;RELIEF	5			
101	2	LBQ6912	O-ﾘﾝｸﾞ AS568-912-HS9	O-RING	5			
102	2	LBQ0102	O-ﾘﾝｸﾞ JISB2401 1BP1	O-RING	5			
103	1A	LJ014740	ﾊﾞﾙﾌﾞ;ﾘﾘｰﾌ KIT	VALVE;RELIEF	1			
104	2	LBQ6912	O-ﾘﾝｸﾞ AS568-912-HS9	O-RING	1			
105	2	LBQ0102	O-ﾘﾝｸﾞ JISB2401 1BP1	O-RING	1			
106	1A	LJ014750	ﾊﾞﾙﾌﾞ;ﾘﾘｰﾌ KIT	VALVE;RELIEF	2			
107	2	LBQ0102	O-ﾘﾝｸﾞ JISB2401 1BP1	O-RING	2			
108	2	LBQ6912	O-ﾘﾝｸﾞ AS568-912-HS9	O-RING	2			
109	1	LJ014700	ﾊﾞﾙﾌﾞ;ﾘﾘｰﾌ ASS'Y	VALVE;RELIEF	2			
110	1A	LNC0218	ﾌﾟﾗｸﾞ S/A	PLUG	4			
111	2	LBQ0182	O-ﾘﾝｸﾞ JISB2401 1BP1	O-RING	4			
112	1A	LNC0217	ﾌﾟﾗｸﾞ S/A	PLUG	10			
113	2	LBQ0142	O-ﾘﾝｸﾞ JISB2401 1BP1	O-RING	10			
114	1A	LNC0238	ﾌﾟﾗｸﾞ S/A	PLUG	3			
115	2	LK00328	ﾌﾟﾗｸﾞ	PLUG	3			
116	2	LBQ0112	O-ﾘﾝｸﾞ JISB2401 1BP1	O-RING	3			
117	1	108R010Z055B	ﾛｯｶｸｱﾅB JIS B 1180 M	BOLT;HEX SOC HD	32			
118	1	108R010Z040B	ﾛｯｶｸｱﾅB JIS B1176 M1	BOLT;HEX SOC HD	66			
119	1	108R016Z130B	ﾛｯｶｸｱﾅB JIS B1180 M1	BOLT;HEX SOC HD	8			
120	1	LUC0118	ﾛｯｶｸｱﾅB	BOLT;HEX SOC HD	4			
121	1	-------	ﾒｲﾊﾞﾝ;ｷﾊﾞﾝ	NAMEPLATE;SER NO.	1			
122	1	-------	ｽｸﾘｭｰ ﾄﾞﾗｲﾌﾞ	SCREW	2			
123	1	-------	ﾌﾟﾗｸﾞ	PLUG	5			
124	1	LA011120	ﾛｯｶｸｱﾅB	BOLT;HEX SOC HD	4			
125	1	-------	ｽﾌﾟｰﾙ ASS'Y	SPOOL	1			
126	1	LR015290	ｷｬｯﾌﾟ	CAP	1			
127	1	LR00579	ｷｬｯﾌﾟ	CAP	2			
128	1	LBQ5219	O-ﾘﾝｸﾞ	O-RING	2			
129	1	LBQ0112	O-ﾘﾝｸﾞ JISB2401 1BP1	O-RING	2			
130	1	LK00301	ﾌﾟﾗｸﾞ	PLUG	2			
131	1A	LK00302	ﾌﾟﾗｸﾞ ASSY	PLUG	2			
132	2	LPC0256	ﾌﾟﾗｸﾞ	PLUG	2			
133	2	LBQ0242	O-ﾘﾝｸﾞ JISB2401 1BP2	O-RING	2			
134	1A	LPC0259	ﾌﾟﾗｸﾞ ASSY	PLUG	2			
135	2	LK00327	ﾌﾟﾗｸﾞ	PLUG	2			
136	2	LBQ6912	O-ﾘﾝｸﾞ AS568-912-HS9	O-RING	2			
137	2	LBQ0080	O-ﾘﾝｸﾞ JISB2401 1AP8	O-RING	2			
138	2	LBB6110	ﾘﾝｸﾞ;ﾊﾞｯｸｱｯﾌﾟ	RING;BACK-UP	2			
139	1	LA011130	ﾛｯｶｸｱﾅB	BOLT;HEX SOC HD	2			
140	1	LT001660	ﾊｳｼﾞﾝｸﾞ ｱｳﾄﾚｯﾄ	HOUSING;SPL	1			
141	1	LB011900	ﾀｲﾛｯﾄﾞ	ROD;TIE	4			
142	1	LUC0094	ﾅｯﾄ	NUT;SPL	4			
143	1A	LJ014760	ｽﾌﾟｰﾙ ｾｸｼｮﾝ S/A	SPOOL	1			
144	2	LBQ0553	O-ﾘﾝｸﾞ JISB2401 1BG5	O-RING	1			
145	2	LE012520	O-ﾘﾝｸﾞ ﾄｸｼｭ ﾌﾂﾂ	O-RING	3			
146	1A	LJ014770	ｲﾝﾚｯﾄｾｸｼｮﾝ;ﾊﾞﾙﾌﾞ S/A	INLET-SECTION;VALVE	1			
147	2	LBQ0553	O-ﾘﾝｸﾞ JISB2401 1BG5	O-RING	1			

https://truckmanualshub.com/

54 [55 ~ 62] 55 [56 ~ 62]

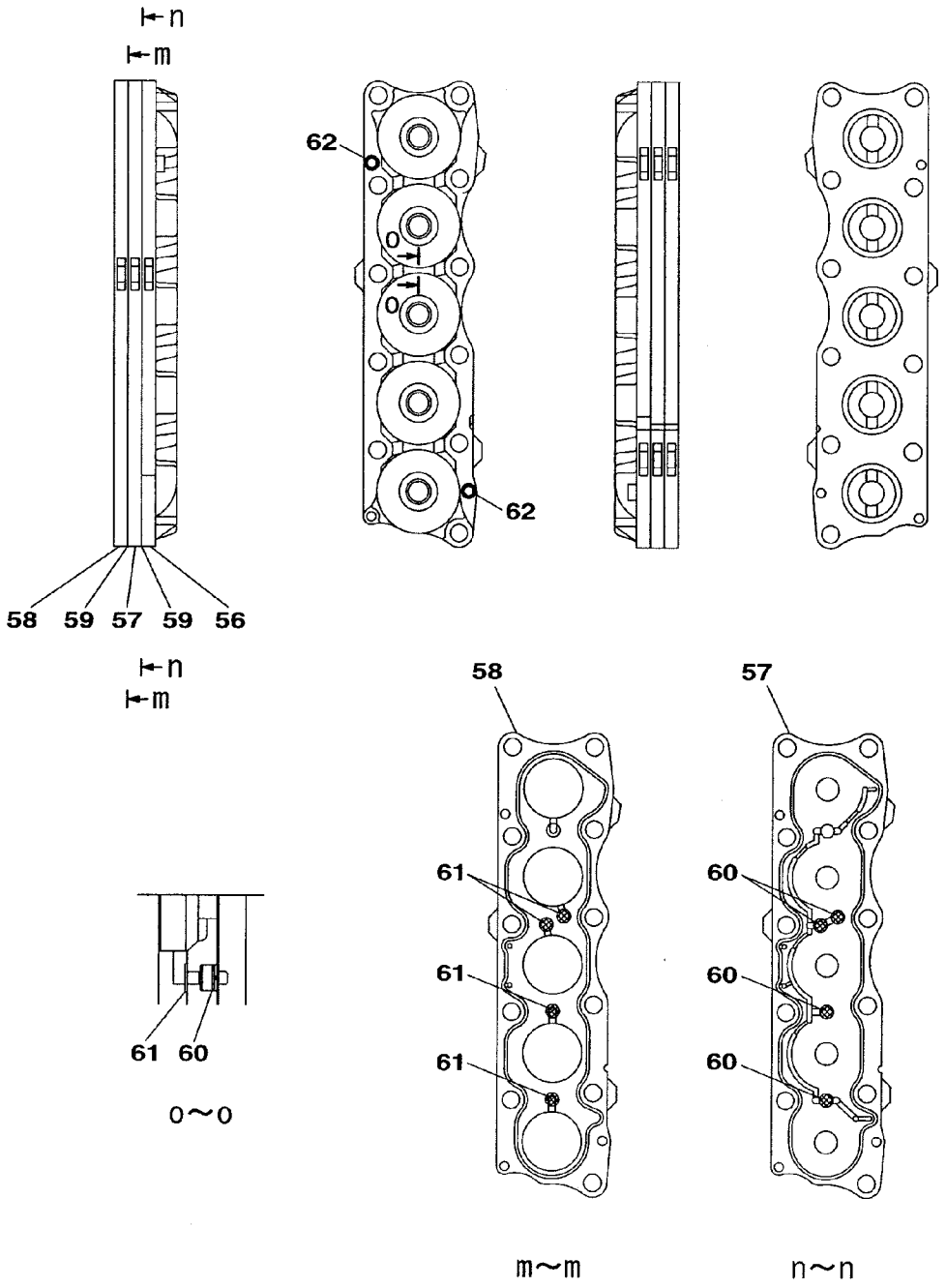

KRJ16012

https://truckmanualshub.com/

VALVE;CONTROL	ﾊﾞﾙﾌﾞ;ｺﾝﾄﾛｰﾙ	ZAJ313L0154 000 20/20	000

符号 ITEM	構成 COMPO	部品番号 PART NO.	部品名	PART NAME	個数 Q'TY	互換 ICA	代替部品 REPLACEABLE PART	備考 MEMO
90	1	LH004980	ｽﾘｰﾌﾞ	SLEEVE	1			
91	1	LPC0098	ﾎﾟﾍﾟｯﾄ	POPPET	1			
92	1	LSC0187	ｽﾌﾟﾘﾝｸﾞ	SPRING;SPL	1			
93	1	LH004990	ﾌﾗﾝｼﾞ ﾄｸｼｭ	FLANGE;SPL	1			
94	1	LE012520	O-ﾘﾝｸﾞ ﾄｸｼｭ ﾌﾂｿ	O-RING	3			
95	1	LE014890	O-ﾘﾝｸﾞ	O-RING	14			
96	1	LBQ0102	O-ﾘﾝｸﾞ JISB2401 1BP1	O-RING	12			
97	1	LJ014710	ﾊﾞﾙﾌﾞ ｱﾝﾁﾄﾞﾘﾌﾄ ASSY	VALVE;SPL	2			
98	1A	LJ014720	ﾊﾞﾙﾌﾞ;ﾘﾘｰﾌ KIT	VALVE;RELIEF	1			
99	2	LBQ6912	O-ﾘﾝｸﾞ AS568-912-HS9	O-RING	1			
100	1A	LJ014730	ﾊﾞﾙﾌﾞ;ﾘﾘｰﾌ KIT	VALVE;RELIEF	5			
101	2	LBQ6912	O-ﾘﾝｸﾞ AS568-912-HS9	O-RING	5			
102	2	LBQ0102	O-ﾘﾝｸﾞ JISB2401 1BP1	O-RING	5			
103	1A	LJ014740	ﾊﾞﾙﾌﾞ;ﾘﾘｰﾌ KIT	VALVE;RELIEF	1			
104	2	LBQ6912	O-ﾘﾝｸﾞ AS568-912-HS9	O-RING	1			
105	2	LBQ0102	O-ﾘﾝｸﾞ JISB2401 1BP1	O-RING	1			
106	1A	LJ014750	ﾊﾞﾙﾌﾞ;ﾘﾘｰﾌ KIT	VALVE;RELIEF	2			
107	2	LBQ0102	O-ﾘﾝｸﾞ JISB2401 1BP1	O-RING	2			
108	2	LBQ6912	O-ﾘﾝｸﾞ AS568-912-HS9	O-RING	2			
109	1	LJ014700	ﾊﾞﾙﾌﾞ;ﾘﾘｰﾌ ASS'Y	VALVE;RELIEF	2			
110	1A	LNC0218	ﾌﾟﾗｸﾞ S/A	PLUG	4			
111	2	LBQ0182	O-ﾘﾝｸﾞ JISB2401 1BP1	O-RING	4			
112	1A	LNC0217	ﾌﾟﾗｸﾞ S/A	PLUG	10			
113	2	LBQ0142	O-ﾘﾝｸﾞ JISB2401 1BP1	O-RING	10			
114	1A	LNC0238	ﾌﾟﾗｸﾞ S/A	PLUG	3			
115	2	LK00328	ﾌﾟﾗｸﾞ	PLUG	3			
116	2	LBQ0112	O-ﾘﾝｸﾞ JISB2401 1BP1	O-RING	3			
117	1	108R010Z055B	ﾛｯｶｸｱﾅB JIS B 1180 M	BOLT;HEX SOC HD	32			
118	1	108R010Z040B	ﾛｯｶｸｱﾅB JIS B1176 M1	BOLT;HEX SOC HD	66			
119	1	108R016Z130B	ﾛｯｶｸｱﾅB JIS B1180 M1	BOLT;HEX SOC HD	8			
120	1	LUC0118	ﾛｯｶｸｱﾅB	BOLT;HEX SOC HD	4			
121	1	-------	ﾒｲﾊﾞﾝ;ｷﾊﾞﾝ	NAMEPLATE;SER NO.	1			
122	1	-------	ｽｸﾘｭｰ ﾄﾞﾗｲﾌﾞ	SCREW	2			
123	1	-------	ﾌﾟﾗｸﾞ	PLUG	5			
124	1	LA011120	ﾛｯｶｸｱﾅB	BOLT;HEX SOC HD	4			
125	1	-------	ｽﾌﾟｰﾙ ASS'Y	SPOOL	1			
126	1	LR015290	ｷｬｯﾌﾟ	CAP	1			
127	1	LR00579	ｷｬｯﾌﾟ	CAP	2			
128	1	LBQ5219	O-ﾘﾝｸﾞ	O-RING	2			
129	1	LBQ0112	O-ﾘﾝｸﾞ JISB2401 1BP1	O-RING	2			
130	1	LK00301	ﾌﾟﾗｸﾞ	PLUG	2			
131	1A	LK00302	ﾌﾟﾗｸﾞ ASSY	PLUG	2			
132	2	LPC0256	ﾌﾟﾗｸﾞ	PLUG	2			
133	2	LBQ0242	O-ﾘﾝｸﾞ JISB2401 1BP2	O-RING	2			
134	1A	LPC0259	ﾌﾟﾗｸﾞ ASSY	PLUG	2			
135	2	LK00327	ﾌﾟﾗｸﾞ	PLUG	2			
136	2	LBQ6912	O-ﾘﾝｸﾞ AS568-912-HS9	O-RING	2			
137	2	LBQ0080	O-ﾘﾝｸﾞ JISB2401 1AP8	O-RING	2			
138	2	LBB6110	ﾘﾝｸﾞ;ﾊﾞｯｸｱｯﾌﾟ	RING;BACK-UP	2			
139	1	LA011130	ﾛｯｶｸｱﾅB	BOLT;HEX SOC HD	2			
140	1	LT001660	ﾊｳｼﾞﾝｸﾞ ｱｳﾄﾚｯﾄ	HOUSING;SPL	1			
141	1	LB011900	ﾀｲﾛｯﾄﾞ	ROD;TIE	4			
142	1	LUC0094	ﾅｯﾄ	NUT;SPL	4			
143	1A	LJ014760	ｽﾌﾟｰﾙ ｾｸｼｮﾝ S/A	SPOOL	1			
144	2	LBQ0553	O-ﾘﾝｸﾞ JISB2401 1BG5	O-RING	1			
145	2	LE012520	O-ﾘﾝｸﾞ ﾄｸｼｭ ﾌﾂｿ	O-RING	3			
146	1A	LJ014770	ｲﾝﾚｯﾄｾｸｼｮﾝ;ﾊﾞﾙﾌﾞ S/A	INLET-SECTION;VALVE	1			
147	2	LBQ0553	O-ﾘﾝｸﾞ JISB2401 1BG5	O-RING	1			
148	2	LE012520	O-ﾘﾝｸﾞ ﾄｸｼｭ ﾌﾂｿ	O-RING	3			
149	1A	LJ014780	ﾊﾞﾙﾌﾞ;ﾘﾘｰﾌ KIT	VALVE;RELIEF	1			
150	2	LBQ6908	O-ﾘﾝｸﾞ	O-RING	1			
151	2	LBQ0102	O-ﾘﾝｸﾞ JISB2401 1BP1	O-RING	1			
152	1	LLC0045	ﾌﾟﾗｸﾞ S/A	PLUG	1			

https://truckmanualshub.com/

VALVE;SOLENOID	ﾊﾞﾙﾌﾞ;ｿﾚﾉｲﾄﾞ (5ﾚﾝ)	ZAJ314L0014 000 1/2	000

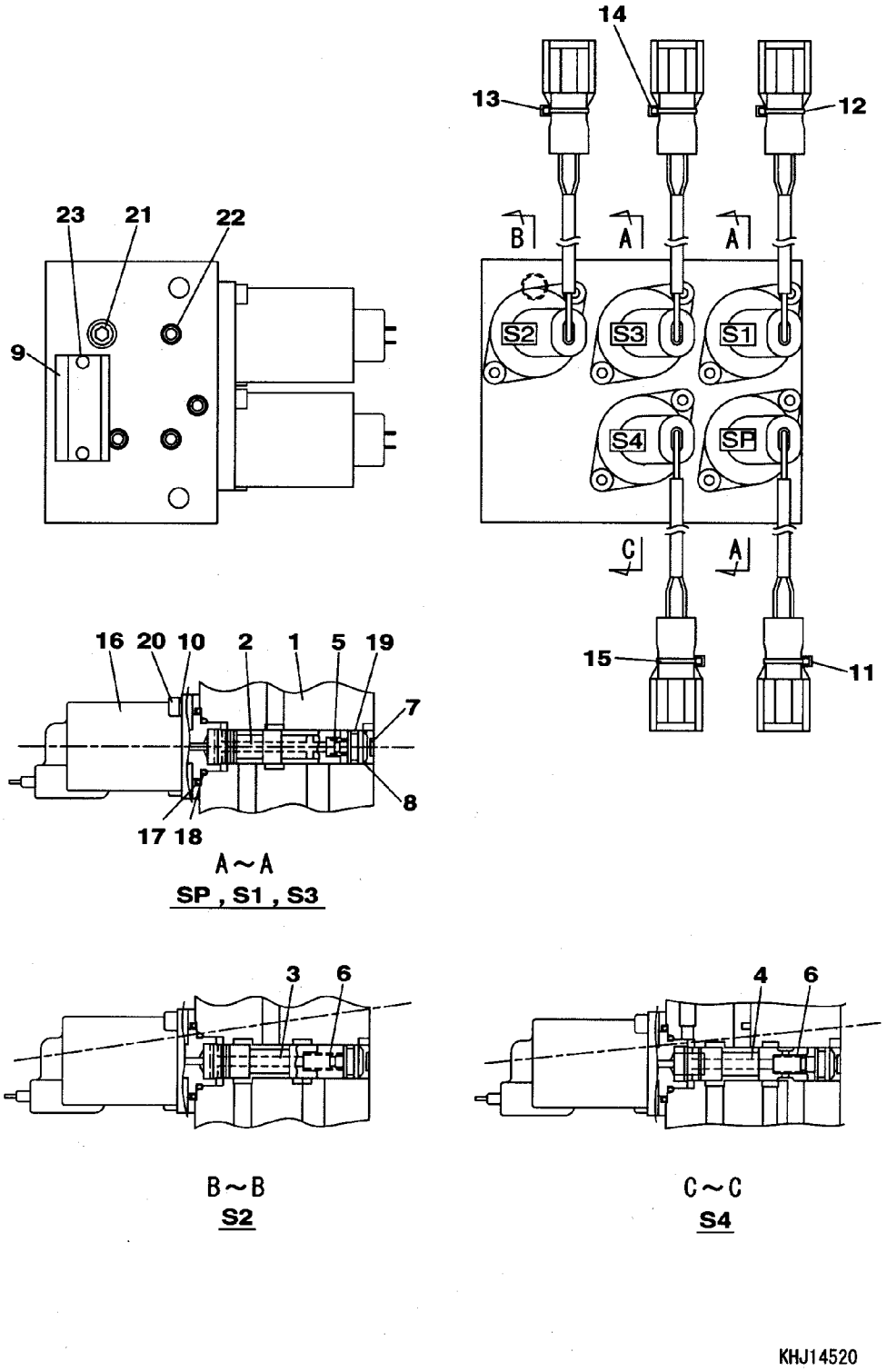

https://truckmanualshub.com/

VALVE;SOLENOID	ﾊﾞﾙﾌﾞ;ｿﾚﾉｲﾄﾞ (5ﾚﾝ)	ZAJ314L0014 000 2/2	000

符号 ITEM	構成 COMPO	部品番号 PART NO.	部品名	PART NAME	個数 Q'TY	互換 ICA	代替部品 REPLACEABLE PART	備考 MEMO
		KHJ14520			1			
1	1	-------	ﾎﾞﾃﾞｲ	BODY	1			
2	1	-------	ｽﾌﾟｰﾙ	SPOOL	3			
3	1	-------	ｽﾌﾟｰﾙ	SPOOL	1			
4	1	-------	ｽﾌﾟｰﾙ	SPOOL	1			
5	1	LG006010	ｽﾌﾟﾘﾝｸﾞ;ｱｯｼｭｸ	SPRING;COMPRESSION	3			
6	1	LG006020	ｽﾌﾟﾘﾝｸﾞ;ｱｯｼｭｸ	SPRING;COMPRESSION	2			
7	1	LR015080	ｱﾀﾞﾌﾟﾀ	ADPT;SPL	5			
8	1	LA010960	ｱﾅﾄﾒﾜ	RING;SNAP	5			
9	1	-------	ﾒｲﾊﾞﾝ ﾄｸｼｭ	NAMEPLATE;SPL	1			
10	1	LA010970	SW	WASHER;SPRING	10			
11	1	LD001470	ﾊﾞﾝﾄﾞ;ｿｸｾﾝ T18R-BLU	BAND;HARNESS	1			
12	1	LD001450	ﾊﾞﾝﾄﾞ;ｿｸｾﾝ T18R-RED	BAND;HARNESS	1			
13	1	LD001440	ﾊﾞﾝﾄﾞ;ｿｸｾﾝ T18R	BAND;HARNESS	1			
14	1	LD001490	ﾊﾞﾝﾄﾞ;ｿｸｾﾝ T18R-YLW	BAND;HARNESS	1			
15	1	LD001460	ﾊﾞﾝﾄﾞ;ｿｸｾﾝ T18R-GRN	BAND;HARNESS	1			
16	1A	LL001140	ｿﾚﾉｲﾄﾞ	SOLENOID	5			
17	2	LBQ5022	O-ﾘﾝｸﾞ	O-RING	5			
18	2	LBQ0182	O-ﾘﾝｸﾞ JISB2401 1BP1	O-RING	5			
19	1	LBQ0102	O-ﾘﾝｸﾞ JISB2401 1BP1	O-RING	5			
20	1	LA010980	ﾛｯｶｸｱﾅB 4X12	BOLT;HEX SOC HD	10			
21	1	LK005630	ﾌﾟﾗｸﾞ	PLUG	6			
22	1	LK005640	ﾌﾟﾗｸﾞ	PLUG	11			
23	1	-------	ﾘﾍﾞｯﾄ	RIVET;SPL	2			

https://truckmanualshub.com/

10 [11 , 12]

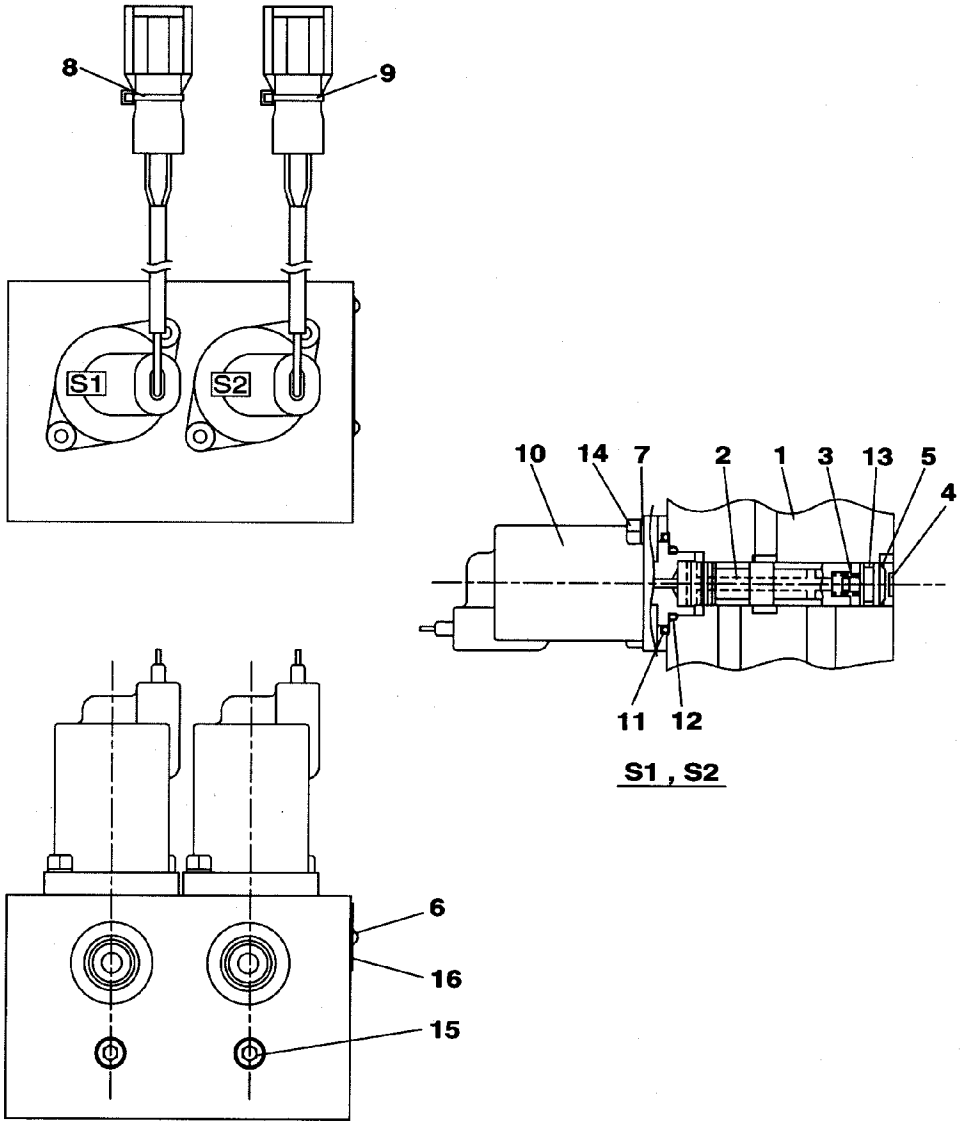

KHJ14780

https://truckmanualshub.com/

VALVE;SOLENOID	ﾊﾞﾙﾌﾞ;ｿﾚﾉｲﾄﾞ (2ﾚﾝ)	ZAJ314L0015 000 2/2	000

符号 ITEM	構成 COMPO	部品番号 PART NO.	部品名	PART NAME	個数 Q'TY	互換 ICA	代替部品 REPLACEABLE PART	備考 MEMO
		KHJ14780			1			
1	1	-------	ﾎﾞﾃﾞｲ	BODY	1			
2	1	-------	ｽﾌﾟｰﾙ	SPOOL	2			
3	1	LG006010	ｽﾌﾟﾘﾝｸﾞ;ｱﾂｼｭｸ	SPRING;COMPRESSION	2			
4	1	LR015080	ｱﾀﾞﾌﾟﾀ	ADPT;SPL	2			
5	1	LA010960	ｱﾅﾄﾒﾜ	RING;SNAP	2			
6	1	-------	ﾒｲﾊﾞﾝ ﾄｸｼｭ	NAMEPLATE;SPL	1			
7	1	LA010970	SW	WASHER;SPRING	4			
8	1	LD001470	ﾊﾞﾝﾄﾞ;ｿｸｾﾝ T18R-BLU	BAND;HARNESS	1			
9	1	LD001450	ﾊﾞﾝﾄﾞ;ｿｸｾﾝ T18R-RED	BAND;HARNESS	1			
10	1A	LL001140	ｿﾚﾉｲﾄﾞ	SOLENOID	2			
11	2	LBQ5022	O-ﾘﾝｸﾞ	O-RING	2			
12	2	LBQ0182	O-ﾘﾝｸﾞ JISB2401 1BP1	O-RING	2			
13	1	LBQ0102	O-ﾘﾝｸﾞ JISB2401 1BP1	O-RING	2			
14	1	LA010980	ﾛｯｶｸｱﾅB 4X12	BOLT;HEX SOC HD	4			
15	1	LK005630	ﾌﾟﾗｸﾞ	PLUG	2			
16	1	-------	ﾘﾍﾞｯﾄ	RIVET;SPL	2			

https://truckmanualshub.com/

VALVE;REMOTE CONT	ﾊﾞﾙﾌﾞ;ﾘﾓｺﾝ	ZAJ316L0001 000 1/2	000

1 [2 , 3]
8 [9 , 10]

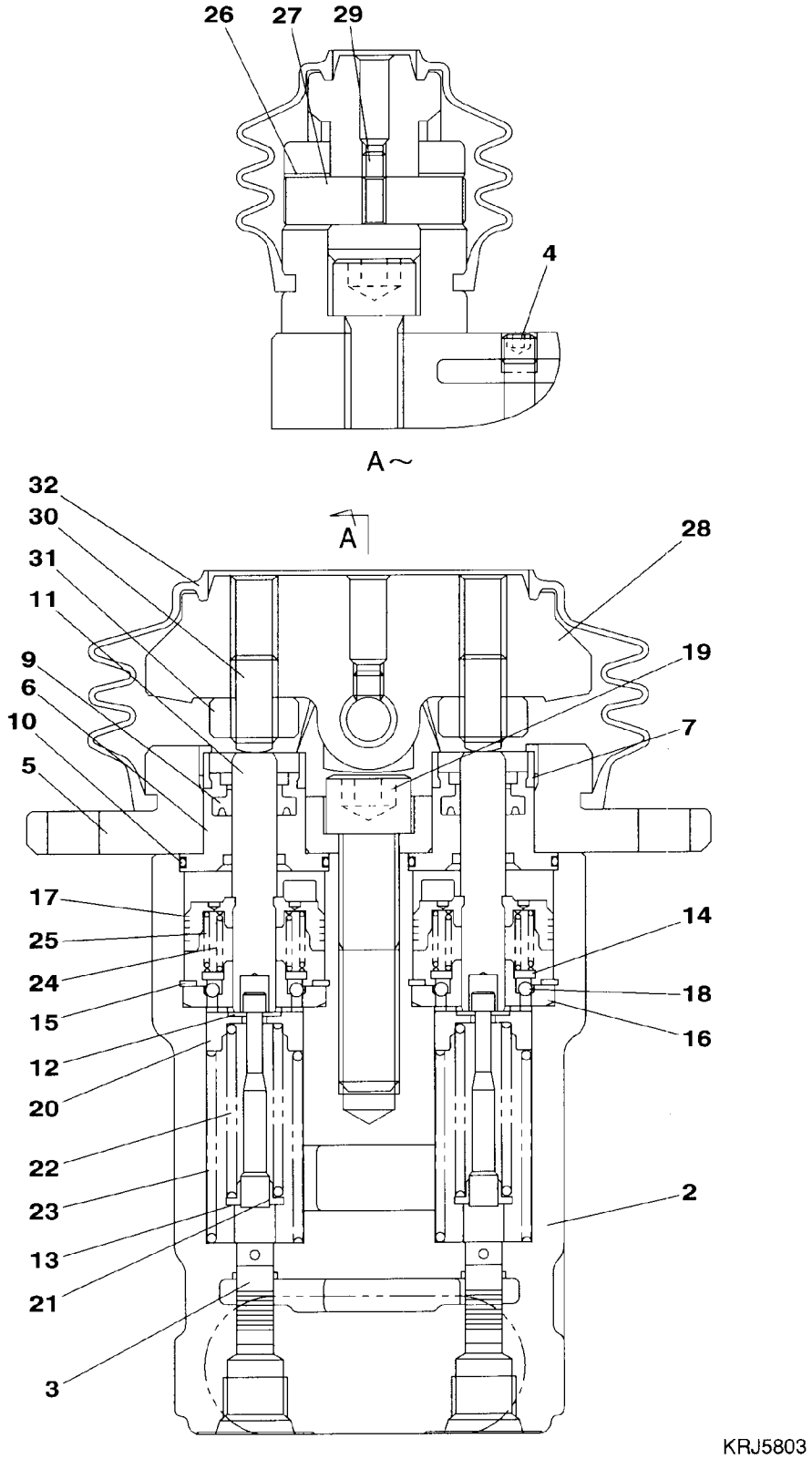

https://truckmanualshub.com/

VALVE;REMOTE CONT	ﾊﾞﾙﾌﾞ;ﾘﾓｺﾝ	ZAJ316L0001 000 2/2	000

符号 ITEM	構成 COMPO	部品番号 PART NO.	部品名	PART NAME	個数 Q'TY	互換 ICA	代替部品 REPLACEABLE PART	備考 MEMO
		KRJ5803			1			
1	1A	-------	ｷｯﾄ	KIT	1			
2	2	LWC0003	ｹｰｽ	CASE	1			
3	2	LSC0235	ｽﾌﾟｰﾙ	SPOOL	4			
4	1	LK00003	ﾌﾟﾗｸﾞ	PLUG	2			
5	1	LZC0158	ｶﾊﾞｰ	COVER	2			
6	1	LLC0128	ﾌﾟﾗｸﾞ	PLUG	4			
7	1	LWC0004	ｶｯﾌﾟ;ｸﾞﾘｽ	CUP;GREASE	4			
8	1A	LE00768	ｼｰﾙ;ｵｲﾙ	SEAL;OIL	1			
9	2	LEC0025	ﾊﾟｯｷﾝ	PACKING	4			
10	2	LBQ6025	O-ﾘﾝｸﾞ	O-RING	4			
11	1	LJC0010	ﾛｯﾄﾞ;ﾌﾟｯｼｭ	ROD;PUSH	4			
12	1	LA00056	ﾜｯｼｬ 1	WASHER	8			
13	1	LA00057	ﾜｯｼｬ 2	WASHER	4			
14	1	LSC0237	ｼｰﾄ	SEAT	4			
15	1	LMC0107	ﾘﾃｰﾅ	RETAINER	4			
16	1	LKC0005	ﾌﾞｼﾝｸﾞ	BUSHING	4			
17	1	LPC0203	ﾋﾟｽﾄﾝ	PISTON	4			
18	1	LPC0204	ﾎﾞｰﾙ;ｽﾁｰﾙ	BALL;STEEL	12			
19	1	108R012Y055R	ﾛｯｸｶｸｱﾅB M12X 55	BOLT;HEX SOC HD	2			
20	1	LSC0238	ｼｰﾄ	SEAT	4			
21	1	LUC0104	ﾜｯｼｬ	WASHER	4			
22	1	LG00330	ｽﾌﾟﾘﾝｸﾞ;ｱｯｼｭｸ	SPRING;COMPRESSION	4			
23	1	LSC0214	ｽﾌﾟﾘﾝｸﾞ ﾄｸｼｭ	SPRING;SPL	4			
24	1	LSC0239	ｽﾌﾟﾘﾝｸﾞ ﾄｸｼｭ	SPRING;SPL	4			
25	1	LSC0240	ｽﾌﾟﾘﾝｸﾞ ﾄｸｼｭ	SPRING;SPL	4			
26	1	LKC0001	ﾌﾞｼｭ ﾄｸｼｭ	BUSH;SPL	4			
27	1	LJC0003	ｼｬﾌﾄ;ｶﾑ	SHAFT;CAM	2			
28	1	LMC0085	ｶﾑ	CAM	2			
29	1	LUC0103	ｽｸﾘｭｰ	SCREW	2			
30	1	LUC0102	ｽｸﾘｭｰ	SCREW	4			
31	1	LUC0101	ﾅｯﾄ ﾛｯｸ	NUT;SPL	4			
32	1	LCC0014	ｼﾞｬﾊﾞﾗ	BELLOWS	2			

https://truckmanualshub.com/

VALVE;REMOTE CONT	ﾊﾞﾙﾌﾞ;ﾘﾓｺﾝ (ｻｷﾞｮｳﾖｳ)	ZAJ316L0023 000 1/2	000

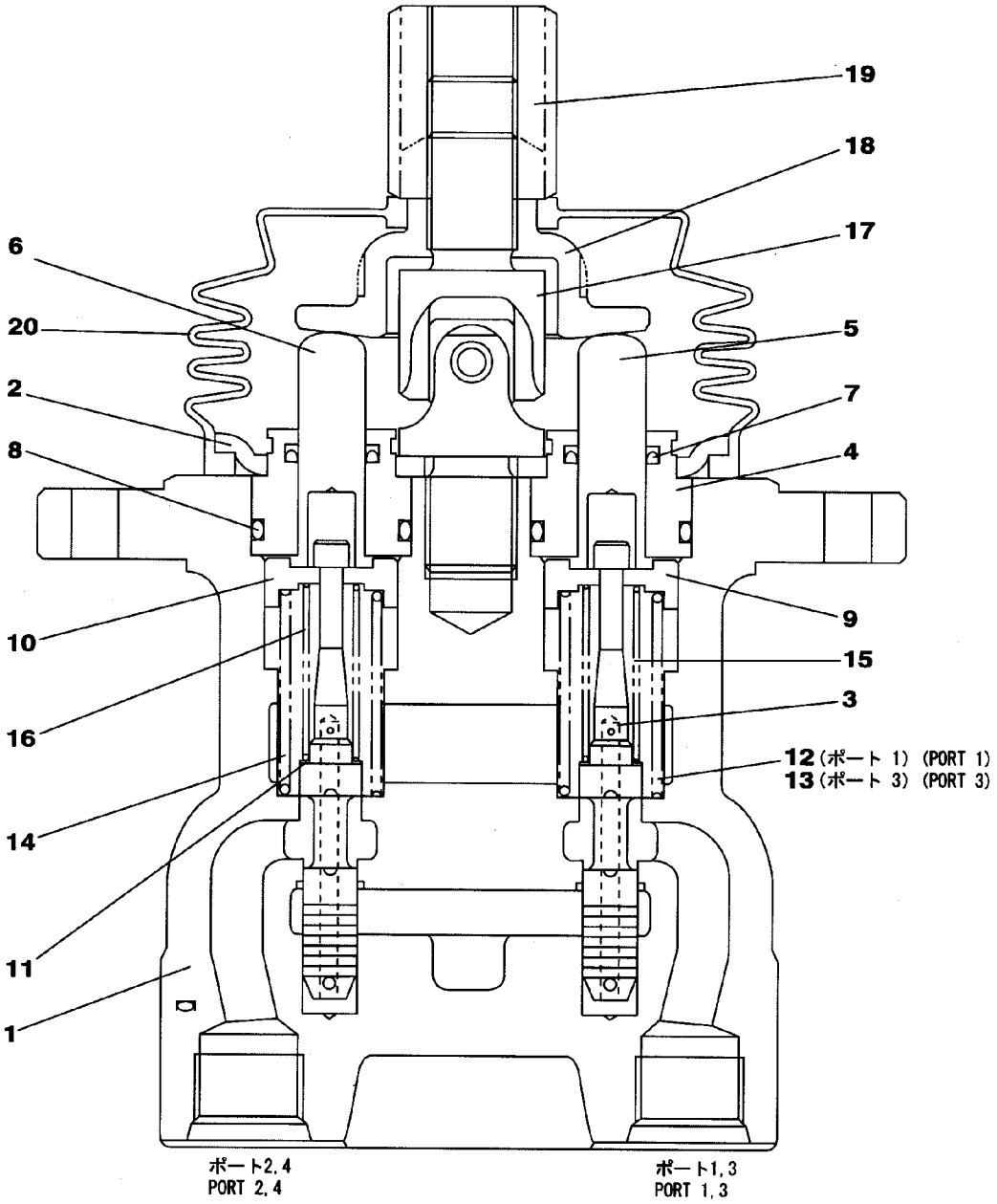

KHJ13270

https://truckmanualshub.com/

VALVE;REMOTE CONT	ﾊﾞﾙﾌﾞ;ﾘﾓｺﾝ (ｻｷﾞｮｳﾖｳ)	ZAJ316L0023 000 2/2	000

符号 ITEM	構成 COMPO	部品番号 PART NO.	部品名	PART NAME	個数 Q'TY	互換 ICA	代替部品 REPLACEABLE PART	備考 MEMO
		KHJ13270			1			
1	1	-------	ｹｰｽ	CASE	1			
2	1	LR00537	ﾌﾟﾚｰﾄ	PLATE	1			
3	1	-------	ｽﾌﾟｰﾙ	SPOOL	4			
4	1	LLC0117	ﾌﾟﾗｸﾞ	PLUG	4			
5	1	LJC0007	ﾛｯﾄﾞ;ﾌﾟｯｼｭ	ROD;PUSH	2			
6	1	LJC0008	ﾛｯﾄﾞ;ﾌﾟｯｼｭ	ROD;PUSH	2			
7	1	CDP0818	ｼｰﾙ;ｵｲﾙ	SEAL;OIL	4			
8	1	LBQ0202	O-ﾘﾝｸﾞ JISB2401 1BP2	O-RING	4			
9	1	LR00538	ｼｰﾄ;ｽﾌﾟﾘﾝｸﾞ	SEAT;SPRING	2			
10	1	LR00539	ｼｰﾄ;ｽﾌﾟﾘﾝｸﾞ	SEAT;SPRING	2			
11	1	LA00057	ﾜｯｼｬ 2	WASHER	4			
12	1	LG005730	ｽﾌﾟﾘﾝｸﾞ;ｱｯｼｭｸ	SPRING;COMPRESSION	1			
13	1	LG005470	ｽﾌﾟﾘﾝｸﾞ;ｱｯｼｭｸ	SPRING;COMPRESSION	1			
14	1	LG005740	ｽﾌﾟﾘﾝｸﾞ;ｱｯｼｭｸ	SPRING;COMPRESSION	2			
15	1	LG00312	ｽﾌﾟﾘﾝｸﾞ;ｱｯｼｭｸ	SPRING;COMPRESSION	2			
16	1	LG00313	ｽﾌﾟﾘﾝｸﾞ;ｱｯｼｭｸ	SPRING;COMPRESSION	2			
17	1	LCC0013	ｼﾞｮｲﾝﾄ	JOINT;SPL	1			
18	1	LR00540	ﾌﾟﾚｰﾄ ｴﾝｹｲ	PLATE;SPL	1			
19	1	LUC0058	ﾅｯﾄ	NUT;SPL	1			
20	1	LQ00024	ｼﾞｬﾊﾞﾗ	BELLOWS	1			

https://truckmanualshub.com/

VALVE;REMOTE CONT	ﾊﾞﾙﾌﾞ;ﾘﾓｺﾝ (ﾖﾋﾞﾖｳ ｼｬﾄﾙﾂｷ)	ZAJ316L0025 001 1/2	000

26 [27 , 28]
29 [30 ~ 32]

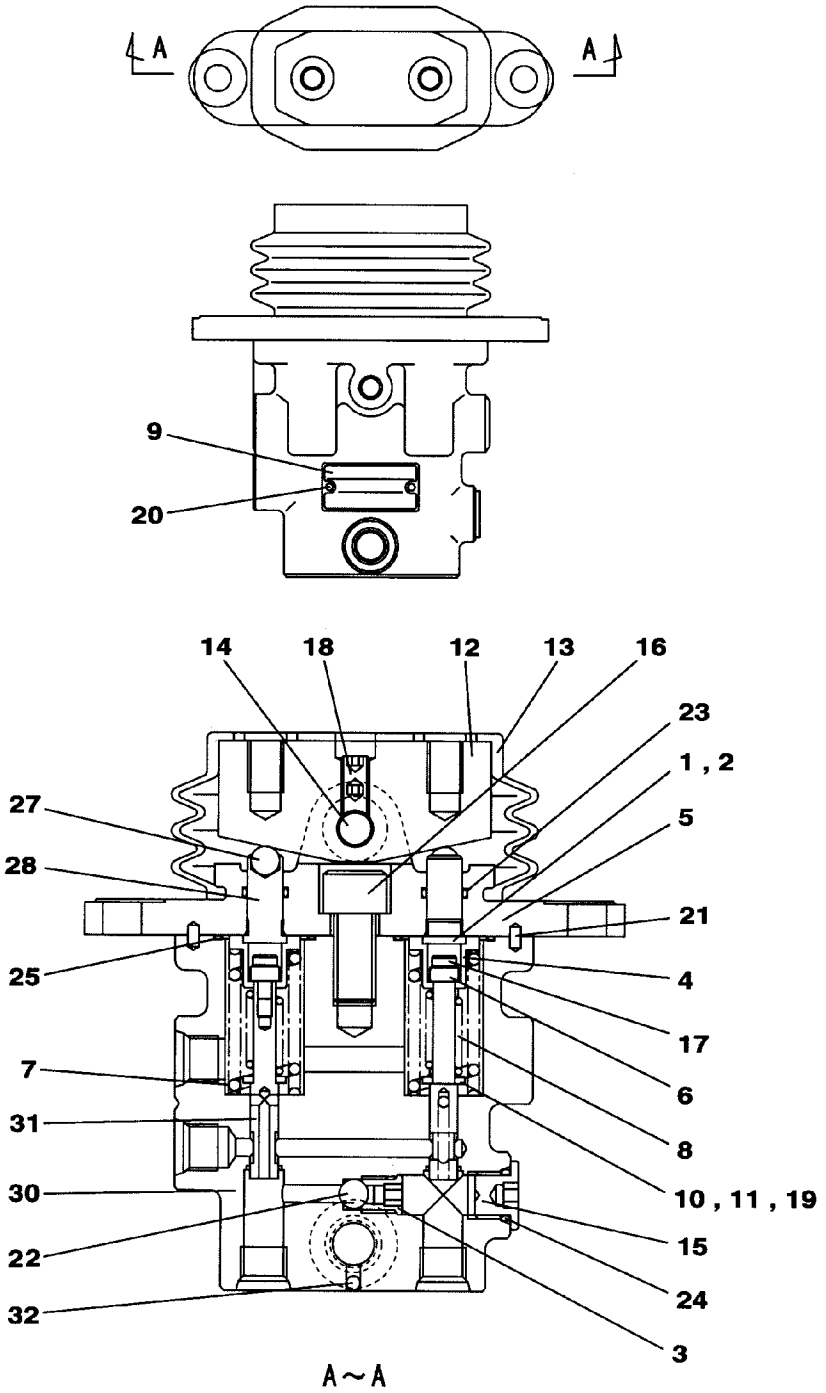

KHJ10450

https://truckmanualshub.com/

VALVE;REMOTE CONT	ﾊﾞﾙﾌﾞ;ﾘﾓｺﾝ (ﾖﾋﾞﾖｳ ｼｬﾄﾙﾂｷ)	ZAJ316L0025 001 2/2	001

符号 ITEM	構成 COMPO	部品番号 PART NO.	部品名	PART NAME	個数 Q'TY	互換 ICA	代替部品 REPLACEABLE PART	備考 MEMO
		KHJ10450			1			
1	1	LMC0063	ｼﾑ ﾄｸｼｭ	SHIM;SPL	2			
2	1	LMC0064	ｼﾑ ﾄｸｼｭ	SHIM;SPL	2			
3	1	LSC0193	ｼｰﾄ	SEAT	1			
4	1	LMC0086	ｽﾘｰﾌﾞ	SLEEVE	2			
5	1	LZC0100	ｶﾊﾞｰ	COVER	1			
6	1	LMC0087	ｶﾗｰ	COLLAR	2			
7	1	LSC0200	ｽﾌﾟﾘﾝｸﾞ;ｱﾂｼｭｸ	SPRING;COMPRESSION	2			
8	1	LG00345	ｽﾌﾟﾘﾝｸﾞ;ｱﾂｼｭｸ	SPRING;COMPRESSION	2			
9	1	-------	ﾒｲﾊﾞﾝ ﾄｸｼｭ	NAMEPLATE;SPL	1			
10	1	LH00029	ｼﾑ ﾄｸｼｭ	SHIM;SPL	2			
11	1	LH00255	ｼﾑ	SHIM;SPL	2			
12	1	TF00005	ｶﾑ	CAM	1			
13	1	LQ00025	ﾌﾞｰﾂ	BOOT;SPL	1			
14	1	LA00706	ﾋﾟﾝ ﾄｸｼｭ	PIN;SPL	1			
15	1	LLS0046	ﾌﾟﾗｸﾞ	PLUG	1			
16	1	108R012Y025R	ﾛｯｶｸｱﾅB M12X 25	BOLT;HEX SOC HD	1			
17	1	LUC0076	ﾎﾞﾙﾄ ﾄｸｼｭ	BOLT;SPL	2			
18	1	152K008Y008R	ｱﾅｸﾎﾞﾐﾄﾒS M 8X 8	SCREW;SET HEX SOC	2			
19	1	LUC0075	ﾜｯｼｬ	WASHER	2			
20	1	LA00769	ﾘﾍﾞｯﾄ ﾄｸｼｭ	RIVET;SPL	2			
21	1	LA010650	ﾍｲｺﾋﾟﾝ	PIN	2			
22	1	LZC0149	ﾎﾞｰﾙ;ｽﾁｰﾙ	STEEL BALL	1			
23	1	LBQ0100	O-ﾘﾝｸﾞ JISB2401 1AP1	O-RING	2			
24	1	LBQ0112	O-ﾘﾝｸﾞ JISB2401 1BP1	O-RING	1			
25	1	LBQ6022	O-ﾘﾝｸﾞ	O-RING	2			
26	1A	LNC0120	ﾌﾟｯｼｬ	PUSHER	2			
27	2	-------	ﾎﾞｰﾙ;ｽﾁｰﾙ	STEEL BALL	2			
28	2	-------	ﾌﾟｯｼｬ	PUSHER	2			
29	1A	LR014520	ﾎﾞﾃﾞｨ ASSY	BODY	1			
30	2	-------	ﾎﾞﾃﾞｨ	BODY	1			
31	2	-------	ｽﾌﾟｰﾙ	SPOOL	2			
32	2	-------	ﾎﾞｰﾙ ;ｽﾁｰﾙ	BALL	1			

https://truckmanualshub.com/

VALVE;REMOTE CONT	ﾊﾞﾙﾌﾞ;ﾘﾓｺﾝ (ｿｳｺｳﾖｳ)	ZAJ316L0027 000 1/2	000

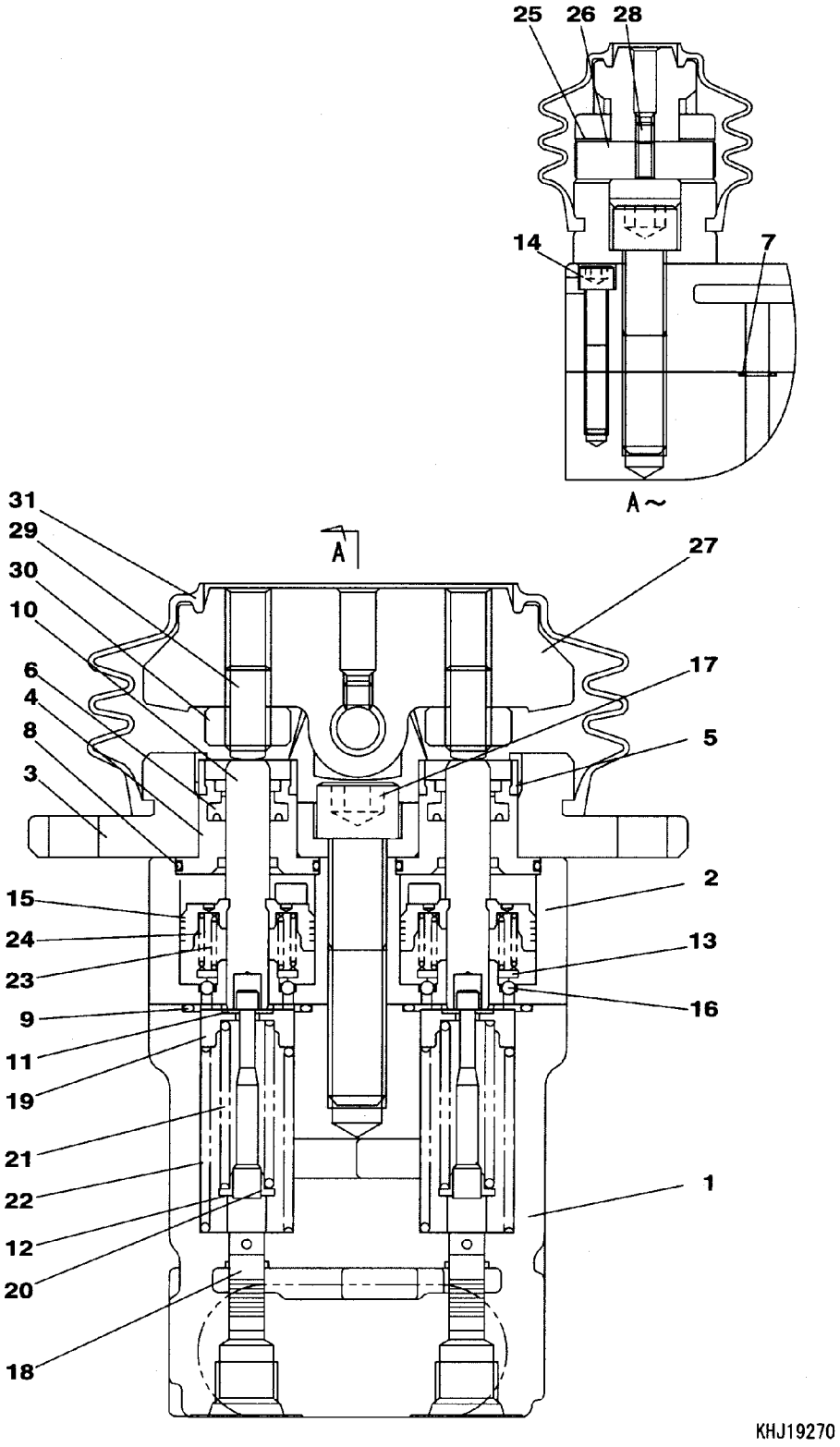

https://truckmanualshub.com/

VALVE;REMOTE CONT	ﾊﾞﾙﾌﾞ;ﾘﾓｺﾝ (ｿｳｺｳﾖｳ)	ZAJ316L0027 000 2/2	000

符号 ITEM	構成 COMPO	部品番号 PART NO.	部品名	PART NAME	個数 Q'TY	互換 ICA	代替部品 REPLACEABLE PART	備考 MEMO
		KHJ19270			1			
1	1	-------	ｹｰｽ	CASE	1			
2	1	-------	ｹｰｽ(ﾀﾞﾝﾊﾟ)	CASE	1			
3	1	LZC0158	ｶﾊﾞｰ	COVER	2			
4	1	LLC0128	ﾌﾟﾗｸﾞ	PLUG	4			
5	1	LWC0004	ｶﾂﾌﾟ;ｸﾞﾘｽ	CUP;GREASE	4			
6	1	LEC0025	ﾊﾟｯｷﾝ	PACKING;SPL	4			
7	1	LBQ0082	O-ﾘﾝｸﾞ JISB2401 1BP8	O-RING	2			
8	1	LBQ6025	O-ﾘﾝｸﾞ AS568-025-HS9	O-RING	4			
9	1	LE012930	O-ﾘﾝｸﾞ NOKS28	O-RING	4			
10	1	LJC0010	ﾛｯﾄﾞ;ﾌﾟｯｼｭ	ROD;PUSH	4			
11	1	LA00056	ﾜｯｼｬ 1	WASHER	8			
12	1	LA00057	ﾜｯｼｬ 2	WASHER	4			
13	1	LSC0237	ｼｰﾄ ｽﾌﾟﾘﾝｸﾞ	SEAT	4			
14	1	108R006Y040R	ﾛｯｶｸｱﾅB M 6X 40	BOLT;HEX SOC HD	2			
15	1	LPC0203	ﾋﾟｽﾄﾝ	PISTON	4			
16	1	LPC0204	ﾎﾞｰﾙ;ｽﾁｰﾙ	STEEL BALL	12			
17	1	108R012Y060R	ﾛｯｶｸｱﾅB M12X 60	BOLT;HEX SOC HD	2			
18	1	-------	ｽﾌﾟｰﾙ	SPOOL	4			
19	1	LSC0238	ｼｰﾄ ｽﾌﾟﾘﾝｸﾞ	SEAT	4			
20	1	LUC0104	ﾜｯｼｬ	WASHER	4			
21	1	LG00330	ｽﾌﾟﾘﾝｸﾞ;ｱｯｼｭｸ	SPRING;COMPRESSION	4			
22	1	LSC0214	ｽﾌﾟﾘﾝｸﾞ	SPRING;SPL	4			
23	1	LSC0239	ｽﾌﾟﾘﾝｸﾞ	SPRING;SPL	4			
24	1	LSC0240	ｽﾌﾟﾘﾝｸﾞ	SPRING;SPL	4			
25	1	LKC0001	ﾌﾞｼｭ	BUSH;SPL	4			
26	1	LJC0003	ｼｬﾌﾄ;ｶﾑ	SHAFT;CAM	2			
27	1	LMC0085	ｶﾑ	CAM	2			
28	1	LUC0103	ｽｸﾘｭｰ ﾛｯｶｸｱﾅ	SCREW	2			
29	1	LUC0102	ｽｸﾘｭｰ	SCREW	4			
30	1	LUC0101	ﾅｯﾄ ﾛｯｸ	NUT;SPL	4			
31	1	LCC0014	ｼﾞｬﾊﾞﾗ	BELLOWS	2			

https://truckmanualshub.com/

VALVE;DIRECTION	ﾊﾞﾙﾌﾞ;ﾃﾞｲﾚｸｼｮﾝ 3ﾎｳｺｳ	ZAJ327L0004 000 1/2	000

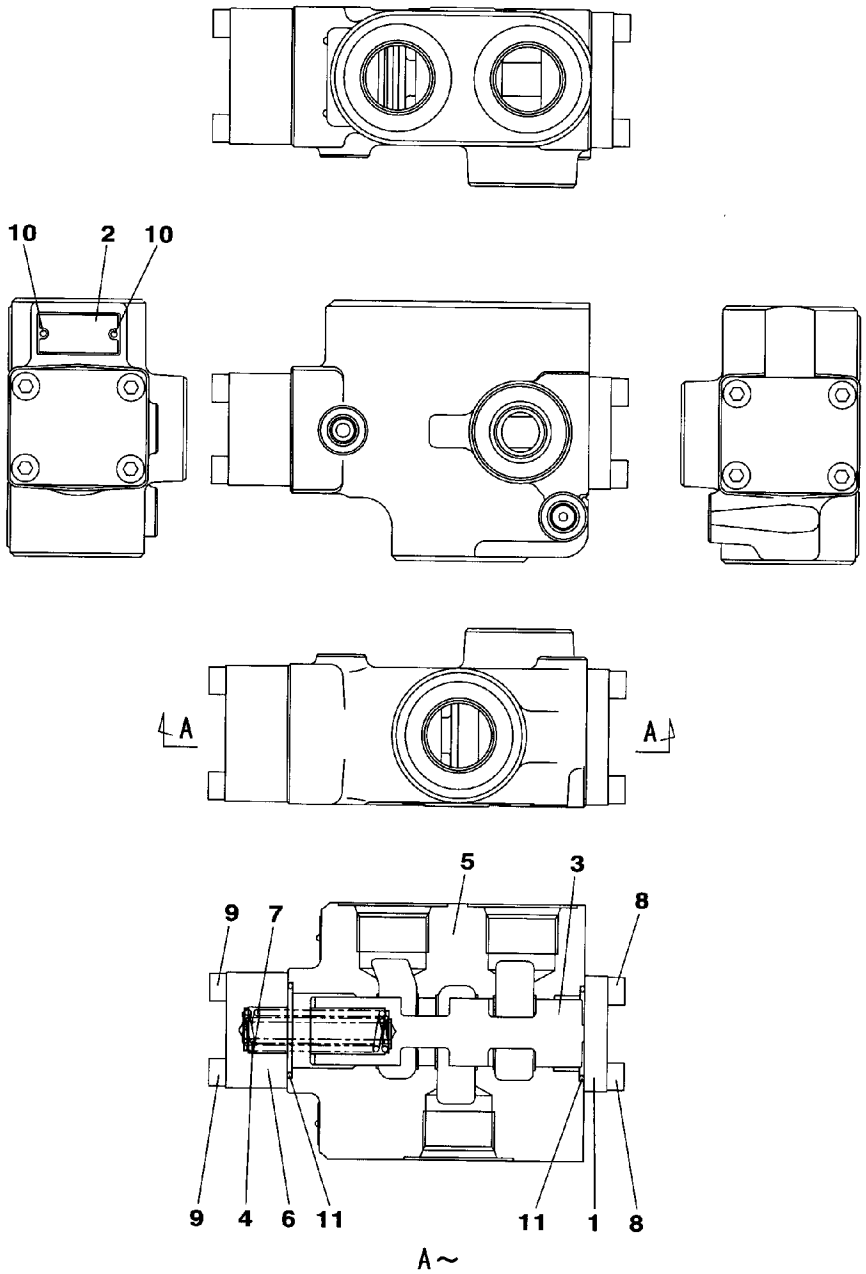

KHJ10420

https://truckmanualshub.com/

VALVE;DIRECTION	ﾊﾞﾙﾌﾞ;ﾃﾞｲﾚｸｼｮﾝ 3ﾎｳｺｳ	ZAJ327L0004 000 2/2	000

符号 ITEM	構成 COMPO	部品番号 PART NO.	部品名	PART NAME	個数 Q'TY	互換 ICA	代替部品 REPLACEABLE PART	備考 MEMO
		KHJ10420			1			
1	1	LW004960	ｶﾊﾞｰ	COVER	1			
2	1	-------	ﾒｲﾊﾞﾝ ﾄｸｼｭ	NAMEPLATE;SPL	1			
3	1	-------	ｽﾌﾟｰﾙ	SPOOL	1			
4	1	LG005800	ｽﾌﾟﾘﾝｸﾞ;ｱｯｼｭｸ	SPRING;COMPRESSION	1			
5	1	-------	ﾎﾞﾃﾞｲ	BODY	1			
6	1	LW004970	ｶﾊﾞｰ	COVER	1			
7	1	LG005810	ｽﾌﾟﾘﾝｸﾞ;ｱｯｼｭｸ	SPRING;COMPRESSION	1			
8	1	108R008Y025N	ﾛｯｶｸｱﾅB M 8X 25	BOLT;HEX SOC HD	4			
9	1	108R008Y045R	ﾛｯｶｸｱﾅB M 8X 45	BOLT;HEX SOC HD	4			
10	1	LA00769	ﾘﾍﾞｯﾄ ﾄｸｼｭ	RIVET;SPL	2			
11	1	LBQ0403	O-ﾘﾝｸﾞ JISB2401 1BG4	O-RING	2			

https://truckmanualshub.com/

VALVE;SHUT-OFF	ﾊﾞﾙﾌﾞ;ｼｬｯﾄｵﾌ	ZAJ335L0001 000 1/2	000

10 [11 ~ 27]

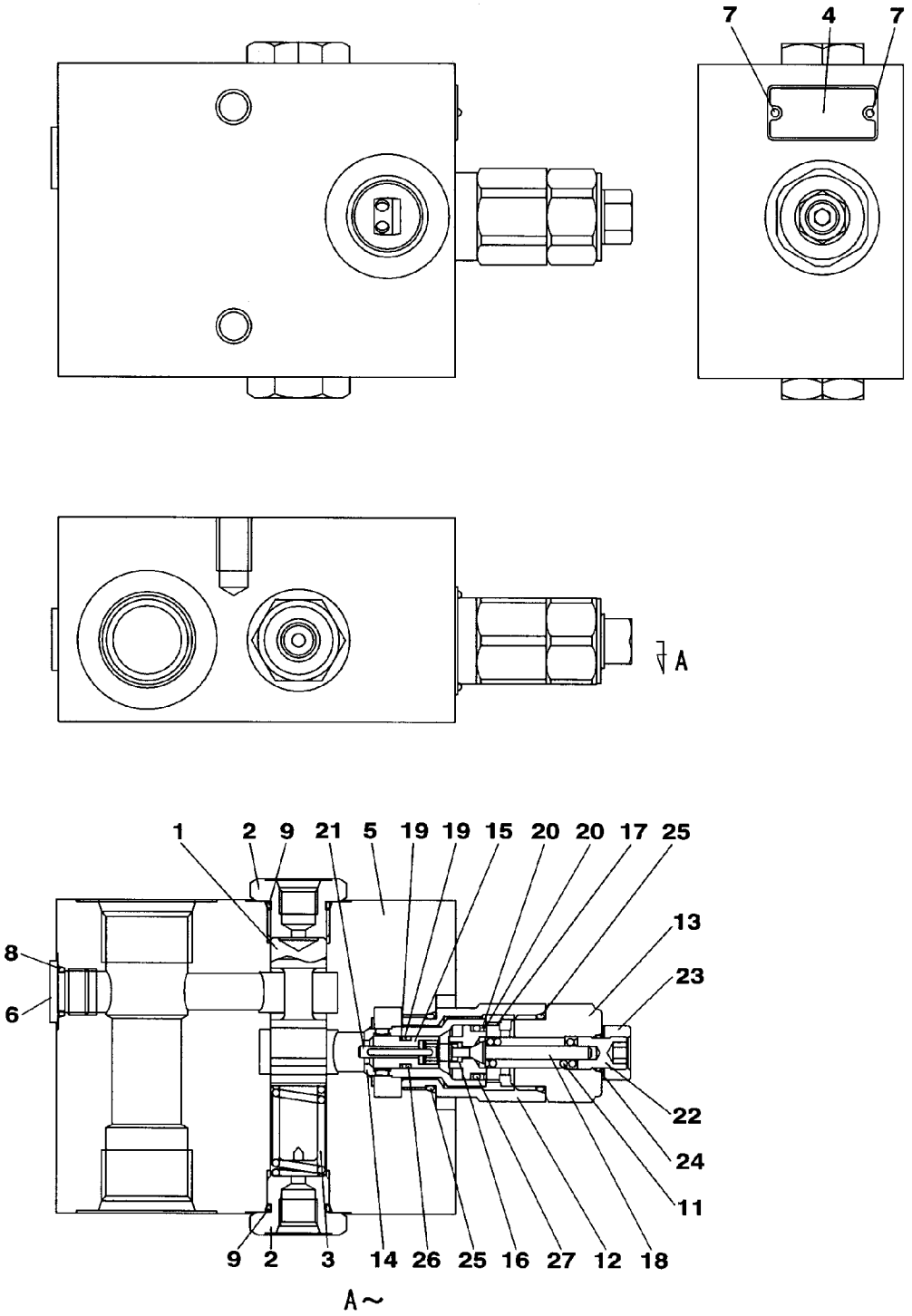

KHJ10410

https://truckmanualshub.com/

VALVE;SHUT-OFF	ﾊﾞﾙﾌﾞ;ｼｬｯﾄｵﾌ	ZAJ335L0001 000 2/2	000

符号 ITEM	構成 COMPO	部品番号 PART NO.	部品名	PART NAME	個数 Q'TY	互換 ICA	代替部品 REPLACEABLE PART	備考 MEMO
		KHJ10410			1			
1	1	-------	ｽﾌﾟｰﾙ	SPOOL	1			
2	1	LK005490	ﾌﾟﾗｸﾞ	PLUG	2			
3	1	LG005790	ｽﾌﾟﾘﾝｸﾞ;ｱﾂｼｭｸ	SPRING;COMPRESSION	1			
4	1	-------	ﾒｲﾊﾞﾝ ﾄｸｼｭ	NAMEPLATE;SPL	1			
5	1	-------	ﾎﾞﾃﾞｨ	BODY	1			
6	1	LLS0044	ﾌﾟﾗｸﾞ	PLUG	1			
7	1	LA00769	ﾘﾍﾞｯﾄ ﾄｸｼｭ	RIVET;SPL	2			
8	1	LBQ0142	O-ﾘﾝｸﾞ JISB2401 1BP1	O-RING	1			
9	1	LBQ0202	O-ﾘﾝｸﾞ JISB2401 1BP2	O-RING	2			
10	1A	KHJ15850	ﾊﾞﾙﾌﾞ;ﾘﾘｰﾌ	VALVE;RELIEF	1			
11	2	-------	ｽﾌﾟﾘﾝｸﾞ;ｱﾂｼｭｸ	SPRING;COMPRESSION	1			
12	2	-------	ｱﾀﾞﾌﾟﾀ	ADPT;SPL	1			
13	2	-------	ﾎﾞﾃﾞｨ	BODY	1			
14	2	-------	ﾎﾟﾍﾟｯﾄ	POPPET	1			
15	2	-------	ﾎﾟﾍﾟｯﾄ	POPPET	1			
16	2	-------	ｽﾌﾟﾘﾝｸﾞ ｱﾂｼｭｸ	SPRING;SPL	1			
17	2	-------	ｽﾌﾟﾘﾝｸﾞ ｱﾂｼｭｸ	SPRING;SPL	1			
18	2	-------	ﾊﾞﾙﾌﾞ;ﾆｰﾄﾞﾙ	VALVE;NEEDLE	1			
19	2	-------	ﾘﾝｸﾞ;ﾊﾞｯｸｱｯﾌﾟ	RING;BACK-UP	2			
20	2	-------	ﾘﾝｸﾞ;ﾊﾞｯｸｱｯﾌﾟ	RING;BACK-UP	2			
21	2	-------	ﾋﾟﾝ	PIN;SPL	1			
22	2	-------	ｽｸﾘｭｰ ﾄｸｼｭ	SCREW;SPL	1			
23	2	174R012SN	ﾄﾒN	NUT;JAM	1			
24	2	LBQ0102	O-ﾘﾝｸﾞ JISB2401 1BP1	O-RING	1			
25	2	LBQ6912	O-ﾘﾝｸﾞ AS568-912-HS9	O-RING	2			
26	2	LBQ0086	O-ﾘﾝｸﾞ JISB2401 4DP8	O-RING	1			
27	2	LBQ0156	O-ﾘﾝｸﾞ JISB2401 4DP1	O-RING	1			

https://truckmanualshub.com/

VALVE;CUSHION	ﾊﾞﾙﾌﾞ;ｸｯｼｮﾝ (ﾏﾙ1.2)	ZAJ345L0002	001	1/2	000

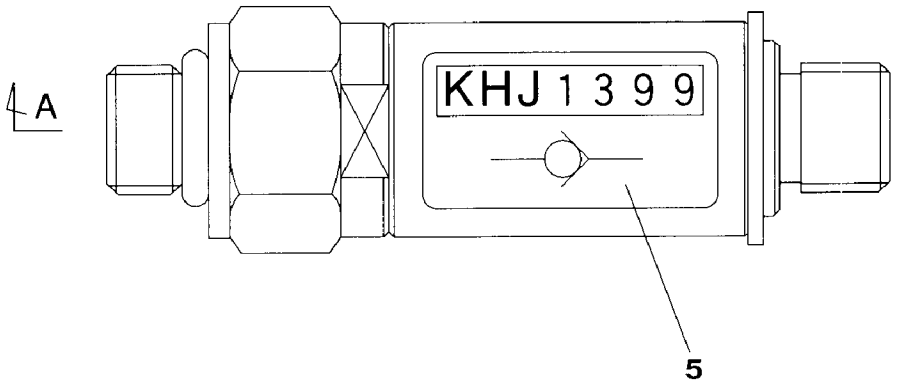

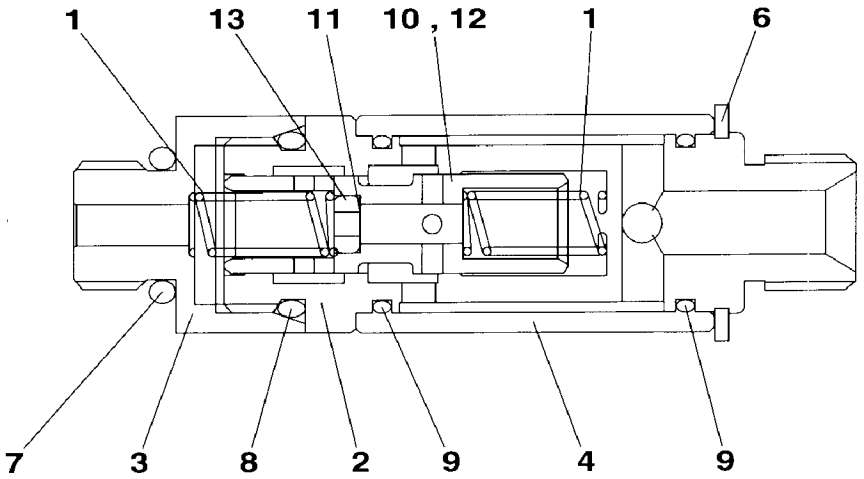

A～

KHJ1399

https://truckmanualshub.com/

VALVE;CUSHION	ﾊﾞﾙﾌﾞ;ｸｯｼｮﾝ (ﾏﾙ1.2)	ZAJ345L0002 001 2/2	001

符号 ITEM	構成 COMPO	部品番号 PART NO.	部品名	PART NAME	個数 Q'TY	互換 ICA	代替部品 REPLACEABLE PART	備考 MEMO
		KHJ1399			1			
1	1	LSC0285	ｽﾌﾟﾘﾝｸﾞ;ｱｯｼｭｸ	SPRING;COMPRESSION	2			
2	1	LR00549	ﾎﾞﾃﾞｨ	BODY	1			
2	1	LZC0179	ﾎﾞﾃﾞｨ	BODY	1			
3	1	LPC0304	ｱﾀﾞﾌﾟﾀ ﾄｸｼｭ	ADPT;SPL	1			
4	1	LPC0305	ｽﾘｰﾌﾞ	SLEEVE	1			
5	1	-------	ﾒｲﾊﾞﾝ;ｼﾔﾒｲ	NAMEPLATE;CO.	1			
6	1	370A0180Z	ｼﾞｸﾄﾒﾜ	RING;SNAP	1			
7	1	LBQ0112	O-ﾘﾝｸﾞ	O-RING	1			
8	1	LBQ0162	O-ﾘﾝｸﾞ	O-RING	1			
9	1	LBC0202	O-ﾘﾝｸﾞ	O-RING	2			
10	1A	LJ00688	ﾌﾟﾗﾝｼﾞｬ	PLUNGER	1			
11	2	-------	ｵﾘﾌｨｽ	ORIFICE	1			
12	2	-------	ﾌﾟﾗﾝｼﾞｬ	PLUNGER	1			
13	2	-------	ﾘﾝｸﾞ	RING	1			

https://truckmanualshub.com/

VALVE;CUSHION	ﾊﾞﾙﾌﾞ;ｸｯｼｮﾝ (ｼｬﾄﾙﾊﾞﾙﾌﾞﾂｷ)	ZAJ345L0029 001 1/2	000

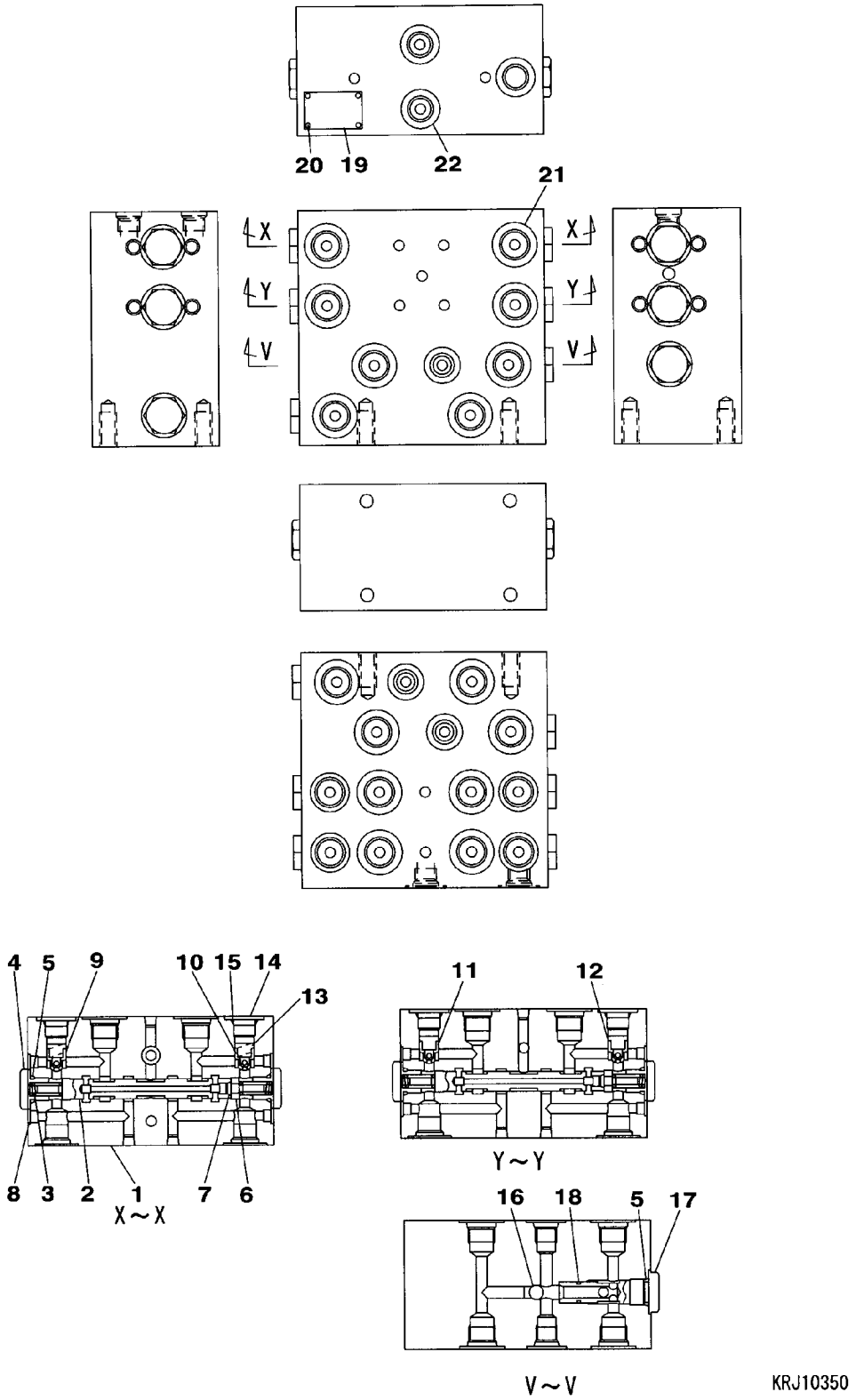

https://truckmanualshub.com/

VALVE;CUSHION	ﾊﾞﾙﾌﾞ;ｸｯｼｮﾝ (ｼｬﾄﾙﾊﾞﾙﾌﾞﾂｷ)	ZAJ345L0029 001 2/2	001

符号 ITEM	構成 COMPO	部品番号 PART NO.	部品名	PART NAME	個数 Q'TY	互換 ICA	代替部品 REPLACEABLE PART	備考 MEMO
		KRJ10350			1			
1	1	-------	ﾎﾞﾃﾞｲ	BODY	1			
2	1	-------	ｽﾌﾟｰﾙ;ﾊﾞﾙﾌﾞ	SPOOL;VALVE	2			
3	1	LSJ0001	ｽﾌﾟﾘﾝｸﾞ;ｱﾂｼｭｸ	SPRING;COMPRESSION	4			
4	1	LLJ0004	ﾌﾟﾗｸﾞ	PLUG	4			
5	1	LBQ0140	O-ﾘﾝｸﾞ JISB2401 1AP1	O-RING	6			
6	1	LLJ0003	ｽｸﾘｭｰ ｷｬｯﾌﾟ	SCREW;SPL	2			
7	1	LBQ0060	O-ﾘﾝｸﾞ JISB2401 1AP6	O-RING	2			
8	1	LLC0156	ﾌﾟﾗｸﾞ	PLUG	18			
9	1	LJ014390	ﾊﾞﾙﾌﾞ;ﾁｪｯｸ	VALVE;CHECK	1			
9	1	LJ015590	ﾊﾞﾙﾌﾞ;ﾁｪｯｸ	VALVE;CHECK	1			
10	1	LJ014400	ﾊﾞﾙﾌﾞ;ﾁｪｯｸ	VALVE;CHECK	1			
10	1	LJ015590	ﾊﾞﾙﾌﾞ;ﾁｪｯｸ	VALVE;CHECK	1			
11	1	LJ014400	ﾊﾞﾙﾌﾞ;ﾁｪｯｸ	VALVE;CHECK	1			
12	1	LJ014390	ﾊﾞﾙﾌﾞ;ﾁｪｯｸ	VALVE;CHECK	1			
13	1	LG005960	ｽﾌﾟﾘﾝｸﾞ;ｱﾂｼｭｸ	SPRING;COMPRESSION	4			
14	1	LK005550	ﾌﾟﾗｸﾞ	PLUG	4			
15	1	LBQ0112	O-ﾘﾝｸﾞ JISB2401 1BP1	O-RING	4			
16	1	LB011510	ﾎﾞｰﾙ;ｽﾁｰﾙ	BALL;STEEL	2			
17	1	LK005560	ﾌﾟﾗｸﾞ	PLUG	2			
18	1	LBQ0100	O-ﾘﾝｸﾞ JISB2401 1AP1	O-RING	2			
19	1	-------	ﾌﾟﾚｰﾄ ﾈｰﾑ	PLATE	1			
20	1	-------	ｽｸﾘｭｰ	SCREW	2			
21	1	LLC0153	ﾌﾟﾗｸﾞ ｼｯﾋﾟﾝｸﾞ	PLUG	16			
22	1	LLC0152	ﾌﾟﾗｸﾞ ｼｯﾋﾟﾝｸﾞ	PLUG	6			

https://truckmanualshub.com/

VALVE;CUSHION	ﾊﾞﾙﾌﾞ;ｸｯｼｮﾝ (ｼｬﾄﾙﾊﾞﾙﾌﾞﾂｷ)	ZAJ345L0054 000 1/2	000

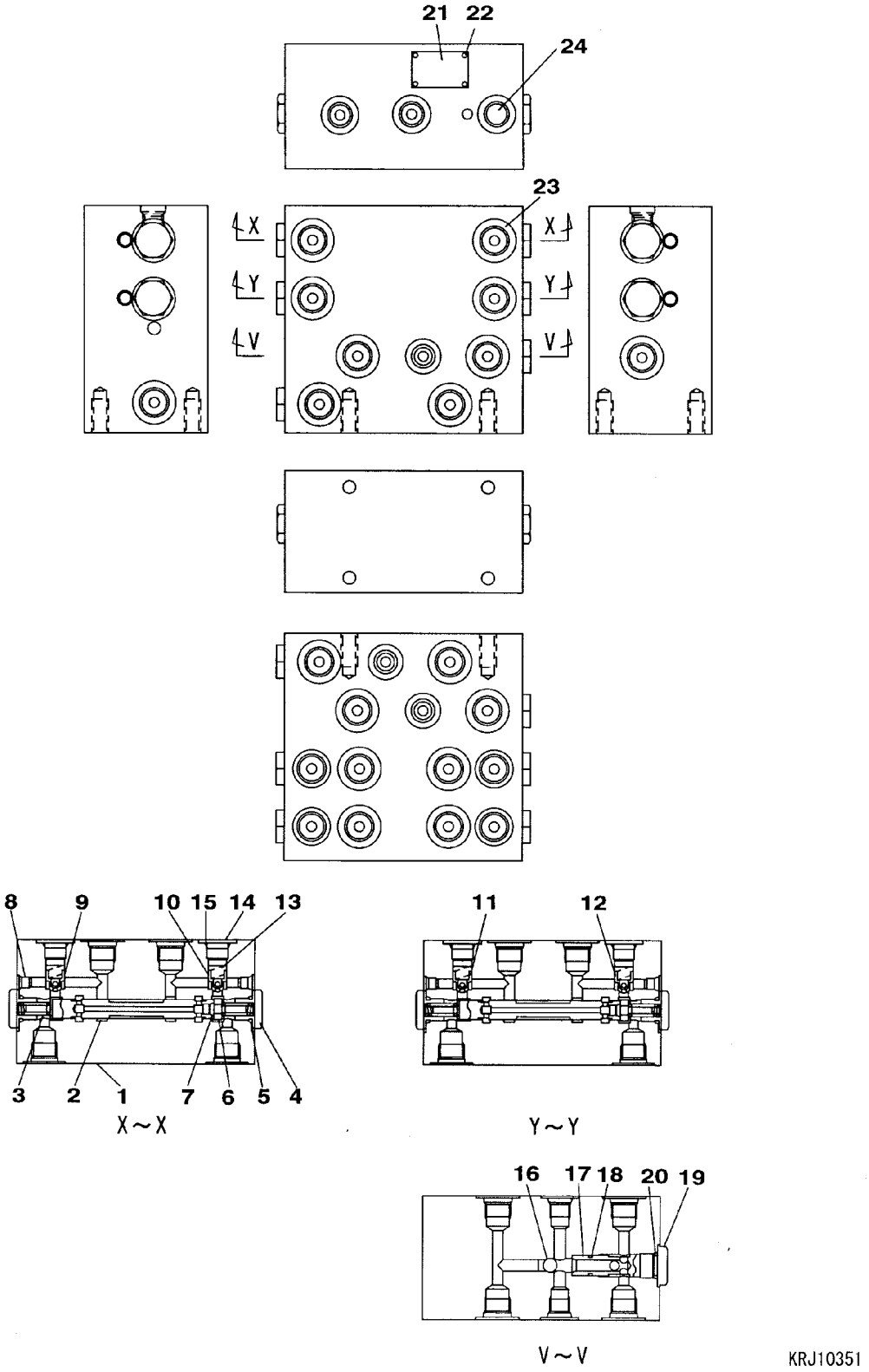

https://truckmanualshub.com/

VALVE;CUSHION	ﾊﾞﾙﾌﾞ;ｸｯｼｮﾝ (ｼｬﾄﾙﾊﾞﾙﾌﾞﾂｷ)	ZAJ345L0054 000 2/2	000

符号 ITEM	構成 COMPO	部品番号 PART NO.	部品名	PART NAME	個数 Q'TY	互換 ICA	代替部品 REPLACEABLE PART	備考 MEMO
		KRJ10351						
1	1	-------	ﾎﾞﾃﾞｲ	BODY	1			
2	1	-------	ｽﾌﾟｰﾙ;ﾊﾞﾙﾌﾞ	SPOOL;VALVE	2			
3	1	LSJ0001	ｽﾌﾟﾘﾝｸﾞ;ｱﾂｼｭｸ	SPRING;COMPRESSION	4			
4	1	LLJ0004	ﾌﾟﾗｸﾞ	PLUG	4			
5	1	LBQ0140	O-ﾘﾝｸﾞ JISB2401 1AP1	O-RING	4			
6	1	LLJ0003	ｽｸﾘｭｰ ｷｬｯﾌﾟ	SCREW;SPL	2			
7	1	LBQ0060	O-ﾘﾝｸﾞ JISB2401 1AP6	O-RING	2			
8	1	-------	ﾌﾟﾗｸﾞ	PLUG	6			
9	1	LJ015590	ﾊﾞﾙﾌﾞ;ﾁｪｯｸ	VALVE;CHECK	1			
10	1	LJ015590	ﾊﾞﾙﾌﾞ;ﾁｪｯｸ	VALVE;CHECK	1			
11	1	LJ014400	ﾊﾞﾙﾌﾞ;ﾁｪｯｸ	VALVE;CHECK	1			
12	1	LJ014390	ﾊﾞﾙﾌﾞ;ﾁｪｯｸ	VALVE;CHECK	1			
13	1	LG005960	ｽﾌﾟﾘﾝｸﾞ;ｱﾂｼｭｸ	SPRING;COMPRESSION	4			
14	1	LK005550	ﾌﾟﾗｸﾞ	PLUG	4			
15	1	LBQ0112	O-ﾘﾝｸﾞ JISB2401 1BP1	O-RING	4			
16	1	LB011510	ﾎﾞｰﾙ;ｽﾁｰﾙ	BALL;STEEL	2			
17	1	LR018180	ｼｰﾄ	SEAT	2			
18	1	LBQ0100	O-ﾘﾝｸﾞ JISB2401 1AP1	O-RING	2			
19	1	LK00195	ﾌﾟﾗｸﾞ	PLUG	2			
20	1	LBQ0142	O-ﾘﾝｸﾞ JISB2401 1BP1	O-RING	2			
21	1	-------	ﾌﾟﾚｰﾄ ﾈｰﾑ	PLATE	1			
22	1	LV000540	ｽｸﾘｭｰ ﾄﾞﾗｲﾌﾞ	SCREW	2			
23	1	LLC0153	ﾌﾟﾗｸﾞ ｼｯﾋﾟﾝｸﾞ	PLUG	16			
24	1	LLC0152	ﾌﾟﾗｸﾞ ｼｯﾋﾟﾝｸﾞ	PLUG	6			

https://truckmanualshub.com/

VALVE;RELIEF	ﾊﾞﾙﾌﾞ;ﾘﾘｰﾌ	ZAJ351L0003 000 1/2	000

8 [9 ~ 25]

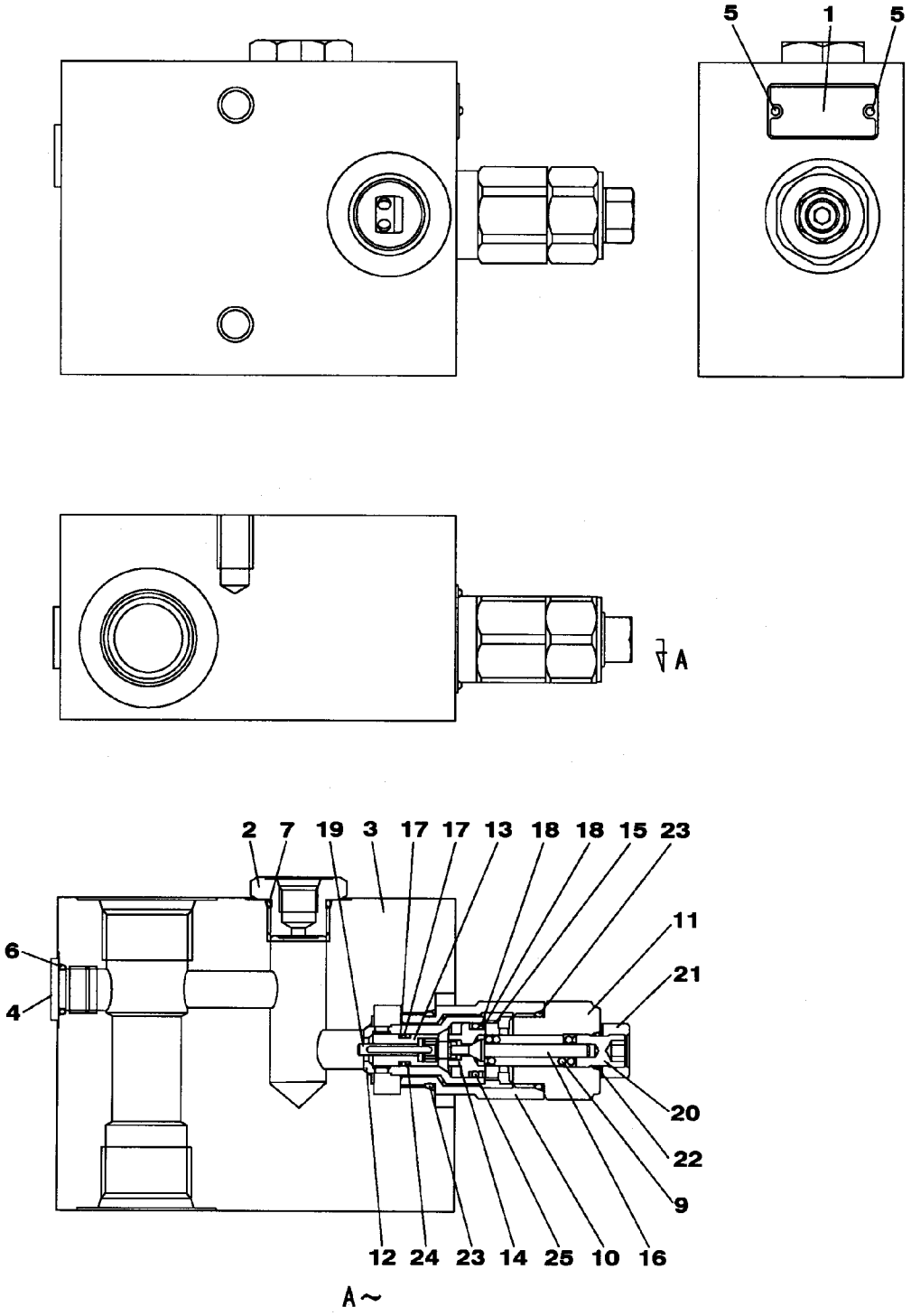

KHJ15050

https://truckmanualshub.com/

VALVE;RELIEF	ﾊﾞﾙﾌﾞ;ﾘﾘｰﾌ	ZAJ351L0003 000 2/2	000

符号 ITEM	構成 COMPO	部品番号 PART NO.	部品名	PART NAME	個数 Q'TY	互換 ICA	代替部品 REPLACEABLE PART	備考 MEMO
		KHJ15050			1			
1	1	-------	ﾒｲﾊﾞﾝ ﾄｸｼｭ	NAMEPLATE;SPL	1			
2	1	LG005580	ｽﾄｯﾊﾟ	STOPPER	2			
3	1	-------	ﾎﾞﾃﾞｨ	BODY	1			
4	1	LLS0044	ﾌﾟﾗｸﾞ	PLUG	1			
5	1	LA00769	ﾘﾍﾞｯﾄ ﾄｸｼｭ	RIVET;SPL	2			
6	1	LBQ0142	O-ﾘﾝｸﾞ JISB2401 1BP1	O-RING	1			
7	1	LBQ0182	O-ﾘﾝｸﾞ JISB2401 1BP1	O-RING	2			
8	1A	KHJ15850	ﾊﾞﾙﾌﾞ;ﾘﾘｰﾌ	VALVE;RELIEF	1			
9	2	-------	ｽﾌﾟﾘﾝｸﾞ;ｱﾂｼｭｸ	SPRING;COMPRESSION	1			
10	2	-------	ｱﾀﾞﾌﾟﾀ	ADPT;SPL	1			
11	2	-------	ﾎﾞﾃﾞｨ	BODY	1			
12	2	-------	ﾎﾟﾍﾟｯﾄ	POPPET	1			
13	2	-------	ﾎﾟﾍﾟｯﾄ	POPPET	1			
14	2	-------	ｽﾌﾟﾘﾝｸﾞ ｱﾂｼｭｸ	SPRING;SPL	1			
15	2	-------	ｽﾌﾟﾘﾝｸﾞ ｱﾂｼｭｸ	SPRING;SPL	1			
16	2	-------	ﾊﾞﾙﾌﾞ;ﾆｰﾄﾞﾙ	VALVE;NEEDLE	1			
17	2	-------	ﾘﾝｸﾞ;ﾊﾞｯｸｱｯﾌﾟ	RING;BACK-UP	2			
18	2	-------	ﾘﾝｸﾞ;ﾊﾞｯｸｱｯﾌﾟ	RING;BACK-UP	2			
19	2	-------	ﾋﾟﾝ	PIN;SPL	1			
20	2	-------	ｽｸﾘｭｰ ﾄｸｼｭ	SCREW;SPL	1			
21	2	174R012SN	ﾄﾒN	NUT;JAM	1			
22	2	LBQ0102	O-ﾘﾝｸﾞ JISB2401 1BP1	O-RING	1			
23	2	LBQ6912	O-ﾘﾝｸﾞ AS568-912-HS9	O-RING	2			
24	2	LBQ0086	O-ﾘﾝｸﾞ JISB2401 4DP8	O-RING	1			
25	2	LBQ0156	O-ﾘﾝｸﾞ JISB2401 4DP1	O-RING	1			

https://truckmanualshub.com/

VALVE;HOLDING	ﾊﾞﾙﾌﾞ;ﾎｰﾙﾃﾞｨﾝｸﾞ	ZAJ362L0020 001 1/2	001

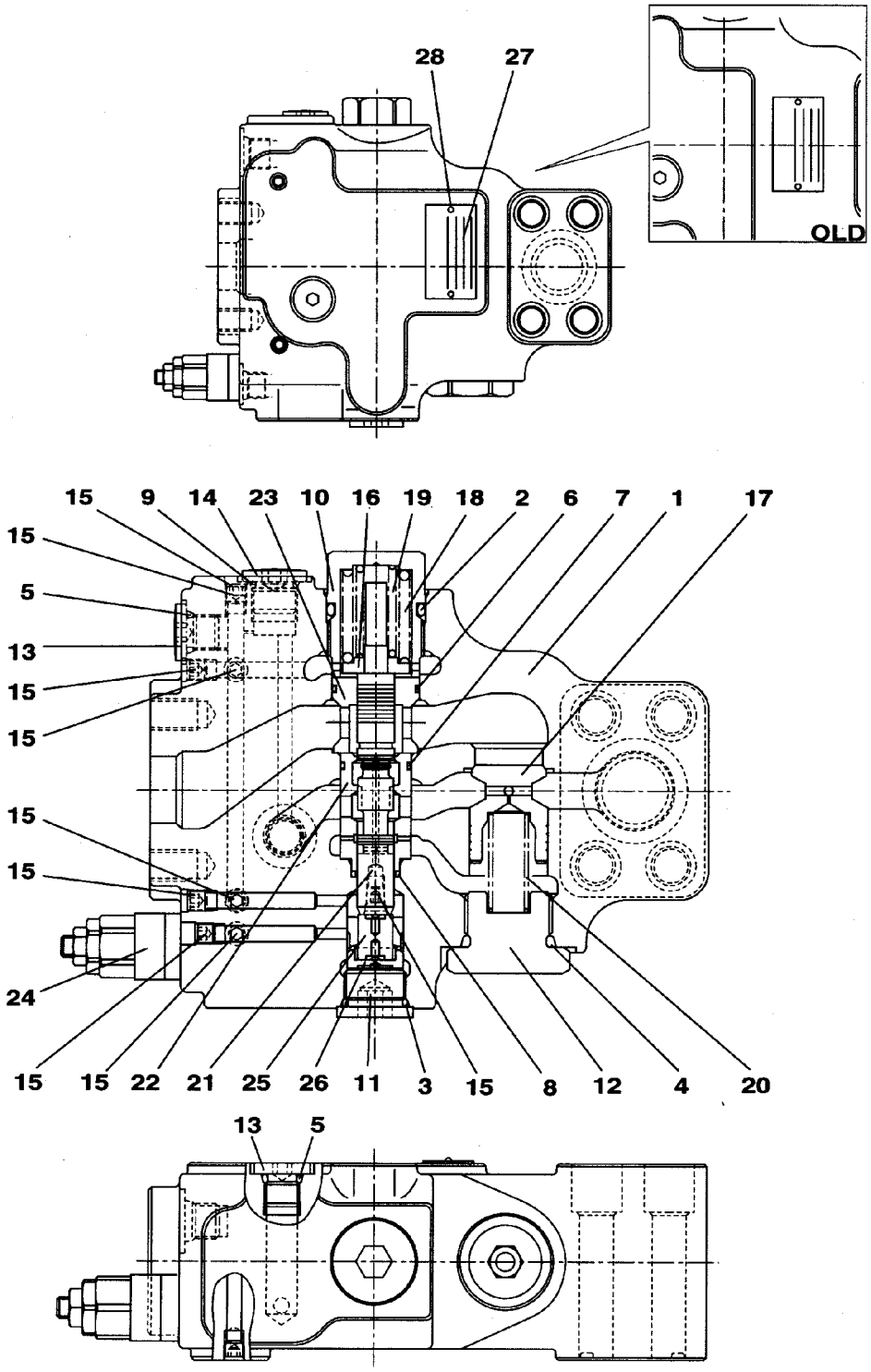

KRV11110

https://truckmanualshub.com/

VALVE;HOLDING	ﾊﾞﾙﾌﾞ;ﾎｰﾙﾃﾞｲﾝｸﾞ	ZAJ362L0020 001 2/2	001

符号 ITEM	構成 COMPO	部品番号 PART NO.	部品名	PART NAME	個数 Q'TY	互換 ICA	代替部品 REPLACEABLE PART	備考 MEMO
		KRV11110			1			
1	1	-------	ｹｰｽ	CASE	1			
2	1	LBQ0312	O-ﾘﾝｸﾞ JISB2401 1BP3	O-RING	1			
3	1	LBQ0222	O-ﾘﾝｸﾞ JISB2401 1BP2	O-RING	1			
4	1	LBQ0242	O-ﾘﾝｸﾞ JISB2401 1BP2	O-RING	1			
5	1	LBQ0112	O-ﾘﾝｸﾞ JISB2401 1BP1	O-RING	2			
6	1	LBQ6025	O-ﾘﾝｸﾞ AS568-025-HS9	O-RING	1			
7	1	LBQ6021	O-ﾘﾝｸﾞ AS568-021-HS9	O-RING	1			
8	1	LE013260	ｼｰﾙ ﾄｸｼｭ	SEAL;SPL	1			
9	1	LBQ0142	O-ﾘﾝｸﾞ JISB2401 1BP1	O-RING	1			
10	1	LK005500	ﾌﾟﾗｸﾞ	PLUG	1			
11	1	LK005510	ﾌﾟﾗｸﾞ	PLUG	1			
11	1	LK005360	ﾌﾟﾗｸﾞ	PLUG	1			
12	1	LK005520	ﾌﾟﾗｸﾞ	PLUG	1			
13	1	LK00015	ﾌﾟﾗｸﾞ	PLUG	2			
14	1	LK00008	ﾌﾟﾗｸﾞ	PLUG	1			
15	1	-------	ﾌﾟﾗｸﾞ	PLUG	9			
16	1	LR014580	ｼｰﾄ;ｽﾌﾟﾘﾝｸﾞ	SEAT;SPRING	1			
17	1	LJ014260	ﾎﾟﾍﾟｯﾄ	POPPET	1			
18	1	LG005860	ｽﾌﾟﾘﾝｸﾞ;ｱﾂｼｭｸ	SPRING;COMPRESSION	1			
19	1	LG005870	ｽﾌﾟﾘﾝｸﾞ;ｱﾂｼｭｸ	SPRING;COMPRESSION	1			
20	1	LG005880	ｽﾌﾟﾘﾝｸﾞ;ｱﾂｼｭｸ	SPRING;COMPRESSION	1			
21	1	-------	ｽﾌﾟｰﾙ	SPOOL	1			
22	1	-------	ﾌﾞｼｭ ﾄｸｼｭ	BUSH;SPL	1			
23	1	-------	ﾌﾞｼｭ ﾄｸｼｭ	BUSH;SPL	1			
24	1	LJ014280	ﾊﾞﾙﾌﾞ;ﾘﾘｰﾌ S/A	VALVE;RELIEF	1			
25	1	LJ014290	ﾋﾟｽﾄﾝ	PISTON	1			
26	1	LJ014300	ﾋﾟｽﾄﾝ	PISTON	1			
27	1	-------	ﾒｲﾊﾞﾝ	NAMEPLATE;SPL	1			
28	1	-------	ﾘﾍﾞｯﾄ ﾄｸｼｭ	RIVET;SPL	2			

https://truckmanualshub.com/

VALVE;HOLDING	ﾊﾞﾙﾌﾞ;ﾎｰﾙﾃﾞｨﾝｸﾞ	ZAJ362L0021 001 1/2	001

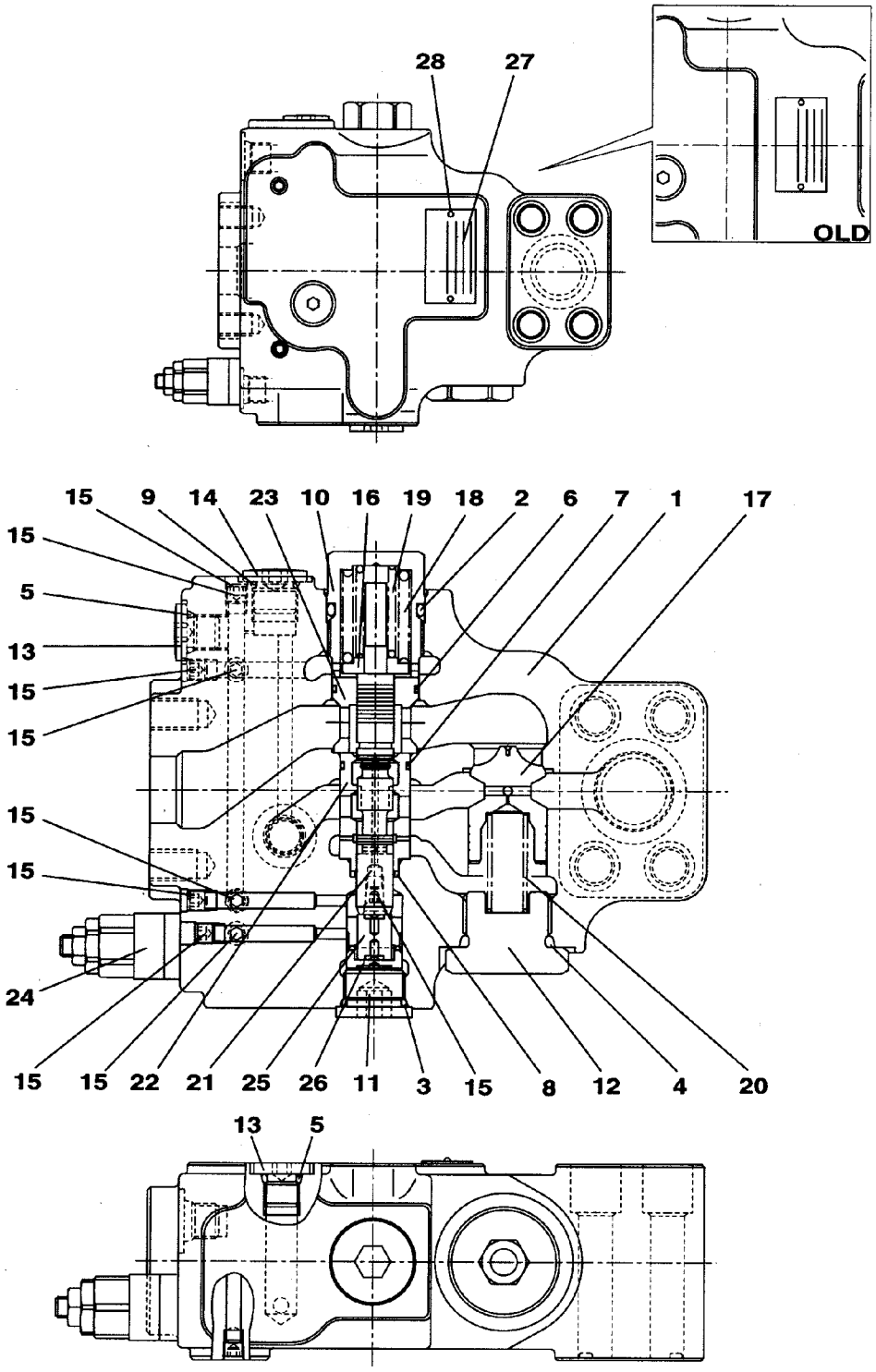

KRV11120

https://truckmanualshub.com/

VALVE;HOLDING	ﾊﾞﾙﾌﾞ;ﾎｰﾙﾃﾞｲﾝｸﾞ	ZAJ362L0021 001 2/2	001

符号 ITEM	構成 COMPO	部品番号 PART NO.	部品名	PART NAME	個数 Q'TY	互換 ICA	代替部品 REPLACEABLE PART	備考 MEMO
		KRV11120			1			
1	1	-------	ｹｰｽ	CASE	1			
2	1	LBQ0312	O-ﾘﾝｸﾞ JISB2401 1BP3	O-RING	1			
3	1	LBQ0222	O-ﾘﾝｸﾞ JISB2401 1BP2	O-RING	1			
4	1	LBQ0292	O-ﾘﾝｸﾞ JISB2401 1BP2	O-RING	1			
5	1	LBQ0112	O-ﾘﾝｸﾞ JISB2401 1BP1	O-RING	2			
6	1	LBQ6025	O-ﾘﾝｸﾞ AS568-025-HS9	O-RING	1			
7	1	LBQ6021	O-ﾘﾝｸﾞ AS568-021-HS9	O-RING	1			
8	1	LE013260	ｼｰﾙ ﾄｸｼｭ	SEAL;SPL	1			
9	1	LBQ0142	O-ﾘﾝｸﾞ JISB2401 1BP1	O-RING	1			
10	1	LK005500	ﾌﾟﾗｸﾞ	PLUG	1			
11	1	LK005510	ﾌﾟﾗｸﾞ	PLUG	1			
11	1	LK005360	ﾌﾟﾗｸﾞ	PLUG	1			
12	1	LK005530	ﾌﾟﾗｸﾞ	PLUG	1			
13	1	LK00015	ﾌﾟﾗｸﾞ	PLUG	2			
14	1	LK00008	ﾌﾟﾗｸﾞ	PLUG	1			
15	1	-------	ﾌﾟﾗｸﾞ	PLUG	9			
16	1	LR014580	ｼｰﾄ;ｽﾌﾟﾘﾝｸﾞ	SEAT;SPRING	1			
17	1	LJ014310	ﾎﾟﾍﾟｯﾄ	POPPET	1			
18	1	LG005860	ｽﾌﾟﾘﾝｸﾞ;ｱﾂｼｭｸ	SPRING;COMPRESSION	1			
19	1	LG005870	ｽﾌﾟﾘﾝｸﾞ;ｱﾂｼｭｸ	SPRING;COMPRESSION	1			
20	1	LG005890	ｽﾌﾟﾘﾝｸﾞ;ｱﾂｼｭｸ	SPRING;COMPRESSION	1			
21	1	-------	ｽﾌﾟｰﾙ	SPOOL	1			
22	1	-------	ﾌﾞｼｭ ﾄｸｼｭ	BUSH;SPL	1			
23	1	-------	ﾌﾞｼｭ ﾄｸｼｭ	BUSH;SPL	1			
24	1	LJ014280	ﾊﾞﾙﾌﾞ;ﾘﾘｰﾌ S/A	VALVE;RELIEF	1			
25	1	LJ014290	ﾋﾟｽﾄﾝ	PISTON	1			
26	1	LJ014300	ﾋﾟｽﾄﾝ	PISTON	1			
27	1	-------	ﾒｲﾊﾞﾝ	NAMEPLATE;SPL	1			
28	1	-------	ﾘﾍﾞｯﾄ ﾄｸｼｭ	RIVET;SPL	2			

https://truckmanualshub.com/

RADIATOR	ﾗｼﾞｴﾀ	ZAN320L0038	001	1/2	000

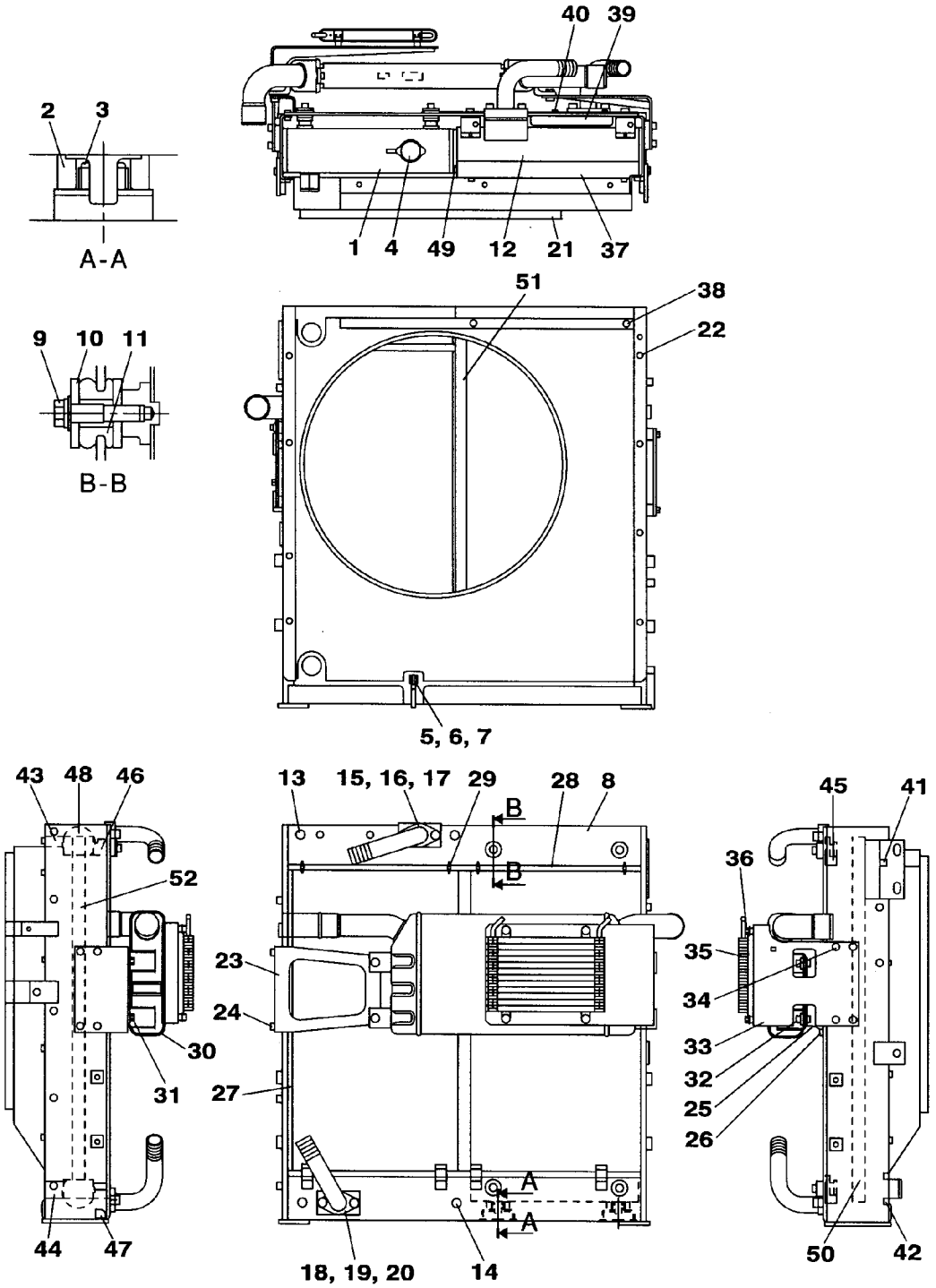

https://truckmanualshub.com/

RADIATOR	ﾗｼﾞｴﾀ	ZAN320L0038 001 2/2	001

符号 ITEM	構成 COMPO	部品番号 PART NO.	部品名	PART NAME	個数 Q'TY	互換 ICA	代替部品 REPLACEABLE PART	備考 MEMO
		KRH10810			1			
1	1	LN001790	ﾗｼﾞｴﾀ	RADIATOR	1			
2	1	LG005900	ｸｯｼｮﾝ ﾄｸｼｭ	CUSHION;SPL	2			
3	1	LG005620	ｸｯｼｮﾝ ﾄｸｼｭ	CUSHION;SPL	2			
4	1	TR00521	ｷｬｯﾌﾟ ;ﾌﾟﾚｽｼｬ	CAP;SPL	1			
5	1	LLG0006	ｺｯｸ;ﾄﾞﾚﾝ	COCK;DRAIN	1			
6	1	LK005540	ﾎｰｽ;ﾋﾞﾆﾙ	HOSE;VINYL	1			
7	1	LA00804	ｸﾘｯﾌﾟ	CLIP	1			
8	1	LT001610	ﾌﾚｰﾑ ﾄｸｼｭ	FRAME;SPL	1			
9	1	LA010480	ｾﾑｽB M10X1.5X50	BOLT;SEMS	4			
10	1	LA010490	ﾜｯｼｬ	WASHER	8			
10	1	LA011260	ﾜｯｼｬ	WASHER	8			
11	1	LG005630	ｸｯｼｮﾝ ﾄｸｼｭ	CUSHION;SPL	4			
12	1	LN001800	ｸｰﾗ;ｵｲﾙ	COOLER;OIL	1			
13	1	LA00792	ｾﾑｽB M12X1.75PX35L	BOLT;SEMS	2			
14	1	LA00792	ｾﾑｽB M12X1.75PX35L	BOLT;SEMS	2			
15	1	LR014840	ﾊﾟｲﾌﾟ	PIPE	1			
16	1	LE013660	O-ﾘﾝｸﾞ	O-RING	1			
17	1	LA010890	ｾﾑｽB M12X1.75X45L	BOLT;SEMS	2			
18	1	LR014850	ﾊﾟｲﾌﾟ	PIPE	1			
19	1	LE013660	O-ﾘﾝｸﾞ	O-RING	1			
20	1	LA010890	ｾﾑｽB M12X1.75X45L	BOLT;SEMS	2			
21	1	LW005010	ｼｭﾗｳﾄﾞ	SHROUD	1			
21	1	LW005400	ｼｭﾗｳﾄﾞ	SHROUD	1			
22	1	LA00677	ﾎﾞﾙﾄ ﾄｸｼｭ	BOLT;SPL	8			
23	1	LS003210	ﾌﾞﾗｹｯﾄ	BRACKET	1			
24	1	LA00781	ｾﾑｽB M12X1.75X25L	BOLT;SEMS	4			
25	1	LS003220	ﾌﾞﾗｹｯﾄ	BRACKET	1			
26	1	LA00781	ｾﾑｽB M12X1.75X25L	BOLT;SEMS	2			
27	1	LG005970	ﾌﾟﾛﾃｸﾀ	PROTECTOR	1			
28	1	LG005980	ﾌﾟﾛﾃｸﾀ	PROTECTOR	1			
29	1	LUG0019	ﾁｮｳB M6XP1.0	BOLT;WING HD	4			
30	1	LN001810	ｸｰﾗ ﾄｸｼｭ (AIR)	COOLER;SPL	1			
31	1	LA00781	ｾﾑｽB M12X1.75X25L	BOLT;SEMS	2			
32	1	LA010500	ｾﾑｽB M10X1.5X35	BOLT;SEMS	2			
33	1	LS003230	ﾌﾞﾗｹｯﾄ	BRACKET	1			
34	1	LA00781	ｾﾑｽB M12X1.75X25L	BOLT;SEMS	4			
35	1	LN001760	ｸｰﾗﾊﾟｰﾂ (FUEL)	COOLER PARTS	1			
36	1	LA00677	ﾎﾞﾙﾄ ﾄｸｼｭ	BOLT;SPL	4			
37	1	LS003240	ﾌﾞﾗｹｯﾄ	BRACKET	1			
38	1	LA00677	ﾎﾞﾙﾄ ﾄｸｼｭ	BOLT;SPL	2			
39	1	LS003250	ﾌﾞﾗｹｯﾄ	BRACKET	1			
40	1	LA00677	ﾎﾞﾙﾄ ﾄｸｼｭ	BOLT;SPL	2			
41	1	LE013670	ﾊﾟｯｷﾝ 70X17X460	PACKING	1			
42	1	LE013680	ﾊﾟｯｷﾝ 70X17X460	PACKING	1			
43	1	LE013690	ﾊﾟｯｷﾝ 30X43X490	PACKING	1			
44	1	LE013700	ﾊﾟｯｷﾝ 50X45X490	PACKING	1			
45	1	LE013710	ﾊﾟｯｷﾝ 40X32X460	PACKING	2			
46	1	LE013720	ﾊﾟｯｷﾝ 70X35X490	PACKING	1			
47	1	LE013730	ﾊﾟｯｷﾝ 90X35X490	PACKING	1			
48	1	LE013680	ﾊﾟｯｷﾝ 150X50X4	PACKING	2			
48	1	LE014500	ﾊﾟｯｷﾝ 150X50X4	PACKING	2			
49	1	LE013740	ﾊﾟｯｷﾝ 50X17X80	PACKING	2			
50	1	LE013750	ﾊﾟｯｷﾝ 30X12X980	PACKING	1			
51	1	LE013760	ﾊﾟｯｷﾝ 30X35X860	PACKING	1			
52	1	LE013770	ﾊﾟｯｷﾝ 30X23X860	PACKING	1			

https://truckmanualshub.com/

RADIATOR	ﾗｼﾞｴﾀ	ZAN320L0054 000 1/2	000

1 [2～8]　11 [12～15]　19 [20～24]　33 [34～39]　55 [56 , 57]

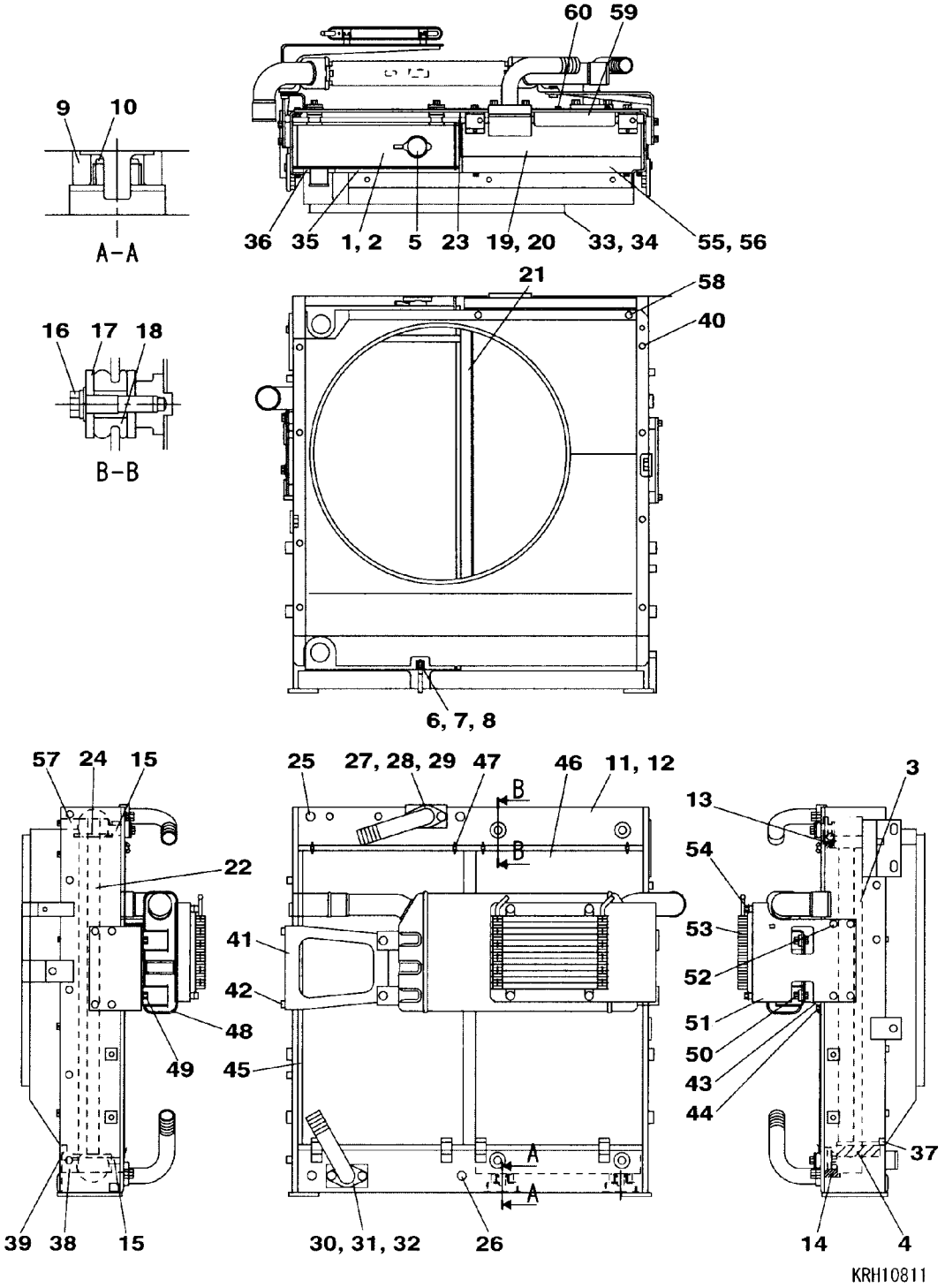

https://truckmanualshub.com/

RADIATOR	ﾗｼﾞｴﾀ	ZAN320L0054 000 2/2	000

符号 ITEM	構成 COMPO	部品番号 PART NO.	部品名	PART NAME	個数 Q'TY	互換 ICA	代替部品 REPLACEABLE PART	備考 MEMO
		KRH10811						
1	1A	LN002290	ﾗｼﾞｴﾀ S/A	RADIATOR	1			
2	2	LN001790	ﾗｼﾞｴﾀ	RADIATOR	1			
3	2	LE016910	ﾊﾟｯｷﾝ 15X15X800	PACKING	1			
4	2	LE015640	ﾊﾟｯｷﾝ 35X18X108	PACKING	2			
5	2	TR00521	ｷｬｯﾌﾟ ;ﾌﾟﾚｯｼｬ	CAP;SPL	1			
6	2	LLG0006	ｺｯｸ;ﾄﾞﾚﾝ	COCK;DRAIN	1			
7	2	LK005540	ﾎｰｽ;ﾋﾞﾆﾙ	HOSE;VINYL	1			
8	2	LA00804	ｸﾘｯﾌﾟ	CLIP	1			
9	1	LG005900	ｸｯｼｮﾝ ﾄｸｼｭ	CUSHION;SPL	2			
10	1	LG005620	ｸｯｼｮﾝ ﾄｸｼｭ	CUSHION;SPL	2			
11	1A	LT002070	ﾌﾚｰﾑ ASSY	FRAME;SPL	1			
12	2	LT001610	ﾌﾚｰﾑ ﾄｸｼｭ	FRAME;SPL	1			
13	2	LE015950	ﾊﾟｯｷﾝ 20X17X470	PACKING	1			
14	2	LE016920	ﾊﾟｯｷﾝ 20X35X470	PACKING	1			
15	2	LE016930	ﾊﾟｯｷﾝ 20X40X490	PACKING	2			
16	1	LA011800	ｾﾑｽB M10X1.5	BOLT;SEMS	4			
17	1	LA011260	ﾜｯｼｬ	WASHER	8			
18	1	LG005630	ｸｯｼｮﾝ ﾄｸｼｭ	CUSHION;SPL	4			
19	1A	LN002300	ｸｰﾗ;ｵｲﾙ S/A	COOLER;OIL	1			
20	2	LN001800	ｸｰﾗ;ｵｲﾙ	COOLER;OIL	1			
21	2	LE013760	ﾊﾟｯｷﾝ 30X35X860	PACKING	1			
22	2	LE013770	ﾊﾟｯｷﾝ 30X23X860	PACKING	1			
23	2	LE015640	ﾊﾟｯｷﾝ 35X18X108	PACKING	2			
24	2	LE015710	ﾊﾟｯｷﾝ 10X5X100	PACKING	2			
25	1	LA011810	ｾﾑｽB M12X1.75	BOLT;SEMS	2			
26	1	LA011810	ｾﾑｽB M12X1.75	BOLT;SEMS	2			
27	1	LR014840	ﾊﾟｲﾌﾟ	PIPE	1			
28	1	LE013660	O-ﾘﾝｸﾞ	O-RING	1			
29	1	LA011820	ｾﾑｽB M12X1.75	BOLT;SEMS	2			
30	1	LR014850	ﾊﾟｲﾌﾟ	PIPE	1			
31	1	LE013660	O-ﾘﾝｸﾞ	O-RING	1			
32	1	LA011820	ｾﾑｽB M12X1.75	BOLT;SEMS	2			
33	1A	LW005910	ｼｭﾗｳﾄﾞ ASSY	SHROUD;SPL	1			
34	2	LW005400	ｼｭﾗｳﾄﾞ	SHROUD	1			
35	2	LE016940	ﾊﾟｯｷﾝ 15X15X340	PACKING	1			
36	2	LE016950	ﾊﾟｯｷﾝ 15X15X110	PACKING	1			
37	2	LE016960	ﾊﾟｯｷﾝ 15X15X430	PACKING	1			
38	2	LE016970	ﾊﾟｯｷﾝ 30X47X465	PACKING	1			
39	2	LE015690	ﾊﾟｯｷﾝ 15X15X45	PACKING	1			
40	1	LA011830	ﾎﾞﾙﾄ M8X1.25	BOLT;SPL	8			
41	1	LS003210	ﾌﾞﾗｹｯﾄ	BRACKET	1			
42	1	LA011840	ｾﾑｽB M10X1.5	BOLT;SEMS	4			
43	1	LS003220	ﾌﾞﾗｹｯﾄ	BRACKET	1			
44	1	LA011840	ｾﾑｽB M10X1.5	BOLT;SEMS	2			
45	1	LG005970	ﾌﾟﾛﾃｸﾀ	PROTECTOR	1			
46	1	LG005980	ﾌﾟﾛﾃｸﾀ	PROTECTOR	1			
47	1	LUG0019	ﾁｮｳB M6XP1.0	BOLT;WING HD	4			
48	1	LN001810	ｸｰﾗ ﾄｸｼｭ (AIR)	COOLER;SPL	1			
49	1	LA011840	ｾﾑｽB M10X1.5	BOLT;SEMS	2			
50	1	LA011850	ｾﾑｽB M10X1.5	BOLT;SEMS	2			
51	1	LS003230	ﾌﾞﾗｹｯﾄ	BRACKET	1			
52	1	LA011840	ｾﾑｽB M10X1.5	BOLT;SEMS	4			
53	1	LN002330	ｸｰﾗﾊﾟｰﾂ (FUEL)	COOLER PARTS	1			
54	1	LA011830	ﾎﾞﾙﾄ M8X1.25	BOLT;SPL	4			
55	1A	LS003850	ﾌﾞﾗｹｯﾄ	BRACKET	1			
56	2	LS003240	ﾌﾞﾗｹｯﾄ	BRACKET	1			
57	2	LE013690	ﾊﾟｯｷﾝ 30X43X490	PACKING	1			
58	1	LA011830	ﾎﾞﾙﾄ M8X1.25	BOLT;SPL	2			
59	1	LS003250	ﾌﾞﾗｹｯﾄ	BRACKET	1			
60	1	LA011830	ﾎﾞﾙﾄ M8X1.25	BOLT;SPL	2			

https://truckmanualshub.com/

https://truckmanualshub.com/

パーツインデックス
Parts index

PART NO.	PPC	ITEM	PART NO.	PPC	ITEM	PART NO.	PPC	ITEM
-------	ZAJ010L0056	3		ZAJ010L0056	189		ZAJ010L0057	55
	ZAJ010L0056	4		ZAJ010L0056	190		ZAJ010L0057	56
	ZAJ010L0056	5		ZAJ010L0056	191		ZAJ010L0057	57
	ZAJ010L0056	6		ZAJ010L0056	192		ZAJ010L0057	59
	ZAJ010L0056	7		ZAJ010L0056	193		ZAJ010L0057	60
	ZAJ010L0056	8		ZAJ010L0056	194		ZAJ010L0057	61
	ZAJ010L0056	24		ZAJ010L0056	195		ZAJ010L0057	63
	ZAJ010L0056	25		ZAJ010L0056	196		ZAJ010L0057	69
	ZAJ010L0056	27		ZAJ010L0056	197		ZAJ010L0057	70
	ZAJ010L0056	28		ZAJ010L0056	198		ZAJ010L0057	71
	ZAJ010L0056	30		ZAJ010L0056	199		ZAJ010L0057	72
	ZAJ010L0056	31		ZAJ010L0056	200		ZAJ010L0057	73
	ZAJ010L0056	33		ZAJ010L0056	201		ZAJ010L0057	74
	ZAJ010L0056	34		ZAJ010L0056	202		ZAJ010L0057	75
	ZAJ010L0056	36		ZAJ010L0056	203		ZAJ010L0057	80
	ZAJ010L0056	37		ZAJ010L0056	204		ZAJ010L0057	82
	ZAJ010L0056	38		ZAJ010L0056	205		ZAJ010L0057	83
	ZAJ010L0056	40		ZAJ010L0056	206		ZAJ010L0057	137
	ZAJ010L0056	41		ZAJ010L0056	207		ZAJ010L0057	138
	ZAJ010L0056	42		ZAJ010L0056	208		ZAJ010L0057	139
	ZAJ010L0056	44		ZAJ010L0056	209		ZAJ010L0057	140
	ZAJ010L0056	50		ZAJ010L0056	210		ZAJ010L0057	141
	ZAJ010L0056	51		ZAJ010L0056	211		ZAJ010L0057	142
	ZAJ010L0056	52		ZAJ010L0056	212		ZAJ010L0057	143
	ZAJ010L0056	53		ZAJ010L0056	213		ZAJ010L0057	144
	ZAJ010L0056	54		ZAJ010L0056	214		ZAJ010L0057	145
	ZAJ010L0056	55		ZAJ010L0056	215		ZAJ010L0057	146
	ZAJ010L0056	56		ZAJ010L0056	216		ZAJ010L0057	147
	ZAJ010L0056	61		ZAJ010L0056	217		ZAJ010L0057	148
	ZAJ010L0056	63		ZAJ010L0056	218		ZAJ010L0057	149
	ZAJ010L0056	64		ZAJ010L0056	237		ZAJ010L0057	150
	ZAJ010L0056	79		ZAJ010L0056	239		ZAJ010L0057	151
	ZAJ010L0056	120		ZAJ010L0056	240		ZAJ010L0057	152
	ZAJ010L0056	121		ZAJ010L0056	241		ZAJ010L0057	153
	ZAJ010L0056	122		ZAJ010L0056	242		ZAJ010L0057	154
	ZAJ010L0056	123		ZAJ010L0056	243		ZAJ010L0057	155
	ZAJ010L0056	124		ZAJ010L0056	244		ZAJ010L0057	156
	ZAJ010L0056	125		ZAJ010L0056	246		ZAJ010L0057	157
	ZAJ010L0056	126		ZAJ010L0056	247		ZAJ010L0057	158
	ZAJ010L0056	127		ZAJ010L0056	248		ZAJ010L0057	159
	ZAJ010L0056	128		ZAJ010L0056	249		ZAJ010L0057	160
	ZAJ010L0056	129		ZAJ010L0056	250		ZAJ010L0057	161
	ZAJ010L0056	130		ZAJ010L0056	251		ZAJ010L0057	162
	ZAJ010L0056	131		ZAJ010L0056	255		ZAJ010L0057	163
	ZAJ010L0056	132		ZAJ010L0056	258		ZAJ010L0057	164
	ZAJ010L0056	133		ZAJ010L0056	259		ZAJ010L0057	165
	ZAJ010L0056	134		ZAJ010L0057	3		ZAJ010L0057	166
	ZAJ010L0056	135		ZAJ010L0057	4		ZAJ010L0057	167
	ZAJ010L0056	136		ZAJ010L0057	5		ZAJ010L0057	186
	ZAJ010L0056	137		ZAJ010L0057	6		ZAJ010L0057	188
	ZAJ010L0056	138		ZAJ010L0057	7		ZAJ010L0057	189
	ZAJ010L0056	139		ZAJ010L0057	8		ZAJ010L0057	190
	ZAJ010L0056	140		ZAJ010L0057	24		ZAJ010L0057	191
	ZAJ010L0056	141		ZAJ010L0057	25		ZAJ010L0057	192
	ZAJ010L0056	142		ZAJ010L0057	26		ZAJ010L0057	193
	ZAJ010L0056	143		ZAJ010L0057	27		ZAJ010L0057	205
	ZAJ010L0056	144		ZAJ010L0057	28		ZAJ010L0057	206
	ZAJ010L0056	145		ZAJ010L0057	29		ZAJ010L0057	207
	ZAJ010L0056	146		ZAJ010L0057	30		ZAJ010L0057	208
	ZAJ010L0056	147		ZAJ010L0057	31		ZAJ010L0057	209
	ZAJ010L0056	148		ZAJ010L0057	38		ZAJ010L0057	210
	ZAJ010L0056	149		ZAJ010L0057	39		ZAJ010L0057	211
	ZAJ010L0056	150		ZAJ010L0057	41		ZAJ010L0057	212
	ZAJ010L0056	169		ZAJ010L0057	43		ZAJ010L0057	213
	ZAJ010L0056	171		ZAJ010L0057	44		ZAJ010L0057	214
	ZAJ010L0056	172		ZAJ010L0057	46		ZAJ010L0057	215
	ZAJ010L0056	173		ZAJ010L0057	47		ZAJ010L0057	216
	ZAJ010L0056	174		ZAJ010L0057	49		ZAJ010L0057	217
	ZAJ010L0056	175		ZAJ010L0057	50		ZAJ010L0057	218
	ZAJ010L0056	176		ZAJ010L0057	52		ZAJ010L0057	219
	ZAJ010L0056	188		ZAJ010L0057	53		ZAJ010L0057	220

https://truckmanualshub.com/

パーツインデックス
Parts index

PART NO. PPC	ITEM	PART NO. PPC	ITEM	PART NO. PPC	ITEM
ZAJ010L0057	221	ZAJ121L0030	92	ZAJ313L0090	10.01
ZAJ010L0057	222	ZAJ121L0030	93	ZAJ313L0090	10.02
ZAJ010L0057	223	ZAJ121L0030	94	ZAJ313L0090	10.03
ZAJ010L0057	224	ZAJ121L0030	95	ZAJ313L0090	10.04
ZAJ010L0057	225	ZAJ121L0030	117	ZAJ313L0090	10.05
ZAJ010L0057	226	ZAJ121L0030	118	ZAJ313L0090	10.06
ZAJ010L0057	227	ZAJ121L0030	119	ZAJ313L0090	10.07
ZAJ010L0057	228	ZAJ121L0030	120	ZAJ313L0090	11.01
ZAJ010L0057	229	ZAJ121L0030	121	ZAJ313L0090	11.02
ZAJ010L0057	230	ZAJ121L0030	122	ZAJ313L0090	11.03
ZAJ010L0057	231	ZAJ121L0038	1	ZAJ313L0090	11.04
ZAJ010L0057	232	ZAJ121L0038	2	ZAJ313L0090	11.05
ZAJ010L0057	233	ZAJ121L0038	3	ZAJ313L0090	11.06
ZAJ010L0057	234	ZAJ121L0038	4	ZAJ313L0090	11.07
ZAJ010L0057	235	ZAJ121L0038	5	ZAJ313L0090	12
ZAJ010L0057	254	ZAJ121L0038	6	ZAJ313L0090	13
ZAJ010L0057	256	ZAJ121L0038	7	ZAJ313L0090	14
ZAJ010L0057	257	ZAJ121L0038	8	ZAJ313L0090	15
ZAJ010L0057	258	ZAJ121L0038	9	ZAJ313L0090	16
ZAJ010L0057	259	ZAJ121L0038	15	ZAJ313L0090	18
ZAJ010L0057	260	ZAJ121L0038	20	ZAJ313L0090	27.01
ZAJ010L0057	261	ZAJ121L0038	23	ZAJ313L0090	27.02
ZAJ010L0057	263	ZAJ121L0038	24	ZAJ313L0090	27.03
ZAJ010L0057	264	ZAJ121L0038	25	ZAJ313L0090	27.04
ZAJ010L0057	265	ZAJ121L0038	26	ZAJ313L0090	27.05
ZAJ010L0057	266	ZAJ121L0038	27	ZAJ313L0090	27.06
ZAJ010L0057	267	ZAJ121L0038	28	ZAJ313L0090	27.07
ZAJ010L0057	268	ZAJ121L0038	30	ZAJ313L0090	28.01
ZAJ010L0057	272	ZAJ121L0038	33	ZAJ313L0090	28.02
ZAJ010L0057	275	ZAJ121L0038	35	ZAJ313L0090	28.03
ZAJ010L0057	276	ZAJ121L0038	39	ZAJ313L0090	28.04
ZAJ012L0006	1	ZAJ121L0038	40	ZAJ313L0090	28.05
ZAJ012L0006	3	ZAJ121L0038	41	ZAJ313L0090	28.06
ZAJ012L0006	4	ZAJ121L0038	42	ZAJ313L0090	28.07
ZAJ121L0030	1	ZAJ121L0038	48	ZAJ313L0090	84
ZAJ121L0030	2	ZAJ121L0038	55	ZAJ313L0090	85
ZAJ121L0030	3	ZAJ121L0038	56	ZAJ313L0090	86
ZAJ121L0030	4	ZAJ121L0038	57	ZAJ313L0090	88
ZAJ121L0030	5	ZAJ121L0038	58	ZAJ313L0091	1
ZAJ121L0030	6	ZAJ121L0038	66	ZAJ313L0091	2
ZAJ121L0030	7	ZAJ121L0038	83	ZAJ313L0091	3
ZAJ121L0030	8	ZAJ121L0038	84	ZAJ313L0091	4
ZAJ121L0030	9	ZAJ121L0038	85	ZAJ313L0091	5
ZAJ121L0030	15	ZAJ121L0038	86	ZAJ313L0091	6
ZAJ121L0030	20	ZAJ121L0038	87	ZAJ313L0091	10.01
ZAJ121L0030	23	ZAJ121L0038	90	ZAJ313L0091	10.02
ZAJ121L0030	24	ZAJ121L0038	92	ZAJ313L0091	10.03
ZAJ121L0030	25	ZAJ121L0038	93	ZAJ313L0091	10.04
ZAJ121L0030	26	ZAJ121L0038	94	ZAJ313L0091	10.05
ZAJ121L0030	27	ZAJ121L0038	95	ZAJ313L0091	10.06
ZAJ121L0030	28	ZAJ121L0038	96	ZAJ313L0091	10.07
ZAJ121L0030	30	ZAJ121L0038	118	ZAJ313L0091	11.01
ZAJ121L0030	33	ZAJ121L0038	119	ZAJ313L0091	11.02
ZAJ121L0030	35	ZAJ121L0038	120	ZAJ313L0091	11.03
ZAJ121L0030	39	ZAJ121L0038	121	ZAJ313L0091	11.04
ZAJ121L0030	40	ZAJ121L0038	122	ZAJ313L0091	11.05
ZAJ121L0030	41	ZAJ121L0038	123	ZAJ313L0091	11.06
ZAJ121L0030	42	ZAJ122L0033	9	ZAJ313L0091	11.07
ZAJ121L0030	48	ZAJ122L0033	26	ZAJ313L0091	12
ZAJ121L0030	54	ZAJ122L0033	27	ZAJ313L0091	13
ZAJ121L0030	55	ZAJ122L0033	35	ZAJ313L0091	14
ZAJ121L0030	56	ZAJ122L0039	7	ZAJ313L0091	15
ZAJ121L0030	57	ZAJ122L0039	24	ZAJ313L0091	16
ZAJ121L0030	65	ZAJ122L0039	25	ZAJ313L0091	18
ZAJ121L0030	82	ZAJ122L0039	33	ZAJ313L0091	27.01
ZAJ121L0030	83	ZAJ313L0090	1	ZAJ313L0091	27.02
ZAJ121L0030	84	ZAJ313L0090	2	ZAJ313L0091	27.03
ZAJ121L0030	85	ZAJ313L0090	3	ZAJ313L0091	27.04
ZAJ121L0030	86	ZAJ313L0090	4	ZAJ313L0091	27.05
ZAJ121L0030	89	ZAJ313L0090	5	ZAJ313L0091	27.06
ZAJ121L0030	91	ZAJ313L0090	6	ZAJ313L0091	27.07

https://truckmanualshub.com/

パーツインデックス
Parts index

PART NO. PPC	ITEM	PART NO. PPC	ITEM	PART NO. PPC	ITEM
ZAJ313L0091	28.01	ZAJ313L0117	118	ZAJ313L0121	25
ZAJ313L0091	28.02	ZAJ313L0117	119	ZAJ313L0121	26
ZAJ313L0091	28.03	ZAJ313L0117	120	ZAJ313L0121	27
ZAJ313L0091	28.04	ZAJ313L0117	122	ZAJ313L0121	30
ZAJ313L0091	28.05	ZAJ313L0120	1	ZAJ313L0121	31
ZAJ313L0091	28.06	ZAJ313L0120	2	ZAJ313L0121	32
ZAJ313L0091	28.07	ZAJ313L0120	3	ZAJ313L0121	33
ZAJ313L0091	87	ZAJ313L0120	4	ZAJ313L0121	34
ZAJ313L0091	88	ZAJ313L0120	5	ZAJ313L0121	36
ZAJ313L0091	89	ZAJ313L0120	6	ZAJ313L0121	45
ZAJ313L0091	91	ZAJ313L0120	10	ZAJ313L0121	46
ZAJ313L0110	1	ZAJ313L0120	11	ZAJ313L0121	47
ZAJ313L0110	2	ZAJ313L0120	12	ZAJ313L0121	48
ZAJ313L0110	3	ZAJ313L0120	13	ZAJ313L0121	49
ZAJ313L0110	4	ZAJ313L0120	14	ZAJ313L0121	50
ZAJ313L0110	5	ZAJ313L0120	15	ZAJ313L0121	51
ZAJ313L0110	6	ZAJ313L0120	16	ZAJ313L0121	52
ZAJ313L0110	12	ZAJ313L0120	17	ZAJ313L0121	54
ZAJ313L0110	13	ZAJ313L0120	20	ZAJ313L0121	55
ZAJ313L0110	14	ZAJ313L0120	21	ZAJ313L0121	56
ZAJ313L0110	15	ZAJ313L0120	22	ZAJ313L0121	57
ZAJ313L0110	16	ZAJ313L0120	23	ZAJ313L0121	58
ZAJ313L0110	18	ZAJ313L0120	24	ZAJ313L0121	59
ZAJ313L0110	87	ZAJ313L0120	25	ZAJ313L0121	60
ZAJ313L0110	88	ZAJ313L0120	26	ZAJ313L0121	61
ZAJ313L0110	89	ZAJ313L0120	27	ZAJ313L0121	121
ZAJ313L0110	91	ZAJ313L0120	30	ZAJ313L0121	122
ZAJ313L0117	1	ZAJ313L0120	31	ZAJ313L0121	123
ZAJ313L0117	2	ZAJ313L0120	32	ZAJ313L0121	125
ZAJ313L0117	3	ZAJ313L0120	33	ZAJ313L0150	1
ZAJ313L0117	4	ZAJ313L0120	34	ZAJ313L0150	2
ZAJ313L0117	5	ZAJ313L0120	36	ZAJ313L0150	3
ZAJ313L0117	6	ZAJ313L0120	45	ZAJ313L0150	4
ZAJ313L0117	10	ZAJ313L0120	46	ZAJ313L0150	5
ZAJ313L0117	11	ZAJ313L0120	47	ZAJ313L0150	6
ZAJ313L0117	12	ZAJ313L0120	48	ZAJ313L0150	11
ZAJ313L0117	13	ZAJ313L0120	49	ZAJ313L0150	12
ZAJ313L0117	14	ZAJ313L0120	50	ZAJ313L0150	13
ZAJ313L0117	15	ZAJ313L0120	51	ZAJ313L0150	14
ZAJ313L0117	16	ZAJ313L0120	52	ZAJ313L0150	15
ZAJ313L0117	17	ZAJ313L0120	54	ZAJ313L0150	16
ZAJ313L0117	20	ZAJ313L0120	55	ZAJ313L0150	17
ZAJ313L0117	21	ZAJ313L0120	56	ZAJ313L0150	21
ZAJ313L0117	22	ZAJ313L0120	57	ZAJ313L0150	22
ZAJ313L0117	23	ZAJ313L0120	58	ZAJ313L0150	23
ZAJ313L0117	24	ZAJ313L0120	59	ZAJ313L0150	24
ZAJ313L0117	25	ZAJ313L0120	60	ZAJ313L0150	25
ZAJ313L0117	26	ZAJ313L0120	61	ZAJ313L0150	26
ZAJ313L0117	27	ZAJ313L0120	121	ZAJ313L0150	27
ZAJ313L0117	30	ZAJ313L0120	122	ZAJ313L0150	30
ZAJ313L0117	31	ZAJ313L0120	123	ZAJ313L0150	31
ZAJ313L0117	32	ZAJ313L0120	125	ZAJ313L0150	32
ZAJ313L0117	33	ZAJ313L0121	1	ZAJ313L0150	33
ZAJ313L0117	34	ZAJ313L0121	2	ZAJ313L0150	34
ZAJ313L0117	36	ZAJ313L0121	3	ZAJ313L0150	36
ZAJ313L0117	45	ZAJ313L0121	4	ZAJ313L0150	46
ZAJ313L0117	46	ZAJ313L0121	5	ZAJ313L0150	47
ZAJ313L0117	47	ZAJ313L0121	6	ZAJ313L0150	48
ZAJ313L0117	48	ZAJ313L0121	10	ZAJ313L0150	49
ZAJ313L0117	49	ZAJ313L0121	11	ZAJ313L0150	50
ZAJ313L0117	50	ZAJ313L0121	12	ZAJ313L0150	51
ZAJ313L0117	51	ZAJ313L0121	13	ZAJ313L0150	52
ZAJ313L0117	52	ZAJ313L0121	14	ZAJ313L0150	55
ZAJ313L0117	54	ZAJ313L0121	15	ZAJ313L0150	56
ZAJ313L0117	55	ZAJ313L0121	16	ZAJ313L0150	57
ZAJ313L0117	56	ZAJ313L0121	17	ZAJ313L0150	58
ZAJ313L0117	57	ZAJ313L0121	20	ZAJ313L0150	59
ZAJ313L0117	58	ZAJ313L0121	21	ZAJ313L0150	60
ZAJ313L0117	59	ZAJ313L0121	22	ZAJ313L0150	61
ZAJ313L0117	60	ZAJ313L0121	23	ZAJ313L0150	118
ZAJ313L0117	61	ZAJ313L0121	24	ZAJ313L0150	119

https://truckmanualshub.com/

パーツインデックス
Parts index

PART NO.	PPC	ITEM
	ZAJ313L0150	120
	ZAJ313L0150	122
	ZAJ313L0151	1
	ZAJ313L0151	2
	ZAJ313L0151	3
	ZAJ313L0151	4
	ZAJ313L0151	5
	ZAJ313L0151	6
	ZAJ313L0151	11
	ZAJ313L0151	12
	ZAJ313L0151	13
	ZAJ313L0151	14
	ZAJ313L0151	15
	ZAJ313L0151	16
	ZAJ313L0151	17
	ZAJ313L0151	21
	ZAJ313L0151	22
	ZAJ313L0151	23
	ZAJ313L0151	24
	ZAJ313L0151	25
	ZAJ313L0151	26
	ZAJ313L0151	27
	ZAJ313L0151	30
	ZAJ313L0151	31
	ZAJ313L0151	32
	ZAJ313L0151	33
	ZAJ313L0151	34
	ZAJ313L0151	36
	ZAJ313L0151	46
	ZAJ313L0151	47
	ZAJ313L0151	48
	ZAJ313L0151	49
	ZAJ313L0151	50
	ZAJ313L0151	51
	ZAJ313L0151	52
	ZAJ313L0151	55
	ZAJ313L0151	56
	ZAJ313L0151	57
	ZAJ313L0151	58
	ZAJ313L0151	59
	ZAJ313L0151	60
	ZAJ313L0151	61
	ZAJ313L0151	121
	ZAJ313L0151	122
	ZAJ313L0151	123
	ZAJ313L0151	125
	ZAJ313L0154	1
	ZAJ313L0154	2
	ZAJ313L0154	3
	ZAJ313L0154	4
	ZAJ313L0154	5
	ZAJ313L0154	6
	ZAJ313L0154	11
	ZAJ313L0154	12
	ZAJ313L0154	13
	ZAJ313L0154	14
	ZAJ313L0154	15
	ZAJ313L0154	16
	ZAJ313L0154	17
	ZAJ313L0154	21
	ZAJ313L0154	22
	ZAJ313L0154	23
	ZAJ313L0154	24
	ZAJ313L0154	25
	ZAJ313L0154	26
	ZAJ313L0154	27
	ZAJ313L0154	30
	ZAJ313L0154	31
	ZAJ313L0154	32
	ZAJ313L0154	33
	ZAJ313L0154	34

PART NO.	PPC	ITEM
	ZAJ313L0154	36
	ZAJ313L0154	46
	ZAJ313L0154	47
	ZAJ313L0154	48
	ZAJ313L0154	49
	ZAJ313L0154	50
	ZAJ313L0154	51
	ZAJ313L0154	52
	ZAJ313L0154	55
	ZAJ313L0154	56
	ZAJ313L0154	57
	ZAJ313L0154	58
	ZAJ313L0154	59
	ZAJ313L0154	60
	ZAJ313L0154	61
	ZAJ313L0154	121
	ZAJ313L0154	122
	ZAJ313L0154	123
	ZAJ313L0154	125
	ZAJ314L0014	1
	ZAJ314L0014	2
	ZAJ314L0014	3
	ZAJ314L0014	4
	ZAJ314L0014	9
	ZAJ314L0014	23
	ZAJ314L0015	1
	ZAJ314L0015	2
	ZAJ314L0015	6
	ZAJ314L0015	16
	ZAJ316L0001	1
	ZAJ316L0023	1
	ZAJ316L0023	3
	ZAJ316L0025	9
	ZAJ316L0025	27
	ZAJ316L0025	28
	ZAJ316L0025	30
	ZAJ316L0025	31
	ZAJ316L0025	32
	ZAJ316L0027	1
	ZAJ316L0027	2
	ZAJ316L0027	18
	ZAJ327L0004	2
	ZAJ327L0004	3
	ZAJ327L0004	5
	ZAJ335L0001	1
	ZAJ335L0001	4
	ZAJ335L0001	5
	ZAJ335L0001	11
	ZAJ335L0001	12
	ZAJ335L0001	13
	ZAJ335L0001	14
	ZAJ335L0001	15
	ZAJ335L0001	16
	ZAJ335L0001	17
	ZAJ335L0001	18
	ZAJ335L0001	19
	ZAJ335L0001	20
	ZAJ335L0001	21
	ZAJ335L0001	22
	ZAJ345L0002	5
	ZAJ345L0002	11
	ZAJ345L0002	12
	ZAJ345L0002	13
	ZAJ345L0029	1
	ZAJ345L0029	2
	ZAJ345L0029	19
	ZAJ345L0029	20
	ZAJ345L0054	1
	ZAJ345L0054	2
	ZAJ345L0054	8
	ZAJ345L0054	21

PART NO.	PPC	ITEM
	ZAJ351L0003	1
	ZAJ351L0003	3
	ZAJ351L0003	9
	ZAJ351L0003	10
	ZAJ351L0003	11
	ZAJ351L0003	12
	ZAJ351L0003	13
	ZAJ351L0003	14
	ZAJ351L0003	15
	ZAJ351L0003	16
	ZAJ351L0003	17
	ZAJ351L0003	18
	ZAJ351L0003	19
	ZAJ351L0003	20
	ZAJ362L0020	1
	ZAJ362L0020	15
	ZAJ362L0020	21
	ZAJ362L0020	22
	ZAJ362L0020	23
	ZAJ362L0020	27
	ZAJ362L0020	28
	ZAJ362L0021	1
	ZAJ362L0021	15
	ZAJ362L0021	21
	ZAJ362L0021	22
	ZAJ362L0021	23
	ZAJ362L0021	27
	ZAJ362L0021	28
---------	ZAJ122L0029	9
	ZAJ122L0029	26
	ZAJ122L0029	27
	ZAJ122L0029	35
102R012Y050R	ZAJ223L0075	34
	ZAJ223L0080	34
102R012Y055N	ZAJ222L0097	36
	ZAJ222L0098	35
	ZAJ222L0128	38
	ZAJ222L0130	37
	ZAJ223L0061	32
108R006Y040R	ZAJ316L0027	14
108R006Y060R	ZAJ010L0056	45
	ZAJ010L0057	64
108R006Z020N	ZAJ010L0056	115
	ZAJ010L0056	183
	ZAJ010L0057	132
	ZAJ010L0057	200
108R006Z025N	ZAJ313L0090	10.09
	ZAJ313L0090	11.09
	ZAJ313L0090	27.08
	ZAJ313L0090	28.08
	ZAJ313L0091	10.09
	ZAJ313L0091	11.09
	ZAJ313L0091	27.08
	ZAJ313L0091	28.08
	ZAJ313L0117	19
	ZAJ313L0117	29
	ZAJ313L0117	53
	ZAJ313L0117	62
	ZAJ313L0120	19
	ZAJ313L0120	29
	ZAJ313L0120	53
	ZAJ313L0120	62
	ZAJ313L0121	19
	ZAJ313L0121	29
	ZAJ313L0121	53
	ZAJ313L0121	62
	ZAJ313L0150	19
	ZAJ313L0150	29
	ZAJ313L0150	53
	ZAJ313L0150	62
	ZAJ313L0151	19

https://truckmanualshub.com/

パーツインデックス
Parts index

PART NO.	PPC	ITEM
	ZAJ313L0151	29
	ZAJ313L0151	53
	ZAJ313L0151	62
	ZAJ313L0154	19
	ZAJ313L0154	29
	ZAJ313L0154	53
	ZAJ313L0154	62
108R006Z040R	ZAJ010L0056	114
	ZAJ010L0056	182
	ZAJ010L0057	131
	ZAJ010L0057	199
108R008Y020N	ZAJ010L0056	81
	ZAJ010L0057	99
108R008Y025N	ZAJ327L0004	8
108R008Y045R	ZAJ327L0004	9
108R008Z025N	ZAJ223L0075	28
	ZAJ223L0080	28
108R008Z050N	ZAJ010L0056	112
	ZAJ010L0056	179
	ZAJ010L0057	129
	ZAJ010L0057	196
108R008Z070N	ZAJ010L0056	113
	ZAJ010L0056	180
	ZAJ010L0057	130
	ZAJ010L0057	197
108R010Y020N	ZAJ010L0056	82
	ZAJ010L0057	32
108R010Z016N	ZAJ121L0030	123
108R010Z020N	ZAJ121L0030	123
	ZAJ121L0038	124
108R010Z030N	ZAJ221L0160	26
	ZAJ221L0161	26
	ZAJ221L0162	27
	ZAJ221L0163	27
	ZAJ223L0061	26
	ZAJ223L0075	26
	ZAJ223L0080	26
108R010Z040B	ZAJ313L0090	81
	ZAJ313L0090	81
	ZAJ313L0091	84
	ZAJ313L0091	84
	ZAJ313L0110	84
	ZAJ313L0117	115
	ZAJ313L0120	118
	ZAJ313L0121	118
	ZAJ313L0150	115
	ZAJ313L0151	118
	ZAJ313L0154	118
108R010Z055B	ZAJ313L0090	80
	ZAJ313L0090	80
	ZAJ313L0091	83
	ZAJ313L0091	83
	ZAJ313L0110	83
	ZAJ313L0117	114
	ZAJ313L0120	117
	ZAJ313L0121	117
	ZAJ313L0150	114
	ZAJ313L0151	117
	ZAJ313L0154	117
108R012Y025R	ZAJ316L0025	16
108R012Y035N	ZAJ222L0097	30
	ZAJ222L0098	29
	ZAJ222L0128	32
	ZAJ222L0130	31
108R012Y055R	ZAJ316L0001	19
108R012Y060R	ZAJ316L0027	17
108R012Z040N	ZAJ121L0030	17
	ZAJ121L0038	17
108R014Z035N	ZAJ121L0030	69
	ZAJ121L0038	70
108R014Z055R	ZAJ223L0075	12

PART NO.	PPC	ITEM
	ZAJ223L0080	12
108R016Y060N	ZAJ122L0029	39
	ZAJ122L0033	39
	ZAJ122L0039	36
108R016Z130B	ZAJ313L0090	82
	ZAJ313L0091	85
	ZAJ313L0110	85
	ZAJ313L0117	116
	ZAJ313L0120	119
	ZAJ313L0121	119
	ZAJ313L0150	116
	ZAJ313L0151	119
	ZAJ313L0154	119
108R018Z080N	ZAJ222L0097	12
	ZAJ222L0098	12
108R020Z080N	ZAJ222L0128	12
	ZAJ222L0130	12
126R010SR	ZAJ010L0056	106
	ZAJ010L0057	123
152K008Y008R	ZAJ316L0025	18
164R016VR	ZAJ010L0056	101
	ZAJ010L0057	118
164R020VR	ZAJ010L0056	102
	ZAJ010L0057	119
174R012SN	ZAJ335L0001	23
	ZAJ351L0003	21
183-112VN	ZAJ122L0029	65
	ZAJ122L0033	65
	ZAJ222L0097	37
	ZAJ222L0098	36
	ZAJ222L0128	39
	ZAJ222L0130	38
	ZAJ223L0061	33
	ZAJ223L0075	35
	ZAJ223L0080	35
183-114VR	ZAJ221L0160	33
	ZAJ221L0161	33
	ZAJ221L0162	34
	ZAJ221L0163	34
338W060Z014B	ZAJ010L0056	105
	ZAJ010L0057	122
370A0100Z	ZAJ010L0056	168
	ZAJ010L0056	236
	ZAJ010L0057	185
	ZAJ010L0057	253
370A0180Z	ZAJ345L0002	6
370A0400Z	ZAJ010L0056	103
	ZAJ010L0057	120
380A0150Z	ZAJ010L0056	170
	ZAJ010L0056	238
	ZAJ010L0057	187
	ZAJ010L0057	255
BLANK	ZAJ122L0029	1
CDP0818	ZAJ316L0023	7
KBV1362	ZAJ222L0128	44
	ZAJ222L0128	47
	ZAJ222L0130	42
	ZAJ222L0130	45
KHJ10410	ZAJ335L0001	
KHJ10420	ZAJ327L0004	
KHJ10450	ZAJ316L0025	
KHJ13270	ZAJ316L0023	
KHJ1399	ZAJ345L0002	
KHJ14520	ZAJ314L0014	
KHJ14780	ZAJ314L0015	
KHJ15050	ZAJ351L0003	
KHJ15850	ZAJ335L0001	10
	ZAJ351L0003	8
KHJ19270	ZAJ316L0027	
KHV0237	ZAJ221L0160	22
	ZAJ221L0161	22

PART NO.	PPC	ITEM
	ZAJ221L0162	22
	ZAJ221L0163	22
	ZAJ222L0097	26
	ZAJ222L0098	26
KHV0238	ZAJ221L0160	23
	ZAJ221L0161	23
	ZAJ221L0162	23
	ZAJ221L0163	23
	ZAJ223L0061	22
KHV0239	ZAJ222L0128	28
	ZAJ222L0130	28
KHV0245	ZAJ223L0075	21
	ZAJ223L0080	21
KHV0249	ZAJ223L0075	22
	ZAJ223L0080	22
KNV1139	ZAJ223L0075	44
	ZAJ223L0080	43
KNV1141	ZAJ223L0075	41
	ZAJ223L0080	40
KNV12540	ZAJ223L0075	
KNV12541	ZAJ223L0080	
KNV14160	ZAJ223L0075	1
KNV14161	ZAJ223L0080	1
KRA10150	ZAJ121L0030	
KRA12910	ZAJ121L0038	
KRC0184	ZAJ122L0033	37
KRC10010	ZAJ122L0029	
KRC10030	ZAJ122L0029	1
	ZAJ122L0029	45-1
	ZAJ122L0033	1
	ZAJ122L0039	43
KRC10130	ZAJ122L0033	
KRC10190	ZAJ122L0029	2
	ZAJ122L0039	
KRH10810	ZAN320L0038	
KRH10811	ZAN320L0054	
KRJ10290	ZAJ010L0056	
KRJ10300	ZAJ012L0006	
KRJ10310	ZAJ313L0090	
KRJ10311	ZAJ313L0117	
KRJ10312	ZAJ313L0150	
KRJ10350	ZAJ345L0029	
KRJ10351	ZAJ345L0054	
KRJ15970	ZAJ010L0057	
KRJ16010	ZAJ313L0091	
KRJ16011	ZAJ313L0120	
KRJ16012	ZAJ313L0154	
KRJ20100	ZAJ313L0110	
KRJ20101	ZAJ313L0121	
KRJ20102	ZAJ313L0151	
KRJ5803	ZAJ316L0001	
KRV11110	ZAJ362L0020	
KRV11120	ZAJ362L0021	
KRV19520	ZAJ221L0162	
KRV19530	ZAJ221L0162	1
KRV19540	ZAJ221L0163	
KRV19550	ZAJ221L0163	1
KRV19560	ZAJ221L0161	
KRV19570	ZAJ221L0161	1
KRV19580	ZAJ221L0160	
KRV19590	ZAJ221L0160	1
KRV19600	ZAJ222L0097	
KRV19610	ZAJ222L0097	1
KRV19620	ZAJ222L0098	
KRV19630	ZAJ222L0098	1
KRV19640	ZAJ223L0061	
KRV19650	ZAJ223L0061	1
KRV2395	ZAJ221L0160	43
	ZAJ221L0161	41
	ZAJ221L0161	41
	ZAJ221L0162	42

https://truckmanualshub.com/

パーツインデックス
Parts index

PART NO.	PPC	ITEM
	ZAJ221L0163	42
KRV2398	ZAJ223L0061	41
	ZAJ223L0061	41
KRV2399	ZAJ223L0061	38
KRV2400	ZAJ222L0097	42
	ZAJ222L0097	45
	ZAJ222L0098	41
	ZAJ222L0098	44
KRV24000	ZAJ222L0128	
KRV2401	ZAJ221L0160	40
	ZAJ221L0161	38
	ZAJ221L0162	39
	ZAJ221L0163	39
KRV24010	ZAJ222L0130	
KRV24650	ZAJ222L0128	1
KRV24700	ZAJ222L0130	1
KTV0059	ZAJ221L0160	32
	ZAJ221L0161	32
	ZAJ221L0162	33
	ZAJ221L0163	33
LA00027	ZAJ010L0056	110
	ZAJ010L0057	127
LA00036	ZAJ010L0056	107
LA00056	ZAJ316L0001	12
	ZAJ316L0027	11
LA00057	ZAJ316L0001	13
	ZAJ316L0023	11
	ZAJ316L0027	12
LA00065	ZAJ010L0056	166
	ZAJ010L0056	234
	ZAJ010L0057	183
	ZAJ010L0057	251
LA00068	ZAJ122L0029	70
	ZAJ122L0033	70
LA00069	ZAJ122L0029	64
	ZAJ122L0033	64
LA00527	ZAJ010L0056	80
	ZAJ010L0057	98
LA00677	ZAN320L0038	22
	ZAN320L0038	36
	ZAN320L0038	38
	ZAN320L0038	40
LA00691	ZAJ010L0057	33
LA00702	ZAJ121L0030	97
	ZAJ121L0038	98
LA00703	ZAJ121L0030	98
	ZAJ121L0038	99
LA00704	ZAJ121L0030	104
	ZAJ121L0038	105
LA00705	ZAJ121L0030	106
	ZAJ121L0038	107
LA00706	ZAJ316L0025	14
LA00759	ZAJ010L0056	177
	ZAJ010L0056	245
	ZAJ010L0057	194
	ZAJ010L0057	262
LA00769	ZAJ316L0025	20
	ZAJ327L0004	10
	ZAJ335L0001	7
	ZAJ351L0003	5
LA00781	ZAN320L0038	24
	ZAN320L0038	26
	ZAN320L0038	31
	ZAN320L0038	34
LA00792	ZAN320L0038	13
	ZAN320L0038	14
LA00804	ZAN320L0038	7
	ZAN320L0054	8
LA010480	ZAN320L0038	9
LA010490	ZAN320L0038	10
LA010500	ZAN320L0038	32
LA010640	ZAJ010L0056	167
	ZAJ010L0056	235
	ZAJ010L0057	184
	ZAJ010L0057	252
LA010650	ZAJ316L0025	21
LA010880	ZAJ222L0128	21
	ZAJ222L0130	21
LA010890	ZAN320L0038	17
	ZAN320L0038	20
LA010900	ZAJ010L0057	40
LA010920	ZAJ010L0056	181
	ZAJ010L0057	198
LA010930	ZAJ010L0056	256
	ZAJ010L0057	273
LA010950	ZAJ121L0030	68
	ZAJ121L0038	69
LA010960	ZAJ314L0014	8
	ZAJ314L0015	5
LA010970	ZAJ314L0014	10
	ZAJ314L0015	7
LA010980	ZAJ314L0014	20
	ZAJ314L0015	14
LA011060	ZAJ012L0006	14
LA011070	ZAJ012L0006	13
LA011120	ZAJ313L0090	87
	ZAJ313L0091	90
	ZAJ313L0110	90
	ZAJ313L0117	121
	ZAJ313L0120	124
	ZAJ313L0121	124
	ZAJ313L0150	121
	ZAJ313L0151	124
	ZAJ313L0154	124
LA011130	ZAJ313L0090	102
	ZAJ313L0091	105
	ZAJ313L0110	105
	ZAJ313L0117	136
	ZAJ313L0120	139
	ZAJ313L0121	139
	ZAJ313L0150	136
	ZAJ313L0151	139
	ZAJ313L0154	139
LA011260	ZAN320L0038	10
	ZAN320L0054	17
LA011800	ZAN320L0054	16
LA011810	ZAN320L0054	25
	ZAN320L0054	26
LA011820	ZAN320L0054	29
	ZAN320L0054	32
LA011830	ZAN320L0054	40
	ZAN320L0054	54
	ZAN320L0054	58
	ZAN320L0054	60
LA011840	ZAN320L0054	42
	ZAN320L0054	44
	ZAN320L0054	49
	ZAN320L0054	52
LA011850	ZAN320L0054	50
LAM0037	ZAJ122L0029	4
	ZAJ122L0033	4
	ZAJ122L0039	2
LAM0038	ZAJ122L0029	56
	ZAJ122L0033	56
LAP0032	ZAJ012L0006	9
LAP0033	ZAJ012L0006	11
LAU0086	ZAJ223L0061	21
LAU0174	ZAJ222L0128	9
	ZAJ222L0130	9
LB00502	ZAJ010L0056	72
	ZAJ010L0057	91
LB00512	ZAJ223L0075	4
	ZAJ223L0080	4
LB00535	ZAJ010L0056	67
	ZAJ010L0057	86
LB00544	ZAJ122L0029	22
	ZAJ122L0033	22
	ZAJ122L0039	20
LB00545	ZAJ121L0030	52
	ZAJ121L0038	53
LB00546	ZAJ121L0030	66
	ZAJ121L0038	67
LB00547	ZAJ121L0030	67
	ZAJ121L0038	68
LB00548	ZAJ121L0030	88
	ZAJ121L0038	89
LB00549	ZAJ121L0030	100
	ZAJ121L0038	101
LB00758	ZAJ122L0029	67
	ZAJ122L0033	67
LB011310	ZAJ221L0160	42
	ZAJ221L0161	40
	ZAJ221L0162	41
	ZAJ221L0163	41
LB011320	ZAJ221L0160	41
	ZAJ221L0161	39
	ZAJ221L0162	40
	ZAJ221L0163	40
LB011330	ZAJ222L0097	44
	ZAJ222L0098	43
LB011340	ZAJ222L0097	43
	ZAJ222L0098	42
LB011350	ZAJ223L0061	40
LB011360	ZAJ223L0061	39
LB011510	ZAJ345L0029	16
	ZAJ345L0054	16
LB011740	ZAJ122L0029	47
	ZAJ122L0033	47
LB011790	ZAJ121L0030	101
	ZAJ121L0038	102
LB011800	ZAJ121L0030	109
	ZAJ121L0038	110
LB011810	ZAJ121L0030	110
	ZAJ121L0038	111
LB011890	ZAJ313L0090	104
	ZAJ313L0110	107
	ZAJ313L0117	138
	ZAJ313L0121	141
	ZAJ313L0150	138
	ZAJ313L0151	141
LB011900	ZAJ313L0091	107
	ZAJ313L0120	141
	ZAJ313L0154	141
LB012210	ZAJ222L0128	46
	ZAJ222L0130	44
LB012270	ZAJ223L0075	43
	ZAJ223L0080	42
LBB0152	ZAJ121L0030	38
	ZAJ121L0038	38
LBB0162	ZAJ313L0090	30
	ZAJ313L0091	30
	ZAJ313L0110	30
	ZAJ313L0117	64
	ZAJ313L0120	64
	ZAJ313L0121	64
	ZAJ313L0150	64
	ZAJ313L0151	64
	ZAJ313L0154	64
LBB0182	ZAJ010L0056	99
	ZAJ010L0057	116
LBB0214	ZAJ121L0030	32
	ZAJ121L0038	32
LBB0253	ZAJ313L0090	53

https://truckmanualshub.com/

パーツインデックス
Parts index

PART NO.	PPC	ITEM
	ZAJ313L0091	53
	ZAJ313L0110	53
	ZAJ313L0117	87
	ZAJ313L0120	87
	ZAJ313L0121	87
	ZAJ313L0150	87
	ZAJ313L0151	87
	ZAJ313L0154	87
LBB0262	ZAJ122L0029	43
	ZAJ122L0033	43
	ZAJ122L0039	40
LBB0353	ZAJ010L0056	100
	ZAJ010L0057	117
LBB6110	ZAJ313L0090	101
	ZAJ313L0091	104
	ZAJ313L0110	104
	ZAJ313L0117	135
	ZAJ313L0120	138
	ZAJ313L0121	138
	ZAJ313L0150	135
	ZAJ313L0151	138
	ZAJ313L0154	138
LBC0201	ZAJ122L0029	31
	ZAJ122L0033	31
	ZAJ122L0039	29
LBC0202	ZAJ345L0002	9
LBM0123	ZAJ121L0030	74
	ZAJ121L0038	75
LBM0124	ZAJ121L0030	75
	ZAJ121L0038	76
LBP0068	ZAJ010L0056	18
	ZAJ010L0057	18
LBP0073	ZAJ012L0006	10
LBQ0060	ZAJ345L0029	7
	ZAJ345L0054	7
LBQ0062	ZAJ313L0090	40
	ZAJ313L0091	40
	ZAJ313L0110	40
	ZAJ313L0117	74
	ZAJ313L0120	74
	ZAJ313L0121	74
	ZAJ313L0150	74
	ZAJ313L0151	74
	ZAJ313L0154	74
LBQ0080	ZAJ313L0090	100
	ZAJ313L0091	103
	ZAJ313L0110	103
	ZAJ313L0117	134
	ZAJ313L0120	137
	ZAJ313L0121	137
	ZAJ313L0150	134
	ZAJ313L0151	137
	ZAJ313L0154	137
LBQ0082	ZAJ121L0030	21
	ZAJ121L0038	21
	ZAJ316L0027	7
LBQ0086	ZAJ335L0001	26
	ZAJ351L0003	24
LBQ0100	ZAJ316L0025	23
	ZAJ345L0029	18
	ZAJ345L0054	18
LBQ0102	ZAJ121L0030	80
	ZAJ121L0038	81
	ZAJ313L0090	62
	ZAJ313L0090	68
	ZAJ313L0090	71
	ZAJ313L0091	62
	ZAJ313L0091	68
	ZAJ313L0091	71
	ZAJ313L0091	73
	ZAJ313L0091	73

PART NO.	PPC	ITEM
	ZAJ313L0091	113
	ZAJ313L0110	62
	ZAJ313L0110	68
	ZAJ313L0110	71
	ZAJ313L0117	96
	ZAJ313L0117	102
	ZAJ313L0117	105
	ZAJ313L0120	96
	ZAJ313L0120	102
	ZAJ313L0120	105
	ZAJ313L0120	107
	ZAJ313L0120	147
	ZAJ313L0121	96
	ZAJ313L0121	102
	ZAJ313L0121	105
	ZAJ313L0150	96
	ZAJ313L0150	102
	ZAJ313L0150	105
	ZAJ313L0151	96
	ZAJ313L0151	102
	ZAJ313L0151	105
	ZAJ313L0154	96
	ZAJ313L0154	102
	ZAJ313L0154	105
	ZAJ313L0154	107
	ZAJ313L0154	151
	ZAJ314L0014	19
	ZAJ314L0015	13
	ZAJ335L0001	24
	ZAJ351L0003	22
LBQ0112	ZAJ010L0056	20
	ZAJ010L0057	20
	ZAJ121L0030	50
	ZAJ121L0038	50
	ZAJ122L0029	18
	ZAJ122L0029	75
	ZAJ122L0033	18
	ZAJ122L0033	75
	ZAJ122L0039	16
	ZAJ313L0090	79
	ZAJ313L0090	92
	ZAJ313L0091	82
	ZAJ313L0091	95
	ZAJ313L0110	82
	ZAJ313L0110	95
	ZAJ313L0117	113
	ZAJ313L0117	126
	ZAJ313L0120	116
	ZAJ313L0120	129
	ZAJ313L0121	116
	ZAJ313L0121	129
	ZAJ313L0150	113
	ZAJ313L0150	126
	ZAJ313L0151	116
	ZAJ313L0151	129
	ZAJ313L0154	116
	ZAJ313L0154	129
	ZAJ316L0025	24
	ZAJ345L0002	7
	ZAJ345L0029	15
	ZAJ345L0054	15
	ZAJ362L0020	5
	ZAJ362L0021	5
LBQ0122	ZAJ122L0029	33
	ZAJ122L0033	33
	ZAJ122L0039	31
LBQ0140	ZAJ345L0029	5
	ZAJ345L0054	5
LBQ0142	ZAJ221L0160	36
	ZAJ313L0090	76
	ZAJ313L0091	79

PART NO.	PPC	ITEM
	ZAJ313L0110	79
	ZAJ313L0117	110
	ZAJ313L0120	113
	ZAJ313L0121	113
	ZAJ313L0150	110
	ZAJ313L0151	113
	ZAJ313L0154	113
	ZAJ335L0001	8
	ZAJ345L0054	20
	ZAJ351L0003	6
	ZAJ362L0020	9
	ZAJ362L0021	9
LBQ0152	ZAJ121L0030	37
	ZAJ121L0038	37
LBQ0156	ZAJ335L0001	27
	ZAJ351L0003	25
LBQ0162	ZAJ010L0056	21
	ZAJ010L0057	21
	ZAJ313L0090	29
	ZAJ313L0091	29
	ZAJ313L0110	29
	ZAJ313L0117	63
	ZAJ313L0120	63
	ZAJ313L0121	63
	ZAJ313L0150	63
	ZAJ313L0151	63
	ZAJ313L0154	63
	ZAJ345L0002	8
LBQ0182	ZAJ121L0030	45
	ZAJ121L0038	45
	ZAJ122L0029	32
	ZAJ122L0029	73
	ZAJ122L0033	32
	ZAJ122L0033	73
	ZAJ122L0039	30
	ZAJ313L0090	74
	ZAJ313L0091	77
	ZAJ313L0110	77
	ZAJ313L0117	108
	ZAJ313L0120	111
	ZAJ313L0121	111
	ZAJ313L0150	108
	ZAJ313L0151	111
	ZAJ313L0154	111
	ZAJ314L0014	18
	ZAJ314L0015	12
	ZAJ351L0003	7
LBQ0202	ZAJ010L0056	257
	ZAJ010L0057	274
	ZAJ316L0023	8
	ZAJ335L0001	9
LBQ0212	ZAJ121L0030	10
	ZAJ121L0030	31
	ZAJ121L0038	10
	ZAJ121L0038	31
LBQ0222	ZAJ223L0075	27
	ZAJ223L0080	27
	ZAJ362L0020	3
	ZAJ362L0021	3
LBQ0242	ZAJ010L0057	37
	ZAJ121L0030	125
	ZAJ121L0038	126
	ZAJ223L0075	38
	ZAJ313L0090	24
	ZAJ313L0090	96
	ZAJ313L0091	24
	ZAJ313L0091	99
	ZAJ313L0110	24
	ZAJ313L0110	99
	ZAJ313L0117	42
	ZAJ313L0117	130

https://truckmanualshub.com/

パーツインデックス
Parts index

PART NO.	PPC	ITEM
	ZAJ313L0120	42
	ZAJ313L0120	133
	ZAJ313L0121	42
	ZAJ313L0121	133
	ZAJ313L0150	42
	ZAJ313L0150	130
	ZAJ313L0151	42
	ZAJ313L0151	133
	ZAJ313L0154	42
	ZAJ313L0154	133
	ZAJ362L0020	4
LBQ0251	ZAJ313L0090	52
	ZAJ313L0091	52
	ZAJ313L0110	52
	ZAJ313L0117	86
	ZAJ313L0120	86
	ZAJ313L0121	86
	ZAJ313L0150	86
	ZAJ313L0151	86
	ZAJ313L0154	86
LBQ0260	ZAJ313L0090	22
	ZAJ313L0091	22
	ZAJ313L0110	22
	ZAJ313L0117	40
	ZAJ313L0120	40
	ZAJ313L0121	40
	ZAJ313L0150	40
	ZAJ313L0151	40
	ZAJ313L0154	40
LBQ0262	ZAJ122L0029	38
	ZAJ122L0033	38
	ZAJ122L0039	35
LBQ0292	ZAJ362L0021	4
LBQ0302	ZAJ221L0160	25
	ZAJ221L0161	25
	ZAJ221L0162	26
	ZAJ221L0163	26
	ZAJ223L0061	25
	ZAJ223L0075	25
	ZAJ223L0080	25
LBQ0312	ZAJ362L0020	2
	ZAJ362L0021	2
LBQ0322	ZAJ313L0090	35
	ZAJ313L0091	35
	ZAJ313L0110	35
	ZAJ313L0117	69
	ZAJ313L0120	69
	ZAJ313L0121	69
	ZAJ313L0150	69
	ZAJ313L0151	69
	ZAJ313L0154	69
LBQ0342	ZAJ222L0097	29
	ZAJ222L0098	28
	ZAJ222L0128	31
	ZAJ222L0130	30
LBQ0403	ZAJ327L0004	11
LBQ0453	ZAJ121L0030	16
	ZAJ121L0038	16
	ZAJ313L0090	7
	ZAJ313L0090	10.08
	ZAJ313L0090	11.08
	ZAJ313L0091	7
	ZAJ313L0091	10.08
	ZAJ313L0091	11.08
	ZAJ313L0110	7
	ZAJ313L0117	7
	ZAJ313L0117	18
	ZAJ313L0117	28
	ZAJ313L0120	7
	ZAJ313L0120	18
	ZAJ313L0120	28

PART NO.	PPC	ITEM
	ZAJ313L0121	7
	ZAJ313L0121	18
	ZAJ313L0121	28
	ZAJ313L0150	7
	ZAJ313L0150	18
	ZAJ313L0150	28
	ZAJ313L0151	7
	ZAJ313L0151	18
	ZAJ313L0151	28
	ZAJ313L0154	7
	ZAJ313L0154	18
	ZAJ313L0154	28
LBQ0553	ZAJ313L0090	54
	ZAJ313L0091	54
	ZAJ313L0110	54
	ZAJ313L0117	88
	ZAJ313L0120	88
	ZAJ313L0121	88
	ZAJ313L0150	88
	ZAJ313L0151	88
	ZAJ313L0154	88
	ZAJ313L0154	144
	ZAJ313L0154	147
LBQ0803	ZAJ010L0057	35
LBQ0853	ZAJ010L0057	36
LBQ0903	ZAJ223L0075	10
	ZAJ223L0080	10
LBQ1153	ZAJ221L0160	10
	ZAJ221L0161	10
	ZAJ221L0162	10
	ZAJ221L0163	10
	ZAJ223L0061	10
LBQ1353	ZAJ222L0097	10
	ZAJ222L0098	10
LBQ1403	ZAJ222L0128	10
	ZAJ222L0130	10
LBQ5022	ZAJ314L0014	17
	ZAJ314L0015	11
LBQ5219	ZAJ313L0090	91
	ZAJ313L0091	94
	ZAJ313L0110	94
	ZAJ313L0117	125
	ZAJ313L0120	128
	ZAJ313L0121	128
	ZAJ313L0150	125
	ZAJ313L0151	128
	ZAJ313L0154	128
LBQ5262	ZAJ122L0029	12
	ZAJ122L0033	12
	ZAJ122L0039	10
LBQ5263	ZAJ122L0029	14
	ZAJ122L0033	14
	ZAJ122L0039	12
LBQ6011	ZAJ122L0029	44
	ZAJ122L0033	44
	ZAJ122L0039	41
LBQ6013	ZAJ010L0056	57
	ZAJ010L0056	252
	ZAJ010L0057	76
	ZAJ010L0057	269
LBQ6014	ZAJ010L0056	58
	ZAJ010L0056	253
	ZAJ010L0057	77
	ZAJ010L0057	270
LBQ6015	ZAJ010L0056	59
	ZAJ010L0056	254
	ZAJ010L0057	78
	ZAJ010L0057	271
LBQ6021	ZAJ362L0020	7
	ZAJ362L0021	7
LBQ6022	ZAJ316L0025	25

PART NO.	PPC	ITEM
LBQ6025	ZAJ316L0001	10
	ZAJ316L0027	8
	ZAJ362L0020	6
	ZAJ362L0021	6
LBQ6273	ZAJ121L0030	81
	ZAJ121L0038	82
LBQ6908	ZAJ313L0091	112
	ZAJ313L0120	146
	ZAJ313L0154	150
LBQ6910	ZAJ313L0090	46
	ZAJ313L0091	46
	ZAJ313L0110	46
	ZAJ313L0117	80
	ZAJ313L0120	80
	ZAJ313L0121	80
	ZAJ313L0150	80
	ZAJ313L0151	80
	ZAJ313L0154	80
LBQ6912	ZAJ313L0090	65
	ZAJ313L0090	67
	ZAJ313L0090	70
	ZAJ313L0090	99
	ZAJ313L0091	65
	ZAJ313L0091	67
	ZAJ313L0091	70
	ZAJ313L0091	74
	ZAJ313L0091	74
	ZAJ313L0091	102
	ZAJ313L0110	65
	ZAJ313L0110	67
	ZAJ313L0110	70
	ZAJ313L0110	74
	ZAJ313L0110	102
	ZAJ313L0117	99
	ZAJ313L0117	101
	ZAJ313L0117	104
	ZAJ313L0117	133
	ZAJ313L0120	99
	ZAJ313L0120	101
	ZAJ313L0120	104
	ZAJ313L0120	108
	ZAJ313L0120	136
	ZAJ313L0121	99
	ZAJ313L0121	101
	ZAJ313L0121	104
	ZAJ313L0121	108
	ZAJ313L0121	136
	ZAJ313L0150	99
	ZAJ313L0150	101
	ZAJ313L0150	104
	ZAJ313L0150	133
	ZAJ313L0151	99
	ZAJ313L0151	101
	ZAJ313L0151	104
	ZAJ313L0151	108
	ZAJ313L0151	136
	ZAJ313L0154	99
	ZAJ313L0154	101
	ZAJ313L0154	104
	ZAJ313L0154	108
	ZAJ313L0154	136
	ZAJ335L0001	25
	ZAJ351L0003	23
LBQ6916	ZAJ121L0030	29
	ZAJ121L0038	29
LBQ8122	ZAJ121L0030	34
	ZAJ121L0038	34
LBU0039	ZAJ223L0075	8
	ZAJ223L0080	8
LBU0042	ZAJ221L0160	8
	ZAJ221L0161	8

https://truckmanualshub.com/

パーツインデックス
Parts index

PART NO.	PPC	ITEM
	ZAJ221L0162	8
	ZAJ221L0163	8
	ZAJ223L0061	8
LBU0044	ZAJ221L0160	11
	ZAJ221L0161	11
	ZAJ221L0162	11
	ZAJ221L0163	11
	ZAJ223L0061	11
LBU0088	ZAJ223L0075	11
	ZAJ223L0080	11
LBU0097	ZAJ223L0075	16
	ZAJ223L0080	16
LC00149	ZAJ122L0029	68
	ZAJ122L0033	68
LC00163	ZAJ121L0030	102
	ZAJ121L0038	103
LC00221	ZAJ122L0029	59
	ZAJ122L0033	59
LC00222	ZAJ122L0029	62
	ZAJ122L0033	62
LC002860	ZAJ010L0057	23
LC002870	ZAJ010L0056	2
	ZAJ010L0057	2
LC002880	ZAJ121L0030	105
	ZAJ121L0038	106
LC002890	ZAJ121L0030	111
	ZAJ121L0038	112
LC002900	ZAJ121L0030	115
	ZAJ121L0038	116
LC002970	ZAJ012L0006	2
LCC0013	ZAJ316L0023	17
LCC0014	ZAJ316L0001	32
	ZAJ316L0027	31
LD00040	ZAJ221L0160	28
	ZAJ221L0161	28
	ZAJ221L0162	29
	ZAJ221L0163	29
LD001370	ZAJ221L0160	27
	ZAJ221L0161	27
	ZAJ221L0162	28
	ZAJ221L0163	28
LD001380	ZAJ222L0097	31
	ZAJ222L0098	30
LD001390	ZAJ223L0061	27
LD001400	ZAJ222L0128	34
	ZAJ222L0130	33
LD001410	ZAJ222L0128	33
	ZAJ222L0130	32
LD001440	ZAJ314L0014	13
LD001450	ZAJ314L0014	12
	ZAJ314L0015	9
LD001460	ZAJ314L0014	15
LD001470	ZAJ314L0014	11
	ZAJ314L0015	8
LD001490	ZAJ314L0014	14
LD001640	ZAJ223L0075	29
	ZAJ223L0080	29
LDM0188	ZAJ122L0029	60
	ZAJ122L0033	60
LE00422	ZAJ223L0075	9
	ZAJ223L0080	9
LE00608	ZAJ010L0056	157
	ZAJ010L0056	225
	ZAJ010L0057	174
	ZAJ010L0057	242
LE00704	ZAJ221L0160	14
	ZAJ221L0161	14
	ZAJ221L0162	14
	ZAJ221L0163	14
LE00705	ZAJ221L0160	17
	ZAJ221L0161	17

PART NO.	PPC	ITEM
	ZAJ221L0162	17
	ZAJ221L0163	17
	ZAJ223L0061	16
LE00735	ZAJ223L0075	13
	ZAJ223L0080	13
LE00738	ZAJ222L0128	8
	ZAJ222L0130	8
LE00739	ZAJ222L0128	11
	ZAJ222L0130	11
LE00740	ZAJ222L0128	13
	ZAJ222L0130	13
LE00741	ZAJ222L0128	14
	ZAJ222L0130	14
LE00742	ZAJ222L0128	16
	ZAJ222L0130	16
LE00743	ZAJ222L0128	17
	ZAJ222L0130	17
LE00745	ZAJ222L0128	19
	ZAJ222L0130	19
LE00746	ZAJ222L0097	23
	ZAJ222L0098	23
	ZAJ222L0128	25
	ZAJ222L0130	25
LE00768	ZAJ316L0001	8
LE00776	ZAJ122L0029	21
	ZAJ122L0033	21
	ZAJ122L0039	19
LE00784	ZAJ222L0097	11
	ZAJ222L0098	11
LE00785	ZAJ222L0097	17
	ZAJ222L0098	17
LE00954	ZAJ222L0097	8
	ZAJ222L0098	8
LE01126	ZAJ121L0030	87
	ZAJ121L0038	88
LE01175	ZAJ010L0056	9
	ZAJ010L0057	9
LE01176	ZAJ010L0056	90
	ZAJ010L0056	165
	ZAJ010L0056	233
	ZAJ010L0057	107
	ZAJ010L0057	182
	ZAJ010L0057	250
LE01177	ZAJ010L0056	97
	ZAJ010L0056	156
	ZAJ010L0056	224
	ZAJ010L0057	114
	ZAJ010L0057	173
	ZAJ010L0057	241
LE01178	ZAJ010L0056	98
	ZAJ010L0057	115
LE012310	ZAJ222L0097	7
	ZAJ222L0098	7
LE012320	ZAJ222L0128	7
	ZAJ222L0130	7
LE012390	ZAJ222L0097	6
	ZAJ222L0098	6
LE012520	ZAJ313L0090	60
	ZAJ313L0091	60
	ZAJ313L0110	60
	ZAJ313L0117	94
	ZAJ313L0120	94
	ZAJ313L0121	94
	ZAJ313L0150	94
	ZAJ313L0151	94
	ZAJ313L0154	94
	ZAJ313L0154	145
	ZAJ313L0154	148
LE012550	ZAJ222L0128	6
	ZAJ222L0130	6
LE012930	ZAJ316L0027	9

PART NO.	PPC	ITEM
LE013140	ZAJ221L0160	6
	ZAJ221L0161	6
	ZAJ221L0162	6
	ZAJ221L0163	6
	ZAJ223L0061	6
LE013150	ZAJ221L0160	7
	ZAJ221L0161	7
	ZAJ221L0162	7
	ZAJ221L0163	7
	ZAJ223L0061	7
LE013160	ZAJ221L0160	13
	ZAJ221L0161	13
	ZAJ221L0162	13
	ZAJ221L0163	13
LE013170	ZAJ221L0160	18
	ZAJ221L0161	18
	ZAJ221L0162	18
	ZAJ221L0163	18
	ZAJ223L0061	17
LE013180	ZAJ222L0097	13
	ZAJ222L0098	13
LE013190	ZAJ222L0097	14
	ZAJ222L0098	14
LE013200	ZAJ222L0097	18
	ZAJ222L0098	18
LE013210	ZAJ222L0097	22
	ZAJ222L0098	22
LE013220	ZAJ223L0061	13
LE013260	ZAJ362L0020	8
	ZAJ362L0021	8
LE013380	ZAJ010L0056	160
	ZAJ010L0056	228
	ZAJ010L0057	177
	ZAJ010L0057	245
LE013390	ZAJ010L0056	151
	ZAJ010L0056	219
	ZAJ010L0057	168
	ZAJ010L0057	236
LE013400	ZAJ010L0056	154
	ZAJ010L0056	222
	ZAJ010L0057	171
	ZAJ010L0057	239
LE013410	ZAJ010L0056	48
	ZAJ010L0056	94
	ZAJ010L0056	163
	ZAJ010L0056	231
	ZAJ010L0057	67
	ZAJ010L0057	111
	ZAJ010L0057	180
	ZAJ010L0057	248
LE013420	ZAJ010L0056	49
	ZAJ010L0056	158
	ZAJ010L0056	226
	ZAJ010L0057	68
	ZAJ010L0057	175
	ZAJ010L0057	243
LE013440	ZAJ010L0056	96
	ZAJ010L0057	113
LE013450	ZAJ010L0056	164
	ZAJ010L0056	232
	ZAJ010L0057	181
	ZAJ010L0057	249
LE013460	ZAJ010L0056	152
	ZAJ010L0056	220
	ZAJ010L0057	169
	ZAJ010L0057	237
LE013470	ZAJ010L0056	93
	ZAJ010L0056	153
	ZAJ010L0056	221
	ZAJ010L0057	110
	ZAJ010L0057	170

https://truckmanualshub.com/

パーツインデックス
Parts index

PART NO.	PPC	ITEM
	ZAJ010L0057	238
LE013490	ZAJ010L0056	95
	ZAJ010L0056	155
	ZAJ010L0056	223
	ZAJ010L0057	112
	ZAJ010L0057	172
	ZAJ010L0057	240
LE013500	ZAJ010L0056	92
	ZAJ010L0057	109
LE013510	ZAJ010L0056	19
	ZAJ010L0056	91
	ZAJ010L0057	19
	ZAJ010L0057	108
LE013520	ZAJ010L0056	161
	ZAJ010L0056	229
	ZAJ010L0057	178
	ZAJ010L0057	246
LE013540	ZAJ010L0056	162
	ZAJ010L0056	230
	ZAJ010L0057	179
	ZAJ010L0057	247
LE013550	ZAJ010L0056	159
	ZAJ010L0056	227
	ZAJ010L0057	176
	ZAJ010L0057	244
LE013620	ZAJ222L0128	18
	ZAJ222L0130	18
LE013660	ZAN320L0038	16
	ZAN320L0038	19
	ZAN320L0054	28
	ZAN320L0054	31
LE013670	ZAN320L0038	41
LE013680	ZAN320L0038	42
	ZAN320L0038	48
LE013690	ZAN320L0038	43
	ZAN320L0054	57
LE013700	ZAN320L0038	44
LE013710	ZAN320L0038	45
LE013720	ZAN320L0038	46
LE013730	ZAN320L0038	47
LE013740	ZAN320L0038	49
LE013750	ZAN320L0038	50
LE013760	ZAN320L0038	51
	ZAN320L0054	21
LE013770	ZAN320L0038	52
	ZAN320L0054	22
LE014500	ZAN320L0038	48
LE014680	ZAJ121L0030	70
	ZAJ121L0038	71
LE014890	ZAJ313L0090	61
	ZAJ313L0091	61
	ZAJ313L0110	61
	ZAJ313L0117	95
	ZAJ313L0120	95
	ZAJ313L0121	95
	ZAJ313L0150	95
	ZAJ313L0151	95
	ZAJ313L0154	95
LE015470	ZAJ222L0128	13
LE015480	ZAJ222L0128	24
LE015490	ZAJ222L0130	13
LE015500	ZAJ222L0130	24
LE015600	ZAJ223L0075	6
	ZAJ223L0080	6
LE015610	ZAJ223L0075	7
	ZAJ223L0080	7
LE015620	ZAJ223L0075	17
	ZAJ223L0080	17
LE015640	ZAN320L0054	4
	ZAN320L0054	23
LE015690	ZAN320L0054	39

PART NO.	PPC	ITEM
LE015710	ZAN320L0054	24
LE015950	ZAN320L0054	13
LE015980	ZAJ222L0097	14
	ZAJ222L0098	14
LE016910	ZAN320L0054	3
LE016920	ZAN320L0054	14
LE016930	ZAN320L0054	15
LE016940	ZAN320L0054	35
LE016950	ZAN320L0054	36
LE016960	ZAN320L0054	37
LE016970	ZAN320L0054	38
LEC0025	ZAJ316L0001	9
	ZAJ316L0027	6
LEU0007	ZAJ222L0097	19
	ZAJ222L0098	19
LEU0009	ZAJ221L0160	19
	ZAJ221L0161	19
	ZAJ221L0162	19
	ZAJ221L0163	19
	ZAJ223L0061	18
LEU0020	ZAJ222L0097	16
	ZAJ222L0098	16
LEU0021	ZAJ221L0160	16
	ZAJ221L0161	16
	ZAJ221L0162	16
	ZAJ221L0163	16
	ZAJ223L0061	15
LEU0085	ZAJ223L0075	15
	ZAJ223L0080	15
LEU0104	ZAJ223L0075	18
	ZAJ223L0080	18
LF00043	ZAJ010L0056	11
	ZAJ010L0057	11
LG00312	ZAJ316L0023	15
LG00313	ZAJ316L0023	16
LG00330	ZAJ316L0001	22
	ZAJ316L0027	21
LG00337	ZAJ122L0029	20
	ZAJ122L0033	20
	ZAJ122L0039	18
LG00338	ZAJ313L0090	20
	ZAJ313L0091	20
	ZAJ313L0110	20
	ZAJ313L0117	38
	ZAJ313L0120	38
	ZAJ313L0121	38
	ZAJ313L0150	38
	ZAJ313L0151	38
	ZAJ313L0154	38
LG00339	ZAJ313L0090	25
	ZAJ313L0091	25
	ZAJ313L0110	25
	ZAJ313L0117	43
	ZAJ313L0120	43
	ZAJ313L0121	43
	ZAJ313L0150	43
	ZAJ313L0151	43
	ZAJ313L0154	43
LG00340	ZAJ313L0090	32
	ZAJ313L0091	32
	ZAJ313L0110	32
	ZAJ313L0117	66
	ZAJ313L0120	66
	ZAJ313L0121	66
	ZAJ313L0150	66
	ZAJ313L0151	66
	ZAJ313L0154	66
LG00341	ZAJ313L0090	34
	ZAJ313L0091	34
	ZAJ313L0110	34
	ZAJ313L0117	68

PART NO.	PPC	ITEM
	ZAJ313L0120	68
	ZAJ313L0121	68
	ZAJ313L0150	68
	ZAJ313L0151	68
	ZAJ313L0154	68
LG00342	ZAJ313L0090	44
	ZAJ313L0091	44
	ZAJ313L0110	44
LG00343	ZAJ121L0030	43
	ZAJ121L0038	43
LG00345	ZAJ316L0025	8
LG00536	ZAJ010L0056	10
	ZAJ010L0057	10
LG005470	ZAJ316L0023	13
LG005580	ZAJ351L0003	2
LG005620	ZAN320L0038	3
	ZAN320L0054	10
LG005630	ZAN320L0038	11
	ZAN320L0054	18
LG005730	ZAJ316L0023	12
LG005740	ZAJ316L0023	14
LG005790	ZAJ335L0001	3
LG005800	ZAJ327L0004	4
LG005810	ZAJ327L0004	7
LG005860	ZAJ362L0020	18
	ZAJ362L0021	18
LG005870	ZAJ362L0020	19
	ZAJ362L0021	19
LG005880	ZAJ362L0020	20
LG005890	ZAJ362L0021	20
LG005900	ZAN320L0038	2
	ZAN320L0054	9
LG005960	ZAJ345L0029	13
	ZAJ345L0054	13
LG005970	ZAN320L0038	27
	ZAN320L0054	45
LG005980	ZAN320L0038	28
	ZAN320L0054	46
LG006010	ZAJ314L0014	5
	ZAJ314L0015	3
LG006020	ZAJ314L0014	6
LG006200	ZAJ121L0030	12
	ZAJ121L0038	12
LG006510	ZAJ313L0090	44
	ZAJ313L0091	44
	ZAJ313L0117	78
	ZAJ313L0120	78
	ZAJ313L0121	78
	ZAJ313L0150	78
	ZAJ313L0151	78
	ZAJ313L0154	78
LH00029	ZAJ316L0025	10
LH00248	ZAJ313L0090	36
	ZAJ313L0091	36
	ZAJ313L0110	36
	ZAJ313L0117	70
	ZAJ313L0120	70
	ZAJ313L0121	70
	ZAJ313L0150	70
	ZAJ313L0151	70
	ZAJ313L0154	70
LH00249	ZAJ313L0090	42
	ZAJ313L0091	42
	ZAJ313L0110	42
LH00250	ZAJ313L0090	50
	ZAJ313L0091	50
	ZAJ313L0110	50
	ZAJ313L0117	84
	ZAJ313L0120	84
	ZAJ313L0121	84
	ZAJ313L0150	84

https://truckmanualshub.com/

パーツインデックス
Parts index

PART NO.	PPC	ITEM
	ZAJ313L0151	84
	ZAJ313L0154	84
LH00254	ZAJ121L0030	90
	ZAJ121L0038	91
LH00255	ZAJ316L0025	11
LH00337	ZAJ122L0029	53
	ZAJ122L0033	53
LH004940	ZAJ012L0006	5
LH004960	ZAJ313L0090	51
	ZAJ313L0091	51
	ZAJ313L0110	51
	ZAJ313L0117	85
	ZAJ313L0120	85
	ZAJ313L0121	85
	ZAJ313L0150	85
	ZAJ313L0151	85
	ZAJ313L0154	85
LH004970	ZAJ313L0090	55
	ZAJ313L0091	55
	ZAJ313L0110	55
	ZAJ313L0117	89
	ZAJ313L0120	89
	ZAJ313L0121	89
	ZAJ313L0150	89
	ZAJ313L0151	89
	ZAJ313L0154	89
LH004980	ZAJ313L0090	56
	ZAJ313L0091	56
	ZAJ313L0110	56
	ZAJ313L0117	90
	ZAJ313L0120	90
	ZAJ313L0121	90
	ZAJ313L0150	90
	ZAJ313L0151	90
	ZAJ313L0154	90
LH004990	ZAJ313L0090	59
	ZAJ313L0091	59
	ZAJ313L0110	59
	ZAJ313L0117	93
	ZAJ313L0120	93
	ZAJ313L0121	93
	ZAJ313L0150	93
	ZAJ313L0151	93
	ZAJ313L0154	93
LH005410	ZAJ313L0090	42
	ZAJ313L0091	42
	ZAJ313L0117	76
	ZAJ313L0120	76
	ZAJ313L0121	76
	ZAJ313L0150	76
	ZAJ313L0151	76
	ZAJ313L0154	76
LJ00688	ZAJ345L0002	10
LJ00723	ZAJ122L0029	16
	ZAJ122L0033	16
	ZAJ122L0039	14
LJ00726	ZAJ313L0090	31
	ZAJ313L0091	31
	ZAJ313L0110	31
	ZAJ313L0117	65
	ZAJ313L0120	65
	ZAJ313L0121	65
	ZAJ313L0150	65
	ZAJ313L0151	65
	ZAJ313L0154	65
LJ00727	ZAJ313L0090	33
	ZAJ313L0091	33
	ZAJ313L0110	33
	ZAJ313L0117	67
	ZAJ313L0120	67
	ZAJ313L0121	67

PART NO.	PPC	ITEM
	ZAJ313L0150	67
	ZAJ313L0151	67
	ZAJ313L0154	67
LJ00728	ZAJ313L0090	43
	ZAJ313L0091	43
	ZAJ313L0110	43
LJ00730	ZAJ313L0090	49
	ZAJ313L0091	49
	ZAJ313L0110	49
	ZAJ313L0117	83
	ZAJ313L0120	83
	ZAJ313L0121	83
	ZAJ313L0150	83
	ZAJ313L0151	83
	ZAJ313L0154	83
LJ00731	ZAJ313L0090	39
	ZAJ313L0091	39
	ZAJ313L0110	39
	ZAJ313L0117	73
	ZAJ313L0120	73
	ZAJ313L0121	73
	ZAJ313L0150	73
	ZAJ313L0151	73
	ZAJ313L0154	73
LJ01196	ZAJ313L0110	73
	ZAJ313L0121	107
	ZAJ313L0151	107
LJ014150	ZAJ221L0160	15
	ZAJ221L0161	15
	ZAJ221L0162	15
	ZAJ221L0163	15
LJ014160	ZAJ222L0097	15
	ZAJ222L0098	15
LJ014170	ZAJ222L0097	27
	ZAJ222L0098	27
	ZAJ222L0128	29
	ZAJ222L0130	29
LJ014180	ZAJ223L0061	14
LJ014260	ZAJ362L0020	17
LJ014280	ZAJ362L0020	24
	ZAJ362L0021	24
LJ014290	ZAJ362L0020	25
	ZAJ362L0021	25
LJ014300	ZAJ362L0020	26
	ZAJ362L0021	26
LJ014310	ZAJ362L0021	17
LJ014390	ZAJ345L0029	9
	ZAJ345L0029	12
	ZAJ345L0054	12
LJ014400	ZAJ345L0029	10
	ZAJ345L0029	11
	ZAJ345L0054	11
LJ014420	ZAJ222L0128	15
	ZAJ222L0130	15
LJ014440	ZAJ122L0029	2
LJ014460	ZAJ010L0056	43
	ZAJ010L0057	62
LJ014480	ZAJ010L0056	119
	ZAJ010L0056	187
	ZAJ010L0057	136
	ZAJ010L0057	204
LJ014490	ZAJ010L0056	29
	ZAJ010L0057	48
LJ014500	ZAJ010L0056	26
	ZAJ010L0057	45
LJ014510	ZAJ010L0056	1
	ZAJ010L0057	1
LJ014520	ZAJ010L0056	77
	ZAJ010L0057	96
LJ014590	ZAJ121L0030	22
	ZAJ121L0038	22

PART NO.	PPC	ITEM
LJ014600	ZAJ121L0030	73
	ZAJ121L0038	74
LJ014680	ZAJ313L0090	48
	ZAJ313L0091	48
	ZAJ313L0110	48
	ZAJ313L0117	82
	ZAJ313L0120	82
	ZAJ313L0121	82
	ZAJ313L0150	82
	ZAJ313L0151	82
	ZAJ313L0154	82
LJ014690	ZAJ313L0090	26
	ZAJ313L0091	26
	ZAJ313L0110	26
	ZAJ313L0117	44
	ZAJ313L0120	44
	ZAJ313L0121	44
	ZAJ313L0150	44
	ZAJ313L0151	44
	ZAJ313L0154	44
LJ014700	ZAJ313L0090	72
	ZAJ313L0091	75
	ZAJ313L0110	75
	ZAJ313L0117	106
	ZAJ313L0120	109
	ZAJ313L0121	109
	ZAJ313L0150	106
	ZAJ313L0151	109
	ZAJ313L0154	109
LJ014710	ZAJ313L0090	63
	ZAJ313L0091	63
	ZAJ313L0110	63
	ZAJ313L0117	97
	ZAJ313L0120	97
	ZAJ313L0121	97
	ZAJ313L0150	97
	ZAJ313L0151	97
	ZAJ313L0154	97
LJ014720	ZAJ313L0090	64
	ZAJ313L0091	64
	ZAJ313L0110	64
	ZAJ313L0117	98
	ZAJ313L0120	98
	ZAJ313L0121	98
	ZAJ313L0150	98
	ZAJ313L0151	98
	ZAJ313L0154	98
LJ014730	ZAJ313L0090	66
	ZAJ313L0091	66
	ZAJ313L0110	66
	ZAJ313L0117	100
	ZAJ313L0120	100
	ZAJ313L0121	100
	ZAJ313L0150	100
	ZAJ313L0151	100
	ZAJ313L0154	100
LJ014740	ZAJ313L0090	69
	ZAJ313L0091	69
	ZAJ313L0110	69
	ZAJ313L0117	103
	ZAJ313L0120	103
	ZAJ313L0121	103
	ZAJ313L0150	103
	ZAJ313L0151	103
	ZAJ313L0154	103
LJ014750	ZAJ313L0091	72
	ZAJ313L0091	72
	ZAJ313L0120	106
	ZAJ313L0154	106
LJ014760	ZAJ313L0091	109
	ZAJ313L0120	143

https://truckmanualshub.com/

パーツインデックス
Parts index

PART NO.	PPC	ITEM
	ZAJ313L0154	143
LJ014770	ZAJ313L0091	110
	ZAJ313L0120	144
	ZAJ313L0154	146
LJ014780	ZAJ313L0091	111
	ZAJ313L0120	145
	ZAJ313L0154	149
LJ015310	ZAJ122L0033	2
LJ015400	ZAJ223L0075	14
	ZAJ223L0080	14
LJ015410	ZAJ122L0033	37
LJ015420	ZAJ122L0029	37
	ZAJ122L0039	44
LJ015460	ZAJ313L0110	72
	ZAJ313L0121	106
	ZAJ313L0151	106
LJ015590	ZAJ345L0029	9
	ZAJ345L0029	10
	ZAJ345L0054	9
	ZAJ345L0054	10
LJ016050	ZAJ313L0090	43
	ZAJ313L0091	43
	ZAJ313L0117	77
	ZAJ313L0120	77
	ZAJ313L0121	77
	ZAJ313L0150	77
	ZAJ313L0151	77
	ZAJ313L0154	77
LJC0003	ZAJ316L0001	27
	ZAJ316L0027	26
LJC0007	ZAJ316L0023	5
LJC0008	ZAJ316L0023	6
LJC0010	ZAJ316L0001	11
	ZAJ316L0027	10
LJP0038	ZAJ010L0056	65
	ZAJ010L0057	84
LJP0039	ZAJ010L0056	66
	ZAJ010L0057	85
LK00003	ZAJ010L0056	47
	ZAJ010L0056	86
	ZAJ010L0056	118
	ZAJ010L0056	186
	ZAJ010L0057	66
	ZAJ010L0057	103
	ZAJ010L0057	135
	ZAJ010L0057	203
	ZAJ316L0001	4
LK00008	ZAJ362L0020	14
	ZAJ362L0021	14
LK00015	ZAJ362L0020	13
	ZAJ362L0021	13
LK00053	ZAJ122L0029	54
	ZAJ122L0033	54
LK00195	ZAJ221L0160	35
	ZAJ345L0054	19
LK00290	ZAJ223L0061	23
LK00301	ZAJ313L0090	93
	ZAJ313L0091	96
	ZAJ313L0110	96
	ZAJ313L0117	127
	ZAJ313L0120	130
	ZAJ313L0121	130
	ZAJ313L0150	127
	ZAJ313L0151	130
	ZAJ313L0154	130
LK00302	ZAJ313L0090	94
	ZAJ313L0091	97
	ZAJ313L0110	97
	ZAJ313L0117	128
	ZAJ313L0120	131
	ZAJ313L0121	131

PART NO.	PPC	ITEM
	ZAJ313L0150	128
	ZAJ313L0151	131
	ZAJ313L0154	131
LK00306	ZAJ121L0030	47
	ZAJ121L0038	47
LK00327	ZAJ313L0090	98
	ZAJ313L0091	101
	ZAJ313L0110	101
	ZAJ313L0117	132
	ZAJ313L0120	135
	ZAJ313L0121	135
	ZAJ313L0150	132
	ZAJ313L0151	135
	ZAJ313L0154	135
LK00328	ZAJ313L0090	78
	ZAJ313L0091	81
	ZAJ313L0110	81
	ZAJ313L0117	112
	ZAJ313L0120	115
	ZAJ313L0121	115
	ZAJ313L0150	112
	ZAJ313L0151	115
	ZAJ313L0154	115
LK00329	ZAJ121L0030	44
	ZAJ121L0038	44
LK005360	ZAJ362L0020	11
	ZAJ362L0021	11
LK005460	ZAJ223L0075	37
LK005490	ZAJ335L0001	2
LK005500	ZAJ362L0020	10
	ZAJ362L0021	10
LK005510	ZAJ362L0020	11
	ZAJ362L0021	11
LK005520	ZAJ362L0020	12
LK005530	ZAJ362L0021	12
LK005540	ZAN320L0038	6
	ZAN320L0054	7
LK005550	ZAJ345L0029	14
	ZAJ345L0054	14
LK005560	ZAJ345L0029	17
LK005600	ZAJ122L0029	34
	ZAJ122L0033	34
	ZAJ122L0039	32
LK005630	ZAJ314L0014	21
	ZAJ314L0015	15
LK005640	ZAJ314L0014	22
LK005690	ZAJ313L0090	23
	ZAJ313L0091	23
	ZAJ313L0110	23
	ZAJ313L0117	41
	ZAJ313L0120	41
	ZAJ313L0121	41
	ZAJ313L0150	41
	ZAJ313L0151	41
	ZAJ313L0154	41
LKC0001	ZAJ316L0001	26
	ZAJ316L0027	25
LKC0005	ZAJ316L0001	16
LKM0054	ZAJ122L0029	69
	ZAJ122L0033	69
LKM0109	ZAJ122L0029	61
	ZAJ122L0033	61
LKU0087	ZAJ221L0160	4
	ZAJ221L0161	4
	ZAJ221L0162	4
	ZAJ221L0163	4
	ZAJ223L0061	4
LKU0098	ZAJ222L0097	4
	ZAJ222L0098	4
LKU0106	ZAJ222L0128	4
	ZAJ222L0130	4

PART NO.	PPC	ITEM
LKU0131	ZAJ222L0128	24
	ZAJ222L0130	24
LL00055	ZAJ010L0056	60
	ZAJ010L0057	79
LL001090	ZAJ010L0056	178
	ZAJ010L0057	195
LL001100	ZAJ010L0056	111
	ZAJ010L0057	128
LL001140	ZAJ314L0014	16
	ZAJ314L0015	10
LLC0045	ZAJ313L0090	106
	ZAJ313L0091	114
	ZAJ313L0110	109
	ZAJ313L0117	140
	ZAJ313L0120	148
	ZAJ313L0121	143
	ZAJ313L0150	140
	ZAJ313L0151	143
	ZAJ313L0154	152
LLC0082	ZAJ313L0090	45
	ZAJ313L0091	45
	ZAJ313L0110	45
	ZAJ313L0117	79
	ZAJ313L0120	79
	ZAJ313L0121	79
	ZAJ313L0150	79
	ZAJ313L0151	79
	ZAJ313L0154	79
LLC0117	ZAJ316L0023	4
LLC0128	ZAJ316L0001	6
	ZAJ316L0027	4
LLC0152	ZAJ345L0029	22
	ZAJ345L0054	24
LLC0153	ZAJ345L0029	21
	ZAJ345L0054	23
LLC0156	ZAJ345L0029	8
LLG0006	ZAN320L0038	5
	ZAN320L0054	6
LLJ0003	ZAJ345L0029	6
	ZAJ345L0054	6
LLJ0004	ZAJ345L0029	4
	ZAJ345L0054	4
LLM0028	ZAJ010L0056	85
	ZAJ010L0057	34
	ZAJ010L0057	102
LLM0098	ZAJ121L0030	124
	ZAJ121L0038	125
LLP0041	ZAJ010L0056	17
	ZAJ010L0056	46
	ZAJ010L0056	83
	ZAJ010L0056	116
	ZAJ010L0056	184
	ZAJ010L0057	17
	ZAJ010L0057	65
	ZAJ010L0057	100
	ZAJ010L0057	133
	ZAJ010L0057	201
LLS0044	ZAJ335L0001	6
	ZAJ351L0003	4
LLS0046	ZAJ316L0025	15
LLU0014	ZAJ223L0075	23
	ZAJ223L0080	23
LMC0063	ZAJ316L0025	1
LMC0064	ZAJ316L0025	2
LMC0085	ZAJ316L0001	28
	ZAJ316L0027	27
LMC0086	ZAJ316L0025	4
LMC0087	ZAJ316L0025	6
LMC0107	ZAJ316L0001	15
LMM0329	ZAJ122L0029	29
	ZAJ122L0033	29

https://truckmanualshub.com/

パーツインデックス
Parts index

PART NO.	PPC	ITEM
	ZAJ122L0039	27
LMM0330	ZAJ122L0029	25
	ZAJ122L0033	25
	ZAJ122L0039	23
LMM0334	ZAJ122L0029	7
	ZAJ122L0033	7
	ZAJ122L0039	5
LMM0335	ZAJ122L0029	8
	ZAJ122L0033	8
	ZAJ122L0039	6
LMM0336	ZAJ122L0029	11
	ZAJ122L0033	11
	ZAJ122L0039	9
LMM0337	ZAJ122L0029	10
	ZAJ122L0033	10
	ZAJ122L0039	8
LMM0338	ZAJ122L0029	3
	ZAJ122L0033	3
	ZAJ122L0039	1
LMM0341	ZAJ122L0029	58
	ZAJ122L0033	58
LMM0363	ZAJ121L0030	62
	ZAJ121L0038	63
LMM0504	ZAJ122L0029	50
	ZAJ122L0033	50
LMM0505	ZAJ122L0029	55
	ZAJ122L0033	55
LMM0513	ZAJ121L0030	61
	ZAJ121L0038	62
LMM0519	ZAJ121L0030	77
	ZAJ121L0038	78
LMM0545	ZAJ122L0029	19
	ZAJ122L0033	19
	ZAJ122L0039	17
LMM0548	ZAJ121L0030	58
	ZAJ121L0038	59
LMM0549	ZAJ121L0030	126
	ZAJ121L0038	127
LMM0558	ZAJ122L0029	48
	ZAJ122L0033	48
LMM0605	ZAJ122L0029	28
	ZAJ122L0033	28
	ZAJ122L0039	26
LMP0108	ZAJ010L0056	104
	ZAJ010L0057	121
LMP0147	ZAJ010L0056	70
	ZAJ010L0057	89
LMP0208	ZAJ010L0056	74
	ZAJ010L0057	93
LMP0213	ZAJ010L0056	89
	ZAJ010L0057	106
LMP0228	ZAJ010L0056	14
	ZAJ010L0057	14
LMP0229	ZAJ010L0056	15
	ZAJ010L0057	15
LMP0230	ZAJ010L0056	16
	ZAJ010L0057	16
LMP0257	ZAJ012L0006	12
LMU0131	ZAJ222L0097	5
	ZAJ222L0098	5
LMU0135	ZAJ221L0160	5
	ZAJ221L0161	5
	ZAJ221L0162	5
	ZAJ221L0163	5
	ZAJ223L0061	5
LMU0137	ZAJ223L0075	5
	ZAJ223L0080	5
LMU0143	ZAJ221L0160	31
	ZAJ221L0161	31
	ZAJ221L0162	32
	ZAJ221L0163	32

PART NO.	PPC	ITEM
LMU0188	ZAJ222L0128	5
	ZAJ222L0130	5
LMU0207	ZAJ222L0097	35
	ZAJ222L0098	34
	ZAJ222L0128	37
	ZAJ222L0130	36
	ZAJ223L0061	31
LMU0338	ZAJ223L0075	33
	ZAJ223L0080	33
LMU0359	ZAJ222L0097	24
	ZAJ222L0098	24
	ZAJ222L0128	26
	ZAJ222L0130	26
LMU0361	ZAJ222L0097	25
	ZAJ222L0098	25
	ZAJ222L0128	27
	ZAJ222L0130	27
LMU0371	ZAJ222L0128	20
	ZAJ222L0130	20
LN001760	ZAN320L0038	35
LN001790	ZAN320L0038	1
	ZAN320L0054	2
LN001800	ZAN320L0038	12
	ZAN320L0054	20
LN001810	ZAN320L0038	30
	ZAN320L0054	48
LN001820	ZAJ122L0029	46
	ZAJ122L0033	46
LN001880	ZAJ121L0030	131
LN002290	ZAN320L0054	1
LN002300	ZAN320L0054	19
LN002330	ZAN320L0054	53
LN002420	ZAJ121L0038	132
LNC0120	ZAJ316L0025	26
LNC0217	ZAJ313L0090	75
	ZAJ313L0091	78
	ZAJ313L0110	78
	ZAJ313L0117	109
	ZAJ313L0120	112
	ZAJ313L0121	112
	ZAJ313L0150	109
	ZAJ313L0151	112
	ZAJ313L0154	112
LNC0218	ZAJ313L0090	73
	ZAJ313L0091	76
	ZAJ313L0110	76
	ZAJ313L0117	107
	ZAJ313L0120	110
	ZAJ313L0121	110
	ZAJ313L0150	107
	ZAJ313L0151	110
	ZAJ313L0154	110
LNC0238	ZAJ313L0090	77
	ZAJ313L0091	80
	ZAJ313L0110	80
	ZAJ313L0117	111
	ZAJ313L0120	114
	ZAJ313L0121	114
	ZAJ313L0150	111
	ZAJ313L0151	114
	ZAJ313L0154	114
LNM0604	ZAJ122L0029	66
	ZAJ122L0033	66
LNP0180	ZAJ010L0056	62
	ZAJ010L0057	81
LPC0098	ZAJ313L0090	57
	ZAJ313L0091	57
	ZAJ313L0110	57
	ZAJ313L0117	91
	ZAJ313L0120	91
	ZAJ313L0121	91

PART NO.	PPC	ITEM
	ZAJ313L0150	91
	ZAJ313L0151	91
	ZAJ313L0154	91
LPC0113	ZAJ122L0029	36
	ZAJ122L0029	72
	ZAJ122L0033	36
	ZAJ122L0033	72
	ZAJ122L0039	34
LPC0180	ZAJ313L0090	37
	ZAJ313L0091	37
	ZAJ313L0110	37
	ZAJ313L0117	71
	ZAJ313L0120	71
	ZAJ313L0121	71
	ZAJ313L0150	71
	ZAJ313L0151	71
	ZAJ313L0154	71
LPC0203	ZAJ316L0001	17
	ZAJ316L0027	15
LPC0204	ZAJ316L0001	18
	ZAJ316L0027	16
LPC0222	ZAJ313L0090	21
	ZAJ313L0091	21
	ZAJ313L0110	21
	ZAJ313L0117	39
	ZAJ313L0120	39
	ZAJ313L0121	39
	ZAJ313L0150	39
	ZAJ313L0151	39
	ZAJ313L0154	39
LPC0256	ZAJ313L0090	95
	ZAJ313L0091	98
	ZAJ313L0110	98
	ZAJ313L0117	129
	ZAJ313L0120	132
	ZAJ313L0121	132
	ZAJ313L0150	129
	ZAJ313L0151	132
	ZAJ313L0154	132
LPC0259	ZAJ313L0090	97
	ZAJ313L0091	100
	ZAJ313L0110	100
	ZAJ313L0117	131
	ZAJ313L0120	134
	ZAJ313L0121	134
	ZAJ313L0150	131
	ZAJ313L0151	134
	ZAJ313L0154	134
LPC0304	ZAJ345L0002	3
LPC0305	ZAJ345L0002	4
LPM0052	ZAJ122L0029	40
	ZAJ122L0033	40
	ZAJ122L0039	37
LPM0063	ZAJ121L0030	64
	ZAJ121L0038	65
LPM0099	ZAJ121L0030	59
	ZAJ121L0038	60
LPM0116	ZAJ122L0029	13
	ZAJ122L0033	13
	ZAJ122L0039	11
LPM0146	ZAJ121L0030	72
	ZAJ121L0038	73
LPP0041	ZAJ121L0030	51
	ZAJ121L0030	51
	ZAJ121L0038	51
LPP0042	ZAJ121L0030	51-1
	ZAJ121L0038	52
LPP0087	ZAJ121L0030	49
	ZAJ121L0038	49
LPP0172	ZAJ010L0056	12
	ZAJ010L0057	12

https://truckmanualshub.com/

パーツインデックス
Parts index

PART NO.	PPC	ITEM
LPP0173	ZAJ010L0056	13
	ZAJ010L0057	13
LPP0174	ZAJ010L0056	22
	ZAJ010L0057	22
LPU0073	ZAJ121L0030	18
	ZAJ121L0038	18
	ZAJ223L0075	20
	ZAJ223L0080	20
LPU0074	ZAJ221L0160	21
	ZAJ221L0161	21
	ZAJ221L0162	21
	ZAJ221L0163	21
	ZAJ223L0061	20
LPU0078	ZAJ222L0097	21
	ZAJ222L0098	21
	ZAJ222L0128	23
	ZAJ222L0130	23
LPU0116	ZAJ222L0097	9
	ZAJ222L0098	9
LPU0118	ZAJ221L0160	9
	ZAJ221L0161	9
	ZAJ221L0162	9
	ZAJ221L0163	9
	ZAJ223L0061	9
LQ00024	ZAJ316L0023	20
LQ00025	ZAJ316L0025	13
LR00537	ZAJ316L0023	2
LR00538	ZAJ316L0023	9
LR00539	ZAJ316L0023	10
LR00540	ZAJ316L0023	18
LR00549	ZAJ345L0002	2
LR00552	ZAJ010L0056	32
	ZAJ010L0057	51
LR00579	ZAJ313L0090	90
	ZAJ313L0091	93
	ZAJ313L0110	93
	ZAJ313L0117	124
	ZAJ313L0120	127
	ZAJ313L0121	127
	ZAJ313L0150	124
	ZAJ313L0151	127
	ZAJ313L0154	127
LR00583	ZAJ121L0030	99
	ZAJ121L0038	100
LR00585	ZAJ121L0030	108
	ZAJ121L0038	109
LR00586	ZAJ121L0030	112
	ZAJ121L0038	113
LR00588	ZAJ121L0030	116
	ZAJ121L0038	117
LR00895	ZAJ122L0029	45
	ZAJ122L0033	45
	ZAJ122L0039	42
LR012550	ZAJ121L0030	63
	ZAJ121L0038	64
LR014040	ZAJ221L0160	39
	ZAJ221L0161	37
	ZAJ221L0162	38
	ZAJ221L0163	38
LR014050	ZAJ221L0162	24
LR014060	ZAJ221L0161	24
	ZAJ221L0162	25
LR014070	ZAJ221L0160	38
	ZAJ221L0161	36
	ZAJ221L0162	37
	ZAJ221L0163	37
LR014080	ZAJ221L0163	24
LR014090	ZAJ221L0163	25
LR014100	ZAJ221L0160	24
LR014110	ZAJ222L0097	41
	ZAJ222L0098	40

PART NO.	PPC	ITEM
LR014120	ZAJ222L0097	28
LR014130	ZAJ222L0097	40
	ZAJ222L0098	39
LR014140	ZAJ223L0061	37
LR014150	ZAJ223L0061	24
LR014160	ZAJ223L0061	36
LR014520	ZAJ316L0025	29
LR014580	ZAJ362L0020	16
	ZAJ362L0021	16
LR014840	ZAN320L0038	15
	ZAN320L0054	27
LR014850	ZAN320L0038	18
	ZAN320L0054	30
LR014920	ZAJ122L0029	23
	ZAJ122L0033	23
	ZAJ122L0039	21
LR015020	ZAJ121L0030	71
	ZAJ121L0038	72
LR015030	ZAJ121L0030	79
	ZAJ121L0038	80
LR015040	ZAJ121L0030	103
	ZAJ121L0038	104
LR015050	ZAJ121L0030	113
	ZAJ121L0038	114
LR015080	ZAJ314L0014	7
	ZAJ314L0015	4
LR015150	ZAJ012L0006	7
LR015210	ZAJ313L0090	8
	ZAJ313L0091	8
	ZAJ313L0110	8
	ZAJ313L0117	8
	ZAJ313L0120	8
	ZAJ313L0121	8
	ZAJ313L0150	8
	ZAJ313L0151	8
	ZAJ313L0154	8
LR015220	ZAJ313L0090	9
	ZAJ313L0091	9
	ZAJ313L0110	9
	ZAJ313L0117	9
	ZAJ313L0120	9
	ZAJ313L0121	9
	ZAJ313L0150	9
	ZAJ313L0151	9
	ZAJ313L0154	9
LR015230	ZAJ313L0090	10
	ZAJ313L0091	10
	ZAJ313L0110	10
	ZAJ313L0150	10
	ZAJ313L0151	10
	ZAJ313L0154	10
LR015240	ZAJ313L0090	11
	ZAJ313L0091	11
	ZAJ313L0110	11
	ZAJ313L0150	20
	ZAJ313L0151	20
	ZAJ313L0154	20
LR015250	ZAJ313L0090	17
	ZAJ313L0091	17
	ZAJ313L0110	17
	ZAJ313L0117	35
	ZAJ313L0120	35
	ZAJ313L0121	35
	ZAJ313L0150	35
	ZAJ313L0151	35
	ZAJ313L0154	35
LR015260	ZAJ313L0090	27
	ZAJ313L0091	27
	ZAJ313L0110	27
	ZAJ313L0150	45
	ZAJ313L0151	45

PART NO.	PPC	ITEM
	ZAJ313L0154	45
LR015270	ZAJ313L0090	28
	ZAJ313L0091	28
	ZAJ313L0110	28
	ZAJ313L0150	54
	ZAJ313L0151	54
	ZAJ313L0154	54
LR015280	ZAJ313L0090	41
	ZAJ313L0091	41
	ZAJ313L0110	41
	ZAJ313L0117	75
	ZAJ313L0120	75
	ZAJ313L0121	75
	ZAJ313L0150	75
	ZAJ313L0151	75
	ZAJ313L0154	75
LR015290	ZAJ313L0090	89
	ZAJ313L0091	92
	ZAJ313L0110	92
	ZAJ313L0117	123
	ZAJ313L0120	126
	ZAJ313L0121	126
	ZAJ313L0150	123
	ZAJ313L0151	126
	ZAJ313L0154	126
LR015850	ZAJ121L0030	13
	ZAJ121L0038	13
LR015910	ZAJ121L0030	14
	ZAJ121L0038	14
LR015920	ZAJ222L0128	43
	ZAJ222L0130	41
LR015930	ZAJ222L0128	30
LR016020	ZAJ223L0075	24
	ZAJ223L0080	24
LR016030	ZAJ223L0075	40
	ZAJ223L0080	39
LR016080	ZAJ222L0128	43
	ZAJ222L0130	41
LR018180	ZAJ345L0054	17
LS00127	ZAJ121L0030	46
	ZAJ121L0038	46
LS00190	ZAJ122L0029	71
	ZAJ122L0033	71
LS00222	ZAJ122L0029	63
	ZAJ122L0033	63
LS003210	ZAN320L0038	23
	ZAN320L0054	41
LS003220	ZAN320L0038	25
	ZAN320L0054	43
LS003230	ZAN320L0038	33
	ZAN320L0054	51
LS003240	ZAN320L0038	37
	ZAN320L0054	56
LS003250	ZAN320L0038	39
	ZAN320L0054	59
LS003330	ZAJ121L0030	53
	ZAJ121L0038	54
LS003340	ZAJ121L0030	96
	ZAJ121L0038	97
LS003350	ZAJ121L0030	107
	ZAJ121L0038	108
LS003850	ZAN320L0054	55
LSC0094	ZAJ313L0090	47
	ZAJ313L0091	47
	ZAJ313L0110	47
	ZAJ313L0117	81
	ZAJ313L0120	81
	ZAJ313L0121	81
	ZAJ313L0150	81
	ZAJ313L0151	81
	ZAJ313L0154	81

https://truckmanualshub.com/

パーツインデックス
Parts index

PART NO.	PPC	ITEM
LSC0158	ZAJ313L0090	19
	ZAJ313L0091	19
	ZAJ313L0110	19
	ZAJ313L0117	37
	ZAJ313L0120	37
	ZAJ313L0121	37
	ZAJ313L0150	37
	ZAJ313L0151	37
	ZAJ313L0154	37
LSC0187	ZAJ313L0090	58
	ZAJ313L0091	58
	ZAJ313L0110	58
	ZAJ313L0117	92
	ZAJ313L0120	92
	ZAJ313L0121	92
	ZAJ313L0150	92
	ZAJ313L0151	92
	ZAJ313L0154	92
LSC0193	ZAJ316L0025	3
LSC0200	ZAJ316L0025	7
LSC0214	ZAJ316L0001	23
	ZAJ316L0027	22
LSC0227	ZAJ313L0090	38
	ZAJ313L0091	38
	ZAJ313L0110	38
	ZAJ313L0117	72
	ZAJ313L0120	72
	ZAJ313L0121	72
	ZAJ313L0150	72
	ZAJ313L0151	72
	ZAJ313L0154	72
LSC0235	ZAJ316L0001	3
LSC0237	ZAJ316L0001	14
	ZAJ316L0027	13
LSC0238	ZAJ316L0001	20
	ZAJ316L0027	19
LSC0239	ZAJ316L0001	24
	ZAJ316L0027	23
LSC0240	ZAJ316L0001	25
	ZAJ316L0027	24
LSC0285	ZAJ345L0002	1
LSJ0001	ZAJ345L0029	3
	ZAJ345L0054	3
LSM0075	ZAJ122L0029	41
	ZAJ122L0033	41
	ZAJ122L0039	38
LSM0080	ZAJ122L0029	6
	ZAJ122L0033	6
	ZAJ122L0039	4
LSM0082	ZAJ122L0029	15
	ZAJ122L0033	15
	ZAJ122L0039	13
LSM0092	ZAJ121L0030	76
	ZAJ121L0038	77
LSM0113	ZAJ121L0030	12
LSM0118	ZAJ121L0030	60
	ZAJ121L0038	61
LSM0120	ZAJ121L0030	78
	ZAJ121L0038	79
LSM3120	ZAJ121L0030	19
	ZAJ121L0038	19
LSP0109	ZAJ010L0056	73
	ZAJ010L0057	92
LSS0023	ZAJ121L0030	11
	ZAJ121L0038	11
LSS0024	ZAJ121L0030	13
LT001610	ZAN320L0038	8
	ZAN320L0054	12
LT001660	ZAJ313L0090	103
	ZAJ313L0091	106
	ZAJ313L0110	106
	ZAJ313L0117	137
	ZAJ313L0120	140
	ZAJ313L0121	140
	ZAJ313L0150	137
	ZAJ313L0151	140
	ZAJ313L0154	140
LT002070	ZAN320L0054	11
LTM0129	ZAJ122L0029	5
	ZAJ122L0033	5
	ZAJ122L0039	3
LTM0130	ZAJ122L0029	24
	ZAJ122L0033	24
	ZAJ122L0039	22
LTM0185	ZAJ122L0029	51
	ZAJ122L0033	51
LTM0206	ZAJ122L0029	57
	ZAJ122L0033	57
LU00073	ZAJ221L0160	2
	ZAJ221L0161	2
	ZAJ221L0162	2
	ZAJ221L0163	2
	ZAJ223L0061	2
LU00079	ZAJ223L0075	2
	ZAJ223L0080	2
LU00104	ZAJ223L0075	3
	ZAJ223L0080	3
LU00106	ZAJ221L0160	3
	ZAJ221L0161	3
	ZAJ221L0162	3
	ZAJ221L0163	3
	ZAJ223L0061	3
LU00191	ZAJ222L0128	2
	ZAJ222L0130	2
LU00192	ZAJ222L0128	3
	ZAJ222L0130	3
LU002400	ZAJ222L0097	3
	ZAJ222L0098	3
LU002410	ZAJ222L0097	2
	ZAJ222L0098	2
LU002440	ZAJ222L0128	3
	ZAJ222L0130	3
LUC0058	ZAJ316L0023	19
LUC0075	ZAJ316L0025	19
LUC0076	ZAJ316L0025	17
LUC0094	ZAJ313L0090	105
	ZAJ313L0091	108
	ZAJ313L0110	108
	ZAJ313L0117	139
	ZAJ313L0120	142
	ZAJ313L0121	142
	ZAJ313L0150	139
	ZAJ313L0151	142
	ZAJ313L0154	142
LUC0101	ZAJ316L0001	31
	ZAJ316L0027	30
LUC0102	ZAJ316L0001	30
	ZAJ316L0027	29
LUC0103	ZAJ316L0001	29
	ZAJ316L0027	28
LUC0104	ZAJ316L0001	21
	ZAJ316L0027	20
LUC0118	ZAJ313L0090	83
	ZAJ313L0091	86
	ZAJ313L0110	86
	ZAJ313L0117	117
	ZAJ313L0120	120
	ZAJ313L0121	120
	ZAJ313L0150	117
	ZAJ313L0151	120
	ZAJ313L0154	120
LUG0019	ZAN320L0038	29
	ZAN320L0054	47
LUM0168	ZAJ121L0030	36
	ZAJ121L0038	36
LUP0189	ZAJ010L0057	124
LUP0190	ZAJ010L0056	108
	ZAJ010L0057	125
LUU0099	ZAJ223L0075	19
	ZAJ223L0080	19
LUU0100	ZAJ221L0160	20
	ZAJ221L0161	20
	ZAJ221L0162	20
	ZAJ221L0163	20
	ZAJ223L0061	19
LUU0105	ZAJ221L0160	30
	ZAJ221L0161	30
	ZAJ221L0162	31
	ZAJ221L0163	31
	ZAJ222L0097	34
	ZAJ222L0098	33
	ZAJ222L0128	36
	ZAJ222L0130	35
	ZAJ223L0061	30
	ZAJ223L0075	32
	ZAJ223L0080	32
LUU0106	ZAJ222L0097	20
	ZAJ222L0098	20
	ZAJ222L0128	22
	ZAJ222L0130	22
LUU0137	ZAJ221L0160	29
	ZAJ221L0161	29
	ZAJ221L0162	30
	ZAJ221L0163	30
	ZAJ222L0097	33
	ZAJ222L0098	32
	ZAJ222L0128	35
	ZAJ222L0130	34
	ZAJ223L0061	29
	ZAJ223L0075	31
	ZAJ223L0080	31
LUU0152	ZAJ221L0160	12
	ZAJ221L0161	12
	ZAJ221L0162	12
	ZAJ221L0163	12
	ZAJ223L0061	12
LV00029	ZAJ121L0030	114
	ZAJ121L0038	115
LV000540	ZAJ345L0054	22
LW00316	ZAJ121L0030	122
LW004960	ZAJ327L0004	1
LW004970	ZAJ327L0004	6
LW005010	ZAN320L0038	21
LW005020	ZAJ122L0029	52
	ZAJ122L0033	52
LW005070	ZAJ012L0006	6
LW005400	ZAN320L0038	21
	ZAN320L0054	34
LW005570	ZAJ121L0030	132
	ZAJ121L0038	133
LW005910	ZAN320L0054	33
LWC0003	ZAJ316L0001	2
LWC0004	ZAJ316L0001	7
	ZAJ316L0027	5
LZ006890	ZAJ121L0030	128
	ZAJ121L0038	129
LZ006910	ZAJ121L0030	129
	ZAJ121L0038	130
LZ007630	ZAJ221L0160	37
	ZAJ221L0161	35
	ZAJ221L0162	36
	ZAJ221L0163	36
LZ007640	ZAJ222L0097	39

https://truckmanualshub.com/

パーツインデックス
Parts index

PART NO.	PPC	ITEM
	ZAJ222L0098	38
LZ007650	ZAJ223L0061	35
LZ007780	ZAJ222L0128	2
	ZAJ222L0130	2
LZ007960	ZAJ121L0030	127
	ZAJ121L0038	128
LZ007970	ZAJ121L0030	130
	ZAJ121L0038	131
LZ008000	ZAJ012L0006	8
LZ008050	ZAJ222L0128	41
	ZAJ222L0130	46
LZ008630	ZAJ222L0128	42
	ZAJ222L0130	40
LZ008640	ZAJ222L0128	45
	ZAJ222L0130	43
LZ008750	ZAJ223L0075	45
	ZAJ223L0080	37
LZ008760	ZAJ223L0075	39
	ZAJ223L0080	38
LZ008770	ZAJ223L0075	42
	ZAJ223L0080	41
LZC0076	ZAJ122L0029	17
	ZAJ122L0029	74
	ZAJ122L0033	17
	ZAJ122L0033	74
	ZAJ122L0039	15
LZC0100	ZAJ316L0025	5
LZC0149	ZAJ316L0025	22
LZC0156	ZAJ122L0029	30
	ZAJ122L0033	30
	ZAJ122L0039	28
LZC0158	ZAJ316L0001	5
	ZAJ316L0027	3
LZC0179	ZAJ345L0002	2
LZM0191	ZAJ122L0029	42
	ZAJ122L0033	42
	ZAJ122L0039	39
LZM0289	ZAJ122L0029	49
	ZAJ122L0033	49
LZP0176	ZAJ010L0056	76
	ZAJ010L0057	95
LZU0021	ZAJ222L0097	32
	ZAJ222L0098	31
LZU0022	ZAJ223L0061	28
LZU0081	ZAJ223L0075	30
	ZAJ223L0080	30
M01X0812	ZAJ221L0160	34
	ZAJ221L0161	34
	ZAJ221L0162	35
	ZAJ221L0163	35
	ZAJ223L0061	34
	ZAJ223L0075	36
	ZAJ223L0080	36
M01X1800	ZAJ222L0097	38
	ZAJ222L0098	37
	ZAJ222L0128	40
	ZAJ222L0130	39
TB00026	ZAJ010L0056	68
	ZAJ010L0057	87
TB00082	ZAJ010L0056	69
	ZAJ010L0057	88
TF00005	ZAJ316L0025	12
TG00286	ZAJ010L0056	88
	ZAJ010L0057	105
TJ00066	ZAJ010L0056	87
	ZAJ010L0057	104
TJ00067	ZAJ010L0056	78
	ZAJ010L0057	97
TJ00765	ZAJ010L0056	23
	ZAJ010L0057	42
TLM0023	ZAJ010L0056	84
	ZAJ010L0056	117
	ZAJ010L0056	185
	ZAJ010L0057	101
	ZAJ010L0057	134
	ZAJ010L0057	202
TM00046	ZAJ010L0056	109
	ZAJ010L0057	126
TNP0022	ZAJ010L0056	35
	ZAJ010L0057	54
TNP0023	ZAJ010L0056	39
	ZAJ010L0057	58
TPP0080	ZAJ010L0056	75
	ZAJ010L0057	94
TR00047	ZAJ010L0056	71
	ZAJ010L0057	90
TR00521	ZAN320L0038	4
	ZAN320L0054	5
TR00587	ZAJ121L0030	14

https://truckmanualshub.com/

https://truckmanualshub.com/

Parts Manual for SH210-5, SH210LC-5, SH240LC-5LR
Publication Record

Revision	Issued Date	Library Reference Number
Firstst Edition	October 20, 2006	WCL2005-0W
2nd Edition	July 20, 2007	WCL2005-0W
3rd Edition	December 10, 2008	WCL2005-0W

All rights reserved.

Published by: SUMITOMO CONSTRUCTION MACHINERY MANUFACTURING CO.LTD.
731-1, NAGANUMAHARA-CHO, INAGE-KU,
CHIBA, 263-0001, Japan
For further information please contact :
Phone : 81-43-420-1878
Facsimile : 81-43-420-1907

https://truckmanualshub.com/

https://truckmanualshub.com/

SUMITOMO (S.H.I.)
CONSTRUCTION MACHINERY
MANUFACTURING CO., LTD.

D08•12 000 C.E.③