https://truckmanualshub.com/

OPERATING MANUAL

H40-60XT (A380)

DO NOT REMOVE THIS MANUAL FROM THIS UNIT

PART NO. 4150900 **3/19**

https://truckmanualshub.com/

LIFT TRUCK MODEL_____ **SERIAL NUMBER** _____

ENGINE MODEL_____ **SERIAL NUMBER**_____

TRANSMISSION TYPE_____ **SERIAL NUMBER**_____

MAST LIFT HEIGHT_____ **GROUP NUMBER**_____

CARRIAGE TYPE_____ **GROUP NUMBER**_____

DRIVE TIRE SIZE_____ **STEERING TIRE SIZE**_____

SPECIAL EQUIPMENT OR ATTACHMENTS

_____

_____

_____

© Hyster Company 2019. All Rights Reserved.

HYSTER, , FORTIS, MONOTROL, and YARDMASTER are Registered Trademarks of Hyster-Yale Group, Inc. HSS, DURAMATCH, UNISOURCE, and are Trademarks in the United States and certain other jurisdictions.

https://truckmanualshub.com/

Foreword

To OWNERS, USERS, and OPERATORS:

The safe and efficient operation of a lift truck requires skill and alertness on the part of the operator. To develop the skill required the operator must:

- Receive training in the proper operation of THIS lift truck.
- Understand any potential hazards that may exist in the work place where the lift truck is intended to be used.
- Understand the capabilities and limitations of the lift truck.
- Become familiar with the construction of the lift truck and see that it is maintained in good condition.
- Read and properly understand the warnings, instructions, and operating procedures in this manual.

In addition, a qualified person, experienced in lift truck operation, must guide a new operator through several driving and load handling operations before the new operator attempts to operate the lift truck alone.

It is the responsibility of the employer to make sure that the operator can see, hear, and has the physical and mental ability to operate the equipment safely.

Various laws and regulations require the employer to train lift truck operators. These laws and regulations include:

- Occupational Safety and Health Act (USA)
- Canada Material Handling Regulations

NOTE: A comprehensive operator training program is available from **Hyster Company**. For further details, contact your dealer for **Hyster** lift trucks.

This **Operating Manual** is the original instruction and contains information necessary for the operation and maintenance of a basic lift truck. Optional equipment is sometimes installed that can change some operating characteristics described in this manual. Make sure the necessary instructions are available and understood before operating the lift truck.

Some of the components and systems described in this **Operating Manual** will NOT be installed on your unit. If you

https://truckmanualshub.com/

have a question about any item described, contact your dealer for **Hyster** lift trucks.

Additional information that describes safe operation and use of lift trucks is available from the following sources:

- Employment safety and health standards or regulations (Examples: "Occupational Safety and Health Standards (USA)", "Canada Material Handling Regulations".
- Safety codes and standards (Example: Industrial Truck Standards Development Foundation, ANSI/ITSDF B56.1, *Safety Standard for Low Lift and High Lift Trucks*).
- Publications from government safety agencies, government insurers, private insurers and private organizations (Example: *Accident Prevention Manual for Industrial Operations,* from the National Safety Council).
- *Guide for Users of Industrial Lift Trucks* (Hyster Part No. 852930) describes lift truck safety, good maintenance practices, and training programs and is available from your dealer for **Hyster** lift trucks.
- *Lift Truck/Pedestrian Accidents, Causes and Prevention.* **Hyster Company** (LIFTPED/B 12/2003).

NOTE: Hyster lift trucks are not intended for use on public roads.

NOTE: The following symbols and words indicate safety information in this manual:

⚠ WARNING

Indicates a hazardous situation which, if not avoided, could result in death or serious injury.

⚠ CAUTION

Indicates a hazardous situation which, if not avoided, could result in minor or moderate injury and property damage.

On the lift truck, the WARNING symbol and word are on orange background. The CAUTION symbol and word are on yellow background.

https://truckmanualshub.com/

Contents

Foreword **1**
TO OWNERS, USERS, AND OPERATORS: 1
Warning **6**
Model Description **9**
GENERAL 11
OPERATOR PROTECTION EQUIPMENT 11
NAMEPLATE 12
SAFETY LABELS 13
CONTROLS 17
DASH DISPLAY 39
Operating Procedures **48**
GENERAL 48
Know Your Lift Truck 48
Stability and Center of Gravity 50
Capacity (Weight and Load Center) 51
INSPECTION BEFORE OPERATION 52
Checks With the Engine Stopped 52
Mounting and Dismounting 53
Lift Truck Interlocks 53
Starting Procedure 54
Checks With the Engine Running 55
OPERATING TECHNIQUES 56
Basic Operating Procedures 56
Driving and Direction Changes 61
General 62
Normal Operations 62
Standard Operator Presence System 63
Basic Powershift or Electronic Powershift Transmission 63
Inching Control 64
Steering (Turning) 65
Load Handling, General 66
Load Handling, Lifting, Lowering, and Tilting 68
Load Handling, How to Engage and Disengage a Load 70
Load Handling, Traveling 73
Set Up the Load Weight Sensor 77
Understanding the A/D (Analog to Digital) Value 77
Store a Value for Zero on the Load Meter 77
Load Meter 78
HIGHWAY TRUCKS, RAIL CARS, AND DOCKS 79
ATTACHMENTS 80
DISCONNECTING ATTACHMENT HYDRAULIC QUICK-DISCONNECT HOSES 81
CONNECTING ATTACHMENT HYDRAULIC QUICK-DISCONNECT HOSES 81

https://truckmanualshub.com/

STOPPING 83
PARKING 83
Maintenance 84
GENERAL 84
Serial Number Data 85
HOW TO MOVE A DISABLED LIFT TRUCK 85
How to Tow the Lift Truck 85
HOW TO PUT A LIFT TRUCK ON BLOCKS 86
How to Raise the Drive Tires 86
How to Raise the Steering Tires 87
HOW TO CLEAN A LIFT TRUCK 89
Maintenance Schedule 89
Maintenance Procedures Every 8 Hours or Daily 108
HOW TO MAKE CHECKS WITH THE ENGINE STOPPED 108
Tires and Wheels 108
Safety Labels 110
Mast, Carriage, Header Hoses, Lift Chains, and Attachment 110
Operator Restraint System 112
Emergency Locking Retractor (ELR) 116
Hood and Seat Latches 116
Engine Compartment 117
Ground Static Strap 117
Fuel, Oil, and Coolant Leaks, Check 119
Hydraulic Hoses 119
Coolant Hoses 119
Transmission 119
Hydraulic System Oil 120
Engine Oil 121
Air Filter 126
Forks 126
Forks, Remove 126
Forks, Inspect 129
Forks, Install 132
Forks, Adjust 133
Brake Fluid 134
HOW TO MAKE CHECKS WITH THE ENGINE RUNNING 136
Indicator Lights, Horn, Fuses, and Relays 136
Service Brakes 138
Brake Fluid Level 138
Operation, Check 138
Parking Brake 139
Engine Oil Pressure 139
Cooling System 139
Steering System 141
Control Levers and Pedals 141
Lift System Operation 141
HOW TO ADD FUEL TO THE LIFT TRUCK 142

https://truckmanualshub.com/

Liquefied Petroleum Gas (LPG) 142
LPG Tank, Removal 143
LPG Tank, Fill 146
LPG Tank, Install 147
Gasoline and Diesel Fuel 147
WHEELS AND TIRES 148
General 148
PNEUMATIC TIRE WITH TUBE, REPAIR 148
Remove Wheels From Lift Truck 148
Remove Tire From Wheel 149
Tire Removal, Two-Piece Wheel 151
Tire Removal, Three- and Four-Piece Wheels 152
Install Wheel in Tire 153
Tire Installation Three- or Four-Piece Wheel 154
Tire Installation Two-Piece Wheel 155
Add Air to Pneumatic Tires With Tube 156
Install the Wheels 157
PNEUMATIC TUBELESS TIRE, REPAIR 157
Remove Tire From Lift Truck 157
Remove Tire From Wheel 158
Install Tire on Wheel 159
Add Air to Pneumatic Tubeless Tire 163
Install the Wheels 163
SOLID RUBBER TIRES ON PNEUMATIC WHEELS, CHANGE 164
Remove Tire From Wheel 164
Install Tire on Wheel 166
OPERATING PROCEDURES FOR A NEW OR REBUILT ENGINE 168
JUMP-STARTING THE LIFT TRUCK 168
Jump-Starting Using a Battery Charger 168
Jump-Starting Using Another Lift Truck 169
CHANGES TO THE OVERHEAD GUARD 169
HOW TO PUT INTERNAL COMBUSTION ENGINE (ICE) TRUCKS IN STORAGE 169
Short-Term Storage 170
Long-Term Storage 171
While the Lift Truck is in Storage 171
How to Put Batteries in Storage 172
Putting a Stored Lift Truck Back Into Service 172
HOW TO MOVE A LIFT TRUCK ON A TRANSPORT 173
Loading 174
Unloading 175
PREPARATION FOR USE 175
Preparation After Transport 175

https://truckmanualshub.com/

⚠ WARNING

FAILURE TO FOLLOW THESE INSTRUCTIONS CAN CAUSE SERIOUS INJURY OR DEATH!
AUTHORIZED, TRAINED OPERATOR ONLY!

KNOW THE EQUIPMENT:

- ALWAYS use 3 points of contact when getting on and off the truck.
- KNOW operating, inspection, and maintenance instructions in this **Operating Manual**.
- **DO NOT** operate or repair truck unless trained and authorized.
- INSPECT truck before use.
- **DO NOT** operate if truck needs repair. Tag truck and remove key. Repair truck before use. Always use **Hyster Approved** parts when making repairs. Replacement parts must meet or exceed the specifications of the original equipment manufacturer.
- USE auxiliary equipment (attachments) for intended purpose only.
- VERIFY truck is equipped with overhead guard and load backrest adequate for the load.

LOOK WHERE YOU ARE GOING:

- IF YOU CAN'T SEE, DON'T GO.
- TRAVEL in reverse if load blocks forward vision.
- MAKE SURE tail swing area is clear.
- SOUND horn at intersections or where vision is blocked.
- WATCH clearances, especially overhead.

KNOW YOUR LOADS:

- HANDLE only stable loads within specified weight and load center. See Nameplate on truck.
- **DO NOT** handle loose loads higher than load backrest.
- SPACE forks as far apart as load allows and center load between forks. Keep load against load backrest.

https://truckmanualshub.com/

⚠ WARNING

FAILURE TO FOLLOW THESE INSTRUCTIONS CAN CAUSE SERIOUS INJURY OR DEATH!
AUTHORIZED, TRAINED OPERATOR ONLY!

USE COMMON SENSE:

- **DO NOT** use truck to lift people unless there is no other practical option. Then, use only a securely attached special work platform. Follow instructions in this Operating Manual.
- OBEY traffic rules. Yield right-of-way to pedestrians.
- BE in complete control at all times.
- ALLOW NO ONE under or near lift mechanism or load.
- OPERATE truck only from operator's seat.
- KEEP arms, legs, and head inside operator's compartment.
- **DO NOT** move truck if anyone is between truck and stationary object.
- BEFORE DISMOUNTING, neutralize travel control, lower carriage, and set brake.
- WHEN PARKING, also shut off power, close LPG fuel valve, block wheels on inclines.

KNOW THE AREA:

- NEVER enter a trailer or railroad car unless its wheels are blocked.
- CONFIRM floor strength.
- FILL fuel tank or charge battery only in designated area.
- TURN OFF engine when fueling.
- AVOID sparks or open flame. Provide ventilation.
- **DO NOT** start if fuel is leaking.
- KEEP vent caps clear when charging battery.
- DISCONNECT battery during servicing.
- CHECK dockboard width, capacity, and security.

https://truckmanualshub.com/

⚠ WARNING

FAILURE TO FOLLOW THESE INSTRUCTIONS CAN CAUSE SERIOUS INJURY OR DEATH!
AUTHORIZED, TRAINED OPERATOR ONLY!

PROTECT YOURSELF FASTEN YOUR SEAT BELT!

- AVOID bumps, holes, and loose materials.
- AVOID sudden starts or stops.
- NEVER turn on or angle across an incline.
- TRAVEL on inclines with load uphill or when unloaded with lift mechanism downhill.
- TILT mast slowly and smoothly. LIFT or LOWER with upright vertical or tilted slightly back. Use minimum tilt when stacking elevated loads.
- TRAVEL with carriage as low as possible and tilted back.
- SLOW DOWN before turning, especially without load.

FAILURE TO FOLLOW THESE INSTRUCTIONS CAN CAUSE THE LIFT TRUCK TO TIP.

DO NOT JUMP off if the truck tips over. HOLD steering wheel firmly. BRACE your feet. LEAN FORWARD and AWAY from point of impact.

https://truckmanualshub.com/

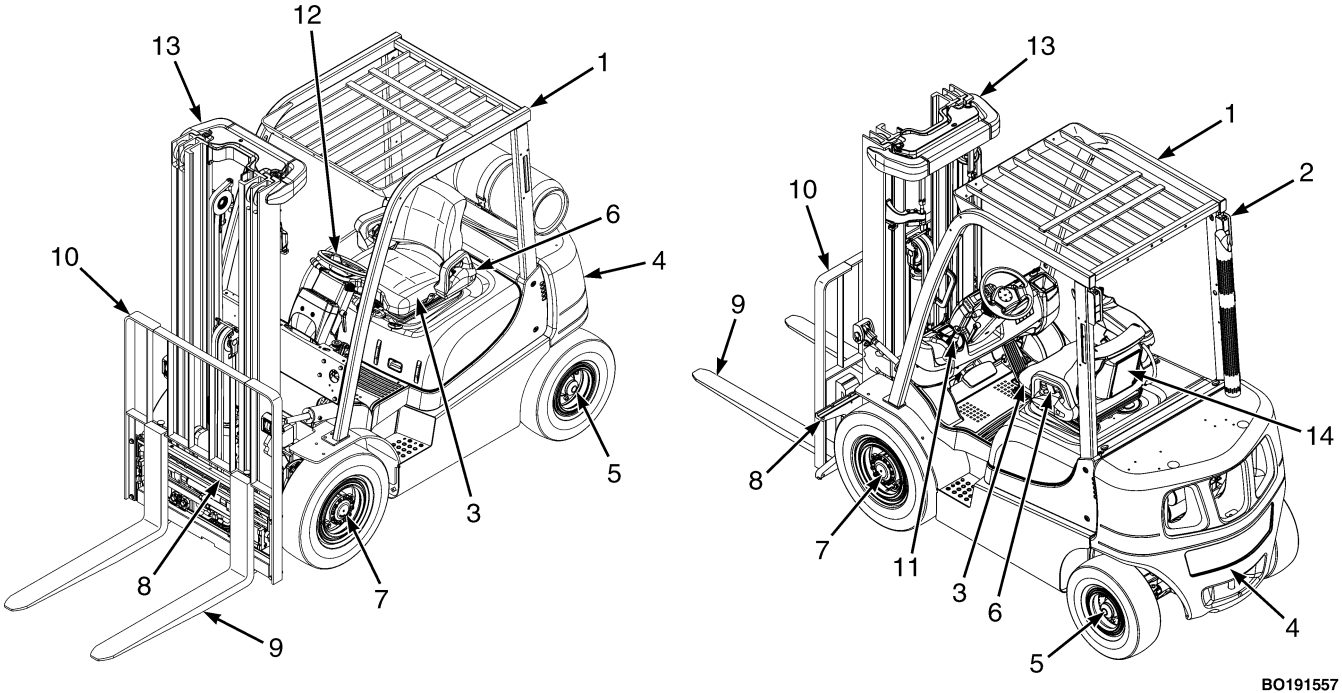

Figure 1. Model View Showing Major Components of H40-60XT

https://truckmanualshub.com/

Legend for Figure 1

1. OVERHEAD GUARD
2. TAIL, BRAKE, AND REVERSE LIGHTS
3. SEAT
4. COUNTERWEIGHT
5. STEERING AXLE
6. SEAT BELT AND HIP RESTRAINT
7. DRIVE AXLE
8. CARRIAGE
9. FORKS
10. LOAD BACKREST EXTENSION
11. PARKING BRAKE
12. STEERING WHEEL
13. MAST
14. OPERATING MANUAL (BEHIND SEAT)

https://truckmanualshub.com/

Model Description

General

This **Operating Manual** is for the following models of lift trucks:

H40-60XT (A380)

These lift trucks are available with the following engine:

- PSI 2.4L engine which uses LPG fuel
- PSI 2.4L bi-fuel engine which uses Gasoline and LPG fuels
- Yanmar 2.6L engine which uses diesel fuel
- Yanmar 3.3L engine which uses diesel fuel

These lift truck models are equipped with a Basic Powershift or Electronic Powershift transmission.

The H40-60XT lift trucks are equipped with pneumatic tires or solid rubber tires that look like pneumatic tires. See **Wheels and Tires** in the **Maintenance Section** for a description of these tires.

Operator Protection Equipment

The LOAD BACKREST EXTENSION is installed to keep loose parts of the load from falling back toward operator. It must be high enough, with vertical openings small enough, to prevent parts of the load from falling backward. If a load backrest extension that is different from the one installed on your lift truck is required, contact your **Hyster** lift truck dealer.

The OVERHEAD GUARD is intended to offer reasonable protection to the operator from falling objects, but cannot protect against every possible impact. Therefore, it must not be considered a substitute for good judgment and care when handling loads. DO NOT remove the overhead guard.

NOTE: The seat belt can be either black or red.

The SEAT BELT AND HIP RESTRAINT provide additional means to help the operator keep the head and torso substantially within the confines of the lift truck frame and overhead guard if a tipover occurs. This restraint system is intended to reduce the risk of the head and torso being trapped between the lift truck and the ground, but it cannot

https://truckmanualshub.com/

protect the operator against all possible injury in a tipover. The hip restraint will help the operator resist side movement. It is not a substitute for the seat belt. Always fasten the seat belt.

This lift truck is equipped with one of the three seat belt configurations.

- Seat belt with no operation interlock.
- Seat belt with operation interlock. Seat belt must be fastened for lift truck to start or to travel.

Nameplate

⚠ WARNING

DO NOT add to or modify the lift truck. Any modification that affects the safe operation of the truck cannot be undertaken without the written authorization of Hyster Company.

Any change to the lift truck, the tyres, or its equipment can change the lifting capacity. The lift truck must be rated as equipped and the Nameplate must show the new capacity rating.

The capacity is specified in kilograms (kg) and pounds (lb). The capacity is the maximum load that the lift truck can handle for the load condition shown on the Nameplate.

The maximum capacity for the lift truck, at full load height, must be shown on the Nameplate. Special capacities with the load height reduced or with optional load centers, may also be shown on the Nameplate.

The lift truck serial number code is on the Nameplate. The serial number code is also stamped on the right-hand side of the lift truck frame, under the floorplate.

When a lift truck is shipped incomplete from the factory, the Nameplate is covered by an INCOMPLETE label as shown in **Figure 2**. If the equipment on the truck is changed, the Nameplate is covered by a NOTICE label as shown in **Figure 2**. If your lift truck has either of these labels, do not operate the lift truck. Contact your dealer for **Hyster** lift trucks to obtain a complete correct Nameplate.

https://truckmanualshub.com/

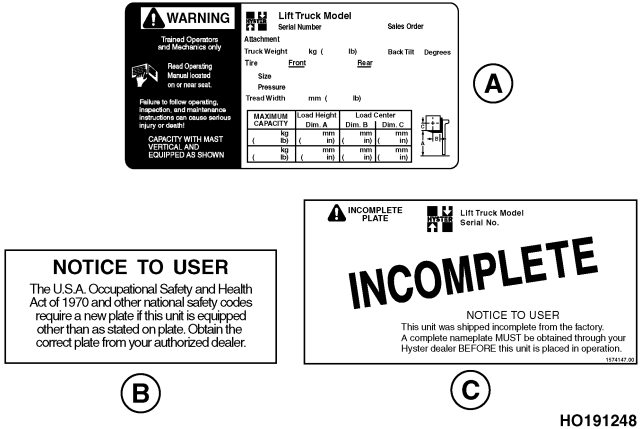

A. NAMEPLATE
B. NOTICE LABEL
C. INCOMPLETE LABEL

Figure 2. Nameplate and Labels

Safety Labels

Safety labels are installed on the lift truck to provide information about possible hazards. It is important that all safety labels are installed on the lift truck and can be read. See **Figure 3**.

All possible label configurations that can be on the lift trucks covered in this **Operating Manual** are not shown in **Figure 3**. See the **Parts Manual** for label part numbers and a complete listing of all labels that are available for the lift trucks covered in this **Operating Manual**.

https://truckmanualshub.com/

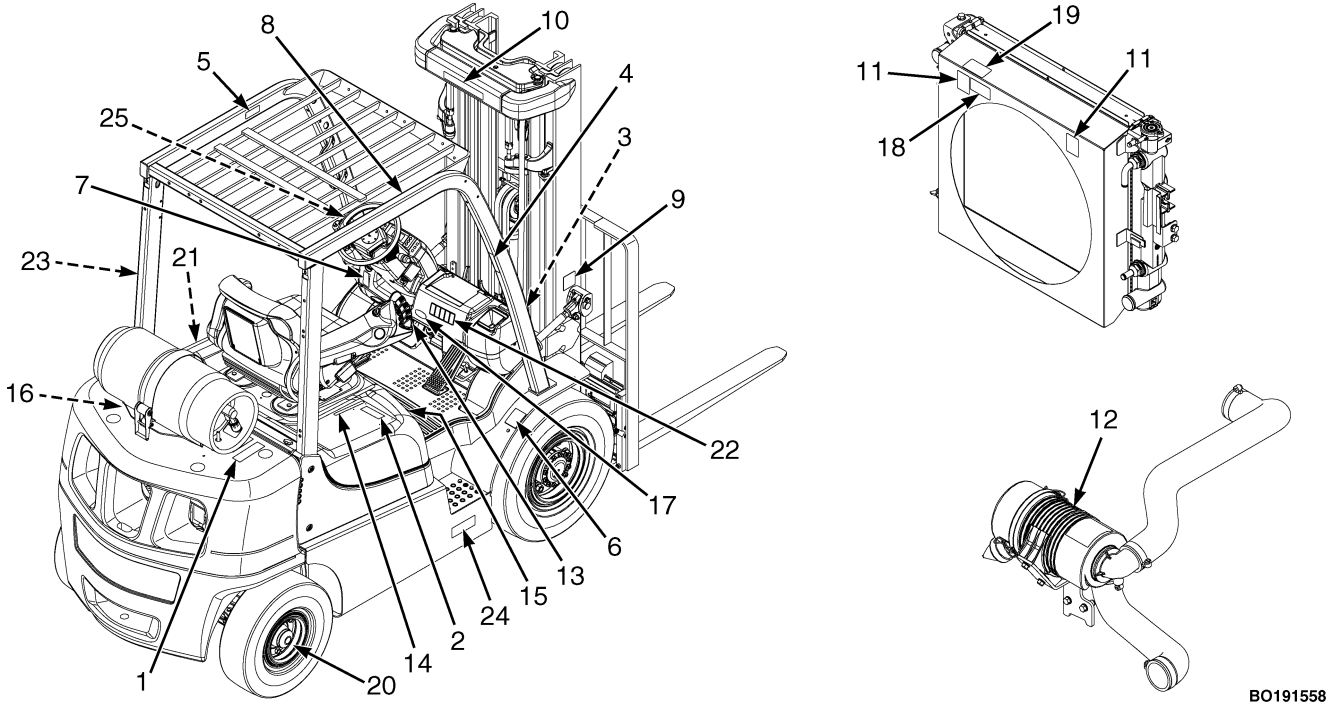

Figure 3. Warning and Safety Labels (Sheet 1 of 3)

https://truckmanualshub.com/

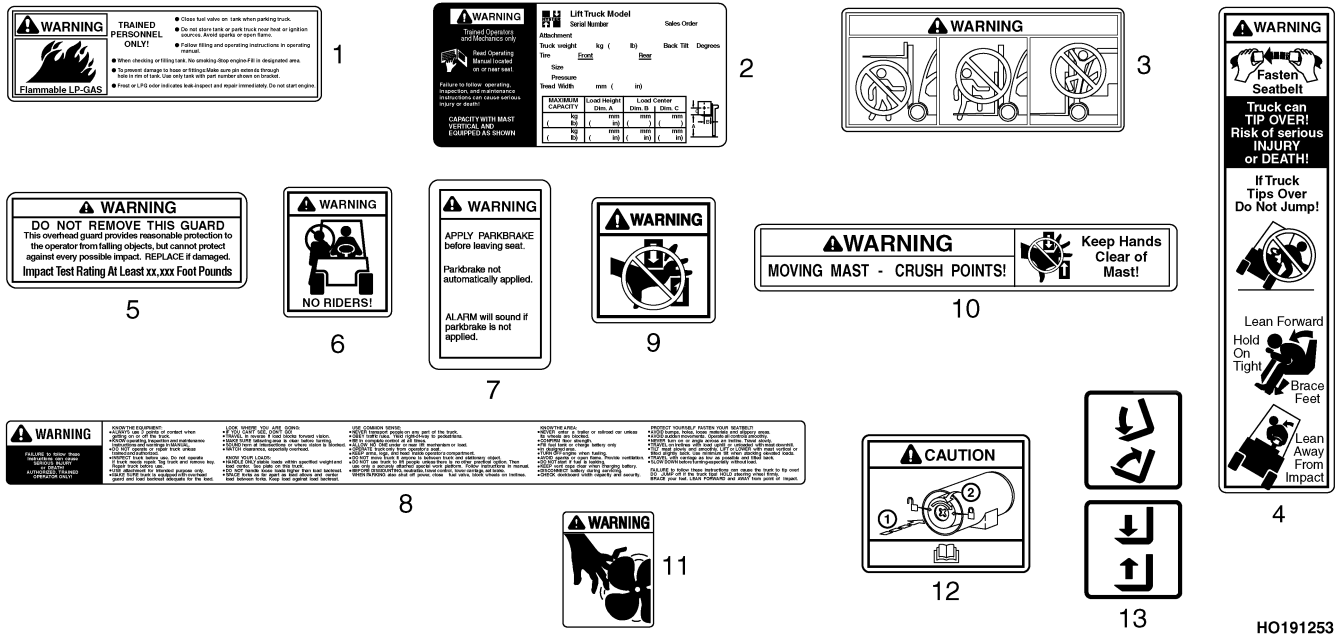

Figure 3. Warning and Safety Labels (Sheet 2 of 3)

https://truckmanualshub.com/

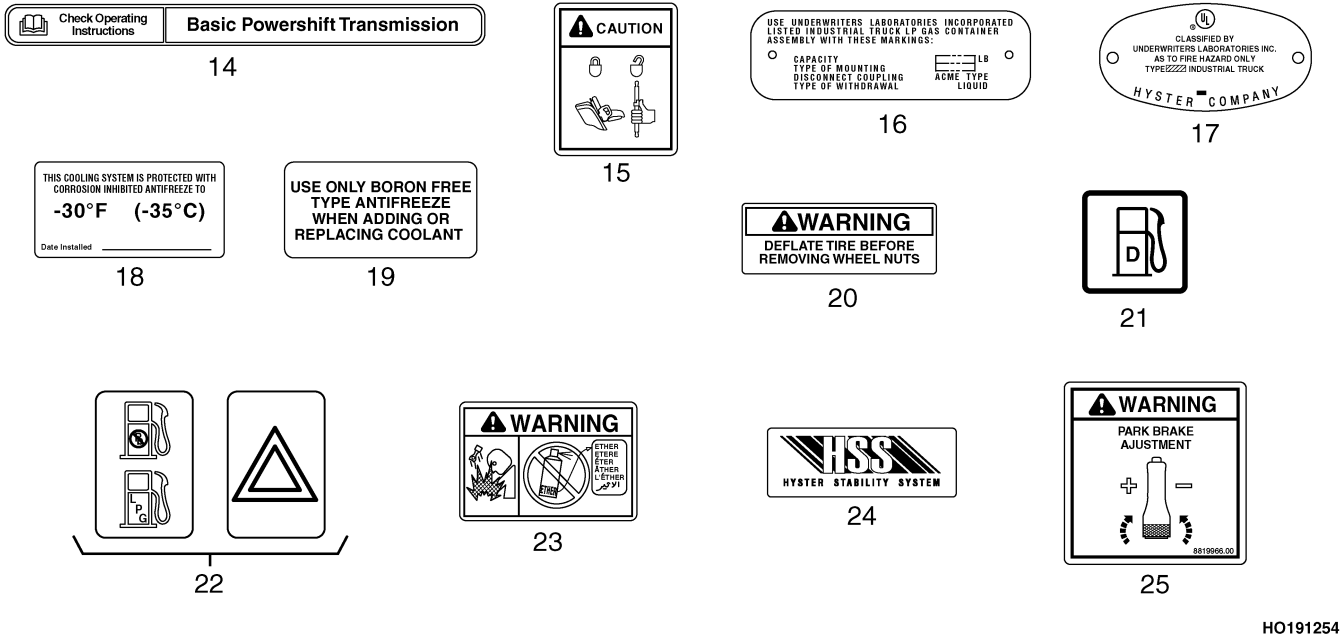

Figure 3. Warning and Safety Labels (Sheet 3 of 3)

https://truckmanualshub.com/

Legend for Figure 3

1. FLAMMABLE LP-GAS
2. NAMEPLATE
3. NO ONE ON OR UNDER FORKS
4. TIPOVER WARNING
5. OVERHEAD GUARD LABEL
6. NO RIDERS
7. WARNING FOR PARKING BRAKE
8. WARNING, OPERATION
9. MAST WARNING
10. MAST WARNING
11. FAN WARNING
12. AIR FILTER INSTALL CAUTION
13. LIFT AND TILT LABEL
14. TRANSMISSION LABEL (EXAMPLE ONLY)
15. LOCKING GAS SPRING
16. LPG TANK WARNING
17. UL LABEL
18. ANTIFREEZE LABEL
19. BORON-FREE LABEL
20. SPLIT WHEEL WARNING
21. DIESEL FUEL LABEL (NOT SHOWN)
22. BI-FUEL SWITCH LABEL (NOT SHOWN)
23. ETHER WARNING (DIESEL ONLY)
24. STABILITY SYSTEM LABEL (ON BOTH SIDES OF TRUCK)
25. PARK BRAKE ADJUSTMENT WARNING

Controls

⚠ WARNING

If any of the instruments, levers, or pedals do not operate as described in the following tables, report the problem immediately. DO NOT operate the lift truck until the problem is corrected.

Not all lift trucks have all of the controls shown in **Figure 4** and **Table 1**.

https://truckmanualshub.com/

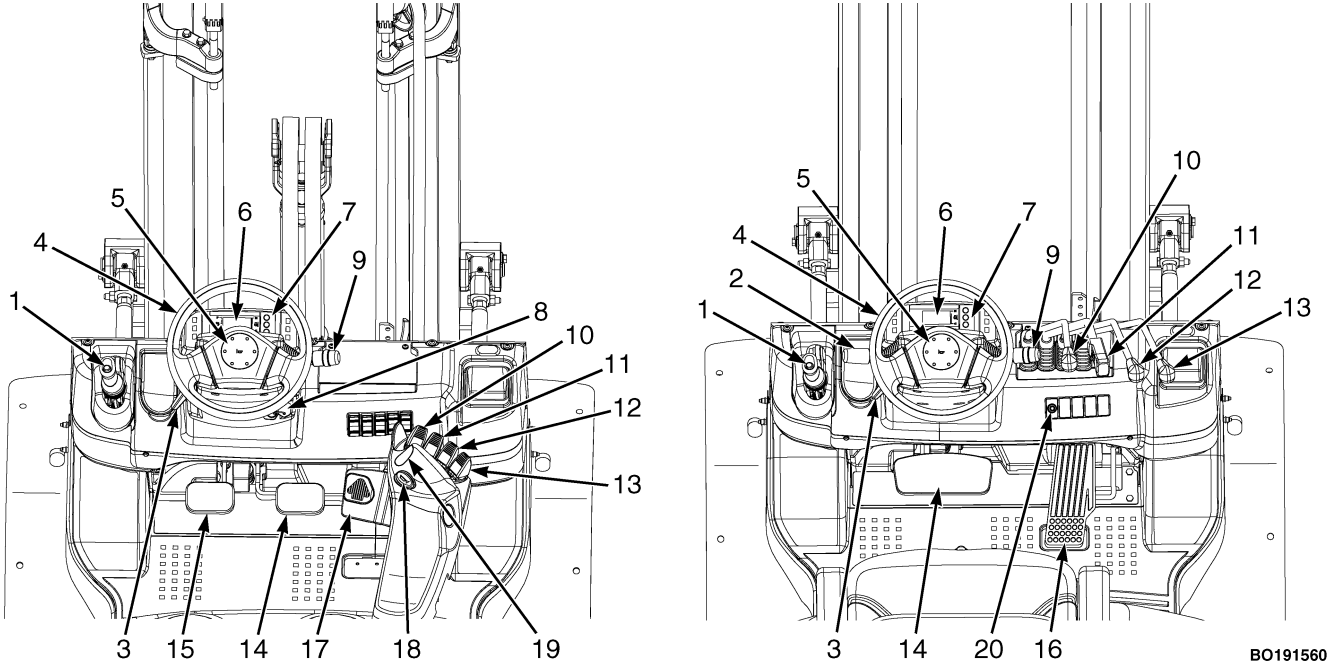

Figure 4. Controls

https://truckmanualshub.com/

Legend for Figure 4

1. PARKING BRAKE LEVER
2. DIRECTION CONTROL LEVER
3. STEERING COLUMN TILT LEVER
4. STEERING WHEEL
5. HORN
6. DASH DISPLAY
7. CONTROL BUTTON PANEL
8. KEY SWITCH
9. LIGHT SWITCH/TURN SIGNAL
10. LIFT/LOWER LEVER
11. TILT LEVER
12. 3RD AUXILIARY LEVER
13. 4TH AUXILIARY LEVER
14. BRAKE PEDAL
15. INCHING/BRAKE PEDAL
16. ACCELERATOR PEDAL
17. MONOTROL PEDAL
18. MLM AUXILIARY HORN BUTTON
19. MLM DIRECTIONAL CONTROL SWITCH
20. TRACTION SPEED LIMITER LIGHT

https://truckmanualshub.com/

Table 1. Controls

Item No.	Item	Function
1	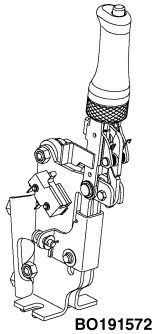 Parking Brake Lever	Parking Brake to be on when lift truck is parked. Pull parking brake lever backward all the way to set it. Push the top button to release the lock, while pulling on the lever, and push lever forward to release parking brake.

https://truckmanualshub.com/

Table 1. Controls (Continued)

Item No.	Item	Function
2	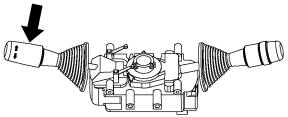 Direction Control Lever	**CAUTION** **This lift truck has a neutral switch. The engine will not start at a position other than neutral.** **Always change the shift lever from forward/reverse when the lift truck is stopped to protect the equipment and for safety.** **NOTE:** This truck series has a safety alarm. If the operator leaves the operator seat with the Direction Control lever not in neutral, an alarm will sound even with the key switch **OFF**. This lever is used to change from forward to reverse travel. This truck is equipped with a travel interlock system as a standard feature. If the operator is not in the operator seat, the direction control does not work and the transmission will stay in neutral.

https://truckmanualshub.com/

Table 1. Controls (Continued)

Item No.	Item	Function
3	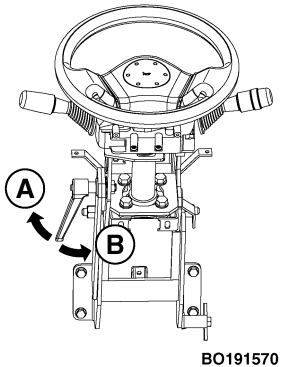 Lever For Steering Column Tilt **A.** Lock **B.** Release Lock	⚠ **CAUTION** **Adjust the steering wheel when the lift truck is stopped, as adjustment during travel is dangerous.** Adjust steering wheel as needed.
4	Steering Wheel	The steering wheel controls the position of the steer tires.

https://truckmanualshub.com/

Table 1. Controls (Continued)

Item No.	Item	Function
5	Horn	The horn button controls the operation of the horn.
6	Dash Display	The screen shows icons for the warning and indicator lights. The display also shows operator messages for the different functions. All programmed warning and indicator lights will light up for two seconds (Start Check) when System Power is turned ON.
7	Control Button Panel	These buttons are used to change items shown on the dash display. See Operating Procedures section of this manual for instructions.

https://truckmanualshub.com/

Table 1. Controls (Continued)

Item No.	Item	Function
8	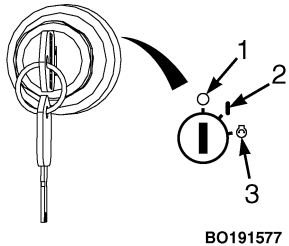 Key Switch	**NOTE:** The key switch has a function of anti-restart, so if the engine does not start even when the key is turn to **ST**, return the key to **OFF** once, and then try again after 5 to 10 seconds. Turn key **OFF** before removing it. The key switch is on the right side of the steering column near the cowl. The key switch has three positions: 1) **OFF** position: De-energizes all electrical circuits except for the horn 2) **ON** position: Energizes all electrical circuits except the start circuit. The key switch will be in this position during normal operations. 3) **START** position: Energizes the starter motor for starting the engine. A spring returns the key to **ON** position when the key is released.

https://truckmanualshub.com/

Table 1. Controls (Continued)

Item No.	Item	Function
9	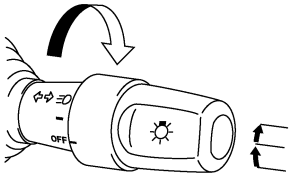 BO191583 Light Switch	The light switch is integrated with the turn signal lever. When the switch is turned forward the light is turned **ON**. When the switch is turned backward the light is turned **OFF**. <table><tr><td rowspan="2">Mark</td><td colspan="2">Lighting</td></tr><tr><td>Front light</td><td>Tail light</td></tr><tr><td>—</td><td></td><td>○</td></tr><tr><td>≡D</td><td>○</td><td>○</td></tr></table>BO191584
9	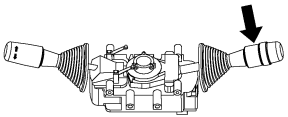 BO191576 Turn Signal Lever	To indicate the turning direction of the lift truck, push the turn signal lever forward for the left turn signal to blink or pull the turn signal lever backward for the right turn signal to blink.

https://truckmanualshub.com/

Table 1. Controls (Continued)

Item No.	Item	Function
10	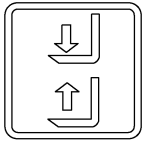 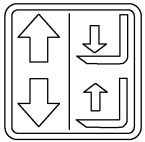 Lift/Lower Control Lever	**NOTE:** If the operator is not in the seat or leaves the seat, hydraulic controls are not active to avoid unintentional movement of front end equipment. **NOTE:** Manual hydraulic control levers are standard on the trucks covered in this manual. Optional electronic hydraulic mini-levers are available for the hydraulic functions. **NOTE:** To operate the mini-levers, the operator must be on the seat. The lift/lower control lever can be either the first manual lever or first mini-lever to the right of the operator's seat. Pull backward toward the operator to raise the carriage and forks. Push forward to lower the carriage and forks.

https://truckmanualshub.com/

Table 1. Controls (Continued)

Item No.	Item	Function
11	Tilt Control Lever	**NOTE:** If the operator is not in the seat or leaves the seat, hydraulic controls are not active to avoid unintentional movement of front end equipment. **NOTE:** Manual hydraulic control levers are standard on the trucks covered in this manual. Optional electronic hydraulic mini-levers are available for the hydraulic functions. **NOTE:** To operate the mini-levers, the operator must be on the seat. The tilt control lever can be either the second manual lever or second mini-lever to the right of the operator's seat. Push the lever forward to tilt the mast and forks forward. Pull the lever backward toward the operator to tilt the mast and forks backward. To tilt the mast to the rear, pull the tilt lever backward. To tilt the mast forward, push the tilt lever forward. The speed of the tilt can be adjusted by the pull/push stroke. There is a built-in tilt-lock mechanism which prevents the mast from tilting forward when the key switch is **OFF**.

https://truckmanualshub.com/

Table 1. Controls (Continued)

Item No.	Item	Function
11	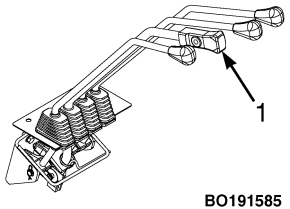 Tilt Control Lever With RTST	These trucks can be equipped with Return to Set Tilt (RTST) option if truck has manual hydraulic levers. The vertical stop position will be set at the factory. Push the tilt lever knob switch while moving the mast forward or backward, with a light load, the mast will return to vertical position. To stop RTST, release the tilt lever knob switch. RTST is intended as an operator aid in positioning forks or attachments for their application to minimize product damage and facilitate load handling. Care should be taken to operate the truck in accordance with load handling instructions as described in **Operating Techniques** on the **Operating Procedures** section of this **Operating Manual**.
12	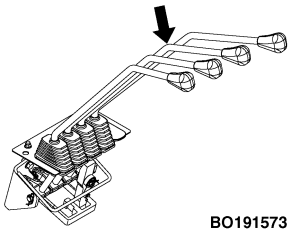 Manual Control Lever for 3rd Auxiliary Functions	⚠ **WARNING** **A manual control lever with a detent must be installed when an attachment with a clamp is installed. See your dealer for Hyster lift trucks to get the correct control lever.** **NOTE:** Manual hydraulic control levers are standard on the trucks covered in this manual. Optional electronic hydraulic mini-levers are available for the hydraulic functions. The third control lever is installed to the right of the tilt control lever. This lever can have two methods of operation, depending on the attachments. The lever is operated by moving forward and backward.

https://truckmanualshub.com/

Table 1. Controls (Continued)

Item No.	Item	Function
12	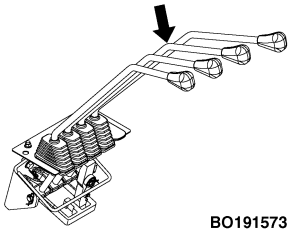 Manual Control Lever for 3rd Auxiliary Functions	**NOTE:** If truck is equipped with only three levers and clamp attachments, the last (3rd) lever controls clamp functions. **Control Lever with a Detent - Attachments with a clamp action:**: The lever is spring-loaded toward the operator. The lever is operated by moving it to the right, then forward and back. **Control Lever without a Detent - Attachments without a clamp action**: The lever is operated by moving it forward and back.

https://truckmanualshub.com/

Table 1. Controls (Continued)

Item No.	Item	Function
12	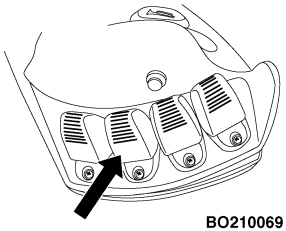 Electronic Control Mini-Lever for 3rd Auxiliary Functions	**NOTE:** To operate the mini-levers, the operator must be on the seat. **NOTE:** If truck is equipped with only three levers and clamp attachment, the last (3rd) lever controls clamp functions. **NOTE:** Third lever on four function control cannot have clamping. The last (4th) lever controls clamp functions. The third electronic control mini-lever is installed to the right of the electronic tilt control lever. This lever can have two methods of operation, depending on the attachment. **Trucks without Clamp Attachment**: The lever is operated by moving it forward and back. The lever is spring-loaded to return to the neutral position when released.

https://truckmanualshub.com/

Table 1. Controls (Continued)

Item No.	Item	Function
13	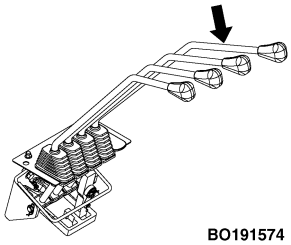 Manual Control Lever for 4th Auxiliary Functions	**NOTE:** Manual hydraulic control levers are standard on the trucks covered in this manual. Optional electronic hydraulic mini-levers are available for the hydraulic functions. **NOTE:** If truck is equipped with four levers and clamp attachment, the last (4th) lever controls clamp functions. The fourth control lever is installed to the right of the third manual control lever. This lever can have two methods of operation, depending on the attachments. **Control Lever with a Detent - Attachments with a clamp action:**: The lever is spring-loaded toward the operator. The lever is operated by moving it to the right, then forward and back. **Control Lever without a Detent - Attachments without a clamp action**: The lever is operated by moving it forward and back.

https://truckmanualshub.com/

Table 1. Controls (Continued)

Item No.	Item	Function
13	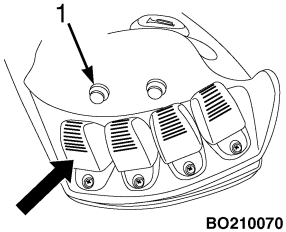 1. OVERRIDE BUTTON Electronic Control Mini-Lever for 4th Auxiliary Functions	**NOTE:** To operate the mini-levers, the operator must be on the seat. **NOTE:** If truck is equipped with four levers and clamp attachment, the last (4th) lever controls clamp functions. **NOTE:** Third lever on four function control cannot have clamping. The last (4th) lever controls clamp functions. The fourth electronic control mini-lever is installed to the right of the third electronic control mini-lever. This lever can have two methods of operation, depending on the attachment. **Trucks with Clamp Attachment**: To engage the clamp, move the mini-lever backward. To disengage the clamp, momentarily push and release the override button located directly behind the mini-lever and push the mini-lever forward. **Trucks without Clamp Attachment**: The lever is operated by moving it forward and back. The lever is spring-loaded to return to the neutral position when released.

https://truckmanualshub.com/

Table 1. Controls (Continued)

Item No.	Item	Function
13	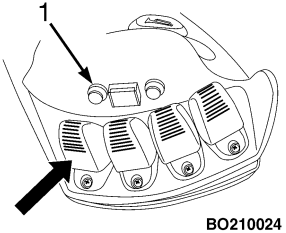 1. OVERRIDE BUTTON Electronic Control Mini-Lever for 4th Auxiliary Functions, Five Function Control Valve	**NOTE:** The lift trucks covered in this **Operating Manual** may be equipped with optional electronic hydraulic mini-levers that are available for the hydraulic functions. **NOTE:** To operate the mini-levers, the operator must be on the seat. **NOTE:** If truck is equipped with a four function control valve with solenoid and clamp attachment, the last (4th) lever controls clamp functions. The fifth function is controlled by using the fourth electronic control mini-lever. If lift truck is equipped with a clamp attachment, the last (4th) mini-lever controls clamp functions. This lever can have two methods of operation, depending on the attachment. **Trucks with Clamp Attachment**: To engage the clamp, move the mini-lever backward. To disengage the clamp, momentarily push and release the override button located directly behind the mini-lever and push the mini-lever forward. **Trucks without Clamp Attachment**: The lever is operated by moving it forward and back. The lever is spring-loaded to return to the neutral position when released.

https://truckmanualshub.com/

Table 1. Controls (Continued)

Item No.	Item	Function
13	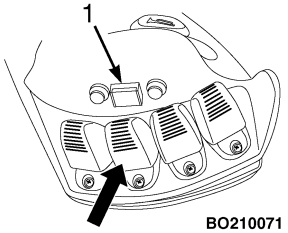 1. OVERRIDE BUTTON 3rd Electronic Control Mini-Lever for Auxiliary Functions, Five Function Control Valve	On lift trucks equipped with a four function control valve and solenoid for fifth function, the third lever controls both the third and fourth functions. To engage the fourth function, toggle in the yellow override button located directly behind the third lever. To engage the third function toggle out the override button. After selecting desired function, operate the lever by moving it forward and backward. The lever is spring-loaded to return to the neutral position when released. To engage the fifth function operate the 4th lever.
14	Brake Pedal 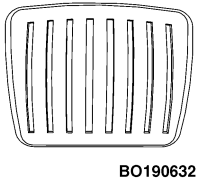	This pedal, controlled by the operators right foot, controls the application of the service brakes.

https://truckmanualshub.com/

Table 1. Controls (Continued)

Item No.	Item	Function
15	Inching/ Brake Pedal 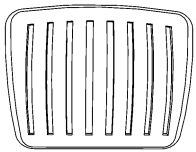 BO190632	By varying the position of the inching/brake pedal, the operator can move the lift truck slowly while a high engine speed is used for lifting loads. Completely depressing the pedal disengages the transmission and applies the service brakes. The engine can be started when the inching/brake pedal is fully depressed and Direction Control Lever is in neutral.
16	Accelerator Pedal 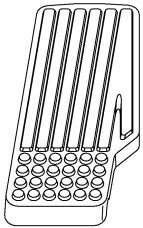 BO191578	This pedal controls the speed of the engine and is operated by the operator right foot.
17	MONO-TROL® Pedal 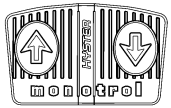 BO210020	The MONOTROL® Pedal controls the speed and direction of the lift truck. Pushing on the right side of the pedal causes the lift truck to move in reverse. Pushing on the left side of the pedal causes the lift truck to move in forward. The speed of the engine increases as the pedal is depressed. The reverse lights and the optional reverse alarm will be on in the reverse position during normal operation.

https://truckmanualshub.com/

Table 1. Controls (Continued)

Item No.	Item	Function
18	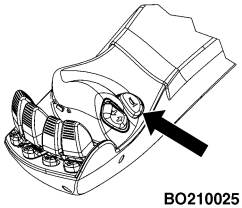 BO210025 Auxiliary Horn Button	The auxiliary horn button functions when the key or keyless ignition is in the **ON** position and up to 20 minutes after the key or keyless ignition is turned to the **OFF** position.
19	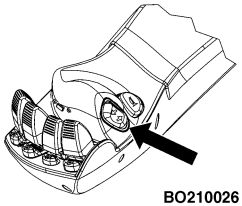 BO210026 Direction Control Switch	The direction control switch for the transmission is next to the auxiliary horn button on the armrest. The direction control switch is used on lift truck without a MONOTROL® Pedal.

https://truckmanualshub.com/

Table 1. Controls (Continued)

Item No.	Item	Function
20	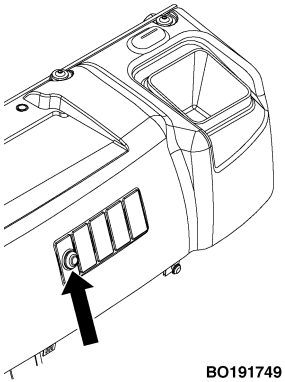 Traction Speed Limiter Light	For lift trucks equipped with a Yanmar engine and traction speed limiter, this light will illuminate if the traction speed limiter is not working properly.

https://truckmanualshub.com/

Function	Direction of Movement	
	Load or Equipment	Control Lever
1. REACH	Retract/Extend	Backward/Forward
2. SIDESHIFT	Right/Left	Backward/Forward
3. PUSH-PULL	Backward/Forward	Backward/Forward
4. ROTATE	Clockwise/Counterclockwise	Backward/Forward
5. UPENDER	Up/Down	Backward/Forward
6. SCOOP	Up/Down	Backward/Forward
7. LOAD STABILIZER	Down (Clamp)/Up (Release)	Backward/Forward
8. SWING (FORKS)	Right/Left	Backward/Forward
9. FORK SPREAD	Together/Apart	Backward/Forward
10. CLAMP	Clamp/Release	Backward/Forward

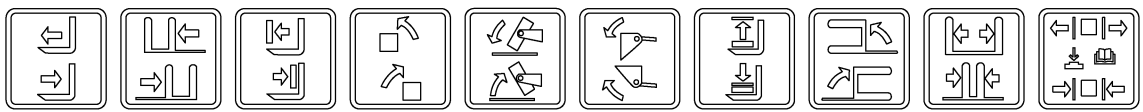

BO190744

https://truckmanualshub.com/

Dash Display

⚠ WARNING

If any of the instruments, levers, or pedals do not operate as described in the following tables, report the problem immediately. DO NOT operate the lift truck until the problem is corrected.

Depending on the equipment installed on the lift truck, warning and indicator lights on the Display will vary and may not contain all the warning and indicator lights shown in **Figure 5** and **Table 2**. When the warning lights and indicators are on, the operator will see the appropriate symbol. When the warning lights and indicators are off, the operator will see a black panel. Unless noted in **Table 2**, all programmed warning and indicator lights will light up for one second when System Power is turned **ON**.

https://truckmanualshub.com/

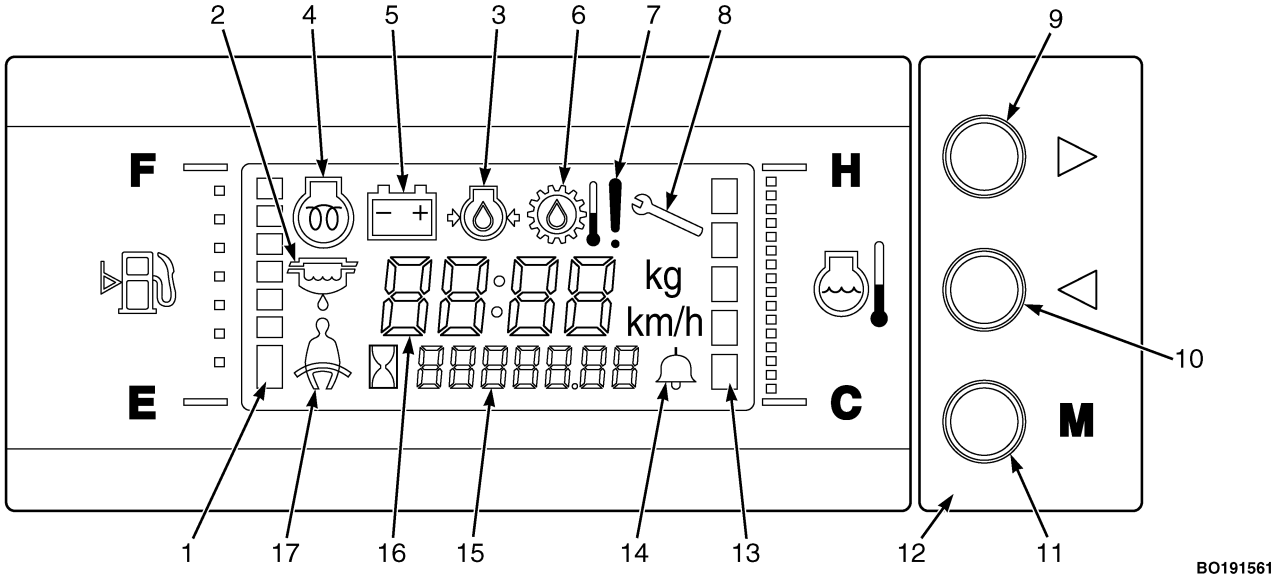

Figure 5. Dash Display - Warning and Indicator Lights

https://truckmanualshub.com/

Legend for Figure 5

1. FUEL GAUGE
2. SEDIMENTER (DIESEL ONLY)
3. ENGINE OIL PRESSURE
4. GLOW LAMP
5. BATTERY CHARGE
6. TORQUE CONVERTER OIL TEMPERATURE
7. WARNING
8. MAINTENANCE REQUIRED
9. DISPLAY CHANGE BUTTON FOR CLOCK
10. DISPLAY CHANGE BUTTON FOR HOUR METER
11. MODE CHANGE BUTTON
12. CONTROL BUTTON PANEL
13. COOLANT TEMPERATURE
14. ALARM SET
15. HOUR METER, CALENDAR
16. CLOCK, SPEED, MESSAGE
17. SEAT BELT

https://truckmanualshub.com/

Table 2. Dash Display - Warning and Indicator Lights (See Figure 5)

Item No.	Item	Function
1	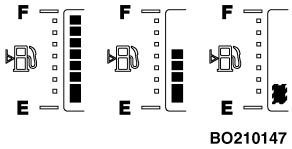 Fuel Gauge	**NOTE:** There is no LPG fuel gauge or indicator light. When a lift truck with an LPG engine has low fuel, a warning buzzer beeps. This gauge indicates the amount of remaining fuel in the fuel tank. Always refill fuel before the gauge reaches the bottom bar. If the fuel level reaches the bottom bar, a warning buzzer beeps.
2	Sedimenter (Diesel Only)	This amber indicator light will illuminate if the fuel-water separator sensor indicates that water must be drained. Not on at Start Check.
3	Glow Lamp	This amber indicator light will illuminate for up to 10 seconds after engine start up signifying that the glow plugs are functioning properly at temperatures up to 80 °C (176 °F) coolant temperature.
4	Battery Charge Lamp	This icon will be **ON** when the key switch is **ON** and the engine is not running. The icon must go **OFF** when the engine is running.

https://truckmanualshub.com/

Table 2. Dash Display - Warning and Indicator Lights (See Figure 5) (Continued)

Item No.	Item	Function
5	Engine Oil Pressure	⚠ **CAUTION** **Stop the engine immediately if this icon is ON while the engine is running.** This icon is **ON** when the key switch is in the **ON** position and must go **OFF** when the engine is running.
6	Torque Converter Oil Temperature Warning	⚠ **CAUTION** **Do not continue to operate the lift truck if the icon is ON when the engine is running. Make sure the oil level is correct and add fluid as needed. Let the transmission cool before operating the lift truck.** The icon must go **OFF** when the engine is running.
7	Warning	
8	Maintenance Required	This amber light will illuminate when a fault that is not engine related and requires immediate attention occurs.

https://truckmanualshub.com/

Table 2. Dash Display - Warning and Indicator Lights (See Figure 5) (Continued)

Item No.	Item	Function
9	Display Change Button - Center Figures 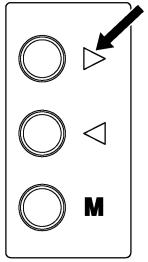	Each time you press a button the display changes to show operating information about the truck. Each screen will show either the date and the hours recorded on that date, or a fault and the hourmeter reading at which it occurred.
10	Display Change Button - Bottom Figures 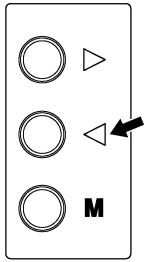	Press this button while the calendar date is showing to update the date and time shown on the display.

https://truckmanualshub.com/

Table 2. Dash Display - Warning and Indicator Lights (See Figure 5) (Continued)

Item No.	Item	Function
11	Mode Change Button 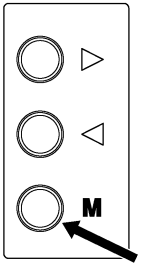	Pressing this button at the same time as the Display Change Buttons will activate a different item on the display for adjustment. The item will blink until changed. Pressing this button once will return the display to normal mode.
12	Control Button Panel 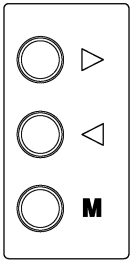	The panel contains the Display Change and Mode Change Buttons.

https://truckmanualshub.com/

Table 2. Dash Display - Warning and Indicator Lights (See Figure 5) (Continued)

Item No.	Item	Function
13	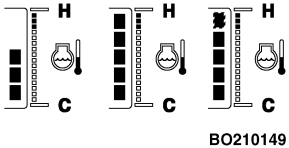 Coolant Temperature Gauge	⚠ **CAUTION** **Do not continue to operator the lift truck when the gauge indicates that the engine is too hot (full bars indicated, and warning buzzer beeping).** This gauge indicates the temperature of the engine cooling water. Start operation after the engine has been warmed up and the bare gauge starts raising. When the bar gauge reaches around the middle bar, the water temperature is optimum.
14	Alarm Set	The icon is **ON** when the alarm is on.
15	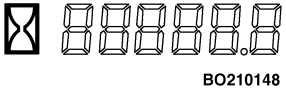 Hour Meter	Hourmeter - The hour meter operates when the key switch is in the **ON** position. Periodic Maintenance recommendations are based on these hours.
16	Clock 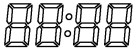	The clock displays the current time. **Clock reset counter Enn** - If the battery has been disconnected but not reset, a counter reads **Enn** to indicate the number of days since the battery was reconnected.

https://truckmanualshub.com/

Table 2. Dash Display - Warning and Indicator Lights (See Figure 5) (Continued)

Item No.	Item	Function
17	Seat Belt	**WARNING** **Always fasten the seat belt when operating the lift truck.** The icon flashes for 10 seconds anytime the key switch is put in the **ON** position. If the seat belt interlock option is equipped, the icon goes **OFF** immediately after fastening the seat belt.

https://truckmanualshub.com/

Operating Procedures

General

Know Your Lift Truck

⚠ WARNING

Always make sure the parking brake is fully applied before leaving the lift truck. If the operator leaves the lift truck without applying the parking brake, a seat activated switch will shift the transmission to neutral. If the lift truck is left on a grade, without the parking brake fully applied, the lift truck will free-wheel down the grade, possibly causing injury or property damage.

⚠ WARNING

EXHAUST GASES

Exhaust from internal combustion engines contains carbon monoxide and other harmful chemicals. Carbon monoxide is a colorless, odorless poison and can cause unconsciousness or death without warning. Long-term exposure to exhaust or chemicals in the exhaust can cause cancer, birth defects, and other reproductive harm. Avoid exposure to engine exhaust.

If engines are operated in confined spaces, maintain adequate ventilation or vent exhaust to the outside. Do not exceed applicable air contaminant limits (see 29 CFR 1910.1000 Table Z-1).

Follow the inspection and maintenance schedule and procedures in this manual. Do not alter exhaust, ignition, or fuel systems.

⚠ WARNING

FIRE HAZARD

The hot engine surfaces and exhaust of internal combustion engine powered lift trucks can present fire hazards when operating in areas containing flammable gases, vapors, liquids, dusts, fibers, or paper debris. Engine and exhaust component surface temperatures can exceed the ignition temperatures of common solvents, fuels, oil, paper, and other organic materials (wood, wheat, cotton, etc.). Exhaust emitted sparks can ignite these materials as well. Engine and exhaust surface temperatures increase after engine shutoff, presenting increased fire hazard. Check the engine compartment frequently in areas containing

https://truckmanualshub.com/

combustible dust, fibers, or paper and remove any foreign materials. Contact your local Hyster dealer for forklift modifications that may be appropriate in environments with fire hazards.

Operate the lift truck only in areas that have been approved for lift truck operation.

- **OSHA regulations prohibit the use of lift trucks in areas containing hazardous concentrations of certain flammable gases or vapors.**
- **OSHA regulations require operating areas to be classified as hazardous or nonhazardous, and that the lift trucks used in designated locations be of the minimum type specified (see *Guide For Users Of Industrial Trucks,* Appendix C and Table N-1).**

Only the designated types of approved lift trucks may be used in areas classified as hazardous by the authority having jurisdiction. Areas classified as hazardous must be identified by signs to show the type of approved lift truck required for operation in the area. Modifications or poor maintenance can result in the lift truck being unsuitable for operation in areas classified as hazardous.

The fork lift truck is designed to pickup, move, and tier materials. The basic lift truck has a lift mechanism and forks on the front to engage the load. The lift mechanism lifts the load so that it can be moved and stacked.

In order to understand how the fork lift truck can pick up a load, you must first know some basic things about the lift truck.

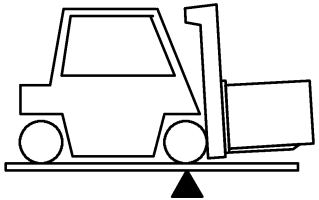

BO190107

The lift truck is based on the principle of two weights balanced on opposite sides of a pivot (fulcrum). This is the same principle used for a seesaw. In order for this principle to work for a lift truck, the load on the forks must be balanced by the weight of the lift truck. The location of the center of gravity of both the truck and the load is also a factor.

https://truckmanualshub.com/

This basic principle is used for picking up a load. The ability of the lift truck to handle a load is discussed in terms of center of gravity and both forward and side stability.

Stability and Center of Gravity

The center of gravity (CG) of any object is the single point about which the object is balanced in all directions.

Every object has a CG. When the lift truck picks up a load, the truck and load have a new combined CG.

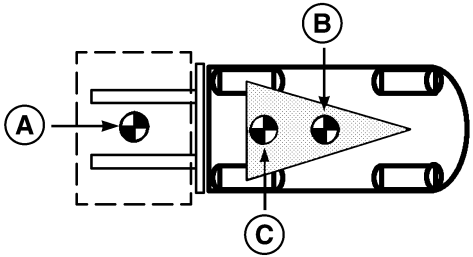

A. CG LOAD **B.** CG TRUCK **C.** COMBINED CG

The stability of the lift truck is determined by the location of its CG, or if the truck is loaded, the combined CG.

The lift truck has moving parts and therefore has a CG that moves. The CG moves forward and back as the mast is tilted forward and back. The CG moves up and down as the mast moves up and down.

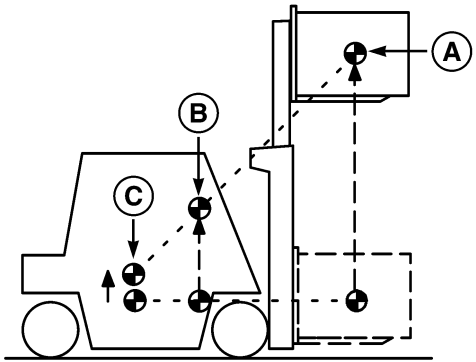

A. CG LOAD **B.** COMBINED CG **C.** CG TRUCK

The center of gravity, and therefore the stability of the loaded lift truck, is affected by a number of factors such as size, weight, shape, and position of the load; the height to which the load is raised; the amount of forward and backward tilt; tire pressure and the dynamic forces created when the truck is moving. These dynamic forces are caused by things like acceleration, braking, turning, and operating on uneven surfaces or on an incline. These factors must be considered when traveling with an unloaded

https://truckmanualshub.com/

truck, as well, because **an unloaded truck will tip over to the side easier** than a loaded truck with its load in the lowered position.

In order for the lift truck to be stable (not tip over forward or to the side), the CG must stay within the area of the lift truck represented by a triangle drawn between the drive axle and the pivot of the steering axle.

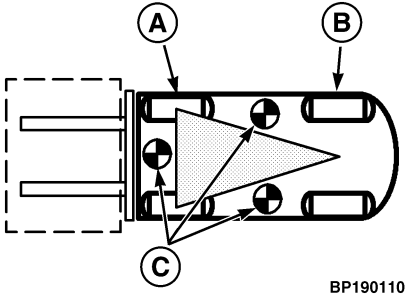

BP190110

A. DRIVE AXLE **B.** STEERING AXLE **C.** TRUCK WILL TIP OVER

If the CG moves forward of the drive axle, the lift truck will tip forward. If the CG moves outside of the line represented by the lines drawn between the drive wheels and the steering axle pivot, the lift truck will tip to that side.

Capacity (Weight and Load Center)

The capacity of the lift truck is shown on the Nameplate. The capacity is listed in terms of weight and load center. The weight is specified in kilograms and pounds. The load center is specified in millimeters and inches. The capacity is the maximum load that the lift truck can handle, with the mast vertical, for the load condition shown on the Nameplate.

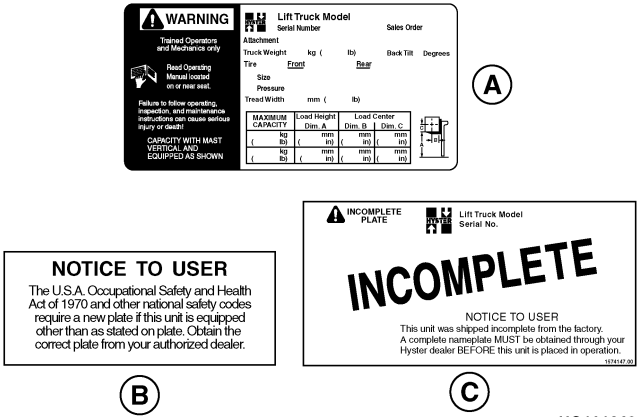

HO191248

https://truckmanualshub.com/

The load center of a load is determined by the location of its center of gravity. The load center is measured from the front face of the forks, or the load face of an attachment, to the center of gravity of the load. Both the vertical and horizontal load centers are specified on the Nameplate.

Loads should be transported while centered on the centerline of the lift truck. The operator must know whether or not a load is within the maximum capacity of the lift truck before the load is handled.

Inspection Before Operation

WARNING

Report damage or faulty operation immediately. Do not operate a lift truck that needs repair. A lift truck will only do its job when it is in proper working order. If repairs are required, install a tag in the operator's area stating "DO NOT OPERATE" and remove the key from the key switch if truck is equipped with key switch option.

Checks With the Engine Stopped

Inspect the lift truck before use and every eight hours or daily as described in the **Maintenance** section of this **Operating Manual**. Inspect more frequently if used in severe operating conditions.

Before using the lift truck, make the following checks:

- Condition of forks, carriage, chains, header hoses, mast, attachment, and overhead guard.
- Condition of wheels and tires.
- Seat belt fastens correctly.
- Seat is correctly fastened to its mounts. Hood is correctly latched.
- Condition of the engine compartment. Ensure all surfaces are free of oils, lubricants, fuel, and organic dusts or fibers (paper, wood, cotton, agricultural grass/grain, etc). Remove all foreign materials.
- Coolant level in the cooling system and condition of the drive belts.
- Condition of the radiator and screen. Clean if necessary.

https://truckmanualshub.com/

- Fuel level.
- Oil level in the engine.
- Oil level in the hydraulic tank.
- Leaks from the engine, transmission, hydraulic system, and fuel system.
- Loose or missing hardware.
- Check transmission oil level.

Mounting and Dismounting

⚠ WARNING

To avoid serious injury when entering or exiting the lift truck, ALWAYS USE 3 POINTS OF CONTACT. Maintain contact simultaneously with two hands and one foot or with two feet and one hand while climbing on or off the lift truck.

Place feet carefully. Always face the lift truck when climbing on or off. Use added care when surfaces are slippery. Keep hands free of any obstacles such as food, beverages, or tools.

Lift Truck Interlocks

Certain operator actions, if not performed correctly while operating the lift truck, will cause traction and the hydraulic functions to become disabled.

DRIVE INTERLOCKS: Traction is enabled when the operator is in the seat (occupancy sensor), seat belt should be fastened, a direction of travel is selected, engine is running, and the parking brake is released. If any of the above actions are not performed while operating the lift truck, traction will be disabled. To reactivate traction, the operator must return to the seat. Once the needed actions are completed, traction will be enabled and the operator can continue to load and unload material.

HYDRAULIC INTERLOCKS: The hydraulic functions are enabled when the operator is in the seat (occupancy sensor), seat belt should be fastened, and the engine is running. If any of the above actions are not performed while operating the lift truck, the hydraulic functions will be disabled. The LCD screen on the display panel will provide a non-service fault message "Hydraulic Interlock Engaged." To reactivate hydraulics, the operator must return to the seat. Once the needed actions are completed, the

https://truckmanualshub.com/

hydraulic function will be enabled and the operator can continue to load and unload material.

Starting Procedure

DO NOT start or operate the lift truck, including any of its functions or attachments, from any place other than the designated operator's position.

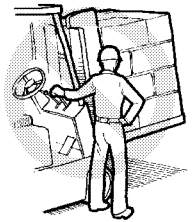

⚠ WARNING

LPG is very flammable. An odor of LPG fuel can indicate a leak in the fuel system. DO NOT start the engine until the fuel leak is repaired and the atmosphere is free of LPG.

NOTE: Lift trucks have a "Clear Flood Mode" programmed into the ECU. When accelerator is depressed more than 80% during cranking, the ECU will not allow any fuel into the engine. This allows the engine to clear any excess fuel out of the intake manifold and cylinders.

1. If the lift truck uses LPG fuel, open fuel valve on LPG tanks.

2. Make sure that parking brake is applied.

3. Put direction control lever for transmission in **NEUTRAL** position.

4. Make sure lift truck hood is closed.

5. Turn key to the **ON** position. If lift truck is equipped with a diesel engine and engine is cold, the cold start indicator light will illuminate and the cold start circuit will be energized.

6. On lift trucks equipped with a LPG engine, turn the key to the **START** position to engage the starter.

On lift trucks equipped with a diesel engine, if cold start delay is required, the cold start indicator will be illuminated and a countdown time of ten seconds is displayed. When countdown reaches 0, turn the key to the **START** position to engage the starter.

For all engine types, if engine fails to start after 30 seconds, the starter will shut down for 60 seconds to cool off. A 60-second countdown timer will appear on the LCD screen showing the time remaining before a restart attempt can be tried. To restart engine, repeat **Step 5** and **Step 6**.

https://truckmanualshub.com/

Checks With the Engine Running

YO190134

WARNING

FASTEN SEAT BELT
If Lift Truck Tips Over

- **DO NOT Jump – Stay On Truck**
- **Hold Firmly To Steering Wheel – Brace Feet – Lean Forward And Away From Impact**

The seat belt is installed to help the operator stay on the truck if the lift truck tips over. IT CAN ONLY HELP IF IT IS FASTENED.

The operator must be aware that the lift truck can tip over. There is a great risk that the operator or someone else can be killed or injured if trapped or hit by the truck as it tips over. The risk of injury can be reduced if the operator stays on the truck. **If the truck tips over, do not jump off!**

THE SEAT BELT AND HIP RESTRAINT bracket provides a means to help the operator keep the head and torso substantially within the confines of the truck frame and overhead guard if a tipover occurs. This protection system is intended to reduce the risk of the head and torso being trapped between the truck and the ground, but it can not protect the operator against all possible injury in a tipover.

Make sure that the area around the lift truck is clear before starting the engine or making any operational checks. Be careful when making the checks. If the lift truck is stationary during a check, apply the parking brake and make sure the direction control is in **NEUTRAL**. Proceed carefully.

Check the operation of the following functions as described in the **Maintenance** section:

- Check the operation of the horn, gauges, and indicator lights.
- Operate the **LIFT, TILT**, and auxiliary functions to check for correct operation of the mast, carriage, and attachments.
- Check the operation of direction control lever and accelerator pedal.
- Check the operation of the service brakes and parking brake.

https://truckmanualshub.com/

- Check the operation of the steering system.
- Check the oil level in the transmission when the oil is at operating temperature 50 °C (120 °F). Turn the truck off and wait one minute. Then check the transmission oil level.

Operating Techniques

⚠ WARNING

Before operating the lift truck, FASTEN YOUR SEAT BELT.

BO190114

There are a number of operations, if not performed carefully, that can cause the lift truck to tip. If you have not read the WARNING page in the front of this Operating Manual, do so NOW. As you study the following information about how to properly operate a lift truck, remember the WARNINGS.

NOTE: When the Emergency Locking Retractor (ELR) seat belt is properly buckled across the operator, the belt will permit slight operator repositioning without activating the locking mechanism. If the truck tips, travels off a dock, or comes to a sudden stop, the locking mechanism will be activated and hold the operator's lower torso in the seat.

Basic Operating Procedures

Many people make the mistake of thinking that operating a lift truck is the same as driving an automobile. This is not true. A lift truck is a special machine designed to do a much different job than an automobile. Because of the close areas in which a lift truck operates and its other operating characteristics (like rear wheel steering and tail swing), every operator must receive additional training, even if they have a license to drive an automobile.

The following discussion lists basic procedures applicable to lift truck operation.

BO190115

1. AUTHORIZED AND TRAINED OPERATOR ONLY. This means the operator must be trained (see 29 CFR 1910.178 section I) to drive the lift truck and it means that the operator must thoroughly understand the procedures for lift truck operation. It also means that a qualified person experienced in lift truck operation must guide the operator

https://truckmanualshub.com/

through several driving and load handling operations before the operator attempts to operate the lift truck alone. A basic education in proper driving and load handling techniques is absolutely necessary to prepare the new operator for proper defensive driving and to expect the unexpected.

⚠ WARNING

This lift truck is designed for handling materials. A lift truck is not designed to lift people. DO NOT use a lift truck to lift people unless it has been determined that there is no other practical option (scaffolds, elevated work platforms, aerial baskets, etc.) to perform the needed work.

BO190567

If a lift truck is used to elevate a worker, a safety platform must be attached to the forks and carriage. The platform must be specially built to meet or exceed the requirements of ANSI/ITSDF B56.1. It must have a solid floor with a surface to prevent the feet of the worker from slipping, hand rail, toe board, and screen or shield at least 2 m (7 ft) high between the people on the platform and the lift mechanism.

The combined weight of the platform, load, and personnel is not to exceed one-half of the capacity as indicated on the Nameplate of the truck on which the platform is used.

Before anyone is allowed in the platform, lift and lower the mast slowly with the platform in place to make sure the mast functions properly. Apply the parking brake. DO NOT travel with people in the platform. The operator must remain at the controls. Watch for overhead obstructions.

2. NO RIDERS. A lift truck is built for only one person – the operator. It is dangerous for anyone to ride on the forks or anywhere else on the lift truck.

https://truckmanualshub.com/

3. ADJUST SEAT - STANDARD FULL SUSPENSION.

Seat Position Adjustment

- Fore and aft adjustment - It is recommended that the seat be adjusted so that the thigh is horizontal to the ground so that the best ergonomic position is achieved. See **Figure 6**.

Seat Adjustment for Operator Weight

⚠ **CAUTION**

A major cause for high Whole Body Vibration is caused by the operator not adjusting the seat to his/her weight.

NOTE: It is important to adjust the weight setting for each operator.

NOTE: The seat is designed for a maximum weight of 135 kg (298 lb).

- The target is for the "ride indicator" to fall between the arrows when the operator sits upright in the seat with the feet positioned on the pedals. This ensures that the operator is set at the midpoint of the 80 mm (3.15 in.) suspension. See **Figure 6**.
- The handle can be turned counterclockwise to increase or clockwise to decrease the weight resistance, pull handle out before turning. As the handle is turned, the "stiffness" of the suspension can be felt to increase or decrease depending on which way the handle is turned. See **Figure 6**.

4. ADJUST SEAT - PREMIUM FULL SUSPENSION

Seat Position Adjustment

- Fore and aft adjustment - It is recommended that the seat be adjusted so that the thigh is horizontal to the ground so that the best ergonomic position is achieved. See **Figure 6**.

Seat Adjustment for Operator Weight

⚠ **CAUTION**

A major cause for high Whole Body Vibration is caused by the operator not adjusting the seat to his/her weight.

NOTE: It is important to adjust weight setting for each operator.

NOTE: The seat is designed for maximum weight of 145 kg (320 lb) for premium full suspension seat.

https://truckmanualshub.com/

- The target is for the "ride indicator" to fall between the arrows when opertaor sits upright in seat with feet positioned on pedals. This ensures that the operator sits upright in seat with feet positioned on pedals. This ensures that the opertor is set at the midpoint of the 80 mm (3.15 in.) suspension
- The handle can be turned as shown to increase or decrease weight resistance. Pull handle out before turning. As the handle is turned the "stiffness" of the suspension can be felt to increase or decrease on which way handle is turned. See **Figure 6**.

https://truckmanualshub.com/

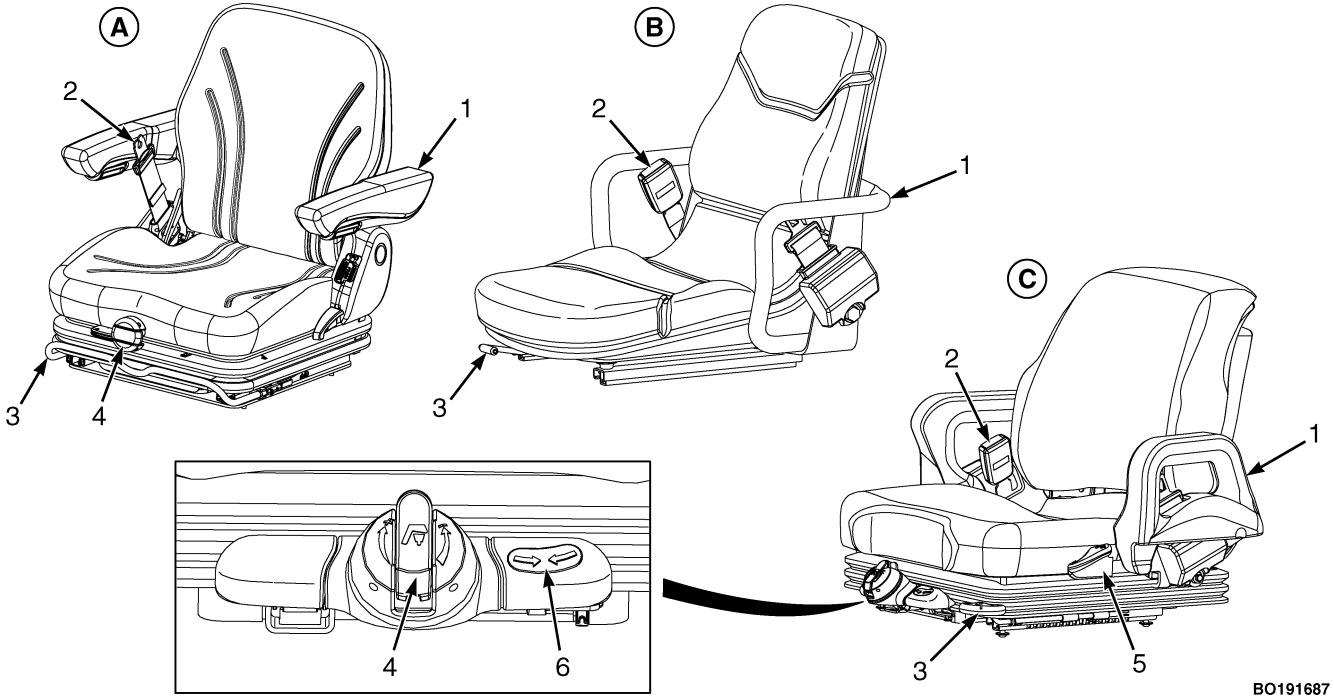

Figure 6. Seat Adjustment

https://truckmanualshub.com/

Legend for Figure 6

A. STANDARD FULL SUSPENSION SEAT
B. STANDARD NON-SUSPENSION SEAT
C. PREMIUM FULL SUSPENSION SEAT

1. HIP RESTRAINT
2. SEAT BELT
3. FORWARD/BACKWARD ADJUSTMENT LEVER
4. WEIGHT ADJUSTMENT KNOB
5. BACKREST ANGLE ADJUSTMENT LEVER
6. RIDE POSITION INDICATOR

5. DO NOT drive a lift truck into an elevator unless authorized to do so. Approach the elevator slowly. After the elevator is properly leveled, the lift truck must be centered so that the elevator is balanced.

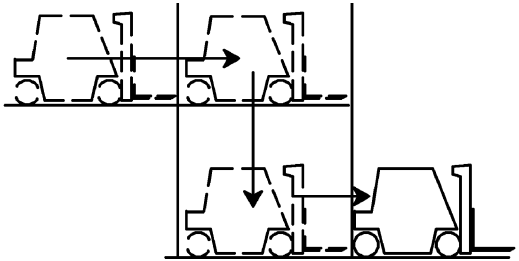

BO190118

When the lift truck is in the proper position in the elevator, set the brakes, put the controls in **NEUTRAL** and shut off the power. It is advisable that all other personnel leave the elevator before the lift truck enters or leaves.

6. Drive carefully, observe traffic rules, and be in full control of the lift truck at all times. Be completely familiar with all the driving and load handling techniques contained in this **Operating Manual**.

Driving and Direction Changes

KNOW YOUR TRANSMISSION. These lift truck models are equipped with a Basic Powershift or Electronic Powershift transmission. See **Table 3** and **Figure 7**. Read the following section carefully.

Table 3. Transmissions

Operational Feature	Basic Powershift or Electronic Powershift
Electronic Inching	Yes

https://truckmanualshub.com/

Table 3. Transmissions (Continued)

Operational Feature	Basic Powershift or Electronic Power-shift
Electronic Control of Direction Changes	Yes

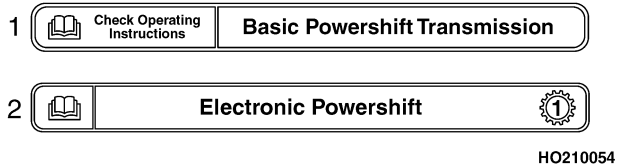

1. BASIC POWERSHIFT TRANSMISSION
2. ELECTRONIC POWERSHIFT

Figure 7. Transmission Labels

General

The lift truck can have either a MONOTROL® Pedal, a Direction Control Lever, or a Direction Control Switch to control the transmission. If the lift truck has a MONOTROL® Pedal, push on the left side of the pedal to go **FORWARD**, or the right side of the pedal to go in **REVERSE**. If the lift truck has a Direction Control Switch, rock the switch toward the palm rest to go **FORWARD** and toward the base to go in **REVERSE**. If the truck has a direction control lever, move the lever toward the front of the lift truck to go **FORWARD** and toward the rear of the lift truck to go in **REVERSE**.

Normal Operations

In normal operating conditions, either at start or while driving the lift truck can only be maintained at a stopped position by applying the service brake or parking brake.

When moving away from a stop:

1. Select direction while maintaining braking.
2. Depress the accelerator or MONOTROL® Pedal.
3. Release the brakes (parking and/or service brake).

Depress the accelerator or MONOTROL® Pedal to ensure the lift truck will move in the selected direction when the brakes are released.

Due to variable load and grade conditions, this procedure minimizes the possibility of the lift truck traveling in a direction opposite to the one selected.

https://truckmanualshub.com/

Standard Operator Presence System

⚠ WARNING

Always make sure the parking brake is fully applied before leaving the lift truck. If the operator leaves the lift truck without applying the parking brake, a seat activated switch will shift the transmission to neutral. If the lift truck is left on a grade, without the parking brake fully applied, the lift truck will freewheel down the grade, possibly causing injury or property damage.

These lift trucks are equipped with an Operator Presence System (OPS). The OPS feature has an electrical sensor in the seat which senses the presence of the operator. This allows the transmission in internal combustion engine trucks to be engaged only when the operator is in the seat. This feature also locks out lift and tilt functions. The OPS is designed with slight delay in the seat sensor to allow the operator to reposition himself without disengaging the transmission. When the seat sensor disengages the transmission (neutral position), the operator must select neutral, then re-select a direction to re-engage the traction (travel mode).

A switch in the operator's seat will automatically shift the transmission to neutral within 1-2 seconds when the operator leaves the seat of the lift truck with the engine running and without applying the parking brake.

Basic Powershift or Electronic Powershift Transmission

⚠ WARNING

DO NOT select the travel direction if the accelerator is depressed. The lift truck will move rapidly and can cause damage or injury.

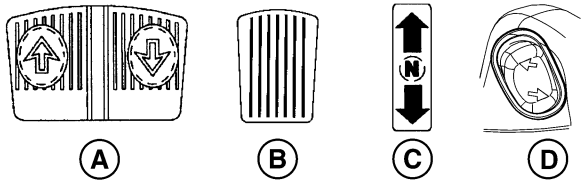

BO210035

A. MONOTROL® pedal
B. ACCELERATOR
C. DIRECTION CONTROL LEVER
D. MLM DIRECTION CONTROL

https://truckmanualshub.com/

⚠ CAUTION

The drive train can be damaged if the lift truck is traveling too fast when the controls are changed to the opposite direction of travel.

The operator can change the direction of travel at slow travel speeds (less than a walking speed), but the mast must not be in a raised position. If the lift truck is moving rapidly, slow to a walking speed before changing the direction of travel.

Inching Control

⚠ WARNING

Inching requires coordinated movement of the inching/brake pedal and the accelerator pedal. New operators must practice this procedure before attempting to handle loads.

Inching is the movement of a lift truck that allows a slow travel speed while keeping the engine speed high for fast operation of the lift mechanism or prevents rollback on an incline.

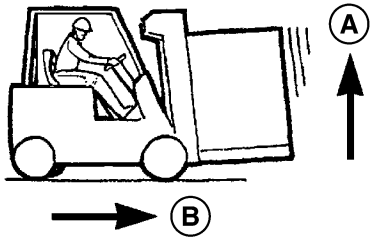

BO190120

A. FAST **B.** SLOW

The inching/brake pedal is used to control the inching operation. During operation as the inching/brake pedal is applied, the clutch in the transmission gradually disengages while the brakes engage.

https://truckmanualshub.com/

Steering (Turning)

⚠ WARNING

TRAVEL SLOWLY WHEN TURNING. Lift trucks can tip over even at very slow speeds. The combination of speed and the sharpness of a turn can cause a tipover. A lift truck is less stable when the forks are elevated, with or without a load.

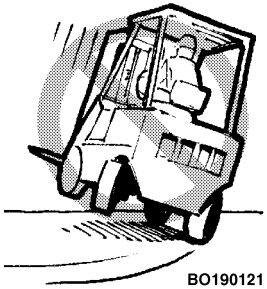

⚠ WARNING

IF THE LIFT TRUCK TIPS OVER, DO NOT JUMP OFF! HOLD FIRMLY TO STEERING WHEEL, BRACE YOUR FEET, AND LEAN FORWARD AND AWAY FROM THE POINT OF IMPACT.

Most operators can understand the need to be careful when handling loads. But some operators do not realize that a tipover can occur with an empty lift truck because similar dynamic forces are present. In fact, the lift truck will actually tip over easier when empty, than when loaded with the load lowered. Mast tilt, off-center loads, and uneven ground will aggravate these conditions and cause the forklift to become unstable.

⚠ WARNING

Failure to observe the tail swing area when making a turn can injure or kill someone.

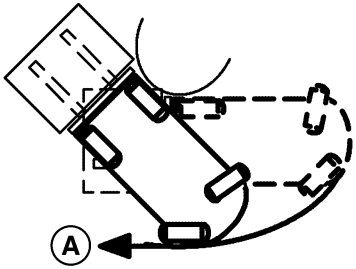

A. TAIL SWING

Because lift trucks are designed to work in a relatively small space, they can turn sharper than some other vehicles. Most lift trucks are steered by the rear wheels and the rear of the lift truck can move to the side very fast during a turn. This movement is called "tail swing". An operator must be aware of tail swing and always check to make sure the tail swing area is clear before turning. Failure to observe

https://truckmanualshub.com/

the tail swing area when making a turn can lead to injury or death.

DO NOT turn on an incline. To reduce the possibility of a tipover, a lift truck must not be driven across an incline.

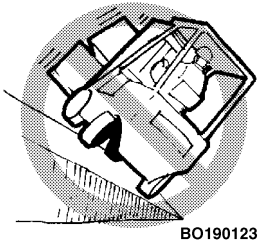
BO190123

When possible, keep both hands on the steering wheel. During most loading or unloading operations, the operator steers with the left hand. The right hand is used to operate the lift, tilt, and attachment controls.

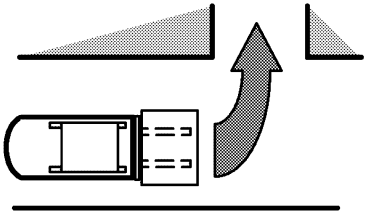
BO190125

When turning the lift truck from a wide aisle into a narrow aisle, start the turn as close to the opposite stock pile as tail swing will permit. This action permits the lift truck to enter the narrow aisle going straight ahead.

Load Handling, General

1. The capacity is the maximum load that the lift truck can handle for the load condition shown on the Nameplate. The operator must know whether or not a load is within the maximum capacity of the lift truck before the load is handled.

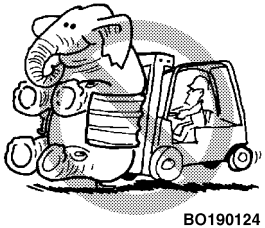
BO190124

However, factors such as weak floors or uneven terrain, loads with a high center of gravity, unevenly distributed loads, or tire condition can mean that the safe working load is less than the capacity shown on the Nameplate. When such conditions exist, the operator must reduce the load so the lift truck will remain stable.

⚠ WARNING

DO NOT handle a load if any loose part of it is above the load backrest or any part of the load is likely to fail.

2. Handle only stable loads. A load can have unstable items that can easily shift and fall on someone.

https://truckmanualshub.com/

WARNING

If the fork/locking pin is not fully engaged, the fork could become unintentionally disengaged.

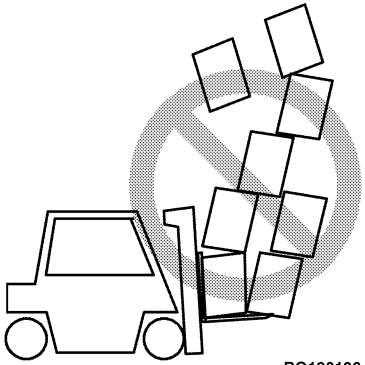

BO190126

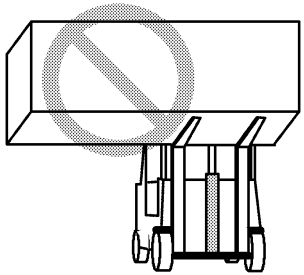

BO190127

3. Position each fork the same distance from the center of the carriage. This action will help center the load on the carriage. Set the forks as far apart as possible for maximum support of the load. Center the weight of the load between the forks.

If the weight of the load is not centered between the forks, the load can fall from the forks when you turn a corner or hit a bump. An off-center load will increase the possibility of the truck tipping over to the side. Make sure the pins that keep the forks in position are engaged so that the forks cannot move.

4. Check the condition of the driving surface. Make sure the floor will support the weight of the lift truck and the load.

https://truckmanualshub.com/

Load Handling, Lifting, Lowering, and Tilting

The **LIFT** and **TILT** functions are controlled by separate levers. See the **Controls** section in the **Model Description** section for the correct operation.

The speed of the hydraulic functions is controlled by the position of the control levers. The farther the hand lever is moved from the **NEUTRAL** position, the faster the speed of the hydraulic function.

DO NOT lift or hit anything that can fall on the operator or a bystander. Remember, a lift truck equipped with a **Hyster** overhead guard and load backrest extension provides reasonable protection to the operator from falling objects, but can not protect against every possible impact.

BO190128

A lift truck without an overhead guard provides no such protection and other personnel have no overhead protection. Avoid hitting objects such as stacked material that could become dislodged and fall.

The operator must exercise care while working near such objects. Whether the lift truck is loaded or empty, DO NOT travel with the load or carriage in a raised position.

https://truckmanualshub.com/

WARNING

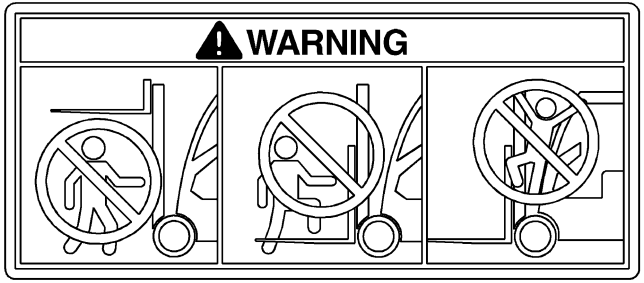

BO190291

Keep yourself and all others clear of the lift mechanism. Never allow anyone under or on the forks.

WARNING

BO190295

NEVER put hands, arms, head, or legs through the mast or near the carriage or lift chains. This warning applies not only to the operator but also a helper. A helper must not be near the load or lift mechanism while the operator is attempting to handle a load. The lift mechanism has moving parts with close clearances that can cause serious injury.

Lift and lower with the mast vertical or tilted slightly backward from vertical. Tilt elevated loads forward only when directly over the unloading place.

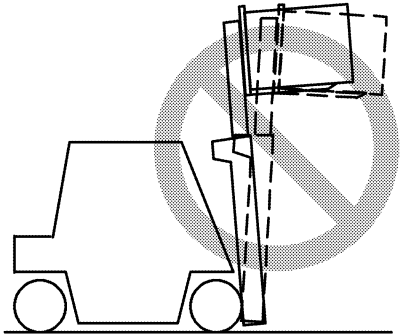

WARNING

The lift truck can tip over forward when the load is raised. Forward tipping is even more likely when tilting forward, braking when traveling forward, or accelerating in reverse.

https://truckmanualshub.com/

If the lift mechanism is raised to pick up or deposit a load, keep the tilt angle in either direction to a minimum. Backward and forward tilt are helpful, but they affect side and forward stability. DO NOT tilt in either direction more than necessary when handling a load that is raised. The lift truck can tip forward if the mast is tilted forward with a load in the raised position.

IF THE LIFT TRUCK TIPS OVER, DO NOT JUMP OFF! HOLD FIRMLY TO STEERING WHEEL, BRACE YOUR FEET, AND LEAN FORWARD AND AWAY FROM POINT OF IMPACT.

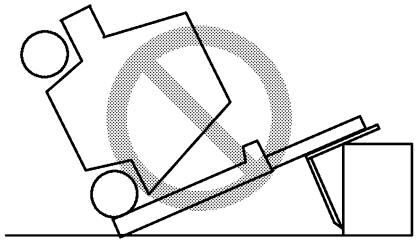

Load Handling, How to Engage and Disengage a Load

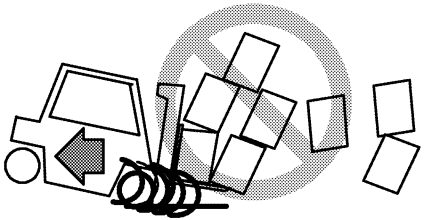

1. Avoid fast starts. Sudden movement can cause the lift truck to tip. People can be hurt or killed and material can be damaged.

Approach the load carefully. Make sure that the truck is perpendicular to the load. Raise the forks to the proper height for engaging the load.

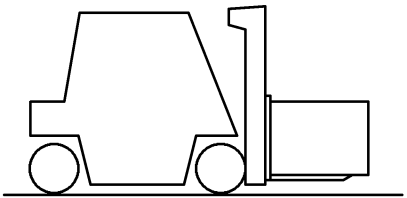

https://truckmanualshub.com/

2. Move forward slowly until the forks are in position under the load. The forks must support at least two-thirds (2/3) of the length of the load.

Make sure that the load is centered between the forks. Make sure that the forks do not extend past the load so that loads or equipment that are behind the load being lifted are not damaged. Lift the load a small distance from the floor to make sure the lift truck has the capacity to lift the load.

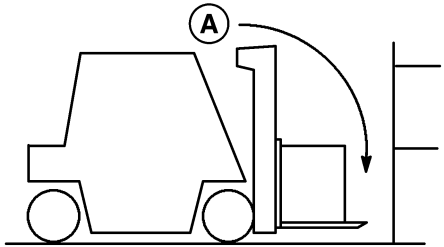

A. BE CAREFUL OF FORKS BEYOND THE LOAD

If the forks are longer than the load, move the forks under the load so that the tips of the forks do not extend beyond the load. Lift the load from the surface. Move backward a few inches, then lower the load onto the surface and inch forward to engage the load against the carriage. Tilt the mast backward just far enough to lift the load from the surface.

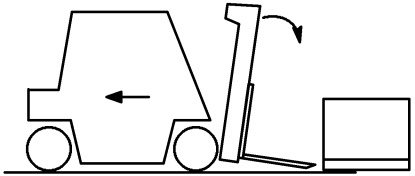

3. When a load is put on the floor, tilt the mast forward to a vertical position and lower the load. Tilt the mast forward to permit smooth removal of the forks. Carefully move the lift truck backward to remove the forks from under the load.

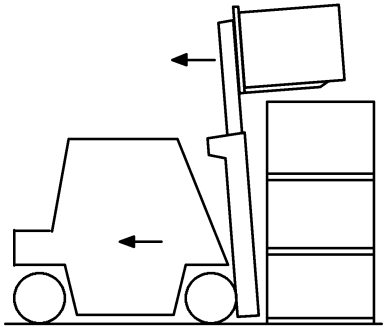

https://truckmanualshub.com/

4. If the load is being removed from a stack, slowly move the lift truck away from the stack. When the load is clear of the stack, lower the load for traveling. Always travel with the load as low as possible and tilted backward. Lowering speed is controlled by the position of the control lever. Lower slowly and smoothly. Slowly return the control lever to the neutral position so that the load is not dropped or that the lift truck is not tipped over due to the rapid stop of the load.

⚠ WARNING

Move carefully and smoothly when the load is raised over a stack. When the load is elevated the center of gravity of the lift truck and the load is much higher. The lift truck can tip over when the load is raised.

5. To put the load on a stack, align the lift truck with the stack. Raise the load higher than the point where it will be placed. DO NOT raise the load to a point below where the load is to be placed and "jog" the load up into position. This operation uses added energy. Be careful not to damage or move adjacent loads.

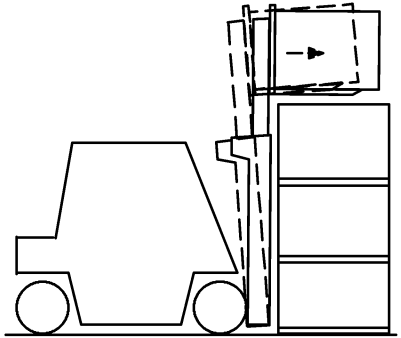

https://truckmanualshub.com/

IF THE LIFT TRUCK TIPS OVER EITHER TO THE SIDE OR FORWARD, DO NOT JUMP OFF! HOLD FIRMLY TO STEERING WHEEL, BRACE YOUR FEET, AND LEAN FORWARD AND AWAY FROM THE POINT OF IMPACT.

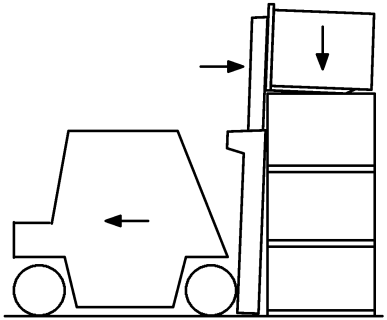

Move forward slowly. When the load is in position, lower the load on to the stack or the rack. Lower the forks just enough to remove them from under the load. DO NOT lower the forks so that they will drag on the surface under the load. Tilt the mast forward just enough to permit smooth removal of the forks from under the load. Carefully move the lift truck backward to remove the forks from under the load. Lower the forks when traveling.

NOTE: Not every load can be lifted using only the forks of a lift truck. Some loads will require a special attachment.

6. When lifting round objects, use a block behind the object. Tilt the mast forward so that the forks can slide along the floor under the object to be lifted. Tilt the mast fully backward to help keep the load on the forks.

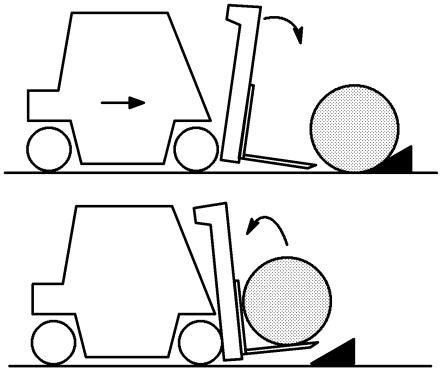

Load Handling, Traveling

1. When traveling with the load lowered, keep the load against the carriage and the mast tilted fully backward. This action will help keep the load on the forks and provide good forward and side stability.

https://truckmanualshub.com/

2. Travel with the lift mechanism raised only enough to clear the ground or obstacles.

When the mast, carriage, or load is in a raised position, the stability of the lift truck is reduced. This is also critical when the lift truck is not carrying a load. The ability of the lift truck to resist side tipping can be less on a lift truck without a load than it is on a lift truck with a load in the lowered (travel) position. Therefore, a lift truck without a load is more likely to tip sideways, especially in a turn, than a lift truck with a load carried in the lowered position.

⚠ WARNING

Some lift trucks have mirrors for viewing along the side to observe the tail swing area. These mirrors are an aid to the driver, but are NOT driving mirrors and must NOT be used as such when operating in reverse.

Always look in the direction of travel to avoid damage to something or injury to someone.

3. For better visibility with large loads, travel with the load trailing, but always keep a proper lookout in the direction of travel. Normally, direction of travel is determined by the best visibility available to the operator. If the lift truck must travel in a direction where visibility is obstructed, a lookout helper is required. Never drive when visibility is obstructed.

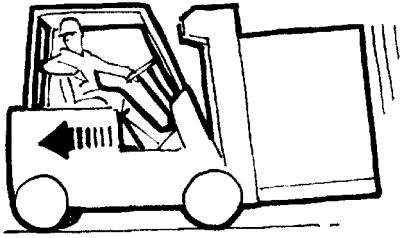

4. When traveling up or down grades in excess of 5% with a **heavily loaded** lift truck, keep the load upgrade to maintain control.

https://truckmanualshub.com/

BO190143

When operating an **unloaded** lift truck on a grade in excess of 5%, keep the counterweight upgrade.

5. Watch out for pedestrians at all times. DO NOT drive up to anyone standing in front of an object. Use extra care at cross-aisles, doorways, and other locations where pedestrians can step into the path of travel of the lift truck.

BO190144

Slow down when approaching blind intersections or turns and sound the horn. The horn is to warn pedestrians that there is a vehicle in the area and to be alert to possible danger.

6. Anytime the lift truck is moving keep arms, legs, etc., inside the operator's compartment. Arms and legs outside the machine can be injured when passing obstructions.

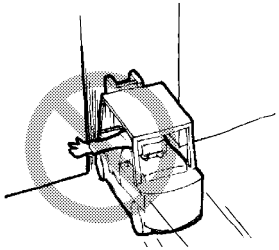

BO190145

7. Avoid bumps, holes, mud, slick spots, and loose materials that may cause the lift truck to swerve or tip. If unavoidable, slow down.

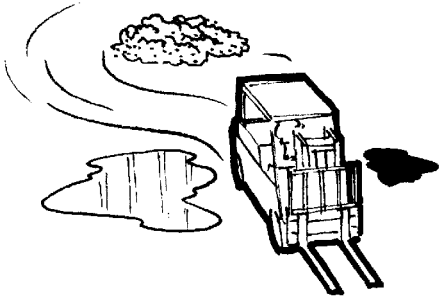

BO190146

Different models of lift trucks are designed to operate under different conditions. Solid rubber tire models are designed to operate on relatively smooth, firm surfaces. Lift trucks with pneumatic tires can adapt to more uneven ground. Always make sure you pick the smoothest route for your lift truck.

https://truckmanualshub.com/

8. Watch clearances, especially forks, mast, overhead guard, and tail swing. A lift truck is designed to perform a wide variety of functions within limited space.

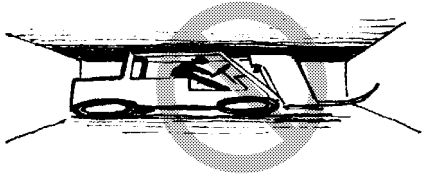

BO190147

The operator must be aware that the forks can sometimes extend beyond the front of the load. If the forks extend beyond the load, the operator can hit an object or lift another load. Serious accidents can be caused by mast and overhead guards hitting pipes and beams near the ceiling.

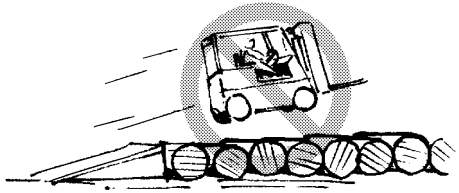

BO190148

9. DO NOT indulge in stunt driving or horseplay.

10. DO NOT pass another lift truck traveling in the same direction at intersections, blind spots, or at other dangerous locations.

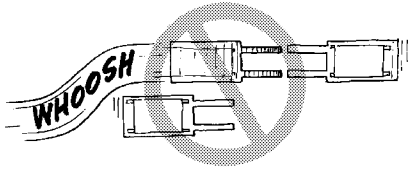

BO190149

11. Stay away from the edge of the road. Keep the wheels of the lift truck on the roadway. If the wheels are allowed to

https://truckmanualshub.com/

run off the edge of the travel surface onto soft ground, the lift truck can tip over.

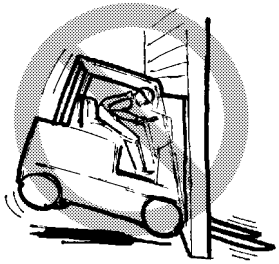

BO190150

12. Under all travel conditions, operate the lift truck at a speed that will permit it to be brought to a stop in a safe manner.

Set Up the Load Weight Sensor

Understanding the A/D (Analog to Digital) Value

The weight stored as **0** on the load meter accounts for the weight of moving mast channels, carriage, and forks.

The A/D value displayed on load meter set screens indicates in hexadicimal (HEX) format the weight currently stored as a zero value of load weight sensor. Each HEX bit is equivalent to about 7 kg (2.2 lb).

To calculate weight stored for zero value, convert A/D value from HEX to decimal format, then multiply by 7. For example, if A/D reading is 70 in HEX:
70 => 112 * 7 kg = 784 kg (1725 lb)

Store a Value for Zero on the Load Meter

1. Enter Service Mode.

2. Enter service password, if enabled.

3. Turn truck **ON**.

4. Set mast to vertical position perpendicular to floor.

5. Lift forks 30 to 40 cm (12 to 15 in.) from floor.

6. Lower mast to floor.

7. Press ►until **SET1 - AdJUST** displays.

8. Press ◄ until **ConT - AdJU** displays.

9. Press ► until **LPFS - SET** displays.

10. Press ◄ until **LoOO kG - nnn** displays.

The current A/D value is displayed below **LoOO kG**.

https://truckmanualshub.com/

11. Press ◄ until **LoOO kG - SET nnn** displays.

12. Raise forks 30 to 40 mm (12 to 16 in.).

13. Press and hold ◄ for two seconds.

14. Press ► until **yES** displays.

15. Press **M** to save value.

It is important to make sure that load weight meter is reading as close to actual weight of loads being lifted as possible. If weights differ, adjust controller code 512.

1. While viewing load meter on display, lift a load of a known weight.

2. If load weight on display matches known weight, stop here. If load weight on display does not match known weight of the object, proceed to the next step.

3. Divide know weight by displayed weight to learn the percentage at which to set controller code 512.

For example, if the know load weight is 500 kg. but display reads 530 kg., the percentage is 94.

4. Set controller code 512 to the percentage identified in previous step. See **Calibratons Procedures** 8000SRM2003, Controller Setting for procedures.

Load Meter

Your lift truck may be equipped with an optional load meter. The load meter calculates mast pressure and converts that pressure into a load value (weight) that will be displayed by pressing the mode change button (**M**) with lift truck stopped.

If the carriage and/or forks are replaced the load meter needs to be reset. To set the load meter function use the following procedure. Refer to **Figure 8** during load meter set procedure.

1. After turn key switch to **ON** position, press mode change button (**M**) for eight or more seconds until oPE SET screen appears.

2. Press display change button (<) one time to select 0 kg set menu until Lo00 AUT SET screen appears.

3. With **NO** load on the forks, place mast assembly in vertical position. It is recommended that mast and forks are in a 90° (±1°) angle for set procedure.

4. Press display change button (>) to begin 0kg set mode. With a second push of the display change button (>) the pressure reading date will begin.

https://truckmanualshub.com/

5. Rev engine and lift forks 30 to 50 cm (11.8 to 19.7 in.) from floor.

6. After several second Lo 0kg Set XXX will appear 0kg set is complete.

7. To exit 0kg set mode, press mode change button (**M**) or turn key switch to **OFF** position.

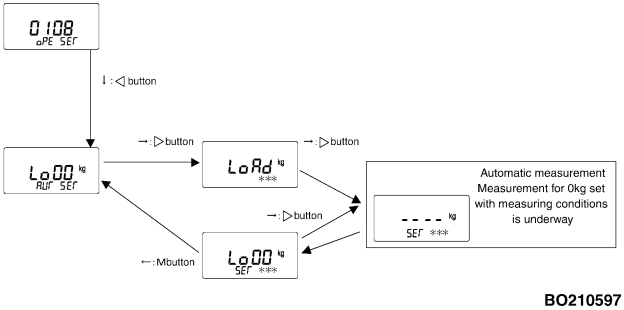

Figure 8. Load Meter Set

Highway Trucks, Rail Cars, and Docks

⚠ WARNING

Maintain a safe distance from the edge of docks, ramps, platforms and other similar working surfaces. Watch the "tail swing." Remember when traveling in the forward direction and the steering wheel is turned to move the lift truck away from the edge of the dock, the rear will swing toward the edge. This action can cause the lift truck to fall off the dock.

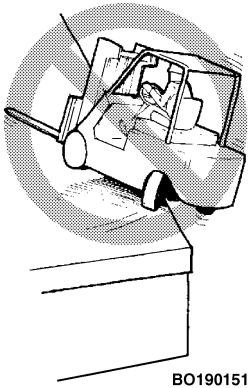

IF THE LIFT TRUCK FALLS OFF THE DOCK, DO NOT JUMP OFF! HOLD FIRMLY TO STEERING WHEEL, BRACE YOUR FEET, AND LEAN FORWARD AND AWAY FROM THE POINT OF IMPACT.

Before operating in a highway trucks or rail cars observe the following:

- DO NOT use a lift truck to move a rail cars.

https://truckmanualshub.com/

- DO NOT use a lift truck to open or close the door on a rail cars unless the lift truck has an attachment that is specifically designed for opening and closing rail cars doors and the operator is trained in its use.

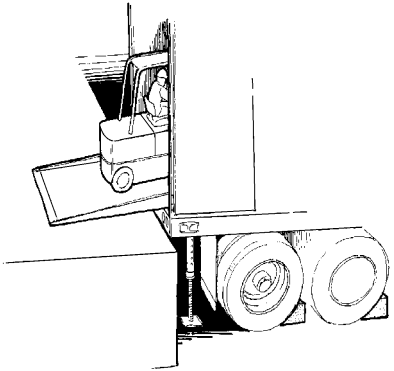

BO190152

- Check to make sure that the brakes on the highway trucks are set and that wheel blocks have been placed on both sides of the rear wheels (unless a dock locking mechanism is engaged). Fixed jacks may be necessary to support the front and rear of a highway trucks trailer to prevent it from moving or tipping during loading or unloading.
- Make sure that the rail cars brakes are set and the wheels are blocked while loading or unloading. Do this check so that the rail cars will not move due to the movement of the lift truck in and out of the rail cars.
- Check the condition of the driving surface. Make sure the floor will support the weight of the lift truck and the load.
- Make sure the dock board is secured, in good condition, and of the proper capacity.
- When entering a rail cars, the operator can enter at an angle (if the dock plate or bridge is wide enough). This will reduce the turning required after entering.
- Never leave a parked truck on a dock plate.

Attachments

⚠ WARNING

Make sure the Nameplate is correct if an attachment has been installed.

https://truckmanualshub.com/

BO190153

If an attachment is installed on the lift truck, make sure the operating instructions are available and understood before operating the attachment. For the operation of attachment control levers, see **Figure 4** and **Table 1**.

Attachments must be removed or installed by trained personnel only.

Disconnecting Attachment Hydraulic Quick-Disconnect Hoses

1. Turn the key switch or keyless switch to the **OFF** position.

2. Disconnect the negative terminal of the battery.

3. Move the manual hydraulic levers forward and backward to relieve the system hydraulic pressure.

4. Disconnect the Quick-Disconnect hose connections. See **Figure 9**.

Connecting Attachment Hydraulic Quick-Disconnect Hoses

1. Connect the Quick-Disconnect hose connections. See **Figure 9**.

2. Connect the negative terminal of the battery.

3. Turn the key switch or keyless switch to the **ON** position and start the engine.

4. Move the manual hydraulic levers forward and backward, and check the hydraulic system for leaks.

https://truckmanualshub.com/

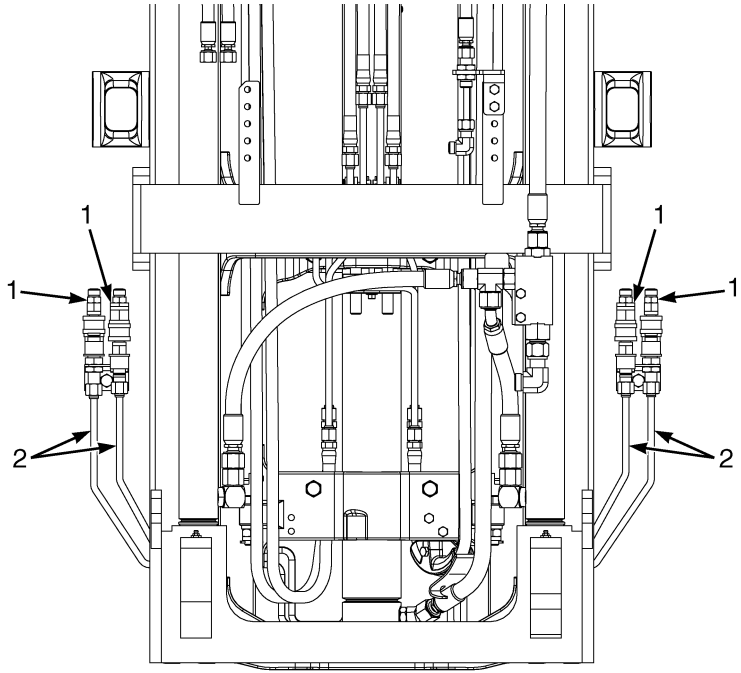

1. QUICK-DISCONNECT FITTINGS
2. HYDRAULIC TUBES

Figure 9. Quick-Disconnect Hoses Connections

https://truckmanualshub.com/

Stopping

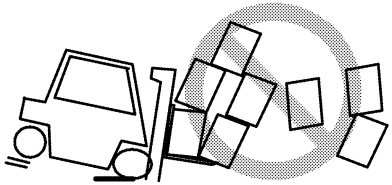

BO190154

Stop the lift truck as gradually as possible. Hard braking and wheel sliding can cause the forklift to tip or the load to fall off of the forks and damage the load or hurt someone.

Parking

The operator must never leave a lift truck in a condition so that it can cause damage and injury. When parking the lift truck, do the following operations:

1. Stop the lift truck and apply the parking brake.

2. Fully lower the forks or carriage. Tilt mast forward until the tips of the forks touch the ground.

3. If equipped, move the Direction Control Lever to the **NEUTRAL** position.

4. Turn the key to the **OFF** position to stop the engine.

5. To release seat belt, press red release button and guide belt carefully back into retractor with your hand.

6. If the lift truck must be left on an incline, put blocks on the down hill side of the wheels so that the lift truck can not move.

7. Check engine compartment, if operating in areas containing combustible material, and remove foreign debris. See **FIRE HAZARD WARNING** at the beginning of this section.

8. If the lift truck is not in active use, close the fuel valve at the tank. If the lift truck is going to be left over night or longer, the truck must be parked outside or the LPG tank must be removed and stored outside.

DO NOT park the lift truck so that it limits access to fire aisles, stairways, and fire equipment.

https://truckmanualshub.com/

Maintenance

General

⚠ WARNING

DO NOT make modifications to the lift truck that affect the safe operation of the lift truck. Don't add parts or components that affect visibility.

DO NOT make repairs or adjustments unless you have both authorization and training. Repairs and adjustments that are not correct can make a dangerous operating condition.

DO NOT operate a lift truck that needs repairs. Report the need for repairs immediately. If repair is necessary, put a "DO NOT OPERATE" tag in the operator's area and remove the key.

⚠ CAUTION

Disposal of lubricants and fluids must meet local environmental regulations.

This section contains a **Maintenance Schedule** and the instructions for maintenance and inspection.

The **Maintenance Schedule** has time intervals for inspection, lubrication, and maintenance for your lift truck. The service intervals are given in both operating hours recorded on the lift truck hour meter, and in calendar time. Use the interval that occurs first.

The recommendation for the time intervals are for eight hours of operation per day. The time intervals must be decreased from the recommendations in the **Maintenance Schedule** for the following conditions:

- If the lift truck is used more than eight hours per day.
- If the lift truck must work in dirty operating conditions.
- Poor ground conditions.
- Intensive usage at high performance levels on other abnormal conditions will require more frequent servicing.

Your dealer for **Hyster** lift trucks has the equipment and trained service personnel to do a complete program of inspection, lubrication, and maintenance. A regular program of inspection, lubrication, and maintenance will help your lift truck provide more efficient performance and operate for a longer period of time.

https://truckmanualshub.com/

Some users have service personnel and equipment to do the inspection, lubrication, and maintenance shown in the **Maintenance Schedule**. **Service Manuals** are available from your dealer for **Hyster** lift trucks to help users who do their own maintenance.

Serial Number Data

The serial number for the lift truck is on the Nameplate. It is also on the right side of the frame, under the floor plate.

How to Move a Disabled Lift Truck

⚠ WARNING

Use extra caution when towing a lift truck if any of the following conditions exist:

1. **Brakes do not operate correctly.**
2. **Steering does not operate correctly.**
3. **Tires are damaged.**
4. **Traction conditions are bad.**
5. **The lift truck must be towed on a slope.**

If the engine cannot run, there is no power available for the hydraulic steering system. This condition can make the lift truck difficult to steer. Poor traction can cause the disabled lift truck or towing vehicle to slide. A slope will also make the lift truck more difficult to stop.

Never lift and move a disabled lift truck unless the disabled lift truck MUST be moved and cannot be towed. A lift truck used to move a disabled lift truck MUST have a capacity rating equal to or greater than the weight of the disabled lift truck. The capacity of the lift truck used to move a disabled lift truck must have a load center equal to half the width of the disabled lift truck. See the Nameplate of the disabled lift truck for the approximate total weight. The forks must extend the full width of the disabled lift truck. Put the weight center of the disabled lift truck on load center of the forks. Be careful to not damage the under side of the lift truck.

How to Tow the Lift Truck

1. The towed lift truck must have an operator.

2. Tow the lift truck slowly.

3. Using a lift truck or a lifting device that can be attached to the mast (i.e., come-a-long), raise the carriage and forks approximately 30 cm (12 in.) from surface. Install a chain

https://truckmanualshub.com/

around a mast crossmember and the carriage, to prevent carriage and mast channels from moving.

4. If another lift truck is used to tow the disabled lift truck, that lift truck must have an equal or larger capacity than the disabled lift truck. Install approximately 1/2 of a capacity load on the forks of the lift truck that is being used to tow the disabled lift truck. This 1/2 capacity load will increase the traction of the lift truck. Keep the load as low as possible.

5. Use a towing link made of steel that fastens to the tow pins in the counterweights of both lift trucks.

How to Put a Lift Truck on Blocks

⚠ WARNING

The lift truck must be put on blocks for some types of maintenance and repair. The removal of the following assemblies will cause large changes in the center of gravity: mast, drive axle, engine and transmission, and the counterweight. When the lift truck is put on blocks, put additional blocks in the following positions to maintain stability:

1. **Before removing the mast and drive axle, put blocks under the counterweight so that the lift truck cannot fall backward.**
2. **Before removing the counterweight, put blocks under the mast assembly so that the lift truck cannot fall forward.**

The surface must be solid, even, and level when the lift truck is put on blocks. Make sure that any blocks used to support the lift truck are solid, one piece units.

NOTE: Some lift trucks have lifting eyes. These lifting eyes can be used to raise the lift truck so that blocks can be installed.

How to Raise the Drive Tires

(See Figure 10)

1. Put blocks on each side (front and back) of the steering tires to prevent movement of the lift truck.

2. Put the mast in a vertical position. Put a block under each outer mast channel.

3. Tilt the mast fully forward until the drive tires are raised from the surface.

https://truckmanualshub.com/

4. Put additional blocks under the frame behind the drive tires.

5. If the hydraulic system will not operate, use a hydraulic jack under the side of the frame near the front. Make sure that the jack has a capacity equal to at least half the weight of the lift truck. See the Nameplate.

How to Raise the Steering Tires

(See Figure 10)

1. Apply the parking brake. Put blocks on both sides (front and back) of the drive tires to prevent movement of the lift truck.

2. Use a hydraulic jack to raise the steering tires. Make sure that the jack has a capacity of at least 2/3 of the total weight of the lift truck as shown on the Nameplate.

3. Put the jack under the steering axle or frame to raise the lift truck. Put blocks under the frame to support the lift truck.

https://truckmanualshub.com/

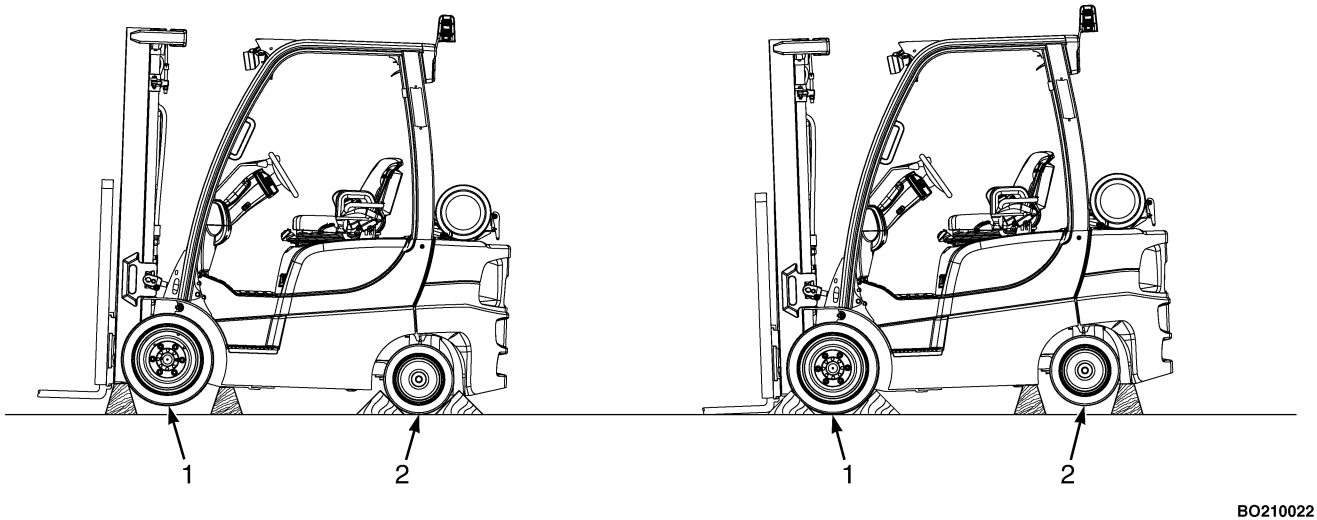

1. DRIVE TIRES
2. STEERING TIRES

Figure 10. Put a Lift Truck on Blocks

https://truckmanualshub.com/

How to Clean a Lift Truck

⚠ CAUTION

Your lift truck may be damaged if water or cleaning agents come in contact with electrical components. DO NOT directly spray any electrical components, especially connectors, switches, electro-hydraulic controls, battery area, and dash display during the cleaning process.

Portions of your lift truck may be washed with a non-heated pressure washer. Steam cleaning is not recommended in most instances, as condensation may form in electrical components causing damage or erratic behavior. For cleaning guidelines and components to avoid, see the **Periodic Maintenance** section of the **Service Manual** for your lift truck.

https://truckmanualshub.com/

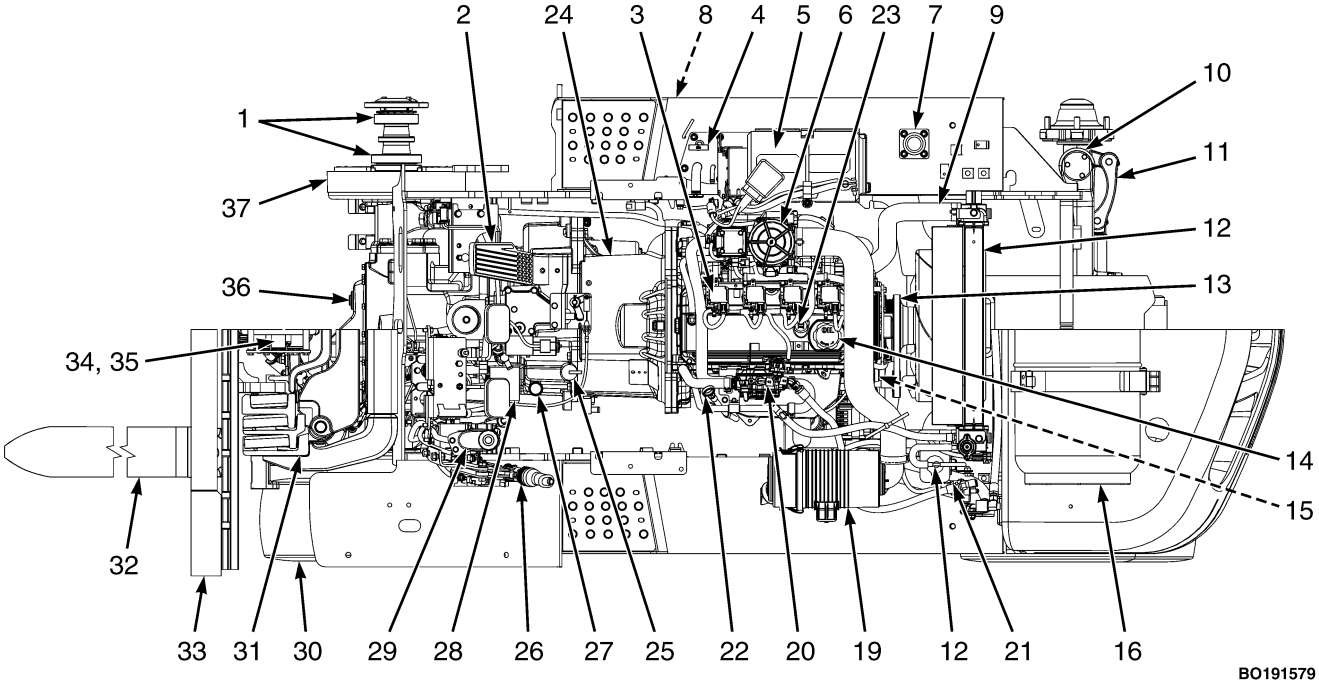

Figure 11. Maintenance and Lubrication Points, PSI 2.4L LPG Trucks

https://truckmanualshub.com/

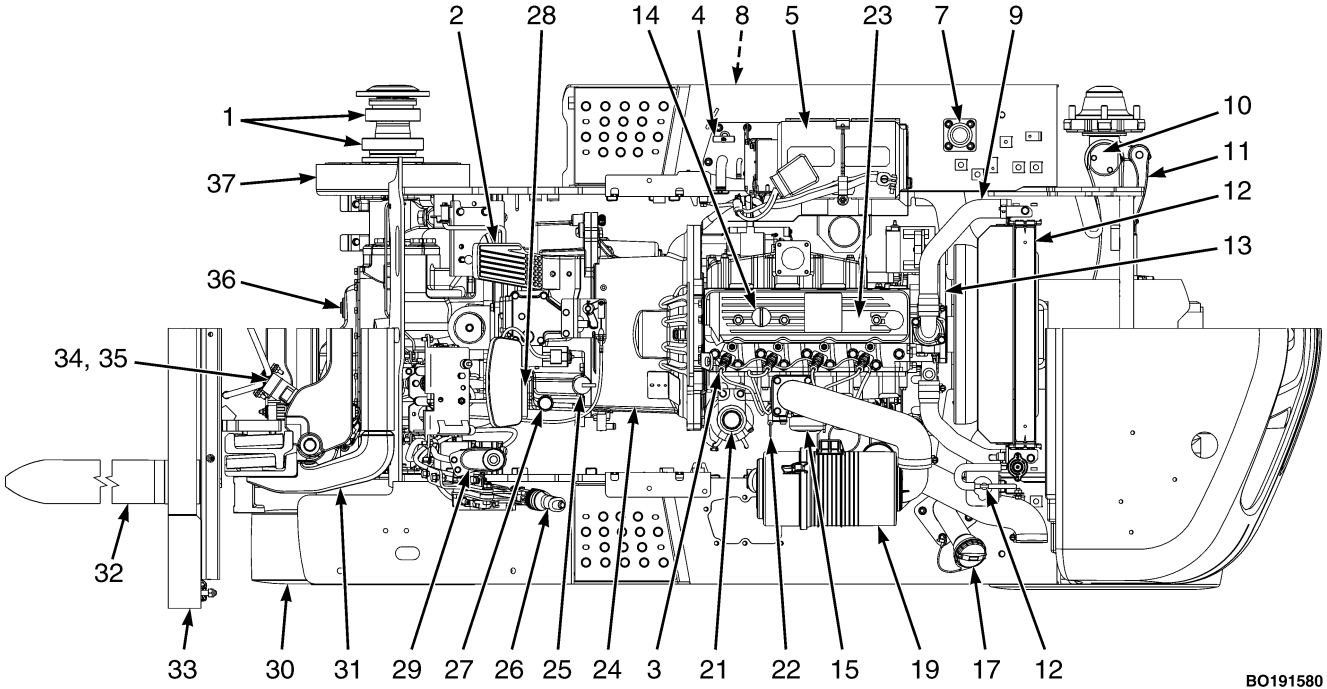

Figure 12. Maintenance and Lubrication Points, Yanmar 2.6L and 3.3L Diesel Trucks

https://truckmanualshub.com/

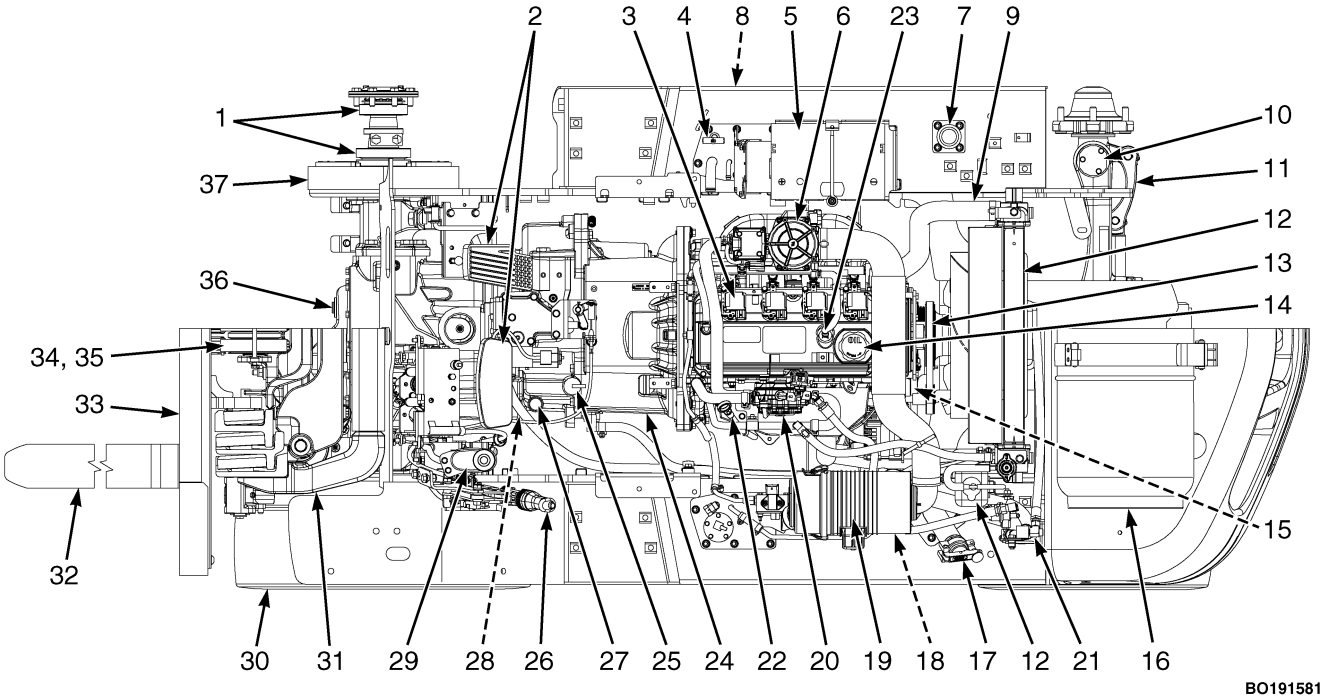

Figure 13. Maintenance and Lubrication Points, PSI 2.4L Bi-Fuel Trucks

https://truckmanualshub.com/

Maintenance Schedule

(See Figure 11, Figure 12, and Figure 13.)

Item No.	Item	8 Hr/ 1 Day	250 Hr/ 6 Mo	500 Hr/ 6 Mo	1000 Hr/ 6 Mo	2000 Hr/ 1 Yr	4000 Hr/ 2 Yr	Procedure or Quantity	Specification
30	TIRES AND WHEELS	X						Check Condition.	See Nameplate.
	SAFETY LABELS	X						Replace as Necessary.	See **Parts Manual**.
31, 33, 34, 35	MAST, CARRIAGE, HEADER HOSES, LIFT CHAINS, AND ATTACHMENT	X						Check Condition and Lubrication.	See **Parts Manual**.
	SEAT BELT, HIP RESTRAINTS, AND SEAT RAILS	X						Check Condition and Operation.	
	HOOD AND SEAT LATCHES	X						Check Condition and Operation.	
X=Check C=Change L=Lubricate CIL=Check Indicator Light during operation									

https://truckmanualshub.com/

Item No.	Item	8 Hr/ 1 Day	250 Hr/ 6 Mo	500 Hr/ 6 Mo	1000 Hr/ 6 Mo	2000 Hr/ 1 Yr	4000 Hr/ 2 Yr	Procedure or Quantity	Specification
	ENGINE COMPARTMENT	X						Remove Combustible Materials. See NOTE 5.	
	CHECK FOR LEAKS - FUEL, OIL, WATER	X						Check for Leaks. See NOTE 1.	
	HYDRAULIC HOSES	X						Check Condition.	See **Parts Manual**.
9	COOLANT HOSES	X						Check Condition.	See **Parts Manual**.
16	FUEL TANK PSI 2.4L LPG Engine	CIL						29.9 liter (7.9 gal)	LPG - HD 5
17	FUEL TANK Yanmar Diesel Engines	CIL						69 liter (18.2 gal)	No. 2 Diesel
17	FUEL TANK Gasoline - PSI 2.4L Bi-Fuel Engine	CIL						69 liter (18.2 gal)	86 Octane Gasoline Minimum
	HORN, LIGHTS, ALARMS, FUSES, AND RELAYS	X						Check Operation.	
37	SERVICE BRAKES	X						Check Operation.	

X=Check C=Change L=Lubricate CIL=Check Indicator Light during operation

https://truckmanualshub.com/

Item No.	Item	8 Hr/ 1 Day	250 Hr/ 6 Mo	500 Hr/ 6 Mo	1000 Hr/ 6 Mo	2000 Hr/ 1 Yr	4000 Hr/ 2 Yr	Procedure or Quantity	Specification
37	SERVICE BRAKES					X		Check Lining Thickness.	1.0 mm (0.04 in.) Minimum
26	PARKING BRAKE	X						Check Operation.	
	ACCELERATOR CABLE						C	1 Cable	See **Parts Manual**.
36	DRIVE AXLE	X						Check for Leaks. Check Operation.	
36	DIFFERENTIAL AND DRIVE AXLE OIL		X			C		6.5 liter (6.9 qt) See NOTE 14.	SAE 80W-90 API GL-5
	STEERING CONTROLS	X						Check Operation and Condition.	
24	TRANSMISSION	X						Check for Leaks and Operation.	
25	TRANSMISSION OIL DIPSTICK			X				Check Oil Level.	John Deere JDM J20C

X=Check C=Change L=Lubricate CIL=Check Indicator Light during operation

https://truckmanualshub.com/

Item No.	Item	8 Hr/ 1 Day	250 Hr/ 6 Mo	500 Hr/ 6 Mo	1000 Hr/ 6 Mo	2000 Hr/ 1 Yr	4000 Hr/ 2 Yr	Procedure or Quantity	Specification
25	TRANSMISSION OIL					C		8.3 liter (8.8 qt)	John Deere JDM J20C
28	TRANSMISSION OIL FILTER					C		1 Filter See NOTE 4.	See **Parts Manual**.
27	TRANSMISSION OIL BREATHER				C			1 Breather See NOTE 4.	See **Parts Manual**.
4	HYDRAULIC OIL	X		X			C	30 liter (32 qt) See NOTE 2, NOTE 3, and NOTE 12.	ISO VG 46 Hydraulic Oil −20 °C (-4 °F) and Above
8	HYDRAULIC OIL RETURN FILTER					C		1 Filter See NOTE 12.	See **Parts Manual**.
7	HYDRAULIC TANK BREATHER		X			C		Inspect and Replace as Required. See NOTE 12.	See **Parts Manual**.
5	BATTERY AND CABLE TERMINALS			X				Clean.	
X=Check C=Change L=Lubricate CIL=Check Indicator Light during operation									

https://truckmanualshub.com/

Item No.	Item	8 Hr/ 1 Day	250 Hr/ 6 Mo	500 Hr/ 6 Mo	1000 Hr/ 6 Mo	2000 Hr/ 1 Yr	4000 Hr/ 2 Yr	Procedure or Quantity	Specification
14	ENGINE OIL PSI Engine	X CIL	C					4.9 liter (5.2 qt) W/FILTER See NOTE 4 and NOTE 5.	–7 °C (20 °F) and Below SAE 5W-20 16 °C (60 °F) and Below SAE 5W-30 –18 °C (0 °F) and Above SAE 10W-30 API SL ILSAC GF3
15	ENGINE OIL FILTER PSI Engine		C					1 Filter See NOTE 4 and NOTE 5.	See **Parts Manual**.
14	ENGINE OIL Yanmar Engine	X CIL		C				10.2 liter (10.8 qt) See NOTE 4 and NOTE 5.	20 °C (68 °F)and Over SAE 40 10 to 30 °C (50 to 86 °F) SAE 30 0 to 20 °C (32 to 68 °F) SAE 20 -16 to 40 °C (-3 to 104 °F) SAE 15W-40 -20 to 30 °C (-4 to 86 °F) SAE 10W-30 -10 to 10 °C (14 to 50 °F) SAE 20W -20 to 10 °C (-4 to 50 °F) SAE 10W
X=Check C=Change L=Lubricate CIL=Check Indicator Light during operation									

https://truckmanualshub.com/

Item No.	Item	8 Hr/ 1 Day	250 Hr/ 6 Mo	500 Hr/ 6 Mo	1000 Hr/ 6 Mo	2000 Hr/ 1 Yr	4000 Hr/ 2 Yr	Procedure or Quantity	Specification
15	ENGINE OIL FILTER Yanmar Engine			C				1 Filter See NOTE 4 and NOTE 5.	See **Parts Manual**.
19	AIR FILTER	X CIL				C		1 Filter See NOTE 5, NOTE 6, and NOTE 10.	See **Parts Manual**.
13	DRIVE BELT PSI Engine		X					Check for Wear and Damage. Adjust as Necessary.	
13	DRIVE BELT Yanmar Engine			X				Check for Wear and Damage. Adjust as Necessary.	
6	LPG REGULATOR PSI Engine		X					Drain Tar. See NOTE 5.	
20	LPG VAPORIZER PSI Engine		X						
X=Check C=Change L=Lubricate CIL=Check Indicator Light during operation									

https://truckmanualshub.com/

Item No.	Item	8 Hr/ 1 Day	250 Hr/ 6 Mo	500 Hr/ 6 Mo	1000 Hr/ 6 Mo	2000 Hr/ 1 Yr	4000 Hr/ 2 Yr	Procedure or Quantity	Specification
	ENGINE IDLE SPEED PSI Engine		X						850 ±25 RPM
	ENGINE GOVERNED SPEED (No Load) PSI Engine		X						2700 ±25 RPM
	ENGINE IDLE SPEED Yanmar Engine			X					825 ±50 RPM
	ENGINE GOVERNED SPEED (No Load) Yanmar Engine			X					2625 ±25 RPM
	PCV Valve PSI Engine					C		Replace as Necessary.	See **Parts Manual**.
23	VALVE ADJUSTMENT PSI Engine							Not Adjustable.	
23	VALVE ADJUSTMENT Yanmar Engine				X			Adjust as Required.	Intake (cold) 0.20 ±0.05 mm (0.008 ±0.002 in.) Exhaust (cold) 0.20 ±0.05 mm (0.008 ±0.002 in.)
	TIMING Yanmar 2.6L Engine					X		Adjust as Required.	Preset at 4° ATDC
X=Check C=Change L=Lubricate CIL=Check Indicator Light during operation									

https://truckmanualshub.com/

Item No.	Item	8 Hr/ 1 Day	250 Hr/ 6 Mo	500 Hr/ 6 Mo	1000 Hr/ 6 Mo	2000 Hr/ 1 Yr	4000 Hr/ 2 Yr	Procedure or Quantity	Specification
	TIMING Yanmar 3.3L Engine					X		Adjust as Required.	Preset at 6° ATDC
21	FUEL FILTER PSI LPG				C			1 Filter	See **Parts Manual**.
18	GASOLINE FUEL FILTER PSI Bi-Fuel Engine			C				1 Filter	See **Parts Manual**.
21	FUEL WATER SEPARATOR FILTER Yanmar Diesel Engine	CIL		C				1 Filter Drain Water from Filter as Required.	See **Parts Manual**.
21	IN-LINE FUEL STRAINER Yanmar Diesel Engine				C			1 Filter	See **Parts Manual**.
3	FUEL INJECTORS PSI Engine						X	Check and Replace if Required. 4 Injectors See NOTE 13.	See **Parts Manual**.
3	FUEL INJECTORS Yanmar Diesel Engine					X		Check and Replace if Required. 4 Injectors	See **Parts Manual**.
X=Check C=Change L=Lubricate CIL=Check Indicator Light during operation									

https://truckmanualshub.com/

Item No.	Item	8 Hr/ 1 Day	250 Hr/ 6 Mo	500 Hr/ 6 Mo	1000 Hr/ 6 Mo	2000 Hr/ 1 Yr	4000 Hr/ 2 Yr	Procedure or Quantity	Specification
3	SPARK PLUGS PSI Engine				C			Change Spark Plugs. 4 Plugs	Torch P/N DK7RTC 0.9 mm (0.035 in.)
12	COOLING SYSTEM PSI Engine	X CIL					C	11.0 liter (11.6 qt)	See NOTE 11.
12	COOLING SYSTEM Yanmar Engine	X CIL				C		11.5 liter (12.2 qt)	See NOTE 11.
	CLEAN DEBRIS FROM RADIATOR CORE			X				See NOTE 5.	
32	FORKS	X		X		X		Check Condition.	
32	FORK LATCHES			L				Lubricate as Necessary.	Multipurpose Grease See NOTE 7.
	LIFT SYSTEM, OPERATE	X						Check Operation.	
31	MAST Sliding Surfaces and Load Roller Surfaces			L				Lubricate as Required. See NOTE 8.	Multipurpose Grease See NOTE 7.
35	HEADER HOSES			X				Check Condition.	
X=Check C=Change L=Lubricate CIL=Check Indicator Light during operation									

https://truckmanualshub.com/

Item No.	Item	8 Hr/ 1 Day	250 Hr/ 6 Mo	500 Hr/ 6 Mo	1000 Hr/ 6 Mo	2000 Hr/ 1 Yr	4000 Hr/ 2 Yr	Procedure or Quantity	Specification
34	LIFT CHAINS	X		L	L, X			Check for Wear. Lube as Required. See NOTE 9.	Engine Oil SAE 30W
	MAST Pivots			L				2 Fittings	Multipurpose Grease See NOTE 7.
	MAST Sideshift Carriage (Upper and Lower Bearing Strips)	X		L	X	C		Lube as Required. 2 Fittings for Upper Bearings and 2 Lower Bearing Strips. Check Lower Bearing Strips for wear.	Multipurpose Grease See NOTE 7. See NOTE 9. 0 mm (0 in.) Minimum Thickness.
	MAST Fork Positioner	X		L	X			Lube as Required. 2 Fittings	Multipurpose Grease See NOTE 7.
	MAST Fork Positioner Cylinder Rod Anchors	X		L	X			Lube as Required. 2 Anchors	Multipurpose Grease See NOTE 7.
X=Check C=Change L=Lubricate CIL=Check Indicator Light during operation									

https://truckmanualshub.com/

Item No.	Item	8 Hr/ 1 Day	250 Hr/ 6 Mo	500 Hr/ 6 Mo	1000 Hr/ 6 Mo	2000 Hr/ 1 Yr	4000 Hr/ 2 Yr	Procedure or Quantity	Specification
	MAST Fork Positioner and Lower Hook Capscrews			X				Check Torque. 8 Capscrews	See NOTE 7.
	TILT CYLINDER ENDS			L				4 Fittings	Multipurpose Grease See NOTE 7.
	BRAKE MASTER CYLINDER ROD END PIN			L					Use Silicone Spray Hyster Part No. 328388.
	MANUAL HYDRAULIC HAND LEVERS			L					API SM ILSAC GF4 SAE J2362
29	BRAKE FLUID Master Cylinder	X		X		C		0.2 liter (0.21 pt)	SAE J-1703 (DOT 3)
1	DRIVE AXLE Wheel Bearings					L		Check Grease.	Multipurpose Grease See NOTE 7.
10	STEERING AXLE Spindle Bearings				L			4 Fittings	Multipurpose Grease See NOTE 7.
11	STEERING AXLE Tie Rods		L					4 Fittings	Multipurpose Grease See NOTE 7 and NOTE 16.
X=Check C=Change L=Lubricate CIL=Check Indicator Light during operation									

https://truckmanualshub.com/

Item No.	Item	8 Hr/ 1 Day	250 Hr/ 6 Mo	500 Hr/ 6 Mo	1000 Hr/ 6 Mo	2000 Hr/ 1 Yr	4000 Hr/ 2 Yr	Procedure or Quantity	Specification
	STEERING AXLE King Pins		L					4 Fittings	Multipurpose Grease See NOTE 7 and NOTE 16.
	STEERING AXLE Wheel Bearings					L		Check Grease.	Multipurpose Grease See NOTE 7.
2	PEDALS, LEVERS, SEAT RAILS, CABLES, HINGES, LINKAGES	X			L			Lubricate as Necessary.	Use Silicone Spray Hyster Part No. 328388.
26	PARKING BRAKE ADJUSTMENT			X				Adjust as Necessary.	Must hold a Full Capacity Load on a 15% Grade.
26	PARKING BRAKE				L			Lubricate as Necessary.	Use Silicone Spray Hyster Part No. 328388.
	WHEEL NUTS Drive Wheels	X						Check Tor-que.	450 to 500 N•m (332 to 369 lbf ft)
	WHEEL NUTS Steer Wheels	X						Check Tor-que.	155 to 175 N•m (114 to 129 lbf ft)
	TIMING BELT PSI Engine						C See NOTE 5.	Replace . See NOTE 15.	See **Parts Manual**.
	INSPECT ENGINE ELECTRICAL SYSTEM, CONNECTORS				X				
X=Check C=Change L=Lubricate CIL=Check Indicator Light during operation									

https://truckmanualshub.com/

Item No.	Item	8 Hr/ 1 Day	250 Hr/ 6 Mo	500 Hr/ 6 Mo	1000 Hr/ 6 Mo	2000 Hr/ 1 Yr	4000 Hr/ 2 Yr	Procedure or Quantity	Specification
	INSPECT ENGINE VACUUM AND FUEL LINES AND FITTINGS					X			
	INSPECT LOCK-OFF FOR LEAKS AND ENSURE LOCK-OFF CLOSING					X			
	TEST LPG/GAS REGULATOR PRESSURE					X			
	CHECK AIR INDUCTION SYSTEM FOR LEAKS					X			
	CHECK MANIFOLD FOR VACUUM LEAKS					X			
	CHECK THROTTLE SHAFT FOR STICKING					X			
	CHECK INJECTORS AND RAILS FOR LEAKS					X			
	INSPECT EXHAUST MANIFOLD AND PIPING FOR LEAKS					X			
X=Check C=Change L=Lubricate CIL=Check Indicator Light during operation									

https://truckmanualshub.com/

Item No.	Item	8 Hr/ 1 Day	250 Hr/ 6 Mo	500 Hr/ 6 Mo	1000 Hr/ 6 Mo	2000 Hr/ 1 Yr	4000 Hr/ 2 Yr	Procedure or Quantity	Specification
	INSPECT CATALYST INLET AND OUTLET					X			
	INSPECT MUFFLER INLET AND OUTLET					X		Replace as Required.	

NOTE 1: Check fuel system for leaks prior to any service or maintenance activity.

NOTE 2: Heavy-duty or high-temperature operations require more frequent checks.

NOTE 3: Heavy-duty or contaminated applications will require hydraulic oil change at 2000 hours.

NOTE 4: Change engine oil and filter after first 100 hours of operation. Change transmission oil filter after first 500 hours of operation.

NOTE 5: Recommended service intervals are based on a normal application in a clean environment. Applications involving contaminated environments such as high levels of airborne debris (dust and waste paper); chemical or abrasive compounds; poor ground conditions; intensive usage at high performance levels; or other abnormal conditions will require more frequent servicing. At your request, your **Hyster** dealer will advise you of the appropriate service intervals based on an application survey.

NOTE 6: In dirty or dusty environments, replace at 1000 hours or as needed.

NOTE 7: Multipurpose grease with 2 to 4% Molybdenum Disulfide.

NOTE 8: Lubricate mast every three months if unit has less than 1000 hours.

NOTE 9: Lubricate if dry or at first sign of visible surface rust.

NOTE 10: Do not open the air filter canister except to change the air filter element. See the Periodic Maintenance Manual for your lift truck for the correct procedure to change air filter element.

NOTE 11: Use Ethylene Glycol Boron-free Antifreeze. Purchase a pre-diluted 50/50 solution; or mix 50% concentrate with 50% distilled or deionized water.

X=Check C=Change L=Lubricate CIL=Check Indicator Light during operation

https://truckmanualshub.com/

Item No.	Item	8 Hr/ 1 Day	250 Hr/ 6 Mo	500 Hr/ 6 Mo	1000 Hr/ 6 Mo	2000 Hr/ 1 Yr	4000 Hr/ 2 Yr	Procedure or Quantity	Specification
NOTE 12: Hydraulic oil sampling and analysis is a recommended practice. See **Hydraulic Cleanliness Procedures** 1900 SRM 1620 for oil cleanliness and water content guidelines. For lift trucks operating in heavy duty applications or highly contaminated environments, take oil samples every 500 hours. Normal operating conditions may allow for less frequent oil sampling. Oil sampling should be done just prior to all oil and filter changes. NOTE 13: Check fuel Injectors at 5000 hours or 7 years. See **PSI 2.4L Engine** 0600 SRM 1755 for procedures. NOTE 14: Change differential/drive axle oil at 2400 hours. Use hour interval only. NOTE 15: Change timing belt at 6000 hours. Use hour interval only. Use ***Kit-Service 6000 hours*** specified in the **Parts Manual** for your lift truck. NOTE 16: Lubricate tie rod ends and king pins at 300 hours. Use hour interval only.									
X=Check C=Change L=Lubricate CIL=Check Indicator Light during operation									

https://truckmanualshub.com/

Maintenance Procedures Every 8 Hours or Daily

How to Make Checks With the Engine Stopped

⚠ WARNING

DO NOT operate a lift truck that needs repairs. Report the need for repairs immediately. If repair is necessary, put a DO NOT OPERATE tag in the operator's area and remove the key.

Put the lift truck on a level surface. Lower the carriage and forks, stop the engine, and apply the parking brake. Open the hood and check for leaks and conditions that are not normal. Clean any oil or fuel spills. Ensure all surfaces are free of oils, lubricants, fuel and organic dust or fibers (paper, wood, cotton, agricultural grass/grain, etc.).

Tires and Wheels

Check the tires for damage (see **Figure 14**). Check the tread and remove any objects that will cause damage. Check for bent or damaged rims. Check for loose or missing hardware. Remove any wire, strapping, or other material that is wrapped around the axle.

https://truckmanualshub.com/

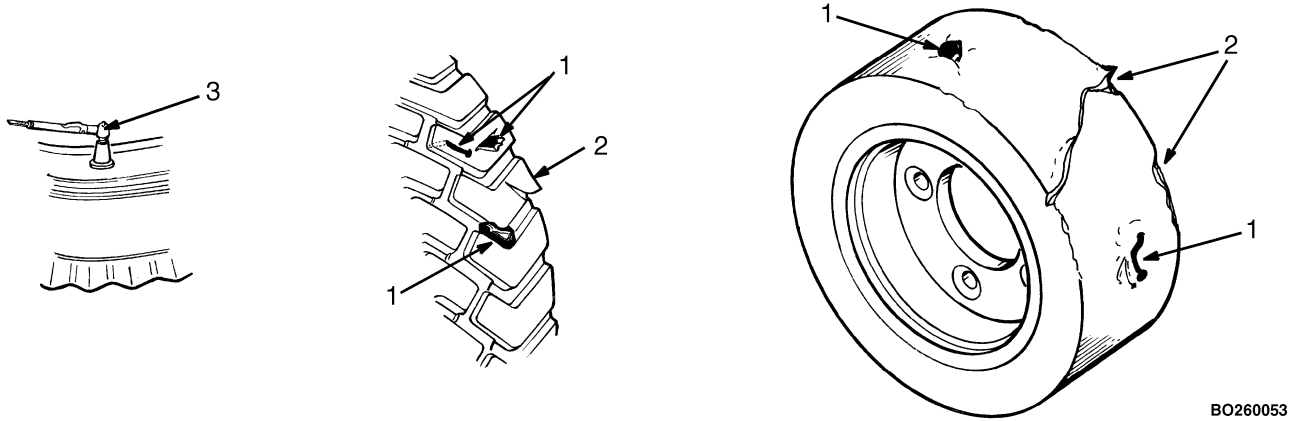

1. CHECK FOR DAMAGE (REMOVE NAILS, GLASS AND OTHER OBJECTS FROM THE TREAD)
2. MAKE SMOOTH EDGES
3. CHECK THE TIRE PRESSURE (PNEUMATIC TIRES)

Figure 14. Check the Tires

https://truckmanualshub.com/

Safety Labels

⚠ WARNING

Safety labels are installed on the lift truck to give information about operation and possible hazards. It is important that all safety labels are installed on the lift truck and can be read.

Check that all safety labels are installed in the correct location on the lift truck. See the **Parts Manual**, the **Model Description** section in this **Operating Manual**, or the **Frame** section of the **Service Manual** 100 SRM 1984 for the correct location of the safety labels. See the **Parts Manual** for the part numbers of the safety labels.

Mast, Carriage, Header Hoses, Lift Chains, and Attachment

(See Figure 27 and Figure 15)

⚠ WARNING

Lower the lift mechanism completely. Never allow any person under a raised carriage. DO NOT put any part of your body in or through the lift mechanism unless all parts of the mast are completely lowered and the engine is STOPPED.

DO NOT try to correct the alignment of the fork tips by bending the forks or adding shims. If either fork is damaged, replace the forks as a set.

Never repair damaged forks by heating or welding. Forks are made of special steel using special procedures. If either fork is damaged, replace the forks as a set.

DO NOT operate fork lift without lateral fork stops in place. Forks may disengage from fork carriage.

1. Inspect the welds on the mast, cylinders, and carriage for cracks. Make sure that the capscrews and nuts are tight.

2. Inspect the carriage to be sure fork stops are in place. Fork stops prevent forks from laterally disengaging from the carriage.

3. Inspect the channels for wear in the areas where the rollers travel. Inspect the rollers for wear or damage.

4. Inspect the load backrest extension for cracks and damage.

5. If the lift truck is equipped with a sideshift carriage or attachment, inspect the parts for cracks and wear. Make

https://truckmanualshub.com/

sure the parts that fasten the sideshift carriage or attachment to the carriage are in good condition.

6. Visually inspect hoses/fittings for hydraulic leaks; hose cover for cuts, cracks, or exposed reinforcement; defective/broken clamping devices or sheaves; and proper tracking during operation. Adjust/repair/replace hose/components as necessary.

7. Check that the lift chains are correctly lubricated. Use SAE 30 engine oil to lubricate the lift chains.

8. Inspect the lift chains for cracks or broken links and worn or turned pins. Lift chains must be replaced as a set. See **Figure 15**.

9. Inspect the chain anchors and pins for cracks and damage.

10. Make sure the lift chains are adjusted so that they have equal tension. **Adjustments or replacement of the lift chains must be done by authorized personnel.**

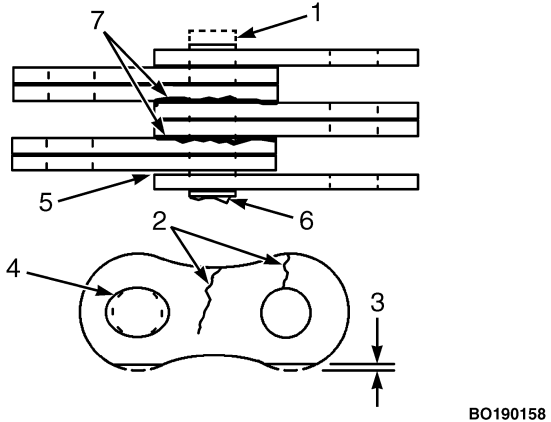

1. WORN PIN
2. CRACKS
3. EDGE WEAR
4. HOLE WEAR
5. LOOSE LEAVES
6. DAMAGED PIN
7. CORROSION

Figure 15. Lift Chain Check

https://truckmanualshub.com/

Operator Restraint System

The seat belt, hip restraint, seat, hood, and hood latches are all part of the operator restraint system (see **Figure 16** and **Figure 17**). Each item must be checked to make sure it is fastened correctly, functions correctly, and is in good condition.

https://truckmanualshub.com/

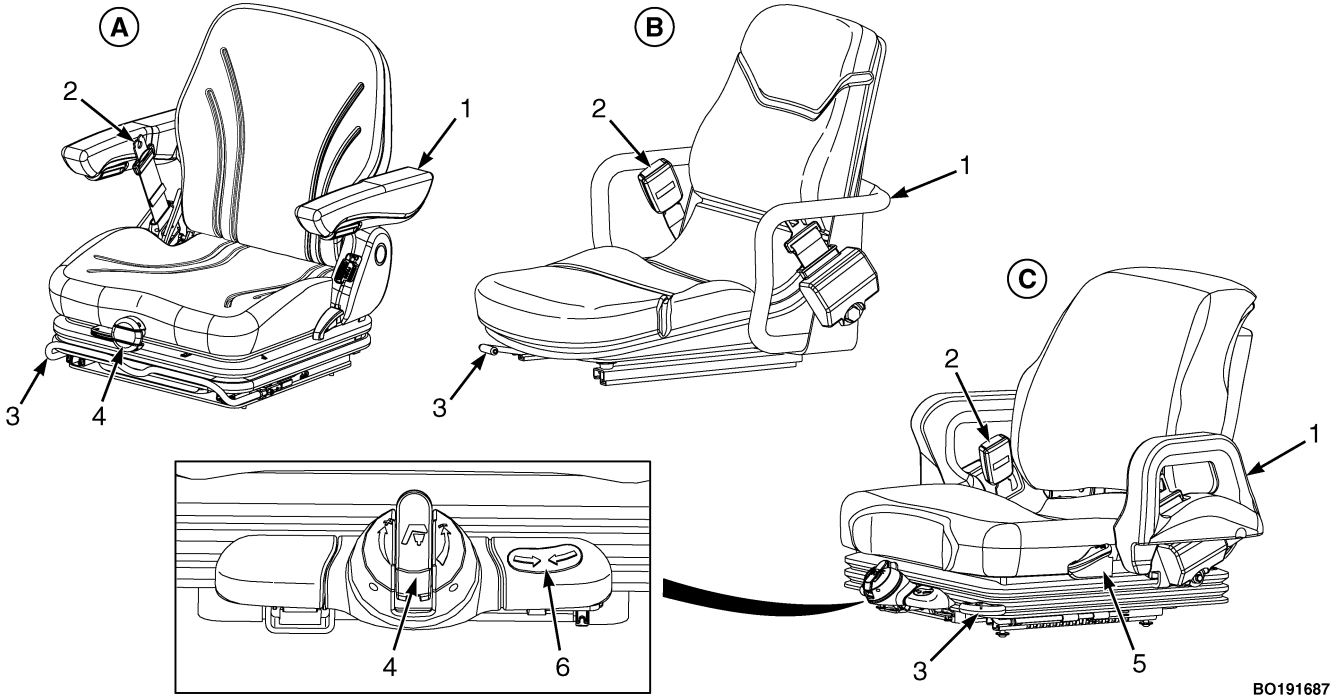

Figure 16. Seat Check

https://truckmanualshub.com/

Legend for Figure 16

A. STANDARD FULL SUSPENSION SEAT
B. STANDARD NON-SUSPENSION SEAT
C. PREMIUM FULL SUSPENSION SEAT

1. HIP RESTRAINT
2. SEAT BELT
3. FORWARD/BACKWARD ADJUSTMENT LEVER
4. WEIGHT ADJUSTMENT KNOB
5. BACKREST ANGLE ADJUSTMENT LEVER
6. RIDE POSITION INDICATOR

https://truckmanualshub.com/

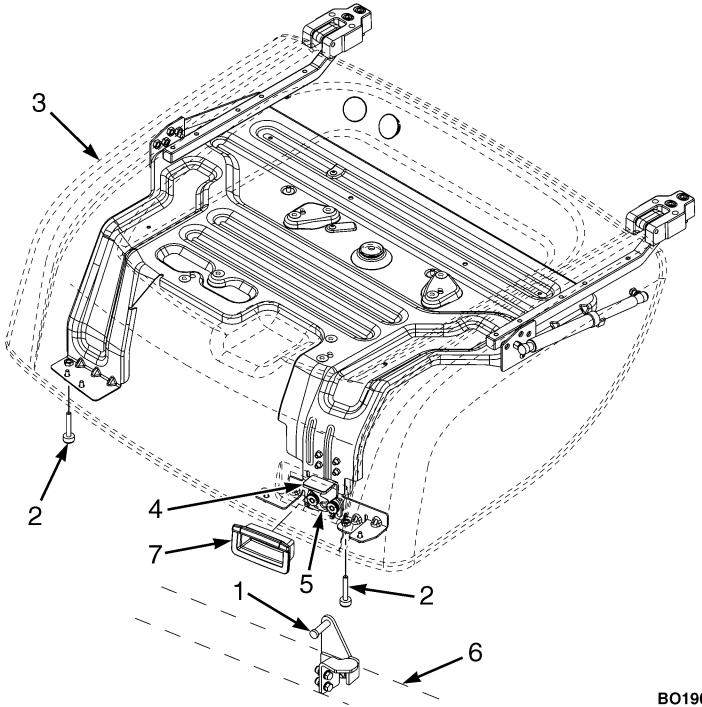

1. LATCH STRIKER
2. BUMPER
3. HOOD
4. HOOD RELEASE HANDLE
5. HOOD LATCH
6. LIFT TRUCK FRAME
7. BOOT

Figure 17. Hood and Hood Latch Check

https://truckmanualshub.com/

Emergency Locking Retractor (ELR)

When the ELR style seat belt is properly buckled across the operator, the belt will permit slight operator repositioning without activating the locking mechanism. If the truck tips over, travels off a dock, or comes to a sudden stop, the locking mechanism will be activated and hold the operator's lower torso in the seat. See **Figure 16**.

A seat belt that is damaged, worn, or does not operate properly will not provide protection when it is needed. The end of the belt must fasten correctly in the latch. The seat belt must be in good condition. Replace the seat belt if it is damaged or worn.

NOTE: The following seat belt operation checks must be performed three times before replacing the seat belt assembly.

- With the hood closed and in the locked position, pull the seat belt slowly from the retractor assembly. Make sure the seat belt pulls out and retracts smoothly. If the seat belt does not pull out of the retractor assembly, the internal latch may be locked. Pull firmly on the seat belt and hold for a moment to remove slack from the belt in the retractor. Release the seat belt. Seat belt will retract and the internal latch will unlock. If the seat belt cannot be pulled from the retractor assembly or the belt will not retract, replace the seat belt assembly.
- With the hood closed and in the locked position, pull the seat belt with a sudden jerk. Make sure the seat belt will not pull from the retractor assembly. If the seat belt can be pulled from the retractor when it is pulled with a sudden jerk, replace the seat belt assembly.
- With the hood in the open position, make sure the seat belt will not pull from the retractor assembly. If the seat belt can be pulled from the retractor, with the hood in the open position, replace the seat belt assembly.

Hood and Seat Latches

Make sure the seat rails and latch striker are not loose. The seat rails must lock tightly in position, but move freely when unlocked (see **Figure 16**). The seat rails must be correctly fastened to the hood and the hood fastened to the hinges on the frame. Try to lift the hood to make sure it is fastened correctly and will not move. If adjustment is required, go to Hood Latch Check in the **Periodic Maintenance** section of the service manual.

https://truckmanualshub.com/

Engine Compartment

Check for the presence of any combustible material such as paper, leaves etc. Remove any combustible materials.

Ground Static Strap

If lift truck is equipped with a Ground Static Strap (see **Figure 18**), check to be sure Ground Static Strap is securely in place and in contact with the ground. Check attaching hardware. If worn, missing or not in contact with the ground, replace strap and mounting hardware as required.

https://truckmanualshub.com/

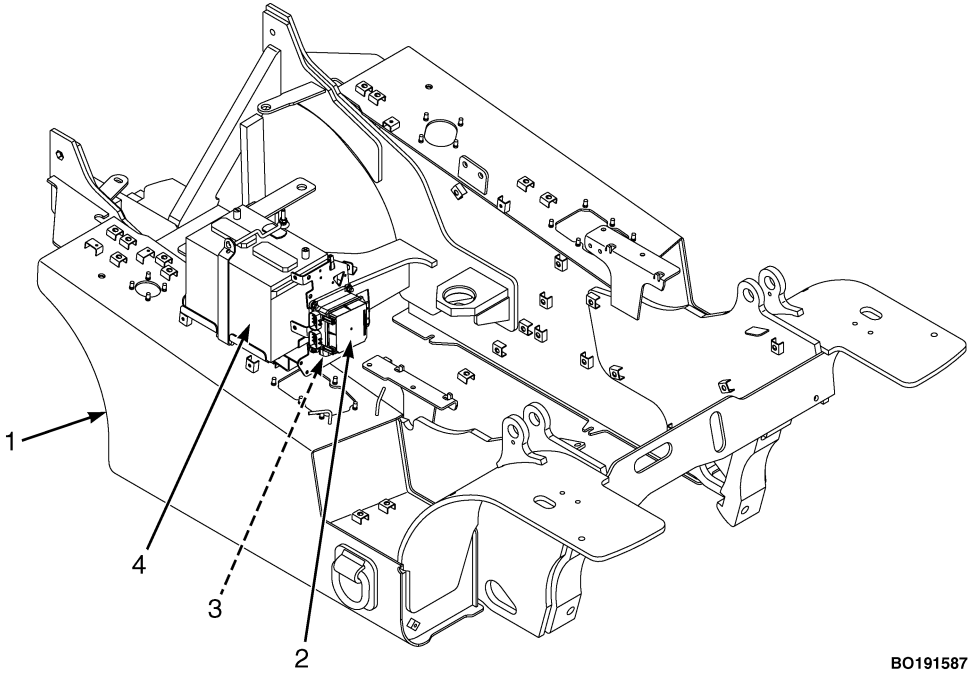

1. FRAME
2. PDM
3. GROUND STATIC STRAP
4. BATTERY

Figure 18. Ground Static Strap

https://truckmanualshub.com/

Fuel, Oil, and Coolant Leaks, Check

⚠ WARNING

All fuels are very flammable and can burn or cause an explosion. DO NOT use an open flame to check the fuel level or to check for leaks in the fuel system. If there is a leak in the fuel system, extra care must be used during the repair. DO NOT operate the lift truck until a leak is repaired.

Make a visual check for leaks on and under the lift truck. If possible, find and report the leak to maintenance for repair. Leaks often indicate a need for repair of damaged or worn components. Leaks in the LPG fuel system are usually not visible unless ice is present. There is however, usually a strong odor. Fuel leaks MUST be repaired **IMMEDIATELY**.

Check the fuel system for leaks and the condition of parts. When fuel is added to the lift truck, see the section, **How to Add Fuel to the Lift Truck**.

Also check the condition of the radiator or heater hoses that are not leaking. Soft or cracked hoses need to be replaced before a major leak occurs.

Hydraulic Hoses

Check the condition of the hydraulic hoses for serviceability by inspecting for cracks or other obvious damage. Check to insure that the hydraulic hoses are not leaking. If any hose is leaking, report it to maintenance for repair.

Coolant Hoses

Check the condition of the coolant hoses for serviceability by inspecting for cracks or other obvious damage. Check to insure that the coolant hoses are not leaking. If any hose is leaking, report it to maintenance for repair.

Transmission

Check the transmission for leaks, damage, and loose components. Heavy-duty or high-temperature operations can require more frequent checks.

https://truckmanualshub.com/

Hydraulic System Oil

⚠ WARNING

At operating temperature the hydraulic oil is HOT. Do not permit the hot oil to touch the skin and cause a burn.

⚠ CAUTION

DO NOT permit dirt to enter the hydraulic system when the oil level is checked or the filter is changed.

Never operate the hydraulic pump without oil in the hydraulic system. The operation of the hydraulic pump without oil will damage the pump.

After the engine has stopped, wait one minute before checking the oil level. Keep hydraulic oil at the correct level as indicated on the dipstick, located on top of right frame channel. See **Figure 19**. Use the correct oil as shown in the **Maintenance Schedule**.

Check the hydraulic system for leaks and damaged or loose components. Heavy-duty or high-temperature operations can require more frequent checks.

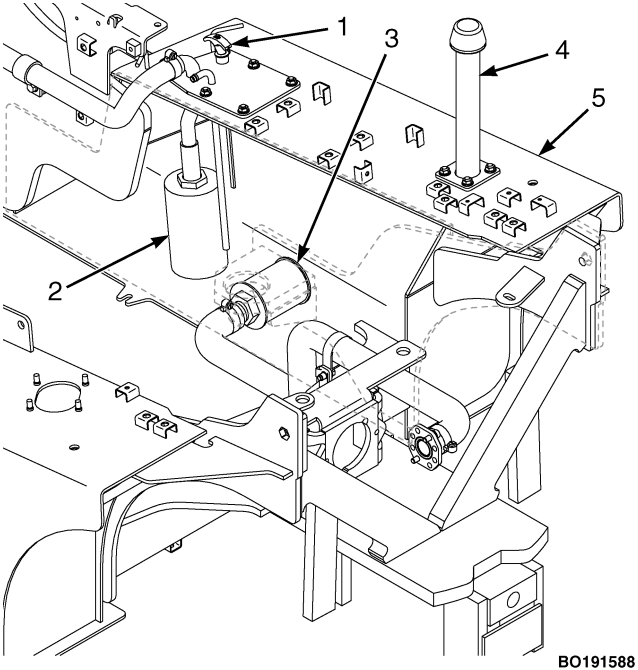

Figure 19. Hydraulic System Oil Check

https://truckmanualshub.com/

Legend for Figure 19

1. DIPSTICK
2. RETURN FILTER
3. SUCTION FILTER
4. BREATHER/FILLER NECK
5. RIGHT FRAME CHANNEL

Engine Oil

After the engine has stopped, wait one minute before checking the oil level. See **Figure 20**, **Figure 21**, **Figure 22**, and **Figure 23**. Keep the oil at the correct level as indicated on the dipstick. Use the correct oil as shown in the **Maintenance Schedule**.

There is an indicator light for the engine oil pressure on the Dash Display. During normal operation the red indicator light will illuminate when the key switch is turned to **ON** and will stay illuminated until correct oil pressure is obtained, at which time the light will go off.

If the light continues to stay on when the engine is running, the engine oil pressure is low. Stop the engine and check the oil level. See **Figure 20**, **Figure 21**, **Figure 22**, and **Figure 23**. DO NOT restart the engine until the low pressure condition has been corrected.

https://truckmanualshub.com/

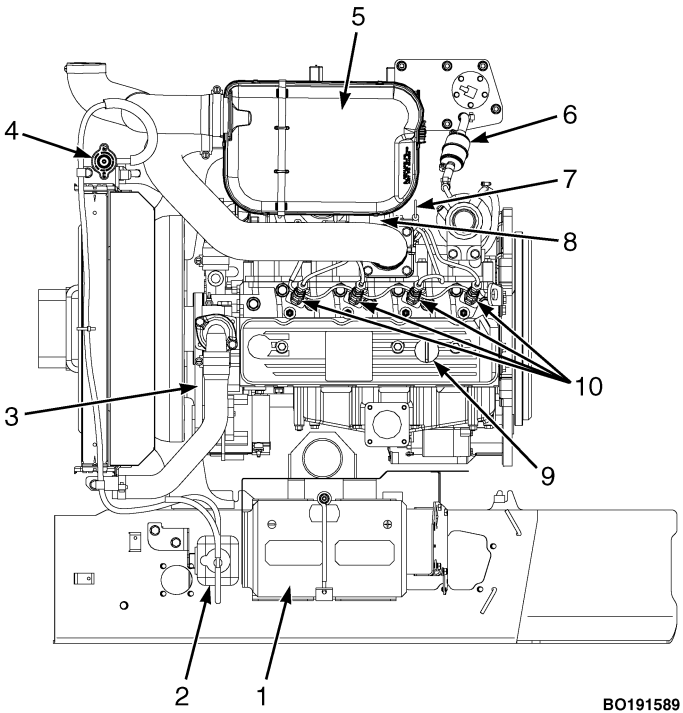

1. BATTERY
2. AUXILIARY COOLANT RESERVOIR
3. DRIVE BELT
4. RADIATOR CAP
5. AIR FILTER
6. FUEL FILTER
7. DIPSTICK ENGINE OIL
8. ENGINE OIL FILTER
9. ENGINE OIL FILL
10. FUEL INJECTOR

Figure 20. Yanmar 2.6L Diesel Engine Maintenance Points

https://truckmanualshub.com/

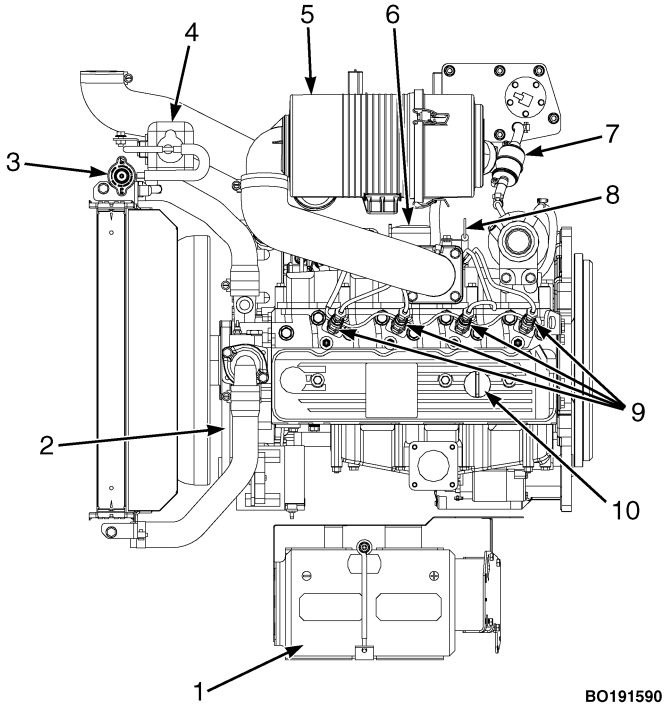

1. BATTERY
2. DRIVE BELT
3. RADIATOR CAP
4. AUXILIARY COOLANT RESERVOIR
5. AIR FILTER
6. ENGINE OIL FILTER
7. FUEL FILTER
8. DIPSTICK ENGINE OIL
9. FUEL INJECTOR
10. ENGINE OIL FILL

Figure 21. Yanmar 3.3L Diesel Engine Maintenance Points

https://truckmanualshub.com/

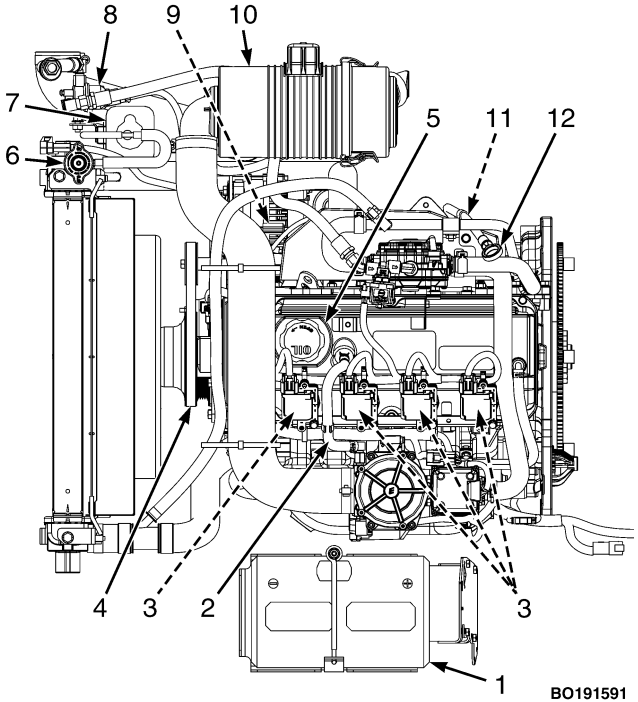

1. BATTERY
2. PCV VALVE
3. SPARK PLUGS
4. DRIVE BELT
5. ENGINE OIL FILL
6. RADIATOR CAP
7. AUXILIARY COOLANT RESERVOIR
8. FUEL FILTER
9. ENGINE OIL FILTER
10. AIR FILTER
11. ENGINE OIL DRAIN PLUG
12. DIPSTICK ENGINE OIL

Figure 22. PSI 2.4L LPG Engine Maintenance Points

https://truckmanualshub.com/

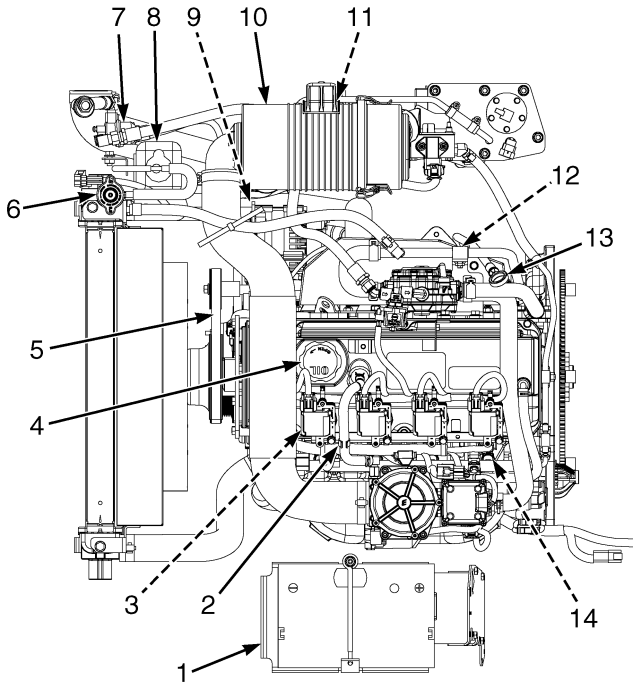

1. BATTERY
2. PCV VALVE
3. SPARK PLUGS
4. ENGINE OIL FILL
5. DRIVE BELT
6. RADIATOR CAP
7. LPG FUEL FILTER
8. AUXILIARY COOLANT RESERVOIR
9. ENGINE OIL FILTER
10. AIR FILTER
11. GASOLINE FUEL FILTER
12. ENGINE OIL DRAIN PLUG
13. DIPSTICK ENGINE OIL
14. INJECTOR

Figure 23. PSI 2.4L Bi-Fuel Engine Maintenance Points

https://truckmanualshub.com/

Air Filter

The air filter canister should not be opened until an air filter element replacement is required. An air filter element replacement is required when one of the following occurs:

- the specified number of hours has passed since the last filter element replacement

DO NOT operate the lift truck until the air filter element has been replaced.

Forks

The identification of a fork describes how the fork is connected to the carriage. These lift trucks have hook forks.

Forks, Remove

⚠ WARNING

DO NOT try to move a fork without a lifting device. Each hook fork for these lift trucks can weigh 45 to 115 kg (99 to 253 lb).

⚠ CAUTION

Remove fork latch pins if adding a fork positioner attachment. Damage to forks and other carriage components can occur if fork latch pins are not removed prior to using attachment.

NOTE: Forks are to be replaced only in sets and not individually.

NOTE: If lift truck is equipped with a fork positioner attachment, perform **Step 1** through **Step 3**. If lift truck is not equipped with a fork positioner attachment, go to **Step 3**.

1. Lower carriage and remove four capscrews from inner fork carriers. Remove inner fork carriers from integral side-shift carriage. See **Figure 24** or **Figure 25**.

2. Slide fork to fork removal notch in bottom bar of carriage. See **Figure 24** or **Figure 25**.

3. Lower fork onto blocks so bottom hook of fork moves through fork removal notch. Lower carriage further so top hook fo fork is disengaged from top carriage bar. Move carriage away from fork or use a lifting device to move fork away from carriage. See **Figure 26**.

https://truckmanualshub.com/

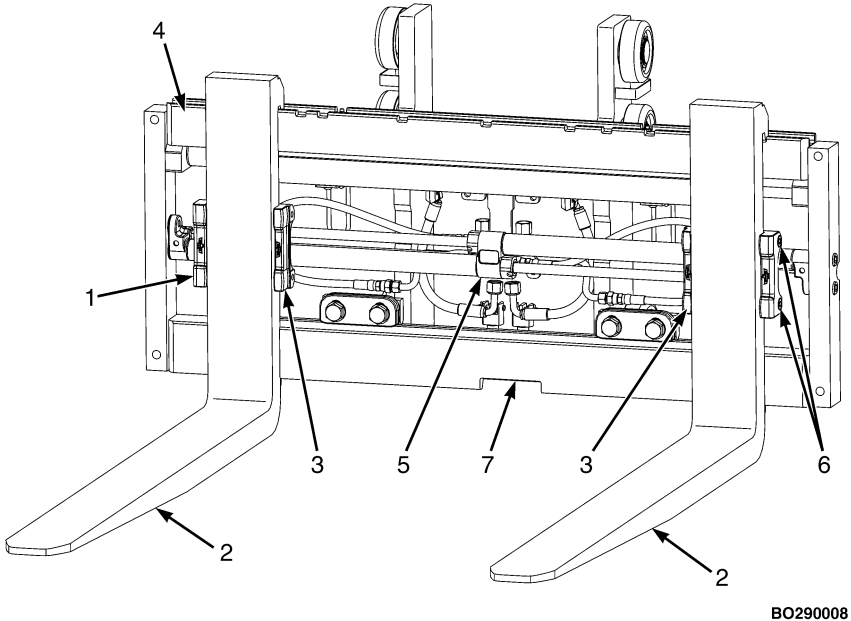

1. OUTER FORK CARRIER
2. FORKS
3. INNER FORK CARRIER
4. SIDESHIFT CARRIAGE
5. FORK POSITIONER
6. CAPSCREWS
7. FORK REMOVAL NOTCH

Figure 24. Fork Positioner Prior to December, 2016

https://truckmanualshub.com/

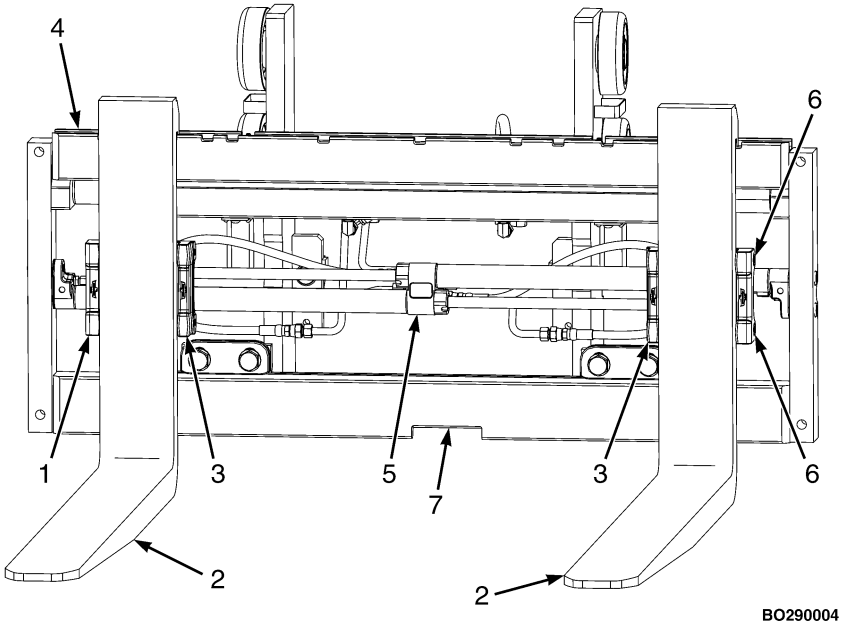

1. OUTER FORK CARRIER
2. FORKS
3. INNER FORK CARRIER
4. SIDESHIFT CARRIAGE
5. FORK POSITIONER
6. CAPSCREWS
7. FORK REMOVAL NOTCH

Figure 25. Fork Positioner After December, 2016

https://truckmanualshub.com/

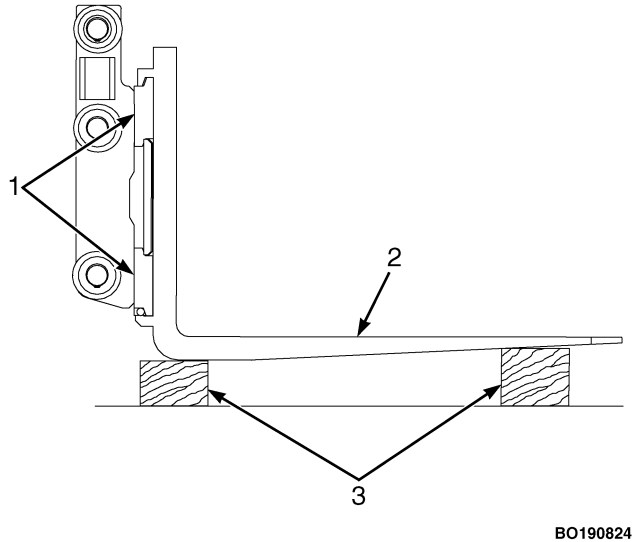

1. CARRIAGE BARS
2. HOOK FORK
3. BLOCKS

Figure 26. Remove a Hook Fork

Forks, Inspect

⚠ WARNING

DO NOT try to correct for tip alignment by bending the forks or adding shims. Replace bent forks.

Never repair damaged forks by heating or welding. Forks are made of special steel using special procedures. Replace damaged fork. Forks are to be replaced only in sets and not individually.

1. Inspect the forks for cracks and wear. Check that the fork tips are aligned as shown in **Figure 27**. Check that the bottom of the fork is not worn (Item 4 in **Figure 27**).

⚠ CAUTION

Remove fork latch pins if adding a fork positioner attachment. Damage to forks and other carriage components can occur if fork latch pins are not removed prior to using attachment.

2. Replace any damaged or broken parts that are used to keep the forks locked in position.

3. Inspect fork wear. Ensure heel wear is not more than 10% of original thickness. if fork wear is more than 10%,

https://truckmanualshub.com/

fork must be replaced or rerated. Perform fork wear inspection using a BOL256N1 caliper ruler Hyster P/N 4092984 as follows. See **Figure 28**.

a. Determine normal thickness of "N" of fork using scale or ruler portion of caliper ruler. Measurement has to be done on fork shank using caliper ruler.

b. Position caliper at end of heel internal radius (item 4, **Figure 27**) with opening corresponding to measured thickness of fork shank in **Step a** above. (e.g. for N 1.75 use N 1.75 opening). This is typically the section of fork where wear is greatest. Note that opening distance has been reduced by 10% from nominal thickness.

c. If fork enters opening, it is mandatory to replace it. DANGER OF BREAKING. Furthermore, a 10% reduction in fork blade thickness results in 20% reduction in operating capacity.

https://truckmanualshub.com/

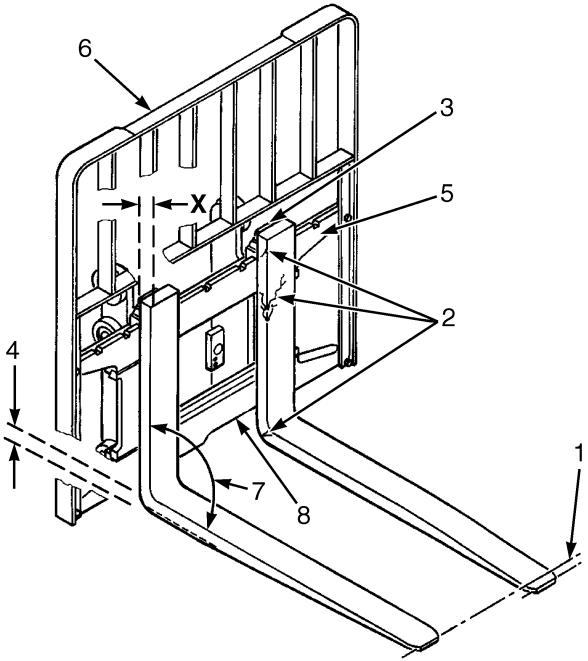

BO190157

Fork Tip Alignment	
Length of Forks	**3% Dimension**
914 mm (36 in)	27 mm (1.08 in)
1016 mm (40 in)	30 mm (1.2 in)
1067 mm (42 in)	32 mm (1.26 in)
1207 mm (47.5 in)	36 mm (1.42 in)
1219 mm (48 in)	37 mm (1.46 in)
1372 mm (54 in)	41 mm (1.61 in)
1524 mm (60 in)	45 mm (1.81 in)
1829 mm (72 in)	55 mm (2.17 in)

1. TIP ALIGNMENT (MUST BE WITHIN 3% OF FORK LENGTH)
2. CRACKS
3. LATCH DAMAGE
4. HEEL OF FORK (MUST BE 90% OF DIMENSION “X”)
5. CARRIAGE
6. LOAD BACKREST EXTENSION
7. MAXIMUM ANGLE 93°
8. FORK REMOVAL NOTCH

Figure 27. Forks Check

https://truckmanualshub.com/

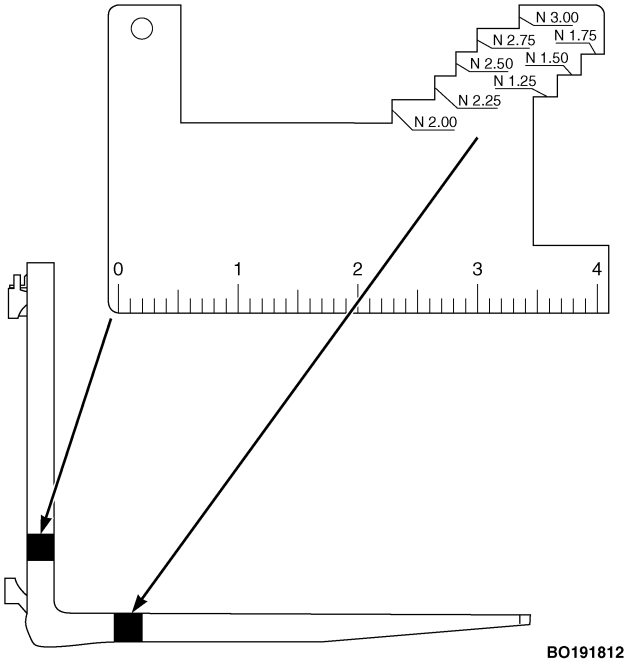

Figure 28. Fork Wear

Forks, Install

⚠ WARNING

DO NOT try to move a fork without a lifting device. Each hook fork for these lift trucks can weight 45 to 115 kg (99 to 253 lb).

⚠ CAUTION

Remove fork latch pins if adding a fork positioner attachment. Damage to forks and other carriage components can occur if fork latch pins are not removed prior to using attachment.

NOTE: Forks are to be replaced only in sets and not individually.

NOTE: If lift truck is not equipped with a fork positioner, go to **Step 1**. If lift truck is equipped with fork positioner, go to **Step 2**.

1. Move the fork and carriage so that the top hook on the fork can engage the upper carriage bar. Raise the carriage to move the lower hook through the fork removal notch. Slide the fork on the carriage so that both upper and lower hooks engage the carriage. Engage the lock pin with a notch in the upper carriage bar. See **Figure 26**.

https://truckmanualshub.com/

2. If lift truck is equipped with a fork positioner attachment, install inner fork carriers using four capscrews. Tighten capscrews to 35 N•m (25 lbf ft). See **Figure 24** or **Figure 25**.

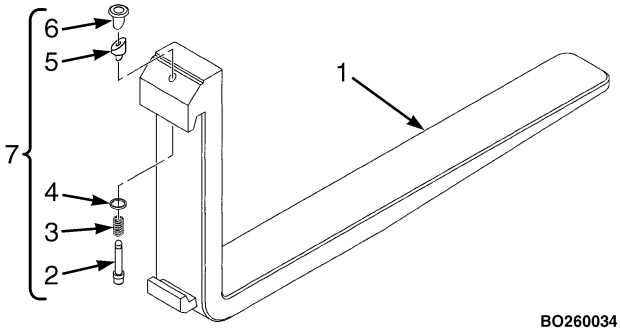

1. FORK
2. LOCK PIN
3. SPRING
4. WASHER
5. WEDGE
6. KNOB
7. LOCK PIN ASSEMBLY

Figure 29. Fork Lock Pin Assembly

Forks, Adjust

NOTE: During the adjustment of the forks, the heel of the forks should not be touching the ground.

The forks are connected to the carriage by hooks and lock pins. See **Figure 26** and **Figure 29**. The lock pins are installed through the top fork hooks and fit into slots in the top carriage bar. If pin does not remain engaged in carriage slot, replace with new pin. Adjust the forks as far apart as possible for maximum support of the load. Hook forks will slide along the carriage bars to adjust for the load to be lifted. Raise the lock pin in each fork to slide the fork on the carriage bar. Make sure the lock pin is engaged in the carriage bar to lock the fork in position after the width adjustment is made.

https://truckmanualshub.com/

Brake Fluid

⚠ WARNING

Small amounts of water in the brake system can cause reduced braking performance if the water reaches the wheel cylinder areas. DO NOT allow water entry. Ensure that the sealed reservoir lid is properly replaced.

Replace the brake fluid in the system if there is dirt or water in the system.

On lift trucks with dry brakes, only use SAE J-1703 (DOT 3) brake fluid in the master cylinder.

Open cover to brake fluid reservoir. Open reservoir and check fluid lever. If fluid is low, fill to within 2.5 mm (0.1 in.) of max line on reservoir. See **Figure 30**.

https://truckmanualshub.com/

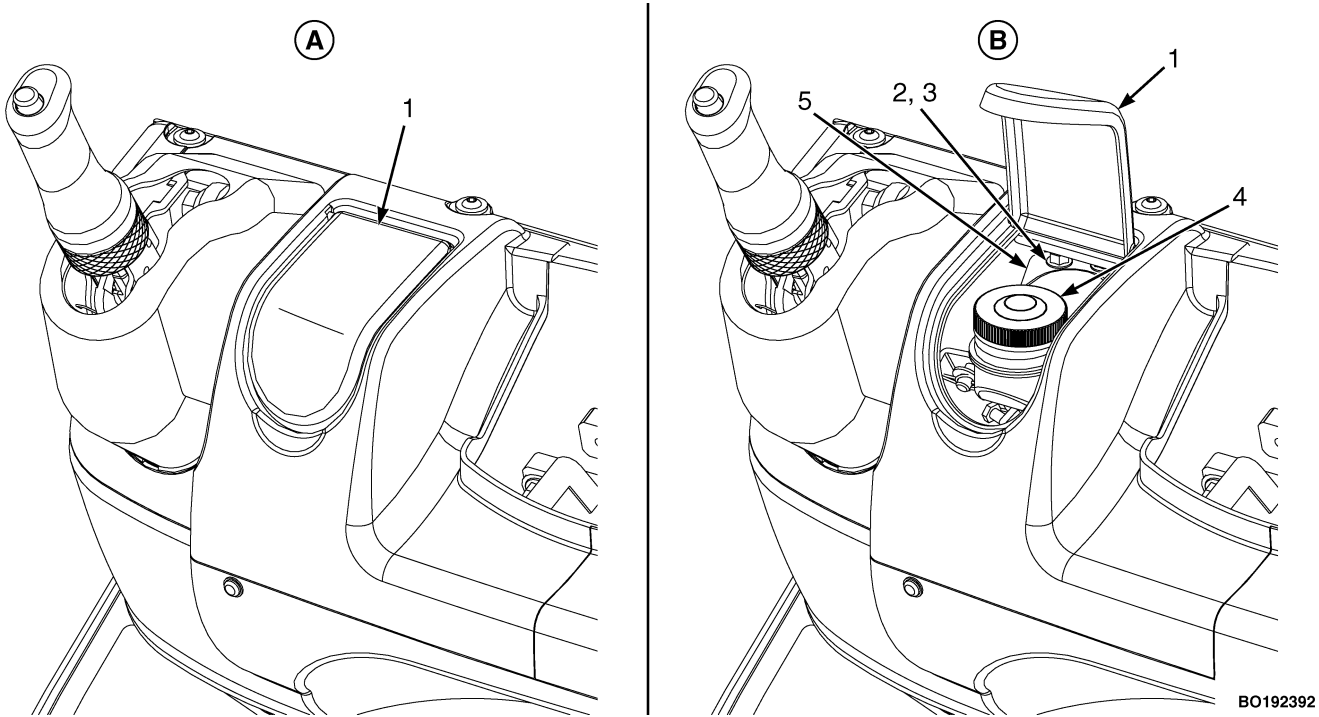

Figure 30. Brake Fluid Reservoir Cover

https://truckmanualshub.com/

Legend for Figure 30

A. COVER CLOSED

1. COVER
2. CAPSCREW
3. NUT

B. COVER OPEN

4. BRAKE FLUID RESERVOIR
5. MOUNTING BRACKET

How to Make Checks With the Engine Running

⚠ WARNING

DO NOT operate a lift truck that needs repairs. Report the need for repair immediately. If repair is necessary, put a DO NOT OPERATE tag in the operator's area and remove the key.

⚠ WARNING

FASTEN YOUR SEAT BELT! The seat belt is installed to help the operator stay on the truck if the lift truck tips over. IT CAN ONLY HELP IF IT IS FASTENED.

Make sure that the area around the lift truck is clear before starting the engine or making any checks of the operation.

Be careful when making the checks. If the lift truck is stationary during a check, apply the parking brake and put the transmission in **NEUTRAL**. Make the checks carefully.

Indicator Lights, Horn, Fuses, and Relays

Turn key to **ON** position. Check all indicator lights for correct operation as described in **Table 1**. Check the operation of the horn. Start the engine by turning the key switch to the **START** position. If any of the indicator lights do not operate correctly, check the fuses. The fuses are located in the Power Distribution Module (PDM) which is under the hood next to the battery on the right side. See **Figure 31**.

https://truckmanualshub.com/

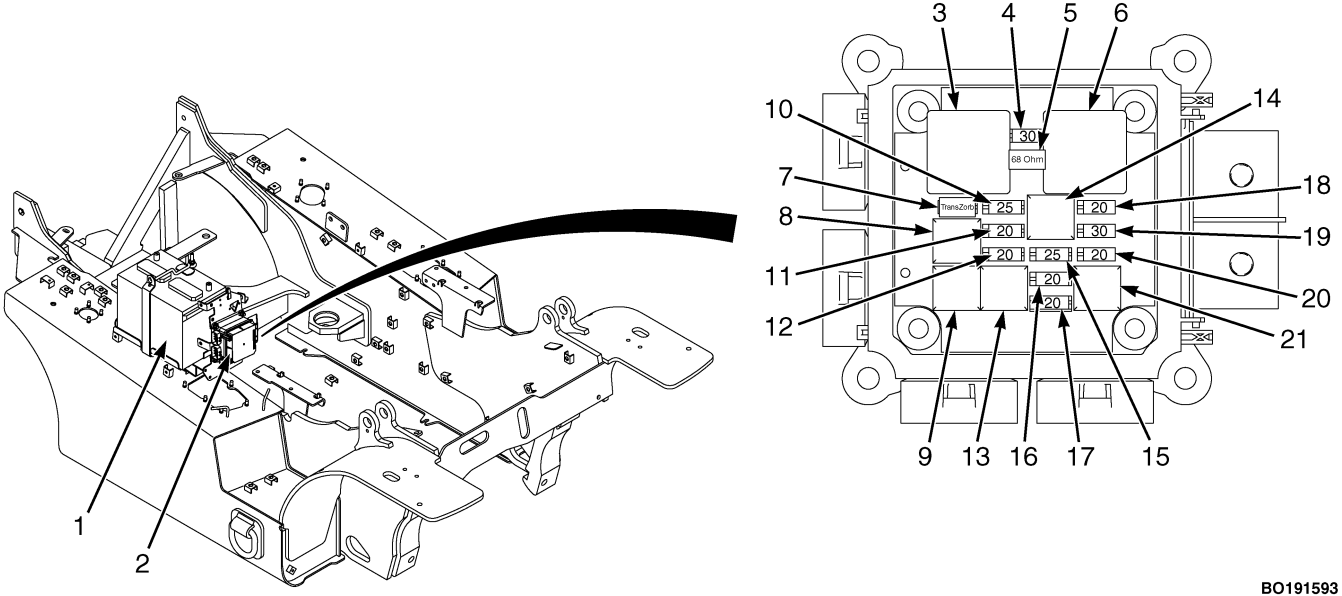

Figure 31. PDM Showing Fuses and Relays

https://truckmanualshub.com/

Legend for Figure 31

NOTE: HOOD REMOVED FOR CLARITY.

1. BATTERY
2. POWER DISTRIBUTION MODULE (PDM)
3. START RELAY
4. STARTER (30 AMP)
5. RESISTOR (68 OHM)
6. IGNITION 3 RELAY
7. TRANZORB
8. IGNITION 1 RELAY
9. REAR WORK LIGHT RELAY
10. BATTERY (25 AMP)
11. IGNITION 1+ (20 AMP)
12. REAR WORK LIGHT (20 AMP)
13. FRONT WORK LIGHT RELAY
14. BACKUP RELAY
15. BATTERY+ (25 AMP)
16. FRONT WORK LIGHT (20 AMP)
17. BATTERY+ (20 AMP)
18. BACKUP (20 AMP)
19. IGNITION 3+ (30 AMP)
20. FUEL/RUN (20 AMP)
21. FUEL/RUN RELAY

Service Brakes

Brake Fluid Level

WARNING

If the brake system has a power assist (or boost), braking will be more difficult if the engine is not running.

Loss of fluid from the brake fluid reservoir indicates a leak. Repair the brake system before using the lift truck. Replace the brake fluid in the system if there is dirt, water, or oil in the system.

Operation, Check

Check the operation of the service brakes. Push on the inching/brake pedal. The service brakes must be applied before the inching/brake pedal reaches the floor plate. The pedal must stop firmly and must not move slowly down after the brakes are applied. The service brakes must apply equally to both drive wheels. The service brakes must not pull the lift truck to either side of the direction of travel when they are applied. The service brakes are automatically adjusted when the transmission is in reverse and the lift

https://truckmanualshub.com/

truck is moving and the brakes are firmly applied. Full application of the inching/brake pedal applies the service brakes and puts the transmission in **NEUTRAL**.

Parking Brake

If the operator leaves the seat without setting the parking brake and the key is in the **OFF** position for a period of 3 minutes or less, an audible alarm will sound for 1 minute.

Make sure the service brakes operate correctly before checking the operation of the parking brake. Check the operation of the parking brake. The parking brake, when in good condition and correctly adjusted, will hold a lift truck with a full capacity load on a 15% grade [a slope that increases 1.5 meters in 10 meters (1.5 feet increases in 10 feet)]. If parking brake requires adjustment, notify service personnel.

Engine Oil Pressure

There is an indicator light for the engine oil pressure on the Dash Display. During normal operation the red indicator light will illuminate when the key switch is turned to **ON** and will stay illuminated until correct minimum oil pressure is obtained, at which time the light will go off. If the light continues to stay on when the engine is running, the engine oil pressure is low. Stop the engine and check the oil level. See **Engine Oil** section in this manual. DO NOT restart the engine until the low pressure condition has been corrected.

Cooling System

⚠ WARNING

DO NOT remove the radiator cap from the radiator when the engine is hot. When the radiator cap is removed, the pressure is released from the system. If the system is hot, the steam and boiling coolant can cause burns.

There is a coolant temperature gauge on the Dash Display. When the bar gauge reaches the middle bar, the temperature is optimum. If the gauge shows full bars, the engine is too hot and a warning buzzer will sound.

Make sure the coolant level is between the **ADD** and **FULL** marks on the auxiliary coolant reservoir (See **Figure 32**). The coolant will expand as it is heated and the level in the auxiliary coolant reservoir will increase.

⚠ CAUTION

Additives may damage the cooling system. Before using additives, contact your local Hyster dealer.

https://truckmanualshub.com/

If coolant is added, use the correct mixture of water and ethylene glycol shown in the **Maintenance Schedule**.

⚠ WARNING

Compressed air can move particles so that they cause injury to the user or to other personnel. Make sure that the path of the compressed air is away from all personnel. Wear protective goggles or a face shield to prevent injury to the eyes.

Check the radiator fins. Clean the radiator with compressed air or water as needed.

Check for and remove any debris on the radiator core. If the indicator light turns on again after restarting, shut down the lift truck and do not operate the lift truck until the problem is corrected.

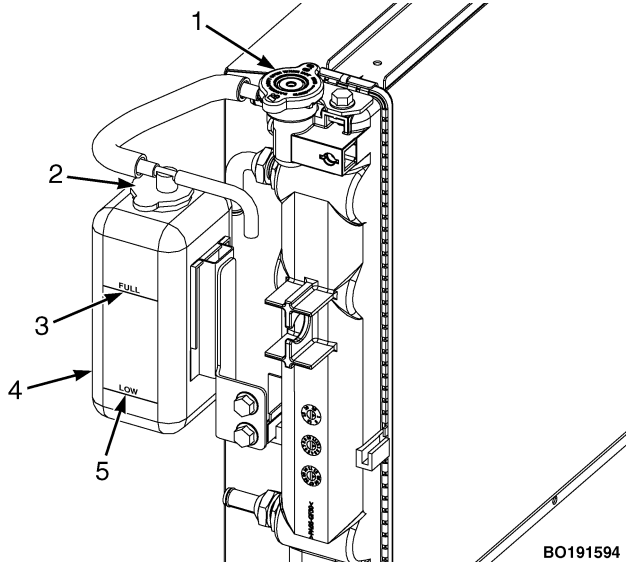

1. RADIATOR CAP
2. FILL CAP
3. FULL MARK
4. AUXILIARY COOLANT RESERVOIR
5. ADD MARK (LOW)

Figure 32. Auxiliary Coolant Reservoir

https://truckmanualshub.com/

Steering System

⚠ WARNING

The lift truck has hydraulic power steering. The steering can be difficult if the engine is not running.

Make sure the steering system operates smoothly and provides good steering control. Make sure the steering column can be adjusted and the gas cylinder function is correct.

Control Levers and Pedals

Check that the control levers for the transmission, mast, and attachment operate as described in **Table 1**. Check that the pedals operate correctly as described in **Table 1**.

Lift System Operation

⚠ WARNING

When working on or near the mast, see Safety Procedures When Working Near the Mast in the Periodic Maintenance for your lift truck.

Lower the lift mechanism completely. Never allow any person under a raised carriage. DO NOT put any part of your body in or through the lift mechanism unless all parts of the mast are completely lowered and the engine is STOPPED.

If the mast cannot be lowered, use chains on the mast weldments and carriage so that they can not move. Make sure the moving parts are attached to a part that does not move. See the Periodic Maintenance section of the service manual for additional information.

DO NOT try to find hydraulic leaks by putting hands on pressurized hydraulic components. Hydraulic oil can be injected into the body by the pressure.

Perform the following checks and inspections:

1. Check for leaks in the hydraulic system. Check the condition of the hydraulic hoses and tubes.

NOTE: Some parts of the mast move at different speeds during raising and lowering.

2. Slowly raise and lower the mast several times without a load. Raise the mast to its full height at least once. The mast components must raise and lower smoothly in the correct sequence. Hose must track properly during operation.

3. The inner weldments and the carriage must lower completely.

https://truckmanualshub.com/

4. Raise the mast 1 m (3 ft) with a capacity load. The inner weldments and the carriage must raise smoothly. Lower the mast. All moving components must lower smoothly.

5. Lower the load to approximately 0.3 m (1 ft). Tilt the mast forward and backward. The mast must tilt smoothly and both tilt cylinders must stop evenly.

6. Check that the controls for the attachment operate the functions of the attachment. See the symbols by each of the controls. Make sure all of the hydraulic lines are connected correctly and do not leak.

How to Add Fuel to the Lift Truck

⚠ WARNING

Use only 86 octane unleaded gasoline.

Stop the engine. Turn the key switch to OFF, if truck is equipped with a key switch; or press the Power ON/OFF button, if truck is equipped with keyless start option. The operator must be off of the lift truck while fuel is added.

No Smoking.

All fuels for internal combustion engines are very flammable.

Fill the fuel tank only in a designated area with good ventilation. Have a fire extinguisher available.

Never fill the fuel tank near an open flame or near equipment that can create sparks. Never check fuel lever or check for leaks with an open flame.

Breathing fuel vapor may cause nausea, unconsciousness or death. Long-term exposure to gasoline vapors may cause liver or kidney damage and cancer. Avoid breathing vapor.

Liquefied Petroleum Gas (LPG)

⚠ WARNING

Close the fuel valve on the tank when the lift truck is not in active use. DO NOT park the lift truck near heat or ignition sources.

For complete instructions on the storage of LPG fuels and the refueling of LPG tanks, refer to NFPA 58 & 505.

LPG is extremely flammable. When checking or filling an LPG tank: No smoking. Stop engine.

https://truckmanualshub.com/

Frost on the surface of the tank, the valves or fittings and the odor of LPG fuel indicates a leak. Inspect the LPG system and repair a leak immediately. An LPG fuel leak creates an explosion and fire hazard. Do not attempt to start the engine if there is a leak in the LPG fuel system.

Only trained and authorized personnel are permitted to operate filling equipment.

Use only the LPG tank indicated on the label on the tank bracket. DO NOT use an LPG tank that is damaged. A damaged LPG tank must be removed from service.

⚠ WARNING

LPG tanks are heavy. The weight of an LPG tank can exceed the maximum recommended weight for safe lifting by an individual. Get assistance when lifting or lowering an LPG tank. Use correct lifting procedures.

LPG can cause an explosion. DO NOT cause sparks or permit flammable material near the LPG system. LPG fuel systems can be disconnected indoors only if the lift truck is at least 8 m (26 ft) from any open flame, motor vehicles, electrical equipments, or ignition source.

Removable LPG tanks must be removed from the fork lift before filling. If the lift truck is equipped with a non-removable LPG tank, make sure all components (engine, transmission, muffler, catalytic muffler) have surface temperatures that have cooled to below 427 °C (800 °F).

LPG Tank, Removal

1. Removable LPG tanks can be replaced indoors only if the lift truck is a minimum of 8 m (26 ft) from any open flame, motor vehicles, electrical equipment, or ignition source. Move lift truck to an area where LPG tanks are changed.

2. Turn the shutoff valve clockwise until the valve is completely closed.

3. Run the engine until it stops, then turn the key switch to the **OFF** position.

4. Disconnect the quick-disconnect fitting on the LPG tank. See **Figure 33**.

https://truckmanualshub.com/

NOTE: Lift trucks covered in this manual may be equipped with a steel LPG tank strap.

5. Unlatch the tank strap and remove the LPG tank from the bracket.

https://truckmanualshub.com/

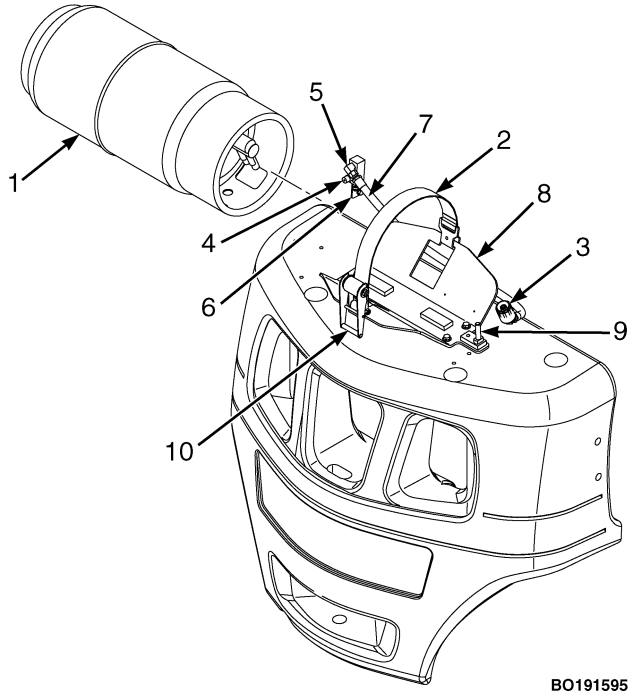

NOTE: FABRIC TANK STRAP SHOWN.

1. LPG TANK
2. TANK STRAP
3. QUICK DISCONNECT FITTING
4. HYDROSTATIC RELIEF VALVE
5. LPG BULKHEAD BRACKET
6. FITTING
7. HOSE ASSEMBLY
8. LPG TANK BRACKET
9. LPG TANK PIN
10. TANK LATCH

Figure 33. LPG Tank and Bracket

https://truckmanualshub.com/

LPG Tank, Fill

⚠ WARNING

Read and follow all the refueling precautions and instructions under Liquefied Petroleum Gas (LPG). Removable LPG tanks must be removed from the fork lift before filling.

NOTE: The following instructions are general procedures. There is a variation in equipment for filling LPG tanks. The local authorities that have jurisdiction have specific rules and regulations for filling LPG tanks. Make sure these rules and regulations are available and understood.

1. Check the gauge on tank to make sure it needs filling. During the fill operation, the LPG tank must be in a position so that the liquid level indicator will always be in the vapor space above the liquid level.

2. Open the liquid outlet valve and bypass return valve on the storage tank.

3. Start the pump.

4. Connect the supply hose to the quick disconnect fitting on the LPG tank (see **Liquefied Petroleum Gas (LPG)**). If the LPG tank has an auxiliary fill fitting, connect the supply hose to this fitting. Make sure the correct adapter is used to connect the supply hose to the auxiliary fill fitting.

5. Open the vent valve on the liquid level indicator.

6. Open the fuel valve on the LPG tank.

7. Open the valve on the end of the supply hose.

8. Watch for a discharge from the vent valve on the liquid level indicator. When a cloud of visible vapor appears, the LPG tank is full. Do not fill the LPG tank to more than the maximum level indicated by the liquid level indicator. Immediately close the valve at the end of the supply hose.

9. Close the vent valve on the LPG tank.

10. Close the fuel valve on the LPG tank.

11. Disconnect the hose supply.

12. Stop the pump.

13. Close the liquid outlet and the bypass return valve on the storage tank.

https://truckmanualshub.com/

LPG Tank, Install

⚠ WARNING

Make sure the alignment pin extends through the correct hole in the rim of the LPG tank. The hose or fittings can be damaged if the LPG tank is not installed in the correct position. A damaged hose or fitting can release LPG fuel and cause an explosion and fire hazard.

1. Install the LPG tank into the bracket so that the LPG tank pin is in the correct hole in the bracket. Replace LPG tank pin if damaged. Close the tank strap latches.

2. Connect the quick disconnect fitting to the shutoff valve on the tank. Hand-tighten the vale to the fitting. See **Figure 33**.

3. Turn the fuel valve counterclockwise to open the fuel valve.

4. Inspect the fuel system for leaks when the fuel valve is open. There are four methods used to inspect the fuel system for leaks:

a. Sound - Listen for sound of LPG escaping from a tank fitting or hose connection.

b. Smell - LPG has a very distinctive odor. If you smell LPG, **DO NOT** start the engine.

c. Soapy Water - This method is used in conjunction with **Step b** above. If the odor of LPG is present but escaping fuel cannot be heard, apply soapy water to the fittings and observe for bubbles.

d. Frost - If the amount of LPG escaping is sufficient, frost may appear on the fittings.

Gasoline and Diesel Fuel

⚠ WARNING

When fuel is added, keep the funnel or fuel nozzle in contact with the metal of the fuel tank to reduce the possibility of static electric sparks. Clean any spilled fuel.

1. Remove the fuel cap. Make sure the fuel tank is filled with the correct fuel for the type of engine in the lift truck. Clean the fuel cap and make sure vent is clear.

2. Replace the fuel cap.

https://truckmanualshub.com/

Wheels and Tires

General

This series of lift trucks have pneumatic tires or solid rubber tires that look like pneumatic tires. These variations in tires also cause a variation in the types of wheels and the disassembly and assembly procedures.

Pneumatic Tire With Tube, Repair

Remove Wheels From Lift Truck

WARNING

A solid rubber tire that is the same shape as a pneumatic tire can be installed on a three-piece or four-piece wheel for a pneumatic tire. DO NOT make changes in the parts of the rim if this type of solid rubber tire is installed instead of a pneumatic tire. Changes to the parts of the rim can cause a failure of the wheel and cause an accident.

The type of tire and the tire pressure (pneumatic tires) are shown on the Nameplate. Make sure the Nameplate is correct for the type of tires on the lift truck. If the truck is equipped with bias-ply tires, the ply rating listed on the Nameplate is the minimum ply rating that must be installed. tire with ply ratings greater than or equal to the Nameplate listed ply rating may be acceptable. Check with your Hyster dealer whether a specific bias-ply tire is approved for use on Hyster trucks.

WARNING

Wheels must be changed and tires repaired by trained personnel only.

Deflate tire completely before removing the wheel from the lift truck. If dual wheels are used, deflate both tires. Air pressure in the tires can cause the tire and rim parts to explode causing serious injury or death.

Always wear safety glasses.

Never loosen the nuts that hold the inner and outer wheel halves together when there is air pressure in the tire.

CAUTION

Not all makes of radial tires have sufficient sidewall strength for successful use on forklift trucks. This can affect stability and ride quality. Check with your dealer

https://truckmanualshub.com/

whether a specific radial tire is approved for use on Hyster trucks.

1. Put the lift truck on blocks as described in **How to Put a Lift Truck on Blocks** at the beginning of this section.

2. Remove the air from the tire. Remove the valve core to make sure that all of the air is out of the inner tube. Push a wire through the valve stem to make sure that the valve stem does not have a restriction.

3. Remove the wheel nuts and remove the wheel and tire from the lift truck. Lift truck tires and wheels are heavy.

Remove Tire From Wheel

When disassembling wheels, see **Figure 34**. There are several types of wheels used on this series of lift trucks. See **Tire Removal, Two-Piece Wheel** and **Tire Removal, Three- and Four-Piece Wheels**.

https://truckmanualshub.com/

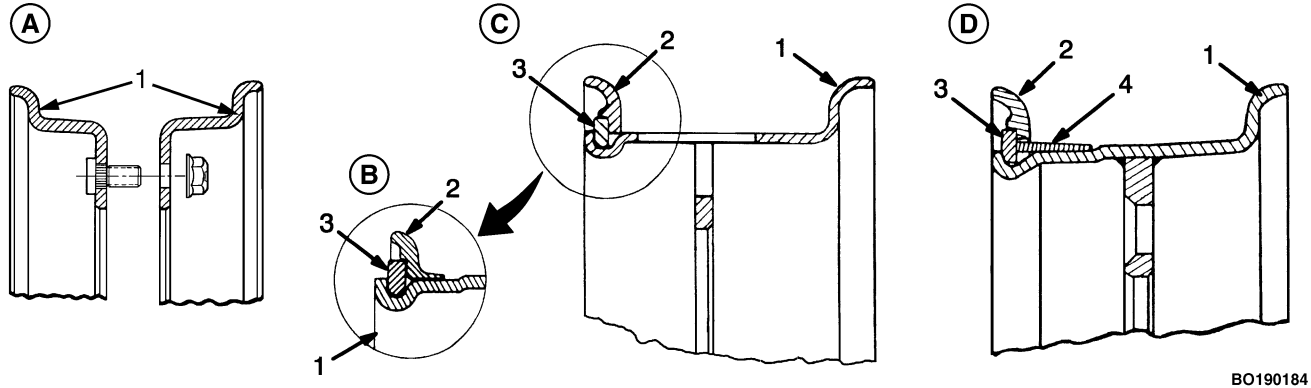

A. TWO-PIECE WHEEL
B. OPTIONAL RIM ASSEMBLY

1. WHEEL RIM
2. SIDE FLANGE

C. THREE-PIECE WHEEL
D. FOUR-PIECE WHEEL

3. LOCK RING
4. FLANGE SEAT

Figure 34. Types of Pneumatic Wheels

https://truckmanualshub.com/

Tire Removal, Two-Piece Wheel

⚠ WARNING

Make sure all of the air pressure is removed from the tire before a wheel is disassembled. Air pressure in the tires can cause the tire and rim parts to explode causing serious injury or death.

Keep tire tools in firm contact with the wheel parts. If the tool slips, it can move with enough force to cause an injury.

1. Remove the nuts that fasten the wheel rims together.

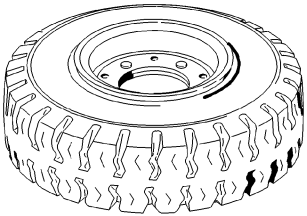

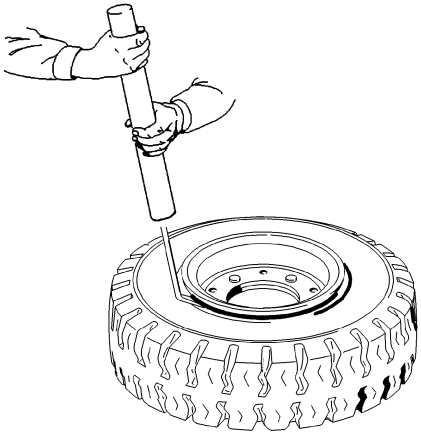

2. Loosen the tire bead from the wheel rim.

3. Remove the wheel rims from tire. Remove the inner tube and flap.

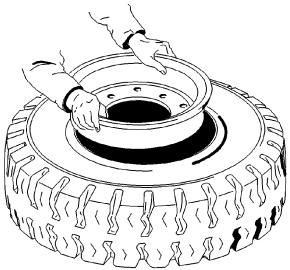

https://truckmanualshub.com/

Tire Removal, Three- and Four-Piece Wheels

⚠ WARNING

Make sure all of the air pressure is removed from the tire before a wheel is disassembled. Air pressure in the tires can cause the tire and rim parts to explode causing serious injury or death.

Keep tire tools in firm contact with the wheel parts. If the tool slips, it can move with enough force to cause an injury.

1. Loosen the tire bead from the side flange.

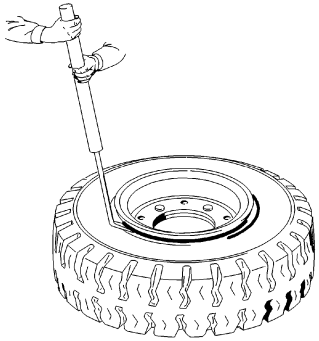

2. Put the tire tool into the slot between the lock ring and wheel rim. Remove the lock ring and side flange. If there is a flange seat, remove it.

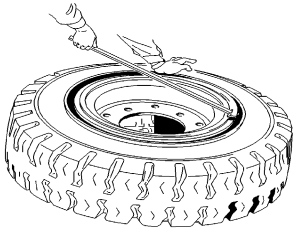

3. Loosen the bead from the other side of the wheel rim. Remove the valve stem from the wheel.

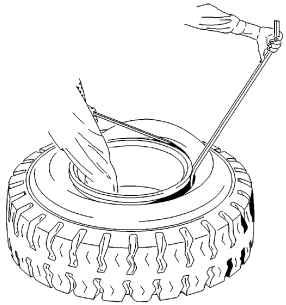

https://truckmanualshub.com/

4. Remove the wheel rim from the tire.

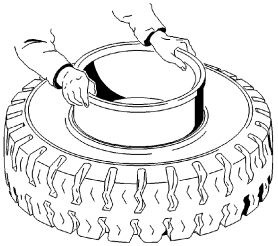

Install Wheel in Tire

⚠ WARNING

Damage to the tire and wheel assembly and injury or death can occur if you do not do the following procedures:

- **Clean and inspect all parts of the wheel before installing the tire.**
- **DO NOT use any damaged or repaired wheel parts.**
- **Make sure that all parts of the wheel are the correct parts for that wheel assembly.**
- **DO NOT mix parts between different types or manufacturers of wheels.**
- **DO NOT mix types of tires, type of tire tread, or wheel assemblies of different manufacturers on any one lift truck.**

DO NOT use a steel hammer on the wheel. Use a rubber, lead, plastic, or brass hammer to put parts together. Make sure that the side ring is in the correct position. The ends of the side ring must not touch. The clearance at the ends of the side ring will be approximately 13 to 25 mm (0.5 to 1.0 in.) after it is installed. If the clearance is wrong, the wrong part has been used.

1. Clean and inspect all parts of the wheel. Paint any parts that have rust or corrosion.

2. Install a new inner tube in the tire. Used tubes and flaps can cause tire failure.

⚠ WARNING

DO NOT lubricate the tire bead with antifreeze or petroleum-based liquid. Vapors from these liquids can cause an explosion during inflation or use.

3. Apply a rubber lubricant or a soap solution to the tire bead and tube.

4. Install a new tire flap.

https://truckmanualshub.com/

⚠ WARNING

DO NOT lubricate the tire bead with antifreeze or petroleum-based liquid. Vapors from these liquids can cause an explosion during inflation or use.

5. Make sure the rim is the correct size for the tire. Lubricate the part of the wheel that contacts the bead and flap.

6. Install the three-piece or four-piece wheel in the tire as shown in **Tire Installation Three- or Four-Piece Wheel**.

7. Install the two-piece wheel in the tire as shown in **Tire Installation Two-Piece Wheel**.

Tire Installation Three- or Four-Piece Wheel

⚠ WARNING

Damage to the tire and wheel assembly and injury or death can occur if you do not do the following procedures:

- **Clean and inspect all parts of the wheel before installing the tire.**
- **DO NOT use any damage or repaired wheel parts.**
- **Make sure that all parts of the wheel are the correct parts for that wheel assembly.**
- **DO NOT mix parts between different types or manufacturers of wheels.**
- **DO NOT mix types of tires, type of tire tread, or wheel assemblies of different manufacturers on any one lift truck.**

DO NOT use a steel hammer on the wheel. Use a rubber, lead, plastic, or brass hammer to put parts together. Make sure that the side ring is in the correct position. The ends of the side ring must not touch. The clearance at the ends of the side ring will be approximately 13 to 25 mm (0.5 to 1.0 in.) after it is installed. If the clearance is wrong, the wrong part has been used.

1. Install the inner tube and the rubber flap in the tire.

https://truckmanualshub.com/

2. Install the wheel rim in the tire. Make sure the stem of the inner tube is aligned with the slot in the rim.

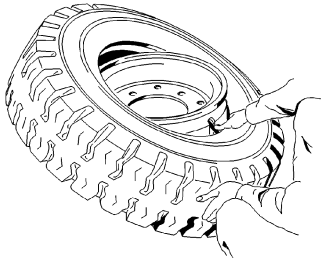

3. Turn over the rim and tire. Put blocks under the rim so that the rim is 8 to 10 cm (3 to 4 in.) above the floor. Install the flange seat (if used) and the lock ring.

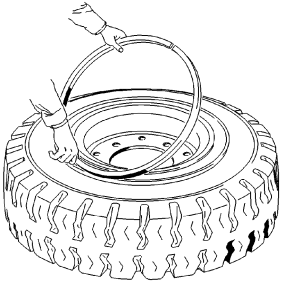

4. Put the lock ring in the correct position on the rim. Add air pressure to the tire as described in **Add Air to Pneumatic Tires With Tube**.

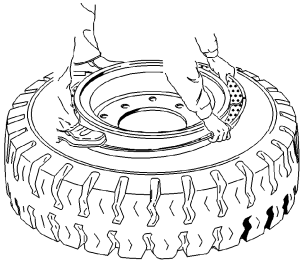

Tire Installation Two-Piece Wheel

⚠ CAUTION

DO NOT use pneumatic-shaped, solid tires on two-piece bolt together drive wheels. Spinning may occur.

1. Install the inner tube and the rubber flap in the tire. Install both halves of the wheel rim in the tire. Make sure the stem of the inner tube is aligned with the slot in the rim.

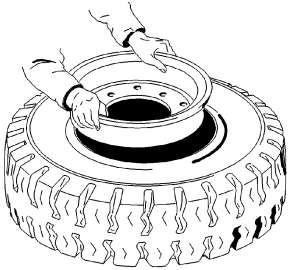

https://truckmanualshub.com/

2. Tighten the nuts that hold the rim halves together to 175 N•m (130 lbf ft). Add air pressure to the tire as described in **Add Air to Pneumatic Tires With Tube**.

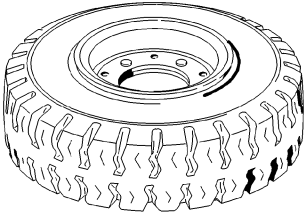

Add Air to Pneumatic Tires With Tube

⚠ WARNING

Add air pressure to the tires only in a safety cage. See Figure 35. Inspect the safety cage for damage before use. When air pressure is added, use a chuck that fastens onto the valve stem of the inner tube. Make sure there is enough hose to permit the operation to stand away from the safety cage when air pressure is added to the tire.

⚠ WARNING

DO NOT sit or stand by the safety cage. DO NOT use a hammer to try and correct the position of the side flange or lock ring when the tire has air pressure greater than 20 kPa (3 psi) of air pressure to the tire.

1. Put the tire in a safety cage. See **Figure 35**.

2. Add 20 kPa (3 psi) of air pressure to the tire.

3. Check that all wheel parts are correctly installed. Hit the lock ring lightly to make sure that it is in the seat.

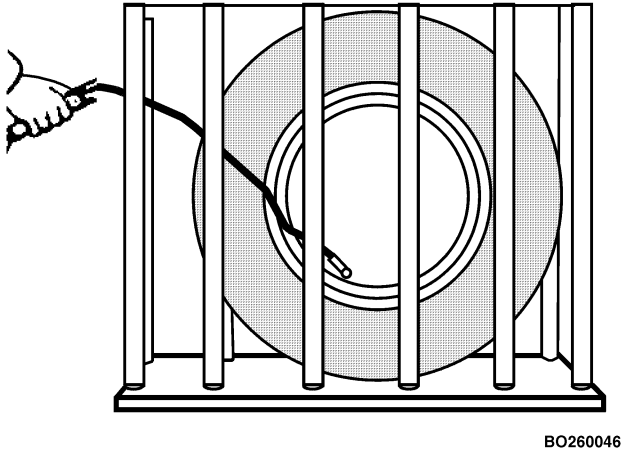

Figure 35. Add Air to Tires With Tube

4. If installation is correct, add air pressure to the tire to the specified pressure. See Nameplate.

https://truckmanualshub.com/

5. Check that all wheel parts are correctly installed. If installation is not correct, remove all of the air pressure from the tire. Remove the valve core to make sure all of the air pressure has been removed and then make adjustments. The clearance at the ends of the lock ring will be approximately 13 to 25 mm (0.5 to 1.0 in.) when the tire has the correct air pressure.

Install the Wheels

Install the wheel on the hub. On the drive wheels tighten the nuts in a cross pattern to a torque value of 450 to 500 N•m (332 to 369 lbf ft). If the wheels are the two-piece rims, make sure the nuts that fasten the rim halves together are toward the brake drum when they are installed.

The steering wheels are fastened to the spindle of the steering axle with a large castle nut. Make sure inner and outer bearings are correctly lubricated with grease. Install inner bearing assembly and wheel on spindle. Install outer bearing cone and castle nut. Tighten castle nut to 60 N•m (44 lbf ft) while wheel is rotated. Loosen castle nut until hub turns freely with no end play. Tighten castle nut to 3.0 to 6.0 N•m (425 to 850 lbf in). Install cotter pin in castle nut. If the cotter pin cannot be installed, loosen the castle nut to the first position where the cotter pin can be installed. Install cap for bearings.

Pneumatic Tubeless Tire, Repair

Remove Tire From Lift Truck

⚠ WARNING

Wheels must be changed and tires repaired by trained personnel only.

Deflate tires completely before removing the wheel from the lift truck. If dual wheels are used, deflate both tires. Air pressure in the tires can cause the tire and rim parts to explode causing serious injury or death.

Always wear safety glasses.

Never loosen the nuts that hold the inner and outer wheels halves together when there is air pressure in the tire.

The Tubeless Bead Seal (TBS) enables tubeless tires to be used on wheel rims that were designed to be used with a tube.

The main component of the TBS is a special rubber ring that fits inside the tire between the tire beads to ensure the

https://truckmanualshub.com/

airtightness of the existing wheel and the tubeless tire assembly. See **Figure 34**.

1. Put the lift truck on blocks as described in **How to Put a Lift Truck on Blocks** at the beginning of this section.

2. Remove the valve cap and core to remove all air from the tire.

3. Remove the wheel nuts and remove the wheel and tire from the lift truck. Lift truck tires and wheels are heavy.

Remove Tire From Wheel

⚠ WARNING

Make sure all of the air pressure is removed from the tire before a wheel is disassembled. Air pressure in the tires can cause the tire and rim parts to explode causing serious injury or death.

Keep tire tools in firm contact with the wheel parts. If the tool slips, it can move with enough force to cause an injury.

NOTE: There are several types of wheels used on these lift trucks. When disassembling wheels, see **Figure 34**.

1. If wheel rim is a three- or four-piece rim, turn the valve 1/4 turn and remove valve from wheel.

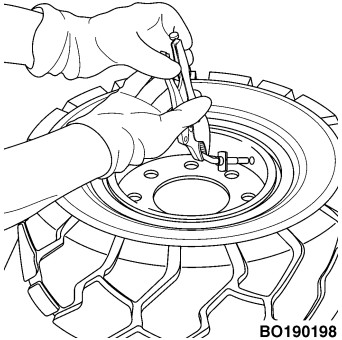

2. Put wheel and tire assembly on the press. Position the feet of the press on the loose flange. Push press down on loose flange to expose the locking ring.

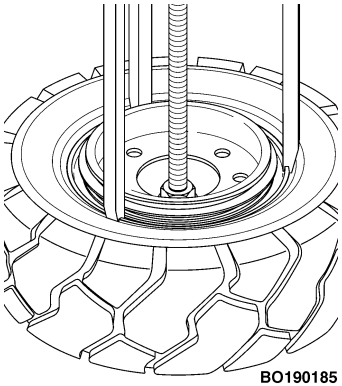

https://truckmanualshub.com/

3. Remove the loose flange locking ring and the advance band (four-piece wheel only) using a tire tool.

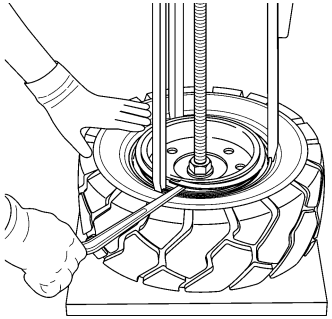

BO190186

4. Remove the press and remove the loose flange locking ring and the advance band (four-piece wheel only) from the tire and wheel assembly.

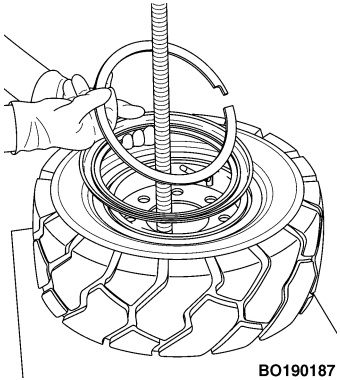

BO190187

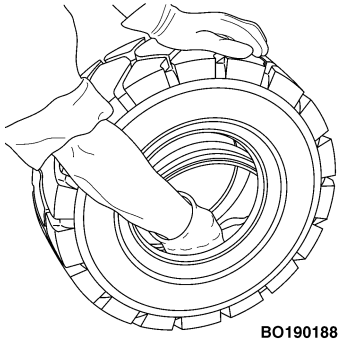

BO190188

5. Push the TBS toward the inside of the tire to remove it.

Install Tire on Wheel

⚠ WARNING

Damage to the tire and wheel assembly and injury or death can occur if you do not do the following procedures:

- **Clean and inspect all parts of the wheel before installing the tire.**
- **DO NOT use any damaged or repaired wheel parts.**
- **Make sure that all parts of the wheel are the correct parts for that wheel assembly.**

https://truckmanualshub.com/

- **DO NOT mix parts between different types or manufacturers of wheels.**
- **DO NOT mix types of tires, type of tire tread, or wheel assemblies of different manufacturers on any one lift truck.**

WARNING

DO NOT use a steel hammer on the wheel. Use a rubber, lead, plastic, or brass hammer to put parts together.

WARNING

DO NOT lubricate the tire bead with antifreeze or petroleum-based liquid. Vapors from these liquids can cause an explosion during inflation or use.

1. Clean interior and exterior bead area of the tire. Lubricate tire beads and the inside of the tire, up to the tire shoulders. Apply lubricant to entire underside of the TBS.

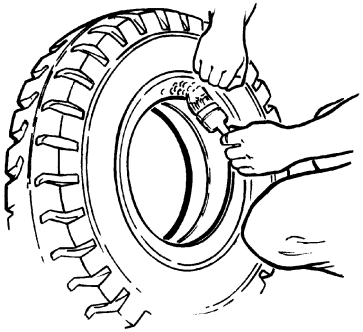

NOTE: If the wheel rim width is less than six inches, the TBS will contain one valve hole to accommodate the needle valve. If the wheel rim width is greater than six inches, the TBS will have two holes for the needle valve.

One hole is centrally located and the other is offset, to ensure the correct positioning of the valve in the valve slot. The valve hole that is not used should be sealed with a small plastic plug.

https://truckmanualshub.com/

2. Apply lubricant to the needle valve and the valve hole that will be used (see **NOTE** in Step 1), by inserting and removing the lubricated valve several times. If a three- or four-piece wheel is being used, remove the valve. If a two-piece wheel is being used, leave valve in valve hole.

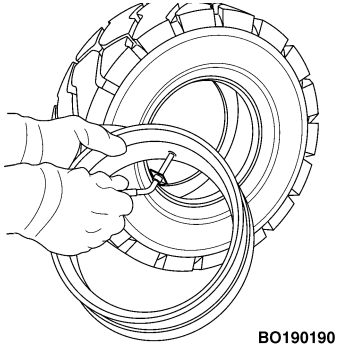
BO190190

If the TBS has two valve holes, lubricate the plastic plug and insert into valve hole that will not be used.

3. Place the TBS inside the tire, making sure that the wings of the TBS are not folded over. Make a mark on the tire to note the position of the valve hole in the TBS.

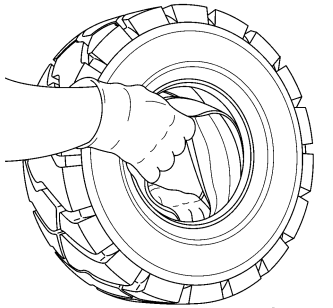
BO190191

4. Apply lubricant to the rim. If a four-piece wheel is being used, lubricate the advance band. Slide the tire and TBS onto the wheel.

Line up the valve hole in the TBS with the valve slot in the wheel. Lubricate and insert the valve into the valve hole. Make sure it is fully inserted.

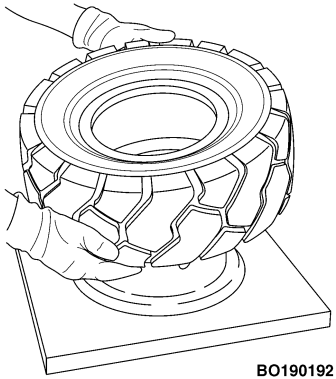
BO190192

https://truckmanualshub.com/

5. Place the wheel and tire assembly on a flat surface. Turn the valve a 1/4 turn to lock the collar under the edges of the rim valve slot.

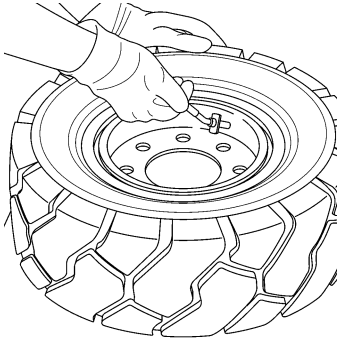

BO190193

6. Raise the tire and position the base and threaded stem of the press through the hole in the center of the wheel. Insert in wheel assembly, the following parts:

- Advance band (four-piece wheel only)
- Loose flange
- Locking ring

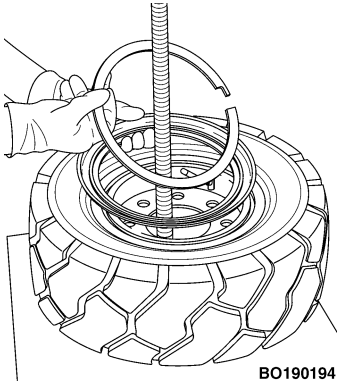

BO190194

7. Position the advance band. Ensure that it does not go in too far and damage the valve. Position the arms of the press onto the loose flange.

Push down on press to depress the tire beads until the locking ring groove is fully exposed.

8. Insert tire tool into the locking ring groove, and a vise grip on other end. Remove vise grip. Release the press and check that all component parts are correctly positioned. Replace the valve core.

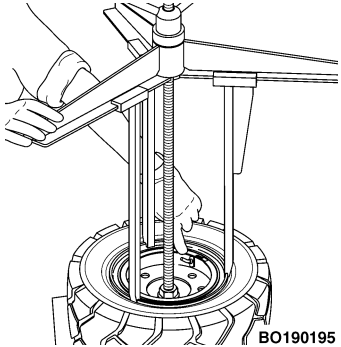

BO190195

9. Inflate tire to 103 kPa (15 psi). Tap wheel with a mallet to ensure all components are correctly sealed. Remove the press from wheel and tire assembly.

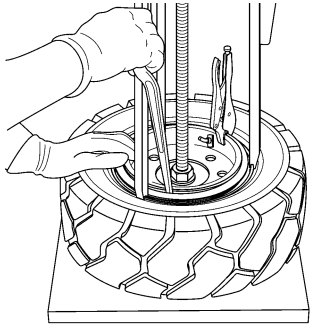

BO190196

https://truckmanualshub.com/

Add Air to Pneumatic Tubeless Tire

⚠ WARNING

Add air pressure to the tires only in a safety cage. See Figure 36. Inspect the safety cage for damage before use. When air pressure is added, use a chuck that fastens onto the valve stem. Make sure there is enough hose to permit the operator to stand away from the safety cage when air pressure is added to the tire. DO NOT sit or stand by the safety cage.

Add air to tire to the recommended pressure that is shown on the Nameplate. Install valve cap to ensure air stays in the tire.

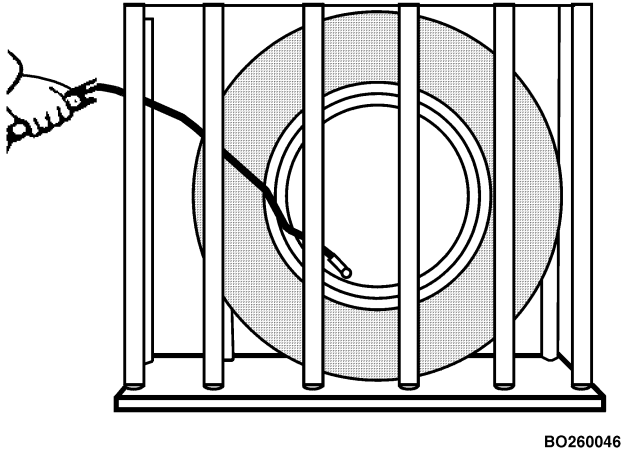

Figure 36. Add Air to Tubeless Tire

Install the Wheels

Install the wheel on the hub. On the drive wheels tighten the nuts in a cross pattern to a torque value of 450 to 500 N•m (332 to 369 lbf ft). If the wheels are the two-piece rims, make sure the nuts that fasten the rim halves together are toward the brake drum when they are installed.

https://truckmanualshub.com/

The steering wheels are fastened to the spindle of the steering axle with a large castle nut. Make sure inner and outer bearings are correctly lubricated with grease. Install inner bearing assembly and wheel on spindle. Install outer bearing cone and castle nut. Tighten castle nut to 60 N•m (44 lbf ft) while wheel is rotated. Loosen castle nut until hub turns freely with no end play. Tighten castle nut to 3.0 to 6.0 N•m (425 to 850 lbf in). Install cotter pin in castle nut. If the cotter pin cannot be installed, loosen the castle nut to the first position where the cotter pin can be installed. Install cap for bearings.

Solid Rubber Tires on Pneumatic Wheels, Change

⚠ WARNING

Wheels must be changed and tires repaired by trained personnel only.

Always wear safety glasses.

1. Put the lift truck on blocks as described in **How to Put a Lift Truck on Blocks** at the beginning of this section.

2. Remove the wheel nuts and remove the wheel and tire from the lift truck. Lift truck tires and wheels are heavy.

Remove Tire From Wheel

⚠ WARNING

Keep tire tools in firm contact with the wheel. If the tool slips, it can move with enough force to cause serious injury.

NOTE: When disassembling wheels, see **Figure 34**. There are several types of wheels used on these series of lift trucks.

⚠ WARNING

Wheels must be changed and tires repaired by trained personnel only.

Always wear safety glasses.

https://truckmanualshub.com/

1. Put the wheel rim on the bed of the press. Put the cage in position on the tire. Use the press to push the tire away from the side flange.

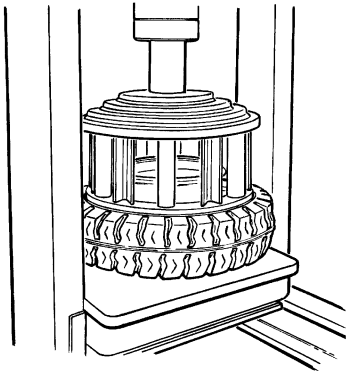

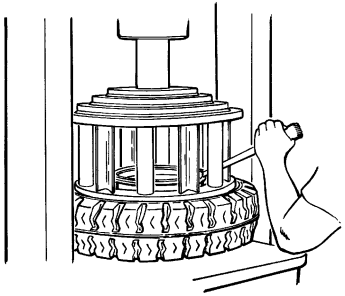

2. Put the tire tool into the slot between the lock ring and the wheel rim. Remove the lock ring and side flange.

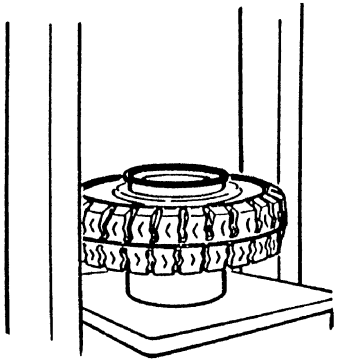

3. Turn the tire over. Put a support under the wheel rim. Make sure the wheel rim is at least 150 to 200 mm (6 to 8 in.) from the bed of the press.

https://truckmanualshub.com/

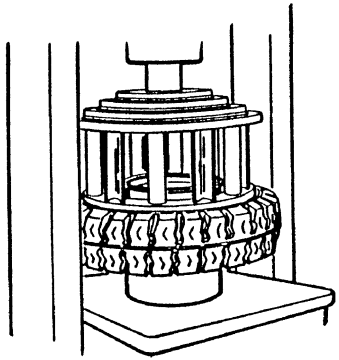

4. Put the cage in position on the tire. Use the press to push the tire from the wheel rim.

Install Tire on Wheel

⚠ WARNING

Damage to tire and wheel assembly and injury or death can occur if you do not do the following procedures:

- **Clean and inspect all parts of the wheel before installing the tire.**
- **DO NOT use any damaged or repaired wheel parts.**
- **Make sure that all parts of the wheel are the correct parts for the wheel assembly.**
- **DO NOT mix parts between different types or manufacturers of wheels.**
- **DO NOT mix type of tires, type of tire tread, or wheel assemblies of different manufacturers on any one lift truck.**

DO NOT use a steel hammer on the wheel. Use a rubber, lead, plastic, or brass hammer to put parts together. Make sure that the lock ring is in the correct position. The ends of the lock ring must not touch. The clearance at the ends of the side ring will be approximately 13 to 25 mm (0.5 to 1.0 in.) after it is installed. If the clearance is wrong, the wrong part has been used.

NOTE: When disassembling wheels, see **Figure 34**. There are several types of wheels used on these series of lift trucks.

⚠ CAUTION

Too much lubricant can cause the tire to slide and move around the wheel rim.

https://truckmanualshub.com/

1. Lubricate the wheel rim and the inner surface of the tire with tire lubricant or soap.

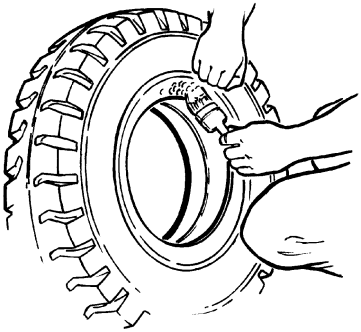

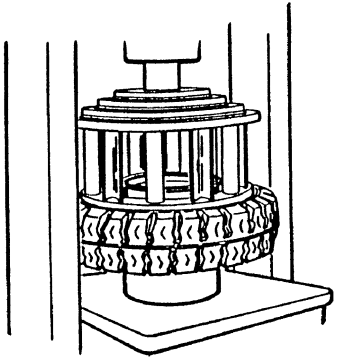

2. Put the wheel rim on the bed of the press. Put the tire over the wheel rim. Put the cage in position on the tire. Use the press to install the tire on the wheel rim.

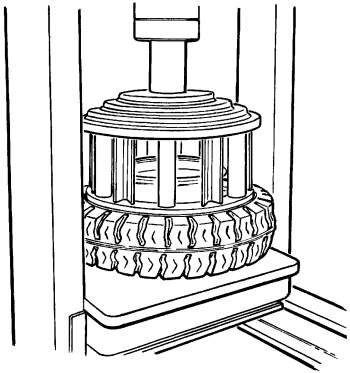

3. Remove the cage and put the flange seat (if used), the side ring, and the lock ring in position on the wheel rim. Install the cage on the tire. Use the press to push the tire onto the wheel rim so that the side flange and lock ring can be installed.

https://truckmanualshub.com/

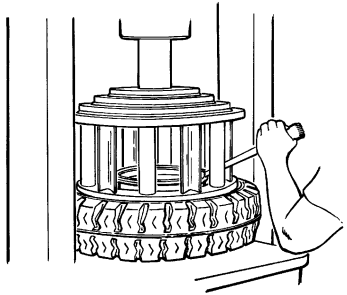

4. While the cage is holding the tire on the wheel rim, install the lock ring. Use a tire tool to make sure the lock ring is in the correct position.

Operating Procedures for a New or Rebuilt Engine

A new or rebuilt engine must be operated under special conditions during the first 50 hours. These special conditions prevent damage to the engine until the new parts can wear and adjust to fit each other.

1. Make sure the fluid levels of oil and coolant are correct.

2. Start and run the engine at approximately one-half throttle for 30 minutes for the first operation. Check the gauges and indicators for the correct operation during this first operating period. Check for leaks.

3. If the work conditions are slow and the loads are less than 50% of the truck capacity, a simulated work condition must be used during the first four hours of operation. Operate the lift truck with a minimum load of 75% capacity. Operate the engine through cycles from idle to full throttle and back to idle. Avoid long periods of high engine speeds with a light load during the first 50 hours of operation. High engine speeds with a light load can cause damage to the cylinders in the engine.

Jump-Starting the Lift Truck

Jump-Starting Using a Battery Charger

⚠ CAUTION

DO NOT try to start the engine by pushing or towing the lift truck. Damage to the transmission can occur if engine is started by pushing or towing lift truck.

If the battery becomes discharged and requires a booster battery to start the engine, follow these procedures carefully when connecting the jumper cables:

https://truckmanualshub.com/

1. Disconnect the negative battery terminal of the lift truck being started.

2. Always connect positive jumper cable to positive terminal of discharged battery and negative jumper cable to negative terminal.

3. Always connect jumper cable, that is the ground cables, last.

4. Always connect jumper cables to discharged battery before connecting them to booster battery.

Jump-Starting Using Another Lift Truck

⚠ WARNING

To prevent possible arcing between the two lift trucks, make sure that the lift trucks are not touching.

⚠ CAUTION

DO NOT try to start the engine by pushing or towing the lift truck. Damage to the transmission can occur if engine is started by pushing or towing lift truck.

1. Always connect positive jumper cable to positive terminal of discharged battery and negativejumper cable to negative terminal.

2. Always connect jumper cable, that is the ground cable, last.

3. Always connect jumper cables to discharge lift truck battery before connecting them to the fully charged lift truck battery.

Changes to the Overhead Guard

⚠ WARNING

Do not operate the lift truck without the overhead guard correctly fastened to the lift truck.

Do not make changes to the overhead guard by welding. Changes that are made by welding, or by drilling holes that are too big in the wrong location, can reduce the strength of the overhead guard.

See your dealer for Hyster lift trucks BEFORE performing any changes to the overhead guard.

How to Put Internal Combustion Engine (ICE) Trucks in Storage

It is important to store your lift truck properly to protect it. The main areas of concern are engines, hydraulic components, and truck batteries. The length of storage time and

https://truckmanualshub.com/

the storage location determines what procedures you should follow.

Before placing any lift truck in storage, you must choose an area that is clean, dry, and free from airborne contaminates. For safety and increased usable floor area, remove the forks and tag them with the lift truck serial number. For best protection, operate your internal combustion engine lift truck for a short period each month.

The following storage procedures are for conditions and temperatures above 0 °C (32 °F). Adjust these procedures for local conditions and any changes in conditions during storage. The preparations necessary for storage are also determined from the following conditions:

- Short-term storage is from one to six months. Long-term storage is over six months.
- Storage Location. A lift truck stored indoors will not require as much external protection as a lift truck stored outdoors.

Short-Term Storage

Perform the following steps to prepare your lift truck for storage from one to six months:

1. Check lubricant and fluid levels. Completely fill the fuel tank. Make sure the coolant mixture will protect cooling system and engine to lowest temperature expected during storage. Make sure all caps and dipsticks are installed correctly.

2. Fully lower the mast. If lift truck is equipped with forks, tilt mast **FORWARD** until the tips of the forks touch the floor. Apply a thin coat of fresh, high grade SAE 30 or 40 weight engine oil to the exposed cylinder rods. If the forks are removed, tilt mast **BACKWARD** until cylinders are completely retracted. This protects the cylinder rods.

3. Check that all switches and accessories are in the **OFF** position.

4. Activate each control lever to relieve hydraulic pressure.

5. Install blocks, front and rear, at the drive wheels. If the lift truck must be left on an incline, put blocks on the downhill side of all wheels so that the lift truck cannot move. DO NOT USE THE PARKING BRAKE.

6. Disconnect the battery cables from the battery. Apply a protective coating to the cable connectors and battery terminals to prevent corrosion.

https://truckmanualshub.com/

7. Check the tire pressure, if applicable. Make sure the tires have the correct pressure (see the Nameplate.)

8. Clean the lift truck and engine compartment to prevent corrosion.

9. If the lift truck is not stored indoors, put a cover over the lift truck to prevent damage from the weather. In wet conditions, a cover will not prevent corrosion to the lift truck.

Long-Term Storage

Do the following steps to prepare the lift truck for storage for 6 months or longer:

1. Complete all short-term storage procedures.

2. Wrap or cover all exterior lights, radiator grill, and air vents with a moisture barrier cover. Use tape to hold the covers in place.

3. Remove the battery or batteries from the lift truck. Store the battery or batteries in an approved space. Be sure to follow local regulations. Batteries that are stored for long periods can become damaged. Either keep batteries in service or follow the battery storage procedures below.

4. Spray exterior surfaces and frame with preservative coating.

While the Lift Truck is in Storage

Each month make a visual inspection for leaks or signs of deterioration. Take corrective action immediately. Check the fluid level in engine, radiator, hydraulic tank, and brake master cylinder.

NOTE: Do not shut down an engine before it reaches operating temperature.

Each month set the park brake, start engine, and run until normal operating temperature is reached. This will coat the internal engine components with a film of oil and rid the engine of built-up condensation.

Each month all hydraulic cylinders must be cycled several times to keep the seals active and to coat the interior walls with oil. Actuate each cylinder, in both directions, until it reaches the stops.

Return lift truck to its storage state for another month.

https://truckmanualshub.com/

How to Put Batteries in Storage

Batteries are to be placed on a wooden pallet and stored in a dry, moderately cool area.

Lead acid batteries will slowly "self-discharge" over a period of time due to their chemical makeup. If the self-discharge is left uncontrolled, excessive sulphation can occur which is difficult to reduce and can damage the anodes. A discharged battery with a specific gravity of 1.000 will freeze at −7.8 °C (18 °F) A fully-charged battery with a specific gravity of 1.280 will freeze at −66 °C (−87 °F).

This "self-discharge" is due to a chemical reaction; therefore, that chemical reaction can be accelerated by heat resulting in more rapid "self-discharge." The rate of discharge can amount to an average of about 0.001 point drop in specific gravity per day.

The following procedure can be followed when placing a battery in storage or when not in operation for more than 30 days.

1. Give an equalizing charge prior to placing new batteries in storage. Used batteries are to be fully charged, then allowed to balance for approximately three more hours.

2. Neutralize and clean the battery. Clean with a solution of 100 grams (3.5 oz) of sodium bicarbonate (baking soda) per 1 liter (0.25 gal) of water.

3. Store in a cool, dry location.

4. Check each cell in the battery at least once every 30 days and boost charge when specific gravity falls below 1.240 Hg.

5. Protect batteries from ambient contamination.

If a greasy film forms on the top of a battery, this is acid and must be neutralized with the solution described above.

Putting a Stored Lift Truck Back Into Service

1. Remove all tape, covers, and preservation materials.

2. Check the lift truck for damage and missing components. Repair damage and/or replace missing components.

NOTE: If the lift truck has been stored longer than one year, all lubricants and fluids must be drained and replaced. See the **Periodic Maintenance** section of your service manual for the procedures.

https://truckmanualshub.com/

3. Clean the battery cables and terminals. Check the battery voltage. If the voltage is not correct, charge battery. Connect battery cables to battery.

4. When a lift truck is to be put into service after storage, it must be given the 250-hour inspection shown in the **Periodic Maintenance** service manual.

How to Move a Lift Truck on a Transport

⚠ WARNING

Stay a safe distance from the edge of docks, ramps, platforms, and other similar working surfaces. Watch the "tail swing." Remember when traveling in the forward direction and the steering wheel is turned to move the lift truck away from the edge of the dock, the rear will swing toward the edge. This can cause the lift truck to fall off the dock.

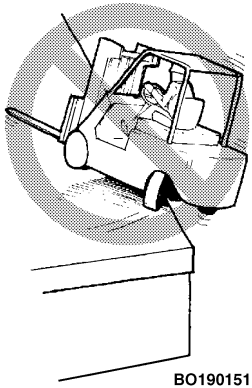

⚠ WARNING

IF THE LIFT TRUCK FALLS OFF THE DOCK, DO NOT JUMP OFF! HOLD FIRMLY TO STEERING WHEEL, BRACE YOUR FEET, AND LEAN FORWARD AND AWAY FROM THE POINT OF IMPACT.

Before the lift truck is moved on a transport, check the selected route to make sure there is enough clearance for the lift truck as loaded on the transport vehicle. Bridges, overpasses, powerlines, and natural barriers can prevent clearance. Removal of the mast can be necessary.

If a trailer is the method of transportation, use blocks in front and back of the trailer tires to prevent movement of the trailer when the lift truck is loaded and unloaded. If a loading ramp is used, make sure that the ramp is the correct design and capacity.

If the lift truck is equipped with lifting eyes, use a crane to load and unload the lift truck from the transport. If the truck is not equipped with approved lifting eyes, do not lift the truck by attaching a lifting device to any other part of the lift truck for the purposes of loading or unloading.

https://truckmanualshub.com/

Loading

⚠ WARNING

The straps or chains used to fasten the lift truck to the transport must be directly connected to the lift truck frame or to a component (drive axle, tow pin) that is solidly attached to the frame. Do not fasten a strap or chain to the mast or any attachment to hold the lift truck on the transport.

⚠ CAUTION

Make sure that any straps or chains used to fasten the lift truck to the transport do not contact any tubes, hoses, hydraulic cylinders, or other parts of the truck that are easily damaged.

If components and attachments must be removed for transport of the lift truck, see the **Service Manual** for removal procedures.

The operator must never leave a lift truck in a condition so that it can cause damage and injury. When the lift truck is loaded on the transport, do the following operations:

1. Apply the parking brake.

2. If the mast is mounted on the lift truck, fully lower the forks or carriage. Tilt the mast **FORWARD** until the tips of the forks touch the surface.

3. Put the direction control lever for the transmission in **NEUTRAL** and leave the gears of the transmission engaged. DO NOT leave the transmission in **NEUTRAL**.

4. Turn the key switch to **OFF** to stop the engine and check that all switches and accessories are turned **OFF**.

5. Put blocks in front and back of the lift truck tires to prevent any movement of the lift truck. Make sure the blocks are attached to the load surface.

If the lift truck is not in active use, close the fuel valve at the LPG tank. If the lift truck is going to be left overnight or longer, the truck must be parked outside or the LPG tank must be removed and stored outside.

If the lift truck is transported in severe weather or any other condition that can damage the lift truck, cover the lift truck. Make sure the protective cover is designed for the application and is securely fastened.

https://truckmanualshub.com/

Unloading

If components normally attached to the lift truck were removed for transport, see the **Service Manual** for installation procedures.

1. If used, remove any protective cover.

2. Make sure the parking brake is applied.

3. Disconnect the straps or chains.

4. Remove the wheel blocks.

5. Check that all switches and accessories are turned **OFF**.

6. Unload the lift truck.

Preparation for Use

After being transported or stored, the lift truck must be prepared for use for proper operation. All problems must be corrected before use of the lift truck, see the **Service Manual Periodic Maintenance** 8000 SRM 2000 for procedures.

Preparation After Transport

1. Complete the unloading procedures.

2. Inspect the lift truck for damage and missing components.

3. Follow the steps in the section **How to Make Checks With the Engine Stopped**.

https://truckmanualshub.com/

NOTES

https://truckmanualshub.com/

NO MATTER HOW YOU SAY IT . . .

La Sécurité Ça Se Paye
La Seguridad Compensa
Betriebssicherheit Macht Sich Bezahlt
Passaa Oll Huolellinen
Veiligheid Voor Alles
Säkerhet Först
Essere Sicuro Paga
Seguranca Paga
Sikkerhet Først
Pinter Be Awas

सावधान और जिन्दा रहो।

في التأني السلامة

安全第一

SAFETY PAYS!

WARNING

California Proposition 65 - Operating, servicing and maintaining a powered industrial truck can expose you to chemicals including engine exhaust, carbon monoxide, phthalates, and lead, which are known to the State of California to cause cancer and birth defects or other reproductive harm. For more information, go to www.P65Warnings.ca.gov.

3/19 (12/18)(7/18)(12/17)(10/17)(5/17)(3/17)(1/17)(11/16)(10/16)(7/16)(5/16)(4/16)(3/16)

OPERATING MANUAL

H40-60XT (A380)

https://truckmanualshub.com/

DO NOT REMOVE THIS MANUAL FROM THIS UNIT

PART NO. 4150900 **3/19**