https://truckmanualshub.com/

# P R E F A C E

1. This parts catalog is a first edition of Yanmar crawler backhoe Vi055(for Europe).

Pub.No. :000Y00S4220

Published:Feb.,2003

2. Model name

| SECTION | Column | Model name |
|---|---|---|
| Ⅰ (Vehicle) | (A) | Vi055 |
| Ⅱ (Engine) | (A) | 4TNE88-EBVCA |

3. Your understanding is asking that this parts catalog is not a technical data manual setting forth as servicing procedures, This parts catalog is using simplified illustration.

Be sure to use Yanmar Genuine Parts in your maintenance servicing of Yanmar products. Be careful not to use the simple parts available in the market; otherwise their use in repairing causes such as an early breakage, for instance.

https://truckmanualshub.com/

# PICTURESQUE INDEX(1)···MAIN PARTS

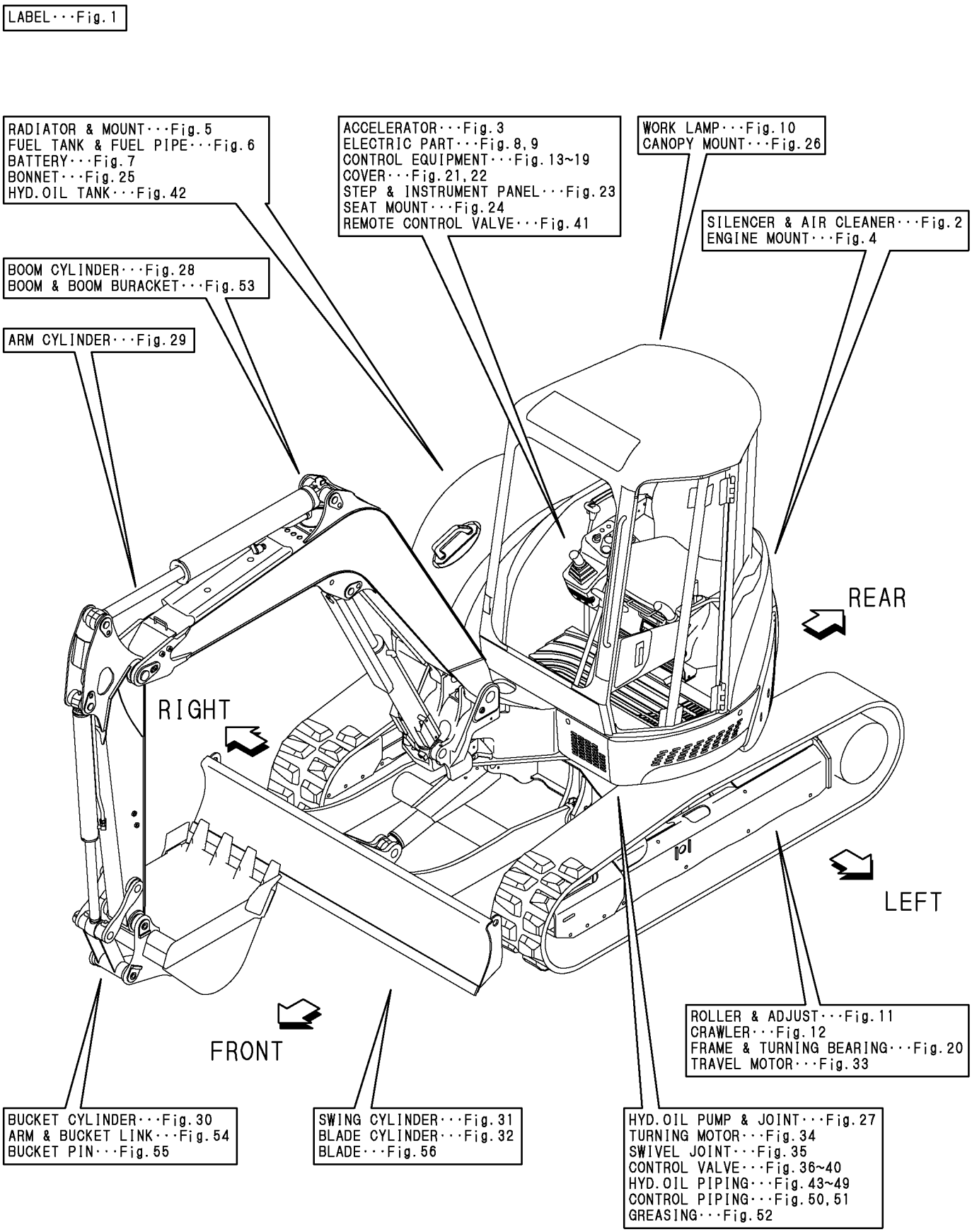

https://truckmanualshub.com/

# PICTUREAQUE INDEX(2)···HYDRAULIC SECTION

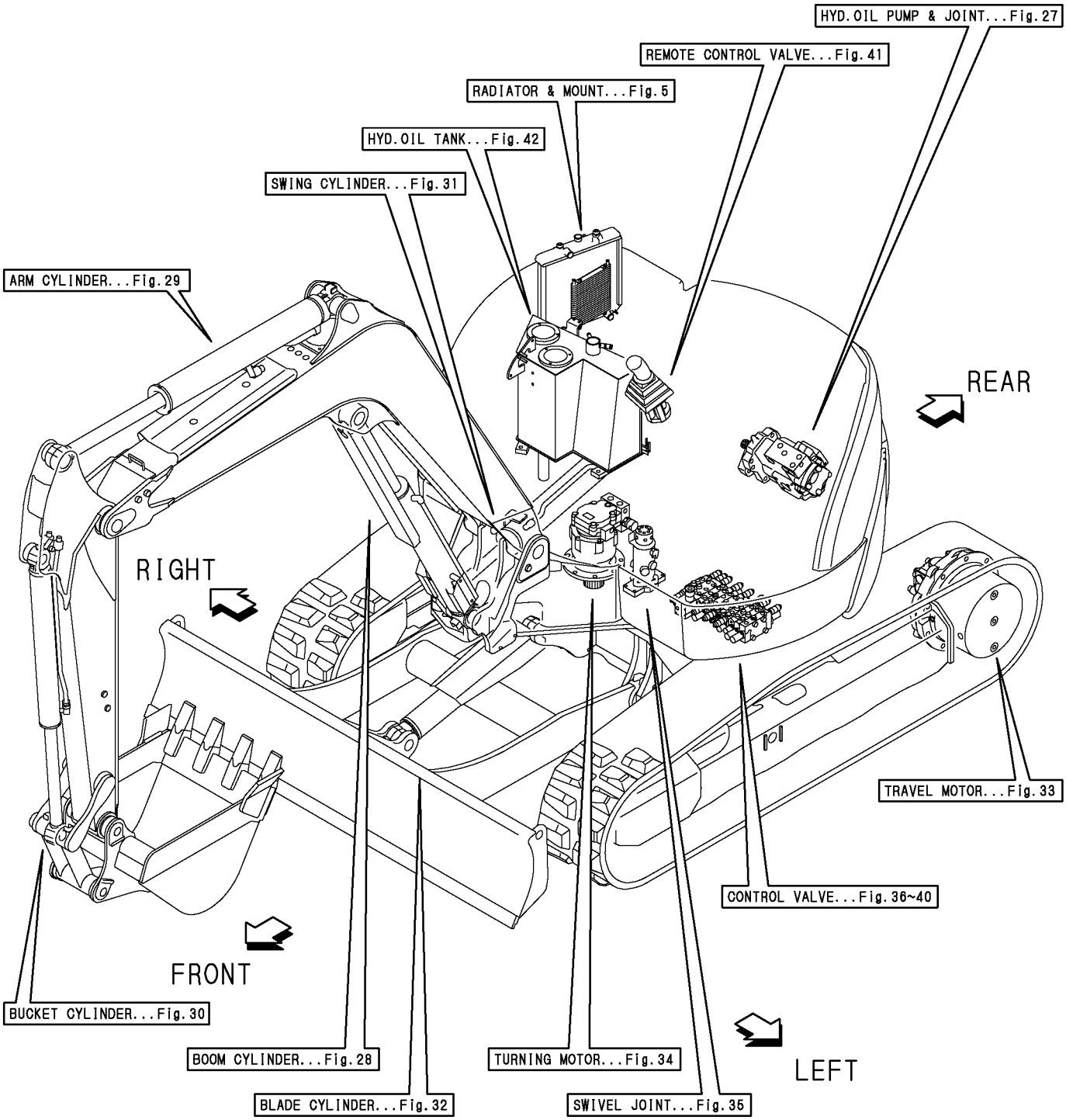

https://truckmanualshub.com/

# 1 [PAINTED COLOR LIST]

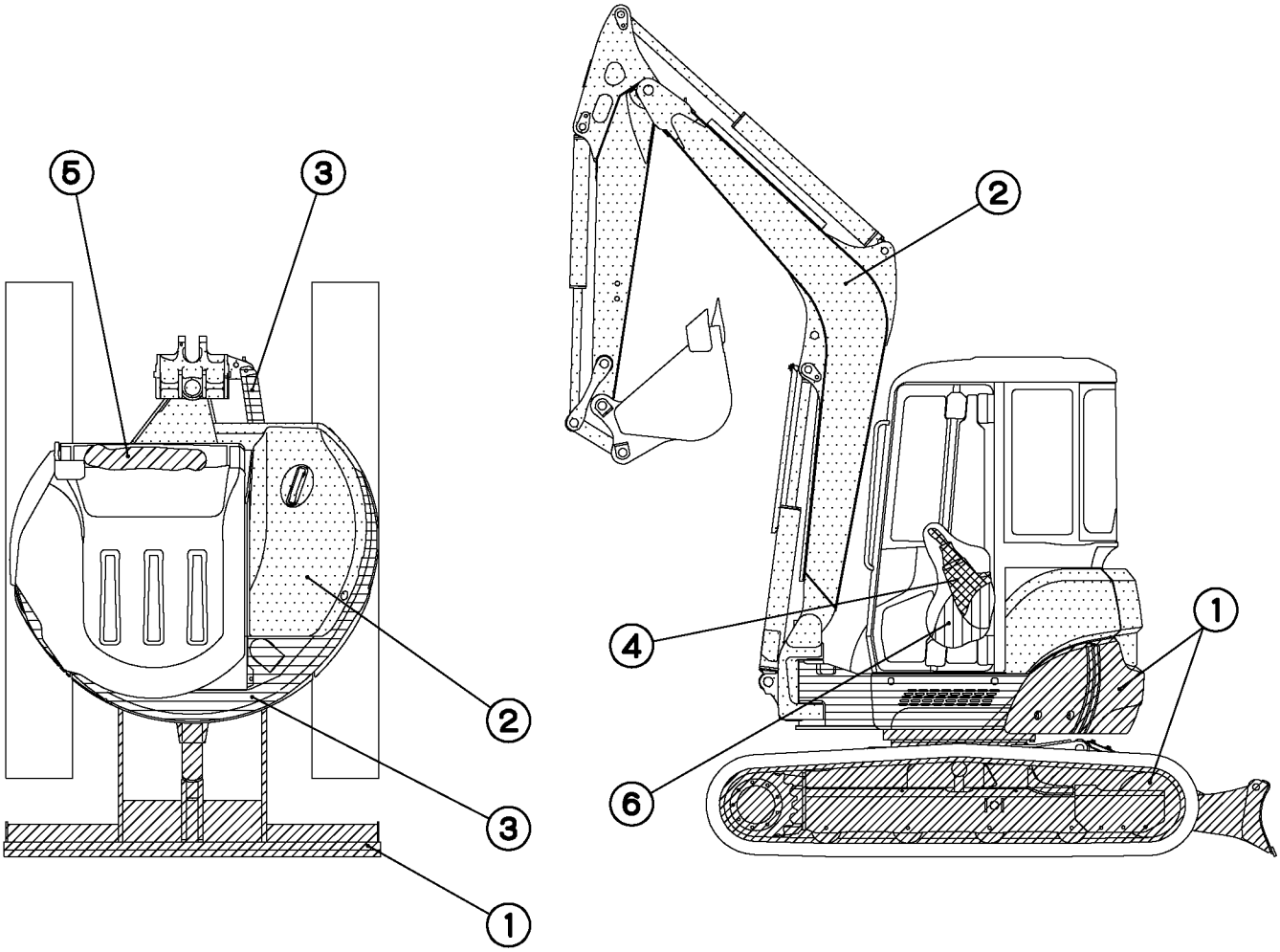


| PART | DESCRIPTION | PAINTED COLOR MUNSEL No. | COLOR CODE |
|---|---|---|---|
| 1 | | YANMAR DEEP GREEN 6.36BG2.11/1.76 | 82 |
| 2 | | YANMAR NEW PERMANENT YELLOW 5.2Y8.5/11 | 87 |
| 3 | | YANMAR NEW GRAYISH GREEN 2.9BG4.8/3.0 | 86 |
| 4 | | YANMAR DARK OLIVE GRAY 5.39Y2.92/0.78 | 72 |
| 5 | | YANMAR BLACK 4.90PB0.08/0.41 | 12 |
| 6 | | YANMAR WARM GRAY 7Y5.3/0.8 | 73 |

https://truckmanualshub.com/

## 2 [PAINT PART No.]

| PART | PAINTED COLOR | PAINT PART No. | | |
|---|---|---|---|---|
| | | 16ℓCAN | 4ℓCAN | SPRAY |
| ① | YANMAR DEEP GREEN | 981101-09517 | 977620-40820 | 977620-30N31 |
| ② | YANMAR NEW PERMANENT YELLOW | 981101-09519 | 977620-40870 | 977620-30871 |
| ③ | YANMAR NEW GRAYISH GREEN | 981101-09616 | 977620-40860 | 977620-30861 |
| ④ | YANMAR DARK OLIVE GRAY | ---------- | 977620-40720 | TOR-90460003 |
| ⑤ | YANMAR BLACK | ---------- | TOR-91220001 | TOR-90220003 |
| ⑥ | YANMAR WARM GRAY | ---------- | ---------- | TOR-90450003 |

## 3 [COLOR OF MAIN PARTS]

| PART | PAINTED COLOR | MAIN PARTS |
|---|---|---|
| ① | YANMAR DEEP GREEN | TRAVEL FRAME<br>WEIGHT<br>SWING CYLINDER<br>BLADE CYLINDER<br>BLADE |
| ② | YANMAR NEW PERMANENT YELLOW | BONNET<br>BOOM<br>ARM |
| ③ | YANMAR NEW GRAYISH GREEN | TURNING FRAME<br>CANOPY |
| ④ | YANMAR DARK OLIVE GRAY | LEVER SORT<br>PEDAL |
| ⑤ | YANMAR BLACK | CABIN DOOR<br>LINK STAND<br>SIDE STEP |
| ⑥ | YANMAR WARM GRAY | OPERATION PART<br>ENGINE RELATED PART<br>FRAME INTERIOR PART |

https://truckmanualshub.com/

# PICTURESQUE INDEX(3)·····FIGURE



Fig.1 LABEL

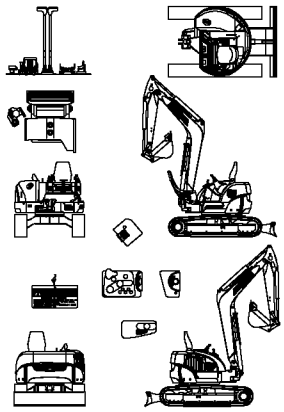

Fig.2 SILENSER & AIR CLEANER

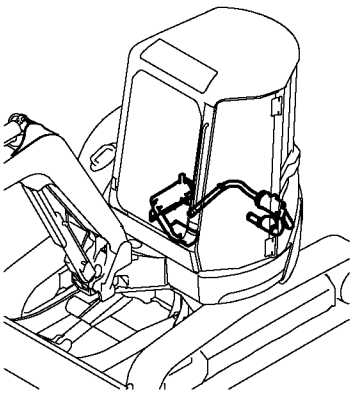

Fig.3 ACCELERATOR

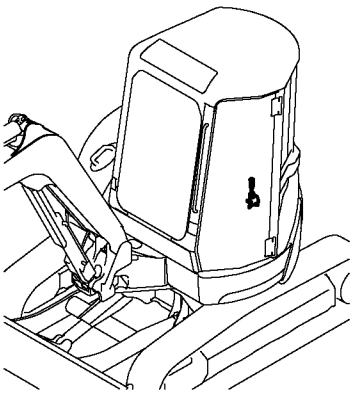

Fig.4 ENGINE MOUNT

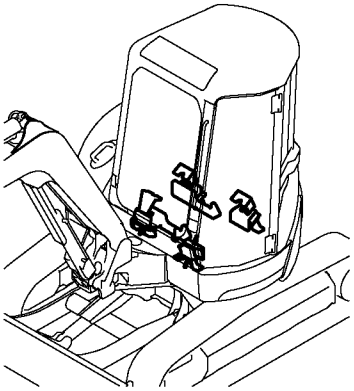

Fig.5 RADIATOR & MOUNT

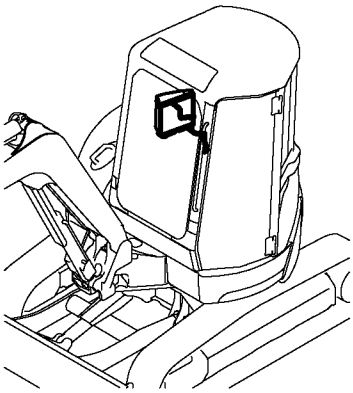

Fig.6 FUEL TANK & FUEL PIPE

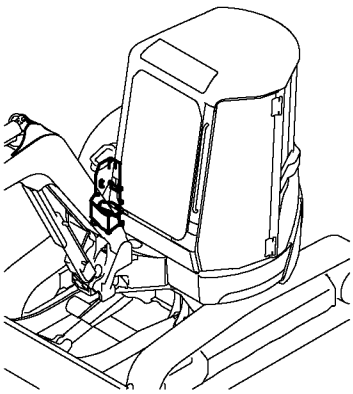

Fig.7 BATTERY

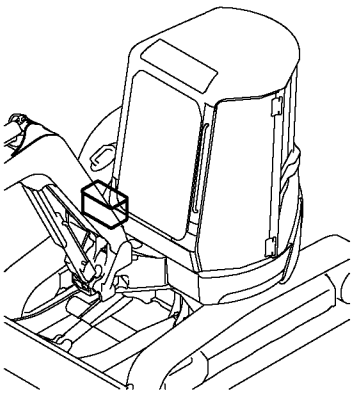

Fig.8 ELECTRIC PART(WIRING)

Fig.9 ELECTRIC PART(EQUIPMENT)

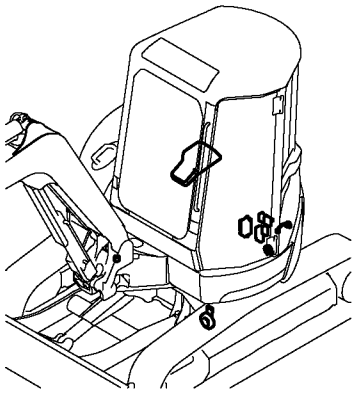

Fig.10 WORK LAMP

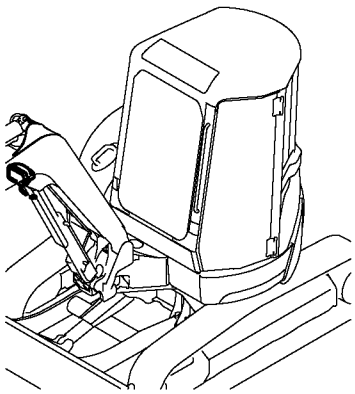

Fig.11 ROLLER & ADJUST

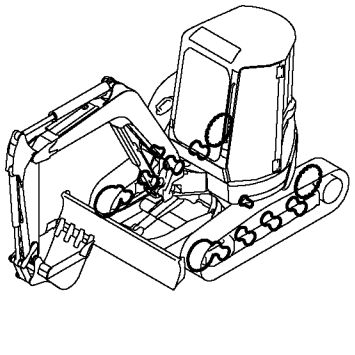

Fig.12 CRAWLER

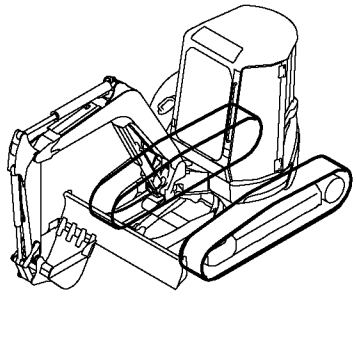

https://truckmanualshub.com/



Fig.13 CONTROL EQUIP. (LOCK LEVER)R

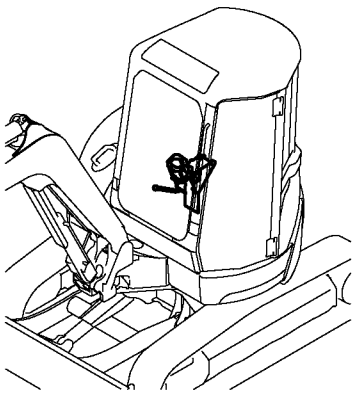

Fig.14 CONTROL EQUIP. (LOCK LEVER)L

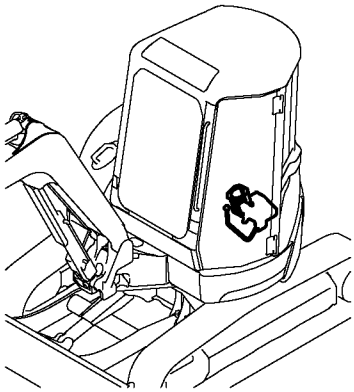

Fig.15 CONTROL EQUIP. (TRAVEL LEVER)

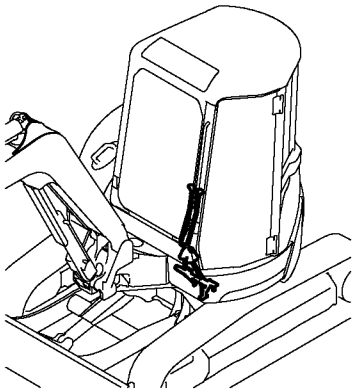

Fig.16 CONTROL EQUIPMENT (BLADE LEVER)

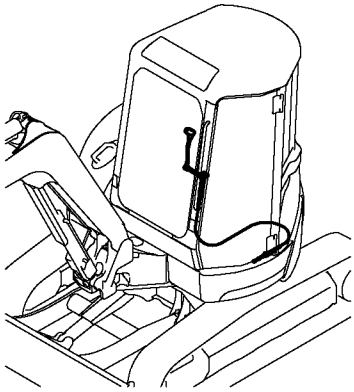

Fig.17 CONTROL EQUIPMENT (SWING PEDAL)

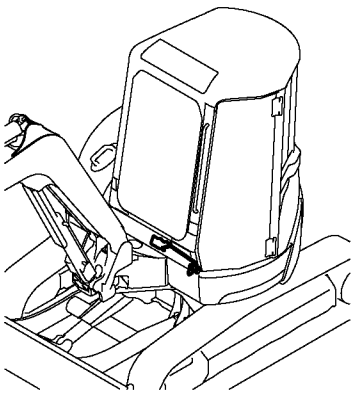

Fig.18 CONTROL EQUIP. (LOW-HIGH PEDAL)

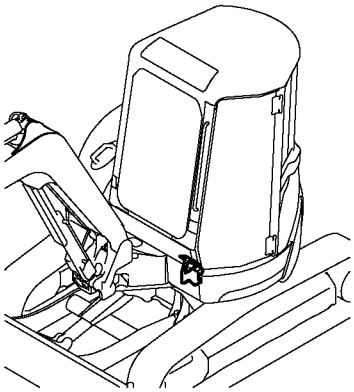

Fig.19 CONTROL EQUIPMENT (P.T.O.PEDAL)

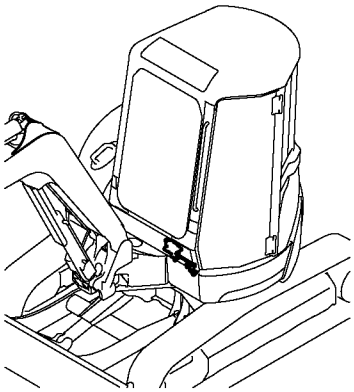

Fig.20 FRAME & TURNING BEARING

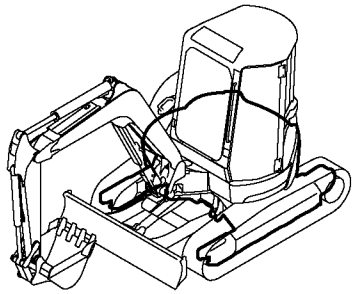

Fig.21 COVER(FRAME)

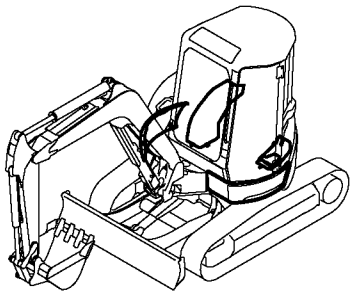

Fig.22 COVER(CABIN)

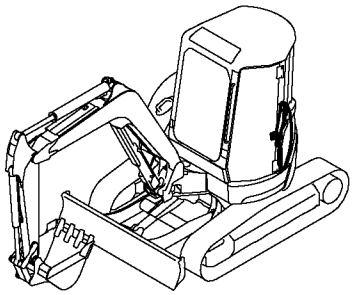

Fig.23 STEP & INSTRUMENT PANEL

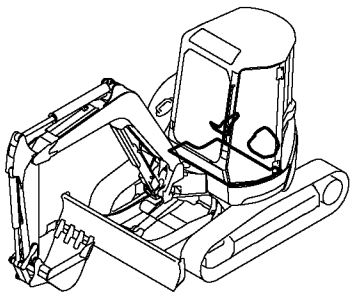

Fig.24 SEAT MOUNT

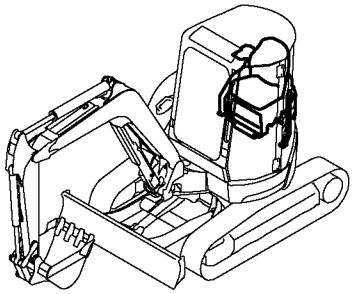

https://truckmanualshub.com/

# PICTURESQUE INDEX(3)·····FIGURE



Fig.25 BONNET

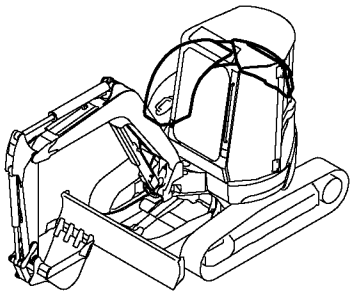

Fig.26 CANOPY MOUNT

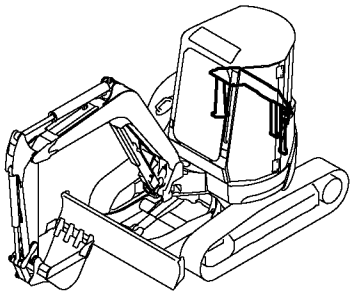

Fig.27 HYD.OIL PUMP & JOINT

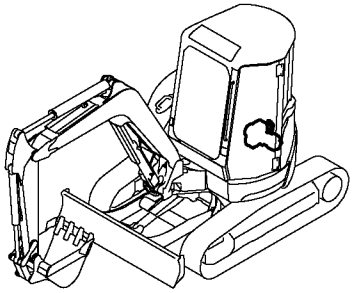

Fig.28 BOOM CYLINDER

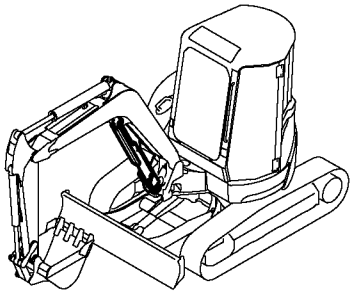

Fig.29 ARM CYLINDER

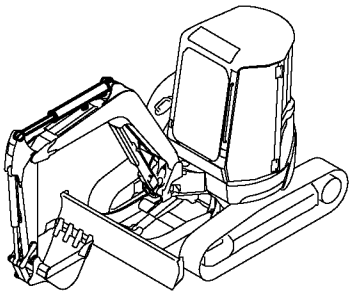

Fig.30 BUCKET CYLINDER

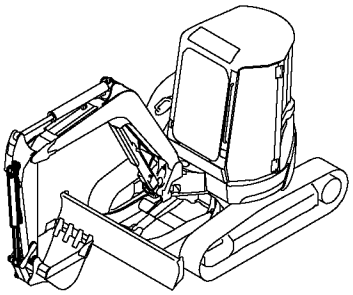

Fig.31 SWING CYLINDER

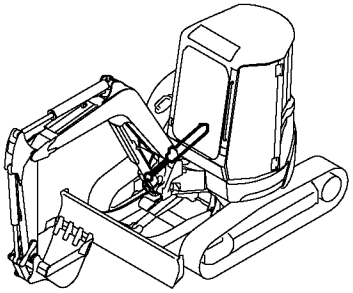

Fig.32 BLADE CYLINDER

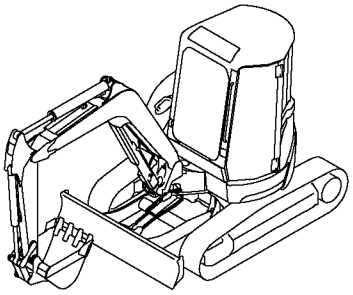

Fig.33 TRAVEL MOTOR

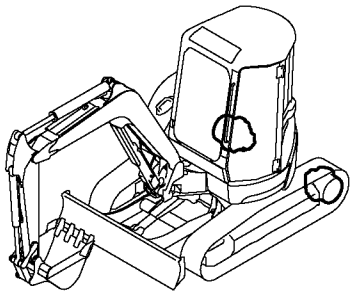

Fig.34 TURNING MOTOR

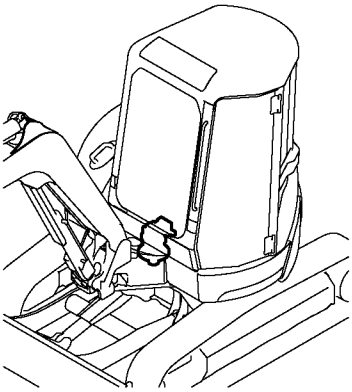

Fig.35 SWIVEL JOINT

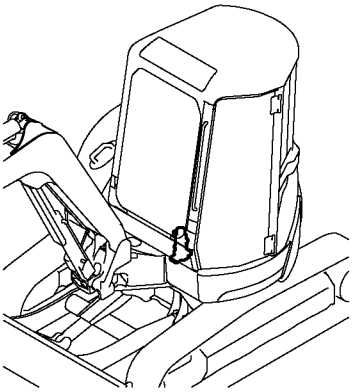

Fig.36 CONTROL VALVE(P-PORT)

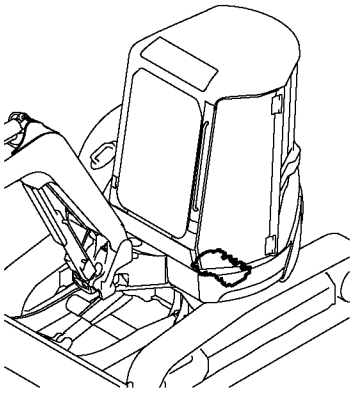

https://truckmanualshub.com/



Fig.37 CONTROL VALVE (TRAVEL & P.T.O.)

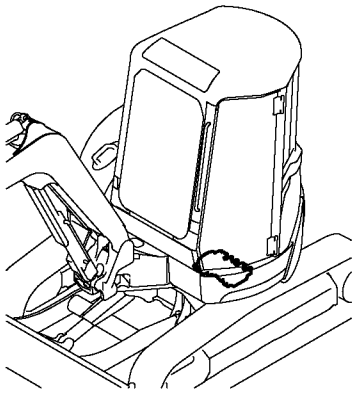

Fig.38 CONTROL VALVE (ARM & SWING)

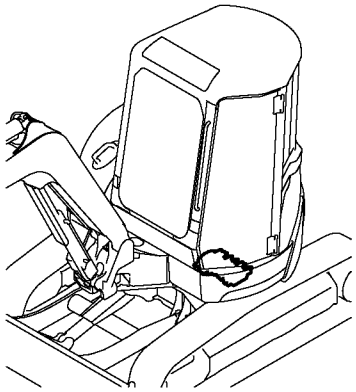

Fig.39 CONTROL VALVE (BOOM & BUCKET)

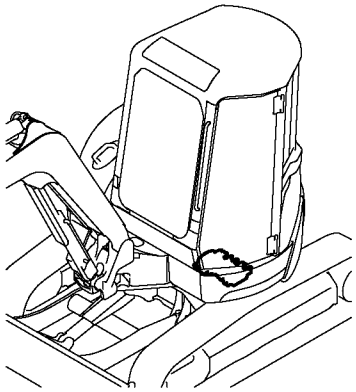

Fig.40 CONTROL VALVE (TURNING & BLADE)

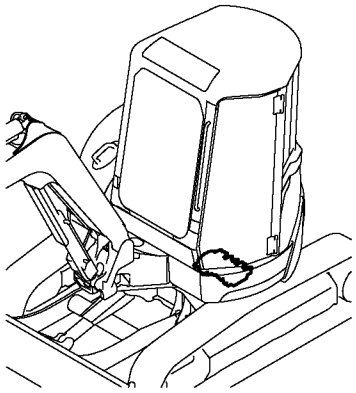

Fig.41 REMOTE CONTROL VALVE

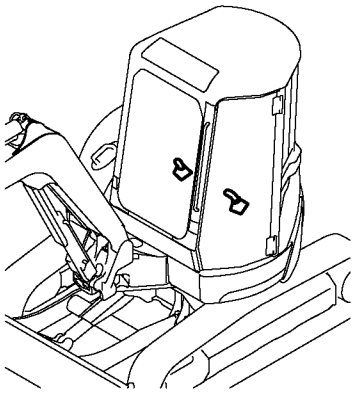

Fig.42 HYD.OIL TANK

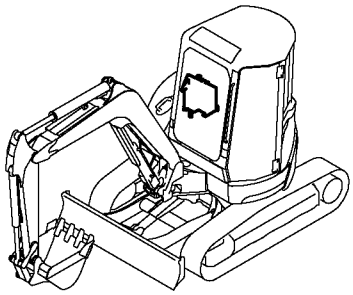

Fig.43 HYD.OIL PIPING (TANK-P.-VALVE)

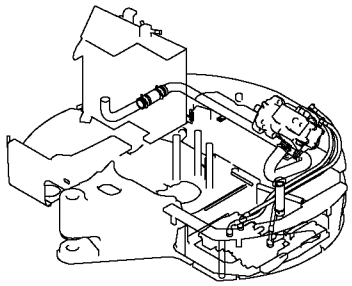

Fig.44 HYD.OIL PIPING (PUMP-V.-MOTOR)

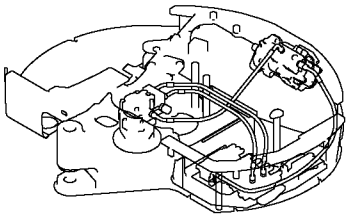

Fig.45 HYD.OIL PIPING (VALVE-S.-SWING)

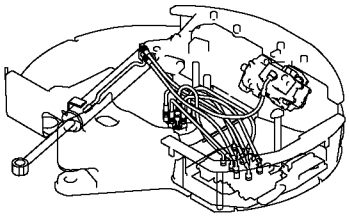

Fig.46 HYD.OIL PIPING(RETURN)

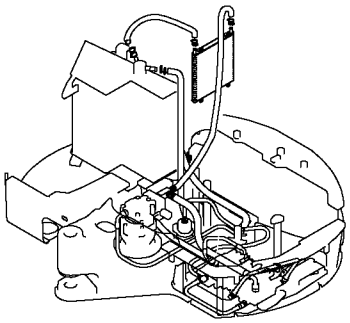

Fig.47 HYD.OIL PIPING(TRAVEL)

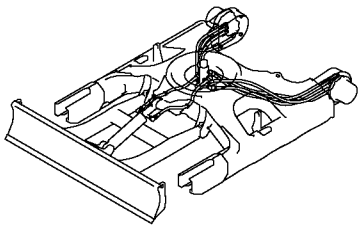

Fig.48 HYD.OIL PIPING(BOOM)

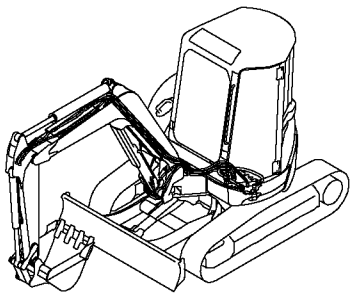

https://truckmanualshub.com/

# PICTURESQUE INDEX(3)·····FIGURE




Fig.49 HYD.OIL PIPING(P.T.O.)

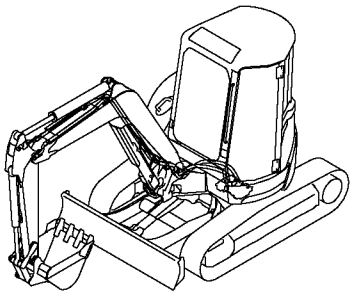

Fig.50 CONTROL PIPING (PUMP-VALVE-RETURN)

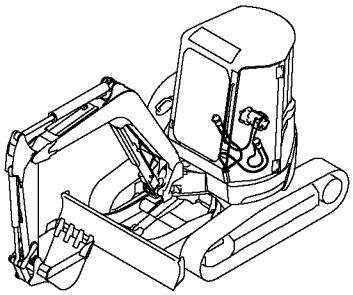

Fig.51 CONTROL PIPING (VALVE-CONTROL V.)

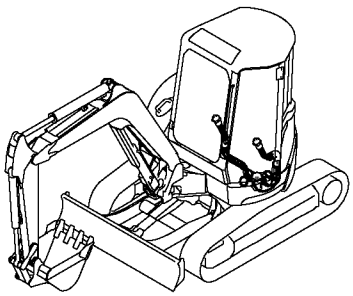

Fig.52 GREASING

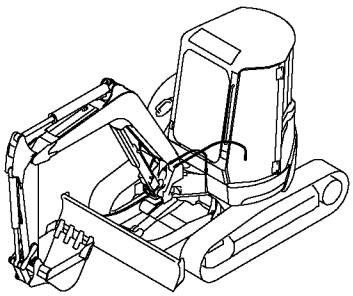

Fig.53 BOOM & BOOM BRACKET

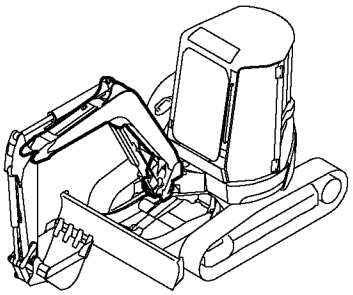

Fig.54 ARM & BUCKET LINK

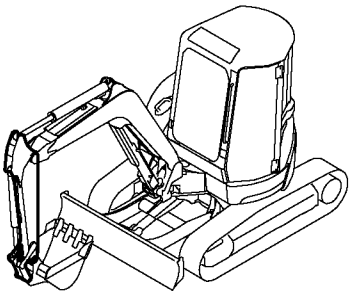

Fig.55 BUCKET PIN

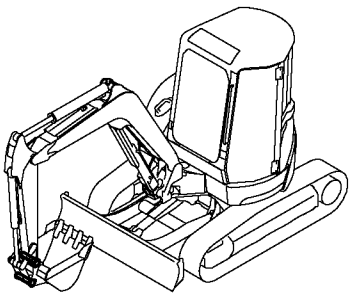

Fig.56 BLADE

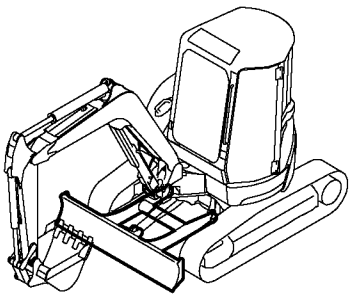

https://truckmanualshub.com/

# WIRING DIAGRAM

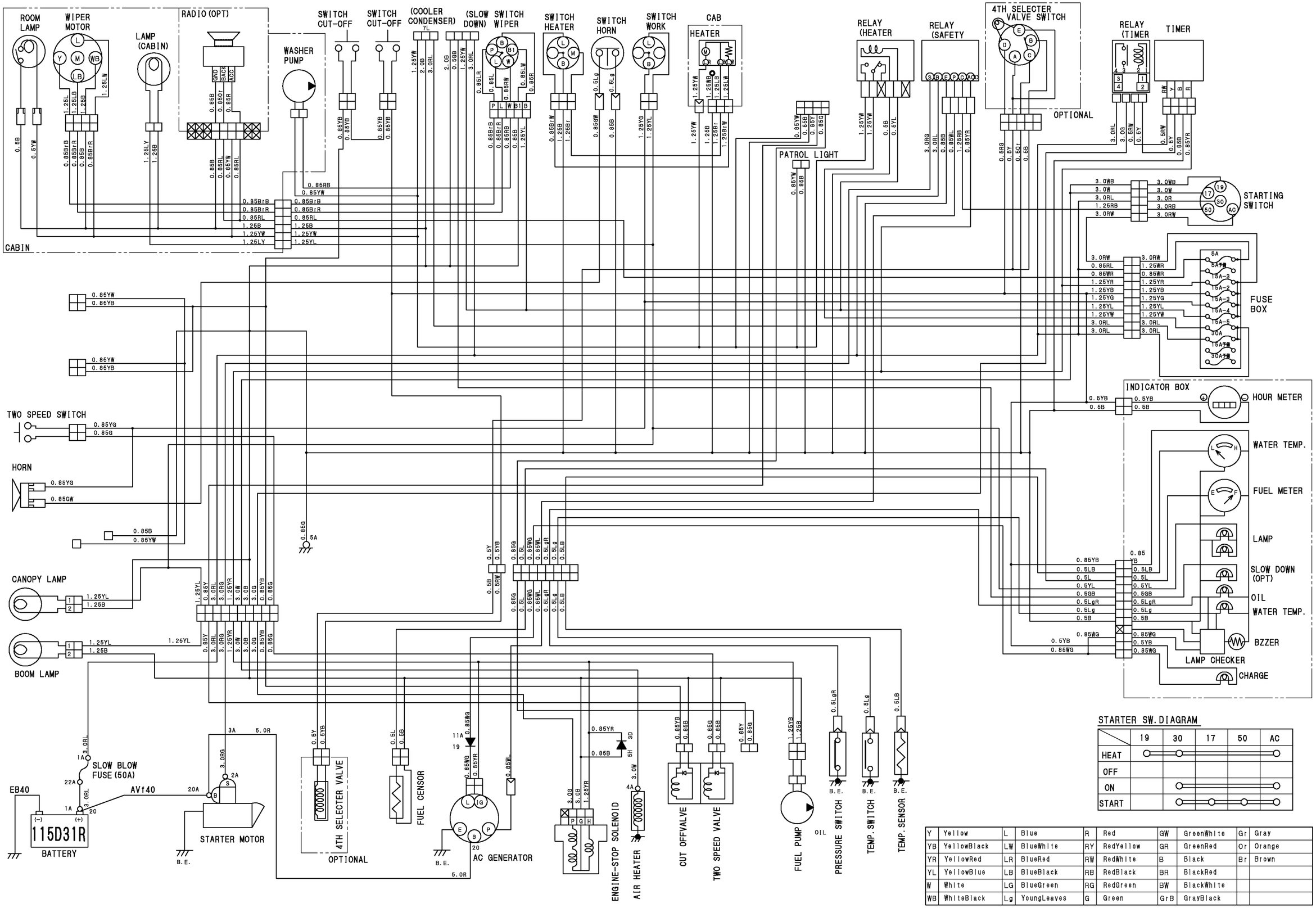


## STARTER SW. DIAGRAM

| | 19 | 30 | 17 | 50 | AC |
|---|---|---|---|---|---|
| HEAT | ○ | ○ | | | ○ |
| OFF | | | | | |
| ON | | ○ | | | ○ |
| START | | ○ | | ○ | ○ |

| | | | | | | | | | |
|---|---|---|---|---|---|---|---|---|---|
| Y | Yellow | L | Blue | R | Red | GW | GreenWhite | Gr | Gray |
| YB | YellowBlack | LW | BlueWhite | RY | RedYellow | GR | GreenRed | Or | Orange |
| YR | YellowRed | LR | BlueRed | RW | RedWhite | B | Black | Br | Brown |
| YL | YellowBlue | LB | BlueBlack | RB | RedBlack | BR | BlackRed | | |
| W | White | LG | BlueGreen | RG | RedGreen | BW | BlackWhite | | |
| WB | WhiteBlack | Lg | YoungLeaves | G | Green | GrB | GrayBlack | | |

https://truckmanualshub.com/

```
1,1,,772468-03100,,"LABEL ASSY",1,,,,,,,,,,,,,,,,,
2,2,,172460-03160,,LABEL,1,,,,,,,,,,,,,,,,,
3,2,,172183-03280,,"LABEL,LOCK",1,,,,,,,,,,,,,,,,,
4,2,,172458-03220,,"LABEL,ACCELERATOR",1,,,,,,,,,,,,,,,,,,
5,2,,172165-03231,,"LABEL, P.T.O.",1,,,,,,,,,,,,,,,,,
6,2,,172458-03240,,"LABEL,LOCK",1,,,,,,,,,,,,,,,,,
7,2,,172438-03300,,LABEL,1,,,,,,,,,,,,,,,,,
8,2,,172141-03360,,"LABEL, START SWITCH",1,,,,,,,,,,,,,,,,,,
9,2,,172437-03510,,"LABEL,HOOK",4,,,,,,,,,,,,,,,,,
10,2,,172171-03420,,"CAUTION PLATE ASSY",1,,,,,,,,,,,,,,,,,,
13,2,,172151-03451,,"LABEL, BOOM",2,,,,,,,,,,,,,,,,,
```

https://truckmanualshub.com/

# Fig. 1 LABEL

1inc.2 ~ 13

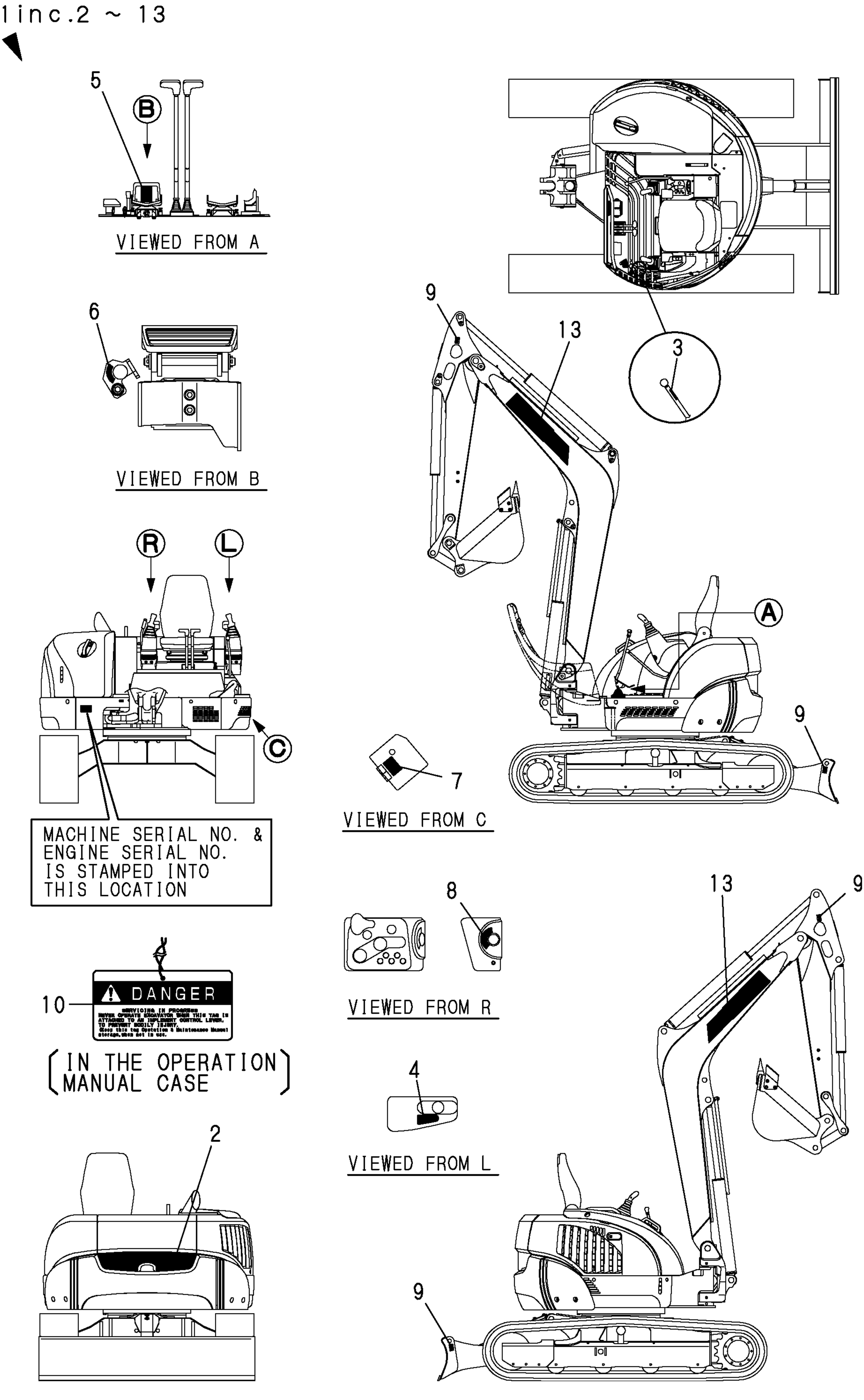

https://truckmanualshub.com/

```
1,1,,172486-11700,,"TUBE ASSY",1,,,,,,,,,,,,,,,,,
4,1,,172485-13400,,BRACKET,1,,,,,,,,,,,,,,,,,
5,1,,172486-13970,,COVER,1,,,,,,,,,,,,,,,,,
6,1,,129400-13201,,"GASKET, (NON-ASB.)",2,,,,,,,,,,,,,,,,,
7,1,,172486-11880,,SILENCER,1,,,,,,,,,,,,,,,,,
8,1,,26013-080202,,"BOLT W/WASHER M8X20",4,,,,,,,,,,,,,,,,,
9,1,,26013-100202,,"BOLT W/WASHER M10X20",4,,,,,,,,,,,,,,,,,,
10,1,,26013-120352,,"BOLT M12X 35",4,,,,,,,,,,,,,,,,,
11,1,,26051-080002,,"NUT M 8",8,,,,,,,,,,,,,,,,,
12,1,,172486-11500,,AIRCLANER,1,,,,,,,,,,,,,,,,,
14,2,,119808-12520,,"ELEMENT, OUTER",1,,,,,,,,,,,,,,,,,
15,2,,119808-12540,,"VALVE, UNLOADER",1,,,,,,,,,,,,,,,,,
16,2,,119866-12540,,"BODY, AIR CLEANER",1,,,,,,,,,,,,,,,,,,
17,1,,172486-11570,,TUBE,1,,,,,,,,,,,,,,,,,
18,1,,172486-11550,,HOSE,1,,,,,,,,,,,,,,,,,
19,1,,172486-11560,,HOSE,1,,,,,,,,,,,,,,,,,
20,1,,172486-11581,,"TUBE       (GRAY:73)",1,,,,,,,,,,,,,,,,,,
21,1,,172486-11620,,COLLER,3,,,,,,,,,,,,,,,,,
22,1,,129612-12280,,"SILENCER, INLET",1,,,,,,,,,,,,,,,,,
23,1,,1A1380-58050,,"GROMMET 16X20X4.5",3,,,,,,,,,,,,,,,,,
24,1,,22137-080000,,"WASHER 8, POLISHED",2,,,,,,,,,,,,,,,,,,
25,1,,22157-100000,,"WASHER 10",3,,,,,,,,,,,,,,,,,
26,1,,23000-070000,,"CLAMP 70",6,,,,,,,,,,,,,,,,,
27,1,,26013-080502,,"BOLT M 8X 50",2,,,,,,,,,,,,,,,,,
28,1,,26013-100252,,"BOLT W/WASHER M10X25",3,,,,,,,,,,,,,,,,,,
29,1,,26013-080162,,"BOLT W/WASHER M8X16",2,,,,,,,,,,,,,,,,,,
30,1,,22137-080000,,"WASHER 8, POLISHED",2,,,,,,,,,,,,,,,,,,
```

https://truckmanualshub.com/

# Fig.2 SILENSER & AIR CLEANER

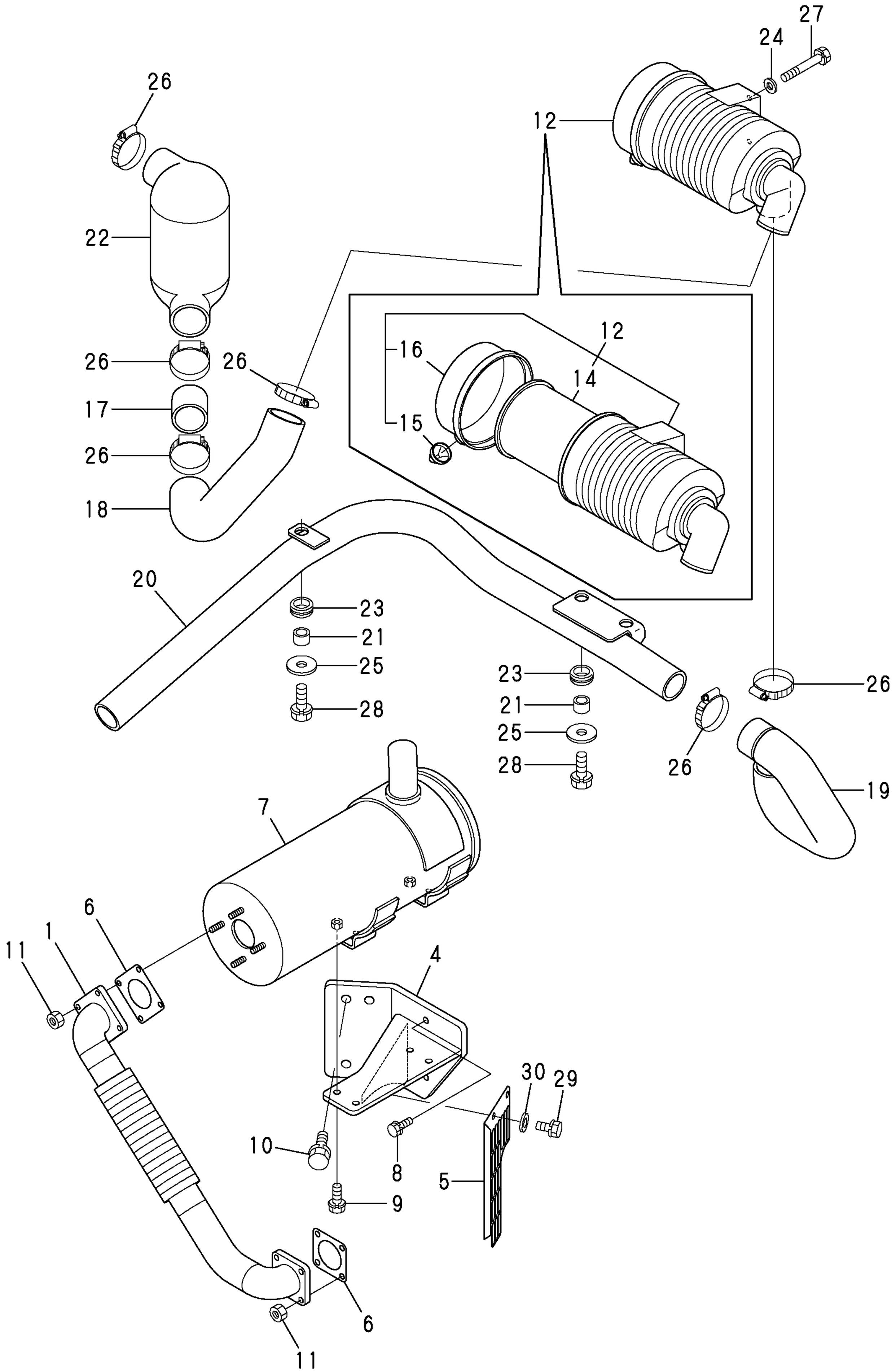

https://truckmanualshub.com/

```
1,1,,172458-12100,,"LEVER,ACCELERATOR",1,,,,,,,,,,,,,,,,,
2,1,,172486-12110,,"SUPPORT    (GRAY:73)",1,,,,,,,,,,,,,,,,,,
3,1,,172467-12120,,"CABLE, ACCELERATOR",1,,,,,,,,,,,,,,,,,
4,1,,172159-12270,,"JOINT, CABLE",1,,,,,,,,,,,,,,,,,
5,1,,172113-12522,,PIN,1,,,,,,,,,,,,,,,,,
6,1,,172159-42070,,"PIN 6,COME-OFF SNAP",2,,,,,,,,,,,,,,,,,
7,1,,1A1040-56900,,"PIN  6X 17",1,,,,,,,,,,,,,,,,,
8,1,,22137-060000,,"WASHER 6, POLISHED",2,,,,,,,,,,,,,,,,,
9,1,,26013-080202,,"BOLT W/WASHER M8X20",2,,,,,,,,,,,,,,,,,
10,1,,26013-100252,,"BOLT W/WASHER M10X25",2,,,,,,,,,,,,,,,,,,
```

https://truckmanualshub.com/

# Fig.3 ACCELERATOR

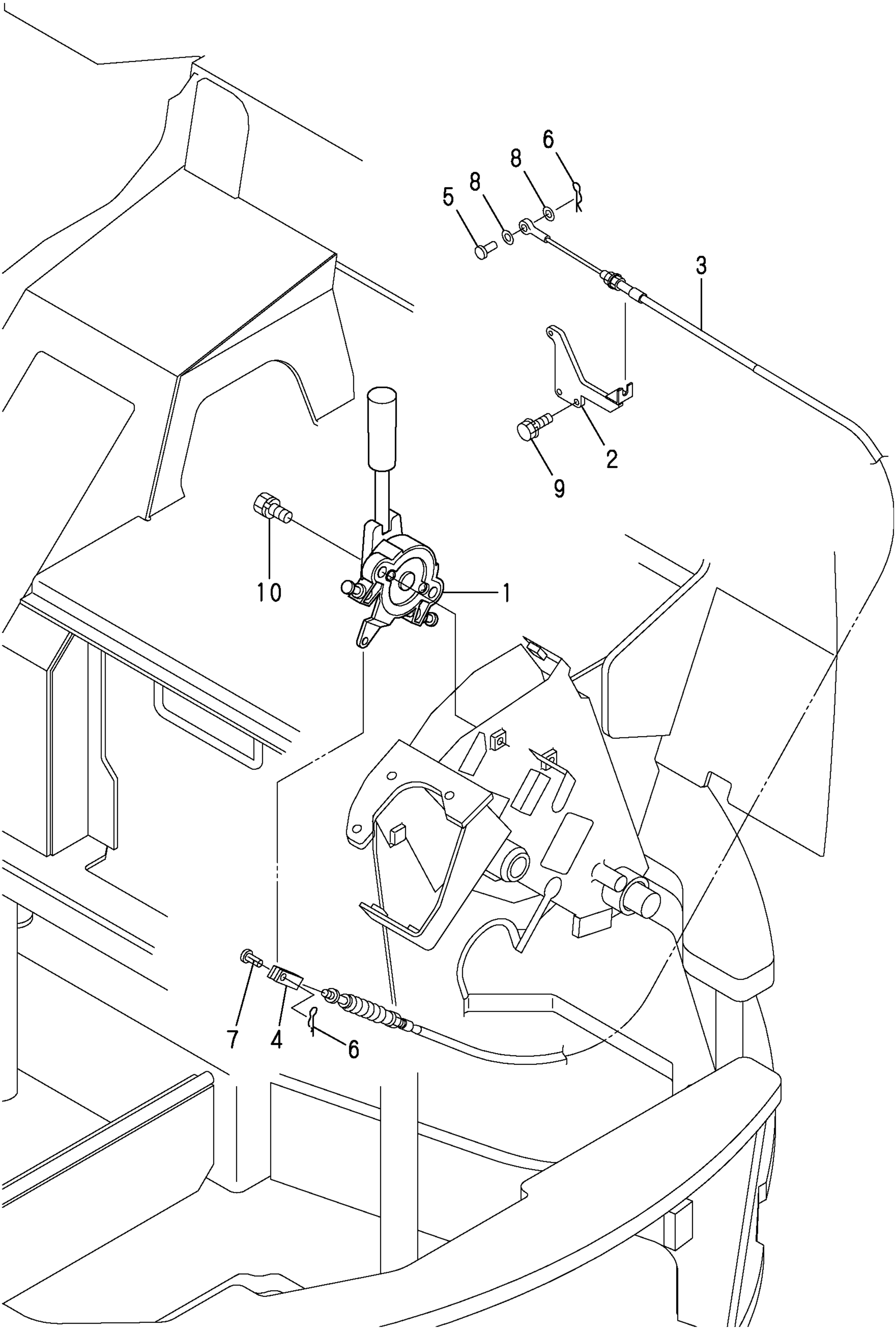

https://truckmanualshub.com/

```
1,1,,172486-13000,,"MOUNT LF   (GRAY:73)",1,,,,,,,,,,,,,,,,,,
2,1,,172486-13010,,"MOUNT LR   (GRAY:73)",1,,,,,,,,,,,,,,,,,,
3,1,,172486-13020,,"BOLT M10X 40",8,,,,,,,,,,,,,,,,,,
4,1,,172486-13030,,"BRACKET LR ASSY (73)",1,,,,,,,,,,,,,,,,,,
5,1,,172486-13060,,WASHER,2,,,,,,,,,,,,,,,,,,
6,1,,172486-13070,,"BOLT M16X150",4,,,,,,,,,,,,,,,,,,
7,1,,172486-13080,,"BRACKET RR CMP  (73)",1,,,,,,,,,,,,,,,,,,
8,1,,26076-100302,,"BOLT 10.9 10X30",12,,,,,,,,,,,,,,,,,,
9,1,,127486-13920,,"STOPPER ASSY(GRAY:73",2,,,,,,,,,,,,,,,,,,
10,1,,172165-13270,,MOUNT.ENGINE,8,,,,,,,,,,,,,,,,,,
11,1,,172137-46040,,"SEAT, SPRING",20,,,,,,,,,,,,,,,,,,
12,1,,22217-100000,,"SPRING WASHER 10",12,,,,,,,,,,,,,,,,,,
13,1,,22217-160000,,"SPRING WASHER 16",4,,,,,,,,,,,,,,,,,,
```

https://truckmanualshub.com/

# Fig.4 ENGINE MOUNT

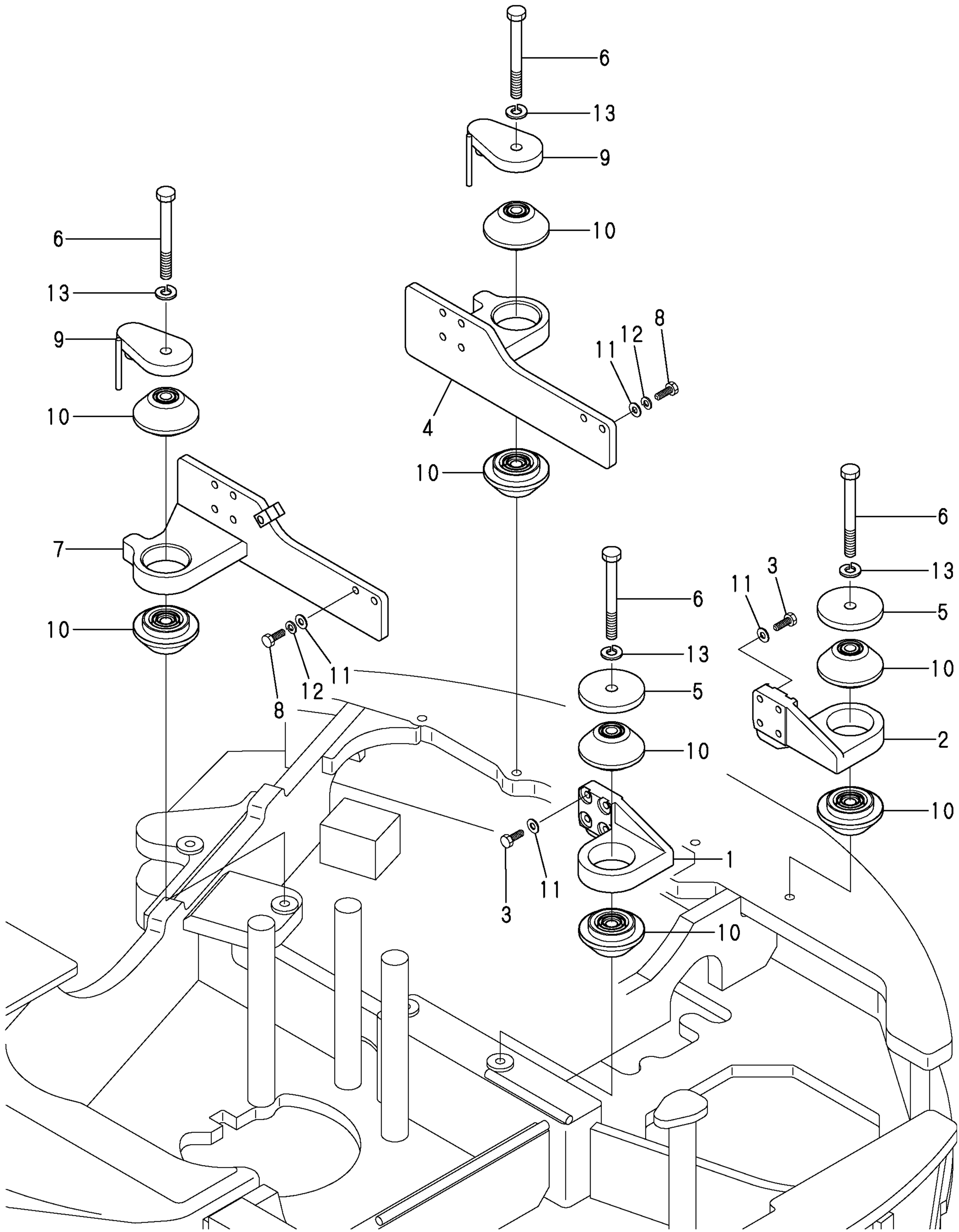

https://truckmanualshub.com/

```
1,1,,172460-13900,,"RADIATOR ASSY",1,,,,,,,,,,,,,,,,,
2,2,,129107-44590,,"CAP, RADIATOR",1,,,,,,,,,,,,,,,,,
3,1,,172460-74820,,"COOLER ASSY, OIL",1,,,,,,,,,,,,,,,,,,
4,1,,172486-75750,,"BRACKET O/C",1,,,,,,,,,,,,,,,,,
5,1,,172486-75711,,"BRACKET A ASSY,O/C",2,,,,,,,,,,,,,,,,,
6,1,,172446-13330,,"ABSOBER,SHOCK",4,,,,,,,,,,,,,,,,,
7,1,,26013-100202,,"BOLT W/WASHER M10X20",6,,,,,,,,,,,,,,,,,,
8,1,,172486-13111,,"HOSE UPPER",1,,,,,,,,,,,,,,,,,
9,1,,172444-13210,,"COCK ASSY,2-WAY",1,,,,,,,,,,,,,,,,,,
10,2,,172444-13220,,BODY,1,,,,,,,,,,,,,,,,,
11,2,,121250-49121,,PLUG,1,,,,,,,,,,,,,,,,,
12,2,,24311-000160,,"O-RING 1A P-16.0",1,,,,,,,,,,,,,,,,,
13,1,,172486-13151,,"HOSE LOWER",1,,,,,,,,,,,,,,,,,
14,1,,172486-13641,,"HOSE 600 ASSY",1,,,,,,,,,,,,,,,,,
15,1,,171064-44510,,"SUB-TANK ASSY",1,,,,,,,,,,,,,,,,,
16,2,,171064-44520,,"BODY, SUB-TANK",1,,,,,,,,,,,,,,,,,
17,2,,121450-44531,,CAP,1,,,,,,,,,,,,,,,,,
18,2,,124450-44560,,CLAMP,1,,,,,,,,,,,,,,,,,
19,2,,121470-44581,,GASKET,1,,,,,,,,,,,,,,,,,
20,2,,23065-070225,,"HOSE  7* 225",1,,,,,,,,,,,,,,,,,
21,1,,124450-44550,,"CLAMP, SUB-TANK",1,,,,,,,,,,,,,,,,,
22,1,,121256-44600-2,,"BRACKET  (YELLOW:87)",1,,,,,,,,,,,,,,,,,,
23,1,,184015-44680,,"RUBBER, RADIATOR",4,,,,,,,,,,,,,,,,,
24,1,,23000-013000,,"CLAMP 13",2,,,,,,,,,,,,,,,,,
25,1,,23000-013000,,"CLAMP 13",2,,,,,,,,,,,,,,,,,
26,1,,172486-13891,,"HOSE 1260,FUEL",1,,,,,,,,,,,,,,,,,
27,1,,23001-048000,,"CLIP 48,HOSE",4,,,,,,,,,,,,,,,,,
28,1,,26013-100252,,"BOLT W/WASHER M10X25",4,,,,,,,,,,,,,,,,,
29,1,,26013-100252,,"BOLT W/WASHER M10X25",2,,,,,,,,,,,,,,,,,
30,1,,26013-100252,,"BOLT W/WASHER M10X25",4,,,,,,,,,,,,,,,,,
31,1,,26013-080202,,"BOLT W/WASHER M8X20",2,,,,,,,,,,,,,,,,,
32,1,,26022-080162,,"SCREW M 8X 16",2,,,,,,,,,,,,,,,,,
33,1,,172485-13530,,"BRACKET ASSY",1,,,,,,,,,,,,,,,,,
34,1,,172485-13560,,"BRACKET ASSY,RAD",1,,,,,,,,,,,,,,,,,
35,1,,172485-13641,,"DUCT ASSY",1,,,,,,,,,,,,,,,,,
37,2,,172485-13301,,"EV,DUCT A",1,,,,,,,,,,,,,,,,,
38,2,,172485-13310,,"EV,DUCT B",1,,,,,,,,,,,,,,,,,
39,2,,172485-13320,,"EV,DUCT C",1,,,,,,,,,,,,,,,,,
40,2,,172485-13330,,"EV,DUCT D",1,,,,,,,,,,,,,,,,,
41,2,,172485-13340,,"EV,DUCT E",1,,,,,,,,,,,,,,,,,
42,2,,172485-13350,,"EV,DUCT F",1,,,,,,,,,,,,,,,,,
43,2,,172485-13880,,"SEAL 160",1,,,,,,,,,,,,,,,,,
44,2,,172485-13720,,"SEAL 530",1,,,,,,,,,,,,,,,,,
45,2,,172485-13730,,"SEAL 480",1,,,,,,,,,,,,,,,,,
46,2,,172485-13740,,"SEAL 550",1,,,,,,,,,,,,,,,,,
47,1,,172485-13750,,"SHURAUD ASSY",1,,,,,,,,,,,,,,,,,,
49,2,,172485-13860,,"SEAL A",1,,,,,,,,,,,,,,,,,
50,2,,172485-13730,,"SEAL 480",1,,,,,,,,,,,,,,,,,,
```

https://truckmanualshub.com/

# Fig.5 RADIATOR & MOUNT

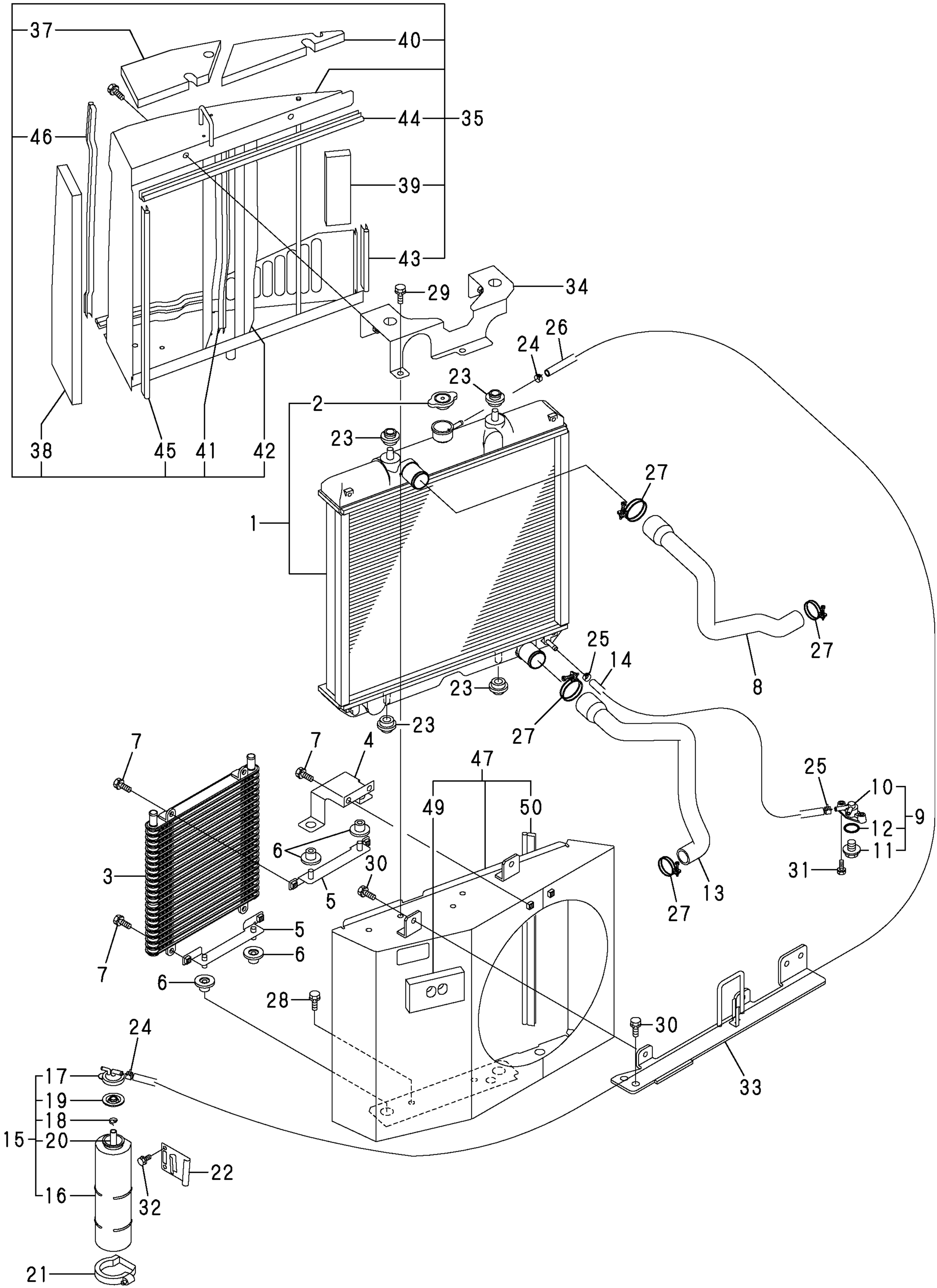

https://truckmanualshub.com/

```
1,1,,772486-14100,,"FUEL TANK(YELLOW:87)",1,,,,,,,,,,,,,,,,,,
3,2,,104200-11920,,COCK,1,,,,,,,,,,,,,,,,,
4,2,,172162-14200,,GASKET,1,,,,,,,,,,,,,,,,,
5,2,,172162-14180,,"GAUGE UNIT,FUEL",1,,,,,,,,,,,,,,,,,
6,2,,172142-14421,,"HOSE, FUEL GAUGE",1,,,,,,,,,,,,,,,,,
7,2,,172141-14260,,FLOAT,1,,,,,,,,,,,,,,,,,
8,2,,172486-14390,,"HOSE,FUEL",1,,,,,,,,,,,,,,,,,
9,2,,172458-14370,,"SOUCER,FUEL OIL",1,,,,,,,,,,,,,,,,,
10,2,,26116-080702,,"BOLT M 8X 70 PLATED",1,,,,,,,,,,,,,,,,,,
11,2,,105340-55040,,"CAP, FUEL TANK",1,,,,,,,,,,,,,,,,,
12,2,,172183-14250,,"FILTER (FUEL",1,,,,,,,,,,,,,,,,,
13,2,,23010-014000,,"CLAMP 14",2,,,,,,,,,,,,,,,,,
14,2,,23010-014000,,"CLAMP 14",1,,,,,,,,,,,,,,,,,
15,2,,26022-050122,,"SCREW M 5X 12",5,,,,,,,,,,,,,,,,,
16,1,,172486-14370,,"HOSE,FUEL DRAIN",1,,,,,,,,,,,,,,,,,
17,1,,22137-140000,,"WASHER 14,POLISHED",4,,,,,,,,,,,,,,,,,
18,1,,22217-140000,,"SPRING WASHER 14",4,,,,,,,,,,,,,,,,,
19,1,,23080-013000,,"CLAMP 13,HOSE",1,,,,,,,,,,,,,,,,,
20,1,,26116-140452,,"BOLT M14X 45 PLATED",4,,,,,,,,,,,,,,,,,
21,1,,172171-14300,,W-CLAMP,1,,,,,,,,,,,,,,,,,
22,1,,172486-14611,,"HOSE 2200 ASSY",1,,,,,,,,,,,,,,,,,
23,1,,172486-14810,,"HOSE 1700 ASSY",1,,,,,,,,,,,,,,,,,
24,1,,172486-14650,,"HOSE 260,FUEL",1,,,,,,,,,,,,,,,,,
25,1,,172486-14660,,"HOSE  400",1,,,,,,,,,,,,,,,,,
26,1,,172174-16540,,"CLAMP 10X70",1,,,,,,,,,,,,,,,,,
27,1,,129612-52100,,"FUEL PUMP",1,,,,,,,,,,,,,,,,,
28,1,,129335-55700,,"SEPARATOR, WATER",1,,,,,,,,,,,,,,,,,
29,2,,104200-55321,,"VALVE, TAPER",1,,,,,,,,,,,,,,,,,
30,2,,104200-55330,,"SPRING, TAPER VALVE",1,,,,,,,,,,,,,,,,,
31,2,,104200-55341,,"HANDLE, COCK",1,,,,,,,,,,,,,,,,,
32,2,,124064-55510,,"BOWL, FUEL STRAINER",1,,,,,,,,,,,,,,,,,
33,2,,102103-55520,,O-RING,1,,,,,,,,,,,,,,,,,
34,2,,110250-55610,,"RING, RETAINING",1,,,,,,,,,,,,,,,,,
35,2,,121257-55720,,"SPRING, SCREEN",1,,,,,,,,,,,,,,,,,
36,2,,121257-55731,,FLOAT,1,,,,,,,,,,,,,,,,,
38,2,,101720-55750,,PLUG,2,,,,,,,,,,,,,,,,,
39,2,,104200-55750,,"SCREW M 4",1,,,,,,,,,,,,,,,,,
40,2,,171081-55910,,SCREEN,1,,,,,,,,,,,,,,,,,
41,2,,23418-060000,,"GASKET 6, NYLON",2,,,,,,,,,,,,,,,,,
42,2,,24311-240100,,"O-RING 1A P-10A",1,,,,,,,,,,,,,,,,,
43,1,,23000-013000,,"CLAMP 13",8,,,,,,,,,,,,,,,,,
44,1,,22137-060000,,"WASHER 6, POLISHED",2,,,,,,,,,,,,,,,,,
45,1,,22217-080000,,"SPRING WASHER  8",1,,,,,,,,,,,,,,,,,
46,1,,26013-060162,,"BOLT M 6X 16",2,,,,,,,,,,,,,,,,,
```

https://truckmanualshub.com/

# Fig.6 FUEL TANK & FUEL PIPE

1inc.(1) ~ 15

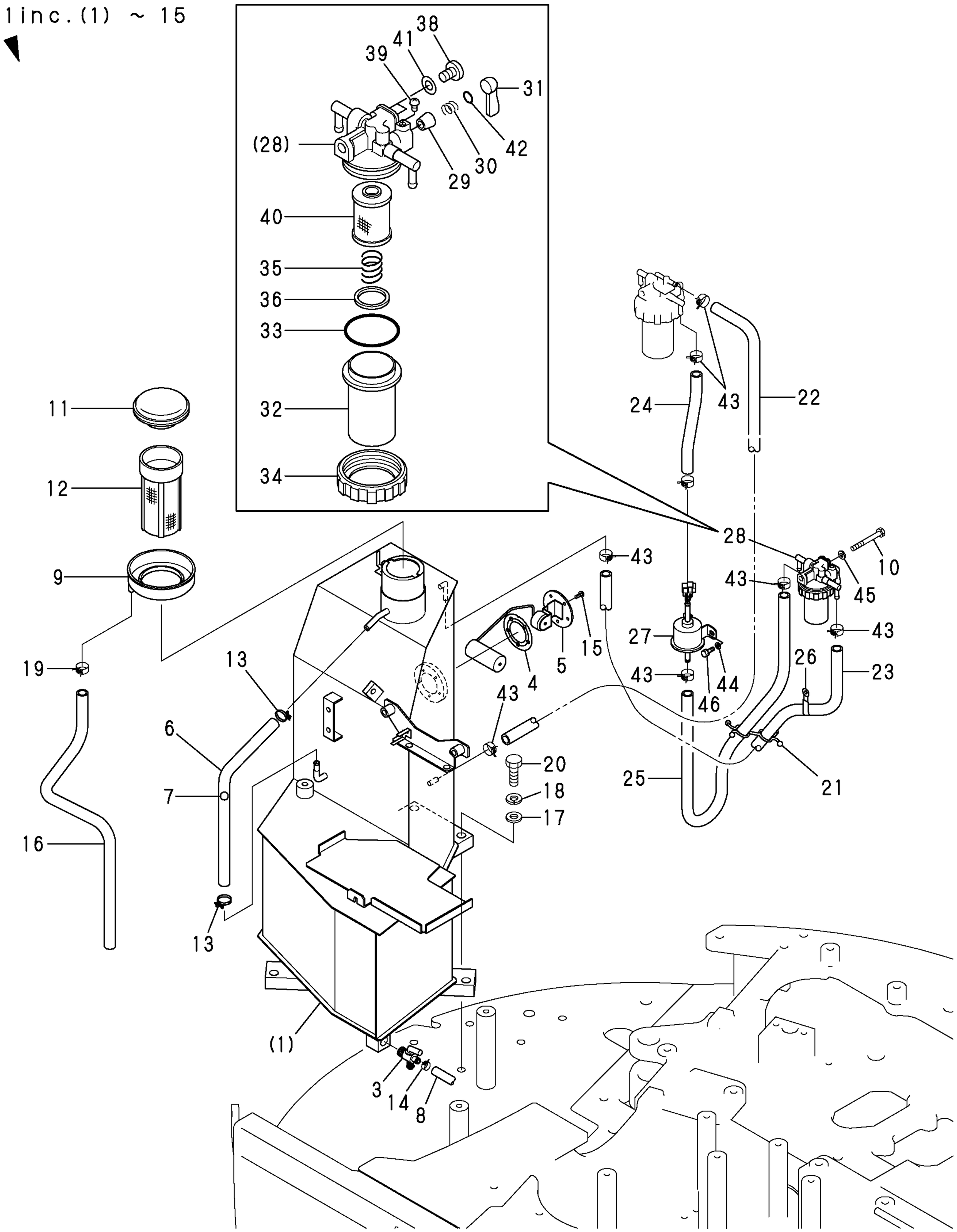

https://truckmanualshub.com/

```
1,1,,172460-16101,,"CORD(+),BATTERY",1,,,,,,,,,,,,,,,,,
2,2,,172458-16140,,"HARNESS C",1,,,,,,,,,,,,,,,,,
3,1,,172460-16111,,"CODE, BATTERY -",1,,,,,,,,,,,,,,,,,
4,1,,172460-16130,,BATTERY,1,,,,,,,,,,,,,,,,,
5,1,,172486-14500,,COVER,1,,,,,,,,,,,,,,,,,
6,1,,172122-17190,,CLIP,2,,,,,,,,,,,,,,,,,
7,1,,22137-100000,,"WASHER 10,POLISHED",2,,,,,,,,,,,,,,,,,
8,1,,22217-080000,,"SPRING WASHER  8",1,,,,,,,,,,,,,,,,,
9,1,,26013-100162,,"BOLT M10X 16",2,,,,,,,,,,,,,,,,,
10,1,,26716-080002,,"NUT M 8",1,,,,,,,,,,,,,,,,,
11,1,,172486-14510,,"CLAMP      (GRAY:73)",1,,,,,,,,,,,,,,,,,
12,1,,172486-14540,,ROD,1,,,,,,,,,,,,,,,,,
13,1,,22137-080000,,"WASHER 8, POLISHED",1,,,,,,,,,,,,,,,,,
14,1,,26716-080002,,"NUT M 8",2,,,,,,,,,,,,,,,,,
```

https://truckmanualshub.com/

# Fig. 7 BATTERY

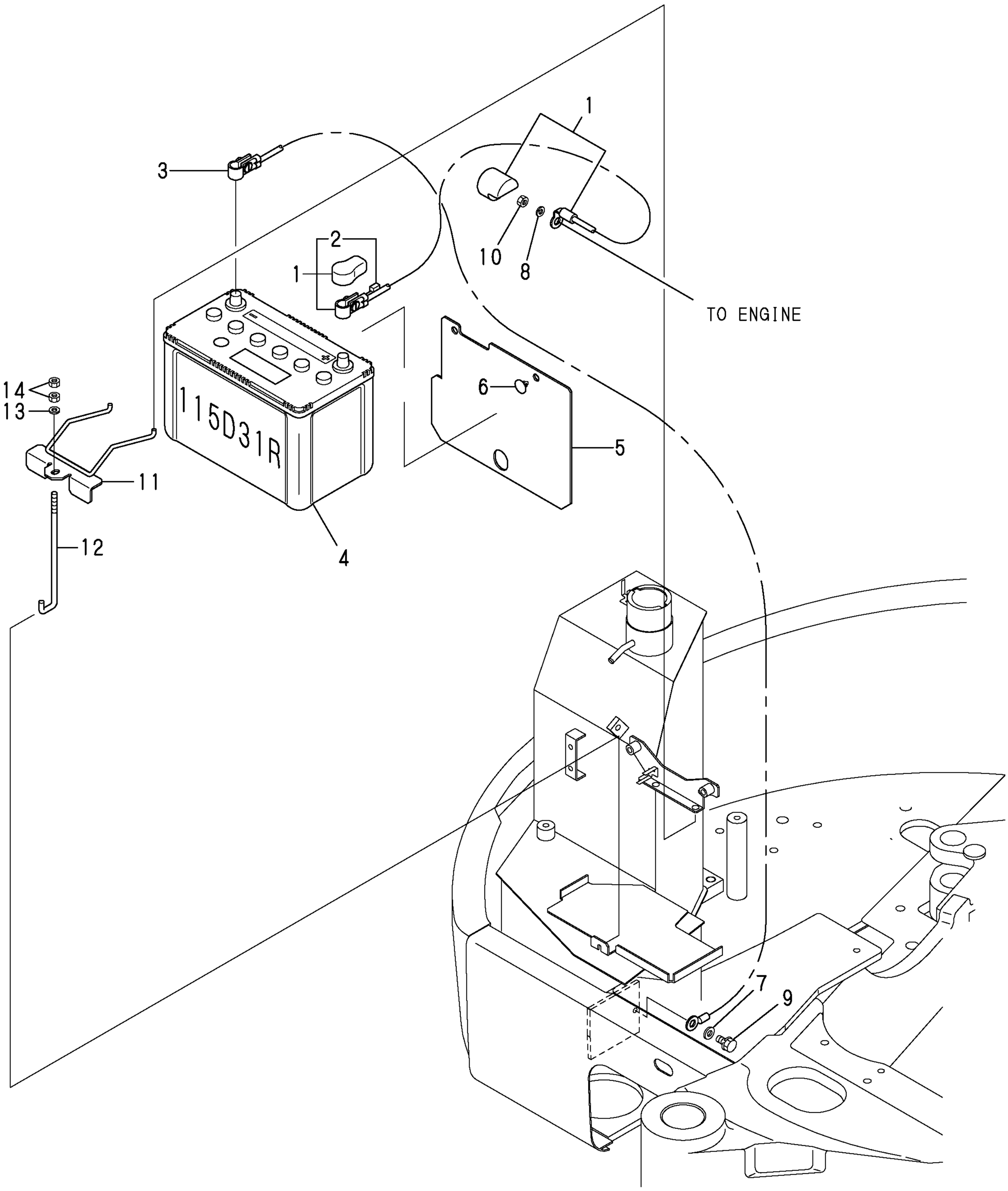

https://truckmanualshub.com/

```
1,1,,172460-16501,,HARNESS,1,,,,,,,,,,,,,,,,,,
3,2,,172648-16600,,DIODE,2,,,,,,,,,,,,,,,,,,
4,2,,172458-16550,,"HUSE,SLOW BLOW (50A",1,,,,,,,,,,,,,,,,,,
5,1,,172467-16520,,"HARNESS B ASSY (US)",1,,,,,,,,,,,,,,,,,,
6,1,,172460-16531,,"HARNESS,BOOM LAMP",1,,,,,,,,,,,,,,,,,,
7,1,,22137-100000,,"WASHER 10,POLISHED",2,,,,,,,,,,,,,,,,,,
8,1,,22217-050000,,"SPRING WASHER  5",1,,,,,,,,,,,,,,,,,,
9,1,,22217-100000,,"SPRING WASHER 10",2,,,,,,,,,,,,,,,,,,
10,1,,194202-56460,,BAND,3,,,,,,,,,,,,,,,,,,
11,1,,26116-100162,,"BOLT M10X 16 PLATED",2,,,,,,,,,,,,,,,,,,
12,1,,26716-050002,,"NUT M 5",1,,,,,,,,,,,,,,,,,,
13,1,,933171-15801,,"WIRE, EARTH",1,,,,,,,,,,,,,,,,,,
14,1,,172190-16500,,HARNESS,1,,,,,,,,,,,,,,,,,,
15,1,,172461-16520,,"HARNESS A",1,,,,,,,,,,,,,,,,,,
16,1,,172183-16560,,"CLIP 400,HOSE",1,,,,,,,,,,,,,,,,,,
17,1,,172187-78580,,BAND,2,,,,,,,,,,,,,,,,,,
18,1,,172458-16561,,"HARNESS,CANOPY LAMP",1,,,,,,,,,,,,,,,,,,
19,1,,172126-11510,,"BAND 300",1,,,,,,,,,,,,,,,,,,
```

https://truckmanualshub.com/

# Fig.8 ELECTRIC PART (WIRING)

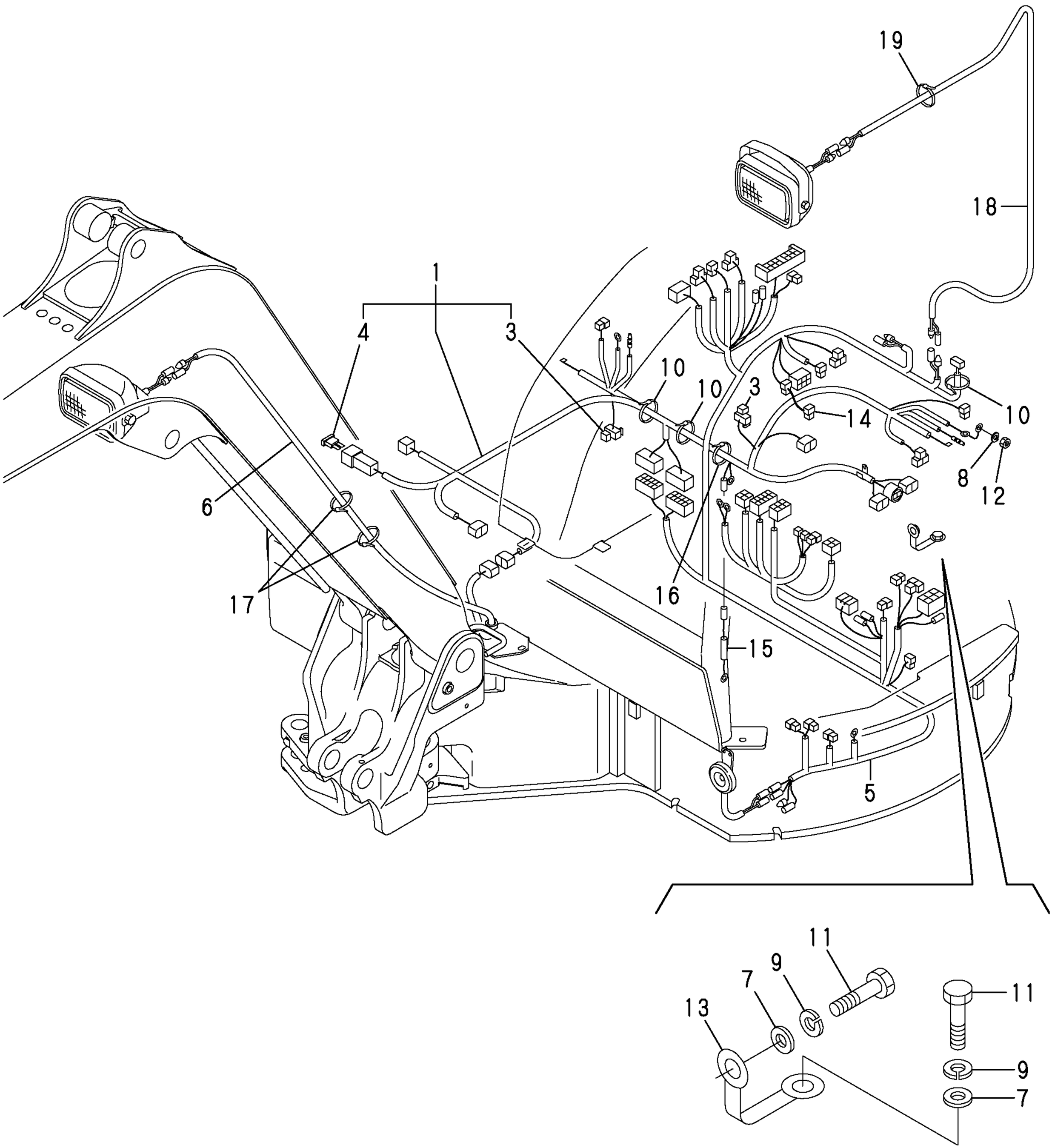

https://truckmanualshub.com/

```
1,1,,172187-16560,,GROMMET,1,,,,,,,,,,,,,,,,,
2,1,,172187-17100,,"SWITCH, START",1,,,,,,,,,,,,,,,,,,
3,2,,172187-17070,,CODE,1,,,,,,,,,,,,,,,,,
4,2,,172187-17080,,"COVER M5",3,,,,,,,,,,,,,,,,,
5,2,,172187-17090,,"COVER M4",2,,,,,,,,,,,,,,,,,
6,2,,933110-00301,,"KEY ASSY",1,,,,,,,,,,,,,,,,,
10,1,,172187-17200,,"BOX, FUSE",1,,,,,,,,,,,,,,,,,,
11,2,,172175-17120,,PULLER,1,,,,,,,,,,,,,,,,,
13,2,,172187-17220,,COVER,1,,,,,,,,,,,,,,,,,
14,2,,29420-050000,,HUSE,2,,,,,,,,,,,,,,,,,
15,2,,29420-150000,,HUSE,6,,,,,,,,,,,,,,,,,
16,2,,29420-300000,,"FUSE B30",2,,,,,,,,,,,,,,,,,
17,1,,172472-17350,,"INDICATOR BOX (CABIN",1,,,,,,,,,,,,,,,,,,
20,2,,172187-17280,,"SWITCH ASSY, LIGHT",1,,,,,,,,,,,,,,,,,
21,2,,172187-17290,,"SWITCH, HEATER",1,,,,,,,,,,,,,,,,,
22,2,,172472-17300,,"SWITCH ASSY,WASHER",1,,,,,,,,,,,,,,,,,
30,2,,172187-17380,,"BULB,T6.5-13.5V-2W",4,,,,,,,,,,,,,,,,,
35,2,,172187-17480,,"BULB,T5-14V-2W",2,,,,,,,,,,,,,,,,,
36,1,,172458-46720,,"BOLT 8X20",1,,,,,,,,,,,,,,,,,
37,1,,194151-57100,,HORN,1,,,,,,,,,,,,,,,,,
38,1,,172165-62800,,"GROMMET 26",1,,,,,,,,,,,,,,,,,
39,1,,172519-63240,,"BOLT  8X 16",3,,,,,,,,,,,,,,,,,
40,1,,119247-77100,,"RELAY, SAFETY",1,,,,,,,,,,,,,,,,,
41,1,,129136-77200,,"RELAY, SAFETY",1,,,,,,,,,,,,,,,,,
42,1,,119650-77910,,"RELAY, GROW",1,,,,,,,,,,,,,,,,,
45,1,,129211-77920,,TIMER,1,,,,,,,,,,,,,,,,,
46,1,,22137-060000,,"WASHER 6, POLISHED",8,,,,,,,,,,,,,,,,,
47,1,,26013-060122,,"BOLT M 6X 12",2,,,,,,,,,,,,,,,,,
48,1,,26013-060122,,"BOLT M 6X 12",1,,,,,,,,,,,,,,,,,
49,1,,26013-060162,,"BOLT M 6X 16",2,,,,,,,,,,,,,,,,,
50,1,,26013-060162,,"BOLT M 6X 16",1,,,,,,,,,,,,,,,,,
51,1,,26013-060202,,"BOLT M 6X 20",2,,,,,,,,,,,,,,,,,
52,1,,26013-060202,,"BOLT M 6X 20",2,,,,,,,,,,,,,,,,,
53,1,,194464-52190,,"SWITCH, SAFETY START",1,,,,,,,,,,,,,,,,,
54,1,,26776-180002,,"NUT M18,LOCK",1,,,,,,,,,,,,,,,,,
```

https://truckmanualshub.com/

# Fig. 9 ELECTRIC PART (EQUIPMENT)

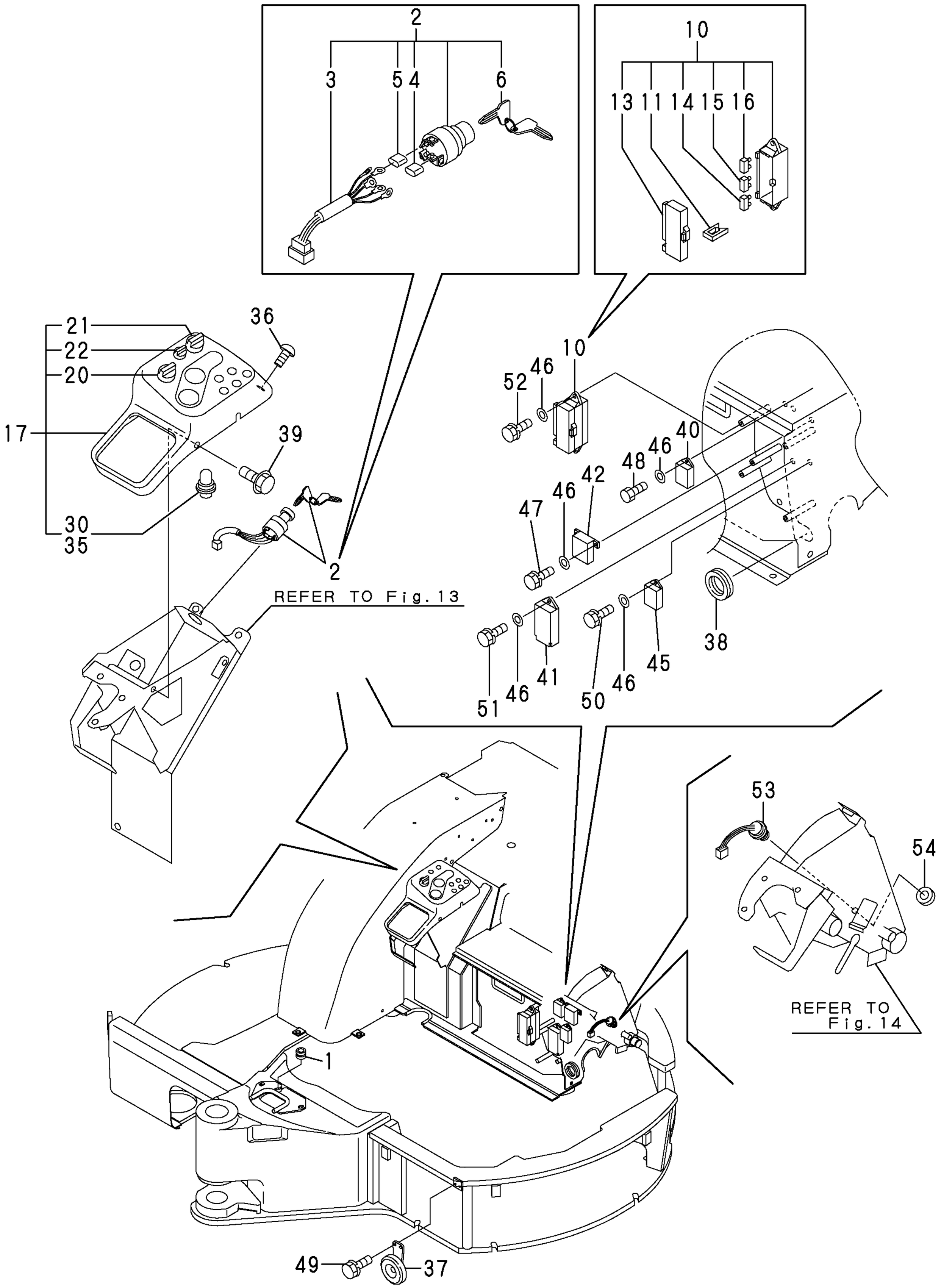

https://truckmanualshub.com/

```
1,1,,172458-17400,,"LAMP 150X95",1,,,,,,,,,,,,,,,,,
2,2,,172458-17420,,"BULB,12V 55W",1,,,,,,,,,,,,,,,,,
3,1,,172486-14550,,"STAY,LAMP (GREEN:86)",1,,,,,,,,,,,,,,,,,,
4,1,,22137-100000,,"WASHER 10,POLISHED",1,,,,,,,,,,,,,,,,,
5,1,,26013-100202,,"BOLT W/WASHER M10X20",1,,,,,,,,,,,,,,,,,,
6,1,,26706-100002,,"NUT M10",1,,,,,,,,,,,,,,,,,
```

https://truckmanualshub.com/

# Fig. 10 WORK LAMP

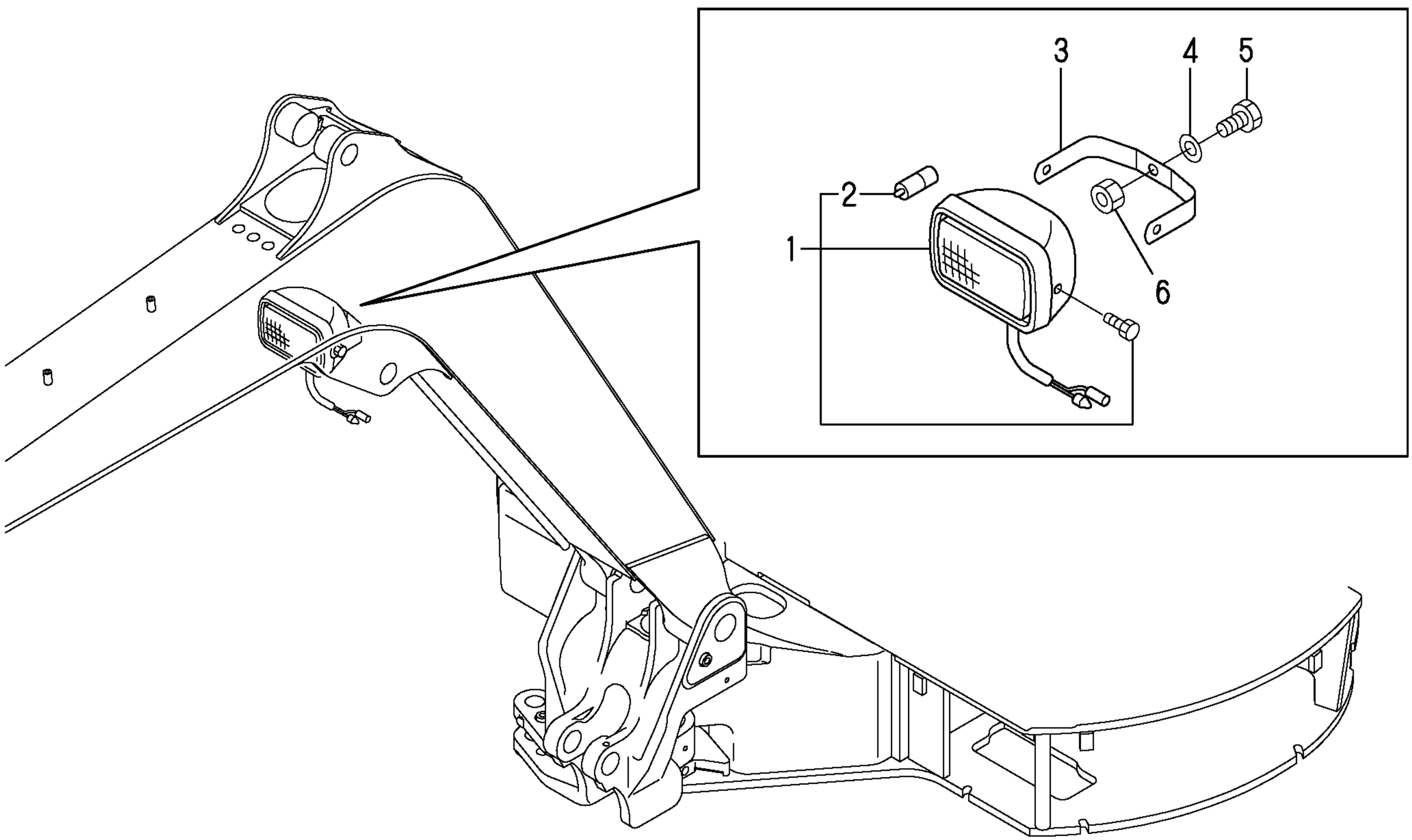

https://truckmanualshub.com/

```
1,1,,172455-29140,,"BOLT 14X35",18,,,,,,,,,,,,,,,,,
2,1,,172119-35010-4,,"SPROKET   (GREEN:82)",2,,,,,,,,,,,,,,,,,
3,1,,22217-140000,,"SPRING WASHER 14",18,,,,,,,,,,,,,,,,,
4,1,,172486-37060,,"IDLER     (GREEN:82)",2,,,,,,,,,,,,,,,,,
5,1,,172486-37050,,"IDLER R A",2,,,,,,,1,,,,,,,,,,
6,2,,172460-37170-2,,IDLER(340,2,,,,,,,,,,,,,,,,,
8,3,,172124-37120,,"BUSH 40",4,,,,,,,,,,,,,,,,,
9,2,,172460-37100-2,,"IDLER,R(344(GREEN:82",2,,,,,,,1,,,,,,,,,,
11,3,,172124-37120,,"BUSH 40",4,,,,,,,,,,,,,,,,,
12,2,,172460-37120,,SEAL,4,,,,,,,,,,,,,,,,,
13,2,,172460-37130-2,,"SHAFT,IDLER(GREEN:82",2,,,,,,,,,,,,,,,,,
14,2,,172460-37150-2,,"COVER     (GREEN:82)",2,,,,,,,,,,,,,,,,,
15,2,,194630-42120,,"PLUG PT1/8",2,,,,,,,,,,,,,,,,,
16,2,,22242-000350,,"CIRCLIP   35",2,,,,,,,,,,,,,,,,,
17,2,,24321-000400,,"O-RING 1A G-40.0",2,,,,,,,,,,,,,,,,,
18,1,,172486-37290,,"ROLLER ASSY, TRUCK",8,,,,,,,,,,,,,,,,,
19,2,,172458-37120,,"FLOATING SEAL",16,,,,,,,,,,,,,,,,,
20,2,,172423-37300-2,,"ROLLER    (GREEN:82)",8,,,,,,,,,,,,,,,,,
22,3,,172423-37370,,BUSH,16,,,,,,,,,,,,,,,,,
23,2,,172423-37330-1,,"SHAFT     (GREEN:82)",8,,,,,,,,,,,,,,,,,
26,2,,172423-37360-1,,"COVER, SEAL(GREEN:82",8,,,,,,,,,,,,,,,,,
27,2,,22242-000300,,"CIRCLIP   30",8,,,,,,,,,,,,,,,,,
28,2,,24315-000290,,"O-RING 1B P-29.0",8,,,,,,,,,,,,,,,,,
29,2,,933171-13691,,"PLUG PT1/8",8,,,,,,,,,,,,,,,,,
30,1,,172162-82980,,"BOLT M16X 35",16,,,,,,,,,,,,,,,,,
31,1,,22217-160000,,"SPRING WASHER 16",16,,,,,,,,,,,,,,,,,
32,1,,172478-37500-1,,"ROLLER,CARRIER  (82)",2,,,,,,,,,,,,,,,,,
34,2,,172478-37520,,"SHAFT,CARRIER ROLLER",2,,,,,,,,,,,,,,,,,
35,2,,172478-37550,,"WASHER, CARRIER",2,,,,,,,,,,,,,,,,,
36,2,,172478-37540,,"CAP, CARRIER ROLLER",2,,,,,,,,,,,,,,,,,
37,2,,172478-37530,,"SEAL,CARRIER ROLLER",2,,,,,,,,,,,,,,,,,
38,2,,22242-000300,,"CIRCLIP   30",2,,,,,,,,,,,,,,,,,
39,2,,22252-000621,,"CIRCRIP 62",2,,,,,,,,,,,,,,,,,
40,2,,24105-062064,,"BALL BEARING",4,,,,,,,,,,,,,,,,,
41,2,,933171-13691,,"PLUG PT1/8",2,,,,,,,,,,,,,,,,,
42,1,,22217-160000,,"SPRING WASHER 16",2,,,,,,,,,,,,,,,,,
43,1,,26116-160702,,"BOLT M16X 70 PLATED",2,,,,,,,,,,,,,,,,,
44,1,,26716-160002,,"NUT M16",2,,,,,,,,,,,,,,,,,
45,1,,172460-37700,,SPRING,2,,,,,,,,,,,,,,,,,
46,1,,172122-37710,,"HOLDER, ADJUSTER",2,,,,,,,,,,,,,,,,,
47,1,,172486-37070,,"ADJUST CYL ASSY",2,,,,,,,,,,,,,,,,,
48,2,,172122-37752,,"ADJUST CYLINDER",2,,,,,,,,,,,,,,,,,
49,3,,172122-37782,,"ADJUST TUBE",2,,,,,,,,,,,,,,,,,
50,3,,172122-37810,,PISTON,2,,,,,,,,,,,,,,,,,
51,3,,172122-37820,,"ADJUST SEAL SET",2,,,,,,,,,,,,,,,,,
52,2,,172122-37844,,"VALVE ASSY, NIPPLE",2,,,,,,,,,,,,,,,,,
53,3,,24315-000140,,"O-RING 1B P-14.0",2,,,,,,,,,,,,,,,,,
54,3,,24761-020000,,"NIPPLE PT1/8,GREASE",2,,,,,,,,,,,,,,,,,
55,1,,26013-120402,,"BOLT M12X 40",8,,,,,,,,,,,,,,,,,
56,1,,172461-37500-1,,"ROLLER, CARRIER(82)",2,,,,,,,1,,,,,,,,,,
58,2,,172478-37520,,"SHAFT,CARRIER ROLLER",2,,,,,,,,,,,,,,,,,
59,2,,172478-37550,,"WASHER, CARRIER",2,,,,,,,,,,,,,,,,,
60,2,,172478-37540,,"CAP, CARRIER ROLLER",2,,,,,,,,,,,,,,,,,
61,2,,172478-37530,,"SEAL,CARRIER ROLLER",2,,,,,,,,,,,,,,,,,
62,2,,22242-000300,,"CIRCLIP   30",2,,,,,,,,,,,,,,,,,
63,2,,22252-000621,,"RING   62",2,,,,,,,,,,,,,,,,,
64,2,,24105-062064,,"BALL BEARING",4,,,,,,,,,,,,,,,,,
65,2,,933171-13691,,"PLUG PT1/8",2,,,,,,,,,,,,,,,,,
```

https://truckmanualshub.com/

# Fig. 11 ROLLER & ADJUST

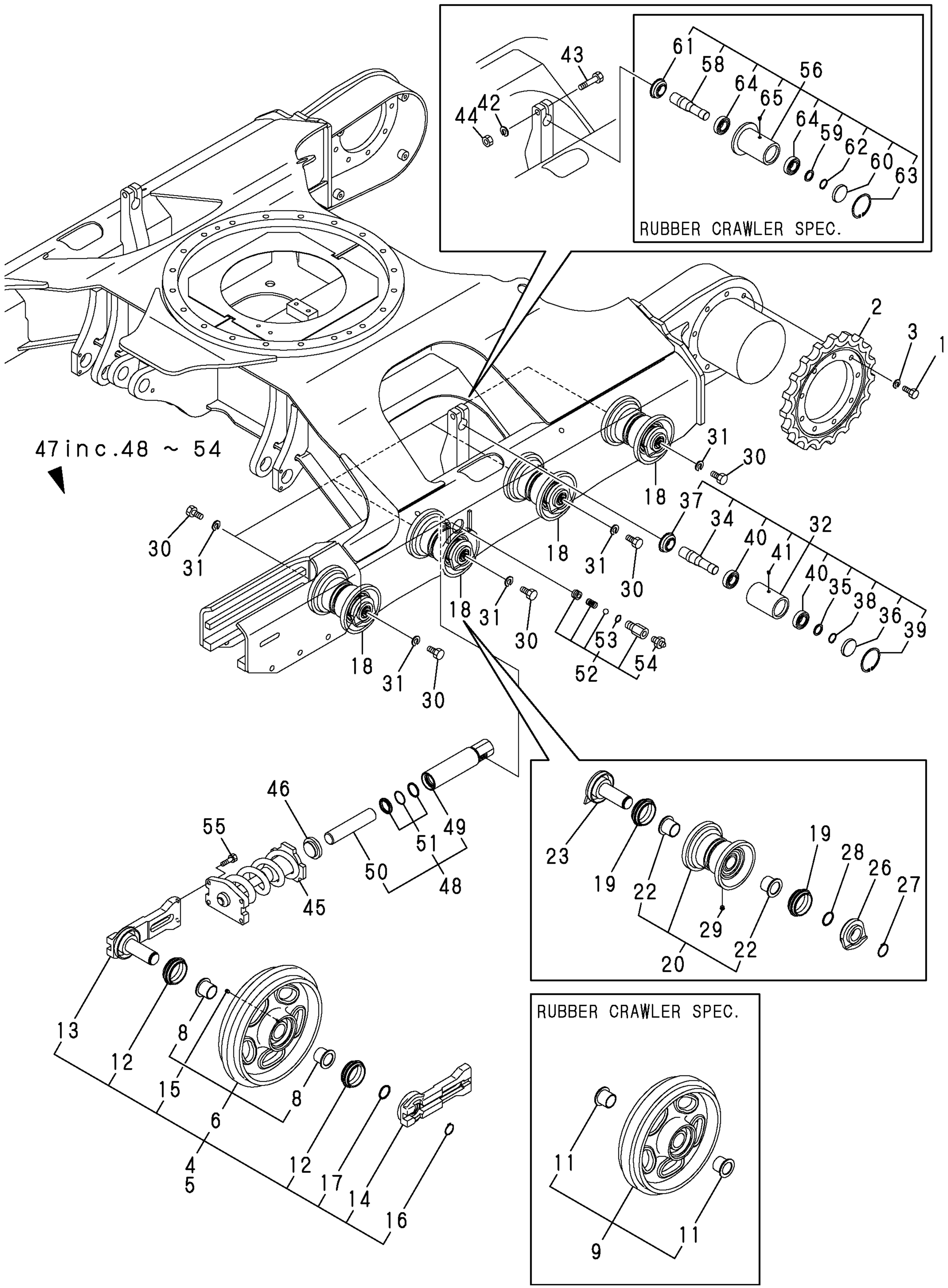

https://truckmanualshub.com/

```
1,1,,172425-38100,,"SHOE 400L ASSY,TRACK",1,,,,,,,,,,,,,,,,,
2,2,,172425-38110,,"SHOE PLATE 400L",40,,,,,,,,,,,,,,,,,
3,2,,172425-38120,,"LINK ASSY",1,,,,,,,,,,,,,,,,,
4,3,,172425-38200,,"LINK (L), TRACK",39,,,,,,,,,,,,,,,,,
5,3,,172425-38210,,"LINK (R), TRACK",39,,,,,,,,,,,,,,,,,
6,3,,172425-38150,,BUSH,40,,,,,,,,,,,,,,,,,
7,3,,172425-38160,,"PIN, TRACK",39,,,,,,,,,,,,,,,,,
8,3,,172425-38170,,"LINK (L), MASTER",1,,,,,,,,,,,,,,,,,
9,3,,172425-38180,,"LINK (R), MASTER",1,,,,,,,,,,,,,,,,,
10,3,,172614-38300,,"PIN 5X45, LOCK",1,,,,,,,,,,,,,,,,,
11,3,,172425-38190,,"PIN, MASTER",1,,,,,,,,,,,,,,,,,
12,2,,172112-38140,,"NUT, SHOE",160,,,,,,,,,,,,,,,,,
13,2,,172112-38130,,"BOLT, SHOE",160,,,,,,,,,,,,,,,,,
14,1,,172425-38130,,"SHOE 400R ASSY,TRUCK",1,,,,,,,,,,,,,,,,,
15,2,,172425-38140,,"SHOE PLATE 400R",40,,,,,,,,,,,,,,,,,
16,2,,172425-38120,,"LINK ASSY",1,,,,,,,,,,,,,,,,,
17,3,,172425-38200,,"LINK (L), TRACK",39,,,,,,,,,,,,,,,,,
18,3,,172425-38210,,"LINK (R), TRACK",39,,,,,,,,,,,,,,,,,
19,3,,172425-38150,,BUSH,40,,,,,,,,,,,,,,,,,
20,3,,172425-38160,,"PIN, TRACK",39,,,,,,,,,,,,,,,,,
21,3,,172425-38170,,"LINK (L), MASTER",1,,,,,,,,,,,,,,,,,
22,3,,172425-38180,,"LINK (R), MASTER",1,,,,,,,,,,,,,,,,,
23,3,,172614-38300,,"PIN 5X45, LOCK",1,,,,,,,,,,,,,,,,,
24,3,,172425-38190,,"PIN, MASTER",1,,,,,,,,,,,,,,,,,
25,2,,172112-38140,,"NUT, SHOE",160,,,,,,,,,,,,,,,,,
26,2,,172112-38130,,"BOLT, SHOE",160,,,,,,,,,,,,,,,,,
27,1,,172425-38603,,"RUBBER CRAWLER 400",2,,,,,,,1,,,,,,,,,,
```

https://truckmanualshub.com/

# Fig. 12 CRAWLER

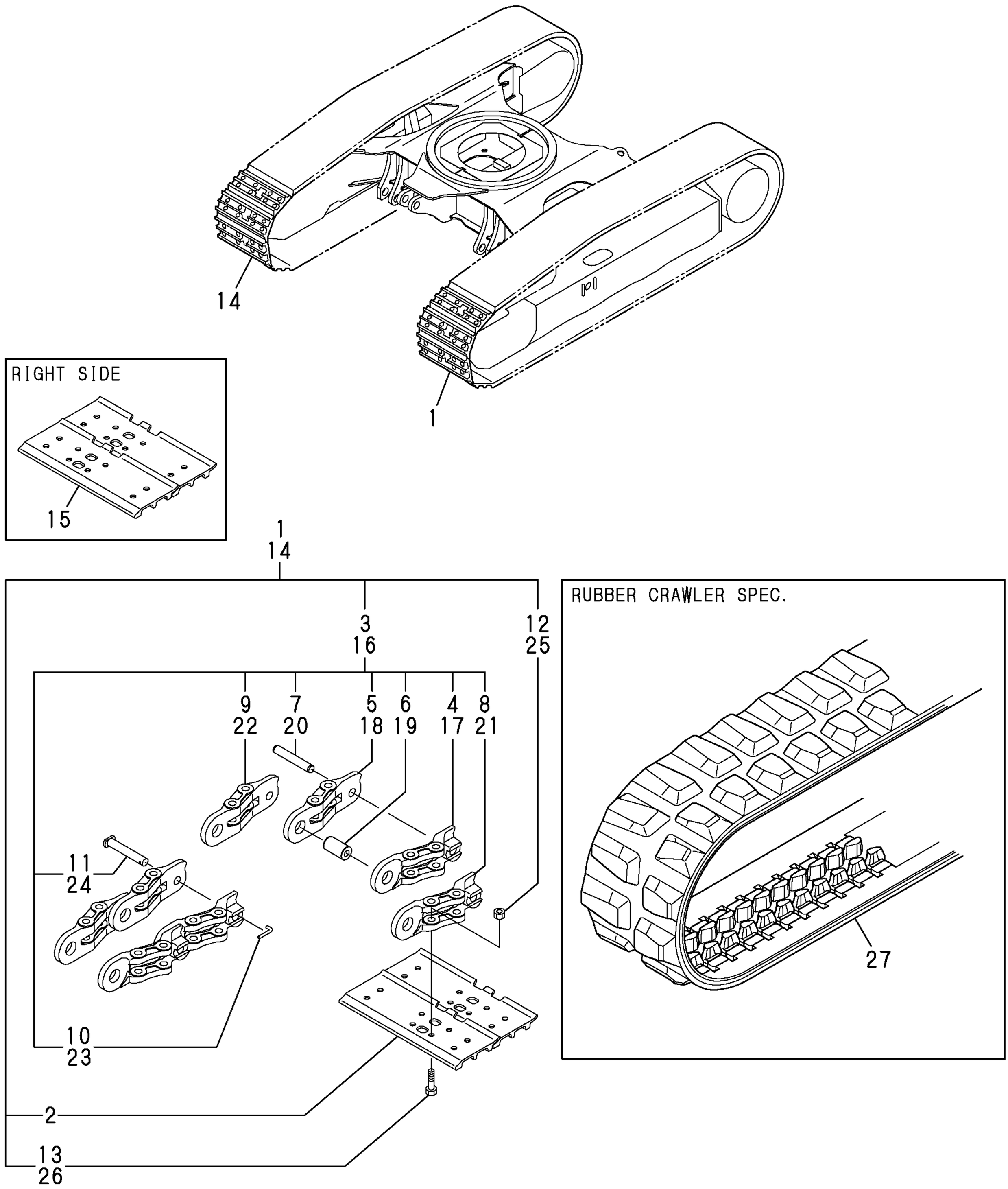

https://truckmanualshub.com/

```
1,1,,172485-45550,,"LEVER STAND R(GRAY73",1,,,,,,,,,,,,,,,,,,
2,2,,172161-41360,,"BUSH 1415",4,,,,,,,,,,,,,,,,,
3,2,,172485-45560,,"SEAL,LEVER STAND",1,,,,,,,,,,,,,,,,,,
5,2,,172485-45570,,"SEAL,LEVER STAND R",1,,,,,,,,,,,,,,,,,,
6,1,,172485-45910,,"BOLT M10X20",2,,,,,,,,,,,,,,,,,
7,1,,172472-46210,,"BRACKET ASSY,R  (73)",1,,,,,,,,,,,,,,,,,,
8,1,,26013-080202,,"BOLT W/WASHER M8X20",3,,,,,,,,,,,,,,,,,
9,1,,26013-100202,,"BOLT W/WASHER M10X20",2,,,,,,,,,,,,,,,,,,
```

https://truckmanualshub.com/

# Fig. 13 CONTROL EQUIP. (LOCK LEVER) R

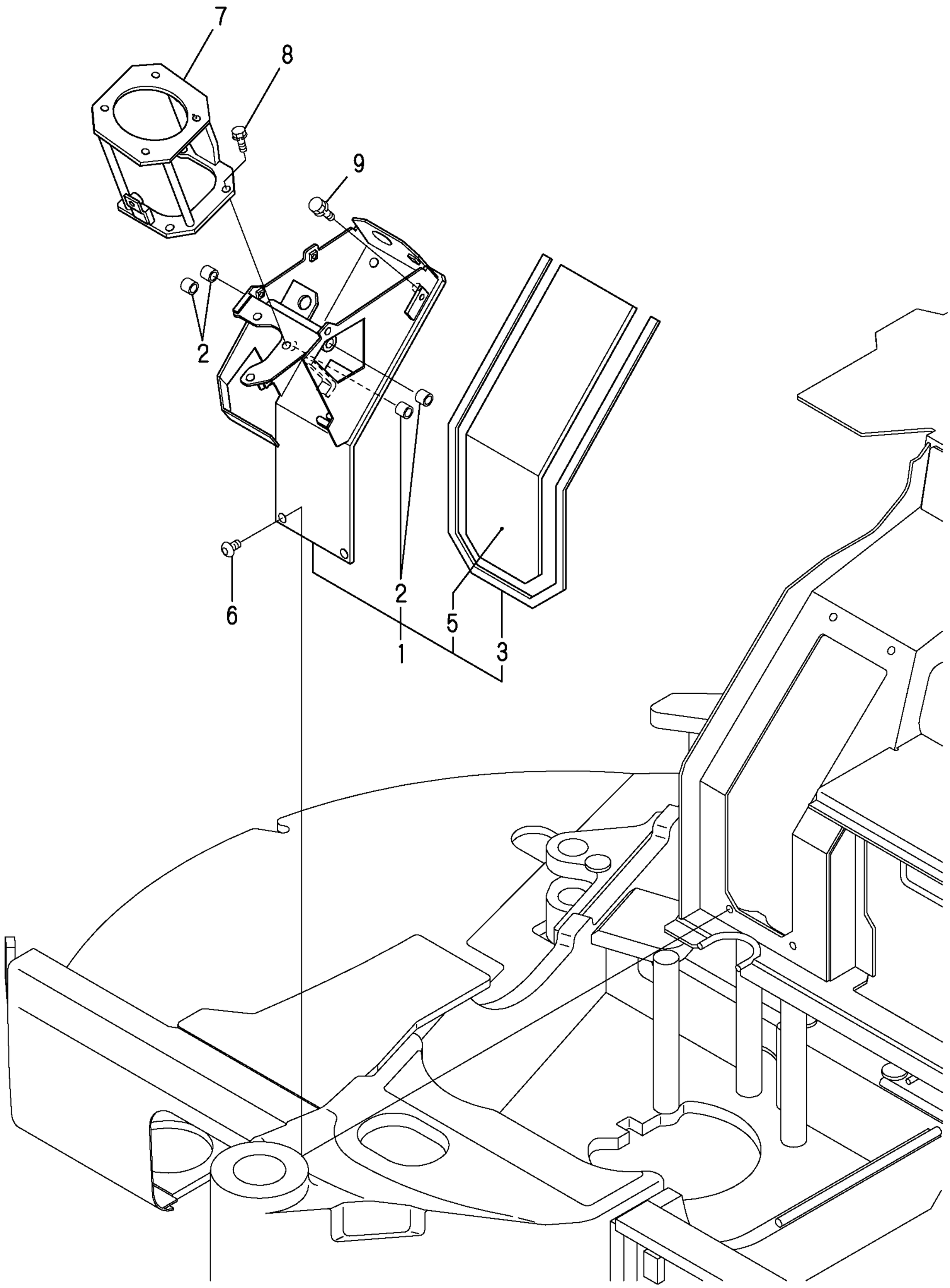

https://truckmanualshub.com/

```
1,1,,1D4070-23580,,"GRIP,RED ROUND",1,,,,,,,,,,,,,,,,
2,1,,172486-45540,,"GUIDE L,HOSE(GRAY:73",1,,,,,,,,,,,,,,,,,
3,1,,172124-46200,,"O-RING 27X5.7",2,,,,,,,,,,,,,,,,,
4,1,,172485-45400,,"LEVER STAND L(GRAY73",1,,,,,,,,,,,,,,,,,
5,2,,172161-41370,,"BUSH 2015",2,,,,,,,,,,,,,,,,,
7,2,,24550-025150,,"BUSH 25X15",2,,,,,,,,,,,,,,,,,
8,1,,172162-46690,,SPRING,1,,,,,,,,,,,,,,,,,
9,1,,172455-46890,,"SPRING,GAS",1,,,,,,,,,,,,,,,,,
10,1,,172485-45810,,"BRACKET,SWITCH",1,,,,,,,,,,,,,,,,,
11,1,,172165-47550,,BUSH,1,,,,,,,,,,,,,,,,,
12,1,,172485-45820,,"LOCK GUIDE L(GRAY:73",1,,,,,,,,,,,,,,,,,
13,1,,172485-45850,,"LOCK LEVER L US (72)",1,,,,,,,,,,,,,,,,,
14,1,,172485-45880,,"ROD,SPRING (GRAY:73)",1,,,,,,,,,,,,,,,,,
15,1,,172165-47980,,"SHIM 42X25.5X0.5",2,,,,,,,,,,,,,,,,,
16,1,,172165-47990,,"WASHER 25.5X42",1,,,,,,,,,,,,,,,,,
17,1,,22137-080000,,"WASHER 8, POLISHED",2,,,,,,,,,,,,,,,,,
18,1,,22137-080000,,"WASHER 8, POLISHED",2,,,,,,,,,,,,,,,,,
19,1,,22242-000250,,"CIRCLIP 25S",1,,,,,,,,,,,,,,,,,
20,1,,22272-000070,,"CIRCLIP E- 7",1,,,,,,,,,,,,,,,,,
21,1,,22351-035040,,"SPRING PIN 3.5X40",1,,,,,,,,,,,,,,,,,
22,1,,22351-060040,,"SPRING PIN 6X40",1,,,,,,,,,,,,,,,,,
23,1,,22417-200200,,"COTTER PIN 2.0X20",2,,,,,,,,,,,,,,,,,
24,1,,24311-000340,,"O-RING 1A P-34.0",2,,,,,,,,,,,,,,,,,
25,1,,24761-050000,,"NIPPLE C,GREASE",2,,,,,,,,,,,,,,,,,
26,1,,26013-080162,,"BOLT W/WASHER M8X16",2,,,,,,,,,,,,,,,,,
27,1,,26013-080202,,"BOLT W/WASHER M8X20",2,,,,,,,,,,,,,,,,,
28,1,,26013-100202,,"BOLT W/WASHER M10X20",3,,,,,,,,,,,,,,,,,
29,1,,172472-46220,,"BRACKET ASSY,L  (73)",1,,,,,,,,,,,,,,,,,
30,1,,26013-080202,,"BOLT W/WASHER M8X20",3,,,,,,,,,,,,,,,,,
31,1,,172485-45920,,"BRACKET ASSY,DAMPER",1,,,,,,,,,,,,,,,,,
32,1,,26013-100202,,"BOLT W/WASHER M10X20",2,,,,,,,,,,,,,,,,,
33,1,,172176-67150,,RUBBER,1,,,,,,,,,,,,,,,,,
```

https://truckmanualshub.com/

# Fig. 14 CONTROL EQUIP. (LOCK LEVER) L

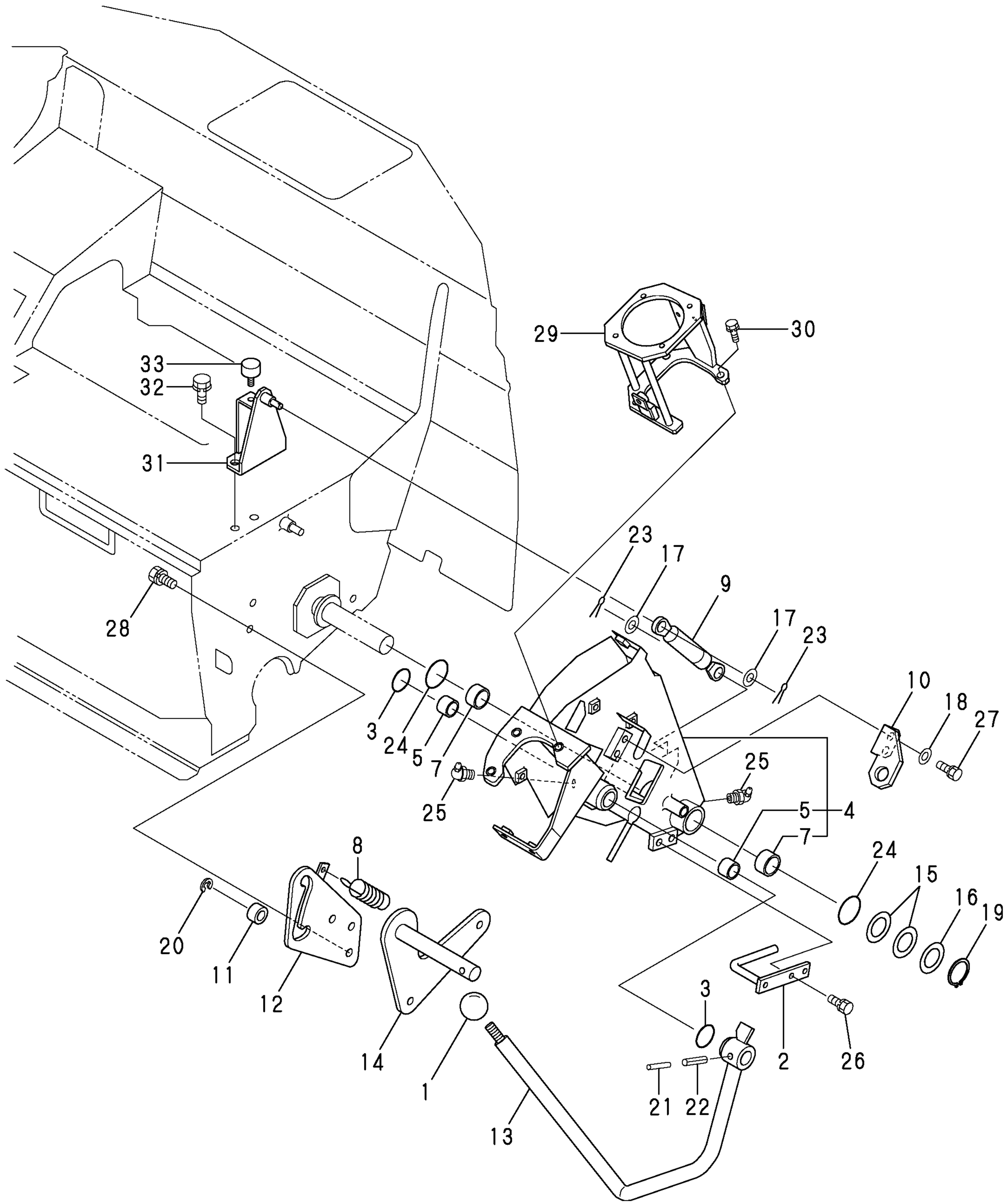

https://truckmanualshub.com/

```
1,1,,172141-41340,,BOOTS,2,,,,,,,,,,,,,,,,,,
2,1,,172485-45100,,"LEVER L,TRACK(GRAY72",1,,,,,,,,,,,,,,,,,,
3,2,,172161-41370,,"BUSH 2015",2,,,,,,,,,,,,,,,,,,
5,1,,933110-54100,,"PIN 4.75X14",2,,,,,,,,,,,,,,,,,,
6,1,,172187-45870,,"GRIP L, DRIVE",1,,,,,,,,,,,,,,,,,,
7,1,,172187-45880,,"GRIP R, DRIVE",1,,,,,,,,,,,,,,,,,,
8,1,,22117-040000,,"WASHER  4",2,,,,,,,,,,,,,,,,,,
9,1,,26116-100404,,"BOLT M10X 40 PLATED",2,,,,,,,,,,,,,,,,,,
10,1,,26116-100604,,"BOLT M10X 60 PLATED",2,,,,,,,,,,,,,,,,,,
11,1,,26587-040122,,"SCREW M 4X 12",2,,,,,,,,,,,,,,,,,,
12,1,,26716-100002,,"NUT 10",4,,,,,,,,,,,,,,,,,,
13,1,,172486-45140,,"BRACKET ASSY(GRAY:72",1,,,,,,,,,,,,,,,,,,
14,1,,172124-46200,,"O-RING 27X5.7",3,,,,,,,,,,,,,,,,,,
15,1,,24761-020000,,"NIPPLE PT1/8,GREASE",1,,,,,,,,,,,,,,,,,,
16,1,,26013-100252,,"BOLT W/WASHER M10X25",2,,,,,,,,,,,,,,,,,,
17,1,,172486-45400,,"LINK STAND ASSY (12)",1,,,,,,,,,,,,,,,,,,
18,1,,172458-45510,,"BRACKET,BOOT(BLACK12",1,,,,,,,,,,,,,,,,,,
19,1,,22137-080000,,"WASHER 8, POLISHED",2,,,,,,,,,,,,,,,,,,
20,1,,26013-100202,,"BOLT W/WASHER M10X20",6,,,,,,,,,,,,,,,,,,
21,1,,172485-45360,,"ROD 91 ASSY",2,,,,,,,,,,,,,,,,,,
22,1,,172122-46590,,"ELBALL 8",2,,,,,,,,,,,,,,,,,,
23,1,,22117-080000,,"WASHER  8",2,,,,,,,,,,,,,,,,,,
24,1,,22417-160160,,"COTTER PIN 1.6X16",2,,,,,,,,,,,,,,,,,,
25,1,,26051-080002,,"NUT M 8",4,,,,,,,,,,,,,,,,,,
26,1,,172485-45180,,"LEVER R,TRACK(GRAY72",1,,,,,,,,,,,,,,,,,,
27,2,,172161-41370,,"BUSH 2015",2,,,,,,,,,,,,,,,,,,
29,1,,26013-080162,,"BOLT W/WASHER M8X16",2,,,,,,,,,,,,,,,,,,
30,1,,24761-050000,,"NIPPLE C,GREASE",1,,,,,,,,,,,,,,,,,,
31,1,,172485-45310,,"PEDAL L ASSY(TRACK",1,,,,,,,,,,,,,,,,,,
32,1,,172485-45340,,"PEDAL R ASSY(TRACK",1,,,,,,,,,,,,,,,,,,
33,1,,26013-060352,,"BOLT M 6X 35",4,,,,,,,,,,,,,,,,,,
```

https://truckmanualshub.com/

# Fig. 15 CONTROL EQUIP. (TRAVEL LEVER)

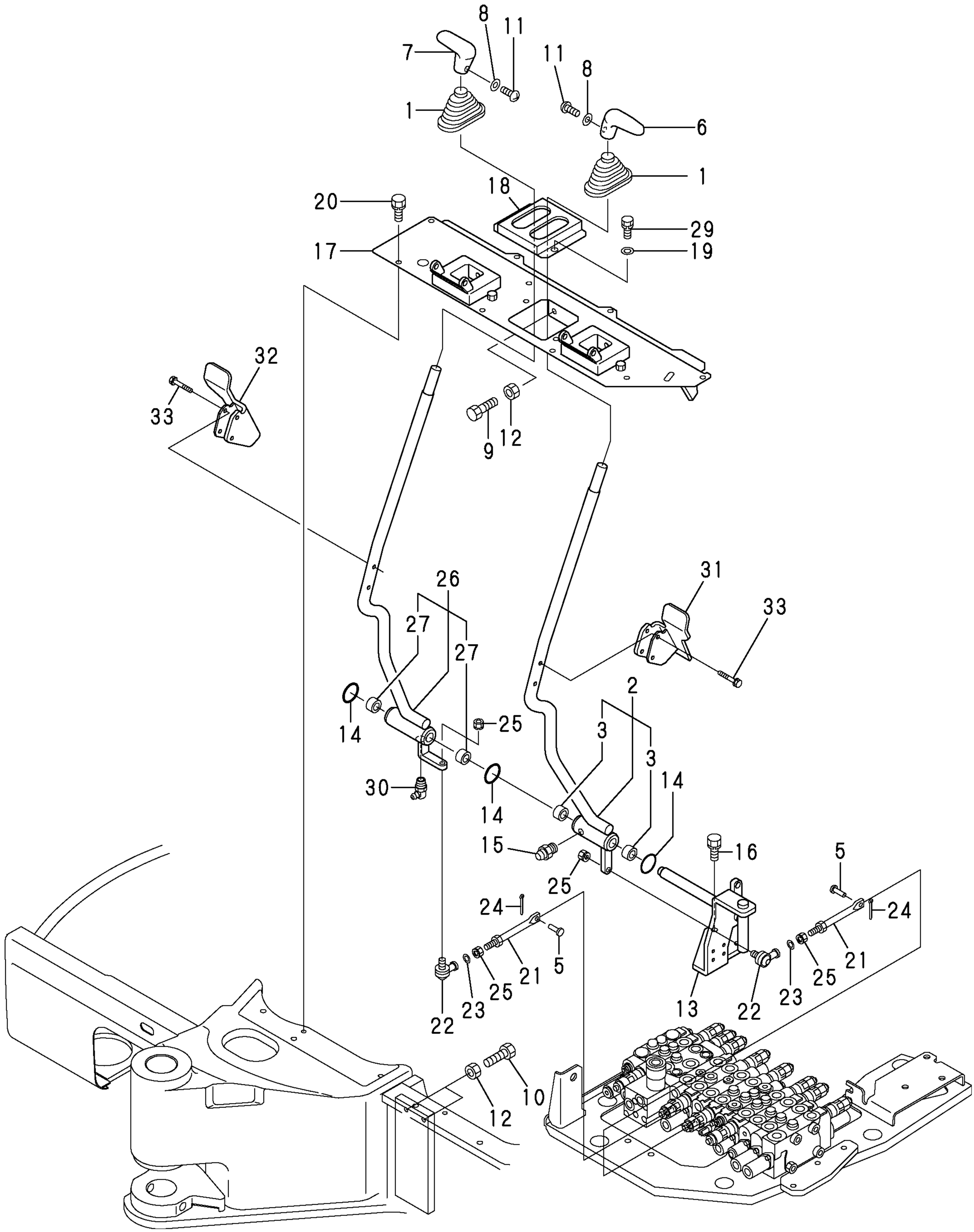

https://truckmanualshub.com/

```
1,1,,172485-45230,,"LEVER,BLADE(GRAY:72)",1,,,,,,,,,,,,,,,,,,
2,1,,172485-45250,,"SHAFT ASSY",1,,,,,,,,,,,,,,,,,
3,1,,172164-45970,,"GRIP, BLADE",1,,,,,,,,,,,,,,,,,
4,1,,22351-030032,,"SPRING PIN 3X32",1,,,,,,,,,,,,,,,,,
5,1,,22351-050032,,"SPRING PIN 5X32",1,,,,,,,,,,,,,,,,,
6,1,,24311-000210,,"O-RING 1A P-21.0",2,,,,,,,,,,,,,,,,,
7,1,,26116-080254,,"BOLT M 8X 25 PLATED",2,,,,,,,,,,,,,,,,,,
8,1,,26716-080002,,"NUT M 8",2,,,,,,,,,,,,,,,,,
9,1,,172472-45800,,"CABLE, BLADE",1,,,,,,,,,,,,,,,,,
10,1,,22417-160160,,"COTTER PIN 1.6X16",1,,,,,,,,,,,,,,,,,,
11,1,,26051-080002,,"NUT M 8",1,,,,,,,,,,,,,,,,,
12,1,,933110-54100,,"PIN 4.75X14",1,,,,,,,,,,,,,,,,,
```

https://truckmanualshub.com/

# Fig. 16 CONTROL EQUIPMENT (BLADE LEVER)

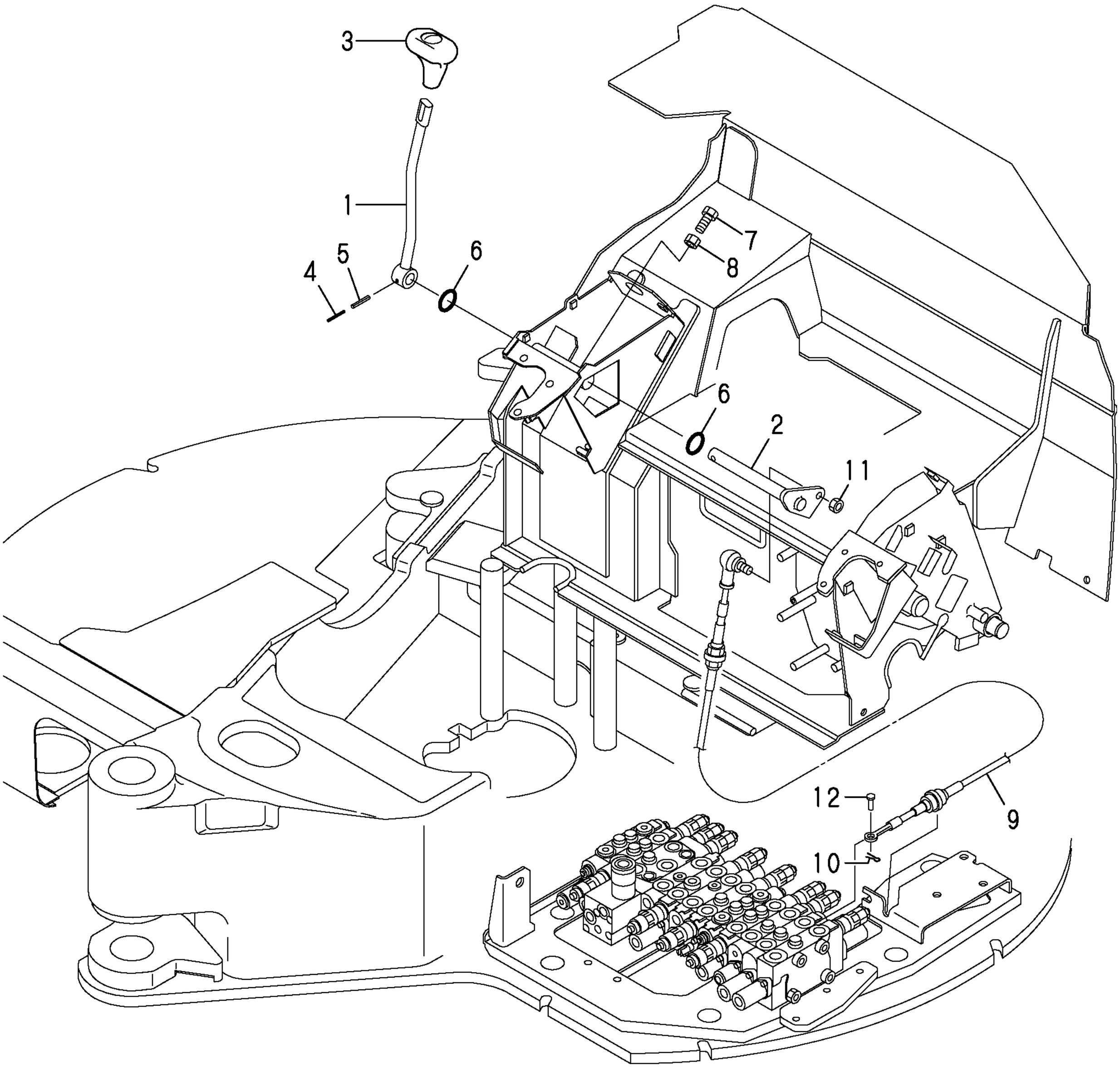

https://truckmanualshub.com/

```
1,1,,172486-45100,,"LINK,SWING (GRAY:72)",1,,,,,,,,,,,,,,,,,,
2,2,,172161-41370,,"BUSH 2015",2,,,,,,,,,,,,,,,,,,
4,1,,172486-45180,,"LINK,PEDAL (GRAY:72)",1,,,,,,,,,,,,,,,,,,
5,2,,172161-41360,,"BUSH 1415",2,,,,,,,,,,,,,,,,,,
7,1,,172486-45230,,"SHAFT,PEDAL(GRAY:72)",1,,,,,,,,,,,,,,,,,,
8,1,,1A1040-45890,,"WASHER 10 36 4.5",1,,,,,,,,,,,,,,,,,,
9,1,,172124-46200,,"O-RING 27X5.7",2,,,,,,,,,,,,,,,,,,
10,1,,22217-100000,,"SPRING WASHER 10",1,,,,,,,,,,,,,,,,,,
11,1,,24311-000210,,"O-RING 1A P-21.0",2,,,,,,,,,,,,,,,,,,
12,1,,24761-020000,,"NIPPLE PT1/8,GREASE",1,,,,,,,,,,,,,,,,,,
13,1,,24761-040000,,"NIPPLE B,GREASE",1,,,,,,,,,,,,,,,,,,
14,1,,26013-080162,,"BOLT W/WASHER M8X16",2,,,,,,,,,,,,,,,,,,
15,1,,26116-080254,,"BOLT M 8X 25 PLATED",2,,,,,,,,,,,,,,,,,,
16,1,,26116-100202,,"BOLT M10X 20 PLATED",1,,,,,,,,,,,,,,,,,,
17,1,,26716-080002,,"NUT M 8",2,,,,,,,,,,,,,,,,,,
18,1,,172486-45300,,"PEDAL,SWING(GRAY:72)",1,,,,,,,,,,,,,,,,,,
19,1,,172458-45540,,"COVER,PEDAL(GRAY:72)",1,,,,,,,,,,,,,,,,,,
20,1,,172486-45360,,"SHAFT,PEDAL COVER",1,,,,,,,,,,,,,,,,,,
21,1,,172187-45760,,"COVER PAD",1,,,,,,,,,,,,,,,,,,
22,1,,172157-45990,,"BOOTS, PEDAL",1,,,,,,,,,,,,,,,,,,
23,1,,172165-46340,,BOLT,2,,,,,,,,,,,,,,,,,,
24,1,,22137-100000,,"WASHER 10,POLISHED",1,,,,,,,,,,,,,,,,,,
25,1,,22417-250200,,"COTTER PIN 2.5X20",1,,,,,,,,,,,,,,,,,,
26,1,,194200-37780,,"LS-NUT 8",1,,,,,,,,,,,,,,,,,,
27,1,,172734-41300,,"LINK BALL 8L",1,,,,,,,,,,,,,,,,,,
28,1,,172485-45380,,"ROD,LINK R",1,,,,,,,,,,,,,,,,,,
29,1,,172485-45080,,"ROD 130 ASSY",1,,,,,,,,,,,,,,,,,,
30,1,,172122-46590,,"ELBALL 8",2,,,,,,,,,,,,,,,,,,
31,1,,22117-080000,,"WASHER  8",3,,,,,,,,,,,,,,,,,,
32,1,,22417-160160,,"COTTER PIN 1.6X16",1,,,,,,,,,,,,,,,,,,
33,1,,26051-080002,,"NUT M 8",5,,,,,,,,,,,,,,,,,,
34,1,,933110-54100,,"PIN 4.75X14",1,,,,,,,,,,,,,,,,,,
```

https://truckmanualshub.com/

# Fig. 17 CONTROL EQUIPMENT (SWING PEDAL)

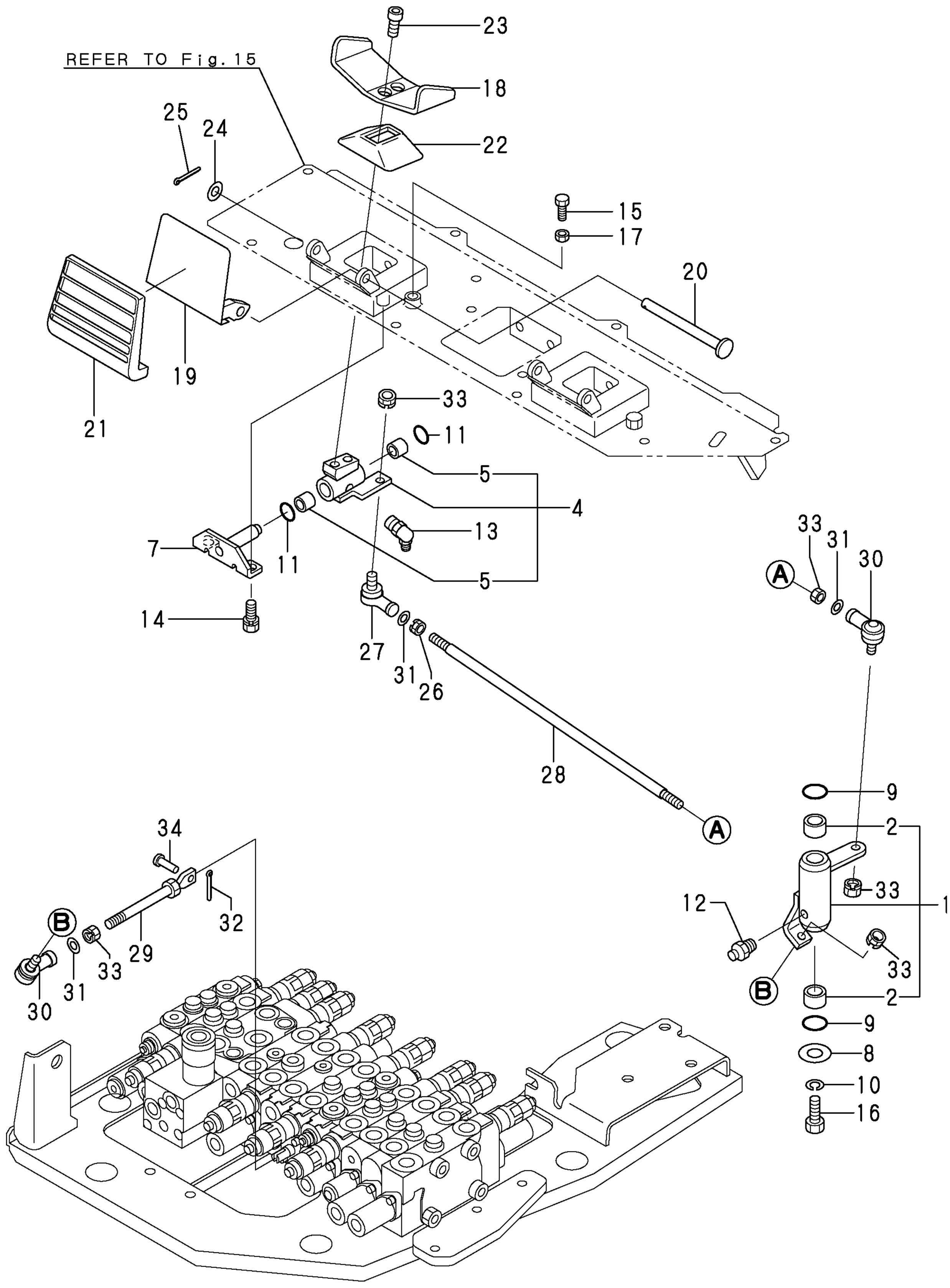

https://truckmanualshub.com/

```
1,1,,172162-12480,,"SPRING,RETURN",1,,,,,,,,,,,,,,,,,
2,1,,1A1040-43900,,"SPRING WASHER",1,,,,,,,,,,,,,,,,,
3,1,,172487-45900,,"PEDAL,LO-HI(GRAY:72)",1,,,,,,,,,,,,,,,,,,
4,1,,172458-45920,,"BRACKET,PEDAL(GRAY72",1,,,,,,,,,,,,,,,,,,
5,2,,172141-41360,,"BUSH 1415",2,,,,,,,,,,,,,,,,,
7,1,,172458-45950,,"PAD,PEDAL",1,,,,,,,,,,,,,,,,,
8,1,,24311-000210,,"O-RING 1A P-21.0",2,,,,,,,,,,,,,,,,,
9,1,,26013-080162,,"BOLT W/WASHER M8X16",2,,,,,,,,,,,,,,,,,
10,1,,26013-080202,,"BOLT W/WASHER M8X20",1,,,,,,,,,,,,,,,,,,
```

https://truckmanualshub.com/

# Fig. 18 CONTROL EQUIP. (LOW-HIGH PEDAL)

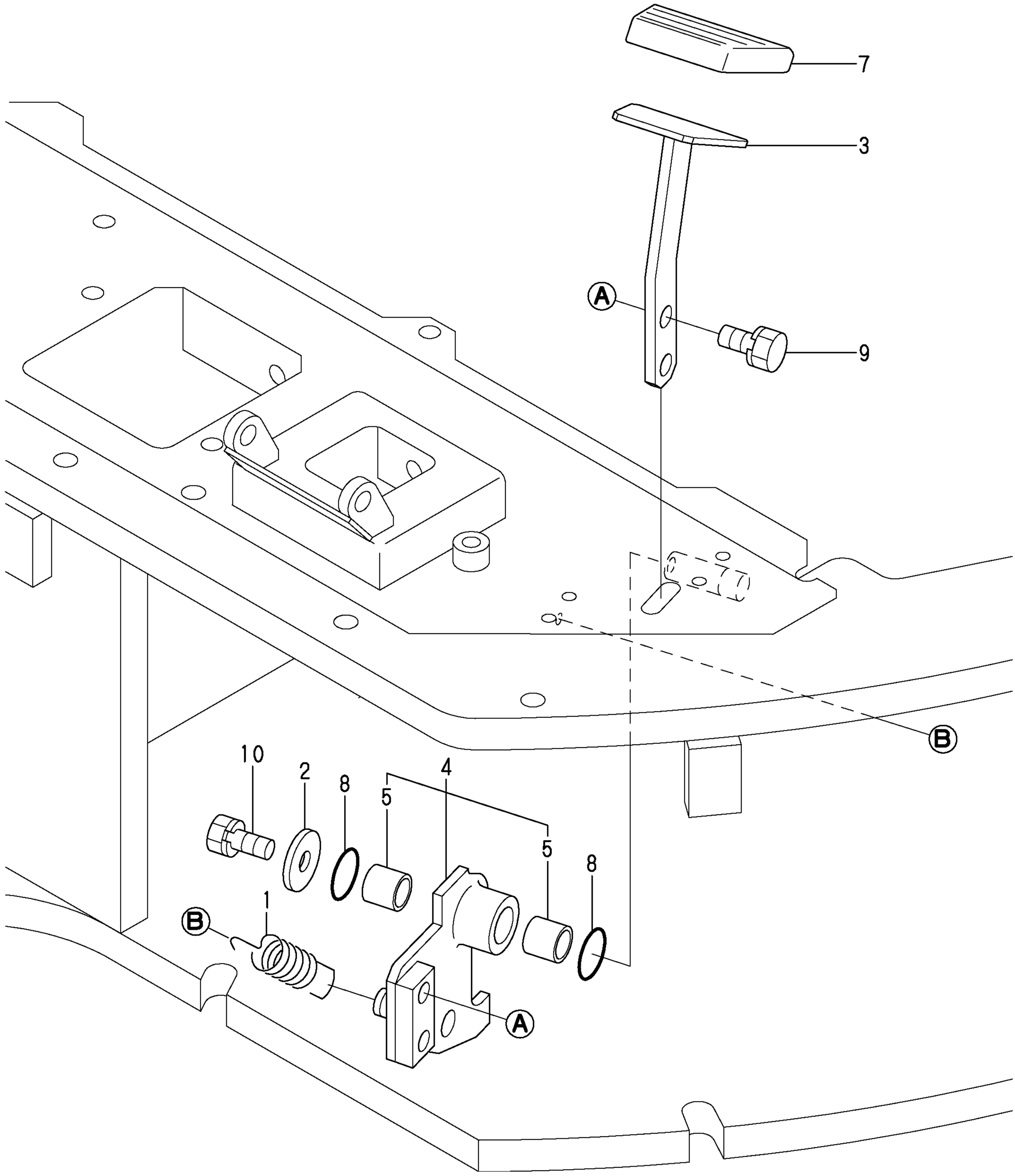

https://truckmanualshub.com/

```
1,1,,172068-28490,,"SPRING  8",2,,,,,,,,,,,,,,,,,
2,1,,172472-45500,,"PEDAL,P.T.O(GRAY:72)",1,,,,,,,,,,,,,,,,,
3,1,,172486-45330,,"COVER,PEDAL(GRAY:72)",1,,,,,,,,,,,,,,,,,
4,1,,172187-45760,,"COVER PAD",1,,,,,,,,,,,,,,,,,
5,1,,172448-45800,,"PLATE,LOCK(PTO  (11)",1,,,,,,,,,,,,,,,,,
6,1,,172157-45990,,"BOOTS, PEDAL",1,,,,,,,,,,,,,,,,,
7,1,,172462-46230,,"BOLT 8X10",1,,,,,,,,,,,,,,,,,
8,1,,172165-46340,,BOLT,2,,,,,,,,,,,,,,,,,
9,1,,22417-250200,,"COTTER PIN 2.5X20",1,,,,,,,,,,,,,,,,,
10,1,,22137-080000,,"WASHER 8, POLISHED",1,,,,,,,,,,,,,,,,,
11,1,,26347-080002,,"U-NUT 8",1,,,,,,,,,,,,,,,,,
12,1,,26716-080002,,"NUT M 8",2,,,,,,,,,,,,,,,,,
13,1,,26757-100002,,"LOCK NUT 10",1,,,,,,,,,,,,,,,,,
14,1,,26116-080254,,"BOLT M 8X 25 PLATED",2,,,,,,,,,,,,,,,,,
15,1,,194200-37780,,"LS-NUT 8",1,,,,,,,,,,,,,,,,,
16,1,,172734-41300,,"LINK BALL 8L",1,,,,,,,,,,,,,,,,,
17,1,,172732-42450,,ROD,1,,,,,,,,,,,,,,,,,
18,1,,172823-45000,,"ROD 54, SPOOL",1,,,,,,,,,,,,,,,,,
19,1,,172458-45230,,"SHAFT,PEDAL(GRAY:72)",1,,,,,,,,,,,,,,,,,,
20,1,,172467-45300,,"LINK A ASSY",1,,,,,,,,,,,,,,,,,
21,2,,172141-41370,,"BUSH 2015",2,,,,,,,,,,,,,,,,,
23,1,,172472-45330,,"LINK B ASSY",1,,,,,,,,,,,,,,,,,
24,2,,172141-41370,,"BUSH 2015",2,,,,,,,,,,,,,,,,,
26,1,,172467-45370,,"BRACKET ASSY",1,,,,,,,,,,,,,,,,,
27,1,,1A1040-45890,,"WASHER 10 36 4.5",1,,,,,,,,,,,,,,,,,
28,1,,172124-46200,,"O-RING 27X5.7",2,,,,,,,,,,,,,,,,,
29,1,,172122-46590,,"ELBALL 8",2,,,,,,,,,,,,,,,,,
30,1,,22117-080000,,"WASHER  8",3,,,,,,,,,,,,,,,,,
31,1,,22217-100000,,"SPRING WASHER 10",1,,,,,,,,,,,,,,,,,
32,1,,22417-160160,,"COTTER PIN 1.6X16",1,,,,,,,,,,,,,,,,,
33,1,,24311-000210,,"O-RING 1A P-21.0",2,,,,,,,,,,,,,,,,,
34,1,,24761-050000,,"NIPPLE C,GREASE",1,,,,,,,,,,,,,,,,,
35,1,,26013-080162,,"BOLT W/WASHER M8X16",2,,,,,,,,,,,,,,,,,
36,1,,26013-100202,,"BOLT W/WASHER M10X20",2,,,,,,,,,,,,,,,,,,
37,1,,26051-080002,,"NUT M 8",5,,,,,,,,,,,,,,,,,
38,1,,26116-100202,,"BOLT M10X 20 PLATED",1,,,,,,,,,,,,,,,,,
39,1,,933110-54100,,"PIN 4.75X14",1,,,,,,,,,,,,,,,,,
40,1,,24761-040000,,"NIPPLE B,GREASE",1,,,,,,,,,,,,,,,,,
41,1,,172187-45651,,"SHAFT, PEDAL COVER",1,,,,,,,,,,,,,,,,,
42,1,,22137-100000,,"WASHER 10,POLISHED",1,,,,,,,,,,,,,,,,,
```

https://truckmanualshub.com/

# Fig. 19 CONTROL EQUIPMENT (P.T.O. PEDAL)

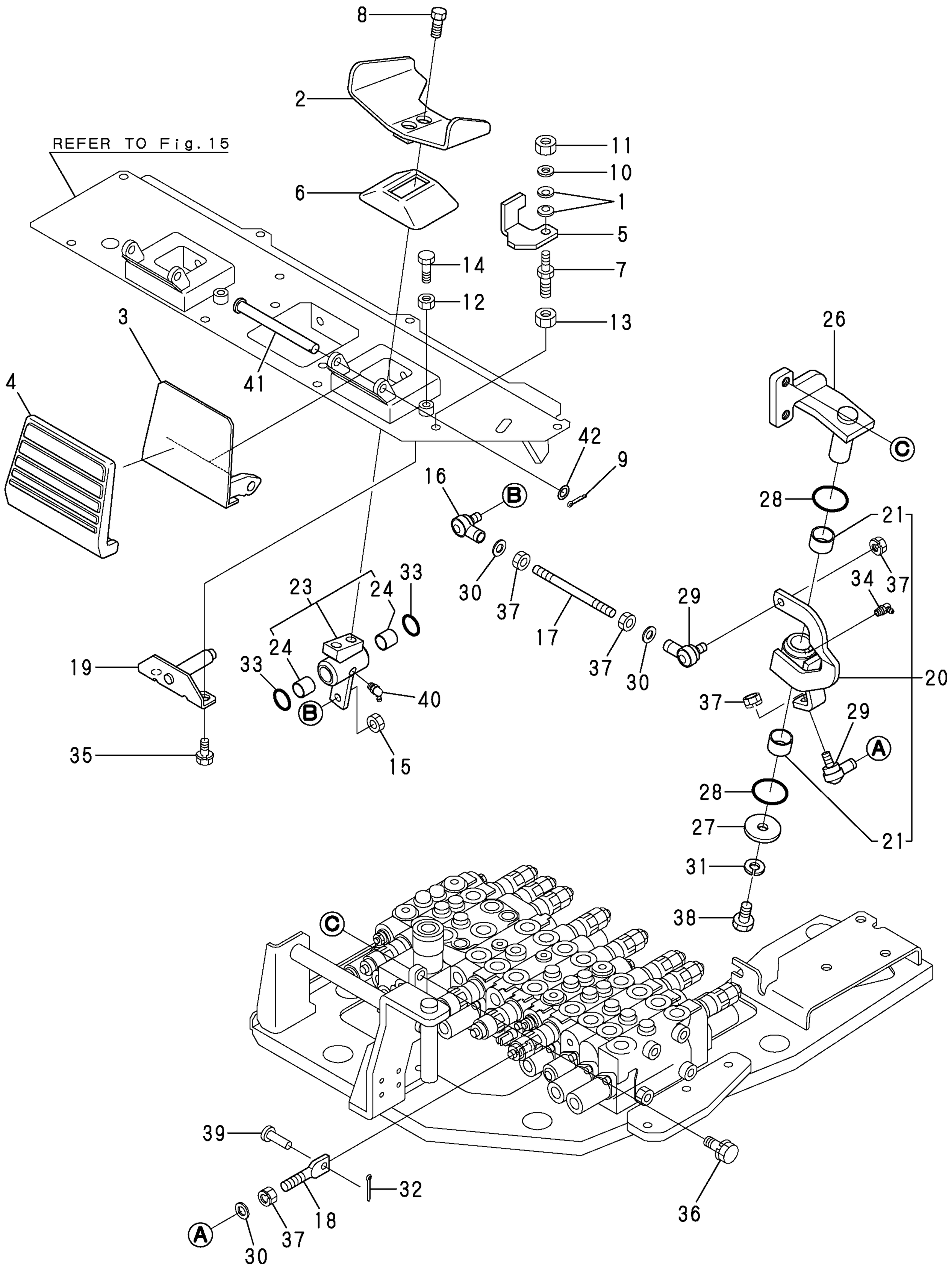

https://truckmanualshub.com/

```
1,1,,172460-50100-1,,"LOWER FLAME(GREEN:82",1,,,,,,,,,,,,,,,,,,
2,1,,172141-50890,,GROMMET,2,,,,,,,,,,,,,,,,,,
3,1,,172455-57650,,"BOLT 16X90",20,,,,,,,,,,,,,,,,,,
4,1,,172455-57661,,"BOLT 16X80",20,,,,,,,,,,,,,,,,,,
5,1,,26116-160402,,"BOLT M16X 40 PLATED",2,,,,,,,,,,,,,,,,,,
6,1,,172486-53300,,"WEIGHT    (GREEN:82)",1,,,,,,,,,,,,,,,,,,
7,1,,172486-53310,,"WASHER 24.5X65X8",2,,,,,,,,,,,,,,,,,,
8,1,,172486-53320,,"BOLT 24X140",2,,,,,,,,,,,,,,,,,,
9,1,,172486-53330,,"BRACKET   (GREEN:86)",2,,,,,,,,,,,,,,,,,,
10,1,,172476-53361,,"WEIGHT,SIDE L   (82)",1,,,,,,,,,,,,,,,,,,
12,2,,172486-53380,,"EV,WEIGHT L",1,,,,,,,,,,,,,,,,,,
13,2,,172486-53570,,"EV,WEIGHT",1,,,,,,,,,,,,,,,,,,
14,1,,172486-53391,,"WEIGHT,SIDE R   (82)",1,,,,,,,,,,,,,,,,,,
16,2,,172486-53570,,"EV,WEIGHT",1,,,,,,,,,,,,,,,,,,
17,1,,172151-53430,,GROMMET,4,,,,,,,,,,,,,,,,,,
18,1,,172486-53430,,"WASHER 16.5X35",8,,,,,,,,,,,,,,,,,,
19,1,,22217-160000,,"SPRING WASHER 16",8,,,,,,,,,,,,,,,,,,
20,1,,26116-160502,,"BOLT M16X 50 PLATED",2,,,,,,,,,,,,,,,,,,
21,1,,26116-160702,,"BOLT 16* 70",1,,,,,,,,,,,,,,,,,,
22,1,,26116-160902,,"BOLT 16* 90",3,,,,,,,,,,,,,,,,,,
23,1,,172486-54090,,"TURNING FRAME   (86)",1,,,,,,,,,,,,,,,,,,
24,2,,172486-54670,,"SEAL,TURNNING",1,,,,,,,,,,,,,,,,,,
26,1,,172486-54640,,"PLATE, BASE(GREEN:86",1,,,,,,,,,,,,,,,,,,
27,1,,26013-100252,,"BOLT W/WASHER M10X25",1,,,,,,,,,,,,,,,,,,
28,1,,172445-57600,,"BEARING,TURNING",1,,,,,,,,,,,,,,,,,,
29,1,,172122-57620,,"PARALLEL PIN 13X36",4,,,,,,,,,,,,,,,,,,
30,1,,172423-50810-1,,"GUARD,CRAWLER",4,,,,,,,,,,,,,,,,,,
31,1,,22217-160000,,"SPRING WASHER 16",8,,,,,,,,,,,,,,,,,,
32,1,,26116-160352,,"BOLT M16X 35 PLATED",12,,,,,,,,,,,,,,,,,,
33,1,,172486-53500,,"SPACER M20 1.5",2,,,,,,,,,,,,,,,,,,
34,1,,172486-53510,,"SPACER M20 2.0",2,,,,,,,,,,,,,,,,,,
35,1,,172486-53520,,"SPACER M20 3.0",2,,,,,,,,,,,,,,,,,,
```

https://truckmanualshub.com/

# Fig.20 FRAME & TURNING BEARING

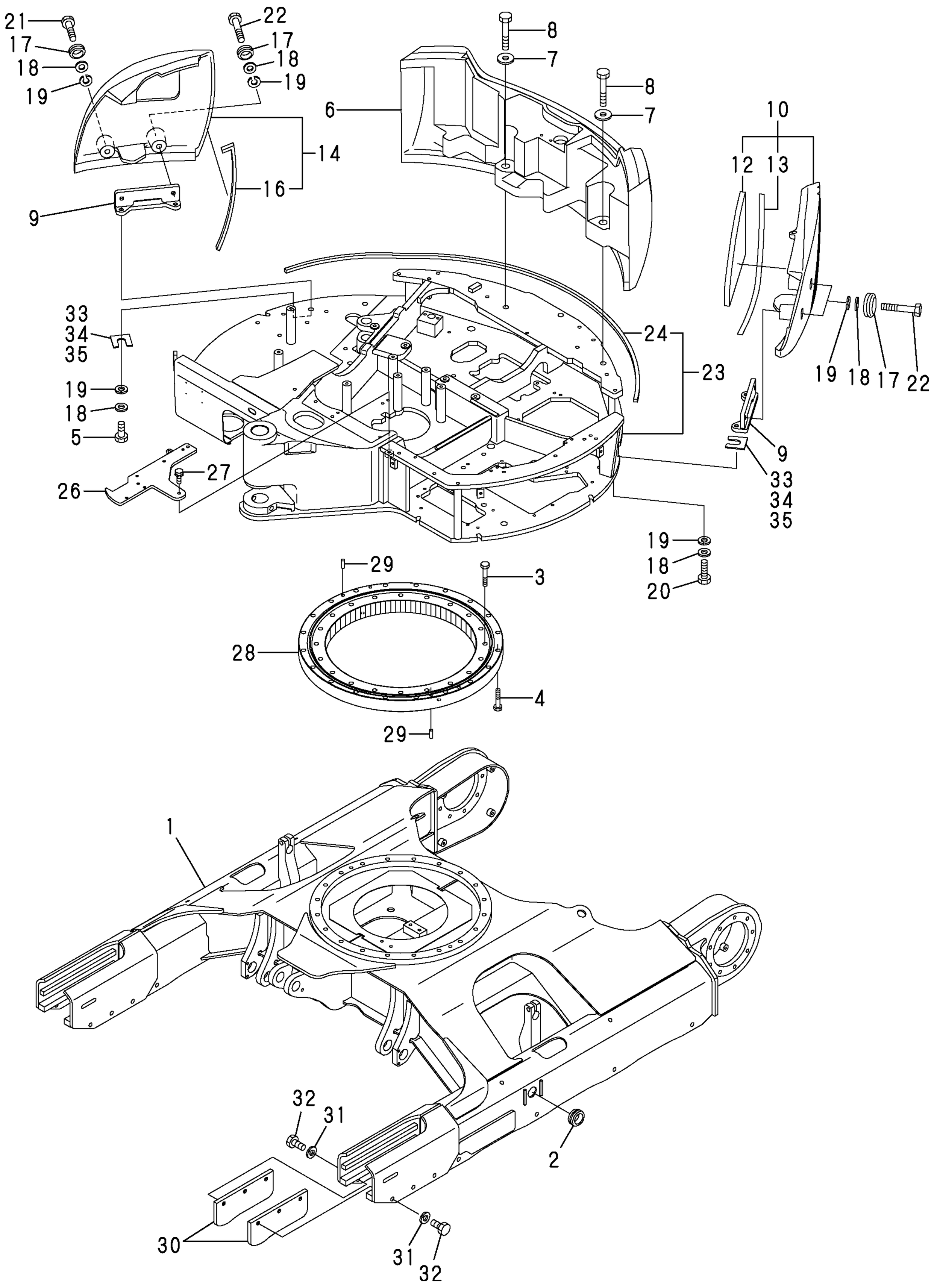

https://truckmanualshub.com/

```
1,1,,172460-61100-2,,"COVER     (GREEN:82)",2,,,,,,,,,,,,,,,,,,
2,1,,172460-61120-1,,"COVER     (GREEN:82)",1,,,,,,,,,,,,,,,,,,
3,1,,172486-61130,,"COVER A   (GREEN:86)",1,,,,,,,,,,,,,,,,,,
4,1,,172486-61140,,"COVER B   (GREEN:86)",1,,,,,,,,,,,,,,,,,,
5,1,,172486-61150,,"COVER C   (GREEN:86)",1,,,,,,,,,,,,,,,,,,
6,1,,172486-61160,,"COVER D   (GREEN:86)",1,,,,,,,,,,,,,,,,,,
7,1,,172486-61171,,"COVER E   (GREEN:86)",1,,,,,,,,,,,,,,,,,,
8,1,,172486-61261,,"COVER,ELECTRIC  (73)",1,,,,,,,,,,,,,,,,,,
9,1,,172486-61180,,"COVER,FRAME L   (86)",1,,,,,,,,,,,,,,,,,,
11,2,,172460-61240,,EV,1,,,,,,,,,,,,,,,,,,
12,2,,172460-61260,,EV,1,,,,,,,,,,,,,,,,,,
13,1,,172486-61291,,"COVER,FRAME R   (86)",1,,,,,,,,,,,,,,,,,,
14,1,,172458-61300,,"GROMMET,MULTI",1,,,,,,,,,,,,,,,,,,
15,1,,172486-61321,,"COVER ASSY,MULTI",1,,,,,,,,,,,,,,,,,,
17,2,,172486-61400,,EV,1,,,,,,,,,,,,,,,,,,
18,2,,172486-61410,,"SEAL,MULTI COVER A",1,,,,,,,,,,,,,,,,,,
19,2,,172486-61420,,"SEAL,MULTI COVER B",1,,,,,,,,,,,,,,,,,,
20,2,,172486-61790,,"RUBBER, SEAL",1,,,,,,,,,,,,,,,,,,
21,2,,172486-61440,,"SEAL E",1,,,,,,,,,,,,,,,,,,
22,2,,172486-61450,,"SEAL F",1,,,,,,,,,,,,,,,,,,
23,2,,172184-65800,,"RUBBER, SEAL E",1,,,,,,,,,,,,,,,,,,
24,1,,172486-61470,,"PLATE ASSY,US",1,,,,,,,,,,,,,,,,,,
25,2,,172455-18640,,RUBBER,1,,,,,,,,,,,,,,,,,,
27,1,,172162-61500,,RUBBER,4,,,,,,,,,,,,,,,,,,
28,1,,172486-61550,,"COVER RR ASSY   (87)",1,,,,,,,,,,,,,,,,,,
29,1,,172486-61580,,PLUG,5,,,,,,,,,,,,,,,,,,
30,1,,172486-61601,,"COVER,OIL SUMP  (86)",1,,,,,,,,,,,,,,,,,,
31,1,,172460-61690,,"COVER      (GRAY:73)",1,,,,,,,,,,,,,,,,,,
32,2,,172458-61650,,"SEAL,SIDE COVER",1,,,,,,,,,,,,,,,,,,
34,2,,172460-61730,,EV,1,,,,,,,,,,,,,,,,,,
35,2,,172460-61740,,EV,1,,,,,,,,,,,,,,,,,,
36,2,,172649-65760,,"SEAL B, RUBBER",1,,,,,,,,,,,,,,,,,,
37,1,,26014-100202,,"BOLT M10X 20",2,,,,,,,,,,,,,,,,,,
38,1,,172142-62300,,"WING BOLT M10X15",1,,,,,,,,,,,,,,,,,,
39,1,,26106-100162,,"BOLT M10X 16 PLATED",17,,,,,,,,,,,,,,,,,,
40,1,,22157-120000,,"WASHER 12",4,,,,,,,,,,,,,,,,,,
41,1,,22417-320200,,"COTTER PIN 3.2X20",1,,,,,,,,,,,,,,,,,,
42,1,,26013-060122,,"BOLT M 6X 12",3,,,,,,,,,,,,,,,,,,
43,1,,26013-100202,,"BOLT W/WASHER M10X20",8,,,,,,,,,,,,,,,,,,
44,1,,26106-100202,,"BOLT M10X 20 PLATED",1,,,,,,,,,,,,,,,,,,
45,1,,26013-100202,,"BOLT W/WASHER M10X20",3,,,,,,,,,,,,,,,,,,
46,1,,26106-100162,,"BOLT M10X 16 PLATED",4,,,,,,,,,,,,,,,,,,
47,1,,26106-100302,,"BOLT M10X 30 PLATED",1,,,,,,,,,,,,,,,,,,
48,1,,26013-100352,,"BOLT M10X 35",5,,,,,,,,,,,,,,,,,,
49,1,,26013-120302,,"BOLT W/WASHER M12X30",4,,,,,,,,,,,,,,,,,,
50,1,,26014-100202,,"BOLT M10X 20",4,,,,,,,,,,,,,,,,,,
51,1,,26014-100202,,"BOLT M10X 20",5,,,,,,,,,,,,,,,,,,
52,1,,172486-61280,,WASHER,5,,,,,,,,,,,,,,,,,,
53,1,,172485-61140,,"CLIP 5",3,,,,,,,,,,,,,,,,,,
```

https://truckmanualshub.com/

# Fig. 21 COVER (FRAME)

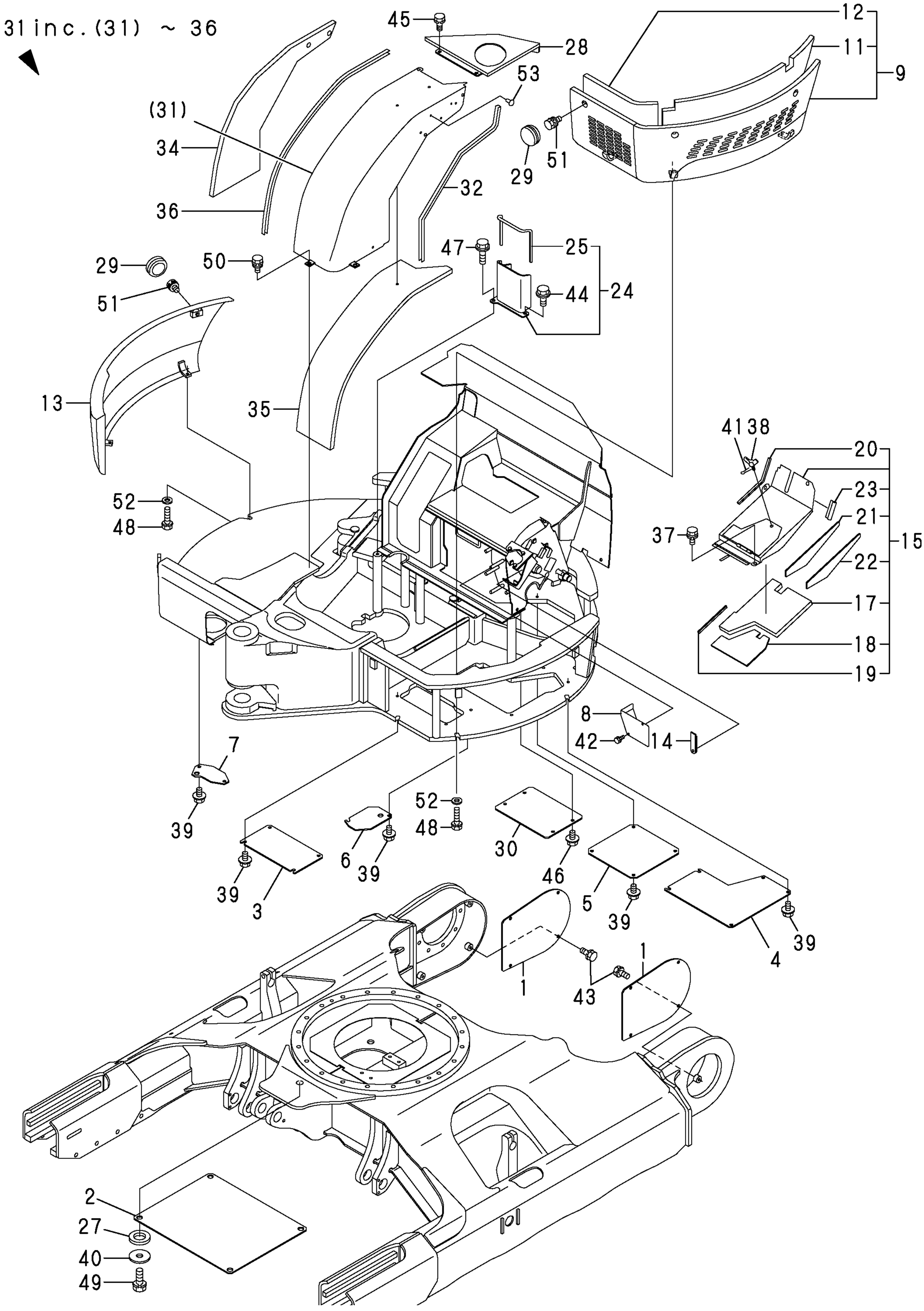

https://truckmanualshub.com/

```
1,1,,172458-63350,,SPOGE,1,,,,,,,,,,,,,,,,,,
2,1,,172460-61900-1,,"COVER L(CAB(YELLOW87",1,,,,,,,,,,,,,,,,,,,,
3,2,,172460-61910-1,,"COVER L(CAB(YELLOW87",1,,,,,,,,,,,,,,,,,,,,
4,3,,172460-61460,,SEAL,1,,,,,,,,,,,,,,,,,,,
6,2,,172460-61480,,RUBBER,1,,,,,,,,,,,,,,,,,,,
7,2,,172458-61510,,"RUBBER,SEAL 55",1,,,,,,,,,,,,,,,,,,,
8,2,,172458-63900,,STOPPER,1,,,,,,,,,,,,,,,,,,,
9,2,,172175-65870,,"SEAL (A)",1,,,,,,,,,,,,,,,,,,,
10,1,,172458-63520,,"PLATE      (GRAY:73)",1,,,,,,,,,,,,,,,,,,,
11,1,,172458-63540,,"COVER ASSY (GRAY:73)",1,,,,,,,,,,,,,,,,,,,
12,2,,172823-61520,,"RUBBER 325, FRAME",1,,,,,,,,,,,,,,,,,,,
13,2,,172162-61870,,"RUBBER 200,EDGE",1,,,,,,,,,,,,,,,,,,,
15,1,,172468-61210,,"COVER      (GRAY:73)",1,,,,,,,,,,,,,,,,,,,
16,1,,26013-080162,,"BOLT W/WASHER M8X16",1,,,,,,,,,,,,,,,,,,,
17,1,,22137-080000,,"WASHER 8, POLISHED",1,,,,,,,,,,,,,,,,,,,
18,1,,22151-100000,,"WASHER 10",4,,,,,,,,,,,,,,,,,,,
19,1,,26013-080162,,"BOLT W/WASHER M8X16",2,,,,,,,,,,,,,,,,,,,
20,1,,26013-080252,,"BOLT M 8X 25",1,,,,,,,,,,,,,,,,,,,
21,1,,26013-100252,,"BOLT W/WASHER M10X25",4,,,,,,,,,,,,,,,,,,,
22,1,,933160-09220,,GROMMET,1,,,,,,,,,,,,,,,,,,,
23,1,,172460-61960,,"SEAL,CAB-COVER",1,,,,,,,,,,,,,,,,,,,
24,1,,172458-62430,,"WASHER M8",2,,,,,,,,,,,,,,,,,,,
25,1,,172519-63240,,"BOLT  8X 16",2,,,,,,,,,,,,,,,,,,,
26,1,,172444-17660,,CLIP,1,,,,,,,,,,,,,,,,,,,
```

https://truckmanualshub.com/

# Fig.22 COVER (CABIN)

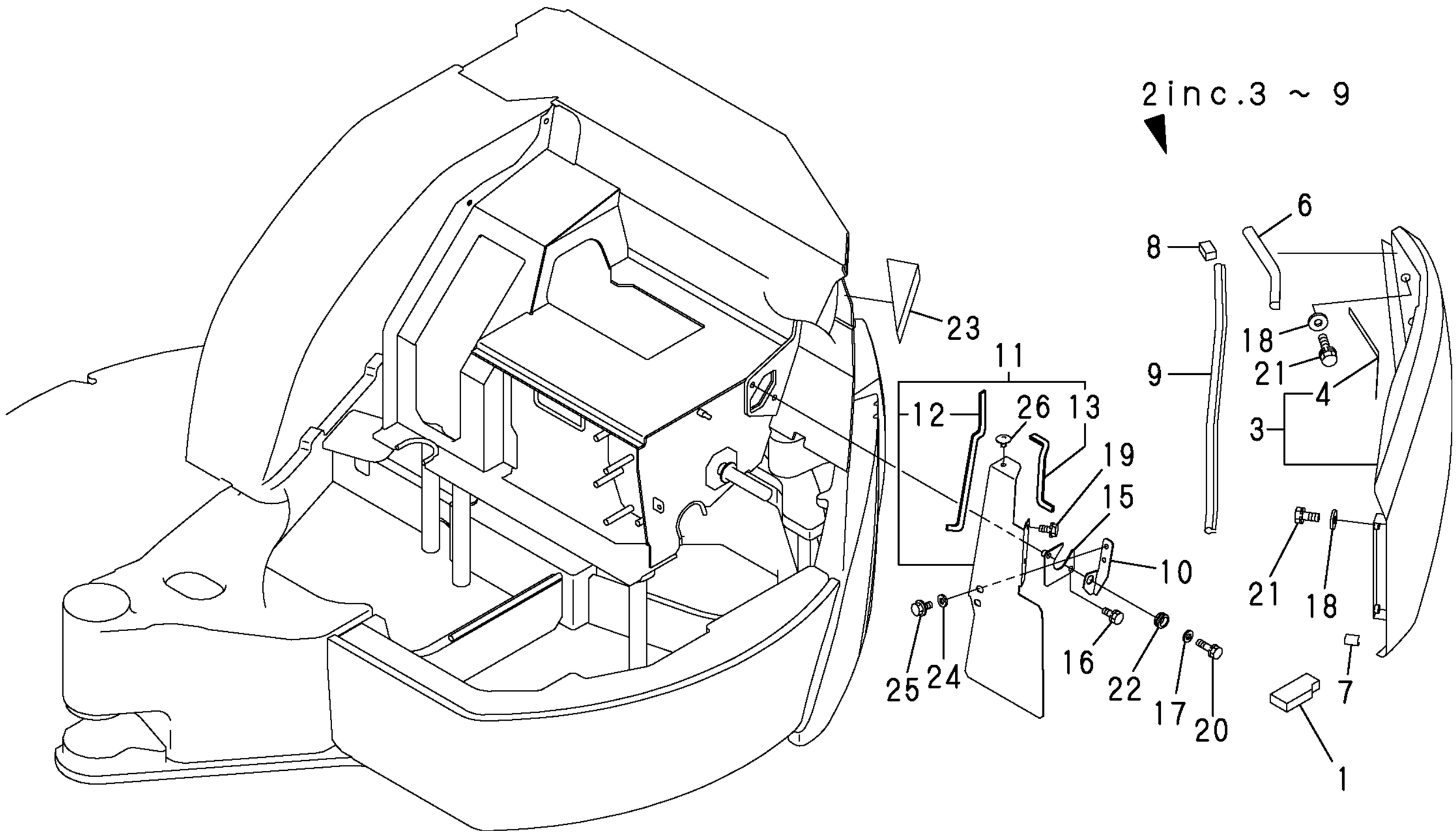

https://truckmanualshub.com/

```
1,1,,172472-62210,,"STEP       (GRAY:73)",1,,,,,,,,,,,,,,,,,,
3,2,,172472-62310,,SEAL,1,,,,,,,,,,,,,,,,,,
4,1,,172460-62110,,"STEP B     (GRAY:73)",1,,,,,,,,,,,,,,,,,,
5,1,,172460-62120,,SEET,1,,,,,,,,,,,,,,,,,,
6,1,,22137-100000,,"WASHER 10,POLISHED",8,,,,,,,,,,,,,,,,,,
7,1,,26013-100202,,"BOLT W/WASHER M10X20",3,,,,,,,,,,,,,,,,,,
8,1,,26013-100202,,"BOLT W/WASHER M10X20",8,,,,,,,,,,,,,,,,,,
9,1,,172458-62400,,"MAT,FLOOR A(CABIN",1,,,,,,,,,,,,,,,,,,
10,1,,172486-62410,,"FLOOR MAT B (CABIN",1,,,,,,,,,,,,,,,,,,
11,1,,172458-46720,,"BOLT 8X20",3,,,,,,,,,,,,,,,,,,
12,1,,172458-46720,,"BOLT 8X20",2,,,,,,,,,,,,,,,,,,
13,1,,172458-46720,,"BOLT 8X20",1,,,,,,,,,,,,,,,,,,
14,1,,172458-63120,,"INSTRUMENT PANEL L",1,,,,,,,,,,,,,,,,,,
15,1,,172458-63130,,"INSTRUMENT PANEL R",1,,,,,,,,,,,,,,,,,,
16,1,,172458-63140,,"INSTRUMENT PANEL R",1,,,,,,,,,,,,,,,,,,
17,1,,172519-63240,,"BOLT  8X 16",2,,,,,,,,,,,,,,,,,,
18,1,,172519-63240,,"BOLT  8X 16",1,,,,,,,,,,,,,,,,,,
19,1,,172519-63240,,"BOLT  8X 16",2,,,,,,,,,,,,,,,,,,
20,1,,172458-63100,,"INSTRUMENT PANEL L",1,,,,,,,,,,,,,,,,,,
21,1,,172458-46720,,"BOLT 8X20",2,,,,,,,,,,,,,,,,,,
22,1,,172162-62540,,"SEAL,STEP L",2,,,,,,,,,,,,,,,,,,
23,1,,172472-63210,,"COVER R,US",1,,,,,,,,,,,,,,,,,,
24,1,,172472-63220,,"COVER L,US",1,,,,,,,,,,,,,,,,,,
25,1,,172441-44320,,"ARM REST",2,,,,,,,,,,,,,,,,,,
26,1,,172485-64510,,"PLATE,ARM REST R(73)",1,,,,,,,,,,,,,,,,,,
27,1,,172485-64520,,"PLATE,ARM REST L(73)",1,,,,,,,,,,,,,,,,,,
28,1,,172485-64530,,"BOLT M 8X 25",4,,,,,,,,,,,,,,,,,,
29,1,,26577-080122,,"SCREW M 8X 12",4,,,,,,,,,,,,,,,,,,
```

https://truckmanualshub.com/

# Fig.23 STEP & INSTRUMENT PANEL

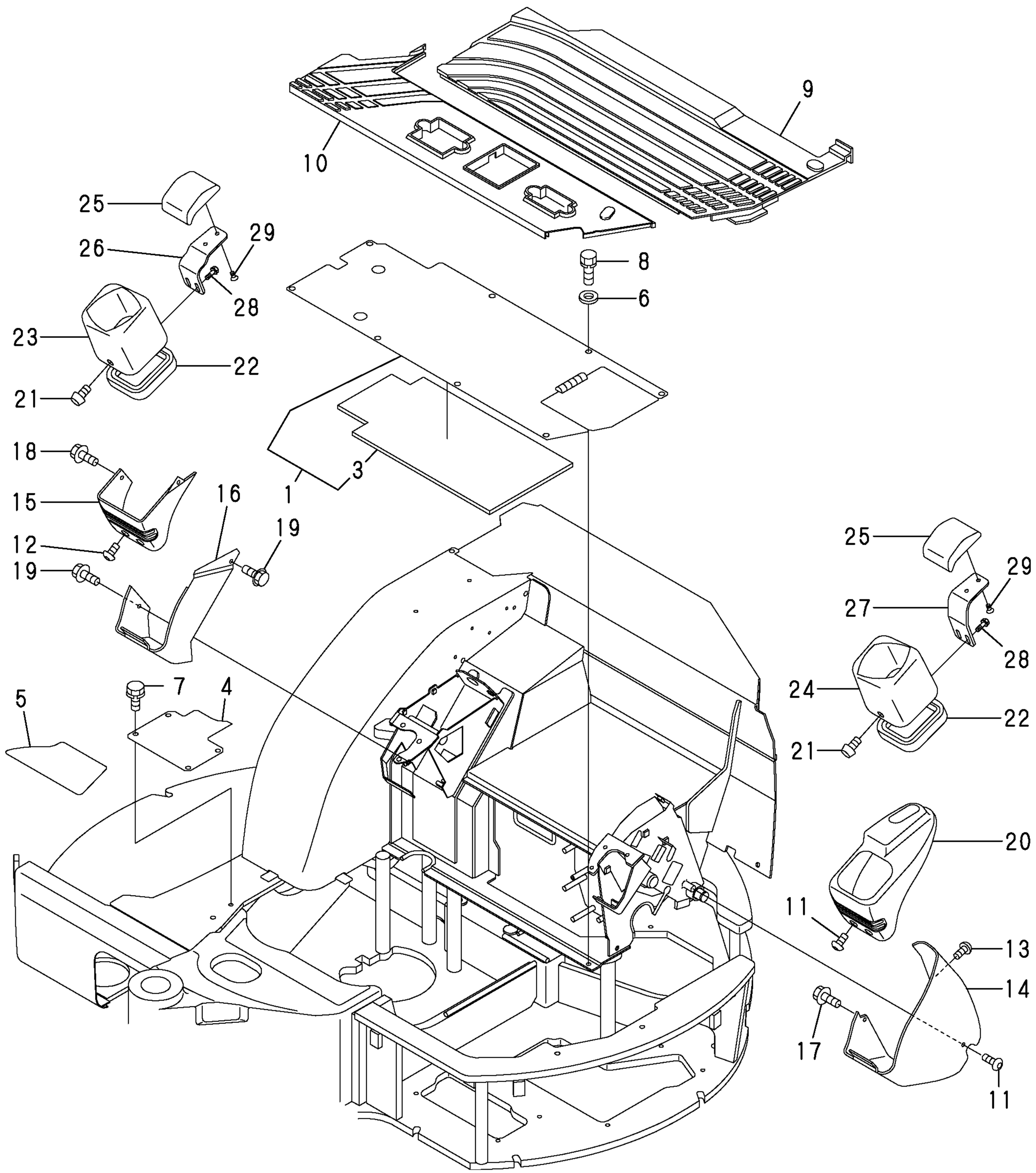

https://truckmanualshub.com/

```
1,1,,26013-120302,,"BOLT W/WASHER M12X30",3,,,,,,,,,,,,,,,,,
2,1,,172187-61421,,"HANDLE, LOCK",1,,,,,,,,,,,,,,,,
3,1,,172486-64301,,"MOUNT ASSY (GRAY:73)",1,,,,,,,,,,,,,,,,,
4,1,,172458-64140,,"SEAL 560",2,,,,,,,,,,,,,,,,
5,1,,172468-64140,,EV,1,,,,,,,,,,,,,,,,
6,1,,172468-64150,,EV,1,,,,,,,,,,,,,,,,
7,1,,172458-64170,,EV,1,,,,,,,,,,,,,,,,
8,1,,172458-64180,,EV,1,,,,,,,,,,,,,,,,
9,1,,172468-64130,,EV,1,,,,,,,,,,,,,,,,
10,1,,26116-080162,,"BOLT 8X16",4,,,,,,,,,,,,,,,,,
11,1,,172468-64110,,EV,1,,,,,,,,,,,,,,,,
12,1,,172460-64310,,EV,1,,,,,,,,,,,,,,,,
13,1,,172458-64650,,EV,1,,,,,,,,,,,,,,,,
14,1,,172458-64660,,"SEAL 95",1,,,,,,,,,,,,,,,,
15,1,,172458-64680,,"SEAL A,SEAT MOUNT",1,,,,,,,,,,,,,,,,
16,1,,172458-64690,,"SEAL B,SEAT MOUNT",1,,,,,,,,,,,,,,,,
17,1,,172460-64400,,SEAL,1,,,,,,,,,,,,,,,,
18,1,,172460-64410,,SEAL,1,,,,,,,,,,,,,,,,
19,1,,172458-64740,,EV,1,,,,,,,,,,,,,,,,
20,1,,172164-65730,,"RUBBER,SEAL D",1,,,,,,,,,,,,,,,,
21,1,,172468-64120,,EV,1,,,,,,,,,,,,,,,,
22,1,,172468-64601,,"GRILL ASSY (GRAY:73)",1,,,,,,,,,,,,,,,,,
23,2,,172468-64640,,EV,1,,,,,,,,,,,,,,,,
25,1,,172468-64400,,"PLATE ASSY (GRAY:73)",1,,,,,,,,,,,,,,,,,
27,2,,172467-64330,,"EV,SEAT PLATE",1,,,,,,,,,,,,,,,,
28,2,,172468-64430,,SEET,1,,,,,,,,,,,,,,,,
29,1,,172458-64590,,"PLUG 28X3.2",1,,,,,,,,,,,,,,,,
30,1,,26716-080002,,"NUT M 8",4,,,,,,,,,,,,,,,,
31,1,,22217-080000,,"SPRING WASHER  8",4,,,,,,,,,,,,,,,,
32,1,,22137-100000,,"WASHER 10,POLISHED",3,,,,,,,,,,,,,,,,
33,1,,22137-080000,,"WASHER 8, POLISHED",4,,,,,,,,,,,,,,,,
34,1,,26013-100202,,"BOLT W/WASHER M10X20",4,,,,,,,,,,,,,,,,,
35,1,,26013-100202,,"BOLT W/WASHER M10X20",5,,,,,,,,,,,,,,,,,
36,1,,26013-100252,,"BOLT W/WASHER M10X25",3,,,,,,,,,,,,,,,,,
37,1,,22137-100000,,"WASHER 10,POLISHED",1,,,,,,,,,,,,,,,,
38,1,,172458-67810,,"SEAT,A",1,,,,,,,,,,,,,,,,
39,1,,172458-67820,,"SEAT,B",1,,,,,,,,,,,,,,,,
```

https://truckmanualshub.com/

# Fig.24 SEAT MOUNT

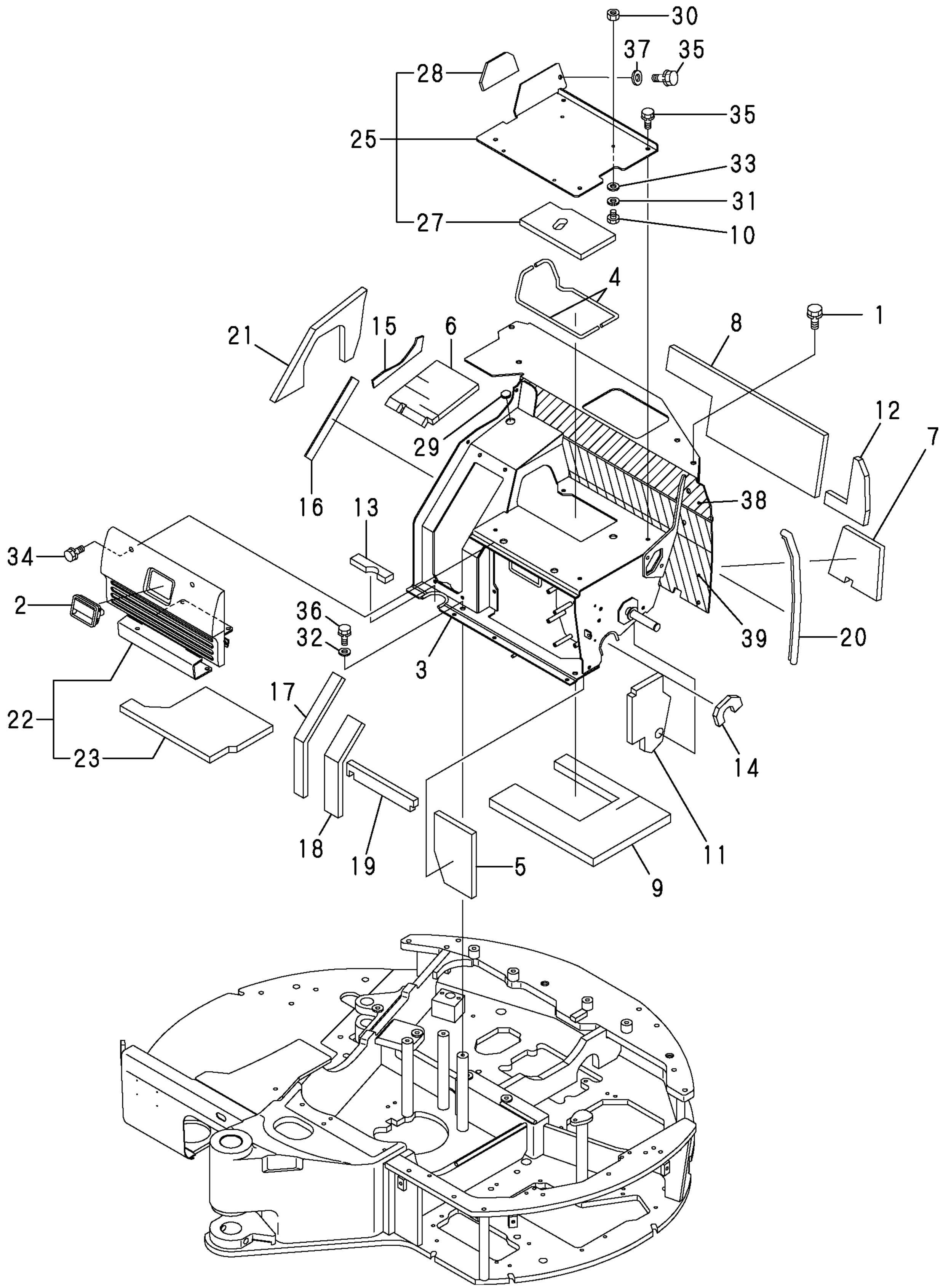

```
1,1,,172159-65930,,"WASHER 10",2,,,,,,,,,,,,,,,,,
2,1,,172164-45980,,"GRIP, BONNET",1,,,,,,,,,,,,,,,,,
3,1,,172486-65120,,"BRACKET B ASSY,LOCK",1,,,,,,,,,,,,,,,,,,
4,1,,172486-65150,,SHAFT,1,,,,,,,,,,,,,,,,,
5,1,,172486-65161,,"HOOK ASSY",1,,,,,,,,,,,,,,,,,
6,1,,172458-65060,,"COVER,BONNET LOCK",1,,,,,,,,,,,,,,,,,
7,1,,172486-65220,,"BONNET   (YELLOW:87)",1,,,,,,,,,,,,,,,,,,
9,2,,172164-19210,,"RUBBER SEAL",1,,,,,,,,,,,,,,,,,
10,2,,172460-65420,,"SEAL A",1,,,,,,,,,,,,,,,,,
11,2,,172460-65430,,"SEAL B",1,,,,,,,,,,,,,,,,,
12,2,,172649-65750,,"SEAL A, RUBBER",1,,,,,,,,,,,,,,,,,
13,1,,172486-65420,,"ROD ASSY,STOPPER",1,,,,,,,,,,,,,,,,,
14,1,,172486-65440,,"LEVER ASSY,LOCK",1,,,,,,,,,,,,,,,,,
15,1,,172486-65470,,"PLATE,KEY(YELLOW:87)",1,,,,,,,,,,,,,,,,,
16,1,,172486-65480,,"BRACKET B (BLACK:12)",1,,,,,,,,,,,,,,,,,
17,1,,172486-65090,,"BRACKET    (GRAY:73)",1,,,,,,,,,,,,,,,,,
18,1,,172486-65520,,"PLATE,ROCK",1,,,,,,,,,,,,,,,,,
19,1,,172159-65960,,"SPRING CATCH",1,,,,,,,,,,,,,,,,,
20,1,,172486-65531,,"BONNET R (YELLOW:87)",1,,,,,,,,,,,,,,,,,
22,2,,172486-65631,,"SEAL A",1,,,,,,,,,,,,,,,,,
23,2,,172460-65750,,EVA,1,,,,,,,,,,,,,,,,,
24,2,,172184-65760,,"RUBBER, SEAL B",1,,,,,,,,,,,,,,,,,
25,2,,172460-65760,,SPONGE,1,,,,,,,,,,,,,,,,,
26,2,,172460-65770,,SPONGE,1,,,,,,,,,,,,,,,,,
27,2,,172486-65671,,"EV D,BONNET R",1,,,,,,,,,,,,,,,,,
28,2,,172486-65681,,"EV E,BONNET R",1,,,,,,,,,,,,,,,,,
29,1,,172486-65691,,"BRACKET B  (GRAY:73)",1,,,,,,,,,,,,,,,,,
30,1,,172486-65720,,"BRACKET C  (GRAY:73)",1,,,,,,,,,,,,,,,,,
31,1,,172486-65740,,"BRACKET R  (GRAY:73)",1,,,,,,,,,,,,,,,,,
32,1,,172159-65950,,CATCHER,1,,,,,,,,,,,,,,,,,
33,1,,172486-65760,,"BONNET ASSY",1,,,,,,,,,,,,,,,,,
35,2,,172460-65730,,EV,1,,,,,,,,,,,,,,,,,
36,1,,172486-65790,,"HINGE ASSY(GREEN:86)",1,,,,,,,,,,,,,,,,,
37,1,,172486-65830,,"PLATE,LOCK(GREEN:86)",1,,,,,,,,,,,,,,,,,
38,1,,172486-65842,,BRACKET,1,,,,,,,,,,,,,,,,,
39,1,,172486-66250,,"PLATE,GUIDE",1,,,,,,,,,,,,,,,,,
40,1,,172486-65882,,"ROD ASSY,STOPPER",1,,,,,,,,,,,,,,,,,
41,1,,26557-080202,,"SCREW M 8X 20",2,,,,,,,,,,,,,,,,,
42,1,,172486-65910,,COVER,1,,,,,,,,,,,,,,,,,
43,1,,172486-65940,,"PLATE      (GRAY:73)",1,,,,,,,,,,,,,,,,,
44,1,,172486-66100,,"BASE       (GRAY:73)",1,,,,,,,,,,,,,,,,,
45,1,,172486-66140,,"TORSION SPRING,STOPR",1,,,,,,,,,,,,,,,,,
46,1,,172486-66150,,"PLATE,ROCK (GRAY:73)",1,,,,,,,,,,,,,,,,,
47,1,,172164-66170,,"KEY ASSY, CYLINDER",1,,,,,,,,,,,,,,,,,
48,1,,172164-66170,,"KEY ASSY, CYLINDER",1,,,,,,,,,,,,,,,,,
49,1,,22137-080000,,"WASHER 8, POLISHED",1,,,,,,,,,,,,,,,,,
50,1,,22137-100000,,"WASHER 10,POLISHED",2,,,,,,,,,,,,,,,,,
51,1,,22137-100000,,"WASHER 10,POLISHED",2,,,,,,,,,,,,,,,,,
52,1,,22137-100000,,"WASHER 10,POLISHED",1,,,,,,,,,,,,,,,,,
53,1,,22137-100000,,"WASHER 10,POLISHED",2,,,,,,,,,,,,,,,,,
54,1,,22137-100000,,"WASHER 10,POLISHED",2,,,,,,,,,,,,,,,,,
55,1,,1A1380-62160,,WASHER,1,,,,,,,,,,,,,,,,,
56,1,,22157-100000,,"WASHER 10",2,,,,,,,,,,,,,,,,,
57,1,,22157-100000,,"WASHER 10",2,,,,,,,,,,,,,,,,,
58,1,,22157-100000,,"WASHER 10",3,,,,,,,,,,,,,,,,,
59,1,,22157-100000,,"WASHER 10",2,,,,,,,,,,,,,,,,,
60,1,,22417-200200,,"COTTER PIN 2.0X20",2,,,,,,,,,,,,,,,,,
61,1,,22417-200200,,"COTTER PIN 2.0X20",2,,,,,,,,,,,,,,,,,
62,1,,22417-200200,,"COTTER PIN 2.0X20",2,,,,,,,,,,,,,,,,,
63,1,,26013-100202,,"BOLT W/WASHER M10X20",2,,,,,,,,,,,,,,,,,
64,1,,26013-100202,,"BOLT W/WASHER M10X20",2,,,,,,,,,,,,,,,,,
65,1,,26013-100202,,"BOLT W/WASHER M10X20",2,,,,,,,,,,,,,,,,,
66,1,,26013-100202,,"BOLT W/WASHER M10X20",2,,,,,,,,,,,,,,,,,
```

https://truckmanualshub.com/

```
67,1,,26013-100252,,"BOLT W/WASHER M10X25",2,,,,,,,,,,,,,,,,,
68,1,,26013-100252,,"BOLT W/WASHER M10X25",2,,,,,,,,,,,,,,,,,
69,1,,26013-100252,,"BOLT W/WASHER M10X25",2,,,,,,,,,,,,,,,,,
70,1,,26013-100252,,"BOLT W/WASHER M10X25",2,,,,,,,,,,,,,,,,,
71,1,,26013-100252,,"BOLT W/WASHER M10X25",4,,,,,,,,,,,,,,,,,
72,1,,26013-100252,,"BOLT W/WASHER M10X25",2,,,,,,,,,,,,,,,,,
73,1,,26013-100252,,"BOLT W/WASHER M10X25",2,,,,,,,,,,,,,,,,,
74,1,,26014-080162,,"BOLT M 8X 16",3,,,,,,,,,,,,,,,,,
75,1,,26014-100202,,"BOLT M10X 20",4,,,,,,,,,,,,,,,,,
76,1,,26014-100202,,"BOLT M10X 20",3,,,,,,,,,,,,,,,,,
77,1,,26014-100202,,"BOLT M10X 20",2,,,,,,,,,,,,,,,,,
78,1,,26347-080002,,"U-NUT  8",1,,,,,,,,,,,,,,,,,
79,1,,26347-100002,,"U-NUT 10",2,,,,,,,,,,,,,,,,,
80,1,,172524-17330,,"KEY ASSY",2,,,,,,,,,,,,,,,,,
81,1,,172460-65840,,"SEAL,RUBBER",1,,,,,,,,,,,,,,,,,
82,1,,172460-65820,,SPONGY,1,,,,,,,,,,,,,,,,,
83,1,,172460-65830,,"RUBBER SEAL",1,,,,,,,,,,,,,,,,,
84,1,,172434-61200,,"TRIM 245",1,,,,,,,,,,,,,,,,,
85,1,,22137-080000,,"WASHER 8, POLISHED",1,,,,,,,,,,,,,,,,,
86,1,,22137-100000,,"WASHER 10,POLISHED",2,,,,,,,,,,,,,,,,,
87,1,,172486-65011,,"PLATE,GUARD",1,,,,,,,,,,,,,,,,,
88,1,,26013-100202,,"BOLT W/WASHER M10X20",2,,,,,,,,,,,,,,,,,
```

https://truckmanualshub.com/

# Fig. 25 BONNET

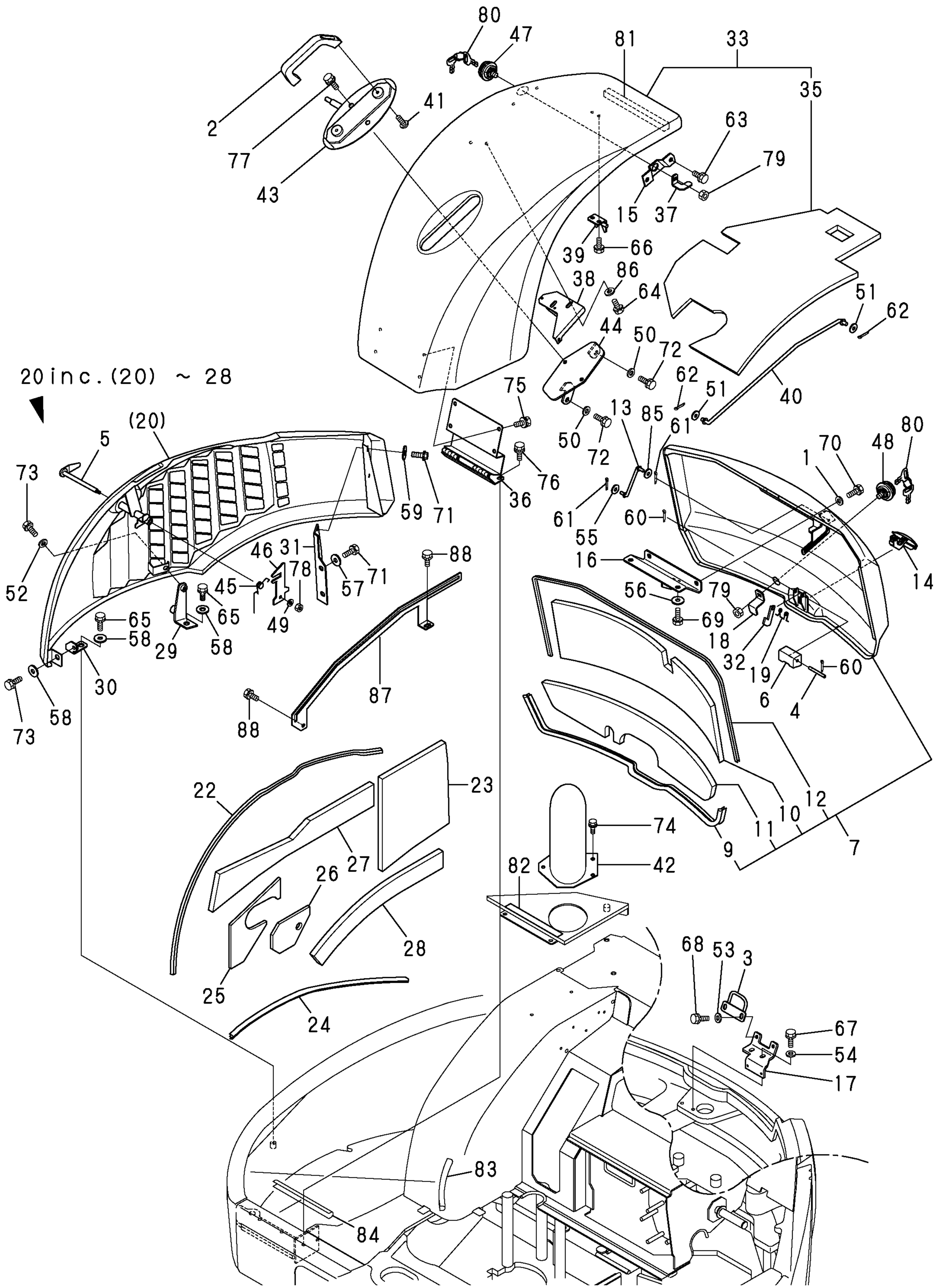

https://truckmanualshub.com/

```
1,1,,172486-68200,,"MOUNT A    (GRAY:73)",1,,,,,,,,,,,,,,,,,,
2,1,,172486-68321,,"MOUNT B    (GRAY:73)",1,,,,,,,,,,,,,,,,,,
3,1,,172486-68370,,"MOUNT C    (GRAY:73)",1,,,,,,,,,,,,,,,,,,
4,1,,22137-140000,,"WASHER 14,POLISHED",3,,,,,,,,,,,,,,,,,,
5,1,,22217-140000,,"SPRING WASHER 14",4,,,,,,,,,,,,,,,,,,
6,1,,22217-140000,,"SPRING WASHER 14",5,,,,,,,,,,,,,,,,,,
7,1,,22217-140000,,"SPRING WASHER 14",3,,,,,,,,,,,,,,,,,,
8,1,,26116-140402,,"BOLT M14X 40 PLATED",3,,,,,,,,,,,,,,,,,,
9,1,,26116-140402,,"BOLT M14X 40 PLATED",5,,,,,,,,,,,,,,,,,,
10,1,,26116-140502,,"BOLT M14X 50",4,,,,,,,,,,,,,,,,,,
```

https://truckmanualshub.com/

# Fig. 26 CANOPY MOUNT

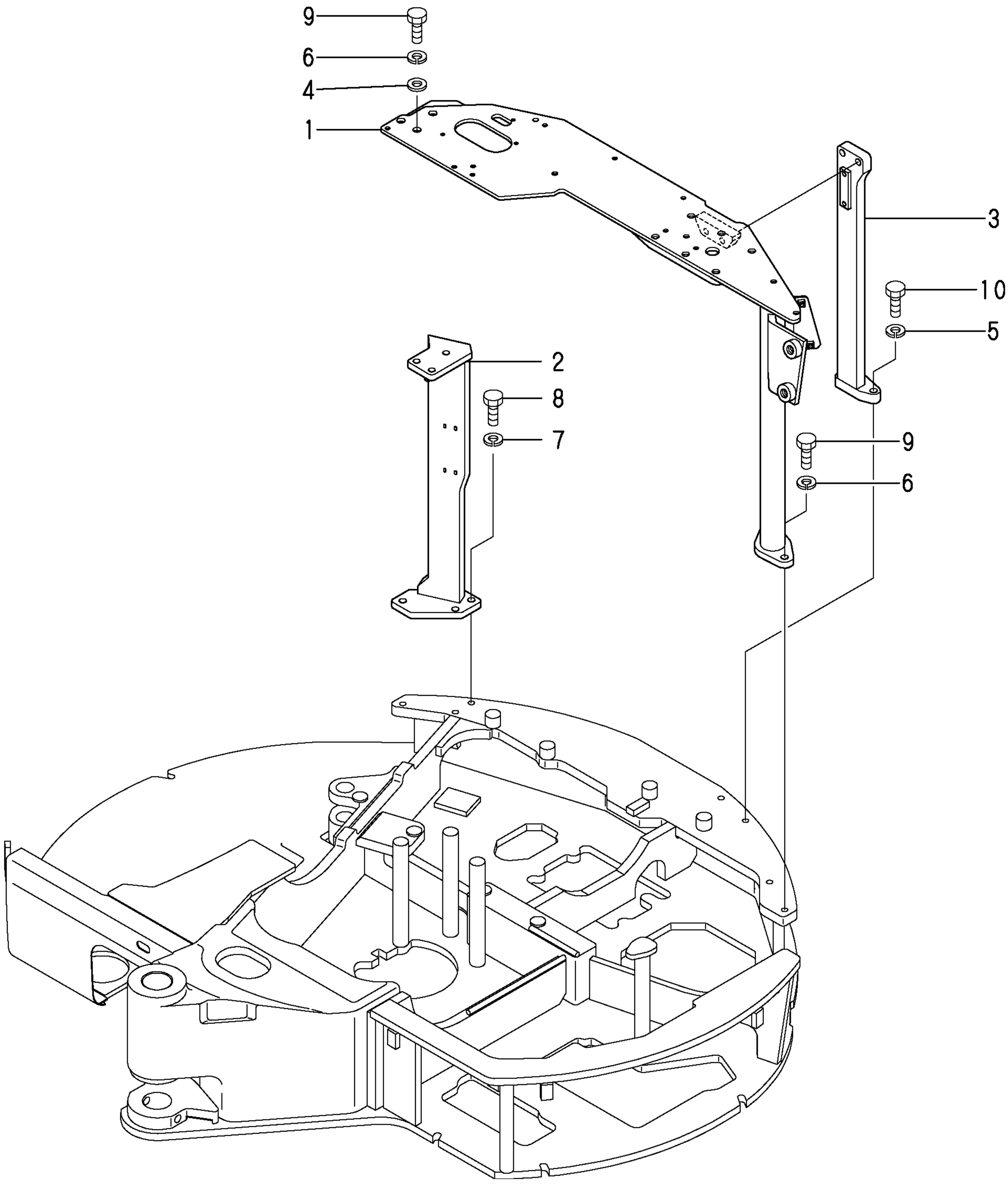

```
1,1,,172168-71101-2,,"COVER, FLYWHEEL (82)",1,,,,,,,,,,,,,,,,,,
2,1,,26013-100302,,"BOLT M10X 30",8,,,,,,,,,,,,,,,,,,
3,1,,172165-71200,,COUPLING,1,,,,,,,,,,,,,,,,,,
4,1,,26450-120402,,"BOLT M12X 40",3,,,,,,,,,,,,,,,,,,
5,1,,172461-73100,,"PUMP ASSY,HYD OIL",1,,,,,,,,,,,,,,,,,,
6,2,,172148-70301,,PLUG,1,,,,,,,,,,,,,,,,,,
7,2,,172122-70350,,BALL,1,,,,,,,,,,,,,,,,,,
8,2,,172460-73110,,"SEAL KIT",1,,,,,,,,724960061,,,,,,,,,,,,I
9,3,,172460-73170,,GASKET,1,,,,,,,,,,,,,,,,,,
10,3,,172460-73190,,"OIL SEAL",1,,,,,,,,,,,,,,,,,,
11,3,,172460-73400,,O-RING,1,,,,,,,,,,,,,,,,,,
12,2,,172460-73120,,"CYLINDER BLOCK KIT",1,,,,,,,,724600341,,,,,,,,,,,,I
13,2,,172460-73130,,RETAINER,1,,,,,,,,,,,,,,,,,,
14,2,,172460-73140,,PLATE,1,,,,,,,,,,,,,,,,,,
15,3,,172312-74790,,ORIFICE,1,,,,,,,,,,,,,,,,,,
16,2,,172460-73150,,SHAFT,1,,,,,,,,,,,,,,,,,,
17,2,,172460-73160,,WASHER,1,,,,,,,,,,,,,,,,,,
18,2,,172460-73180,,RING,1,,,,,,,,,,,,,,,,,,
19,2,,172460-73200,,BEARING,1,,,,,,,,,,,,,,,,,,
20,2,,172460-73210,,BUSH,2,,,,,,,,,,,,,,,,,,
21,2,,172460-73220,,STOPPER,1,,,,,,,,,,,,,,,,,,
22,2,,172460-73230,,PLATE,1,,,,,,,,724600341,,,,,,,,,,,,I
23,2,,172460-73240,,HOLDER,1,,,,,,,,,,,,,,,,,,
24,2,,172461-73110,,SPRING,1,,,,,,,,724600341,,,,,,,,,,,,I
25,2,,172461-73120,,SPRING,1,,,,,,,,724600341,,,,,,,,,,,,I
26,2,,172460-73270,,SEAL,1,,,,,,,,724960061,,,,,,,,,,,,I
27,2,,172460-73280,,PIN,1,,,,,,,,,,,,,,,,,,
28,2,,172176-73290,,"SHEET,SPRING",1,,,,,,,,,,,,,,,,,,
29,2,,172460-73290,,PIN,1,,,,,,,,,,,,,,,,,,
30,2,,172460-73330,,BEARING,1,,,,,,,,,,,,,,,,,,
31,2,,172460-73340,,STOPPER,1,,,,,,,,,,,,,,,,,,
32,2,,172460-73350,,SPRING,3,,,,,,,,,,,,,,,,,,
33,2,,172460-73360,,WASHER,1,,,,,,,,,,,,,,,,,,
34,2,,172460-73370,,PLUG,1,,,,,,,,,,,,,,,,,,
35,2,,172460-73380,,BUSH,1,,,,,,,,,,,,,,,,,,
36,2,,172460-73390,,PLATE,1,,,,,,,,,,,,,,,,,,
37,2,,172461-73130,,"PUMP ASSY, GEAR",1,,,,,,,,724960061,,,,,,,,,,,,I
38,2,,172460-73420,,PIN,1,,,,,,,,,,,,,,,,,,
39,2,,172460-73430,,"VALVE S/A",1,,,,,,,,,,,,,,,,,,
40,3,,172460-73900,,"SOLENOID B",1,,,,,,,,,,,,,,,,,,
41,3,,172460-73910,,"SOLENOID A",1,,,,,,,,,,,,,,,,,,
42,3,,24352-190110,,"O-RING 2 19011",2,,,,,,,,,,,,,,,,,,
43,2,,172122-73480,,PIN,1,,,,,,,,,,,,,,,,,,
44,2,,172122-73480,,PIN,2,,,,,,,,,,,,,,,,,,
45,2,,172452-73480,,PLUG,6,,,,,,,,,,,,,,,,,,
46,2,,172176-73560,,SPRING,1,,,,,,,,,,,,,,,,,,
47,2,,172176-73590,,SHIM,2,,,,,,,,,,,,,,,,,,
48,2,,172176-73600,,PLUG,1,,,,,,,,,,,,,,,,,,
49,2,,172176-73690,,"BREEDER, AIR",1,,,,,,,,,,,,,,,,,,
50,2,,172176-73880,,"ROTOR ASSY,TROCHOID",1,,,,,,,,,,,,,,,,,,
51,2,,172176-73910,,"THRUST WASHER",2,,,,,,,,,,,,,,,,,,
52,2,,172176-73930,,PIN,1,,,,,,,,,,,,,,,,,,
53,2,,172176-73940,,POPPET,1,,,,,,,,,,,,,,,,,,
54,1,,26013-120352,,"BOLT M12X 35",2,,,,,,,,,,,,,,,,,,
```

https://truckmanualshub.com/

# Fig.27 HYD.OIL PUMP & JOINT

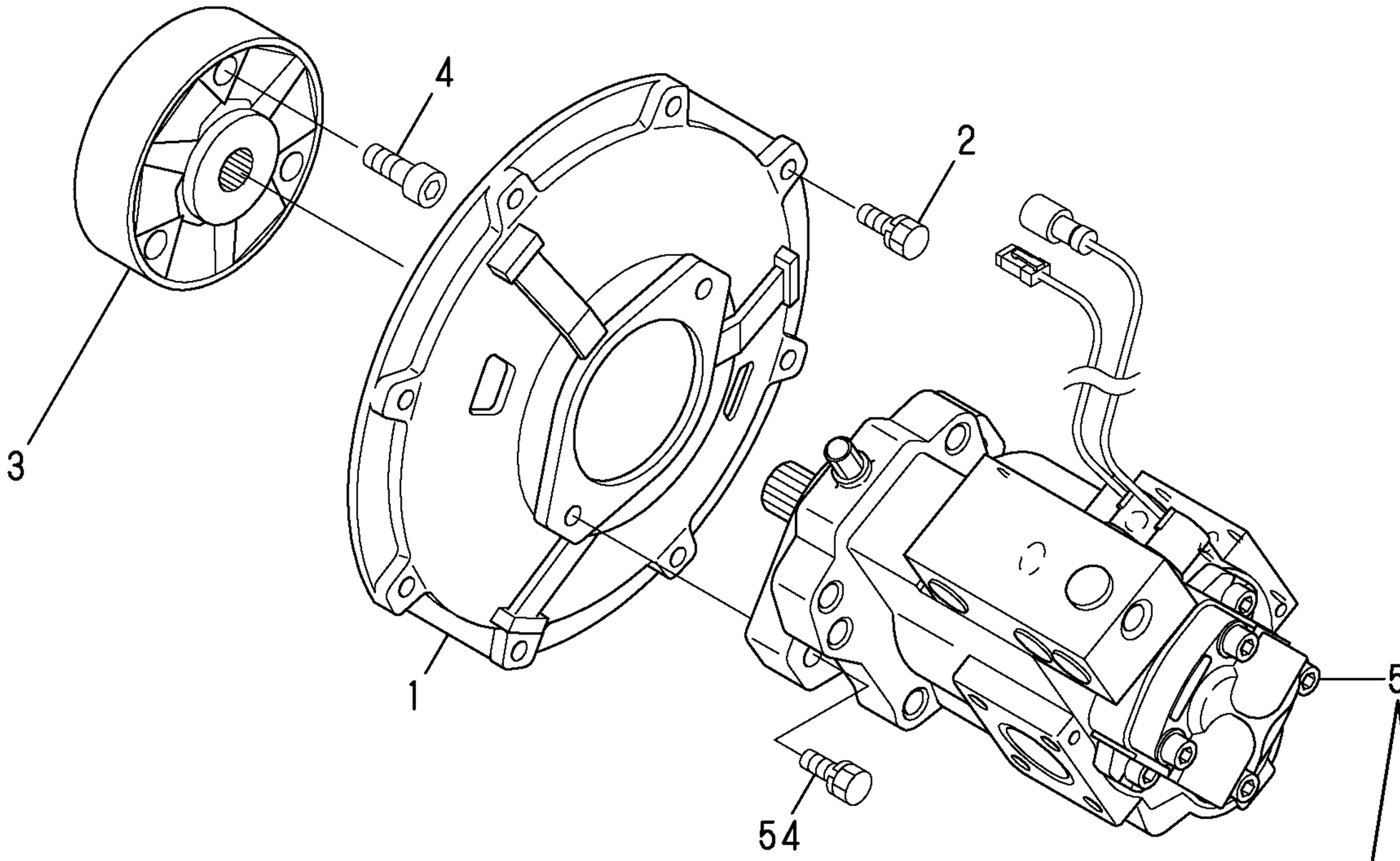


8inc.(8) ~ 11
14inc.(14) ~ 15

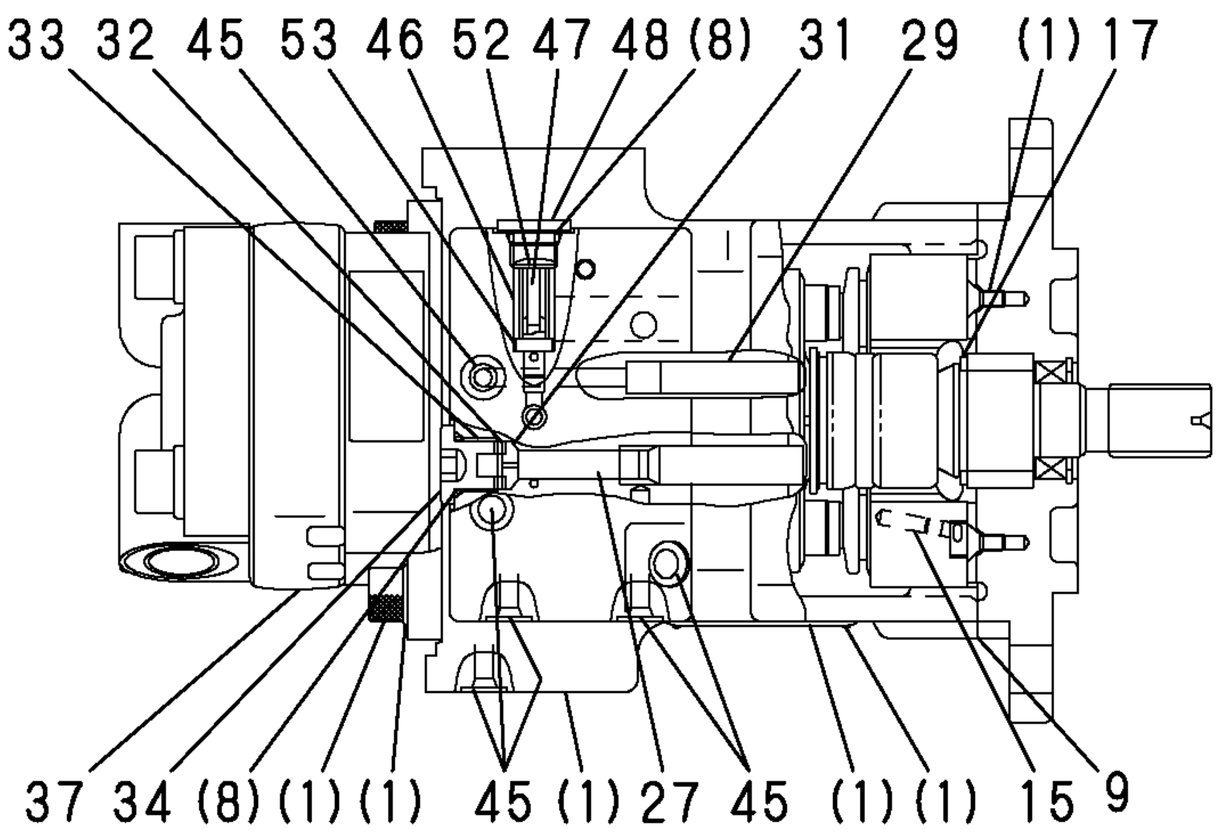


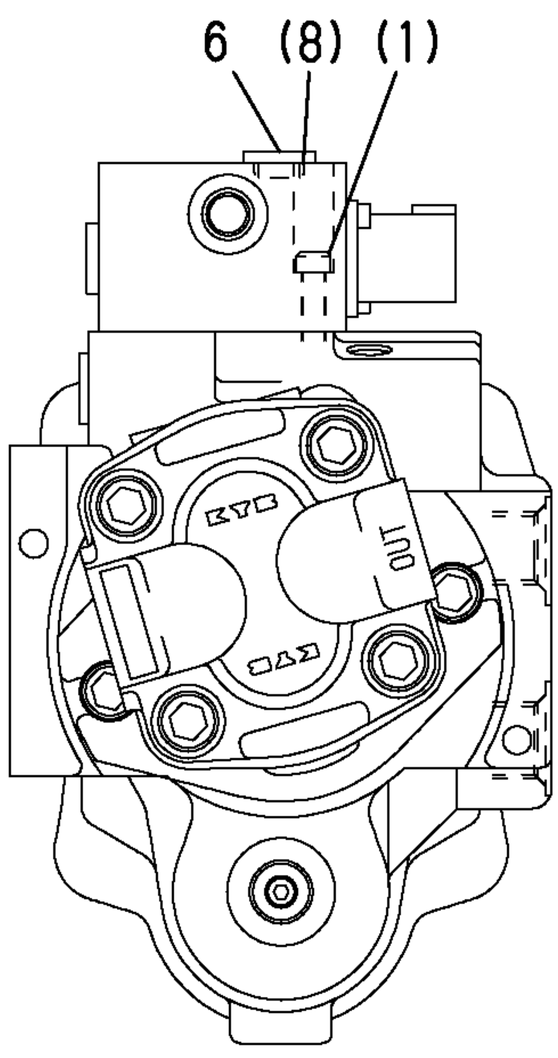


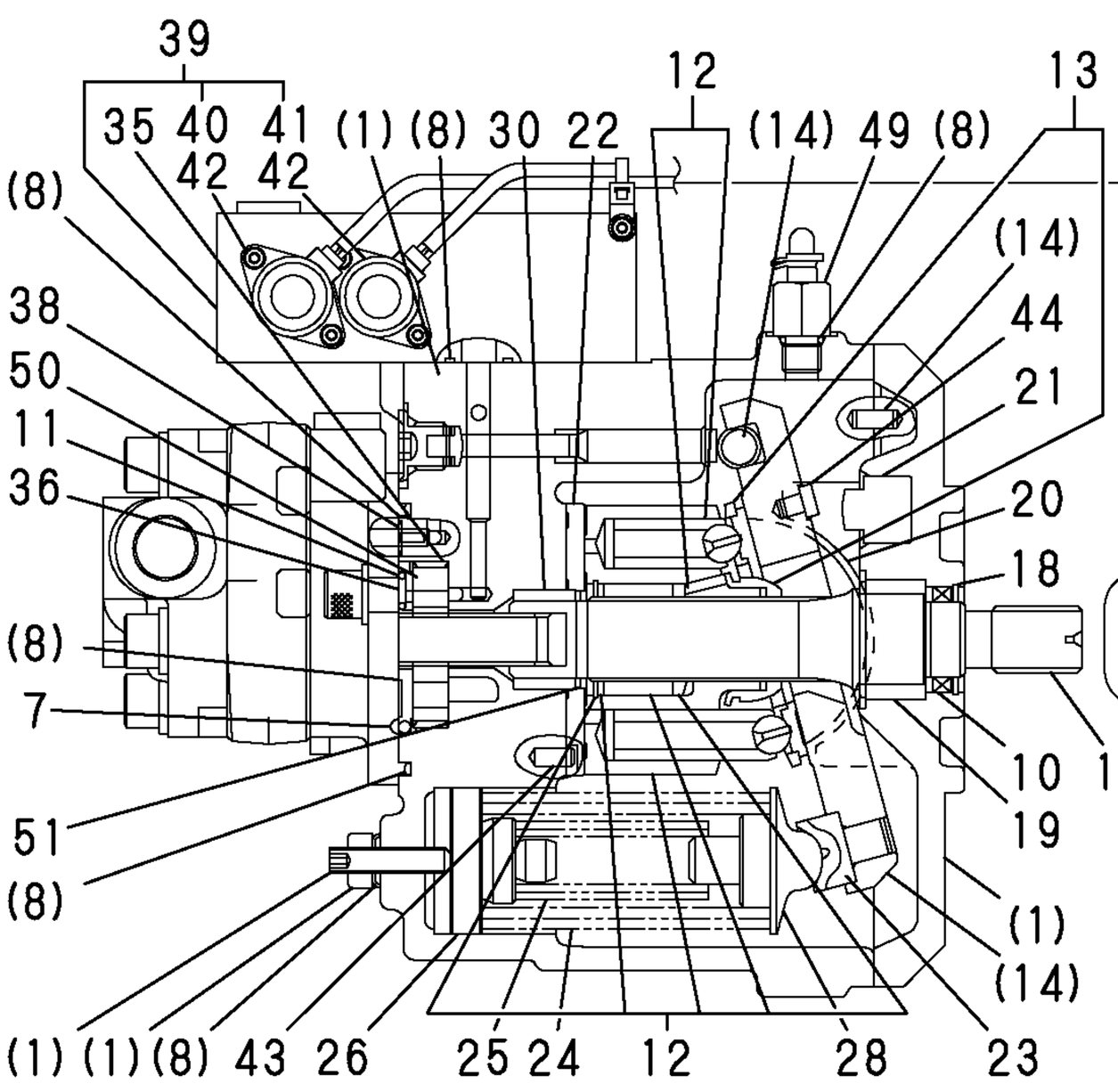


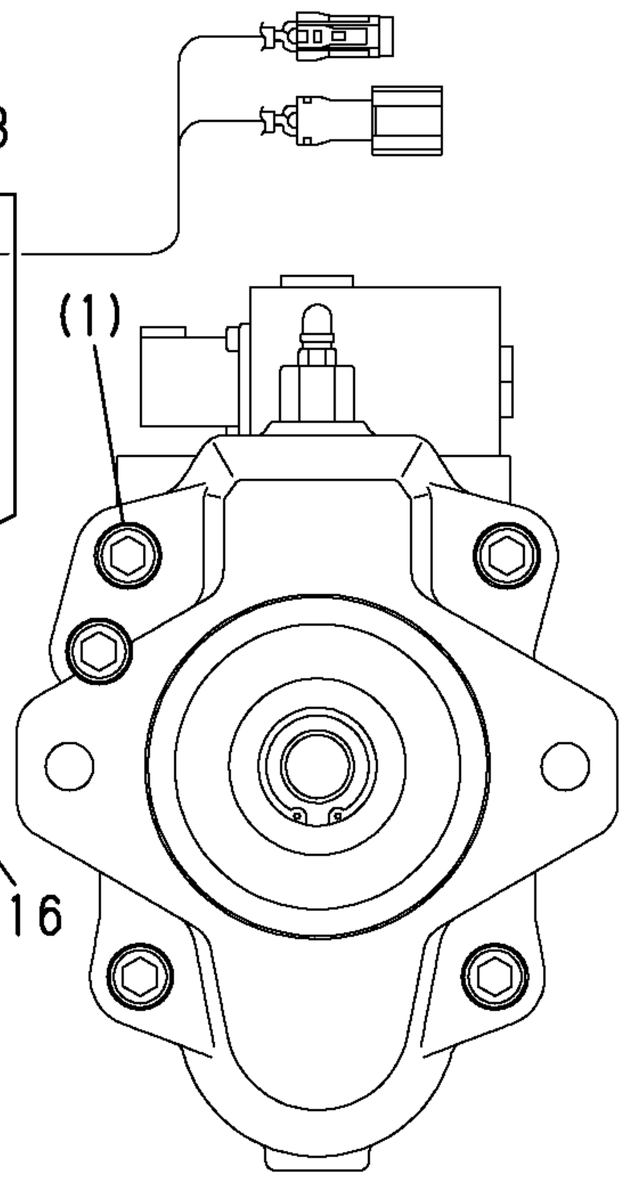

```
1,1,,172460-72321-1,,"CYLINDER,BOOM C (87)",1,,,,,,,,,,,,,,,,,,
2,2,,172460-72010,,"SEAL SET",1,,,,,,,,,,,,,,,,,
9,2,,172460-72111-1,,"TUBE,BOOM(YELLOW:87)",1,,,,,,,,,,,,,,,,,,
10,3,,172460-72180,,BUSH,1,,,,,,,,,,,,,,,,,
11,3,,172448-54120,,"SEAL 50X60X4,DUST",2,,,,,,,,,,,,,,,,,
12,2,,172460-72201,,ROD,1,,,,,,,,,,,,,,,,,
13,3,,172460-72180,,BUSH,1,,,,,,,,,,,,,,,,,
14,3,,172448-54120,,"SEAL 50X60X4,DUST",2,,,,,,,,,,,,,,,,,
15,2,,172460-72260,,PISTON,1,,,,,,,,,,,,,,,,,
16,2,,172151-72270,,"U-NUT M39",1,,,,,,,,,,,,,,,,,
17,2,,172460-72271,,PLANGER,1,,,,,,,,,,,,,,,,,
18,2,,172460-72280,,COLLER,1,,,,,,,,,,,,,,,,,
19,2,,172460-72330,,HEAD,1,,,,,,,,,,,,,,,,,
21,3,,172151-72540,,"BUSH 50 35, ROD",1,,,,,,,,,,,,,,,,,
22,2,,172444-72430,,"LOCK WASHER",1,,,,,,,,,,,,,,,,,
23,2,,172444-72890,,"PISTON SEAL SET",1,,,,,,,,,,,,,,,,,
26,2,,24761-020000,,"NIPPLE PT1/8,GREASE",2,,,,,,,,,,,,,,,,,
27,1,,172485-72340,,"GUIDE,SLIDE",2,,,,,,,,,,,,,,,,,
28,1,,172485-72810,,"COVER,SLIDE(YELLOR87",1,,,,,,,,,,,,,,,,,
29,1,,172485-72820,,"COVER R,BOOM-CYL(87)",1,,,,,,,,,,,,,,,,,
30,1,,172485-72830,,"COVER L,BOOM-CYL(87)",1,,,,,,,,,,,,,,,,,
31,1,,22217-100000,,"SPRING WASHER 10",1,,,,,,,,,,,,,,,,,
32,1,,22217-100000,,"SPRING WASHER 10",4,,,,,,,,,,,,,,,,,
33,1,,26116-100162,,"BOLT M10X 16 PLATED",1,,,,,,,,,,,,,,,,,
34,1,,26116-100162,,"BOLT M10X 16 PLATED",4,,,,,,,,,,,,,,,,,
35,1,,933147-03400,,"WASHER, BRAKE ARM",1,,,,,,,,,,,,,,,,,
36,1,,933168-14170,,"SPRING 16",2,,,,,,,,,,,,,,,,,
```

https://truckmanualshub.com/

# Fig.28 BOOM CYLINDER

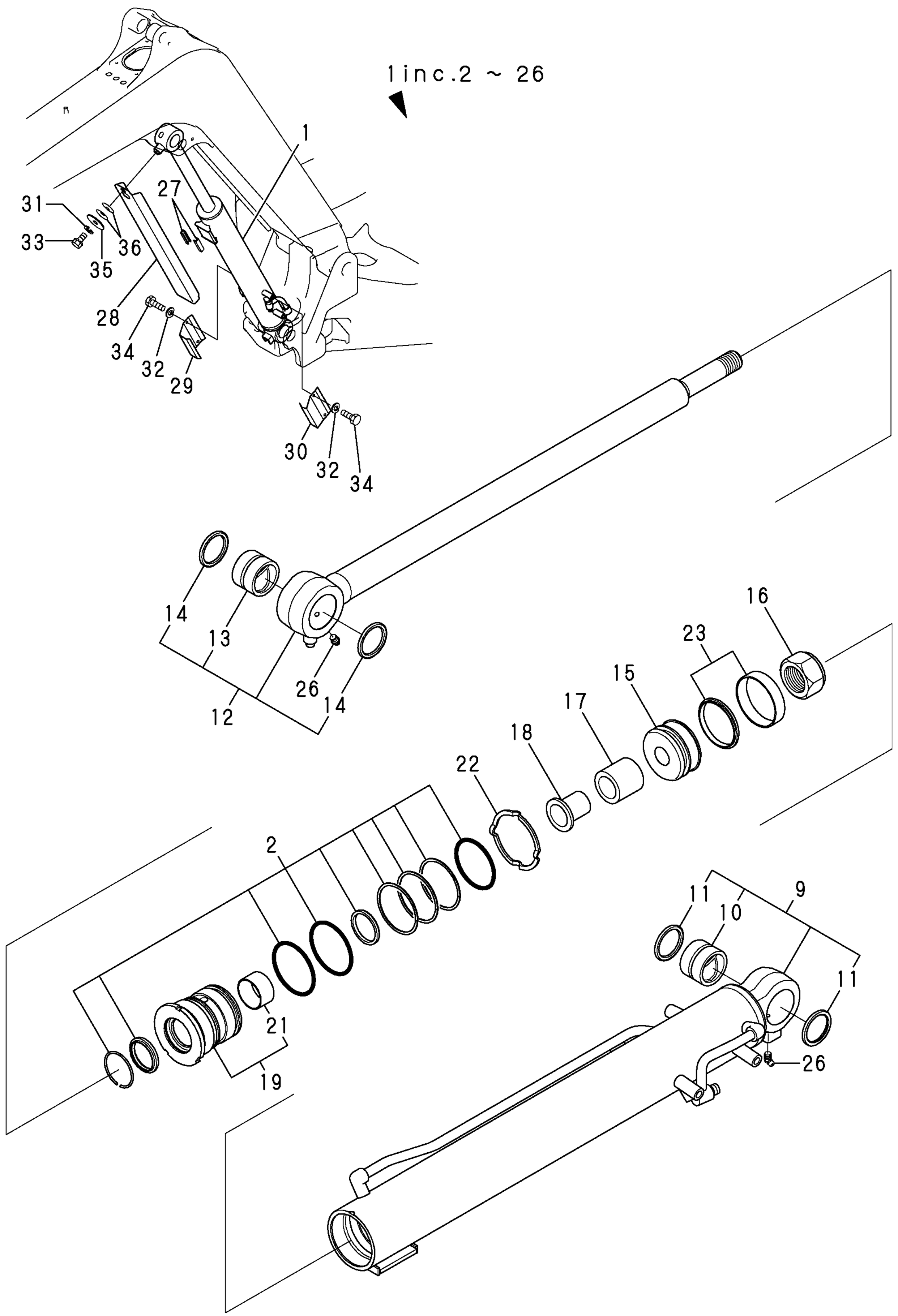

https://truckmanualshub.com/

```
1,1,,172461-72350-1,,"CYLINDER,ARM    (87)",1,,,,,,,,,,,,,,,,,
2,2,,172461-72010,,"SEAL SET",1,,,,,,,,,,,,,,,,,
9,2,,172461-72020,,"SEAL SET",1,,,,,,,,,,,,,,,,,
13,2,,172146-72270,,"LOCK WASHER 85",1,,,,,,,,,,,,,,,,,
14,2,,172461-72511,,PLUNGER,1,,,,,,,,,,,,,,,,,
15,2,,172461-72520,,"COLLAR 33 44,CUSHON",1,,,,,,,,,,,,,,,,,
16,2,,172461-72360-1,,"TUBE,ARM (YELLOW:87)",1,,,,,,,,,,,,,,,,,,
17,3,,172151-72591,,"BUSH 50X60",1,,,,,,,,,,,,,,,,,
18,3,,172448-54120,,"SEAL 50X60X4,DUST",2,,,,,,,,,,,,,,,,,,
19,2,,172460-72940,,PLUNGER,1,,,,,,,,,,,,,,,,,
20,2,,172461-72450,,"ROD,ARM",1,,,,,,,,,,,,,,,,,
21,3,,172151-72591,,"BUSH 50X60",1,,,,,,,,,,,,,,,,,
22,3,,172448-54120,,"SEAL 50X60X4,DUST",2,,,,,,,,,,,,,,,,,
23,2,,172458-72460,,"COLLAR 26 32,CUSHION",1,,,,,,,,,,,,,,,,,
24,2,,172461-72500,,PISTON,1,,,,,,,,,,,,,,,,,
25,2,,172458-72470,,"COVER,STOPPER",1,,,,,,,,,,,,,,,,,
26,2,,172461-72480,,HEAD,1,,,,,,,,,,,,,,,,,
27,3,,172151-72540,,"BUSH 50 35, ROD",1,,,,,,,,,,,,,,,,,
29,2,,172423-72530,,SPACER,1,,,,,,,,,,,,,,,,,
30,2,,172423-72540,,STOPPER,2,,,,,,,,,,,,,,,,,
31,2,,22242-000260,,"CIRCLIP   26",1,,,,,,,,,,,,,,,,,
32,2,,24761-040000,,"NIPPLE B,GREASE",1,,,,,,,,,,,,,,,,,
33,2,,24761-050000,,"NIPPLE C,GREASE",1,,,,,,,,,,,,,,,,,
34,2,,172151-72580,,"U-NUT M36",1,,,,,,,,,,,,,,,,,
```

https://truckmanualshub.com/

# Fig.29 ARM CYLINDER

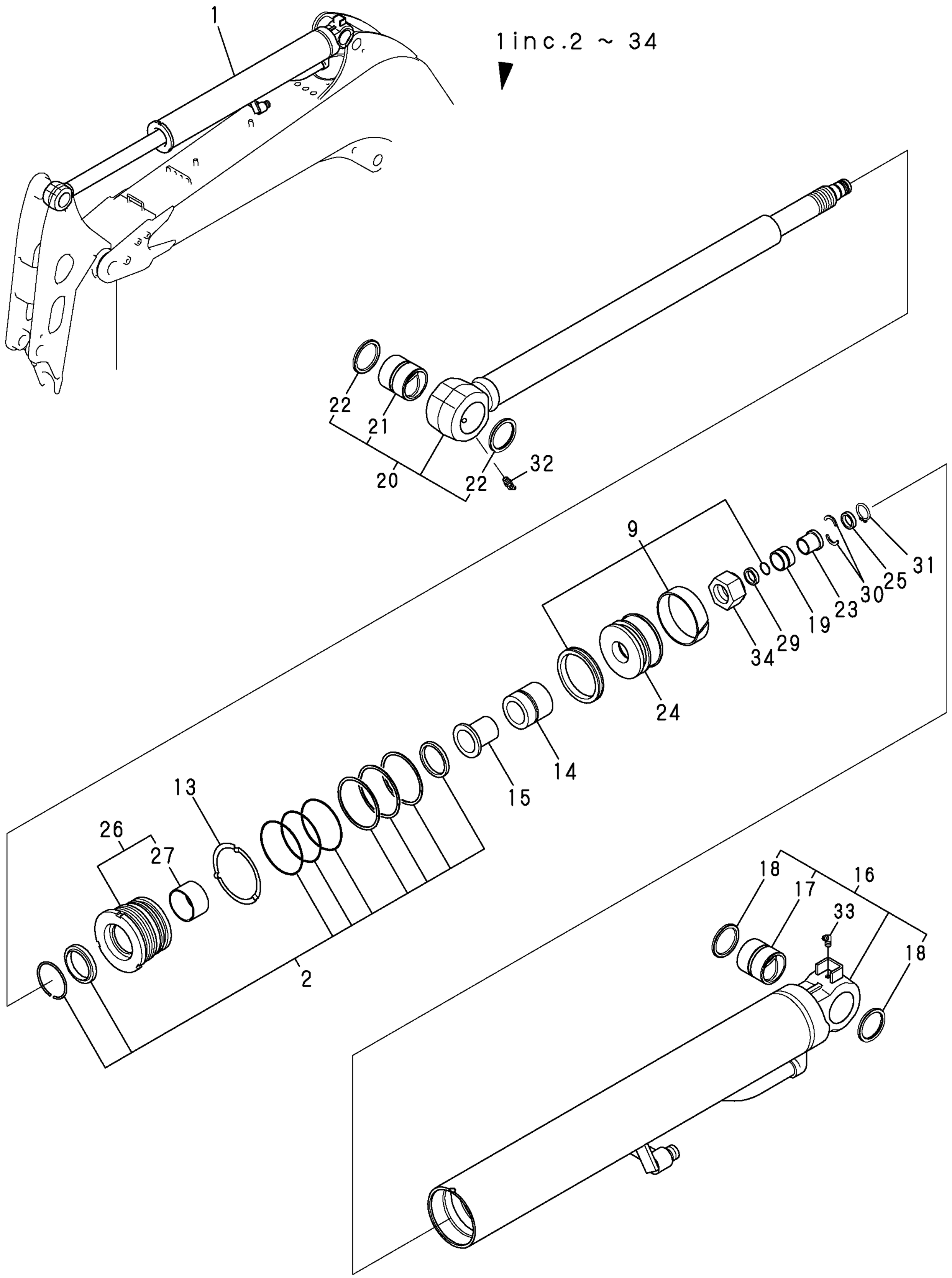

https://truckmanualshub.com/

```
1,1,,172460-72600-1,,"CYLINDER,BUCKET (87)",1,,,,,,,,,,,,,,,,,
2,2,,194145-04810,,"WASHER 10",2,,,,,,,,,,,,,,,,,
3,2,,172460-72060,,"SEAL SET",1,,,,,,,,,,,,,,,,,
10,2,,172460-72070,,"SEAL SET",1,,,,,,,,,,,,,,,,,
13,2,,172141-72420,,"WASHER 70, LOCK",1,,,,,,,,,,,,,,,,,
14,2,,172175-72550,,U-NUT,1,,,,,,,,,,,,,,,,,
15,2,,172460-72610-1,,"TUBE,BUCKET(YELLOW87",1,,,,,,,,,,,,,,,,,,
16,3,,172165-72320,,"BUSH 45X40",1,,,,,,,,,,,,,,,,,
17,3,,172168-81410,,"SEAL 45X55X4, DUST",2,,,,,,,,,,,,,,,,,
18,2,,172460-72640,,"PIPE     (YELLOW:87)",1,,,,,,,,,,,,,,,,,
19,2,,172460-72660,,"ROD,BUCKET",1,,,,,,,,,,,,,,,,,
20,3,,172151-72670,,"BUSH 45 50",1,,,,,,,,,,,,,,,,,
21,3,,172168-81410,,"SEAL 45X55X4, DUST",2,,,,,,,,,,,,,,,,,
22,2,,172460-72690,,HEAD,1,,,,,,,,,,,,,,,,,
23,3,,24550-045300,,BUSH,1,,,,,,,,,,,,,,,,,
25,2,,172421-72770,,"PISTON 70 30",1,,,,,,,,,,,,,,,,,
26,2,,172460-72840,,"PIPE     (YELLOW:87)",1,,,,,,,,,,,,,,,,,
27,2,,24761-040000,,"NIPPLE B,GREASE",2,,,,,,,,,,,,,,,,,
28,2,,26013-100202,,"BOLT W/WASHER M10X20",2,,,,,,,,,,,,,,,,,
```

https://truckmanualshub.com/

# Fig.30 BUCKET CYLINDER

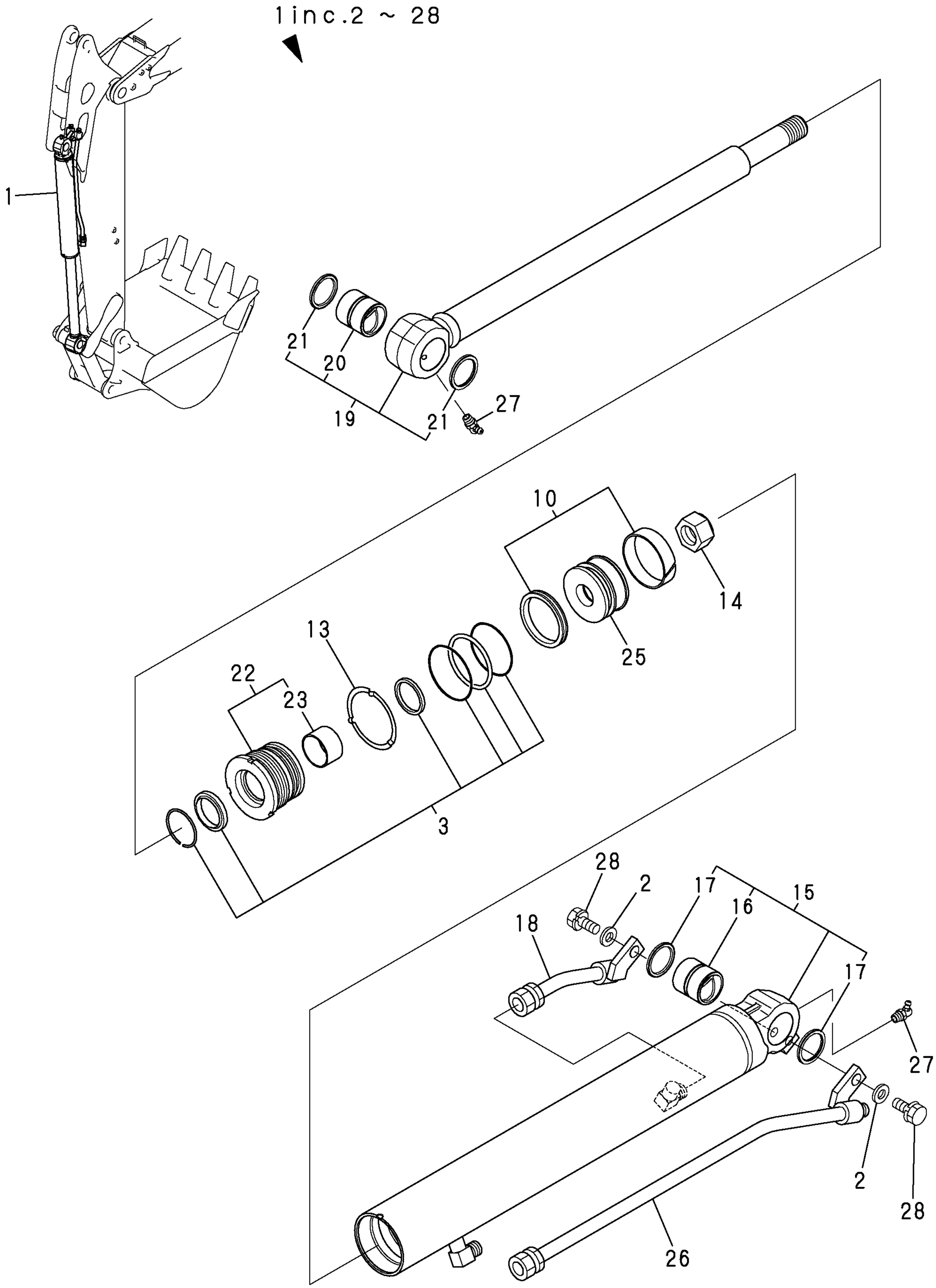

https://truckmanualshub.com/

```
1,1,,172460-72750-1,,"CYLINDER,SWING  (82)",1,,,,,,,,,,,,,,,,,
2,2,,172460-72040,,"SEAL SET",1,,,,,,,,,,,,,,,,,
9,2,,172460-72050,,"SEAL SET",1,,,,,,,,,,,,,,,,,
12,2,,933111-20200,,"U-NUT M33",1,,,,,,,,,,,,,,,,,
13,2,,172460-72760-1,,"TUBE,SWING(GREEN:82)",1,,,,,,,,,,,,,,,,,,
14,3,,172458-72740,,"BUSH 40X40,SO",1,,,,,,,,,,,,,,,,,
15,3,,172448-72650,,"SEAL 40X50X4,DUST",2,,,,,,,,,,,,,,,,,,
16,2,,172460-72850,,"ROD,SWING",1,,,,,,,,,,,,,,,,,
17,3,,172165-72310,,"BUSH 40X40",1,,,,,,,,,,,,,,,,,
18,3,,172448-72650,,"SEAL 40X50X4,DUST",2,,,,,,,,,,,,,,,,,,
19,2,,172151-72870,,"LOCK WASHER 90",1,,,,,,,,,,,,,,,,,
20,2,,172460-72880,,HEAD,1,,,,,,,,,,,,,,,,,
21,3,,24550-045300,,BUSH,1,,,,,,,,,,,,,,,,,
23,2,,172460-72900,,PISTON,1,,,,,,,,,,,,,,,,,
24,2,,24761-050000,,"NIPPLE C,GREASE",1,,,,,,,,,,,,,,,,,
25,1,,22217-100000,,"SPRING WASHER 10",1,,,,,,,,,,,,,,,,,
26,1,,26116-100162,,"BOLT M10X 16 PLATED",1,,,,,,,,,,,,,,,,,,
27,1,,22157-100000,,"WASHER 10",1,,,,,,,,,,,,,,,,,
```

https://truckmanualshub.com/

# Fig.31 SWING CYLINDER

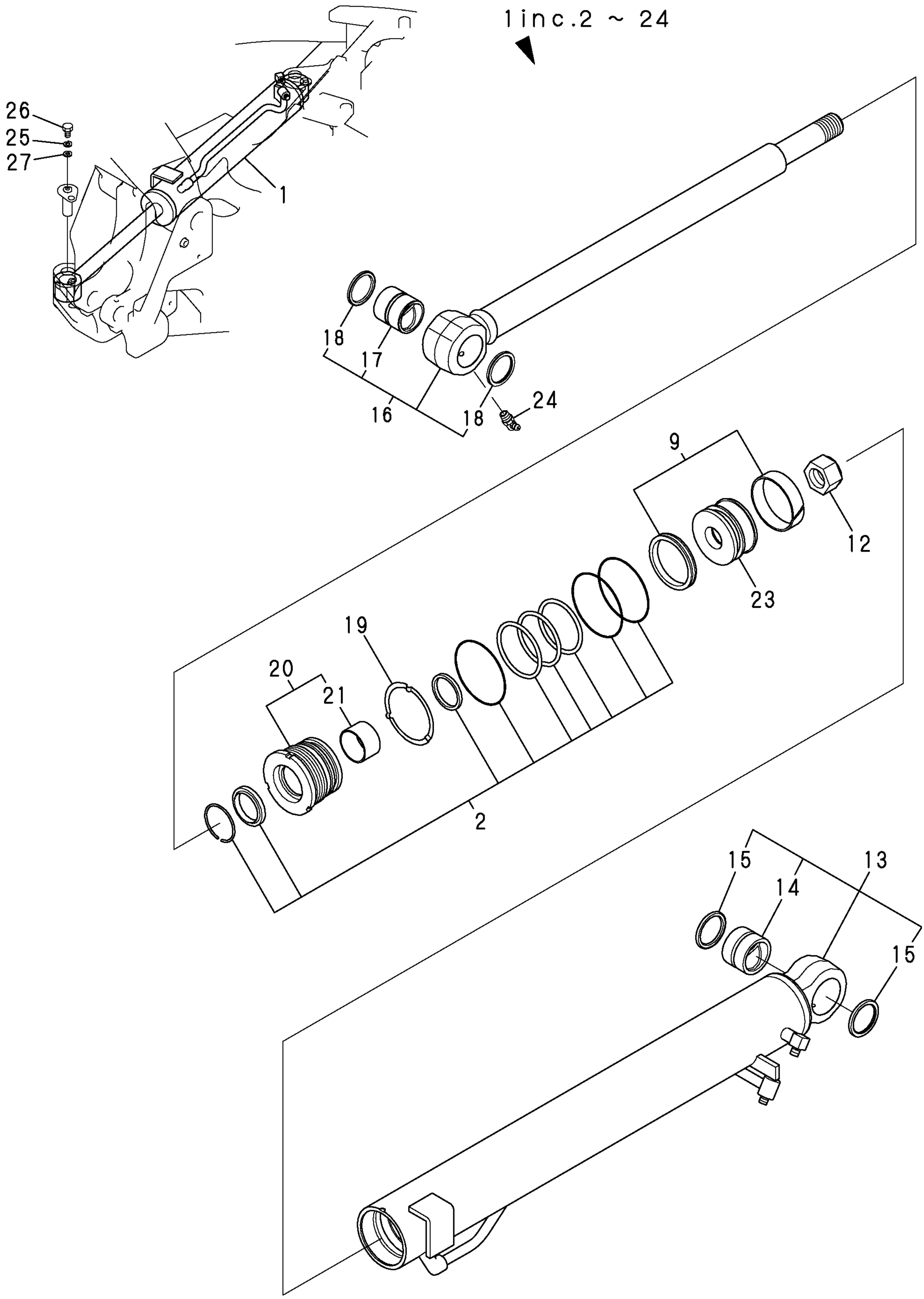

https://truckmanualshub.com/

```
1,1,,172423-72701-2,,"CYLINDER,BRADE  (82)",1,,,,,,,,,,,,,,,,,
2,2,,172423-72710-1,,"TUBE,BLADE(GREEN:82)",1,,,,,,,,,,,,,,,,,
3,3,,172151-72670,,"BUSH 45 50",1,,,,,,,,,,,,,,,,,
4,3,,172168-81410,,"SEAL 45X55X4, DUST",2,,,,,,,,,,,,,,,,,
5,2,,172423-72731,,"ROD ASSY, BLADE",1,,,,,,,,,,,,,,,,,
6,3,,172151-72670,,"BUSH 45 50",1,,,,,,,,,,,,,,,,,
7,3,,172168-81410,,"SEAL 45X55X4, DUST",2,,,,,,,,,,,,,,,,,
8,3,,23871-010000,,"PLUG PT1/8,SCREW",1,,,,,,,,,,,,,,,,,
9,2,,172151-71590,,"HEAD 90 50",1,,,,,,,,,,,,,,,,,
10,3,,172151-72540,,"BUSH 50 35, ROD",1,,,,,,,,,,,,,,,,,
12,2,,172151-71880,,"SEAL SET, HEAD",1,,,,,,,,,,,,,,,,,
17,2,,933111-26700,,"RING 65, SPRING",1,,,,,,,,,,,,,,,,,
18,2,,172151-72870,,"LOCK WASHER 90",1,,,,,,,,,,,,,,,,,
19,2,,172460-72050,,"SEAL SET",1,,,,,,,,,,,,,,,,,
22,2,,172423-72800,,"PISTON 90",1,,,,,,,,,,,,,,,,,
23,2,,172151-72580,,"U-NUT M36",1,,,,,,,,,,,,,,,,,
24,1,,172485-72670,,"COVER,BLADE(GREEN:82",1,,,,,,,,,,,,,,,,,
25,1,,22137-120000,,"WASHER 12,POLISHED",2,,,,,,,,,,,,,,,,,
26,1,,26116-120252,,"BOLT M12X 25 PLATED",2,,,,,,,,,,,,,,,,,
27,1,,22217-120000,,"SPRING WASHER",2,,,,,,,,,,,,,,,,,
```

https://truckmanualshub.com/

# Fig.32 BLADE CYLINDER

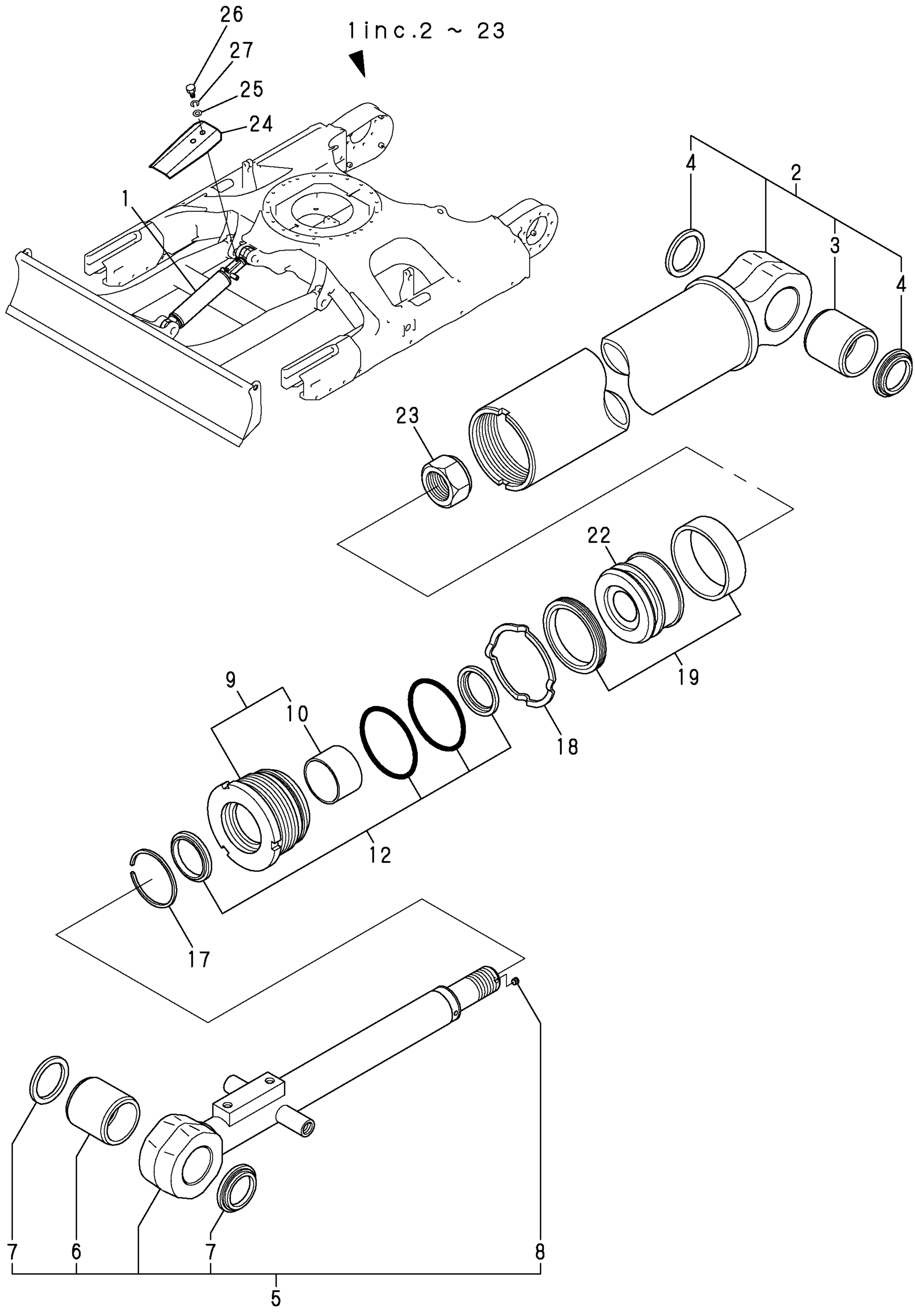

https://truckmanualshub.com/

```
1,1,,172460-73300,,"TRAVEL MOTOR",2,,,,,,,,,,,,,,,,,
2,2,,172147-70360,,SPRING,4,,,,,,,,,,,,,,,,,
3,2,,172147-70370,,"PLATE VALVE",2,,,,,,,,,,,,,,,,,
4,2,,172147-70390,,"BALL BEARING",2,,,,,,,,,,,,,,,,,
5,2,,172122-70410,,PIN,4,,,,,,,,,,,,,,,,,
6,2,,172122-70460,,"SPRING SEAT",4,,,,,,,,,,,,,,,,,
7,2,,172147-70500,,PLUG,6,,,,,,,,,,,,,,,,,
8,2,,172147-70520,,PLUG,2,,,,,,,,,,,,,,,,,
9,2,,172147-70540,,"HEAD BOLT, SOCKET",12,,,,,,,,,,,,,,,,,,
10,2,,172122-73470,,PIN,2,,,,,,,,,,,,,,,,,
11,2,,172423-73470,,SHAFT,2,,,,,,,,,,,,,,,,,
12,2,,172423-73480,,BEARING,2,,,,,,,,,,,,,,,,,
13,2,,172460-73500,,"REDUCTION GEAR",2,,,,,,,,,,,,,,,,,
14,3,,172124-70010,,BEARING,2,,,,,,,,,,,,,,,,,
15,3,,172124-70030,,BALL,198,,,,,,,,,,,,,,,,,
16,3,,172124-70050,,"RING NUT",2,,,,,,,,,,,,,,,,,
17,3,,172147-70070,,PLATE,2,,,,,,,,,,,,,,,,,
18,3,,172147-70090,,"SNAP RING",2,,,,,,,,,,,,,,,,,
19,3,,172141-70110,,SCREW,8,,,,,,,,,,,,,,,,,
20,3,,172147-70110,,"GEAR(A), PLANETARY",6,,,,,,,,,,,,,,,,,,
21,3,,172147-70120,,"GAUGE & ROLLER",6,,,,,,,,,,,,,,,,,
22,3,,172147-70210,,WIRE,2,,,,,,,,,,,,,,,,,
23,3,,172423-73330,,PLUG,4,,,,,,,,,,,,,,,,,
24,3,,172423-73340,,GEAR,8,,,,,,,,,,,,,,,,,
25,3,,172423-73350,,BEARING,8,,,,,,,,,,,,,,,,,
26,3,,172423-73360,,LATHE,8,,,,,,,,,,,,,,,,,
27,3,,172423-73370,,WASHER,8,,,,,,,,,,,,,,,,,
28,3,,172423-73380,,GEAR,2,,,,,,,,,,,,,,,,,
29,3,,172423-73410,,LATHE,6,,,,,,,,,,,,,,,,,
30,3,,172122-73430,,PLUG,4,,,,,,,,,,,,,,,,,
31,3,,172460-73510,,HOLDER,2,,,,,,,,,,,,,,,,,
32,3,,172460-73530,,GEAR,2,,,,,,,,,,,,,,,,,
33,3,,172460-73540,,COVER,2,,,,,,,,,,,,,,,,,
34,3,,172460-73600,,"SEAL KIT",2,,,,,,,,,,,,,,,,,
35,4,,172147-70020,,SEAL,2,,,,,,,,,,,,,,,,,
36,4,,24315-000110,,"O-RING 1B P-11.0",6,,,,,,,,,,,,,,,,,
37,4,,172147-70200,,O-RING,2,,,,,,M,,,,,,,,,,,,I
37-1,4,,172423-73690,,O-RING,2,,,,,,,,,,,,,,,,,,,,I
38,3,,172460-73620,,FRAMGE,2,,,,,,,,,,,,,,,,,
40,3,,172460-73630,,PLATE,2,,,,,,,,,,,,,,,,,
44,3,,172183-73770,,PLUG,6,,,,,,,,,,,,,,,,,
45,2,,172423-73510,,BOLL,4,,,,,,,,,,,,,,,,,
46,2,,172460-73550,,PLATE,2,,,,,,,,,,,,,,,,,
47,2,,172460-73560,,SPRING,4,,,,,,,,,,,,,,,,,
48,2,,172460-73570,,CAP,4,,,,,,,,,,,,,,,,,
49,2,,172460-73580,,VALVE,2,,,,,,,,,,,,,,,,,
50,3,,172460-73520,,"HEAD BOLT",6,,,,,,,,,,,,,,,,,
51,2,,172460-73590,,PLUG,4,,,,,,,,,,,,,,,,,
52,2,,172423-73600,,SPRING,2,,,,,,,,,,,,,,,,,
53,2,,172460-73610,,"SEAL KIT",2,,,,,,,,,,,,,,,,,
54,3,,172423-73490,,"OIL SEAL",2,,,,,,,,,,,,,,,,,
55,3,,172423-73560,,O-RING,2,,,,,,,,,,,,,,,,,
56,3,,24315-000070,,"O-RING 1B P-7.0",6,,,,,,,,,,,,,,,,,
57,3,,24315-000080,,"O-RING 1B P-8.0",4,,,,,,,,,,,,,,,,,
58,3,,24315-000140,,"O-RING 1B P-14.0",8,,,,,,,,,,,,,,,,,
59,3,,24315-000290,,"O-RING 1B P-29.0",4,,,,,,,,,,,,,,,,,
60,3,,24315-000100,,"O-RING 1B P-10.0",4,,,,,,,,,,,,,,,,,
61,2,,172460-73640,,"PLATE KIT",2,,,,,,,,,,,,,,,,,
62,3,,172147-70220,,PLUG,4,,,,,,,,,,,,,,,,,
63,3,,172148-70340,,ORIFICE,8,,,,,,,,,,,,,,,,,
65,3,,172312-74790,,ORIFICE,8,,,,,,,,,,,,,,,,,
66,2,,172423-73650,,"BROCK KIT",2,,,,,,,,,,,,,,,,,
76,2,,23871-020000,,"PLUG PT1/4,SCREW",2,,,,,,,,,,,,,,,,,
```

https://truckmanualshub.com/

```
77,1,,22217-140000,,"SPRING WASHER 14",18,,,,,,,,,,,,,,,,,,
78,1,,172455-29140,,"BOLT 14X35",18,,,,,,,,,,,,,,,,,,
```

https://truckmanualshub.com/

P/C NEWS No:Y00S4220-2
PUBLISHED:2004/6

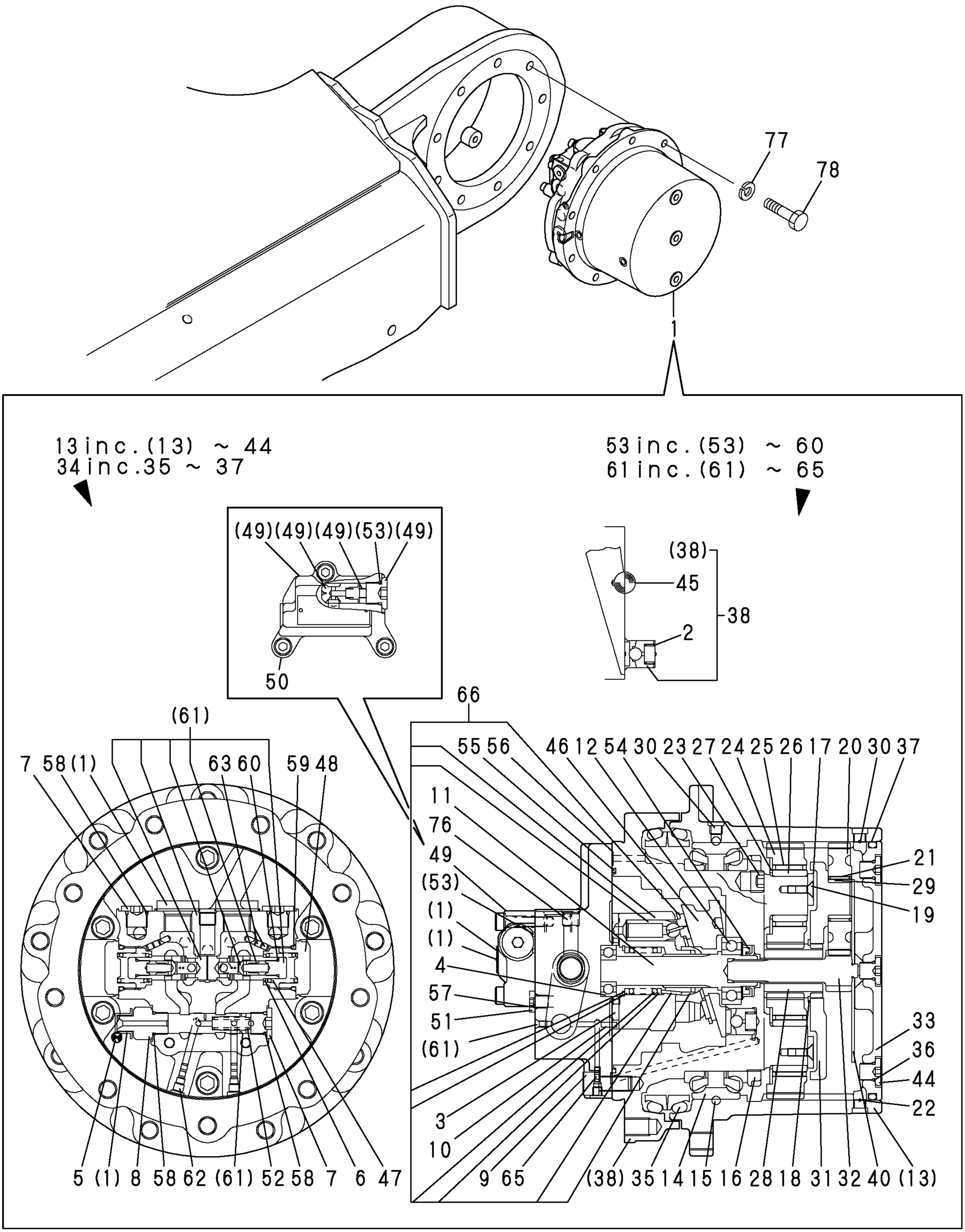

```
1,1,,172486-73310,,"MOTOR COMP.,SWING",1,,,,,,,,,,,,,,,,,,
2,2,,172460-73700,,"REDUCTION GEAR",1,,,,,,,,,,,,,,,,,,
3,3,,172425-73410,,"CARRIER 1 KIT",1,,,,,,,,,,,,,,,,,,
4,4,,22242-000200,,"CIRCLIP   20",4,,,,,,,,,,,,,,,,,,
5,4,,22351-040020,,"SPRING PIN 4X20",4,,,,,,,,,,,,,,,,,,
6,3,,172425-73420,,"CARRIER 2 KIT",1,,,,,,,,,,,,,,,,,,
7,4,,22242-000200,,"CIRCLIP   20",3,,,,,,,,,,,,,,,,,,
8,4,,22242-000300,,"CIRCLIP   30",1,,,,,,,,,,,,,,,,,,
9,4,,22351-040020,,"SPRING PIN 4X20",3,,,,,,,,,,,,,,,,,,
10,3,,172460-73790,,GEAR,1,,,,,,,,,,,,,,,,,,
11,3,,172425-73490,,COLLER,1,,,,,,,,,,,,,,,,,,
12,3,,172425-73510,,O-RING,1,,,,,,,,,,,,,,,,,,
13,3,,172425-73520,,RING,1,,,,,,,,,,,,,,,,,,
14,3,,172460-73710,,PINION,1,,,,,,,,,,,,,,,,,,
15,3,,26450-080252,,"BOLT M 8X 25",6,,,,,,,,,,,,,,,,,,
16,2,,172460-73720,,HYD.MOTOR,1,,,,,,,,,,,,,,,,,,
17,3,,172425-73440,,"BARREL KIT",1,,,,,,,,,,,,,,,,,,
18,4,,22252-000280,,"CIRCLIP   28",1,,,,,,,,,,,,,,,,,,
19,3,,172425-73450,,"PLATE KIT",1,,,,,,,,,,,,,,,,,,
20,4,,172425-73550,,PIN,1,,,,,,,,,,,,,,,,,,
21,3,,172425-73530,,FILDER,2,,,,,,,,,,,,,,,,,,
22,3,,172425-73540,,PIN,1,,,,,,,,,,,,,,,,,,
23,3,,172460-73730,,"BODY H KIT",1,,,,,,,,,,,,,,,,,,
24,4,,22351-050012,,"PIN 5X12,SPRING",1,,,,,,,,,,,,,,,,,,
25,4,,24101-062010,,"BALL BEARING",2,,,,,,,,,,,,,,,,,,
26,4,,24315-000180,,"O-RING 1B P-18.0",2,,,,,,,,,,,,,,,,,,
27,3,,172460-73740,,"SEAL KIT",1,,,,,,,,,,,,,,,,,,
28,4,,24315-000180,,"O-RING 1B P-18.0",1,,,,,,,,,,,,,,,,,,
29,4,,24325-001200,,"O-RING BG120.0",1,,,,,,,,,,,,,,,,,,
30,4,,24325-001000,,"O-RING 1B G-100.0",1,,,,,,,,,,,,,,,,,,
31,4,,24325-001100,,"O-RING 1B G110",1,,,,,,,,,,,,,,,,,,
32,4,,24376-001000,,"BACKUP RING T3 G100",1,,,,,,,,,,,,,,,,,,
33,4,,24376-001100,,"BACKUP RING T3 G110",1,,,,,,,,,,,,,,,,,,
34,3,,24105-062044,,"BALL BEARING",1,,,,,,,,,,,,,,,,,,
35,3,,26450-080502,,"BOLT 8X50",4,,,,,,,,,,,,,,,,,,
36,3,,26450-120352,,"BOLT M12X 35",5,,,,,,,,,,,,,,,,,,
37,2,,172460-73750,,VALVE,1,,,,,,,,,,,,,,,,,,
38,3,,172460-73760,,"SEAL KIT",1,,,,,,,,,,,,,,,,,,
39,4,,24315-000110,,"O-RING 1B P-11.0",2,,,,,,,,,,,,,,,,,,
40,4,,24315-000180,,"O-RING 1B P-18.0",2,,,,,,,,,,,,,,,,,,
41,2,,172461-73770,,"VALVE ASSY",2,,,,,,,,,,,,,,,,,,
42,3,,172460-73780,,"SEAL KIT",2,,,,,,,,,,,,,,,,,,
43,4,,24315-000140,,"O-RING 1B P-14.0",2,,,,,,,,,,,,,,,,,,
44,4,,24315-000180,,"O-RING 1B P-18.0",2,,,,,,,,,,,,,,,,,,
45,4,,24315-000220,,"O-RING 1B P-22.0",2,,,,,,,,,,,,,,,,,,
46,4,,24315-000280,,"O-RING 1B P-28.0",2,,,,,,,,,,,,,,,,,,
47,4,,24372-000140,,RING,4,,,,,,,,,,,,,,,,,,
48,1,,172460-73320,,BOLT,9,,,,,,,,,,,,,,,,,,
```

https://truckmanualshub.com/

# Fig.34 TURNING MOTOR

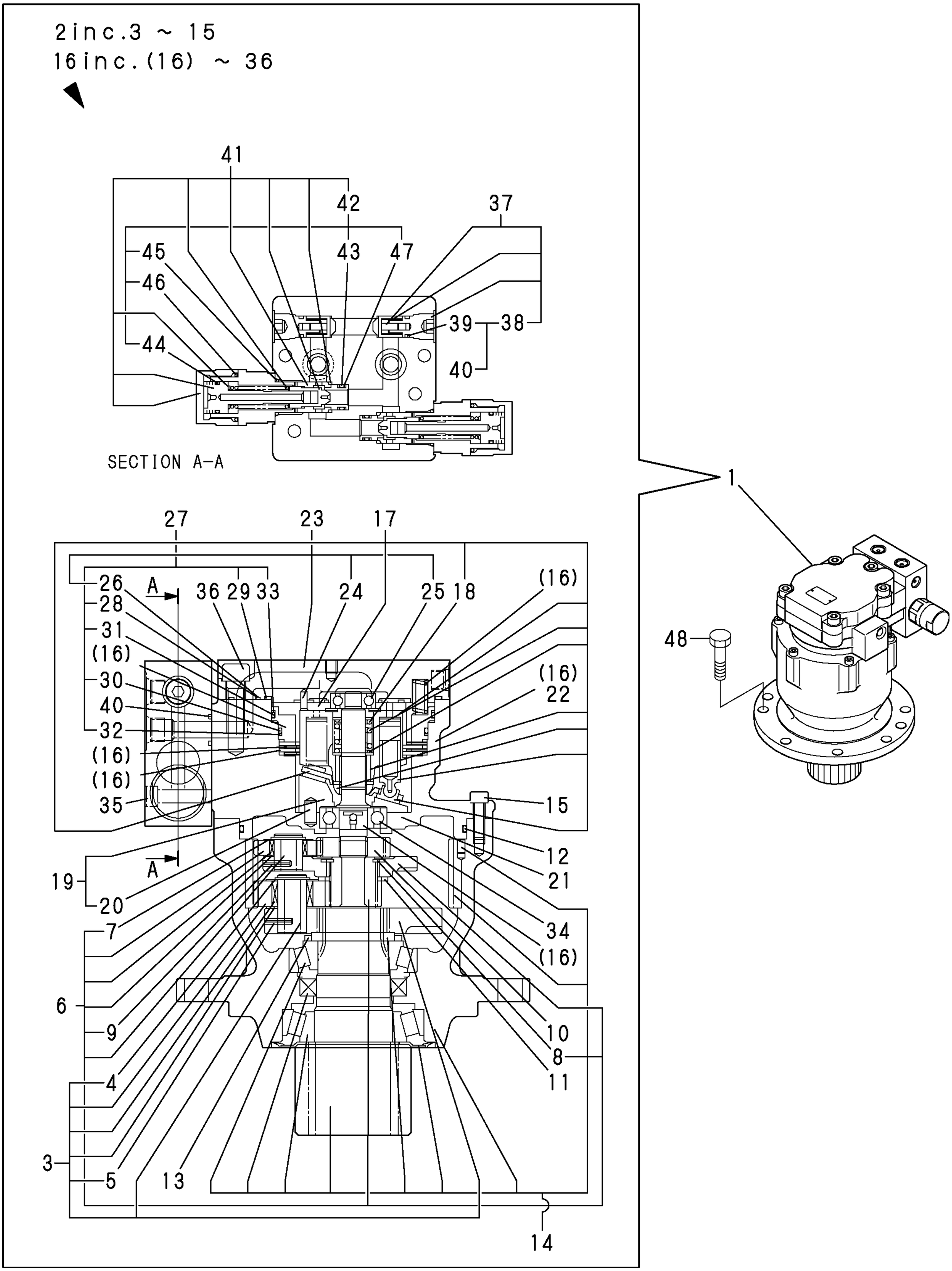

https://truckmanualshub.com/

```
1,1,,172444-73802,,"JOINT ASSY, SWIVEL",1,,,,,,,,,,,,,,,,,
2,2,,172444-73810,,"SHAFT, SWIVEL",1,,,,,,,,,,,,,,,,,
3,2,,172444-73840,,"FLANGE, SWIVEL",1,,,,,,,,,,,,,,,,,
4,2,,172444-73831,,"HUB, SWIVEL",1,,,,,,,,,,,,,,,,,
5,2,,172137-73860,,"SPACER, SWIVEL",1,,,,,,,,,,,,,,,,,
6,2,,172444-73880,,"SEAL KIT,SWIVEL",1,,,,,,,,,,,,,,,,,
7,3,,172142-73800,,"O-RING 55.76X5.7",1,,,,,,,,,,,,,,,,,
8,3,,172458-73820,,"SEAL, SWIVEL",7,,,,,,,,,,,,,,,,,
9,3,,172148-73870,,"LING EL, BUCK UP",1,,,,,,,,,,,,,,,,,
10,3,,24311-000750,,"O-RING 1A P-75.0",1,,,,,,,,,,,,,,,,,
11,3,,24321-000700,,"O-RING 1A G70.0,NBR",1,,,,,,,,,,,,,,,,,
12,2,,22242-000451,,"CIRCLIP   45",1,,,,,,,,,,,,,,,,,
13,2,,23871-020000,,"PLUG PT1/4,SCREW",7,,,,,,,,,,,,,,,,,
14,2,,26013-100352,,"BOLT M10X 35",3,,,,,,,,,,,,,,,,,
15,1,,22217-100000,,"SPRING WASHER 10",4,,,,,,,,,,,,,,,,,
16,1,,26116-100652,,"BOLT M10X 65 PLATED",4,,,,,,,,,,,,,,,,,
```

https://truckmanualshub.com/

# Fig.35 SWIVEL JOINT

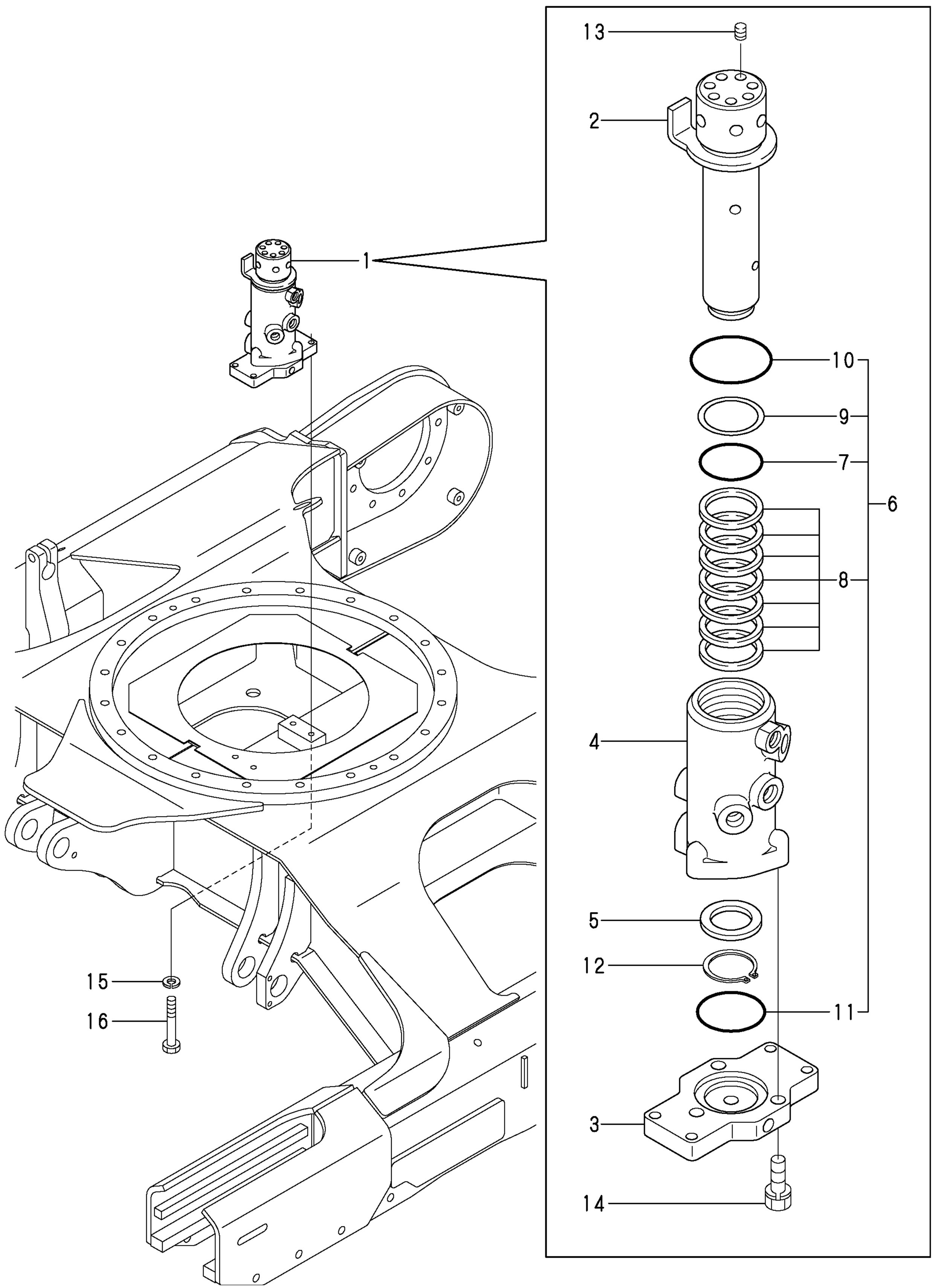

https://truckmanualshub.com/

```
1,1,,172486-74100,,"VALVE ASSY, CONTROL",1,,,,,,,,,,,,,,,,,,
2,2,,172422-74110,,NUT,8,,,,,,,,,,,,,,,,,
3,2,,172461-74140,,"INLET SECTION",1,,,,,,,,,,,,,,,,,,
6,4,,172422-74220,,O-RING,2,,,,,,,,,,,,,,,,,,
13,4,,172460-74370,,O-RING,2,,,,,,,,,,,,,,,,,,
14,3,,172461-74310,,"MAIN RELIFE 280",2,,,,,,,,,,,,,,,,,,,
15,4,,172116-74150,,O-RING,2,,,,,,,,,,,,,,,,,,
16,2,,172461-74210,,"BOOM 2 SECTION",1,,,,,,,,,,,,,,,,,,
19,4,,24315-000110,,"O-RING 1B P-11.0",1,,,,,,,,,,,,,,,,,,,
23,4,,172422-74220,,O-RING,2,,,,,,,,,,,,,,,,,,
29,4,,172460-74370,,O-RING,1,,,,,,,,,,,,,,,,,,
30,3,,172461-74310,,"MAIN RELIFE 280",1,,,,,,,,,,,,,,,,,,
31,4,,172116-74150,,O-RING,1,,,,,,,,,,,,,,,,,,
32,2,,172467-74130,,TIE-ROD,4,,,,,,,,,,,,,,,,,,
33,1,,26013-100162,,"BOLT M10X 16",3,,,,,,,,,,,,,,,,,,
34,1,,172165-45490,,CUSHION,6,,,,,,,,,,,,,,,,,,
35,1,,172460-45601,,"PLATE      (GRAY:72)",1,,,,,,,,,,,,,,,,,,,,
36,1,,22252-000280,,"CIRCLIP   28",6,,,,,,,,,,,,,,,,,,
37,1,,26106-100352,,"BOLT M10X 35 PLATED",6,,,,,,,,,,,,,,,,,,,
```

https://truckmanualshub.com/

# Fig.36 CONTROL VALVE (P PORT)

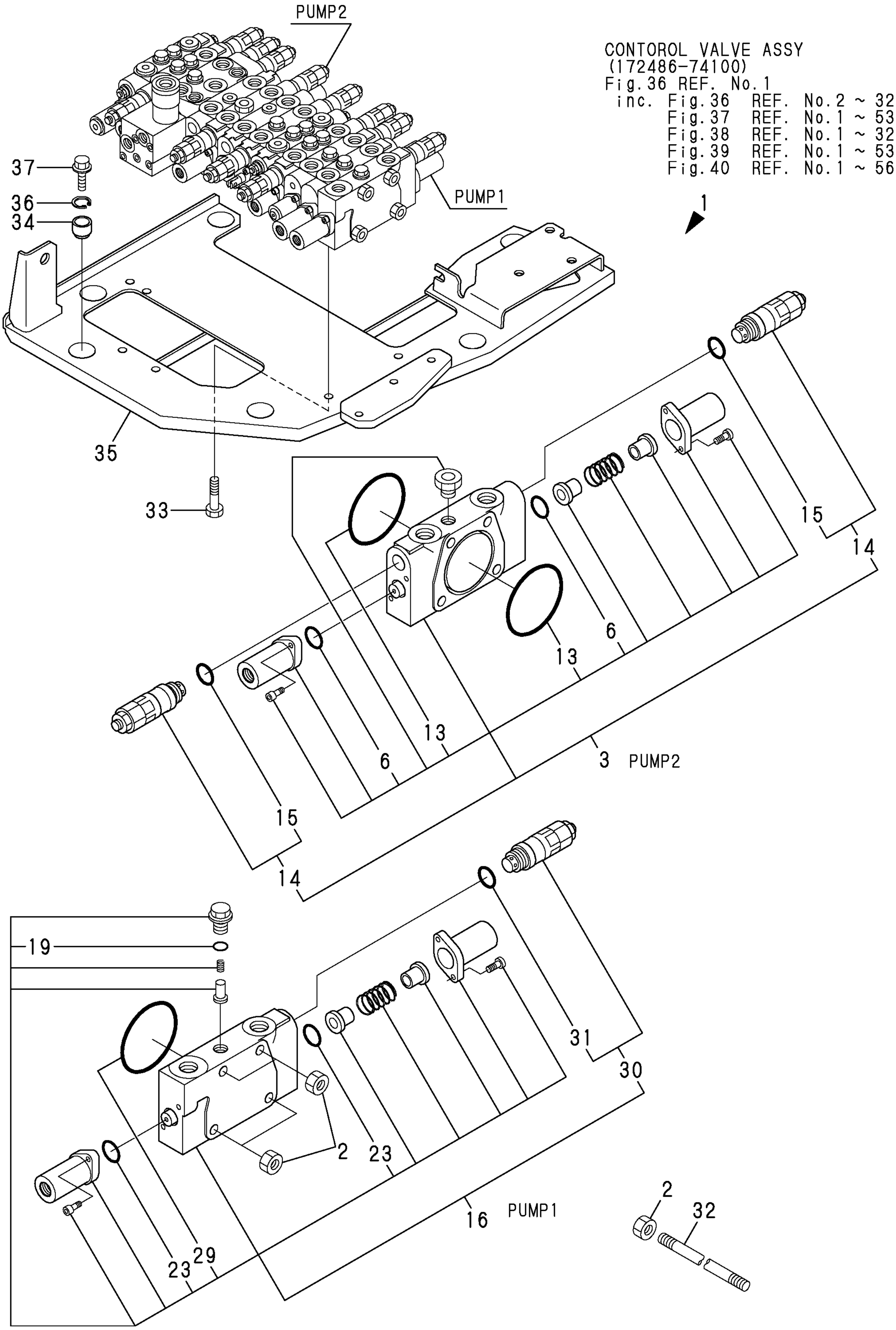


CONTOROL VALVE ASSY
(172486-74100)
Fig.36 REF. No.1
inc. Fig.36 REF. No.2 ~ 32
Fig.37 REF. No.1 ~ 53
Fig.38 REF. No.1 ~ 32
Fig.39 REF. No.1 ~ 53
Fig.40 REF. No.1 ~ 56

https://truckmanualshub.com/

```
1,2,,172460-74130,,"TRAVEL R SECTION",1,,,,,,,,,,,,,,,,,
6,3,,172614-74290,,WIPER,2,,,,,,,,,,,,,,,,,
12,3,,172422-74370,,O-RING,2,,,,,,,,,,,,,,,,,
13,3,,172460-74370,,O-RING,1,,,,,,,,,,,,,,,,,
15,2,,172460-74150,,"TRAVEL L SECTION",1,,,,,,,,,,,,,,,,,,
20,3,,172614-74290,,WIPER,2,,,,,,,,,,,,,,,,,
26,3,,172422-74370,,O-RING,2,,,,,,,,,,,,,,,,,
27,3,,172460-74370,,O-RING,1,,,,,,,,,,,,,,,,,
29,2,,172460-74170,,"P.T.O. SECTION",1,,,,,,,,,,,,,,,,,
32,4,,24315-000110,,"O-RING 1B P-11.0",2,,,,,,,,,,,,,,,,,,
33,4,,172422-74370,,O-RING,2,,,,,,,,,,,,,,,,,
34,4,,172614-74290,,WIPER,2,,,,,,,,,,,,,,,,,
44,4,,172460-74370,,O-RING,1,,,,,,,,,,,,,,,,,
45,3,,172455-74320,,"SHUTOFF VALVE",2,,,,,,,,,,,,,,,,,
48,4,,172455-74030,,O-RING,2,,,,,,,,,,,,,,,,,
51,4,,172116-74150,,O-RING,2,,,,,,,,,,,,,,,,,
52,3,,172187-74540,,PLUG,2,,,,,,,,,,,,,,,,,
53,4,,24315-000140,,"O-RING 1B P-14.0",2,,,,,,,,,,,,,,,,,
```

https://truckmanualshub.com/

# Fig.37 CONTROL VALVE (TRAVEL & P.T.O.)

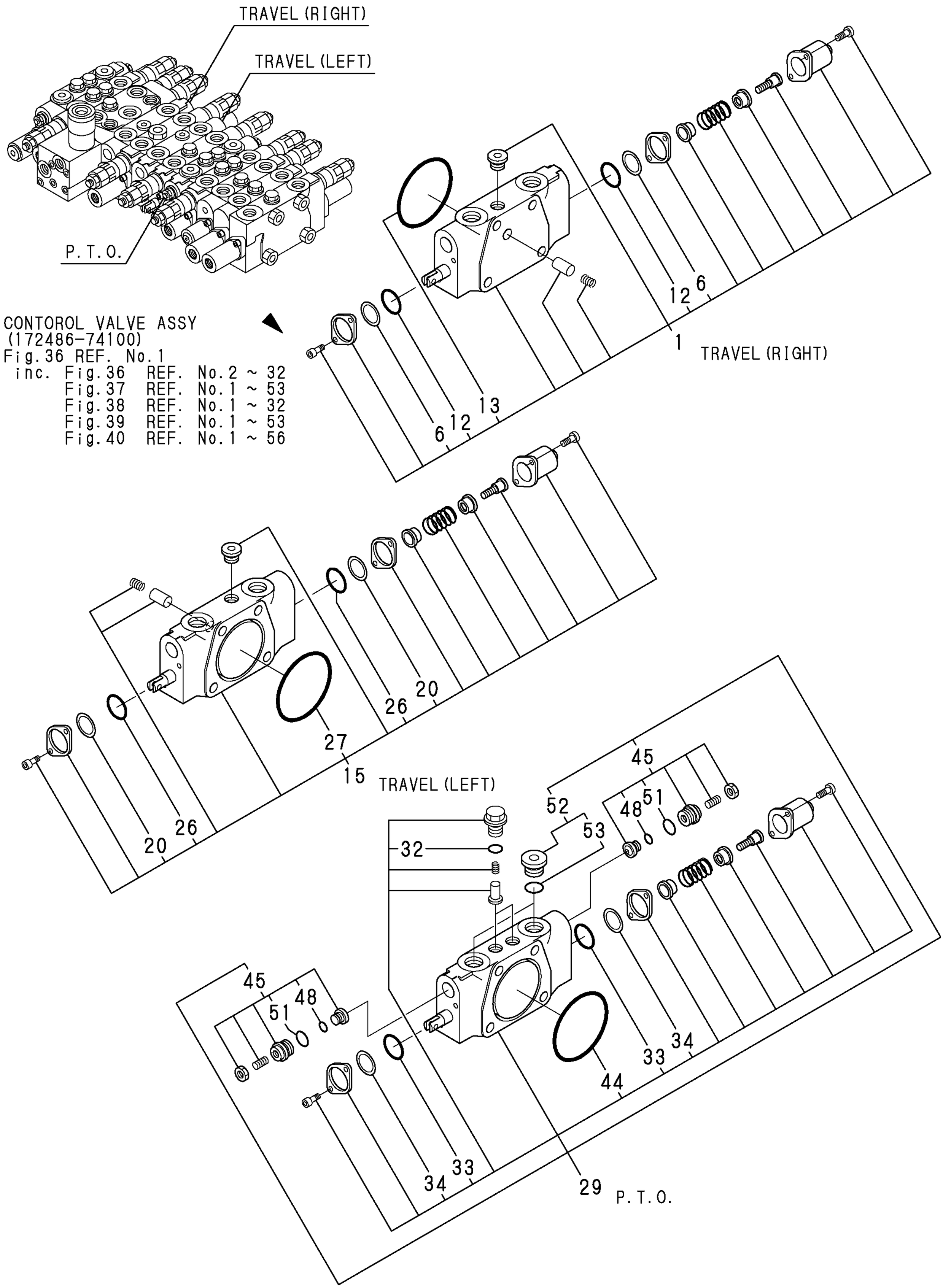

https://truckmanualshub.com/

```
1,2,,172461-74160,,"SWING SECTION",1,,,,,,,,,,,,,,,,,
4,4,,24315-000110,,"O-RING 1B P-11.0",1,,,,,,,,,,,,,,,,,,
5,4,,172422-74370,,O-RING,2,,,,,,,,,,,,,,,,,
6,4,,172614-74290,,WIPER,2,,,,,,,,,,,,,,,,,
16,4,,172460-74370,,O-RING,1,,,,,,,,,,,,,,,,,
17,3,,172461-74300,,"PORT RELIFE 280",2,,,,,,,,,,,,,,,,,,
18,4,,172116-74150,,O-RING,2,,,,,,,,,,,,,,,,,
19,2,,172461-74180,,"SECTION CMP,ARM",1,,,,,,,,,,,,,,,,,
22,4,,24315-000110,,"O-RING 1B P-11.0",2,,,,,,,,,,,,,,,,,,,
26,4,,172422-74220,,O-RING,2,,,,,,,,,,,,,,,,,
31,3,,172461-74300,,"PORT RELIFE 280",2,,,,,,,,,,,,,,,,,,
32,4,,172116-74150,,O-RING,2,,,,,,,,,,,,,,,,,
```

https://truckmanualshub.com/

# Fig.38 CONTROL VALVE (ARM & SWING)

CONTOROL VALVE ASSY
(172486-74100)
Fig.36 REF. No.1
inc. Fig.36 REF. No.2 ~ 32
Fig.37 REF. No.1 ~ 53
Fig.38 REF. No.1 ~ 32
Fig.39 REF. No.1 ~ 53
Fig.40 REF. No.1 ~ 56

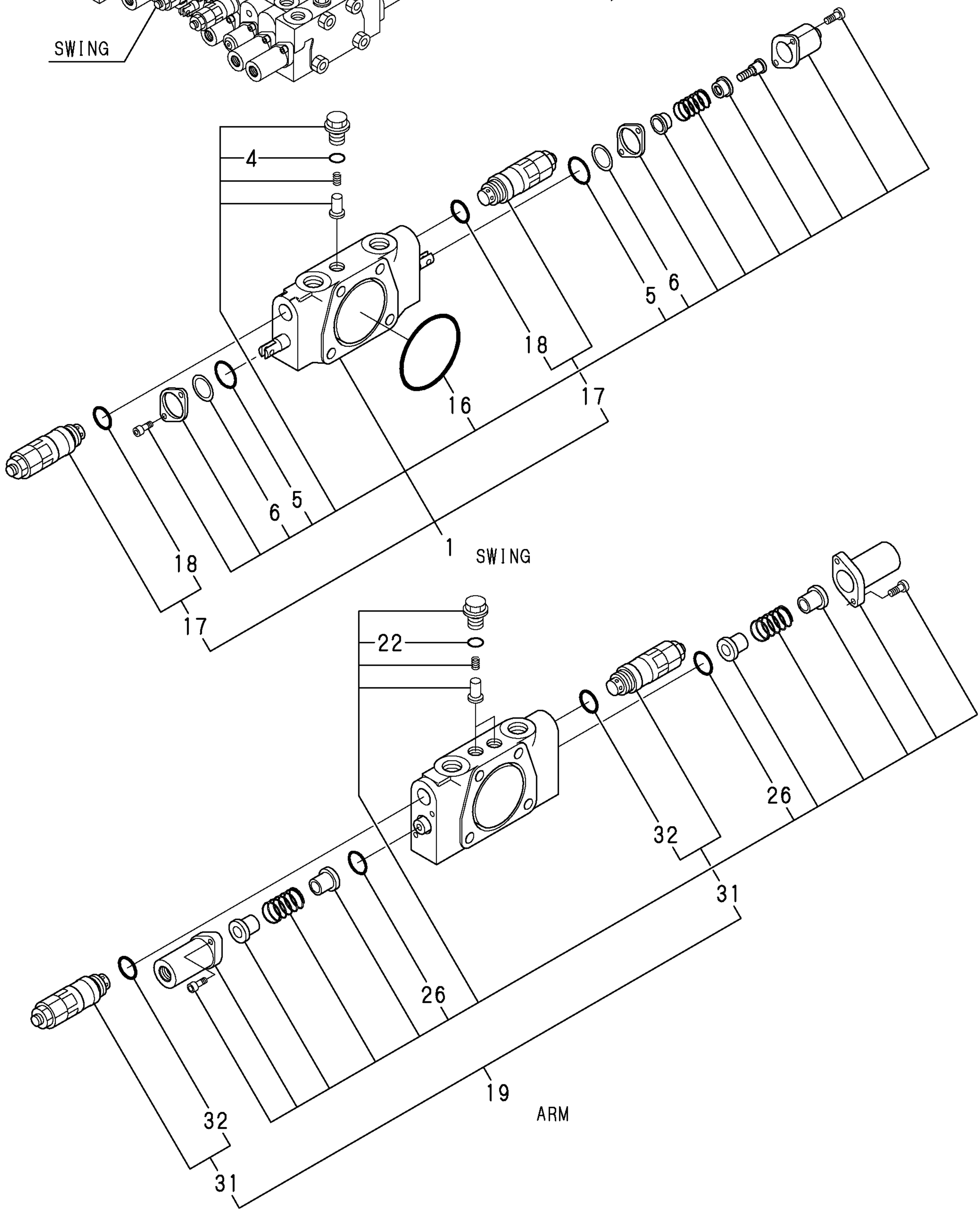

https://truckmanualshub.com/

```
1,2,,172467-74110,,"BUCKET SECTION",1,,,,,,,,,,,,,,,,,
4,4,,24315-000110,,"O-RING 1B P-11.0",2,,,,,,,,,,,,,,,,,,
8,4,,172422-74220,,O-RING,2,,,,,,,,,,,,,,,,,
14,4,,172460-74370,,O-RING,1,,,,,,,,,,,,,,,,,
15,3,,172461-74300,,"PORT RELIFE 280",2,,,,,,,,,,,,,,,,,,
16,4,,172116-74150,,O-RING,2,,,,,,,,,,,,,,,,,
17,2,,172461-74120,,"SECTION COMP.,BOOM",1,,,,,,,,,,,,,,,,,,
19,4,,172638-73650,,RING,1,,,,,,,,,,,,,,,,,
20,4,,24315-000110,,"O-RING 1B P-11.0",2,,,,,,,,,,,,,,,,,,
25,4,,172422-74220,,O-RING,2,,,,,,,,,,,,,,,,,
33,4,,172460-74500,,"BUCKUP RING",1,,,,,,,,,,,,,,,,,
34,4,,172455-74690,,PACKING,2,,,,,,,,,,,,,,,,,
40,4,,172455-74680,,"BACK UP RING",1,,,,,,,,,,,,,,,,,
41,4,,172455-74660,,PACKING,1,,,,,,,,,,,,,,,,,
42,4,,172455-74670,,PACKING,1,,,,,,,,,,,,,,,,,
45,4,,172116-74150,,O-RING,1,,,,,,,,,,,,,,,,,
51,4,,172460-74370,,O-RING,1,,,,,,,,,,,,,,,,,
52,3,,172461-74300,,"PORT RELIFE 280",2,,,,,,,,,,,,,,,,,,
53,4,,172116-74150,,O-RING,2,,,,,,,,,,,,,,,,,
```

https://truckmanualshub.com/

# Fig.39 CONTROL VALVE (BOOM & BUCKET)

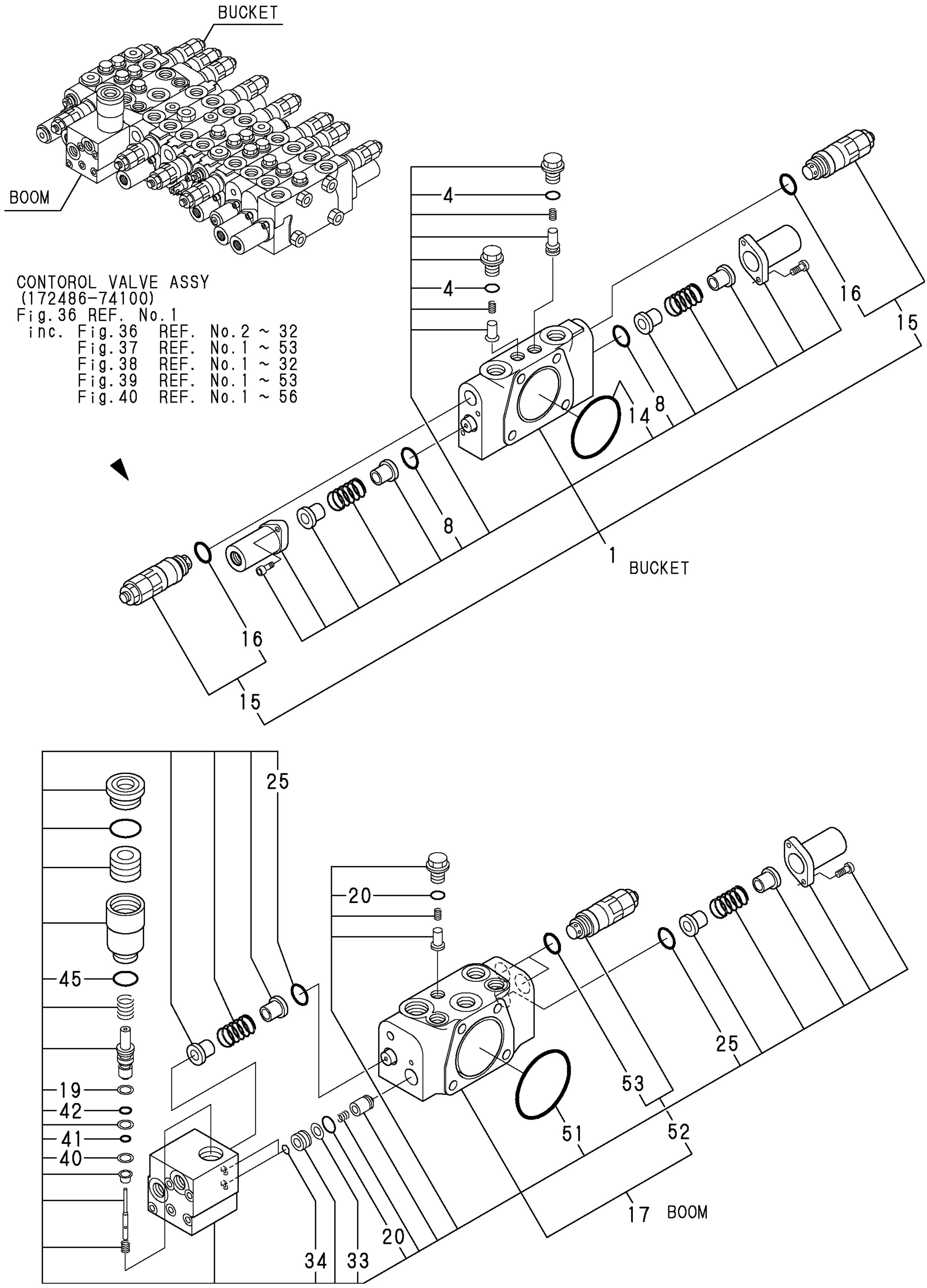

https://truckmanualshub.com/

```
1,2,,172460-74190,,"BLADE SECTION",1,,,,,,,,,,,,,,,,,
4,4,,24315-000110,,"O-RING 1B P-11.0",1,,,,,,,,,,,,,,,,,,
5,4,,172422-74370,,O-RING,2,,,,,,,,,,,,,,,,,
6,4,,172614-74290,,WIPER,2,,,,,,,,,,,,,,,,,
16,4,,172460-74370,,O-RING,1,,,,,,,,,,,,,,,,,
20,3,,172460-74320,,"PORT RELIFE 150",1,,,,,,,,,,,,,,,,,,
21,4,,172116-74150,,O-RING,1,,,,,,,,,,,,,,,,,
22,2,,172461-74200,,"TURNING SECTION",1,,,,,,,,,,,,,,,,,,
24,3,,172422-74220,,O-RING,2,,,,,,,,,,,,,,,,,
27,3,,172460-74370,,O-RING,1,,,,,,,,,,,,,,,,,
33,3,,24315-000110,,"O-RING 1B P-11.0",1,,,,,,,,,,,,,,,,,,
34,2,,172467-74120,,"4TH SECTION ASSY",1,,,,,,,,,,,,,,,,,,
37,4,,24315-000110,,"O-RING 1B P-11.0",2,,,,,,,,,,,,,,,,,,
41,4,,172422-74220,,O-RING,2,,,,,,,,,,,,,,,,,
47,3,,172455-74320,,"SHUTOFF VALVE",2,,,,,,,,,,,,,,,,,
50,4,,172455-74030,,O-RING,2,,,,,,,,,,,,,,,,,
53,4,,172116-74150,,O-RING,2,,,,,,,,,,,,,,,,,
54,3,,172187-74540,,PLUG,2,,,,,,,,,,,,,,,,,
55,4,,24315-000140,,"O-RING 1B P-14.0",2,,,,,,,,,,,,,,,,,,
56,3,,172422-74330,,PLUG,2,,,,,,,,,,,,,,,,,
```

https://truckmanualshub.com/

# Fig.40 CONTROL VALVE(TURNING & BLADE)

CONTOROL VALVE ASSY
(172486-74100)
Fig.36 REF. No.1
inc. Fig.36 REF. No.2 ~ 32
Fig.37 REF. No.1 ~ 53
Fig.38 REF. No.1 ~ 32
Fig.39 REF. No.1 ~ 53
Fig.40 REF. No.1 ~ 56

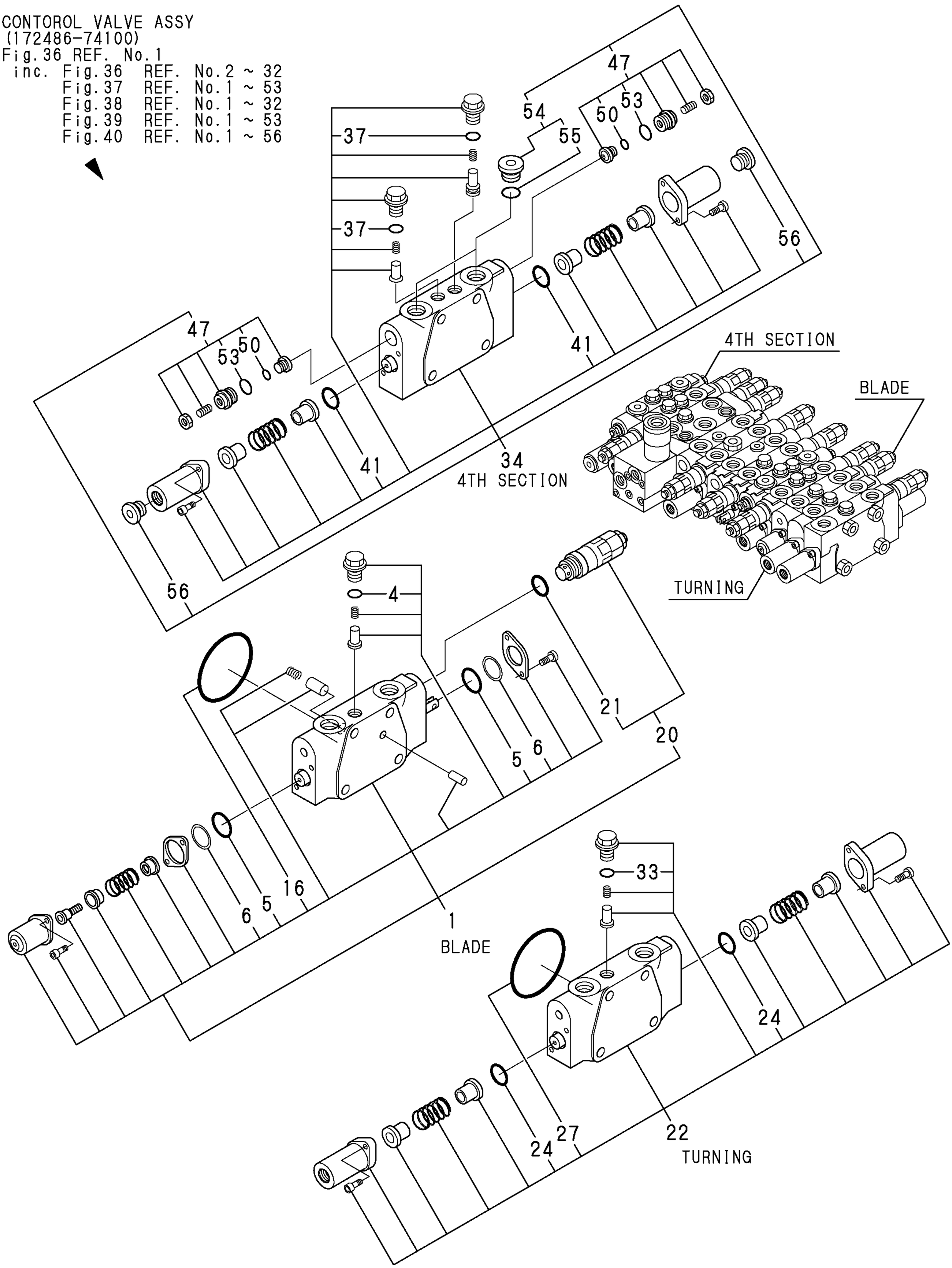

https://truckmanualshub.com/

```
1,1,,172463-74511,,"VALVE ASSY, R.US",1,,,,,,,,,,,,,,,,,
2,2,,172441-74030,,BELLOWS,1,,,,,,,,,,,,,,,,,
3,2,,172441-74040,,"COMMAND KIT",1,,,,,,,,,,,,,,,,,
4,2,,172463-74530,,"CARDAN KIT",1,,,,,,,,,,,,,,,,,
5,2,,172463-74540,,"RETAINING PLATE",1,,,,,,,,,,,,,,,,,
6,2,,172463-74551,,"PLUNGER KIT",1,,,,,,,,,,,,,,,,,
7,2,,172463-74561,,"REGULATION KIT",1,,,,,,,,,,,,,,,,,
8,2,,172463-74570,,"SPRING KIT",1,,,,,,,,,,,,,,,,,
9,2,,172463-74580,,"PUSH BUTTON",1,,,,,,,,,,,,,,,,,
10,2,,172463-74590,,"HANDLE R",1,,,,,,,,,,,,,,,,,
11,1,,172463-74521,,"VALVE ASSY, L.US",1,,,,,,,,,,,,,,,,,
12,2,,172441-74030,,BELLOWS,1,,,,,,,,,,,,,,,,,
13,2,,172441-74040,,"COMMAND KIT",1,,,,,,,,,,,,,,,,,
14,2,,172441-74050,,"HANDLE L",1,,,,,,,,,,,,,,,,,
15,2,,172463-74530,,"CARDAN KIT",1,,,,,,,,,,,,,,,,,
16,2,,172463-74540,,"RETAINING PLATE",1,,,,,,,,,,,,,,,,,
17,2,,172463-74551,,"PLUNGER KIT",1,,,,,,,,,,,,,,,,,
18,2,,172463-74561,,"REGULATION KIT",1,,,,,,,,,,,,,,,,,
19,2,,172463-74570,,"SPRING KIT",1,,,,,,,,,,,,,,,,,
20,1,,26013-060202,,"BOLT M 6X 20",8,,,,,,,,,,,,,,,,,
21,1,,22137-060000,,"WASHER 6, POLISHED",8,,,,,,,,,,,,,,,,,
```

https://truckmanualshub.com/

# Fig. 41 REMOTE CONTROL VALVE

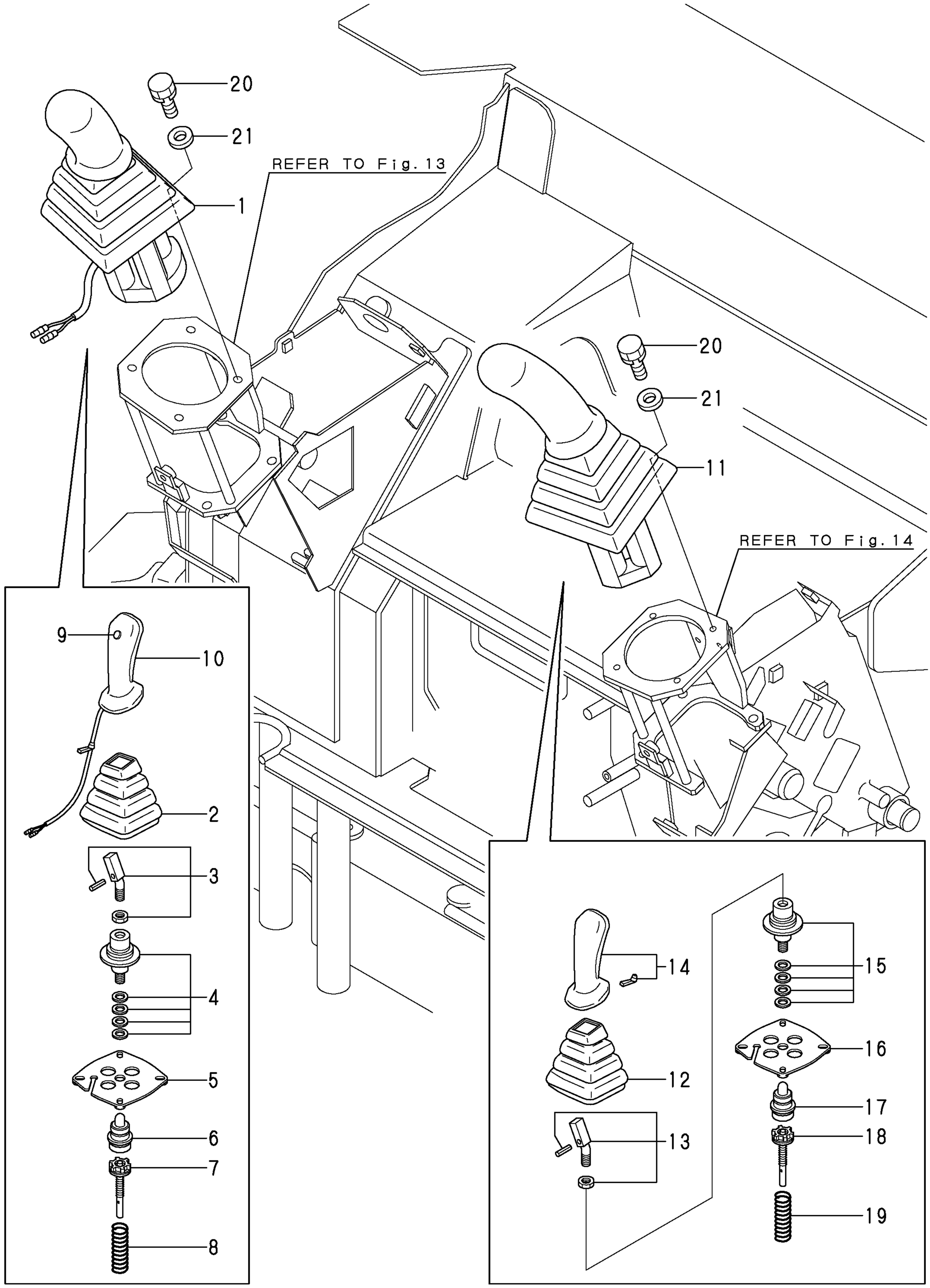

https://truckmanualshub.com/

```
1,1,,772486-75100,,"HYD.OIL TANK    (87)",1,,,,,,,,,,,,,,,,,,
3,2,,23000-013000,,"CLAMP 13",1,,,,,,,,,,,,,,,,,
4,2,,172486-75431,,"COVER    (YELLOW:87)",1,,,,,,,,,,,,,,,,,,
5,2,,172174-75490,,HOSE,1,,,,,,,,,,,,,,,,,
6,2,,172486-75510,,"DRAIN PLUG 24",1,,,,,,,,,,,,,,,,,
7,2,,172486-75520,,"CAP,TANK (YELLOW:87)",1,,,,,,,,,,,,,,,,,,
8,2,,172174-75450,,PLATE,1,,,,,,,,,,,,,,,,,
9,2,,172165-75460,,GASKET,1,,,,,,,,,,,,,,,,,
10,2,,172165-75481,,ELEMENT,1,,,,,,,,,,,,,,,,,
11,2,,172447-75600,,GAUGE,1,,,,,,,,,,,,,,,,,
12,3,,172455-75290,,"BOLT M10",2,,,,,,,,,,,,,,,,,
13,3,,172455-75300,,O-RING,4,,,,,,,,,,,,,,,,,
16,2,,172159-75850,,"PLUG, OIL FEED",1,,,,,,,,,,,,,,,,,
17,2,,24311-000380,,"O-RING 1A P-38.0",1,,,,,,,,,,,,,,,,,
18,2,,24321-001050,,"O-RING 1A G-105.0",1,,,,,,,,,,,,,,,,,
19,2,,24321-001050,,"O-RING 1A G-105.0",1,,,,,,,,,,,,,,,,,
20,2,,24341-000300,,"O-RING 1A S-30.0",1,,,,,,,,,,,,,,,,,
21,2,,26013-080202,,"BOLT W/WASHER M8X20",6,,,,,,,,,,,,,,,,,
22,2,,26022-050102,,"SCREW M 5X 10",3,,,,,,,,,,,,,,,,,
23,2,,172159-73710,,"ROD, FILTER",1,,,,,,,,,,,,,,,,,
24,2,,172137-73700,,"FILTER, SUCTION",1,,,,,,,,,,,,,,,,,
25,2,,172175-73700,,"FILTER ASSY, RETURN",1,,,,,,,,,,,,,,,,,
26,3,,172175-73710,,ELEMENT,1,,,,,,,,,,,,,,,,,
27,3,,172141-73770,,"VALVE ASSY, BYPASS",1,,,,,,,,,,,,,,,,,
28,2,,172159-73780,,"SPRING, SIDE CLUTCH",1,,,,,,,,,,,,,,,,,
29,2,,26716-100002,,"NUT 10",1,,,,,,,,,,,,,,,,,
30,2,,172159-73700,,"SPRING, SIDE CLUTCH",1,,,,,,,,,,,,,,,,,
31,2,,172184-76370,,CONNECTOR,1,,,,,,,,,,,,,,,,,
32,1,,22137-140000,,"WASHER 14,POLISHED",4,,,,,,,,,,,,,,,,,
33,1,,22217-140000,,"SPRING WASHER 14",4,,,,,,,,,,,,,,,,,
34,1,,26116-140402,,"BOLT M14X 40 PLATED",4,,,,,,,,,,,,,,,,,
```

https://truckmanualshub.com/

# Fig.42 HYD.OIL TANK

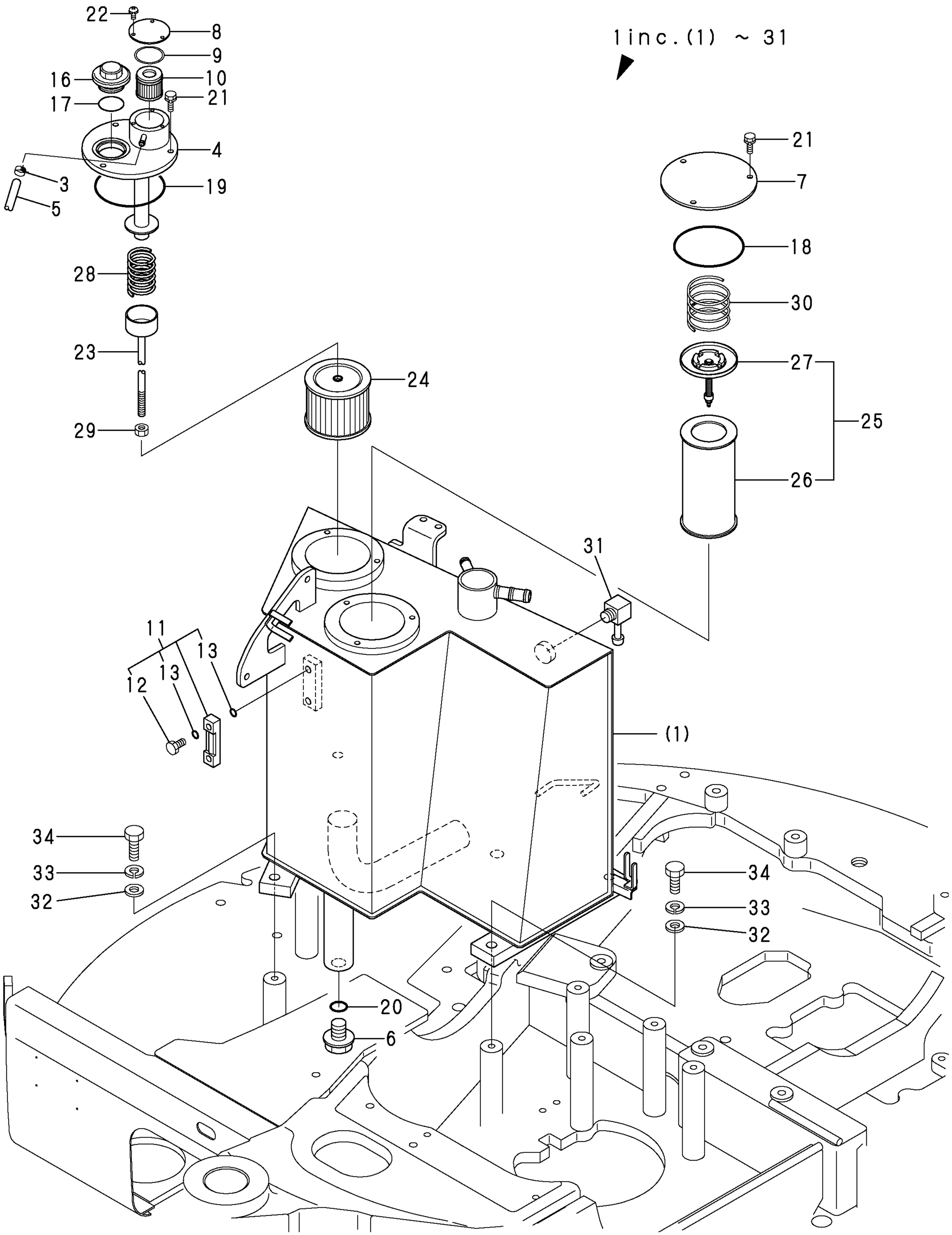

https://truckmanualshub.com/

```
1,1,,172174-76200,,"CONNECTOR PF1/2-3/8",3,,,,,,,,,,,,,,,,,,
2,1,,172460-76570,,PLUG,1,,,,,,,,,,,,,,,,,,
3,1,,172165-76860,,FLANGE,1,,,,,,,,,,,,,,,,,,
4,1,,172460-76900,,BODY,1,,,,,,,,,,,,,,,,,,
5,1,,172164-76950,,CONNECTOR,1,,,,,,,,,,,,,,,,,,
6,2,,24315-000180,,"O-RING 1B P-18.0",1,,,,,,,,,,,,,,,,,,
7,1,,172112-77361,,CONNECTOR,2,,,,,,,,,,,,,,,,,,
8,1,,22117-120000,,"WASHER 12",4,,,,,,,,,,,,,,,,,,
9,1,,23391-040000,,"JOINT RGI 1/2",1,,,,,,,,,,,,,,,,,,
10,1,,24315-000140,,"O-RING 1B P-14.0",3,,,,,,,,,,,,,,,,,,
11,1,,24315-000180,,"O-RING 1B P-18.0",2,,,,,,,,,,,,,,,,,,
12,1,,24321-000450,,"O-RING 1A G-45.0",1,,,,,,,,,,,,,,,,,,
13,1,,26013-120302,,"BOLT W/WASHER M12X30",4,,,,,,,,,,,,,,,,,,,,
14,1,,172486-78100,,"HOSE 44.5X57.5",1,,,,,,,,,,,,,,,,,,
15,1,,172486-78111,,"HOSE 44.5X57.5",1,,,,,,,,,,,,,,,,,,
16,1,,172486-78170,,GUARD,1,,,,,,,,,,,,,,,,,,
17,1,,172486-78330,,GUARD,1,,,,,,,,,,,,,,,,,,
18,1,,172486-78370,,"HOSE H208BC097",1,,,,,,,,,,,,,,,,,,
19,1,,172486-78380,,"HOSE H208CZ091",1,,,,,,,,,,,,,,,,,,
20,1,,172486-78450,,"HOSE H208CZ092",1,,,,,,,,,,,,,,,,,,
21,1,,172174-79930,,"BAND 250",1,,,,,,,,,,,,,,,,,,
22,1,,23001-070000,,CLIP,8,,,,,,,,,,,,,,,,,,
23,1,,172486-76681,,"TUBE      (GREEN:82)",1,,,,,,,,,,,,,,,,,,,,
24,1,,26013-100252,,"BOLT W/WASHER M10X25",2,,,,,,,,,,,,,,,,,,,,
```

https://truckmanualshub.com/

# Fig.43 HYD.OIL PIPING(TANK-P.-VALVE)

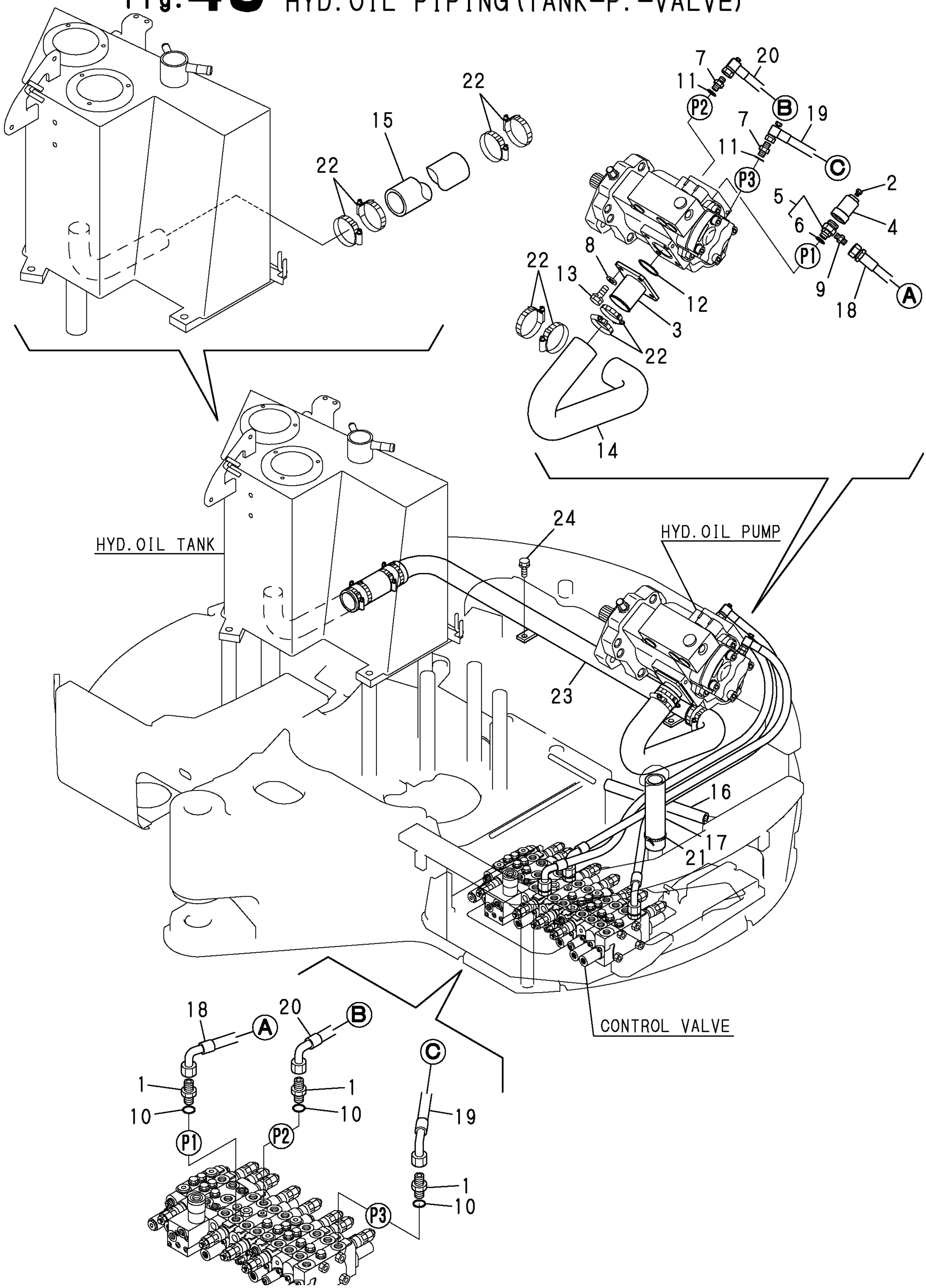

https://truckmanualshub.com/

```
1,1,,172159-76160,,ADAPTOR,2,,,,,,,,,,,,,,,,,,
2,1,,172486-76360,,"ADAPTER G3/8",1,,,,,,,,,,,,,,,,,,
3,1,,172159-76180,,CONNECTOR,1,,,,,,,,,,,,,,,,,,
5,2,,24315-000110,,"O-RING 1B P-11.0",1,,,,,,,,,,,,,,,,,,
6,1,,172486-76360,,"ADAPTER G3/8",1,,,,,,,,,,,,,,,,,,
7,1,,24315-000140,,"O-RING 1B P-14.0",2,,,,,,,,,,,,,,,,,,
8,1,,24315-000140,,"O-RING 1B P-14.0",1,,,,,,,,,,,,,,,,,,
9,1,,24315-000140,,"O-RING 1B P-14.0",1,,,,,,,,,,,,,,,,,,
10,1,,172457-76100,,"ADJUSTABLE TEE",1,,,,,,,,,,,,,,,,,,
11,1,,172159-76120,,"CONNECTOR PF1/4",2,,,,,,,,,,,,,,,,,,
12,1,,24315-000110,,"O-RING 1B P-11.0",2,,,,,,,,,,,,,,,,,,,
13,1,,172486-78340,,"HOSE F206CE094S",1,,,,,,,,,,,,,,,,,,
14,1,,172486-78350,,"HOSE F206CE090S",1,,,,,,,,,,,,,,,,,,
15,1,,172486-78420,,"HOSE F403CE127",1,,,,,,,,,,,,,,,,,,
16,1,,172486-78440,,"HOSE F403CE092",1,,,,,,,,,,,,,,,,,,
```

https://truckmanualshub.com/

# Fig. 44 HYD. OIL PIPING (PUMP-V.-MOTOR)

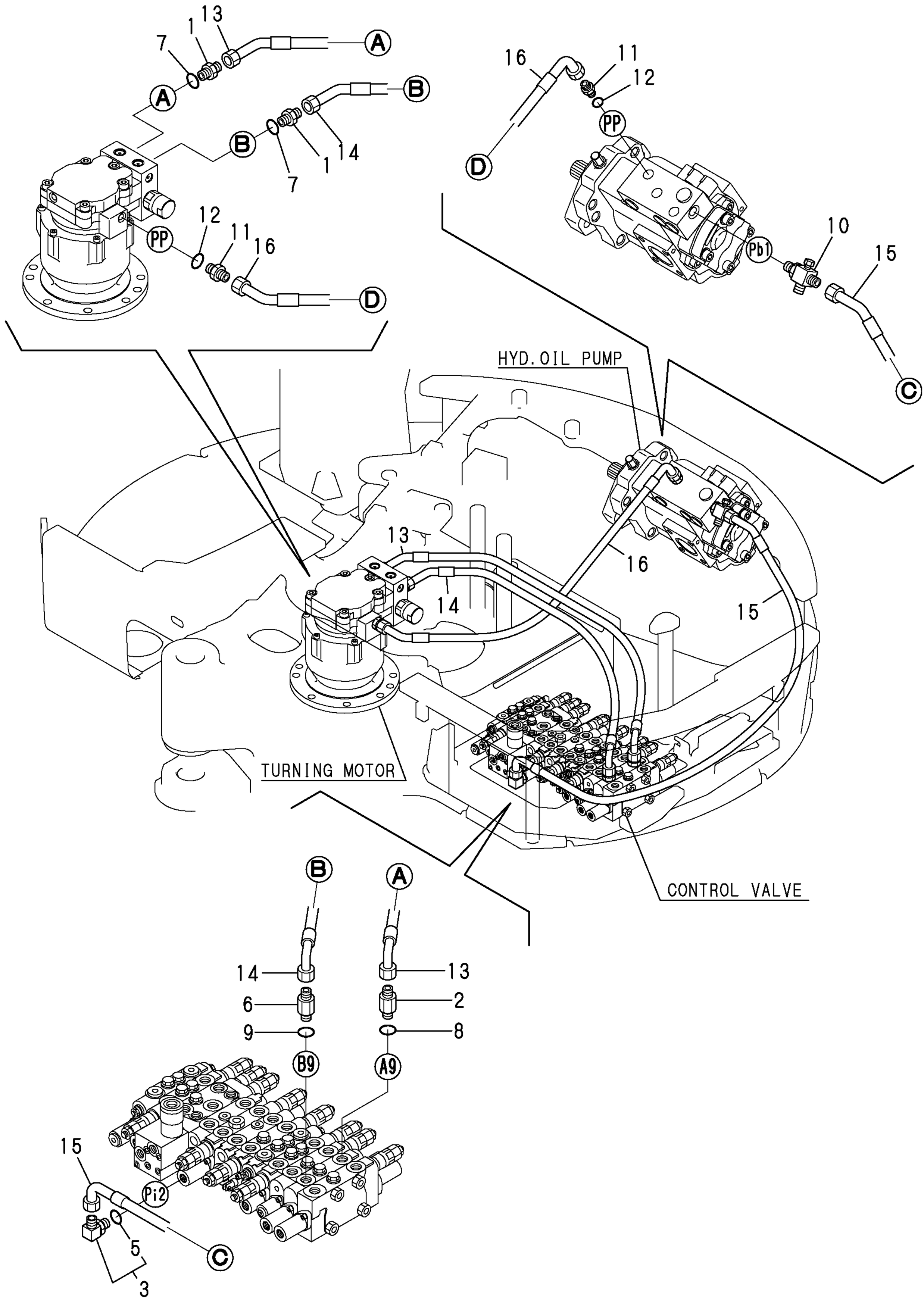

https://truckmanualshub.com/

```
1,1,,172159-76160,,ADAPTOR,1,,,,,,,,,,,,,,,,,,
2,1,,172486-76120,,CONNECTOR,2,,,,,,,,,,,,,,,,,,
3,1,,172486-76170,,CONNECTOR,1,,,,,,,,,,,,,,,,,,
4,1,,172161-76160,,"CONNECTOR 3/8-1/4",1,,,,,,,,,,,,,,,,,,
5,1,,172159-76180,,CONNECTOR,2,,,,,,,,,,,,,,,,,,
7,2,,24315-000110,,"O-RING 1B P-11.0",2,,,,,,,,,,,,,,,,,,
8,1,,172159-76060,,"CONNECTOR 3/8",2,,,,,,,,,,,,,,,,,,
9,1,,172159-76060,,"CONNECTOR 3/8",4,,,,,,,,,,,,,,,,,,
10,1,,172486-76360,,"ADAPTER G3/8",3,,,,,,,,,,,,,,,,,,
11,1,,24315-000140,,"O-RING 1B P-14.0",3,,,,,,,,,,,,,,,,,,
12,1,,24315-000140,,"O-RING 1B P-14.0",1,,,,,,,,,,,,,,,,,,
13,1,,24315-000140,,"O-RING 1B P-14.0",2,,,,,,,,,,,,,,,,,,
14,1,,172486-78140,,"HOSE F206BB073S",1,,,,,,,,,,,,,,,,,,
15,1,,172486-78150,,"HOSE F206BC072S",2,,,,,,,,,,,,,,,,,,
16,1,,172486-78160,,"HOSE F206BB071S",1,,,,,,,,,,,,,,,,,,
17,1,,172486-78180,,"HOSE F206BC082S",1,,,,,,,,,,,,,,,,,,
18,1,,172486-78190,,"HOSE F206BC088S",1,,,,,,,,,,,,,,,,,,
19,1,,172486-78430,,"HOSE F403BE079S",1,,,,,,,,,,,,,,,,,,
20,1,,172486-78470,,"HOSE F204BC116S",1,,,,,,,,,,,,,,,,,,
21,1,,172486-78480,,"HOSE F204BC104S",1,,,,,,,,,,,,,,,,,,
```

https://truckmanualshub.com/

# Fig.45 HYD.OIL PIPING(VALVE-S.-SWING)

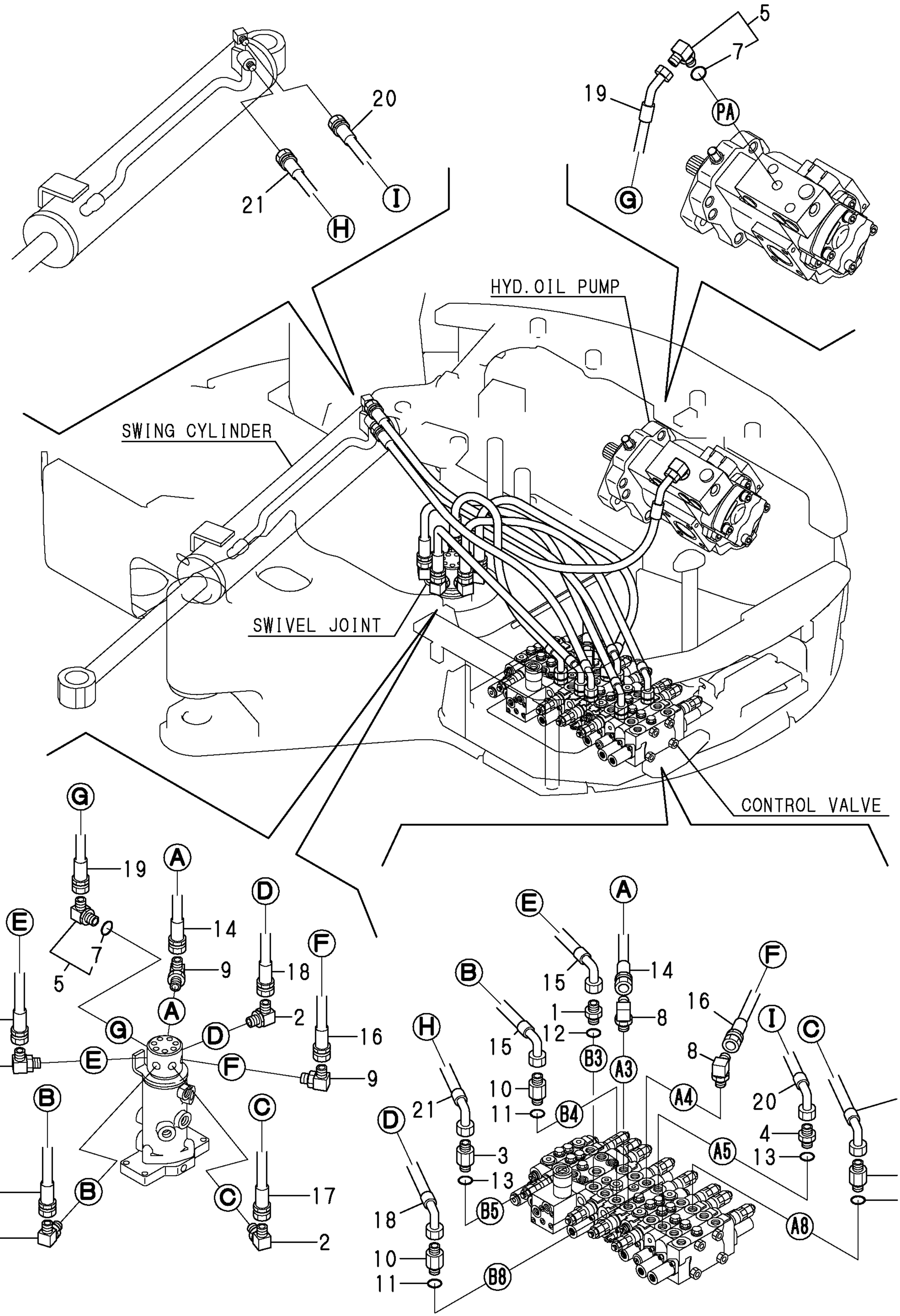

https://truckmanualshub.com/

```
1,1,,172159-76120,,"CONNECTOR PF1/4",1,,,,,,,,,,,,,,,,,
2,1,,172486-76180,,"DRAIN BLOCK ASSY",1,,,,,,,,,,,,,,,,,
3,1,,172159-76180,,CONNECTOR,2,,,,,,,,,,,,,,,,,
5,2,,24315-000110,,"O-RING 1B P-11.0",2,,,,,,,,,,,,,,,,,
6,1,,172162-76180,,"JOINT 3-1/4 COMPL.",3,,,,,,,,,,,,,,,,,,
8,2,,24315-000110,,"O-RING 1B P-11.0",3,,,,,,,,,,,,,,,,,
9,1,,172486-76140,,CONNECTOR,1,,,,,,,,,,,,,,,,,
11,2,,24315-000110,,"O-RING 1B P-11.0",1,,,,,,,,,,,,,,,,,
12,1,,23001-025000,,"HOSE CLAMP  25",14,,,,,,,,,,,,,,,,,
13,1,,172486-76281,,CONNECTOR,1,,,,,,,,,,,,,,,,,
14,2,,24315-000140,,"O-RING 1B P-14.0",1,,,,,,,,,,,,,,,,,
15,1,,172486-76300,,CONNECTOR,1,,,,,,,,,,,,,,,,,
16,1,,172180-76160,,"CONNECTOR PF1/4-0.7",1,,,,,,,,,,,,,,,,,,
17,1,,24315-000110,,"O-RING 1B P-11.0",2,,,,,,,,,,,,,,,,,
18,1,,24315-000180,,"O-RING 1B P-18.0",1,,,,,,,,,,,,,,,,,
19,1,,26013-100202,,"BOLT W/WASHER M10X20",2,,,,,,,,,,,,,,,,,,
20,1,,172486-78260,,"HOSE G804YY036",1,,,,,,,,,,,,,,,,,
21,1,,172486-78270,,"HOSE G804YY062S",1,,,,,,,,,,,,,,,,,
22,1,,172486-78280,,"HOSE G806YY088S",1,,,,,,,,,,,,,,,,,
23,1,,172486-78290,,"HOSE G804YY062",1,,,,,,,,,,,,,,,,,
24,1,,172486-78300,,"HOSE F403CE036",1,,,,,,,,,,,,,,,,,
25,1,,172486-78310,,"HOSE F403BB049",2,,,,,,,,,,,,,,,,,
26,1,,172486-78390,,"HOSE G612YY127S",1,,,,,,,,,,,,,,,,,
27,1,,172486-78400,,"HOSE G612CY086S",1,,,,,,,,,,,,,,,,,
28,1,,172486-78410,,"HOSE G608YY140S",1,,,,,,,,,,,,,,,,,
29,1,,172486-78491,,"HOSE G608YY049S",1,,,,,,,,,,,,,,,,,
30,1,,172174-79930,,"BAND 250",2,,,,,,,,,,,,,,,,,
31,1,,23000-013000,,"CLAMP 13",7,,,,,,,,,,,,,,,,,
32,1,,23001-016000,,"HOSE CLAMP 16",2,,,,,,,,,,,,,,,,,
33,1,,172161-76220,,NIPPLE,1,,,,,,,,,,,,,,,,,
34,1,,172486-76370,,NIPPLE,1,,,,,,,,,,,,,,,,,
36,2,,24315-000110,,"O-RING 1B P-11.0",1,,,,,,,,,,,,,,,,,
```

https://truckmanualshub.com/

# Fig.46 HYD.OIL PIPING(RETURN)

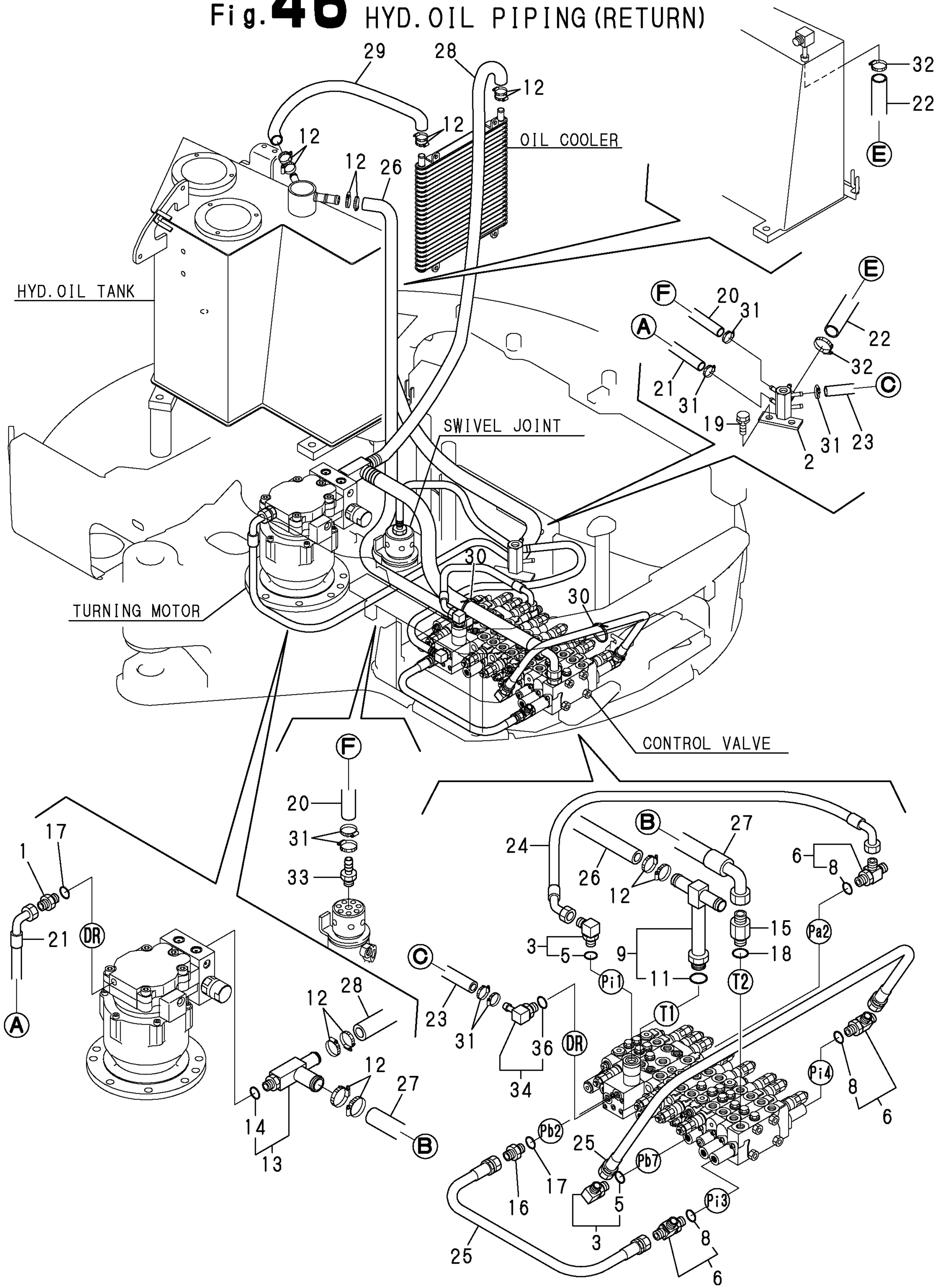

https://truckmanualshub.com/

```
1,1,,172173-76101,,"CONNECTOR PF1/4-45",4,,,,,,,,,,,,,,,,,
2,1,,172173-76121,,CONNECTOR,2,,,,,,,,,,,,,,,,,
3,1,,172124-76160,,CONNECTOR,2,,,,,,,,,,,,,,,,,
4,1,,172644-76161,,"ADJUST ELBOW 45ß",2,,,,,,,,,,,,,,,,,
5,1,,172142-76181,,"JOINT 90-3/8 ASSY",2,,,,,,,,,,,,,,,,,
6,1,,23393-030000,,"JOINT 90RGI 3/8",2,,,,,,,,,,,,,,,,,
7,1,,24315-000140,,"O-RING 1B P-14.0",2,,,,,,,,,,,,,,,,,
8,1,,24315-000180,,"O-RING 1B P-18.0",4,,,,,,,,,,,,,,,,,
9,1,,933160-01370,,"CONNECTOR PF1/2-3/8",4,,,,,,,,,,,,,,,,,,
10,1,,172460-78120,,HOSE,4,,,,,,,,,,,,,,,,,
11,1,,172460-78140,,HOSE,2,,,,,,,,,,,,,,,,,
12,1,,172460-78540,,HOSE,2,,,,,,,,,,,,,,,,,
13,1,,172422-78760,,GROMMET,2,,,,,,,,,,,,,,,,,
14,1,,172423-78430,,"HOSE P204BC142W",2,,,,,,,,,,,,,,,,,
```

https://truckmanualshub.com/

# Fig.47 HYD.OIL PIPING(TRAVEL)

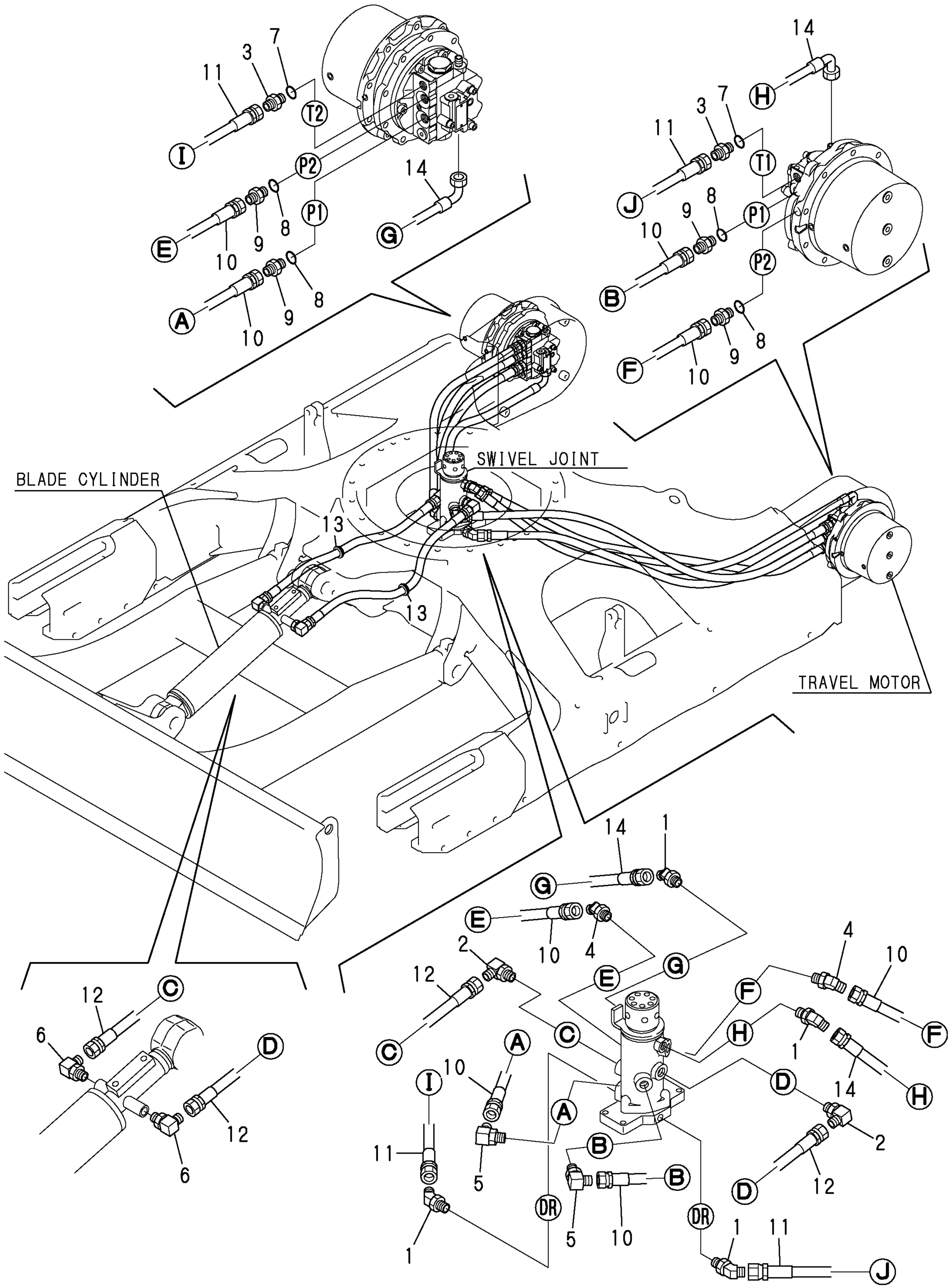

https://truckmanualshub.com/

```
1,1,,172159-76160,,ADAPTOR,2,,,,,,,,,,,,,,,,,,
2,1,,172486-76310,,BODY,1,,,,,,,,,,,,,,,,,,
3,1,,172486-76340,,CONNECTOR,1,,,,,,,,,,,,,,,,,,
4,1,,172486-76350,,CONNECTOR,1,,,,,,,,,,,,,,,,,,
5,1,,172486-76360,,"ADAPTER G3/8",3,,,,,,,,,,,,,,,,,,
6,1,,172174-76340,,"CONNECTOR 3/8X1/2",1,,,,,,,,,,,,,,,,,,,,
8,2,,24315-000140,,"O-RING 1B P-14.0",1,,,,,,,,,,,,,,,,,,
9,1,,24315-000140,,"O-RING 1B P-14.0",5,,,,,,,,,,,,,,,,,,
10,1,,26013-100162,,"BOLT M10X 16",3,,,,,,,,,,,,,,,,,,
11,1,,172486-78200,,"HOSE H206BC170W",1,,,,,,,,,,,,,,,,,,
12,1,,172486-78210,,"HOSE H206BC170W",1,,,,,,,,,,,,,,,,,,
13,1,,172485-78100,,"HOSE H208BC379K",1,,,,,,,,,,,,,,,,,,
14,1,,172485-78110,,"HOSE H206BC420K",1,,,,,,,,,,,,,,,,,,
15,1,,172485-78120,,"HOSE H206CX395K",1,,,,,,,,,,,,,,,,,,
16,1,,172485-78130,,"HOSE H206CX395K",1,,,,,,,,,,,,,,,,,,
17,1,,172486-78320,,"HOSE H208CZ041K",1,,,,,,,,,,,,,,,,,,
18,1,,172122-79890,,"CLAMP 350",2,,,,,,,,,,,,,,,,,,
19,1,,172485-78800,,"HOSE H206BE078W",2,,,,,,,,,,,,,,,,,,
20,1,,172122-79930,,"CLAMP B",1,,,,,,,,,,,,,,,,,,
```

https://truckmanualshub.com/

# Fig.48 HYD.OIL PIPING(BOOM)

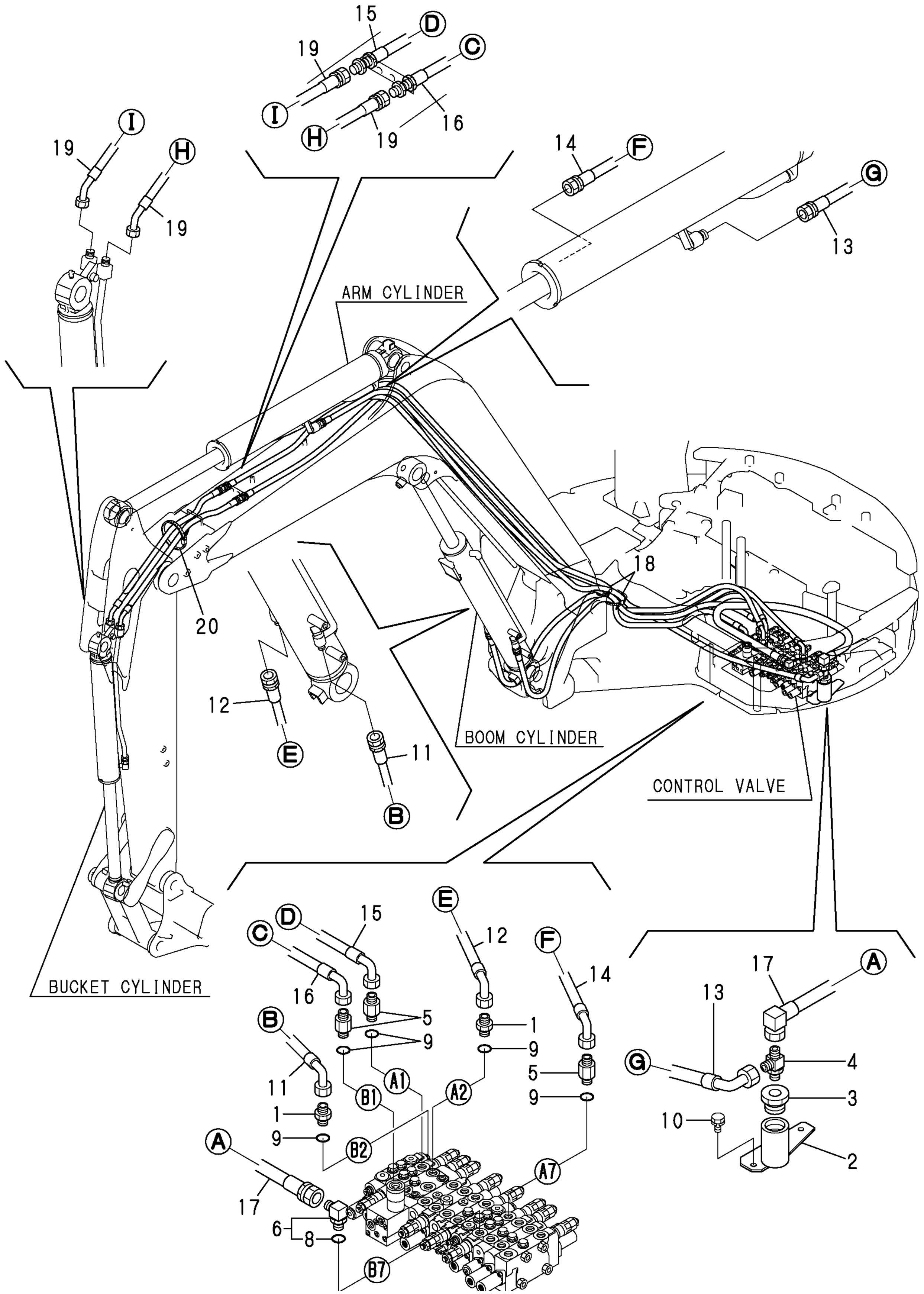

https://truckmanualshub.com/

```
1,1,,172486-76700,,COVER,1,,,,,,,,,,,,,,,,,
2,1,,172486-76760,,CONNECTOR,1,,,,,,,,,,,,,,,,,
3,1,,172467-76500,,"TUBE L ASSY, P.T.O.",1,,,,,,,,,,,,,,,,,
4,1,,172467-76530,,"TUBE R ASSY, P.T.O.",1,,,,,,,,,,,,,,,,,
5,1,,172486-76850,,CONNECTOR,1,,,,,,,,,,,,,,,,,
7,2,,24315-000140,,"O-RING 1B P-14.0",1,,,,,,,,,,,,,,,,,
8,1,,172486-78700,,"HOSE H116BC467K",1,,,,,,,,,,,,,,,,,
9,1,,172486-78730,,"HOSE G112BC462K",1,,,,,,,,,,,,,,,,,
10,1,,172486-78710,,"HOSE H112BV103",1,,,,,,,,,,,,,,,,,
11,1,,172486-78720,,"HOSE H612YY033S",1,,,,,,,,,,,,,,,,,
12,1,,172486-76740,,"JOINT 3/4-1",1,,,,,,,,,,,,,,,,,
13,1,,172486-76750,,CONNECTOR,1,,,,,,,,,,,,,,,,,
14,1,,172472-76200,,"VALVE ASSY, STOP",1,,,,,,,,,,,,,,,,,
15,1,,26013-100302,,"BOLT M10X 30",2,,,,,,,,,,,,,,,,,
16,1,,23001-035000,,"HOSE CLAMP  35",4,,,,,,,,,,,,,,,,,
17,1,,172444-17660,,CLIP,8,,,,,,,,,,,,,,,,,
18,1,,172467-79110,,"COVER ASSY,BOOM (87)",1,,,,,,,,,,,,,,,,,
20,2,,172460-79140,,RUBBER,2,,,,,,,,,,,,,,,,,
21,1,,26014-080252,,"BOLT M 8X 25",2,,,,,,,,,,,,,,,,,
22,1,,172151-76600,,"ADAPTER PF3/4,BLIND",1,,,,,,,,,,,,,,,,,
23,1,,172151-76610,,"ADAPTER PF 1",1,,,,,,,,,,,,,,,,,
24,1,,172486-76960,,"CONNECTOR 90-G1",1,,,,,,,,,,,,,,,,,
25,1,,26013-100202,,"BOLT W/WASHER M10X20",4,,,,,,,,,,,,,,,,,
26,1,,26014-100202,,"BOLT M10X 20",2,,,,,,,,,,,,,,,,,
```

https://truckmanualshub.com/

# Fig. 49 HYD. OIL PIPING (P. T. O.)

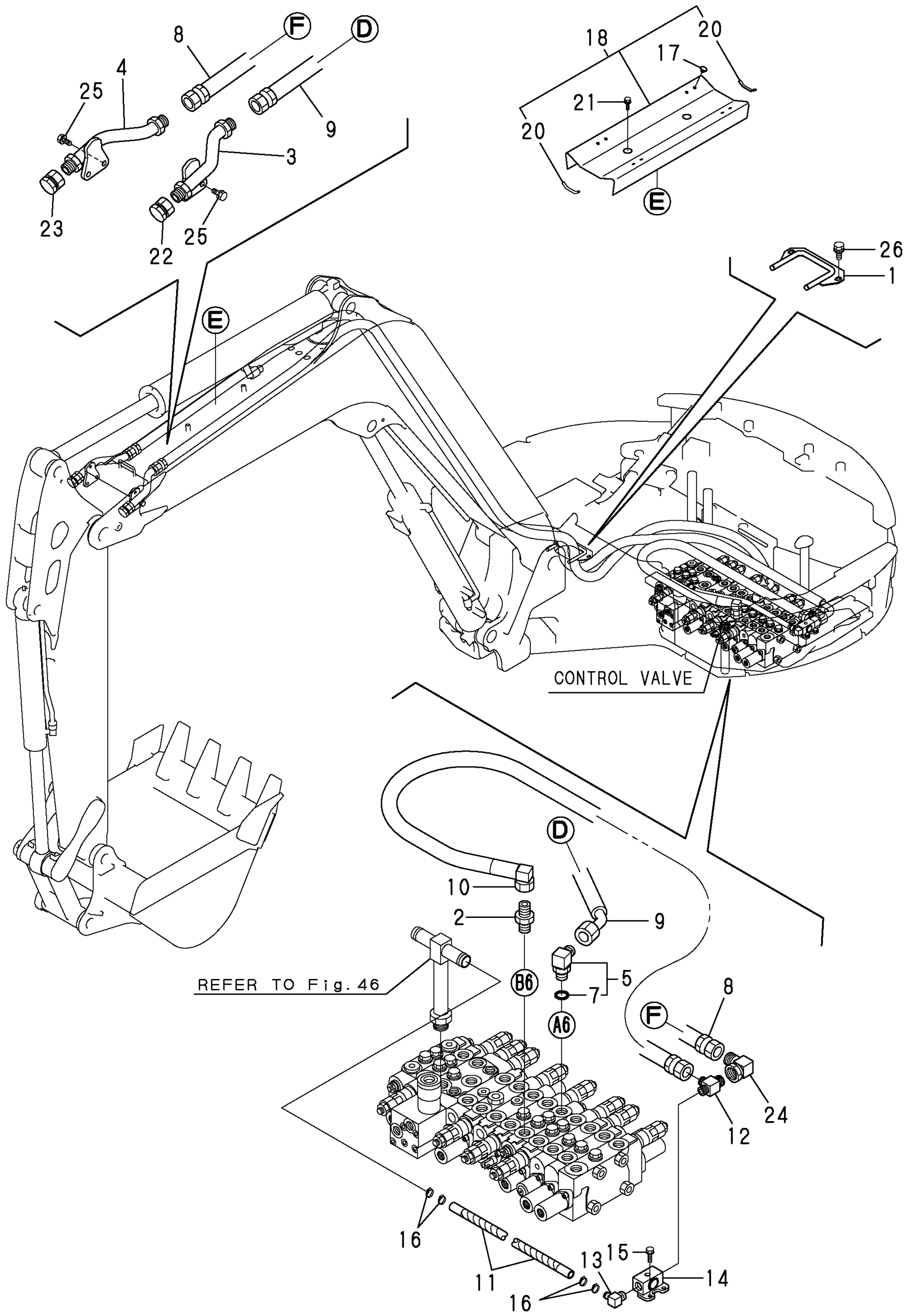

https://truckmanualshub.com/

```
1,1,,172159-76120,,"CONNECTOR PF1/4",2,,,,,,,,,,,,,,,,,
2,1,,172141-76180,,CONNECTOR,1,,,,,,,,,,,,,,,,,
4,2,,24315-000110,,"O-RING 1B P-11.0",1,,,,,,,,,,,,,,,,,,
5,1,,172455-76220,,"CONNECTOR PF1/4",2,,,,,,,,,,,,,,,,,
6,1,,24315-000110,,"O-RING 1B P-11.0",2,,,,,,,,,,,,,,,,,,
7,1,,24315-000110,,"O-RING 1B P-11.0",2,,,,,,,,,,,,,,,,,,
8,1,,23000-013000,,"CLAMP 13",2,,,,,,,,,,,,,,,,,
9,1,,172467-78180,,"HOSE G804BY091S",1,,,,,,,,,,,,,,,,,
10,1,,172467-78190,,"HOSE G804BY117S",1,,,,,,,,,,,,,,,,,
11,1,,172467-78200,,"HOSE F403BB097S",1,,,,,,,,,,,,,,,,,
12,1,,172467-78210,,"HOSE F403BE113S",1,,,,,,,,,,,,,,,,,
13,1,,172468-78150,,"HOSE F403CE076S",1,,,,,,,,,,,,,,,,,
14,1,,172437-73600,,ACCUMULATOR,1,,,,,,,,,,,,,,,,,
15,1,,172437-73630,,"STOPPER,ACCUMULATOR",1,,,,,,,,,,,,,,,,,,
16,1,,172468-74200,,"BRACKET ASSY(ACC",1,,,,,,,,,,,,,,,,,,
17,1,,172437-76120,,ELBOW,1,,,,,,,,,,,,,,,,,
18,1,,172437-78760,,RUBBER,1,,,,,,,,,,,,,,,,,
19,1,,23391-020000,,"JOINT RGI1/4",1,,,,,,,,,,,,,,,,,
20,1,,26013-080252,,"BOLT M 8X 25",2,,,,,,,,,,,,,,,,,
21,1,,26013-100162,,"BOLT M10X 16",3,,,,,,,,,,,,,,,,,
22,1,,172149-64480,,"COLLAR 11X21",2,,,,,,,,,,,,,,,,,,
```

https://truckmanualshub.com/

# Fig.50 CON.PIPING(PUMP-VALVE-RETURN)

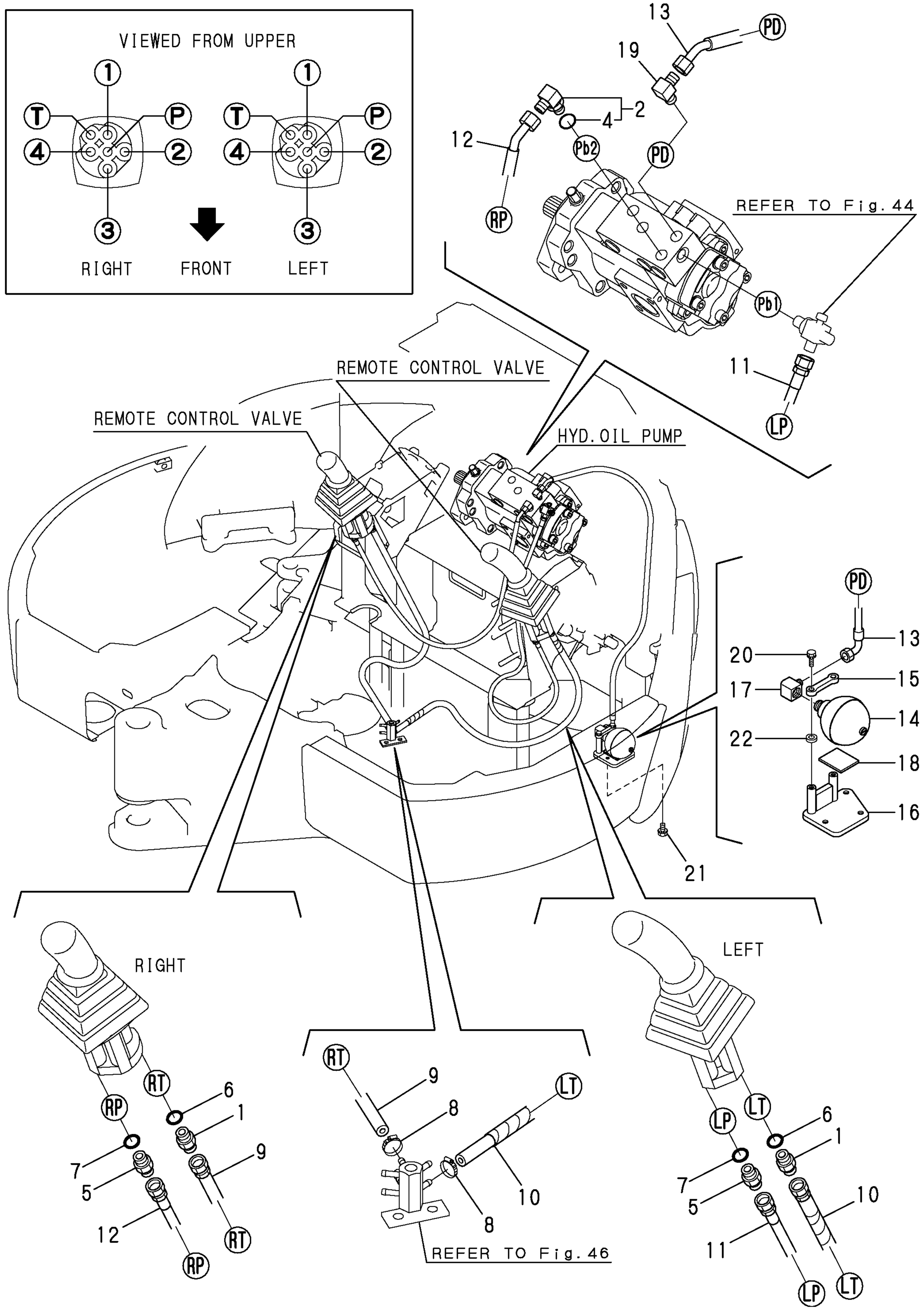

https://truckmanualshub.com/

```
1,1,,172159-76120,,"CONNECTOR PF1/4",2,,,,,,,,,,,,,,,,,
2,1,,172159-76120,,"CONNECTOR PF1/4",8,,,,,,,,,,,,,,,,,
3,1,,172159-76180,,CONNECTOR,2,,,,,,,,,,,,,,,,,
5,2,,24315-000110,,"O-RING 1B P-11.0",2,,,,,,,,,,,,,,,,,,
6,1,,172164-76330,,"JOINT PF1/4-0.7",1,,,,,,,,,,,,,,,,,
7,1,,24315-000110,,"O-RING 1B P-11.0",2,,,,,,,,,,,,,,,,,,
8,1,,24315-000110,,"O-RING 1B P-11.0",9,,,,,,,,,,,,,,,,,,
9,1,,172122-79930,,"CLAMP B",1,,,,,,,,,,,,,,,,,
10,1,,172468-78110,,"HOSE F403BB138S",1,,,,,,,,,,,,,,,,,,
11,1,,172468-78100,,"HOSE F403BE156S",1,,,,,,,,,,,,,,,,,,
12,1,,172467-78280,,"HOSE F403BB198S",1,,,,,,,,,,,,,,,,,,
13,1,,172468-78140,,"HOSE F403BB158S",1,,,,,,,,,,,,,,,,,,
14,1,,172468-78130,,"HOSE F403BB115S",1,,,,,,,,,,,,,,,,,,
15,1,,172468-78120,,"HOSE F403BB170S",1,,,,,,,,,,,,,,,,,,
16,1,,172472-78200,,"HOSE F403BB115S",1,,,,,,,,,,,,,,,,,,
17,1,,172472-78210,,"HOSE F403BC145S",1,,,,,,,,,,,,,,,,,,
18,1,,172165-79810,,SPONGE,1,,,,,,,,,,,,,,,,,
19,1,,172472-78800,,SPONGE,1,,,,,,,,,,,,,,,,,
20,1,,172122-79930,,"CLAMP B",4,,,,,,,,,,,,,,,,,
```

https://truckmanualshub.com/

# Fig.51 CON.PIPING(VALVE-CONTROL V.)

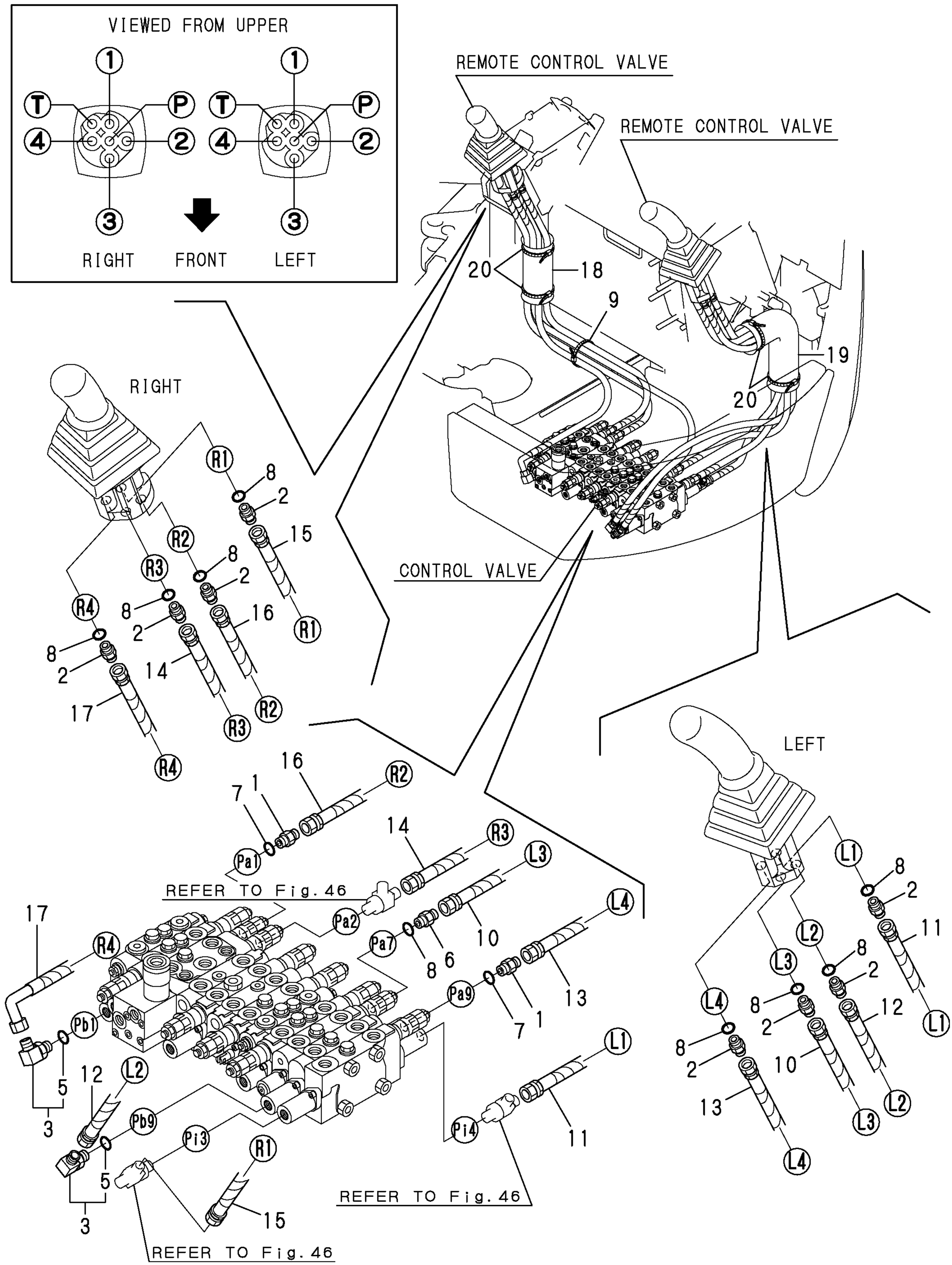

https://truckmanualshub.com/

```
1,1,,172159-77800,,"JOINT, GREASE",4,,,,,,,,,,,,,,,,,,
2,1,,172486-77800,,"HOSE P602YY130",1,,,,,,,,,,,,,,,,,,
3,1,,172486-77810,,"HOSE P602YY115",1,,,,,,,,,,,,,,,,,,
4,1,,172159-76140,,"FITTING, GREASE",1,,,,,,,,,,,,,,,,,,
5,1,,24761-020000,,"NIPPLE PT1/8,GREASE",2,,,,,,,,,,,,,,,,,,
```

https://truckmanualshub.com/

# Fig. 52 GREASING

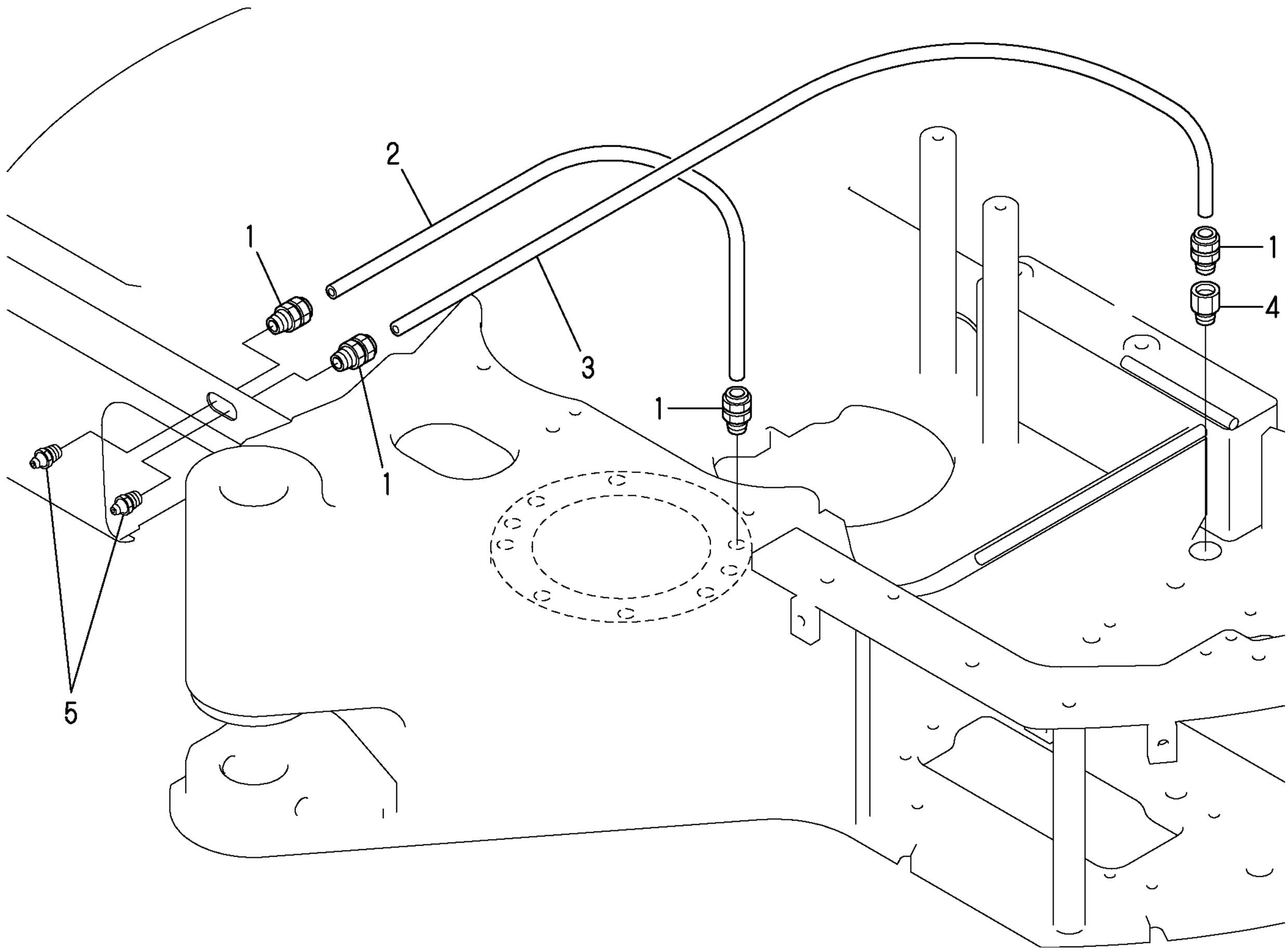

https://truckmanualshub.com/

```
1,1,,172461-81101-1,,"BOOM ASSY(YELLOW:87)",1,,,,,,,,,,,,,,,,,
2,2,,172162-81050,,"SEAL 60X75X6,DUST",4,,,,,,,,,,,,,,,,,
3,2,,172460-81400,,BUSH,2,,,,,,,,724600322,,,,,,,,,,,,I
4,1,,172183-81160,,"TREE CLIP",4,,,,,,,,,,,,,,,,,
5,1,,172164-81670,,SPACER,2,,,,,,,,,,,,,,,,,
6,1,,172461-81710,,PIPE,1,,,,,,,,,,,,,,,,,
7,1,,172461-81740-1,,"PLATE    (YELLOW:87)",1,,,,,,,,,,,,,,,,,
8,1,,172187-81970,,WASHER,1,,,,,,,,,,,,,,,,,
9,1,,172147-82140,,WASHER,1,,,,,,,,,,,,,,,,,
10,1,,172460-82480-1,,"PIN 50X204(YELLOW:87",2,,,,,,,,,,,,,,,,,
11,1,,172460-82500-1,,"PIN 60X245(YELLOW:87",1,,,,,,,,,,,,,,,,,
12,1,,172165-82520,,"SHIM 50X85X0.5",2,,,,,,,,,,,,,,,,,
13,1,,172165-82530,,"SHIM 50X85X1.2",2,,,,,,,,,,,,,,,,,
14,1,,172165-82540,,"SHIM 50X85X1.6",2,,,,,,,,,,,,,,,,,
15,1,,22157-120000,,"WASHER 12",2,,,,,,,,,,,,,,,,,
16,1,,22217-140000,,"SPRING WASHER 14",1,,,,,,,,,,,,,,,,,
17,1,,24761-040000,,"NIPPLE B,GREASE",2,,,,,,,,,,,,,,,,,
18,1,,26013-100162,,"BOLT M10X 16",2,,,,,,,,,,,,,,,,,
19,1,,26013-120252,,"BOLT M12X 25",3,,,,,,,,,,,,,,,,,
20,1,,26116-140252,,"BOLT M14X 25 PLATED",1,,,,,,,,,,,,,,,,,
21,1,,172176-81700,,SHIM,1,,,,,,,,,,,,,,,,,
22,1,,172176-81710,,SHIM,1,,,,,,,,,,,,,,,,,
23,1,,172460-81800,,SHIM,2,,,,,,,,,,,,,,,,,
24,1,,172460-81810,,SHIM,2,,,,,,,,,,,,,,,,,
25,1,,172460-81820,,SHIM,2,,,,,,,,,,,,,,,,,
26,1,,172458-81830,,"PIN 50X135",1,,,,,,,,,,,,,,,,,
27,1,,172458-81930-1,,"PIN 40X111(YELLOW:87",1,,,,,,,,,,,,,,,,,
28,1,,172187-81970,,WASHER,2,,,,,,,,,,,,,,,,,
29,1,,172460-82300-1,,"BRACKET  (YELLOW:87)",1,,,,,,,,,,,,,,,,,
30,2,,172165-81710,,"BUSH 70X85",2,,,,,,,,,,,,,,,,,
31,2,,172165-81770,,"SEAL 70X80X6, DUST",2,,,,,,,,,,,,,,,,,
33,2,,24321-000700,,"O-RING 1A G70.0,NBR",2,,,,,,,,,,,,,,,,,
34,1,,172460-82400,,PIN,1,,,,,,,,,,,,,,,,,
35,1,,172460-82410-1,,"PIN 60X142(YELLOW:87",2,,,,,,,,,,,,,,,,,
36,1,,172460-82430,,PIN,1,,,,,,,,,,,,,,,,,
37,1,,172165-82520,,"SHIM 50X85X0.5",2,,,,,,,,,,,,,,,,,
38,1,,172165-82530,,"SHIM 50X85X1.2",2,,,,,,,,,,,,,,,,,
39,1,,172165-82540,,"SHIM 50X85X1.6",2,,,,,,,,,,,,,,,,,
40,1,,172165-82580,,"SHIM 40X75X0.5",4,,,,,,,,,,,,,,,,,
41,1,,172165-82590,,"SHIM 40X75X1.2",4,,,,,,,,,,,,,,,,,
42,1,,172165-82600,,"SHIM 40X75X1.6",4,,,,,,,,,,,,,,,,,
43,1,,172117-83970-5,,"PLATE(C),LOCK   (86)",1,,,,,,,,,,,,,,,,,
44,1,,22157-120000,,"WASHER 12",1,,,,,,,,,,,,,,,,,
45,1,,26716-160002,,"NUT M16",2,,,,,,,,,,,,,,,,,
46,1,,22217-140000,,"SPRING WASHER 14",2,,,,,,,,,,,,,,,,,
47,1,,22242-000700,,"CIRCLIP   70",1,,,,,,,,,,,,,,,,,
48,1,,24761-020000,,"NIPPLE PT1/8,GREASE",2,,,,,,,,,,,,,,,,,
49,1,,26013-100202,,"BOLT W/WASHER M10X20",2,,,,,,,,,,,,,,,,,
50,1,,26013-120252,,"BOLT M12X 25",1,,,,,,,,,,,,,,,,,
51,1,,26076-161702,,"BOLT 10.9 16X170",1,,,,,,,,,,,,,,,,,
52,1,,26116-121302,,"BOLT M12X130 PLATED",1,,,,,,,,,,,,,,,,,
53,1,,26116-140352,,"BOLT M14X 35 PLATED",2,,,,,,,,,,,,,,,,,
54,1,,26716-120002,,"NUT 12",2,,,,,,,,,,,,,,,,,
```

https://truckmanualshub.com/

# Fig.53 BOOM & BOOM BRACKET

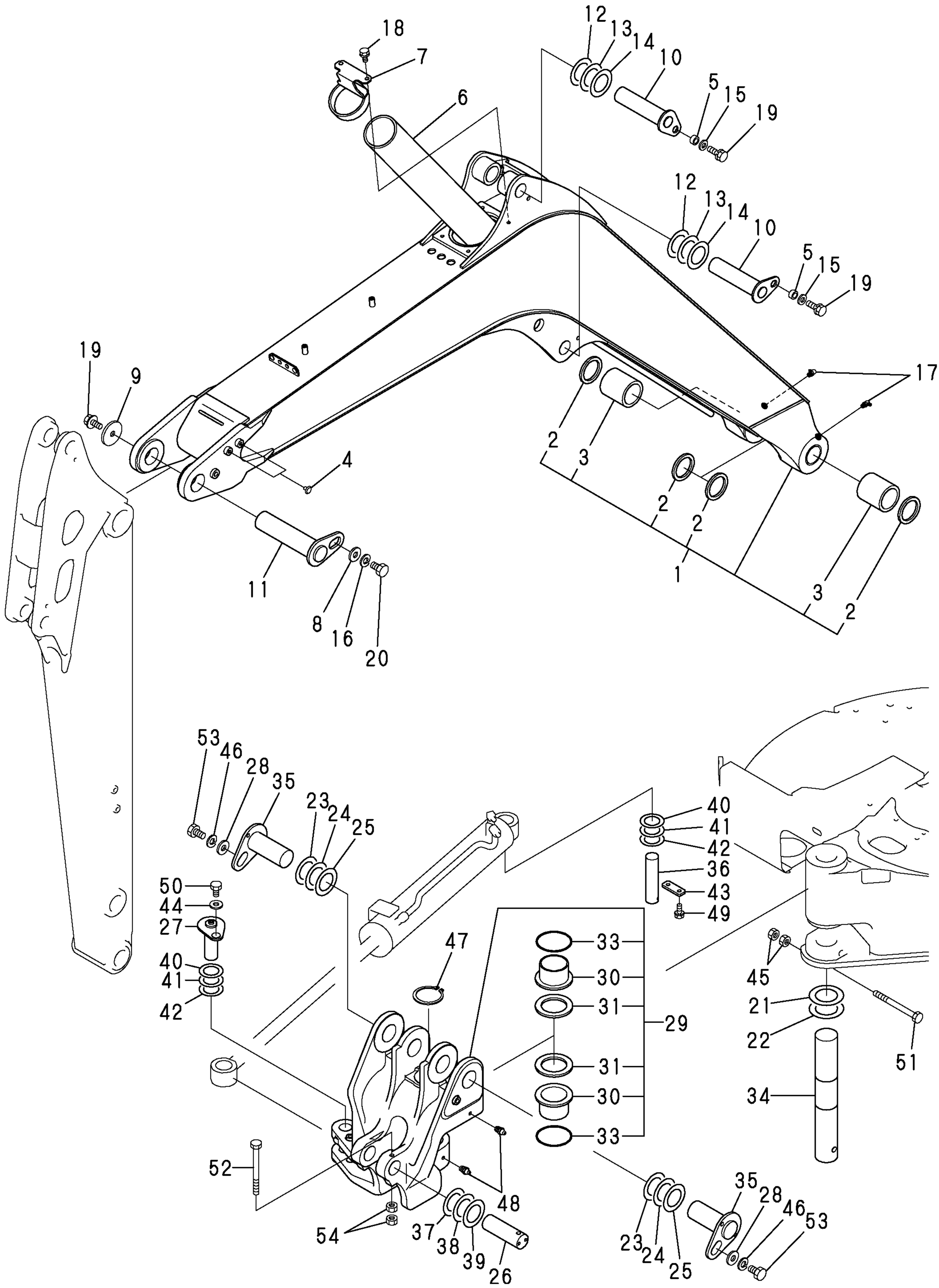

https://truckmanualshub.com/

```
1,1,,172183-81160,,"TREE CLIP",4,,,,,,,,,,,,,,,,,
2,1,,172125-81280,,"O-RING 81X8",2,,,,,,,,,,,,,,,,,
3,1,,172461-81500-1,,"ARM 1680 (YELLOW:87)",1,,,,,,,,,,,,,,,,,
4,2,,172162-81050,,"SEAL 60X75X6,DUST",2,,,,,,,,,,,,,,,,,
5,2,,172445-81360,,"BUSH 60X75",2,,,,,,,,724600322,,,,,,,,,,,I
6,2,,172112-83500,,"PIN BUSH 45X60",4,,,,,,,,,,,,,,,,,
7,2,,933126-44500,,"SEAL VAY45X55X4,DUST",4,,,,,,,,,,,,,,,,,
8,1,,172164-81670,,SPACER,2,,,,,,,,,,,,,,,,,
9,1,,172165-82520,,"SHIM 50X85X0.5",1,,,,,,,,,,,,,,,,,
10,1,,172460-82520-1,,"PIN 50X134(YELLOW:87",1,,,,,,,,,,,,,,,,,
11,1,,172165-82530,,"SHIM 50X85X1.2",1,,,,,,,,,,,,,,,,,
12,1,,172165-82540,,"SHIM 50X85X1.6",1,,,,,,,,,,,,,,,,,
13,1,,172460-82540-1,,"PIN 45X138(YELLOW:87",1,,,,,,,,,,,,,,,,,
14,1,,172165-82550,,"SHIM 45X1.2",1,,,,,,,,,,,,,,,,,
15,1,,172165-82560,,"SHIM 45X80X1.2",1,,,,,,,,,,,,,,,,,
16,1,,172165-82570,,"SHIM 45X80X1.6",1,,,,,,,,,,,,,,,,,
17,1,,22157-120000,,"WASHER 12",2,,,,,,,,,,,,,,,,,
18,1,,24761-040000,,"NIPPLE B,GREASE",1,,,,,,,,,,,,,,,,,
19,1,,26013-120252,,"BOLT M12X 25",2,,,,,,,,,,,,,,,,,
20,1,,172460-82350-1,,"ARM ASSY,BUCKET (87)",1,,,,,,,,,,,,,,,,,
21,1,,172460-82360-1,,"ARM,BUCKET(YELLOW:87",1,,,,,,,,,,,,,,,,,
22,1,,172460-82650,,"PIN KIT, ARM    (97)",1,,,,,,,,,,,,,,,,,
23,2,,172165-82550,,"SHIM 45X1.2",2,,,,,,,,,,,,,,,,,
24,2,,172165-82560,,"SHIM 45X80X1.2",2,,,,,,,,,,,,,,,,,
25,2,,172460-82560,,"PIN 45X217      (97)",1,,,,,,,,,,,,,,,,,
26,2,,172165-82570,,"SHIM 45X80X1.6",2,,,,,,,,,,,,,,,,,
27,2,,172460-82590,,"PIN 45X217      (97)",1,,,,,,,,,,,,,,,,,
28,2,,24761-020000,,"NIPPLE PT1/8,GREASE",1,,,,,,,,,,,,,,,,,
29,2,,26116-100802,,"BOLT M10X 80 PLATED",2,,,,,,,,,,,,,,,,,
30,2,,26716-100002,,"NUT 10",4,,,,,,,,,,,,,,,,,
31,1,,172460-82380,,"LINK, BUCKET    (87)",1,,,,,,,,,,,,,,,,,
32,2,,172112-83500,,"PIN BUSH 45X60",2,,,,,,,,724600322,,,,,,,,,,,I
33,2,,172112-86250,,"BUSH 45X39, PIN",2,,,,,,,,,,,,,,,,,
34,2,,933126-44500,,"SEAL VAY45X55X4,DUST",6,,,,,,,,,,,,,,,,,
35,1,,24761-020000,,"NIPPLE PT1/8,GREASE",2,,,,,,,,,,,,,,,,,
```

https://truckmanualshub.com/

# Fig.54 ARM & BUCKET LINK

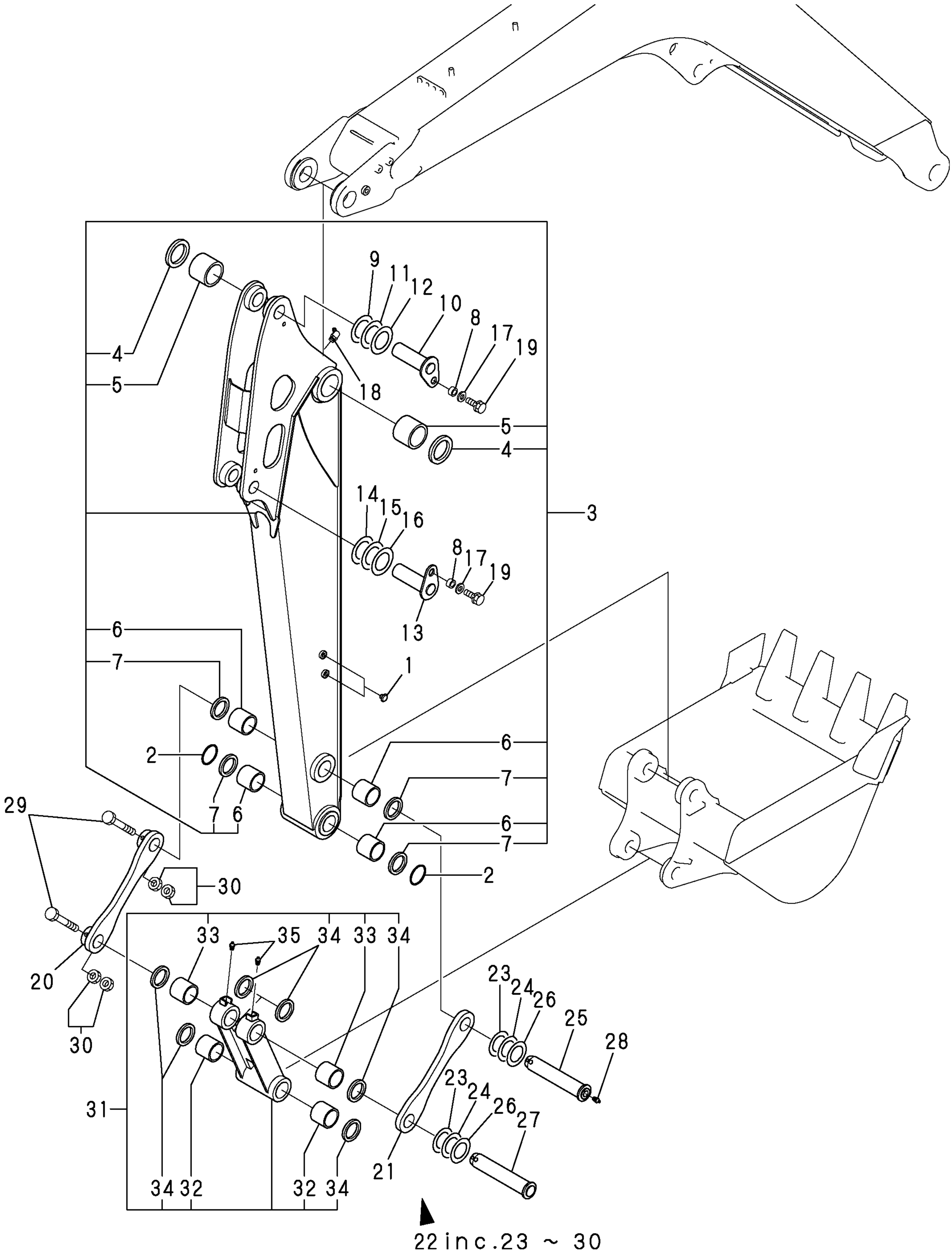

https://truckmanualshub.com/

```
1,1,,172176-81950-4,,"PIN KIT,BUCKET  (82)",1,,,,,,M,,,,,,,,,,,,I
1-1,1,,172176-81950-4,,"PIN KIT,BUCKET  (82)",2,,,,,,,,,,,,,,,,,,,I
2,2,,172176-81560-4,,"PIN 45X271 ASSY (82)",2,,,,,,,,,,,,,,,,,,
3,2,,172176-81640,,"COLLAR 45X60.5X22",2,,,,,,,,,,,,,,,,,,
4,2,,24761-020000,,"NIPPLE PT1/8,GREASE",2,,,,,,,,,,,,,,,,,,
5,2,,26116-100752,,"BOLT M10X 75 PLATED",2,,,,,,,,,,,,,,,,,,
6,2,,26716-100002,,"NUT 10",4,,,,,,,,,,,,,,,,,,
7,2,,172124-81930,,"SHIM 45X0.8",2,,,,,,,,,,,,,,,,,,
7-1,2,,172165-82550,,"SHIM 45X1.2",2,,,,,,R,,724580547,*2003.05,,,,,,,,,,I
8,2,,172124-81940,,"SHIM 45X1.2",2,,,,,,,,,,,,,,,,,,
8-1,2,,172165-82560,,"SHIM 45X80X1.2",2,,,,,,R,,724580547,*2003.05,,,,,,,,,,I
```

https://truckmanualshub.com/

P/C NEWS No.:Y00S4220-1
PUBLISHED :2004/5

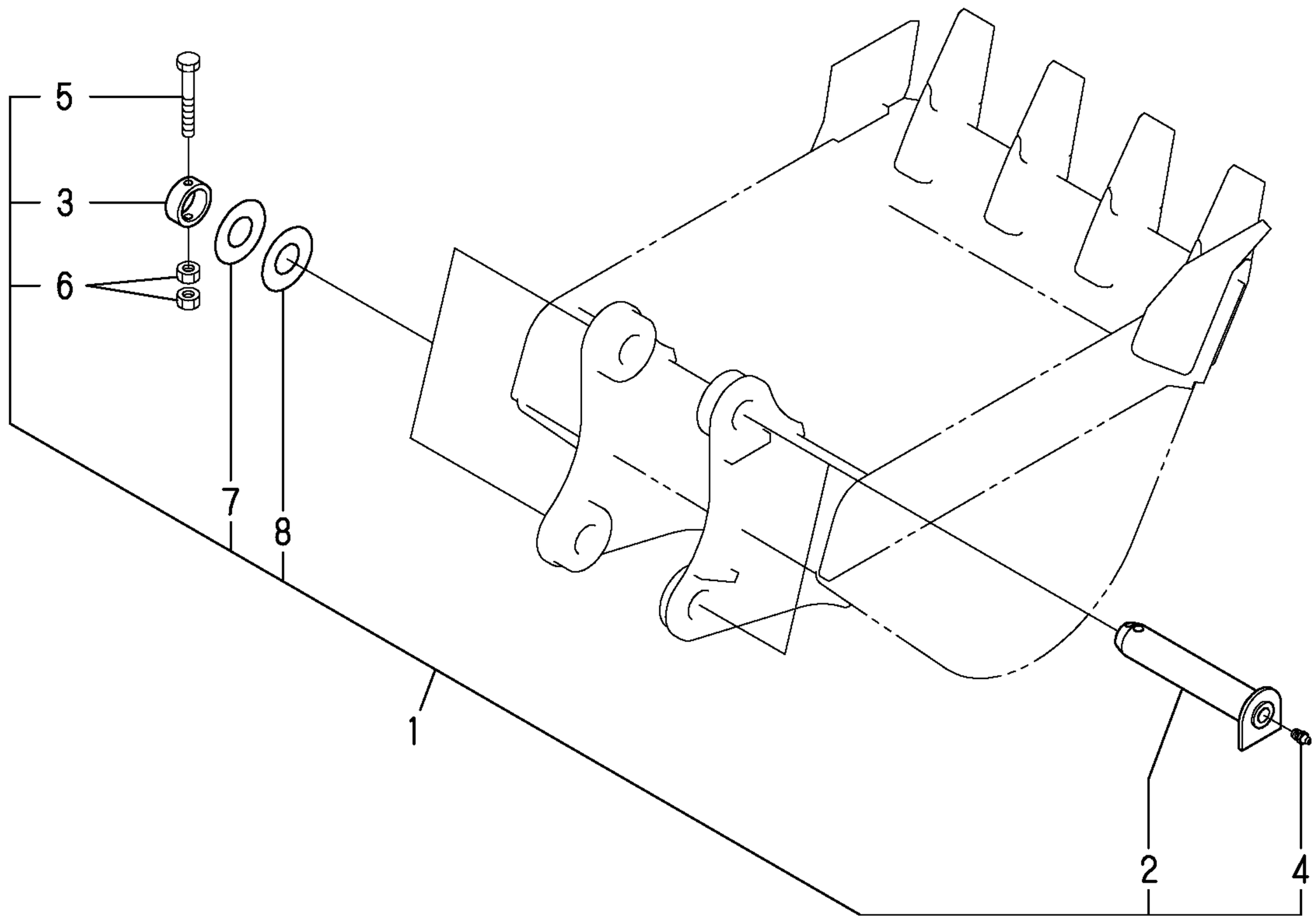

https://truckmanualshub.com/

```
1,1,,172164-81650-2,,"PIN 45X122(GREEN:82)",2,,,,,,,,,,,,,,,,,,
2,1,,172164-81670,,SPACER,2,,,,,,,,,,,,,,,,,
3,1,,172112-87840,,"SHIM 45X1",4,,,,,,,,,,,,,,,,,
4,1,,172460-94100-1,,"BLADE ASSY(GREEN:82)",1,,,,,,,,,,,,,,,,,,
5,2,,172151-72670,,"BUSH 45 50",2,,,,,,,,,,,,,,,,,
6,2,,172168-81410,,"SEAL 45X55X4, DUST",4,,,,,,,,,,,,,,,,,
7,1,,172423-94210,,"PIN 45X120",2,,,,,,,,,,,,,,,,,
8,1,,172124-94310-2,,"PLATE,LOCK(GREEN:82)",2,,,,,,,,,,,,,,,,,,
9,1,,22157-120000,,"WASHER 12",2,,,,,,,,,,,,,,,,,
10,1,,24761-020000,,"NIPPLE PT1/8,GREASE",2,,,,,,,,,,,,,,,,,
11,1,,24761-040000,,"NIPPLE B,GREASE",2,,,,,,,,,,,,,,,,,
12,1,,26013-100252,,"BOLT W/WASHER M10X25",4,,,,,,,,,,,,,,,,,
13,1,,26013-120302,,"BOLT W/WASHER M12X30",2,,,,,,,,,,,,,,,,,
```

https://truckmanualshub.com/

# Fig. 56 BLADE

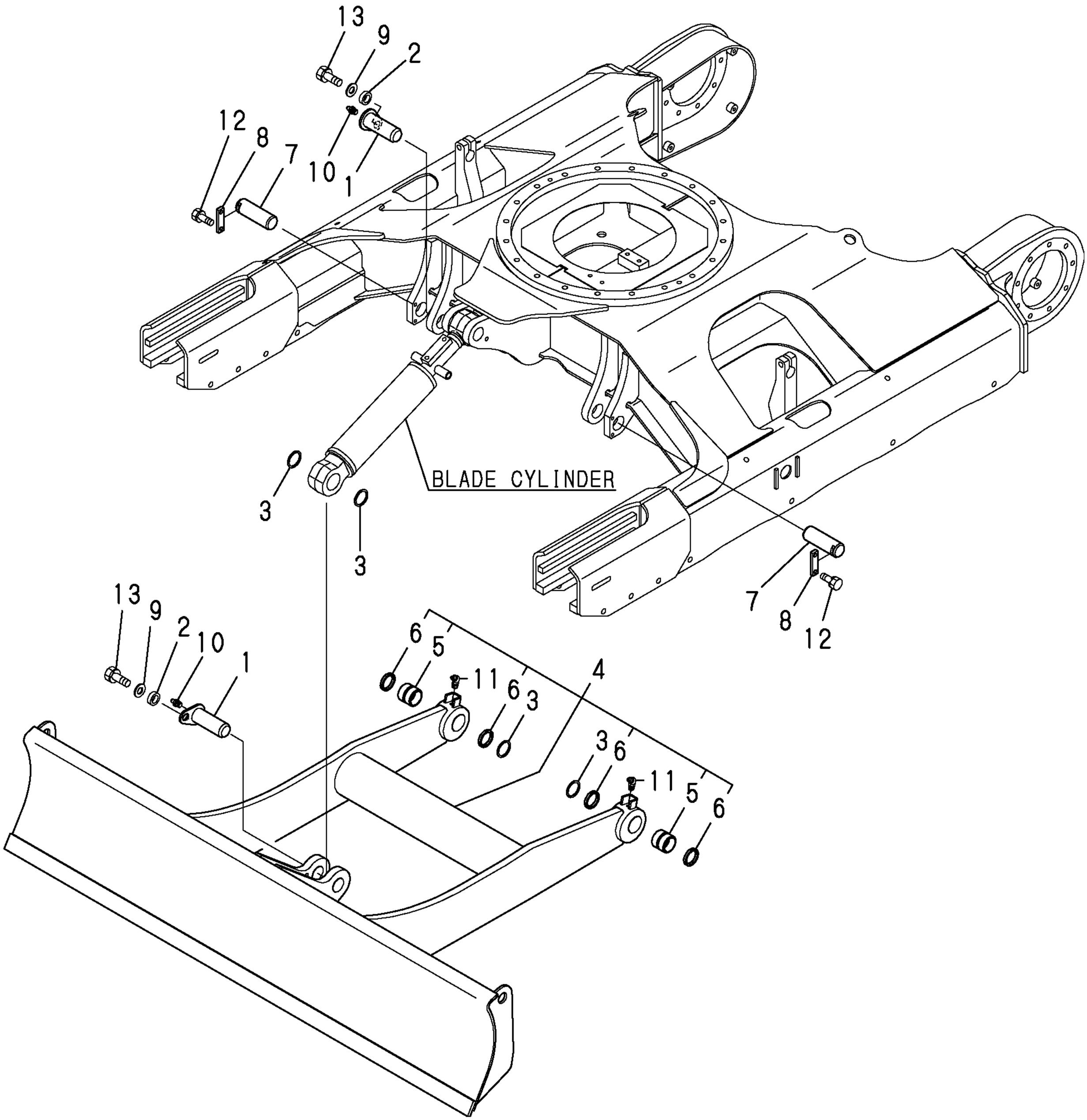

https://truckmanualshub.com/

```
[Info]
PcNo=Y00S4220
PcName=VIO55(AY)
JpnUse=0
JpnSec1=Œš‹@
JpnSec2=ƒoƒbƒNƒz[
JpnSec3=VIO
JpnPreface=0
EngUse=1
EngSec1=CONSTRUCTION
EngSec2=EXCAVATOR (ViO)
EngSec3=VIO
EngPreface=1
```