duma rent
https://truckmanualshub.com
Torkonjestraat 23
8510 Marke
Belgium
056 / 222 111
info@dumarent.be
www.dumarent.be

MANITOU

MANITOU BF
BP 10249
44158 ANCENIS CEDEX - FRANCE
TEL: + 33 (0)2 40 09 10 11

YOUR DEALER

647003 EN (03/01/2012)

MC 30 Turbo Série 3-E3
M 26-2 Turbo Série 3-E3 M 26-4 Turbo Série 3-E3
M 30-2 Turbo Série 3-E3 M 30-4 Turbo Série 3-E3
M 40-4 Turbo Série 3-E3
M 50-4 Turbo Série 3-E3
MC 40 Turbo POWERSHIFT Série 3-E3
MC 50 Turbo POWERSHIFT Série 3-E3
MC 60 Turbo POWERSHIFT Série 3-E3
MC 70 Turbo POWERSHIFT Série 3-E3

OPERATOR'S MANUAL

(ORIGINAL INSTRUCTIONS)

THIS OPERATOR'S MANUAL MUST BE KEPT IN THE LIFT TRUCK AND MUST BE READ AND UNDERSTOOD BY OPERATORS.

Downloaded from www.Manualslib.com manuals search engine

https://truckmanualshub.com/

duma rent
Torkonjestraat 23
8510 Marke
Belgium
056 / 222 111
info@dumarent.be
www.dumarent.be

647003 EN (03/01/2012)

Downloaded from www.Manualslib.com manuals search engine

https://truckmanualshub.com/
Torkonjestraat 23
8510 Marke
Belgium
056 / 222 111
info@dumarent.be
www.dumarent.be

1 - OPERATING AND SAFETY INSTRUCTIONS

2 - DESCRIPTION

3 - MAINTENANCE

4 - ADAPTABLE ATTACHMENTS IN OPTION ON THE RANGE

13/06/2008	1ST DATE OF ISSUE
04/05/2009	UP DATING: 2-4 ; 2-19 ; 3-14 ; 3-15
04/05/2010	UP DATING (1-5 ; 1-6 ; 1-10 – 1-12 ; 1-15 ; 1-16 2-2 – 2-6 3-3 – 3-9)
03/01/2012	UP DATING (2-6 – 2-43 3-6 ; 3-7 ; 3-11 ; 3-32 ; 3-38 ; 3-39)

THE TEXTS AND ILLUSTRATIONS IN THIS DOCUMENT MUST NOT BE REPRODUCED EITHER WHOLLY OR IN PART.

647003 EN (03/01/2012)

Downloaded from www.Manualslib.com manuals search engine

duma rent
https://truckmanualshub.com
Torkonjestraat 23
8510 Marke
Belgium
056 / 222 111
info@dumarent.be
www.dumarent.be

647003 EN (03/01/2012)

Downloaded from www.Manualslib.com manuals search engine

https://truckmanualshub.com
Torkonjestraat 23
8510 Marke
Belgium
056 / 222 111
info@dumarent.be
www.dumarent.be

1 - OPERATING AND SAFETY INSTRUCTIONS

647003 EN (03/01/2012)

Downloaded from www.Manualslib.com manuals search engine

Downloaded from www.Manualslib.com manuals search engine

TABLE OF CONTENTS

INSTRUCTIONS TO THE COMPANY MANAGER 1 - 4

THE SITE **1 - 4**
THE OPERATOR **1 - 4**
THE LIFT TRUCK **1 - 4**
A - THE LIFT TRUCK'S SUITABILITY FOR THE JOB 1 - 4
B - ADAPTATION OF THE LIFT TRUCK TO STANDARD ENVIRONMENTAL CONDITIONS 1 - 4
C - MODIFICATION OF THE LIFT TRUCK 1 - 5
THE INSTRUCTIONS **1 - 5**
THE MAINTENANCE **1 - 5**

INSTRUCTIONS FOR THE OPERATOR 1 - 6

PREAMBULE **1 - 6**
GENERAL INSTRUCTIONS **1 - 6**
A - OPERATOR'S MANUAL 1 - 6
B - AUTHORIZATION FOR USE IN FRANCE (or see current legislation in other countries) 1 - 6
C - MAINTENANCE 1 - 6
D - MODIFICATION OF THE LIFT TRUCK 1 - 6
E - LIFTING PEOPLE 1 - 6
OPERATING INSTRUCTIONS UNLADEN AND LADEN **1 - 8**
A - BEFORE STARTING THE LIFT TRUCK 1 - 8
B - DRIVER'S OPERATING INSTRUCTIONS 1 - 8
C - ENVIRONMENT 1 - 9
D - VISIBILITY 1 - 9
E - STARTING THE LIFT TRUCK 1 - 10
F - DRIVING THE LIFT TRUCK 1 - 10
G - STOPPING THE LIFT TRUCK 1 - 11
H - DRIVING THE LIFT TRUCK ON THE PUBLIC HIGHWAY 1 - 12
INSTRUCTIONS FOR HANDLING A LOAD **1 - 13**
A - CHOICE OF ATTACHMENTS 1 - 13
B - MASS OF LOAD AND CENTRE OF GRAVITY 1 - 13
C - TRANSVERSE ATTITUDE OF THE LIFT TRUCK 1 - 14
D - TAKING UP A LOAD ON THE GROUND 1 - 14
E - TAKING UP AND LAYING A HIGH LOAD ON TYRES 1 - 15

MAINTENANCE INSTRUCTIONS OF THE LIFT TRUCK 1 - 16

GENERAL INSTRUCTIONS **1 - 16**
MAINTENANCE **1 - 16**
LUBRICANT AND FUEL LEVELS **1 - 16**
HYDRAULIC **1 - 16**
ELECTRICITY **1 - 16**
WELDING **1 - 17**
WASHING THE LIFT TRUCK **1 - 17**

IF THE LIFT TRUCK IS NOT TO BE USED FOR A LONG TIME 1 - 18

INTRODUCTION **1 - 18**
PREPARING THE LIFT TRUCK **1 - 18**
PROTECTING THE I.C. ENGINE **1 - 18**
PROTECTING THE LIFT TRUCK **1 - 18**
BRINGING THE LIFT TRUCK BACK INTO SERVICE **1 - 19**

647003 EN (03/01/2012)

Downloaded from www.Manualslib.com manuals search engine

INSTRUCTIONS TO THE COMPANY MANAGER

THE SITE

- Proper management of lift truck's area of travel will reduce the risk of accidents:
  . ground not unnecessarily uneven or obstructed,
  . no excessive slopes,
  . pedestrian traffic controlled, etc.

THE OPERATOR

- Only qualified, authorized personnel can use the lift truck. This authorization is given in writing by the appropriate person in the establishment with respect to the use of lift trucks and must be carried permanently by the operator.

On the basis of experience, there are a number of possible situations in which operating the lift truck is contra-indicated. Such foreseeable abnormal uses, the main ones being listed below, are strictly forbidden.

- The foreseeable abnormal behaviour resulting from ordinary neglect, but does not result from any wish to put the machinery to any improper use.
- The reflex reactions of a person in the event of a malfunction, incident, fault, etc. during operation of the lift truck.
- Behaviour resulting from application of the «principle of least action» when performing a task.
- For certain machines, the foreseeable behaviour of such persons as: apprentices, teenagers, handicapped persons, trainees tempted to drive a lift truck, operator tempted to operate a truck to win a bet, in competition or for their own personal experience.

The person in charge of the equipment must take these criteria into account when assessing whether or not a person will make a suitable driver.

THE LIFT TRUCK

A - THE LIFT TRUCK'S SUITABILITY FOR THE JOB

- MANITOU has ensured that this lift truck is suitable for use under the standard operating conditions defined in this operator's manual, with a **STATIC TEST COEFFICIENT OF 1.33** and a **DYNAMIC TEST COEFFICIENT OF 1**, as specified in harmonised norm **EN 1726-1** for mast trucks.
- Before commissioning, the company manager must make sure that the lift truck is appropriate for the work to be done, and perform certain tests (in accordance with current legislation).

B - ADAPTATION OF THE LIFT TRUCK TO STANDARD ENVIRONMENTAL CONDITIONS

- In addition to series equipment mounted on your lift truck, many options are available, such as: road lighting, stop lights, flashing light, reverse lights, reverse buzzer alarm, front light, rear light, etc.
- The operator must take into account the operating conditions to define the lift truck's signalling and lighting equipment. Contact your dealer.
- Take into account climatic and atmospheric conditions of the site of utilisation.
  . Protection against frost (see: 3 - MAINTENANCE: LUBRICANTS AND FUEL).
  . Adaptation of lubricants (ask your dealer for information).
  . I.C. engine filtration (see: 3 - MAINTENANCE: FILTERS CARTRIDGES AND BELTS).

For operation under average climatic conditions, i.e.: between -15 °C and + 35 °C, correct levels of lubricants in all the circuits are checked in production. For operation under more severe climatic conditions, before starting up, it is necessary to drain all the circuits, then ensure correct levels of lubricants using lubricants properly suited to the relevant ambient temperatures. It is the same for the cooling liquid.

- A lift truck operating in an area without fire extinguishing equipment must be equipped with an individual extinguisher. There are solutions, consult your dealer.

Your lift truck is designed for outdoor use under normal atmospheric conditions and indoor use in suitably aerated and ventilated premises. It is prohibited to use the lift truck in areas where there is a risk of fire or which are potentially explosive (e.g. Refineries, fuel or gas depots, stores of inflammable products…). For use in these areas, specific equipment is available (ask your dealer for information).

- Our trucks comply with Directive 2004/108/EC concerning electromagnetic compatibility (EMC), and with the corresponding harmonized norm EN 12895. Their proper operation is no longer guaranteed if they are used within areas in which the electromagnetic fields exceed the limit specified by that norm (10 V/m).
- Directive 2002/44/EC requires company managers to not expose their employees to excessive vibration doses. There is no recognized code of measurement for comparing the machines of different manufacturers. The actual doses received can therefore be measured only under actual operating conditions at the user's premises.
- The following are some tips for minimizing these vibration doses:
  • Select the most suitable lift truck and attachment for the intended use.
  • Adapt the seat adjustment to the operator's weight (according to lift truck model) and maintain it in good condition, as well as the cab suspension. Inflate the tires in accordance with recommendations.
  • Ensure that the operators adapt their operating speed to suit the conditions on site.
  • As far as possible, arrange the site in such a way as to provide a flat running surface and remove obstacles and harmful potholes.

Downloaded from www.Manualslib.com manuals search engine

C - MODIFICATION OF THE LIFT TRUCK

- For your safety and that of others, you must not change the structure and settings of the various components used in your lift truck (hydraulic pressure, calibrating limiters, I.C. engine speed, addition of extra equipment, addition of counterweight, unapproved attachments, alarm systems, etc.) yourself. In this event, the manufacturer cannot be held responsible.

THE INSTRUCTIONS

- The operator's manual must always be in good condition and kept in the place provided on the lift truck and in the language used by the operator.
- The operator's manual and any plates or stickers which are no longer legible or are damaged, must be replaced immediately.

THE MAINTENANCE

- Maintenance or repairs other than those detailed in part: 3 - MAINTENANCE must be carried out by qualified personnel (consult your dealer) and under the necessary safety conditions to maintain the health of the operator and any third party.

Your lift truck must be inspected periodically to ensure that it remains in compliance. The frequency of this inspection is defined by current legislation in the country in which the lift truck is used.

Downloaded from www.Manualslib.com manuals search engine

INSTRUCTIONS FOR THE OPERATOR

PREAMBULE

WHENEVER YOU SEE THIS SYMBOL IT MEANS:

WARNING ! BE CAREFUL ! YOUR SAFETY OR THE SAFETY OF THE LIFT TRUCK IS AT RISK.

The risk of accident while using, servicing or repairing your lift truck can be restricted if you follow the safety instructions and safety measures detailed in these instruction.

- Only the operations and manœuvres described in these operator's manual must be performed. The manufacturer cannot predict all possible risky situations. Consequently, the safety instructions given in the operator's manual and on the lift truck itself are not exhaustive.
- At any time, as an operator, you must envisage, within reason, the possible risk to yourself, to others or to the lift truck itself when you use it.

Failure to respect the safety and operating instructions, or the instructions for repairing or servicing your lift truck may lead to serious, even fatal accident.

GENERAL INSTRUCTIONS

A - OPERATOR'S MANUAL
- Read the operator's manual carefully.
- The operator's manual must always be in good condition and in the place provided for it on the lift truck.
- You must report any plates and stickers which are no longer legible or which are damaged.

B - AUTHORIZATION FOR USE IN FRANCE
(or see current legislation in other countries)
- Only qualified, authorized personnel may use the lift truck. This authorization is given in writing by the appropriate person in the company, in charge of using the lift truck, and must be permanently carried by the operator.
- The operator is not competent to authorise the driving of the lift truck by another person.

C - MAINTENANCE
- The operator must immediately advise his superior if his lift truck is not in good working order or does not comply with the safety notice.
- The operator is prohibited from carrying out any repairs or adjustments himself, unless he has been trained for this purpose. He must keep the lift truck properly cleaned if this is among his responsibilities.
- The operator must carry out daily maintenance (see: 3 - MAINTENANCE: A - DAILY OR EVERY 10 HOURS SERVICE).
- The operator must ensure tyres are adapted to the nature of the ground (see area of the contact surface of the tyres in the chapter: 2 - DESCRIPTION: FRONT AND REAR TYRES). There are optional solutions, consult your dealer.
  . SAND tyres.
  . LAND tyres.
  . Snow chains.

Do not use the lift truck if the tyres are incorrectly inflated, damaged or excessively worn, because this could put your own safety or that of others at risk, or cause damage to the lift truck itself. The fitting of foam inflated tyres is prohibited and is not guaranteed by the manufacturer, excepting prior authorisation.

D - MODIFICATION OF THE LIFT TRUCK
- For your safety and that of others, you must not change the structure and settings of the various components used in your lift truck (hydraulic pressure, calibrating limiters, I.C. engine speed, addition of extra equipment, addition of counterweight, unapproved attachments, alarm systems, etc.) yourself. In this event, the manufacturer cannot be held responsible.

E - LIFTING PEOPLE
- The use of working equipment and load lifting attachments to lift people is:
  • either forbidden
  • or authorized exceptionally and under certain conditions (see current regulations in the country in which the lift truck is used).

Downloaded from www.Manualslib.com manuals search engine

Downloaded from www.Manualslib.com manuals search engine

OPERATING INSTRUCTIONS UNLADEN AND LADEN

A - BEFORE STARTING THE LIFT TRUCK

- Carry out daily maintenance (see: 3 - MAINTENANCE: A - DAILY OR EVERY 10 HOURS SERVICE).
- Make sure the lights, indicators and windscreen wipers are working properly.
- Make sure the rear view mirrors are in good condition, clean and properly adjusted.
- Make sure the horn works.

B - DRIVER'S OPERATING INSTRUCTIONS

- Whatever his experience, the operator is advised to familiarize himself with the position and operation of all the controls and instruments before operating the lift truck.
- Wear clothes suited for driving the lift truck, avoid loose clothes.
- Make sure you have the appropriate protective equipment for the job to be done.
- Prolonged exposure to high noise levels may cause hearing problems. It is recommended to wear ear muffs to protect against excessive noise.
- Always face the lift truck when getting into and leaving the driving seat and use the handle(s) provided for this purpose. Do not jump out of the seat to get down.
- Always pay attention when using the lift truck. Do not listen to the radio or music using headphones or earphones.
- Never operate the lift truck when hands or feet are wet or soiled with greasy substances.
- For increased comfort, adjust the seat to your requirements and adopt the correct position in the driver's cab.

Under no circumstances must the seat be adjusted while the lift truck is moving.

- The operator must always be in his normal position in the driver's cab. It is prohibited to have arms or legs, or generally any part of the body, protruding from the driver's cab of the lift truck.
- The safety belt must be worn and adjusted to the operator's size.
- The control units must never in any event be used for any other than their intended purposes (e.g. climbing onto or down from the lift truck, portmanteau, etc.).
- If the control components are fitted with a forced operation (lever lock) device, it is forbidden to leave the cab without first putting these controls in neutral.
- It is prohibited to carry passengers either on the lift truck or in the cab.

Downloaded from www.Manualslib.com manuals search engine

C - ENVIRONMENT

- Comply with site safety regulations.
- If you have to use the lift truck in a dark area or at night, make sure it is equipped with working lights.
- During handling operations, make sure that no one is in the way of the lift truck and its load.
- Do not allow anybody to come near the working area of the lift truck or pass beneath an elevated load.
- When using the lift truck on a transverse slope, before lifting the mast, follow the instructions given in the paragraph: INSTRUCTIONS FOR HANDLING A LOAD: C - TRANSVERSE ATTITUDE OF THE LIFT TRUCK.
- Traveling on a longitudinal slope:
  - Drive and brake gently.
  - Moving without load: Forks or attachment facing downhill.
  - Moving with load: Forks or attachment facing uphill. 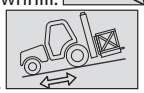
- Take into account the lift truck's dimensions and its load before trying to negotiate a narrow or low passageway.
- Never move onto a loading platform without having first checked:
  - That it is suitably positioned and made fast.
  - That the unit to which it is connected (wagon, lorry, etc.) will not shift.
  - That this platform is prescribed for the total weight of the lift truck to be loaded.
  - That this platform is prescribed for the size of the lift truck.
- Never move onto a foot bridge, floor or freight lift, without being certain that they are prescribed for the weight and size of the lift truck to be loaded and without having checked that they are in sound working order.
- Be careful in the area of loading bays, trenches, scaffolding, soft ground and manholes.
- Make sure the ground is stable and firm under the wheels before lifting the load.
- Make sure that the scaffolding, loading platform, pilings or ground is capable of bearing the load.
- Never stack loads on uneven ground, they may tip over.
- The load or the attachment must not be left just above a structure for long periods at a time because of the descending mast. In such a case, a constant watch must be kept and the height of the forks or the attachment readjusted if necessary.
- When working near aerial lines, ensure that the safety distance is sufficient between the working area of the lift truck and the aerial line.

You must consult your local electrical agency. You could be electrocuted or seriously injured if you operate or park the lift truck too close to power cables.

In the event of high winds, do not carry out handling work that jeopardizes the stability of the lift truck and its load, particularly if the load catches the wind badly.

D - VISIBILITY

- The safety of people within the lift truck's working area, as well as that of the lift truck itself and the operator are depend on good operator visibility of the lift truck's immediate vicinity in all situations and at all times.
- This lift truck has been designed to allow good operator visibility (direct or indirect by means of rear-view mirrors) of the immediate vicinity of the lift truck while traveling with no load and with the mast in the transport position.
- Special precautions must be taken if the size of the load restricts visibility towards the front:
  - moving in reverse,
  - site layout,
  - assisted by a person directing the maneuver (while standing outside the truck's area of travel), making sure to keep this person clearly in view at all times,
  - in any case, avoid reversing over long distances.
- If visibility of your road is inadequate, ask someone to assist by directing the maneuver (while standing outside the truck's area of travel), making sure to keep this person clearly in view at all times.
- Keep all components affecting visibility in a clean, properly adjusted state and in good working order (e.g. windscreens, windows, windscreen wipers, windscreen washers, driving and work lights, rear-view mirrors).

Downloaded from www.Manualslib.com manuals search engine

E - STARTING THE LIFT TRUCK

SAFETY NOTICE

The lift truck must only be started up or manoeuvred when the operator is sitting in the driver's cab, with his seat belt adjusted and fastened.

- Never try to start the lift truck by pushing or towing it. Such operation may cause severe damage to the transmission. If necessary, to tow the lift truck in an emergency, the transmission must be placed in the neutral position (see: 3 - MAINTENANCE: G - OCCASIONAL MAINTENANCE).
- If using an emergency battery for start-up, use a battery with the same characteristics and respect battery polarity when connecting it. Connect at first the positive terminals before the negative terminals.

Failure to respect polarity between batteries can cause serious damage to the electrical circuit. The electrolyte in the battery may produce an explosive gas. Avoid flames and generation of sparks close to the batteries. Never disconnect a battery while it is charging.

INSTRUCTIONS

- Check the closing and locking of the hood(s).
- For lift trucks operating on gas carburisation, open the gas bottle.
- Check that the forward/reverse selector is in neutral.
- Turn the ignition key to the position I to activate the electrical system and the preheat.
- Check the fuel level on the indicator.
- Turn the ignition key fully: the I.C. engine should then start. Release the ignition key and let the I.C. engine run at idle.
- Do not engage the starter motor for more than 15 seconds and carry out the preheating between unsuccessful attempts.
- Make sure all the signal lights on the control instrument panel are off.
- Check all control instruments when the I.C. engine is warm and at regular intervals during use, so as to quickly detect any faults and to be able to correct them without any delay.
- If an instrument does not show the correct display, stop the I.C. engine and immediately carry out the necessary operations.

F - DRIVING THE LIFT TRUCK

SAFETY NOTICE

Operators' attention is drawn to the risks involved in using the lift truck, in particular:
- Risk of losing control.
- Risk of losing lateral and frontal stability of the lift truck.
The operator must remain in control of the lift truck.
In the event of the lift truck overturning, do not try to leave the cabin during the incident. YOUR BEST PROTECTION IS TO STAY FASTENED IN THE CABIN.

- Observe the company's traffic regulations or, by default, the public highway code.
- Do not carry out operations which exceed the capacities of your lift truck or attachments.
- Always drive the lift truck with the forks or attachment to the transport position, i.e. at 300 mm from the ground and the carriage sloping backwards.
- Only carry loads which are balanced and properly anchored to avoid any risk of a load falling off.
- Ensure that palettes, cases, etc, are in good order and suitable for the load to be lifted.
- Familiarise yourself with the lift truck on the terrain where it will be used.
- Ensure that the service brakes are working properly.
- The loaded lift truck must not travel at speeds in excess of 12 km/h.
- Drive smoothly at an appropriate speed for the operating conditions (land configuration, load on the lift truck).
- Do not use the hydraulic mast controls when the lift truck is moving.
- Do not manoeuvre the lift truck with the mast in the raised position unless under exceptional circumstances and then with extreme caution, at very low speed and using gentle braking. Ensure that visibility is adequate.
- Take bends slowly.
- In all circumstances make sure you are in control of your speed.
- On damp, slippery or uneven terrain, drive slowly.
- Brake gently, never abruptly.
- Only use the lift truck's forward/reverse selector from a stationary position and never do so abruptly.
- Do not drive with your foot on the brake pedal.
- Always remember that hydrostatic type steering is extremely sensitive to movement of the steering wheel, so turn it gently and not jerkily.
- Never leave the I.C. engine on when the lift truck is unattended.
- Do not leave the cab when the lift truck has a raised load.
- Look where you are going and always make sure you have good visibility along the route.

Downloaded from www.Manualslib.com manuals search engine

- Use the rear-view mirrors frequently.
- Drive round obstacles.
- Never drive on the edge of a ditch or steep slope.
- It is dangerous to use two lift trucks simultaneously to handle heavy or voluminous loads, since this operation requires particular precautions to be taken. It must only be used exceptionally and after risk analysis.
- The ignition switch has an emergency stop mechanism in case of an operating anomaly occurring in the case of lift trucks not fitted with a punch-operated cut-out.

INSTRUCTIONS
- Always drive the lift truck with the forks or attachment to the transport position, i.e. at 300 mm from the ground and the carriage sloping backwards.
- For lift trucks with gearboxes, use the recommended gear (see: 2 - DESCRIPTION: INSTRUMENTS AND CONTROLS).
- Release the parking brake.
- Shift the forward/reverse selector to the selected direction of travel and accelerate gradually until the lift truck moves off.

G - STOPPING THE LIFT TRUCK

SAFETY NOTICE
- Never leave the ignition key in the lift truck during the operator's absence.
- When the lift truck is stationary, or if the operator has to leave his cab (even for a moment), place the forks or attachment on the ground, apply the parking brake and put the forward/reverse selector in neutral.
- Make sure that the lift truck is not stopped in any position that will interfere with the traffic flow and at less than one meter from the track of a railway.
- In the event of prolonged parking on a site, protect the lift truck from bad weather, particularly from frost (check the level of antifreeze), close and lock all the lift truck accesses (doors, windows, cowls…).

INSTRUCTIONS
- Park the lift truck on flat ground or on an incline lower than 15 %.
- Place the forward/reverse selector in neutral.
- Apply the parking brake.
- For lift trucks with gearboxes, place the gear lever in neutral.
- Lower the forks or attachment to rest on the ground.
- When using an attachment with a grab or jaws, or a bucket with hydraulic opening, close the attachment fully.
- Before stopping the lift truck after a long working period, leave the I.C. engine idling for a few moments, to allow the coolant liquid and oil to lower the temperature of the I.C. engine and transmission. Do not forget this precaution, in the event of frequent stops or warm stalling of the I.C. engine, or else the temperature of certain parts will rise significantly due to the stopping of the cooling system, with the risk of badly damaging such parts.
- Stop the I.C. engine with the ignition switch.
- Remove the ignition key.
- Lock all the accesses to the lift truck (doors, windows, cowls…).
- For lift trucks operating on gas carburisation, shut the LPG bottle. For a long lasting stop, let the engine stop naturally by shutting the LPG bottle before switching off the ignition, so as to eliminate all the fuel in the feed tube.

Downloaded from www.Manualslib.com manuals search engine

H - DRIVING THE LIFT TRUCK ON THE PUBLIC HIGHWAY

SAFETY INSTRUCTIONS

- Operators driving on the public highway must comply with current highway code legislation.
- The lift truck must comply with current road legislation. If necessary, there are optional solutions. Contact your dealer.

INSTRUCTIONS

- Make sure the revolving light is in place, switch it on and verify its operation.
- Check the good working order and cleanness of lights, indicators and windscreen wiper.
- Switch off the working headlights if the lift truck is fitted with them.
- Put the attachment at 300 mm from the ground.

Never move in neutral (forward/reverse selector or gear lever in neutral or transmission cut-off button pressed) to preserve the lift truck engine brake. Failure to respect this instruction on a slope will lead to excessive speed which may make the lift truck uncontrollable (steering, brakes) and may cause severe mechanical damage.

DRIVING THE LIFT TRUCK WITH A FRONT-MOUNTED ATTACHMENT

- You must comply with current regulations in your country, covering the possibility of driving on the public highway with a front-mounted attachment on your lift truck.
- If road legislation in your country authorizes circulation with a front-mounted attachment, you must at least:
  - Protect and report any sharp and/or dangerous edges on the attachment (see: 4 - ADAPTABLE ATTACHMENTS IN OPTION ON THE RANGE: ATTACHMENT SHIELDS).
  - The attachment must not be loaded.
  - Make sure that the attachment does not mask the lighting range of the forward lights.
  - Make sure that current legislation in your country does not require other obligations.

OPERATING THE LIFT TRUCK WITH A TRAILER

- For using a trailer, observe the regulations in force in your country (maximum travel speed, braking, maximum weight of trailer, etc.).
- Do not forget to connect the trailer's electrical equipment to that of the lift truck.
- The trailer's braking system must comply with current legislation.
- If pulling a trailer with assisted braking, the tractor lift truck must be equipped with a trailer braking mechanism. In this case, do not forget to connect the trailer braking equipment to the lift truck.
- The vertical force on the towing hook must not exceed the maximum authorised by the manufacturer (consult the manufacturer's plate on your lift truck).
- The authorised gross vehicle weight must not exceed the maximum weight authorised by the manufacturer (consult the manufacturer's plate on your lift truck).

IF NECESSARY, CONSULT YOUR DEALER.

Downloaded from www.Manualslib.com manuals search engine

INSTRUCTIONS FOR HANDLING A LOAD

A - CHOICE OF ATTACHMENTS

- Only attachments approved by MANITOU can be used on its lift trucks.
- Make sure the attachment is appropriate for the work to be done (see: 4 - ADAPTABLE ATTACHMENTS IN OPTION ON THE RANGE).
- Make sure the attachment is correctly installed and locked onto the lift truck carriage.
- Make sure that your lift truck attachments work properly.
- Comply with the load chart limits for the lift truck for the attachment used.
- Do not exceed the rated capacity of the attachment.
- Never lift a load in a sling without the attachment provided for the purpose. There are optional solutions ; contact your dealer.

B - MASS OF LOAD AND CENTRE OF GRAVITY

- Before taking up a load, you must know its mass and its centre of gravity.
- The load chart for your lift truck is valid for a load in which the longitudinal position of the centre of gravity is 500 or 600 mm from the base of the forks (as model of lift truck) (fig. B1). For a higher centre of gravity, contact your dealer.
- For irregular loads, determine the transverse centre of gravity before any movement (fig. B2) and set it in the longitudinal axis of the lift truck.

It is forbidden to move a load heavier than the effective capacity defined on the lift truck load chart.

For loads with a moving centre of gravity (e.g. liquids), take account of the variations in the centre of gravity in order to determine the load to be handled and be vigilant and take extra care to limit these variations as far as possible.

B1

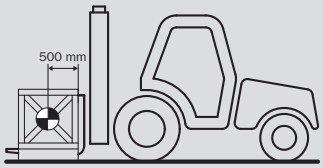

B2

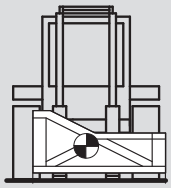

Downloaded from www.Manualslib.com manuals search engine

C - TRANSVERSE ATTITUDE OF THE LIFT TRUCK

The transverse attitude is the transverse slope of the chassis with respect to the horizontal.
Raising the load reduces the lift truck's lateral stability. The transverse attitude must be set with the mast in down position as follows:

- Position the lift truck so that the bubble in the level is between the two lines (see: 2 - DESCRIPTION: INSTRUMENTS AND CONTROLS).

D - TAKING UP A LOAD ON THE GROUND

- Approach the lift truck perpendicular to the load, with the the forks in a horizontal position (fig. D1).
- Adjust the fork spread and centering in connection with the load (fig. D2) (optional solutions exist, consult your dealer).
- Never lift a load with a single fork.

Beware of the risks of trapping or squashing limbs when manually adjusting the forks.

- Move the lift truck forward slowly (1) and bring the forks to stop in front of the load (fig. D3), if necessary, slightly lift the mast (2) while taking up the load.
- Bring the load into the transport position.
- Tilt the load far enough backwards to ensure stability (loss of load on braking or going downhill).

FOR A NON-PALLETIZED LOAD

- Tilt the carriage (1) forwards and move the lift truck slowly forwards (2), to insert the fork under the load (fig. D4) (block the load if necessary).
- Continue to move the lift truck forwards (2) tilting the carriage (3) (fig. D4) backwards to position the load on the forks and check the load's longitudinal and lateral stability.

D1

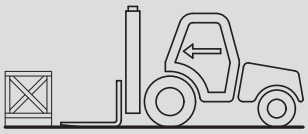

D2

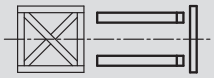

D3

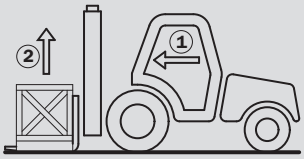

D4

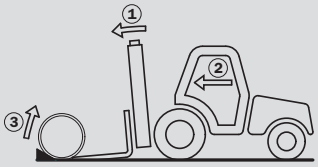

647003 EN (03/01/2012)

Downloaded from www.Manualslib.com manuals search engine

E - TAKING UP AND LAYING A HIGH LOAD ON TYRES

You must not raise the mast if you have not checked the transverse attitude of the lift truck (see: INSTRUCTIONS FOR HANDLING A LOAD: C - TRANSVERSE ATTITUDE OF THE LIFT TRUCK).

REMINDER: Make sure that the following operations can be performed with good visibility (see: OPERATIONS INSTRUCTIONS UNLADEN AND LADEN: D - VISIBILITY).

TAKING UP A HIGH LOAD ON TYRES
- Ensure that the forks will easily pass under the load.
- Keeping the mast vertical (1), advance the lift truck and raise the forks to level with the load (2) (fig. E1).
- Manoeuvre carefully and gently to bring the forks to the stop in front of the load (fig. E2). Put the handbrake on and set the forward/reverse selector to neutral.
- Slightly lift the load (1) and incline the carriage (2) backwards to stabilize the load (fig. E3).
- Tilt the load sufficiently backwards to ensure its stability.
- Reverse the lift truck (1) very carefully and gently to free the load. Lower the mast (2) to bring the load into transport position (fig. E4).

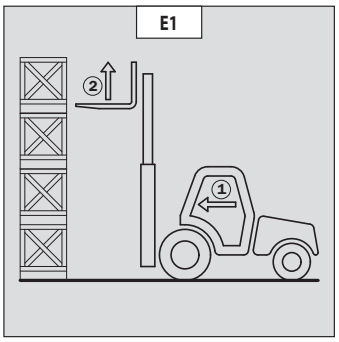

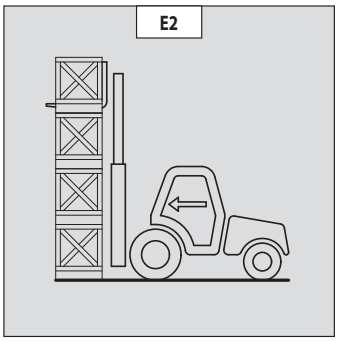

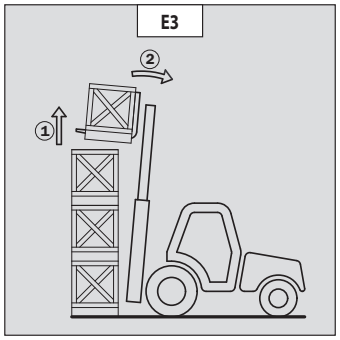

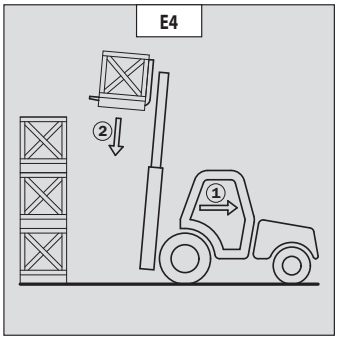

LAYING A HIGH LOAD ON TYRES
- Approach the load in the transport position in front of the pile (fig. E5).
- Raise the mast (1) until the load is higher than the pile and move the lift truck forward (2) (fig. E6) very carefully and gently, until the load is over the pile. Put the handbrake on and set the forward/reverse selector to neutral.
- Place the load in a horizontal position by tilting the mast forwards (1) and lay it down on the pile (2) while checking the correct positioning of the load (fig. E7).
- Reverse the lift truck (1) very slowly and carefully to release the forks (fig. E8). Then set them into transport position.

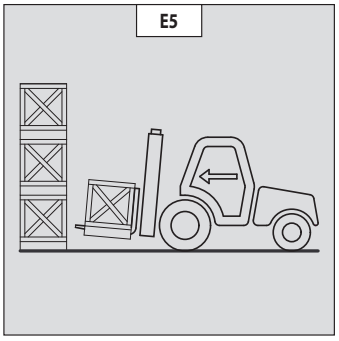

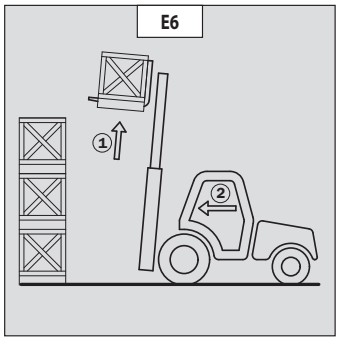

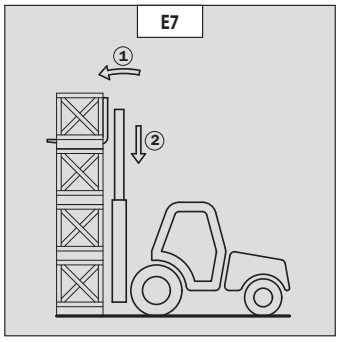

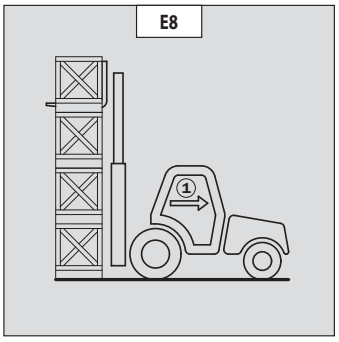

Downloaded from www.Manualslib.com manuals search engine

MAINTENANCE INSTRUCTIONS OF THE LIFT TRUCK

GENERAL INSTRUCTIONS

- Ensure the area is sufficiently ventilated before starting the lift truck.
- Wear clothes suitable for the maintenance of the lift truck, avoid wearing jewellery and loose clothes. Tie and protect your hair, if necessary.
- Stop the I.C. engine and remove the ignition key, when an intervention is necessary.
- Read the operator's manual carefully.
- Carry out all repairs immediately, even if the repairs concerned are minor.
- Repair all leaks immediately, even if the leak concerned is minor.
- Make sure that the disposal of process materials and of spare parts is carried out in total safety and in a ecological way.
- Be careful of the risk of burning and splashing (exhaust, radiator, I.C. engine, etc.).

MAINTENANCE

- Perform the periodic service (see: 3 - MAINTENANCE) to keep your lift truck in good working conditions. Failure to perform the periodic service may cancel the contractual guarantee.

MAINTENANCE LOGBOOK

- The maintenance operations carried out in accordance with the recommendations given in part: 3 - MAINTENANCE and the other inspection, servicing or repair operations or modifications performed on the lift truck or its attachments shall be recorded in a maintenance logbook. The entry for each operation shall include details of the date of the works, the names of the individuals or companies having performed them, the type of operation and its frequency, if applicable. The part numbers of any lift truck items replaced shall also be indicated.

LUBRICANT AND FUEL LEVELS

- Use the recommended lubricants (never use contaminated lubricants).
- Do not fill the fuel tank when the I.C. engine is running.
- Only fill up the fuel tank in areas specified for this purpose.
- Do not fill the fuel tank to the maximum level.
- Do not smoke or approach the lift truck with a flame, when the fuel tank is open or is being filled.

HYDRAULIC

- Any work on the load handling hydraulic circuit is forbidden except for the operations described in part: 3 - MAINTENANCE.
- Do not attempt to loosen unions, hoses or any hydraulic component with the circuit under pressure.

BALANCING VALVE: It is dangerous to change the setting and remove the balancing valves or safety valves which may be fitted to your lift truck cylinders. These operations must only be performed by approved personnel (consult your dealer).

The HYDRAULIC ACCUMULATORS that may be fitted on your lift truck are pressurised units. Removing these accumulators and their pipework is a dangerous operation and must only be performed by approved personnel (consult your dealer).

ELECTRICITY

- Do not short-circuit the starter relay to start the IC engine. If the forward/reverse selector is not in neutral and the parking brake is not engaged, the lift truck may suddenly start to move.
- Do not drop metallic items on the battery.
- Disconnect the battery before working on the electrical circuit.

Downloaded from www.Manualslib.com manuals search engine

WELDING

- Disconnect the battery before any welding operations on the lift truck.
- When carrying out electric welding work on the lift truck, connect the negative cable from the equipment directly to the part being welded, so as to avoid high tension current passing through the alternator.
- Never carry out welding or work which gives off heat on an assembled tyre. The heat would increase the pressure which could cause the tyre to explode.
- If the lift truck is equipped with an electronic control unit, disconnect this before starting to weld, to avoid the risk of causing irreparable damage to electronic components.

WASHING THE LIFT TRUCK

- Clean the lift truck or at least the area concerned before any intervention.
- Remember to close and lock all accesses to the lift truck (doors, windows, cowls…).
- During washing, avoid the articulations and electrical components and connections.
- If necessary, protect against penetration of water, steam or cleaning agents, components susceptible of being damaged, particularly electrical components and connections and the injection pump.
- Clean the lift truck of any fuel, oil or grease trace.

FOR ANY INTERVENTION OTHER THAN REGULAR MAINTENANCE, CONSULT YOUR DEALER.

Downloaded from www.Manualslib.com manuals search engine

IF THE LIFT TRUCK IS NOT TO BE USED FOR A LONG TIME

INTRODUCTION

The following recommendations are intended to prevent the lift truck from being damaged when it is withdrawn from service for an extended period.
For these operations, we recommend the use of a MANITOU protective product, reference 603726.
Instructions for using the product are given on the packaging.

Procedures to follow if the lift truck is not to be used for a long time and for starting it up again afterwards must be performed by your dealership.

PREPARING THE LIFT TRUCK

- Clean the lift truck thoroughly.
- Check and repair any leakage of fuel, oil, water or air.
- Replace or repair any worn or damaged parts.
- Wash the painted surfaces of the lift truck in clear and cold water and wipe them.
- Touch up the paintwork if necessary.
- Shut down the lift truck (see: OPERATING INSTRUCTIONS UNLADEN AND LADEN).
- Make sure the mast cylinder rods are all in retracted position.
- Release the pressure in the hydraulic circuits.

PROTECTING THE I.C. ENGINE

- Fill the tank with fuel (see: 3 - MAINTENANCE: A - DAILY OR EVERY 10 HOURS SERVICE).
- Empty and replace the cooling liquid (see: 3 - MAINTENANCE: F - EVERY 2000 HOURS SERVICE).
- Leave the I.C. engine running at idling speed for a few minutes, then switch off.
- Replace the I.C. engine oil and oil filter (see: 3 - MAINTENANCE: D - EVERY 500 HOURS SERVICE).
- Add the protective product to the engine oil.
- Run the I.C. engine for a short time so that the oil and cooling liquid circulate inside.
- Disconnect the battery and store it in a safe place away from the cold, after charging it to a maximum.
- Remove the injectors and spray the protective product into each cylinder for two seconds with the piston in low neutral position.
- Turn the crankshaft once slowly and refit the injectors (see I.C. engine REPAIR MANUAL).
- Remove the intake hose from the manifold or turbocharger and spray the protective product into the manifold or turbocharger.
- Cap the intake manifold or turbocharger hole with waterproof adhesive tape.
- Remove the exhaust pipe and spray the protective product into the exhaust manifold or turbocharger.
- Refit the exhaust pipe and block the outlet with waterproof adhesive tape.

NOTE: The spray time is noted on the product packaging and must be increased by 50 % for turbo engines.

- Open the filler plug, spray the protective product around the rocker arm shaft and refit the filler plug.
- Cap the fuel tank using waterproof adhesive tape.
- Remove the drive belts and store them in a safe place.
- Disconnect the engine cut-off solenoid on the injection pump and carefully insulate the connection.

PROTECTING THE LIFT TRUCK

- Set the lift truck on axle stands so that the tyres are not in contact with the ground and release the handbrake.
- Protect cylinder rods which will not be retracted, from corrosion.
- Wrap the tyres.

NOTE: If the lift truck is to be stored outdoors, cover it with a waterproof tarpaulin.

Downloaded from www.Manualslib.com manuals search engine

BRINGING THE LIFT TRUCK BACK INTO SERVICE

- Remove the waterproof adhesive tape from all the holes.
- Refit the intake hose.
- Refit and reconnect the battery.
- Remove the protection from the cylinder rods.
- Perform the daily service (see: 3 - MAINTENANCE: A - DAILY OR EVERY 10 HOURS SERVICE).
- Put the handbrake on and remove the axle stands.
- Empty and replace the fuel and replace the fuel filter (see: 3 - MAINTENANCE: D - EVERY 500 HOURS SERVICE).
- Refit and set the tension in the drive belts (see: 3 - MAINTENANCE: C - EVERY 250 HOURS SERVICE).
- Turn the I.C. engine using the starter, to allow the oil pressure to rise.
- Reconnect the engine cut-off solenoid.
- Lubricate the lift truck completely (see: 3 - MAINTENANCE: SERVICING SCHEDULE).

Make sure the area is adequately ventilated before starting up the lift truck.

- Start up the lift truck, following the safety instructions and regulations (see: OPERATING INSTRUCTIONS UNLADEN AND LADEN).
- Run all the mast's hydraulic movements, concentrating on the ends of travel for each cylinder.

Downloaded from www.Manualslib.com manuals search engine

Downloaded from www.Manualslib.com manuals search engine

2 - DESCRIPTION

Downloaded from www.Manualslib.com manuals search engine

TABLE OF CONTENTS

« EC» DECLARATION OF CONFORMITY		2-4
SAFETY PLATES AND STICKERS		2-6
IDENTIFICATION OF THE LIFT TRUCK		2-10
CHARACTERISTICS	MC 30 Turbo Série 3-E3	2-14
CHARACTERISTICS	M 26-2 Turbo Série 3-E3	2-16
CHARACTERISTICS	M 30-2 Turbo Série 3-E3	2-18
CHARACTERISTICS	M 26-4 Turbo Série 3-E3	2-20
CHARACTERISTICS	M 30-4 Turbo Série 3-E3	2-22
CHARACTERISTICS	M40-4 T Série 3-E3	2-24
CHARACTERISTICS	M 50-4 Turbo Série 3-E3	2-26
CHARACTERISTICS	MC 40 Turbo POWERSHIFT Série 3-E3	2-28
CHARACTERISTICS	MC 50 Turbo POWERSHIFT Série 3-E3	2-30
CHARACTERISTICS	MC 60 Turbo POWERSHIFT Série 3-E3	2-32
CHARACTERISTICS	MC 70 Turbo POWERSHIFT Série 3-E3	2-34
CHARACTERISTICS OF MASTS WITH ROLLERS	MC 30 Turbo Série 3-E3	2-36
CHARACTERISTICS OF MASTS WITH ROLLERS	M 26-2 Turbo Série 3-E3 M 30-2 Turbo Série 3-E3 M 26-4 Turbo Série 3-E3 M 30-4 Turbo Série 3-E3	2-37
CHARACTERISTICS OF MASTS WITH ROLLERS	M40-4 Turbo Série 3-E3	2-38
CHARACTERISTICS OF MASTS WITH ROLLERS	M 50-4 Turbo Série 3-E3	2-39
CHARACTERISTICS OF MASTS WITH ROLLERS	MC 40 Turbo POWERSHIFT Série 3-E3	2-40
CHARACTERISTICS OF MASTS WITH ROLLERS	MC 50 Turbo POWERSHIFT Série 3-E3	2-41
CHARACTERISTICS OF MASTS WITH ROLLERS	MC 60 T POWERSHIFT Série 3-E3 MC 70 T POWERSHIFT Série 3-E3	2-42
FRONT AND REAR TIRES		2-44
DIMENSIONS AND LOAD CHART	MC 30 Turbo Série 3-E3	2-48

647003 EN (03/01/2012)

Downloaded from www.Manualslib.com manuals search engine

DIMENSIONS AND LOAD CHART M 26-2 Turbo Série 3-E3 2-49

DIMENSIONS AND LOAD CHART M 30-2 Turbo Série 3-E3 2-50

DIMENSIONS AND LOAD CHART M 26-4 Turbo Série 3-E3 2-51

DIMENSIONS AND LOAD CHART M 30-4 Turbo Série 3-E3 2-52

DIMENSIONS AND LOAD CHART M 40-4 Turbo Série 3-E3 2-53

DIMENSIONS AND LOAD CHART M 50-4 Turbo Série 3-E3 2-54

DIMENSIONS AND LOAD CHART MC 40 Turbo POWERSHIFT Série 3-E3 2-55

DIMENSIONS AND LOAD CHART MC 50 Turbo POWERSHIFT Série 3-E3 2-56

DIMENSIONS AND LOAD CHART MC 60 Turbo POWERSHIFT Série 3-E3 2-57

DIMENSIONS AND LOAD CHART MC 70 Turbo POWERSHIFT Série 3-E3 2-58

INSTRUMENTS AND CONTROLS MC 30 Turbo Série 3-E3 2-60

INSTRUMENTS AND CONTROLS M 26-2 Turbo Série 3-E3, M 26-4 Turbo Série 3-E3, M 30-2 Turbo Série 3-E3, M 30-4 Turbo Série 3-E3, M 40-4 Turbo Série 3-E3, M 50-4 Turbo Série 3-E3 2-62

INSTRUMENTS AND CONTROLS MC 40 Turbo POWERSHIFT Série 3-E3, MC 50 Turbo POWERSHIFT Série 3-E3, MC 60 Turbo POWERSHIFT Série 3-E3, MC 70 Turbo POWERSHIFT Série 3-E3 2-64

TOWING PIN AND HOOK 2-80

DESCRIPTION AND USE OF THE OPTIONS 2-82

Downloaded from www.Manualslib.com manuals search engine

« EC» DECLARATION OF CONFORMITY

1) DÉCLARATION «CE» DE CONFORMITÉ (originale)

« EC» DECLARATION OF CONFORMITY (original)

2) La société, *The company* : **MANITOU BF**

3) Adresse, *Address* : **430, rue de l'Aubinière - BP 10249 - 44158 - ANCENIS CEDEX - FRANCE**

4) Dossier technique,*Technical file* : **MANITOU BF - 430, rue de l'Aubinière**
BP 10249 - 44158 - ANCENIS CEDEX - FRANCE

5) Constructeur de la machine décrite ci-après, *Manufacturer of the machine described below* :

MC 30 Turbo Série 3-E3
M 26-2 Turbo Série 3-E3 **M 26-4 Turbo Série 3-E3**
M 30-2 Turbo Série 3-E3 **M 30-4 Turbo Série 3-E3**
M 40-4 Turbo Série 3-E3
M 50-4 Turbo Série 3-E3
MC 40 Turbo POWERSHIFT Série 3-E3
MC 50 Turbo POWERSHIFT Série 3-E3
MC 60 Turbo POWERSHIFT Série 3-E3
MC 70 Turbo POWERSHIFT Série 3-E3

6) Déclare que cette machine, *Declares that this machine* :

7) Est conforme aux directives suivantes et à leurs transpositions en droit national, *Complies with the following directives and their transpositions into national law* :

2006/42/CE

8) Pour les machines annexe IV , *For annex IV machines* :
9) Numéro d'attestation, *Certificate number* :
10) Organisme notifié, *Notified body* :

15) Normes harmonisées utilisées, *Harmonised standards used* :

16) Normes ou dispositions techniques utilisées, *Standards or technical provisions used* :

17) Fait à, *Done at* : **Ancenis** 18) Date, *Date* : **03/01/2012**

19) Nom du signataire, *Name of signatory* : **Éric LAMBERT**

20) Fonction, *Function* : **Président division RTH**

21) Signature, *Signature* :

647003 EN (03/01/2012)

Downloaded from www.Manualslib.com manuals search engine

bg : 1) удостоверение за « CE » съответствие (оригинална), 2) Фирмата, 3) Адрес, 4) Техническо досие, 5) Фабрикант на описаната по-долу машина, 6) Обявява, че тази машина, 7) Отговаря на следните директиви и на тяхното съответствие национално право, 8) За машините към допълнение IV, 9)Номер на удостоверението, 10) Наименувана фирма, 15) хармонизирани стандарти използвани, 16) стандарти или технически правила, използвани, 17) Изработено в, 18) Дата, 19) Име на разписалия се, 20) Функция, 21) Функция.

cs : 1) ES prohlášení o shodě (původní), 2) Název společnosti, 3) Adresa, 4) Technická dokumentace, 5) Výrobce níže uvedeného stroje, 6) Prohlašuje, že tento stroj, 7) Je v souladu s následujícími směrnicemi a směrnicemi transponovanými do vnitrostátního práva, 8) Pro stroje v příloze IV, 9) Číslo certifikátu, 10) Notifikační orgán, 15) harmonizované normy použity, 16) Norem a technických pravidel používaných, 17) Místo vydání, 18) Datum vydání, 19) Jméno podepsaného, 20) Funkce, 21) Podpis.

da : 1) EF Overensstemmelseserklæring (original), 2) Firmaet, 3) Adresse, 4) tekniske dossier, 5) Konstruktør af nedenfor beskrevne maskine, 6) Erklærer, at denne maskine, 7) Overholder nedennævnte direktiver og disses gennemførelse til national ret, 8) For maskiner under bilag IV, 9) Certifikat nummer, 10) Bemyndigede organ, 15) harmoniserede standarder, der anvendes, 16) standarder eller tekniske regler, 17) Udfærdiget i, 18) Dato, 19) Underskrivers navn, 20) Funktion, 21) Underskrift.

de : 1) EG-Konformitätserklärung (original), 2) Die Firma, 3) Adresse, 4) Technischen Unterlagen, 5) Hersteller der nachfolgend beschriebenen Maschine, 6) Erklärt, dass diese Maschine, 7) den folgenden Richtlinien und deren Umsetzung in die nationale Gesetzgebung entspricht, 8) Für die Maschinen laut Anhang IV, 9) Bescheinigungsnummer, 10) Benannte Stelle, 15) angewandten harmonisierten Normen, 16) angewandten sonstigen technischen Normen und Spezifikationen, 17) Ausgestellt in, 18) Datum, 19) Name des Unterzeichners, 20) Funktion, 21) Unterschrift.

el : 1) Δήλωση συμμόρφωσης CE (πρωτότυπο), 2) Η εταιρεία, 3) Διεύθυνση, 4) τεχνικό φάκελο, 5) Κατασκευάστρια του εξής περιγραφόμενου μηχανήματος, 6) Δηλώνει ότι αυτό το μηχάνημα, 7) Είναι σύμφωνο με τις εξής οδηγίες και τις προσαρμογές τους στο εθνικό δίκαιο, 8) Για τα μηχανήματα παραρτήματος IV, 9) Αριθμός δήλωσης, 10) Κοινοποιημένος φορέας, 15) εναρμονισμένα πρότυπα που χρησιμοποιούνται, 16) Πρότυπα ή τεχνικούς κανόνες που χρησιμοποιούνται, 16) Είναι σύμφωνο με τα εξής πρότυπα και τεχνικές διατάξεις, 17) Εν, 18) Ημερομηνία, 19) Όνομα του υπογράφοντος, 20) Θέση, 21) Υπογραφή.

es : 1)Declaración DE de conformidad (original), 2) La sociedad, 3) Dirección, 4) expediente técnico, 5) Constructor de la máquina descrita a continuación, 6) Declara que esta máquina, 7) Está conforme a las siguientes directivas y a sus transposiciones en derecho nacional, 8) Para las máquinas anexo IV, 9) Número de certificación, 10) Organismo notificado, 15) normas armonizadas utilizadas, 16) Otras normas o especificaciones técnicas utilizadas, 17) Hecho en, 18) Fecha, 19) Nombre del signatario, 20) Función, 21) Firma.

et : 1) EÜ vastavusdeklaratsioon (algupärane), 2) Äriühing, 3) Aadress, 4) Tehniline dokumentatsioon, 5) Seadme tootja, 6) Kinnitab, et see toode, 7) On vastavuses järgmiste direktiivide ja nende riigisisesesse õigusesse ülevõtmiseks vastuvõetud õigusaktidega, 8) IV lisas loetletud seadmete puhul, 9) Tunnistuse number, 10) Sertifitseerimisasutus, 15) kasutatud ühtlustatud standarditele, 16) Muud standardites või spetsifikatsioonides kasutatakse, 17) Väljaandmise koht, 18) Väljaandmise aeg, 19) Allkirjastaja nimi, 20) Amet, 21) Allkiri.

fi : 1) EY-vaatimustenmukaisuusvakuutus (alkuperäiset), 2) Yritys, 3) Osoite, 4) teknisen eritelmän, 5) Jäljessä kuvatun koneen valmistaja, 6) Vakuuttaa, että tämä kone, 7) Täyttää seuraavien direktiivien sekä niitä vastaavien kansallisten säännösten vaatimukset, 8) Liitteen IV koneiden osalta, 9) Todistuksen numero, 10) Ilmoitettu laitos, 15) yhdenmukaistettuja standardeja käytetään, 16) muita standardeja tai eritelmät, 17) Paikka, 18) Aika, 19) Allekirjoittajan nimi, 20) Toimi, 21) Allekirjoitus.

ga : 1) « EC »dearbhú comhréireachta (bunaidh), 2) An comhlacht, 3) Seoladh, 4) comhad teicniúil, 5) Déantóir an innill a thuairiscítear thíos, 6) Dearbhaíonn sé go bhfuil an t-inneall, 7) Go gcloíonn sé le na treoracha seo a leanas agus a trasuímh isteach i ndlí náisiúnta, 8) Le haghaidh innill an aguisín IV, 9) Uimhir teastais, 10) Comhlacht a chuireadh i bhfios, 15) caighdeáin comhchuibhithe a úsáidtear, 16) caighdeáin eile nó sonraíochtaí teicniúla a úsáidtear, 17) Déanta ag, 18) Dáta, 19) Ainm an tsínitheora, 20) Feidhm, 21) Síniú.

hu : 1) CE megfelelőségi nyilatkozat (eredeti), 2) A vállalat, 3) Cím, 4) műszaki dokumentáció, 5) Az alábbi gép gyártója, 6) Kijelenti, hogy a gép, 7) Megfelel az alábbi irányelveknek valamint azok honosított előírásainak, 8) A IV. melléklet gépeihez, 9) Bizonylati szám, 10) Értesített szervezet, 15) felhasznált harmonizált szabványok, 16) egyéb felhasznált műszaki szabványok és előírások hivatkozásai, 17) Kelt (hely), 18) Dátum, 19) Aláíró neve, 20) Funkció, 21) Aláírás.

is : 1) (Samræmisvottorð ESB (upprunalega), 2) Fyrirtækið, 3) Aðsetur, 4) Tæknilegar skrá, 5) Smiður tækisins sem lýst er hér á eftir, 6) Staðfestir að tækið, 7) Samræmist eftirfarandi stöðlum og staðfærslu þeirra með hliðsjón af þjóðarrétti, 8) Fyrir tækin í aukakafla IV, 9) Staðfestingarnúmer, 10) Tilkynnt til, 15) samhæfða staðla sem notaðir, 16) önnur staðlar eða forskriftir notað, 17) Staður, 18) Dagsetning, 19) Nafn undirritaðs, 20) Staða, 21) Undirskrift.

it : 1) Dichiarazione CE di conformità (originale), 2) La società, 3) Indirizzo, 4) fascicolo tecnico, 5) Costruttore della macchina descritta di seguito, 6) Dichiara che questa macchina, 7) È conforme alle direttive seguenti e alle relative trasposizioni nel diritto nazionale, 8) Per le macchine Allegato IV, 9) Numero di Attestazione, 10) Organismo notificato, 15) norme armonizzate applicate, 16) altre norme e specifiche tecniche applicate, 17) Stabilita a, 18) Data, 19) Nome del firmatario, 20) Funzione, 21) Firma.

lt : 1) CE atitikties deklaracija (originalas), 2) Bendrovė, 3) Adresas, 4) Techninė byla, 5) Žemiau nurodytas įrenginio gamintojas, 6) Pareiškia, kad šis įrenginys, 7) Atitinka toliau nurodytas direktyvas ir į nacionalinius teisės aktus perkeltas jų nuostatas, 8) IV priedas dėl mašinų, 9) Sertifikato Nr, 10) Paskelbtoji įstaiga, 15) suderintus standartus naudojamus, 16) Kiti standartai ir technines specifikacijas, 17) Pasirašyta, 18) Data, 19) Pasirašiusio asmens vardas ir pavardė, 20) Pareigos, 21) Parašas.

lv : 1) EK atbilstības deklarācija (oriģināls), 2) Uzņēmums, 3) Adrese, 4) tehniskās lietas, 5) Tālāk aprakstītās iekārtas ražotājs, 6) Apliecina, ka šī iekārta, 7) Ir atbilstoša tālāk norādītajām direktīvām un to transpozicijai nacionālajā likumdošanā, 8) Iekārtām IV pielikumā, 9) Apliecības numurs, 10) Reģistrētā organizācija, 15) lietotajiem saskaņotajiem standartiem, 16) lietotajiem tehniskajiem standartiem un specifikācijām, 17) Sastādīts, 18) Datums, 19) Parakstītāja vārds, 20) Amats, 21) Paraksts.

mt : 1) Dikjarazzjoni ta' Konformità KE (originali), 2) Il-kumpanija, 3) Indirizz, 4) fajl tekniku, 5) Manifattrici tal-magna deskritta hawn isfel, 6) Tiddikjara li din il-magna, 7) Hija konformi hija konformi mad-Direttivi segwenti u l-liġijiet li jimplimentawhom fil-liġi nazzjonali, 8) Għall-magni fl-Anness IV, 9) Numru taċ-certifikat, 10) Entità nnotifikata, 15) l-istandards armonizzati użati, 16) standards tekniċi u speċifikazzjonijiet oħra użati, 17) Magħmul f', 18) Data, 19) Isem il-firmatarju, 20) Kariga, 21) Firma.

nl : 1) EG-verklaring van overeenstemming (oorspronkelijke), 2) Het bedrijf, 3) Adres, 4) technisch dossier, 5) Constructeur van de hierna genoemde machine, 6) Verklaart dat deze machine, 7) In overeenstemming is met de volgende richtlijnen en hun omzettingen in het nationale recht, 8) Voor machines van bijlage IV, 9) Goedkeuringsnummer, 10) Aangezegde instelling, 15) gehanteerde geharmoniseerde normen, 16) andere gehanteerde technische normen en specificaties, 17) Opgemaakt te, 18) Datum, 19) Naam van ondergetekende, 20) Functie, 21) Handtekening.

no : 1) CE-samsvarserklæring (original), 2) Selskapet, 3) Adresse, 4) tekniske arkiv, 5) Fabrikant av følgende maskin, 6) Erklærer at denne maskinen, 7) Oppfyller kravene i følgende direktiver, med nasjonale gjennomføringsbestemmelser, 8) For maskinene i tillegg IV, 9) Attestnummer, 10) Notifisert organ, 15) harmoniserte standarder som brukes, 16) Andre standarder og spesifikasjoner brukt, 17) Utstedt i, 18) Dato, 19) Underskriverens navn, 20) Stilling, 21) Underskrift.

pl : 1) Deklaracja zgodności CE (oryginalne), 2) Spółka, 3) Adres, 4) dokumentacji technicznej, 5) Wykonawca maszyny opisanej poniżej, 6) Oświadcza, że ta maszyna, 7) Jest zgodna z następującymi dyrektywami i odpowiadającymi przepisami prawa krajowego, 8) Dla maszyn załącznik IV, 9) Numer certyfikatu, 10) Jednostka certyfikująca, 15) zastosowanych norm zharmonizowanych, 16) innych zastosowanych norm technicznych i specyfikacji, 17) Sporządzono w, 18) Data, 19) Nazwisko podpisującego, 20) Stanowisko, 21) Podpis.

pt : 1) Declaração de conformidade CE (original), 2) A empresa, 3) Morada, 4) processo técnico, 5) Fabricante da máquina descrita abaixo, 6) Declara que esta máquina, 7) Está em conformidade às directivas seguintes e às suas transposições para o direito nacional, 8) Para as máquinas no anexo IV, 9) Número de certificado, 10) Entidade notificada, 15) normas harmonizadas utilizadas, 16) outras normas e especificações técnicas utilizadas, 17) Elaborado em, 18) Data, 19) Nome do signatário, 20) Cargo, 21) Assinatura.

ro : 1) Declarație de conformitate CE (originală), 2) Societatea, 3) Adresa, 4) cărtii tehnice, 5) Constructor al maşinii descrise mai jos, 6) Declară că prezenta maşină, 7) Este conformă cu directivele următoare şi cu transpunerea lor în dreptul naţional, 8) Pentru maşinile din anexa IV, 9) Număr de atestare, 10) Organism notificat, 15) standardele armonizate utilizate, 16) alte standarde si specificatii tehnice utilizate, 17) Întocmit la, 18) Data, 19) Numele persoanei care semnează, 20) Funcţia, 21) Semnătura.

sk : 1) ES vyhlásenie o zhode (pôvodný), 2) Názov spoločnosti, 3) Adresa, 4) technickej dokumentácie, 5) Výrobca nižšie opísaného stroja, 6) Vyhlasuje, že tento stroj, 7) Je v súlade s nasledujúcimi smernicami a smernicami transponovanými do vnútroštátneho práva, 8) Pre stroje v prílohe IV, 9) Číslo certifikátu, 10) Notifikačný orgán, 15) použité harmonizované normy, 16) použité iné technické normy a predpisy, 17) Miesto vydania, 18) Dátum vydania, 19) Meno podpisujúceho, 20) Funkcia, 21) Podpis.

sl : 1) ES Izjava o ustreznosti (izvirna), 2) Družba. 3) Naslov. 4) tehnične dokumentacije, 5) Proizvajalac tukaj opisanega stroja, 6) Izjavlja, da je ta stroj, 7) Ustreza naslednjim direktivam in njihovi transpoziciji v državno pravo, 8) Za stroje priloga IV, 9) Številka potrdila, 10) Obvestilo organu, 15) uporabljene harmonizirane standarde, 16) druge uporabljene tehnične standarde in zahteve, 17) V, 18) Datum, 19) Ime podpisnika, 20) Funkcija, 21) Podpis.

sv : 1) CE-försäkran om överensstämmelse (original), 2) Företaget, 3) Adress, 4) tekniska dokumentationen, 5) Konstruktör av nedan beskrivna maskin, 6) Försäkrar att denna maskin, 7) Överensstämmer med nedanstående direktiv och införlivandet av dem i nationell rätt, 8) För maskinerna i bilaga IV, 9) Nummer för godkännande, 10) Organism som underrättats, 15) Harmoniserade standarder som använts, 16) andra tekniska standarder och specifikationer som använts, 17) Upprättat i, 18) Datum, 19) Namn på den som undertecknat, 20) Befattning, 21) Namnteckning.

647003 EN (03/01/2012)

Downloaded from www.Manualslib.com manuals search engine

duma rent
https://truckmanualshub.com
Torkonjestraat 23
8510 Marke
Belgium
056 / 222 111
info@dumarent.be
www.dumarent.be

SAFETY PLATES AND STICKERS

You must replace illegible or damaged plates. Contact your dealer.

1 - EXTERNAL PLATES AND STICKERS

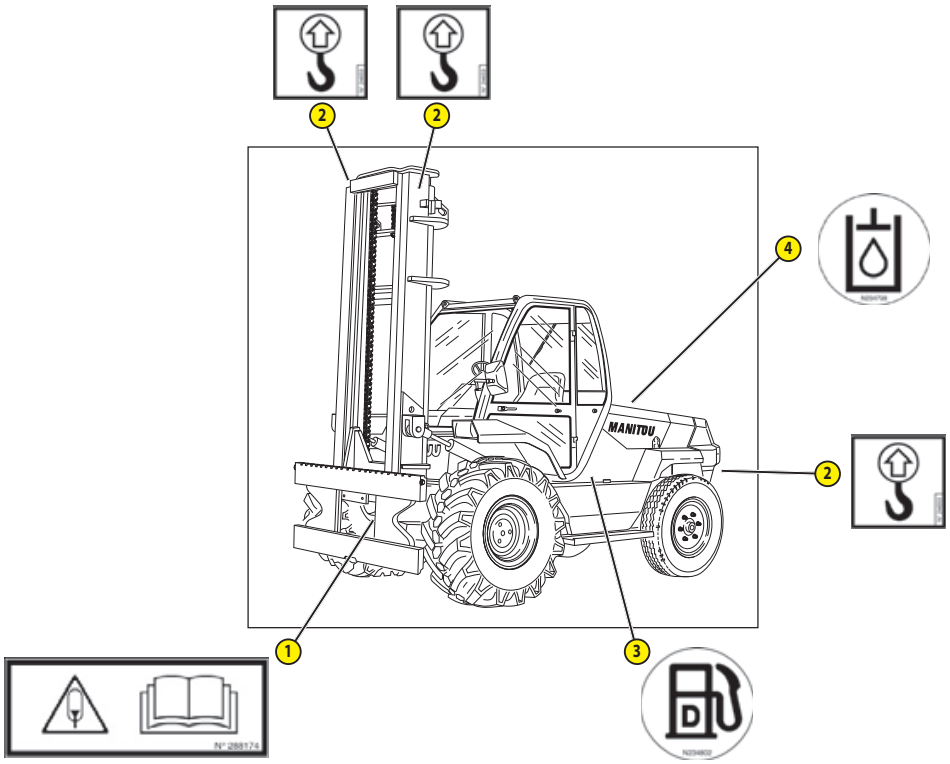

REF	PART NUMBER	DESCRIPTION
1	288174	Instruction accumulator
2	24653	Securing and slinging point
3	234802	Diesel fuel
4	234798	Hydraulic oil

Downloaded from www.Manualslib.com manuals search engine

2 - STICKERS AND PLATES UNDER THE ENGINE HOOD

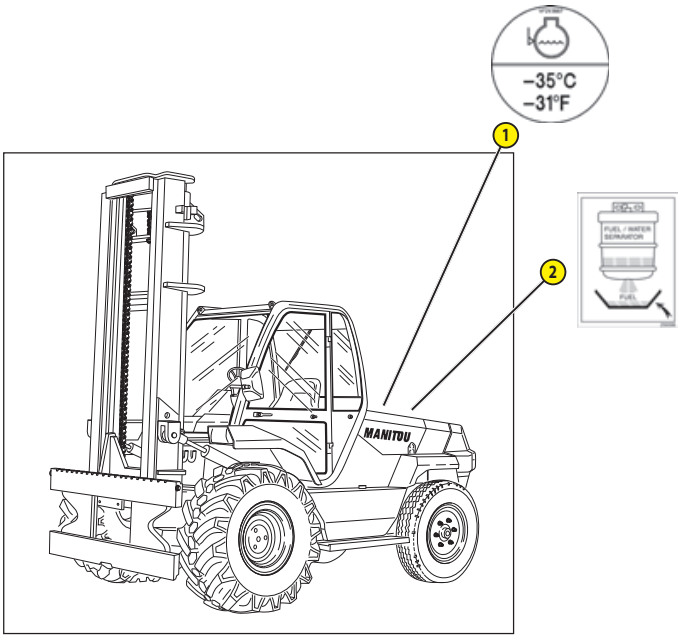

REF	PART NUMBER	DESCRIPTION
1	293887	Anti-freeze
2	259398	Water/diesel separator

Downloaded from www.Manualslib.com manuals search engine

duma rent
https://truckmanualshub.com
Torkonjestraat 23
8510 Marke
Belgium
056 / 222 111
info@dumarent.be
www.dumarent.be

3 - STICKERS AND PLATES IN THE CAB

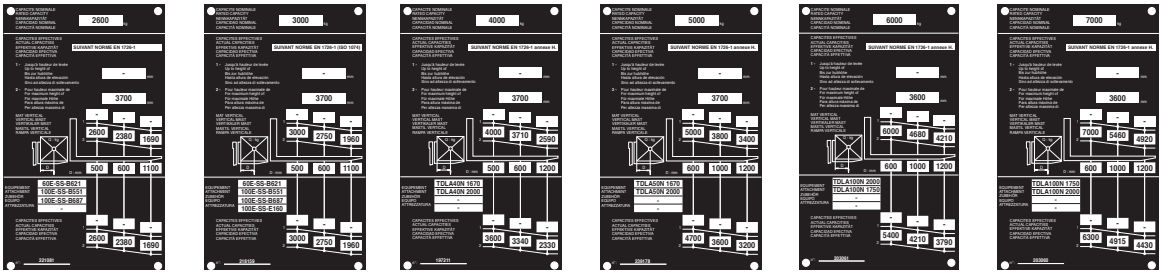

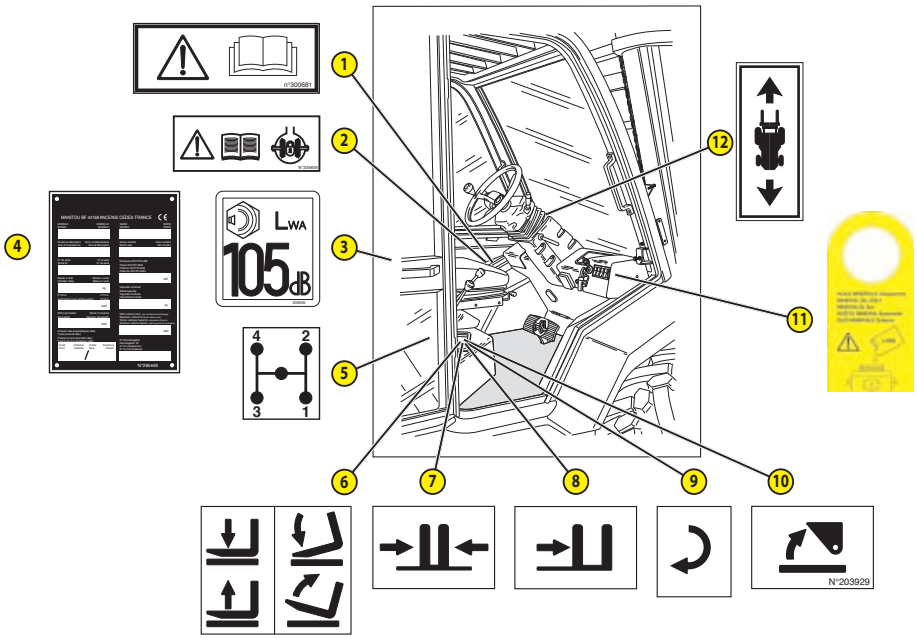

Downloaded from www.Manualslib.com manuals search engine

Torkonjestraat 23
8510 Marke
Belgium
056 / 222 111
info@dumarent.be
www.dumarent.be

REF	PART NUMBER	DESCRIPTION
1	300681	Safety instruction
2	234806	Safety instruction
3	239595	Acoustic power 105dB
4	Consult your dealer	Manufacturer's plate
5	33460	Gear lever control
6	200042	Manipulator function sheet
7	203792	Manipulator function sheet
8	203791	Manipulator function sheet
9	203928	Manipulator function sheet
10	203929	Manipulator function sheet
11	268491	Break fluid instruction
12	76571	Forward/ reverse lever
13	Consult your dealer	Load chart (according to model)
14	Consult your dealer	Load chart (according to model)
15	Consult your dealer	Load chart (according to model)
16	Consult your dealer	Load chart (according to model)
17	Consult your dealer	Load chart (according to model)
18	Consult your dealer	Load chart (according to model)

Downloaded from www.Manualslib.com manuals search engine

IDENTIFICATION OF THE LIFT TRUCK

As our policy is to promote a constant improvement of our products, our range of telescopic lift trucks may undergo certain modifications, without obligation for us to advise our customers.

When you order parts, or when you require any technical information, always specify:

NOTE: For the owner's convenience, it is recommended that a note of these numbers is made in the spaces provided, at the time of the delivery of the lift truck.

LIFT TRUCK MANUFACTURER'S PLATE (FIG. A)

1 - MODEL .....
2 - SERIES .....
3 - Year of manufacture .....
4 - Model year .....
5 - Serial Nr .....
6 - Power ISO/TR 14396 .....
7 - Unladen mass .....
8 - Authorized gross vehicle weight .....
9 - Rated capacity .....
10 - Drag strain .....
11 - Maximun vertical force (on trailer hook) .....
12 - Tyres pressure (bar) .....
13 - Homologation Nr .....

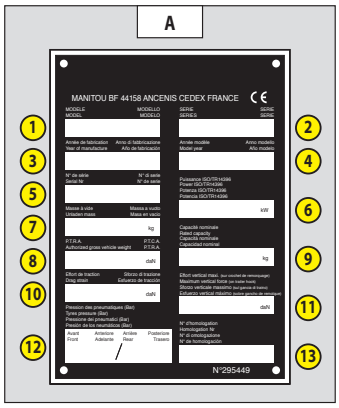

For any further technical information regarding your lift truck refer to chapter: 2 - DESCRIPTION: CHARACTERISTICS.

Downloaded from www.Manualslib.com manuals search engine

I.C. ENGINE (FIG. B)

- I.C. engine Nr .....

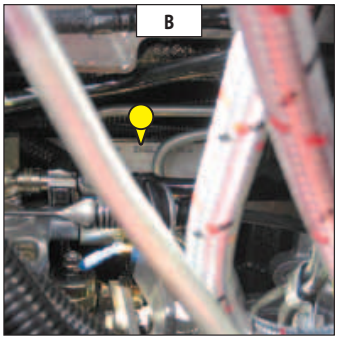

GEAR BOX (FIG. C)

MC 30 Turbo Série 3-E3
M 26-2 Turbo Série 3-E3
M 30-2 Turbo Série 3-E3
M 40-4 Turbo Série 3-E3
M 26-4 Turbo Série 3-E3
M 30-4 Turbo Série 3-E3
M 50-4 Turbo Série 3-E3

- Type .....
- MANITOU reference .....
- N° de série .....

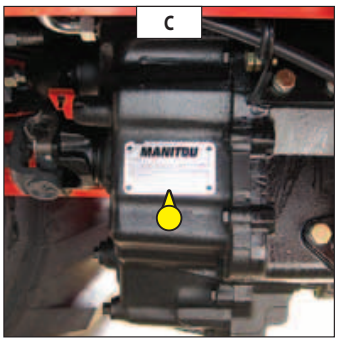

GEAR BOX (FIG. D)

MC 40 Turbo POWERSHIFT Série 3-E3
MC 50 Turbo POWERSHIFT Série 3-E3
MC 60 Turbo POWERSHIFT Série 3-E3
MC 70 Turbo POWERSHIFT Série 3-E3

- Type .....
- Référence MANITOU .....
- N° de série .....

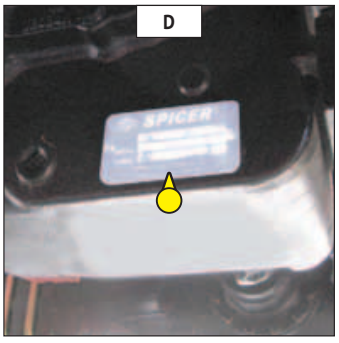

FRONT AXLE (FIG. E)

- Type .....
- Serial Nr .....
- MANITOU reference .....

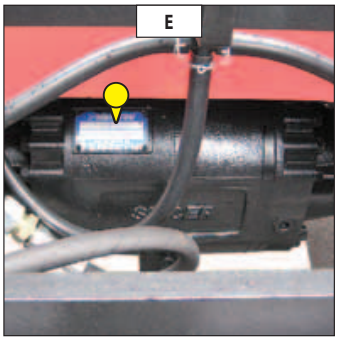

647003 EN (03/01/2012)

Downloaded from www.Manualslib.com manuals search engine

duma rent
https://truckmanualshub.com
Torkonjestraat 23
8510 Marke
Belgium
056 / 222 111
info@dumarent.be
www.dumarent.be

REAR AXLE (FIG. F)

M 26-4 Turbo Série 3-E3 M 30-4 Turbo Série 3-E3
M 40-4 Turbo Série 3-E3 M 50-4 Turbo Série 3-E3

- Type .....
- Serial Nr .....
- MANITOU reference .....

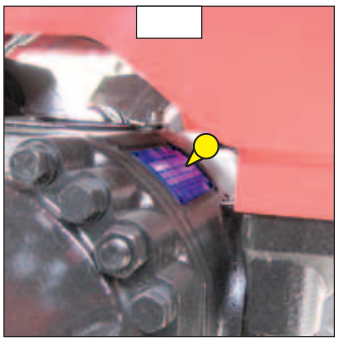

OVERHEAD GUARD (FIG. G)

MC 30 Turbo Série 3-E3

- Type .....
- Serial Nr .....

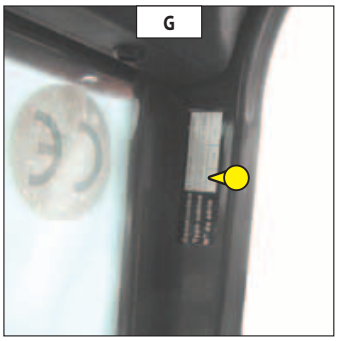

CAB (FIG. H)

M 26-2 Turbo Série 3-E3 M 26-4 Turbo Série 3-E3 M 30-2 Turbo Série 3-E3
M 30-4 Turbo Série 3-E3 M 40-4 Turbo Série 3-E3 M 50-4 Turbo Série 3-E3
MC 40 Turbo POWERSHIFT Série 3-E3 MC 50 Turbo POWERSHIFT Série 3-E3
MC 60 Turbo POWERSHIFT Série 3-E3 MC 70 Turbo POWERSHIFT Série 3-E3

- Type .....
- Serial Nr .....

MAST WITH ROLLERS (FIG. I)

MC 30 Turbo Série 3-E3 M 26-2 Turbo Série 3-E3 M 26-4 Turbo Série 3-E3
M 30-2 Turbo Série 3-E3 M 30-4 Turbo Série 3-E3

- Mast identification Nr .....

MAST WITH ROLLERS (FIG. J)

M 40-4 Turbo Série 3-E3 MC 40 Turbo POWERSHIFT Série 3-E3
M 50-4 Turbo Série 3-E3 MC 50 Turbo POWERSHIFT Série 3-E3

- Mast identification Nr .....

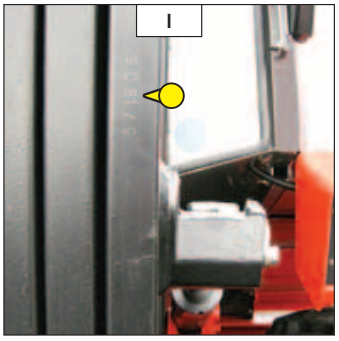

MAST WITH ROLLERS (FIG. K)

MC 60 Turbo POWERSHIFT Série 3-E3
MC 70 Turbo POWERSHIFT Série 3-E3

- Mast identification Nr .....

ATTACHMENT MANUFACTURER'S PLATE (FIG. L)

- Model .....
- Serial Nr .....
- Year of manufacture .....

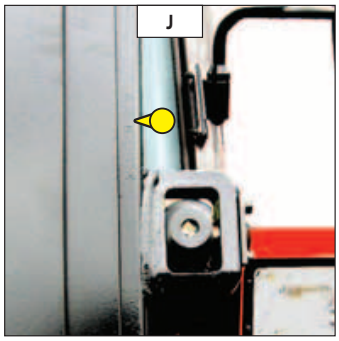

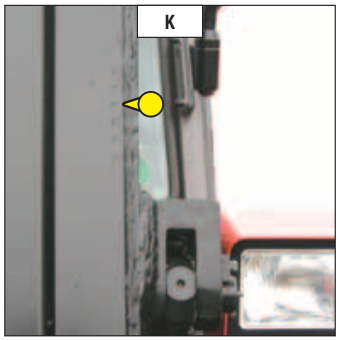

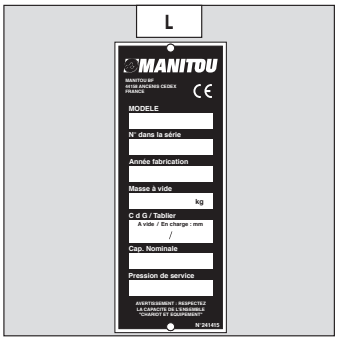

647003 EN (03/01/2012)

Downloaded from www.Manualslib.com manuals search engine

Downloaded from www.Manualslib.com manuals search engine

CHARACTERISTICS

MC 30 Turbo Série 3-E3

I.C. ENGINE		
Type		PERKINS 1104D-44T NL38894
Fuel		Diesel
Number of cylinders		4 in line
Suction		Supercharged
Injection system		Mechanical
Ignition sequence		1-3-4-2
Capacity	cm3	4400
Bore and stroke	mm	105 x 127
Compression ratio		18,2/1
Nominal rating loaded	rpm	2200
Rating slow unladen	rpm	850
Max. rating unladen	rpm	2300
Power ISO/TR 14396	cv - kW	95 - 70
Power SAE J 1995	cv - kW	95 - 70
Maximum torque ISO/TR 14396	Nm	392 to 1400 rpm
Air cleaner	µm	3
Type of cooling		By water
Fan		Puller

TRANSMISSION		
Gear box		TURNER POWERTRAIN SYSTEMS
Type		Mechanical
Forward/reverse selector		Electro-hydraulic
Torque converter		SACHS
Number of forward speeds		4
Number of reverse speeds		4
Front axle		DANA
Differential		With locking
Rear axle		MANITOU
Differential		Without locking
Drive wheels		2 RM Permanent
Switch for 2/4 drive wheels		No
Front tyres		CONTINENTAL
Size		14,5R20 18PR MPT80 TL
Pressure	bar	3,5
Rear tyres		GOODYEAR
Size		10R17,5 134/132M G291
Pressure	bar	5,5

ELECTRIC CIRCUIT		
Battery	Standard	12 V - 110 Ah - 750 A EN
	Option	12 V - 135 Ah - 850 A EN
Alternator		12 V - 65 A
Type		DENSO A115i
Starter		12 V - 3,2 kW
Type		ISKRA AZE

BRAKE CIRCUIT		
Service brake		Non-servo hydraulic brake
Type of brake		Oil-immersed multi-disc
Type of control		By foot on front wheels
Parking brake		Mechanical
Type of brake		Oil-immersed multi-disc
Type of control		Manual

SOUND AND VIBRATION		
Level of sound pressure in the driver's cab LpA (according to standard NF EN 12053)	dB	77
Level of sound power ensured in the LwA environment (according to directive 2000/14/EC modified by directive 2005/88/EC)	dB	104 measured 105 ensured
Average weighted acceleration on driver's body (according to standard NF EN 13059)	m/s2	
The average weighted acceleration transmitted to the driver's hand/arm system (according to standard ISO 5349-2)	m/s2	< 2,5

647003 EN (03/01/2012)

Downloaded from www.Manualslib.com manuals search engine

HYDRAULIC CIRCUIT		
Hydraulic pump		PARKER
Type		Gear
Capacity	cm3	37
Max. rating capacity unladen	l/mn	85
Flow rate at 1800 rpm	l/mn	
Filtration		
Return	µm	10
Suction	µm	100
Maximum service pressure		
Double mast with all-round vision	bar	185
Triple mast with free-acting lift	bar	260
Double mast with free-acting lift	bar	185
Triple mast without free-acting lift	bar	185
Front/rear tilting circuit	bar	185/185
Attachment circuit	bar	185
Steering circuit	bar	125
Hydraulic shock absorber		
Capacity	L	0,7
Pressure	bar	100

HYDRAULIC MOVEMENTS		
Lifting movements		
Unladen lifting	m/s	0,6
Laden lifting	m/s	0,5
Unladen lowering	m/s	0,5
Laden lowering	m/s	0,5

SPECIFICATIONS AND WEIGHTS			
Speed of movement for lift truck in standard configuration on flat ground (except particular conditions)			
Front unladen	1	km/h	3,4
	2	km/h	6,5
	3	km/h	12,6
	4	km/h	22,1
Rear unladen	1	km/h	3,4
	2	km/h	6,5
	3	km/h	12,6
	4	km/h	22,1
Standard mast			DVT 3M70
Lift height		mm	3700
Free lift height		mm	130
Overall height (retracted)		mm	2715
Overall height (extended)		mm	4745
Carriage			
Class			FEM3
width		mm	1470
Weight of forks (each)		kg	73
Rated load capacity		kg	3000
Rated load capacity with standard mast		kg	3000
Effective load capacity on forks with side-shift carriage		kg	3000
Distance from the centre of gravity of the load to the base of the forks		mm	500
Lift truck weight without forks or mast		kg	4081
Lift truck weight with standard mast			
Unladen		kg	5090
At rated load		kg	8090
Axle weight with standard mast (transport position)			
Front unladen		kg	2250
Rear unladen		kg	2840
Front rated load		kg	7050
Rear rated load		kg	1040
Drag strain on the coupling hook			
Unladen (sliding)		daN	1873
At rated load (transmission setting)		daN	4830
Pull strain with open carrier (according to standard ISO 8313)		daN	

Downloaded from www.Manualslib.com manuals search engine

CHARACTERISTICS

M 26-2 Turbo Série 3-E3

I.C. ENGINE		
Type		PERKINS 1104D-44T NL38894
Fuel		Diesel
Number of cylinders		4 in line
Suction		Supercharged
Injection system		Mechanical
Ignition sequence		1-3-4-2
Capacity	cm3	4400
Bore and stroke	mm	105 x 127
Compression ratio		18,2/1
Nominal rating loaded	rpm	2200
Rating slow unladen	rpm	850
Max. rating unladen	rpm	2300
Power ISO/TR 14396	cv - kW	95 - 70
Power SAE J 1995	cv - kW	95 - 70
Maximum torque ISO/TR 14396	Nm	392 to 1400 rpm
Air cleaner	µm	3
Type of cooling		By water
Fan		Puller

TRANSMISSION		
Gear box		TURNER POWERTRAIN SYSTEMS
Type		Mechanical
Forward/reverse selector		Electro-hydraulic
Torque converter		SACHS
Number of forward speeds		4
Number of reverse speeds		4
Front axle		DANA
Differential		With locking
Rear axle		MANITOU
Differential		Without locking
Drive wheels		2 RM Permanent
Switch for 2/4 drive wheels		No
Front tyres		GOODYEAR
Size		16,5/85-24 14PR 154A6 SGI TL
Pressure	bar	2,5
Rear tyres		DUNLOP
Size		9.00-16 10PR EM5
Pressure	bar	3

ELECTRIC CIRCUIT		
Battery	Standard	12 V - 110 Ah - 750 A EN
	Option	12 V - 135 Ah - 850 A EN
Alternator		12 V - 65 A
Type		DENSO A115i
Starter		12 V - 3,2 kW
Type		ISKRA AZE

BRAKE CIRCUIT		
Service brake		Non-servo hydraulic brake
Type of brake		Oil-immersed multi-disc
Type of control		By foot on front wheels
Parking brake		Mechanical
Type of brake		Oil-immersed multi-disc
Type of control		Manual

SOUND AND VIBRATION		
Level of sound pressure in the driver's cab LpA (according to standard NF EN 12053)	dB	77
Level of sound power ensured in the LwA environment (according to directive 2000/14/EC modified by directive 2005/88/EC)	dB	103 measured 105 ensured
Average weighted acceleration on driver's body (according to standard NF EN 13059)	m/s2	
The average weighted acceleration transmitted to the driver's hand/arm system (according to standard ISO 5349-2)	m/s2	< 2,5

Downloaded from www.Manualslib.com manuals search engine

HYDRAULIC CIRCUIT		
Hydraulic pump		PARKER
Type		Gear
Capacity	cm3	37
Max. rating capacity unladen	l/mn	85
Flow rate at 1800 rpm	l/mn	
Filtration		
Return	µm	10
Suction	µm	100
Maximum service pressure		
Double mast with all-round vision	bar	185
Triple mast with free-acting lift	bar	220
Double mast with free-acting lift	bar	185
Triple mast without free-acting lift	bar	185
Front/rear tilting circuit	bar	185/185
Attachment circuit	bar	185
Steering circuit	bar	145
Hydraulic shock absorber		
Capacity	L	0,7
Pressure	bar	100

HYDRAULIC MOVEMENTS		
Lifting movements		
Unladen lifting	m/s	0,6
Laden lifting	m/s	0,5
Unladen lowering	m/s	0,5
Laden lowering	m/s	0,5

SPECIFICATIONS AND WEIGHTS			
Speed of movement for lift truck in standard configuration on flat ground (except particular conditions)			
Front unladen	1	km/h	4,2
	2	km/h	9,8
	3	km/h	15,4
	4	km/h	27
Rear unladen	1	km/h	4,2
	2	km/h	7,9
	3	km/h	15,4
	4	km/h	27
Standard mast			DVT 3M70
Lift height		mm	3700
Free lift height		mm	130
Overall height (retracted)		mm	2785
Overall height (extended)		mm	4815
Carriage			
Class			FEM3
width		mm	1470
Weight of forks (each)		kg	76
Rated load capacity		kg	2600
Rated load capacity with standard mast		kg	2600
Effective load capacity on forks with side-shift carriage		kg	2600
Distance from the centre of gravity of the load to the base of the forks		mm	500
Lift truck weight without forks or mast		kg	4785
Lift truck weight with standard mast			
Unladen		kg	5800
At rated load		kg	8400
Axle weight with standard mast (transport position)			
Front unladen		kg	2950
Rear unladen		kg	2850
Front rated load		kg	7320
Rear rated load		kg	1080
Drag strain on the coupling hook			
Unladen (sliding)		daN	
At rated load (transmission setting)		daN	
Pull strain with open carrier (according to standard ISO 8313)		daN	

Downloaded from www.Manualslib.com manuals search engine

CHARACTERISTICS

M 30-2 Turbo Série 3-E3

I.C. ENGINE		
Type		PERKINS 1104D-44T NL38894
Fuel		Diesel
Number of cylinders		4 in line
Suction		Supercharged
Injection system		Mechanical
Ignition sequence		1-3-4-2
Capacity	cm3	4400
Bore and stroke	mm	105 x 127
Compression ratio		18,2/1
Nominal rating loaded	rpm	2200
Rating slow unladen	rpm	850
Max. rating unladen	rpm	2300
Power ISO/TR 14396	cv - kW	95 - 70
Power SAE J 1995	cv - kW	95 - 70
Maximum torque ISO/TR 14396	Nm	392 to 1400 rpm
Air cleaner	µm	3
Type of cooling		By water
Fan		Puller

TRANSMISSION		
Gear box		TURNER POWERTRAIN SYSTEMS
Type		Mechanical
Forward/reverse selector		Electro-hydraulic
Torque converter		SACHS
Number of forward speeds		4
Number of reverse speeds		4
Front axle		DANA
Differential		With locking
Rear axle		MANITOU
Differential		Without locking
Drive wheels		2 RM Permanent
Switch for 2/4 drive wheels		No
Front tyres		GOODYEAR
Size		16,5/85-24 14PR 154A6 SGI TL
Pressure	bar	2,5
Rear tyres		GOODYEAR
Size		10R17,5 134/132M G291
Pressure	bar	5,5

ELECTRIC CIRCUIT		
Battery	Standard	12 V - 110 Ah - 750 A EN
	Option	12 V - 135 Ah - 850 A EN
Alternator		12 V - 65 A
Type		DENSO A115i
Starter		12 V - 3,2 kW
Type		ISKRA AZE

BRAKE CIRCUIT	
Service brake	Non-servo hydraulic brake
Type of brake	Oil-immersed multi-disc
Type of control	By foot on front wheels
Parking brake	Mechanical
Type of brake	Oil-immersed multi-disc
Type of control	Manual

SOUND AND VIBRATION		
Level of sound pressure in the driver's cab LpA (according to standard NF EN 12053)	dB	77
Level of sound power ensured in the LwA environment (according to directive 2000/14/EC modified by directive 2005/88/EC)	dB	103 measured 105 ensured
Average weighted acceleration on driver's body (according to standard NF EN 13059)	m/s2	
The average weighted acceleration transmitted to the driver's hand/arm system (according to standard ISO 5349-2)	m/s2	< 2,5

Downloaded from www.Manualslib.com manuals search engine

HYDRAULIC CIRCUIT		
Hydraulic pump		PARKER
Type		Gear
Capacity	cm3	37
Max. rating capacity unladen	l/mn	85
Flow rate at 1800 rpm	l/mn	
Filtration		
Return	µm	10
Suction	µm	100
Maximum service pressure		
Double mast with all-round vision	bar	185
Triple mast with free-acting lift	bar	260
Double mast with free-acting lift	bar	185
Triple mast without free-acting lift	bar	185
Front/rear tilting circuit	bar	185/185
Attachment circuit	bar	185
Steering circuit	bar	145
Hydraulic shock absorber		
Capacity	L	0,7
Pressure	bar	100

HYDRAULIC MOVEMENTS		
Lifting movements		
Unladen lifting	m/s	0,6
Laden lifting	m/s	0,5
Unladen lowering	m/s	0,5
Laden lowering	m/s	0,5

SPECIFICATIONS AND WEIGHTS		
Speed of movement for lift truck in standard configuration on flat ground (except particular conditions)		
Front unladen 1	km/h	4,2
2	km/h	7,9
3	km/h	15,4
4	km/h	27
Rear unladen 1	km/h	4,2
2	km/h	7,9
3	km/h	15,4
4	km/h	27
Standard mast		DVT 3M70
Lift height	mm	3700
Free lift height	mm	130
Overall height (retracted)	mm	2785
Overall height (extended)	mm	4815
Carriage		
Class		FEM3
width	mm	1470
Weight of forks (each)	kg	76
Rated load capacity	kg	3000
Rated load capacity with standard mast	kg	3000
Effective load capacity on forks with side-shift carriage	kg	3000
Distance from the centre of gravity of the load to the base of the forks	mm	500
Lift truck weight without forks or mast	kg	5085
Lift truck weight with standard mast		
Unladen	kg	6100
At rated load	kg	9100
Axle weight with standard mast (transport position)		
Front unladen	kg	2860
Rear unladen	kg	3240
Front rated load	kg	7910
Rear rated load	kg	1190
Drag strain on the coupling hook		
Unladen (sliding)	daN	
At rated load (transmission setting)	daN	
Pull strain with open carrier (according to standard ISO 8313)	daN	

Downloaded from www.Manualslib.com manuals search engine

CHARACTERISTICS

M 26-4 Turbo Série 3-E3

I.C. ENGINE		
Type		PERKINS 1104D-44T NL38894
Fuel		Diesel
Number of cylinders		4 in line
Suction		Supercharged
Injection system		Mechanical
Ignition sequence		1-3-4-2
Capacity	cm3	4400
Bore and stroke	mm	105 x 127
Compression ratio		18,2/1
Nominal rating loaded	rpm	2200
Rating slow unladen	rpm	850
Max. rating unladen	rpm	2300
Power ISO/TR 14396	cv - kW	95 - 70
Power SAE J 1995	cv - kW	95 - 70
Maximum torque ISO/TR 14396	Nm	392 to 1400 rpm
Air cleaner	µm	3
Type of cooling		By water
Fan		Puller

TRANSMISSION		
Gear box		TURNER POWERTRAIN SYSTEMS
Type		Mechanical
Forward/reverse selector		Electro-hydraulic
Torque converter		SACHS
Number of forward speeds		4
Number of reverse speeds		4
Front axle		DANA
Differential		With locking
Rear axle		MANITOU
Differential		Without locking
Drive wheels		4 RM Permanent
Switch for 2/4 drive wheels		No
Front tyres		GOODYEAR
Size		16,5/85-24 14PR 154A6 SGI TL
Pressure	bar	2,5
Rear tyres		DUNLOP
Size		10,5/80-18 10PR TG42 TL
Pressure	bar	3,5

ELECTRIC CIRCUIT		
Battery	Standard	12 V - 110 Ah - 750 A EN
	Option	12 V - 135 Ah - 850 A EN
Alternator		12 V - 65 A
Type		DENSO A115i
Starter		12 V - 3,2 kW
Type		ISKRA AZE

BRAKE CIRCUIT		
Service brake		Non-servo hydraulic brake
Type of brake		Oil-immersed multi-disc
Type of control		By foot on front wheels
Parking brake		Mechanical
Type of brake		Oil-immersed multi-disc
Type of control		Manual

SOUND AND VIBRATION		
Level of sound pressure in the driver's cab LpA (according to standard NF EN 12053)	dB	77
Level of sound power ensured in the LwA environment (according to directive 2000/14/EC modified by directive 2005/88/EC)	dB	103 measured 105 ensured
Average weighted acceleration on driver's body (according to standard NF EN 13059)	m/s2	
The average weighted acceleration transmitted to the driver's hand/arm system (according to standard ISO 5349-2)	m/s2	< 2,5

Downloaded from www.Manualslib.com manuals search engine

HYDRAULIC CIRCUIT		
Hydraulic pump		PARKER
Type		Gear
Capacity	cm3	37
Max. rating capacity unladen	l/mn	85
Flow rate at 1800 rpm	l/mn	
Filtration		
Return	µm	10
Suction	µm	100
Maximum service pressure		
Double mast with all-round vision	bar	185
Triple mast with free-acting lift	bar	220
Double mast with free-acting lift	bar	185
Triple mast without free-acting lift	bar	185
Front/rear tilting circuit	bar	185/185
Attachment circuit	bar	185
Steering circuit	bar	145
Hydraulic shock absorber		
Capacity	L	0,7
Pressure	bar	100

HYDRAULIC MOVEMENTS		
Lifting movements		
Unladen lifting	m/s	0,6
Laden lifting	m/s	0,5
Unladen lowering	m/s	0,5
Laden lowering	m/s	0,5

SPECIFICATIONS AND WEIGHTS			
Speed of movement for lift truck in standard configuration on flat ground (except particular conditions)			
Front unladen	1	km/h	4,2
	2	km/h	7,9
	3	km/h	15,4
	4	km/h	27
Rear unladen	1	km/h	4,2
	2	km/h	7,9
	3	km/h	15,4
	4	km/h	27
Standard mast			DVT 3M70
Lift height		mm	3700
Free lift height		mm	130
Overall height (retracted)		mm	2785
Overall height (extended)		mm	4815
Carriage			
Class			FEM3
width		mm	1470
Weight of forks (each)		kg	76
Rated load capacity		kg	2600
Rated load capacity with standard mast		kg	2600
Effective load capacity on forks with side-shift carriage		kg	2600
Distance from the centre of gravity of the load to the base of the forks		mm	500
Lift truck weight without forks or mast		kg	4865
Lift truck weight with standard mast			
Unladen		kg	5880
At rated load		kg	8480
Axle weight with standard mast (transport position)			
Front unladen		kg	2980
Rear unladen		kg	2900
Front rated load		kg	7220
Rear rated load		kg	1260
Drag strain on the coupling hook			
Unladen (sliding)		daN	
At rated load (transmission setting)		daN	
Pull strain with open carrier (according to standard ISO 8313)		daN	

Downloaded from www.Manualslib.com manuals search engine

CHARACTERISTICS

M 30-4 Turbo Série 3-E3

I.C. ENGINE		
Type		PERKINS 1104D-44T NL38894
Fuel		Diesel
Number of cylinders		4 in line
Suction		Supercharged
Injection system		Mechanical
Ignition sequence		1-3-4-2
Capacity	cm3	4400
Bore and stroke	mm	105 x 127
Compression ratio		18,2/1
Nominal rating loaded	rpm	2200
Rating slow unladen	rpm	850
Max. rating unladen	rpm	2300
Power ISO/TR 14396	cv - kW	95 - 70
Power SAE J 1995	cv - kW	95 - 70
Maximum torque ISO/TR 14396	Nm	392 to 1400 rpm
Air cleaner	µm	3
Type of cooling		By water
Fan		Puller

TRANSMISSION		
Gear box		TURNER POWERTRAIN SYSTEMS
Type		Mechanical
Forward/reverse selector		Electro-hydraulic
Torque converter		SACHS
Number of forward speeds		4
Number of reverse speeds		4
Front axle		DANA
Differential		With locking
Rear axle		MANITOU
Differential		Without locking
Drive wheels		4 RM Permanent
Switch for 2/4 drive wheels		No
Front tyres		GOODYEAR
Size		16,5/85-24 14PR 154A6 SGI TL
Pressure	bar	2,5
Rear tyres		DUNLOP
Size		10,5/80-18 10PR TG42 TL
Pressure	bar	3,5

ELECTRIC CIRCUIT		
Battery	Standard	12 V - 110 Ah - 750 A EN
	Option	12 V - 135 Ah - 850 A EN
Alternator		12 V - 65 A
Type		DENSO A115i
Starter		12 V - 3,2 kW
Type		ISKRA AZE

BRAKE CIRCUIT		
Service brake		Non-servo hydraulic brake
Type of brake		Oil-immersed multi-disc
Type of control		By foot on front wheels
Parking brake		Mechanical
Type of brake		Oil-immersed multi-disc
Type of control		Manual

SOUND AND VIBRATION		
Level of sound pressure in the driver's cab LpA (according to standard NF EN 12053)	dB	77
Level of sound power ensured in the LwA environment (according to directive 2000/14/EC modified by directive 2005/88/EC)	dB	103 measured 105 ensured
Average weighted acceleration on driver's body (according to standard NF EN 13059)	m/s2	
The average weighted acceleration transmitted to the driver's hand/arm system (according to standard ISO 5349-2)	m/s2	< 2,5

Downloaded from www.Manualslib.com manuals search engine

HYDRAULIC CIRCUIT		
Hydraulic pump		PARKER
Type		Gear
Capacity	cm3	37
Max. rating capacity unladen	l/mn	85
Flow rate at 1800 rpm	l/mn	
Filtration		
Return	µm	10
Suction	µm	100
Maximum service pressure		
Double mast with all-round vision	bar	185
Triple mast with free-acting lift	bar	260
Double mast with free-acting lift	bar	185
Triple mast without free-acting lift	bar	185
Front/rear tilting circuit	bar	185/185
Attachment circuit	bar	185
Steering circuit	bar	145
Hydraulic shock absorber		
Capacity	L	0,7
Pressure	bar	100

HYDRAULIC MOVEMENTS		
Lifting movements		
Unladen lifting	m/s	0,6
Laden lifting	m/s	0,5
Unladen lowering	m/s	0,5
Laden lowering	m/s	0,5

SPECIFICATIONS AND WEIGHTS			
Speed of movement for lift truck in standard configuration on flat ground (except particular conditions)			
Front unladen	1	km/h	4,2
	2	km/h	7,9
	3	km/h	15,4
	4	km/h	27
Rear unladen	1	km/h	4,2
	2	km/h	7,9
	3	km/h	15,4
	4	km/h	27
Standard mast			DVT 3M70
Lift height		mm	3700
Free lift height		mm	130
Overall height (retracted)		mm	2785
Overall height (extended)		mm	4815
Carriage			
Class			FEM3
width		mm	1470
Weight of forks (each)		kg	76
Rated load capacity		kg	3000
Rated load capacity with standard mast		kg	3000
Effective load capacity on forks with side-shift carriage		kg	3000
Distance from the centre of gravity of the load to the base of the forks		mm	500
Lift truck weight without forks or mast		kg	5165
Lift truck weight with standard mast			
Unladen		kg	6180
At rated load		kg	9180
Axle weight with standard mast (transport position)			
Front unladen		kg	2870
Rear unladen		kg	3310
Front rated load		kg	7800
Rear rated load		kg	1380
Drag strain on the coupling hook			
Unladen (sliding)		daN	3560
At rated load (transmission setting)		daN	5870
Pull strain with open carrier (according to standard ISO 8313)		daN	

Downloaded from www.Manualslib.com manuals search engine

CHARACTERISTICS

M40-4 T Série 3-E3

I.C. ENGINE		
Type		PERKINS 1104D-44T NL38894
Fuel		Diesel
Number of cylinders		4 in line
Suction		Supercharged
Injection system		Mechanical
Ignition sequence		1-3-4-2
Capacity	cm3	4400
Bore and stroke	mm	105 x 127
Compression ratio		18,2/1
Nominal rating loaded	rpm	2200
Rating slow unladen	rpm	850
Max. rating unladen	rpm	2300
Power ISO/TR 14396	cv - kW	95 - 70
Power SAE J 1995	cv - kW	95 - 70
Maximum torque ISO/TR 14396	Nm	392 to 1400 rpm
Air cleaner	µm	3
Type of cooling		By water
Fan		Puller

TRANSMISSION		
Gear box		TURNER POWERTRAIN SYSTEMS
Type		Mechanical
Forward/reverse selector		Electro-hydraulic
Torque converter		SACHS
Number of forward speeds		4
Number of reverse speeds		4
Front axle		DANA
Differential		With locking
Rear axle		MANITOU
Differential		Without locking
Drive wheels		4 RM Permanent
Switch for 2/4 drive wheels		No
Front tyres		MITAS
Size		18-22,5 163A8 MPT-06 TL
Pressure	bar	4
Rear tyres		MICHELIN
Size		340/80R18 XMCL 143A8
Pressure	bar	3,2

ELECTRIC CIRCUIT		
Battery	Standard	12 V - 110 Ah - 750 A EN
	Option	12 V - 135 Ah - 850 A EN
Alternator		12 V - 65 A
Type		DENSO A115i
Starter		12 V - 3,2 kW
Type		ISKRA AZE

BRAKE CIRCUIT		
Service brake		Non-servo hydraulic brake
Type of brake		Oil-immersed multi-disc
Type of control		By foot on front wheels
Parking brake		Mechanical
Type of brake		Oil-immersed multi-disc
Type of control		Manual

SOUND AND VIBRATION		
Level of sound pressure in the driver's cab LpA (according to standard NF EN 12053)	dB	76
Level of sound power ensured in the LwA environment (according to directive 2000/14/EC modified by directive 2005/88/EC)	dB	103 measured 105 ensured
Average weighted acceleration on driver's body (according to standard NF EN 13059)	m/s2	
The average weighted acceleration transmitted to the driver's hand/arm system (according to standard ISO 5349-2)	m/s2	< 2,5

Downloaded from www.Manualslib.com manuals search engine

HYDRAULIC CIRCUIT		
Hydraulic pump		PARKER
Type		Gear
Capacity	cm3	37
Max. rating capacity unladen	l/mn	85
Flow rate at 1800 rpm	l/mn	
Filtration		
Return	µm	10
Suction	µm	100
Maximum service pressure		
Double mast with all-round vision	bar	210
Triple mast with free-acting lift	bar	
Double mast with free-acting lift	bar	210
Triple mast without free-acting lift	bar	210
Front/rear tilting circuit	bar	210/210
Attachment circuit	bar	210
Steering circuit	bar	145
Hydraulic shock absorber		
Capacity	L	1,4
Pressure	bar	120

HYDRAULIC MOVEMENTS		
Lifting movements		
Unladen lifting	m/s	0,5
Laden lifting	m/s	0,5
Unladen lowering	m/s	0,4
Laden lowering	m/s	0,5

SPECIFICATIONS AND WEIGHTS			
Speed of movement for lift truck in standard configuration on flat ground (except particular conditions)			
Front unladen	1	km/h	3,6
	2	km/h	6,9
	3	km/h	13,3
	4	km/h	23,4
Rear unladen	1	km/h	3,6
	2	km/h	6,9
	3	km/h	13,3
	4	km/h	23,4
Standard mast			DVT 3M70
Lift height		mm	3700
Free lift height		mm	
Overall height (retracted)		mm	2910
Overall height (extended)		mm	4815
Carriage			
Class			FEM3
width		mm	1670
Weight of forks (each)		kg	112
Rated load capacity		kg	4000
Rated load capacity with standard mast		kg	4000
Effective load capacity on forks with side-shift carriage		kg	3600
Distance from the centre of gravity of the load to the base of the forks		mm	500
Lift truck weight without forks or mast		kg	5231
Lift truck weight with standard mast			
Unladen		kg	6700
At rated load		kg	10700
Axle weight with standard mast (transport position)			
Front unladen		kg	2450
Rear unladen		kg	4250
Front rated load		kg	9280
Rear rated load		kg	1420
Drag strain on the coupling hook			
Unladen (sliding)		daN	
At rated load (transmission setting)		daN	
Pull strain with open carrier (according to standard ISO 8313)		daN	

Downloaded from www.Manualslib.com manuals search engine

CHARACTERISTICS

M 50-4 Turbo Série 3-E3

I.C. ENGINE		
Type		PERKINS 1104D-44T NL38894
Fuel		Diesel
Number of cylinders		4 in line
Suction		Supercharged
Injection system		Mechanical
Ignition sequence		1-3-4-2
Capacity	cm3	4400
Bore and stroke	mm	105 x 127
Compression ratio		18,2/1
Nominal rating loaded	rpm	2200
Rating slow unladen	rpm	850
Max. rating unladen	rpm	2300
Power ISO/TR 14396	cv - kW	95 - 70
Power SAE J 1995	cv - kW	95 - 70
Maximum torque ISO/TR 14396	Nm	392 to 1400 rpm
Air cleaner	µm	3
Type of cooling		By water
Fan		Puller

TRANSMISSION		
Gear box		TURNER POWERTRAIN SYSTEMS
Type		Mechanical
Forward/reverse selector		Electro-hydraulic
Torque converter		SACHS
Number of forward speeds		4
Number of reverse speeds		4
Front axle		DANA
Differential		With locking
Rear axle		MANITOU
Differential		Without locking
Drive wheels		4 RM Permanent
Switch for 2/4 drive wheels		No
Front tyres		MITAS
Size		18-22,5 163A8 MPT-06 TL
Pressure	bar	4,5
Rear tyres		MICHELIN
Size		340/80R18 XMCL 143A8
Pressure	bar	3,2

ELECTRIC CIRCUIT		
Battery	Standard	12 V - 110 Ah - 750 A EN
	Option	12 V - 135 Ah - 850 A EN
Alternator		12 V - 65 A
Type		DENSO A115i
Starter		12 V - 3,2 kW
Type		ISKRA AZE

BRAKE CIRCUIT		
Service brake		Non-servo hydraulic brake
Type of brake		Oil-immersed multi-disc
Type of control		By foot on front wheels
Parking brake		Mechanical
Type of brake		Oil-immersed multi-disc
Type of control		Manual

SOUND AND VIBRATION		
Level of sound pressure in the driver's cab LpA (according to standard NF EN 12053)	dB	76
Level of sound power ensured in the LwA environment (according to directive 2000/14/EC modified by directive 2005/88/EC)	dB	103 measured 105 ensured
Average weighted acceleration on driver's body (according to standard NF EN 13059)	m/s2	
The average weighted acceleration transmitted to the driver's hand/arm system (according to standard ISO 5349-2)	m/s2	< 2,5

Downloaded from www.Manualslib.com manuals search engine

HYDRAULIC CIRCUIT		
Hydraulic pump		PARKER
Type		Gear
Capacity	cm3	37
Max. rating capacity unladen	l/mn	85
Flow rate at 1800 rpm	l/mn	
Filtration		
Return	µm	10
Suction	µm	100
Maximum service pressure		
Double mast with all-round vision	bar	210
Triple mast with free-acting lift	bar	
Double mast with free-acting lift	bar	210
Triple mast without free-acting lift	bar	210
Front/rear tilting circuit	bar	210/210
Attachment circuit	bar	210
Steering circuit	bar	145
Hydraulic shock absorber		
Capacity	L	1,4
Pressure	bar	120

HYDRAULIC MOVEMENTS		
Lifting movements		
Unladen lifting	m/s	0,4
Laden lifting	m/s	0,4
Unladen lowering	m/s	0,4
Laden lowering	m/s	0,5

SPECIFICATIONS AND WEIGHTS			
Speed of movement for lift truck in standard configuration on flat ground (except particular conditions)			
Front unladen	1	km/h	3,6
	2	km/h	6,9
	3	km/h	13,3
	4	km/h	23,4
Rear unladen	1	km/h	3,6
	2	km/h	6,9
	3	km/h	13,3
	4	km/h	23,4
Standard mast			DVT 3M70
Lift height		mm	3700
Free lift height		mm	
Overall height (retracted)		mm	2910
Overall height (extended)		mm	4815
Carriage			
Class			FEM3
width		mm	1670
Weight of forks (each)		kg	138
Rated load capacity		kg	5000
Rated load capacity with standard mast		kg	5000
Effective load capacity on forks with side-shift carriage		kg	4500
Distance from the centre of gravity of the load to the base of the forks		mm	600
Lift truck weight without forks or mast		kg	6074
Lift truck weight with standard mast			
Unladen		kg	7660
At rated load		kg	12660
Axle weight with standard mast (transport position)			
Front unladen		kg	2570
Rear unladen		kg	5090
Front rated load		kg	10800
Rear rated load		kg	1860
Drag strain on the coupling hook			
Unladen (sliding)		daN	6205
At rated load (transmission setting)		daN	10360
Pull strain with open carrier (according to standard ISO 8313)		daN	

Downloaded from www.Manualslib.com manuals search engine

CHARACTERISTICS

MC 40 Turbo POWERSHIFT Série 3-E3

I.C. ENGINE		
Type		PERKINS 1104D-44T NL38894
Fuel		Diesel
Number of cylinders		4 in line
Suction		Supercharged
Injection system		Mechanical
Ignition sequence		1-3-4-2
Capacity	cm3	4400
Bore and stroke	mm	105 x 127
Compression ratio		18,2/1
Nominal rating loaded	rpm	2200
Rating slow unladen	rpm	850
Max. rating unladen	rpm	2300
Power ISO/TR 14396	cv - kW	95 - 70
Power SAE J 1995	cv - kW	95 - 70
Maximum torque ISO/TR 14396	Nm	392 to 1400 rpm
Air cleaner	µm	3
Type of cooling		By water
Fan		Puller

TRANSMISSION		
Gear box		DANA
Type		Mechanical
Forward/reverse selector		Electro-hydraulic
Torque converter		DANA
Number of forward speeds		4
Number of reverse speeds		3
Front axle		DANA
Differential		With locking
Rear axle		MANITOU
Differential		Without locking
Drive wheels		2 RM Permanent
Switch for 2/4 drive wheels		No
Front tyres		ALLIANCE
Size		18-19,5 18PR 166A6 TL EVEREST
Pressure	bar	6,5
Rear tyres		GOODYEAR
Size		10R17,5 134/132M G291
Pressure	bar	8,5

ELECTRIC CIRCUIT		
Battery	Standard	12 V - 110 Ah - 750 A EN
	Option	12 V - 135 Ah - 850 A EN
Alternator		12 V - 65 A
Type		DENSO A115i
Starter		12 V - 3,2 kW
Type		ISKRA AZE

BRAKE CIRCUIT		
Service brake		Hydraulic power brake
Type of brake		Oil-immersed multi-disc
Type of control		By foot on front wheels
Parking brake		Mechanical
Type of brake		Oil-immersed multi-disc
Type of control		Manual

SOUND AND VIBRATION		
Level of sound pressure in the driver's cab LpA (according to standard NF EN 12053)	dB	76
Level of sound power ensured in the LwA environment (according to directive 2000/14/EC modified by directive 2005/88/EC)	dB	104 measured 105 ensured
Average weighted acceleration on driver's body (according to standard NF EN 13059)	m/s2	
The average weighted acceleration transmitted to the driver's hand/arm system (according to standard ISO 5349-2)	m/s2	< 2,5

Downloaded from www.Manualslib.com manuals search engine

HYDRAULIC CIRCUIT		
Hydraulic pump		PARKER
Type		Gear
Capacity	cm3	37
Max. rating capacity unladen	l/mn	85
Flow rate at 1800 rpm	l/mn	
Filtration		
Return	µm	10
Suction	µm	100
Maximum service pressure		
Double mast with all-round vision	bar	210
Triple mast with free-acting lift	bar	
Double mast with free-acting lift	bar	210
Triple mast without free-acting lift	bar	210
Front/rear tilting circuit	bar	210/210
Attachment circuit	bar	210
Steering circuit	bar	145
Hydraulic shock absorber		
Capacity	L	1,4
Pressure	bar	120

HYDRAULIC MOVEMENTS		
Lifting movements		
Unladen lifting	m/s	0,5
Laden lifting	m/s	0,5
Unladen lowering	m/s	0,4
Laden lowering	m/s	0,5

SPECIFICATIONS AND WEIGHTS			
Speed of movement for lift truck in standard configuration on flat ground (except particular conditions)			
Front unladen	1	km/h	3,6
	2	km/h	7,9
	3	km/h	16,2
	4	km/h	22,8
Rear unladen	1	km/h	3,6
	2	km/h	7,9
	3	km/h	16,2
	4	km/h	
Standard mast			DVT 3M70
Lift height		mm	3700
Free lift height		mm	
Overall height (retracted)		mm	2855
Overall height (extended)		mm	4750
Carriage			
Class			FEM3
width		mm	1670
Weight of forks (each)		kg	105
Rated load capacity		kg	4000
Rated load capacity with standard mast		kg	4000
Effective load capacity on forks with side-shift carriage		kg	3600
Distance from the centre of gravity of the load to the base of the forks		mm	500
Lift truck weight without forks or mast		kg	5080
Lift truck weight with standard mast			
Unladen		kg	6535
At rated load		kg	10535
Axle weight with standard mast (transport position)			
Front unladen		kg	2445
Rear unladen		kg	4090
Front rated load		kg	9100
Rear rated load		kg	1435
Drag strain on the coupling hook			
Unladen (sliding)		daN	
At rated load (transmission setting)		daN	
Pull strain with open carrier (according to standard ISO 8313)		daN	

Downloaded from www.Manualslib.com manuals search engine

CHARACTERISTICS

MC 50 Turbo POWERSHIFT Série 3-E3

I.C. ENGINE		
Type		PERKINS 1104D-44T NL38894
Fuel		Diesel
Number of cylinders		4 in line
Suction		Supercharged
Injection system		Mechanical
Ignition sequence		1-3-4-2
Capacity	cm3	4400
Bore and stroke	mm	105 x 127
Compression ratio		18,2/1
Nominal rating loaded	rpm	2200
Rating slow unladen	rpm	850
Max. rating unladen	rpm	2300
Power ISO/TR 14396	cv - kW	95 - 70
Power SAE J 1995	cv - kW	95 - 70
Maximum torque ISO/TR 14396	Nm	392 to 1400 rpm
Air cleaner	µm	3
Type of cooling		By water
Fan		Puller

TRANSMISSION		
Gear box		DANA
Type		Mechanical
Forward/reverse selector		Electro-hydraulic
Torque converter		DANA
Number of forward speeds		4
Number of reverse speeds		3
Front axle		DANA
Differential		With locking
Rear axle		MANITOU
Differential		Without locking
Drive wheels		2 RM Permanent
Switch for 2/4 drive wheels		No
Front tyres		ALLIANCE
Size		18-19,5 18PR 166A6 TL EVEREST
Pressure	bar	6,5
Rear tyres		GOODYEAR
Size		10R17,5 134/132M G291
Pressure	bar	8,5

ELECTRIC CIRCUIT		
Battery	Standard	12 V - 110 Ah - 750 A EN
	Option	12 V - 135 Ah - 850 A EN
Alternator		12 V - 65 A
Type		DENSO A115i
Starter		12 V - 3,2 kW
Type		ISKRA AZE

BRAKE CIRCUIT		
Service brake		Hydraulic power brake
Type of brake		Oil-immersed multi-disc
Type of control		By foot on front wheels
Parking brake		Mechanical
Type of brake		Oil-immersed multi-disc
Type of control		Manual

SOUND AND VIBRATION		
Level of sound pressure in the driver's cab LpA (according to standard NF EN 12053)	dB	76
Level of sound power ensured in the LwA environment (according to directive 2000/14/EC modified by directive 2005/88/EC)	dB	104 measured 105 ensured
Average weighted acceleration on driver's body (according to standard NF EN 13059)	m/s2	
The average weighted acceleration transmitted to the driver's hand/arm system (according to standard ISO 5349-2)	m/s2	< 2,5

Downloaded from www.Manualslib.com manuals search engine

HYDRAULIC CIRCUIT		
Hydraulic pump		PARKER
Type		Gear
Capacity	cm3	37
Max. rating capacity unladen	l/mn	85
Flow rate at 1800 rpm	l/mn	
Filtration		
Return	µm	10
Suction	µm	100
Maximum service pressure		
Double mast with all-round vision	bar	210
Triple mast with free-acting lift	bar	
Double mast with free-acting lift	bar	210
Triple mast without free-acting lift	bar	210
Front/rear tilting circuit	bar	210/210
Attachment circuit	bar	210
Steering circuit	bar	145
Hydraulic shock absorber		
Capacity	L	1,4
Pressure	bar	120

HYDRAULIC MOVEMENTS		
Lifting movements		
Unladen lifting	m/s	0,4
Laden lifting	m/s	0,4
Unladen lowering	m/s	0,4
Laden lowering	m/s	0,5

SPECIFICATIONS AND WEIGHTS		
Speed of movement for lift truck in standard configuration on flat ground (except particular conditions)		
Front unladen 1	km/h	3,6
2	km/h	7,9
3	km/h	16,2
4	km/h	22,8
Rear unladen 1	km/h	3,6
2	km/h	7,9
3	km/h	16,2
4	km/h	
Standard mast		DVT 3M70
Lift height	mm	3700
Free lift height	mm	
Overall height (retracted)	mm	2855
Overall height (extended)	mm	4750
Carriage		
Class		FEM4
width	mm	1670
Weight of forks (each)	kg	134
Rated load capacity	kg	5000
Rated load capacity with standard mast	kg	5000
Effective load capacity on forks with side-shift carriage	kg	4500
Distance from the centre of gravity of the load to the base of the forks	mm	600
Lift truck weight without forks or mast	kg	5917
Lift truck weight with standard mast		
Unladen	kg	7495
At rated load	kg	12495
Axle weight with standard mast (transport position)		
Front unladen	kg	2375
Rear unladen	kg	5120
Front rated load	kg	10700
Rear rated load	kg	1795
Drag strain on the coupling hook		
Unladen (sliding)	daN	1920
At rated load (transmission setting)	daN	6089
Pull strain with open carrier (according to standard ISO 8313)	daN	

Downloaded from www.Manualslib.com manuals search engine

CHARACTERISTICS

MC 60 Turbo POWERSHIFT Série 3-E3

I.C. ENGINE		
Type		PERKINS 1104D-44T NL38894
Fuel		Diesel
Number of cylinders		4 in line
Suction		Supercharged
Injection system		Mechanical
Ignition sequence		1-3-4-2
Capacity	cm3	4400
Bore and stroke	mm	105 x 127
Compression ratio		18,2/1
Nominal rating loaded	rpm	2200
Rating slow unladen	rpm	850
Max. rating unladen	rpm	2300
Power ISO/TR 14396	cv - kW	95 - 70
Power SAE J 1995	cv - kW	95 - 70
Maximum torque ISO/TR 14396	Nm	392 to 1400 rpm
Air cleaner	µm	3
Type of cooling		By water
Fan		Puller

TRANSMISSION		
Gear box		DANA
Type		Mechanical
Forward/reverse selector		Electro-hydraulic
Torque converter		DANA
Number of forward speeds		4
Number of reverse speeds		3
Front axle		DANA
Differential		With locking
Rear axle		MANITOU
Differential		Without locking
Drive wheels		2 RM Permanent
Switch for 2/4 drive wheels		No
Front tyres		MICHELIN
Size		18R19,5 XF TL
Pressure	bar	6,5
Rear tyres		CONTINENTAL
Size		265/70R19,5 140/138M HSR1
Pressure	bar	9,2

ELECTRIC CIRCUIT		
Battery	Standard	12 V - 110 Ah - 750 A EN
	Option	12 V - 135 Ah - 850 A EN
Alternator		12 V - 65 A
Type		DENSO A115i
Starter		12 V - 3,2 kW
Type		ISKRA AZE

BRAKE CIRCUIT		
Service brake		Hydraulic power brake
Type of brake		Oil-immersed multi-disc
Type of control		By foot on front wheels
Parking brake		Mechanical
Type of brake		Oil-immersed multi-disc
Type of control		Manual

SOUND AND VIBRATION		
Level of sound pressure in the driver's cab LpA (according to standard NF EN 12053)	dB	
Level of sound power ensured in the LwA environment (according to directive 2000/14/EC modified by directive 2005/88/EC)	dB	- measured 105 ensured
Average weighted acceleration on driver's body (according to standard NF EN 13059)	m/s2	
The average weighted acceleration transmitted to the driver's hand/arm system (according to standard ISO 5349-2)	m/s2	< 2,5

Downloaded from www.Manualslib.com manuals search engine

HYDRAULIC CIRCUIT		
Hydraulic pump		PARKER
Type		Gear
Capacity	cm3	37
Max. rating capacity unladen	l/mn	85
Flow rate at 1800 rpm	l/mn	
Filtration		
Return	µm	10
Suction	µm	100
Maximum service pressure		
Double mast with all-round vision	bar	230
Triple mast with free-acting lift	bar	
Double mast with free-acting lift	bar	
Triple mast without free-acting lift	bar	
Front/rear tilting circuit	bar	230/230
Attachment circuit	bar	230
Steering circuit	bar	145
Hydraulic shock absorber		
Capacity	L	1,4
Pressure	bar	150

HYDRAULIC MOVEMENTS		
Lifting movements		
Unladen lifting	m/s	0,4
Laden lifting	m/s	0,4
Unladen lowering	m/s	0,4
Laden lowering	m/s	0,5

SPECIFICATIONS AND WEIGHTS			
Speed of movement for lift truck in standard configuration on flat ground (except particular conditions)			
Front unladen	1	km/h	3,8
	2	km/h	8,4
	3	km/h	17,1
	4	km/h	24,1
Rear unladen	1	km/h	3,8
	2	km/h	8,4
	3	km/h	17,1
	4	km/h	
Standard mast			DVT 4M00
Lift height		mm	4000
Free lift height		mm	
Overall height (retracted)		mm	3405
Overall height (extended)		mm	5405
Carriage			
Class			FEM4
width		mm	1750
Weight of forks (each)		kg	156
Rated load capacity		kg	6000
Rated load capacity with standard mast		kg	6000
Effective load capacity on forks with side-shift carriage		kg	5400
Distance from the centre of gravity of the load to the base of the forks		mm	600
Lift truck weight without forks or mast		kg	7139
Lift truck weight with standard mast			
Unladen		kg	9175
At rated load		kg	15175
Axle weight with standard mast (transport position)			
Front unladen		kg	3600
Rear unladen		kg	5575
Front rated load		kg	13660
Rear rated load		kg	1515
Drag strain on the coupling hook			
Unladen (sliding)		daN	
At rated load (transmission setting)		daN	
Pull strain with open carrier (according to standard ISO 8313)		daN	

Downloaded from www.Manualslib.com manuals search engine

CHARACTERISTICS

MC 70 Turbo POWERSHIFT Série 3-E3

I.C. ENGINE		
Type		PERKINS 1104D-44T NL38894
Fuel		Diesel
Number of cylinders		4 in line
Suction		Supercharged
Injection system		Mechanical
Ignition sequence		1-3-4-2
Capacity	cm3	4400
Bore and stroke	mm	105 x 127
Compression ratio		18,2/1
Nominal rating loaded	rpm	2200
Rating slow unladen	rpm	850
Max. rating unladen	rpm	2300
Power ISO/TR 14396	cv - kW	95 - 70
Power SAE J 1995	cv - kW	95 - 70
Maximum torque ISO/TR 14396	Nm	392 to 1400 rpm
Air cleaner	µm	3
Type of cooling		By water
Fan		Puller

TRANSMISSION		
Gear box		DANA
Type		Mechanical
Forward/reverse selector		Electro-hydraulic
Torque converter		DANA
Number of forward speeds		4
Number of reverse speeds		3
Front axle		DANA
Differential		With locking
Rear axle		MANITOU
Differential		Without locking
Drive wheels		2 RM Permanent
Switch for 2/4 drive wheels		No
Front tyres		MICHELIN
Size		18R19,5 XF TL
Pressure	bar	7
Rear tyres		CONTINENTAL
Size		265/70R19,5 140/138M HSR1
Pressure	bar	9,9

ELECTRIC CIRCUIT		
Battery	Standard	12 V - 110 Ah - 750 A EN
	Option	12 V - 135 Ah - 850 A EN
Alternator		12 V - 65 A
Type		DENSO A115i
Starter		12 V - 3,2 kW
Type		ISKRA AZE

BRAKE CIRCUIT		
Service brake		Hydraulic power brake
Type of brake		Oil-immersed multi-disc
Type of control		By foot on front wheels
Parking brake		Mechanical
Type of brake		Oil-immersed multi-disc
Type of control		Manual

SOUND AND VIBRATION		
Level of sound pressure in the driver's cab LpA (according to standard NF EN 12053)	dB	
Level of sound power ensured in the LwA environment (according to directive 2000/14/EC modified by directive 2005/88/EC)	dB	- measured 105 ensured
Average weighted acceleration on driver's body (according to standard NF EN 13059)	m/s2	
The average weighted acceleration transmitted to the driver's hand/arm system (according to standard ISO 5349-2)	m/s2	< 2,5

Downloaded from www.Manualslib.com manuals search engine

HYDRAULIC CIRCUIT		
Hydraulic pump		PARKER
Type		Gear
Capacity	cm3	37
Max. rating capacity unladen	l/mn	85
Flow rate at 1800 rpm	l/mn	
Filtration		
Return	µm	10
Suction	µm	100
Maximum service pressure		
Double mast with all-round vision	bar	230
Triple mast with free-acting lift	bar	
Double mast with free-acting lift	bar	
Triple mast without free-acting lift	bar	
Front/rear tilting circuit	bar	230/230
Attachment circuit	bar	230
Steering circuit	bar	145
Hydraulic shock absorber		
Capacity	L	1,4
Pressure	bar	150

HYDRAULIC MOVEMENTS		
Lifting movements		
Unladen lifting	m/s	0,4
Laden lifting	m/s	0,3
Unladen lowering	m/s	0,4
Laden lowering	m/s	0,4

SPECIFICATIONS AND WEIGHTS			
Speed of movement for lift truck in standard configuration on flat ground (except particular conditions)			
Front unladen	1	km/h	3,8
	2	km/h	8,4
	3	km/h	17,1
	4	km/h	24,1
Rear unladen	1	km/h	3,8
	2	km/h	8,4
	3	km/h	17,1
	4	km/h	
Standard mast			DVT 4M00
Lift height		mm	4000
Free lift height		mm	
Overall height (retracted)		mm	3405
Overall height (extended)		mm	5405
Carriage			
Class			FEM4
width		mm	1750
Weight of forks (each)		kg	156
Rated load capacity		kg	7000
Rated load capacity with standard mast		kg	7000
Effective load capacity on forks with side-shift carriage		kg	6300
Distance from the centre of gravity of the load to the base of the forks		mm	600
Lift truck weight without forks or mast		kg	7784
Lift truck weight with standard mast			
Unladen		kg	9820
At rated load		kg	16820
Axle weight with standard mast (transport position)			
Front unladen		kg	3735
Rear unladen		kg	6085
Front rated load		kg	14265
Rear rated load		kg	2555
Drag strain on the coupling hook			
Unladen (sliding)		daN	2720
At rated load (transmission setting)		daN	8845
Pull strain with open carrier (according to standard ISO 8313)		daN	

Downloaded from www.Manualslib.com manuals search engine

CHARACTERISTICS OF MASTS WITH ROLLERS

MC 30 Turbo Série 3-E3

DOUBLE MAST WITH ALL-ROUND VISION							
MAST	HL	Z	Y	LL	H	H1	H2
3m00	3030	6°	12°	130	2305	4045	290
3m30	3330	6°	12°	130	2455	4345	290
3m50	3530	6°	12°	130	2555	4545	290
3m70	3730	6°	12°	130	2715	4745	230
4m00	4030	6°	12°	130	2905	5045	190
4m50	4530	6°	12°	130	3155	5545	190
5m00	5030	6°	12°	130	3405	6045	190
5m50	5530	6°	12°	130	3655	6545	190
6m00	6030	6°	12°	130	4015	7195	190

DOUBLE MAST WITH TOTAL FREE-ACTING LIFT							
MAST	HL	Z	Y	LL	H	H1	H2
3m00	3040	6°	12°	1383	2305	3962	167
3m30	3340	6°	12°	1533	2455	4262	167
3m50	3540	6°	12°	1633	2555	4462	167
3m70	3740	6°	12°	1793	2715	4662	167
4m00	4040	6°	12°	1983	2905	4962	167
4m50	4540	6°	12°	2233	3155	5462	167

TRIPLE MAST WITH TOTAL FREE-ACTING LIFT							
MAST	HL	Z	Y	LL	H	H1	H2
3m70	3740	6°	12°	1283	2205	4662	47
4m00	4040	6°	12°	1383	2305	4962	47
4m30	4340	6°	12°	1533	2455	5262	47
4m70	4740	6°	12°	1633	2555	5662	47
5m00	5040	6°	12°	1793	2715	5962	47
5m50	5540	6°	12°	1983	2905	6462	47
6m00	6040	6°	12°	2233	3155	6962	47
6m50	6540	6°	12°	2483	3405	7462	47
7m00	7040	6°	12°	2733	3655	7962	47

TRIPLE MAST WITHOUT FREE-ACTING LIFT							
MAST	HL	Z	Y	LL	H	H1	H2
5m505	5545	6°	10°	0	2985	6655	0

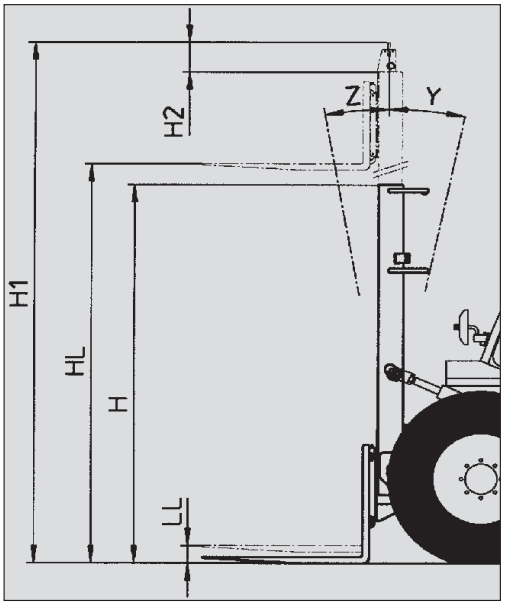

HL : Lift height in mm
Z : Forward tilting
Y : Backward tilting
LL : Free-acting lift in mm
H : Overall height with retracted mast in mm
H1 : Overall height with extended mast in mm
H2 : Carriage overhang in mm

Downloaded from www.Manualslib.com manuals search engine

CHARACTERISTICS OF MASTS WITH ROLLERS

M 26-2 Turbo Série 3-E3 M 26-4 Turbo Série 3-E3
M 30-2 Turbo Série 3-E3 M 30-4 Turbo Série 3-E3

DOUBLE MAST WITH ALL-ROUND VISION							
MAST	HL	Z	Y	LL	H	H1	H2
3m00	3030	6°	12°	130	2375	4115	290
3m30	3330	6°	12°	130	2525	4415	290
3m50	3530	6°	12°	130	2625	4615	290
3m70	3730	6°	12°	130	2785	4815	230
4m00	4030	6°	12°	130	2975	5115	190
4m50	4530	6°	12°	130	3225	5615	190
5m00	5030	6°	12°	130	3475	6115	190
5m50	5530	6°	12°	130	3725	6615	190
6m00	6030	6°	12°	130	3975	7115	190

DOUBLE MAST WITH TOTAL FREE-ACTING LIFT							
MAST	HL	Z	Y	LL	H	H1	H2
3m00	3040	6°	12°	1383	2375	4032	167
3m30	3340	6°	12°	1533	2525	4332	167
3m50	3540	6°	12°	1633	2625	4532	167
3m70	3740	6°	12°	1793	2785	4732	167
4m00	4040	6°	12°	1983	2975	5032	167
4m50	4540	6°	12°	2233	3225	5532	167

TRIPLE MAST WITH TOTAL FREE-ACTING LIFT							
MAST	HL	Z	Y	LL	H	H1	H2
3m70	3740	6°	12°	1283	2275	4732	47
4m00	4040	6°	12°	1383	2375	5032	47
4m30	4340	6°	12°	1533	2525	5532	47
4m70	4740	6°	12°	1633	2625	5732	47
5m00	5040	6°	12°	1793	2785	6032	47
5m50	5540	6°	12°	1983	2975	6532	47
6m00	6040	6°	12°	2233	3225	7032	47
6m50	6540	6°	12°	2483	3475	7532	47
7m00	7040	6°	12°	2733	3725	8032	47

TRIPLE MAST WITHOUT FREE-ACTING LIFT							
MAST	HL	Z	Y	LL	H	H1	H2
5m505	5545	6°	12°	0	3055	6725	0

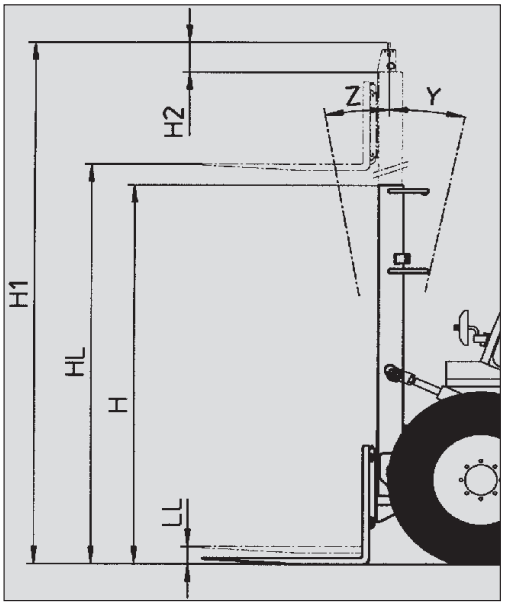

HL : Lift height in mm
Z : Forward tilting
Y : Backward tilting
LL : Free-acting lift in mm
H : Overall height with retracted mast in mm
H1 : Overall height with extended mast in mm
H2 : Carriage overhang in mm

Downloaded from www.Manualslib.com manuals search engine

CHARACTERISTICS OF MASTS WITH ROLLERS

M40-4 Turbo Série 3-E3

DOUBLE MAST WITH ALL-ROUND VISION							
MAST	HL	Z	Y	LL	H	H1	H2
3m00	3050	15°	15°	0	2560	4115	55
3m30	3350	15°	15°	0	2710	4415	55
3m50	3550	15°	15°	0	2810	4615	55
3m70	3750	15°	15°	0	2910	4815	55
4m00	4050	15°	15°	0	3060	5115	55
4m50	4550	15°	15°	0	3305	5615	55
5m00	5050	15°	15°	0	3560	6115	55

DOUBLE MAST WITH TOTAL FREE-ACTING LIFT							
MAST	HL	Z	Y	LL	H	H1	H2
3m00	3050	15°	15°	1518	2585	4117	32
3m30	3350	15°	15°	1668	2735	4417	32
3m50	3550	15°	15°	1768	2835	4617	32
3m70	3750	15°	15°	1868	2935	4817	32
4m00	4050	15°	15°	1968	3085	5517	32

TRIPLE MAST WITH TOTAL FREE-ACTING LIFT							
MAST	HL	Z	Y	LL	H	H1	H2
3m70	3750	15°	15°	1255	2310	4805	45
4m00	4050	15°	15°	1355	2410	5105	45
4m30	4350	15°	15°	1455	2510	5405	45
4m50	4550	15°	15°	1530	2585	5605	20
4m70	4750	15°	15°	1590	2645	5805	40
5m00	5050	10°	15°	1705	2760	6105	15
5m50	5550	10°	15°	1855	2910	6605	45
6m00	6050	10°	15°	2030	3085	7105	20

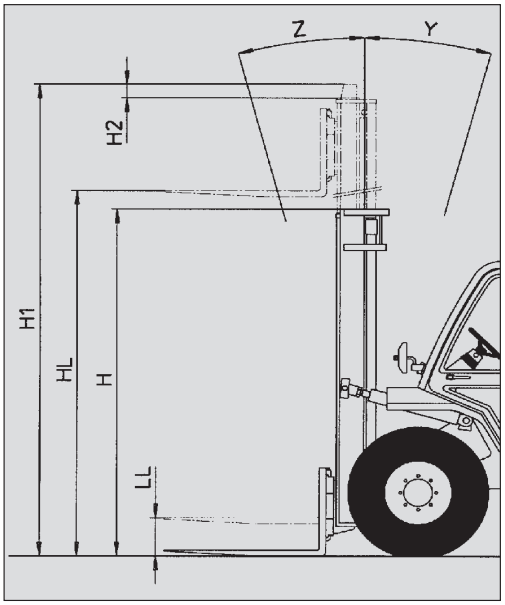

HL : Lift height in mm
Z : Forward tilting
Y : Backward tilting
LL : Free-acting lift in mm
H : Overall height with retracted mast in mm
H1 : Overall height with extended mast in mm
H2 : Carriage overhang in mm

Downloaded from www.Manualslib.com manuals search engine

CHARACTERISTICS OF MASTS WITH ROLLERS

M 50-4 Turbo Série 3-E3

DOUBLE MAST WITH ALL-ROUND VISION							
MAST	HL	Z	Y	LL	H	H1	H2
3m00	3060	15°	15°	0	2560	4115	55
3m30	3360	15°	15°	0	2710	4415	55
3m50	3560	15°	15°	0	2810	4615	55
3m70	3760	15°	15°	0	2910	4815	55
4m00	4060	15°	15°	0	3060	5115	55
4m50	4560	15°	15°	0	3305	5615	55
5m00	5060	15°	15°	0	3560	6115	55
5m50	5560	15°	15°	0	3810	6615	55

DOUBLE MAST WITH TOTAL FREE-ACTING LIFT							
MAST	HL	Z	Y	LL	H	H1	H2
3m00	3060	15°	15°	1528	2585	4117	32
3m30	3360	15°	15°	1678	2735	4417	32
3m50	3560	15°	15°	1778	2835	4617	32
3m70	3760	15°	15°	1878	2935	4817	32
4m00	4060	15°	15°	1978	3085	5517	32

TRIPLE MAST WITH TOTAL FREE-ACTING LIFT							
MAST	HL	Z	Y	LL	H	H1	H2
3m70	3760	15°	15°	1265	2310	4805	45
4m00	4060	15°	15°	1365	2410	5105	45
4m30	4360	15°	15°	1465	2510	5405	45
4m50	4560	15°	15°	1540	2585	5605	20
4m70	4760	15°	15°	1600	2645	5805	40
5m00	5060	10°	15°	1715	2760	6105	15
5m50	5560	10°	15°	1865	2910	6605	45
6m00	6060	10°	15°	2040	3085	7105	20

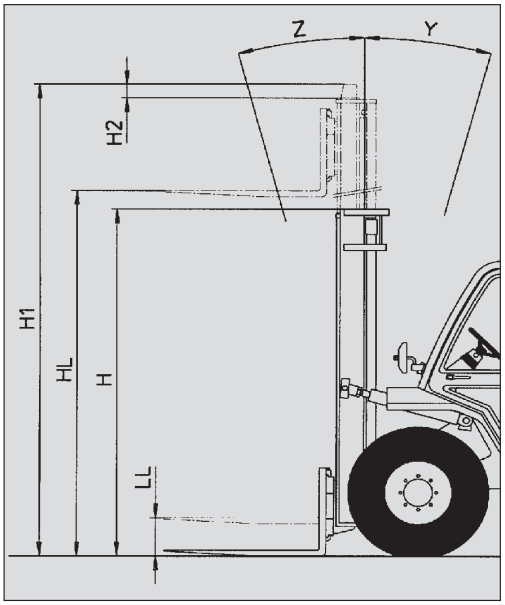

HL : Lift height in mm
Z : Forward tilting
Y : Backward tilting
LL : Free-acting lift in mm
H : Overall height with retracted mast in mm
H1 : Overall height with extended mast in mm
H2 : Carriage overhang in mm

Downloaded from www.Manualslib.com manuals search engine

CHARACTERISTICS OF MASTS WITH ROLLERS

MC 40 Turbo POWERSHIFT Série 3-E3

DOUBLE MAST WITH ALL-ROUND VISION							
MAST	HL	Z	Y	LL	H	H1	H2
3m00	3050	15°	15°	0	2505	4050	45
3m30	3350	15°	15°	0	2655	4350	45
3m50	3550	15°	15°	0	2750	4550	45
3m70	3750	15°	15°	0	2855	4750	45
4m00	4050	15°	15°	0	3005	5050	45
4m50	4550	15°	15°	0	3250	5550	45
5m00	5050	15°	15°	0	3505	6050	45

DOUBLE MAST WITH TOTAL FREE-ACTING LIFT							
MAST	HL	Z	Y	LL	H	H1	H2
3m00	3050	15°	15°	1518	2530	4062	32
3m30	3350	15°	15°	1668	2680	4362	32
3m50	3550	15°	15°	1768	2780	4562	32
3m70	3750	15°	15°	1868	2880	4762	32
4m00	4050	15°	15°	2068	3030	5062	32

TRIPLE MAST WITH TOTAL FREE-ACTING LIFT							
MAST	HL	Z	Y	LL	H	H1	H2
3m70	3750	15°	15°	1255	2255	4750	45
4m00	4050	15°	15°	1355	2355	5050	45
4m30	4350	15°	15°	1455	2455	5350	45
4m50	4550	15°	15°	1530	2530	5550	20
4m70	4750	15°	15°	1590	2590	5750	40
5m00	5050	10°	15°	1705	2705	6050	15
5m50	5550	10°	15°	1855	2855	6550	45
6m00	6050	10°	15°	2030	3030	7050	20

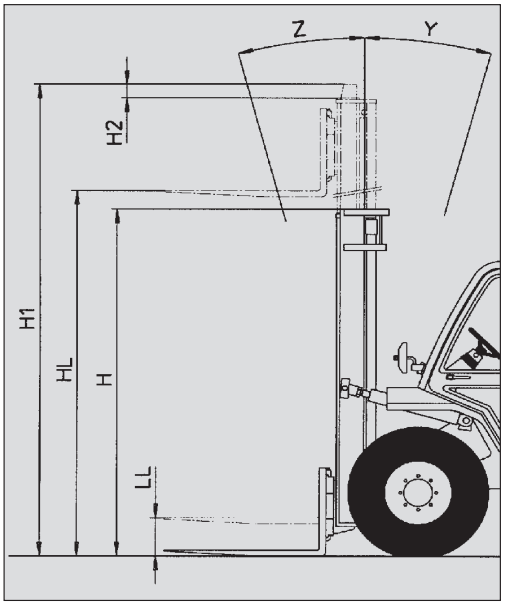

HL : Lift height in mm
Z : Forward tilting
Y : Backward tilting
LL : Free-acting lift in mm
H : Overall height with retracted mast in mm
H1 : Overall height with extended mast in mm
H2 : Carriage overhang in mm

Downloaded from www.Manualslib.com manuals search engine

CHARACTERISTICS OF MASTS WITH ROLLERS

MC 50 Turbo POWERSHIFT Série 3-E3

DOUBLE MAST WITH ALL-ROUND VISION							
MAST	HL	Z	Y	LL	H	H1	H2
3m00	3060	15°	15°	0	2505	4050	45
3m30	3360	15°	15°	0	2655	4350	45
3m50	3560	15°	15°	0	2755	4550	45
3m70	3760	15°	15°	0	2855	4750	45
4m00	4060	15°	15°	0	3005	5050	45
4m50	4560	15°	15°	0	3250	5550	45
5m00	5060	15°	15°	0	3505	6050	45
5m50	5560	15°	15°	0	3755	6550	45

DOUBLE MAST WITH TOTAL FREE-ACTING LIFT							
MAST	HL	Z	Y	LL	H	H1	H2
3m00	3060	15°	15°	1528	2530	4062	32
3m30	3360	15°	15°	1678	2680	4362	32
3m50	3560	15°	15°	1778	2780	4562	32
3m70	3760	15°	15°	1878	2880	4762	32
4m00	4060	15°	15°	2028	3030	5062	32

TRIPLE MAST WITH TOTAL FREE-ACTING LIFT							
MAST	HL	Z	Y	LL	H	H1	H2
3m70	3760	15°	15°	1265	2255	4750	45
4m00	4060	15°	15°	1365	2355	5050	45
4m30	4360	15°	15°	1465	2455	5350	45
4m50	4560	15°	15°	1540	2530	5550	20
4m70	4760	15°	15°	1600	2590	5750	40
5m00	5060	10°	15°	1715	2750	6050	15
5m50	5560	10°	15°	1865	2855	6550	45
6m00	6060	10°	15°	2040	3030	7050	20

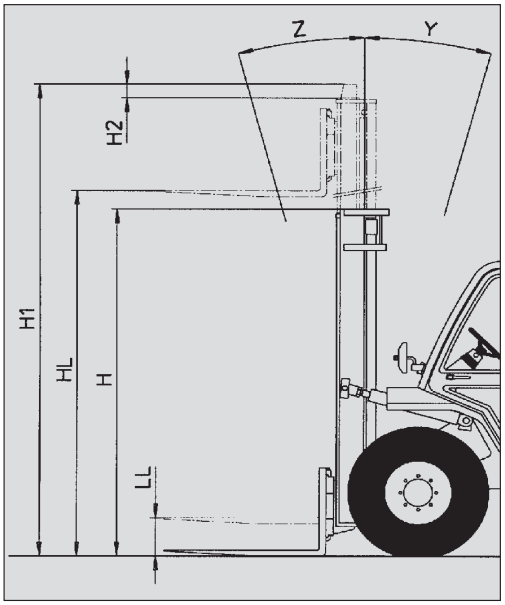

HL : Lift height in mm
Z : Forward tilting
Y : Backward tilting
LL : Free-acting lift in mm
H : Overall height with retracted mast in mm
H1 : Overall height with extended mast in mm
H2 : Carriage overhang in mm

Downloaded from www.Manualslib.com manuals search engine

CHARACTERISTICS OF MASTS WITH ROLLERS

MC 60 T POWERSHIFT Série 3-E3
MC 70 T POWERSHIFT Série 3-E3

DOUBLE MAST WITH ALL-ROUND VISION							
MAST	HL	Z	Y	LL	H	H1	H2
3m60	3670	15°	15°	0	3205	5005	0
4m00	4070	15°	15°	0	3405	5405	0
4m50	4570	15°	15°	0	3655	5905	0

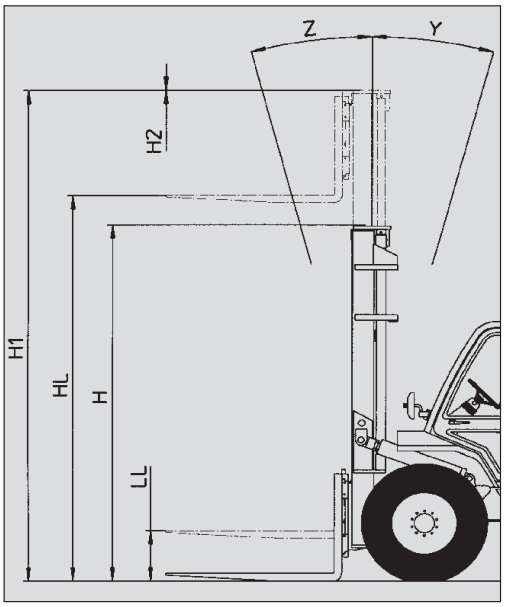

HL : Lift height in mm
Z : Forward tilting
Y : Backward tilting
LL : Free-acting lift in mm
H : Overall height with retracted mast in mm
H1 : Overall height with extended mast in mm
H2 : Carriage overhang in mm

Downloaded from www.Manualslib.com manuals search engine

Downloaded from www.Manualslib.com manuals search engine

Torkonjestraat 23
8510 Marke
Belgium
056 / 222 111
info@dumarent.be
www.dumarent.be

FRONT AND REAR TIRES

FRONT		PRESSURE (bar) TYRE LOAD (kg)	MC 30 Turbo Série 3-E3	M 26-2 Turbo Série 3-E3	M 30-2 Turbo Série 3-E3	M 26-4 Turbo Série 3-E3	M 30-4 Turbo Série 3-E3	M 40-4 Turbo Série 3-E3	M 50-4 Turbo Série 3-E3	MC 40 Turbo POWERSHIFT Série 3-E3	MC 50 Turbo POWERSHIFT Série 3-E3	MC 60 Turbo POWERSHIFT Série 3-E3	MC 70 Turbo POWERSHIFT Série 3-E3
ALLIANCE	18-19,5 ML224 EVEREST 18PR TUBELESS	PRESSURE								6,5	6,5		
		Front unladen								1200	1200		
		Front laden								4550	5350		
CONTINENTAL	14,5R20 MPT80 MPT80 18PR 143G/J TUBELESS	PRESSURE	3,5										
		Front unladen	1150										
		Front laden	3550										
GOODYEAR	16,5/85-24 SGI 8PR TUBELESS	PRESSURE		2,5	2,5	2,5	2,5						
		Front unladen		1500	1450	1500	1450						
		Front laden		3650	3950	3600	3900						
MICHELIN	380/75 R20 XMCL 148A8 TUBELESS	PRESSURE	3,5										
		Front unladen	1150										
		Front laden	3550										
	13,00 R24 XGL A2 TG TUBELESS	PRESSURE		3,5	4								
		Front unladen		1500	1450								
		Front laden		3650	3950								
	18R22,5 XF TUBELESS	PRESSURE						4,5	5,5			7	7,5
		Front unladen						1250	1300			1800	1850
		Front laden						4650	5400			6850	7150
	445/65R19,5 XZY 165K TUBELESS	PRESSURE										7	7,5
		Front unladen										1800	1850
		Front laden										6850	7150
	18R19,5 XF TUBELESS	PRESSURE								6,5	6,5	6,5	7
		Front unladen								1200	1200	1800	1850
		Front laden								4550	5350	6850	7150
MITAS	18-22,5 MPT-06 16PR 163A8 TUBELESS	PRESSURE						4	4,5				
		Front unladen						1250	1300				
		Front laden						4650	5400				

Downloaded from www.Manualslib.com manuals search engine

REAR		PRESSURE (bar) TYRE LOAD (kg)	MC 30 Turbo Série 3-E3	M 26-2 Turbo Série 3-E3	M 30-2 Turbo Série 3-E3	M 26-4 Turbo Série 3-E3	M 30-4 Turbo Série 3-E3	M 40-4 Turbo Série 3-E3	M 50-4 Turbo Série 3-E3	MC 40 Turbo POWERSHIFT Série 3-E3	MC 50 Turbo POWERSHIFT Série 3-E3	MC 60 Turbo POWERSHIFT Série 3-E3	MC 70 Turbo POWERSHIFT Série 3-E3
CONTINENTAL	10R17,5 LSR1 134/132L TUBELESS	PRESSURE	4,5							5	6		
		Rear unladen	1400							2050	2550		
		Rear laden	500							700	900		
	10R17,5 LDR 134/132L TUBELESS	PRESSURE	4							6,5	8		
		Rear unladen	1400							2050	2550		
		Rear laden	500							700	900		
	265/70R19,5 HRS1 140/138M TUBELESS	PRESSURE										9,2	9,9
		Rear unladen										2800	3050
		Rear laden										750	1300
DUNLOP	9,00-16 EM5 10PR	PRESSURE		3									
		Rear unladen		1500									
		Rear laden		550									
	10,5/80-18 TG42 10PR TUBELESS	PRESSURE		3,5	3,5	3,5	3,5						
		Rear unladen		1500	1600	1450	1650						
		Rear laden		550	600	650	700						
	12,0-18 T86 12PR TUBELESS	PRESSURE				2,2	2,2						
		Rear unladen				1450	1650						
		Rear laden				650	700						
GOODYEAR	10R17,5 G291 134M	PRESSURE	5,5	5,5	5,5					8,5	9,5		
		Rear unladen	1400	1500	1600					2050	2550		
		Rear laden	500	550	600					700	900		
MICHELIN	340/80R18 XMCL 143A8 TUBELESS	PRESSURE						3,2	3,2				
		Rear unladen						2150	2550				
		Rear laden						700	950				

Downloaded from www.Manualslib.com manuals search engine

FRONT		PRESSURE (bar)	LOAD (kg)	PRESSURE ON THE CONTACT SURFACE (kg/cm2)		AREA OF THE CONTACT SURFACE (cm2)	
				HARD SOIL	LOOSE SOIL	HARD SOIL	LOOSE SOIL
ALLIANCE	18-19,5 ML224 EVEREST 18PR TUBELESS	6,5	1200	6,51		184	
			4550	6,50		700	
			5350	6,50		823	
CONTINENTAL	14,5R20 MPT80 MPT80 18PR 143G/J TUBELESS	3,5	1150	1,83		628	
			3550	3,38		1050	
GOODYEAR	16,5/85-24 SGI 8PR TUBELESS	2,5	1450	5,44	1,27	261	1116
			1500	5,52	1,29	265	1789
			3600	8,63	2,02	417	1786
			3650	8,67	2,03	421	1802
			3900	8,88	2,07	439	1880
			3950	8,93	2,08	443	1895
MICHELIN	380/75 R20 XMCL 148A8 TUBELESS	3,5	1150				
			2550				
	13,00 R24 XGL A2 TG TUBELESS	3,5	1500	2,75	1,27	539	1161
			3650	1,59	1,48	1240	2674
		4	1450	2,98	1,38	479	1033
			3950	3,37	1,56	1170	2524
	18R22,5 XF TUBELESS	4,5	1250	1,39	0,64	868	1872
			4650	3,37	1,56	1485	3201
		5,5	1300	1,66	0,77	787	1697
			5400				
		7	1800				
			6850				
		7,5	1850	2,31	1,07	800	1726
			7150				
	445/65R19,5 XZY 165K TUBELESS	7	1800				
			6850				
		7,5	1850	4,63		400	
			7150	7,07		1012	
	18R19,5 XF TUBELESS	6,5	1200	2,94	1,37	411	887
			1800	3,34	1,55	537	1158
			4550	4,05	1,88	1118	2413
			5350	4,19	1,94	1275	2750
			6850	4,55	2,11	1506	3250
		7	1850	3,65	1,69	507	1094
			7150	4,77	2,21	1500	3236
MITAS	18-22,5 MPT-06 16PR 163A8 TUBELESS	4	1250				
			4650				
		4,5	1300				
			5400				

Downloaded from www.Manualslib.com manuals search engine

REAR		PRESSURE (bar)	LOAD (kg)	PRESSURE ON THE CONTACT SURFACE (kg/cm2)		AREA OF THE CONTACT SURFACE (cm2)	
				HARD SOIL	LOOSE SOIL	HARD SOIL	LOOSE SOIL
CONTINENTAL	10R17,5 LSR1 134/132L TUBELESS	4,5	500				
			1400				
		5	700				
			2050				
		6	900				
			2550				
	10R17,5 LDR 134/132L TUBELESS	4	500				
			1400				
		6,5	700				
			2050				
		8	900				
			2550				
	265/70R19,5 HRS1 140/138M TUBELESS	9,2	750				
			2800				
		9,9	1300				
			3050				
DUNLOP	9,00-16 EM5 10PR	3	550	4,98	2,74	110	203
			1500	6,57	3,08	228	487
	10,5/80-18 TG42 10PR TUBELESS	3,5	550				
			600				
			650				
			700				
			1450				
			1500				
			1600				
			1650				
	12,0-18 T86 12PR TUBELESS	2,2	650	5,23	1,73	125	377
			700	5,35	1,77	131	397
			1450	6,37	2,11	226	682
			1650	6,57	2,19	251	752
GOODYEAR	10R17,5 G291 134M	5,5	500				
			550				
			600	4,29	3,24	140	185
			1400				
			1500	6,38	4,76	235	315
			1600				
		8,5	700	5,00	3,78	140	185
			2050				
		9,5	900				
			2550				
MICHELIN	340/80R18 XMCL 143A8 TUBELESS	3,2	700				
			950				
			2150				
			2550				

Downloaded from www.Manualslib.com manuals search engine

DIMENSIONS AND LOAD CHART

MC 30 Turbo Série 3-E3

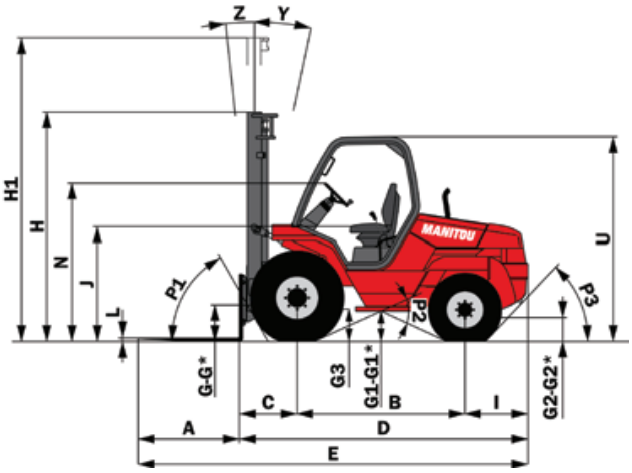

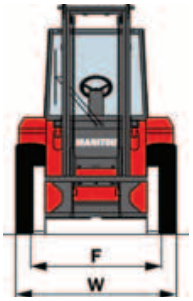

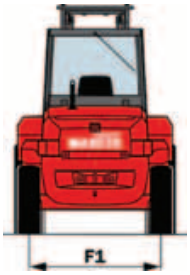

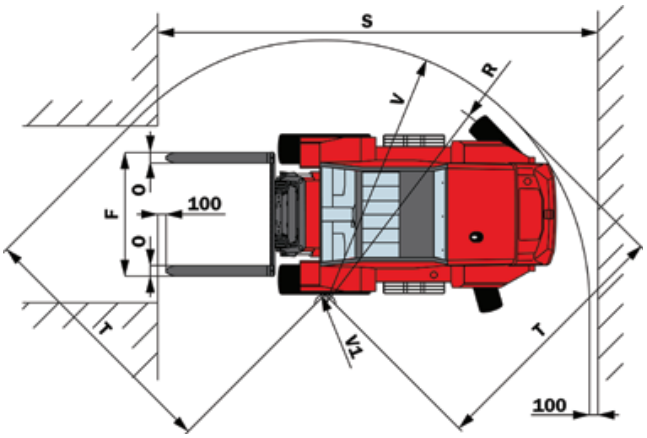

A	mm	1200
B	mm	1995
C	mm	697
D	mm	3442
E	mm	4642
F	mm	1550
F1	mm	1564
G	mm	425
G*	mm	385
G1	mm	385
G1*	mm	370
G2	mm	300
G2*	mm	310
G3	mm	380
H	mm	2715
H1	mm	4745
I	mm	750
J	mm	1400
K	mm	1470
L	mm	40
N	mm	1880
O	mm	125
P1	°	60,5
P2	°	49
P3	°	46,5
R	mm	2910
S	mm	5307
T	mm	3060
U	mm	2460
V	mm	3210
V1	mm	210
W	mm	1900
Y	°	12
Z	°	6

RATED CAPACITY ▶

ACTUAL CAPACITIES (according to standard EN 1726-1) ▶

1 - Up to height of ▶

2 - For maximum height of ▶

VERTICAL MAST ▶

ATTACHMENT ▶

ACTUAL CAPACITIES ▶

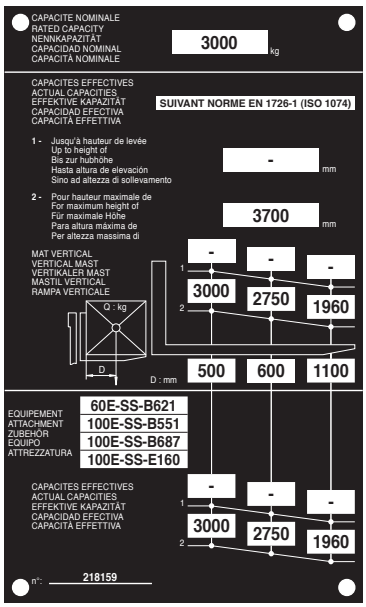

G - G1 - G2 - G3 = Unladen
G* - G1* - G2* = Rated load
H - H1 = Standard mast DUPLEX 3M70

647003 EN (03/01/2012)

Downloaded from www.Manualslib.com manuals search engine

DIMENSIONS AND LOAD CHART

M 26-2 Turbo Série 3-E3

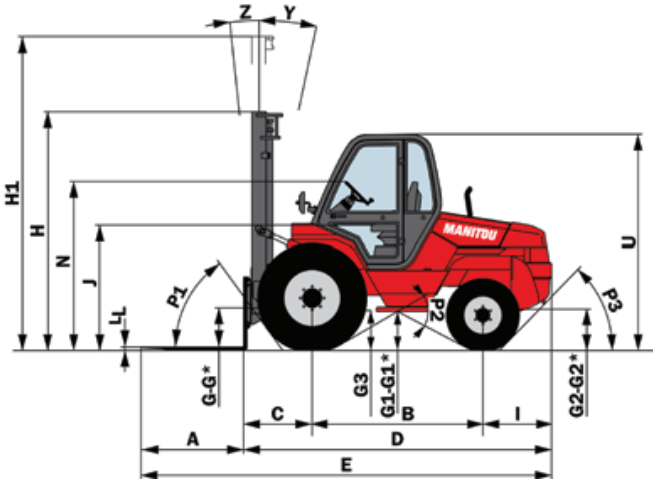

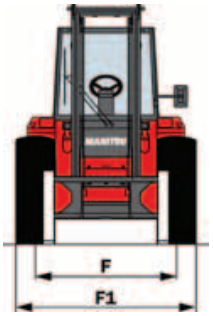

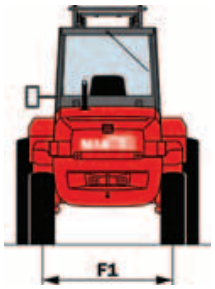

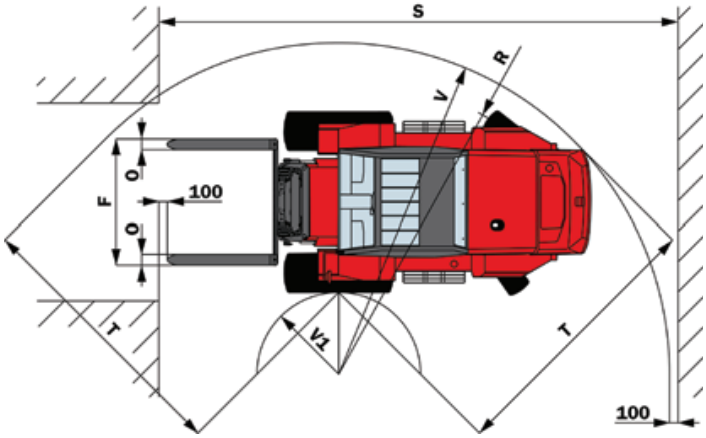

A	mm	1200
B	mm	2000
C	mm	810
D	mm	3635
E	mm	4835
F	mm	1670
F1	mm	1520
G	mm	495
G*	mm	455
G1	mm	465
G1*	mm	450
G2	mm	420
G2*	mm	430
G3	mm	480
H	mm	2785
H1	mm	4815
I	mm	825
J	mm	1480
K	mm	1470
L	mm	40
N	mm	1960
O	mm	125
P1	°	54
P2	°	58
P3	°	46
R	mm	3730
S	mm	6140
T	mm	3215
U	mm	2540
V	mm	3930
V1	mm	1015
W	mm	2105
Y	°	12
Z	°	6

RATED CAPACITY ▶

ACTUAL CAPACITIES (according to standard EN 1726-1) ▶

1 - Up to height of ▶

2 - For maximum height of ▶

VERTICAL MAST ▶

ATTACHMENT ▶

ACTUAL CAPACITIES ▶

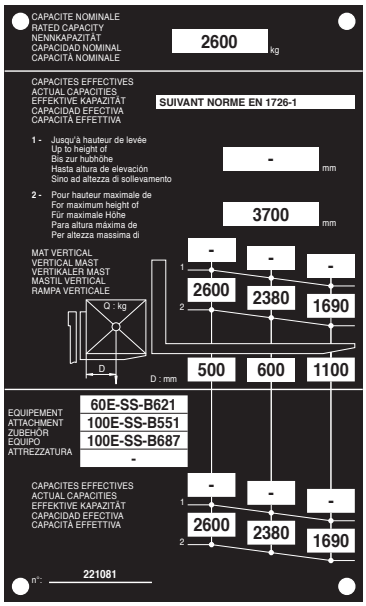

G - G1 - G2 - G3 = Unladen
G* - G1* - G2* = Rated load
H - H1 = Standard mast DUPLEX 3M70

647003 EN (03/01/2012)

Downloaded from www.Manualslib.com manuals search engine

DIMENSIONS AND LOAD CHART

M 30-2 Turbo Série 3-E3

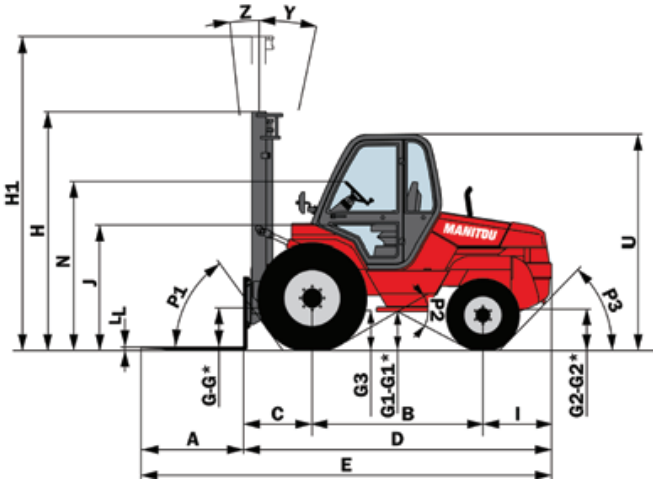

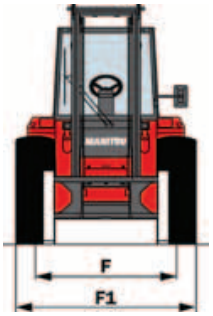

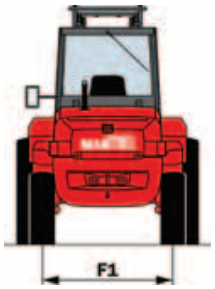

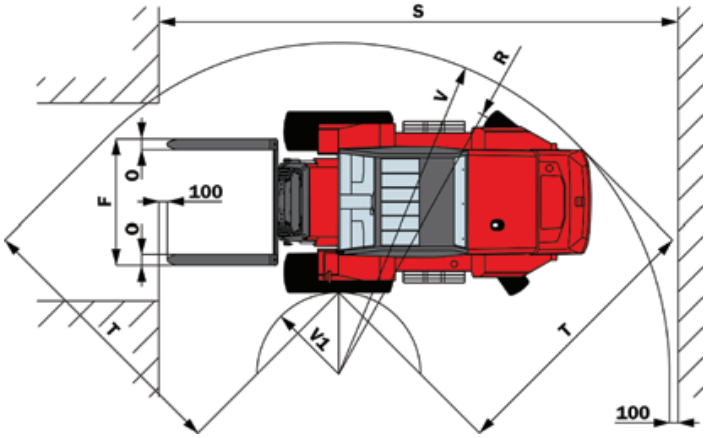

A	mm	1200
B	mm	2000
C	mm	810
D	mm	3635
E	mm	4835
F	mm	1670
F1	mm	1520
G	mm	495
G*	mm	455
G1	mm	465
G1*	mm	450
G2	mm	420
G2*	mm	430
G3	mm	480
H	mm	2785
H1	mm	4815
I	mm	825
J	mm	1480
K	mm	1470
L	mm	40
N	mm	1960
O	mm	125
P1	°	54
P2	°	58
P3	°	46
R	mm	3730
S	mm	6140
T	mm	3215
U	mm	2540
V	mm	3930
V1	mm	1015
W	mm	2105
Y	°	12
Z	°	6

RATED CAPACITY ▶

ACTUAL CAPACITIES (according to standard EN 1726-1) ▶

1 - Up to height of ▶

2 - For maximum height of ▶

VERTICAL MAST ▶

ATTACHMENT ▶

ACTUAL CAPACITIES ▶

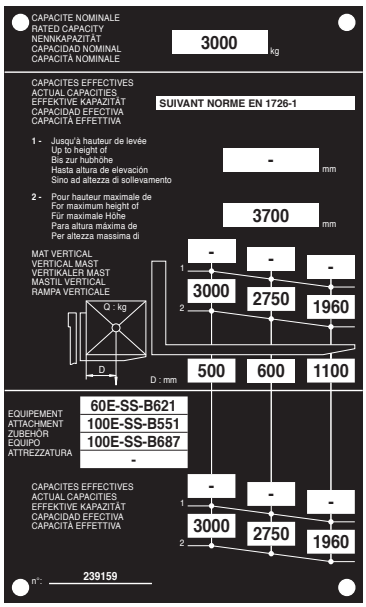

G - G1 - G2 - G3 = Unladen
G* - G1* - G2* = Rated load
H - H1 = Standard mast DUPLEX 3M70

647003 EN (03/01/2012)

Downloaded from www.Manualslib.com manuals search engine

DIMENSIONS AND LOAD CHART

M 26-4 Turbo Série 3-E3

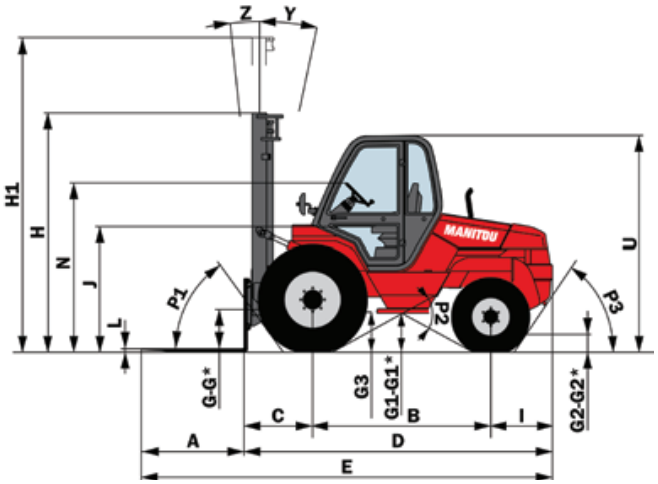

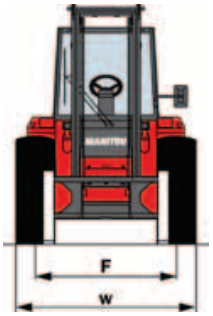

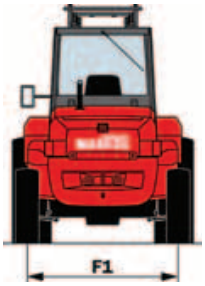

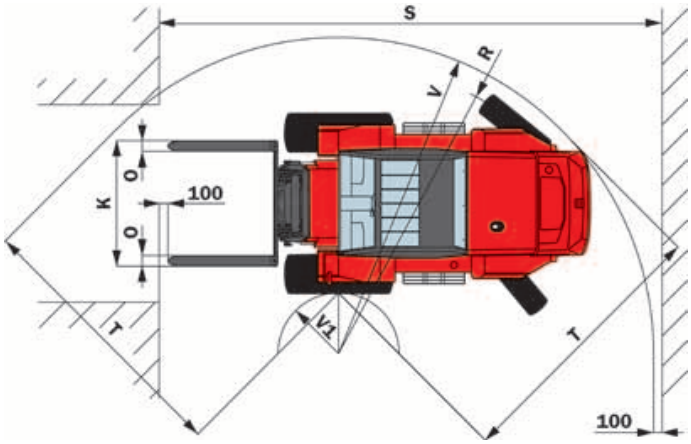

A	mm	1200
B	mm	2080
C	mm	810
D	mm	3635
E	mm	4835
F	mm	1670
F1	mm	1760
G	mm	495
G*	mm	455
G1	mm	395
G1*	mm	380
G2	mm	290
G2*	mm	300
G3	mm	480
H	mm	2785
H1	mm	4815
I	mm	745
J	mm	1480
K	mm	1470
L	mm	40
N	mm	1960
O	mm	125
P1	°	54
P2	°	57,5
P3	°	56,5
R	mm	3930
S	mm	6280
T	mm	3115
U	mm	2540
V	mm	4070
V1	mm	1350
W	mm	2105
Y	°	12
Z	°	6

RATED CAPACITY ▶

ACTUAL CAPACITIES (according to standard EN 1726-1) ▶

1 - Up to height of ▶

2 - For maximum height of ▶

VERTICAL MAST ▶

ATTACHMENT ▶

ACTUAL CAPACITIES ▶

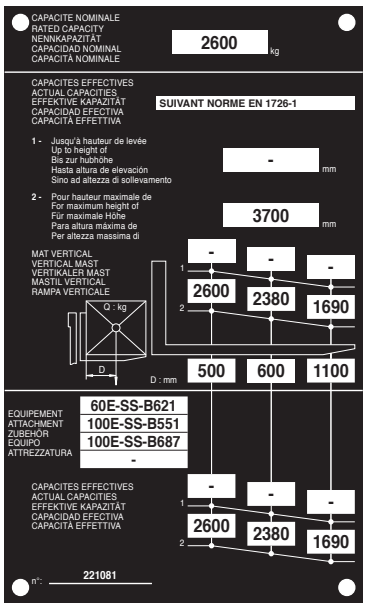

G - G1 - G2 - G3 = Unladen
G* - G1* - G2* = Rated load
H - H1 = Standard mast DUPLEX 3M70

647003 EN (03/01/2012)

Downloaded from www.Manualslib.com manuals search engine

DIMENSIONS AND LOAD CHART

M 30-4 Turbo Série 3-E3

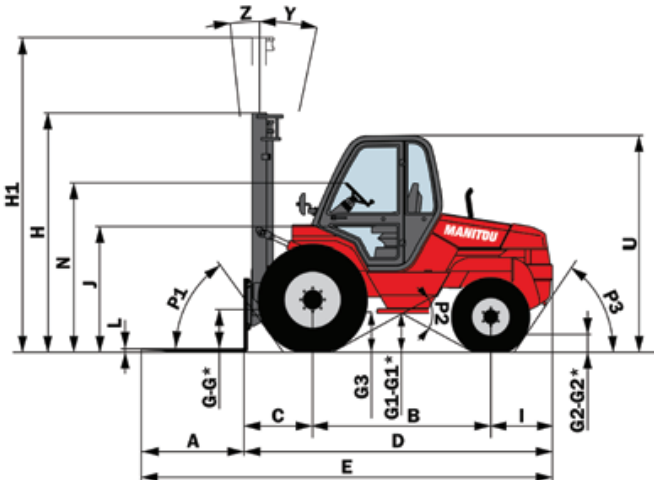

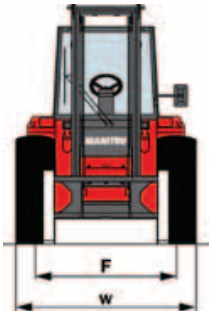

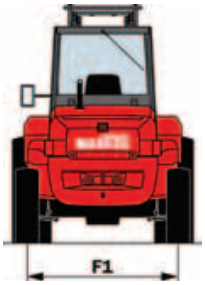

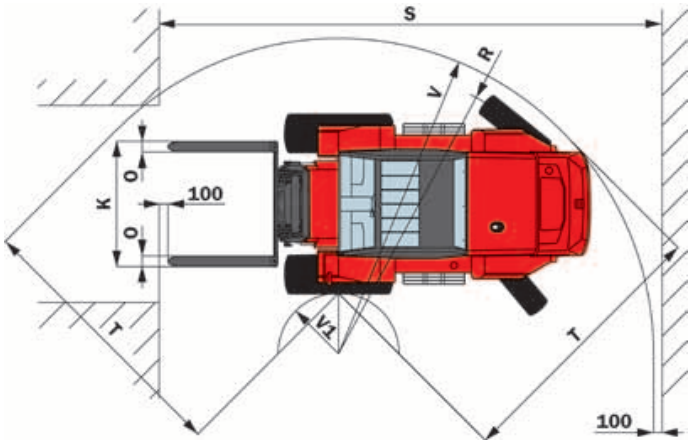

A	mm	1200
B	mm	2080
C	mm	810
D	mm	3635
E	mm	4835
F	mm	1670
F1	mm	1760
G	mm	495
G*	mm	455
G1	mm	395
G1*	mm	380
G2	mm	290
G2*	mm	300
G3	mm	480
H	mm	2785
H1	mm	4815
I	mm	745
J	mm	1480
K	mm	1470
L	mm	40
N	mm	1960
O	mm	125
P1	°	54
P2	°	57,5
P3	°	56,5
R	mm	3930
S	mm	6280
T	mm	3115
U	mm	2540
V	mm	4070
V1	mm	1350
W	mm	2105
Y	°	12
Z	°	6

RATED CAPACITY ▶

ACTUAL CAPACITIES (according to standard EN 1726-1) ▶

1 - Up to height of ▶

2 - For maximum height of ▶

VERTICAL MAST ▶

ATTACHMENT ▶

ACTUAL CAPACITIES ▶

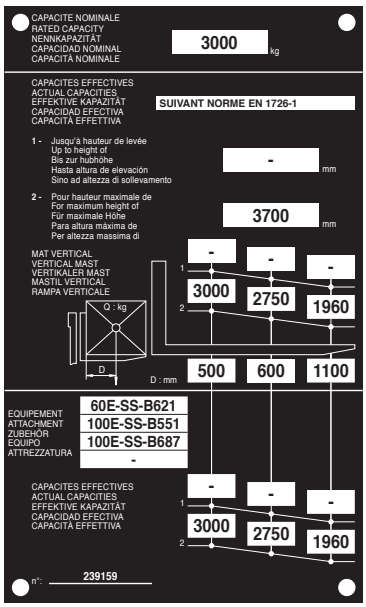

G - G1 - G2 - G3 = Unladen
G* - G1* - G2* = Rated load
H - H1 = Standard mast DUPLEX 3M70

647003 EN (03/01/2012)

Downloaded from www.Manualslib.com manuals search engine

DIMENSIONS AND LOAD CHART

M 40-4 Turbo Série 3-E3

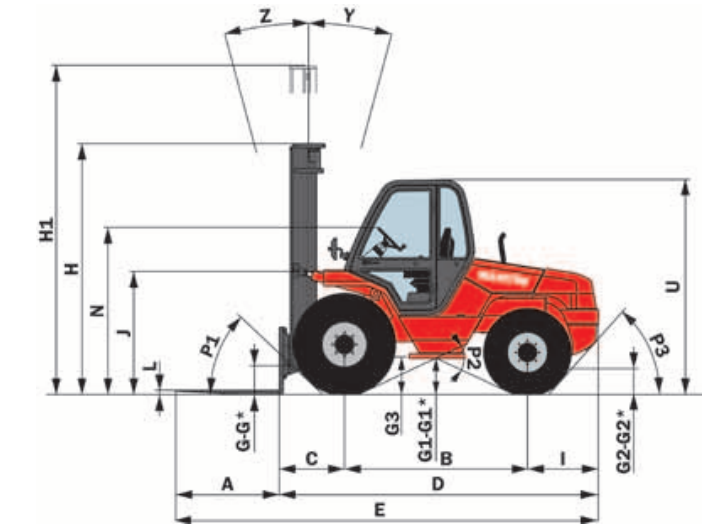

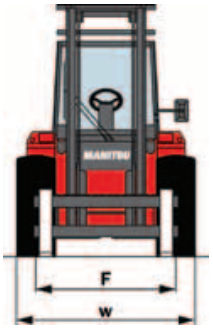

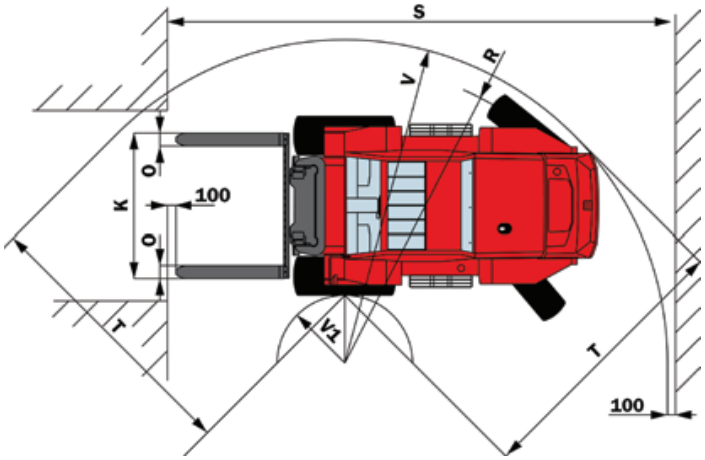

A	mm	1200
B	mm	2124
C	mm	762
D	mm	3745
E	mm	4945
F	mm	1620
F1	mm	1740
G	mm	265
G*	mm	210
G1	mm	375
G1*	mm	355
G2	mm	340
G2*	mm	315
G3	mm	360
H	mm	2910
H1	mm	4815
I	mm	859
J	mm	1435
K	mm	1670
L	mm	50
N	mm	1925
O	mm	150
P1	°	43,5
P2	°	50
P3	°	48,5
R	mm	3985
S	mm	6327
T	mm	3363
U	mm	2495
V	mm	4155
V1	mm	1120
W	mm	2050
Y	°	15
Z	°	15

RATED CAPACITY ▶

ACTUAL CAPACITIES (according to standard EN 1726-1) ▶

1 - Up to height of ▶

2 - For maximum height of ▶

VERTICAL MAST ▶

ATTACHMENT ▶

ACTUAL CAPACITIES ▶

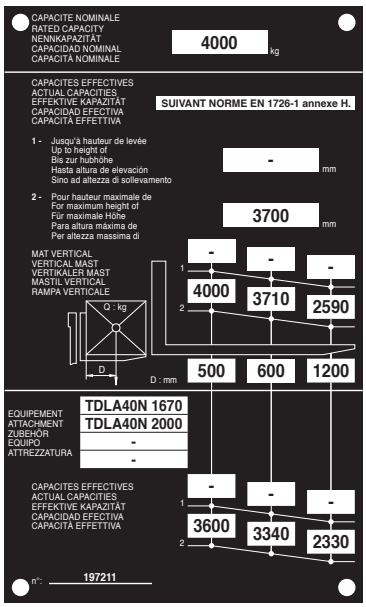

G - G1 - G2 - G3 = Unladen
G* - G1* - G2* = Rated load
H - H1 = Standard mast DUPLEX 3M70

647003 EN (03/01/2012)

Downloaded from www.Manualslib.com manuals search engine

duma rent
https://truckmanualshub.com
Torkonjestraat 23
8510 Marke
Belgium
056 / 222 111
info@dumarent.be
www.dumarent.be

DIMENSIONS AND LOAD CHART

M 50-4 Turbo Série 3-E3

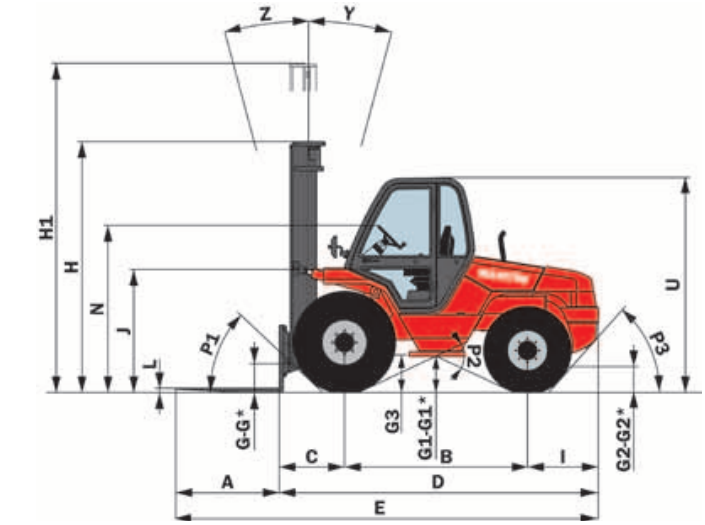

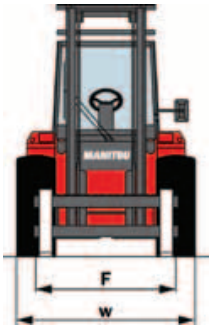

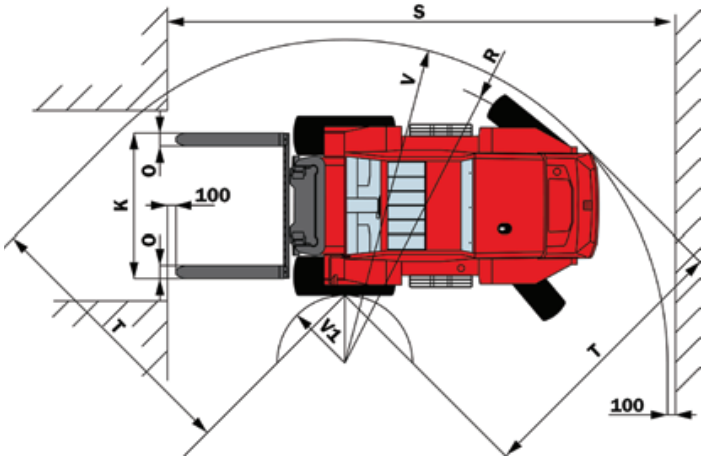

A	mm	1200
B	mm	2124
C	mm	762
D	mm	3745
E	mm	4945
F	mm	1620
F1	mm	1740
G	mm	265
G*	mm	210
G1	mm	375
G1*	mm	355
G2	mm	310
G2*	mm	335
G3	mm	360
H	mm	2910
H1	mm	4815
I	mm	859
J	mm	1435
K	mm	1670
L	mm	50
N	mm	1925
O	mm	150
P1	°	43,5
P2	°	50
P3	°	48,5
R	mm	3985
S	mm	6337
T	mm	3363
U	mm	2495
V	mm	4155
V1	mm	1120
W	mm	2080
Y	°	15
Z	°	15

RATED CAPACITY ▶

ACTUAL CAPACITIES (according to standard EN 1726-1) ▶

1 - Up to height of ▶

2 - For maximum height of ▶

VERTICAL MAST ▶

ATTACHMENT ▶

ACTUAL CAPACITIES ▶

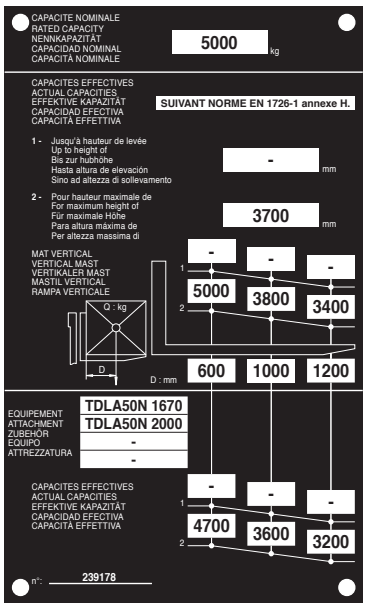

G - G1 - G2 - G3 = Unladen
G* - G1* - G2* = Rated load
H - H1 = Standard mast DUPLEX 3M70

647003 EN (03/01/2012)

Downloaded from www.Manualslib.com manuals search engine

DIMENSIONS AND LOAD CHART

MC 40 Turbo POWERSHIFT Série 3-E3

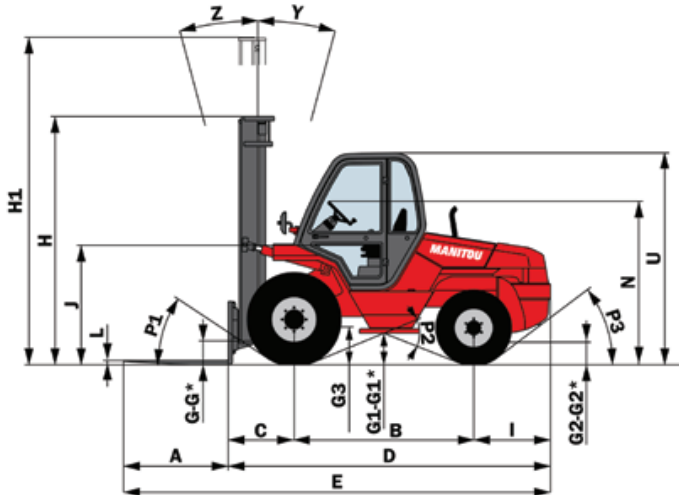

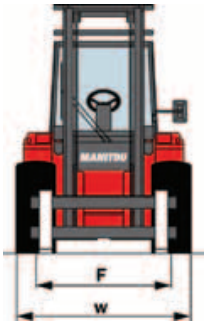

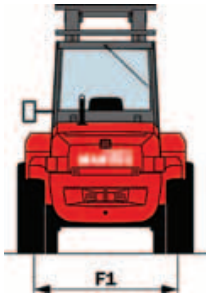

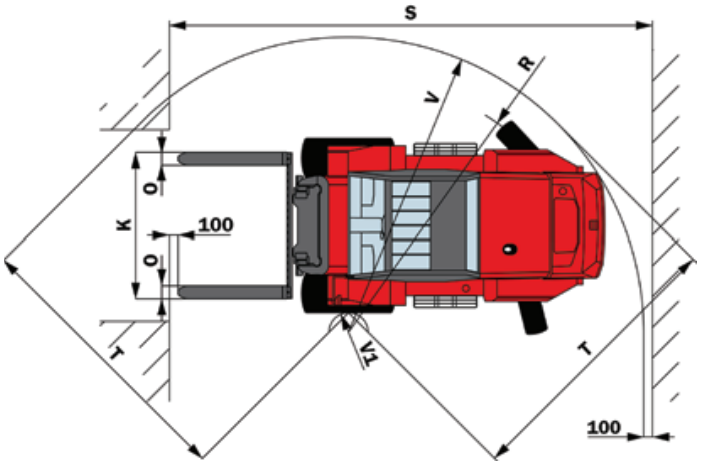

A	mm	1200
B	mm	2063
C	mm	762
D	mm	3745
E	mm	4945
F	mm	1600
F1	mm	1640
G	mm	265
G*	mm	210
G1	mm	365
G1*	mm	345
G2	mm	290
G2*	mm	315
G3	mm	360
H	mm	2855
H1	mm	4750
I	mm	920
J	mm	1380
K	mm	1670
L	mm	50
N	mm	1840/1900
O	mm	150
P1	°	33,5
P2	°	44
P3	°	37
R	mm	2970
S	mm	5560
T	mm	3255
U	mm	2420
V	mm	3395
V1	mm	200
W	mm	2060
Y	°	15
Z	°	15

RATED CAPACITY ▶

ACTUAL CAPACITIES (according to standard EN 1726-1) ▶

1 - Up to height of ▶

2 - For maximum height of ▶

VERTICAL MAST ▶

ATTACHMENT ▶

ACTUAL CAPACITIES ▶

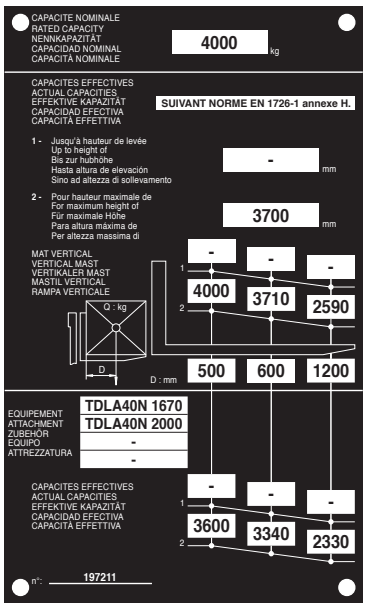

G - G1 - G2 - G3 = Unladen
G* - G1* - G2* = Rated load
H - H1 = Standard mast DUPLEX 3M70

647003 EN (03/01/2012)

Downloaded from www.Manualslib.com manuals search engine

DIMENSIONS AND LOAD CHART

MC 50 Turbo POWERSHIFT Série 3-E3

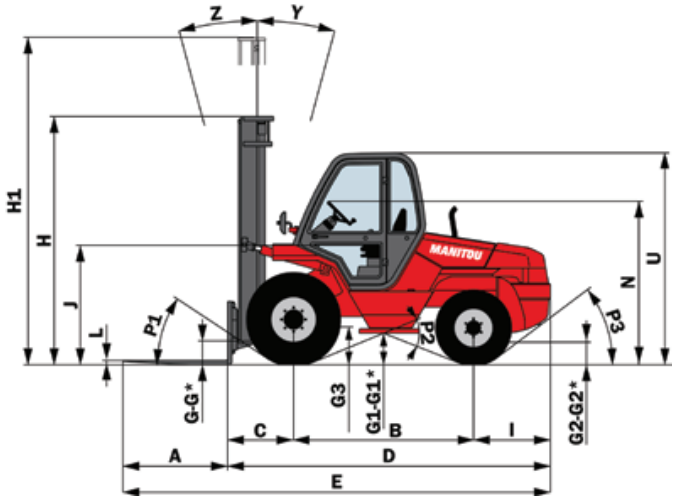

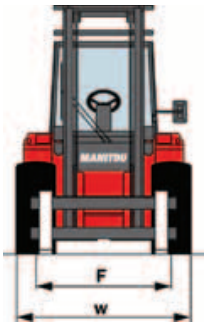

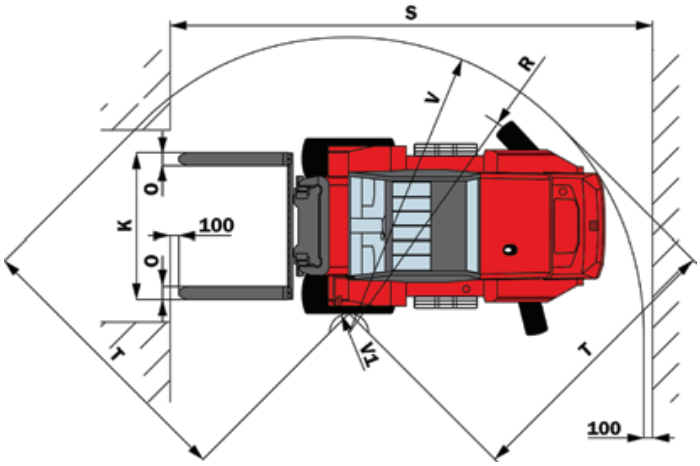

A	mm	1200
B	mm	2063
C	mm	772
D	mm	3755
E	mm	4955
F	mm	1600
F1	mm	1640
G	mm	265
G*	mm	210
G1	mm	365
G1*	mm	345
G2	mm	290
G2*	mm	315
G3	mm	360
H	mm	2855
H1	mm	4750
I	mm	920
J	mm	1380
K	mm	1670
L	mm	50
N	mm	1840/1900
O	mm	150
P1	°	33,5
P2	°	44
P3	°	37
R	mm	2970
S	mm	5570
T	mm	3255
U	mm	2420
V	mm	3395
V1	mm	200
W	mm	2060
Y	°	15
Z	°	15

RATED CAPACITY ▶

ACTUAL CAPACITIES (according to standard EN 1726-1) ▶

1 - Up to height of ▶

2 - For maximum height of ▶

VERTICAL MAST ▶

ATTACHMENT ▶

ACTUAL CAPACITIES ▶

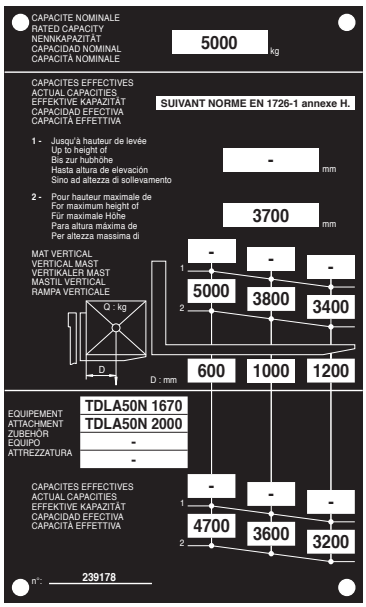

G - G1 - G2 - G3 = Unladen
G* - G1* - G2* = Rated load
H - H1 = Standard mast DUPLEX 3M70

647003 EN (03/01/2012)

Downloaded from www.Manualslib.com manuals search engine

DIMENSIONS AND LOAD CHART

MC 60 Turbo POWERSHIFT Série 3-E3

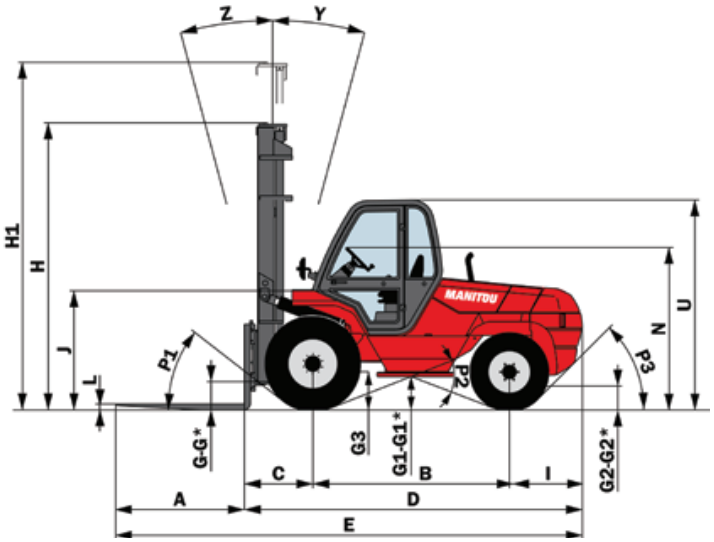

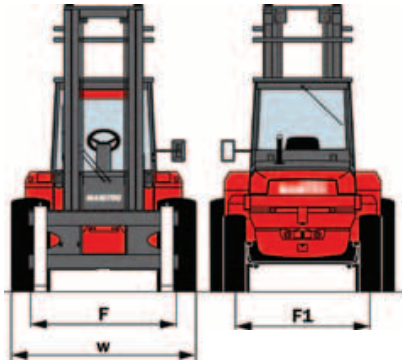

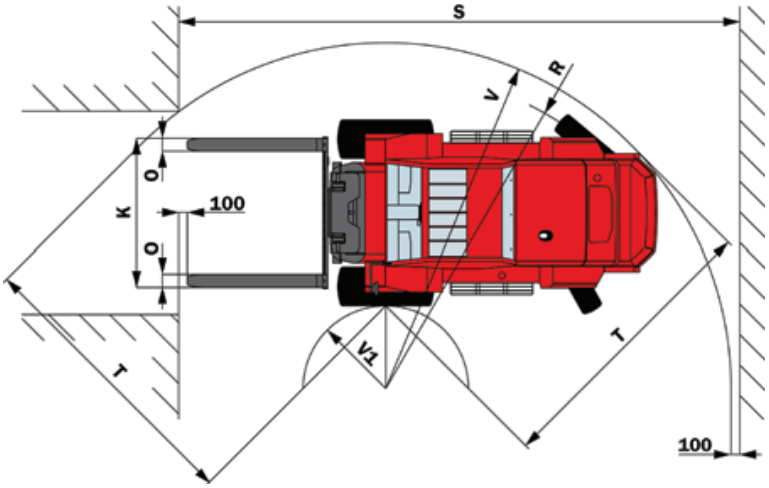

A	mm	1500
B	mm	2293
C	mm	803
D	mm	3960
E	mm	5460
F	mm	1700
F1	mm	1580
G	mm	320
G*	mm	285
G1	mm	390
G1*	mm	370
G2	mm	305
G2*	mm	330
G3	mm	390
H	mm	3405
H1	mm	5405
I	mm	864
J	mm	1390
K	mm	1750
L	mm	70
N	mm	1860/1920
O	mm	150
P1	°	38
P2	°	42,5
P3	°	45
R	mm	3625
S	mm	6500
T	mm	3460
U	mm	2440
V	mm	3995
V1	mm	760
W	mm	2150
Y	°	15
Z	°	15

G - G1 - G2 - G3 = Unladen
G* - G1* - G2* = Rated load
H - H1 = Standard mast DUPLEX 4M00

RATED CAPACITY ▶

ACTUAL CAPACITIES **(according to standard EN 1726-1)** ▶

1 - Up to height of ▶

2 - For maximum height of ▶

VERTICAL MAST ▶

ATTACHMENT ▶

ACTUAL CAPACITIES ▶

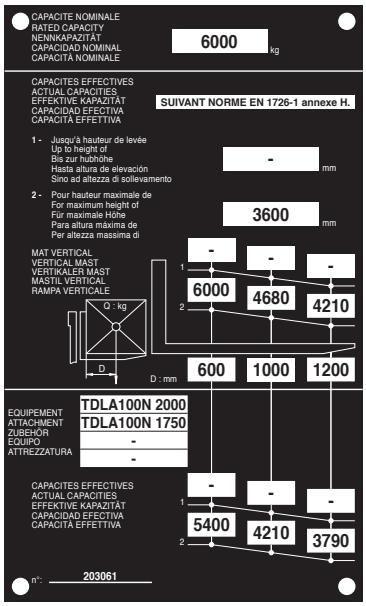

647003 EN (03/01/2012)

Downloaded from www.Manualslib.com manuals search engine

duma rent
https://truckmanualshub.com
Torkonjestraat 23
8510 Marke
Belgium
056 / 222 111
info@dumarent.be
www.dumarent.be

DIMENSIONS AND LOAD CHART

MC 70 Turbo POWERSHIFT Série 3-E3

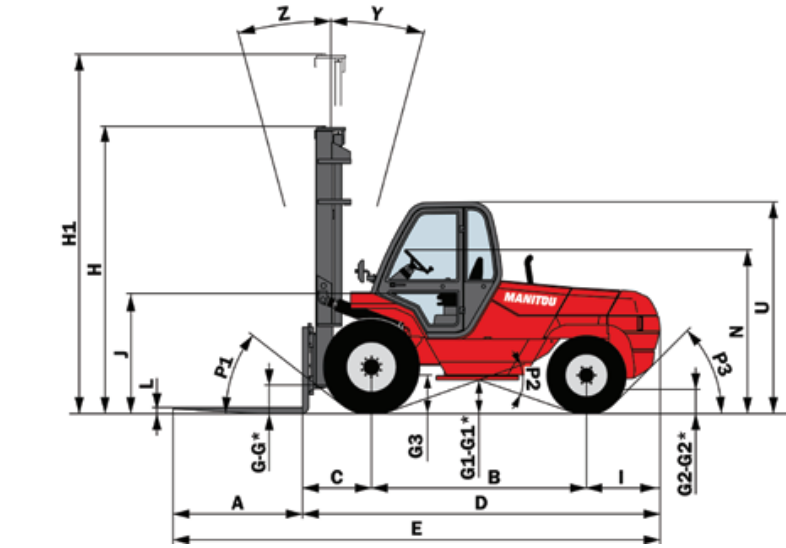

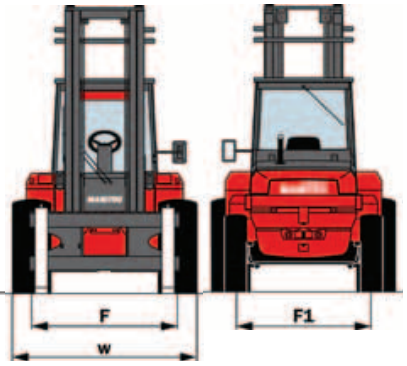

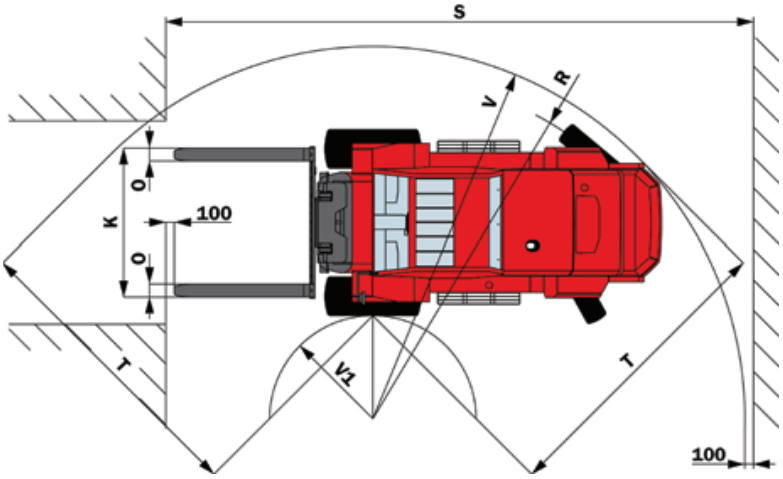

A	mm	1500
B	mm	2493
C	mm	803
D	mm	4160
E	mm	5660
F	mm	1700
F1	mm	1580
G	mm	320
G*	mm	270
G1	mm	385
G1*	mm	375
G2	mm	305
G2*	mm	335
G3	mm	390
H	mm	3405
H1	mm	5405
I	mm	864
J	mm	1390
K	mm	1750
L	mm	70
N	mm	1860/1920
O	mm	150
P1	°	38
P2	°	38,5
P3	°	45
R	mm	3840
S	mm	6715
T	mm	3510
U	mm	2440
V	mm	4210
V1	mm	995
W	mm	2150
Y	°	15
Z	°	15

RATED CAPACITY ▶

ACTUAL CAPACITIES (according to standard EN 1726-1) ▶

1 - Up to height of ▶

2 - For maximum height of ▶

VERTICAL MAST ▶

ATTACHMENT ▶

ACTUAL CAPACITIES ▶

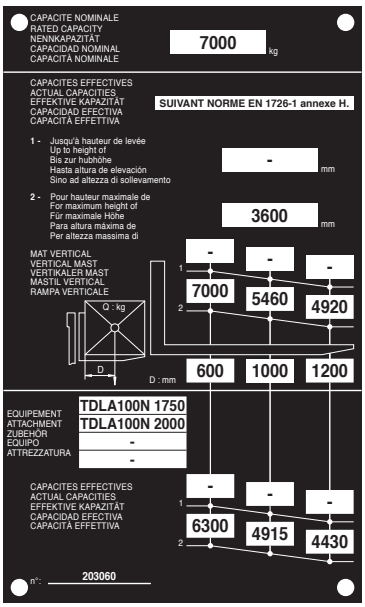

G - G1 - G2 - G3 = Unladen
G* - G1* - G2* = Rated load
H - H1 = Standard mast DUPLEX 4M00

647003 EN (03/01/2012)

Downloaded from www.Manualslib.com manuals search engine

Downloaded from www.Manualslib.com manuals search engine

INSTRUMENTS AND CONTROLS

MC 30 Turbo Série 3-E3

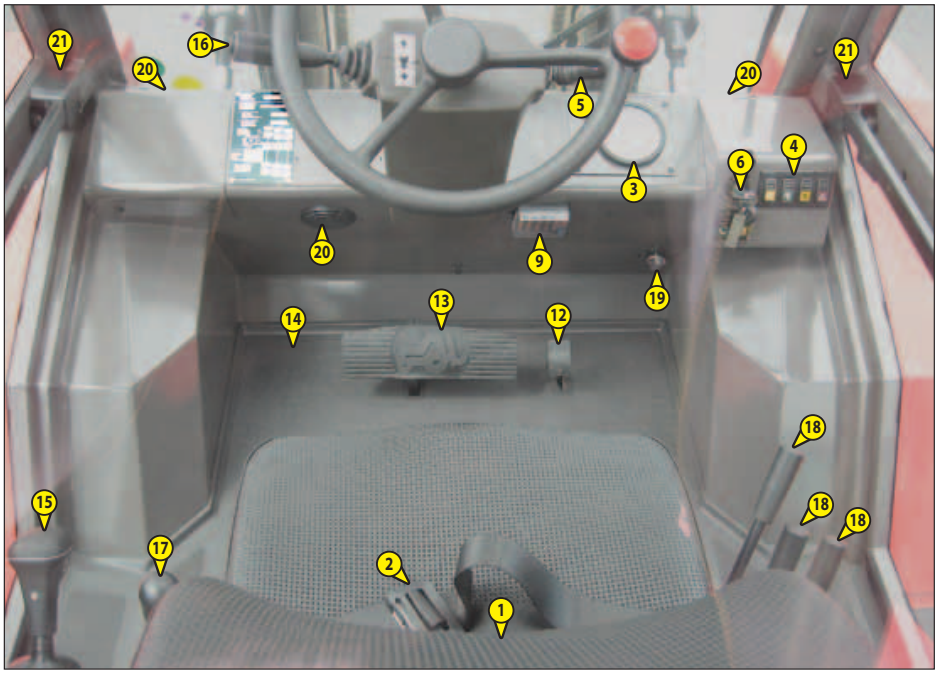

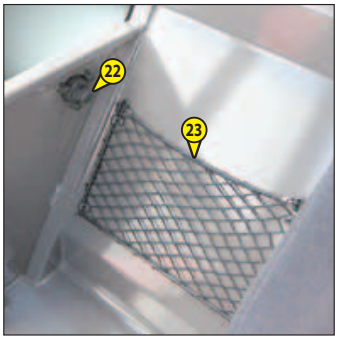

647003 EN (03/01/2012)

Downloaded from www.Manualslib.com manuals search engine

DESCRIPTION

1 - DRIVER'S SEAT
2 - SAFETY BELT
3 - CONTROL AND SIGNAL LIGHTS PANEL
4 - SWITCHES
5 - HORN SWITCH
5 - LIGHT SWITCH, HORN AND INDICATORS (OPTION)
6 - IGNITION SWITCH
7 - BRAKING OIL TANK
8 - WINDSCREEN WASHER TANK
9 - FUSES AND RELAYS IN THE CAB
10 - FUSES AND RELAYS UNDER THE ENGINE HOOD (NOT ILLUSTRATED)
11 - ROOF LIGHT (OPTION)
12 - ACCELERATOR PEDAL
13 - SERVICE BRAKE PEDAL AND TRANSMISSION CUT-OFF
14 - DIFFERENTIAL LOCK PUSH-BUTTON
15 - GEAR LEVER AND TRANSMISSION CUT-OFF
16 - FORWARD/NEUTRAL/REVERSE GEAR SELECTION
17 - PARKING BRAKE LEVER
18 - HYDRAULIC CONTROLS
19 - HEATER CONTROL (OPTION)
20 - HEATING VENTS (OPTION)
21 - DOOR LOCKS (OPTION)
22 - DOOR RELEASE SWITCHES (OPTION)
23 - DOCUMENT HOLDER NET
24 - FRONT LIGHTS (NOT ILLUSTRATED) (OPTION)
25 - REAR LIGHT (NOT ILLUSTRATED) (OPTION)
26 - LEVEL INDICATOR

NOTE: All the terms such as: RIGHT, LEFT, FRONT, REAR are meant for an observer seated on driver's seat and looking in front of him.

Downloaded from www.Manualslib.com manuals search engine

INSTRUMENTS AND CONTROLS

M 26-2 Turbo Série 3-E3
M 30-2 Turbo Série 3-E3
M 40-4 Turbo Série 3-E3
M 26-4 Turbo Série 3-E3
M 30-4 Turbo Série 3-E3
M 50-4 Turbo Série 3-E3

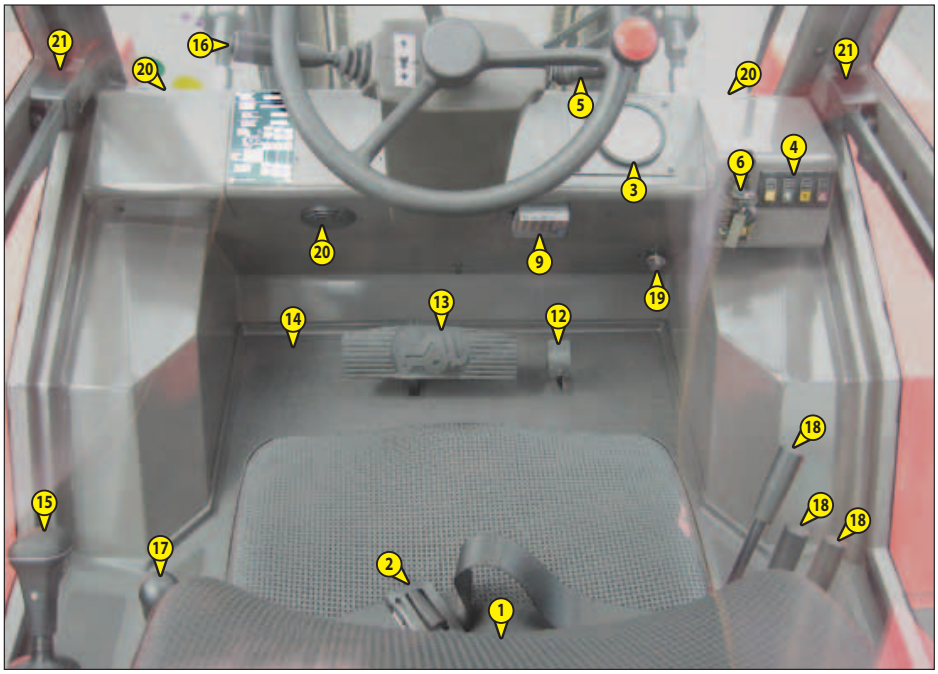

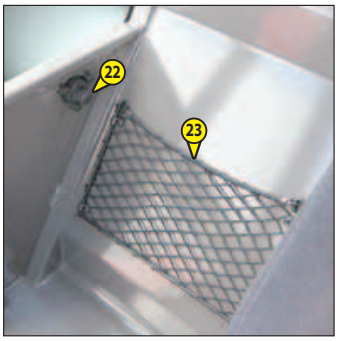

647003 EN (03/01/2012)

Downloaded from www.Manualslib.com manuals search engine

DESCRIPTION

1 - DRIVER'S SEAT
2 - SAFETY BELT
3 - CONTROL AND SIGNAL LIGHTS PANEL
4 - SWITCHES
5 - LIGHTS, HORN AND INDICATOR SWITCH
6 - IGNITION SWITCH
7 - BRAKING OIL TANK
8 - WINDSCREEN WASHER TANK
9 - FUSES AND RELAYS IN THE CAB
10 - FUSES AND RELAYS UNDER THE ENGINE HOOD (NOT ILLUSTRATED)
11 - ROOF LIGHT
12 - ACCELERATOR PEDAL
13 - SERVICE BRAKE PEDAL AND TRANSMISSION CUT-OFF
14 - DIFFERENTIAL LOCK PUSH-BUTTON
15 - GEAR LEVER AND TRANSMISSION CUT-OFF
16 - FORWARD/NEUTRAL/REVERSE GEAR SELECTION
17 - PARKING BRAKE LEVER
18 - HYDRAULIC CONTROLS
19 - HEATER CONTROL
20 - HEATING VENTS
21 - DOOR LOCKS
22 - DOOR RELEASE BUTTONS
23 - DOCUMENT HOLDER NET
24 - FRONT LIGHTS (NOT ILLUSTRATED)
25 - REAR LIGHTS (NOT ILLUSTRATED)
26 - LEVEL INDICATOR

NOTE: All the terms such as: RIGHT, LEFT, FRONT, REAR are meant for an observer seated on driver's seat and looking in front of him.

Downloaded from www.Manualslib.com manuals search engine

duma rent
https://truckmanualshub.com
Torkonjestraat 23
8510 Marke
Belgium
056 / 222 111
info@dumarent.be
www.dumarent.be

INSTRUMENTS AND CONTROLS

MC 40 Turbo POWERSHIFT Série 3-E3
MC 50 Turbo POWERSHIFT Série 3-E3
MC 60 Turbo POWERSHIFT Série 3-E3
MC 70 Turbo POWERSHIFT Série 3-E3

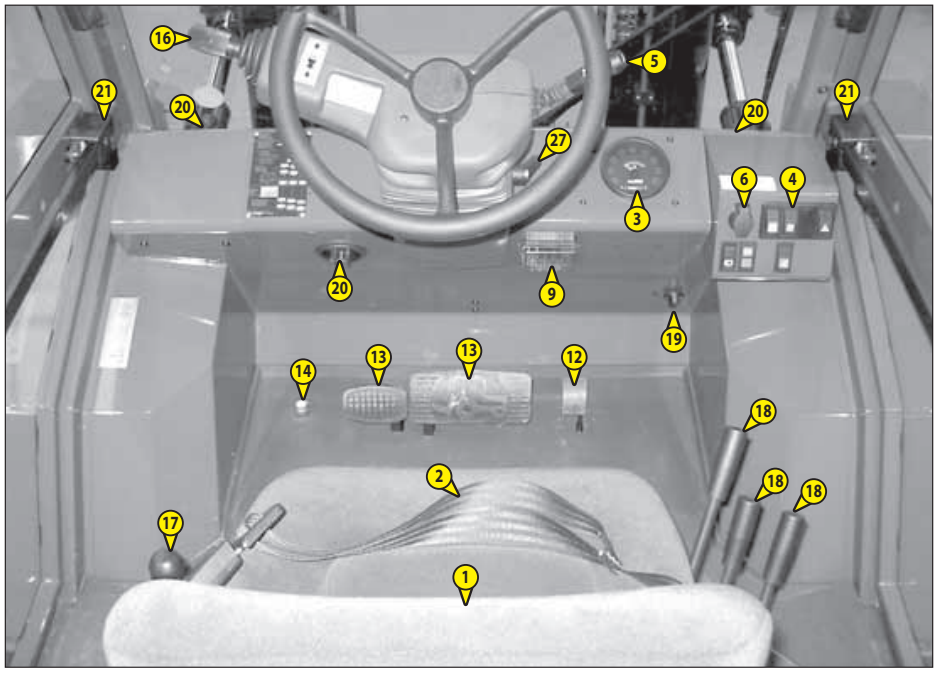

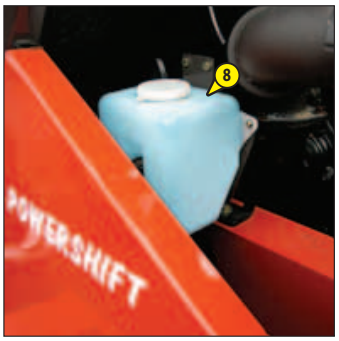

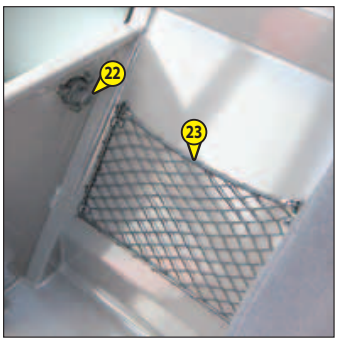

647003 EN (03/01/2012)

Downloaded from www.Manualslib.com manuals search engine

DESCRIPTION

1 - DRIVER'S SEAT
2 - SAFETY BELT
3 - CONTROL AND SIGNAL LIGHTS PANEL
4 - SWITCHES
5 - LIGHTS, HORN AND INDICATOR SWITCH
6 - IGNITION SWITCH
7 - BRAKING OIL TANK
8 - WINDSCREEN WASHER TANK
9 - FUSES AND RELAYS IN THE CAB
10 - FUSES AND RELAYS UNDER THE ENGINE HOOD (NOT ILLUSTRATED)
11 - ROOF LIGHT
12 - ACCELERATOR PEDAL
13 - SERVICE BRAKE PEDAL AND TRANSMISSION CUT-OFF
14 - DIFFERENTIAL LOCK PUSH-BUTTON
16 - FORWARD/NEUTRAL/REVERSE AND GEAR SELECTOR
17 - PARKING BRAKE LEVER
18 - HYDRAULIC CONTROLS
19 - HEATER CONTROL
20 - HEATING VENTS
21 - DOOR LOCKS
22 - DOOR RELEASE BUTTONS
23 - DOCUMENT HOLDER NET
24 - FRONT LIGHTS (NOT ILLUSTRATED)
25 - REAR LIGHTS (NOT ILLUSTRATED)
26 - LEVEL INDICATOR
27 - STEERING WHEEL ADJUSTMENT LEVER

NOTE: All the terms such as: RIGHT, LEFT, FRONT, REAR are meant for an observer seated on driver's seat and looking in front of him.

Downloaded from www.Manualslib.com manuals search engine

1 - DRIVER'S SEAT

MC 30 Turbo Série 3-E3 M 26-2 Turbo Série 3-E3 M 26-4 Turbo Série 3-E3
M 30-2 Turbo Série 3-E3 M 30-4 Turbo Série 3-E3
M 40-4 Turbo Série 3-E3 M 50-4 Turbo Série 3-E3

DESIGNED FOR MAXIMUM COMFORT, THIS SEAT CAN BE ADJUSTED AS FOLLOWS.

LONGITUDINAL ADJUSTMENT
- Pull locking lever 1 towards the right.
- Slide the seat to the desired position.
- Release the lever and be sure it returns to the lock position.

SEAT SUSPENSION ADJUSTMENT
- Refer to the seat's graduation.
- Turn handle 2 depending on the driver's weight.

ANGLE ADJUSTMENT OF THE BACK-REST
- Pull locking lever 3 upwards.
- Slide the back-rest to the required position.
- Release the locking lever and ensure it returns to the lock position.

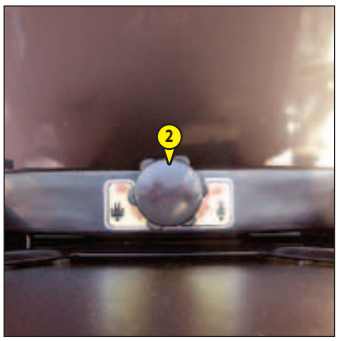

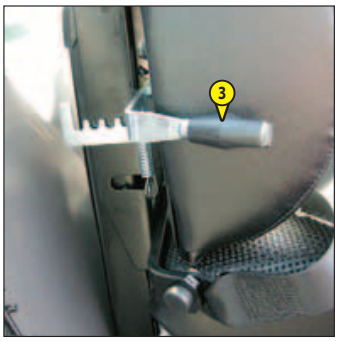

1 - DRIVER'S SEAT

MC 40 Turbo POWERSHIFT Série 3-E3
MC 50 Turbo POWERSHIFT Série 3-E3
MC 60 Turbo POWERSHIFT Série 3-E3
MC 70 Turbo POWERSHIFT Série 3-E3

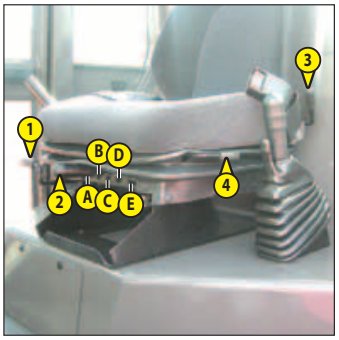

DESIGNED FOR MAXIMUM COMFORT, THIS SEAT CAN BE ADJUSTED AS FOLLOWS.

LONGITUDINAL ADJUSTMENT
- Pull the locking lever 1 upwards.
- Slide the seat to the desired position.
- Release the lever and be sure it returns to the lock position.

SEAT SUSPENSION ADJUSTMENT
- Pull and lift up the locking lever 2 so as to place it into one of these five positions.
  Position A: Light-weight driver (50 kg).
  Position B: Intermediate.
  Position C: Middle-weight driver.
  Position D: Intermediate.
  Position E: Heavy-weight driver (120 kg).

ANGLE ADJUSTMENT OF THE BACK-REST
- Pull the locking lever 3 backwards.
- Tilt the back-rest into one of the three possible positions.
- Release the lever and be sure it returns to the lock position.

ANGLE ADJUSTMENT OF THE WHOLE SEAT
- Lift up the locking lever 4.
- Tilt the seat forwards or backwards.
- Release the locking lever and ensure it returns to the lock position.

Downloaded from www.Manualslib.com manuals search engine

1 - BASIC PNEUMATIC DRIVER'S SEAT (OPTION)

DESIGNED FOR MAXIMUM COMFORT, THIS SEAT CAN BE ADJUSTED AS FOLLOWS.

WEIGHT ADJUSTMENT (FIG. A)
It is advised that you adjust the seat according to your weight when sitting.
- Switch on lift truck ignition.
- Push or pull lever 1 until green appears in display 2 indicating correct adjustment according to your weight.

NOTE: To avoid any health problems, it is recommended that the weight should be checked and adjusted before starting up the lift truck.

SEAT HEIGHT ADJUSTMENT (FIG. B)
When weight adjustment has been carried out, you can then modify seat height.
- Keep the ignition on in the lift truck.
- Push or pull lever 1 until green appears and adjust the height of the seat while checking that the green in display 2 remains visible.

To avoid causing any damage, do not activate the compressor for over 1 minute.

SEAT BACK-REST ANGLE ADJUSTMENT (FIG. C)
The back-rest angle of the seat may be adjusted to suit the individual.
- Press the left-hand button while pushing on the seat or relaxing pressure on the seat to find a comfortable position.

SEAT DEPTH ADJUSTMENT (FIG. D)
The depth of the seat may be adjusted to suit the individual.
- Press the right-hand button while raising or lowering the seat to find the desired position.

EXTENDING THE HEAD-REST (FIG. E)
- The height of the back-rest can be adjusted by pulling it upwards (the notches will click) up to the stop.
- The head-rest can be removed by applying sufficient pressure to pull it off the stop.

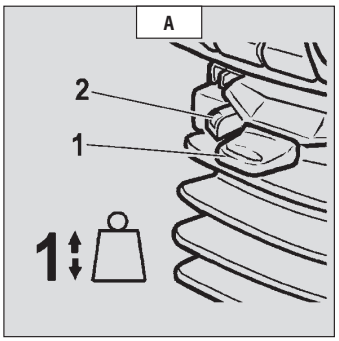

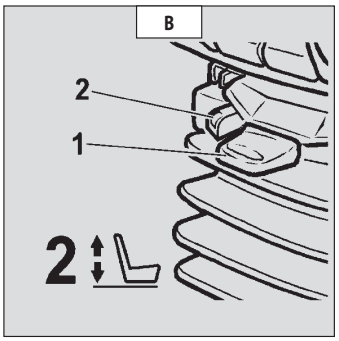

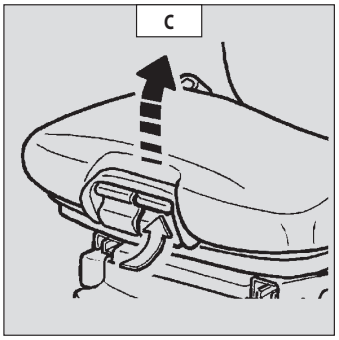

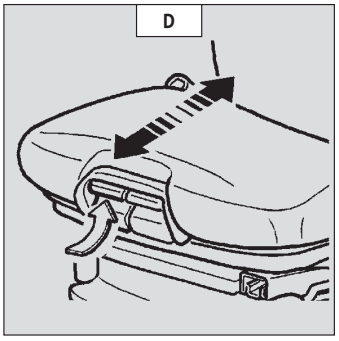

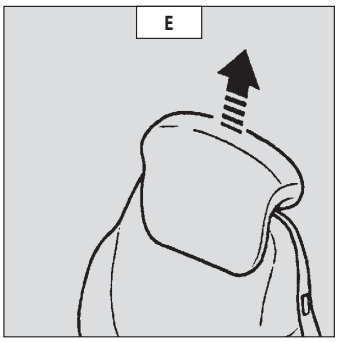

Downloaded from www.Manualslib.com manuals search engine

LUMBAR ADJUSTMENT (FIG. F)
This increases the comfort of the seat and the driver's freedom of movement.
- Turn the handle either left or right to adjust the height or depth of the lumbar support.

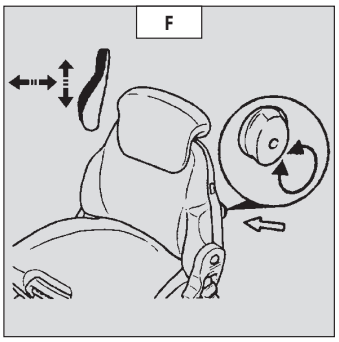

ADJUSTMENT OF THE ANGLE OF THE BACK-REST (FIG. G)
- Support the back-rest, pull the lever and position the back-rest to find the desired position.

If you do not support the back-rest when making adjustments, it swings completely forwards.

HORIZONTAL SHOCK ABSORBER (FIG. H)
In certain conditions (e.g. driving with a trailer) it is advised that a horizontal shock absorber be used. The driver's seat is thus better able to absorb jerks in the direction of travel.
- Position 1: Horizontal shock absorber fitted.
- Position 2: Horizontal shock absorber removed.

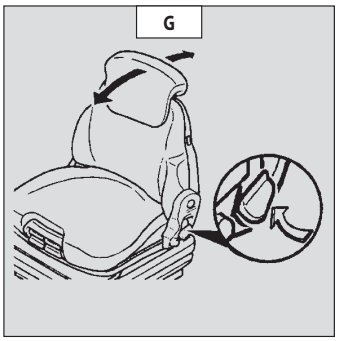

LONGITUDINAL ADJUSTMENT (FIG. I)
- Adjust the locking lever until you reach the position required. This then locks and the seat will not shift into another position.

SERVICING (FIG. J)
Dirt may adversely affect the correct functioning of the seat. For this reason, make sure your seat is always clean.
- To clean or change the cushions, simply remove them from the seat frame.

A rocking head-rest increases the risk of an accident !

Avoid wetting the cushion fabric when cleaning. Check the resistance of the fabric on a small hidden area before using any fabric or plastic cleaner.

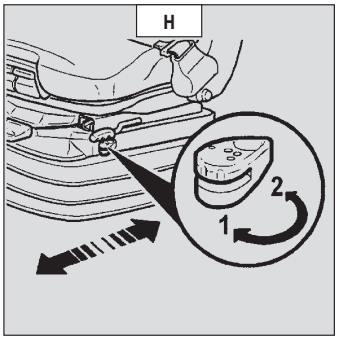

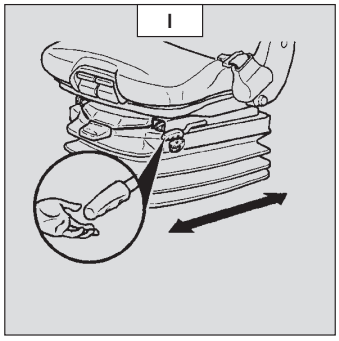

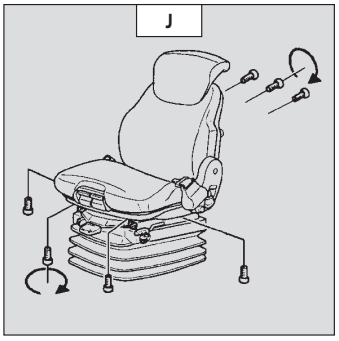

2 - SAFETY BELT

- Sit correctly on the seat.
- Check that seat belt is not twisted.
- Place the seat belt at hip level.
- Attach the seat belt and check that it locks.
- Adjust the seat belt to your body shape without squeezing your hip and without over-slack.

In no event should the lift truck be used if the seat belt is defective (fixing, locking, cuts, tears, etc.). Repair or replace the seat belt immediately.

Downloaded from www.Manualslib.com manuals search engine

duma rent
https://truckmanualshub.com
Torkonjestraat 23
8510 Marke
Belgium
056 / 222 111
info@dumarent.be
www.dumarent.be

3 - CONTROL AND SIGNAL LIGHTS PANEL

MC 30 Turbo Série 3-E3 M 26-2 Turbo Série 3-E3 M 26-4 Turbo Série 3-E3
M 30-2 Turbo Série 3-E3 M 30-4 Turbo Série 3-E3
M 40-4 Turbo Série 3-E3 M 50-4 Turbo Série 3-E3

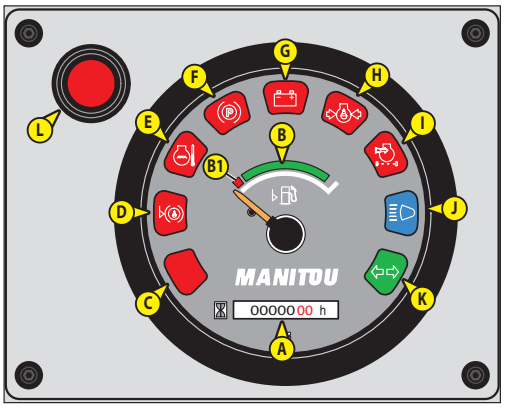

CONTROL INSTRUMENTS

A - HOURMETER

B - FUEL LEVEL
Red zone B1 indicates that you are using the reserve supply and that time of use is limited.

SIGNAL LIGHTS

When activating the electrical system of the lift truck, all the red lamps and the panel's buzzer must light to indicate their good working order. If one of the red lamps or the buzzer does not function, carry out the necessary repairs.

RED TRANSMISSION OIL TEMPERATURE INDICATOR LIGHT
The lamp and the buzzer come on when the gear box oil temperature is abnormally high. Stop the lift truck and look for the cause of this overheating.

RED BRAKING OIL LEVEL LAMP
If the lamp and the buzzer come on, when the lift truck is running, stop the I.C. engine immediately and check the braking oil level. In the event of an abnormal dropping of the level, consult your dealer.

RED I.C. ENGINE WATER TEMPERATURE LAMP
If the lamp and the buzzer come on when the lift truck is running, stop the I.C. engine immediately and investigate the cooling circuit for the cause of the malfunction.

RED PARKING BRAKE LAMP
This lamp comes on when the parking brake is applied.

RED BATTERY CHARGE WARNING INDICATOR LIGHT
If the red lamps and the buzzer come on, when the lift truck is running, stop the I.C. engine immediately and check the electrical circuit as well as the alternator belt.

RED I.C. ENGINE OIL PRESSURE LAMP
If the lamp and the buzzer come on when the lift truck is running, stop the I.C. engine immediately and look for the cause (see oil level in I.C. engine crankcase).

RED AIR FILTER CLOGGING INDICATOR LAMP
The lamp and the buzzer come on when the air filter cartridge is clogged up. Stop the lift truck and carry out the necessary repairs (see cleaning and replacement requirements in chapter: 3 - MAINTENANCE: FILTERS CARTRIDGES AND BELTS).

BLUE MAIN BEAM LAMP
Optional for MC 30 Série 3-E3

GREEN DIRECTION INDICATOR LAMP
Optional for MC 30 Série 3-E3

RED GEAR BOX OIL PRESSURE INDICATOR LIGHT
This lamp and buzzer come on when there is an abnormal drop in gear box pressure, in forward gear. Stop the lift truck and look for the cause (e.g., Low oil level in the transmission, internal leak in the transmission, etc.).
NOTE: The signal light operates in forward travel conditions only, the signal should not be taken into account when the I.C. engine is running at idle or is stopped.

Downloaded from www.Manualslib.com manuals search engine

3 - CONTROL AND SIGNAL LIGHTS PANEL

MC 40 Turbo POWERSHIFT Série 3-E3
MC 50 Turbo POWERSHIFT Série 3-E3
MC 60 Turbo POWERSHIFT Série 3-E3
MC 70 Turbo POWERSHIFT Série 3-E3

CONTROL INSTRUMENTS

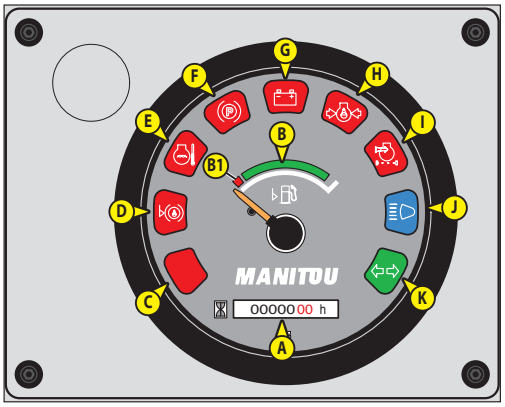

A - HOURMETER

B - FUEL LEVEL
Red zone B1 indicates that you are using the reserve supply and that time of use is limited.

SIGNAL LIGHTS

When activating the electrical system of the lift truck, all the red lamps and the panel's buzzer must light to indicate their good working order. If one of the red lamps or the buzzer does not function, carry out the necessary repairs.

RED TRANSMISSION OIL TEMPERATURE INDICATOR LIGHT
The lamp and the buzzer come on when the gear box oil temperature is abnormally high. Stop the lift truck and look for the cause of this overheating.

RED BRAKING OIL LEVEL LAMP
If the lamp and the buzzer come on, when the lift truck is running, stop the I.C. engine immediately and check the braking oil level. In the event of an abnormal dropping of the level, consult your dealer.

RED I.C. ENGINE WATER TEMPERATURE LAMP
If the lamp and the buzzer come on when the lift truck is running, stop the I.C. engine immediately and investigate the cooling circuit for the cause of the malfunction.

RED PARKING BRAKE LAMP
This lamp comes on when the parking brake is applied.

RED BATTERY CHARGE WARNING INDICATOR LIGHT
If the red lamps and the buzzer come on, when the lift truck is running, stop the I.C. engine immediately and check the electrical circuit as well as the alternator belt.

RED I.C. ENGINE OIL PRESSURE LAMP
If the lamp and the buzzer come on when the lift truck is running, stop the I.C. engine immediately and look for the cause (see oil level in I.C. engine crankcase).

RED AIR FILTER CLOGGING INDICATOR LAMP
The lamp and the buzzer come on when the air filter cartridge is clogged up. Stop the lift truck and carry out the necessary repairs (see cleaning and replacement requirements in chapter: 3 - MAINTENANCE: FILTERS CARTRIDGES AND BELTS).

BLUE MAIN BEAM LAMP

GREEN DIRECTION INDICATOR LAMP

Downloaded from www.Manualslib.com manuals search engine

duma rent
https://truckmanualshub.com
Torkonjestraat 23
8510 Marke
Belgium
056 / 222 111
info@dumarent.be
www.dumarent.be

4 - SWITCHES

NOTE: The location of the switches may vary depending on the options.

A - FRONT WINDSCREEN WIPER AND WINDSCREEN WASHER
This switch, when set to the "intermediate" position, the windscreen wiper to be operated and the "down" position and simultaneously pressed, the windscreen-washer to be operated.

B - HEATING FAN
Optional for MC 30 Série 3-E3
This two speed switch allows warm or cold air to pass through the heating ventilators.

C - TRANSMISSION CUT-OFF
MC 30 Turbo Série 3-E3 M 26-2 Turbo Série 3-E3 M 26-4 Turbo Série 3-E3
M 30-2 Turbo Série 3-E3 M 30-4 Turbo Série 3-E3
M 40-4 Turbo Série 3-E3 M 50-4 Turbo Série 3-E3
The switch selects transmission cut-off to the service brake pedal.
Position 1: Indicator light on, transmission cut-off to service brake pedal effected.
Position 2: Indicator light on, transmission cut-off to service brake pedal effected.
NOTE: In all cases transmission cut-off can be effected using the gear lever.

C - OPTION
MC 40 Turbo POWERSHIFT Série 3-E3 MC 50 Turbo POWERSHIFT Série 3-E3

C - TRANSMISSION CUT-OFF
MC 60 Turbo POWERSHIFT Série 3-E3 MC 70 Turbo POWERSHIFT Série 3-E3
The switch selects transmission cut-off to the service brake pedal.
Position 1: Indicator light on, transmission cut-off to service brake pedal effected.
Position 2: Indicator light on, transmission cut-off to service brake pedal effected.

D - WARNING LIGHTS
Optional for MC 30 Série 3-E3
This switch enables the L.H. and R.H. Indicators to be switched on simultaneously, with the ignition off. The signal light indicates that the switch is being used.

E - REAR WINDSCREEN WIPER + OPTIONAL ROOF WINDSCREEN WIPER
Optional for MC 30 Série 3-E3

F - OPTION
MC 30 Turbo Série 3-E3 M 26-2 Turbo Série 3-E3 M 30-2 Turbo Série 3-E3

F - REAR AXLE CLUTCH
M 26-4 Turbo Série 3-E3 M 40-4 Turbo Série 3-E3
M 30-4 Turbo Série 3-E3 M 50-4 Turbo Série 3-E3
This switch allows the lift truck to be used in two- or four-wheel drive mode.
- 2-Wheel drive: Switch in position 1, indicator light off.
- 4-Wheel drive: Switch in position 2, indicator light on.

F - DIFFERENTIAL LOCK INDICATOR LIGHT
MC 40 Turbo POWERSHIFT Série 3-E3 MC 60 Turbo POWERSHIFT Série 3-E3
MC 50 Turbo POWERSHIFT Série 3-E3 MC 70 Turbo POWERSHIFT Série 3-E3
This orange indicator light comes on when you press on the differential lock push-button switch.

G - REVOLVING LIGHT OPTION

H - FRONT WORK LIGHT OPTION

I - REAR WORK LIGHT OPTION

J - OPTION

MC 30 Turbo Série 3-E3
M 26-2 Turbo Série 3-E3
M 30-2 Turbo Série 3-E3

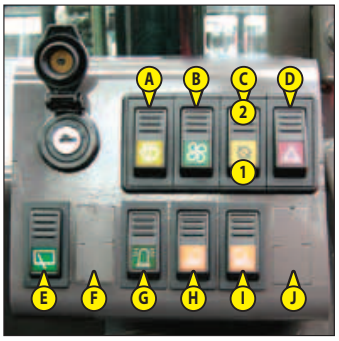

M 26-4 Turbo Série 3-E3
M 40-4 Turbo Série 3-E3
M 30-4 Turbo Série 3-E3
M 50-4 Turbo Série 3-E3

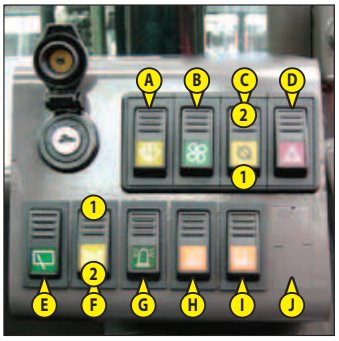

MC 40 Turbo POWERSHIFT Série 3-E3
MC 50 Turbo POWERSHIFT Série 3-E3

MC 60 Turbo POWERSHIFT Série 3-E3
MC 70 Turbo POWERSHIFT Série 3-E3

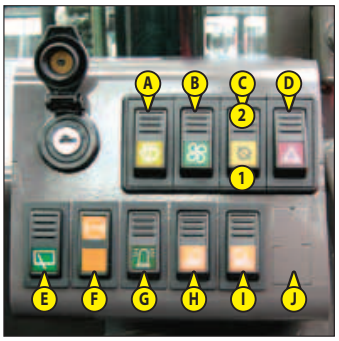

647003 EN (03/01/2012)

Downloaded from www.Manualslib.com manuals search engine

5 - HORN SWITCH

MC 30 Turbo Série 3-E3

5 - LIGHTS, HORN AND INDICATOR SWITCH

Optional for MC 30 Série 3-E3

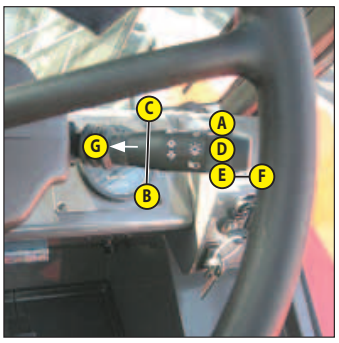

The switch controls the visual and sound alarms.

A - All lights are off, the direction indicators do not flash.
B - The right hand direction indicators flash.
C - The left hand direction indicators flash.
D - The sidelights and the rear lights are on.
E - The dipped headlights and the rear lights are on.
F - The main beam headlights and the rear lights are on.
G - Headlight signal.

Pressing the switch sounds the horn.
NOTE: The positions D - E - F - G can be carried out without the ignition being on.

6 - IGNITION SWITCH

The key switch has five positions:

P - Ignition off, parking position.
O - Ignition switched off and I.C. engine stopped.
I - Ignition on.
II - Heating.
III - The I.C. engine starts, return to position I as soon as the key is released.

7 - BRAKING OIL TANK

See: 3 - MAINTENANCE: B - EVERY 50 HOURS SERVICE.

8 - WINDSCREEN WASHER TANK

See: 3 - MAINTENANCE: B - EVERY 50 HOURS SERVICE.

9 - FUSES AND RELAYS IN THE CAB

*: Optional for MC 30 Turbo Série 3-E3

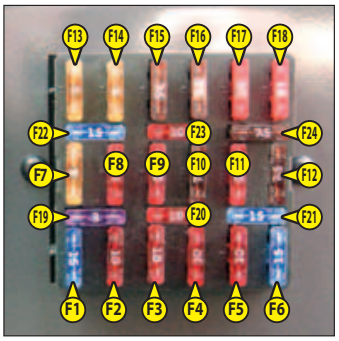

- Remove the casing to access fuses F1 to F24.

Always replace a faulty fuse with another of equivalent rating. Never use a fuse that has been repaired.

F1 - Light switch power supply, horn and indicators (15A). *
F2 - Hazard warning lights power supply (10A). *
F3 - Rear windscreen wiper (10A). *
- OPTION Roof windscreen wiper (10A).
F4 - OPTION Working tail light (10A).
F5 - OPTION Front working head light (10A).
F6 - Heating (15A). *
F7 - Control panel (5A).
F8 - Front windscreen wiper and windscreen-washer (10A).
F9 - Indicator power supply (10A). *
F10 - Forward/reverse selector (10A).
- Transmission cut-off (10A).
- OPTION Reversing lights (10A).
- OPTION Audible reversing alarm (10A).
F11 - Sound alarm (10A).
- Stop switch (10A).
F12 - OPTION Revolving light (7,5A).
F13 - Right sidelight (5A). *
- Sidelight indicator light (5A). *
- Control panel lighting (5A). *

Downloaded from www.Manualslib.com manuals search engine

duma » rent
https://truckmanualshub.com
Torkonjestraat 23
8510 Marke
Belgium
056 / 222 111
info@dumarent.be
www.dumarent.be

F14 - Left sidelights (5A). *
F15 - Right indicators (7,5A). *
F16 - Left indicators (7,5A). *
F17 - Low beam (10A). *
- Low beam indicator light (10A). *
F18 - Main beam (10A). *
- Main beam lamp (10A). *
F19 - Roof light (3A). *
- OPTION (+) permanent (3A).
F20 - OPTION Anti-theft device provision (10A).
- OPTION Car radio (10A).
MC 30 Turbo Série 3-E3 M 26-2 Turbo Série 3-E3 M 26-4 Turbo Série 3-E3
M 30-2 Turbo Série 3-E3 M 30-4 Turbo Série 3-E3
M 40-4 Turbo Série 3-E3 M 50-4 Turbo Série 3-E3
- OPTION.
MC 40 Turbo POWERSHIFT Série 3-E3 MC 60 Turbo POWERSHIFT Série 3-E3
MC 50 Turbo POWERSHIFT Série 3-E3 MC 70 Turbo POWERSHIFT Série 3-E3
F21 - OPTION.
MC 30 Turbo Série 3-E3 M 26-2 Turbo Série 3-E3 M 26-4 Turbo Série 3-E3
M 30-2 Turbo Série 3-E3 M 30-4 Turbo Série 3-E3
M 40-4 Turbo Série 3-E3 M 50-4 Turbo Série 3-E3
- Differential lock (10A).
MC 40 Turbo POWERSHIFT Série 3-E3 MC 60 Turbo POWERSHIFT Série 3-E3
MC 50 Turbo POWERSHIFT Série 3-E3 MC 70 Turbo POWERSHIFT Série 3-E3
F22 - OPTION Pneumatic seat (15A).
- OPTION Car radio (10A).
F23 - OPTION Anti-theft device provision (10A).
MC 30 Turbo Série 3-E3 M 26-2 Turbo Série 3-E3 M 26-4 Turbo Série 3-E3
M 30-2 Turbo Série 3-E3 M 30-4 Turbo Série 3-E3
M 40-4 Turbo Série 3-E3 M 50-4 Turbo Série 3-E3
- OPTION.
MC 40 Turbo POWERSHIFT Série 3-E3 MC 60 Turbo POWERSHIFT Série 3-E3
MC 50 Turbo POWERSHIFT Série 3-E3 MC 70 Turbo POWERSHIFT Série 3-E3
F24 - OPTION.
MC 30 Turbo Série 3-E3 M 26-2 Turbo Série 3-E3 M 30-2 Turbo Série 3-E3
MC 40 Turbo POWERSHIFT Série 3-E3 MC 60 Turbo POWERSHIFT Série 3-E3
MC 50 Turbo POWERSHIFT Série 3-E3 MC 70 Turbo POWERSHIFT Série 3-E3
- Rear axle clutch (7,5A).
M 26-4 Turbo Série 3-E3 M 40-4 Turbo Série 3-E3
M 30-4 Turbo Série 3-E3 M 50-4 Turbo Série 3-E3
F25 - Starter (25A).

- Remove plate 1 to access fuse F25 and relays K1 to K6.
K1 - Transmission cut-off relay.
MC 30 Turbo Série 3-E3 M 26-2 Turbo Série 3-E3 M 26-4 Turbo Série 3-E3
M 30-2 Turbo Série 3-E3 M 30-4 Turbo Série 3-E3
M 40-4 Turbo Série 3-E3 M 50-4 Turbo Série 3-E3
K1 - Forward reverse relay.
MC 40 Turbo POWERSHIFT Série 3-E3 MC 60 Turbo POWERSHIFT Série 3-E3
MC 50 Turbo POWERSHIFT Série 3-E3 MC 70 Turbo POWERSHIFT Série 3-E3
K2 - Flashing unit.
K3 - Forward gear relay.
MC 30 Turbo Série 3-E3 M 26-2 Turbo Série 3-E3 M 26-4 Turbo Série 3-E3
M 30-2 Turbo Série 3-E3 M 30-4 Turbo Série 3-E3
M 40-4 Turbo Série 3-E3 M 50-4 Turbo Série 3-E3
K4 - Safety system starting switch relay.
K5 - Reverse gear relay.
K6 - Buzzer.

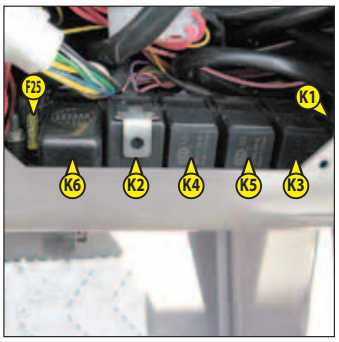

Downloaded from www.Manualslib.com manuals search engine

10 - FUSES AND RELAYS UNDER THE ENGINE HOOD

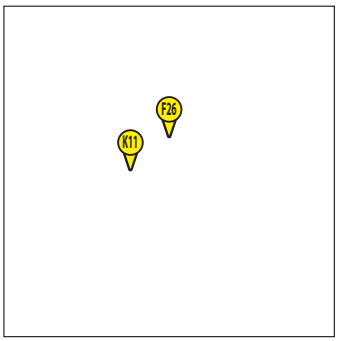

Always replace a faulty fuse with another of equivalent rating. Never use a fuse that has been repaired.

F26 - OPTION Diesel decongealant (15A).

K11 - OPTION Diesel decongealant.

- Remove cover 1 in order to gain access to the fuses.

F41 - Lift truck electrical equipment (40A).
F42 - Preheating I.C. engine (80A).
F43 - Alternator (80A).
F44 - Lift truck electrical equipment (40A).

K10 - Preheating relay

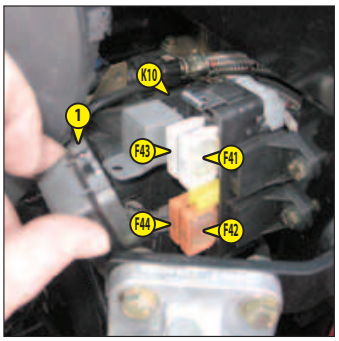

11 - ROOF LIGHT

Optional for MC 30 Série 3-E3

12 - ACCELERATOR PEDAL

13 - SERVICE BRAKE PEDAL AND TRANSMISSION CUT-OFF

MC 30 Turbo Série 3-E3 M 26-2 Turbo Série 3-E3 M 26-4 Turbo Série 3-E3 M 40-4 Turbo Série 3-E3
M 30-2 Turbo Série 3-E3 M 30-4 Turbo Série 3-E3 M 50-4 Turbo Série 3-E3

The pedal acts on the front wheels by means of a hydraulic brake system enabling the slowing down and stopping of the lift truck. During clearance travel it enables the transmission to be cut off progressively thus allowing a gradual approach (delicate handling) with all the I.C. engine power.

13 - SERVICE BRAKE PEDAL AND TRANSMISSION CUT-OFF

MC 40 Turbo POWERSHIFT Série 3-E3 MC 60 Turbo POWERSHIFT Série 3-E3
MC 50 Turbo POWERSHIFT Série 3-E3 MC 70 Turbo POWERSHIFT Série 3-E3

SERVICE BRAKE PEDAL
The pedal applies on the front and rear wheels by an hydraulic brake system, and allows the lift truck to be slowed down and stopped.
TRANSMISSION CUT-OFF PEDAL
This pedal progressively cuts off the transmission thus allowing a gradual approach (delicate handling) with the full power of the I.C. engine power, then works the service brake pedal to bring the lift truck to a halt.

14 - DIFFERENTIAL LOCK PUSH-BUTTON

Optional for M 26-4 Turbo Série 3-E3 M 40-4 Turbo Série 3-E3
M 30-4 Turbo Série 3-E3 M 50-4 Turbo Série 3-E3

The differential lock allows the driving wheels to rotate at the same speed regardless of ground conditions. Press on the top of the push-button to engage.

- Hold this position for as long as the differential lock is required. To disengage, simply remove the foot from the push-button that will automatically return to its initial position.

While the differential lock is engaged, always drive in a straight line and remain in first gear.

Downloaded from www.Manualslib.com manuals search engine

duma rent
https://truckmanualshub.com
Torkonjestraat 23
8510 Marke
Belgium
056 / 222 111
info@dumarent.be
www.dumarent.be

15 - GEAR LEVER AND TRANSMISSION CUT-OFF

MC 30 Turbo Série 3-E3 M 26-2 Turbo Série 3-E3 M 26-4 Turbo Série 3-E3
M 30-2 Turbo Série 3-E3 M 30-4 Turbo Série 3-E3
M 40-4 Turbo Série 3-E3 M 50-4 Turbo Série 3-E3

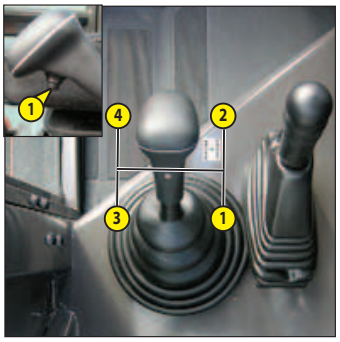

In order to change speeds, it is necessary to cut the transmission by pressing the button 1 on the lever.

1st gear: To the right, backwards.
2nd gear: To the right, forwards.
3rd gear: To the left, backwards.
4th gear: To the left, forwards.

USING THE GEARS ON THE GEAR BOX

- On these lift trucks with a torque converter, it is not necessary to automatically start up in 1st speed and progress up the gears.

The choice of transmission gear ratio should be made carefully according to the nature of the work being carried out. A poor choice may result in the extremely rapid rise of the transmission oil temperature through excessive slipping of the converter, which could lead to serious damage to the transmission (it is essential to stop and change the working conditions if the transmission oil temperature indicator light comes on). This poor choice may also result in a reduction in the lift truck's performance in forward gear. When the forward force increases, the forward speed in the r gear (for example, in 3rd gear) may be lower than the forward speed that could be obtained with the r-1 gear (in 2nd instead of 3rd).

In general, we would advise you to use the following gears according to the nature of the work being carried out.

- On the road: Set off in 3rd gear and go up to 4th if the conditions and state of the road permit it. In hilly areas, set off in 2nd gear and go up to 3rd if the conditions and state of the road permit it.
- With a trailer on the road: Set off in 2nd gear and switch to 3rd if the conditions and state of the road permit it.
- Handling: 3rd gear.
  2nd gear in restricted spaces.
- Loading (reclaiming with bucket, manure fork, etc.): 2nd gear.
- Earth moving: 1st gear.

16 - FORWARD/NEUTRAL/REVERSE GEAR SELECTION

MC 30 Turbo Série 3-E3 M 26-2 Turbo Série 3-E3 M 26-4 Turbo Série 3-E3
M 30-2 Turbo Série 3-E3 M 30-4 Turbo Série 3-E3
M 40-4 Turbo Série 3-E3 M 50-4 Turbo Série 3-E3

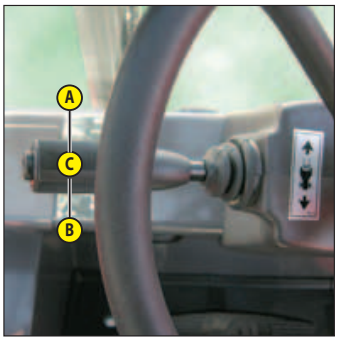

When operating this control, the lift truck should be travelling at slow speed and not accelerating. When the reverser is in the neutral position a mechanical lock prevents an accidental shifting movement.

FORWARD: Lift slightly and push the lever forwards (position A).
REVERSE: Lift slightly and pull the lever backwards (position B).
NEUTRAL: To start the lift truck, the lever must be in neutral (position C).

NOTE: As an OPTION, reversing lights and an acoustic reversing alarm indicate that the lift truck is running in reverse.

SAFETY FOR MOVING THE LIFT TRUCK

Authorisation to move the lift truck is controlled by an electronic unit. The operator must observe the following sequence to move the truck forwards or backwards:

1 - sit down correctly in the driver's seat,
2 - release the parking brake,
3 - engage forward or reverse movement.

To stop the lift truck, he must observe the following sequence:

1 - Set the forward/reverse selector to neutral,
2 - engage the parking brake,
3 - get out of the lift truck.

NOTE: If the operator leaves the driving cab with forward or reverse engaged, a continuous alarm will sound. While this alarm sounds, the operator can simply sit back in the seat and continue advancing or reversing.
If the alarm becomes discontinuous, the operator must sit back in the seat, put the forward/reverse selector back in neutral and select forward or reverse if he wishes to continue moving.

Downloaded from www.Manualslib.com manuals search engine

duma rent
https://truckmanualshub.com
Torkonjestraat 23
8510 Marke
Belgium
056 / 222 111
info@dumarent.be
www.dumarent.be

16 - FORWARD/NEUTRAL/REVERSE AND GEAR SELECTOR

MC 40 Turbo POWERSHIFT Série 3-E3 MC 60 Turbo POWERSHIFT Série 3-E3
MC 50 Turbo POWERSHIFT Série 3-E3 MC 70 Turbo POWERSHIFT Série 3-E3

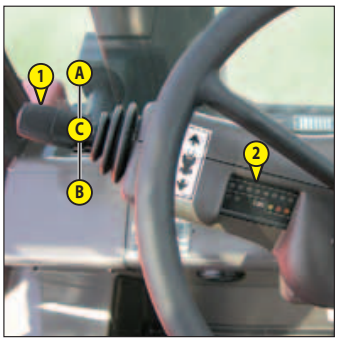

FORWARD/REVERSE SELECTOR

When operating this control, the lift truck should be stopped or travelling at slow speed and not accelerating. During this operation, the selected speed remains the same, except for the 4th gear in forward motion which becomes 3rd gear in reverse motion.

FORWARD: Push the lever forwards (position A).
REVERSE: Pull the lever backwards (position B).
NEUTRAL: To start the lift truck, the lever must be in neutral (position C). 3rd gear is automatically selected at start-up.

NOTE: As an OPTION, reversing lights and an acoustic reversing alarm indicate that the lift truck is running in reverse.

SAFETY FOR MOVING THE LIFT TRUCK

Authorisation to move the lift truck is controlled by an electronic unit. The operator must observe the following sequence to move the truck forwards or backwards:

1 - sit down correctly in the driver's seat,
2 - release the parking brake,
3 - engage forward or reverse movement.

To stop the lift truck, he must observe the following sequence:

1 - Set the forward/reverse selector to neutral,
2 - engage the parking brake,
3 - get out of the lift truck.

NOTE: If the operator leaves the driving cab with forward or reverse engaged, a continuous alarm will sound. While this alarm sounds, the operator can simply sit back in the seat and continue advancing or reversing.
If the alarm becomes discontinuous, the operator must sit back in the seat, put the forward/reverse selector back in neutral and select forward or reverse if he wishes to continue moving.

GEAR SELECTOR

You can shift up the gears in turn by turning the handle 1 to towards the front and shift down by turning handle 1 towards the back. The selected speed is indicated by a lamp on the dial 2.

DESCRIPTION OF LEDS

1 2 3 4: Indicates the selected gear and the position of the gear reverser (4th, only in forward gear).
- Red when in neutral.
- Green when in forward gear.
- Yellow when in reverse gear.

5 6 7: Operating test (see repair manual).
8: The green LED comes on when the lift truck is at a standstill. If it lights when driving, consult your dealer.
N: The red LED lights in the following two cases:
- When the reversing lever is in neutral.
- 3 to 4 seconds after the lift truck is brought to a standstill, regardless of the position of the gear reverser (transmission cut-out). Accelerate to re-engage the transmission.

T: Operating test (see repair manual). If the LED lights when driving, consult your dealer.

USING THE GEARS ON THE GEAR BOX

- On these lift trucks with a torque converter, it is not necessary to automatically start up in 1st speed and progress up the gears.

The choice of transmission gear ratio should be made carefully according to the nature of the work being carried out. A poor choice may result in the extremely rapid rise of the transmission oil temperature through excessive slipping of the converter, which could lead to serious damage to the transmission (it is essential to stop and change the working conditions if the transmission oil temperature indicator light comes on). This poor choice may also result in a reduction in the lift truck's performance in forward gear. When the forward force increases, the forward speed in the r gear (for example, in 3rd gear) may be lower than the forward speed that could be obtained with the r-1 gear (in 2nd instead of 3rd).

In general, we would advise you to use the following gears according to the nature of the work being carried out.

- On the road: Set off in 3rd gear and go up to 4th if the conditions and state of the road permit it. In hilly areas, set off in 2nd gear and go up to 3rd if the conditions and state of the road permit it.
- With a trailer on the road: Set off in 2nd gear and switch to 3rd if the conditions and state of the road permit it.
- Handling: 3rd gear.
  2nd gear in restricted spaces.
- Loading (reclaiming with bucket, manure fork, etc.): 2nd gear.
- Earth moving: 1st gear.

Downloaded from www.Manualslib.com manuals search engine

17 - PARKING BRAKE

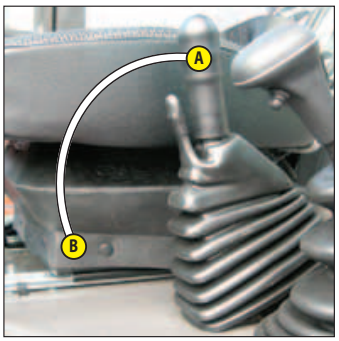

To prevent accidental loosening or release, the lever is fitted with safety locking.

- To apply the parking brake, pull the lever backwards (position A).
- To loosen the parking brake, release and push the lever forwards (position B).

18 - HYDRAULIC CONTROLS

Do not attempt to alter the hydraulic system pressure by interfering with the pressure regulating valve. In the event of suspected malfunction, contact your dealer. ANY ALTERATION MAY RENDER THE WARRANTY NULL AND VOID.

Use the hydraulic controls carefully without jerking, to avoid accidents caused by shaking the lift truck.

LIFTING THE LOAD
- The lever A backwards when lifting.
- The lever A forwards when lowering.

TILTING THE MAST
- The lever B backward for backward tilting.
- The lever B forwards for forward tilting.

ATTACHMENT
- The lever C forwards or backwards.

19 - HEATER CONTROL

Optional for MC 30 Série 3-E3

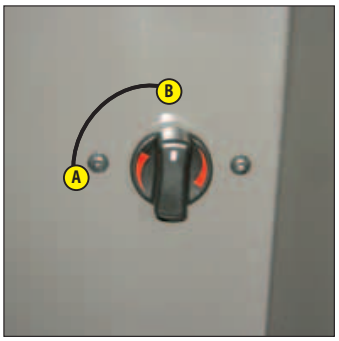

Allows the temperature inside the cab to be adjusted.

A - With the valve closed, the fan delivers fresh air.

B - With the valve opened completely, the fan delivers warm air.

The intermediate positions allow the temperature to be adjusted.

20 - HEATING VENTS

Optional for MC 30 Série 3-E3

21 - DOOR LOCKS

Optional for MC 30 Série 3-E3

Two keys are provided with the lift truck to enable the cabin to be locked.

22 - DOOR RELEASE BUTTONS

Optional for MC 30 Série 3-E3

23 - DOCUMENT HOLDER NET

Make sure that the operator's manual is in the right place, i.e. in the document holder net.
NOTE: An OPTION waterproof document-holder exists.

Downloaded from www.Manualslib.com manuals search engine

24 - FRONT LIGHTS

Optional for MC 30 Série 3-E3

A - Left front indicator.
B - Left front sidelight.
C - Left front dipped headlight and main beam.
D - Right front sidelight.
E - Right front dipped headlight and main beam.
F - Right front indicator.

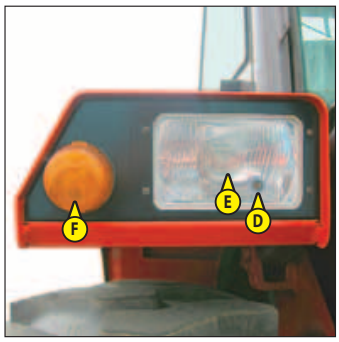

25 - REAR LIGHTS

Optional for MC 30 Série 3-E3

A - Left rear indicator.
B - Left rear stoplight.
C - Left tail light.
D - Right tail light.
E - Right rear stoplight.
F - Right rear indicator.

25 - REAR LIGHTS

MC 60 Turbo POWERSHIFT Série 3-E3
MC 70 Turbo POWERSHIFT Série 3-E3

A - Left rear indicator.
B - Left rear stoplight.
C - Left tail light.
D - Right tail light.
E - Right rear stoplight.
F - Right rear indicator.

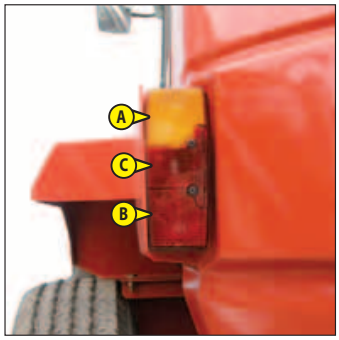

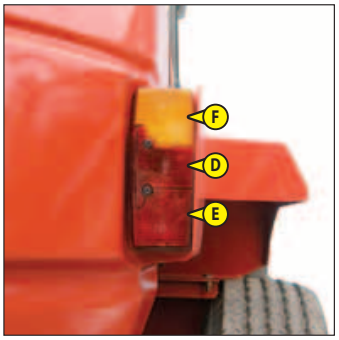

26 - LEVEL INDICATOR

Enables the operator to check that the lift truck is in the horizontal position.

27 - STEERING WHEEL ADJUSTMENT LEVER

Optional for MC 30 Turbo Série 3-E3
M 26-2 Turbo Série 3-E3 M 26-4 Turbo Série 3-E3
M 30-2 Turbo Série 3-E3 M 30-4 Turbo Série 3-E3
M 40-4 Turbo Série 3-E3 M 50-4 Turbo Série 3-E3

This handle enables the angle and height of the steering wheel to be adjusted.

- Turn handle 1 towards A to loosen and adjust steering wheel.
- Turn handle 1 towards B to lock steering wheel in the position required.

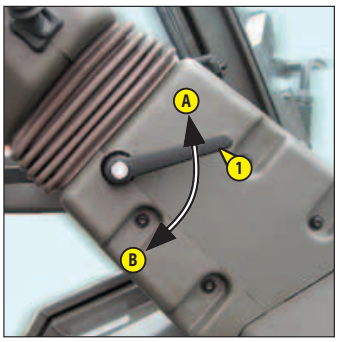

Downloaded from www.Manualslib.com manuals search engine

Downloaded from www.Manualslib.com manuals search engine

duma rent
https://truckmanualshub.com
Torkonjestraat 23
8510 Marke
Belgium
056 / 222 111
info@dumarent.be
www.dumarent.be

TOWING PIN AND HOOK

Located at the rear of the lift truck, this device is used to attach a trailer. Its capacity is limited for each lift truck by the authorised gross vehicle weight, tractive effort and maximum vertical force on the coupling point. This information is given on the manufacturer's plate fixed to each lift truck (see: 2 - DESCRIPTION: IDENTIFICATION OF THE LIFT TRUCK).

- To use a trailer, see current regulations in your country (maximum running speed, braking, maximum weight of trailer, etc.).
- Verify the trailer's condition before using it (tyre condition and pressures, electrical connection, hydraulic hose, brake system…).

Do not tow a trailer or attachment which is not in perfect working order. Using a trailer in poor condition may affect the lift truck's steering and braking, and hence safety.

If a third party helps in coupling or uncoupling the trailer, this person must be permanently visible to the driver and wait until the lift truck has stopped, the handbrake is on and the I.C. engine is switched off before performing the operation.

A - TOWING PIN

COUPLING AND UNCOUPLING THE TRAILER
- To couple the trailer, position the lift truck as close as possible to the trailer ring.
- Put the handbrake on and switch off the I.C. engine.
- Remove the clip 1, lift the trailer pin 2 and place or remove the trailer ring.

Be careful not to get your fingers caught or crushed during this operation.
Do not forget to put clip 1 back in place.
When uncoupling, make sure that the trailer is supported independently.

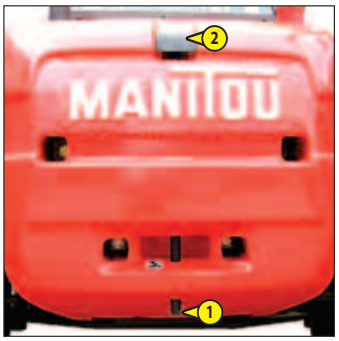

Downloaded from www.Manualslib.com manuals search engine

Downloaded from www.Manualslib.com manuals search engine

DESCRIPTION AND USE OF THE OPTIONS

1 - REVOLVING LIGHT

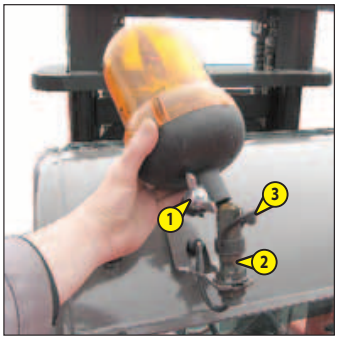

The revolving light is dismountable to make it possible, for example, to reduce the bulkiness of the lift truck or to avoid being stolen.

- Loosen nut 1 and remove the revolving light.
- Protect mounting 2 with cap 3.

2 - AIR CONDITIONING CONTROLS (OPTION AIR CONDITIONING)

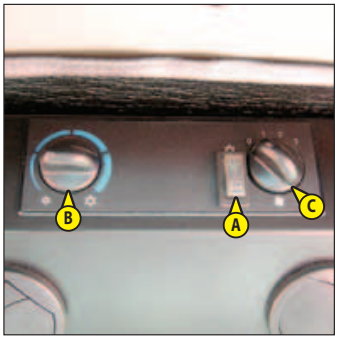

The air conditioning only comes on when the forklift truck has been started up. When using your air conditioning, you must work with the doors and windows closed.

In winter: So as to ensure correct operation and complete efficiency of the air conditioning unit, start up the compressor once a week, if only for a short spell, so as to lubricate the internal seals.

In cold weather: Warm the I.C. engine before switching on the compressor, so as to allow the coolant that has collected in the liquid state at the lowest point of the compressor circuit to turn into gas under the effect of the heat given off by the I.C. engine, as the compressor is liable to be damaged by coolant in the liquid state.

If your air conditioning does not seem to be working properly, have it examined by your dealer (see: 3 - MAINTENANCE: H - EVERY 2 YEARS "AIR CONDITIONING OPTION"). Never try to repair any possible problems by yourself.

DESCRIPTION OF THE AIR CONDITIONING CONTROLS

A - Air conditioning system ON/OFF control switch with indicator lamp. Only works when control switch "C" set to 1, 2 or 3.
B - Air temperature control.
C - Air flow and fan speed control. When this control is set to "0" the air conditioning system will not work.

NOTE: Possible losses of water under the lift truck are due to condensate discharges caused by the drying effect of the installation, especially with high outside temperatures and high relative humidity.
For the air conditioning to perform properly, the air intakes must not be blocked by frost, snow or leaves.
When the facility is running, at least one of the cab air grilles must be open so as to avoid any risk of freezing to the evaporator.

CONDITIONED AIR MODE

The controls must be adjusted in the following way:

A - Control with signal light on.
B - At the required temperature.
C - To the desired position 1, 2 or 3.

3 - AIR CONDITIONING VENTS (AIR CONDITIONING OPTION)

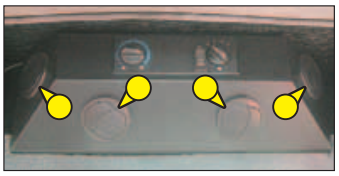

Downloaded from www.Manualslib.com manuals search engine

4 - REVERSE BUZZER ALARM

5 - BATTERY CUT-OFF

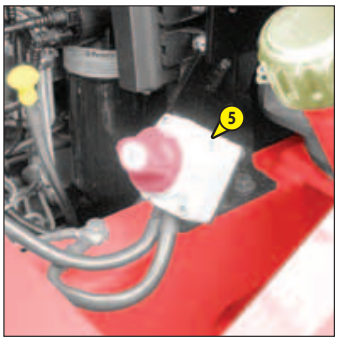

6 - DIGICODE ANTI-THEFT SYSTEM

MC 30 Turbo Série 3-E3 M 26-2 Turbo Série 3-E3 M 26-4 Turbo Série 3-E3
M 30-2 Turbo Série 3-E3 M 30-4 Turbo Série 3-E3
M 40-4 Turbo Série 3-E3 M 50-4 Turbo Série 3-E3

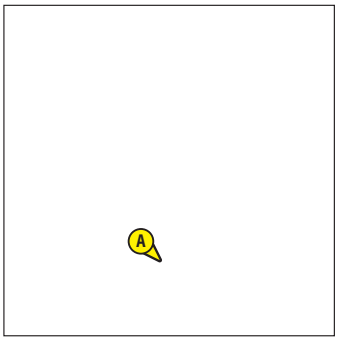

OPERATION

- Switch on the lift truck: LED A flashes red.
- Enter your user code followed by "VAL": LED A goes out.
- The entry of each figure in your code is confirmed by LED A lighting up green. If you make an error, press the "ANN" key and re-enter your code completely.
- Start the lift truck within the next 30 seconds; otherwise the anti-theft system will react and LED A flashes red.

NOTE: You can restart the lift truck within 12 seconds of stopping it: after this time, the anti-theft system reacts and LED A flashes red.

7 - FINTRONIC ANTI-START SYSTEM

MC 30 Turbo Série 3-E3 M 26-2 Turbo Série 3-E3 M 26-4 Turbo Série 3-E3
M 30-2 Turbo Série 3-E3 M 30-4 Turbo Série 3-E3
M 40-4 Turbo Série 3-E3 M 50-4 Turbo Série 3-E3

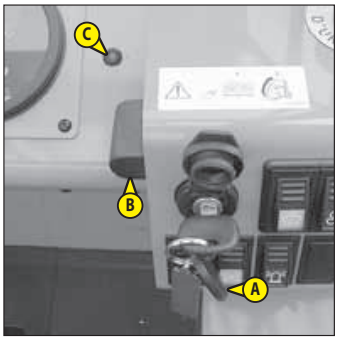

OPERATION

- Switch on the lift truck and set the black key A next to the antenna B (maximum 80 mm).
- Wait a few seconds for red LED C to go out before starting the lift truck.

NOTE: You can restart the lift truck within 20 seconds of stopping it: after this time, the anti-start system reacts and LED C flashes red.

8 - ADAPTATION OF DISTRIBUTOR'S 4TH ELEMENT

ADDITIONAL ACCESSORY

- Lever A forward or backward.

9 - ADAPTATION OF BALANCING VALVE ON TILTING CIRCUIT

MC 30 Turbo Série 3-E3 M 26-2 Turbo Série 3-E3 M 26-4 Turbo Série 3-E3
M 30-2 Turbo Série 3-E3 M 30-4 Turbo Série 3-E3
M 40-4 Turbo Série 3-E3 M 50-4 Turbo Série 3-E3
MC 40 Turbo POWERSHIFT Série 3-E3 MC 50 Turbo POWERSHIFT Série 3-E3

Downloaded from www.Manualslib.com manuals search engine

Downloaded from www.Manualslib.com manuals search engine

https://truckmanualshub.com/
Torkonjestraat 23
8510 Marke
Belgium
056 / 222 111
info@dumarent.be
www.dumarent.be

3 - MAINTENANCE

Downloaded from www.Manualslib.com manuals search engine

Downloaded from www.Manualslib.com manuals search engine

duma rent
https://truckmanualshub.com
Torkonjestraat 23
8510 Marke
Belgium
056 / 222 111
info@dumarent.be
www.dumarent.be

TABLE OF CONTENTS

MANITOU ORIGINAL SPARE PARTS AND EQUIPMENT 3-4

START-UP CHECKLIST 3-5

FILTERS CARTRIDGES AND BELTS MC 30 Turbo Série 3-E3 3-6

FILTERS CARTRIDGES AND BELTS M 26-2 Turbo Série 3-E3 M 26-4 Turbo Série 3-E3 M 40-4 Turbo Série 3-E3 M 30-2 Turbo Série 3-E3 M 30-4 Turbo Série 3-E3 M 50-4 Turbo Série 3-E3 3-7

FILTERS CARTRIDGES AND BELTS MC 40 Turbo POWERSHIFT Série 3-E3 MC 50 Turbo POWERSHIFT Série 3-E3 3-8

FILTERS CARTRIDGES AND BELTS MC 60 Turbo POWERSHIFT Série 3-E3 MC 70 Turbo POWERSHIFT Série 3-E3 3-9

LUBRICANTS AND FUEL MC 30 Turbo Série 3-E3 M 26-2 Turbo Série 3-E3 M 26-4 Turbo Série 3-E3 M 40-4 Turbo Série 3-E3 M 30-2 Turbo Série 3-E3 M 30-4 Turbo Série 3-E3 M 50-4 Turbo Série 3-E3 3-10

LUBRICANTS AND FUEL MC 40 Turbo POWERSHIFT Série 3-E3 MC 50 Turbo POWERSHIFT Série 3-E3 MC 60 Turbo POWERSHIFT Série 3-E3 MC 70 Turbo POWERSHIFT Série 3-E3 3-12

SERVICING SCHEDULE 3-14

A - DAILY OR EVERY 10 HOURS SERVICE 3-16

B - EVERY 50 HOURS SERVICE 3-20

C - EVERY 250 HOURS SERVICE 3-30

D - EVERY 500 HOURS SERVICE 3-34

E - EVERY 1000 HOURS SERVICE 3-40

F - EVERY 2000 HOURS OF SERVICE 3-46

G - OCCASIONAL MAINTENANCE 3-48

647003 EN (03/01/2012)

Downloaded from www.Manualslib.com manuals search engine

MANITOU ORIGINAL SPARE PARTS AND EQUIPMENT

OUR LIFT TRUCKS MUST BE SERVICED USING ORIGINAL MANITOU PARTS.

IF YOU USE PARTS WHICH ARE NOT ORIGINAL MANITOU PARTS,

YOU RISK

- Legally - to be held responsible in the event of an accident.
- Technically - to generate operating failure or shorten the life of the lift truck.

THE USE OF COUNTERFEIT PARTS OR COMPONENTS NOT APPROVED BY THE MANUFACTURER, MEANS YOU LOSE THE BENEFIT OF THE CONTRACTUAL GUARANTEE.

BY USING ORIGINAL MANITOU PARTS FOR MAINTENANCE OPERATIONS,

YOU BENEFIT EXPERTISE

Through its network, MANITOU provides the user with

- Know-how and competence.
- The guarantee of high-quality work.
- Original replacement components.
- Help with preventive maintenance.
- Efficient help with diagnosis.
- Improvements due to experience feedback.
- Operator training.
- Only the MANITOU network has detailed knowledge of the design of the lift truck and therefore the best technical ability to provide maintenance.

ORIGINAL REPLACEMENT PARTS ARE DISTRIBUTED EXCLUSIVELY BY MANITOU AND ITS DEALER NETWORK.
the dealer network list is available on manitou web site www.manitou.com

Downloaded from www.Manualslib.com manuals search engine

START-UP CHECKLIST

0 = OK 1 = Missing 2 = Incorrect

100	**ENGINE**	
01	Air filter	
02	Fuel tank	
03	Fuel lines - Filter	
04	Injection or carburetion system	
05	Radiator and cooling system	
06	Belts	
07	Hoses	
101	**TRANSMISSION**	
01	Direction reversal system	
02	Gear shift	
03	Cut-off pedal	
04	Clutch	
102	**AXLES/TRANSFER GEAR BOX**	
01	operation and seal	
02	Stop settings	
103	**HYDRAULIC/HYDROSTATIC CIRCUIT**	
01	Tank	
02	Pumps and couplings	
03	Tightening of connections	
04	Lift cylinder(s)	
05	Tilt cylinder(s)	
06	Attachment cylinder(s)	
07	Telescope cylinder(s)	
08	Compensation cylinder(s)	
09	Steering cylinder(s)	
10	Control Valve	
11	Balancing valve	
104	**BRAKE SYSTEM**	
01	Service brake and parking brake operation	
02	Brake fluid level	
105	**LUBRICATION AND GREASING**	
106	**JIB/MANISCOPIC/MANIACCESS ASSEMBLY**	
01	Beam and telescope(s)	
02	Skid	
03	Hinges	
04	Carriage	
05	Forks	
107	**MAST ASSEMBLY**	
01	Fixed and mobile uprights	
02	Carriage	
03	Chains	
04	Rollers	
05	Forks	

108	**ATTACHMENTS**	
01	Fitting on machine	
02	Hydraulic couplings	
109	**CABIN/PROTECTOR/ELECTRIC CIRCUIT**	
01	Seat	
02	Dashboard and radio	
03	Sound and visual alarm/safety system	
04	Heating/Air conditioning	
05	Windscreen wiper/windscreen washer	
06	Road horn	
07	Reversing horn	
08	Road lights	
09	Additional lights	
10	Rotating beacon light	
11	Battery	
110	**WHEEL**	
01	Rims	
02	Tyre/Pressure	
111	**SCREWS**	
112	**FRAME AND BODYWORK**	
113	**PAINTING**	
114	**GENERAL OPERATION**	
115	**OPERATOR'S MANUAL**	
116	**CUSTOMER INSTRUCTIONS**	

Downloaded from www.Manualslib.com manuals search engine

FILTERS CARTRIDGES AND BELTS

MC 30 Turbo Série 3-E3

I.C. ENGINE

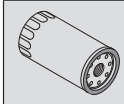	I.C. ENGINE OIL FILTER Part number: 476954 Change: 500 H	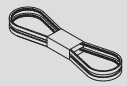	ALTERNATOR BELT Part number: 702494
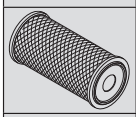	DRY AIR FILTER CARTRIDGE Part number: 563416 Clean: 50 H* Change: 500 H*	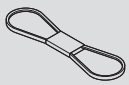	COMPRESSOR BELT (OPTION AIR CONDITIONING) Part number: 244237
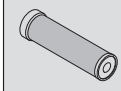	SAFETY DRY AIR FILTER CARTRIDGE Part number: 563415 Change: 1000 H*		CYCLONIC PRE-FILTER (OPTION) Part number: 224713 Clean: 10 H
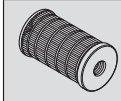	FUEL FILTER CARTRIDGE Part number: 605013 Change: 500 H	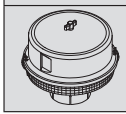	AUTOMATIC VACUUM-CLEANING PRE-FILTER (OPTION) Part number: 226611
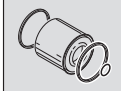	FUEL PRE-FILTER CARTRIDGE Part number: 706497 Change: 500 H		

*: This periodicity is given for information only (see: 3 - MAINTENANCE: SERVICING SCHEDULE) for cleaning and changing.

TRANSMISSION

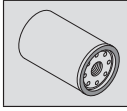	GEAR BOX OIL FILTER Part number: 561749 Change: 500 H

HYDRAULIC

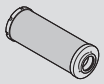	HYDRAULIC RETURN OIL FILTER CARTRIDGE Part number: 221174 Change: 500 H	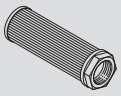	SUCTION STRAINER FOR HYDRAULIC OIL TANK Part number: 77402 Clean: 1000 H
	FILTER CAP FOR HYDRAULIC OIL TANK Part number: 62415 Change: 1000 H		

CAB (OPTION)

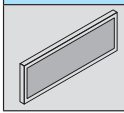	CAB VENTILATION FILTERS Part number: 562185 Clean: 500 H

FRONT AXLE

	FRONT AXLE COOLING CIRCUIT FILTER (OPTION) Part number: 254582 Change: 500 H

Downloaded from www.Manualslib.com manuals search engine

FILTERS CARTRIDGES AND BELTS

M 26-2 Turbo Série 3-E3 M 26-4 Turbo Série 3-E3 M 40-4 Turbo Série 3-E3
M 30-2 Turbo Série 3-E3 M 30-4 Turbo Série 3-E3 M 50-4 Turbo Série 3-E3

I.C. ENGINE

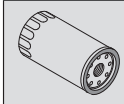	I.C. ENGINE OIL FILTER Part number: 476954 Change: 500 H	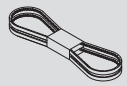	ALTERNATOR BELT Part number: 702494
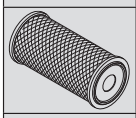	DRY AIR FILTER CARTRIDGE Part number: 563416 Clean: 50 H* Change: 500 H*	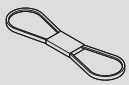	COMPRESSOR BELT (OPTION AIR CONDITIONING) Part number: 244237
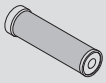	SAFETY DRY AIR FILTER CARTRIDGE Part number: 563415 Change: 1000 H*		CYCLONIC PRE-FILTER (OPTION) Part number: 224713 Clean: 10 H
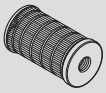	FUEL FILTER CARTRIDGE Part number: 605013 Change: 500 H	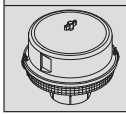	AUTOMATIC VACUUM-CLEANING PRE-FILTER (OPTION) Part number: 226611
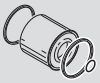	FUEL PRE-FILTER CARTRIDGE Part number: 706497 Change: 500 H		

*: This periodicity is given for information only (see: 3 - MAINTENANCE: SERVICING SCHEDULE) for cleaning and changing.

TRANSMISSION

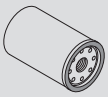	GEAR BOX OIL FILTER Part number: 561749 Change: 500 H

HYDRAULIC

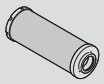	HYDRAULIC RETURN OIL FILTER CARTRIDGE Part number: 221174 Change: 500 H	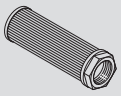	SUCTION STRAINER FOR HYDRAULIC OIL TANK Part number: 77402 Clean: 1000 H
	FILTER CAP FOR HYDRAULIC OIL TANK Part number: 62415 Change: 1000 H		

CAB

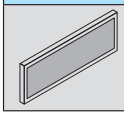	CAB VENTILATION FILTERS Part number: 562185 Clean: 500 H

FRONT AXLE

	FRONT AXLE COOLING CIRCUIT FILTER (OPTION) Part number: 254582 Change: 500 H

Downloaded from www.Manualslib.com manuals search engine

FILTERS CARTRIDGES AND BELTS

MC 40 Turbo POWERSHIFT Série 3-E3
MC 50 Turbo POWERSHIFT Série 3-E3

I.C. ENGINE

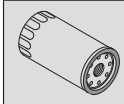	I.C. ENGINE OIL FILTER Part number: 476954 Change: 500 H	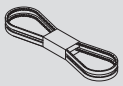	ALTERNATOR BELT Part number: 702494
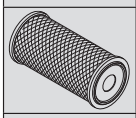	DRY AIR FILTER CARTRIDGE Part number: 563416 Clean: 50 H* Change: 500 H*	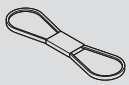	COMPRESSOR BELT (OPTION AIR CONDITIONING) Part number: 244237
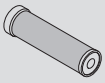	SAFETY DRY AIR FILTER CARTRIDGE Part number: 563415 Change: 1000 H*		CYCLONIC PRE-FILTER (OPTION) Part number: 224713 Clean: 10 H
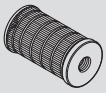	FUEL FILTER CARTRIDGE Part number: 605013 Change: 500 H	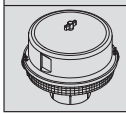	AUTOMATIC VACUUM-CLEANING PRE-FILTER (OPTION) Part number: 226611
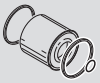	FUEL PRE-FILTER CARTRIDGE Part number: 706497 Change: 500 H		

*: This periodicity is given for information only (see: 3 - MAINTENANCE: SERVICING SCHEDULE) for cleaning and changing.

TRANSMISSION

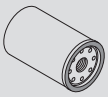	GEAR BOX OIL FILTER Part number: 706711 Change: 500 H

HYDRAULIC

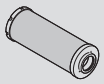	HYDRAULIC RETURN OIL FILTER CARTRIDGE Part number: 221174 Change: 500 H	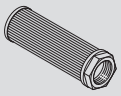	SUCTION STRAINER FOR HYDRAULIC OIL TANK Part number: 77402 Clean: 1000 H
	FILTER CAP FOR HYDRAULIC OIL TANK Part number: 62415 Change: 1000 H		

CAB

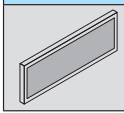	CAB VENTILATION FILTERS Part number: 562185 Clean: 500 H

FRONT AXLE

	FRONT AXLE COOLING CIRCUIT FILTER Part number: 254582 Change: 500 H

Downloaded from www.Manualslib.com manuals search engine

FILTERS CARTRIDGES AND BELTS

MC 60 Turbo POWERSHIFT Série 3-E3
MC 70 Turbo POWERSHIFT Série 3-E3

I.C. ENGINE

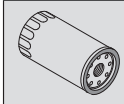	I.C. ENGINE OIL FILTER Part number: 476954 Change: 500 H	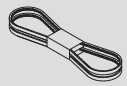	ALTERNATOR BELT Part number: 702494
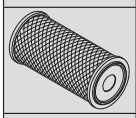	DRY AIR FILTER CARTRIDGE Part number: 563416 Clean: 50 H* Change: 500 H*	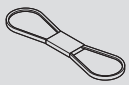	COMPRESSOR BELT (OPTION AIR CONDITIONING) Part number: 244237
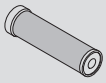	SAFETY DRY AIR FILTER CARTRIDGE Part number: 563415 Change: 1000 H*		CYCLONIC PRE-FILTER Part number: 224713 Clean: 10 H
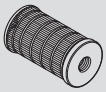	FUEL FILTER CARTRIDGE Part number: 605013 Change: 500 H	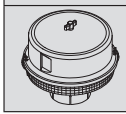	AUTOMATIC VACUUM-CLEANING PRE-FILTER (OPTION) Part number: 226611
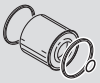	FUEL PRE-FILTER CARTRIDGE Part number: 706497 Change: 500 H		

*: This periodicity is given for information only (see: 3 - MAINTENANCE: SERVICING SCHEDULE) for cleaning and changing.

TRANSMISSION

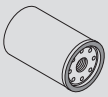	GEAR BOX OIL FILTER Part number: 706711 Change: 500 H

HYDRAULIC

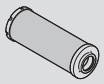	HYDRAULIC RETURN OIL FILTER CARTRIDGE Part number: 221174 Change: 500 H	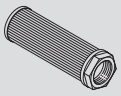	SUCTION STRAINER FOR HYDRAULIC OIL TANK Part number: 77402 Clean: 1000 H
	FILTER CAP FOR HYDRAULIC OIL TANK Part number: 62415 Change: 1000 H		

CAB

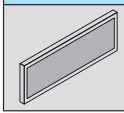	CAB VENTILATION FILTERS Part number: 562185 Clean: 500 H

FRONT AXLE

	FRONT AXLE COOLING CIRCUIT FILTER (OPTION) Part number: 254582 Change: 500 H

Downloaded from www.Manualslib.com manuals search engine

LUBRICANTS AND FUEL

MC 30 Turbo Série 3-E3
M 26-2 Turbo Série 3-E3 M 26-4 Turbo Série 3-E3 M 40-4 Turbo Série 3-E3
M 30-2 Turbo Série 3-E3 M 30-4 Turbo Série 3-E3 M 50-4 Turbo Série 3-E3

USE THE RECOMMENDED LUBRICANTS AND FUEL:
- For topping up, oils may not be miscible.
- For oil changes, MANITOU oils are perfectly appropriate.

DIAGNOSTIC ANALYSIS OF OILS
If a service or maintenance contract has been organized with the dealer, a diagnostic analysis of engine, gear box and axle oils may be requested depending on the rate of use.

(*) RECOMMENDED FUEL SPECIFICATION
Use a high-quality fuel to obtain optimal performance of the I.C. engine.

- N590 diesel fuel type - Auto/C0/C1/C2/C3/C4
- BS2869 Class A2
- ASTM D975-91 Class 2-2DA, US DF1, US DF2, US DFA
- JIS K2204 (1992) Grades 1, 2, 3 and Special Grade 3.

I.C. ENGINE

ORGANS TO BE LUBRICATED	CAPACITY	RECOMMENDATION	PACKAGING	PART NUMBER
I.C. ENGINE	8,5 Liters	MANITOU Oil API CH4	5 l 20 l 55 l 209 l 1000 l	661706 582357 582358 582359 490205
COOLING CIRCUIT	14,5 Liters	Cooling liquid (protection - 30°)	2 l 5 l 20 l	473076 470077 470078
		Cooling liquid (protection - 25°)	2 l 5 l 20 l	554002 554003 554004
FUEL TANK	85 Liters	Diesel fuel (*)		

TRANSMISSION

ORGANS TO BE LUBRICATED	CAPACITY	RECOMMENDATION	PACKAGING	PART NUMBER
GEAR BOX	15,5 Liters	MANITOU Oil Automatic transmission	1 l 20 l 55 l 209 l 1000 l	62148 546332 546217 546195 720148
TRANSMISSION UNIVERSAL JOINT		MANITOU Grease BLUE multi-purpose	400 g 1 kg 5 kg 20 kg 50 kg	161589 720683 554974 499233 489670

MAST

ORGANS TO BE LUBRICATED	RECOMMENDATION	PACKAGING	PART NUMBER
MAST LIFTING CHAINS	MANITOU Lubricant Chain special (aerosol)	400 ml.	554271
GREASING OF THE MAST	MANITOU Grease Multipurpose NLGI 2	400 g 1 kg 5 kg	545996 161590 499235

HYDRAULIC

ORGANS TO BE LUBRICATED	CAPACITY	RECOMMENDATION	PACKAGING	PART NUMBER
HYDRAULIC OIL TANK MC 30 Turbo Série 3-E3 M 26-2 Turbo Série 3-E3 / M 26-4 Turbo Série 3-E3 M 30-2 Turbo Série 3-E3 / M 30-4 Turbo Série 3-E3 M 40-4 Turbo Série 3-E3 / M 50-4 Turbo Série 3-E3	64 Liters 64 Liters 64 Liters 80 Liters	MANITOU Oil Hydraulic ISO VG 46	5 l 20 l 55 l 209 l	545500 582297 546108 546109

Downloaded from www.Manualslib.com manuals search engine

BRAKE			
ORGANS TO BE LUBRICATED	RECOMMENDATION	PACKAGING	PART NUMBER
BRAKE CIRCUIT	MANITOU Oil Mineral brake fluid	1 l	490408

CAB			
ORGANS TO BE LUBRICATED	RECOMMENDATION	PACKAGING	PART NUMBER
CAB DOOR Optional for MC 30 Turbo Série 3-E3	MANITOU Grease BLUE multi-purpose	400 g 1 kg 5 kg 20 kg 50 kg	161589 720683 554974 499233 489670
WINDSCREEN WASHER TANK	Windscreen washer fluid	1 l 5 l	490402 486424

FRONT AXLE				
ORGANS TO BE LUBRICATED	CAPACITY	RECOMMENDATION	PACKAGING	PART NUMBER
FRONT AXLE DIFFERENTIAL	6,2 Liters	MANITOU Oil Special immersed brakes	5 l 20 l 209 l 1000 l	545976 582391 546222 720149
FRONT WHEELS REDUCERS	0,75 Liter	MANITOU Oil SAE80W90 Mechanical transmission	2 l 5 l 20 l 55 l 209 l	499237 720184 546330 546221 546220
FRONT AXLE COOLING CIRCUIT Optional for MC 30 Turbo Série 3-E3 M 26-2 Turbo Série 3-E3 M 26-4 Turbo Série 3-E3 M 30-2 Turbo Série 3-E3 M 30-4 Turbo Série 3-E3 M 40-4 Turbo Série 3-E3 M 50-4 Turbo Série 3-E3	9,5 Liters	MANITOU Oil Special immersed brakes	5 l 20 l 209 l 1000 l	545976 582391 546222 720149

REAR AXLE MC 30 Turbo Série 3-E3 M 26-2 Turbo Série 3-E3 M 30-2 Turbo Série 3-E3			
ORGANS TO BE LUBRICATED	RECOMMENDATION	PACKAGING	PART NUMBER
SWIVEL PINS STEERING CYLINDER REAR AXLE OSCILLATION	MANITOU Grease BLUE multi-purpose	400 g 1 kg 5 kg 20 kg 50 kg	161589 720683 554974 499233 489670

REAR AXLE M 26-4 Turbo Série 3-E3 M 30-4 Turbo Série 3-E3 M 40-4 Turbo Série 3-E3 M 50-4 Turbo Série 3-E3				
ORGANS TO BE LUBRICATED	CAPACITY	RECOMMENDATION	PACKAGING	PART NUMBER
REAR AXLE DIFFERENTIAL	6,5 Liters	MANITOU Oil SAE80W90 Mechanical transmission	2 l 5 l 20 l 55 l 209 l	499237 720184 546330 546221 546220
REAR WHEEL REDUCER	0,75 Liter	MANITOU Oil SAE80W90 Mechanical transmission	2 l 5 l 20 l 55 l 209 l	499237 720184 546330 546221 546220
PIVOTSREAR WHEEL REDUCER		MANITOU Grease BLUE multi-purpose	400 g 1 kg 5 kg 20 kg 50 kg	161589 720683 554974 499233 489670
REAR AXLE OSCILLATION		MANITOU Grease BLUE multi-purpose	400 g 1 kg 5 kg 20 kg 50 kg	161589 720683 554974 499233 489670

Downloaded from www.Manualslib.com manuals search engine

LUBRICANTS AND FUEL

MC 40 Turbo POWERSHIFT Série 3-E3 MC 50 Turbo POWERSHIFT Série 3-E3
MC 60 Turbo POWERSHIFT Série 3-E3 MC 70 Turbo POWERSHIFT Série 3-E3

USE THE RECOMMENDED LUBRICANTS AND FUEL:
- For topping up, oils may not be miscible.
- For oil changes, MANITOU oils are perfectly appropriate.

DIAGNOSTIC ANALYSIS OF OILS
If a service or maintenance contract has been organized with the dealer, a diagnostic analysis of engine, gear box and axle oils may be requested depending on the rate of use.

(*) RECOMMENDED FUEL SPECIFICATION
Use a high-quality fuel to obtain optimal performance of the I.C. engine.

- N590 diesel fuel type - Auto/C0/C1/C2/C3/C4
- BS2869 Class A2
- ASTM D975-91 Class 2-2DA, US DF1, US DF2, US DFA
- JIS K2204 (1992) Grades 1, 2, 3 and Special Grade 3.

I.C. ENGINE

ORGANS TO BE LUBRICATED	CAPACITY	RECOMMENDATION	PACKAGING	PART NUMBER
I.C. ENGINE	8,5 Liters	MANITOU Oil API CH4	5 l 20 l 55 l 209 l 1000 l	661706 582357 582358 582359 490205
COOLING CIRCUIT	14,5 Liters	Cooling liquid (protection - 30°)	2 l 5 l 20 l	473076 470077 470078
		Cooling liquid (protection - 25°)	2 l 5 l 20 l	554002 554003 554004
FUEL TANK MC 40 Turbo POWERSHIFT Série 3-E3 MC 50 Turbo POWERSHIFT Série 3-E3 MC 60 Turbo POWERSHIFT Série 3-E3 MC 70 Turbo POWERSHIFT Série 3-E3	85 Liters 85 Liters 115 Liters 115 Liters	Diesel fuel (*)		

TRANSMISSION

ORGANS TO BE LUBRICATED	CAPACITY	RECOMMENDATION	PACKAGING	PART NUMBER
GEAR BOX	12,5 Liters	MANITOU Oil Automatic transmission	1 l 20 l 55 l 209 l 1000 l	62148 546332 546217 546195 720148
TRANSMISSION UNIVERSAL JOINT		MANITOU Grease BLUE multi-purpose	400 g 1 kg 5 kg 20 kg 50 kg	161589 720683 554974 499233 489670

MAST

ORGANS TO BE LUBRICATED	RECOMMENDATION	PACKAGING	PART NUMBER
MAST LIFTING CHAINS	MANITOU Lubricant Chain special (aerosol)	400 ml	554271
GREASING OF THE MAST	MANITOU Grease Multipurpose NLGI 2	400 g 1 kg 5 kg	545996 161590 499235

HYDRAULIC

ORGANS TO BE LUBRICATED	CAPACITY	RECOMMENDATION	PACKAGING	PART NUMBER
HYDRAULIC OIL TANK MC 40 Turbo POWERSHIFT Série 3-E3 MC 50 Turbo POWERSHIFT Série 3-E3 MC 60 Turbo POWERSHIFT Série 3-E3 MC 70 Turbo POWERSHIFT Série 3-E3	80 Liters 80 Liters 108 Liters 108 Liters	MANITOU Oil Hydraulic ISO VG 46	5 l 20 l 55 l 209 l	545500 582297 546108 546109

647003 EN (03/01/2012)

Downloaded from www.Manualslib.com manuals search engine

BRAKE			
ORGANS TO BE LUBRICATED	RECOMMENDATION	PACKAGING	PART NUMBER
BRAKE CIRCUIT	MANITOU Oil Mineral brake fluid	1 l	490408

CAB			
ORGANS TO BE LUBRICATED	RECOMMENDATION	PACKAGING	PART NUMBER
CAB DOOR	MANITOU Grease BLUE multi-purpose	400 g 1 kg 5 kg 20 kg 50 kg	161589 720683 554974 499233 489670
WINDSCREEN WASHER TANK	Windscreen washer fluid	1 l 5 l	490402 486424

FRONT AXLE				
ORGANS TO BE LUBRICATED	CAPACITY	RECOMMENDATION	PACKAGING	PART NUMBER
FRONT AXLE DIFFERENTIAL	6,2 Liters	MANITOU Oil Special immersed brakes	5 l 20 l 209 l 1000 l	545976 582391 546222 720149
FRONT WHEELS REDUCERS	0,75 Liter	MANITOU Oil SAE80W90 Mechanical transmission	2 l 5 l 20 l 55 l 209 l	499237 720184 546330 546221 546220
FRONT AXLE COOLING CIRCUIT Optional for MC 40 Turbo POWERSHIFT Série 3-E3 MC 50 Turbo POWERSHIFT Série 3-E3 MC 60 Turbo POWERSHIFT Série 3-E3 MC 70 Turbo POWERSHIFT Série 3-E3	9,5 Liters	MANITOU Oil Special immersed brakes	5 l 20 l 209 l 1000 l	545976 582391 546222 720149

REAR AXLE			
ORGANS TO BE LUBRICATED	RECOMMENDATION	PACKAGING	PART NUMBER
SWIVEL PINS REAR AXLE OSCILLATION	MANITOU Grease BLUE multi-purpose	400 g 1 kg 5 kg 20 kg 50 kg	161589 720683 554974 499233 489670

Downloaded from www.Manualslib.com manuals search engine

SERVICING SCHEDULE

(1): MANDATORY 500 HOUR OR 6 MONTH SERVICE

This service must be carried out after approximately the first 500 hours of operation or within the 6 months following the start-up of the machine (whichever occurs first).

(*): Every 10 hours during the first 50 hours, then once at 250 hours.
(**): Consult your dealer.

A = ADJUST, C = CHECK, G = GREASE, N = CLEAN, P = BLEED, R = REPLACE, V = DRAIN	PAGE	(1)	DAILY OR EVERY 10 HOURS SERVICE	EVERY 50 HOURS SERVICE	EVERY 250 HOURS SERVICE	EVERY 500 HOURS SERVICE OR 6 MONTHS	EVERY 1000 HOURS SERVICE OR 1 YEAR	EVERY 2000 HOURS SERVICE OR 2 YEARS	EVERY 4000 HOURS SERVICE	OCCASIONALLY
I.C. ENGINE										
I.C. engine oil level	3-16	C	C	<<<	<<<	<<<	<<<	<<<	<<<	
Cooling liquid level	3-16	C	C	<<<	<<<	<<<	<<<	<<<	<<<	
Fuel level	3-16	C	C	<<<	<<<	<<<	<<<	<<<	<<<	
Fuel pre-filter	3-17	C	C	<<<	<<<	<<<	<<<	<<<	<<<	
Cyclonic pre-filter	3-17	N	N	<<<	<<<	<<<	<<<	<<<	<<<	
Dry air filter cartridge	3-20/35	C/N		C/N	<<<	R	<<<	<<<	<<<	
Radiator cores	3-20	N		N	<<<	<<<	<<<	<<<	<<<	
Condenser core (OPTION Air conditioning)	3-20	C/N		C/N	<<<	<<<	<<<	<<<	<<<	
Alternator/ fan/ crankshaft belt tension	3-30	C/A			C/A	<<<	<<<	<<<	<<<	
Compressor belt tension (OPTION Air conditioning)	3-30	C/A			C/A	<<<	<<<	<<<	<<<	
I.C. engine oil	3-34	V				V	<<<	<<<	<<<	
I.C. engine oil filter	3-34	R				R	<<<	<<<	<<<	
Fuel pre-filter	3-35	R				R	<<<	<<<	<<<	
Fuel filter	3-36	R				R	<<<	<<<	<<<	
Fuel tank	3-40						N	<<<	<<<	
Safety dry air filter cartridge	3-40						R	<<<	<<<	
I.C. engine silent blocks							C**	<<<	<<<	
I.C. engine rates							C**	<<<	<<<	
Valves clearances		C**					C**	<<<	<<<	
Cooling liquid	3-46							V	<<<	
Radiator								C**	<<<	
Water pump and the thermostat								C**	<<<	
Alternator and the starter motor								C**	<<<	
Turbocompressor								C**	<<<	
Fuel system	3-48									P
TRANSMISSION										
Gear box oil level	3-17	C	C	<<<	<<<	<<<	<<<	<<<	<<<	
Transmission universal joint	3-21	G		G	<<<	<<<	<<<	<<<	G/C**	
Gear box oil filter	3-36	R				R	<<<	<<<	<<<	
Gear box oil	3-41	V					V	<<<	<<<	
Gear box sump strainer	3-41						N	<<<	<<<	
Silentblocks in the gear box							C**	<<<	<<<	
Gear box controls							C**	<<<	<<<	
Gear box pressures								C**	<<<	
Converter pressure								C**	<<<	
TYRES										
Tyre pressure	3-18	C	C	<<<	<<<	<<<	<<<	<<<	<<<	
Wheel nut torque	3-18	C	C	<<<	<<<	<<<	<<<	<<<	<<<	
Condition of wheels and tyres							C**	<<<	<<<	
Wheel	3-49									R
MAST										
Tension and alignment of the mast lifting chains	3-21	C/A		C/A	<<<	<<<	<<<	<<<	<<<	
Mast	3-22	G		G	<<<	<<<	<<<	<<<	<<<	
Mast uprights	3-30				N/G*	<<<	<<<	<<<	<<<	
Mast lifting chains	3-37	N/C/G				N/C/G	<<<	C*	<<<	
Condition of mast unit								C**	<<<	
Chain rollers								C**	<<<	
Mast guide rollers								C**	<<<	
Mast bearing rollers								C**	<<<	
Thickness of the mast wearing plates								C**	<<<	
HYDRAULIC										
Hydraulic oil level	3-25	C		C	<<<	<<<	<<<	<<<	<<<	
Hydraulic return oil filter cartridge	3-37	R				R	<<<	<<<	<<<	
Hydraulic oil	3-43						V	<<<	<<<	
Suction strainer for hydraulic oil tank	3-43						N	<<<	<<<	
Filter cap for hydraulic oil tank	3-43						R	<<<	<<<	
Speeds of hydraulic movements							C**	<<<	<<<	
Hydraulic pump tubular filter							N**	<<<	<<<	
Condition of hoses and flexible pipes							C**	<<<	<<<	
Condition of cylinders (leakage, shafts)							C**	<<<	<<<	
Hydraulic circuit pressures								C**	<<<	
Hydraulic circuit outputs								C**	<<<	
Hydraulic oil tank								N**	<<<	

647003 EN (03/01/2012)

Downloaded from www.Manualslib.com manuals search engine

A = ADJUST, C = CHECK, G = GREASE, N = CLEAN, P = BLEED, R = REPLACE, V = DRAIN	PAGE	(1)	DAILY OR EVERY 10 HOURS SERVICE	EVERY 50 HOURS SERVICE	EVERY 250 HOURS SERVICE	EVERY 500 HOURS SERVICE OR 6 MONTHS	EVERY 1000 HOURS SERVICE OR 1 YEAR	EVERY 2000 HOURS SERVICE OR 2 YEARS	EVERY 4000 HOURS SERVICE	OCCASIONALLY
BRAKE										
Brake oil level	3-25	C		C	<<<	<<<	<<<	<<<	<<<	
Parking brake	3-31	C/A			C/A	<<<	<<<	<<<	<<<	
Parking brake lever mechanism	3-38	G				G	<<<	<<<	<<<	
Brake oil							V**	<<<	<<<	
Brake system							P**	<<<	<<<	
Brake system pressure							C**	<<<	<<<	
Brake							A**	<<<	<<<	
STEERING										
Steering								C**	<<<	
Steering swivel joints									C**	
CAB										
Windscreen washer liquid level	3-25	C		C	<<<	<<<	<<<	<<<	<<<	
Cab door	3-26	G		G	<<<	<<<	<<<	<<<	<<<	
Cab ventilation filter (OPTION Air conditioning)	3-26/31	R		N	R	<<<	<<<	<<<	<<<	
Cab ventilation filters	3-38	N				N	<<<	<<<	<<<	
Seat belt	3-44						C	<<<	<<<	
Condition of the rear view mirrors							C**	<<<	<<<	
Structure							C**	<<<	<<<	
Air conditioning (OPTION)	3-47							N/C	<<<	
Raising the overhead guard or the cab	3-50									XXX
ELECTRICITY										
Condition of wiring harness and cables							C**	<<<	<<<	
Lights and signals							C**	<<<	<<<	
Warning indicators							C**	<<<	<<<	
Front headlights	3-51									A
FRONT AXLE										
Front axle differential oil level	3-32	C			C	<<<	<<<	<<<	<<<	
Front wheels reducers oil level	3-32	C			C	<<<	<<<	<<<	<<<	
Front axle differential oil	3-38	V				V	<<<	<<<	<<<	
Front axle cooling circuit filter	3-39	R				R	<<<	<<<	<<<	
Front wheels reducers oil	3-44	V					V	<<<	<<<	
Wear of front axle brake discs									C**	
Front wheels reducers clearance									C**	
REAR AXLE MC 30 Turbo Série 3-E3										
Swivel pins	3-26	G		G	<<<	<<<	<<<	<<<	<<<	
Steering cylinder head axle	3-26	G		G	<<<	<<<	<<<	<<<	<<<	
Rear axle oscillation	3-26	G		G	<<<	<<<	<<<	G/C**	<<<	
Rear axle									C**	
REAR AXLE M 26-2 Turbo Série 3-E3 M 30-2 Turbo Série 3-E3										
Swivel pins	3-27	G		G	<<<	<<<	<<<	<<<	<<<	
Steering cylinder foot axles	3-27	G		G	<<<	<<<	<<<	<<<	<<<	
Rear axle oscillation	3-27	G		G	<<<	<<<	<<<	G/C**	<<<	
Rear axle									C**	
REAR AXLE M 26-4 Turbo Série 3-E3 M 30-4 Turbo Série 3-E3 M 40-4Turbo Série 3-E3 M 50-4 Turbo Série 3-E3										
Rear wheels reducers pivots	3-27	G		G	<<<	<<<	<<<	<<<	G/C**	
Rear axle oscillation	3-27	G		G	<<<	<<<	<<<	G/C**	<<<	
Rear axle differential oil level	3-32	C			C	<<<	<<<	<<<	<<<	
Rear wheels reducers oil level	3-32	C			C	<<<	<<<	<<<	<<<	
Rear axle differential oil	3-44	V					V	<<<	<<<	
Rear wheels reducers oil	3-45	V					V	<<<	<<<	
Rear wheels reducers universal joint									C**	
Rear wheels reducers clearance									C**	
REAR AXLE MC 40/50 Turbo POWERSHIFT Série 3-E3 MC 60/70 Turbo POWERSHIFT Série 3-E3										
Swivel pins	3-28	G		G	<<<	<<<	<<<	<<<	<<<	
Rear axle oscillation	3-28	G		G	<<<	<<<	<<<	G/C**	<<<	
Rear axle									C**	
CHASSIS										
Structure							C**	<<<	<<<	
Bearings and articulation rings								C**	<<<	
ATTACHMENTS										
Forks wear		C**				C**	<<<	<<<	<<<	
Attachment carriage							C**	<<<	<<<	
Condition of attachments							C**	<<<	<<<	
LIFT TRUCK										
Tow the lift truck	3-52									XXX
Sling the lift truck	3-52									XXX
Transport the lift truck on a platform	3-53									XXX

Downloaded from www.Manualslib.com manuals search engine

A - DAILY OR EVERY 10 HOURS SERVICE

A1 - I.C. ENGINE OIL LEVEL

CHECK

Place the lift truck on level ground with the I.C. engine stopped, and let the oil drain into the sump.

- Open the I.C. engine bonnet.
- Remove the dipstick 1 (fig. A1/1).
- Clean the dipstick and check the correct level between the two notches.
- If necessary, add oil (see: 3 - MAINTENANCE: LUBRICANTS AND FUEL) by the filler port 2 (fig. A1/2).
- Check visually that there is no leakage or seepage of oil in the I.C. engine.

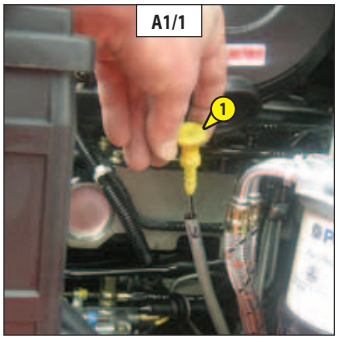

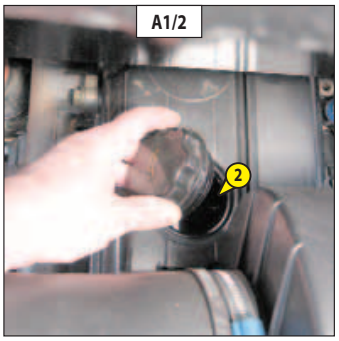

A2 - COOLING LIQUID LEVEL

CHECK

Place the lift truck on level ground with the I.C. engine stopped, and allow the I.C. engine to cool.

- Open the I.C. engine bonnet.
- Slowly turn the cap of the radiator 1 (fig. A2) up to the safety stop.
- Allow the pressure and the steam to escape.
- Press down and turn the cap so as to release it.
- If necessary, add cooling liquid (see: 3 - MAINTENANCE: LUBRICANTS AND FUEL) in order to top up the level to 12 mm below the filler port 2 (fig. A2).
- Lubricate slightly the filler neck in order to facilitate the setting and the removal of the radiator cap.
- Check visually that there is no leakage in the radiator and pipes.

To avoid any risk of spraying or burning, wait until the I.C. engine has cooled down before removing the cooling circuit filler plug. If the cooling liquid is very hot, add only hot cooling liquid (80°C). In an emergency, you can use water as a cooling liquid, then change the cooling circuit liquid as soon as possible (see: 3 - MAINTENANCE: F1 - COOLING LIQUID).

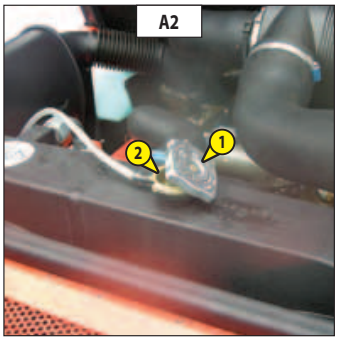

A3 - FUEL LEVEL

CHECK

Keep the fuel tank full, to reduce as much as possible any condensation due to the atmospheric conditions.

- Remove cap 1 (fig. A3).
- Fill the fuel tank with clean fuel (see: 3 - MAINTENANCE: LUBRICANTS AND FUEL), filtered through a strainer or a clean, lint free cloth, through filler port 2 (fig. A3).
- Put the cap back 1 (fig. A3).
- Check visually that there is no leakage in the tank and pipes.

Never smoke or approach with a flame during filling operations or when the tank is open. Never refill while I.C. engine is running.

The fuel tank is degassed via the filler plug. When changing it, always use an original part, with degassing hole.

NOTE: A locking tank cap is available as an OPTION.

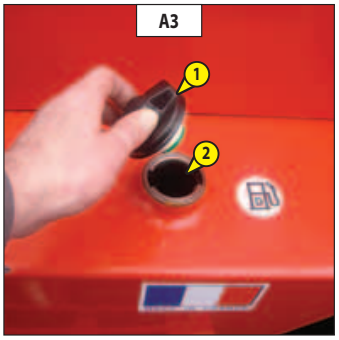

Downloaded from www.Manualslib.com manuals search engine

A4 - FUEL PRE-FILTER

CHECK

- Open the I.C. engine bonnet.
- Check for the presence of water in the pre-filter bowl 1 (fig. A4) and empty it out if necessary.
- Place a receptacle under the drain plug 2 (fig. A4) and loosen it in two to three thread turns.
- Allow the diesel fuel to flow out until it is free from impurities and water.
- Retighten the drain plug while the diesel fuel is flowing out.

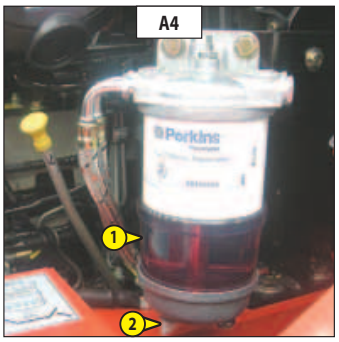

A5 - CYCLONIC PRE-FILTER

CLEAN

Optional for MC 30 Turbo Série 3-E3
M 26-2 Turbo Série 3-E3 M 26-4 Turbo Série 3-E3
M 30-2 Turbo Série 3-E3 M 30-4 Turbo Série 3-E3
M 40-4 Turbo Série 3-E3 M 50-4 Turbo Série 3-E3
MC 40 Turbo POWERSHIFT Série 3-E3 MC 50 Turbo POWERSHIFT Série 3-E3

The cleaning interval is given as a guide, however the pre-filter must be emptied as soon as impurities reach the MAXI level on the tank.

- Loosen nut 1 (fig. A5), remove cover 2 (fig. A5) and empty the tank.
- Clean the pre-filter unit with a clean dry cloth and reassemble the unit.

When cleaning, take care not to let impurities into the dry air filter.

A6 - GEAR BOX OIL LEVEL

CHECK

MC 30 Turbo Série 3-E3 M 26-2 Turbo Série 3-E3 M 26-4 Turbo Série 3-E3
M 30-2 Turbo Série 3-E3 M 30-4 Turbo Série 3-E3
M 40-4 Turbo Série 3-E3 M 50-4 Turbo Série 3-E3

Place the lift truck on level ground with the I.C. engine cold and idling.

- Open the I.C. engine bonnet.
- Remove the dipstick 1 (fig. A6).
- Wipe the dipstick and check the correct level between the two MIN and MAX marks.
- If necessary, add oil (see: 3 - MAINTENANCE: E3 - GEAR BOX OIL).
- Check visually that there is no leakage or seepage of oil in the transmission.

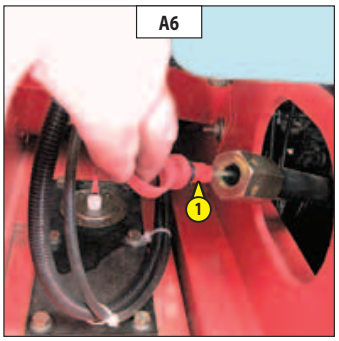

Downloaded from www.Manualslib.com manuals search engine

A6 - GEAR BOX OIL LEVEL

CHECK

MC 40 Turbo POWERSHIFT Série 3-E3 MC 60 Turbo POWERSHIFT Série 3-E3
MC 50 Turbo POWERSHIFT Série 3-E3 MC 70 Turbo POWERSHIFT Série 3-E3

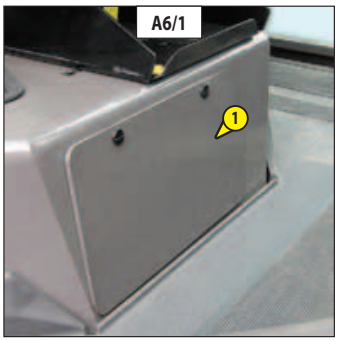

Place the lift truck on level ground with the I.C. engine cold and idling.

- Remove the access panel 1 (fig. A6/1).
- Remove the dipstick 2 (fig. A6/2).
- Wipe the dipstick and check the correct level against the lower mark.
- If necessary, add oil (see: 3 - MAINTENANCE: LUBRICANTS AND FUEL) by the filler port 3 (fig. A6/2).

NOTE: LEVEL WHEN COLD (between 15°C and 20°C), the oil must be level with the lower mark.
LEVEL WHEN HOT (between 82°C and 93°C), the oil must be level with the upper mark.

- Check visually that there is no leakage or seepage of oil in the transmission.

An excess of oil in the gearbox may adversely affect the operation of the lift truck.

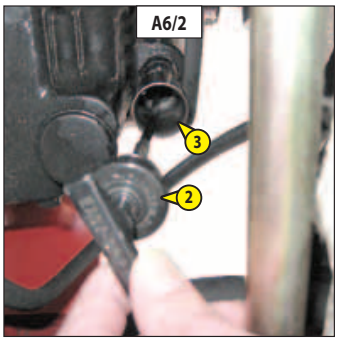

A7 - TYRE PRESSURE AND WHEEL NUT TORQUE

CHECK

- Check the condition of the tyres, to detect cuts, protuberances, wear, etc.
- Check the torque load of the wheel nuts. Non compliance with this instruction can cause damage and rupture to the wheel bolts and distortion to the wheels.

Wheel nut tightening torque

- Front tyres: 630 N.m ± 15%
- Rear tyres: 180 N.m ± 15 % MC 30 Turbo Série 3-E3
- Rear tyres: 340 N.m ± 15 % M 26-2 Turbo Série 3-E3 M 30-2 Turbo Série 3-E3
- Rear tyres: 340 N.m ± 15 % M 26-4 Turbo Série 3-E3 M 30-4 Turbo Série 3-E3 M 40-4 Turbo Série 3-E3 M 50-4 Turbo Série 3-E3
- Rear tyres: 340 N.m ± 15 % MC 40 Turbo POWERSHIFT Série 3-E3 MC 50 Turbo POWERSHIFT Série 3-E3
- Rear tyres: 340 N.m ± 15 % MC 60 Turbo POWERSHIFT Série 3-E3 MC 70 Turbo POWERSHIFT Série 3-E3

- Check and adjust the tyre pressures if necessary (see: 2 - DESCRIPTION: CHARACTERISTICS).

Check that the air hose is correctly connected to the tyre valve before inflating and keep all persons at a distance during inflation. Respect the recommended tyre pressures given.

Downloaded from www.Manualslib.com manuals search engine

Downloaded from www.Manualslib.com manuals search engine

duma rent
https://truckmanualshub.com
Torkonjestraat 23
8510 Marke
Belgium
056 / 222 111
info@dumarent.be
www.dumarent.be

B - EVERY 50 HOURS SERVICE

Carry out the operations described previously as well as the following operations.

B1 - DRY AIR FILTER CARTRIDGE

CHECK - CLEAN

In case of use in a heavily dust laden atmosphere, there are pre-filtration cartridges (see: 3 - MAINTENANCE: FILTERS CARTRIDGES AND BELTS). Also, the checking and cleaning periodicity of the cartridge must be reduced.

If the clogging indicator light comes on, this operation must be carried out as quickly as possible (1 hour maximum). The cartridge must not be cleaned more than seven times, after which the cartridge must be changed. Never use the lift truck without an air filter or with a damaged air filter.

- For the disassembly and reassembly of the cartridge, see: 3 - MAINTENANCE: D3 - DRY AIR FILTER CARTRIDGE.
- Clean the filter cartridge using a compressed air jet (max. pressure 3 bar) directed from the top to the bottom and from the inside towards the outside at a minimum distance of 30 mm from the cartridge wall.
- Cleaning is completed when there is no more dust on the cartridge.

Respect the safety distance of 30 mm between the air jet and the cartridge to avoid tearing or making a hole in the cartridge. The cartridge must not be blown anywhere near the air filter box. Never clean the cartridge by tapping it against a hard surface. Your eyes must be protected during this intervention.

- Clean the cartridge seal surfaces with a damp, clean lint-free cloth and grease with a silicone lubricant (MANITOU reference: 479292).
- Check visually the outer condition of the air filter and its mounts. Verify the condition of the hoses and their mounts also.

Never clean the dry air filter cartridge by washing it in liquid. Do not clean by any means the safety cartridge located inside the filter cartridge, change it for a new one if it is clogged or damaged.

B2 - RADIATOR CORE

CLEAN

In a polluting atmosphere, clean the radiator core every day. Do not use a water jet or high-pressure steam as this could damage the radiator fins.

- Open the I.C. engine bonnet.
- Remove inspection panel 1 (fig. B2/1).
- In order to prevent radiator 2 (fig. B2/2) becoming clogged, clean the radiator with a compressed air jet directed from the outside to the inside. This is the only effective way of removing impurities.

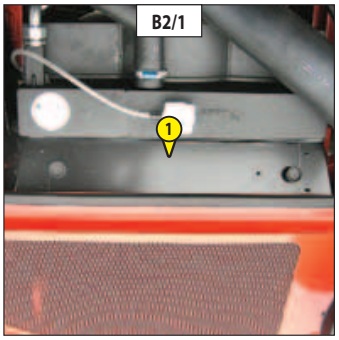

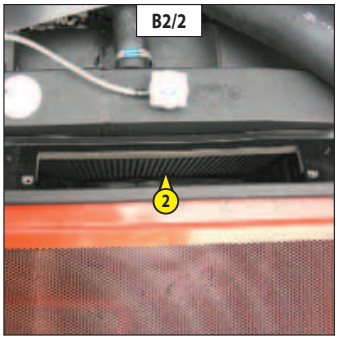

B3 - CONDENSER CORE (OPTION AIR CONDITIONING)

CHECK - CLEAN

In a polluting atmosphere, clean the radiator core every day. Do not use a water jet or high-pressure steam as this could damage the condenser fins.

- Remove the protective grid 1 (fig. B3) and clean it if necessary.
- Visually check whether the condenser is clean and clean it if necessary.
- Clean the condenser using a compressed air jet aimed in the same direction as the air flow.

NOTE: So as to enhance the cleaning, carry out this operation with the fans running.

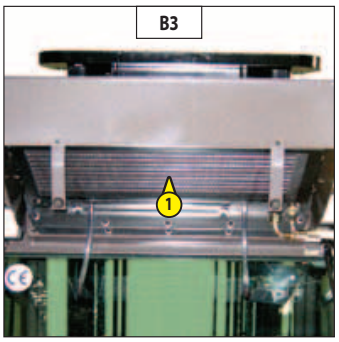

Downloaded from www.Manualslib.com manuals search engine

duma rent
https://truckmanualshub.com
Torkonjestraat 23
8510 Marke
Belgium
056 / 222 111
info@dumarent.be
www.dumarent.be

B4 - TRANSMISSION UNIVERSAL JOINT

GREASE

Clean and lubricate the following points with grease (see: 3 - MAINTENANCE: LUBRICANTS AND FUEL) and remove the surplus of grease.

1 - Lubricators of the universal joint Transmission/Front axle (3 lubricators) (fig. B4/1 and B4/2).

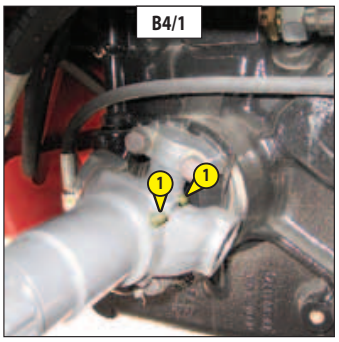

B4/1

M 26-4 Turbo Série 3-E3 M 30-4 Turbo Série 3-E3
M 40-4 Turbo Série 3-E3 M 50-4 Turbo Série 3-E3

Clean and lubricate the following points with grease (see: 3 - MAINTENANCE: LUBRICANTS AND FUEL) and remove the surplus of grease.

2 - Lubricators of the universal joint Transmission/Rear axle (3 lubricators) (fig. B4/3 and B4/4).

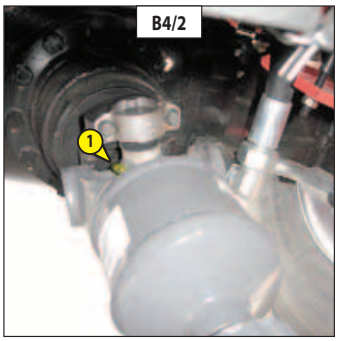

B4/2

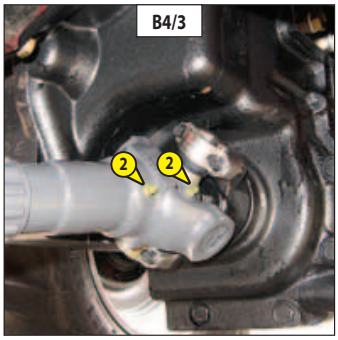

B4/3

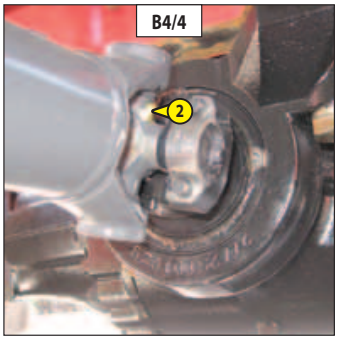

B4/4

B5 - TENSION AND ALIGNMENT OF THE MAST LIFTING CHAINS

CHECK - ADJUST

MC 30 Turbo Série 3-E3 M 26-2 Turbo Série 3-E3 M 26-4 Turbo Série 3-E3
M 30-2 Turbo Série 3-E3 M 30-4 Turbo Série 3-E3

Place the lift truck on level ground with the mast in a vertical position and the forks raised approximately 200 mm.
- Check the alignment of the mast lifting chains between the carriage's chain fasteners and the chain rollers.
- Manually verify the chain tension, if necessary adjust as following while ensuring that the carriage is perpendicular to the mast.
- Untighten the nut 1 (fig. B5).
- Untighten the lock nut 2 (fig. B3) of the chain tension adjuster.
- Adjust the tension by tightening or untightening the nut 3 (fig. B5) while checking the alignment of the lifting chains.
- Then block the lock nut 2 (fig. B5) and the nut 3 (fig. B5).
- Retighten the nut 1 (fig. B5).

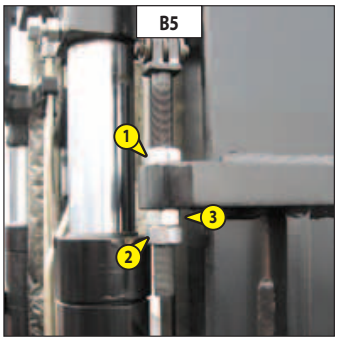

B5

These checks are important for the good working operation of the mast. In case of technical faults, consult your dealer.

Downloaded from www.Manualslib.com manuals search engine

duma » rent
https://truckmanualshub.com
Torkonjestraat 23
8510 Marke
Belgium
056 / 222 111
info@dumarent.be
www.dumarent.be

B5 - TENSION AND ALIGNMENT OF THE MAST LIFTING CHAINS

CHECK - ADJUST

M 40-4 Turbo Série 3-E3 MC 40 Turbo POWERSHIFT Série 3-E3
M 50-4 Turbo Série 3-E3 MC 50 Turbo POWERSHIFT Série 3-E3

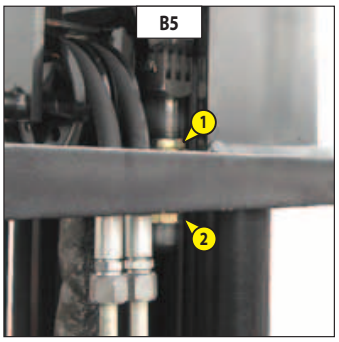

Place the lift truck on level ground with the mast in a vertical position and the forks raised approximately 200 mm.
- Check the alignment of the mast lifting chains between the carriage's chain fasteners and the chain rollers.
- Manually verify the chain tension, if necessary adjust as following while ensuring that the carriage is perpendicular to the mast.
- Untighten the lock nut 1 (fig. B5) of the chain tension adjuster.
- Adjust the tension by tightening or untightening the nut 2 (fig. B5) while checking the alignment of the lifting chains.
- Then block the lock nut 1 (fig. B5) and the nut 2 (fig. B5).

These checks are important for the good working operation of the mast. In case of technical faults, consult your dealer.

B5 - TENSION AND ALIGNMENT OF THE MAST LIFTING CHAINS

CHECK - ADJUST

MC 60 Turbo POWERSHIFT Série 3-E3
MC 70 Turbo POWERSHIFT Série 3-E3

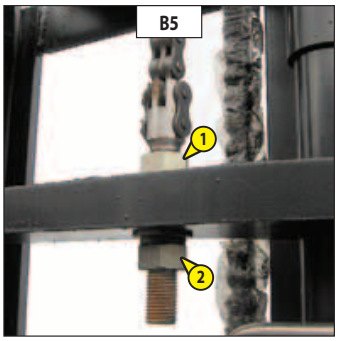

Place the lift truck on level ground with the mast in a vertical position and the forks raised approximately 200 mm.
- Check the alignment of the mast lifting chains between the carriage's chain fasteners and the chain rollers.
- Manually verify the chain tension, if necessary adjust as following while ensuring that the carriage is perpendicular to the mast.
- Untighten the lock nut 1 (fig. B5) of the chain tension adjuster.
- Adjust the tension by tightening or untightening the nut 2 (fig. B5) while checking the alignment of the lifting chains.
- Then block the lock nut 1 (fig. B5) and the nut 2 (fig. B5).

These checks are important for the good working operation of the mast. In case of technical faults, consult your dealer.

B6 - MAST

GREASE

MC 30 Turbo Série 3-E3 M 26-2 Turbo Série 3-E3 M 26-4 Turbo Série 3-E3
M 30-2 Turbo Série 3-E3 M 30-4 Turbo Série 3-E3

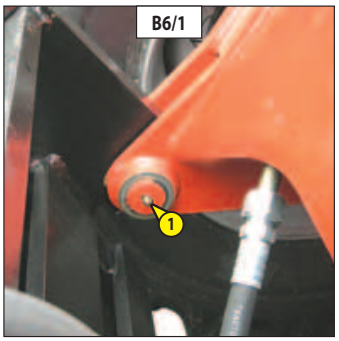

To be carried out weekly, if the lift truck has been operated for less than 50 hours during the week.

In the event of prolonged use in an extremely dusty or oxidising atmosphere, reduce this interval to 10 working hours or every day.

Clean and lubricate the following points with grease (see: 3 - MAINTENANCE: LUBRICANTS AND FUEL) and remove the surplus of grease.

1 - Lubricators of the articulation axles at the foot of the mast (2 lubricators) (fig. B6/1).
2 - Lubricators of the tilt cylinders foot axles (2 lubricators) (fig. B6/2).
3 - Lubricators of the tilt cylinders head axles (2 lubricators) (fig. B6/3).

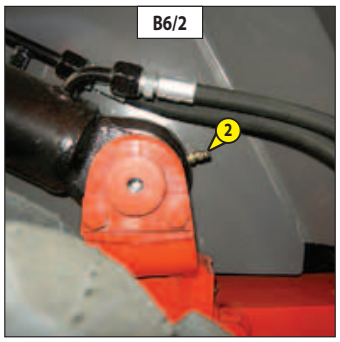

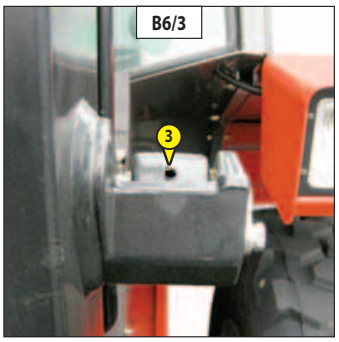

Downloaded from www.Manualslib.com manuals search engine

B6 - MAST

GREASE

M 40-4 Turbo Série 3-E3 MC 40 Turbo POWERSHIFT Série 3-E3
M 50-4 Turbo Série 3-E3 MC 50 Turbo POWERSHIFT Série 3-E3

To be carried out weekly, if the lift truck has been operated for less than 50 hours during the week.

In the event of prolonged use in an extremely dusty or oxidising atmosphere, reduce this interval to 10 working hours or every day.

Clean and lubricate the following points with grease (see: 3 - MAINTENANCE: LUBRICANTS AND FUEL) and remove the surplus of grease.

1 - Lubricators of the articulation axles at the foot of the mast (2 lubricators) (fig. B6/1).
2 - Lubricators of the tilt cylinders foot axles (2 lubricators) (fig. B6/2).
3 - Lubricators of the tilt cylinders head axles (2 lubricators) (fig. B6/3).
4 - Lubricators of upper guide rollers on mast (2 lubricators) (fig. B6/4).
5 - Lubricators of lower guide rollers on mast (2 lubricators) (fig. B6/5).

NOTE: With wide tyre OPTION, raise the forks approximately 2m in order to lubricate the lower mast guide rollers via port 6 (fig. B6/6).

In case of technical faults, consult your dealer.

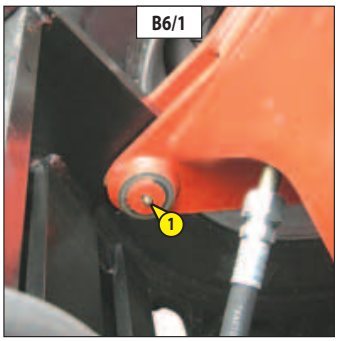

B6/1

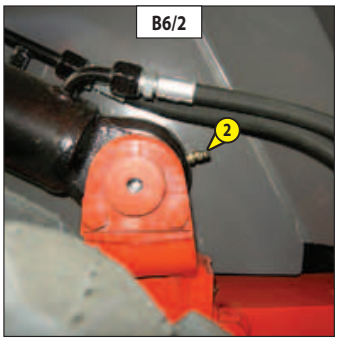

B6/2

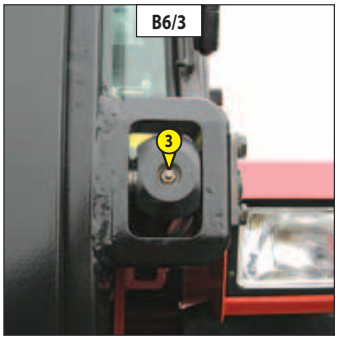

B6/3

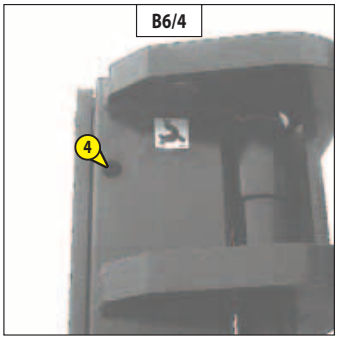

B6/4

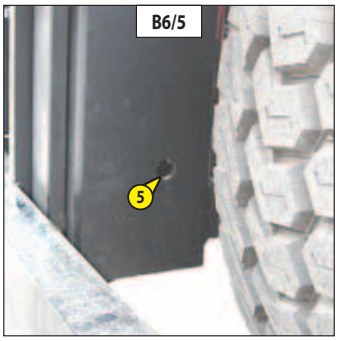

B6/5

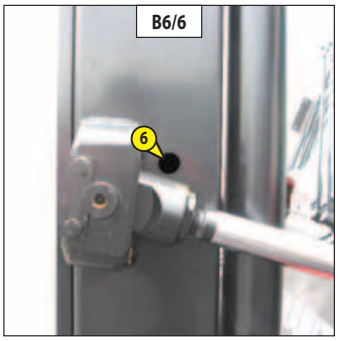

B6/6

Downloaded from www.Manualslib.com manuals search engine

duma rent
https://truckmanualshub.com
Torkonjestraat 23
8510 Marke
Belgium
056 / 222 111
info@dumarent.be
www.dumarent.be

B6 - MAST

GREASE

MC 60 Turbo POWERSHIFT Série 3-E3
MC 70 Turbo POWERSHIFT Série 3-E3

To be carried out weekly, if the lift truck has been operated for less than 50 hours during the week.

In the event of prolonged use in an extremely dusty or oxidising atmosphere, reduce this interval to 10 working hours or every day.

Clean and lubricate the following points with grease (see: 3 - MAINTENANCE: LUBRICANTS AND FUEL) and remove the surplus of grease.

1 - Lubricators of the articulation axles at the foot of the mast (2 lubricators) (fig. B6/1).
2 - Lubricators of the tilt cylinders foot axles (2 lubricators) (fig. B6/2).
3 - Lubricators of the tilt cylinders head axles (2 lubricators) (fig. B6/3).
4 - Lubricators of upper guide rollers on mast (2 lubricators) (fig. B6/4).
5 - Lubricators of lower guide rollers on mast (2 lubricators) (fig. B6/5).
6 - Lubricators of guide rollers on carriage (4 lubricators) (fig. B6/6).

In case of technical faults, consult your dealer.

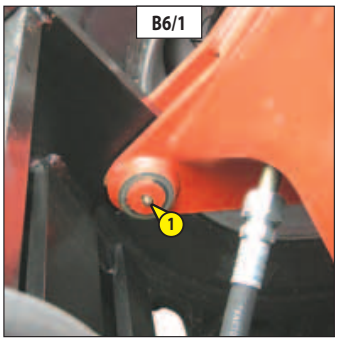

B6/1

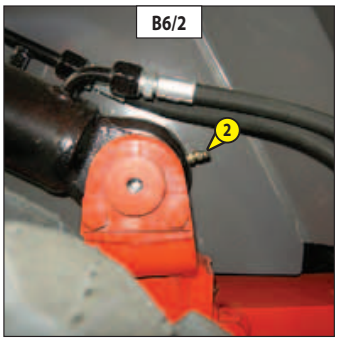

B6/2

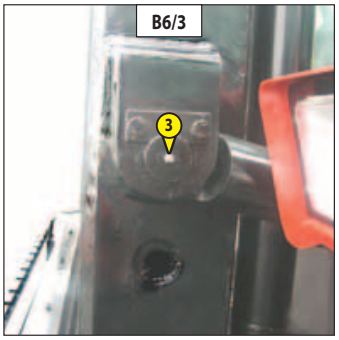

B6/3

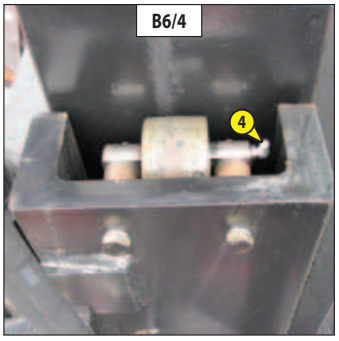

B6/4

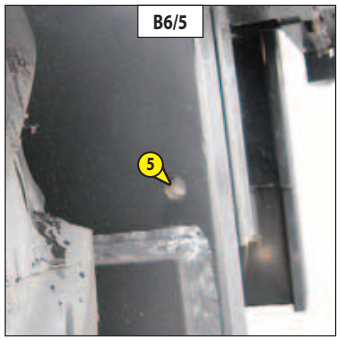

B6/5

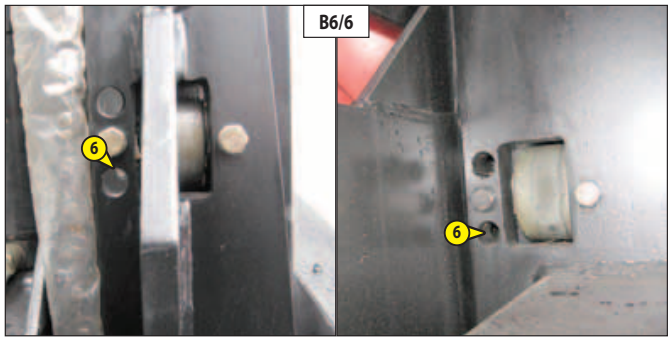

B6/6

Downloaded from www.Manualslib.com manuals search engine

B7 - HYDRAULIC OIL LEVEL

CHECK

Place the lift truck on level ground with the I.C. engine stopped and mast tilted backward and lowered as far as possible.

- Refer to gauge 1 (fig. B7/1).
- The level is correct when it is mid-way between the two indicator marks.
- If necessary, add oil (see: 3 - MAINTENANCE: LUBRICANTS AND FUEL).
- Remove cap 2 (fig. B7/2).
- Add oil by filler port 3 (fig. B7/2).

Use a clean container and funnel and clean the underside of the oil drum before filling.

- Put the cap back.
- Check visually that there is no leakage in the tank and pipes.

Always maintain the oil level at maximum as cooling depends on the oil flowing through the tank.

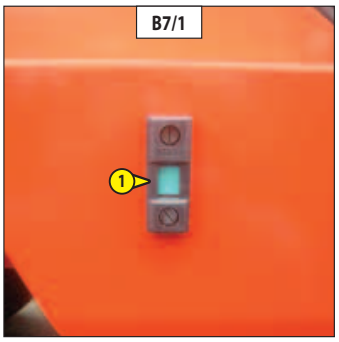

B7/1

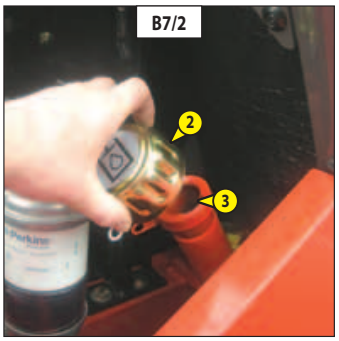

B7/2

B8 - BRAKE OIL LEVEL

CHECK

Place the lift truck on level ground.

- Remove the front plate 1 (fig. B8/1).
- The level is correct when it is at the MAXI level on the tank.
- If necessary, add oil (see: 3 - MAINTENANCE: LUBRICANTS AND FUEL) by the filler port 2 (fig. B8/2).
- Check visually that there is no leakage in the tank and pipes.
- Refit the front plate 1 (fig. B8/1).

If the braking oil level is abnormally low, consult your dealer.

B8/1

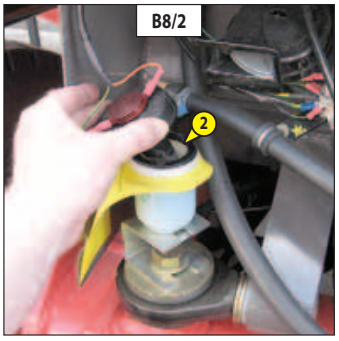

B8/2

B9 - WINDSCREEN WASHER LIQUID LEVEL

CHECK

- Open the I.C. engine bonnet.
- Check visually the level.
- If necessary add windscreen washer liquid (see: 3 - MAINTENANCE: LUBRICANTS AND FUEL) by filler port 1 (fig. B9).

B9

Downloaded from www.Manualslib.com manuals search engine

duma rent
https://truckmanualshub.com
Torkonjestraat 23
8510 Marke
Belgium
056 / 222 111
info@dumarent.be
www.dumarent.be

B10 - CAB DOOR

GREASE

Optional for MC 30 Turbo Série 3-E3

Clean and lubricate the points 1 (4 lubricators) (fig. B10) with grease (see: 3 - MAINTENANCE: LUBRICANTS AND FUEL) and remove the surplus of grease.

B11 - CAB VENTILATION FILTER (OPTION AIR CONDITIONING)

CLEAN

- Lift up protective casing 1 (fig. B11/1).
- Lift out cabin ventilation filter 2 (fig. B11/2).
- Clean the filter with a compressed air jet.
- Check its condition and change if necessary (see: 3 - MAINTENANCE: FILTERS CARTRIDGES AND BELTS).
- Refit the filter and protective casing.

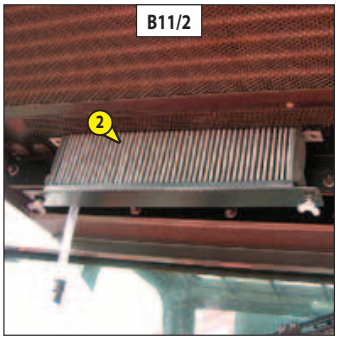

B12 - REAR AXLE

GREASE

MC 30 Turbo Série 3-E3

Clean and lubricate the following points with grease (see: 3 - MAINTENANCE: LUBRICANTS AND FUEL) and remove the surplus of grease.

1 - Lubricators of the swivel pins (6 lubricators) (fig. B12/1).
2 - Lubricators of the steering cylinder head axles (4 lubricators) (fig. B12/1).
3 - Lubricators of the rear axle oscillation pin (2 lubricators) (fig. B12/2).

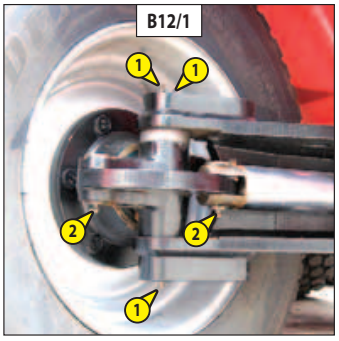

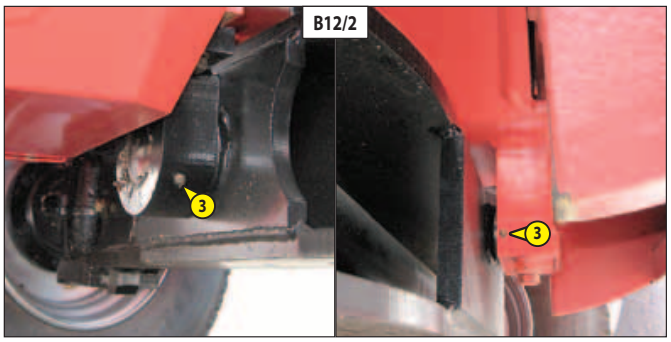

Downloaded from www.Manualslib.com manuals search engine

B12 - REAR AXLE

GREASE

M 26-2 Turbo Série 3-E3 M 30-2 Turbo Série 3-E3

Clean and lubricate the following points with grease (see: 3 - MAINTENANCE: LUBRICANTS AND FUEL) and remove the surplus of grease.

1 - Lubricators of the swivel pins (2 lubricators) (fig. B12/1).
2 - Lubricator of the steering cylinder foot axle (1 lubricator) (fig. B12/2).
3 - Lubricators of the rear axle oscillation pin (2 lubricators) (fig. B12/3).

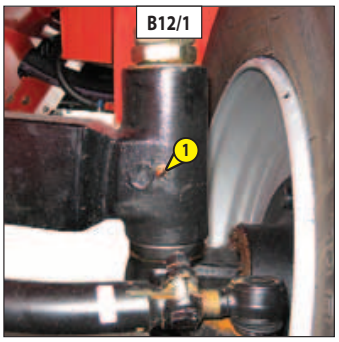

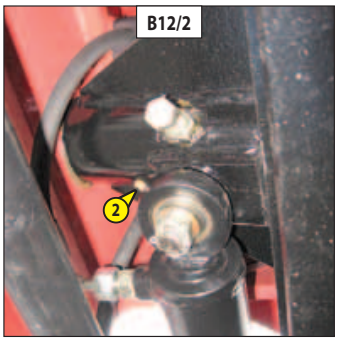

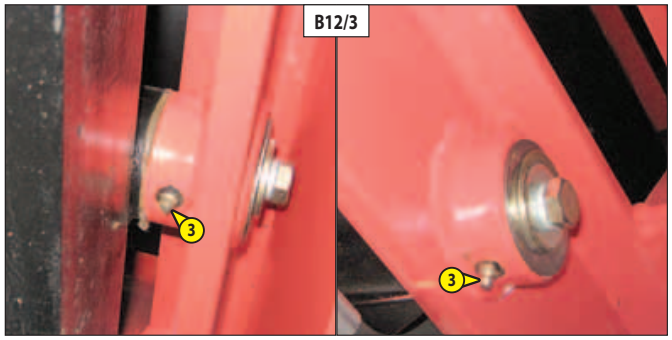

B12 - REAR AXLE

GREASE

M 26-4 Turbo Série 3-E3 M 40-4 Turbo Série 3-E3
M 30-4 Turbo Série 3-E3 M 50-4 Turbo Série 3-E3

Clean and lubricate the following points with grease (see: 3 - MAINTENANCE: LUBRICANTS AND FUEL) and remove the surplus of grease.

1 - Lubricators of the transmission reduction gear box pivots (2 lubricators) (fig. B12/1).
2 - Lubricators of the rear axle oscillation pin (2 lubricators) (fig. B12/2).

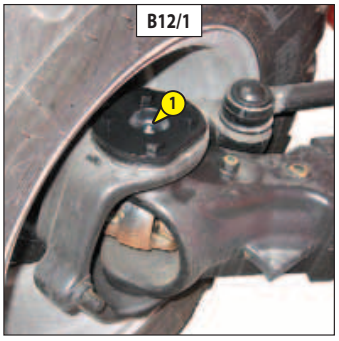

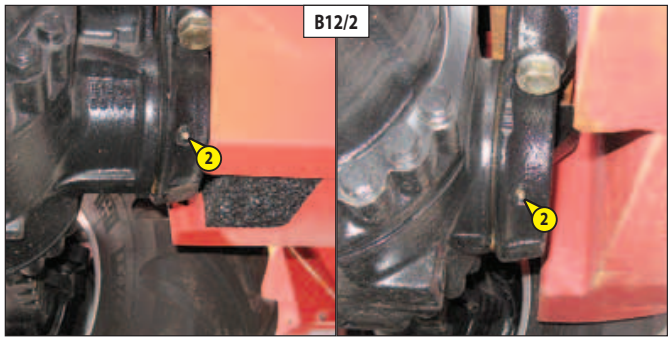

Downloaded from www.Manualslib.com manuals search engine

B12 - REAR AXLE

GREASE

MC 40 Turbo POWERSHIFT Série 3-E3
MC 50 Turbo POWERSHIFT Série 3-E3
MC 60 Turbo POWERSHIFT Série 3-E3
MC 70 Turbo POWERSHIFT Série 3-E3

Clean and lubricate the following points with grease (see: 3 - MAINTENANCE: LUBRICANTS AND FUEL) and remove the surplus of grease.

1 - Lubricators of the swivel pins (4 lubricators) (fig. B12/1).
2 - Lubricators of the rear axle oscillation pin (2 lubricators) (fig. B12/2).

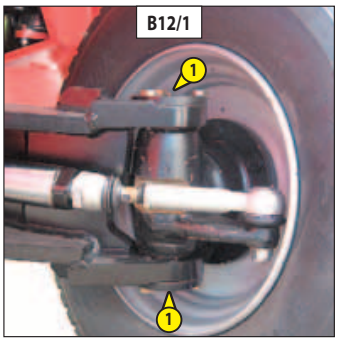

B12/1

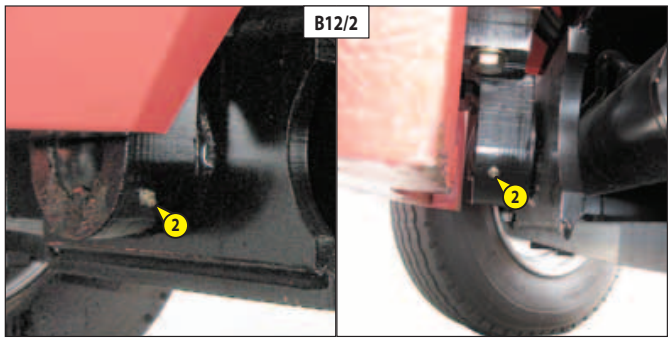

B12/2

Downloaded from www.Manualslib.com manuals search engine

Downloaded from www.Manualslib.com manuals search engine

C - EVERY 250 HOURS SERVICE

Carry out the operations described previously as well as the following operations.

C1 - ALTERNATOR/FAN/CRANKSHAFT BELT TENSION

CHECK - ADJUST

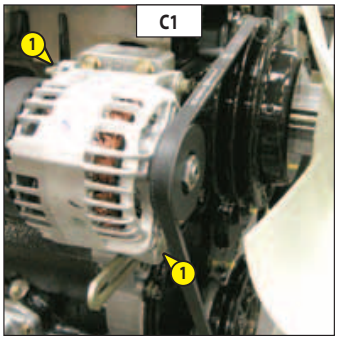

- Open the I.C. engine bonnet.
- Check the belt for signs of wear and cracks and change if necessary (see: 3 - MAINTENANCE: FILTERS CARTRIDGES AND BELTS).
- Check the belt tension between the pulleys of the crankshaft and of the alternator.
- Under a normal pressure exerted with the thumb (45N), the tension should be approximately 10 mm.
- Carry out adjustments if necessary.
- Untighten screws 1 (fig. C1) by two to three thread turns.
- Swivel the alternator assembly so as to obtain the belt tension required.
- Retighten screws 1 (fig. C1) (tightening torque 22 N.m).

If the alternator belt has to be changed, check the tension again after the first 20 hours of operation.

C2 - COMPRESSOR BELT TENSION (OPTION AIR CONDITIONING)

CHECK - ADJUST

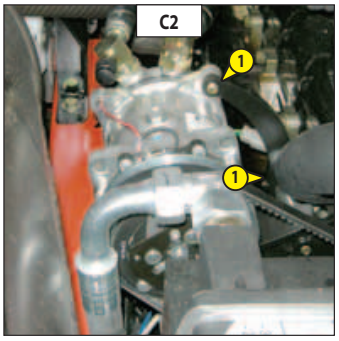

- Open the I.C. engine bonnet.
- Check the belt for signs of wear and cracks and change if necessary (see: 3 - MAINTENANCE: FILTERS CARTRIDGES AND BELTS).
- Check the belt tension between the pulleys of the crankshaft and of the compressor.
- Under a normal pressure exerted with the thumb (45 N), the belt should move approximately 10 mm.
- Carry out adjustments if necessary.
- Untighten screws 1 (fig. C2) by two to three thread turns.
- Swivel the compressor assembly so as to obtain the belt tension required.
- Retighten screws 1 (fig. C2).

If the compressor belt has to be changed, check the tension again after the first 20 hours of operation.

C3 - MAST UPRIGHTS

CLEAN - GREASE

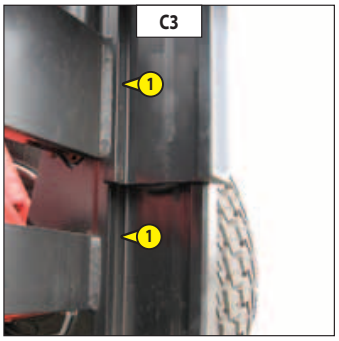

M 40-4 Turbo Série 3-E3 MC 40 Turbo POWERSHIFT Série 3-E3
M 50-4 Turbo Série 3-E3 MC 50 Turbo POWERSHIFT Série 3-E3

OPERATION TO BE PERFORMED BEFORE STARTING-UP A NEW LIFT TRUCK AND A FINAL TIME AFTER 250 HOURS SERVICE.

- Clean and remove the grease over the full length of the mast uprights (fig. C3). Particular care must be taken if the lift truck is used in an environment containing abrasive particles.
- Carefully inspect the different rollers for any traces of wear and replace if necessary.
- Very lightly grease the mast over its entire length (see: 3 - MAINTENANCE: LUBRICANTS AND FUEL).

In case of technical faults, consult your dealer.

Downloaded from www.Manualslib.com manuals search engine

C4 - PARKING BRAKE

CHECK - ADJUST

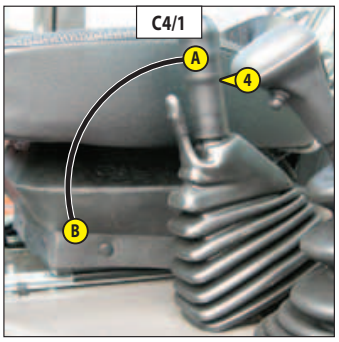

C4/1

Place the lift truck on a slope less than 15 % with the rated load in the transport position.
- Check the tightening adjustment by locking the parking brake in position A (fig. C4/1).
- The adjustment is correct when the lift truck is held stationary on a slope.
- Carry out adjustments if necessary.

ADJUSTING THE PARKING BRAKE CABLE ON THE FRONT AXLE
- Press and release the brake pedal, then release the parking brake, putting it in position B (fig. C4/1).
- Unscrew the nuts 1 (fig. C4/2).
- Adjust the cable by tightening or loosening the nuts 1 (fig. C4/2) to obtain a play of 1.5 mm between the cams 2 (fig. C4/2) and the stops 3 (fig. C4/2).

The manufacturer's settings of the stops must never be changed.

ADJUSTING THE PARKING BRAKE
- Leave the parking brake in position B (fig. C4/1).
- Progressively tighten the end piece of the lever 4 (fig. C4/1) and recheck braking.
- Repeat the operation until the correct braking adjustment is obtained.

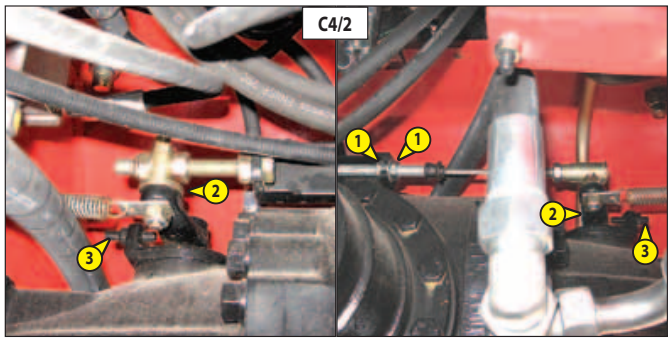

C4/2

C5 - CAB VENTILATION FILTER (OPTION AIR CONDITIONING)

CHANGE

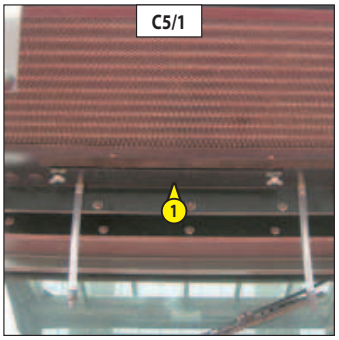

C5/1

- Lift up protective casing 1 (fig. C5/1).
- Lift out cab ventilation filter 2 (fig. C5/2) and replace it with a new one (see: 3 - MAINTENANCE: FILTERS AND BELTS).
- Refit the protective casing.

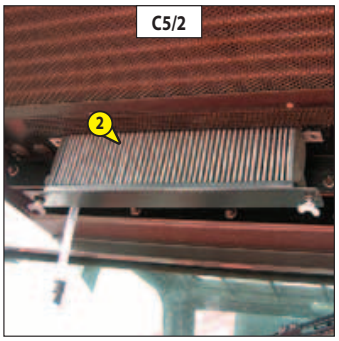

C5/2

Downloaded from www.Manualslib.com manuals search engine

duma rent
https://truckmanualshub.com
Torkonjestraat 23
8510 Marke
Belgium
056 / 222 111
info@dumarent.be
www.dumarent.be

C6 - FRONT AXLE DIFFERENTIAL OIL LEVEL (without cooler of oil)

CHECK

Except for : MC 40 Turbo POWERSHIFT Série 3-E3
MC 50 Turbo POWERSHIFT Série 3-E3

Place the lift truck on level ground with the I.C. engine stopped.

- Remove level plug 1 (fig. C6). The oil should be flush with the edge of the hole.
- If necessary, add oil (see: 3 - MAINTENANCE: LUBRICANTS AND FUEL) by the filler port 2 (fig. C6).
- Replace and tighten the level plug 1 (fig. C6) (tightening torque 34 to 49 N.m).

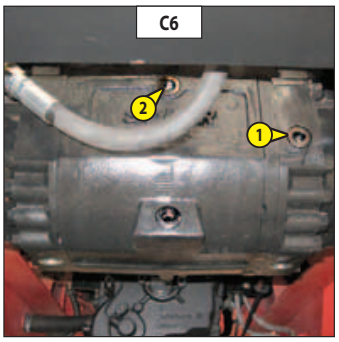

C7 - FRONT AXLE DIFFERENTIAL OIL LEVEL (with cooler of oil)

CHECK

Place the lift truck on level ground with the I.C. engine stopped.

- Remove level plug 1 (fig. C7). The oil should be flush with the edge of the hole.
- If necessary, add oil (see: 3 - MAINTENANCE: LUBRICANTS AND FUEL) by the same hole.
- Replace and tighten the level plug 1 (fig. C7) (tightening torque 34 to 49 N.m).

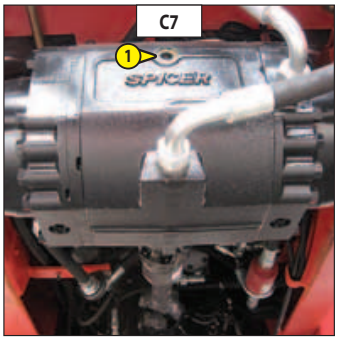

C8 - FRONT WHEEL REDUCERS OIL LEVEL

CHECK

Place the lift truck on level ground with the I.C. engine stopped.

- Check the level on each front wheel reducer.
- Place level plug 1 (fig. C8) in the horizontal position.
- Remove the level plug, the oil should be flush with the edge of the hole.
- If necessary, add oil (see: 3 - MAINTENANCE: LUBRICANTS AND FUEL) by the same hole.
- Replace and tighten the level plug 1 (fig. C8) (tightening torque 34 to 49 N.m).

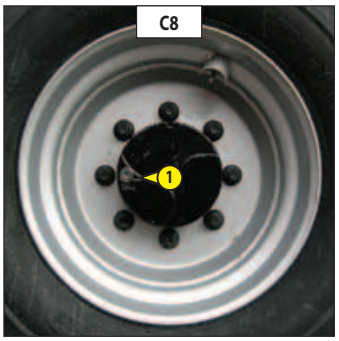

C9 - REAR AXLE DIFFERENTIAL OIL LEVEL

CHECK

M 26-4 Turbo Série 3-E3 M 40-4 Turbo Série 3-E3
M 30-4 Turbo Série 3-E3 M 50-4 Turbo Série 3-E3

Place the lift truck on level ground with the I.C. engine stopped.

- Remove level plug 1 (fig. C9). The oil should be flush with the edge of the hole.
- If necessary, add oil (see: 3 - MAINTENANCE: LUBRICANTS AND FUEL) by the filler port 2 (fig. C9).
- Replace and tighten the level plug 1 (fig. C9) (tightening torque 34 to 49 N.m).

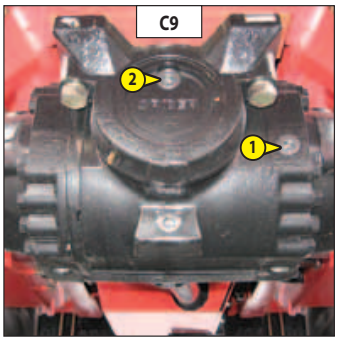

Downloaded from www.Manualslib.com manuals search engine

duma rent
https://truckmanualshub.com
Torkonjestraat 23
8510 Marke
Belgium
056 / 222 111
info@dumarent.be
www.dumarent.be

C10 - REAR WHEEL REDUCER OIL LEVEL

CHECK

M 26-4 Turbo Série 3-E3 M 40-4 Turbo Série 3-E3
M 30-4 Turbo Série 3-E3 M 50-4 Turbo Série 3-E3

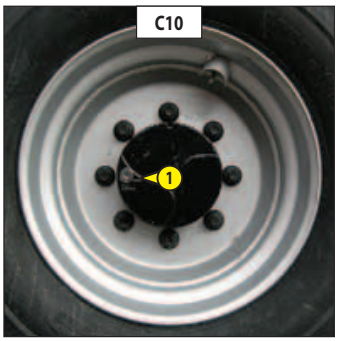

Place the lift truck on level ground with the I.C. engine stopped.

- Check the level on each rear wheel reducer.
- Place level plug 1 (fig. C10) in the horizontal position.
- Remove the level plug, the oil should be flush with the edge of the hole.
- If necessary, add oil (see: 3 - MAINTENANCE: LUBRICANTS AND FUEL) by the same hole.
- Replace and tighten the level plug 1 (fig. C10) (tightening torque 34 to 49 N.m).

Downloaded from www.Manualslib.com manuals search engine

duma rent
https://truckmanualshub.com
Torkonjestraat 23
8510 Marke
Belgium
056 / 222 111
info@dumarent.be
www.dumarent.be

D - EVERY 500 HOURS SERVICE

Carry out the operations described previously as well as the following operations.

D1 - I.C. ENGINE OIL

DRAIN

D2 - I.C. ENGINE OIL FILTER

CHANGE

Place the lift truck on level ground, let the I.C. engine run at idle for a few minutes, then stop the I.C. engine.

DRAINING THE OIL
- Open the I.C. engine bonnet.
- Remove the two inspection panels 1 (fig. D1/1).
- Place a container under drain plug 2 (fig. D1/2) and unscrew the plug.
- Remove filler cap 3 (fig. D1/3) in order to ensure that the oil is drained properly.

Dispose of the drain oil in an ecological manner.

REPLACEMENT OF THE FILTER
- Remove I.C. engine oil filter 4 (fig. D1/2) ; discard the filter and the filter seal.
- Clean the filter bracket with a clean, lint-free cloth.
- Lightly grease the new oil filter seal and refit the oil filter (see: 3 - MAINTENANCE: FILTERS CARTRIDGES AND BELTS) on the filter bracket.

Tighten the oil filter by hand pressure only and lock the filter in place by a quarter turn.

FILLING UP THE OIL
- Refit and tighten drain plug 2 (fig. D1/2) (Tightening torque 30 to 40 N.m).
- Fill up with oil (see: 3 - MAINTENANCE: LUBRICANTS AND FUEL) through filler port 5 (fig. D1/3).

NOTE: For this operation, we recommend you use a funnel fitted with a hose.
- Wait a few minutes to allow the oil to flow into the sump.
- Start the I.C. engine and let it run for a few minutes.
- Check for possible leaks at the drain plug and the oil filter.
- Stop the I.C. engine, wait a few minutes and check the level between the two notches on dipstick 6 (fig. D1/4).
- Top up the level if necessary.
- Refit the two inspection panels 1 (fig. D1/1).

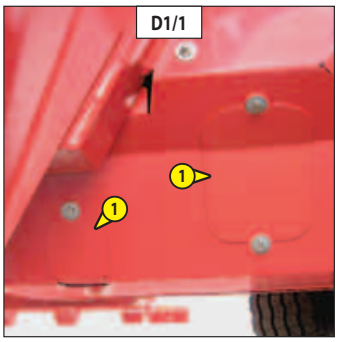

D1/1

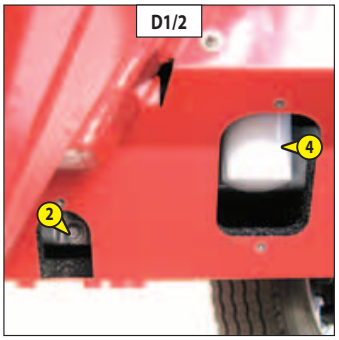

D1/2

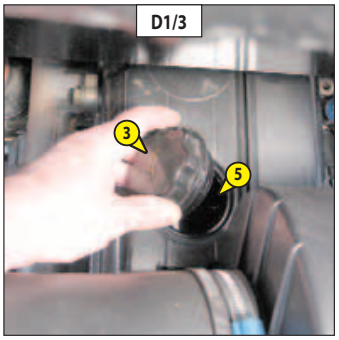

D1/3

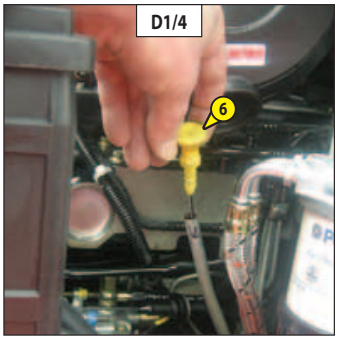

D1/4

Downloaded from www.Manualslib.com manuals search engine

D3 - DRY AIR FILTER CARTRIDGE

CHANGE

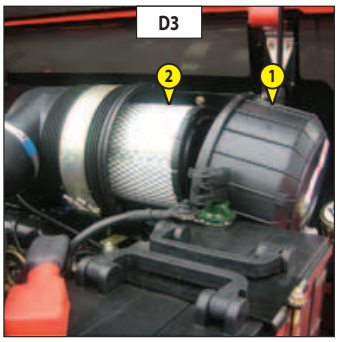

In case of use in a heavily dust laden atmosphere, there are pre-filtration cartridges, see: 3 - MAINTENANCE: FILTERS CARTRIDGES AND BELTS. Also, the checking and cleaning periodicity of the cartridge must be reduced (up to 250 hours in a heavily laden dust atmosphere and with pre-filtration).

Change the cartridge in a clean location, with the I.C. engine stopped. Never operate the lift truck with the air filter removed or damaged.

- Open the I.C. engine bonnet.
- Loosen the bolts and remove cover 1 (fig. D3).
- Gently remove the cartridge 2 (fig. D3), taking care to avoid spilling the dust.
- Leave the safety cartridge in place.
- The following parts must be cleaned with a damp, clean lint-free cloth.
    - The inside of the filter and cover.
    - The inside of the filter inlet hose.
    - The gasket surfaces in the filter and in the cover.
- Check pipes and connections between the air filter and the I.C. engine and the connection and state of the clogging indicator on the filter.
- Before mounting check the state of the new cartridge (see: 3 - MAINTENANCE: FILTERS CARTRIDGES AND BELTS).
- Introduce the cartridge into the filter axis and push it in, pressing the edges and not the middle.
- Reassemble the cover, guiding the valve downwards.

D4 - FUEL PRE-FILTER

CHANGE

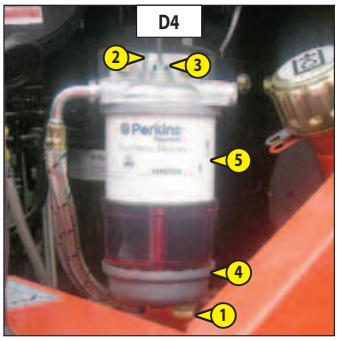

Make sure the electrical contact on the lift truck is cut, otherwise fuel will be released if the lift pump is on.

- Open the I.C. engine bonnet.
- Carefully clean the outside of the pre-filter and its holder, to prevent dust from getting into the system.
- Place a container under the pre-filter and drain it using drain plug 1 (fig. D4).
- Remove bleeder screw 2 (fig. D4) in order to ensure that the oil is drained properly.
- Unscrew locking screw 3 (fig. D4).
- Remove housing 4 (fig. D4) and discard pre-filter 5 (fig. D4) and its seals.
- Clean the inside of the pre-filter head and the housing, using a brush immersed in clean diesel oil.
- Refit the assembly with a new pre-filter and new seals (see: 3 - MAINTENANCE: FILTERS CARTRIDGES AND BELTS).

Downloaded from www.Manualslib.com manuals search engine

D5 - FUEL FILTER CARTRIDGE

CHANGE

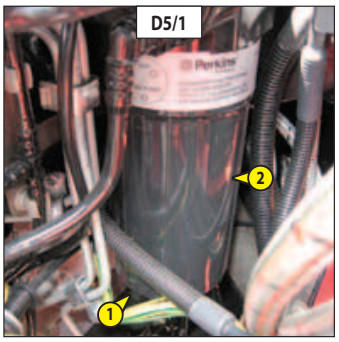

D5/1

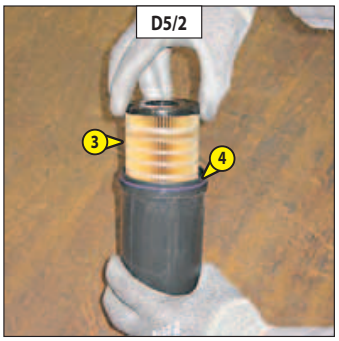

D5/2

Make sure the electrical contact on the lift truck is cut, otherwise fuel will be released if the lift pump is on.

- Open the I.C. engine bonnet.
- Carefully clean the outside of the filter and its holder, to prevent dust from getting into the system.
- Place a container under the filter and drain it through drain plug 1 (fig. D5/1).
- Loosen the body of filter 2 (fig. D5/1).
- Remove the filter cartridge by pressing cartridge 3 (fig. D5/2) down against the pressure of the spring and turn it to the left to extract it.
- Insert a new cartridge (see: 3 - MAINTENANCE: FILTERS AND BELTS), by pressing cartridge 3 (fig. D5/2) down against the pressure of the spring and turn it to the right to lock it into the body of the filter.
- Place the new seal 4 (fig. D5/2) onto the body of the filter and lightly lubricate the contact surface of the seal using clean motor oil.
- Refit the body of the filter onto its holder, hand-tighten it only and lock it with a quarter-turn.
- Close drain plug 1 (fig. D5/1) and remove the container.
- Before starting the I.C. engine, leave the ignition on for three minutes on the lift truck, to give the lift pump time to release air from the filter.
- Start up the I.C. engine and make sure there is no leakage.
- If necessary, bleed the fuel circuit (see: 3 - MAINTENANCE: G1 - FUEL SYSTEM).

D6 - GEAR BOX OIL FILTER

CHANGE

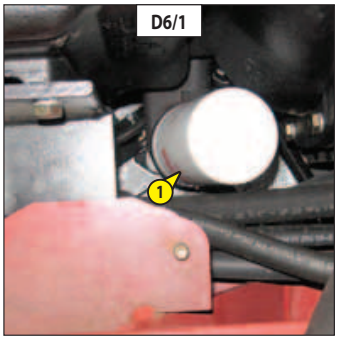

D6/1

MC 30 Turbo Série 3-E3 M 26-2 Turbo Série 3-E3 M 26-4 Turbo Série 3-E3
M 30-2 Turbo Série 3-E3 M 30-4 Turbo Série 3-E3
M 40-4 Turbo Série 3-E3 M 50-4 Turbo Série 3-E3

- Unscrew and discard gear box oil filter 1 (fig. D6/1).
- Carefully clean the filter head with a clean, lint-free cloth.
- Lightly grease the new oil filter seal and fit it on the filter (see: 3 - MAINTENANCE: FILTERS CARTRIDGES AND BELTS).
- Fill up the new gear box oil filter with oil (see: 3 - MAINTENANCE: FILTERS CARTRIDGES AND BELTS)
- Refit the filter, making sure that the seal is correctly positioned and tightened.

Tighten the gear box oil filter by hand pressure only and lock the filter in place by a quarter turn.

Downloaded from www.Manualslib.com manuals search engine

D6 - GEAR BOX OIL FILTER

CHANGE

MC 40 Turbo POWERSHIFT Série 3-E3
MC 50 Turbo POWERSHIFT Série 3-E3
MC 60 Turbo POWERSHIFT Série 3-E3
MC 70 Turbo POWERSHIFT Série 3-E3

- Remove access panel 1 (fig. D6/1).
- Unscrew and discard gear box oil filter 2 (fig. D6/2).
- Carefully clean the filter head with a clean, lint-free cloth.
- Lightly grease the new oil filter seal and fit it on the filter (see: 3 - MAINTENANCE: FILTERS CARTRIDGES AND BELTS).
- Refit the filter, making sure that the seal is correctly positioned and tightened.

Tighten the gear box oil filter by hand pressure only and lock the filter in place by a quarter turn.

- Refit access panel 1 (fig. D6/1).

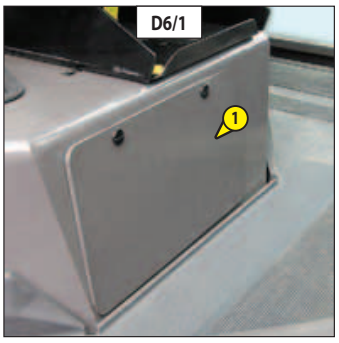

D6/1

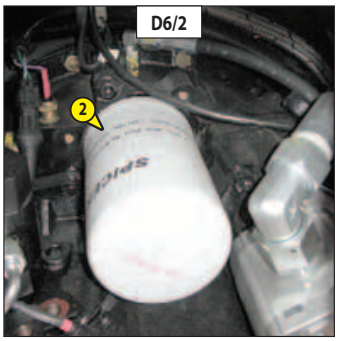

D6/2

D7 - MAST LIFTING CHAINS

CLEAN - CHECK - GREASE

- Wipe the mast lifting chains 1 (fig. D7) with a clean, lint-free cloth, then examine them closely so as to detect any signs of wear.
- Vigorously brush the chains to get rid of any foreign matter, with a hard nylon brush and clean diesel fuel.
- Rinse the chains by means of a paint brush impregnated with clean diesel fuel and dry them with a compressed air jet.
- Moderately lubricate the chains (see: 3 - MAINTENANCE: LUBRICANTS AND FUEL).

In case of technical faults, consult your dealer.

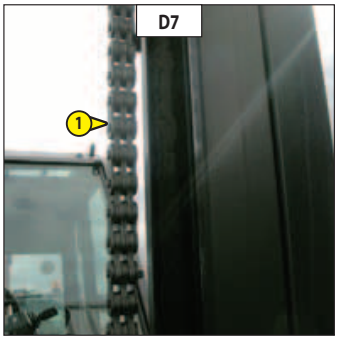

D7

D8 - HYDRAULIC RETURN OIL FILTER CARTRIDGE

CHANGE

Stop the I.C. engine and remove the pressure from the circuits by acting on the hydraulic controls.

Thoroughly clean the outside of the filter and its surroundings before any intervention in order to prevent any risk of polluting the hydraulic circuit.

- Open the I.C. engine bonnet.
- Unscrew the locking screws of the cover 1 (fig. D8).
- Remove the hydraulic return oil filter cartridge 2 (fig. D8), and fit new replacement cartridge (see: 3 - MAINTENANCE: FILTERS CARTRIDGES AND BELTS).
- Make sure that the cartridge is correctly positioned and refit cover 1 (fig. D8).

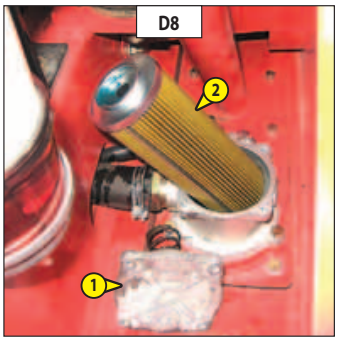

D8

Downloaded from www.Manualslib.com manuals search engine

D9 - PARKING BRAKE LEVER MECHANISM

GREASE

- Clean and grease articulation axles 1 (fig. D9) with grease (see: 3 - MAINTENANCE: LUBRICANTS AND FUEL).

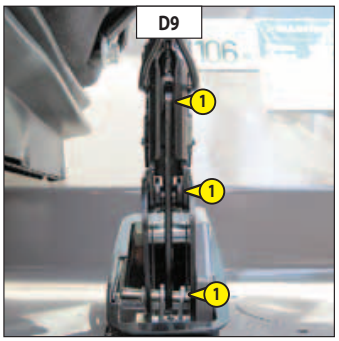

D10 - CAB VENTILATION FILTER

CLEAN

Optional for MC 30 Turbo Série 3-E3

- Remove protective casing 1 (fig. D10/1).
- Lift out cabin ventilation filter 2 (fig. D10/2).
- Clean the filter using a compressed air jet.
- Check its condition and change if necessary (see: 3 - MAINTENANCE: FILTERS CARTRIDGES AND BELTS).
- Refit the filter and protective casing.

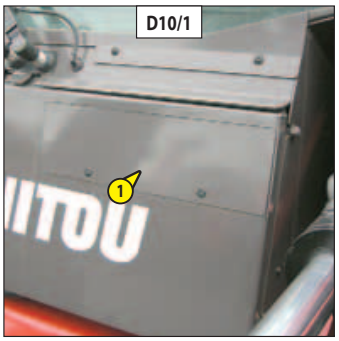

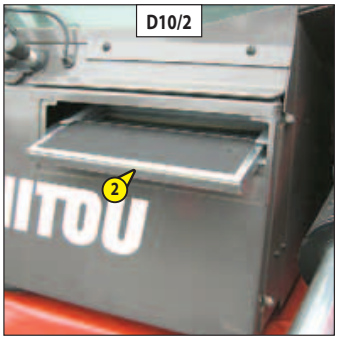

D11- FRONT AXLE DIFFERENTIAL OIL (without cooler of oil)

DRAIN

Except for : MC 40 Turbo POWERSHIFT Série 3-E3
MC 50 Turbo POWERSHIFT Série 3-E3

Place the lift truck on level ground with the I.C. engine stopped and the differential oil still warm.

Dispose of the drain oil in an ecological manner.

- Place a container under drain plugs 1 (fig. D11) and unscrew the plugs.
- Remove level plug 2 (fig. D11) and filler plug 3 (fig. D11) in order to ensure proper emptying.
- Refit and tighten drain plugs 1 (fig. D11) (tightening torque 34 to 49 N.m).
- Fill up with oil (see: 3 - MAINTENANCE: LUBRICANTS AND FUEL) through filler port 3 (fig. D11).
- The level is correct when the oil level is flush with the edge of port 2 (fig. D11).
- Check for any possible leaks at the drain plugs.
- Refit and tighten level cap 2 (fig. D11) (tightening torque 34 to 49 Nm) and filler port 3 (fig. D11) (tightening torque 34 to 49 N.m).

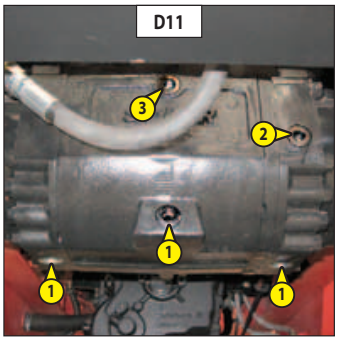

Downloaded from www.Manualslib.com manuals search engine

D12 - FRONT AXLE DIFFERENTIAL OIL (with cooler of oil)

DRAIN

D13 - FRONT AXLE COOLING CIRCUIT FILTER

CHANGE

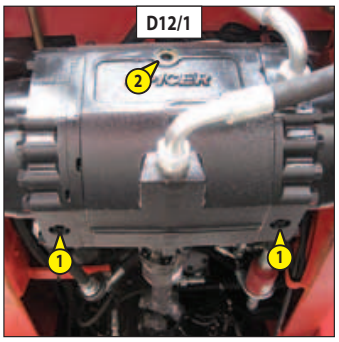

Place the lift truck on level ground with the I.C. engine stopped and the differential oil still warm.

DRAINING THE OIL

Dispose of the drain oil in an ecological manner.

- Place a container under drain plugs 1 (fig. D12/1) and unscrew the plugs.
- Remove level and filling plug 2 (fig. D12/1) in order to ensure that the oil is drained properly.
- Refit and tighten drain plugs 1 (fig. D12/1) (tightening torque 34 to 49 N.m).

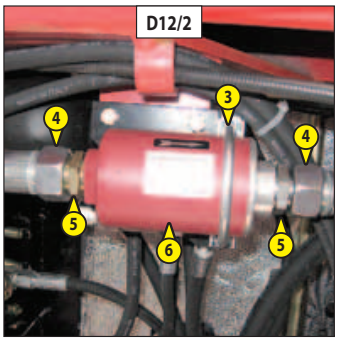

REPLACEMENT OF THE FILTER

- Unscrew the half clamp 3 (fig. D12/2).
- Unscrew the two hoses 4 (fig. D12/2), remove the two couplings 5 (fig. D12/2) and replace the filter 6 (fig. D12/2) (see: 3 - MAINTENANCE: FILTERS CARTRIDGES AND BELTS).

Be careful to mount the filter 6 (fig. D11/2) in the same direction as the arrow.

- Retighten the half clamp 3 (fig. D12/2).

FILLING UP THE OIL

- Fill with oil (see: 3 - MAINTENANCE: LUBRICANTS AND FUEL) by oil level and filler port 2 (fig. D12/1) until the oil is flush with the edge of the port, and put back the plug.
- Start the I.C. engine and allow to run for a few minutes to fill the cooling circuit.
- Stop the I.C. engine, wait a few minutes and top-up the level.
- The level is correct when the oil level is flush with the edge of the level and filling port 2 (fig. D12/1).
- Check for any possible leaks at the drain plugs.
- Refit and tighten the level and filling plug 2 (fig. D12/1) (tightening torque 34 to 49 N.m).

Downloaded from www.Manualslib.com manuals search engine

duma rent
https://truckmanualshub.com
Torkonjestraat 23
8510 Marke
Belgium
056 / 222 111
info@dumarent.be
www.dumarent.be

E - EVERY 1000 HOURS SERVICE

Carry out the operations described previously as well as the following operations.

E1 - FUEL TANK

CLEAN

While carrying out these operations, do not smoke or work near a flame.

Place the lift truck on level ground with the I.C. engine stopped.

- Inspect the parts susceptible to leaks in the fuel circuit and in the tank.
- In the event of a leak, contact your dealer.

Never try to carry out a weld or any other operation by yourself, this could provoke an explosion or a fire.

- Place a container under drain plug 1 (fig. E1/1) and unscrew the plug.
- Remove filling plug 2 (fig. E1/2) in order to ensure that the oil is drained properly.
- Rinse out with ten litres of clean diesel through filler port 3 (fig. E1/2).
- Refit and tighten the drain plug (tightening torque 29 to 39 N.m).
- Fill the fuel tank with clean diesel filtered through the filler port.
- Refit the filling cap.

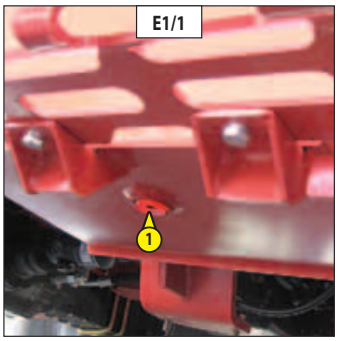

E1/1

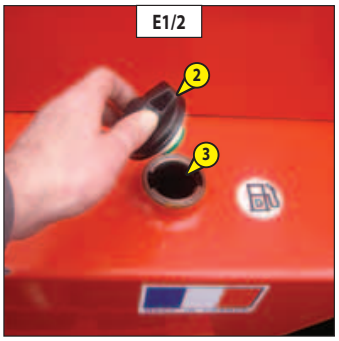

E1/2

E2 - SAFETY DRY AIR FILTER CARTRIDGE

CHANGE

- For the disassembly and reassembly of the dry air filter cartridge, see: 3 - MAINTENANCE: D3 - AIR FILTER CARTRIDGE.
- Gently remove the dry air filter safety cartridge 1 (fig. E2), taking care to avoid spilling the dust.
- Clean the gasket surface on the filter with a damp, clean lint-free cloth.
- Before mounting, check the state of the new safety cartridge (see: 3 - MAINTENANCE: FILTERS AND BELTS).
- Introduce the cartridge into the filter axis and push it in, pressing the edges and not the middle.

NOTE: The periodicity for changing the safety cartridge is given for information only. It must be changed for every two changes of the dry air filter cartridge.

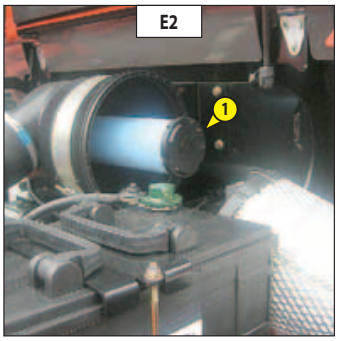

E2

Downloaded from www.Manualslib.com manuals search engine

duma rent
https://truckmanualshub.com
Torkonjestraat 23
8510 Marke
Belgium
056 / 222 111
info@dumarent.be
www.dumarent.be

E3 - GEAR BOX OIL

DRAIN

E4 -GEAR BOX SUMP STRAINER

CLEAN

MC 30 Turbo Série 3-E3 M 26-2 Turbo Série 3-E3 M 26-4 Turbo Série 3-E3
M 30-2 Turbo Série 3-E3 M 30-4 Turbo Série 3-E3
M 40-4 Turbo Série 3-E3 M 50-4 Turbo Série 3-E3

Place the lift truck on level ground with the I.C. engine stopped, the gear box oil still warm.

DRAINING THE OIL

- Place a container under drain plug 1 (fig. E3/1) and under cover 2 (fig. E3/2) and unscrew the drain plug.
- Remove dipstick 3 (fig. E3/3) and unscrew filler cap 4 (fig. E3/3) in order to ensure that the oil is drained properly.

Dispose of the drain oil in an ecological manner.

CLEANING THE STRAINER

- Remove cover 2 (fig. E3/2) and set aside the O-ring joint and sealing washer.
- Allow the rest of the oil to drain away.
- Remove and clean the strainer using a compressed air jet.
- Clean the magnetic section on the plate.
- Refit the assembly and tighten up plate 2 (fig. E3/2) (tightening torque 18 to 31 N.m).

FILLING UP THE OIL

- Refit and tighten drain plug 1 (fig. E3/1) (tightening torque 34 to 54 N.m).
- Fill up with oil (see: 3 - MAINTENANCE: LUBRICANTS AND FUEL) by filler port 5 (fig. E3/3) and refit the filler cap.
- With the I.C. engine idling, check the correct level at the upper mark on the dipstick 3 (fig. E3/3).
- Check any possible leaks from the drain plug or cover.
- Top up the level if necessary.

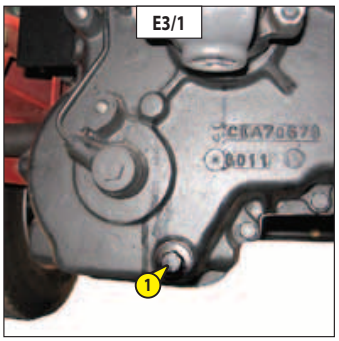

E3/1

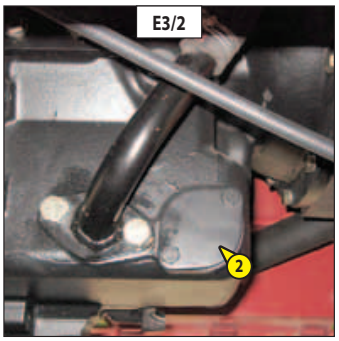

E3/2

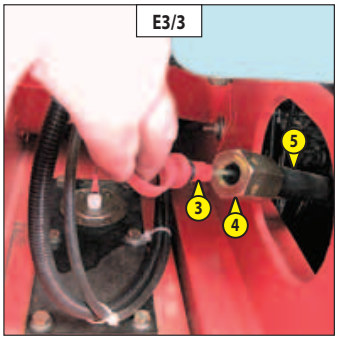

E3/3

Downloaded from www.Manualslib.com manuals search engine

E3 - GEAR BOX OIL

DRAIN

MC 40 Turbo POWERSHIFT Série 3-E3
MC 50 Turbo POWERSHIFT Série 3-E3
MC 60 Turbo POWERSHIFT Série 3-E3
MC 70 Turbo POWERSHIFT Série 3-E3

Place the lift truck on level ground with the I.C. engine stopped, the gear box oil still warm.

DRAINING THE OIL
- Place a container under drain plug 1 (fig. E3/1) and unscrew it.
- Remove the access panel 2 (fig. E3/2).
- Remove dipstick 3 (fig. E3/3) in order to ensure proper emptying.

Dispose of the drain oil in an ecological manner.

FILLING UP THE OIL
- Refit and tighten drain plug 1 (fig. E3/1) (tightening torque 54 to 61 Nm).
- Fill up with oil (see: 3 - MAINTENANCE: LUBRICANTS AND FUEL) by filler port 4 (fig. E3/3).
- Run the I.C. engine at idle then check the level (see: 3 - MAINTENANCE: A5 - GEAR BOX OIL LEVEL) and check for leaks.
- Refit access panel 2 (fig. E3/2).

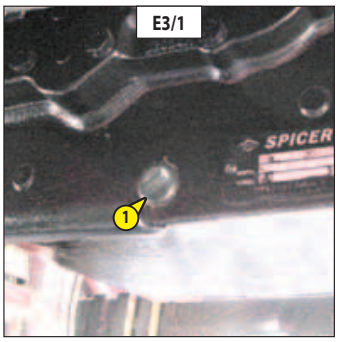

E3/1

E3/2

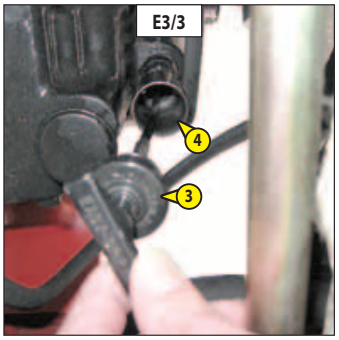

E3/3

Downloaded from www.Manualslib.com manuals search engine

E5 - HYDRAULIC OIL

DRAIN

E6 - SUCTION STRAINER FOR HYDRAULIC OIL TANK

CLEAN

E7 - FILTER CAP FOR HYDRAULIC OIL TANK

CHANGE

Place the lift truck on level ground with the I.C. engine stopped and mast tilted backward and lowered as far as possible.

Before any intervention, thoroughly clean the area surrounding the drain plug and the suction cover on the hydraulic tank.

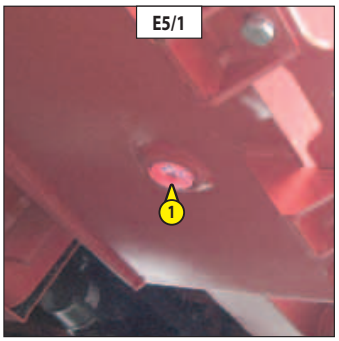

E5/1

DRAINING THE OIL

- Place a container under drain plug 1 (fig. E5/1) and unscrew the plug.
- Open the I.C. engine bonnet.
- Remove filler cap 2 (fig. E5/2) in order to ensure that the oil is drained properly.

Dispose of the drain oil in an ecological manner.

E5/2

CLEANING THE STRAINER

- Remove the side panel 3 (fig. E5/3) (3 fastening screws).
- Disconnect the hoses 4 (fig. E5/4) (according to model of lift truck).
- Remove the inspection cover 5 (fig. E5/4).
- Unscrew the suction strainer at the bottom of the tank, clean it with the help of a compressed air jet, check its condition and change it, if necessary (see: 3 - MAINTENANCE: FILTERS CARTRIDGES AND BELTS).
- Refit the strainer and the access panel 5 (fig. E5/4).
- Reconnect the hoses 4 (fig. E5/4) (according to model of lift truck).
- Refit the side panel 3 (fig. E5/3).

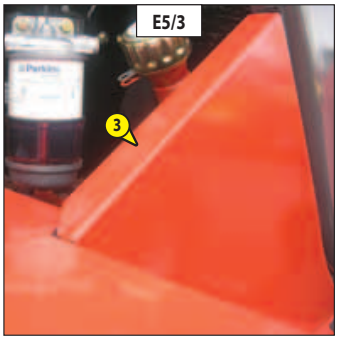

E5/3

FILLING UP THE OIL

- Clean and refit drain plug 1 (fig. E5/1) (tightening torque 29 to 39 N.m).
- Fill up with oil (see: 3 - MAINTENANCE: LUBRICANTS AND FUEL) by filler port 6 (fig. E5/2).

Use a clean container and funnel and clean the underside of the oil drum before filling.

- Check that the oil level on the dipstick 7 (fig. E5/5), is mid-way between the two indicator marks.
- Check for any possible leaks at the drain plug.
- Replace filler plug 2 (fig. E5/2) with a new filler plug (see: 3 - MAINTENANCE: FILTERS CARTRIDGES AND BELTS).

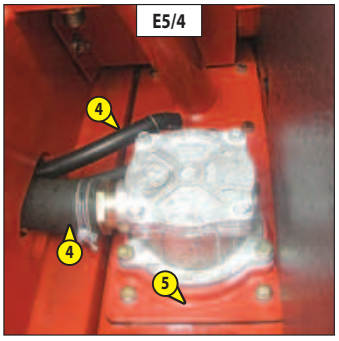

E5/4

HYDRAULIC CIRCUIT DECONTAMINATION

- Let the I.C. engine run (accelerator pedal at halfway travel) for 5 minutes without using anything on the lift truck, then for 5 more minutes while using completely the hydraulic movements (except the steering system).
- Accelerate the I.C. engine at full speed for 1 minute, then activate the steering system.
- This operation makes a pollution abatement of the circuit possible through the hydraulic return oil filter.

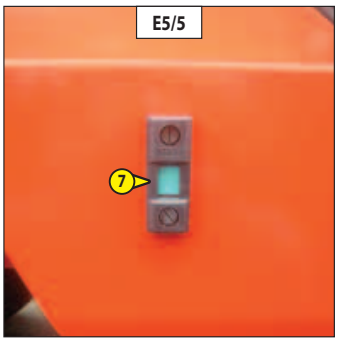

E5/5

Downloaded from www.Manualslib.com manuals search engine

E8 - SEAT BELT

CHECK

Seat belt with two anchoring points
- Check the following points:
  - Fixing of the anchoring points on the seat.
  - Cleanness of the strap and the locking mechanism.
  - Triggering of the locking mechanism.
  - Condition of the strap (cuts, curled edges).

Reeled seat belt with two anchoring points
- Check the points listed above together with the following points:
  - The correct winding of the belt.
  - Condition of the reel guards.
  - Roller locking mechanism when the strap is given a sharp tug.

NOTE: After an accident, replace the seat belt.

In no event should the lift truck be used if the seat belt is defective (fixing, locking, cuts, tears, etc.). Repair or replace the seat belt immediately.

E9 - FRONT WHEELS REDUCERS OIL

DRAIN

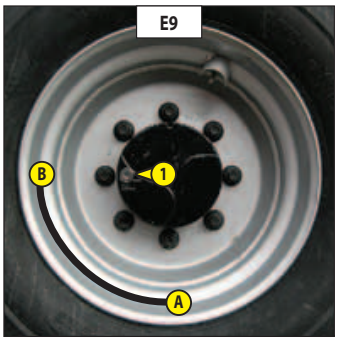

Place the lift truck on level ground with the I.C. engine stopped and the reducers oil still warm.

Dispose of the drain oil in an ecological manner.

- Drain and change each front wheel reducer.
- Place drain plug 1 (fig. E9) in position A.
- Place a container under the drain plug and unscrew the plug.
- Let the oil drain fully.
- Place the drain port in position B, i.e. in a level port.
- Fill up with oil (see: 3 - MAINTENANCE: LUBRICANTS AND FUEL) by level port 1 (fig. E9).
- The level is correct when the oil level is flush with the edge of the hole.
- Refit and tighten the drain plug 1 (fig. E9) (tightening torque 34 to 49 N.m).

E10 - REAR AXLE DIFFERENTIAL OIL

DRAIN

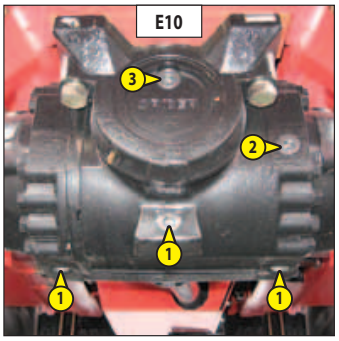

M 26-4 Turbo Série 3-E3 M 40-4 Turbo Série 3-E3
M 30-4 Turbo Série 3-E3 M 50-4 Turbo Série 3-E3

Place the lift truck on level ground with the I.C. engine stopped and the differential oil still warm.

Dispose of the drain oil in an ecological manner.

- Place a container under drain plugs 1 (fig. E10) and unscrew them.
- Remove the level plug 2 (fig. E10) and the filler plug 3 (fig. E10) to ensure proper emptying.
- Refit and tighten the drain plugs 1 (fig. E10) (tightening torque 34 to 49 N.m).
- Fill up with oil (see: 3 - MAINTENANCE: LUBRICANTS AND FUEL) by filler port 3 (fig. E10).
- The level is correct when the oil is level is flush with the edge of port 2 (fig. E10).
- Check for any possible leaks at the drain plugs.
- Refit and tighten the level plug 2 (fig. E10) (tightening torque 34 to 49 N.m) and the filler plug 3 (fig. E10) (tightening torque 34 to 49 N.m).

Downloaded from www.Manualslib.com manuals search engine

duma rent
https://truckmanualshub.com
Torkonjestraat 23
8510 Marke
Belgium
056 / 222 111
info@dumarent.be
www.dumarent.be

E11 - REAR WHEEL REDUCER OIL

DRAIN

M 26-4 Turbo Série 3-E3 M 40-4 Turbo Série 3-E3
M 30-4 Turbo Série 3-E3 M 50-4 Turbo Série 3-E3

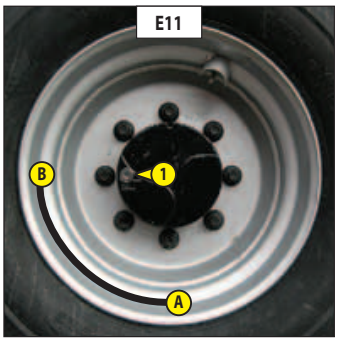

Place the lift truck on level ground with the I.C. engine stopped and the reducers oil still warm.

Dispose of the drain oil in an ecological manner.

- Drain and change the oil in each rear wheel reducer.
- Place drain plug 1 (fig. E11) in position A.
- Place a container under the drain plug and unscrew the plug.
- Let the oil drain fully.
- Place the drain port in position B, i.e. in a level port.
- Fill up with oil (see: 3 - MAINTENANCE: LUBRICANTS AND FUEL) by level port 1 (fig. E11).
- The level is correct when the oil level is flush with the edge of the hole.
- Refit and tighten the drain plug 1 (fig. E11) (tightening torque 34 to 49 N.m).

Downloaded from www.Manualslib.com manuals search engine

F - EVERY 2000 HOURS OF SERVICE

Carry out the operations described previously as well as the following operations.

F1 - COOLING LIQUID

DRAIN

These operations are to be carried out if necessary or every two years at the beginning of winter. Place the lift truck on level ground with the I.C. engine stopped and cold.

DRAINING THE LIQUID
- Open the I.C. engine bonnet.
- Place a container under hose 1 (fig. F1/1) on the radiator and drain plug 2 (fig. F1/2) of the engine block. Remove the hose and loosen the drain plug.
- Remove filling plug 3 (fig. F1/3) of the radiator.
- Let the cooling circuit drain entirely while ensuring that the ports do not get clogged.
- Check the condition of the hoses as well as the fastening devices and change the hoses if necessary.
- Rinse the circuit with clean water and use a cleaning agent if necessary.

FILLING THE LIQUID
- Refit and tighten the hose 1 (fig. F1/1) and drain plug 2 (fig. F1/2) (tightening torque 40 N.m).
- Slowly fill up the cooling circuit (see: 3 - MAINTENANCE: LUBRICANTS AND FUEL) to 12 mm under filler port 4 (fig. F1/3).
- Put back filling plug 3 (fig. F1/3).
- Run the I.C. engine at idle for a few minutes.
- Check for any possible leaks.
- Check the level and refill if necessary.

The I.C. engine does not contain any corrosion resistor and must be filled during the whole year with a mixture containing 25% of ethylene glycol-based antifreeze.

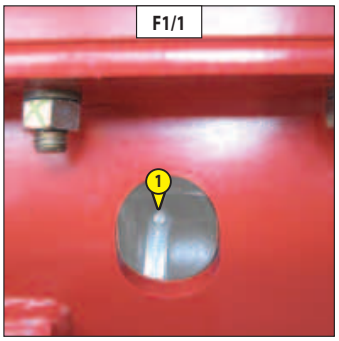

F1/1

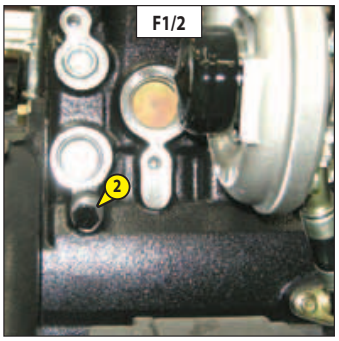

F1/2

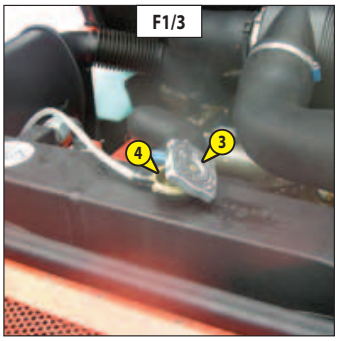

F1/3

Downloaded from www.Manualslib.com manuals search engine

F2 - AIR CONDITIONING (OPTION)

CLEANING - INSPECTION

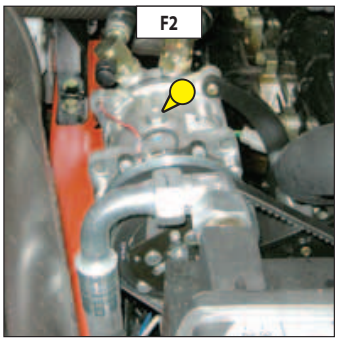

CLEANING CONDENSER AND EVAPORATOR COILS (*)
CLEANING CONDENSATE TRAY AND RELIEF VALVE (*)
COLLECTING COOLANT TO REPLACE FILTER-DRIER (*)
REFILLING WITH COOLANT AND CHECKING THE THERMOSTATIC CONTROL AND PRESSURE SWITCHES (*)

NOTE: When opening the evaporator unit, remember to replace the cover seal.

(*): (CONSULT YOUR DEALER).

CAUTION: DO NOT ATTEMPT TO REPAIR ANY PROBLEMS YOURSELF. ALWAYS REFER TO YOUR DEALER WHEN REFILLING CIRCUITS, AS THEY HOLD THE CORRECT SPARE PARTS, AS WELL AS HAVING THE NECESSARY TECHNICAL KNOWLEDGE AND TOOLS.

- Do not open the circuit under any circumstances as this would cause the coolant to be lost.
- The cooling circuit contains a gas which can be dangerous under certain conditions. This gas, coolant R 134a, is colourless, odourless and heavier than air.

• If this gas is inhaled, take the victim into fresh air, give oxygen or artificial respiration if necessary and call a doctor.
• If the gas is in contact with the skin, wash it immediately under running water and remove any contaminated garments.
• If the gas is in contact with the eyes, rinse them in clear water for 15 minutes and call a doctor.

- The compressor has an oil level gauge (fig. F2). Never unscrew this gauge because it would depressurizes the installation. The oil level is only checked when changing the oil in the circuit.

Downloaded from www.Manualslib.com manuals search engine

G - OCCASIONAL MAINTENANCE

G1 - FUEL SYSTEM

BLEED

These operations are to be carried out only in the following cases:

- A component of the fuel system replaced.
- A drained tank.
- Running out of fuel.

Ensure that the level of fuel in the tank is sufficient and bleed in the following order:

- Open the I.C. engine bonnet.
- Put the ignition on for three minutes on the lift truck, to give the lift pump time to release air from the filter.
- Switch off the ignition with the ignition key.
- Disconnect the harness from the clogging indicator 1 (fig. G1/1), and remove the air filter outlet hose 2 (fig. G1/1).
- Remove the air filter bracket 3 (fig. G1/2), and pivot the assembly to the side.

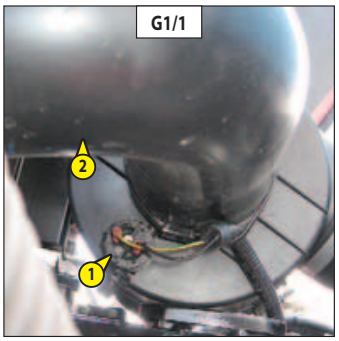

G1/1

BLEEDING THE INJECTORS

- Remove the injectors cover 4 (fig. G1/3).
- Loosen high pressure connectors 5 (fig. G1/4) of all the injectors.
- Temporarily refit the air filter outlet hose 2 (fig. G1/1).
- Activate the starter until the diesel fuel flows out free of air at high pressure connectors 5 (fig. G1/4).

Do not engage the starter motor on a continual basis for more than 30 seconds and let it cool between unsuccessful attempts.

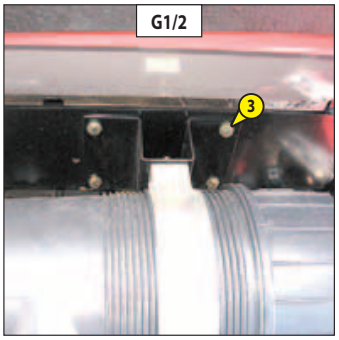

G1/2

- Tighten the connections while the diesel fuel is flowing out (tightening torque 30 N.m).
- The I.C. engine is then ready to be started up.
- Turn the I.C. engine over slowly for 5 minutes immediately after bleeding the fuel feed circuit, in order to ensure that the injection pump has been bled thoroughly.
- Refit the assembly and reconnect the harness to the clogging indicator 1 (fig. G1/1).

NOTE: If the I.C. engine functions correctly for a short time then stops or functions irregularly, check for possible leaks in the low pressure circuit. If in doubt, contact your dealer.

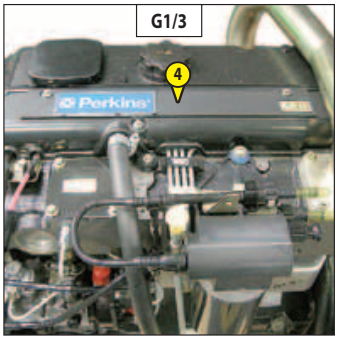

G1/3

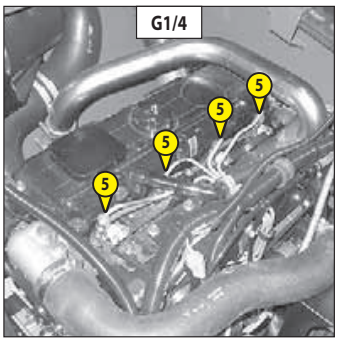

G1/4

Downloaded from www.Manualslib.com manuals search engine

duma rent
https://truckmanualshub.com
Torkonjestraat 23
8510 Marke
Belgium
056 / 222 111
info@dumarent.be
www.dumarent.be

G2 - WHEEL

In the event of a wheel being changed on the public highway, make sure of the following points:

- Stop the lift truck, if possible on even and hard ground.
- To pass on stop of lift truck (see: 1 - OPERATING AND SAFETY INSTRUCTIONS: DRIVING INSTRUCTIONS UNLADEN AND LADEN).
- Put the warning lights on.
- Immobilise the lift truck in both directions on the axle opposite to the wheel to be changed.
- Unlock the nuts of the wheel to be changed.

REAR WHEEL

For this operation, we advise you to use the hydraulic jack MANITOU Reference 505507.

- Place the jack under the rear axle, as near as possible to the wheel and adjust the jack (fig. G2/1).
- Lift the wheel until it lifts off the ground and fit security wedges under the rear axle (fig. G2/2).
- Completely unscrew the wheel nuts and remove them.
- Free the wheel by reciprocating movements and roll it to the side.
- Slip the new wheel on the wheel hub.
- Refit the nuts by hand, if necessary grease them.
- Remove the security wedges and lower the lift truck with the jack.
- Tighten the wheel nuts with a torque wrench (see: 3 - MAINTENANCE: A - DAILY OR EVERY 10 HOURS SERVICE for tightening torque).

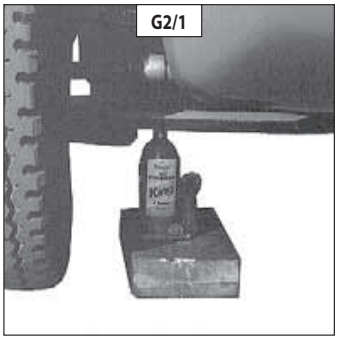
G2/1

G2/2

FRONT WHEEL

For this operation, we advise you to use the hydraulic jack MANITOU reference 505507 and the safety support MANITOU reference 554772.

- Place the jack under the flared axle tube, as near as possible to the wheel and adjust the jack (fig. G2/3).
- Lift the wheel until it comes off the ground and place the safety support under the axle (fig. G2/4).
- Completely unscrew the wheel nuts and remove them.
- Free the wheel by reciprocating movements and roll it to the side.
- Slip the new wheel on the wheel hub.
- Refit the nuts by hand, if necessary grease them.
- Remove the safety support and lower the lift truck with the jack.
- Tighten the wheel nuts with a torque wrench (see: 3 - MAINTENANCE: A - DAILY OR EVERY 10 HOURS SERVICE for tightening torque).

G2/3

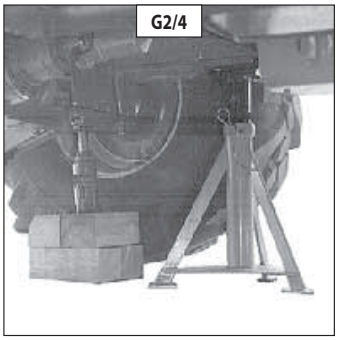
G2/4

Downloaded from www.Manualslib.com manuals search engine

G3 - OVERHEAD GUARD OR CAB

LIFTING

To be carried out when performing servicing operations.

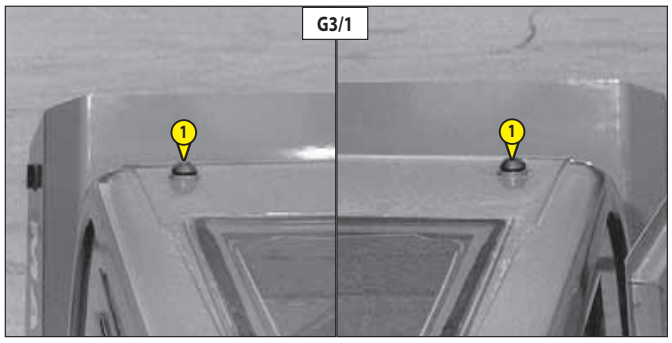

G3/1

POSITIONING THE LIFT TRUCK

- Place the lift truck on level ground.
- Place the gear lever in 1st or 3rd gear (according to model of lift truck).
- Untighten the hand brake.
- Tilt the mast to its maximum extent and, if necessary, raise the mast until it is approximately 50 cm above the overhead guard or the cab.

PLACING THE CABLE

- Unscrew the two screws 1 (fig. G3/1) on the roof and replace them with two MANITOU eyes 2 (fig. G3/2) Reference 72422.
- Pass the cable over the upper belt of the mobile upright and attach it to the eyes (fig. G3/3).

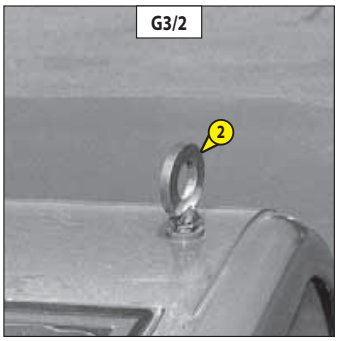

G3/2

UNLOCKING THE OVERHEAD GUARD OR THE CAB

- Remove the side panels 3 (fig. G3/4) (3 fastening screws).
- Unscrew the silentblock screws 4 (fig. G3/5) and remove only the nuts.
- Close the left-hand cab door.
- Open and block the right-hand cab door.

G3/3

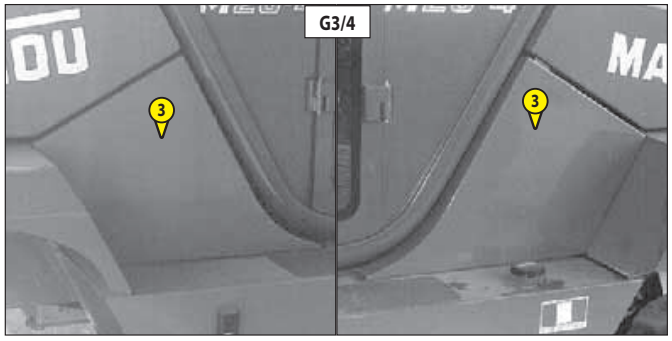

G3/4

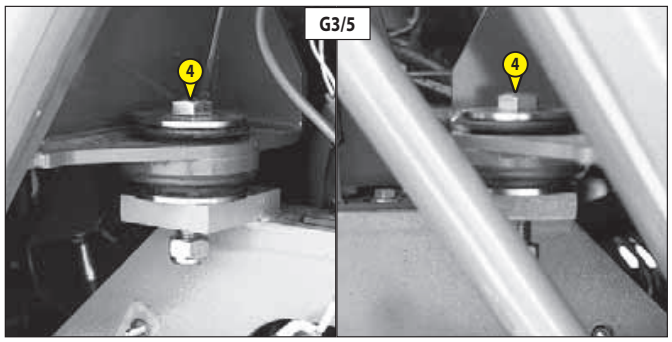

G3/5

Downloaded from www.Manualslib.com manuals search engine

duma rent
https://truckmanualshub.com
Torkonjestraat 23
8510 Marke
Belgium
056 / 222 111
info@dumarent.be
www.dumarent.be

LIFTING THE OVERHEAD GUARD OR CAB

Check that any object left in the operator's stand cannot impede the operation.

- Slowly and slightly tilt the mast towards the front and release the support leg 5 (fig. G3/6).
- Continue lifting the overhead guard or the cab and insert the support leg in its end stops 6 (fig. G3/7) at the earliest possible moment.

Do not raise the overhead guard or the cab more than necessary.

NOTE: The gear lever bellows will be turned inside out (according to model of lift truck).
- Slightly lower the overhead guard or cab to secure it in place (fig. G3/8).

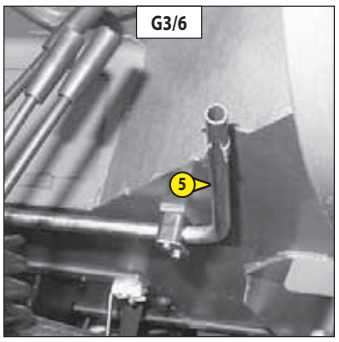

G3/6

LOWERING THE OVERHEAD GUARD OR CAB

- Tilt the mast forward slightly to release the support leg and return it to its clip.
- Slowly lower the overhead guard or cab and check that nothing impedes the operation
- Reinsert and tighten the silentblock fastening screws.
- Refit the side panels.
- Restore the gear box lever bellows to its correct shape (according to the model of lift truck).
- Remove the cable, the eyes and refit the two screws on the roof.

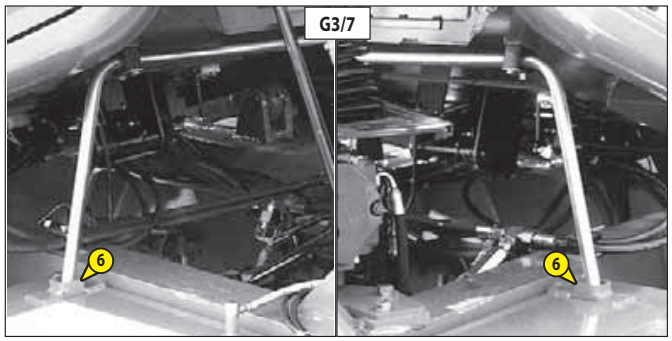

G3/7

G3/8

G4 - FRONT HEADLAMPS

ADJUST

RECOMMENDED SETTING

(as per standard ECE-76/756 76/761 ECE20)

Set to - 2% of the dipped beam in relation to the horizontal line of the headlamp.

ADJUSTING PROCEDURE

- Place the lift truck unloaded and in the transport position and perpendicular to a white wall on flat, level ground (fig. G4).
- Check the tyre pressures (see: 2 - DESCRIPTION: CHARACTERISTICS).
- Put the gear reverser lever in neutral and release the parking brake.

CALCULATING THE HEIGHT OF THE DIPPED BEAM (H2)

- h1 = Height of the dipped beam in relation to the ground.
- h2 = Height of the adjusted beam.
- l = Distance between the dipped beam and the white wall.

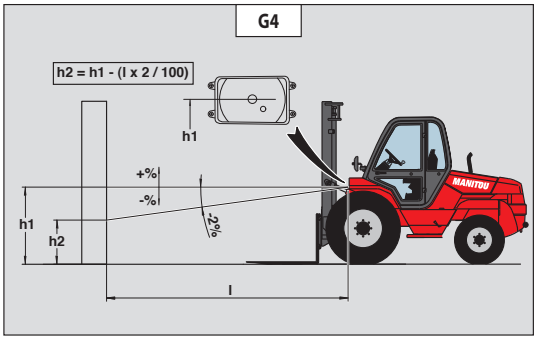

G4

Downloaded from www.Manualslib.com manuals search engine

G5 - LIFT TRUCK

TOW

Do not tow the lift truck at more than 25 km/h.

- Place the forward/reverse selector in neutral and the gear shift in neutral (according to model of lift truck).
- Release the parking brake.
- Put the warning lights on.
- If the I.C. engine is not running there will be no steering or braking assistance. Operate the steering and pedal slowly avoiding sudden jerky movements.

G6 - LIFT TRUCK

SLING

- Take into account the position of the lift truck centre of gravity for lifting (fig. G6/1).

A = 1115 mm	B = 880 mm	MC 30 Turbo Série 3-E3
A = 985 mm	B = 1015 mm	M 26-2 Turbo Série 3-E3
A = 1060 mm	B = 940 mm	M 30-2 Turbo Série 3-E3
A = 1025 mm	B = 1055 mm	M 26-4 Turbo Série 3-E3
A = 1115 mm	B = 965 mm	M 30-4 Turbo Série 3-E3
A = 1350 mm	B = 775 mm	M 40-4 Turbo Série 3-E3
A = 1415 mm	B = 710 mm	M 50-4 Turbo Série 3-E3
A = 1295 mm	B = 770 mm	MC 40 Turbo POWERSHIFT Série 3-E3
A = 1410 mm	B = 655 mm	MC 50 Turbo POWERSHIFT Série 3-E3
A = 1395 mm	B = 900 mm	MC 60 Turbo POWERSHIFT Série 3-E3
A = 1545 mm	B = 950 mm	MC 70 Turbo POWERSHIFT Série 3-E3

- Place the hooks in the fastening points provided (fig. G6/2 and G6/3).

G6/1

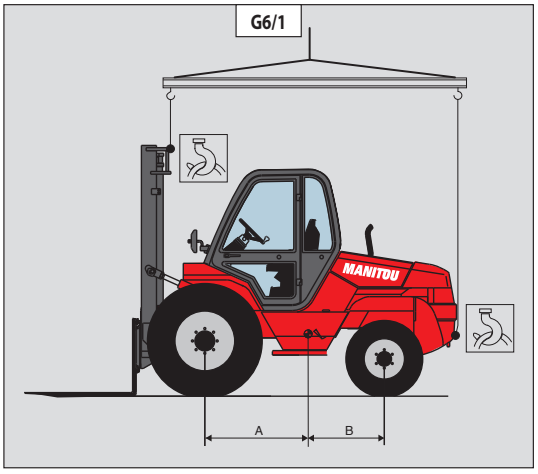

G6/2

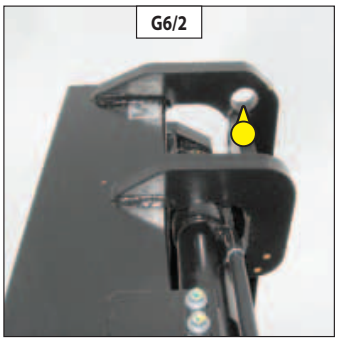

G6/3

Downloaded from www.Manualslib.com manuals search engine

G7 - LIFT TRUCK ON A PLATFORM

Ensure that the safety instructions connected to the platform are respected before the loading of the lift truck and that the driver of the means of transport is informed about the dimensions and the weight of the lift truck (see: 2 - DESCRIPTION: CHARACTERISTICS).

Ensure that the platform has got dimensions and a load capacity sufficient for transporting the lift truck. Check also the pressure on the contact surface allowable for the platform in connection with the lift truck.

LOAD THE LIFT TRUCK

- Block the wheels of the platform.
- Fix the loading ramps so that you obtain an angle as little as possible to lift the lift truck.
- Load the lift truck parallel to the platform.
- Stop the lift truck (see: 1 - OPERATING AND SAFETY INSTRUCTIONS: DRIVING INSTRUCTIONS UNLADEN AND LADEN).

STOW THE LIFT TRUCK

- Fix the chocks to the platform at the front and at the back of each tyre (fig. G7/1).
- Fix also the chocks to the platform in the inside of each tyre (fig. G7/2).
- Stow the lift truck onto the semi-trailer with sufficiently resistant ropes. To the front by passing above the articulation fittings 1 (fig. G7/3) of the mast and to the back onto the towing pin 2 (fig. G7/4).
- Tighten the ropes (fig. G7/5).

G7/1

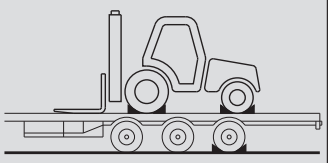

G7/2

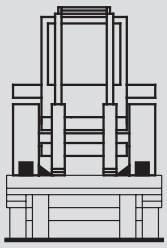

G7/3

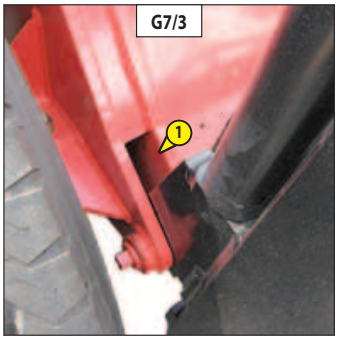

G7/4

G7/5

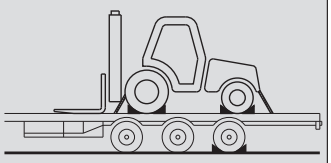

Downloaded from www.Manualslib.com manuals search engine

Downloaded from www.Manualslib.com manuals search engine

https://truckmanualshub.com
Torkonjestraat 23
8510 Marke
Belgium
056 / 222 111
info@dumarent.be
www.dumarent.be

4 - OPTIONAL ATTACHMENTS FOR USE WITH THE RANGE

647003 EN (03/01/2012)

Downloaded from www.Manualslib.com manuals search engine

Downloaded from www.Manualslib.com manuals search engine

duma rent
https://truckmanualshub.com
Torkonjestraat 23
8510 Marke
Belgium
056 / 222 111
info@dumarent.be
www.dumarent.be

TABLE OF CONTENTS

INTRODUCTION			4-5
TECHNICAL SPECIFICATIONS OF ATTACHMENTS	MC 30 Turbo Série 3-E3 M 26-2 Turbo Série 3-E3 M 30-2 Turbo Série 3-E3	M 26-4 Turbo Série 3-E3 M 30-4 Turbo Série 3-E3	4-6
TECHNICAL SPECIFICATIONS OF ATTACHMENTS	M 40-4 Turbo Série 3-E3 MC 40 Turbo POWERSHIFT Série 3-E3 M 50-4 Turbo Série 3-E3 MC 50 Turbo POWERSHIFT Série 3-E3		4-10
TECHNICAL SPECIFICATIONS OF ATTACHMENTS	MC 60 Turbo POWERSHIFT Série 3-E3 MC 70 Turbo POWERSHIFT Série 3-E3		4-14
ATTACHMENT SHIELDS			4-16

Downloaded from www.Manualslib.com manuals search engine

Downloaded from www.Manualslib.com manuals search engine

INTRODUCTION

- Your lift truck must be used with interchangeable equipment. These items are called: ATTACHMENTS.

- A wide range of attachments, specially designed and perfectly suitable for your lift truck is available and guaranteed by MANITOU.

- The attachments are delivered with a load chart concerning your lift truck. The operator's manual and the load chart should be kept in the places provided in the lift truck. For standard attachments, their use is governed by the instructions contained on this notice.

- Some particular uses require the adaptation of the attachment which is not provided in the price-listed options. Optional solutions exist, consult your dealer.

All attachments with a suspended load (winch, crane jib, crane jib with winch, hook, etc.) MUST be used with a lift truck equipped with a hydraulic movement cut-out device. In this case, the movement cut-out must be switched on and the transverse attitude perfectly horizontal.

Only attachments approved by MANITOU are to be used on our lift trucks (see: 4 - ADAPTABLE ATTACHMENTS IN OPTION ON THE RANGE: TECHNICAL SPECIFICATIONS OF ATTACHMENTS). The manufacturer's liability will be denied in case of modification or of attachment adaptation carried out without his knowing it.

Maximum loads are defined by the capacity of a lift truck taking account of the attachment's mass and centre of gravity. In the event of the attachment having less capacity than the lift truck, never exceed this limit.

Downloaded from www.Manualslib.com manuals search engine

TECHNICAL SPECIFICATIONS OF ATTACHMENTS

MC 30 Turbo Série 3-E3 M 26-2 Turbo Série 3-E3 M 26-4 Turbo Série 3-E3
M 30-2 Turbo Série 3-E3 M 30-4 Turbo Série 3-E3

STANDARDISED SIDE-SHIFT CARRIAGE

*: Double Mast With All-Round Vision
**: Double Mast With Total Free-Acting Lift
***: Triple Mast With All-Round Vision
****: Triple Mast With Free-Acting Lift

	TDL 100E-SS-B686 - 1470	TDL 100E-SS-E089 - 1750	TDL 100E-SS-E160 - 2000
PART NUMBER	**570218***	**570073***	**570074***
	570166**	**570167****	**570168****
	570169***	**570170*****	**570171*****
	570163****	**570164******	**570165******
Rated capacity	3000 kg	3000 kg	3000 kg
Side-shift	2 x 100 mm	2 x 100 mm	2 x 100 mm
Width	1470 mm	1750 mm	2000 mm
Weight	192 kg	219 kg	240 kg

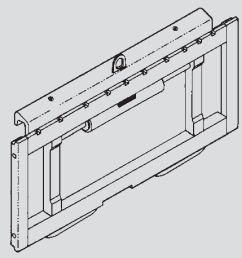

STANDARDISED FORK

MC 30 Turbo Série 3-E3

PART NUMBER	**415727**	**415729**	
Section	125 x 40 x 1200 mm	125 x 45 x 1200 mm	
Weight	74 kg	79 kg	

M26-2 Turbo Série 3-E3 M26-4 Turbo Série 3-E3
M30-2 Turbo Série 3-E3 M30-4 Turbo Série 3-E3

PART NUMBER	**415728**	**415730**	
Section	125 x 40 x 1200 mm	125 x 45 x 1200 mm	
Weight	77 kg	82 kg	

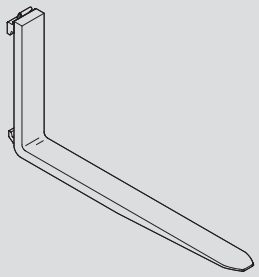

LOAD BACK REST

PART NUMBER	**555325**	**570113**	**570114**
Width	1470 mm	1750 mm	2000 mm
Weight	41 kg	46 kg	51 kg

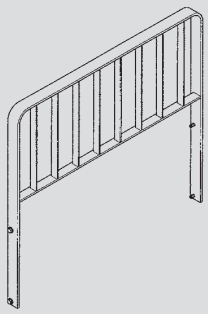

647003 EN (03/01/2012)

Downloaded from www.Manualslib.com manuals search engine

DIGGING BUCKET			
	SP 500 30N AD S3	SP 500 30NL AD S3	
PART NUMBER	**741444**	**741446**	
Rated capacity	500 L/900 kg	500 L/900 kg	
Width	1648 mm	2022 mm	
Teeth	4	6	
Weight	420 kg	450 kg	

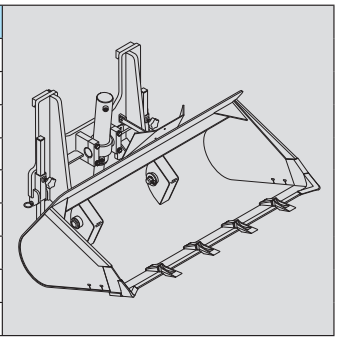

DIGGING BUCKET			
	SP 700 40N AD S2	SP 1000 40NL AD S2	
PART NUMBER	**751454**	**751459**	
Rated capacity	700 L/1260 kg	1000 L/1800 kg	
Width	2110 mm	2210 mm	
Teeth	6	6	
Weight	630 kg	715 kg	

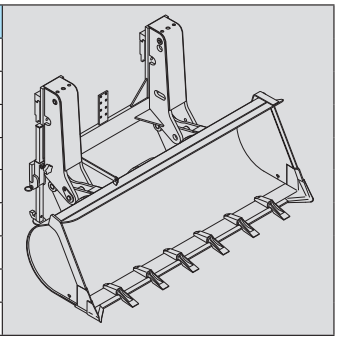

BUILDING BUCKET			
	SP 500 30N SD	SP 500 30NL SD	
PART NUMBER	**570278**	**570280**	
Rated capacity	500 L/900 kg	500 L/900 kg	
Width	1648 mm	2022 mm	
Weight	420 kg	450 kg	

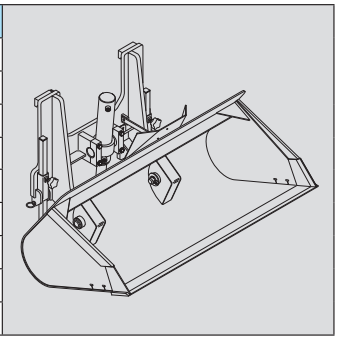

BUILDING BUCKET			
	SP 700 40N SD	SP 1000 40N SD	
PART NUMBER	**751452**	**751456**	
Rated capacity	700 L/1260 kg	1000 L/1800 kg	
Width	2100 mm	2200 mm	
Weight	605 kg	690 kg	

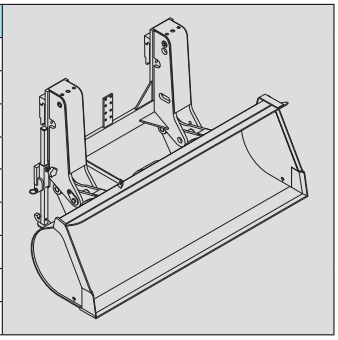

GRAIN BUCKET			
	BA 1000 S2 30N	BA 1500 S2 30N	BA 2000 S2 30N
PART NUMBER	**751466**	**751467**	**751468**
Rated capacity	1000 L/1200 kg	1500 L/1800 kg	2000 L/2000 kg
Width	2022 mm	2022 mm	2022 mm
Weight	480 kg	610 kg	700 kg

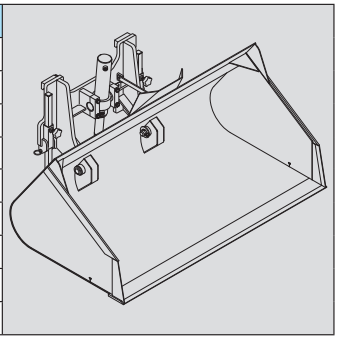

Downloaded from www.Manualslib.com manuals search engine

Torkonjestraat 23
8510 Marke
Belgium
056 / 222 111
info@dumarent.be
www.dumarent.be

CEREAL AND FERTILIZER BUCKET			
	BCE 1500 40N	BCE 2000 40N	
PART NUMBER	**751469**	**751471**	
Rated capacity	2000 L/2400 kg	2000 L/2400 kg	
Width	2100 mm	2100 mm	
Weight	775 kg	870 kg	

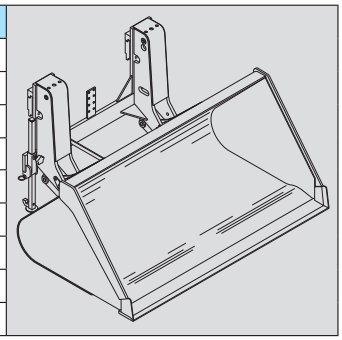

Downloaded from www.Manualslib.com manuals search engine

Torkonjestraat 23
8510 Marke
Belgium
056 / 222 111
info@dumarent.be
www.dumarent.be

CONCRETE BUCKET (ADAPTABLE ON FORKS)			
	BB 500 S4		
PART NUMBER	**654409**		
Rated capacity	500 L/1300 kg		
Width	1100 mm		
Weight	205 kg		

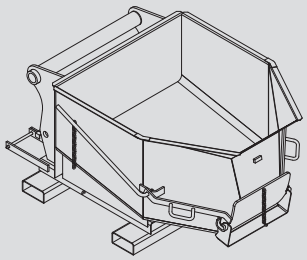

CONCRETE BUCKET WITH SPOUT (ADAPTABLE ON FORKS)			
	BBG 500 S4		
PART NUMBER	**654411**		
Rated capacity	500 L/1300 kg		
Width	1100 mm		
Weight	220 kg		

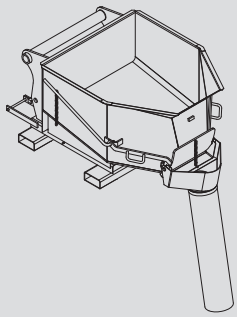

SPOUT BUCKET (ADAPTABLE ON FORKS)			
	GL 300 S2	**GL 400 S2**	**GL 600 S2**
PART NUMBER	**174371**	**174372**	**174373**
Rated capacity	300 L/660 kg	400 L/880 kg	600 L/1320 kg
Weight	149 kg	157 kg	277 kg
	GL 800 S2		
PART NUMBER	**174374**		
Rated capacity	800 L/1760 kg		
Weight	308 kg		
HYDRAULIC KIT TO OPEN THE SPOUT			
PART NUMBER	**653750**		

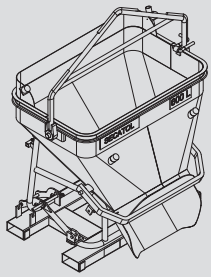

SPOUT BUCKET (ADAPTABLE ON FORKS)			
	GL 1000 S2	**GL 1500 S2**	
PART NUMBER	**174375**	**174376**	
Rated capacity	1000 L/2200 kg	1500 L/3300 kg	
Weight	325 kg	375 kg	
HYDRAULIC KIT TO OPEN THE SPOUT			
PART NUMBER	**653750**		

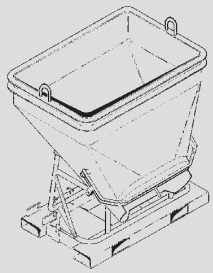

Downloaded from www.Manualslib.com manuals search engine

Torkonjestraat 23
8510 Marke
Belgium
056 / 222 111
info@dumarent.be
www.dumarent.be

TECHNICAL SPECIFICATIONS OF ATTACHMENTS

M 40-4 Turbo Série 3-E3 MC 40 Turbo POWERSHIFT Série 3-E3
M 50-4 Turbo Série 3-E3 MC 50 Turbo POWERSHIFT Série 3-E3

STANDARDISED SIDE-SHIFT CARRIAGE

M 40-4 Turbo Série 3-E3 MC 40 Turbo POWERSHIFT Série 3-E3

*: Double Mast With All-Round Vision
**: Double Mast With Total Free-Acting Lift
Triple Mast With All-Round Vision

	TDL 40N 1670	TDL 40N 2000	
PART NUMBER	**752185***	**752186***	
	572069**	**572071****	
Rated capacity	3600 kg	3600 kg	
Side-shift	2 x 100 mm	2 x 100 mm	
Width	1670 mm	2000 mm	
Weight	335 kg	380 kg	

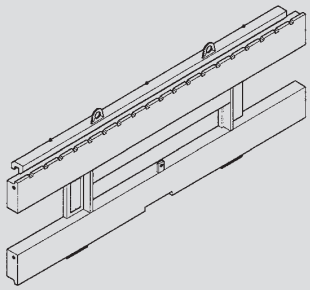

STANDARDISED SIDE-SHIFT CARRIAGE

M 50-4 Turbo Série 3-E3 MC 50 Turbo POWERSHIFT Série 3-E3

*: Double Mast With All-Round Vision
**: Double Mast With Total Free-Acting Lift
Triple Mast With All-Round Vision

	TDL 50N 1670	TDL 50N 2000	
PART NUMBER	**752187***	**752188***	
	572070**	**572072****	
Rated capacity	4500 kg	4500 kg	
Side-shift	2 x 100 mm	2 x 100 mm	
Width	1670 mm	2000 mm	
Weight	360 kg	415 kg	

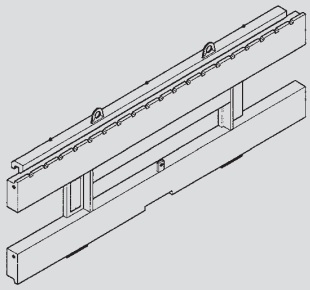

STANDARDISED FORK

M 40-4 Turbo Série 3-E3			
PART NUMBER	**415497**	**415498**	
Section	150 x 50 x 1200 mm	150 x 60 x 1200 mm	
Weight	112 kg	128 kg	
MC 40 Turbo POWERSHIFT Série 3-E3			
PART NUMBER	**415493**	**415494**	
Section	150 x 50 x 1200 mm	150 x 60 x 1200 mm	
Weight	105 kg	124 kg	
M 50-4 Turbo Série 3-E3			
PART NUMBER	**415499**		
Section	150 x 60 x 1200 mm		
Weight	138 kg		
MC 50 Turbo POWERSHIFT Série 3-E3			
PART NUMBER	**415495**		
Section	150 x 60 x 1200 mm		
Weight	134 kg		

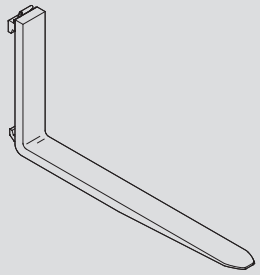

647003 EN (03/01/2012)

Downloaded from www.Manualslib.com manuals search engine

LOAD BACK REST			
PART NUMBER	**572788**	**572790**	
Width	1670 mm	2000 mm	
Weight	56 kg	63 kg	

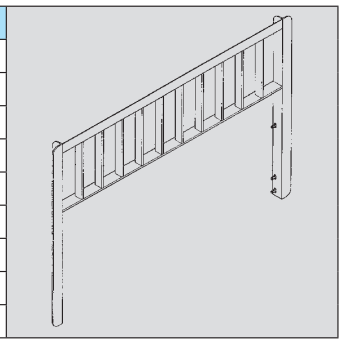

STANDARD DOUBLE SIDE-SHIFT CARRIAGE			
M 40-4 Turbo Série 3-E3 MC 40 Turbo POWERSHIFT Série 3-E3			
	DOUBLE TDLA 40N		
PART NUMBER	**572401**		
Rated capacity	2 x 2000 kg		
Side-shift	2 x 150/100 mm		
Width	2 x 985 mm		
Weight	2 x 132 kg		

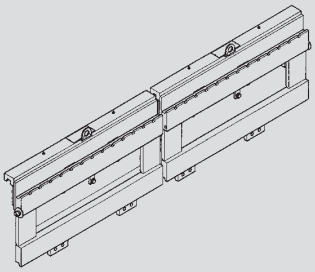

STANDARD DOUBLE SIDE-SHIFT CARRIAGE			
M 50-4 Turbo Série 3-E3 MC 50 Turbo POWERSHIFT Série 3-E3			
	DOUBLE TDLA 50N		
PART NUMBER	**572404**		
Rated capacity	2 x 2500 kg		
Side-shift	2 x 150/100 mm		
Width	2 x 985 mm		
Weight	2 x 165 kg		

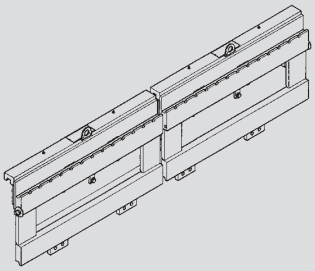

STANDARDISED FORK			
M 40-4 Turbo Série 3-E3			
PART NUMBER	**415745**		
Section	125 x 40 x 1200 mm		
Weight	67 kg		
MC 40 Turbo POWERSHIFT Série 3-E3			
PART NUMBER	**415744**		
Section	125 x 40 x 1200 mm		
Weight	65 kg		
M 50-4 Turbo Série 3-E3			
PART NUMBER	**415746**		
Section	125 x 40 x 1200 mm		
Weight	70 kg		
MC 50 Turbo POWERSHIFT Série 3-E3			
PART NUMBER	**415742**		
Section	125 x 40 x 1200 mm		
Weight	65 kg		

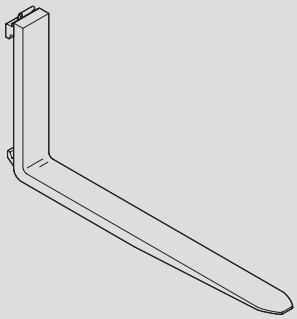

Downloaded from www.Manualslib.com manuals search engine

DIGGING BUCKET			
M 40-4 Turbo Série 3-E3 MC 40 Turbo POWERSHIFT Série 3-E3			
	SP 700 40N AD S2	SP 1000 40N AD S2	
PART NUMBER	**751454**	**751459**	
Rated capacity	700 L/1260 kg	1000 L/1800 kg	
Width	2110 mm	2210 mm	
Teeth	6	6	
Weight	630 kg	715 kg	

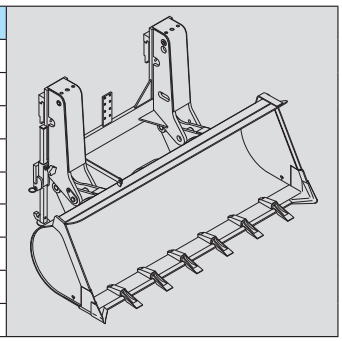

DIGGING BUCKET			
M 50-4 Turbo Série 3-E3 MC 50 Turbo POWERSHIFT Série 3-E3			
	SP 700 50N AD S2	SP 1000 50N AD S2	
PART NUMBER	**751455**	**751460**	
Rated capacity	700 L/1260 kg	1000 L/1800 kg	
Width	2110 mm	2210 mm	
Teeth	6	6	
Weight	605 kg	690 kg	

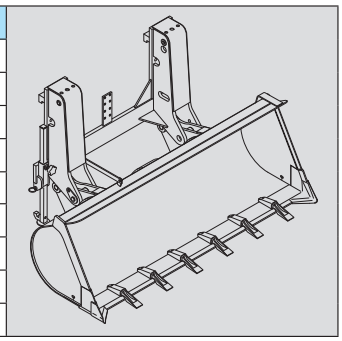

BUILDING BUCKET			
M 40-4 Turbo Série 3-E3 MC 40 Turbo POWERSHIFT Série 3-E3			
	SP 700 40N SD	SP 1000 40N SD	
PART NUMBER	**751452**	**751456**	
Rated capacity	700 L/1260 kg	1000 L/1800 kg	
Width	2100 mm	2200 mm	
Weight	605 kg	690 kg	

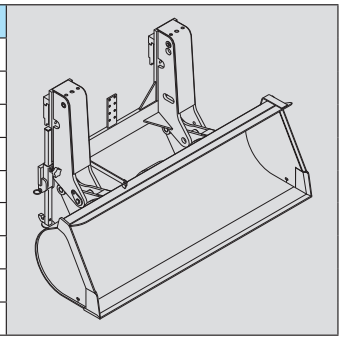

BUILDING BUCKET			
M 50-4 Turbo Série 3-E3 MC 50 Turbo POWERSHIFT Série 3-E3			
	SP 700 50N SD	SP 1000 50N SD	
PART NUMBER	**751453**	**751457**	
Rated capacity	700 L/1260 kg	1000 L/1800 kg	
Width	2100 mm	2200 mm	
Weight	580 kg	665 kg	

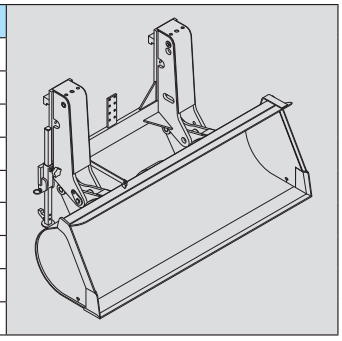

Downloaded from www.Manualslib.com manuals search engine

CEREAL AND FERTILIZER BUCKET			
M 40-4 Turbo Série 3-E3 MC 40 Turbo POWERSHIFT Série 3-E3			
	BCE 1500 40N	**BCE 2000 40N**	**BCE 2500 40N**
PART NUMBER	**751469**	**751471**	**751473**
Rated capacity	1500 L/1800 kg	2000 L/2400 kg	2500 L/3000 kg
Width	2100 mm	2100 mm	2100 mm
Weight	775 kg	870 kg	950 kg

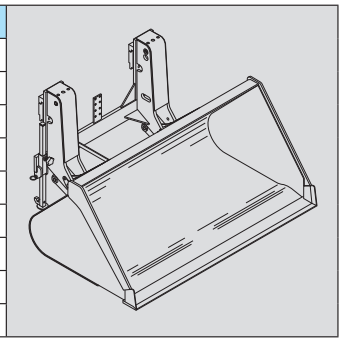

CEREAL AND FERTILIZER BUCKET			
M 50-4 Turbo Série 3-E3 MC 50 Turbo POWERSHIFT Série 3-E3			
	BCE 1500 50N	**BCE 2000 50N**	**BCE 2500 50N**
PART NUMBER	**751470**	**751472**	**751474**
Rated capacity	1500 L/1800 kg	2000 L/2400 kg	2500 L/3000 kg
Width	2100 mm	2100 mm	2100 mm
Weight	750 kg	845 kg	925 kg

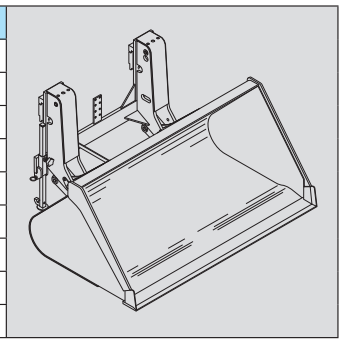

SPOUT BUCKET (ADAPTABLE ON FORKS)			
	GL 600 S2	**GL 800 S2**	
PART NUMBER	**174373**	**174374**	
Rated capacity	600 L/1320 kg	800 L/1760 kg	
Weight	277 kg	308 kg	
HYDRAULIC KIT TO OPEN THE SPOUT			
PART NUMBER	**653750**		

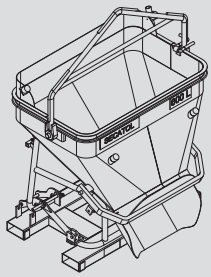

SPOUT BUCKET (ADAPTABLE ON FORKS)			
	GL 1000 S2	**GL 1500 S2**	
PART NUMBER	**174375**	**174376**	
Rated capacity	1000 L/2200 kg	1500 L/3300 kg	
Weight	325 kg	375 kg	
HYDRAULIC KIT TO OPEN THE SPOUT			
PART NUMBER	**653750**		

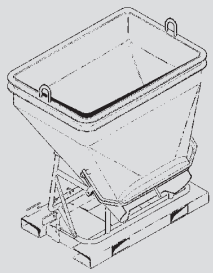

Downloaded from www.Manualslib.com manuals search engine

TECHNICAL SPECIFICATIONS OF ATTACHMENTS

MC 60 Turbo POWERSHIFT Série 3-E3
MC 70 Turbo POWERSHIFT Série 3-E3

STANDARDISED SIDE-SHIFT CARRIAGE			
	TDLA 100N 1800		
PART NUMBER	**762607**		
Rated capacity	8000 kg		
Side-shift	2 x 150 mm		
Width	1800 mm		
Weight	520 kg		

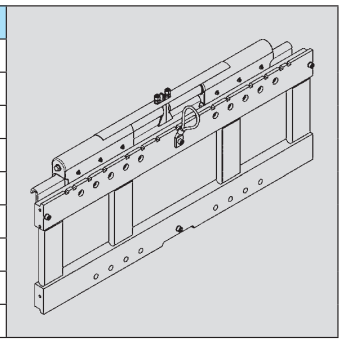

STANDARDISED FORK			
PART NUMBER	**415702**		
Section	150 x 70 x 1500 mm		
Weight	176 kg		

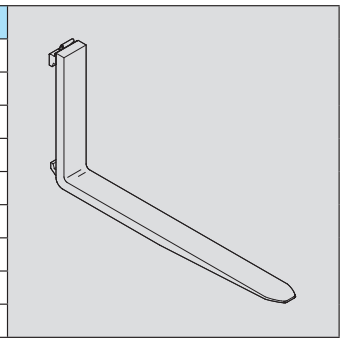

LOAD BACK REST			
PART NUMBER	**560858**	**560859**	**560860**
Width	1750 mm	2000 mm	2400 mm
Weight	206 kg	220 kg	256 kg

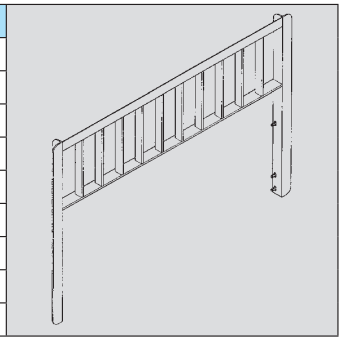

Downloaded from www.Manualslib.com manuals search engine

DIGGING BUCKET			
	SP 1000 70N AD S2	SP 1200 70N AD S2	
PART NUMBER	**751475**	**751476**	
Rated capacity	1000 L/1800 kg	1200 L/2160 kg	
Width	2210 mm	2210 mm	
Teeth	6	6	
Weight	720 kg	785 kg	

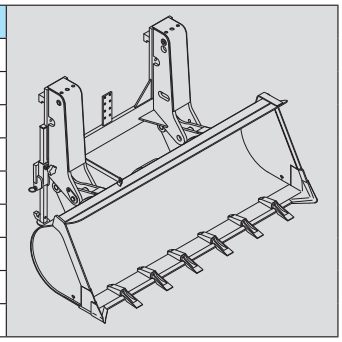

BUILDING BUCKET			
	SP 1000 70N SD	SP 1200 70N SD	
PART NUMBER	**751477**	**751458**	
Rated capacity	1000 L/1800 kg	1200 L/1800 kg	
Width	2200 mm	2200 mm	
Weight	695 kg	760 kg	

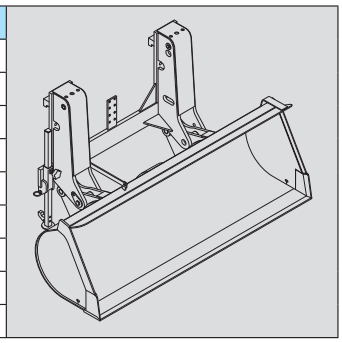

SPOUT BUCKET (ADAPTABLE ON FORKS)			
	GL 600 S2	GL 800 S2	
PART NUMBER	**174373**	**174374**	
Rated capacity	600 L/1320 kg	800 L/1760 kg	
Weight	277 kg	308 kg	
HYDRAULIC KIT TO OPEN THE SPOUT			
PART NUMBER	**653750**		

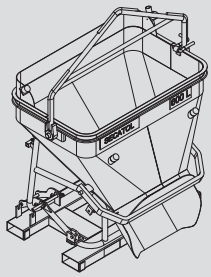

SPOUT BUCKET (ADAPTABLE ON FORKS)			
	GL 1000 S2	GL 1500 S2	
PART NUMBER	**174375**	**174376**	
Rated capacity	1000 L/2200 kg	1500 L/3300 kg	
Weight	325 kg	375 kg	
HYDRAULIC KIT TO OPEN THE SPOUT			
PART NUMBER	**653750**		

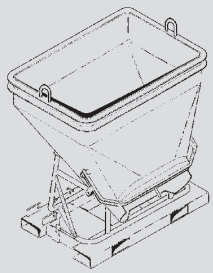

Downloaded from www.Manualslib.com manuals search engine

https://truckmanualshub.com
Torkonjestraat 23
8510 Marke
Belgium
056 / 222 111
info@dumarent.be
www.dumarent.be

ATTACHMENT SHIELDS

FORK PROTECTOR			
PART NUMBER	**227801**		

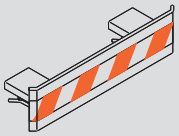

BUCKET PROTECTOR			
NOTE: Always ensure that the width of the protector you choose is less than or equal to the width of the bucket.			
PART NUMBER	**206734**	**206732**	**206730**
Width	1375 mm	1500 mm	1650 mm
PART NUMBER	**235854**	**206728**	**206726**
Width	1850 mm	1950 mm	2000 mm
PART NUMBER	**223771**	**223773**	**206724**
Width	2050 mm	2100 mm	2150 mm
PART NUMBER	**206099**	**206722**	**223775**
Width	2250 mm	2450 mm	2500 mm

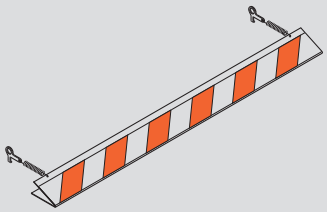

Downloaded from www.Manualslib.com manuals search engine