https://truckmanualshub.com/

OPERATION MANUAL

IC50

IHI

SERIAL NUMBER
CA003001 ~

PUB.1

1008

https://truckmanualshub.com/

https://truckmanualshub.com/

CONTENTS

FOREWORD 0-1

SAFETY INFORMATION 0-2

SAFETY

PRECAUTIONS BEFORE OPERATION 1-1
PRECAUTIONS DURING OPERATION 1-3
PRECAUTIONS AFTER OPERATION 1-6
PRECAUTIONS AT TRANSPORTING 1-7
PRECAUTIONS AT MAINTENANCE 1-7
WARNING SIGNS AND LABELS 1-11

CONTROLS

NOMENCLATURE 2-1
CONTROLS AND INSTRUMENTS 2-2
Monitor panel
Meters
Switches
Control levers
Operator seat
Seat belt

OPERATION **3-1**

BEFORE STARTING OPERATION 3-1
BEFORE STARTING THE ENGINE 3-2
ENGINE STARTING 3-3
AFTER STARTING THE ENGINE 3-3
WARMING UP THE MACHINE 3-4
STARTING WITH JUMPER CABLES 3-5
“BREAK-IN” OPERATION 3-6
TRAVELING THE MACHINE 3-7
Start-travel-stop
Steering control
Caution of travel on a steep grade
DUMP OPERATION 3-10
Procedure of dump operation
Caution of dump operation
STOPPING THE ENGINE 3-11
PRECAUTION ON USE OF RUBBER CRAWLER SHOE 3-12
TOWING 3-15

https://truckmanualshub.com/

TRANSPORT 3-16
Loading and unloading the machine
Fixation at transport
Lifting the machine

MAINTENANCE

PRECAUTION ON MAINTENANCE 4-1
USE THE SAFETY BAR 4-2
PERIODICAL EXCHANGE OF THE IMPORTANT PARTS 4-3
Fuel relation
Hydraulic relation
MAINTENANCE INTERVALS 4-4
RECOMMENDED LUBRICATION TABLE 4-6
LUBRICATE THE GREASE 4-7
Body
Oscillating link
RUBBER CRAWLER 4-8
Rubber crawler shoe maintenance
TRACK ADJUSTMENT
CHECK THE FIXED BOLT TORQUE 4-10
Special torque specifications
General torque specifications
TRAVEL REDUCTION GEAR 4-12
Check the travel reduction oil level
Replace the travel reduction oil
HYDRAULIC SYSTEM 4-13
Check the hydraulic oil level
Drain the hydraulic oil tank
Replace the hydraulic oil and clean the strainer
Replace the line filter element
Replace the return filter cartridge
ENGINE OIL SYSTEM 4-17
Check the engine oil level
Replace the engine oil and engine oil filter cartridge
COOLING SYSTEM 4-19
Selection of coolant
Check the coolant level
Change the coolant
Check the fan belt
FUEL SYSTEM 4-23
Applicable Fuel
Check the fuel level
Drain the fuel tank
Drain the fuel main filter and the fuel pre-filter
Clean the electromagnetic fuel pump
Replace the main fuel filter element and the pre fuel filter element
Fuel system air bleeding

https://truckmanualshub.com/

AIR CLEANER SYSTEM 4-28
Check the dust indicator
Clean and change the air cleaner element
Clean and change the air cleaner element
HYDRAULIC SYSTEM 4-30
Hydraulic system diagram
ELECTRIC SYSTEM 4-31
Change the fuses
Change the fusible link
Check the battery
Electrical wiring system diagram
HANDLING IN COLD REGIONS 4-37
LONG TERM STORAGE 4-38
TROUBLE SHOOTING 4-39

SPECIFICATIONS

SPECIFICATIONS AND DIMENSIONS 5-1

https://truckmanualshub.com/

https://truckmanualshub.com/

FOREWORD

This manual contains safety, operation, maintenance, and adjustment information.
The procedures are designed to provide the best performance of the machine in an effective and economical way. In order to obtain it, remember the next basic rules.

- This manual should be stored in the operator's compartment in the literature holder or seat back literature storage area.

- Before inspection, maintenance or operating the machine, read and understand this manual completely.

- Since all of the explanations in this manual may not be thoroughly understood at first, repeat reading it until abilities as an operator are obtained and developed for proper operation.

- Further abilities as an operator outside of descriptions in this manual can be obtained from the experience during normal operations and under proper supervision.

- The illustrations in this manual are used first of all to let you pay attention. They do not show all of illustrations in this manual. Because of continuing improvement and advancement of product design, the shape of machine in the illustrations may be partly different from your machine. Please understand it. Whenever a question arises regarding your machine, or this publication, please consult your local IHI distributor for the latest available information.

https://truckmanualshub.com/

SAFETY INFORMATION

We offer you basic and important rules and precautions for safe operations.

Read, understand, and observe them before starting operation. This is the most essential way to prevent accidents.
Wrong operation, inspection, or maintenance can cause personal injury or death.

Throughout this manual and on the machine, precautions are provided with ⚠ marks and classified by the words "**DANGER**", "**WARNING**", and "**CAUTION**" according to their extent of danger.
The classification is as follows:

⚠ **DANGER**	indicates an imminently hazardous situation which, if not avoided, will result in death or serious injury.
⚠ **WARNING**	indicates a potentially hazardous situation which, if not avoided, could result in death or serious injury.
⚠ **CAUTION**	indicates a potentially hazardous situation which, if not avoided, could result in minor or moderate injury. It may also be used to alert against possible damage to the machine and its components.
NOTICE	indicates a potentially hazardous situation which, if not avoided, could result in the damage of the machine or the performance and the decrease in longevity are caused.

We have made very effort for you to prevent accidents during operation, however, we cannot be held responsible for predicting every kind of danger in all operating conditions.
It is the owner or user of the machine who is responsible for **ALWAYS** paying attention to operate the machine; as well as reading and understanding this manual enough to obtain the essential knowledge and skills fundamental to correct machine operation.

⚠ WARNING

- **BEFORE** inspection, operation, or maintenance of the machine, be sure to read and understand this manual.
- Incorrect operation or maintenance of the machine can cause the accident and serious injury or death.
- Keep this manual on hand during operation so that you can immediately consult it when necessary. If it should be missing or damaged, place an order from IHI distributor for a replacement.
- There are various kinds of federal, state, and local regulations that effect construction and industrial machinery. Since the regulations are subject to change, and differ from one locale to another, it is impossible for us to provide such information in this manual.
  It is the responsibility of the owner or user to be familiar with the regulations.
- Specifications and materials of the machine are subject to change without any obligation on the part of the manufacturer.

https://truckmanualshub.com/

SAFETY

Read the SAFETY section without fail. It describes the basic instructions about safety.

Most accidents occur during works when preventive measures against danger are neglected or basic safety instructions are not observed.
Such accidents may be avoided by paying careful attention in advance.
This manual describes the basic safety instructions to be observed in daily operation, inspection and maintenance of the machine.
Observe these instructions carefully for safety.
Check the safety with great care for any other matters not described in this manual.

https://truckmanualshub.com/

https://truckmanualshub.com/

PRECAUTIONS BEFORE OPERATION

READ AND UNDERSTAND THE WARNINGS SIGNS AND LABELS

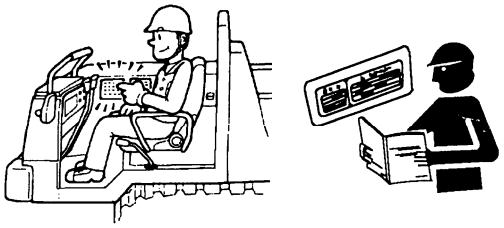

CA-C100010

- There are several specific safety signs on your machine. Please take the time to familiarize yourself with these safety signs.
  Make sure that you can read all safety signs.
- You must replace a label if it is damaged, missing or cannot be read. If a label is on a part that is replaced, make sure a new label is installed on the replaced part.

OPERATION SHOULD BE IN GOOD HEALTH.

Operator should be physically and mentally alert, which is one of the best insurance against an accident.

NEVER operate the machine under the influence of alcohol, medication, or intoxication.

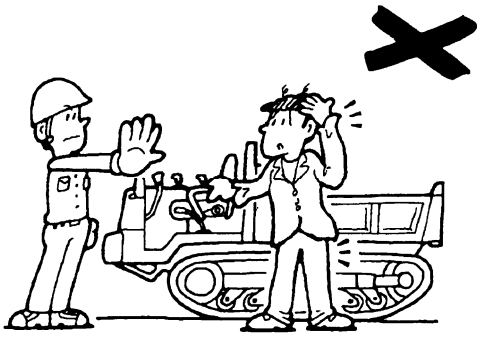

CA-C100020

WEAR PROPER WORKING CLOTHES.

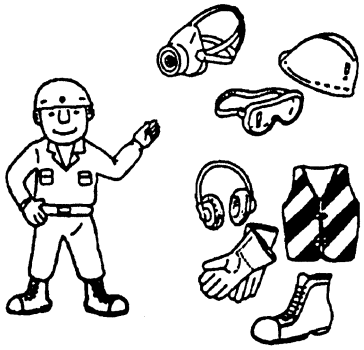

CA-C100030

- For the sake of safety during driving, wear clothes that match your body. The sleeves of sloppy clothes can get caught in the machine and can cause unforeseen accidents.
- Always wear protective cap and safety boots.
  Wear a hard hat, protective glasses and other protective equipment as required by job conditions.

PERFORM “WALK-AROUND” INSPECTION.

Walk around the machine to check safety guards, plates, and other related parts are set in place. Do not attempt to operate the machine when any unsafe condition is detected.

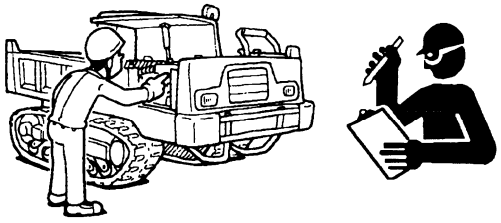

CA-C100040

MAKE A WORK PLAN.

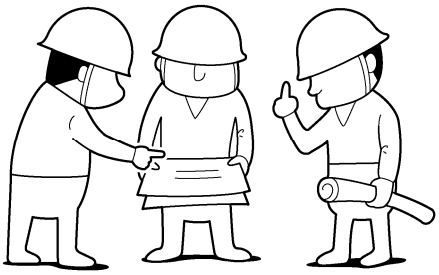

CQ0-01880

- Start the work only after discussing with the person in charge at the site the rules and precautions inside the work place as well as the work procedure.
- When working together with other persons, determine the signals and who is to give those signals.

https://truckmanualshub.com/

CHECK THE JOB SITE.

- Confirm in advance if there are any dangerous locations where the land collapses or where machine can fall off a cliff, etc.
- Take measures necessary for safety in dangerous locations.

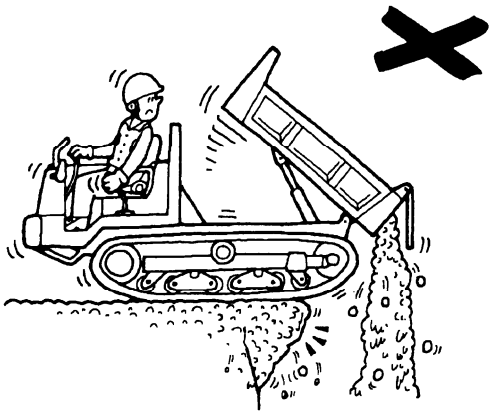

CA-C100050

CAREFULLY MOUNT AND DISMOUNT THE MACHINE.

- Maintain a three point contact (Two feet and one hand or one foot and two hands contact) with the steps and handholds.
- Do not use any controls as handholds when entering or leaving the operator's station.
- When any oil or other slippery substance has got adhered to hand rails or steps, wipe them off clean.

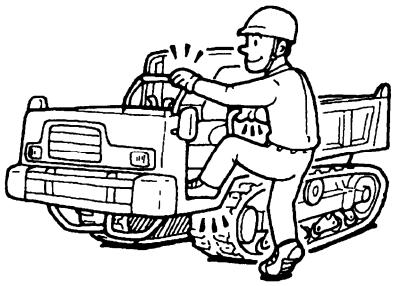

CA-C100060

START THE ENGINE WHILE SITTING IN THE OPERATOR SEAT

If the engine is started from a position other than sitting in the operator seat, there is the danger that the machine starts moving suddenly.
Start the engine only after carrying out checks while sitting in the operator seat.

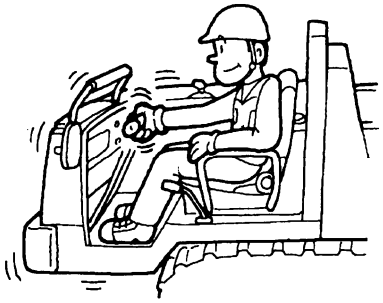

CA-C100070

CONDUCT WARM-UP BEFORE OPERATION.

If the machine is operated without carrying out sufficient warming up operation, it can lead to movements not intended by the operator, and can lead to accidents.
Always carry out sufficient warming up operation.

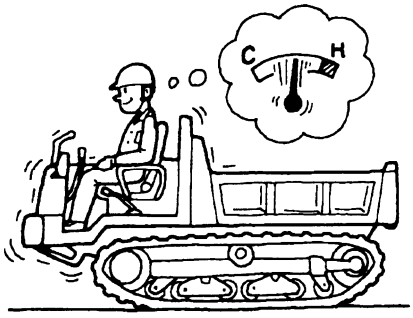

CA-C100080

https://truckmanualshub.com/

PRECAUTIONS DURING OPERATION

CLEAR ALL PERSONNEL FROM THE MACHINE AND AREA.

Be sure to barricade the job site to prevent entry of the unauthorized. Confirm that there is no one around the machine before starting the engine or operating the machine.

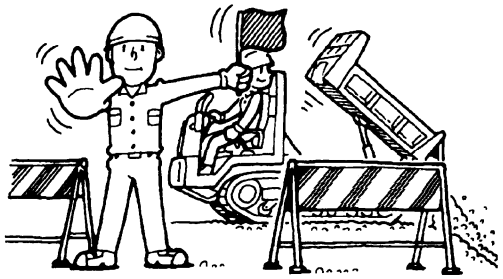

CA-C100090

MAINTAIN GOOD VENTILATION.

Diesel engine exhaust contains products of combustion which may be harmful to your health. Always start and operate the engine in a well ventilated area. If in an enclosed area, vent the exhaust to the outside.

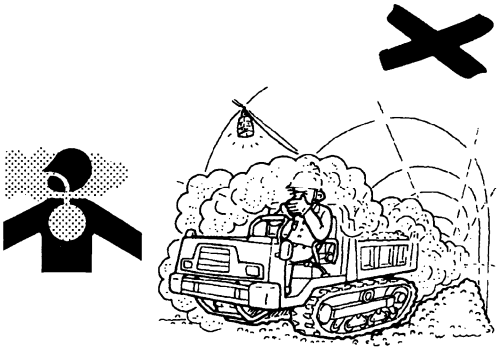

CA-C100100

STAY SEATED WHILE OPERATING

There is the danger of making wrong operations if the operating is done from a position other than the operator seat or while standing.

Operate the machine only while seated and with the seat belt fastened.

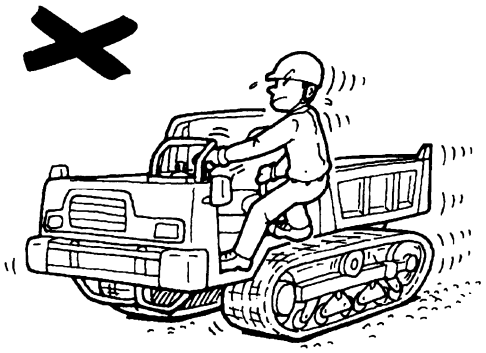

CA-C100110

PREVENT ACCIDENTS WHILE MOVING

- Always sound the horn to signal others nearby that you are moving the machine. Check that no one is within the working area of the machine before attempting to move it.
- Position a guiding person to guide and check when necessary or when the field of view is bad.

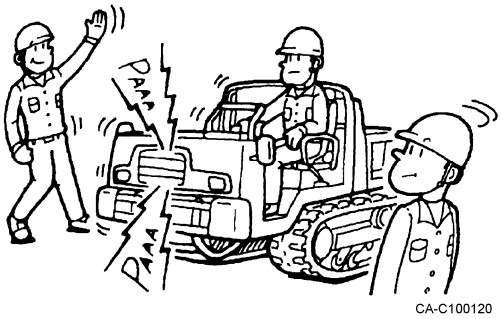

CA-C100120

https://truckmanualshub.com/

DO NOT TRAVEL WITH THE BODY IN DUMP POSITION

Traveling with the body in dump position not only makes the machine unstable but limits operator visibility causing hazardous situations.

Never attempt to travel with the body in dump position.

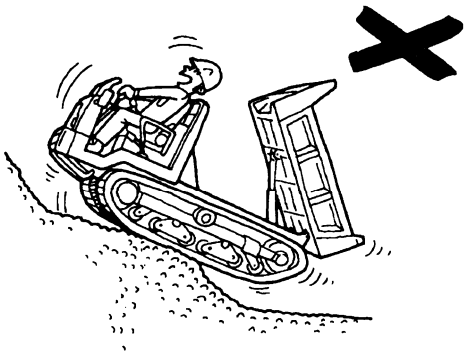

CA-C100130

DO NOT OVERLOAD

- Working with loads exceeding the performance of the machine can cause loss of safety or reduction in the functionality or life of the machine.
- Never exceed the maximum load limits.
- Never place a load onto the sideracks.

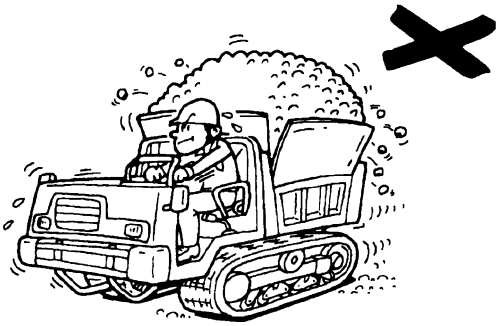

CA-C100140

DO NOT EXCEED THE WATER DEPTH LIMIT

The acceptable water limit is up to the lower roller.

Check the water depth, foundation and strength of water current and other safety factors before operating. Do not place the machine in locations exceeding the lower frame of the machine.

CA-C100150E

DO NOT TRY TO TRAVEL OVER OBSTRUCTIONS

Trying to travel over obstacles could cause the machine to lose its balance and topple over.

Avoid potential obstacles in your path.

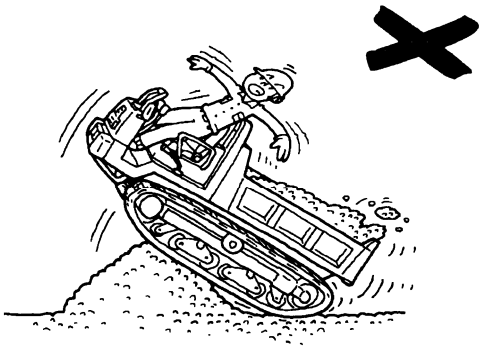

CA-C100160

https://truckmanualshub.com/

DO NOT CHANGE DIRECTIONS WHILE ON A SLOPE

Avoid changing the direction of travel on a slope, which could result in tipping or side slipping of the machine.
When it is inevitable to change the direction, carry it out in a hard ground where the slope is gradual.

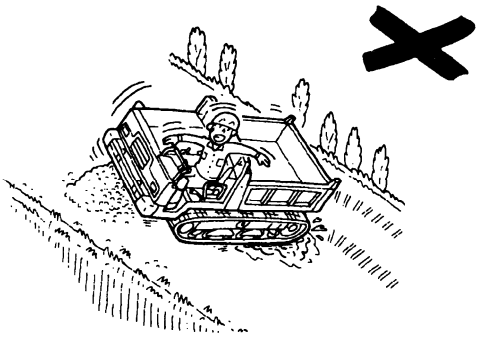

CA-C100170

MOVE UP AND DOWN SLOPES DIRECTLY NOT SIDEWAYS

Moving sideways or parallel to the slope while on it may cause the machine to slide and fall over.
To prevent such accidents, only move up and down slopes at a direct angle.

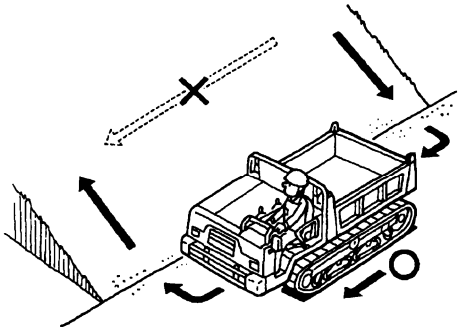

CA-C100180

WATCH THE MACHINE POSITION WHILE TRAVELING ON SLOPES

The machine center of gravity tends to quickly change while traveling on sloping surfaces.
This can create hazardous situations where the machine may tip over.
Observe the following points regarding machine position:

- Go forward up the hill and back down the hill WHEN NO CARRYING A LOAD.
- Reverse up the hill and go forward down the hill WHEN CARRYING A LOAD.

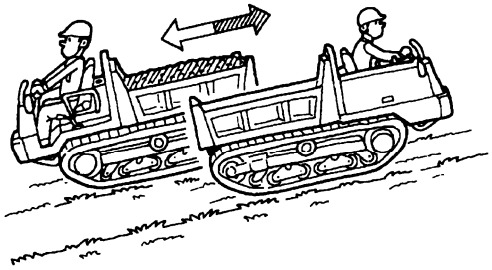

CA-C100190

NEVER ALLOW PERSONNEL RIDE ON THE MACHINE OTHER THAN OPERATOR.

Any person riding as a passenger can fall off and suffer injury. In addition, such a passenger also obstructs the driving by the Operator.
Only operator is authorized to be on the machine during operation. Never let unauthorized personnel ride on the machine.

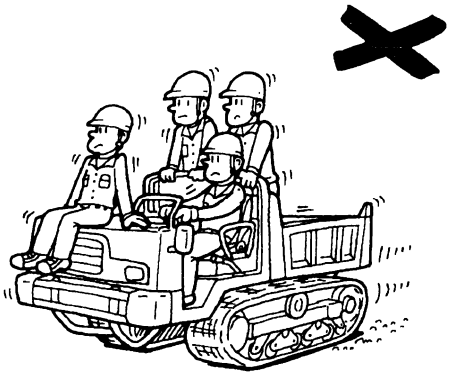

CA-C100200

https://truckmanualshub.com/

PRECAUTIONS AFTER OPERATION

PARK IN A SAFE PLACE

For parking, select a flat ground with good foothold and where there is no danger of land or mud slides, and also, near a river, select a place which is safe even if the river water level becomes high.

CA-C100210

DO NOT PARK THE MACHINE ON A GRADE

There is the danger of the machine running off wild when stopped or parked on a sloping land.
When it is unavoidable to stop or park on a slopping land, Place stopper blocks on the downhill side under both crawlers.

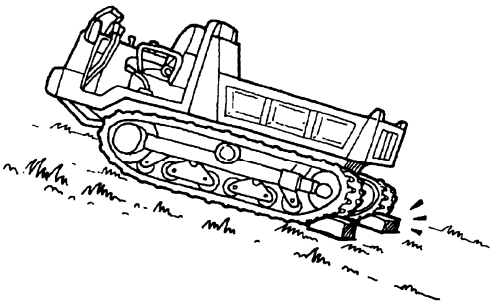

CA-C100220

OBSERVE PRECAUTIONS WHEN PARKING THE MACHINE ON THE ROAD.

If you have to park the machine on the road, use appropriate flags, barriers, flares, and warning signals.

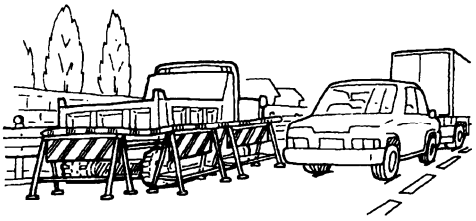

CA-C100230

OPERATOR LEAVING MACHINE

- Lower the body completely.
- Apply the parking brake.
- Put the dump lock lever in their locked positions.
- Stop the engine and take out the ignition key.
- Lock all lockable locations such as the cover, etc., and only then leave the crane.

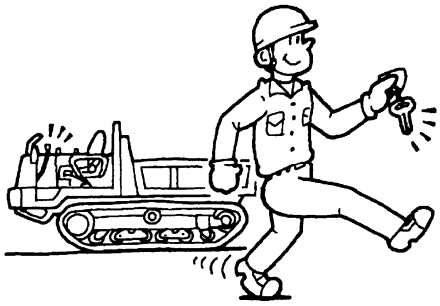

CA-C100240

https://truckmanualshub.com/

PRECAUTIONS AT TRANSPORTING

CAREFULLY LOAD AND UNLOAD THE MACHINE

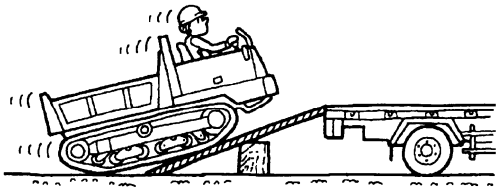
CA-C100250

- ALWAYS load and unload the machine on the level ground.
- Use a ramp that has sufficient strength, width, length, and thickness.
- Remove ice, snow, or slippery material from the ramp and truck deck before loading.
- NEVER make a turn on a ramp.

OBSERVE PRECAUTIONS ON TRANSPORTATION.

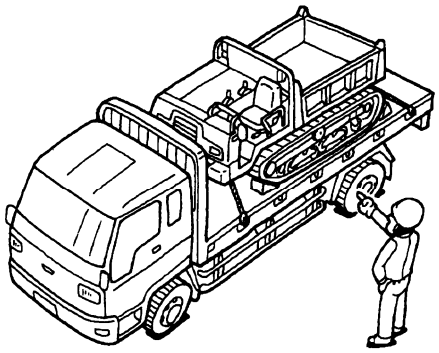
CA-C100260

- Blocks tracks and secure the machine to the truck before transporting.
- Securely fix the machine to the platform using a wire rope, etc.
- Transport safely strictly following the concerned laws.

PRECAUTIONS AT MAINTENANCE

KEEP ROUTINE MAINTENANCE

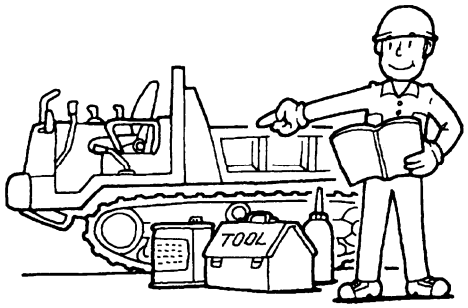

CA-C100270

- Wrong maintenance not only causes damage to the machine but also has the danger of causing accidents that involve injury to humans.
- You must read and understand the warnings and instructions contained in this manual, before performing any operation or maintenance procedures.

INDICATIONS DURING INSPECTION AND MAINTENANCE

Hang a warning board saying “Under Inspection / Maintenance” at an easy to see location of the operation lever so that nobody other than the concerned persons touches it.

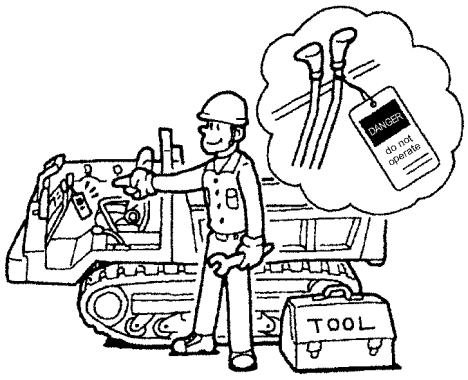

CA-C100280

https://truckmanualshub.com/

WHEN WORKING UNDER TRACKS

There is the danger of an accident of being caught under the machine if the machine comes down.
Place supporting pillars or blocks under the crawler and make sure that it is supported firmly.

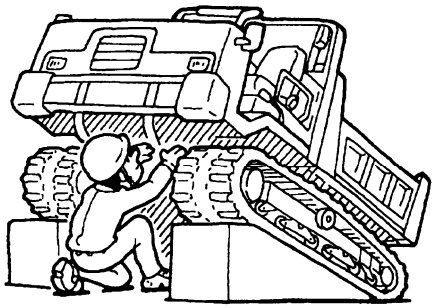

CA-C100290

ALWAYS RELEASE PRESSURE BEFORE DISCONNECTING HYDRAULIC LINES.

There is the danger of high pressure oil jetting out if a piping or a hose is removed without releasing the internal pressure of the hydraulic system. Start the work only after completely releasing the internal pressure.

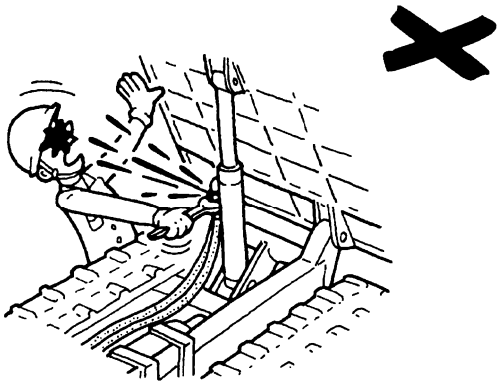

CA-C100300

SUPPORTING THE BODY

If replacement or repair of couplings or hoses is made with the body in the raised condition, there is the possibility that the body drops down.
Always support the body using the safety bar, and also lock it using the dump lever.

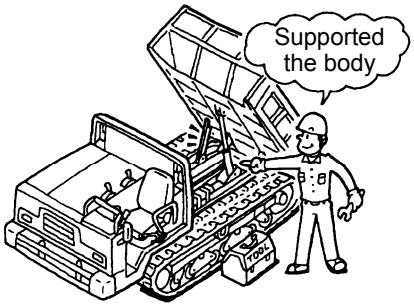

CA-C100310

DO NOT WATCH THE RELIEF VALVE WHEN ADJUSTING TRACKS.

- Track adjusting grease is under high pressure. Grease coming out of the check valve under pressure can penetrate the body causing injury or death.
- Watch the track or track adjustment cylinder to see if the track is being loosened. Loosen the check valve one turn only.
- Do not put your face, hand, foot, or body in front of the check valve.

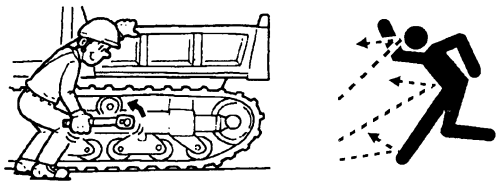

CA-C100320

https://truckmanualshub.com/

PRECAUTIONS AGAINST HIGH PRESSURE OIL

- It is very dangerous if the high pressure oil enters your skin or eyes.
- Use a thick sheet of paper or a wooden piece to test for the leakage of high pressure oil, and never test with your hands.
  Wear protective goggles for protecting your eyes.
- If oil enters your skin, immediately go to a doctor and get medical attention.

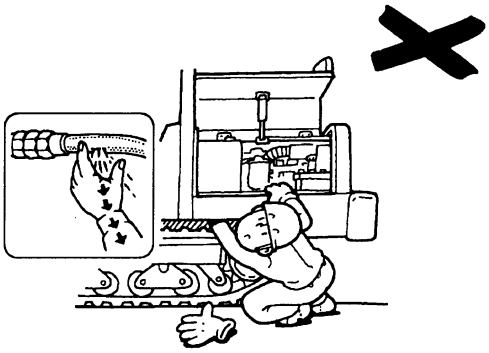

CA-C100330

NEVER CARRY OUT MAINTENANCE WITH THE ENGINE RUNNING

Touching a rotating or moving part such as the fan belt, etc., can get your hand crushed by the machine and there is the danger of your hand being cut off.
Always carry out maintenance work with the engine switched off.

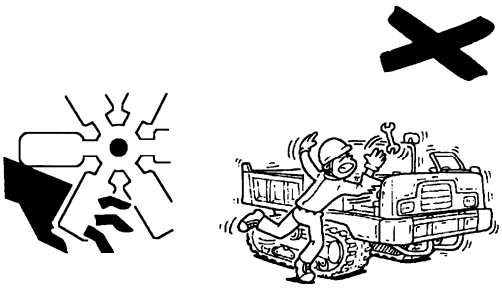

CA-C100340

BE CAREFUL TO HOT ENGINE AFTER THE MACHINE STOPS.

Do not touch the engine or muffler right after the machine is stopped. It is very hot and causes burns.
Start inspection and maintenance only after the temperatures of the different parts have gone down sufficiently,

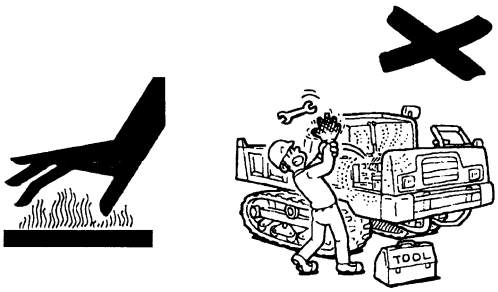

CA-C100350

NEVER OPEN A RADIATOR CAP WHEN IT IS HOT

Removing the radiator cap when the temperature of the water inside the radiator is still high can cause high temperature steam to jet out, and can cause scalding of your hands and body. Never open the radiator cap when the temperature is till high.
After the water temperature has gone down, gradually open the radiator cap thereby releasing the pressure.

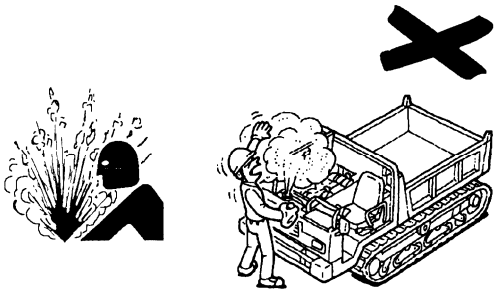

CA-C100360

https://truckmanualshub.com/

HANDLING BATTERY

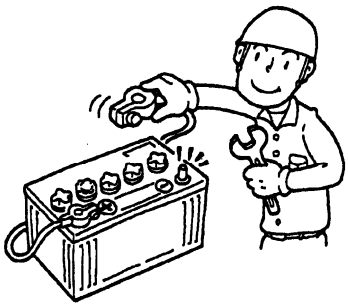

CA-C100370

- When maintaining the electrical system or when carrying out welding, remove the lead connected to the negative terminal (-) of the battery.
- A battery can generate flammable gases and there is the danger of the gases catching fire and exploding. Also, dilute sulfuric acid is being used for the battery liquid. Take sufficient care while handling.

FIRE PREVENTION

CA-C100380

- Do not leave burnable items such as oily rags, dry leaves, paper, etc., near the engine. Since these can cause fire hazards, constantly check and remove them.
- Stop the engine during refueling, and take care not to bring sparks or fire near the fuel.
- Inspect for leakage of fuel, oil, and working oil and repair if there is any defect, and wipe off all oil that has leaked.
- Make sure where a fire extinguisher is placed and know how to use it.

https://truckmanualshub.com/

WARNING SIGNS AND LABELS

There are several specific safety signs on your machine. Their exact location and description of the hazard are reviewed in this section. Please take the time to familiarize yourself with these safety signs.

Make sure that you can read all safety signs. Clean or replace these if you cannot read the words or see the pictures. When cleaning the labels use a cloth, water and soap. Do not use solvent, gasoline, etc.

You must replace a label if it is damaged, missing or cannot be read. If a label is on a part that is replaced, make sure a new label is installed on the replaced part.

See your IHI dealer for new labels.

Where the warning Signs and Labels are stuck

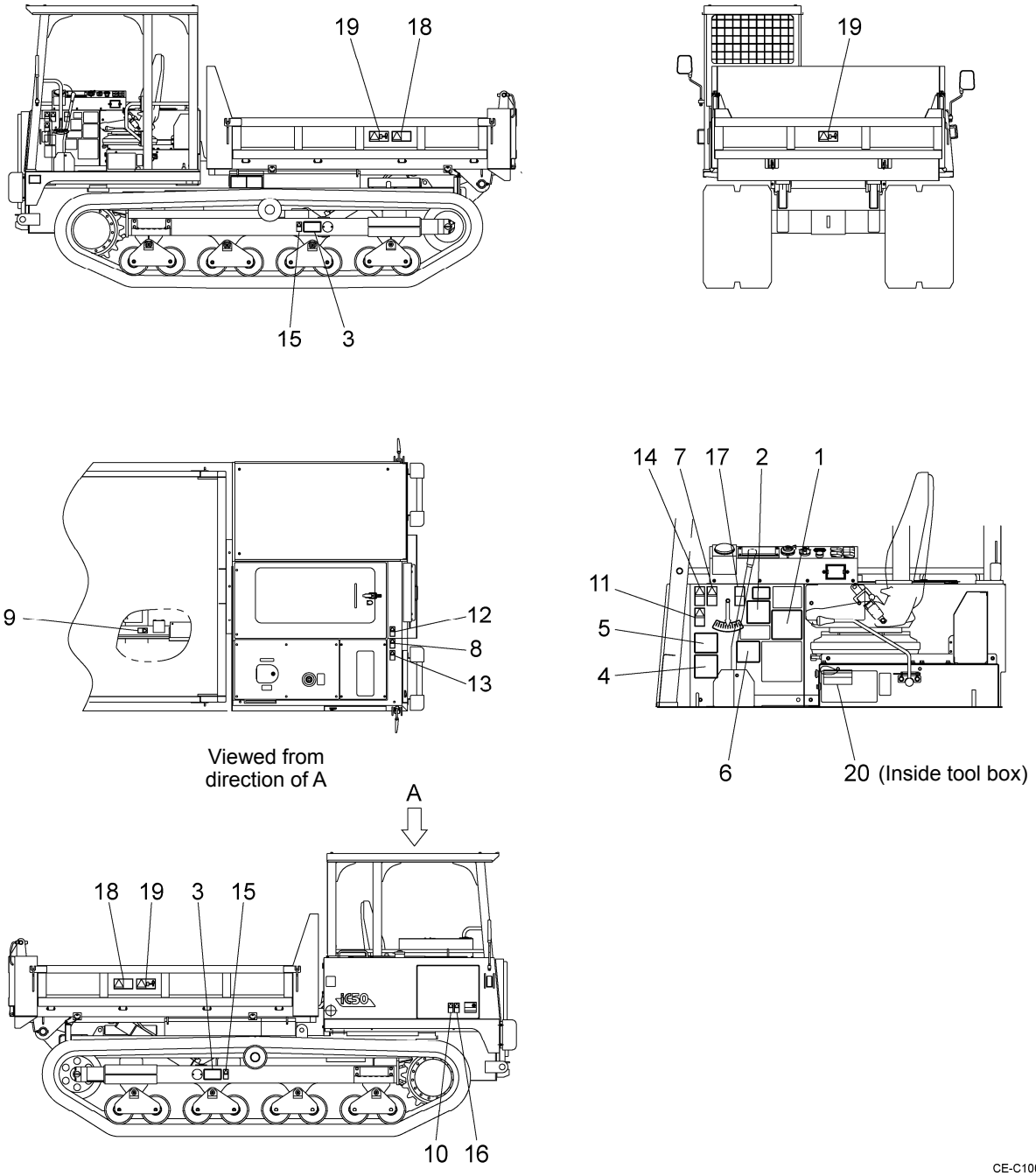

CE-C100010E

https://truckmanualshub.com/

1. Precautions on safety
   (4448 818 00)

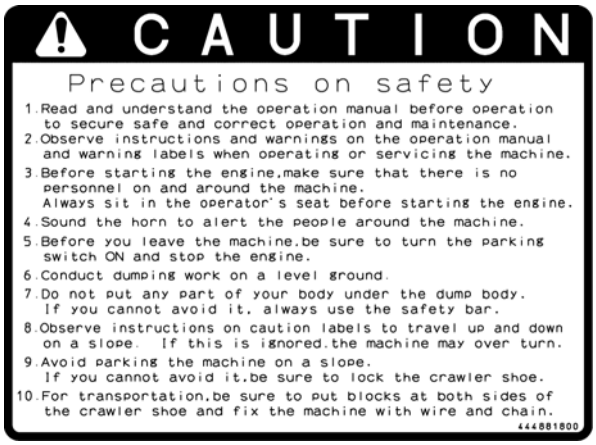

2. Precaution for working under the raised body
   (4448 816 00)

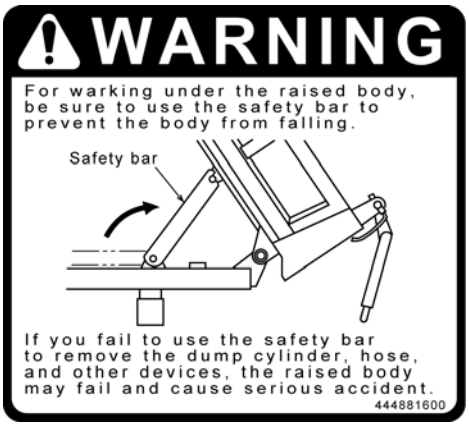

3. Crawler shoe tension adjustment
   (D405 516 00)

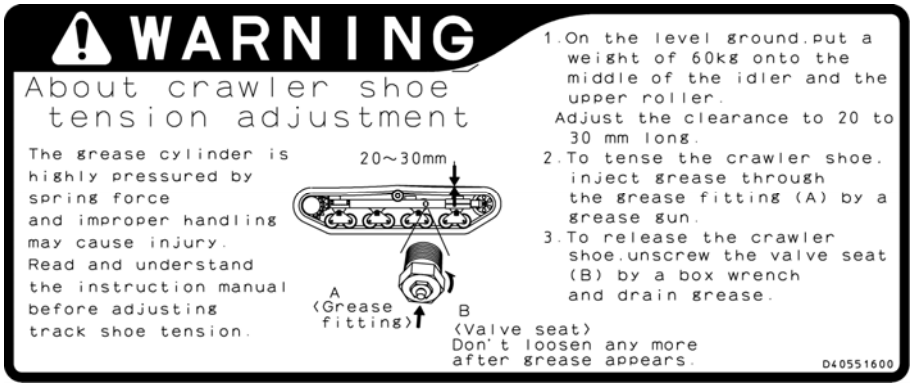

https://truckmanualshub.com/

4. Traveling on a slope
   (D406 188 00)

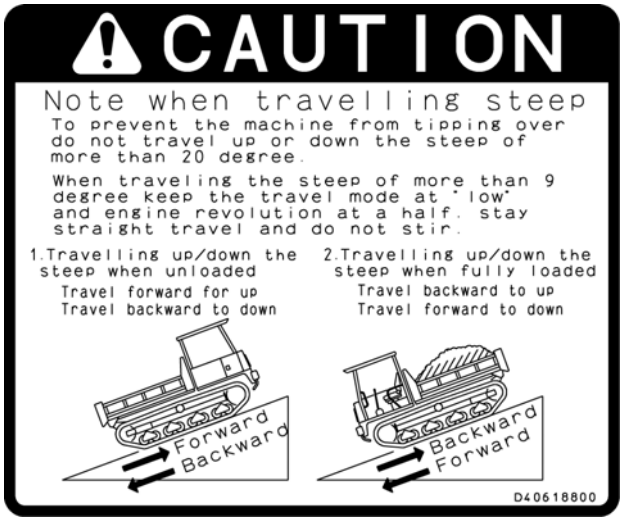

5. Loading and unloading the machine
   (4448 820 00)

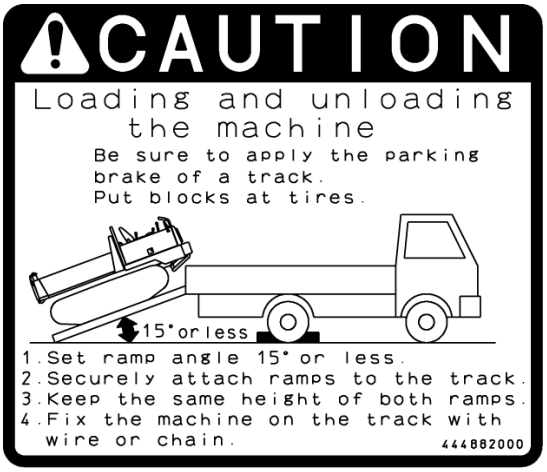

6. When the body moves down
   (D407 746 00)

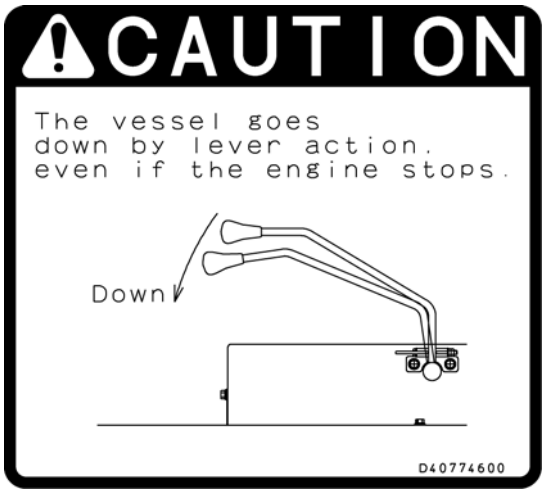

https://truckmanualshub.com/

7. Warning!
   Read manual before operation, maintenance, disassembly, assembly and transportation.
   (D405 359 00)

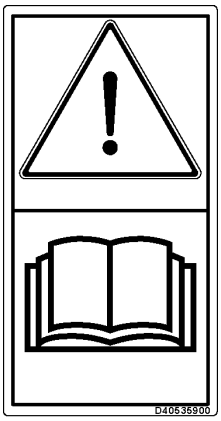

8. Sign indicates a burn hazard from spurting hot water or oil if radiator or hydraulic tank is uncapped while hot.
   Allow radiator or hydraulic tank to cool before removing cap.
   (D405 360 00)

9. Sign indicates a burn hazard from touching heated parts, such as engine, motor, or muffler during or right after operation. Never touch when hot.
   (D405 361 00)

10. Sign indicates an electrical hazard from handling the cable. Read manual for safe and proper handling.
    (D405 363 00)

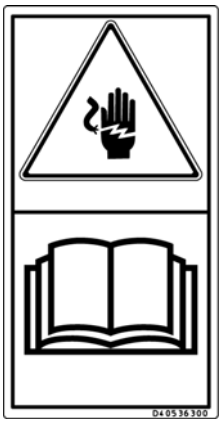

11. Sign indicates an electrocution hazard if machine is brought too near electric power lines. Keep a safe distance from electric power lines.
    (D405 364 00)

12. Sign indicates a hazard of falling. Do not stand on this place.
    (D405 365 00)

13. Sign indicates a hazard of rotating parts, such as belt.
    Turn off before inspection and maintenance.
    (D405 366 00)

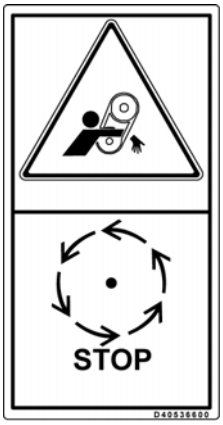

14. Sign indicates a hazard of falling out when machine goes over an obstacle. Read manual and follow instructions for safe and proper operation.
    (D405 368 00)

https://truckmanualshub.com/

15. Sign indicates a hazard of a flying plug from track adjuster that could cause injury.
Read manual before adjusting track for safe and proper handling.
(D405 369 00)

16. Sign indicates an explosion hazard.
Never drill, cut with gas, hit or disassemble. Also, keep open flame away.
(D405 362 00)

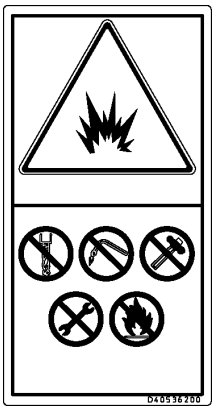

17. Sign indicates the necessity of fastening the seat belt.
Always keep the seat belt fastened while operating the machine to minimize danger caused by accidents such as falling down.
(D407 741 00)

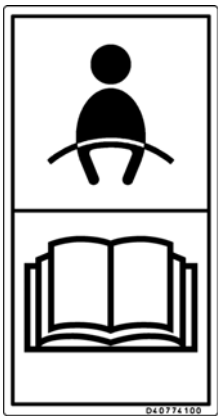

18.

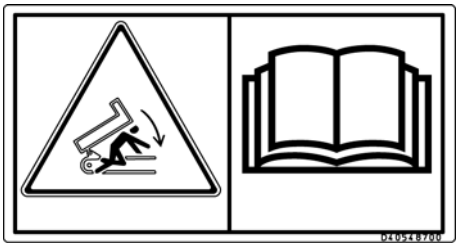

Sign indicates a crush hazard from falling body.
Read manual and follow safety instructions when holding the body in a raised position.
(D405 487 00)

19.

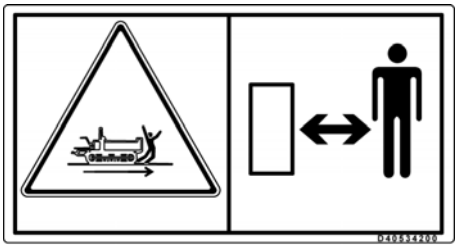

Sign indicates a hazard of being run over by moving equipment.
Keep away from equipment when t is moving.
(D405 488 00)

20.

Attach a DO NOT OPERATE warning tag to start switch or controls before servicing or repairing the machine.
Do not start the engine or move any of the controls if there is DO NOT OPERATE or similar warning tag attached to the start switch or controls.
(D405 323 00)

https://truckmanualshub.com/

This page is intentionally left blank

https://truckmanualshub.com/

CONTROLS

This section describes the functions of the devices needed to operate this machine and the proper operation procedures. Understand them sufficiently and operate the machine in safe.

https://truckmanualshub.com/

https://truckmanualshub.com/

NOMENCLATURE

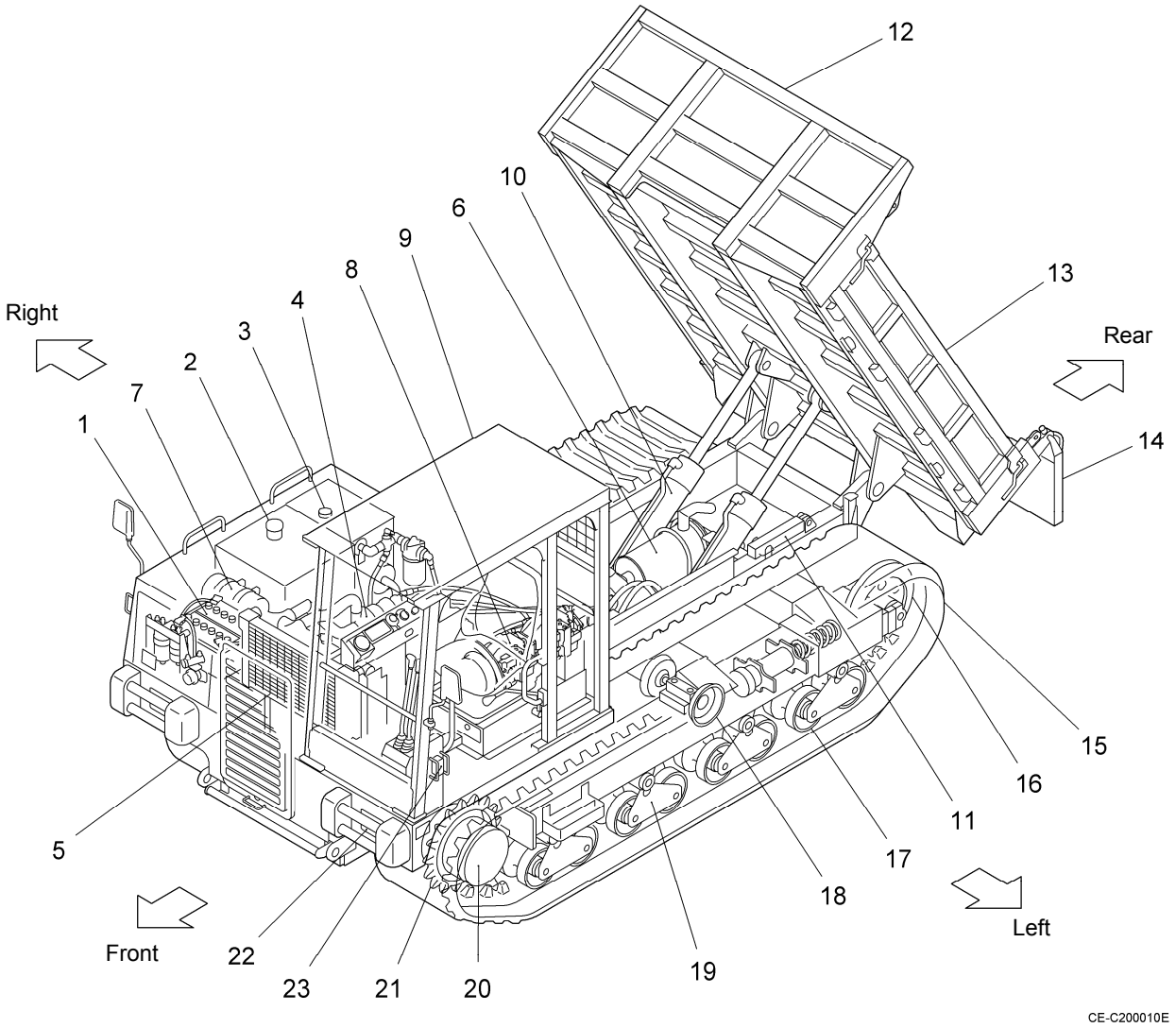

No.	Name	No.	Name	No.	Name
1	Battery	9	Cabin	17	Lower roller
2	Fuel tank	10	Dump cylinder	18	Upper roller
3	Hydraulic tank	11	Safety bar	19	Oscillating link
4	Engine	12	Body	20	Travel device
5	Radiator, oil cooler	13	Side gate	21	Drive sprocket
6	Muffler	14	Rear gate	22	Headlight
7	Air cleaner	15	Rubber crawler	23	Direction indicator lamp
8	Hydraulic pump	16	Idle tumbler		

https://truckmanualshub.com/

CONTROLS AND INSTRUMENTS

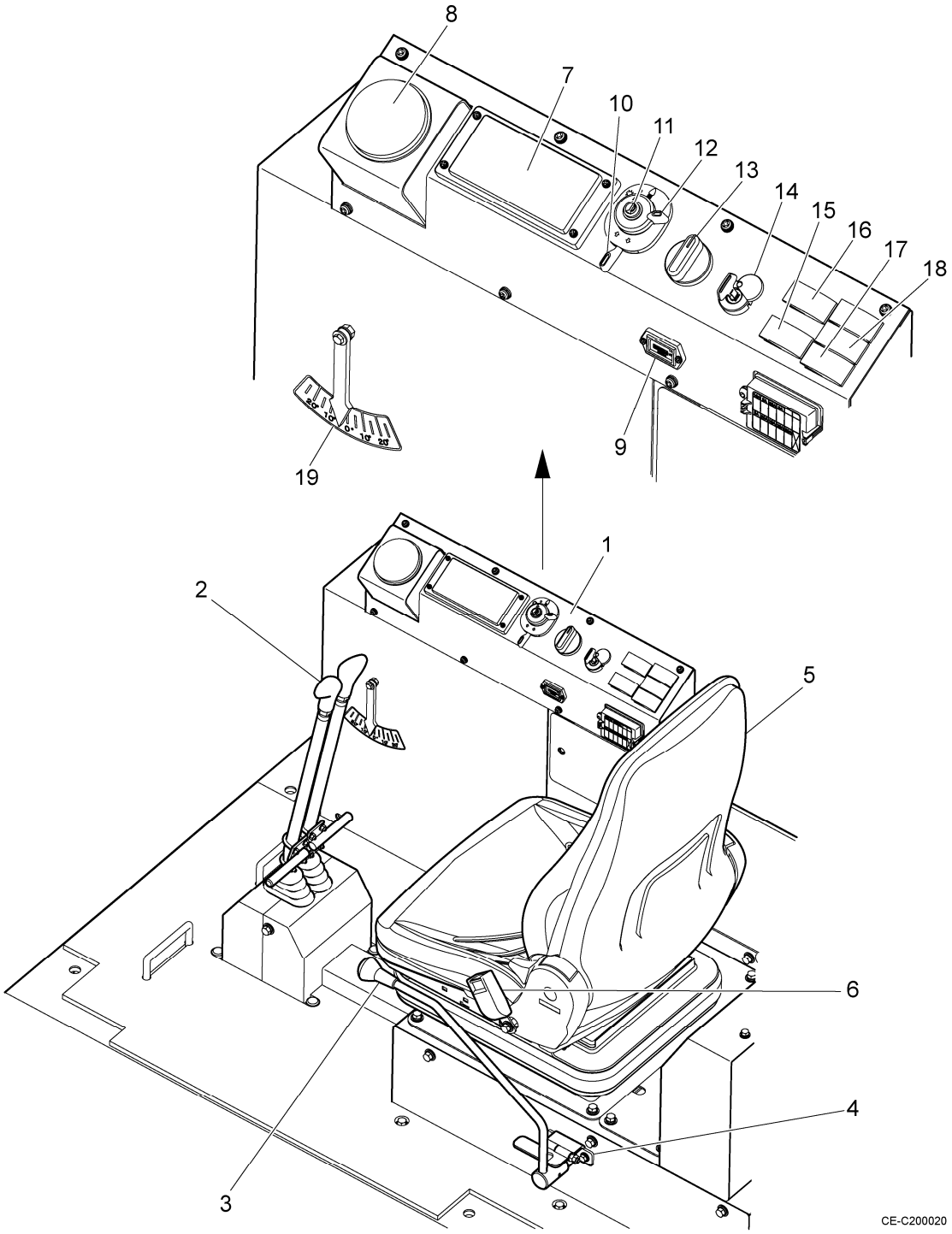

No.	Name	No.	Name	No.	Name
1	Instrument panel	8	Tachometer	15	Parking switch
2	Travel lever	9	Hour meter	16	Emergency stop switch
3	Dump lever	10	Turn signal switch	17	Travel speed select switch
4	Dump lever lock	11	Horn switch	18	Car heater switch (option)
5	Operator seat	12	Light switch	19	Inclinometer
6	Seat belt	13	Engine throttle dial		
7	Monitor panel	14	Engine key switch		

https://truckmanualshub.com/

Monitor panel

No.	Name
1	Engine system warning lamp
2	Engine oil pressure warning lamp
3	Charge warning lamp
4	Glow (preheat) lamp
5	Inlet air temperature warning lamp
6	Water temperature gauge
7	Fuel level gauge

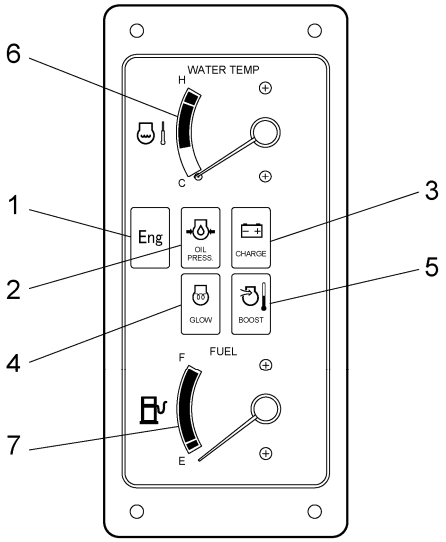

CA-C200030

Engine system warning lamp

This lamp goes on if the engine system is defective.
Ask IHI's sales service dealer for repair services.

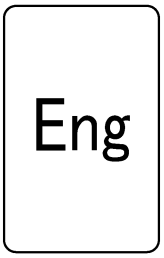

CA-C200080

Engine oil pressure warning lamp

This lamp goes on if the pressure of oil for lubricating the inside of the engine drops while the engine is running.
Stop the engine and check the engine oil system and oil level if the lamp goes on while the engine is running.

CA-C200040

Charge warning lamp

This lamp goes on if an error occurs in the charge system while the engine is running.
If it goes on while the engine is running, the fan belt may be slack.
Stop the engine and check the tension of the fan belt.

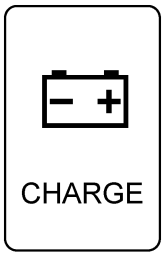

CA-C200050

https://truckmanualshub.com/

Glow (preheat) lamp

This lamp goes on when the engine key switch is set to the ON position.

The water temperature sensor senses the water temperature, the engine is preheated automatically for 1 to 15 seconds, and the lamp goes out then.

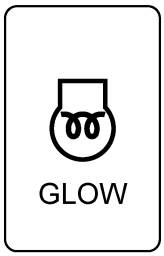

CA-C200060

Inlet air temperature warning lamp

This lamp goes on if the inlet air temperature of the engine rises.

The inlet air temperature rises if the turbo charger is defective or the inter-cooler is clogged.

Stop the engine and check the inlet air system.

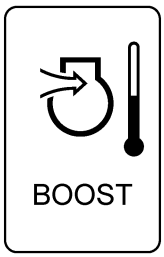

CA-C200070

Water temperature gauge

- This gauge indicates the temperature of the engine coolant when the engine key switch is set to the ON position.
- It is OK if the gauge pointer indicates a temperature in the green zone during operation.
- Warm up the engine after starting it until the gauge pointer indicates a temperature in the green zone.
- Idle the engine and wait until the temperature lowers to the green zone, if the gauge pointer indicates a temperature in the red zone.

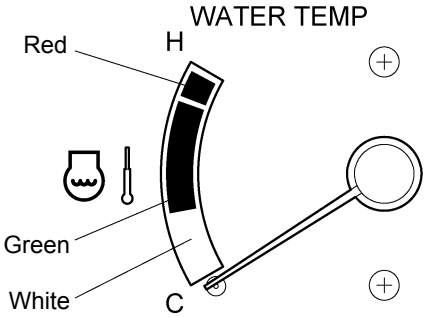

CA-C200090E

Fuel level gauge

This gauge indicates the fuel level in the fuel tank.

F: The fuel tank is full.

Fuel tank capacity: 200 liters

E: The fuel level is below 25 liters. Refill the tank with fuel.

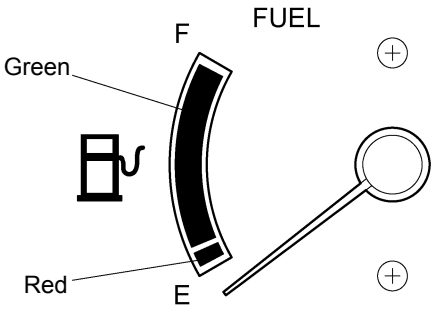

CA-C200100E

https://truckmanualshub.com/

Meters

Tachometer

This meter indicates the engine revolution per minute.

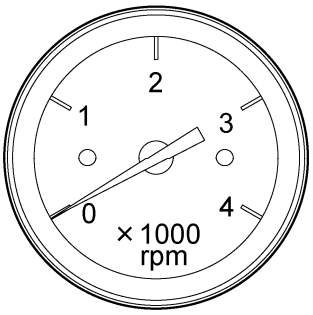

CA-C200110

Service hour meter

- This meter indicates the total service hours of the engine.
  The smallest digit shows 1/10 hour (six minutes).
- The meter advances if the engine runs, even though the machine does not work.
- The total service hours serve as the standard of inspection and maintenance.

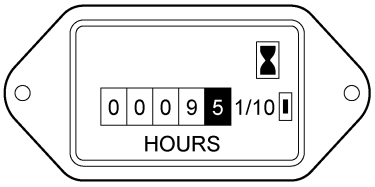

CJ-C200081

Switches

Turn signal switch

This switch works when the engine key switch is set to ON.

Use the lever (1) to change the direction indicator lamps.

⇨ : The right direction indicator lamp blinks.

OFF : The lamps are off.

⇦ : The left direction indicator lamp blinks.

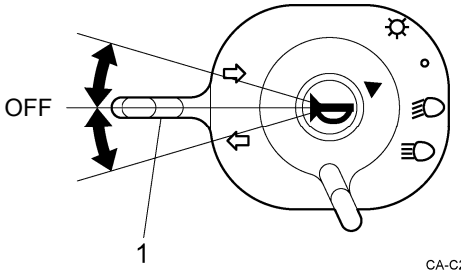

CA-C200160

Head light switch

This switch works when the engine key switch is set to ON.

Use the lever (2) to change the head lights.

Turn the lever to point the mark (►) to a symbol.

○ : (OFF)

: (ON) Two outside lights emit light downward.

: (ON) Four lights emit light upward.

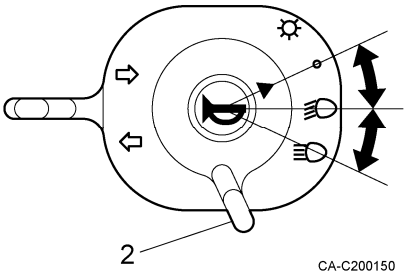

CA-C200150

Horn switch

Press the button (3) of this switch to turn on the horn.

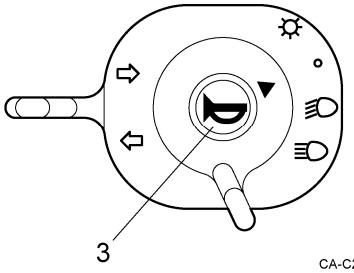

CA-C200170

https://truckmanualshub.com/

Engine throttle dial

Use this dial to adjust the engine speed and output.

High: Turn the dial to the mark position.

Low: Turn the dial to the mark position.

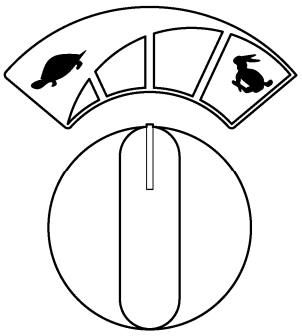

CA-C200250

Engine key switch

Use this switch to start and stop the engine.

- OFF (stop) position
  The key may be inserted and pulled out. All currents are cut off. Fuel injection stops and the engine stops when the key switch is set to the OFF position.
- ON (run) and GLOW (preheat) positions
  The electrical system is turned on.
  The temperature sensor senses the temperature and the engine is preheated automatically for 1 to 15 seconds.
  The glow lamp is on during preheating.
- START position
  Set the key to this position to start the engine.
  Release the hand from the key immediately after the engine starts.
  The key returns to the ON position automatically.

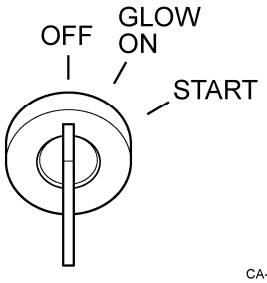

CA-C200130

Parking switch

Push this switch to apply the parking brake.

ON: Push down on the P mark position. The mark lamp goes on.

OFF: Push down the no-mark position. The mark lamp goes out.

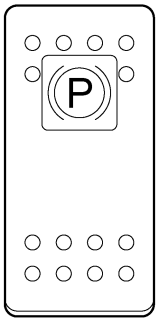

CA-C200190

Emergency stop switch

Use this switch if the brake does not work and the machine does not stop when the travel lever is returned to the neutral position while moving down a slope.

STOP: Push down on the STOP mark position. The mark lamp goes on. The engine stops in emergency and the machine stops traveling.

Reset: Push down on the no-mark position. The mark lamp goes out.

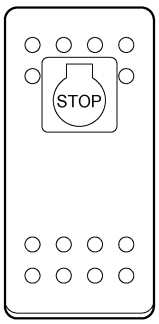

CA-C200200

https://truckmanualshub.com/

Travel speed select switch

Use this switch to change the travel speed in two steps.

High speed: Push down on the 🐇 mark. The mark lamp goes on.

Low speed: Push down the no-mark position. The mark lamp goes out.

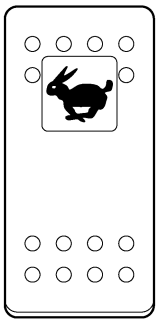

CA-C200180

Car heater switch

Use this switch to turn on the fan of the cabin heater.

High and Low may be selected.

HIGH: Push down on the HIGH mark.

LOW: Push down on the LOW mark.

- Push down on the center to turn off the heater.

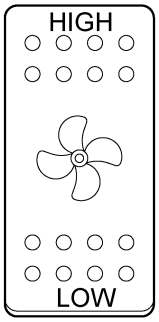

CA-C200210

Inclinometer

This meter indicates inclination of the machine in the travel direction.

The pointer shakes forward when the machine tilts forward.

The pointer shakes backward when the machine tilts backward.

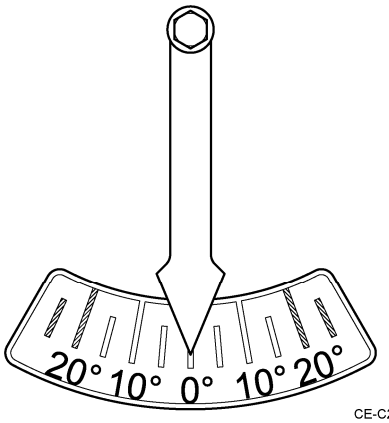

CE-C200030

https://truckmanualshub.com/

Control levers

Travel lever

Use this lever to control machine traveling.

Forward: Push the travel lever forward.
Stop: This is the neutral position.
Backward: Pull the travel lever backward.

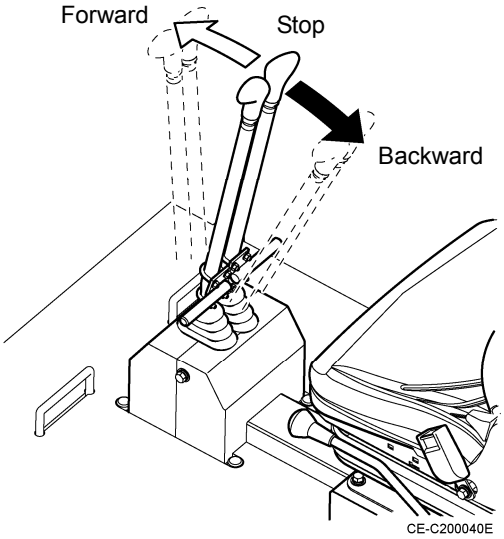

Dump lever

Use this lever to control dumping.

Raise: Pull the lever up to raise the body.
Hold: This is the neutral position.
Lower: Push the lever down to lower the body.

The body stops at the current position when the lever is returned to the neutral position.

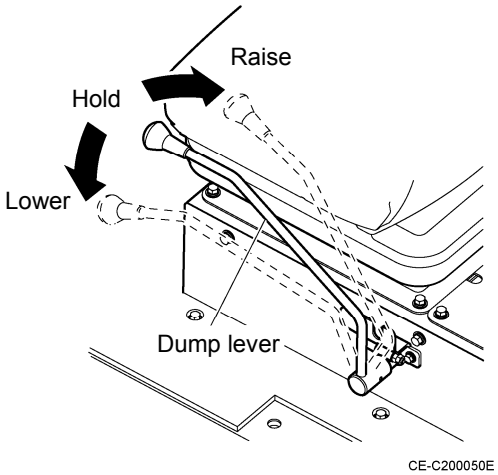

Dump lever lock

This lock prevents the body from moving if you touch the dump lever by mistake.

Locked position: Dumping is disabled.
Free position: Dumping is enabled.

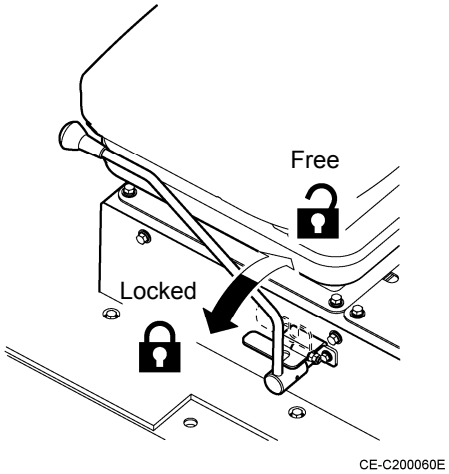

https://truckmanualshub.com/

Operator seat

Sit on the seat and adjust it to allow free lever operations.

- Adjusting tilt
  Move the seat back while pulling the lever (1) to adjust the angle of the seat back.
- Adjusting the back-and-forth position
  Move the seat forward or backward while pulling the lever (2) to adjust the back-and-forth position.
- Adjusting suspension
  Raise the lever (3) and turn it to adjust suspension. The appropriate body weight is displayed on the display (4).

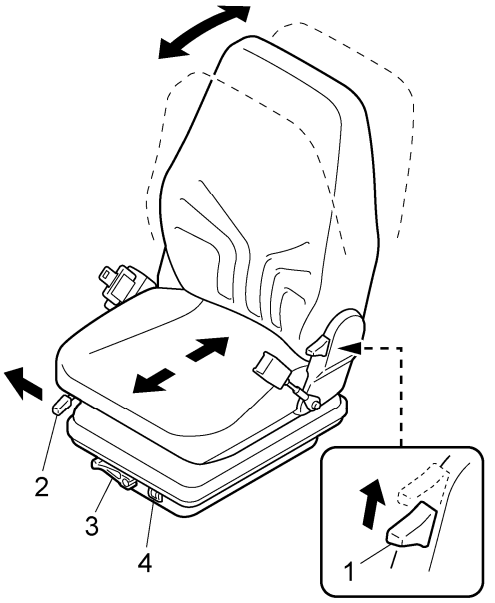

CA-C200320

> **⚠ CAUTION**
>
> - Do not adjust the seat while driving. Sudden seat movement can cause operating errors or unforeseen accidents.
> - Shake the seat back and forth lightly and check if the seat is fixed firmly after adjusting it. If the seat is not fixed, it may move suddenly and cause unforeseen accidents.

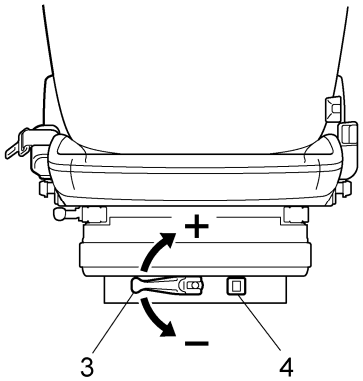

CA-C200340

Seat belt

1. Adjust the seat belt length according to your body size.
2. Confirm that the seat belt is not twisted and put the plate (5) into the buckle (6) securely.
3. Slightly pull the belt and confirm the belt is locked.
4. Press the button (7) of the buckle to unfasten seat belt.

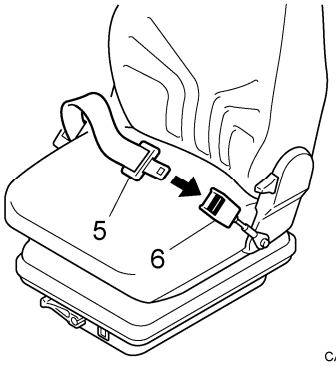

CA-C200400

> **⚠ CAUTION**
>
> - ALWAYS fasten the seat belt while operating the machine.
> - ALWAYS check the condition of the seat belt and mounting hardware before operating the machine.
> Replace the seat belt at least once every three years, regardless of appearance.

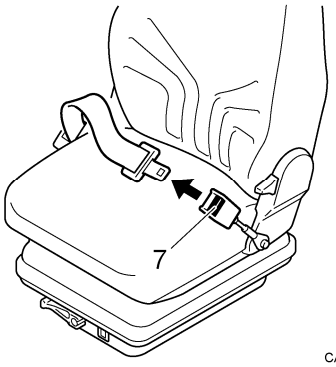

CA-C200410

https://truckmanualshub.com/

This page is intentionally left blank

https://truckmanualshub.com/

OPERATION

This section describes the proper operation procedures of this machine.
Always look to the safety and observe the given operation instructions and cautions to carry out works safely.

https://truckmanualshub.com/

https://truckmanualshub.com/

BEFORE STARTING OPERATION

The operator of the machine must carry out these inspections before starting the engine at the beginning of daily works.
Be sure to carry out them to prevent accidents in advance.

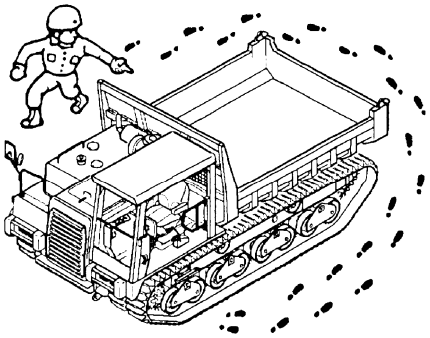
CA-C300010

Walk-around inspection

Look around and under the machine and check the items shown below.
Repair defective parts before starting operation.

- Check oil leak from the hydraulic devices, hydraulic oil tank, hose, joints, etc.
- Check damages of the fuel line and hose.
- Check damages, cracks, wear, backlash and loose bolts of the shoes, idle tumblers and sprockets.
- Check oil leak and water leak from the engine.
- Remove dust and foreign matters from the engine, radiator and peripheral parts.
  If flammable objects touch the exhaust pipe or the like, a fire may break out. Make sure that there is no withered grass, paper trash or other flammable objects near the exhaust pipe.
- Check loose terminals of the electrical cables.

Start-up inspection

Refer to [MAINTENANCE] for details.

- Check the coolant quantity. Refill if necessary.
- Check the engine oil quantity. Refill if necessary.
- Check the fuel quantity. Refill if necessary.
- Check the hydraulic oil quantity. Refill if necessary.
- Check the dust indicator.

https://truckmanualshub.com/

BEFORE STARTING THE ENGINE

1. Sit on the seat, adjust it to allow free lever operations, and fasten the seat belt.

2. Make sure that the travel lever (1) and dump lever (2) are set at the neutral positions.

3. Make sure that the dump lever lock (3) is set at the locked position.

4. Insert the key into the engine key switch, turn it to the ON position, and check the following:

   - Engine preheating starts automatically. Make sure that the glow lamp (4) is lit for 1 to 15 seconds and goes out then.

   - Make sure that the engine oil pressure warning lamp (5) and charge warning lamp (6) are on.

   - Make sure that the mark lamp of the parking switch (7) is on.

   - Turn the light switch (8) and make sure that the head lamps go on.

   - Turn the turn signal switch (9) and make sure that the direction indicator lamps go on.

   - Push down the horn switch (10) and make sure that the horn sounds.

Ask IHI's sales service dealer for repair services, if some abnormality is found in the above check.

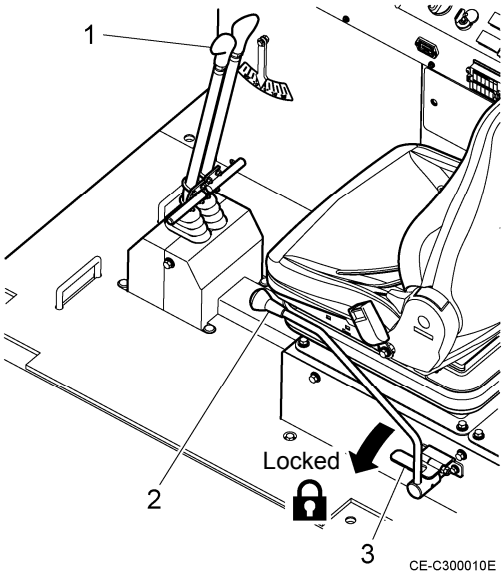

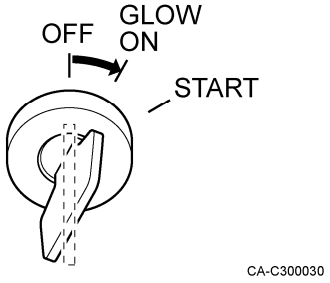

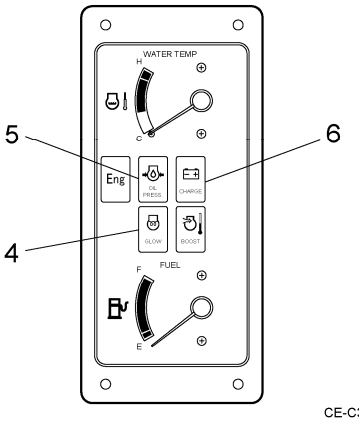

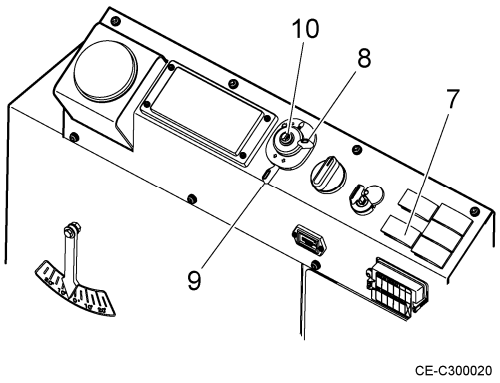

https://truckmanualshub.com/

ENGINE STARTING

⚠ CAUTION

- Make sure that there are no persons or obstacles around the machine and sound the horn before starting the engine.
- Be sure to sit on the seat when starting the engine.

NOTICE

Do not turn on the starter motor for 20 seconds or more. If the engine does not start, return the key switch to OFF, wait for 30 seconds and restart the engine.

1. Set the engine throttle dial to the low position.
2. Make sure that the glow lamp is off. Turn the key to the START position. The engine starts.
3. Release the hand from the key when the engine starts. The key returns to the ON position automatically.

CA-C300070

AFTER STARTING THE ENGINE

NOTICE

- Never race the engine immediately after starting it. Racing after starting may cause breakdown of the engine.
- Do not accelerate the engine quickly or apply loads to it when the pointer of the engine water temperature gauge (1) shows a temperature in the white zone.
- If some abnormality is found, stop the engine immediately, find the cause and repair the defective part.

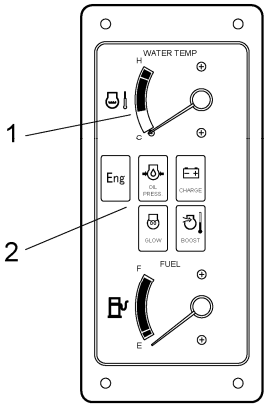

CA-C300080

1. Checking monitor functioning
   Make sure that all lamps (2) on the monitor are off.
2. Check if engine exhaust color, sound and vibrations are not abnormal.

https://truckmanualshub.com/

WARMING UP THE MACHINE

NOTICE
Do not increase the engine speed quickly when hydraulic oil is cool (below 20°). The proper hydraulic oil temperature is approximately 50°C to 80°C. If you should carry out works at low temperature, warm up the engine until the hydraulic oil temperature rises to approximately 20°C before starting works.

1. Idle the engine for approximately 10 minutes to warm it up after starting it.
2. If the hydraulic oil temperature is low, continue warming up for approximately 3 to 5 minutes with the dump lever to the “Lower” position to increase the hydraulic oil temperature, when it is low.
3. Move the machine forward and backward and raise and lower the body several times to warm up the mechanisms.

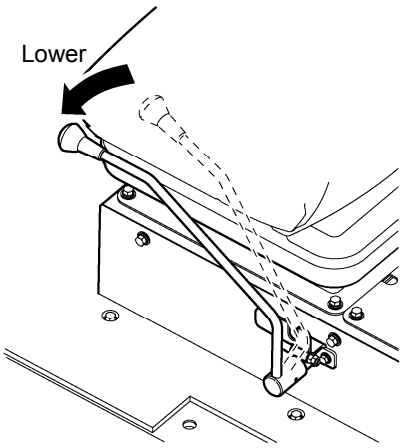

CE-C300030E

https://truckmanualshub.com/

STARTING WITH JUMPER CABLES

Follow the procedures shown below to start the engine with jumper cables, if the batteries are exhausted.

Never connect the positive and negative terminals.

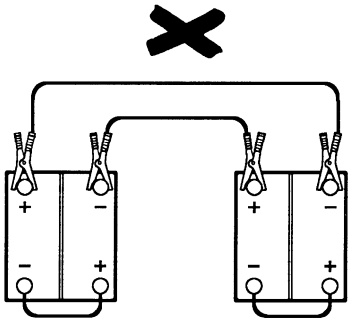

⚠ WARNING

- If the jumper cables are connected improperly, the batteries are short-circuited, resulting in a dangerous accident. Never connect the positive and negative terminals.
- The battery produces inflammable hydrogen gas. It is explosive. Never bring fire close to the battery or strike a spark near it.

NOTICE

The electrical system of this machine runs on 24 V. Use a 24 V auxiliary battery.

Connecting the jumper cables

1. Set the engine key switches of a machine with a charged battery and the machine with a dead battery.
2. Connect the clip of the (red) jumper cable to the positive terminal of the dead battery. Connect the other clip to the positive terminal of the charged battery.
3. Connect the clip of the (black) jumper cable to the negative terminal of the charged battery. Connect the other clip to the upper frame of the machine with the dead battery.

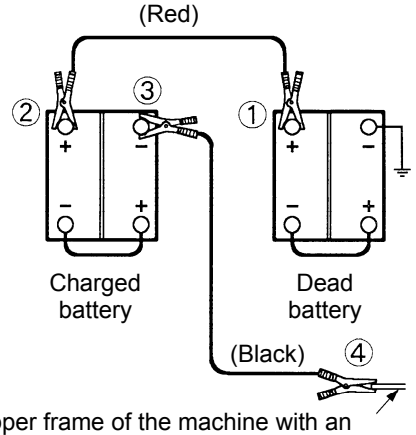

Order of connecting the jumper cables

①→②→③→④

CA-C300110E

Starting the engine

1. Make sure that the cable clips are connected with the battery terminals and upper frame properly.
2. Start the engine of the machine with the charged battery and keep it running at high speed.
3. Start the engine of the machine with the dead battery.

Disconnecting the jumper cables

1. Disconnect the clip of the black cable from the upper frame first. Disconnect the clip from the negative terminal of the charged battery then.
2. Disconnect the clip of the red cable from the positive terminal of the charged battery first. Disconnect the clip from the positive terminal of the dead battery then.

Order of disconnecting the jumper cables

④→③→②→①

CA-C300120E

https://truckmanualshub.com/

“BREAK-IN” OPERATION

NOTICE
If a new machine is used in severe conditions, its performances are deteriorated early and the service life becomes shorter. Break in a new machine for about 100 hours first.

Warm-up operation

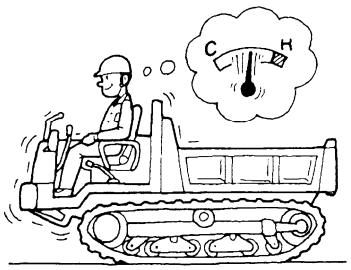

CA-C300130E

Pay attention to the following when breaking in a new machine.

- Warm up the machine sufficiently.

- Do not apply heavy loads to the machine or run it at high speed.
  Run the machine at approximately 80% of the maximum engine speed.
  Place loads of approximately 80% of the maximum loading capacity.

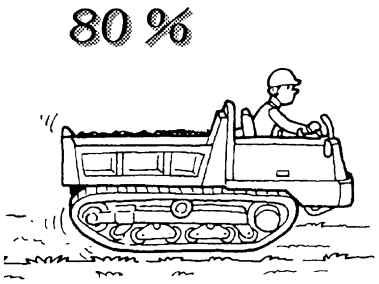

CA-C300140

- Do not start or accelerate quickly or stop unnecessarily.
  Do not change the direction quickly.

CA-C300150

https://truckmanualshub.com/

TRAVELING THE MACHINE

Start-travel-stop

⚠ WARNING

- When traveling, lower the body completely.
- Lock the rear gate and side gates firmly.
- Make sure that no persons are around the machine. Sound the horn before starting.

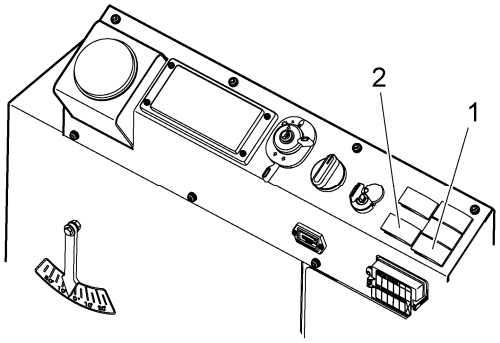

CE-C300040

1. Adjust the traveling speed properly with the travel speed select switch (1). (See page 2-7)

2. Turn the engine throttle dial to increase the engine speed to the necessary speed.

3. Push down on the no-mark position of the parking switch (2) to deactivate the brake.
   Make sure that the mark lamp is off.

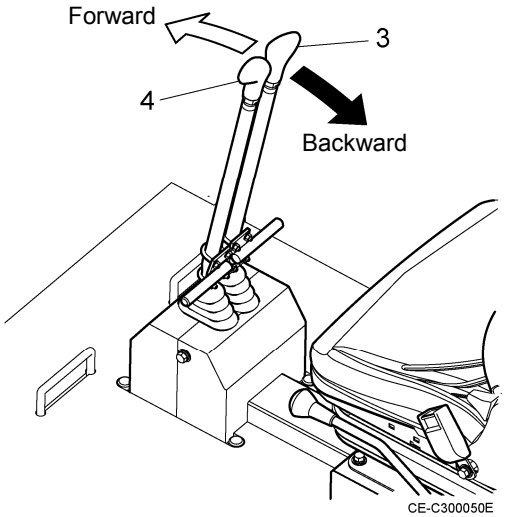

CE-C300050E

4. Use the right and left travel levers (3) and (4) as shown below.
   - Forward direction travel
     Push the right and left levers (3) and (4) evenly and slowly to start the machine slowly.
   - Backward direction travel
     Pull the right and left levers (3) and (4) evenly and slowly to start the machine slowly.
   - Speed adjustment
     Increase the travel lever stroke to raise the speed.
     Decrease the stroke to reduce the speed.

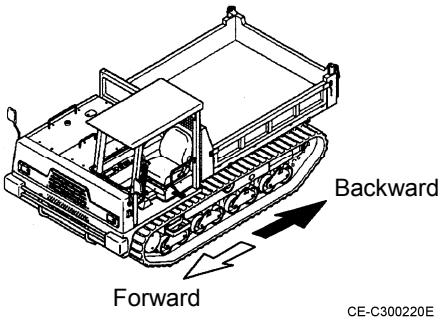

CE-C300220E

5. Stopping
   Set the right and left levers (3) and (4) to the neutral position. The machine stops and the travel brake is applied automatically.

https://truckmanualshub.com/

Steering control

Gentle turn

Change the stroke of the travel lever (1) or (2) to change the travel direction while moving forward (or backward). Return the lever of the desired direction slightly. The machine turns in that direction slowly.

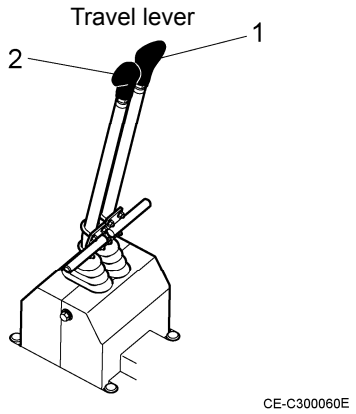

Pivot Turn

- Move the right travel lever (1) forward, allowing the machine to the left, pivoting on the left track.
- Move the left travel lever (2) forward, allowing the machine to turn to the right, pivoting o the right track.

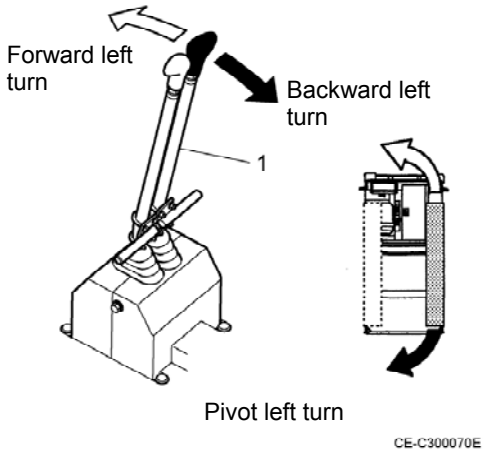

Spot Turn

- Move the right side travel lever (1) forward and move the left side travel lever (2) backward at the same time. This allows a quick left turn (counter track rotation).
- Move the right side travel lever (1) backward and move the left side travel lever (2) forward at the same time. This allows a quick right turn (counter track rotation).

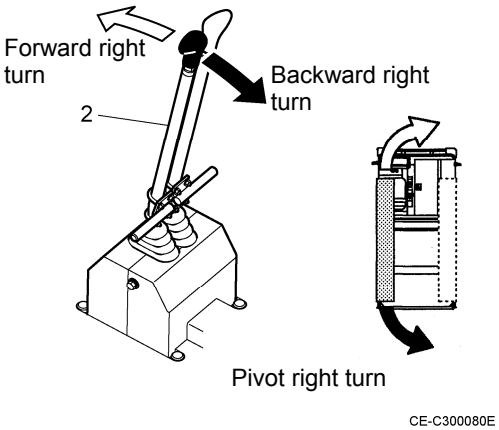

⚠ WARNING

NEVER steer on a grade or unstable ground, which causes turnover. It is very dangerous.
If the engine stall when changing directions while the engine speed is low or the travel select switch is set to high. Restart the engine, increase the engine speed and set the travel select lever is set to low. Avoid the engine stall to control the travel levers stroke while travelling.

Never change the travel direction quickly on a slope. Quick direction change may cause turnover or slip.

If it is necessary to change the travel direction quickly, move to a solid ground with a gentle slope and change the direction.

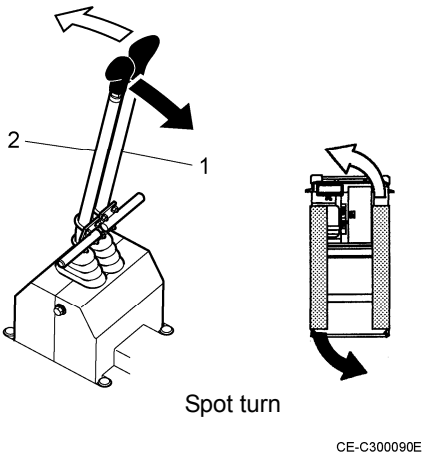

https://truckmanualshub.com/

Caution of travel on a steep grade

⚠ DANGER

- Do not travel on grades over 20° in order to avoid turnover.
  Otherwise, the machine may fall down, resulting in a serious accident.
- On steep grades over 9°, travel the machine at low travel speed and middle or lower engine speed.
- If the machine is inclined in the forward direction by 9°, the slope warning is given.
- Never change the travel direction on steep grades or cross such grades. Such operation may cause turnover or slip. Move down to a flat ground once and make a detour. Be sure to drive safely.

Never change the travel direction on or cross a slope.

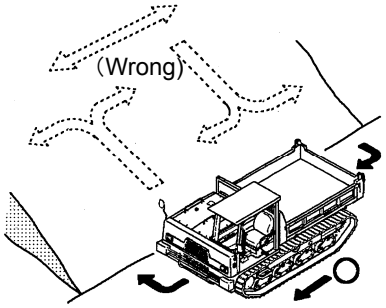

Make a detour on a flat ground.

CE-C300230E

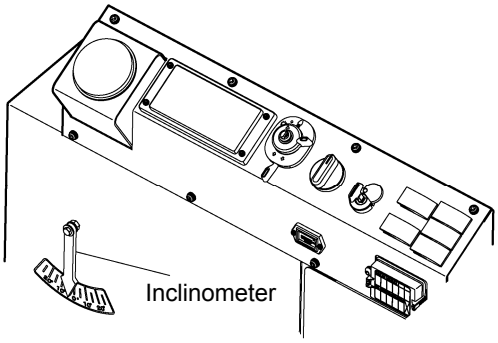

CE-C300110E

Cautions

Travel in the proper postures shown below.

- Drive the machine with the cabin upper side of a slope when the body is empty. This posture ensures stable driving, since the center of gravity is located on the cabin side.
- Drive the machine with the body upper side of a slope when the body is full. This posture ensures stable driving, since the center of gravity is located on the body side.
- When driving over an obstacle, reduce the speed and drive safely with care not to turn over.
- Do not accelerate or decelerate the speed or stop suddenly.
- The engine may stop if the travel lever is pulled fully while climbing a slope.
  When the engine speed lowers, return the travel lever slightly to reduce the engine load.

Traveling on slope with an unloaded machine

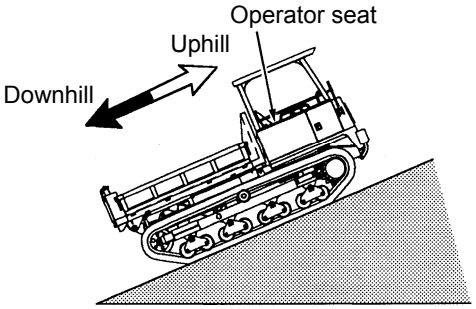

CE-C300240E

Traveling on slope with a loaded machine.

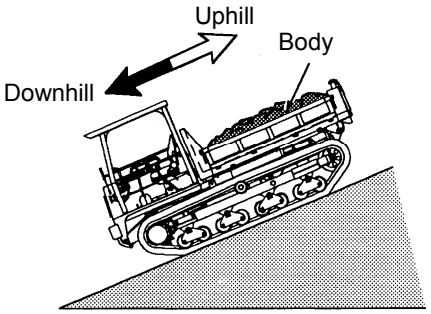

CE-C300250E

https://truckmanualshub.com/

DUMP OPERATION

⚠ DANGER

Never go under the raised body.

Keep the body with the safety bar.

If you touch the dump lever with the body raised, the body moves down even though the engine is stopping, resulting in a serious accident possibly.

Procedure of dump operation

1. Stop the machine and confirm safety of a dumping place.
2. Set the dump lever lock (1) to the free position.
3. Use the dump lever (2) to raise or lower the body.
   - Raise position: The body is raised.
   - Lower position: The body lowers.
4. Adjust the dumping speed by changing the engine speed and the stroke of the dump lever.
5. The rear gate of the body opens or closes automatically as the body moves up or down.

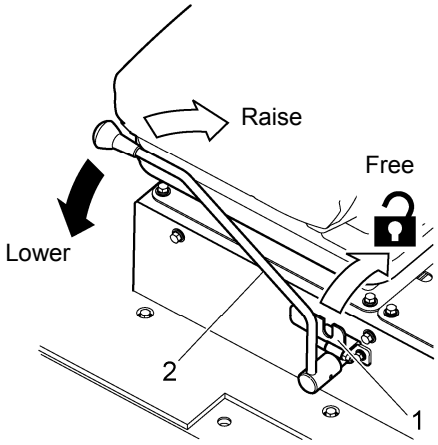

CE-C300120E

Caution of dump operation

1. If dumping is carried out on a slope, uneven ground or soft ground, the center of gravity may move and the machine may turn over.
   Carry out dumping on flat and solid grounds where the machine may be maintained as horizontally as possible.
2. Avoid dumping on cliffs or near ditches in danger of falling as far as possible.
   If it is necessary to carry out dumping in such places, use buffers or post a guide as the necessity requires.
   Be sure to observe instructions of the guide.
3. When dumping bigger stones, operate dumping slowly.
   If there is a too big object to be dumped through the rear gate, remove the gate in advance.
4. Make sure that the body has lowered completely before starting the machine.
5. Do not travel while the body is raised. ALWAYS travel keeping the body lowered.

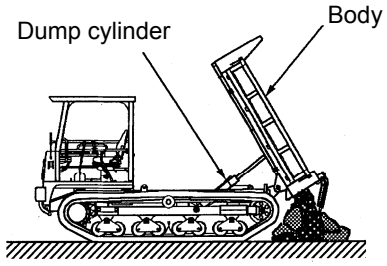

Dump at a level and stable place.

CE-C300130E

https://truckmanualshub.com/

STOPPING THE ENGINE

⚠ WARNING

- Be sure to move down the body, stop the engine and pull out the key before leaving the operator seat.
- Do not park the machine on a slope. If it is necessary to park on a slope, use buffers on the lower side of the crawler.

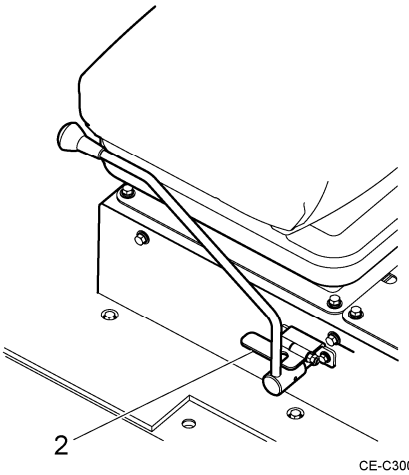

CE-C300150

Stopping the machine

1. Stop the machine on a flat and rigid ground.
2. Set the parking switch (1) to the brake ON position.
3. Make sure that the body is lowered completely.
4. Check if the dump lever lock (2) is set to the locked position.

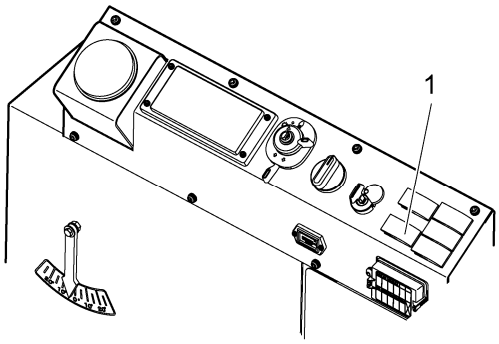

CE-C300140

Stopping the engine

1. Keep the engine idling for approximately 5 minutes to lower the temperature of the engine.
2. Set the engine key switch to the OFF position to stop the engine.
3. Pull out the key from the engine key switch.

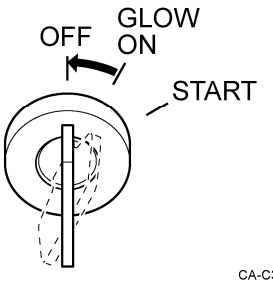

CA-C300370J

Inspection and locking after stopping the engine

1. Check necessary parts for oil leak and damages. Repair defective parts if oil leak or damages are found.
2. Fill the fuel tank with fuel.
3. Remove soil and sand from the body and traveling mechanisms, in particular.
4. Lock the fuel filling port, engine hood and all other lockable parts.

https://truckmanualshub.com/

PRECAUTION ON USE OF RUBBER CRAWLER SHOE

⚠ CAUTION

The rubber crawler shoe may be damaged or worn faster depending on working conditions. Perform working operation properly according to working site conditions and machine operation. Be sure to observe the prohibitions and instructions shown below.

Structure of Rubber Crawler Shoe

The structure of rubber crawler shoe. It consists of steel cord to sustain tension, iron core to support it, and covering rubber to them.

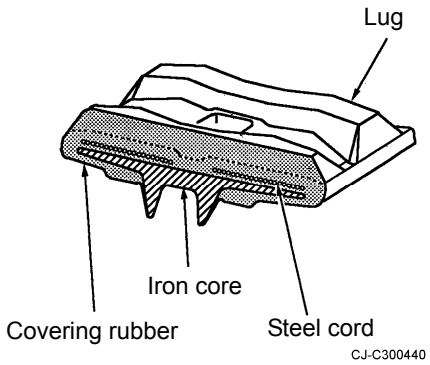

NOTICE

If a crack reaches the steel cord, it may be rusted and cut off by moisture. When any crack is detected, immediate repair is essential. Please contact your local IHI distributor.

Cautions while working and traveling

Avoid the following while traveling.

DO NOT TRAVEL OR WORK ON STONE FOUNDATIONS OR SHARP ROCKS

This wears down the lug and causes the steel cord to break.

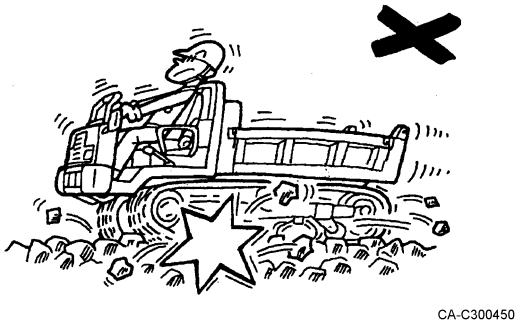

DO NOT TRAVEL OR WORK ON SURFACES WITH MANY STONES SUCH AS RIVER BEDS

This causes damage or wear on the rubber crawler and they may slip off.

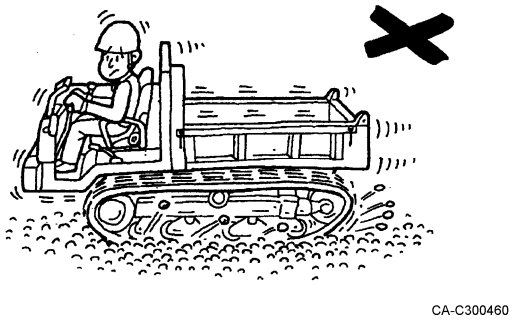

https://truckmanualshub.com/

DO NOT TRAVEL OR WORK ON STEEL OR SCRAP MATERIAL

This wears down the lug and causes the steel cord to break.

CA-C300470

DO NOT TRAVEL OR WORK ON LARGE STEPS SUCH AS STONE STAIRS

- Move slowly directly up steps.
- While moving up the steps, avoid places where the road surface changes.

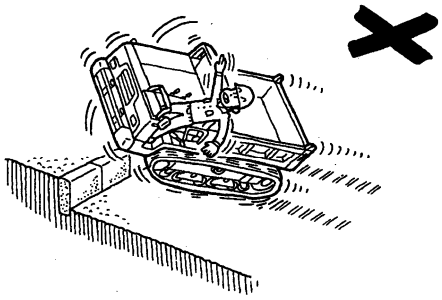

CA-C300480

DO NOT TRAVEL OR WORK WHILE SPANNING A DITCH ETC.

- This wears down the lug and breaks the iron core.
- The carrier might fall or topple over.

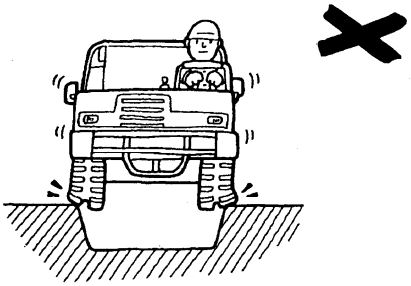

CA-C300490

AVOID LOCATIONS WHERE THE CARRIER MIGHT FALL

Do not let the carrier fall from locations like large stone steps.

This might damage or break the iron core.

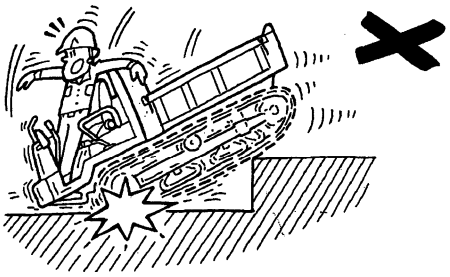

CA-C300500

AVOID TRAVELING OVER LARGE RUTS OR PROTRUSIONS ON THE ROAD

- Travel slowly and take care not to let the crawlers come off the rollers.
- Do not change directions when the crawlers may have lost tension at the high and low parts of ruts and protrusions. This may cause the crawlers to come off.

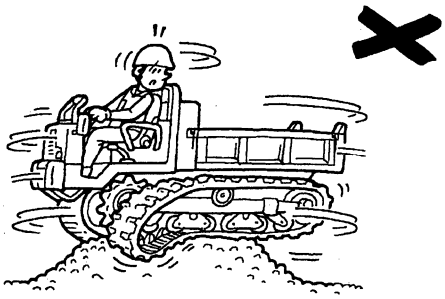

CA-C300510

https://truckmanualshub.com/

AVOID SUDDEN CHANGES IN DIRECTION WHEN STEERING

- Make direction changes in several smaller steering movements.
- Avoid sudden changes in direction.
  This causes early wear on the lug and may cause the crawlers to slip off.

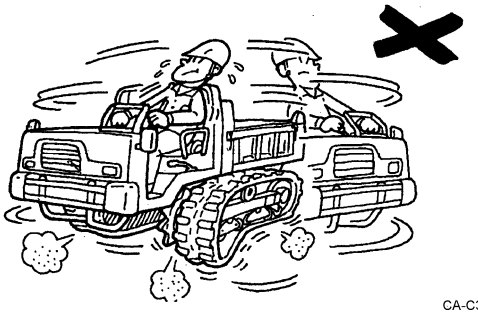

CA-C300520

DO NOT TRAVEL OVER HIGH HEAT LOCATIONS.

Do not try to travel over place subjected to high heat such as steel plate that was placed in bonfires or under scorching heat, asphalt or floorboards etc.
This causes serious abrasion or damage and breakage of the lug.

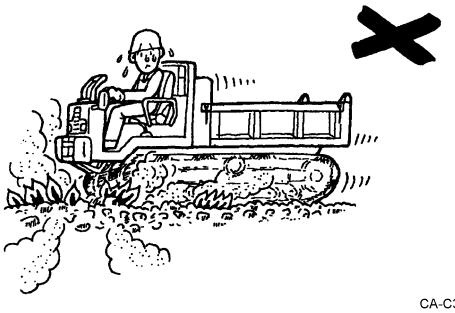

CA-C300530

OTHER ITEMS FOR CAUTION

DO NOT LET OIL – SOLVENTS OR SALT ADHERE TO THE RUBBER CRAWLERS

- If fuel, transmission fluid or paint should adhere to the rubber crawlers wipe it away quickly.
- Wash away with water after working in locations with a large salt content. Salt can cause the iron core to rust or peel.

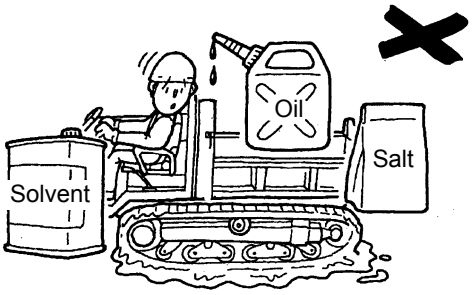

CA-C300540

ALWAYS USE CORRECT TENSION ON THE SHOE

Attempting to change directions on terrain with different levels or steps while the rubber crawler is still slack may damage the rubber crawlers or cause them to come off the rollers.

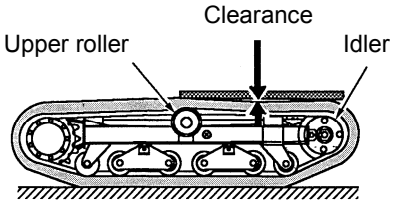

CA-C300550E

https://truckmanualshub.com/

TOWING

⚠ WARNING

- Use wire ropes and shackles for towing that are strong enough for the towing weight.
- It is very dangerous if the wire rope is disentangled during towing. Do not stand between the towing machine and the towed machine.

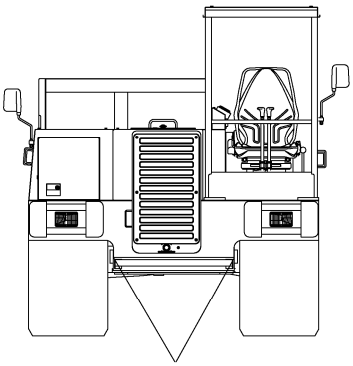

Hook
Front towing hook

CE-C300160E

Towing the carrier

When the carrier gets stuck for instance in mud and cannot escape under its own power it must be towed by another machine. In such cases attach a shackle to a wire rope and attach this to the front or rear hook. The carrier can now be towed.

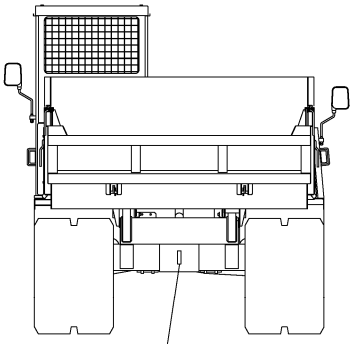

Hook
Rear towing hook

CE-C300170E

1. Start the engine.
2. Select the low speed mode with the travel speed select switch.
3. Set the parking brake to the OFF position.
4. Move the travel lever in the travel direction slowly when towing starts.

NOTICE

When the engine is broken and will not start, the parking brake will not release. The parking brake will prevent the crawler belt from rotating so the carrier cannot be towed.

https://truckmanualshub.com/

TRANSPORT

Observe the loading and unloading methods and the anchoring method for transportation as well as the laws and regulations concerned when transporting the machine.

Loading and unloading the machine

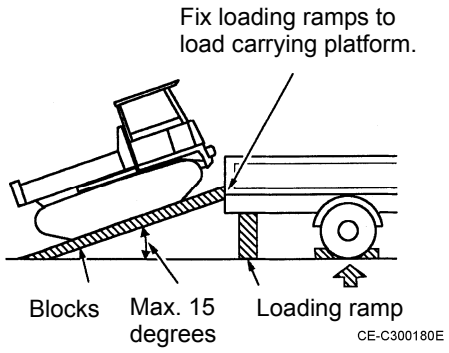

⚠ WARNING

- Move the machine forward when loading. Move it back when unloading.
- Be sure to select the low speed mode with the travel speed select switch to reduce the engine speed before loading or unloading.
- Be sure to use loading ramps or loading tables for loading or unloading.
- Use loading ramps of adequate width, length and thickness that allow safe loading and unloading.
- Carry out loading or unloading on a flat and solid ground.
- Remove dirt and soil from the crawlers to prevent slippage. Remove grease, oil, water and other adherent matters from the lading ramps.
- Never make a turn on the loading ramps to avoid turnover. To make a turn, return to the load carrying platform or road.
- Warm up the machine sufficiently before load or unload it in cold weather.

1. Apply the truck brake firmly. Fix the trailer wheels with blocks to prevent them from moving.
2. Adjust the center line of the machine to the center line of the truck. Adjust the loading ramp interval to the crawler width.
3. Maintain the slope of loading ramps within 15 degrees.
4. Drive the machine slowly at low speed.
5. Maintain the machine balance point while traveling over the loading ramp joint areas.
6. Load the machine properly at the specified position on the truck.

https://truckmanualshub.com/

Fixation at transport

⚠ CAUTION

It is very dangerous if the machine moves during transportation.

Fix it firmly on the load carrying platform of the truck with wheel blocks and wire ropes.

Apply wheel blocks in front of and behind the rubber crawlers to fix the machine.

Finally, make sure that the machine is loaded properly and fixed completely.

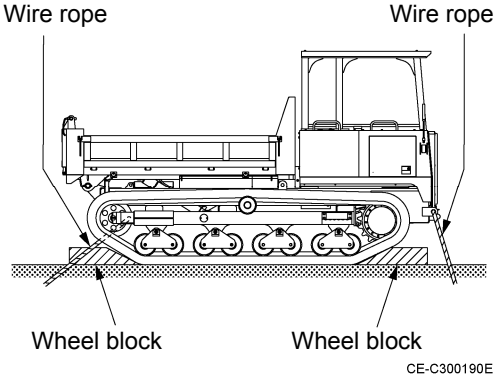

https://truckmanualshub.com/

Lifting the machine

⚠ WARNING

- ALWAYS lift the machine on the level ground.
- NEVER lift the machine loaded with any personnel.
- Make sure the lifting cables and other lifting devices are strong enough to support the machine.
- Use guide or tag lines to prevent the machine from swinging or turning.

Weight on lifting the machine: 6330 kg

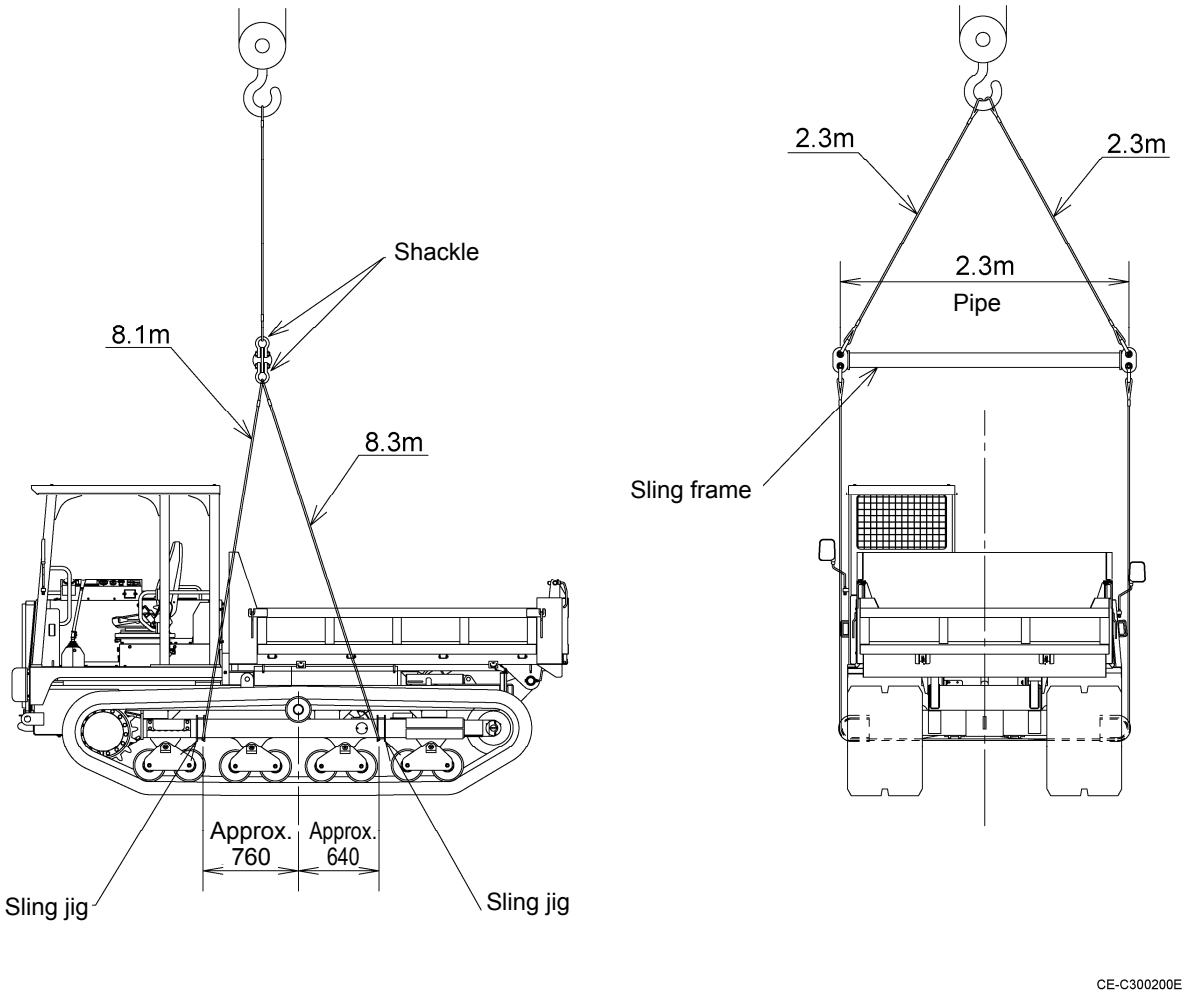

1. Prepare strong enough wire ropes, shackles, sling frame and sling jigs.
2. Fix the sling jigs at the positions of the crawler frame shown above and pass the wire rope through them.
3. Install the wire rope to the sling frame with the shackle.
4. Install the wire rope to the crane hooks and lift upward so the crawler is a little bit above the ground, then stop lifting.
5. If the balance is good continue slowing lifting the machine.

https://truckmanualshub.com/

MAINTENANCE

Proper maintenance is needed to maintain the machine performances for long and prevent damages and troubles in advance.
This section describes the proper maintenance procedures of this machine. Carry out maintenance safely and properly in accordance with the maintenance procedures described below.

https://truckmanualshub.com/

https://truckmanualshub.com/

PRECAUTION ON MAINTENANCE

Maintenance intervals

Determine the maintenance intervals in accordance with the time of the hour meter and certain period of time.

This section shows the maintenance intervals on the assumption that the machine is used in normal running conditions. Carry out maintenance earlier if the work environments are bad or severe.

Preparation for maintenance

- Place the machine in a flat and rigid ground.
- For normal maintenance, lower the body completely.
  To carry out maintenance with the body raised, raise the body fully and apply the safety lever.
- Set the parking switch to the brake ON position and the dump lever lock to the locked positions. Stop the engine and pull out the key from the engine key switch.
- Put a tag, which indicates that maintenance is being carried out, on the engine key switch or control lever at an easy-to-see position.

Cautions for repair works requiring welding

- Turn off power. (Disconnect the cable from the negative terminal of the battery.)
- Do not put any seals, bearings or the like between the weld zone and GND.
- Do not connect the GND wire to the pin of the body or hydraulic cylinder. It is the best way to connect the GND wire at or near the object to be welded.

Use genuine parts.

Be sure to use the genuine parts.

Use oil and grease of viscosity appropriate to the temperature.

Ask IHI's sales service dealer for important maintenance.

Ask IHI's sales service dealer for important maintenance works such as replacement of electronic parts, adjustment of the hydraulic pressure and so forth that require professional knowledge and technique.

https://truckmanualshub.com/

USE THE SAFETY BAR

⚠ DANGER

ALWAYS use the safety bar to prevent personal injury or death, when maintenance under the raised body. Use the safety bar when underneath the body which has been raised.

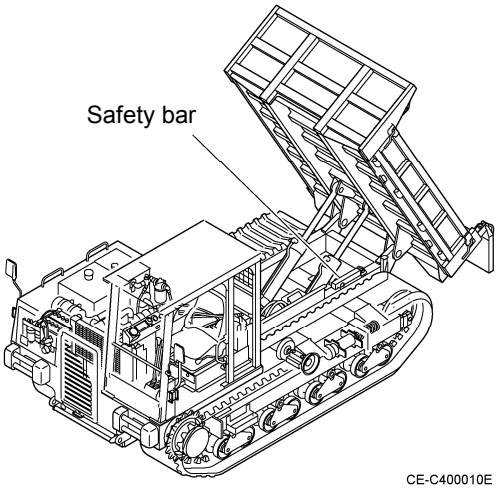

Setting the safety bar

1. Raise the body completely.
2. Raise the safety bar and set it to the bracket under the body.

⚠ CAUTION

Do not start the engine or lower the body while the safety bars are used.
Such an action may cause breakage of the safety bar or body.

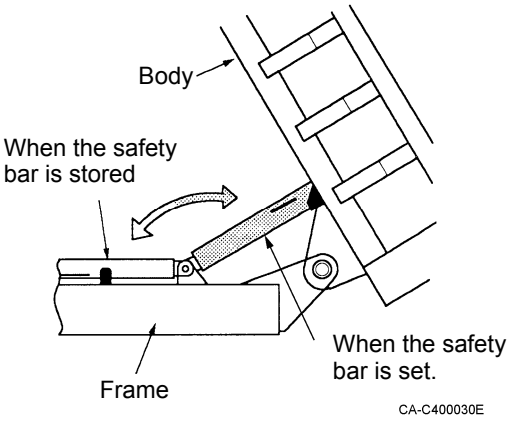

Removing the safety bar

1. Raise the body completely.
2. Remove the safety bar from the bracket and store the bar onto the frame.

https://truckmanualshub.com/

PERIODICAL EXCHANGE OF THE IMPORTANT PARTS

Carry out periodical maintenance of the parts shown below having great concern with safety and fire, in particular.
These parts are subject to changes of materials, wear and deterioration as they are used long. It is difficult to judge the service life by checking the appearance of these parts. Replace them periodically, even though they do not have apparent defects.

Fuel relation

Parts to be replaced periodically	Q'ty	Replace interval
Fuel hose (between fuel tank and fuel pre-filter)	1	Every 2 years
Fuel hose (between fuel pre-filter and electromagnetic fuel pump)	1	
Fuel hose (between electromagnetic fuel pump and fuel main filter)	1	
Fuel hose (between fuel main filter and engine)	1	
Fuel hose (between engine and fuel cooler)	1	
Fuel hose (between fuel cooler and fuel tank)	1	

Hydraulic relation

Parts to be replaced periodically	Q'ty	Replace interval
Hydraulic hose (between pump and right travel motor, main line)	2	Every 2 years
Hydraulic hose (between pump and left travel motor, main line)	2	
Hydraulic hose (between pump, CV and dump cylinder)	7	

Repair or replace these parts immediately if some abnormalities or defects are found in them even before the replacement periods.
Also check the fuel hoses and hydraulic hoses in daily check, monthly check and yearly check.

https://truckmanualshub.com/

MAINTENANCE INTERVALS

Maintenance points		Maintenance intervals								
		Startup check	Every 50 hours	Every 150 hours	Every 250 hours	Every 500 hours	Every 1000 hours	Every 1500 hours	Every 2 years	Irregular
Greasing										
	Pins around body		○							
	Oscillating link pins of lower rollers		○							
Checking rubber crawlers		○								
Tightening bolts					○					
Travel reduction gear										
	Check lubricating oil q'ty & refill					○				
	Replace lubricating oil			First time			○			
Hydraulic system										
	Check oil q'ty & refill	○								
	Drain oil tank		○							
	Replace oil & clean strainer						○			
	Replace line filter element		First time			○				
	Replace return filter cartridge		First time			○				
Engine oil system										
	Check oil q'ty & refill	○								
	Replace oil & oil filter cartridge		First time		○					
Engine cooling system										
	Check coolant q'ty & refill	○								
	Replace coolant (use LLC)								○	
	Check & adjust fan belt tension		First time		○					

https://truckmanualshub.com/

Maintenance points		Maintenance intervals								
		Startup check	Every 50 hours	Every 150 hours	Every 250 hours	Every 500 hours	Every 1000 hours	Every 1500 hours	Every 2 years	Irregular
Fuel system										
	Check fuel q'ty & refill	○								
	Drain fuel tank		○							
	Drain main filter & pre-filter	○								
	Replace main filter & pre-filter element					○				
	Clean electromagnetic fuel pump filter					○				
Air cleaner system										
	Check dust indicator	○								
	Clean air cleaner element				○					
	Replace air cleaner element					○				
Electric system										
	Replace fuse									○
	Replace fusible link									○
	Check battery		○							
Engine, etc.										
	Measure engine compression pressure						●			
	Check valve clearance						●			

• Inquire of IHI's sales service dealer about the maintenance items with ● marks.

https://truckmanualshub.com/

RECOMMENDED LUBRICATION TABLE

Lubrication points	Oil type	Grade	Temp. & application (-30 -20 -10 0 10 20 30 40)	Q'ty required
Engine oil pan	Engine oil	API-CD	SAE10W-30 SAE15W-40	H: 14 L L: 10 L
Hydraulic oil tank	Hydraulic oil	Abrasion-resistant	ISO-VG46 ISO-VG32	Whole system: 63 L Tank level: 50 L
Travel reduction gear	Gear oil	API GL-4	SAE90	2.6 L
Fuel tank	Light oil	JIS	JIS No. 2 JIS No. 3 JIS special No. 3	120 L
Cooling system	Coolant	LLC	Long-life coolant (LLC) added	Total q'ty: 16.4 L

https://truckmanualshub.com/

LUBRICATE THE GREASE

Refill the grease nipples with grease using a grease gun.

Remove oozed old grease after refilling.

Body

⚠ WARNING

Be sure to set the safety bars under the body when lubricating with the body raised.

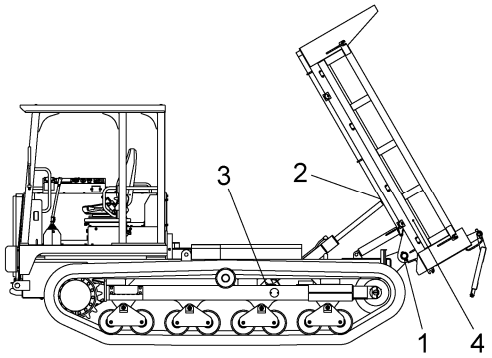

CE-C400020

- Body joint pins (1) 2 positions
- Dump cylinder rod pins (2) 2 positions
- Dump cylinder foot pins (3) 2 positions
- Control springs of the body rear gate (4) 2 positions

Oscillating link

- Oscillating link pins (5) 8 positions

NOTICE

Grease the link pins everyday before starting works if the machine is used on damp grounds or in mud.

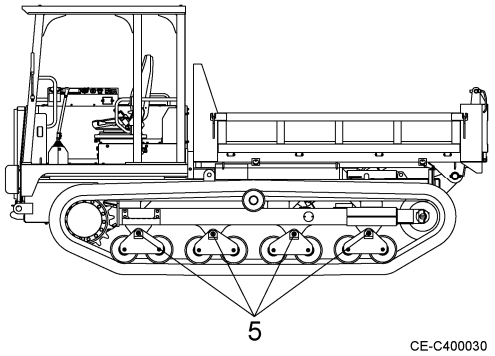

CE-C400030

https://truckmanualshub.com/

RUBBER CRAWLER

Rubber crawler shoe maintenance

Rubber crawler shoe should be repaired or exchanged under the next conditions.
If it is necessary to repair or replace it, contact your IHI dealer.

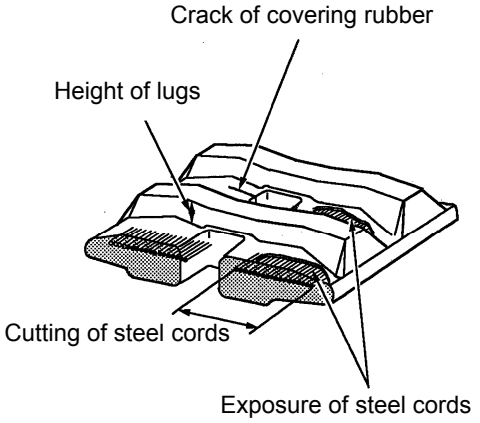

- **Height of Lugs**

The rubber crawler can be used even if it is worn, however, if it is excessively worn, the crawler shoe is likely to be slippery and more travel force is required. If the remaining lug is less than 5 mm (approx. 0.2 in.) high, exchange it with brand-new one.

- **Exposure of Steel Cords**

If steel cord is exposed because of weary rubber or damage, exchange it with brand-new one.

- **Cutting of Steel Cords of Rubber Crawler Shoes**

When cutting of steel cord is detected, exchange it immediately. If you leave it as it is, the rubber crawler shoes can be cut off without expectation, which causes a serious accident.

- **Crack of Covering Rubber**

If a crack is 30 mm (1.2 in.) or more long and 8 mm (0.32 in.) or more deep, repair the cover immediately. If steel cord appears even if a crack is small, repair it immediately. Otherwise, water may come into a crack, which rusts steel cords and cuts off the rubber crawler shoe.

- **Dislocation of the rubber crawler cores**

Exchange the rubber crawler with a new crawler if one or more cores are dislocated from it.

https://truckmanualshub.com/

TRACK ADJUSTMENT

Checking tension of the rubber crawlers

1. Place the carrier on a flat and rigid ground.
2. Put a timber of approximately 1.5 meters long on the rubber crawler shoe above the idle tumbler (1) and upper roller (2) and check clearance when a person (of 60 kg in weight) gets on the timer at its center.
   The proper clearance is 20 to 30 mm.

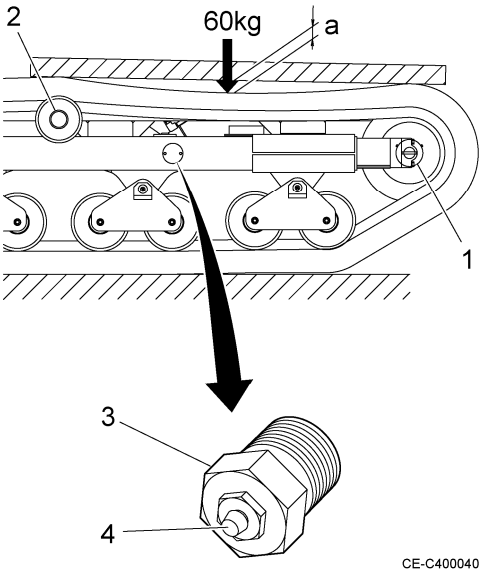

Tensioning the rubber crawlers

1. Fill grease through the grease nipple (4) of the check valve (3) until the rubber crawler shoe are tensioned properly.
2. Rotate the rubber crawlers forward and backward and check tension. Re-adjust it if necessary.

NOTICE
• Adjust the right and left rubber crawlers evenly. • If the rubber crawlers are not tensioned properly, the cylinders may be defective. Ask IHI's sales service dealer for repair services.

Loosening the rubber crawlers

1. Remove dirt and soil from around the idle tumblers.
2. Loosen the check valve until grease is discharged (by a maximum of one turn) little by little.
   Do not loosen it when grease is discharged.
3. Rotate the rubber crawlers forward and backward slightly if grease is hardly discharged.
4. Tighten the check valve when the rubber crawlers are tensioned properly.
   Tightening torque: 59 to 69 N·m (6 to 7 kgf·m)

NOTICE
Be careful not to over-tighten the check valve.

5. Rotate the rubber crawlers forward and backward and check tension. Re-adjust it if necessary.

⚠ WARNING
• When the rubber crawlers are tensioned intensely, the internal pressure in the grease cylinder is very high. Do not remove any parts before the pressure is zeroed. • To relief the pressure, loosen the check valve gradually. Do not loosen it when grease is discharged. (It should be loosened by a maximum of one turn.) • Grease may spout out at high pressure. Never loosen the grease nipple. • Do not bring your face or hand close to the check valve during adjustment.

https://truckmanualshub.com/

CHECK THE FIXED BOLT TORQUE

Tighten the bolts and nuts as shown in the table below.
If loose bolts and nuts are found in daily check, tighten them. If lacking bolts and/or nuts are found, be sure to replace new parts with lacking parts.
When a new machine is used, check the bolts and nuts when first 50 hours have past. Tighten loose bolts and nuts.

Special torque specifications

The bolts and nuts shown in the table below bear large forces. Tighten them at the torques shown in the table. When these bolts and nuts are replaced, apply the locktite to the threads and tighten them at the specified torques.

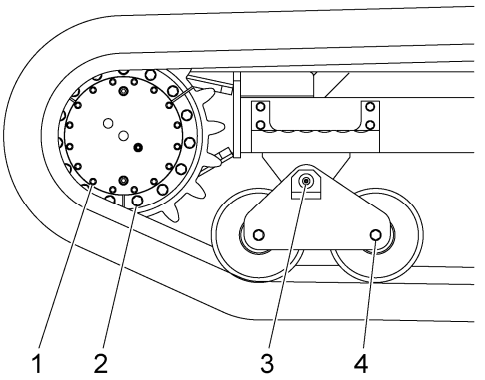

CE-C400050

Traveling-rated

No.	Special tightening	Thread size	Wrench size (mm)	Tightening torque	
				(N·m)	(kgf-m)
1	Travel reduction gear	M16	24	241	24.6
2	Drive sprocket	M16	24	241	24.6
3	Oscillating link	M30	46	980	100.0
4	Lower roller	M20	30	476	48.5

Precautions for installing the travel reduction gear and drive sprocket

1. Apply screw locking agent to the threads of bolts No. 1 and No. 2.
2. Observe the following procedures when attaching the drive sprocket.
   (1) Tighten all of five bolts with the locktite applied at a torque of 98 to 156.9 N·m first.
   (2) Then, tighten the five bolts in the order shown on the right at the specified torque of 241 N·m.
   Tighten the bolts quickly since screw locking agent is applied to them.

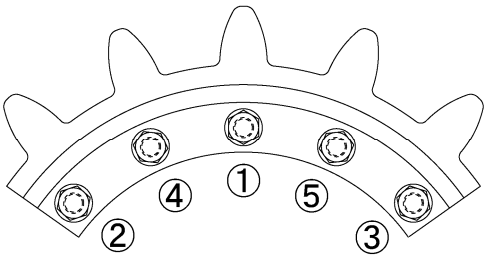

CE-C400320

https://truckmanualshub.com/

Hydraulic pump

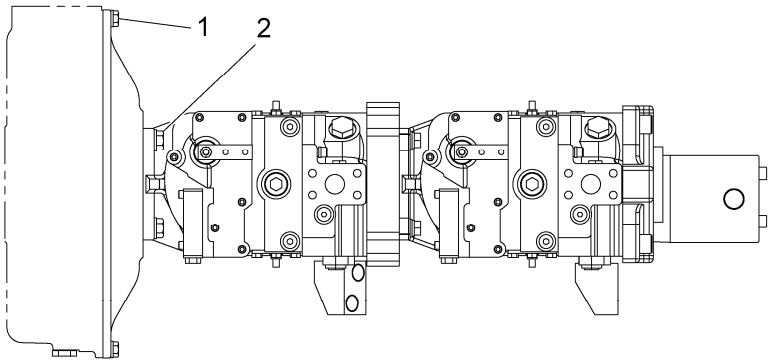

CE-C400060

No.	Tightening position	Bolt size	Wrench required (mm)	Tightening torque	
				(N·m)	(kgf·m)
1	Engine and pump housing	M10	17	55	5.6
2	Pump housing and hydraulic pump	M14	22	156	15.9

General torque specifications

Tighten bolts and nuts not shown above at the torques shown in the table below.

Bolt size	Wrench size (mm)	Tightening torque			
		Metric coarse thread heat-processed bolt		Metric fine thread heat-processed bolt	
		(N·m)	(kgf·m)	(N·m)	(kgf·m)
M8	13	23	2.3	25	2.5
M10	17	47	4.8	50	5.1
M12	19	83	8.5	91	9.3
M14	22	134	13.7	135	13.8
M16	24	208	21.2	221	22.5
M20	30	411	41.9	452	46.1
M24	36	715	72.9	811	82.7

High-pressure hose union nut		
Hose size (inch)	Tightening torque	
	(N·m)	(kgf·m)
1/4"	25	2.5
3/8"	49	5.0
1/2"	59	6.0
3/4"	118	12.0
1"	137	14.0
1-1/4"	167	17.0

https://truckmanualshub.com/

TRAVEL REDUCTION GEAR

Check the travel reduction oil level

⚠ WARNING

- Immediately after traveling, the gear case, oil, etc. are hot. Start work after they have cooled down.
- If pressure remains in the case, oil or plug may jump out. Loosen the plug slowly to reduce the pressure.

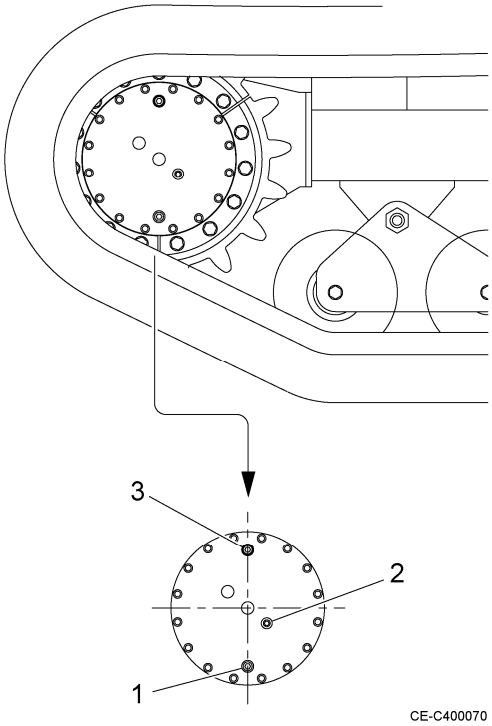

1. The drain port (1) must be located at the lowest position. The level port (2) must be located on the lateral side.
2. Remove the level plug. It is OK if the oil level is near the bottom of the plug hole.
3. Refill oil through the filler port (3) if oil is insufficient.
4. After check and refilling, clean the plugs and attach them.

Replace the travel reduction oil

1. The drain port must be located at the lowest position. The level port must be located on the lateral side.
2. Put the container under the drain port.
3. Remove the 3 plugs to discharge oil.
4. Attach the drain plug.
5. Fill the specified quantity of gear oil through the filler port.
6. Attach the level plug when oil is discharged through the level port.

https://truckmanualshub.com/

HYDRAULIC SYSTEM

Check the hydraulic oil level

1. Place the machine on a flat and rigid ground and bring it into the posture for checking the hydraulic oil level. Stop the engine.

2. Check the oil level gauge (1). If the oil level is between H and L, it is proper.
   The oil level differs with the oil temperature. The following shows the standard.

   - Near the L level before starting operation (Oil temperature: 10 to 30°C)
   - Near the H level during operation (Oil temperature: 50 to 80°C)

3. If the oil level is below the L level, open the cover (2) and refill hydraulic oil through the filler port (3).

Posture for checking the hydraulic oil level

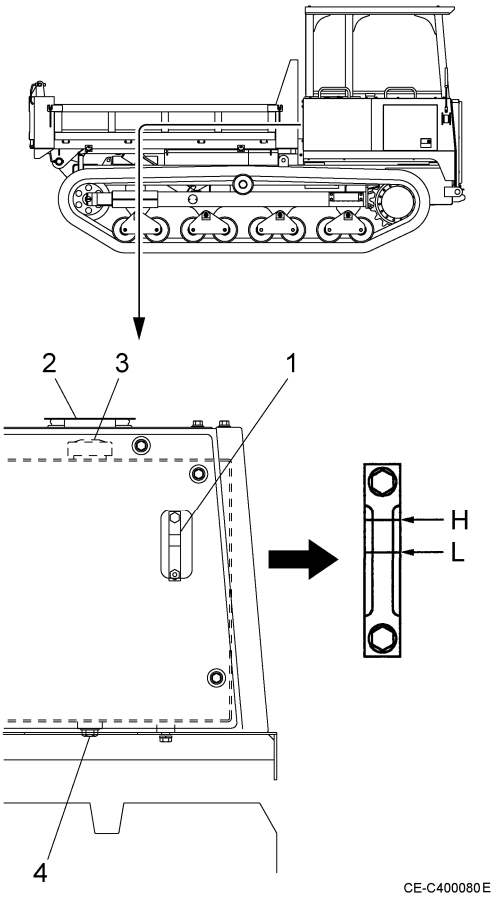

Drain the hydraulic oil tank

⚠ WARNING
Oil is hot immediately after operation. You may get burnt if you touch oil. Start work after oil has cooled down.

1. Loosen the drain plug (4) under the hydraulic oil tank to discharge water and sediment into the container.
2. Close the drain plug when clean hydraulic oil is only discharged.
3. Check the hydraulic oil level. Refill oil if insufficient.

https://truckmanualshub.com/

Replace the hydraulic oil and clean the strainer

⚠ WARNING

- Be sure to set the safety bars under the body before starting works with the body raised.
- Oil is hot immediately after operation. You may get burnt if you touch oil. Start work after oil has cooled down.

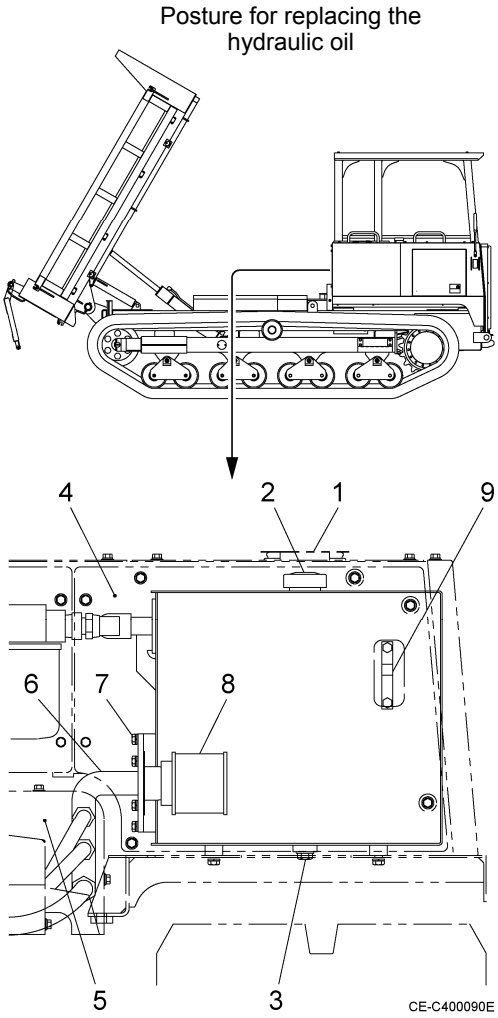

1. Place the machine on a flat and rigid ground and bring it into the posture for changing hydraulic oil. Stop the engine.
2. Open the cover (1). Discharge hydraulic oil through the filler port (2) into an empty drum with an oil pump.
3. Put the container under the drain plug (3) at the bottom of the hydraulic oil tank, and remove the drain plug to discharge residual oil.
   Tighten the drain plug after discharging oil.
4. Remove the cover (4), (5). Disconnect the hose from the tube (6). Remove the bolt (7) and take out the strainer (8).
5. Clean the strainer to remove dust and foreign matters.
6. Attach the strainer in the reverse order to step 4.
7. Fill the tank with hydraulic oil through the filler port up to the L level of the level gauge (9). Tighten the filler port plug.
8. Store the safety bars and start the engine. Keep the engine running with no load for approximately 5 minutes. Travel the machine and move the dump cylinder slowly several times. Bring the machine into the posture for checking the hydraulic oil level. Stop the engine.
9. Make sure that the hydraulic oil level is within the proper range. Refill hydraulic oil if insufficient.

https://truckmanualshub.com/

Replace the line filter element

⚠ WARNING

- Be sure to set the safety bars under the body before starting works with the body raised.
- Oil is hot immediately after operation. You may get burnt if you touch oil. Start work after oil has cooled down.

Posture for replacing the line filter

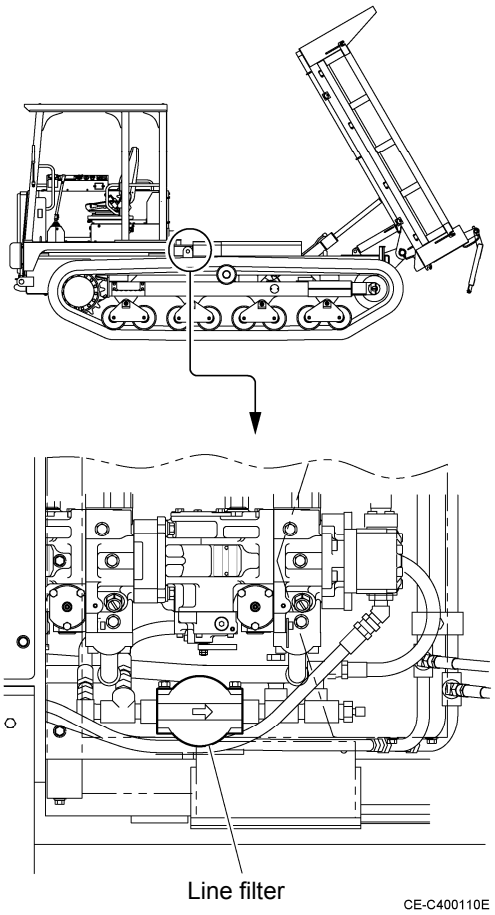

1. Place the machine on a flat and rigid ground and bring it into the posture for changing hydraulic oil. Stop the engine.
2. Detach the case (1) with a wrench (of size 32).
3. Clean the inside of the case.
4. Replace the element (3), O-ring (3) and backup ring (4).
5. Attach the case and tighten it with the wrench.
6. Start the engine and make sure that no oil leaks from the mount of the case.
7. Store the safety bar, move down the load carrying platform, and check the level of hydraulic oil.
   The level is proper if it is between the H and L levels of the level gauge.
   Refill hydraulic oil if the level is too low.

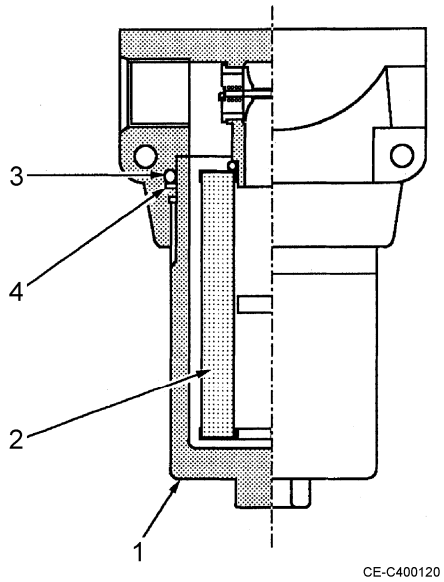

https://truckmanualshub.com/

Replace the return filter cartridge

⚠ WARNING

- Be sure to set the safety bars under the body when starting work with the body raised.
- Oil is hot immediately after operation. You may get burnt if you touch oil.
  Start work after oil has cooled down.

1. Place the machine on a flat and rigid ground and bring it into the posture for changing hydraulic oil. Stop the engine.
2. Detach the cover (1) and remove the filter cartridge (2).
3. Clean the filter mounting position of the filter head (3). Apply hydraulic oil to the O ring (4) of a new filter cartridge.
4. Attach the filter cartridge and tighten it with the filter wrench.
   Tighten it until the O ring is crushed and the top of the cartridge is brought into contact with the head.
5. Start the engine. Make sure that no oil leaks from the mounting position of the filter cartridge.
6. Store the safety bars, lower the body and check the oil level in the hydraulic oil tank.
   It is OK if the oil level is between the H and L positions of the level gauge.
   Refill hydraulic oil if insufficient.

Posture for replacing the return

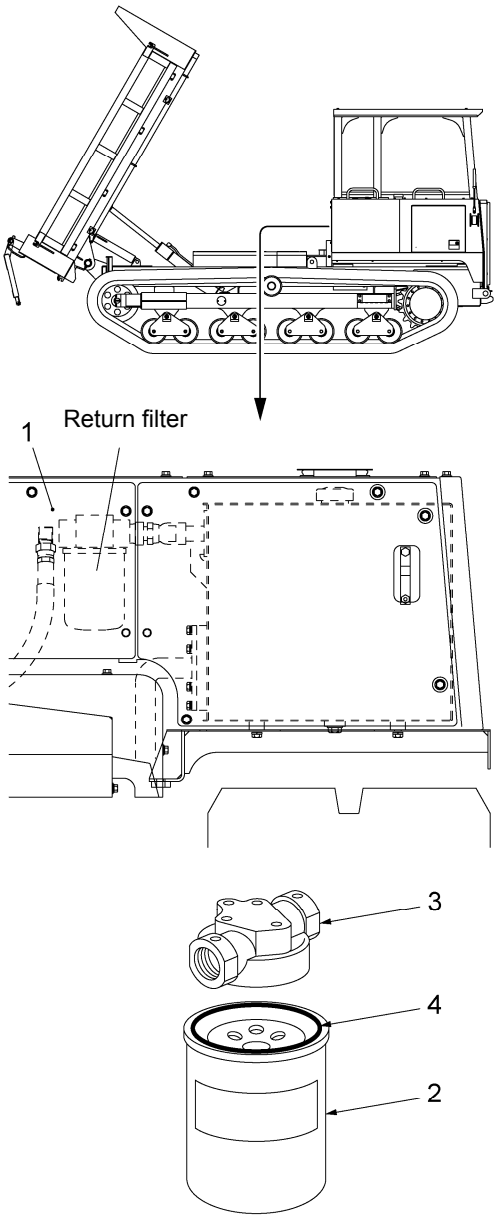

https://truckmanualshub.com/

ENGINE OIL SYSTEM

Check the engine oil level

1. Open the engine cover, pull out the dipstick (1), and remove oil with waste cloth.

2. Insert the dipstick fully into the oil level pipe and pull it out.

3. The oil level is proper if oil on the oil level gauge reaches between the H and L positions.

4. Refill engine oil through the filler port (2) if the oil level is below the L level. Wait for approximately 15 minutes after refilling, and check the oil level.

5. If the oil level is proper, close the lubrication port firmly and close the engine cover.

6. Too much engine oil may cause engine troubles. Be careful.

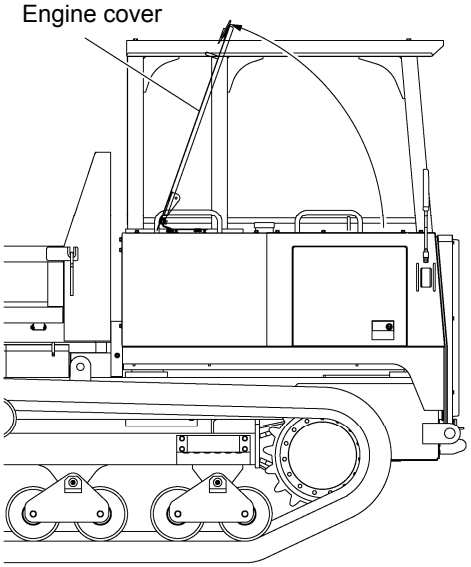

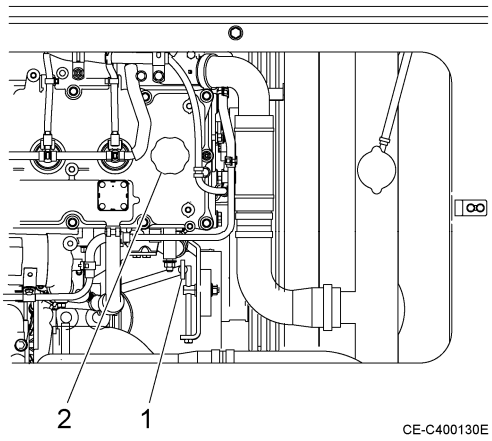

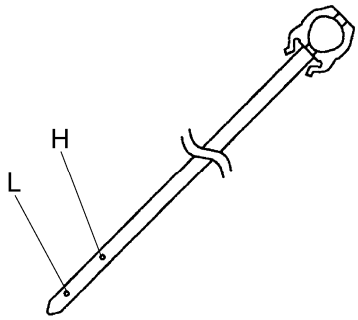

> **⚠ CAUTION**
>
> Using improper engine oil promotes sticking of the piston rings, seizure of the pistons and cylinders and/or wear of sliding parts. Further, it may increase oil consumption, reduce the engine output and cause engine breakage or other serious accidents.
> We will not warrant any breakdown or accidents caused by using improper engine oil.

https://truckmanualshub.com/

Replace the engine oil and engine oil filter cartridge

> **⚠ WARNING**
>
> - Be sure to set the safety bars under the body before starting works with the body raised.
> - Oil is hot immediately after operation. You may get burnt if you touch oil. Start work after oil has cooled down.

Posture for replacing the engine oil filter

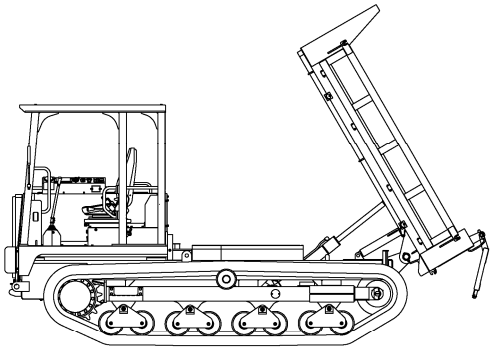

Place the machine on a flat and rigid ground and bring it into the posture for replacing the engine oil filter. Stop the engine.

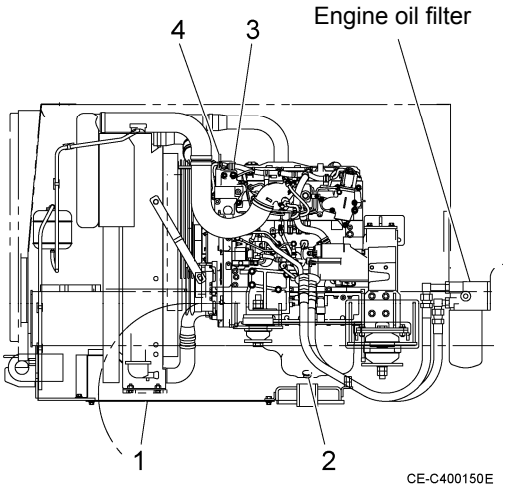

Discharging engine oil

1. Remove the cover (1). Put the container just under the drain plug (2) of the engine.
2. Clean the periphery of the filler port (3) to prevent foreign matters from entering. Remove the filler port cap.
3. Remove the drain plug slowly so that oil will not splash on you. Discharge oil then.
4. Check drain oil. Contact IHI's sales service dealer if it contains much metallic powder, foreign matters, etc.
5. Tighten the drain plug.

Replace the oil filter cartridge

1. Remove the filter cartridge (5) with the filter wrench.
2. Clean the seal surface of the filter head, apply engine oil thinly to the gasket surface of a new filter cartridge, and screw the filter cartridge by hand until the gasket contacts with the seal surface of the filter head.
3. Tighten the filter cartridge by one turn from this condition with the filter wrench.

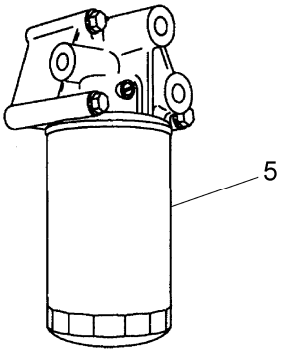

CE-C400160

Fill the engine oil

1. Fill engine oil through the filler port up to a point between the H and L levels of the level gauge.
2. Keep the engine idling for a while, stop it, check the engine oil level, and refill engine oil up to the specified level.
3. Check the oil level 10 to 20 minutes later. Make sure that no oil leaks and attach the cover, if the oil level is correct.

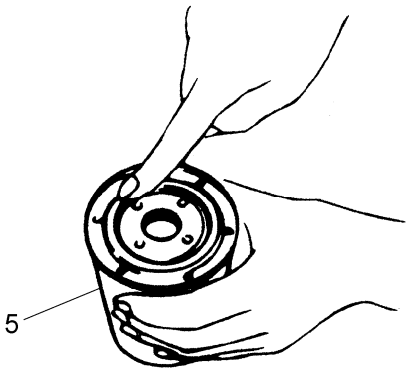

CA-C400250

https://truckmanualshub.com/

COOLING SYSTEM

Selection of coolant

- Long-Life-Coolant (LLC) is supplied to this machine before shipment.
  This is a coolant provided with properties of antifreeze and corrosion-proof.
  It features long-lasting effects and is used throughout the year.
- Exchange coolant every 2 years (in autumn every other year).
- The Long-Life-Coolant is therefore recommended for use with this machine when exchanging its coolant.

Mixing Rate of Long-Life-Coolant

The mixing ratio of Long-Life-Coolant with water determines the freezing point.
Select the mixing ratio for a freezing point lower by 5°C than the expected lowest atmospheric temperature.
Meanwhile, use city water to mix with Long-Life-Coolant

Lowest ambient temperature (ºC)		-15 or higher	-25	-35
Mixing ratio (%)		30	41	49
Mixing q'ty (L)	Quantity of LLC	4.9	6.7	8.0
	Quantity of water	11.5	9.7	8.4
Coolant total amount: 16.4 liter		Engine proper: 6.0 liter Radiator and others proper: 9.1 liter Tank: 1.3 liter		

⚠ WARNING

- The Long-Life-Coolant is toxic.
- If someone should shallow it by mistake, make him/her vomit it immediately and consult a doctor.
- If it is put into eyes, wash the eyes with water sufficiently immediately and consult a doctor.
- If it is necessary to store it, use a container with an antifreeze mark, cap it and store it in a place inaccessible by children.

https://truckmanualshub.com/

Check the coolant level

> **⚠ WARNING**
>
> Do not open the radiator cap normally. Check coolant in the reserve tank when the engine is cool.

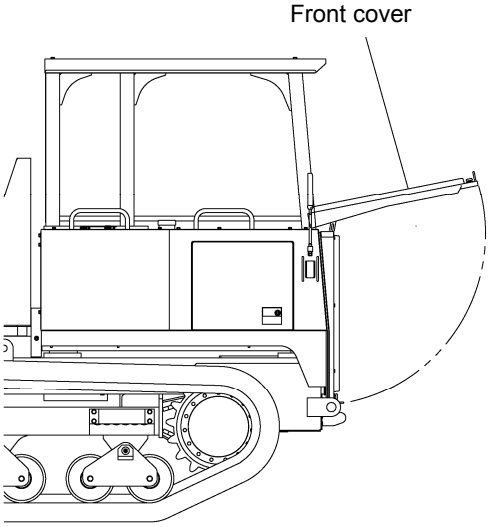

1. Open the front cover and check if the coolant level in the reserve tank (1) is between the FULL and LOW levels. Refill the reserve tank with coolant through the filling port up to the FULL level.
   Close the cap firmly after refilling.

2. If the reserve tank is empty, check water leak, remove the radiator cap (2), and check the radiator coolant level. If radiator coolant is insufficient, refill radiator with coolant. Then, refill the reserve tank with coolant.

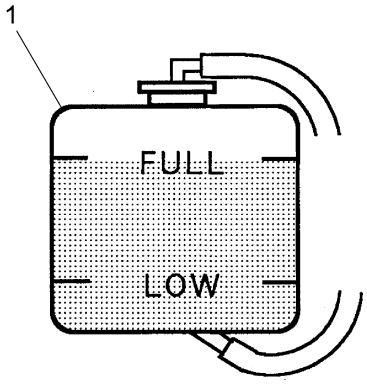

CE-C400170E

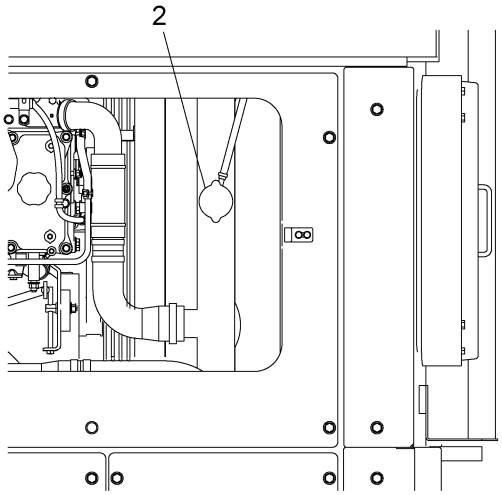

CE-C400180

https://truckmanualshub.com/

Change the coolant

⚠ WARNING

- Immediately after the engine stops, coolant is hot. If coolant is discharged immediately, you may get burnt. Change coolant after the engine cools down.
- Do not remove the cap when the radiator coolant is hot. Hot water may spout out. Rotate the cap slowly to relief the pressure after the coolant temperature lowers.

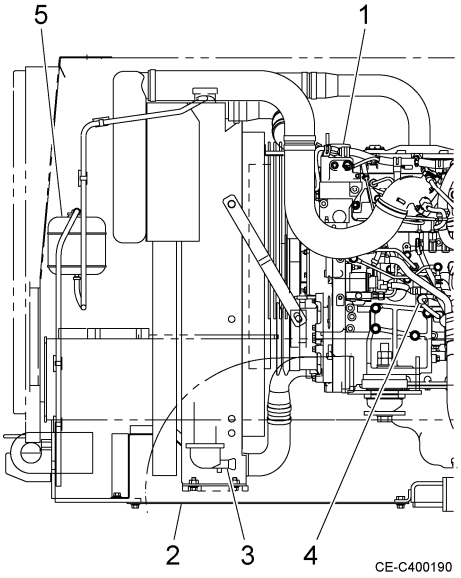

1. Open the engine cover and rotate the radiator cap (1) slowly to remove it.
2. Remove the cover (2). Loosen the drain cock (3) at the bottom of the radiator to discharge coolant into the container.
3. Loosen the drain cock (4) of the engine cylinder block to discharge coolant into the container.
4. Close the drain cocks (3) and (4) after discharging coolant.
5. Mix city water and the necessary quantity of Long-Life-Coolant. Fill solution up to the opening of the radiator. Fill solution slowly to prevent air from being mixed in solution.
6. Discharge coolant from the reserve tank (6), clean the inside of the tank, and fill it with mixed solution of city water and Long-Life-Coolant up to the FULL level.
7. Loosen the air bleeder plug (7) of the EGR cooler to discharge air from the EGR cooler.
   Tighten the air bleeder plug if coolant overflows from the air bleeder plug. If the air bleeder plug is loosened, replace the copper packing with new packing.
   Overflowed coolant may cause a fire, etc. Be sure to wipe it off.
8. Refill the radiator and reserve tank with coolant.
9. Keep the engine idling for 5 minutes or less with the radiator cap removed to discharge air from the cooling system.
10. Stop the engine. Check the coolant level after the engine cools down.
    Refill coolant if insufficient. Tighten the radiator cap then.

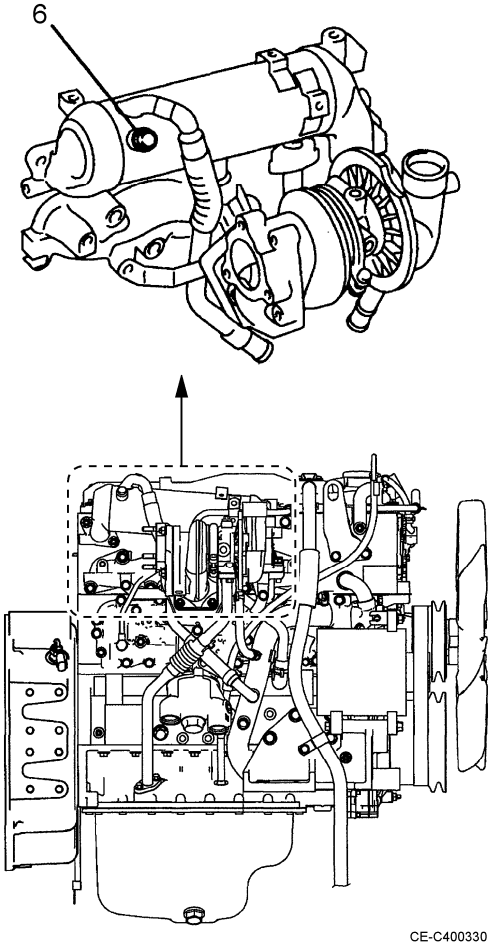

https://truckmanualshub.com/

Check the fan belt

⚠ WARNING

To help avoid being injury, check and adjust the fan belt tension with engine stopped.

Parts are hot immediately after the engine stops. You may get burnt.

Check

1. Push a point in the middle of the idle pulley (1) and alternator pulley (2) at approximately 98 N (10 kgf). The belt tension is proper if the belt slacks by approximately 6 to 8 mm.

2. Replace the belt if the adjustment margin of the belt is lost or the belt has flaws or cracks.

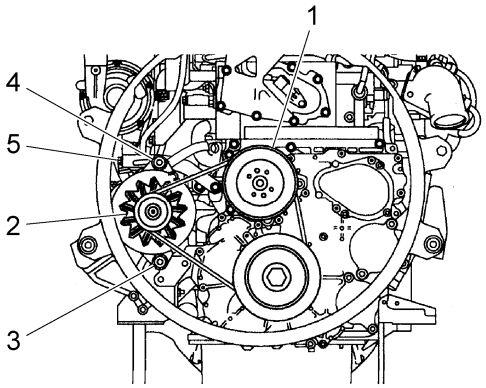

CE-C400210

Adjustment

1. Loosen the alternator fixing bolt (3) and lock nut (4).

2. Adjust the belt tension with the adjust bolt (5).

3. Tighten the fixing bolt and lock nut firmly after adjustment.

4. Keep the engine idling for 5 minutes and check the belt tension.

https://truckmanualshub.com/

FUEL SYSTEM

Applicable Fuel

The following advantages are required for diesel fuel:

1) Must be free from minute dust particles.
2) Must have adequate viscosity.
3) Must have a high cetane number.
4) Must have high fluidity at low temperature.
5) Must have low sulfur content.
6) Must have little residual carbon.

Use light oil for normal diesel cars that meets the above requirements.

⚠ CAUTION

The functions or performance of parts of the fuel injection system or the engine may be lost or the engine may break down if any other fuel than light oil is used. Never use any other fuel than light oil.

Damages or troubles caused by using fuel other than light oil are not covered by the warranty.

Check the fuel level

⚠ WARNING

- Overflowed or spilt fuel may cause a fire. Wipe it off completely if it overflows or spills.
- Removing the strainer (2) to refill fuel may cause engine troubles. Do not remove it.
- Do not fill the tank with fuel up to the top.

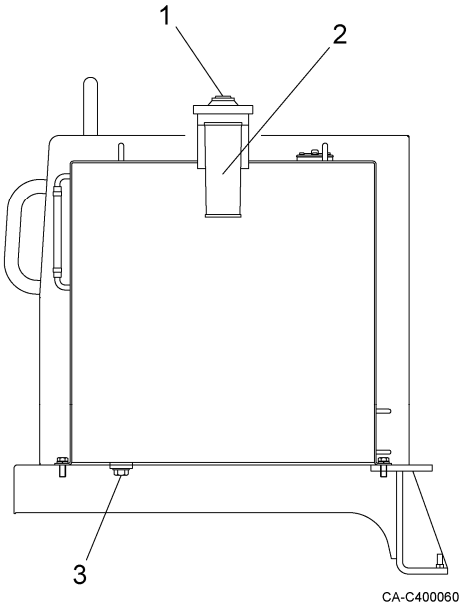

1. Turn the engine key switch to the ON position and check the quantity of remaining fuel with the fuel gauge. Refill the tank with fuel through the filler port (1) if fuel is insufficient.

2. Close the cap of the filler port firmly after refilling.

https://truckmanualshub.com/

Drain the fuel tank

1. Loosen the drain plug (3) at the bottom of the fuel tank to discharge water and sediment into the container.

2. Close the drain plug when clean fuel is only discharged.

⚠ CAUTION
Using fuel other than light oil may hinder the fuel injection system and/or engine from demonstrating full functions and performances. It may also cause engine troubles and accidents. Never use fuel other than light oil. We will not warrant any troubles caused by using fuel other than light oil.

https://truckmanualshub.com/

Drain the fuel main filter and the fuel pre-filter

> **⚠ WARNING**
>
> - Be sure to set the safety bars under the body when carrying work with the body raised.
> - Spilt fuel may cause a fire. Wipe it off completely if it spills.

The internal float (1) floats up when water is collected inside the case.
Be sure to discharge water if the float rises up to the bottom of the element (2).

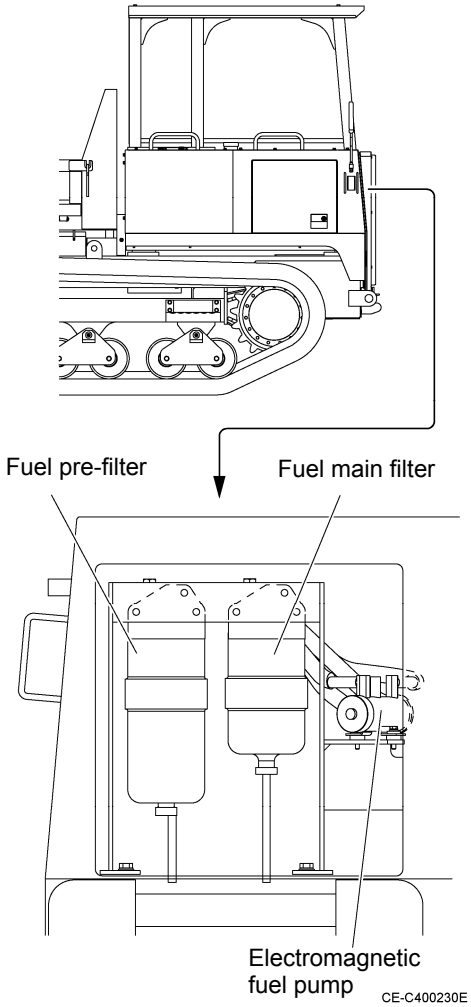

1. Place the machine on a flat and rigid ground. Bring the machine into the posture for checking the fuel filter, and stop the engine.

2. Loosen the air bleeder plug (3) on the top of the filter. Then, loosen the drain plug (4) at the bottom of the case to discharge water collected inside.

3. Be sure to tighten the plugs after discharging water. Discharge air from the fuel system.
   Be careful not to over-tighten the air bleeder plug (4).

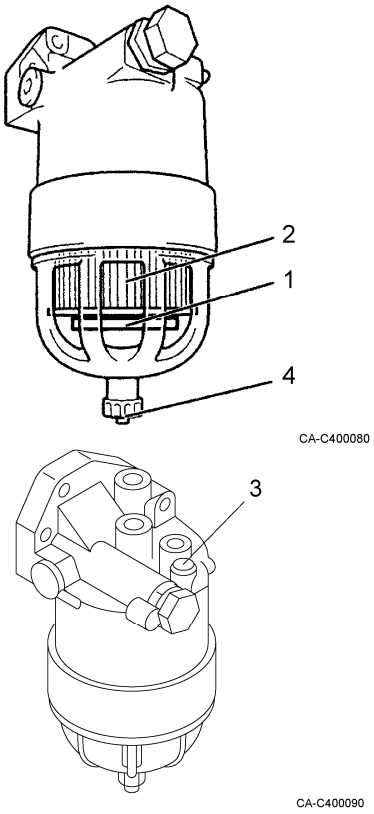

https://truckmanualshub.com/

Clean the electromagnetic fuel pump

1. Disconnect the wire from the cover (1) of the pump.
   Remove the cover with a wrench.
   The pump is filled with fuel. Put the container under the pump and discharge fuel into it when removing.

2. Remove the filter (2) and gasket (3). Clean the filter with light oil, blow out dust and foreign matters with compressed air, and undo the filter and gasket.

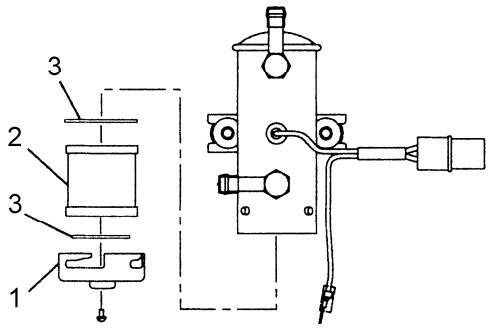

CA-C400130

3. Attach the cover. Use the wrench to attach it and tighten firmly to the very end.

4. Be sure to check air-tightness after attaching the cover.

Replace the main fuel filter element and the pre fuel filter element

1. Loosen the air bleeder plug (1) and drain plug (2) to discharge fuel from inside the filter into the container.

2. Remove the case (4) with the filter wrench.
   Tool name: Fuel filter wrench
   Special tool rank: Rank A
   Tool No.: : 8-9801-3170-0

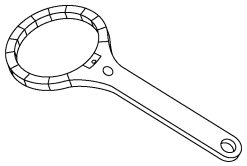

CA-C400520J

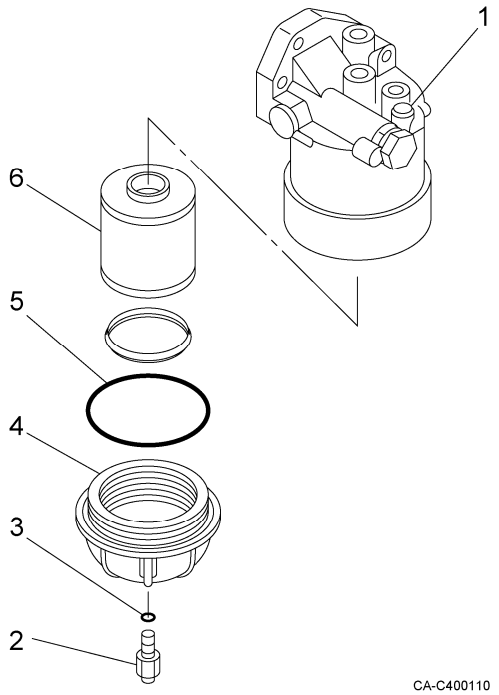

CA-C400110

3. Replace the gasket (3) and O ring (5) with new parts.
   Put a new element (6) into the case. Apply fuel thinly to the O ring and screw the case.
   Tighten the case using the filter wrench firmly when the O ring contacts with the seal surface.

4. Discharge air from the fuel system.
   See page 4-27 “Fuel system air bleeding”.

https://truckmanualshub.com/

Fuel system air bleeding

If air enters the fuel system, it hinders the engine from starting and cause engine troubles.
Be sure to bleed the air of fuel system, when the fuel tank is emptied, water is discharged from fuel, or the filter element is replaced.

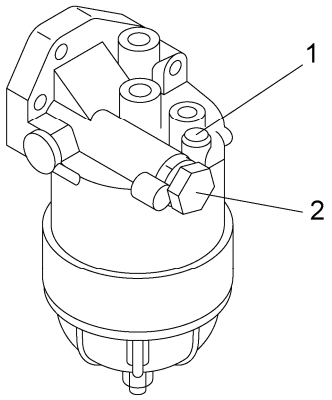

CA-C400100

1. Set the engine key switch to the ON position to activate the electromagnetic fuel pump.

2. Loosen the air bleeder plug (1) of the main fuel filter. Move the priming pump (2) (20 times or more) until fuel comes out.

3. Tighten the air bleeder plug. Move the priming pump (10 times or more) until the fuel filter is filled with fuel.

4. Wait for approximately 1 minute. Loosen the air bleeder valve to bleed the air of fuel system.

5. Repeat steps 2 to 4 until no air is discharged from the air bleeder valve. (Three times at least)

6. Tighten the air bleeder plug firmly. Wipe off fuel around.

7. Start the engine at the idling speed.
   If the engine does not start, retry operation from step 3.

8. Keep the engine idling for 5 seconds.

9. Increase the engine speed gradually and keep the maximum speed for 3 minutes.

10. Repeat steps 8 and 9 several times.

⚠ WARNING
Check if no fuel leaks from the fuel system. Leaked fuel may cause a fire.

https://truckmanualshub.com/

AIR CLEANER SYSTEM

Check the dust indicator

1. Check if the dust indicator (1) at the suction pipe of the air cleaner does not show a red signal.

2. Clean or replace the element immediately if a red signal is shown .

3. Push the reset button (2) of the dust indicator to reset the red signal after cleaning or replacing the element.

NOTICE
Clean the air cleaner element if the dust indicator shows a red signal in daily check, regardless of the maintenance time.

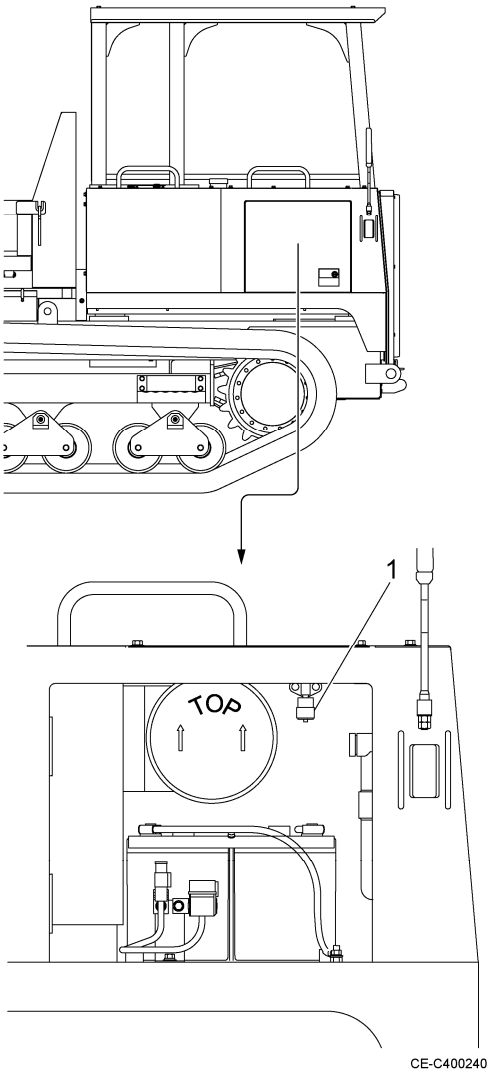

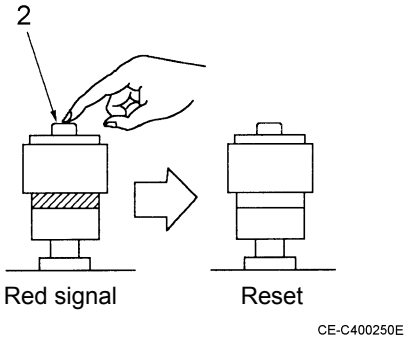

https://truckmanualshub.com/

Clean and change the air cleaner element

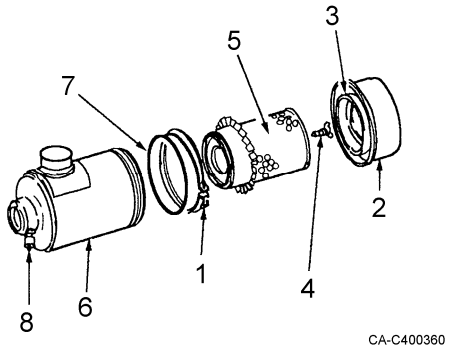

⚠ CAUTION

- Be sure to stop the engine before cleaning or changing the air cleaner. If it is cleaned or changed while the engine is running, dust is sucked in, causing engine damages.
- Put on goggle when cleaning the element with compressed air. Otherwise, dust may be put in the eyes, resulting in injury.

Cleaning the element

1. Remove the clamp (1). Remove the dust cup (2).
2. Take out the baffle (3) from the dust cup and clean it.
3. Remove the wing bolt (4) and remove the element (5).
4. Clean the inside of the air cleaner body (6).
5. Blow dry compressed air at a pressure of 0.3 to 0.5 MPa (3 to 5 kgf/cm^2) onto the element from inside along the pleats. Move the air flow up and down. Then, blow compressed air from outside. Again, blow it from inside.
6. Light the inside of the element with a lamp after cleaning. Replace it if small holes or thin parts are found.

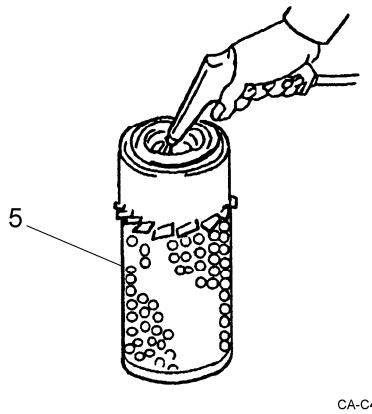

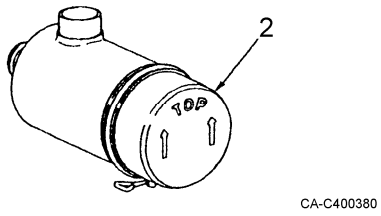

NOTICE

Do not tap, hit or drop the element.

7. Attach the cleaned element and fix it with the wing bolt.
8. Attach the dust cup to the body with the TOP mark with arrows upside. Insert the O ring (7) and fix it with the clamp.
9. Push the button of the dust indicator to reset the red signal.

Replacing the element

Replace the element with a new element in the same procedures as shown above.

https://truckmanualshub.com/

HYDRAULIC SYSTEM

Hydraulic system diagram

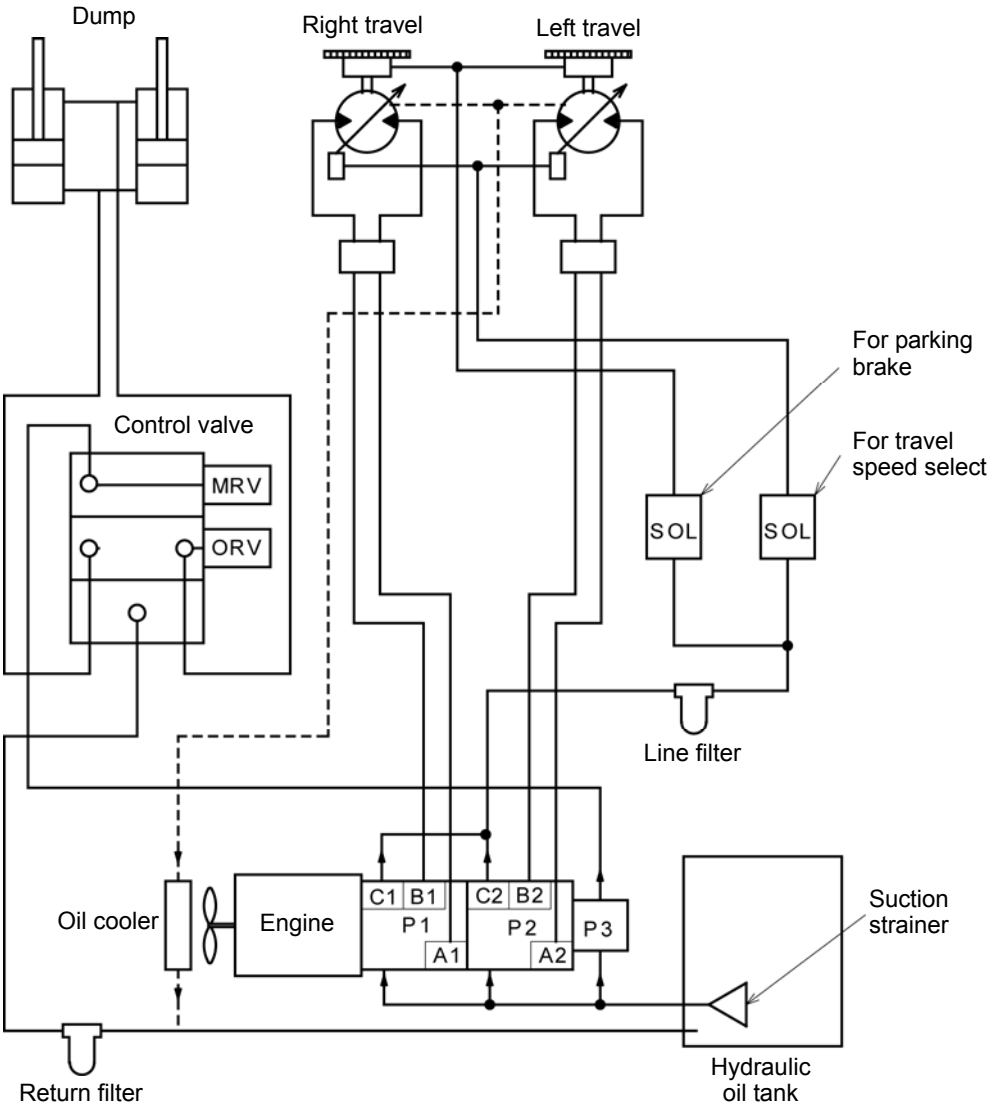

Set Pressure for Relief Valves

Locations	Item	Relief valves	Set Pressure (MPa)
Pump 1	A1: Backward B1: Forward	Pump relief valves for right travel motor	34.0
Pump 2	A2: Backward B2: Forward	Pump relief valves for left travel motor	34.0
Control Valve	MRV	Main relief valve for dump (Raise)	20.6
	ORV	Over load relief valve for dump (Lower)	6.9
Pump1•2	C1•C2	Charge relief valve	2.0

https://truckmanualshub.com/

ELECTRIC SYSTEM

Change the fuses

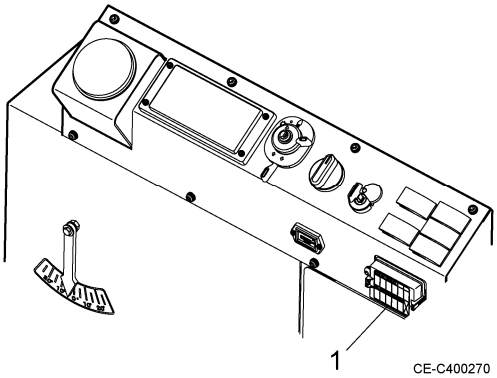

NOTICE

- Be sure to set the engine key switch to the OFF position before replacing the fuses.
- Do not use wires, silver foils, etc. instead of fuses.
  If such materials are used, the wires may overheat and burn, resulting in a fire.
- If lamps fail to go on or devices in the electric system fail to work, the fuses may have been blown out. Check the fuses and replace a blown fuse with a fuse of the same capacity.
- If a new fuse still blows out after replacement, ask IHI's sales service dealer for checks.

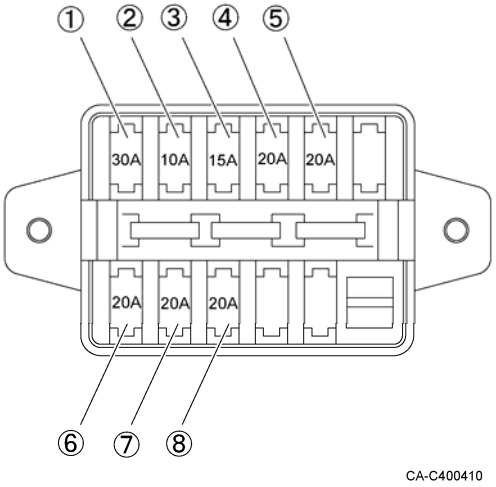

1. Unlatch and detach the fuse cover (1).
2. Replace the blown fuse with a new fuse of the same capacity.

	Fuse capacity	Circuit name
①	30A	Engine main relay
②	10A	Electromagnetic fuel pump
③	15A	Emergency stop switch
④	20A	Monitor panel, 2-speed travel select switch
⑤	20A	Horn, back lamps, radio & cigarette lighter
⑥	20A	Engine tachometer, car heater & safety warning device
⑦	20A	Head lamps & direction indicator lamps
⑧	20A	Parking brake

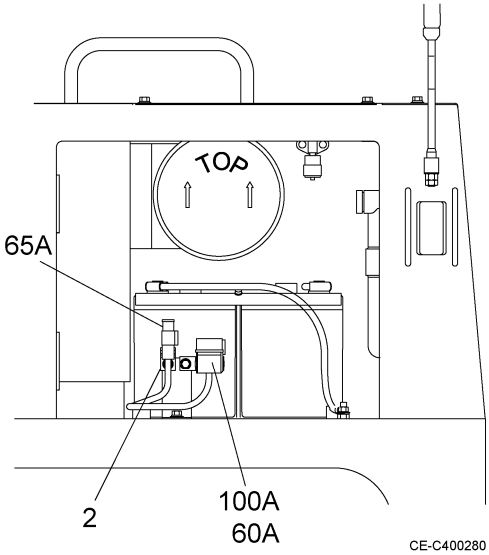

Change the fusible link

If power is not turned on even though the engine key switch is set to the ON position, the fusible link (2) between the battery and the engine key switch circuit may have blown out. Detach and check the fusible link. Replace it with a new fusible link, if it has blown out.

https://truckmanualshub.com/

Check the battery

Refilling battery liquid

⚠ WARNING

- The battery produces inflammable hydrogen gas. It ignites or explodes if fire is nearby. Never bring fire close to the battery or strike a spark near it.
- Never place any tool, metallic object or inflammable matter on or near the battery. The battery may possibly ignite and explode if it short-circuits.
- The battery liquid (diluted sulfuric acid) may cause loss of eyesight or burning. If it is put into the eyes or on the skin or clothes, wash with much water immediately and consult a doctor.
- Be sure to put on protective goggles when handing the battery.

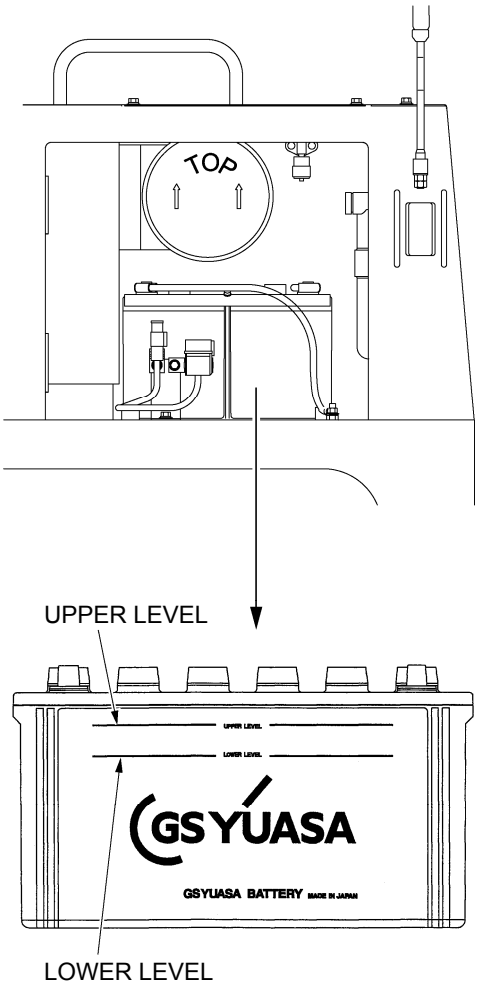

Check the liquid level. Refill the battery with refill liquid up to UPPER LEVEL, if it has lowered down to LOWER LEVEL.

Cleaning the battery terminals

⚠ CAUTION

- Be sure to keep the engine stopping during work.
- Be careful during work not to short-circuit the positive and negative terminals of the battery with a tool, etc.
- Disconnect the battery cable from the negative terminal first. Connect it to the negative terminal last.
- Tighten the terminals firmly.

1. Clean the terminals if they are dirty or corroded. (Pour warm water onto the terminals and wipe them if they are corroded and white powder sticks on them.)
2. Detach the terminals and polish them with a wire brush or sandpaper if they are corroded remarkably.
3. Apply grease, etc. thinly to the terminals after cleaning and tightening.

https://truckmanualshub.com/

This page is intentionally left blank

https://truckmanualshub.com/

Electrical wiring system diagram

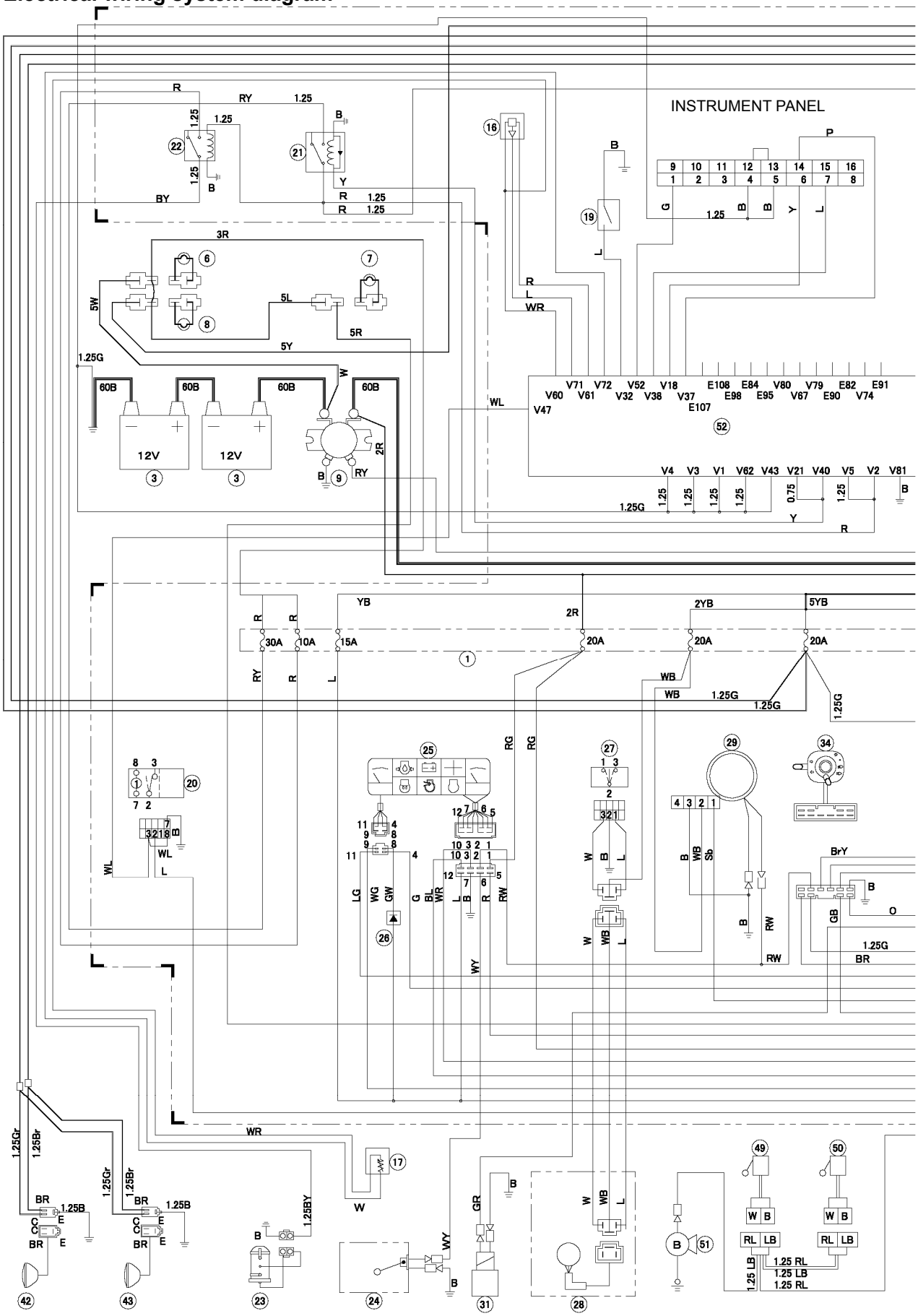

https://truckmanualshub.com/

Note:
1. Unless otherwise specified, the wire thickness is AVS-0.75.
2. The connection diagram shows the layout viewed from the plane.

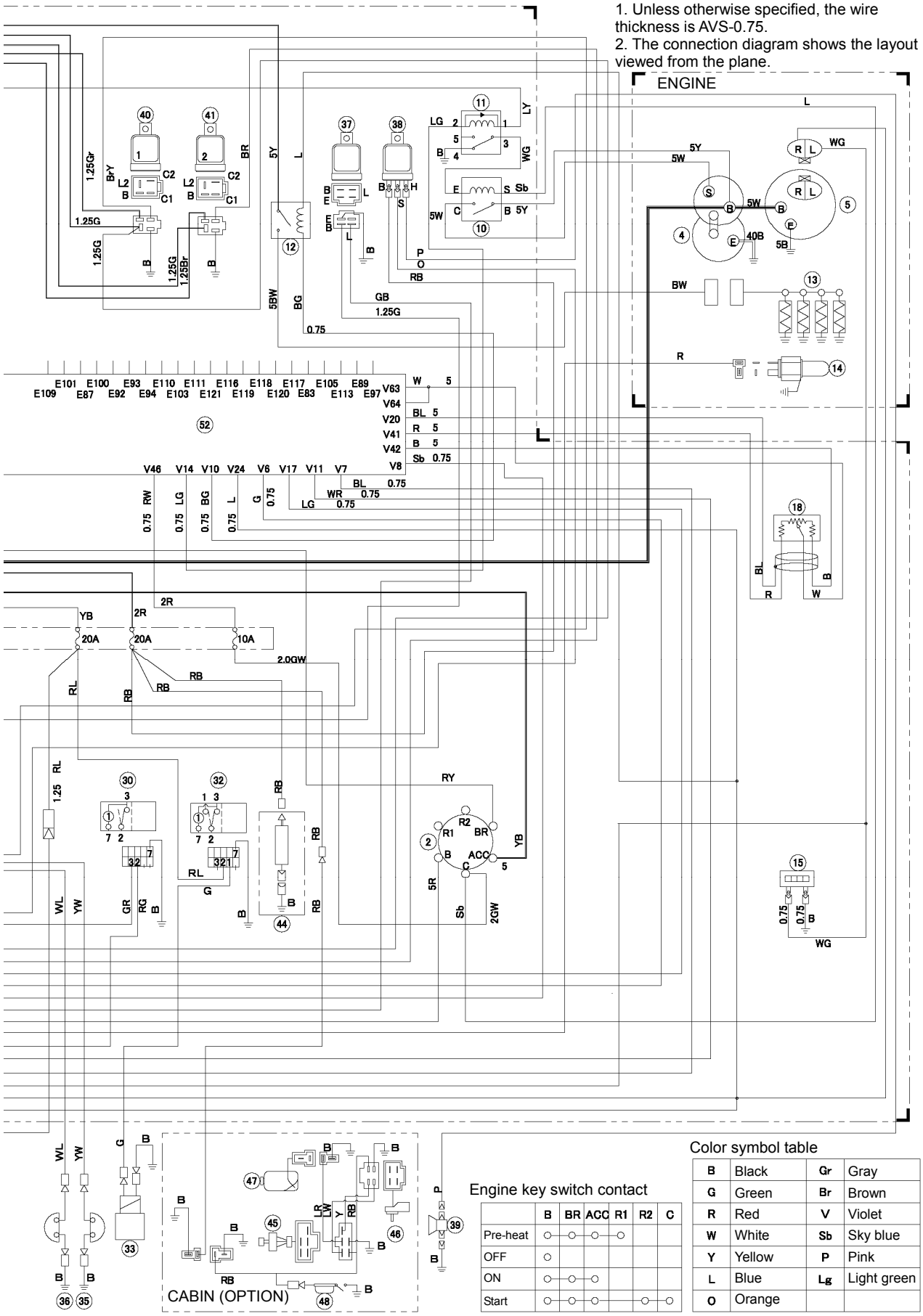

Engine key switch contact

	B	BR	ACC	R1	R2	C
Pre-heat	○	○	○	○		
OFF	○					
ON	○	○	○			
Start	○	○	○		○	○

Color symbol table

B	Black	Gr	Gray
G	Green	Br	Brown
R	Red	V	Violet
W	White	Sb	Sky blue
Y	Yellow	P	Pink
L	Blue	Lg	Light green
O	Orange		

https://truckmanualshub.com/

No.	Name	No.	Name
①	Fuse box	㊵	Light relay-1
②	Engine key switch	㊶	Light relay-2
③	Battery	㊷	Headlight(right)
④	Starting motor	㊸	Headlight(left)
⑤	Alternator	㊹	Cigarette lighter
⑥	Fusible link(100A)	㊺	Wiper switch
⑦	Fusible link(65A)	㊻	Wiper
⑧	Fusible link(60A)	㊼	Washer
⑨	Battery relay	㊽	Room lamp
⑩	Starting motor relay	㊾	Back buzzer limit switch(right)
⑪	Safety relay	㊿	Back buzzer limit switch(left)
⑫	Glow relay	51	Back buzzer
⑬	Glow plug	52	Engine Control Module
⑭	Water temperature sensor		
⑮	Hour meter		
⑯	Barometric pressure sensor		
⑰	Air intake temperature sensor		
⑱	Throttle potentiometer		
⑲	Memory clear switch		
⑳	Emergency stop switch		
21	Main relay		
22	Electromagnetic fuel pump relay		
23	Electromagnetic fuel pump		
24	Fuel level sensor		
25	Monitor panel		
26	Diode		
27	Car heater switch (opt.)		
28	Car heater		
29	Engine tachometer		
30	Travel speed select switch		
31	Travel speed select solenoid		
32	Parking switch		
33	Parking brake solenoid		
34	Combination switch		
35	Turn signal(right)		
36	Turn signal(left)		
37	Flasher relay		
38	Horn relay		
39	Horn		

https://truckmanualshub.com/

HANDLING IN COLD REGIONS

At low temperature, the engine hardly starts and coolant is subject to freezing. Make preparation for cold weather as shown below.

Fuel

In winter in cold regions, fuel may be frozen and it may be difficult tot start the engine.
Use fuel (light oil) appropriate for the temperature.
Freezing temperature of light oil (as specified in JIS K2204)

Light oil type	Freezing point	Remark
No. 1	-5ºC or less	For normal use
No. 2	-10ºC or less	
No. 3	-20ºC or less	For cold regions
Special No. 3	-30ºC or less	

Coolant

Long-Life-Coolant (LLC) has been mixed in coolant of this machine before shipment. A mark at a temperature on the label stuck behind the radiator shows the freezing point.
If the lowest temperature may be lower than it, refer to the antifreeze mixing ratio table and adjust the concentration.
Exchange Long-Life-Coolant every two years (in autumn every other year).

CJ-C400430

Lubricant and grease

Exchange engine oil and hydraulic oil with proper oil having viscosity appropriate for the outer temperature. Refer to RECOMMENDED LUBRICATION TABLE for the specified viscosity.

Battery

In cold seasons, larger discharge current flows when starting the engine and the battery performance is also reduced. If the battery is almost discharged, battery liquid may be frozen. Recharge the battery almost fully and keep it warm to start the engine free from troubles next morning.

Precautions when finishing work

- Remove mud and water and water from the cylinder rod to prevent the cylinder rod seals from being damaged.
- Put plates on dry and solid ground and park the machine on them in order to prevent the crawlers and around them from freezing.
- Discharge water from the fuel tank to prevent fuel from freezing.

https://truckmanualshub.com/

LONG TERM STORAGE

Before Storage

NOTICE
Move the body down to the lowest position while storing in order to protect the cylinder rod from rust.

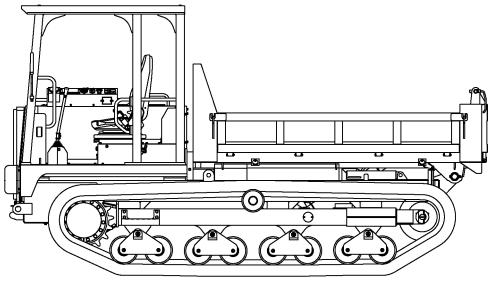

Position for long term storage

CE-C400300E

To store the machine from long term, follow the next procedures.

1. Clean parts of the machine.
2. Be sure to perform fill the fuel, lubrication, and oil change.
3. Select a well-drained, dry and well-ventilated flat place. Put plates on the ground.
4. Store the battery after remove the negative terminal and covering it or dismounting the battery from the machine.

During Storage

⚠ WARNING
If you have to operate the machine indoors to prevent rust, keep good ventilation and gas poisoning by window or entrance.

1. During storage, operate the machine once a month to maintain films of oil at the lubrication section and charge the battery at the same time.
2. Before starting the engine, be sure to crank the engine with the starter and make sure that the engine oil pressure warning lamp goes out.
3. Warm up the engine at low speed. Increase the engine speed after the water temperature reaches the proper temperature.

After Storage

Lubricate or grease every necessary part, check the coolant level and refill coolant if necessary, before using the machine after long-term storage.

https://truckmanualshub.com/

TROUBLE SHOOTING

Regarding to actions marked with *, contact the distributor or service personnel.

SYMPTOM	PROBABLE CAUSE	REMEDY
Levers cannot be controlled smoothly.	• Short of grease at lever operating portions • Defect of control valve	• Supply oil or grease. • Repair or replace parts.*
Machine does not travel fast and powerfully.	• Short of hydraulic oil • Lowered pressure set for relief valve • Defect of motor or reduction gear • Defect of pump • Over-tensed crawler	• Supply oil up to specified level. • Repair or replace parts.* • Repair or replace parts.* • Repair or replace parts.* • Adjust both right and left tension to regular value.
Speed does not change even if changing selectors.	• Discontinuity or disconnection of electric wires. • Defect of solenoid valve for speed selection	• Repair or replace parts.* • Repair or replace parts.*
Machine curves during travel.	• Tangled obstacle • Unequal tension of right and left • Loose stopper bolt of travel selector lever	• Remove obstacle • Adjust tension of right and left to regular value. • Adjust and fix stopper bolts
Machine does not travel smoothly.	• Tangled stone and obstacle • Over-tensed crawler • Short of hydraulic oil • Defect of motor or reduction gear • Defect of pump	• Remove obstacle. • Adjust tension of right and left to regular value. • Supply oil to specified level. • Repair or replace parts.* • Repair or replace parts.*

https://truckmanualshub.com/

This page is intentionally left blank

https://truckmanualshub.com/

SPECIFICATIONS

https://truckmanualshub.com/

https://truckmanualshub.com/

SPECIFICATIONS AND DIMENSIONS

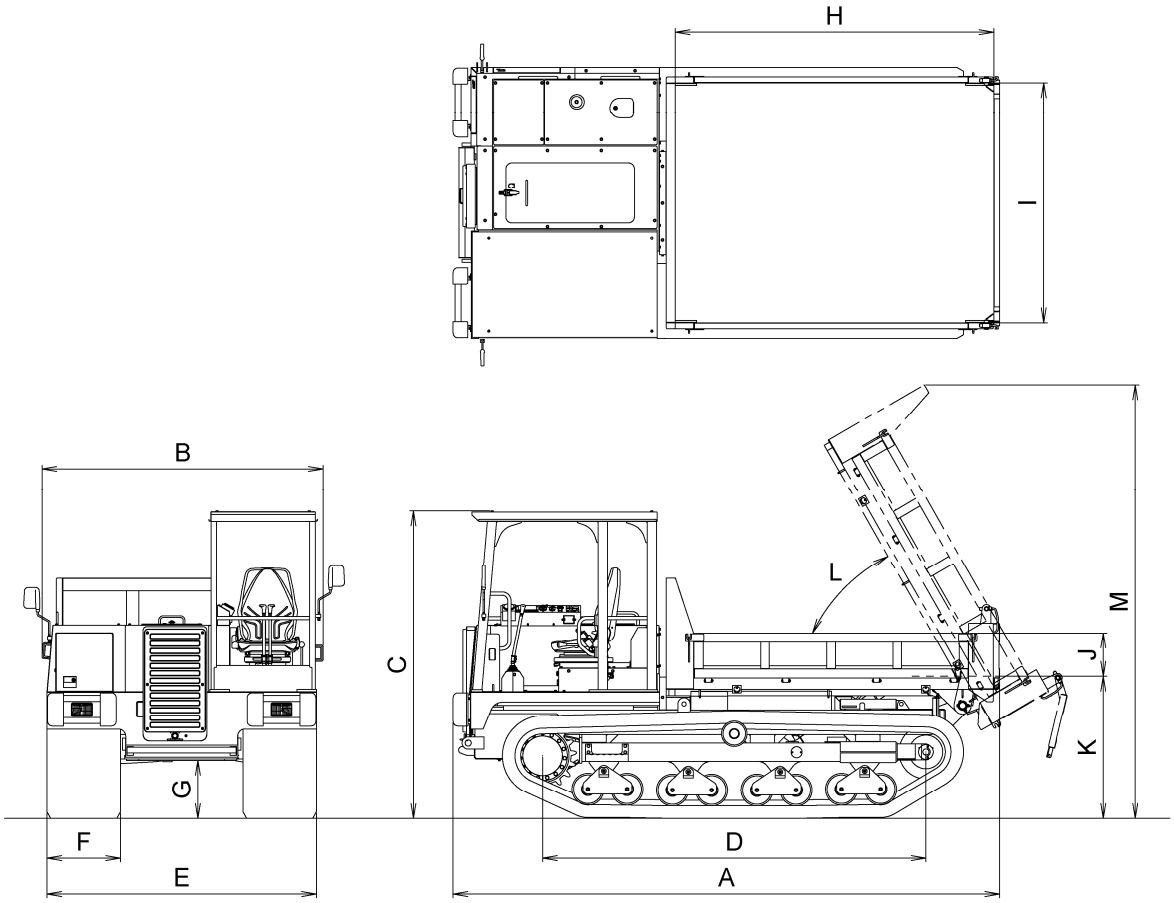

CE-C500010

			Canopy spec.
Loading capacity		kg	4000
Machine weight		kg	6330
Travel speed Low/High		km/h	7.5/12.0
Engine	Model	-	ISUZU 4JJ1
	Cylinder-total displacement	CC	4-2999
	Rated output	kW /min^{-1}	89.7/2200
Ground pressure	Empty	kPa	21.6
	Loaded	kPa	35.6
Body capacity	Fully loaded	m^3	3.0
	Flat loaded	m^3	1.8
A	Overall length	mm	4460
B	Overall width	mm	2290
C	Overall height	mm	2500
D	Tumbler center distance	mm	3130
E	Overall crawler width	mm	2200
F	Crawler width	mm	600
G	Minimum height from ground	mm	475
H	Body length	mm	2600
I	Inner body width	mm	1950
J	Body height	mm	350
K	Body floor height from ground	mm	1160
L	Maximum dumping angle	ºC	60
M	Maximum height in dumping	mm	3540

https://truckmanualshub.com/

2010 年 7 月　　初版発行
First Edition, July 2010

不許複製
All rights reserved.

IC50

取　扱　説　明　書
OPERATION MANUAL

編集及び発行所
IHI建機株式会社 プロダクトサポート部
Editing & Publishing Office.
IHI Construction Machinery Limited
Product Support Department
〒236-8611 神奈川県横浜市金沢区昭和町 3174
3174 Showa-machi, Kanazawa-ku, Yokohama, Kanagawa 236-8611 Japan