https://truckmanualshub.com/

Genie®
A TEREX BRAND

Maintenance Manual - Scissor Lifts

Slab Scissor Lifts

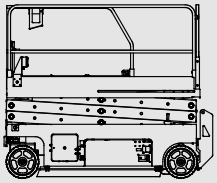

Rough Terrain Scissor Lifts

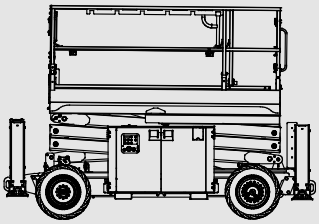

Refer to the inside cover for a list of models included in this manual.

This manual includes detailed procedures for each maintenance inspection.

For Repair procedures, Fault Codes, Electrical and Hydraulic Schematics, refer to the appropriate Service and Repair Manual for your machine.

Part No. 1272215
Rev B2
September 2016

Downloaded from www.Manualslib.com manuals search engine

https://truckmanualshub.com/

Introduction

Important

Read, understand and obey the safety rules and operating instructions in the appropriate Operator's Manual on your machine before attempting any maintenance procedure.

This manual provides detailed scheduled maintenance information for the machine owner and user.

Basic mechanical, hydraulic and electrical skills are required to perform most procedures. However, several procedures require specialized skills, tools, lifting equipment and a suitable workshop. In these instances, we strongly recommend that maintenance be performed at an authorized Genie dealer service center.

Compliance

Machine Classification

Group A/Type 2, 3 as defined by ISO 16368

Machine Design Life

Unrestricted with proper operation, inspection and scheduled maintenance.

Technical Publications

Genie has endeavored to deliver the highest degree of accuracy possible. However, continuous improvement of our products is a Genie policy. Therefore, product specifications are subject to change without notice.

Readers are encouraged to notify Genie of errors and send in suggestions for improvement. All communications will be carefully considered for future printings of this and all other manuals.

Contact Us:

Internet: www.genielift.com
E-mail: awp.techpub@terex.com

Copyright © 2016 by Terex Corporation

1272215 Rev B, May 2016

First Edition, Second Printing

Genie is a registered trademark of Terex South Dakota, Inc. in the U.S.A. and many other countries.

“GS” is a trademark of Terex South Dakota, Inc.

Downloaded from www.Manualslib.com manuals search engine

https://truckmanualshub.com/

Models included in this manual

Use the following chart to identify the specific serial number for models included in this manual.

Models	Serial number
GS-1530 / GS-1532 GS-1930 / GS-1932	from SN GS3010A-110000 from SN GS3011C-10000 to GS3016C-23999 from SN GS3014D-101 to GS3016D-607 from SN GS3016P-151487 to GS3016P-160599 from GS30C-24000 from GS30D-6080 from GS30P-160600
GS-2032/2632/3232	from SN GS3211A-110000 from SN GS3212C-10000 to GS3216C-17299 from SN GS3216P-142676 to GS3216P-148699 from GS32C-17300 from GS32P-148700
GS-2046/2646/3246	from SN GS4612A-110000 from SN GS4612C-10000 to GS4616C-18099 from SN GS4614D-101 to GS4616D-5029 from SN GS4616P-138362 to GS4616P-141799 from GS46C-18100 from GS46D-5030 from GS46P-141800
GS-2646 AV/2646 AV35	from SN GS4612A-110000 from SN GS4616P-138383 to GS4616P-141799
GS-4047	from SN GS4712C-101 to GS4716C-4499 from SN GS4714D-101 to GS4716D-3959 from GS4716P-101 to GS4716P-999 from GS47C-4500 from GS47D-3960 from GS47P-1000
GS-2669/3369/4069 RT	from SN GS6911-101 from SN GS6916F-7897 to GS69F-10499 from GS69F-10500
GS-2669/3369/4069 DC	from SN GS6912-1300 from SN GS6916F-7897 to GS6916F-10499 from GS69F-10500
GS-2669/3369/4069 BE	from SN GS6914-5000 from SN GS6916F-7897 to GS6916F-10499 from GS69F-10500
GS-3384	from SN GS8413-42181 to GS8415-42382 from SN GS8416F-42383 to GS8416F-45499 from GS84F-45500
GS-3390/4390/5390	from SN GS9013-48427 to GS9015-51064 from SN GS9016F-51064 to GS9016F-53299 from GS90F-53300

Find additional Manuals for your Model

Go to http://www.genielift.com

Use the links to locate Service Manuals, Maintenance Manuals, Service and Repair Manuals, Parts Manuals and Operator's Manuals.

Downloaded from www.Manualslib.com manuals search engine

https://truckmanualshub.com/

Introduction

Identifying the Correct Procedure for your Model

Unless otherwise noted, each procedure will apply to all models. Procedures that only apply to specific models or options will include the information in the procedure title.

Examples of procedures that apply to specific models:

- Test the Oscillate Axle - **GS-90**
- Grease the Steer Yokes - **GS-30, GS-32, GS-46** and **GS-47**
- **Model Abbreviations:**
  GS-30: GS-1530, GS-1532, GS-1930, GS-1932
  GS-32: GS-2032, GS-2632, GS-3232
  GS-46: GS-2046, GS-2646, GS-2646 AV, 2646 AV35, GS-3246
  GS-47: GS-4047
  GS-69: Unless specified DC, BE or RT GS-2669 (all models), GS-3369 (all models), GS-4069 (all models)
  GS-84: GS-3384
  GS-90: GS-3390, GS-4390, GS-5390

Examples of procedures that apply to all models:

- Test the Drive Speed – Stowed Position
- Inspect the Electrical Wiring

Glossary of terms:

ECM – Electronic Control Module (GS-69 RT, GS-84, and GS-90)

GCON – Ground Controller. Located at the chassis ground controls. (GS-30, GS-32, GS-46, GS-47, GS-69 DC, and GS-69 BE)

PCON – Platform Controller. Located at the platform. (GS-30, GS-32, GS-46, GS-47, GS-69 DC, and GS-69 BE)

CAT5 Cable – Standard Ethernet cable used for networking purposes.

Downloaded from www.Manualslib.com manuals search engine

https://truckmanualshub.com/

Revision History

Revision	Date	Section	Procedure / Description
A	3/2016		Initial Release
B	5/2016	Specifications	Add GM .998L engine
		Maintenance	Add GM Maintenance intervals Programmed Maint. Report Update C-2 and P2-1, Add P0-8
B1	7/2016	Maintenance	A-8
B2	9/2016	Introduction	Models Included

Reference Examples:	
Section – Specifications	**Electronic Version** Click on any content or procedure in the Table of Contents to view the update.
Section – Maintenance, (procedure)	

Downloaded from www.Manualslib.com manuals search engine

https://truckmanualshub.com/

Introduction

Revision History (continued)

Revision	Date	Section	Procedure / Description
Reference Examples:			
Section – Specifications			**Electronic Version** Click on any content or procedure in the Table of Contents to view the update.
Section – Maintenance, (procedure)			

Downloaded from www.Manualslib.com manuals search engine

https://truckmanualshub.com/

Safety Rules

Danger

Failure to obey the instructions and safety rules in this manual and the appropriate Operator's Manual on your machine will result in death or serious injury.

Many of the hazards identified in the operator's manual are also safety hazards when maintenance and repair procedures are performed.

Do Not Perform Maintenance Unless:

☑ You are trained and qualified to perform maintenance on this machine.

☑ You read, understand and obey:

- manufacturer's instructions and safety rules
- employer's safety rules and worksite regulations
- applicable governmental regulations

☑ You have the appropriate tools, lifting equipment and a suitable workshop.

Downloaded from www.Manualslib.com manuals search engine

https://truckmanualshub.com/

Safety Rules

Personal Safety

Any person working on or around a machine must be aware of all known safety hazards. Personal safety and the continued safe operation of the machine should be your top priority.

Read each procedure thoroughly. This manual and the decals on the machine, use signal words to identify the following:

Safety alert symbol—used to alert personnel to potential personal injury hazards. Obey all safety messages that follow this symbol to avoid possible injury or death.

DANGER Indicates a imminently hazardous situation which, if not avoided, will result in death or serious injury.

WARNING Indicates a potentially hazardous situation which, if not avoided, could result in death or serious injury.

CAUTION Indicates a potentially hazardous situation which, if not avoided, may cause minor or moderate injury.

NOTICE Indicates a potentially hazardous situation which, if not avoided, may result in property damage.

Be sure to wear protective eye wear and other protective clothing if the situation warrants it.

Be aware of potential crushing hazards such as moving parts, free swinging or unsecured components when lifting or placing loads. Always wear approved steel-toed shoes.

Workplace Safety

Any person working on or around a machine must be aware of all known safety hazards. Personal safety and the continued safe operation of the machine should be your top priority.

Be sure to keep sparks, flames and lighted tobacco away from flammable and combustible materials like battery gases and engine fuels. Always have an approved fire extinguisher within easy reach.

Be sure that all tools and working areas are properly maintained and ready for use. Keep work surfaces clean and free of debris that could get into machine components and cause damage.

Be sure any forklift, overhead crane or other lifting or supporting device is fully capable of supporting and stabilizing the weight to be lifted. Use only chains or straps that are in good condition and of ample capacity.

Be sure that fasteners intended for one time use (i.e., cotter pins and self-locking nuts) are not reused. These components may fail if they are used a second time.

Be sure to properly dispose of old oil or other fluids. Use an approved container. Please be environmentally safe.

Be sure that your workshop or work area is properly ventilated and well lit.

Downloaded from www.Manualslib.com manuals search engine

https://truckmanualshub.com/

Table of Contents

Introduction	**Introduction**	**ii**
	Important Information	ii
	Models included in this manual	iii
	Find additional Manuals for your Model	iii
	Identifying the Correct Procedure for your Model	iv
	Glossary of terms:	iv
	Revision History	v
Section 1	**Safety Rules**	**vii**
	General Safety Rules	vii
Section 2	**Performance Specifications**	**1**
	Function Speeds GS-30, GS-32, GS-46, GS-47	1
	Function Speeds GS-69, GS-84, GS-90	2
	Drive Speeds	3
	Torque Specifications	**4**
	Tires and Wheels	4
	Battery Specifications	**5**
	Battery Specifications - DC and BE Models	5
	Engine Specifications	**6**
	Engine Operator and Maintenance Manuals	6
	Deutz Engine Models	6
	Perkins Engine Models	7
	Ford Engine Models	7
	Kubota Engine Models	8
	Kohler Engine Models	8
	GM Engine Models	9
	Hydraulic Specifications	**10**
	Hydraulic Relief Valves	10
	Hydraulic and Drive Hub Fluid Capacities	12
	Hydraulic Oil Specifications	13
	Hydraulic Hose and Fitting Torque Specifications	16
	Torque Procedure	17

Downloaded from www.Manualslib.com manuals search engine

https://truckmanualshub.com/

Table of Contents

Section 3 **Maintenance Procedures 20**

Introduction 20

Maintenance Schedule 22

Pre-Delivery Preparation Report 23

Scheduled Maintenance Inspection Report - Scissor Lifts 24

Programmed Maintenance Inspection Report - Scissor Lifts 25

Commissioning Procedures 26

C-1 Perform 50 Hour Service 26

C-2 Perform Engine Maintenance – 50 Hours 26

C-3 Perform 150 Hour Service 27

Quarterly Maintenance Procedures 28

Q-1 Check for Open Bulletins and Owner Registration 28

Q-2 Battery Inspection 29

Q-3 Check the Module Tray Latch Components 31

Q-4 Inspect the Battery Balancer - GS-69 DC 32

Q-5 Inspect the Electrical Wiring 33

Q-6 Inspect the Electrical Contactor - GS-30, GS-32, GS-46, GS-47, GS-69 DC and GS-69 BE 34

Q-7 Inspect the Voltage Inverter (if equipped) 34

Q-8 Test the Flashing Beacons (if equipped) 35

Q-9 Visual Inspection of the Hydraulic Oil 36

Q-10 Inspect the Hydraulic Filters 37

Q-11 Check the Exhaust System - Engine Models 38

Q-12 Inspect the Fuel Tank Check Valve Venting System - GS-69 RT Gas Models 38

Q-13 Test the Fuel Select Operation - Gasoline/LPG Models 39

Q-14 Check and Adjust the Engine RPM 40

Q-15 Inspect the Tires, Wheels and Lug Nut Torque 42

Q-16 Confirm the Proper Brake Configuration - GS-69, GS-84, GS-90 43

Q-17 Test the Drive Brakes 43

Q-18 Test the Drive Speed – Stowed Position 44

Q-19 Test the Drive Speed - Raised Position 44

Downloaded from www.Manualslib.com manuals search engine

https://truckmanualshub.com/

Table of Contents

Q-20 Test the Down Limit Switch, Level Sensor and Pothole Limit Switches - GS-30, GS-32, GS-46 and GS-47 45

Q-21 Test the Platform Gate Proximity Switches and the Extension Deck Limit Switch - GS-2646 AV, GS-2646 AV35 49

Annual Maintenance Procedures 51

A-1 Check the Drive Hub Oil Level and Fastener Torque 51

A-2 Test the Function Pump - GS-69 BE and GS-69 DC 51

A-3 Test the Oscillate Axle - GS-90 52

A-4 Test the Down Limit Switch Descent Delay - GS-69, GS-84 and GS-90 (if equipped) 55

A-5 Test the Platform Overload Pressure Transducer and Platform Height Sensor - GS-30, GS-32, GS-46 and GS-47 (if equipped) 57

A-6 Test the Platform Overload System - GS-30, GS-32, GS-46 and GS-47 (if equipped) 60

A-7 Test the Platform Overload System - GS-69 (if equipped) 62

A-8 Test the Platform Overload System - GS-84 and GS-90 (if equipped) 64

Programmed Maintenance Procedures 66

P0-1 Inspect the Engine Air Filter - GS-69 RT 66

P0-2 Grease the Steer Yokes - GS-30, GS-32, GS-46 and GS-47 67

P0-3 Deutz Engine Maintenance – Under 1000 Hours 68

P0-4 Ford Engine Maintenance – Under 1000 Hours 69

P0-5 Kohler Engine Maintenance – Under 1000 Hours 70

P0-6 Kubota Engine Maintenance – Under 1000 Hours 71

P0-7 Perkins Engine Maintenance – Under 1000 Hours 72

P0-8 GM Engine Maintenance – Under 1000 Hours 73

P1-1 Perform Engine Maintenance – 1000 Hours 74

P1-2 Replace the Drive Hub Oil - GS-69, GS-84 and GS-90 75

P2-1 Perform Engine Maintenance – 2000 Hours 75

P2-2 Replace the Hydraulic Filters 76

P2-3 Check the Free-wheel Configuration - GS-84 and GS-90 77

P2-4 Check the Scissor Arm Wear Pads (and Slider Blocks, if equipped) 79

P2-5 Grease the Steer Axle Wheel Bearings - GS-69 BE and GS-69 DC 82

P2-6 Test or Replace the Hydraulic Oil 83

P3-1 Perform Engine Maintenance – 3000 Hours 84

Downloaded from www.Manualslib.com manuals search engine

https://truckmanualshub.com/

Performance Specifications

Function Speeds (models without proportional lift)

Function speed, maximum from platform controls (with maximum rated load in platform)	
GS-1530, GS-1532, GS-1930 and GS-1932	
Platform up (fast mode)	15 to 17 seconds
Platform up (slow mode)	30 to 32 seconds
Platform down	28 to 30 seconds
GS-2032 and GS-2632	
Platform up (fast mode)	28 to 32 seconds
Platform up (slow mode)	58 to 62 seconds
Platform down	32 to 36 seconds
GS-2046 and GS-2646	
Platform up (fast mode)	28 to 32 seconds
Platform up (slow mode)	58 to 62 seconds
Platform down	32 to 36 seconds
GS-2646 AV and GS-2646 AV35	
Platform up (fast mode)	28 to 32 seconds
Platform up (slow mode)	58 to 62 seconds
Platform down	32 to 36 seconds
Platform Ext. Deck - Extend	28 to 32 seconds
Platform Ext. Deck - Retract	31 to 35 seconds
GS-3232 and GS-3246	
Platform up (fast mode)	55 to 59 seconds
Platform up (slow mode)	108 to 112 seconds
Platform down	33 to 37 seconds
GS-4047	
Platform up (fast mode)	71 to 76 seconds
Platform up (slow mode)	83 to 87 seconds
Platform down	41 to 46 seconds
GS-2669DC	
Platform up (fast mode)	71 to 76 seconds
Platform up (slow mode)	83 to 87 seconds
Platform down	41 to 46 seconds

Function Speeds (models with proportional lift)

Function speed, maximum from platform controls (with 1 person in platform)	
GS-1530, GS-1532, GS-1930 and GS-1932	
Platform up	15 to 17 seconds
Platform down	18 to 25 seconds
GS-2032 and GS-2632	
Platform up	28 to 32 seconds
Platform down	24 to 28 seconds
GS-2046 and GS-2646	
Platform up	28 to 32 seconds
Platform down	28 to 32 seconds
GS-2646 AV and GS-2646 AV35	
Platform up	28 to 32 seconds
Platform down	28 to 32 seconds
Platform Ext. Deck - Extend	28 to 32 seconds
Platform Ext. Deck - Retract	31 to 35 seconds
GS-3232 and GS-3246	
Platform up	55 to 59 seconds
Platform down	28 to 32 seconds
GS-4047	
Platform up	71 to 76 seconds
Platform down	41 to 46 seconds
GS-2669DC	
Platform up (fast mode)	71 to 76 seconds
Platform down	41 to 46 seconds

Downloaded from www.Manualslib.com manuals search engine

https://truckmanualshub.com/

Performance Specifications

Function Speeds

Function speed, maximum from platform controls (with maximum rated load in platform)	
GS-2669 DC, GS-2669 BE, GS-2669 RT	
Platform up	29 to 39 seconds
Platform down	26 to 36 seconds
GS-3369 DC, GS-3369 BE, GS-3369 RT	
Platform up	34 to 44 seconds
Platform down	24 to 34 seconds
GS-4069 DC, GS-4069 BE, GS-4069 RT	
Platform up	56 to 66 seconds
Platform down	23 to 33 seconds
GS-3384, GS-3390	
Platform up	40 to 50 seconds
Platform down	24 to 34 seconds
GS-4390	
Platform up	40 to 50 seconds
Platform down	34 to 44 seconds
GS-5390	
Platform up	50 to 60 seconds
Platform down	44 to 54 seconds

Downloaded from www.Manualslib.com manuals search engine

https://truckmanualshub.com/

Performance Specifications

Drive Speeds

Model	Stowed position	Elevated position	Braking distance, maximum High range on paved surface	Gradeability
GS-1530, GS-1532	10.9 seconds 40 ft / 12.2 m	55 seconds 40 ft / 12.2 m	1 - 3 ft 0.3 - 0.9 m	30%
GS-1930, GS-1932	10.9 seconds 40 ft / 12.2 m	55 seconds 40 ft / 12.2 m	1 - 3 ft 0.3 - 0.9 m	25%
GS-2032, GS-2046, GS-2646	12.4 seconds 40 ft / 12.2 m	55 seconds 40 ft / 12.2 m	1 - 3 ft 0.3 - 0.9 m	30%
GS-2632, GS-3232, GS-3246	12.4 seconds 40 ft / 12.2 m	55 seconds 40 ft / 12.2 m	1 - 3 ft 0.3 - 0.9 m	25%
GS-2646 AV	12.4 seconds 40 ft / 12.2 m	55 seconds 40 ft / 12.2 m	1 - 3 ft 0.3 - 0.9 m	25% 20% (35mph Wind Rating)
GS-4047	13.6 seconds 40 ft / 12.2 m	55 seconds 40 ft / 12.2 m	1 - 3 ft 0.3 - 0.9 m	25%
GS-2669 RT	High speed 7.8 seconds 40 ft / 12.2 m High torque 30 seconds 40 ft / 12.2 m	91 seconds 40 ft / 12.2 m	2 ft 0.6 m	40% 35% (with outriggers)
GS-3369 RT **GS-4069 RT**	High speed 7.8 seconds 40 ft / 12.2 m High torque 30 seconds 40 ft / 12.2 m	91 seconds 40 ft / 12.2 m	2 ft 0.6 m	35% 30% (with outriggers)
GS-2669 **GS-3369** **GS-4069** **(DC and BE models)**	Forward - 6.1 seconds Reverse - 9.1 seconds 40 ft / 12.2 m	91 seconds 40 ft / 12.2 m	3 ft 0.9 m	35% (ext deck uphill) 15% (ext deck downhill)
GS-3384	6.8 seconds 40 ft / 12.2 m	39 seconds 40 ft / 12.2 m	5 ft 1.5 m	50%
GS-3390 **GS-4390**	5.5 seconds 40 ft / 12.2 m	39 seconds 40 ft / 12.2 m	5 ft 1.5 m	50%
GS-5390	5.5 seconds 40 ft / 12.2 m	39 seconds 40 ft / 12.2 m	5 ft 1.5 m	40%

Downloaded from www.Manualslib.com manuals search engine

https://truckmanualshub.com/

Torque Specifications

Tires and Wheels

Torque values are listed as lubricated unless otherwise noted. Lug nuts must be coated with a mineral based lubricant when removed and replaced on the machine.

Model	**GS-1530, GS-1532, GS-1930, GS-1932, GS-2032, GS-2632, GS-3232, GS-2046, GS-2646, GS-3246, GS-4047, GS-2646AV**
Castle nut torque	225 ft-lbs 305 Nm
Model	**GS-2669 RT, GS-3369 RT, GS-4069 RT**
Castle nut torque (steer end)	225 ft-lbs 305 Nm
Lug nut torque (steer end)	68 ft-lbs 92 Nm
Lug nut torque (non-steer end)	130 ft-lbs 176 Nm
Model	**GS-2669, GS-3369, GS-4069 (DC and BE models)**
Castle nut torque (steer end)	35 ft-lbs 47.5 Nm
Lug nut torque (steer end)	68 ft-lbs 92 Nm
Lug nut torque (non-steer end)	130 ft-lbs 176 Nm
Model	**GS-3384, GS-3390, GS-4390, GS-5390**
Lug nut torque	94 ft-lbs 127 Nm
Tire pressure high flotation	38 psi 2.6 bar

Downloaded from www.Manualslib.com manuals search engine

https://truckmanualshub.com/

Battery Specifications

GS-1530, GS-1532, GS-1930, GS-1932, GS-2032, GS-2632, GS-3232, GS-2046, GS-2646, GS-3246, GS-2646 AV	(standard)
Voltage	6V DC
Group	GC2
Type	T-105
Quantity	4
Battery capacity, maximum	225 AH
Reserve capacity @ 25A rate	447 minutes

GS-1530, GS-1532, GS-1930, GS-1932 GS-2032, GS-2632, GS-3232, GS-2046, GS-2646, GS-3246, GS-2646 AV	(optional)
Voltage	6V DC
Group	GC2
Type	6V-AGM
Quantity	4
Battery capacity, maximum	200 AH
Reserve capacity @ 25A rate	380 minutes

Note: When upgrading from standard to AGM batteries the machine software must be configured for AGM batteries. Refer to Repair Procedure, *Machine Setup* in the Service and Repair Manual.

GS-4047	(standard)
Voltage	12V DC
Group	GC2
Type	T-1275
Quantity	4
Battery capacity, maximum	150 AH
Reserve capacity @ 25A rate	280 minutes

GS-2669, GS-3369, GS-4069 (DC and BE models)	(standard)
Voltage	6V DC
Group	GC2
Type	T-105
Quantity	8
Battery capacity, maximum	225 AH
Reserve capacity @ 25A rate	447 minutes

GS-2669, GS-3369, GS-4069 (DC models)	(optional)
Voltage	6V DC
Group	902
Type	J305GH
Quantity	8
Battery capacity, maximum	315 AH
Reserve capacity @ 25A rate	678 minutes

GS-2669, GS-3369, GS-4069 (BE models)	(optional)
Voltage	6V DC
Group	GC2
Type	T145
Quantity	8
Battery capacity, maximum	260 AH
Reserve capacity @ 25A rate	530 minutes

Downloaded from www.Manualslib.com manuals search engine

https://truckmanualshub.com/

Engine Specifications

Engine Operator and Maintenance Manuals

Deutz D2011L03i	
Genie part number	139320
Deutz D 2.9 L4	
Genie part number	1251561
Perkins 403D-11	
Genie part number	131661
Ford MSG-425	
Genie part number	215322
Diagnostic Manual	
Genie part number	162067
Kubota D1105-E3B	
Genie part number	229761
Kubota WG-972	
Genie part number	227584
Kohler KD350	
Genie part number	1255885
GM .998L	
Genie part number	Not available until May 2016

Deutz Engine Models

D2011 L03i	
Low idle	1500 rpm 313 Hz
High idle	2500 rpm 522 Hz
Oil capacity (including filter)	9.5 quarts 9 liters
Fan belt deflection	3/8 to 1/2 inch 9 to 12 mm
D 2.9 L4	
Low idle	1500 rpm 1500 Hz
High idle	2500 rpm 2500 Hz
Oil capacity (including filter)	9.4 quarts 9 liters
Engine coolant	Ethylene Glycol
Engine coolant capacity	10 quarts 9.4 liters
Fan belt deflection	3/8 to 1/2 inch 9 to 12 mm

Unit ships with 15W-40. Extreme operating temperatures may require the use of alternative engine oils. For oil requirements, refer to the Engine Operator Manual for your engine.

Downloaded from www.Manualslib.com manuals search engine

https://truckmanualshub.com/

Engine Specifications

Perkins Engine Models

403D-11	
Low idle	1500 rpm 150 Hz
High idle	3000 rpm 300 Hz
Oil capacity (including filter)	4.6 quarts 4.4 liters
Engine coolant capacity	2.0 quarts 1.9 liters
Fan belt deflection	3/16 inch 5 mm

Unit ships with 15W-40. Extreme operating temperatures may require the use of alternative engine oils. For oil requirements, refer to the Engine Operator Manual for your engine.

Ford Engine Models

MSG-425	
Low idle	1600 rpm 53.3 Hz
High idle	2500 rpm 83.3 Hz
Oil capacity (including filter)	6.7 quarts 6.4 liters
Engine coolant capacity	10 quarts 9.5 liters
Spark plug gap	0.049 to 0.053 inches 1.25 to 1.35 mm
Fan belt deflection	3/8 to 1/2 inch 9 to 12 mm

Unit ships with 15W-40. Extreme operating temperatures may require the use of alternative engine oils. For oil requirements, refer to the Engine Operator Manual for your engine.

Downloaded from www.Manualslib.com manuals search engine

https://truckmanualshub.com/

Engine Specifications

Kubota Engine Models

D1105-E3B, D1105-E4B	
Low idle	1500 rpm 250 Hz
High idle	3000 rpm 500 Hz
Oil capacity (including filter)	5.4 quarts 5.1 liters
Engine coolant capacity	3.3 quarts 3.1 liters
Fan belt deflection	5/16 inch 8 mm

WG-972	
Low idle	1500 rpm 250 Hz
High idle	3000 rpm 500 Hz
Oil capacity (including filter)	3.6 quarts 3.4 liters
Engine coolant capacity	2.4 quarts 2.3 liters
Spark plug gap	0.024 to 0.028 inches 0.6 to 0.7 mm
Fan belt deflection	0.28 to 0.35 inch 7 to 9 mm

Unit ships with 15W-40. Extreme operating temperatures may require the use of alternative engine oils. For oil requirements, refer to the Engine Operator Manual for your engine.

Kohler Engine Models

KD350	
High idle	3600/3000 rpm
Oil capacity (including filter)	1.3 quarts 1.2 liters

Unit ships with 15W-40. Extreme operating temperatures may require the use of alternative engine oils. For oil requirements, refer to the Engine Operator Manual for your engine.

Downloaded from www.Manualslib.com manuals search engine

https://truckmanualshub.com/

GM Engine Models

.998L	
Low idle	1100 rpm 36.6 Hz
High idle	3000 rpm 100 Hz
Oil capacity (including filter)	3.2 quarts 3.0 liters
Engine coolant capacity	5 quarts 4.7 liters
Spark plug gap	0.039 to 0.047 inches 1.0 to 1.2 mm

Unit ships with 15W-40. Extreme operating temperatures may require the use of alternative engine oils. For oil requirements, refer to the Engine Operator Manual for your engine.

Downloaded from www.Manualslib.com manuals search engine

https://truckmanualshub.com/

Hydraulic Specifications

Hydraulic Relief Valve Pressure

Manifold Relief Valve Pressure / Bar						
Model	**System relief**	**Lift relief**	**Steer relief**	**Outrigger relief**	**Oscillate relief**	**Traction Manifold Hot oil relief**
GS-1530, GS-1532 GS-1930, GS-1932 GS-2032, GS-2632 GS-2046, GS-2646, GS-3246 GS-2646 AV	3700 psi 255 bar	1800 to 3700 psi 142 to 255 bar	1500 psi 103 bar	X	X	X
GS-3232	3700 psi 255 bar	1800 to 3700 psi 142 to 255 bar	1500 psi 103 bar	3500 psi 241 bar	X	X
GS-4047	3500 psi 241 bar	3000 psi 206 bar	1500 psi 103 bar	X	X	X
GS-2669 RT	3500 psi 241 bar	3100 psi 214 bar	X	X	3300 psi 228 bar	2500 psi 172 bar
GS-3369 RT	3500 psi 241 bar	2900 psi 200 bar	X	X	3300 psi 228 bar	2500 psi 172 bar
GS-4069 RT	3500 psi 241 bar	2850 psi 197 bar	X	X	3300 psi 228 bar	2500 psi 172 bar
GS-2669 DC and BE	3500 psi 241 bar	3100 psi 214 bar	1500 psi 103 bar	X	3300 psi 228 bar	X
GS-3369 DC and BE	3500 psi 241 bar	2900 psi 130 bar	1500 psi 103 bar	X	3300 psi 228 bar	X
GS-4069 DC and BE	3500 psi 241 bar	2850 psi 197 bar	1500 psi 103 bar	X	3300 psi 228 bar	X

Downloaded from www.Manualslib.com manuals search engine

https://truckmanualshub.com/

Hydraulic Specifications

Manifold Relief Valve Pressure / Bar						
Model	**System relief**	**Lift relief**	**Steer relief**	**Outrigger relief**	**Oscillate relief**	**Traction Manifold Hot oil relief**
GS-3384	2700 to 2900 psi 186 to 200 bar	X	2700 to 2900 psi 186 to 200 bar	X	X	280 psi 19.3 bar
GS-3390	2700 to 2900 psi 186 to 200 bar	X	1950 to 2250 psi 135 to 155 bar	X	3500 psi 241 bar	280 psi 19.3 bar
GS-4390	2900 to 3100 psi 200 to 214 bar	X	1950 to 2250 psi 135 to 155 bar	X	3500 psi 241 bar	280 psi 19.3 bar
GS-5390	2900 to 3100 psi 200 to 214 bar	X	1950 to 2250 psi 135 to 155 bar	X	3500 psi 241 bar	280 psi 19.3 bar
GS-1530, GS-1532 GS-1930, GS-1932 Check valve manifold	200 psi 14 bar					
GS-2646 AV Extension deck manifold	750 psi 52 bar					
GS-4047 Lift pressure select manifold	2000 psi 138 bar					

Downloaded from www.Manualslib.com manuals search engine

https://truckmanualshub.com/

Hydraulic Specifications

Hydraulic and Drive Hub Fluid Capacities

Note: Hydraulic system includes hydraulic tank capacity.

Drive hub oil type: SAE 90 multipurpose hypoid gear oil API service classification GL5

Model	Drive hubs	Hydraulic tank	Hydraulic system (including tank)
GS-1530, GS-1532, GS-1930, GS-1932	X	3.4 gallons 12.9 liters	3.8 gallons 14.2 liters
GS-2032, GS-2632, GS-2046, GS-2646, GS-2646 AV	X	3.4 gallons 12.9 liters	4.5 gallons 17 liters
GS-3232, GS-3246	X	3.4 gallons 12.9 liters	5.5 gallons 20.8 liters
GS-4047	X	5.9 gallons 22.4 liters	7.5 gallons 28.4 liters
GS-2669, GS-3369, GS-4069 (all models)	24.5 fl oz 725 cc	16.5 gallons 62.5 liters	18 gallons 68.1 liters
GS-3384	26 fl oz 769 cc	30 gallons 114 liters	37.5 gallons 142 liters
GS-3390	26 fl oz 769 cc	30 gallons 114 liters	37.5 gallons 142 liters
GS-4390	26 fl oz 769 cc	30 gallons 114 liters	38.25 gallons 145 liters
GS-5390	26 fl oz 769 cc	30 gallons 114 liters	38.75 gallons 147 liters

Downloaded from www.Manualslib.com manuals search engine

https://truckmanualshub.com/

Hydraulic Oil Specifications

Hydraulic Fluid Specifications	
Genie specifications require hydraulic oils which are designed to give maximum protection to hydraulic systems, have the ability to perform over a wide temperature range, and the viscosity index should exceed 140. They should provide excellent antiwear, oxidation prevention, corrosion inhibition, seal conditioning, and foam and aeration suppression properties.	
Cleanliness level, minimum	ISO 15/13
Water content, maximum	250 ppm
Recommended Hydraulic Fluid	
Hydraulic oil type	Chevron Rando HD Premium
Viscosity grade	32
Viscosity index	200
Optional Hydraulic Fluids	
Mineral based	Shell Tellus S2 V 32 Shell Tellus S2 V 46 Shell Tellus S4 VX 32 Shell Shell Donax TG (Dexron III) Chevron 5606A
Biodegradable	Petro Canada Environ MV 46
Fire resistant	UCON Hydrolube HP-5046

Note: Genie specifications require additional equipment and special installation instructions for the approved optional fluids. Consult Genie Product Support before use.

NOTICE Optional fluids may not have the same hydraulic lifespan and may result in component damage.

Note: Extended machine operation can cause the hydraulic fluid temperature to increase beyond it's maximum allowable range. If the hydraulic fluid temperature consistently exceeds 200°F / 90°C an optional oil cooler may be required.

NOTICE Do not top off with incompatible hydraulic fluids. Hydraulic fluids may be incompatible due to the differences in base additive chemistry. When incompatible fluids are mixed, insoluble materials may form and deposit in the hydraulic system, plugging hydraulic lines, filters, control valves and may result in component damage.

Note: Do not operate the machine when the ambient air temperature is consistently above 120°F / 49°C.

Hydraulic Fluid Temperature Range

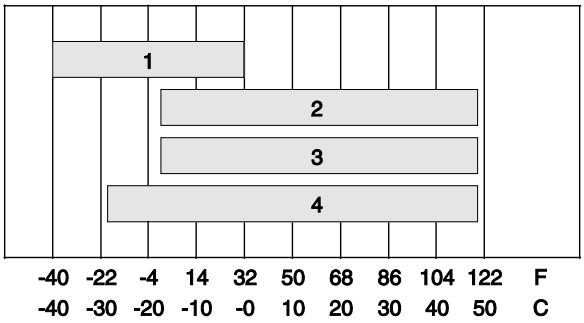

Ambient air temperature

1 Chevron hydraulic oil 5606A
2 Petro-Canada Environ MV 46
3 UCON Hydrolube HP-5046D
4 Chevron Rando HD premium oil MV

Downloaded from www.Manualslib.com manuals search engine

https://truckmanualshub.com/

Hydraulic Specifications

Chevron Rando HD Premium Oil MV Fluid Properties

ISO Grade	32
Viscosity index	200
Kinematic Viscosity cSt @ 200°F / 100°C cSt @ 104°F / 40°C	 7.5 33.5
Brookfield Viscosity cP @ -4°F / -20°C cP @ -22°F / -30°C	 1040 3310
Flash point	375°F / 190°C
Pour point	-58°F / -50°C
Maximum continuous operating temperature	171°F / 77°C

Note: A hydraulic oil heating system is recommended when the ambient temperature is consistently below 0°F / -18°C.

Note: Do not operate the machine when the ambient temperature is below -20°F / -29°C with Rando HD Premium MV.

Chevron 5606A Hydraulic Oil Fluid Properties

ISO Grade	15
Viscosity index	300
Kinematic Viscosity cSt @ 200°F / 100°C cSt @ 104°F / 40°C cSt @ -40°F / -40°C	 5.5 15.0 510
Flash point	180°F / 82°C
Pour point	-81°F / -63°C
Maximum continuous operating temperature	124°F / 51°C

Note: Use of Chevron 5606A hydraulic fluid, or equivalent, is required when ambient temperatures are consistently below 0°F / -17°C unless an oil heating system is used.

NOTICE

Continued use of Chevron 5606A hydraulic fluid, or equivalent, when ambient temperatures are consistently above 32°F / 0°C may result in component damage

Downloaded from www.Manualslib.com manuals search engine

https://truckmanualshub.com/

Petro-Canada Environ MV 46 Fluid Properties

ISO Grade	46
Viscosity index	154
Kinematic Viscosity cSt @ 200°F / 100°C cSt @ 104°F / 40°C	 8.0 44.4
Flash point	482°F / 250°C
Pour point	-49°F / -45°C
Maximum continuous operating temperature	180°F / 82°C

Shell Tellus S4 VX Fluid Properties

ISO Grade	32
Viscosity index	300
Kinematic Viscosity cSt @ 200°F / 100°C cSt @ 104°F / 40°C	 9 33.8
Brookfield Viscosity cSt @ -4°F / -20°C cSt @ -13°F / -25°C cSt @ -40°F / -40°C	 481 702.4 2624
Flash point	>100
Pour point	-76°F / -60°C
Maximum continuous operating temperature	103°F / 75°C

UCON Hydrolube HP-5046 Fluid Properties

ISO Grade	46
Viscosity index	192
Kinematic Viscosity cSt @ 149°F / 65°C cSt @ 104°F / 40°C cSt @ 0°F / -18°C	 22 46 1300
Flash point	None
Pour point	-81°F / -63°C
Maximum continuous operating temperature	189°F / 87°C

Downloaded from www.Manualslib.com manuals search engine

https://truckmanualshub.com/

Hydraulic Specifications

Hydraulic Hose and Fitting Torque Specifications

Your machine is equipped with Parker Seal-Lok™ ORFS or 37° JIC fittings and hose ends. Genie specifications require that fittings and hose ends be torqued to specification when they are removed and installed or when new hoses or fittings are installed.

Seal-Lok™ Fittings

(hose end - ORFS)

SAE Dash Size	Torque
-4	10 ft-lbs / 13.6 Nm
-6	30 ft-lbs / 40.7 Nm
-8	40 ft-lbs / 54.2 Nm
-10	60 ft-lbs / 81.3 Nm
-12	85 ft-lbs / 115 Nm
-16	110 ft-lbs / 150 Nm
-20	140 ft-lbs / 190 Nm
-24	180 ft-lbs / 245 Nm

JIC 37° Fittings

(swivel nut or hose connection)

SAE Dash Size	Thread Size	Flats
-4	7/16-20	2
-6	9/16-18	1 ¼
-8	3/4-16	1
-10	7/8-14	1
-12	1 1/16-12	1
-16	1 5/16-12	1
-20	1 5/8-12	1
-24	1 7/8-12	1

SAE O-ring Boss Port

(tube fitting - installed into Aluminum)
(all types)

SAE Dash Size	Torque
-4	14 ft-lbs / 19 Nm
-6	23 ft-lbs / 31.2 Nm
-8	36 ft-lbs / 54.2 Nm
-10	62 ft-lbs / 84 Nm
-12	84 ft-lbs / 114 Nm
-16	125 ft-lbs / 169.5 Nm
-20	151 ft-lbs / 204.7 Nm
-24	184 ft-lbs / 249.5 Nm

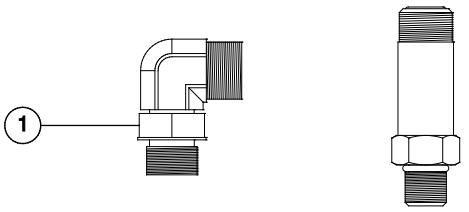

Adjustable Fitting

Non-adjustable fitting

1 jam nut

SAE O-ring Boss Port

(tube fitting - installed into Steel)

SAE Dash Size		Torque
-4	ORFS / 37° (Adj) ORFS (Non-adj) 37° (Non-adj)	15 ft-lbs / 20.3 Nm 26 ft-lbs / 35.3 Nm 22 ft-lbs / 30 Nm
-6	ORFS (Adj / Non-adj) 37° (Adj / Non-adj)	35 ft-lbs / 47.5 Nm 29 ft-lbs / 39.3 Nm
-8	ORFS (Adj / Non-adj) 37° (Adj / Non-adj)	60 ft-lbs / 81.3 Nm 52 ft-lbs / 70.5 Nm
-10	ORFS (Adj / Non-adj) 37° (Adj / Non-adj)	100 ft-lbs / 135.6 Nm 85 ft-lbs / 115.3 Nm
-12	(All types)	135 ft-lbs / 183 Nm
-16	(All types)	200 ft-lbs / 271.2 Nm
-20	(All types)	250 ft-lbs / 339 Nm
-24	(All types)	305 ft-lbs / 413.5 Nm

Downloaded from www.Manualslib.com manuals search engine

https://truckmanualshub.com/

Torque Procedure

Seal-Lok™ fittings

1 Replace the O-ring. The O-ring must be replaced anytime the seal has been broken. The O-ring cannot be re-used if the fitting or hose end has been tightened beyond finger tight.

Note: The O-ring in Parker Seal Lok™ fittings and hose end are custom-size O-rings. They are not standard size O-rings. They are available in the O-ring field service kit (Genie part number 49612).

2 Lubricate the O-ring before installation.

3 Be sure the O-ring face seal is seated and retained properly.

4 Position the tube and nut squarely on the face seal end of the fitting, and tighten the nut finger tight.

5 Tighten the nut or fitting to the appropriate torque. Refer to the appropriate torque chart in this section.

6 Operate all machine functions and inspect the hose, fittings and related components to confirm there are no leaks.

JIC 37° fittings

1 Align the tube flare (hex nut) against the nose of the fitting body (body hex fitting) and tighten the hex nut to the body hex fitting to hand tight, approximately 30 in-lbs / 3.4 Nm.

2 Using a permanent ink marker, make a reference mark on one the flats of the hex nut and continue the mark onto the body of the hex fitting. Refer to Illustration 1.

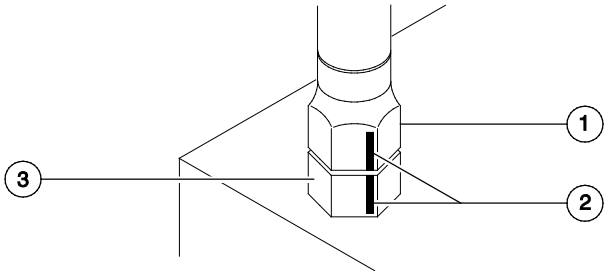

Illustration 1

1 hex nut
2 reference mark
3 body hex fitting

Downloaded from www.Manualslib.com manuals search engine

https://truckmanualshub.com/

Hydraulic Specifications

3 Working clockwise on the body hex fitting, make a second mark with a permanent ink marker to indicate the proper tightening position. Refer to Illustration 2.

Note: Use the JIC 37° Fitting table in this section to determine the correct number of flats, for the proper tightening position.

Note: The marks indicate the correct tightening positions have been determined. Use the second mark on the body hex fitting to properly tighten the joint after it has been loosened.

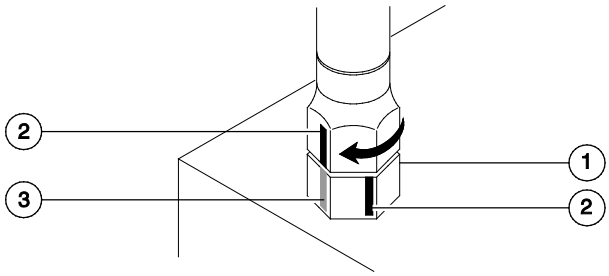

Illustration 2

1 body hex fitting
2 reference mark
3 second mark

4 Tighten the hex nut until the mark on the hex nut is aligned with the second mark on the body hex fitting.

5 Operate all machine functions and inspect the hose, fittings and related components to confirm there are no leaks.

Downloaded from www.Manualslib.com manuals search engine

https://truckmanualshub.com/

This page intentionally left blank.

Downloaded from www.Manualslib.com manuals search engine

https://truckmanualshub.com/

Maintenance Procedures

Observe and Obey:

☑ Maintenance inspections shall be completed by a person trained and qualified on the maintenance of this machine.

☑ Scheduled maintenance inspections shall be completed as specified on the *Maintenance inspection Reports*. The frequency and extent of periodic examinations and tests may also depend on national regulations.

WARNING Failure to perform each procedure as presented and scheduled may cause death, serious injury or substantial damage.

☑ Immediately tag and remove from service a damaged or malfunctioning machine.

☑ Repair any machine damage or malfunction before operating the machine.

☑ Use only Genie approved replacement parts.

☑ Machines that have been out of service for a period longer than 3 months must complete the quarterly inspection.

Machine Configuration:

☑ Unless otherwise specified, perform each procedure with the machine in the following configuration:

- Machine parked on a firm, level surface
- Key switch in the off position with the key removed
- The red Emergency Stop button in the off position at both the ground and platform controls
- Wheels chocked
- All external AC power supply disconnected from the machine
- Platform in the stowed position

Downloaded from www.Manualslib.com manuals search engine

https://truckmanualshub.com/

Maintenance Procedures

About This Section

This section contains detailed procedures for each scheduled maintenance inspection.

Each procedure includes a description, safety warnings and step-by-step instructions.

Symbols Legend

Safety alert symbol—used to alert personnel to potential personal injury hazards. Obey all safety messages that follow this symbol to avoid possible injury or death.

DANGER Indicates a imminently hazardous situation which, if not avoided, will result in death or serious injury.

WARNING Indicates a potentially hazardous situation which, if not avoided, could result in death or serious injury.

CAUTION Indicates a potentially hazardous situation which, if not avoided, may cause minor or moderate injury.

NOTICE Indicates a potentially hazardous situation which, if not avoided, may result in property damage.

⊙ Indicates that a specific result is expected after performing a series of steps.

⊠ Indicates that an incorrect result has occurred after performing a series of steps.

Maintenance Symbols Legend

Note: The following symbols have been used in this manual to help communicate the intent of the instructions. When one or more of the symbols appear at the beginning of a maintenance procedure, it conveys the meaning below.

Indicates that tools will be required to perform this procedure.

Indicates that new parts will be required to perform this procedure.

Indicates that dealer service will be required to perform this procedure.

Indicates that a cold motor/pump or engine will be required to perform this procedure.

Indicates that a warm engine will be required to perform this procedure.

Downloaded from www.Manualslib.com manuals search engine

https://truckmanualshub.com/

Maintenance Procedures

Maintenance Schedule

The maintenance procedures have been divided into subsections that include: Commissioning, Quarterly, Annually and Programmed maintenance intervals. The maintenance inspection report has been divided into general areas of the machine that include: Drive Chassis, Platform, Functions and Controls, Engine and Electrical.

Failure to perform these procedures may result in poor performance, component damage and unsafe operating conditions. They are essential to safe operation, machine performance and service life.

Commissioning: A series of required one time maintenance procedures to be performed at 50 and 150 hour intervals.

Quarterly and Annually: A series of maintenance procedures to be performed quarterly or annually.

Programmed: A series of maintenance procedures to be performed during a Pre-Delivery Preparation or based on machine operating hours.

Maintenance Inspection Report

The maintenance inspection report contains checklists for each type of scheduled inspection.

Make copies of the *Maintenance Inspection Report* to use for each inspection. Maintain completed forms for a minimum of 4 years or in compliance with your employer, jobsite and governmental regulations and requirements.

Instruction Examples

Commissioning Example:

Commissioning		1 50	1 150
2 Engine - all models	3 PO-1	4	4

Quarterly and Annually Example:

6 Drive Chassis	1 Intervals	Q	A
2 Inspect the tires, wheels and Lug Nut Torque	3 Q-4	4	5 Ø

Programmed Example (under 1000 HRS):

Programmed Maintenance - Under 1000 HRS		Status	Enter Hours
2 Check Track Tension/Fastener Torque	3 P0-1	4	7 50
2 Engines - Deutz Under 1000 HRS	3 P0-2	4	7

Programmed Example:

Programmed Maintenance		1 Hours are in thousands					
All models		1	2	3	4	6	12
2 Engine - all models, 1000 hrs	3 P1-1	4	Ø	Ø	Ø	Ø	Ø

Instructions Legend

Use the following detailed descriptions to identify the intended use of the maintenance inspection reports.

1	Specific Interval: blank box is the interval to be completed and the ∅ marks the interval as not required.
2	The description of the procedure or checklist to be completed.
3	The procedure number or checklist to be completed.
4	Check box to indicate status of inspection.
5	Specific interval is not required for this procedure.
6	General area of the machine to complete the procedure.
7	If this box has a designated time interval: this is the specific time interval to complete the procedure or checklist. If this box is empty: the maintenance checklist will include multiple time intervals, use this box to write in the specific interval for the inspection completed.

Downloaded from www.Manualslib.com manuals search engine

https://truckmanualshub.com/

Pre-Delivery Preparation Report

Fundamentals

It is the responsibility of the owner or dealer to perform the Pre-delivery Preparation.

The Pre-delivery Preparation is performed prior to each delivery. The inspection is designed to discover if anything is apparently wrong with a machine before it is put into service.

A damaged or modified machine must never be used. If damage or any variation from factory delivered condition is discovered, the machine must be tagged and removed from service.

Repairs to the machine may only be made by a qualified service technician, according to the manufacturer's specifications.

Scheduled maintenance inspections shall be performed by qualified service technicians, according to the manufacturer's specifications and the requirements listed in the responsibilities manual.

Instructions

Use the operator's manual on your machine.

The Pre-delivery Preparation consists of completing the Pre-operation Inspection, the Maintenance items and the Function Tests.

Use this form to record the results. Place a check in the appropriate box after each part is completed. Follow the instructions in the operator's manual.

If any inspection receives an N, remove the machine from service, repair and re-inspect it. After repair, place a check in the R box.

Legend

Y = yes, acceptable
N = no, remove from service
R = repaired

Comments

Pre-delivery Preparation	Y	N	R
Pre-operation inspection completed			
Maintenance items completed			
Function tests completed			

Genie
A TEREX BRAND

Terex South Dakota, Inc USA
500 Oak Wood Road
PO Box 1150
Watertown, SD 57201-6150
(605) 882-4000

Genie UK
The Maltings, Wharf Road
Grantham, Lincolnshire
NG31- 6BH England
(44) 1476-584333

Model

Serial number

Date

Machine owner

Inspected by (print)

Inspector signature

Inspector title

Inspector company

Downloaded from www.Manualslib.com manuals search engine

https://truckmanualshub.com/

Scheduled Maintenance Inspection Report – Scissor Lifts

Model	Hour meter	Date
Serial number	Inspector company	Machine owner
Inspected by (print)	Inspector signature	
Inspection Type Q = quarterly or frequent inspections A = annual inspections	**Legend** Y = yes, acceptable N = no, remove from service R = repaired ∅ = not applicable	Make copies of this report to use for each inspection. Select the appropriate procedures for the type of inspection(s) to perform.

If any inspection receives an "N," tag and remove the machine from service, repair and re-inspect it. After repair, place a "R" in the box.

Drive Chassis	**Intervals**	**Q**	**A**
Inspect Electrical Contactors - GS-30, GS-32, GS-46, GS-47, GS-69 DC and GS-69 BE	Q-6		
Inspect the Fuel Tank Check Valve Venting System - GS-69 RT Gas Models	Q-12		
Inspect the Tires, Wheels and Lug Nut Torque	Q-15		
Confirm the Proper Brake Configuration - GS-69, GS-84 and GS-90	Q-16		
Check Drive Hub Oil Level and Fastener Torque	A-1	∅	
Test the Oscillate Axle - GS-90	A-3	∅	
Chassis Mechanicals and Hydraulics	**Intervals**	**Q**	**A**
Check the Module Tray Latch Components	Q-3		
Visual Inspection of the Hydraulic Oil	Q-9		
Inspect the Hydraulic Filters	Q-10		
Test the Function Pump - GS-69 BE and GS-69 DC	A-2	∅	
Electrical	**Intervals**	**Q**	**A**
Battery Inspection	Q-2		
Inspect the Battery Balancer - GS-69 DC	Q-4		
Inspect the Electrical Wiring	Q-5		
Inspect the Voltage Inverter - (if equipped)	Q-7		
Engine	**Intervals**	**Q**	**A**
Check the Exhaust System	Q-11		
Check and Adjust Engine RPM	Q-14		

Platform	**Intervals**	**Q**	**A**
Test the Platform Overload Pressure Transducer and Platform Height Sensor - GS-30, GS-32, GS-46 and GS-47 (if equipped)	A-5	∅	
Test the Platform Overload System - GS-30, GS-32, GS-46 and GS-47 (if equipped)	A-6	∅	
Test the Platform Overload System - GS-69 (if equipped)	A-7	∅	
Test the Platform Overload System - GS-84 and GS-90 (if equipped)	A-8	∅	
Functions and Controls	**Intervals**	**Q**	**A**
Check for Open Bulletins and Owner Registration	Q-1		
Test the Flashing Beacons (if equipped)	Q-8		
Test Fuel Select Operation - Gas/LPG Models	Q-13		
Test the Drive Brakes	Q-17		
Test Drive Speed – Stowed Position	Q-18		
Test Drive Speed – Raised Position	Q-19		
Test the Down Limit Switch, Level Sensor and Pothole Limit Switches - GS-30, GS-32, GS-46 and GS-47	Q-20		
Test the Platform Gate Proximity Switches and the Extension Deck Limit Switch - GS-2646 AV, GS-2646 AV35	Q-21		
Test the Down Limit Switch Descent Delay - GS-69, GS-84 and GS-90 (if equipped)	A-4	∅	

Downloaded from www.Manualslib.com manuals search engine

https://truckmanualshub.com/

Programmed Maintenance Inspection Report – Scissor Lifts

Model	Hour meter	Date
Serial number	Inspector company	Machine owner
Inspected by (print)	Inspector signature	

Programmed maintenance will be completed based on machine hours. This program includes the onetime or commissioning procedures for new products. The onetime procedures will be completed at 50 or 150 hours.	**Legend** Y = yes, acceptable N = no, remove from service R = repaired ∅ = not applicable	Make copies of this report to use for each inspection. Select the appropriate procedures for the type of inspection(s) to perform.

If any inspection receives an "N," tag and remove the machine from service, repair and re-inspect it. After repair, place a "R" in the box.

Commissioning		50	150
50 Hour Service - all models	C-1		∅
Perform Engine Maintenance - 50 Hours	C-2		∅
Perform 150 Hour Service	C-3	∅	

Programmed Maintenance - Under 1000 HRS		Status	Enter Hours
Inspect the Engine Air Filter - GS-69 RT	P0-1		40
Grease the Steer Yokes - GS-30, GS-32, GS-46 and GS-47	P0-2		100
Engines - Deutz Under 1000 Hours	P0-3		
Engines - Ford Under 1000 Hours	P0-4		
Engines - Kohler Under 1000 Hours	P0-5		
Engines - Kubota Under 1000 Hours	P0-6		
Engines - Perkins Under 1000 Hours	P0-7		
Engines - GM Under 1000 Hours	P0-8		

Programmed Maintenance		Hours are in thousands					
All models	**Perform every:**	**1**	**2**	**3**	**4**	**5**	**6**
Engines - all models, 1000 Hours	P1-1		∅	∅	∅	∅	∅
Replace the Drive Hub Oil - GS-69, GS-84 and GS-90	P1-2		∅	∅	∅	∅	∅
Engines - all models, 2000 Hours	P2-1	∅		∅	∅	∅	∅
Replace the Hydraulic Filters	P2-2	∅		∅	∅	∅	∅
Check the Free-wheel Configuration - GS-84 and GS-90	P2-3	∅		∅	∅	∅	∅
Check the Scissor Arm Wear Pads (and Slider Blocks, If Equipped)	P2-4	∅		∅	∅	∅	∅
Grease Steer Axle Wheel Bearings - GS-69 BE and GS-69 DC	P2-5	∅		∅	∅	∅	∅
Test or Replace the Hydraulic Oil	P2-6	∅		∅	∅	∅	∅
Engines - all models, 3000 Hours	P3-1	∅	∅		∅	∅	∅

Downloaded from www.Manualslib.com manuals search engine

https://truckmanualshub.com/

Commissioning Procedures

C-1
Perform 50 Hour Service

The 50 hour maintenance procedure is a one time sequence of procedures to be performed after the first 50 hours of usage. After this interval, refer to the maintenance inspection report for continued scheduled maintenance.

1 Perform the following maintenance procedures:

All Models:

Q-15 Inspect the Tires, Wheels and Lug/Castle Nut Torque

P1-2 Replace the Drive Hub Oil - GS-69, GS-84 and GS-90

P2-2 Replace the Hydraulic Filters

C-2
Perform Engine Maintenance - 50 Hours

The 50 hour maintenance procedure is a one time sequence of procedures to be performed after the first 50 hours of usage. After this interval, refer to the maintenance inspection report for continued scheduled maintenance.

Ford Models

- Oil, coolant, fuel, exhaust and vacuum hoses - check for leaks, damage or deterioration
- Electrical wiring - check for chafing or damage
- Engine oil - replace
- Oil filter - replace

Kubota Models

- Engine oil - replace
- Oil filter - replace

Kohler Models

- Engine oil - replace
- Oil filter - replace

GM Models

- Cylinder head bolts - torque 40.5 ft-lbs / 55 Nm)
- Valve clearance - check/adjust

Required maintenance procedures and additional engine information are available in the manufacturer's manuals. Refer to Specifications, *Engine Operator and Maintenance Manuals*.

Downloaded from www.Manualslib.com manuals search engine

https://truckmanualshub.com/

C-3
Perform 150 Hour Service

The 150 hour maintenance procedure is a one time sequence of procedures to be performed after the first 150 hours of usage. After this interval, refer to the maintenance tables for continued scheduled maintenance.

1 Perform the following maintenance procedures:

Q-9 Visual Inspection of the Hydraulic Oil

Q-10 Inspect the Hydraulic Filters

Downloaded from www.Manualslib.com manuals search engine

https://truckmanualshub.com/

Quarterly Maintenance Procedures

Q-1
Check for Open Bulletins and Owner Registration

Genie specifications require that this procedure be performed quarterly.

Completing required bulletins is essential to safe machine operation. An important way to ensure your machine has no open bulletins is to frequently check the serial number of your Genie machine against our bulletin database. Using the links below you can view any open bulletins for your machine(s) that require mandatory and immediate work to be completed.

Note: If you are unable to access this information on our websites, please contact your local Genie representative using the contact information provided on the back cover of this manual.

1 Locate the serial number plate or label on your machine and document your Genie machine serial number (exactly as its displayed on the serial plate or label).

2 Confirm that Genie has the current machine owner information on file by contacting our warranty department at 1-800-536-1800 or use the link included in this procedure to download and complete a New Owner Registration Form.

3 Using the link provided, check for current bulletins for your machine(s).

Machines purchased in Australia:

Go to Australia Bulletins (http://genielift.com.au/contact)

1 Contact any one of the Genie Service centers around Australia to arrange for factory trained technicians to attend to your equipment needs.

Machines purchased in ASIA, North America and Latin America:

Go to ASIA, North America and Latin America https://www.gogenielift.com/)

1 Select "Customer Login" to login or select "Request New Access" to create a new account.

2 At the homepage, select "Unit Configuration" and enter your machine serial number.

3 Press the "Lookup" button to view your machine configuration and to check for open bulletins.

4 Complete all required bulletins shown for your specific machine serial number.

Machines purchased in Europe, Middle East, Africa, and Russia:

Go to EMEAR Bulletins (http://www.genielift.co.uk/en/sales-and-support/bulletin-campaigns/index.htm)

1 Enter your machine serial number and press search to check for open bulletins.

2 Complete all required bulletins shown for your specific machine serial number.

Downloaded from www.Manualslib.com manuals search engine

https://truckmanualshub.com/

Q-2
Battery Inspection

Genie specifications require that this procedure be performed quarterly.

Proper battery condition is essential to good engine and machine performance and operational safety. Improper fluid levels or damaged cables and connections can result in engine and component damage and hazardous conditions.

WARNING Electrocution/burn hazard. Contact with electrically charged circuits could result in death or serious injury. Remove all rings, watches and other jewelry.

WARNING Bodily injury hazard. Batteries contain acid. Avoid spilling or contacting battery acid. Neutralize battery acid spills with baking soda and water.

Note: Fully charge the batteries and allow the batteries to rest 24 hours before performing this procedure to allow the battery cells to equalize.

1 If equipped: Release the battery pack latch and rotate the battery pack out and away from the chassis.

2 Be sure that the battery cable connections are free of corrosion.

Note: Adding terminal protectors and a corrosion preventative sealant will help eliminate corrosion on the battery terminals and cables.

3 Be sure that the battery retainers and cable connections are tight.

4 Be sure that the battery separator wire connections are tight (if equipped).

Models without maintenance-free or sealed batteries:

5 Put on protective clothing and eye wear.

6 Remove the battery vent caps and check the specific gravity of each battery cell with a hydrometer. Note the results.

7 Check the ambient air temperature and adjust the specific gravity reading for each cell as follows:

- Add 0.004 to the reading of each cell for every 10° F / 5.5° C above 80° F / 26.7° C.
- Subtract 0.004 from the reading of each cell for every 10° F / 5.5° C below 80° F / 26.7° C.

Result: All battery cells display an adjusted specific gravity of 1.277 or higher. The battery is fully charged. Proceed to step 11.

Result: One or more battery cells display a specific gravity of 1.276 or below. Proceed to step 8.

Downloaded from www.Manualslib.com manuals search engine

https://truckmanualshub.com/

Quarterly Maintenance Procedures

8 Perform an equalizing charge OR fully charge the battery(s) and allow the battery(s) to rest at least 6 hours.

9 Remove the battery vent caps and check the specific gravity of each battery cell with a hydrometer. Note the results.

10 Check the ambient air temperature and adjust the specific gravity reading for each cell as follows:

- Add 0.004 to the reading of each cell for every 10° F / 5.5° C above 80° F / 26.7° C.
- Subtract 0.004 from the reading of each cell for every 10° F / 5.5° C below 80° F / 26.7° C.

⊙ Result: All battery cells display a specific gravity of 1.277 or greater. The battery is fully charged. Proceed to step 11.

⊠ Result: One or more battery cells display a specific gravity from 1.218 to 1.269. The battery is still usable, but at a lower performance. The battery will need to be recharged more often. Proceed to step 11.

⊠ Result: One or more battery cells display a specific gravity from 1.217 to 1.173. The battery is approaching the end of its life. Proceed to step 11.

⊠ Result: The difference in specific gravity readings between cells is greater than 0.1 OR the specific gravity of one or more cells is less than 1.177. Replace the battery.

11 Check the battery acid level. If needed, replenish with distilled water to 1/8 inch / 3 mm below the bottom of the battery fill tube. Do not overfill.

12 Install the vent caps and neutralize any electrolyte that may have spilled.

GS-30, GS-32, GS-46, GS-47 and GS-69 DC:

1 Check each battery pack and verify that the batteries are wired correctly.

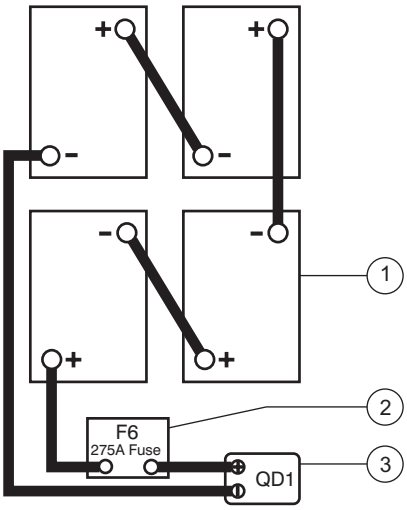

GS-30, GS-32, GS-46

1 batteries B5
2 275A fuse F6
3 quick disconnect QD1

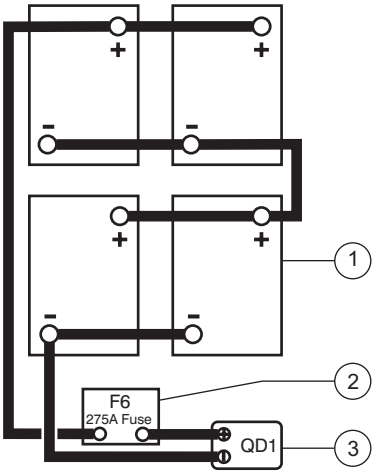

GS-47

1 batteries B5
2 275A fuse F6
3 quick disconnect QD1

Downloaded from www.Manualslib.com manuals search engine

https://truckmanualshub.com/

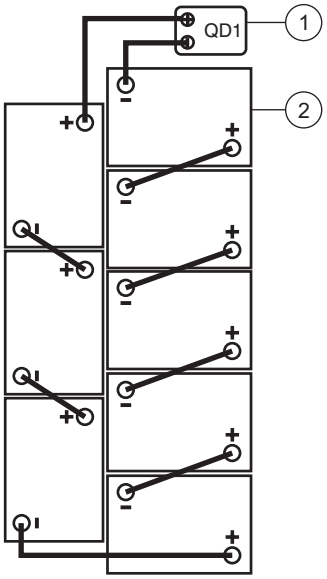

GS-69 DC

1 quick disconnect QD1
2 batteries B5

2 Inspect the battery charger plug and pigtail for damage or excessive insulation wear. Replace as required.

Q-3
Check the Module Tray Latch Components

Genie specifications require that this procedure be performed quarterly.

Maintaining the module tray latch components in good condition is essential to good performance and service life. Failure to detect worn out latch components may result in module trays opening unexpectedly, creating an unsafe operating condition.

1 Inspect each module tray latch and related components for wear. Tighten any loose fasteners.

2 Lubricate each module tray latch. Using light oil, apply a few drops to each of the springs and to the sides of the latch mechanism.

Downloaded from www.Manualslib.com manuals search engine

https://truckmanualshub.com/

Quarterly Maintenance Procedures

Q-4
Inspect the Battery Balancer - GS-69 DC

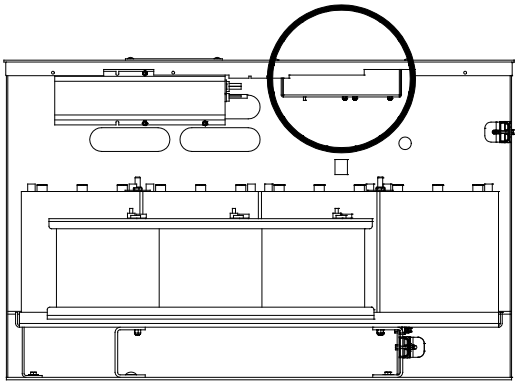

Genie specifications require that this procedure be performed quarterly.

1 Open the battery compartment and locate the fuse box.

2 Locate the LED indicator under the fuse box and watch the LED for 5 seconds to verify the battery balancer condition.

Mode	Led indicator	Condition
Balanced	Green - Steady	Voltage differential (< 0.3V)
Equalizing	Green - Blinking (1 per sec)	Voltage differential (> 0.3V)
Low or Over voltage Auto shutdown	Green w/ Orange blinking (1 every 4 seconds)	B- to 24V battery pack beyond normal range (< 18V or > 33V)
Low or Over voltage Auto shutdown	Green w/ Orange blinking (2 every 4 seconds)	24V to 48V battery pack beyond normal range (< 18V or > 33V)
24V circuit Disconnected	No LED	24V lead not connected
Auto shutdown	Red - Steady	1) Voltage differential, 8V between battery packs. OR 2) 48V disconnected.

Downloaded from www.Manualslib.com manuals search engine

https://truckmanualshub.com/

Q-5
Inspect the Electrical Wiring

Genie specifications require that this procedure be performed quarterly.

Maintaining electrical wiring in good condition is essential to safe operation and good machine performance. Failure to find and replace burnt, chafed, corroded or pinched wires could result in unsafe operating conditions and may cause component damage.

WARNING Electrocution/burn hazard. Contact with electrically charged circuits could result in death or serious injury. Remove all rings, watches and other jewelry.

1 Inspect the following areas for burnt, chafed, corroded pinched and loose wires:

Note: Inspection areas will vary by model.

- All wire harness connectors to ground control box
- Ground control panel
- Hydraulic power unit module tray
- Hydraulic tray
- Engine tray
- Engine wiring harness
- Generator cable
- Battery tray(s)
- Battery charger
- Scissor arms
- All wire harness connectors to platform control box
- ECM (GCON) to platform controls (PCON)
- Platform controls
- Power to platform wiring
- Harness connections
- Hydraulic manifold wiring
- Contactor
- Limit switches

2 Inspect for a lite, even coating of dielectric grease on all harness connections.

Note: Do not apply excessive amounts of dielectric grease to harness connectors, pins or sockets.

Note: Do not apply dielectric grease to a engine ECU/ECM or engine harness connectors.

Downloaded from www.Manualslib.com manuals search engine

https://truckmanualshub.com/

Quarterly Maintenance Procedures

Q-6
Inspect the Electrical Contactor - GS-30, GS-32, GS-46, GS-47, GS-69 DC and GS-69 BE

Genie specifications require that this procedure be performed quarterly.

Maintaining the electrical contactor in good condition is essential to safe machine performance. Failure to locate a worn or damaged contactor could result in unsafe operating conditions and may cause component damage.

1 **GS-30, GS-32, GS-46, GS-47**: Open the battery tray and disconnect the Anderson connector.

GS-69 DC, GS-69 BE: Open the contactor box below the ground control box.

2 Locate the electrical contactor mounted on the fuse bracket.

3 Visually inspect the contact points of the contactor for the following items:

- Excessive burns
- Excessive arcs
- Excessive pitting

WARNING Electrocution/burn hazard. Contact with electrically charged circuits could result in death or serious injury. Remove all rings, watches and other jewelry.

Note: Replace the contactor if any damage is found.

Q-7
Inspect the Voltage Inverter (if equipped)

Genie specifications require that this procedure be performed quarterly.

Perform this procedure more often if dusty conditions exist.

1 Inspect the inverter plug and pigtail for damage or excessive insulation wear. Replace as required.

2 Turn the key switch to the on position and pull out the red Emergency Stop button to the on position at both the ground and platform controls.

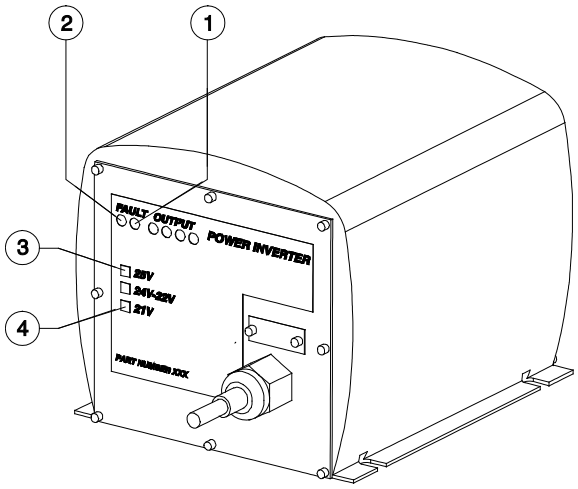

1 right fault LED
2 left fault LED
3 25V LED
4 21V LED

Downloaded from www.Manualslib.com manuals search engine

https://truckmanualshub.com/

3 Connect an appropriate power tool to the inverter. Activate the tool.

⊙ Result: The power tool should operate. There may be a brief (0.5 second) delay if the power tool has not been used in the previous 10 minutes.

⊠ If the left fault LED (REV_POL) is illuminated, the inverter is connected to batteries with the incorrect polarity. Correct the polarity issue with the red wire to battery positive and the black wire to battery negative. The inverter will then operate correctly and begin supplying AC power.

⊠ If the right fault LED (123) blinks one time, the power draw is too high. The tool being used requires too much power to operate or is being used at or near the limit of the inverter for an extended period of time. Reduce the power draw. The inverter will then operate correctly and begin supplying AC power.

⊠ If the right fault LED (123) blinks two times, the Ground Fault Interrupt (GFI) has been activated. A short circuit or partial short exists between the AC hot and ground in the tool or outlet. Check the tool for burnt, chafed, corroded and loose wires, and inspect the tool for internal moisture. Correct the short circuit or moisture issue OR inspect the wiring in the power-to-platform box. The inverter will then operate correctly and begin supplying AC power.

⊠ If right fault LED (123) blinks three times, the inverter is overheated. Allow the inverter to cool. The inverter will then operate correctly and begin supplying AC power.

⊠ If the battery 25 volt fault LED (25V) blinks one time, the battery voltage is over 30V. Operate the machine to lower the voltage level. The inverter will then operate correctly and begin supplying AC power.

⊠ If the battery 21 volt fault LED (21V) blinks one time, the battery voltage is less than 20V DC. The inverter will continue to operate until the battery voltage falls to 17.8V DC.

Q-8
Test the Flashing Beacons (if equipped)

Genie specifications require that this procedure be performed quarterly.

Flashing beacons are used to alert operators and ground personnel of machine proximity and motion. The flashing beacons are located on both sides of the machine.

1 Turn the key switch to ground control and pull out the red Emergency Stop button to the on position at both the ground and platform controls.

⊙ Result: The beacons should flash.

2 Turn the key switch to platform controls.

⊙ Result: The beacons should flash.

Downloaded from www.Manualslib.com manuals search engine

https://truckmanualshub.com/

Quarterly Maintenance Procedures

Q-9
Visual Inspection of the Hydraulic Oil

Genie specifications require that this procedure be performed quarterly.

Replacement or testing of the hydraulic oil is essential for good machine performance and service life. Dirty oil and a clogged suction strainer may cause the machine to perform poorly and continued use may cause component damage. Extremely dirty conditions may require oil changes to be performed more often. For hydraulic oil specifications, Refer to Specifications, *Hydraulic Specifications*.

Note: Before replacing the hydraulic oil, the oil may be tested by an oil distributor for specific levels of contamination to verify that changing the oil is necessary. Replace the oil when it fails the test. Refer to Maintenance Procedure, *Test or Replace the Hydraulic Oil*.

1 Collect a sample of hydraulic oil and place in a clear container. Visually inspect the hydraulic oil for the following:

- Color: oil should be a clear, light-honey colored
- Appearance, oil should be clear and not cloudy or visibly distorts the view through the sight glass or container
- Contains no particles, foreign objects, or other contamination
- The hydraulic oil can be inspected by smell (can smell “hot” but not “burnt”) or rubbing between fingers (should feel viscous and free of any rough feel due to particles)

⊙ If the hydraulic oil passes all of the above inspections, continue the scheduled maintenance intervals.

⊠ If the hydraulic oil fails any of the above inspections, the hydraulic oil must be tested by an oil distributor or replaced.

Note: If the hydraulic oil was not replaced at or before the 2000 hour maintenance interval, the oil must be tested every quarter by an oil distributor until the oil fails the test and is replaced. After the oil has been replaced, continue the scheduled quarterly maintenance inspection.

Note: When replacing the hydraulic oil, it is recommended that all hydraulic filters be replaced at the same time.

Downloaded from www.Manualslib.com manuals search engine

https://truckmanualshub.com/

Q-10
Inspect the Hydraulic Filters

Genie specifications require that this procedure be performed quarterly.

Maintaining the hydraulic filter in good condition is essential to good system performance and safe machine operation. The filter condition indicator will show when the hydraulic flow is bypassing a clogged filter. If the filter is not frequently checked and replaced, impurities will remain in the hydraulic system and cause component damage.

Note: There are four types of hydraulic filters: tank return filter, medium pressure filter, high pressure filter and drive motor case drain filter. The quantity and type of filter(s) may vary by model.

Models with Filter Condition Indicator:

1 Start the engine from the ground controls.

2 Set the engine idle to high rpm (rabbit symbol).

3 Visually inspect the filter condition indicator.

⊙ Result: The filter condition indicator is operating in the green area.

⊠ Result: The filter condition indicator is operating in the red area. This indicates that the hydraulic filter is being bypassed and the filter should be replaced. Refer to Maintenance Procedure, *Replace the Hydraulic Filters.*

Models without Filter Condition Indicator:

Note: Models without a filter condition indicator cannot be inspected. At the required maintenance interval, replace the filters.

Hydraulic Tank Cap (if equipped):

1 Remove the breather cap from the hydraulic tank.

2 Check for proper venting.

⊙ Result: Air passes through the breather cap. Proceed to step 4.

⊠ Result: If air does not pass through the cap, clean or replace the cap. Proceed to step 3.

Note: When checking for positive tank cap venting, air should pass freely through the cap.

3 Using a mild solvent, carefully wash the cap venting system. Dry using low pressure compressed air. Repeat this procedure beginning with step 2.

4 Install the breather cap onto the hydraulic tank.

Downloaded from www.Manualslib.com manuals search engine

https://truckmanualshub.com/

Quarterly Maintenance Procedures

Q-11
Check the Exhaust System - Engine Models

Genie specifications require that this procedure be performed quarterly.

Maintaining the exhaust system is essential to good engine performance and service life. Operating the engine with a damaged or leaking exhaust system can cause component damage and unsafe operating conditions.

WARNING Bodily injury hazard. Do not inspect while the engine is running. Remove the key to secure from operation.

CAUTION Burn hazard. Beware of hot engine components. Contact with hot engine components may result in severe burns.

1 Be sure that all nuts and bolts are tight.

2 Inspect all welds for cracks.

3 Inspect for exhaust leaks; i.e., carbon buildup around seams and joints.

Q-12
Inspect the Fuel Tank Check Valve Venting System - GS-69 RT Gas Models

Note: For machines located in the United States, EPA Certificate 40 CFR Part 1060 requires that the check valve be in proper working condition.

Genie specifications require that this procedure be performed quarterly.

Free-breathing fuel tank check valve is essential for good machine performance and service life. A dirty or clogged check valve may cause the fuel tank to not vent properly. Extremely dirty conditions may require that the check valve be inspected more often.

DANGER Explosion and fire hazard. Engine fuels are combustible. Perform this procedure in an open, well-ventilated area away from heaters, sparks, flames and lighted tobacco. Always have an approved fire extinguisher within easy reach.

1 Locate the check valve near the top of the fuel tank.

2 Remove the check valve from the fuel lines.

3 Check for proper venting.

⊙ Result: Air passes through the check valve. Proceed to step 4.

⊠ Result: If air does not pass through the check valve, replace the check valve. Proceed to step 4.

Note: When checking for positive venting, air should pass freely through the check valve only in one direction from the tank.

4 Securely install the check valve to the fuel lines.

Downloaded from www.Manualslib.com manuals search engine

https://truckmanualshub.com/

Q-13
Test the Fuel Select Operation - Gasoline/LPG Models

Genie specifications require that this procedure be performed quarterly.

The ability to select and switch between gasoline and LPG fuels as needed is essential to safe machine operation. A fuel selection can be made when the engine is running or not. Switching malfunctions and/or the failure of the engine to start and run properly in both fuel modes and through all idle speeds can indicate fuel system problems that could develop into a hazardous situation.

Note: Perform this test after checking the gasoline and LPG fuel levels, and warming the engine to normal operating temperature.

1 Start the engine from the platform controls and allow the engine to run at low idle.

2 Press high idle button at the platform controls to allow the engine to run at high idle.

⊙ Result: The high idle indicator light should be on and the engine should start promptly and operate smoothly in low and high idle.

3 Press high idle button again to return the engine to low idle.

⊙ Result: The high idle indicator light should turn off and the engine should return to low idle.

4 Press the engine stop button.

⊙ Result: The engine should stop.

5 Press the LPG operation button.

⊙ Result: The LPG indicator light should be on.

6 Start the engine and allow it to run at low idle.

7 Press high idle button to allow the engine to run at high idle.

⊙ Result: The high idle indicator light should be on and the engine should start promptly and operate smoothly in low and high idle.

Note: The engine may hesitate momentarily and then continue to run on the selected fuel if the fuel source is switched while the engine is running.

Downloaded from www.Manualslib.com manuals search engine

https://truckmanualshub.com/

Quarterly Maintenance Procedures

Q-14
Check and Adjust the Engine RPM - GS-69 RT, GS-84, GS-90

Engine specifications require that this procedure be performed quarterly.

Maintaining the engine rpm at the proper setting for both low and high idle is essential to good engine performance and service life. The machine will not operate properly if the rpm is incorrect and continued use may cause component damage.

Note: The on-board self diagnostics incorporate a built-in engine tachometer. The first two digits of the engine RPM are displayed on the diagnostic display when the start toggle switch is moved to the start position with the engine running. Engine RPM equals the first two digits multiplied by 100.

Note: These procedures do not apply to the following engine models. The engine RPM is controlled by the ECM and can only be adjusted by re-programming the ECM. If RPM or service is required, please contact Genie Product Support.

Ford Models: MSG-425 EFI

Deutz Models: D 2.9 L4

Note: Some procedures may require two people.

Note: For engine RPM information refer to *Specifications, Engine Specifications* for your engine model.

1 Start the engine from the ground controls.

2 Press and hold the start button or hold the start toggle switch and check the engine RPM on the diagnostic display.

⊙ Result: Low idle rpm is correct. Continue with step 3.

⊠ Result: Low idle rpm is not correct. Follow the low rpm idle procedure for your engine model.

3 Activate high idle (rabbit symbol).

4 Press and hold the start button or hold the start toggle switch and check the engine RPM on the diagnostic display.

⊙ Result: High idle rpm is correct.

⊠ Result: High idle rpm is not correct. Follow the high rpm idle procedure for your engine model.

Kubota WG-972:

Low rpm idle adjustment:

1 Loosen the core clamp screw so the cable moves freely.

2 Hold the throttle lever against the low idle adjustment screw.

3 Turn the adjustment screw clockwise to increase low rpm or counterclockwise to decrease low rpm.

4 While holding the throttle lever against the low idle adjustment screw, tighten the core clamp screw.

High rpm idle adjustment:

1 Loosen the lock nut on the high idle adjustment nut.

2 Turn the high idle adjustment nut clockwise to increase the high rpm or counterclockwise to decrease high rpm.

Downloaded from www.Manualslib.com manuals search engine

https://truckmanualshub.com/

3 Tighten the lock nut.

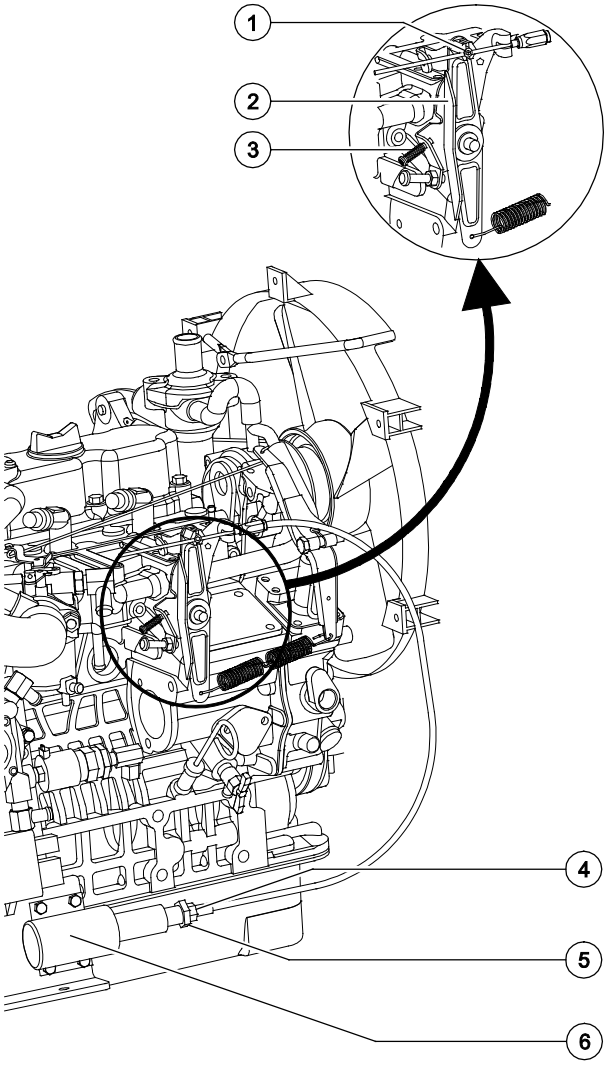

1 core clamp screw
2 throttle lever
3 low idle adjustment screw
4 lock nut
5 high idle adjustment nut
6 high idle solenoid

All other engine models:

Low rpm idle adjustment:

1 Loosen the lock nut on the low idle adjustment screw.

2 Turn the adjustment screw clockwise to increase low rpm or counterclockwise to decrease low rpm.

3 Tighten the lock nut.

High rpm idle adjustment:

1 Loosen the lock nut on the high idle adjustment nut.

2 Turn the high idle adjustment nut counterclockwise to increase the rpm or clockwise to decrease the rpm.

3 Tighten the lock nut.

Kubota D1105-E3B, D1105-E4B

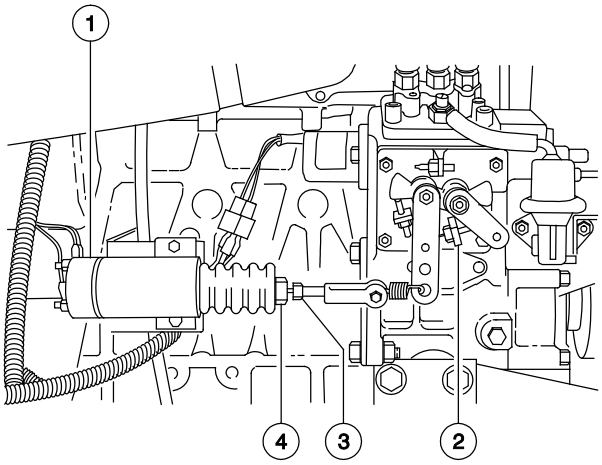

1 high idle solenoid
2 low idle adjustment screw
3 lock nut
4 high idle adjustment nut

Downloaded from www.Manualslib.com manuals search engine

https://truckmanualshub.com/

Quarterly Maintenance Procedures

Deutz D2011L03i

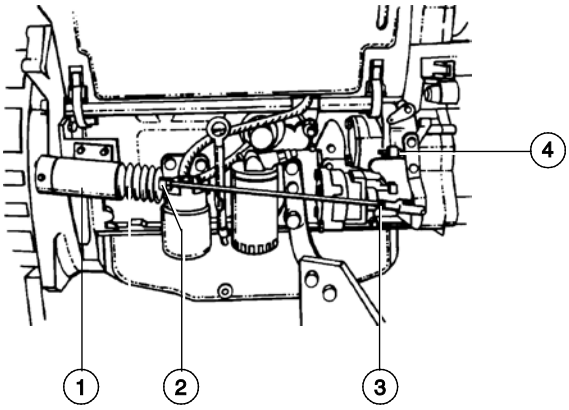

1 high idle solenoid
2 high idle adjustment nut
3 lock nut
4 low idle adjustment screw

Perkins 403D-11

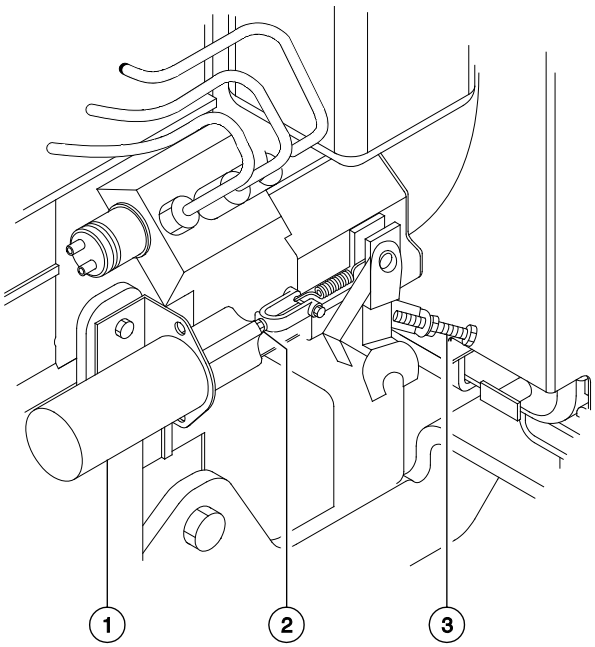

1 high idle solenoid
2 high idle adjustment nut
3 low idle adjustment screw

Q-15
Inspect the Tires and Wheels (including torque)

Genie specifications require that this procedure be performed quarterly.

Maintaining the tires and wheels, including proper wheel fastener torque, is essential to safe operation and good performance. Tire and/or wheel failure could result in a machine tip-over. Component damage may also result if problems are not discovered and repaired in a timely fashion.

WARNING Bodily injury hazard. An over-inflated tire can explode and could cause death or serious injury.

WARNING Tip-over hazard. Do not use temporary flat tire repair products.

Note: The tires on some machines are foam-filled or solid rubber and do not need air added to them.

1 Check all tire treads and sidewalls for cuts, cracks, punctures and unusual wear.

2 Check each wheel for damage, bends and cracked welds.

3 **Models with Lug Nuts**: Check each lug nut for proper torque. Refer to Specifications, *Machine Specifications*.

Models with Castle Nuts: Remove the cotter pin and check the castle nut for proper torque. Refer to Specifications, *Tire and Wheel Specifications*.

Note: Always replace the cotter pin with a new one when removing the castle nut or when checking the torque of the castle nut.

4 Check the pressure in each air-filled tire.

Downloaded from www.Manualslib.com manuals search engine

https://truckmanualshub.com/

Q-16
Confirm the Proper Brake Configuration - GS-69, GS-84, GS-90

Genie specifications require that this procedure be performed quarterly.

Proper brake configuration is essential to safe operation and good machine performance. Hydrostatic brakes, hydraulically and electrically released, spring-applied individual wheel brakes can appear to operate normally when they are actually not fully operational.

1 Check each drive hub disconnect cap to be sure it is in the engaged position.

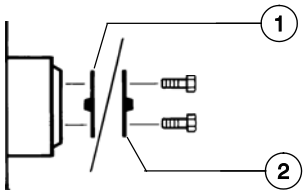

1 brake disengaged position
2 brake engaged position

Q-17
Test the Drive Brakes

Genie specifications require that this procedure be performed quarterly.

Proper brake action is essential to safe machine operation. The drive brake function should operate smoothly, free of hesitation, jerking and unusual noise. Hydraulically and electrically released, spring applied individual wheel brakes can appear to operate normally when they are actually not fully operational.

WARNING Collision hazard. Be sure that the machine is not in free-wheel or partial free-wheel configuration. Refer to maintenance procedure, *Confirm the Proper Brake Configuration*.

Note: Select a test area that is firm, level and free of obstructions.

Note: Be sure the platform deck extension deck is fully retracted and the platform is in the stowed position.

1 Mark a test line on the ground for reference.

2 Choose a point on the machine (i.e., contact patch of a tire) as a visual reference for use when crossing the test line.

3 Bring the machine to top drive speed before reaching the test line. Release the drive joystick when your reference point on the machine crosses the test line.

4 Measure the distance between the test line and your machine reference point. Refer to Specifications, *Performance Specifications*.

Note: The brakes must be able to hold the machine on any slope it is able to climb.

Downloaded from www.Manualslib.com manuals search engine

https://truckmanualshub.com/

Quarterly Maintenance Procedures

Q-18
Test the Drive Speed - Stowed Position

Genie specifications require that this procedure be performed quarterly.

Proper drive function is essential to safe machine operation. The drive function should respond quickly and smoothly to operator control. Drive performance should also be free of hesitation, jerking and unusual noise over the entire proportionally controlled speed range.

Note: Perform this procedure with the machine on a firm, level surface that is free of obstructions.

Note: Perform this procedure with the machine on a firm, level surface that is free of obstructions.

Note: Perform this procedure with the machine in the stowed position.

1 Create start and finish lines by marking two lines on the ground 40 feet / 12.2 m apart.

2 Choose a point on the machine (i.e., contact patch of a tire) as a visual reference for use when crossing the start and finish lines.

Note: Be sure the low drive speed light (if equipped) is off. If the low dive speed light is on, press the drive speed select button to turn off the low drive speed function.

3 Bring the machine to top drive speed before reaching the start line. Begin timing when your reference point on the machine crosses the start line.

4 Continue at full speed and note the time when the machine reference point crosses the finish line. Refer to Specifications, *Drive Speed Specifications*.

Q-19
Test the Drive Speed - Raised Position

Genie specifications require that this procedure be performed quarterly.

Proper drive function is essential to safe machine operation. The drive function should respond quickly and smoothly to operator control. Drive performance should also be free of hesitation, jerking and unusual noise over the entire proportionally controlled speed range.

1 Create start and finish lines by marking two lines on the ground 40 feet / 12.2 m apart.

2 **GS-30, GS-32, GS-46, GS-47**: Raise the platform approximately 4 feet / 1.2 m.

GS-69: Raise the platform approximately 6 ft / 2 m.

GS-84, GS-90: Raise the platform approximately 12 feet / 3.6 m.

3 Choose a point on the machine (i.e., contact patch of a tire) as a visual reference for use when crossing the start and finish lines.

4 Bring the machine to top drive speed before reaching the start line. Begin timing when your reference point on the machine crosses the start line.

5 Continue at full speed and note the time when the machine reference point crosses the finish line. Refer to Specifications, *Drive Speed Specifications*.

Downloaded from www.Manualslib.com manuals search engine

https://truckmanualshub.com/

Q-20
Test the Down Limit Switch, Level Sensor and Pothole Limit Switches - GS-30, GS-32, GS-46 and GS-47

Genie specifications require that this procedure be performed quarterly.

Maintaining the limit switches is essential to safe operation and good machine performance. Operating the machine with a faulty limit switch could result in reduced machine performance and a potentially unsafe operating condition.

Note: Perform this procedure with the machine on a firm, level surface that is free of obstructions.

1 Remove the platform controls from the platform.

2 Raise the platform 7 to 8 feet / 2.1 to 2.4 m.

3 Lift the safety arm, move it to the center of the scissor arm and rotate down to a vertical position.

4 Lower the platform onto the safety arm.

WARNING Crushing hazard. Keep hands clear of the safety arm when lowering the platform.

5 Turn the selector/key switch to the off position.

6 Tag and disconnect the platform control box at the platform.

7 Follow the platform control cable down the scissor stack to the alarm bracket on the chassis deck. Tag and disconnect the platform control cable from the GCON power control harness at the 6-pin Deutsch connector.

8 Securely install the platform control box harness plug into the 6-pin Deutsch connector of the GCON power control harness.

Down Limit Switch

9 Disable the down limit switch. Loosen the fastener securing the roller arm to the limit switch, and rotate the roller arm 90 degrees in a downwards direction. Do not activate the switch contacts.

10 Turn the selector/key switch to platform control.

11 Raise the platform and return the safety arm to the stowed position.

12 Working at the platform controls, lower the platform to the stowed position.

⊙ Result: The ground controls LCD displays "PHS: POTHOLE GUARDS STUCK" and the platform controls LED displays "PHS". The alarm sounds and the lift function operates. The machine is functioning properly. Refer to the Operation Indicator Codes below.

⊠ Result: The ground controls LCD does not display "PHS: POTHOLE GUARDS STUCK" and the platform controls LED does not display "PHS". The alarm does not sound and the lift function does not operate. Replace the down limit switch.

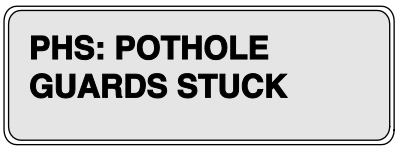

LCD display

LED display

Downloaded from www.Manualslib.com manuals search engine

https://truckmanualshub.com/

Quarterly Maintenance Procedures

13 Attempt to drive and steer the machine.

⊙ Result: The ground controls LCD displays "PHS: POTHOLE GUARDS STUCK" and the platform controls LED displays "PHS". The alarm sounds, and the drive and steer functions do not operate. The machine is functioning properly.

⊠ Result: The ground controls LCD does not display "PHS: POTHOLE GUARDS STUCK" and the platform controls LED does not display "PHS". The alarm does not sound, and the steer and drive functions operate. Replace the down limit switch.

14 Raise the platform approximately 12 inches / 0.3 m.

⊙ Result: The ground controls LCD displays "PHS: POTHOLE GUARDS STUCK" and the platform controls LED displays "PHS". The alarm sounds. The machine is functioning properly.

⊠ Result: The ground controls LCD does not display "PHS: POTHOLE GUARDS STUCK" and the platform controls LED does not display "PHS". The alarm does not sound. Replace the down limit switch.

15 Raise the platform 7 to 8 feet / 2.1 to 2.4 m.

16 Lift the safety arm, move it to the center of the scissor arm and rotate down to a vertical position.

17 Lower the platform onto the safety arm.

⚠WARNING Crushing hazard. Keep hands clear of the safety arm when lowering the platform.

18 Turn the selector/key switch to the off position.

19 Enable the down limit switch. Loosen the fastener securing the roller arm to the limit switch, and rotate the roller arm 90 degrees in a upwards direction. Do not activate the switch contacts.

20 Turn the selector/key switch to ground control.

21 Raise the platform and return the safety arm to the stowed position.

22 Lower the platform to the stowed position.

Downloaded from www.Manualslib.com manuals search engine

https://truckmanualshub.com/

Level Sensor

23 Move the machine onto a grade which exceeds the rating of the level sensor. Refer to the serial label on the machine.

24 Standing on the up-hill side of the machine, attempt to raise the platform to approximately 8 feet / 2.4 m.

⊙ Result: The ground controls LCD displays "LL: MACHINE TILTED" and the platform controls LED displays "LL". The alarm sounds and the platform stops lifting after the pothole guards are deployed. The machine is functioning properly. Refer to the Operation Indicator Codes below.

⊙ Result: The ground controls LCD does not display "LL: MACHINE TILTED" and the platform controls LED does not display "LL". The alarm does not sound and the platform continues to lift after the pothole guards are deployed. Adjust or replace the level sensor.

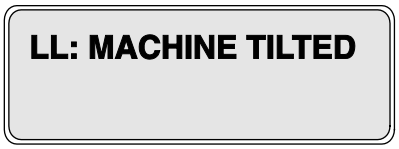

LCD display

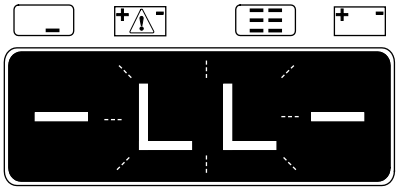

LED display

25 Standing on the up-hill side of the machine, attempt to drive and steer the machine.

⊙ Result: The ground controls LCD displays "LL: MACHINE TILTED" and the platform controls LED displays "LL". The alarm sounds, and the machine will not steer or drive. The machine is functioning properly.

⊠ Result: The ground controls LCD does not display "LL: MACHINE TILTED" and the platform controls LED does not display "LL". The alarm does not sound and the steer and drive functions operate. Adjust or replace the level sensor.

26 Lower the platform to the stowed position. Move the machine onto a firm, level surface.

Pothole Limit Switches

27 Place a wooden block approximately 2 inches / 5 cm tall under the right pothole guard.

Downloaded from www.Manualslib.com manuals search engine

https://truckmanualshub.com/

Quarterly Maintenance Procedures

28 Attempt to raise the platform to approximately 8 feet / 2.4 m.

⊙ Result: The pothole guard contacts the block and does not fully deploy. The ground controls LCD displays "PHS: POTHOLE GUARDS STUCK" and the platform controls LED displays "PHS". The alarm sounds and the platform will lift to 8 feet / 2.4 m or beyond. The machine is functioning properly. Refer to the Operation Indicator Codes below.

⊠ Result: The pothole guard contacts the block and does not fully deploy. The ground controls LCD does not display "PHS: POTHOLE GUARDS STUCK" and the platform controls LED does not display "PHS". The alarm does not sound and the machine will continue to lift the platform after the pothole guards are deployed. Adjust or replace the pothole limit switch.

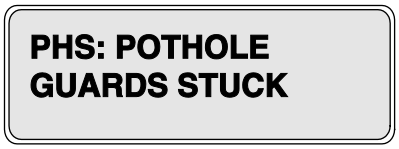

LCD display

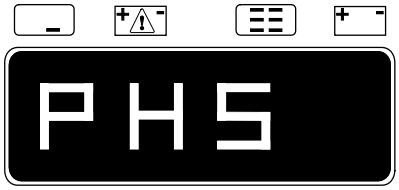

LED display

29 Attempt to drive and steer the machine.

⊙ Result: The ground controls LCD displays "PHS: POTHOLE GUARDS STUCK" and the platform controls LED displays "PHS". The alarm sounds, and the machine will not steer or drive. The machine is functioning properly.

⊠ Result: The ground controls LCD does not display "PHS: POTHOLE GUARDS STUCK" and the platform controls LED does not display "PHS". The alarm does not sound and the steer and drive functions operate. Adjust or replace the down limit switch.

30 Lower the platform to the stowed position and remove the block under the right pothole guard.

31 Repeat this procedure beginning with step 30 for the left pothole guard.

32 Lower the platform to the stowed position, remove the block under the left pothole guard.

33 Raise the platform 7 to 8 feet / 2.1 to 2.4 m.

34 Lift the safety arm, move it to the center of the scissor arm and rotate down to a vertical position.

35 Lower the platform onto the safety arm

⚠WARNING Crushing hazard. Keep hands clear of the safety arm when lowering the platform.

36 Turn the selector/key switch to the off position.

37 Disconnect the platform controls (PCON) from the platform control cable.

38 Securely install the connector of the GCON power control harness into the platform control cable.

39 Working at the platform, securely install the connector from the platform controls (PCON) into the platform control cable.

40 Raise and return the safety arm to the stowed position.

41 Turn off the machine.

Downloaded from www.Manualslib.com manuals search engine

https://truckmanualshub.com/

Q-21
Test the Platform Gate Proximity Switches and the Extension Deck Limit Switch - GS-2646 AV, GS-2646 AV35

Genie specifications require that this procedure be performed quarterly.

Maintaining the limit switches is essential to safe operation and good machine performance. Operating the machine with a faulty limit switch could result in reduced machine performance and a potentially unsafe operating condition.

Perform these procedures with the machine on a firm, level surface that is free of obstructions.

Platform Gate Proximity Switches:

1 Raise the platform approximately 8 feet / 2.4 m from the ground.

2 Open the rear entry gate and prop open.

3 Attempt to raise the platform for approximately 2 seconds and release. Attempt to lower the platform for approximately 2 seconds and release.

⊙ Result: The platform up and down functions do not operate. The ground controls LCD displays "Fd: FUNCTION DISABLED" and the platform controls LED displays "Ld". The machine is functioning properly.

⊠ Result: The platform up and down functions operate.The ground controls LCD does not display "Fd: FUNCTION DISABLED" and the platform controls LED does not display "Ld". Adjust or replace the rear entry proximity switch.

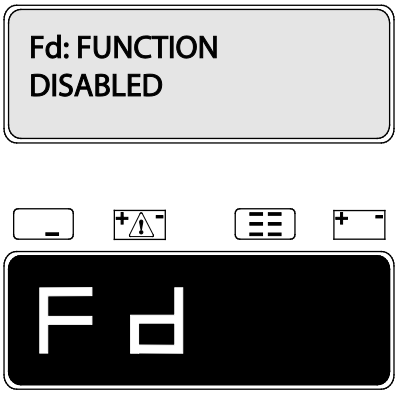

Downloaded from www.Manualslib.com manuals search engine

https://truckmanualshub.com/

Quarterly Maintenance Procedures

4 Attempt to drive and steer the machine.

⊙ Result: The drive and steer functions do not operate.The ground controls LCD displays "Fd: FUNCTION DISABLED" and the platform controls LED displays "Ld". The machine is functioning properly.

⊠ Result: The drive and steer functions operate. The ground controls LCD does not display "Fd: FUNCTION DISABLED" and the platform controls LED does not display "Ld". Adjust or replace the rear entry proximity switch.

5 Press and hold the powered extension deck function enable button (if equipped).

6 Press the powered extension deck extend button for approximately 2 seconds and release. Press the powered extension deck retract button for approximately 2 seconds and release.

⊙ Result: The powered extension deck extend and retract functions do not operate. The ground controls LCD displays "Fd: FUNCTION DISABLED" and the platform controls LED displays "Ld". The machine is functioning properly.

⊠ Result: The powered extension deck extend and retract functions operate.The ground controls LCD does not display "Fd: FUNCTION DISABLED" and the platform controls LED does not display "Ld". Adjust or replace the rear entry proximity switch.

7 Fully close the rear entry gate.

8 Open the front entry gate and prop open.

9 Repeat steps 3 through 6.

10 Fully close the front entry gate.

Extension Deck Limit Switch

11 Deploy the manual extension deck or the powered extension deck (if equipped), approximately 2 ft / 0.6 m.

12 Attempt to raise the platform for approximately 2 seconds and release. Attempt to lower the platform for approximately 2 seconds and release.

⊙ Result: The platform up and down functions do not operate. The ground controls LCD displays "dE: DECK EXTENDED" and the platform controls LED displays "dE". The machine is functioning properly.

⊠ Result: The platform up and down functions operate. The ground controls LCD does not display "dE: DECK EXTENDED" and the platform controls LED does not display "dE". Adjust or replace the extension deck limit switch.

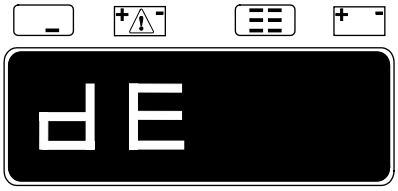

13 Attempt to drive and steer the machine.

⊙ Result: The drive and steer functions do not operate. The ground controls LCD displays "dE: DECK EXTENDED" and the platform controls LED displays "dE". The machine is functioning properly.

⊠ Result: The drive and steer functions operate. The ground controls LCD displays "dE: DECK EXTENDED" and the platform controls LED displays "dE". Adjust or replace the extension deck limit switch.

Downloaded from www.Manualslib.com manuals search engine

https://truckmanualshub.com/

A-1
Check the Drive Hub Oil Level and Fastener Torque - GS-69, GS-84 and GS-90

Genie specifications require that this procedure be performed quarterly.

Failure to maintain proper drive hub oil levels may cause the machine to perform poorly and continued use may cause component damage.

1 Drive the machine to rotate the hub until the plugs are located one on top and the other at 90 degrees.

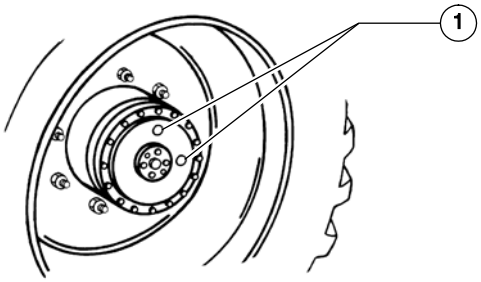

1 drive hub plugs

2 Remove the plug located at 90 degrees and check the oil level.

⊙ Result: The oil level should be even with the bottom of the plug hole.

3 If necessary, remove the top plug and add oil until the oil level is even with the bottom of the side plug hole.

4 Install the plug(s) into the drive hub.

5 Check the torque of the drive hub mounting bolts. Refer to Specifications, *Machine Torque Specifications*.

6 Repeat this procedure for each drive hub.

Torque specifications	
Drive hub mounting bolts	180 ft-lbs 244 Nm

A-2
Test the Function Pump GS-69 BE and GS-69 DC

Genie specifications require that this procedure be performed annually.

Proper pump function is essential to safe oscillate operation and machine function.

Note: Perform this procedure on a firm, level surface with the platform in the stowed position and the platform extension deck fully retracted.

1 Lower the platform to the stowed position.

2 Turn the key switch to ground control and pull out the red Emergency Stop button to the on position at both ground and platform controls.

Downloaded from www.Manualslib.com manuals search engine

https://truckmanualshub.com/

Annual Maintenance Procedures

3 At the ground controls, record the time it takes to fully raise the platform.

⊙ Result: The time to fully elevate the platform is at or less than the table shown below. The efficiency of the function pump is good.

GS-2669	55 seconds
GS-3369	60 seconds
GS-4069	94 seconds

⊠ Result: The time to fully elevate the platform is greater than the table shown above, Refer to Repair Procedure in the appropriate Service and Repair Manual for your machine, *How to Set Up the Machine from Ground Controls*. Repeat the above procedure.

Note: If the above times can not be achieved, the machine must be tagged and removed from service until the function pump is repaired or replaced.

DANGER Tip-over hazard. Failure to repair or replace the function pump as instructed could compromise the stability of the machine resulting in death or serious injury.

A-3
Test the Oscillate Axle - GS-90

Genie specifications require that this procedure be performed annually.

The oscillate system is designed so that all four tires maintain firm contact with the ground on unlevel terrain, improving traction and machine stability.

Proper axle oscillation is essential to safe machine operation. If the axle oscillation system is not operating correctly, the stability of the machine is compromised and it may tip over.

Note: Perform this procedure on a firm, level surface with the platform in the stowed position in a safe, secure location away from obstacles and with an area working height of 20 ft / 6 m.

Note: The outrigger, if equipped, must be fully retracted.

1 Disconnect and remove the platform controller from the platform.

2 Open the ground control panel door and locate the cable connector below the ground controls. Unplug the control cable from the ground control plug and connect the platform controller to the cable.

3 Remove the two retaining fasteners from the ground control panel and set aside. Tilt the control panel out towards you exposing the wiring and relays.

Downloaded from www.Manualslib.com manuals search engine

https://truckmanualshub.com/

Test the down limit switch and relay K11

Note: Perform this test using the platform controls while standing on the ground as described below.

4 At the ground controls, turn the key switch to platform controls and pull out the red Emergency Stop button.

5 Pull out the red Emergency Stop button on the platform controller and start the engine.

6 Using a volt meter, check for voltage by connecting the positive lead to relay K11, terminal 30 and connecting the negative lead to the ground strip terminal.

⊙ Result: The volt meter should read 12V DC or greater.

⊠ Result: The volt meter reads 0V DC. Check the down limit switch LS6.

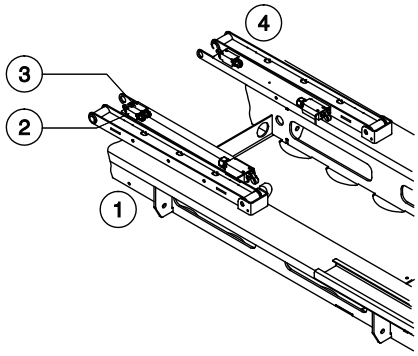

1 ground control side
2 down limit switch LS6
3 load sense delay LS25 (CE models only)
4 hydraulic tank side

7 Using a volt meter, check for voltage by connecting the positive lead to relay K11, terminal 87 and connecting the negative lead to the ground strip terminal.

⊙ Result: The volt meter should read 0V DC.

⊠ Result: The volt meter reads 12V DC or greater. Check the green wire on terminal 86 for voltage. If yes, the drive controller is activated or the ECU needs to be replaced.

8 Press the drive speed button and select high speed drive mode.

⊙ Result: The green LED should go off.

⊠ Result: The green LED stays on. Check the down limit switch LS6 for an open circuit.

9 Raise the platform until the green LED comes on.

10 Using a volt meter, check for voltage by connecting the positive lead to relay K11, terminal 30 and connecting the negative lead to the ground strip terminal.

⊙ Result: The volt meter should read 0V DC.

⊠ Result: The volt meter reads 12V DC or greater. Check the down limit switch for a closed circuit.

11 Using a volt meter, check for voltage by connecting the positive lead to relay K11, terminal 87 and connecting the negative lead to the ground strip terminal.

⊙ Result: The volt meter should read 0V DC.

⊠ Result: The volt meter reads 12V DC or greater. Check the relay K11 for an internal short to power.

12 Lower the platform to the stowed position.

Downloaded from www.Manualslib.com manuals search engine

https://truckmanualshub.com/

Annual Maintenance Procedures

Oscillate Float Test

Note: The following procedure will require two people.

13 Using a volt meter, check for voltage by connecting the positive lead to terminals D2, D3, D4 and D5. Connect the negative lead to the ground strip terminal. Slowly move the drive controller just off center.

WARNING Crushing Hazard. Stay clear of the machine when performing this procedure. Movement of the machine could result in death or serious injury.

⊙ Result: The volt meter should read 12V DC or greater.

⊠ Result: The volt meter reads 0V DC. Do not proceed. Contact Genie Product Support for assistance.

Test the Oscillating Axle Limit Switches

14 Using the jumper wire, jump from relay K12, terminal 87A to terminal D3 below the white wire.

⊙ Result: The right steer end oscillate cylinder will extend causing the machine to tilt towards you. This simulates closing the left rear limit switch causing the right oscillate cylinder to extend.

⊠ Result: No movement. Verify there is voltage on the jumper wire. Check for voltage on relay K12, terminal 30.

⊠ Oscillate operates in the incorrect direction. Do not proceed. Contact Genie Product Support.

Note: Remove the jumper wire from relay K12 and terminal D3 after the limit switch activates the oscillate in the opposite direction.

15 Using the jumper wire, jump from relay K12, terminal 87A to terminal D4 below the blue wire.

⊙ Result: The left steer end oscillate cylinder will extend causing the machine to tilt away from you. This simulates closing the right rear limit switch causing the left oscillate cylinder to extend.

⊠ Result: No movement. Verify there is voltage on the jumper wire. Check for voltage on relay K12, terminal 30.

⊠ Oscillate operates in the incorrect direction. Do not proceed. Contact Genie Product Support.

Note: Remove the jumper wire from relay K12 and terminal D4 after the limit switch activates the oscillate in the opposite direction.

16 Using a volt meter, check for voltage by connecting the positive lead to relay K12, terminal 87 and connecting the negative lead to the ground strip terminal.

⊙ Result: The volt meter should read 0V DC.

⊠ Result: The volt meter reads 12V DC or greater. Check terminal 86 for voltage. If yes, the drive controller is activated or the ECU needs to be replaced.

17 Move the drive controller just of center in a safe driving direction.

⊙ Result: The volt meter should read 12V DC or greater.

⊠ Result: The volt meter reads 0V DC. Do not proceed. Contact Genie Product Support for assistance.

Downloaded from www.Manualslib.com manuals search engine

https://truckmanualshub.com/

18 Push in the red Emergency Stop button on the platform controller and on the ground controls. Turn the key switch to the off position.

19 Close the ground control panel and secure using the fasteners removed in Step 3 and securely tighten.

20 Disconnect the platform controller from the control cable and securely connect the control cable to the ground control plug. Close the ground control panel door.

21 Install the platform controller in the platform.

22 Perform the function tests. Refer to the Operator's Manual on your machine.

23 Return the machine to service.

A-4
Test the Down Limit Switch Descent Delay (if equipped) GS-69, GS-84 and GS-90

Genie specifications require that this procedure be performed annually.

Check the Down Limit Switch Rocker Arm Orientation

1 Turn the key switch to ground controls and pull out the red Emergency Stop button to the on position at both ground and platform controls.

2 Raise the platform approximately 16 ft / 5 m.

3 Push in the red Emergency Stop button to the off position.

4 Verify the limit switch rocker arms are adjusted 30° from the vertical position.

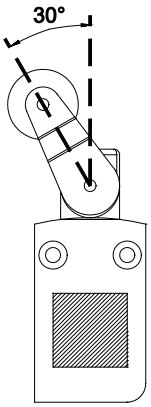

Downloaded from www.Manualslib.com manuals search engine

https://truckmanualshub.com/

Annual Maintenance Procedures

Check the Descent Delay Function

1 **GS-69**: Raise the platform approximately 10 ft / 3 m.

GS-84 and GS-90: Raise the platform approximately 15 ft / 4.6 m.

2 Lower the platform until the down limit switch activates and the platform stops lowering. Quickly release the controls and then immediately attempt to lower the platform to the stowed position.

⊙ Result: The platform will not lower for 4 to 6 seconds. Release the joystick and proceed to step 3

⊠ Result: The platform continues to lower. Confirm that the descent delay option has been selected to on. Refer to Repair Procedure in the appropriate Service and Repair Manual for your machine, *How to Setup the Machine or Software Configuration*. Repeat this procedure.

3 Lower the platform to the stowed position.

Check the Down Limit Switch Height

1 **GS-69**: Raise the platform approximately 10 ft / 3 m.

GS-84 and GS-90: Raise the platform approximately 15 ft / 4.6 m.

2 Lower the platform until the down limit switch activates and the platform stops lowering.

3 Push in the red Emergency Stop button to the off position.

4 Measure the distance between the working surface and the platform deck.

GS-2669	63 to 69 inches 1.6 to 1.75 m
GS-3369	66 to 72 inches 1.7 to 1.83 m
GS-4069	76 to 82 inches 1.9 to 2.1 m
GS-3384 **GS-3390**	95 to 107 in 2.4 to 2.7 m
GS-4390	106 to 118 in 2.7 to 3.0 m
GS-5390	118 to 130 in 3.0 to 3.3 m

Downloaded from www.Manualslib.com manuals search engine

https://truckmanualshub.com/

A-5
Test the Platform Overload Pressure Transducer and Platform Height Sensor - GS-30, GS-32, GS-46 and GS-47 (if equipped)

Genie specifications require that this procedure be performed annually OR when the machine fails to lift the maximum rated load.

Testing the platform overload pressure transducer and platform height sensor regularly is essential to safe machine operation. Continued use of an improperly operating platform overload pressure transducer or platform height sensor could result in the system not sensing an overloaded platform condition. Machine stability could be compromised resulting in the machine tipping over.

Note: Perform this procedure with the machine on a firm, level surface that is free of obstructions.

1 Turn the key switch to ground control and pull out the red Emergency Stop button to the on position at both ground and platform controls.

2 Raise the platform 7 to 8 feet / 2.1 to 2.4 m.

3 Lift the safety arm, move it to the center of the scissor arm and rotate down to a vertical position.

4 Lower the platform onto the safety arm.

WARNING Crushing hazard. Keep hands clear of the safety arm when lowering the platform.

5 At the ground controls, turn the key switch to the off position and push in the red Emergency Stop button to the off position.

Pressure Transducer

6 Working at the barrel end of the lift cylinder, follow the pressure transducer cable down the scissor stack to its end point, at the chassis deck.

7 Using the positive post of a multimeter probe, securely fit the post into pin C of the pressure transducer cable rubber boot. Refer to the illustration below.

8 Using the negative post of a multimeter probe, securely fit the post into pin B of the pressure transducer cable rubber boot. Refer to the illustration below.

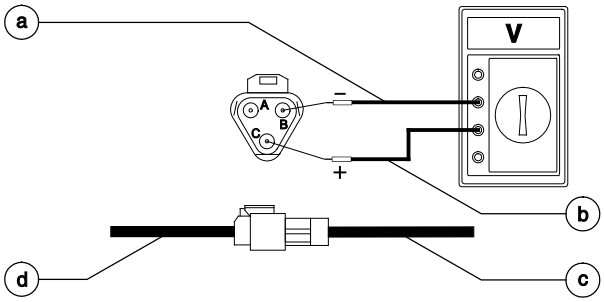

a negative post
b positive post
c pressure transducer cable
d pressure transducer sensor harness

Downloaded from www.Manualslib.com manuals search engine

https://truckmanualshub.com/

Annual Maintenance Procedures

9 Turn the key switch to ground controls and pull out the ground controls red Emergency Stop button to the on position.

10 Using the multimeter, measure the voltage reading of the pressure transducer at pin C and B.

GS-1532, GS-1932, GS-2032, GS-2632, GS-2046, GS-2646 and GS-3246

⊙ Result: The voltage reading of the pressure transducer is between 1V and 5V. The pressure transducer is functioning properly.

⊠ Result: The voltage reading of the pressure transducer is between 0V and 1V. The pressure transducer is not functioning properly. Replace the pressure transducer. Refer to Repair Procedure in the appropriate Service and Repair Manual for your machine, *How to Remove the Pressure Transducer (if equipped).*

GS-3232 and GS-4047

⊙ Result: The voltage reading of the pressure transducer is between 0.2V and 6.25V. The pressure transducer is functioning properly.

⊠ Result: The voltage reading of the pressure transducer is between 0V and 0.2V or greater than 6.25V. The pressure transducer is not functioning properly. Replace the pressure transducer. Refer to Repair Procedure in the appropriate Service and Repair Manual for your machine, *How to Remove the Pressure Transducer (if equipped).*

11 At the ground controls, turn the key switch to the off position and push in the red Emergency Stop button to the off position.

12 Remove the probes from the rubber boot of the pressure transducer cable.

Platform Height Sensor

13 Working at platform height sensor assembly, follow the platform height sensor cable to its end point at the chassis deck.

14 Using the positive post of a multimeter probe, securely fit the post into pin C of the platform height sensor cable rubber boot. Refer to the illustration below.

15 Using the negative post of a multimeter probe, securely fit the post into pin B of the platform height sensor cable rubber boot. Refer to the illustration below.

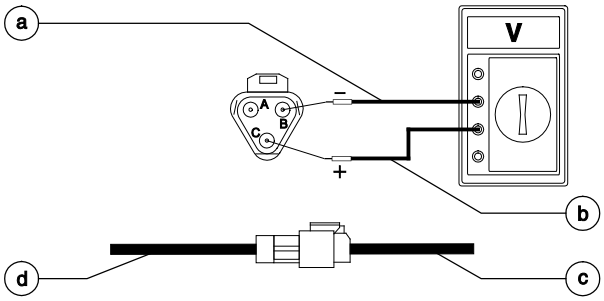

a negative post
b positive post
c platform height sensor cable
d GCON platform height sensor wire harness

16 Turn the key switch to ground controls and pull out the ground controls red Emergency Stop button to the on position.

Downloaded from www.Manualslib.com manuals search engine

https://truckmanualshub.com/

17 Using the multimeter, measure the voltage reading of the pressure transducer at pin C and B.

⊙ Result: The voltage reading of the platform height sensor is between 1V and 4V. The platform height sensor is functioning properly.

⊠ Result: The voltage reading of the platform height sensor is 0V or above 5V. The platform height sensor is not functioning properly. Replace the platform height sensor. Refer to Repair Procedure in the appropriate Service and Repair Manual for your machine, *How to Disassemble the Platform Height Sensor Assembly (if equipped).*

18 At the ground controls, turn the key switch to the off position and push in the red Emergency Stop button to the off position.

19 Remove the probes from the rubber boot of the platform height sensor cable.

20 Turn the key switch to ground controls and pull out the ground controls red Emergency Stop button to the on position.

21 Raise the platform 12 inches / 30.5 cm.

22 Return the safety arm to the stowed position.

23 Lower the platform to the stowed position.

24 Turn the key switch to the off position.

Downloaded from www.Manualslib.com manuals search engine

https://truckmanualshub.com/

Annual Maintenance Procedures

A-6
Test the Platform Overload System - GS-30, GS-32, GS-46 and GS-47 (if equipped)

Genie specifications require that this procedure be performed annually OR when the machine fails to lift the maximum rated load.

Testing the platform overload system regularly is essential to safe machine operation. Continued use of an improperly operating platform overload system could result in the system not sensing an overloaded platform condition. Machine stability could be compromised resulting in the machine tipping over.

The platform overload system is designed to prevent machine operation in the event the platform is overloaded. Models equipped with the platform overload option are provided with two additional machine control components: the overload pressure transducer and the platform height sensor.

The overload pressure transducer, located at the barrel-end of the lift cylinder, is used to determine the pressure inside the lift cylinder.

The platform height sensor, located at the steer end of the chassis, battery side, is used to determine the height of the platform.

The overload pressure transducer and the platform height sensor provide the GCON with necessary information to determine the load in the platform.

Note: The overload system will not measure loads at or below the height of the Down Limit Switch.

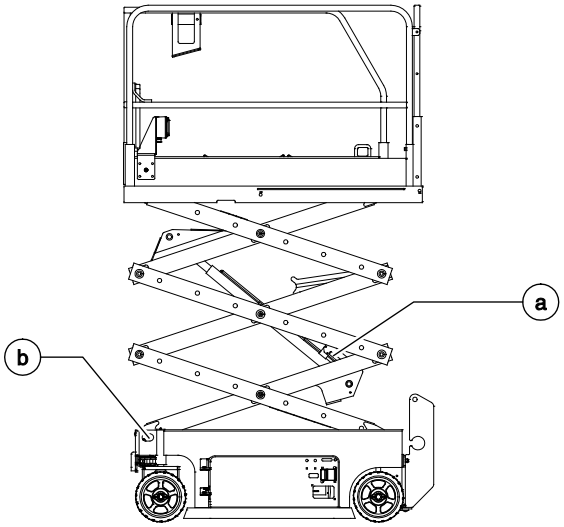

a overload pressure transducer
b platform height sensor

1 Turn the key switch to the ground controls position and pull out the red Emergency Stop button to the on position at the platform controls.

Downloaded from www.Manualslib.com manuals search engine

https://truckmanualshub.com/

2 Press and hold the ground control scroll up and scroll down buttons.

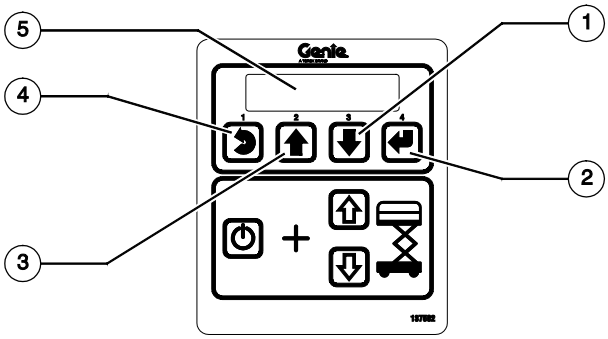

Ground Control Menu Buttons

1 scroll down button
2 enter button
3 scroll up button
4 escape button
5 LCD display

3 Pull out the red Emergency Stop button to the on position at the ground controls.

⊙ Result: The ground controls LCD display will show the following:

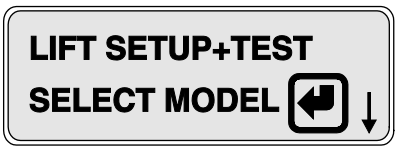

4 Press the ground control scroll down button.

⊙ Result: The ground controls LCD display will show the following:

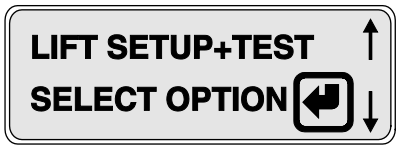

5 Press the Enter button.

⊙ Result: The ground controls LCD display will show the following:

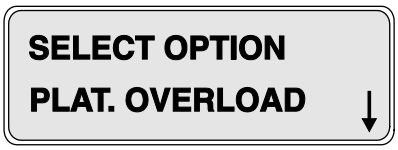

6 Press the Enter button.

⊙ Result: The ground controls LCD display will show the following:

7 Press the scroll up and scroll down buttons at the same time.

⊙ Result: The ground controls LCD display will show the following:

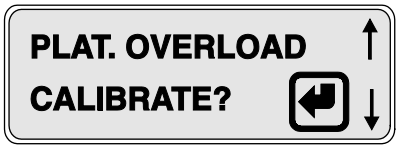

8 Press the Enter button.

Downloaded from www.Manualslib.com manuals search engine

https://truckmanualshub.com/

9 Follow the menu structure to complete the NO LOAD calibration procedure.

⊙ Result: The ground controls LCD display will show the following:

CAL COMPLETE.
PRESS ESTOP

⊠ Result: Fault code with description is displayed. Refer to the repair procedure in the appropriate Service and Repair Manual for your machine, *How to Calibrate the Platform Overload System (if equipped)*.

FAULT CODE: NAME.
FAULT DESCRIPTION

Note: The FULL LOAD calibration procedure must be performed if the ground control box has been replaced.

Note: Ambient temperature must be above 32°F / 0°C before calibrating the platform overload system.

A-7
Test the Platform Overload System - GS-69 (if equipped)

Genie specifications require that this procedure be performed annually OR when the machine fails to lift the maximum rated load.

Testing the platform overload system regularly is essential to safe machine operation. Continued use of an improperly operating platform overload system could result in the system not sensing an overloaded platform condition. Machine stability could be compromised resulting in the machine tipping over.

1 Disconnect the platform controls (PCON) from the machine at the platform.

2 Open the side covers at the ground controls side of the machine.

3 Locate the GCON power control harness 6 pin connector to platform controls connection below and behind the control box.

4 Tag and disconnect the PCON power control cable from the GCON control harness.

5 Securely connect the platform controls (PCON) to the GCON control harness.

6 Raise the platform approximately 10 feet / 3 m.

Downloaded from www.Manualslib.com manuals search engine

https://truckmanualshub.com/

7 Lift the safety arm, move it to the center of the scissor arm and rotate down to a vertical position.

8 Lower the platform onto the safety arm.

WARNING Crushing hazard. Keep hands clear of the safety arm when lowering the platform.

9 Turn the key switch to the off position.

10 Locate and remove the maximum height limit switch from the lower slider channel and set aside.

Note: Do not disconnect the limit switch harness.

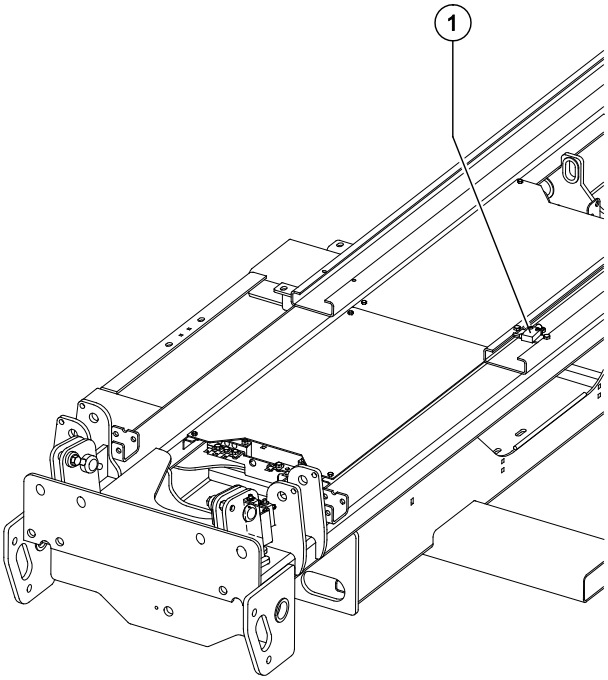

1 maximum height limit switch

11 **GS-69 BE and GS-69 DC**: Turn the key switch to ground control and fully raise the platform.

⊙ Result: The platform should stop raising and an alarm should sound. A fault of platform overloaded should be present on the GCON display window at the ground controls.

⊠ Result: The platform continues to raise OR an alarm does not sound OR a fault is not present on the GCON diagnostic display window at the ground controls. Refer to Repair Procedure, *How to Calibrate the Platform Overload System (if equipped)*.

GS-69 RT: Start the machine and fully raise the platform. Release the joystick

⊙ Result: The engine should stop and an alarm should sound. A fault code 99 platform overload should be present in the ECM diagnostic display window at the ground controls

⊠ Result: The engine does not stop OR an alarm doesn't sound OR fault code 99 is not present in the ECM diagnostic display window at the ground controls. Refer to Repair Procedure, *Calibrate the Platform Overload System (if equipped)*.

12 Lower the platform onto the safety arm.

13 Turn the machine off.

14 Securely install the limit switch to the lower slider channel.

Downloaded from www.Manualslib.com manuals search engine

https://truckmanualshub.com/

Annual Maintenance Procedures

15 **GS-69 BE and GS-69 DC:** Turn the key switch to ground control and fully raise the platform.

⊙ Result: The platform should stop raising at maximum height. An alarm should not sound.

⊠ Result: The platform does not raise to maximum height OR an alarm sounds. Refer to Repair Procedure, *How to Calibrate the Platform Overload System (if equipped)*.

GS-69 RT: Start the machine and fully raise the platform. Release the joystick

⊙ Result: The platform should stop raising at maximum height. The engine should continue to run and an alarm should not sound

⊠ Result: The engine stops OR an alarm sounds. Refer to Repair Procedure, *Calibrate the Platform Overload System (if equipped).*

16 Lower the platform enough to return the safety arm to the stowed position.

17 Lower the platform to the stowed position.

18 Disconnect the platform controls from the power control cable.

19 Securely connect the power control cable to the GCON power control harness.

20 Securely connect the platform controls to the power control cable at the platform.

A-8
Test the Platform Overload System - GS-84 and GS-90 (if equipped)

Genie specifications require that this procedure be performed annually OR when the machine fails to lift the maximum rated load.

Testing the platform overload system regularly is essential to safe machine operation. Continued use of an improperly operating platform overload system could result in the system not sensing an overloaded platform condition. Machine stability could be compromised resulting in the machine tipping over.

Note: Perform this procedure with the machine on a firm, level surface.

1 Models with outriggers: Deploy the outriggers and level the machine.

2 Apply a thin layer of dry film lubricant to the area of the chassis where the scissor arm wear pads make contact.

3 Disconnect the platform controls from the machine at the platform.

4 Open the large ground control panel door and locate connector joining the Electronic Control Module (ECM) wire harness and the platform controls wire harness.

Note: This connection is just below the ground controls.

Downloaded from www.Manualslib.com manuals search engine

https://truckmanualshub.com/

5 Tag and disconnect the platform controls wire harness from the ECM wire harness.

6 Securely connect the platform controls to the ECM wire harness.

7 Using a suitable lifting device, place a test weight, corresponding to the maximum load as indicated on the capacity indicator decal, in the center of the platform floor. Secure the weight to the platform. Refer to the chart below.

GS-3384 and GS-3390	1878 kg
GS-4390 (standard)	1286 kg
GS-4390 (high capacity) (from SN 41523 to 47262)	1421 kg
GS-5390	1410 kg

8 Turn the key switch to platform control and pull out the red Emergency Stop button to the on position at both the ground and platform controls. Start the engine.

9 Raise the platform to approximately 1 m.

10 Apply a piece of tape to the underside of the platform, at a point which corresponds to the maximum load position of the capacity indicator decal.

11 Raise the platform until the position indicator corresponds to the maximum load position of the capacity indicator decal.

⊙ Result: The engine stops and an audible alarm sounds.

⊠ Result: The engine does not stop and an audible alarm does not sound, Refer to Repair Procedure *How to Calibrate the Platform Overload system* in the Service and Repair Manual.

DANGER Tip-over hazard. Raising the platform with maximum load above the maximum load position, as shown on the capacity indicator decal on the side of the platform, could result in the machine tipping over, resulting in death or serious injury. Do not raise the platform above the maximum load position of the capacity indicator decal.

Downloaded from www.Manualslib.com manuals search engine

https://truckmanualshub.com/

Programmed Maintenance Procedures

P0-1
Inspect the Engine Air Filter - GS-69 RT

Genie specifications require that this procedure be performed every 40 hours or weekly, whichever comes first.

Maintaining the engine air filter in good condition is essential to good engine performance and service life. Failure to perform this procedure can lead to poor engine performance and component damage.

1 **Kubota WG972 models**: Remove the engine tray flange nut, located under the radiator on the engine pivot tray. Swing the engine pivot tray out and away from the machine for access.

2 **Kubota D1105 models**: Remove the wing nut securing the end cap to the air cleaner canister. Remove the end cap.

All other models: Disconnect the retaining clamps securing the end cap to the air cleaner canister. Remove the end cap.

3 Remove the air filter element.

4 Clean the inside of the air filter canister and the canister gasket with a damp cloth.

5 Inspect for and remove any blockage or debris from the intake air passages.

6 Inspect the air filter element. If needed, blow from the inside out using low pressure dry compressed air, or carefully tap out dust.

7 Securely install the filter element into the canister.

8 Install the gasket and baffle (if equipped), and end cap onto the air cleaner canister.

Note: Be sure the dust discharge valve is facing down when installed.

9 Secure the end cap to the air cleaner cannister with the retaining clamps.

10 **Kubota WG972 models**: Swing the engine pivot tray back to its original position and secure with the flange nut.

Downloaded from www.Manualslib.com manuals search engine

https://truckmanualshub.com/

P0-2
Grease the Steer Yokes - GS-30, GS-32, GS-46 and GS-47

Genie specifications require that this procedure be performed every 100 hours of operation.

Regular application of lubrication to the steer yokes is essential to good machine performance and service life. Continued use of an insufficiently greased steer yoke will result in component damage.

1 Locate the grease fitting on the top of the steer yoke.

2 Pump multipurpose grease into the steer yoke until the steer yoke is full and grease is being forced past the bearings. Repeat this step for the other steer yoke.

Grease Specifications
Chevron Ultra-duty grease, EP NLGI 2 (lithium based) or equivalent

Downloaded from www.Manualslib.com manuals search engine

https://truckmanualshub.com/

Programmed Maintenance Procedures

P0-3
Deutz Engine Maintenance – Under 1000 Hours

Additional engine maintenance is required. Refer to the *Programmed Maintenance Inspection Report* for the specific intervals that apply.

Required maintenance procedures and additional engine information are available in the manufacturer's manuals. Refer to Specifications, *Engine Operator and Maintenance Manuals*.

This maintenance schedule applies to the following Deutz Engines:

Deutz D2011L03i **Deutz D 2.9 L4**

Deutz Engines		**Hour Intervals**		
Procedure	**∅ = Not required**	**Daily**	**250**	**500**
Oil level - check			∅	∅
Coolant level - check			∅	∅
Oil, fuel and coolant systems - check for leaks			∅	∅
Fuel system filter/water separator – inspect/drain			∅	∅
Air filter discharge valve - clean			∅	∅
Exhaust system - inspect			∅	∅
Check / clean the oil cooler and cooling fins		∅		∅
Engine oil and filter – replace		∅	∅	
Air filter - replace		∅	∅	
Valve clearance - check/adjust		∅	∅	
Engine coolant - test/add		∅	∅	
Air intake pipes - inspect		∅	∅	
V-belts - inspect		∅	∅	
Fuel filter / separator - replace		∅	∅	

Downloaded from www.Manualslib.com manuals search engine

https://truckmanualshub.com/

P0-4
Ford Engine Maintenance – Under 1000 Hours

Additional engine maintenance is required. Refer to the *Programmed Maintenance Inspection Report* for the specific intervals that apply.

Required maintenance procedures and additional engine information are available in the manufacturer's manuals. Refer to Specifications, *Engine Operator and Maintenance Manuals*.

Ford MSG 425		**Hour Intervals**				
Procedure	**∅ = Not required**	**Daily**	**100**	**200**	**400**	**800**
Oil level - check			∅	∅	∅	∅
Coolant level - check			∅	∅	∅	∅
Oil, fuel and coolant systems - check for leaks			∅	∅	∅	∅
Air filter discharge valve - clean			∅	∅	∅	∅
Oil, coolant, fuel, exhaust and vacuum hoses - check for leaks, damage or deterioration		∅		∅	∅	∅
Electrical wiring - check for chafing or damage		∅		∅	∅	∅
Engine belts - check/adjust		∅	∅		∅	∅
Fuel filters - check/replace		∅	∅		∅	∅
Engine oil - replace		∅	∅	∅		∅
Oil filter - replace		∅	∅	∅		∅
Air filter - replace		∅	∅	∅		∅
Spark plugs - clean/adjust/replace		∅	∅	∅		∅
Loose or missing fasteners - tighten/replace		∅	∅	∅		∅
PCV valve - check		∅	∅	∅	∅	
PCV hoses, tubes and fittings - clean		∅	∅	∅	∅	

Downloaded from www.Manualslib.com manuals search engine

https://truckmanualshub.com/

Programmed Maintenance Procedures

P0-5
Kohler Engine Maintenance – Under 1000 Hours

Additional engine maintenance is required. Refer to the *Programmed Maintenance Inspection Report* for the specific intervals that apply.

Required maintenance procedures and additional engine information are available in the manufacturer's manuals. Refer to Specifications, *Engine Operator and Maintenance Manuals*.

Kohler KD350		**Hour Intervals**		
Procedure	**∅ = Not required**	**Daily**	**250**	**500**
Oil level - check			∅	∅
Air cleaner - check and maintenance			∅	∅
Oil and fuel leaks			∅	∅
Engine oil and filter – replace		∅		∅
Fuel tank		∅	∅	
Cooling fins - clean		∅	∅	
Dry air cleaner cartridge		∅	∅	
Fuel filter - replace		∅	∅	
Rocker arm		∅	∅	
Injector cleaning and adjustment		∅	∅	

Downloaded from www.Manualslib.com manuals search engine

https://truckmanualshub.com/

P0-6
Kubota Engine Maintenance – Under 1000 Hours

Additional engine maintenance is required. Refer to the *Programmed Maintenance Inspection Report* for the specific intervals that apply.

Required maintenance procedures and additional engine information are available in the manufacturer's manuals. Refer to Specifications, *Engine Operator and Maintenance Manuals*.

This maintenance schedule applies to the following Kubota Engines:

Kubota D-1105-E3B **Kubota WG972**

Kubota Engines		**Hour Intervals**								
Procedure	**∅ = Not required**	**Daily**	**50**	**75**	**100**	**150**	**200**	**400**	**500**	**800**
Coolant level - check			∅	∅	∅	∅	∅	∅	∅	∅
Oil level - check			∅	∅	∅	∅	∅	∅	∅	∅
Oil, fuel and coolant systems - check for leaks			∅	∅	∅	∅	∅	∅	∅	∅
Fuel system filter/water separator – inspect/drain			∅	∅	∅	∅	∅	∅	∅	∅
Fuel hoses and clamp bands - check		∅		∅	∅	∅	∅	∅	∅	∅
Fan belt tension and damage - check		∅	∅	∅		∅	∅	∅	∅	∅
Battery electrolyte level - check		∅	∅	∅		∅	∅	∅	∅	∅
Spark plug - check		∅	∅	∅		∅	∅	∅	∅	∅
Air cleaner element - clean (Replace the element after 6 times cleaning)		∅	∅	∅		∅	∅	∅	∅	∅
Fuel filter (element type) - clean		∅	∅	∅		∅	∅	∅	∅	∅
Oil filter cartridge - replace,		∅	∅	∅	∅	∅		∅	∅	∅
Engine oil - replace		∅	∅	∅	∅	∅		∅	∅	∅
Radiator hoses and clamps - check		∅	∅	∅	∅	∅		∅	∅	∅
Intake air line - check, D-1105		∅	∅	∅	∅	∅		∅	∅	∅
Fuel filter cartridge - replace		∅	∅	∅	∅	∅	∅		∅	∅
Air cleaner element - replace		∅	∅	∅	∅	∅	∅	∅		∅
Fan belt - replace		∅	∅	∅	∅	∅	∅	∅		∅
Cleaning of water jacket (radiator interior)		∅	∅	∅	∅	∅	∅	∅		∅
Removal of sediment in fuel tank		∅	∅	∅	∅	∅	∅	∅		∅
Damage in electric wiring and loose connections - check		∅	∅	∅	∅	∅	∅	∅		∅
Valve clearance - check		∅	∅	∅	∅	∅	∅	∅	∅	

Downloaded from www.Manualslib.com manuals search engine

https://truckmanualshub.com/

Programmed Maintenance Procedures

P0-7
Perkins Engine Maintenance – Under 1000 Hours

Additional engine maintenance is required. Refer to the *Programmed Maintenance Inspection Report* for the specific intervals that apply.

Required maintenance procedures and additional engine information are available in the manufacturer's manuals. Refer to Specifications, *Engine Operator and Maintenance Manuals*.

Perkins 403D-11		**Hour Intervals**		
Procedure	**∅ = Not required**	**Daily**	**50**	**500**
Air filter discharge valve - clean			∅	∅
Oil, fuel and coolant systems - check for leaks			∅	∅
Coolant level – check/add			∅	∅
Oil level - check			∅	∅
Fuel system filter/water separator – drain			∅	∅
Engine air precleaner - check/drain			∅	∅
Alternator belt - inspect/adjust/replace		∅		∅
Fuel tank water/sediment - drain		∅		∅
Hoses and clamps – inspect/replace		∅		∅
Cooling system supplement additive - test/add		∅	∅	
Engine oil and filter – replace		∅	∅	
Fuel system filter(s) - replace		∅	∅	
Radiator – clean		∅	∅	
Air cleaner element - clean/replace		∅	∅	
Fan clearance - check		∅	∅	

Downloaded from www.Manualslib.com manuals search engine

https://truckmanualshub.com/

P0-8
GM Engine Maintenance – Under 1000 Hours

Additional engine maintenance is required. Refer to the *Programmed Maintenance Inspection Report* for the specific intervals that apply.

Required maintenance procedures and additional engine information are available in the manufacturer's manuals. Refer to Specifications, *Engine Operator and Maintenance Manuals*.

GM .998L Engine		**Hour Intervals**					
Procedure	**∅ = Not required**	**Daily**	**100**	**150**	**200**	**400**	**800**
Coolant level - check			∅	∅	∅	∅	∅
Oil level - check			∅	∅	∅	∅	∅
Oil, fuel and coolant systems - check for leaks			∅	∅	∅	∅	∅
Fan belt tension and damage - check		∅		∅	∅	∅	∅
Radiator hoses and clamps - check		∅		∅	∅	∅	∅
Intake manifold - check for vacuum leaks		∅		∅	∅	∅	∅
LPG system - check for leaks		∅		∅	∅	∅	∅
Radiator – clean		∅		∅	∅	∅	∅
Engine oil and filter – replace		∅	∅		∅	∅	∅
LPG Vaporizer - drain/clean		∅	∅		∅	∅	∅
PCV valve - check		∅	∅	∅		∅	∅
Air cleaner element - clean/replace		∅	∅	∅		∅	∅
Timing belt - check		∅	∅	∅		∅	∅
Electrical wiring - check for chafing or damage		∅	∅	∅	∅		∅
Vacuum lines and fittings - check		∅	∅	∅	∅		∅
Fuel filter - replace		∅	∅	∅	∅		∅
Fuel lines and clamps - check for leaks		∅	∅	∅	∅		∅
Air intake system - inspect for leaks		∅	∅	∅	∅		∅
Cylinder head bolts - torque (40.5 ft-lbs / 55 Nm)		∅	∅	∅	∅		∅
Valve clearance - check/adjust		∅	∅	∅	∅		∅
PCV valve - replace		∅	∅	∅	∅	∅	
Cooling system coolant - replace		∅	∅	∅	∅	∅	
Spark plugs - replace		∅	∅	∅	∅	∅	
Spark plug wires - check/replace		∅	∅	∅	∅	∅	

Downloaded from www.Manualslib.com manuals search engine

https://truckmanualshub.com/

Programmed Maintenance Procedures

P1-1
Perform Engine Maintenance – 1000 Hours

Engine specifications require that this procedure be performed every 1000 hours.

Required maintenance procedures and additional engine information are available in the manufacturer's manuals. Refer to Specifications, *Engine Operator and Maintenance Manuals*.

Deutz Models

- Fuel system primary filter (water separator) element – replace
- Fuel system secondary filter – replace
- Hoses and clamps – inspect/replace
- By-pass oil filter - replace
- Engine mounts - inspect
- Hoses and clamps – inspect/replace
- Glow plugs - check
- Valve clearance - check
- V-belts - re-tension/renew
- Cold starting device (if equipped) - check
- Battery and cable connectors - check
- Engine valve lash – inspect/adjust

D 2.9 L4:

- Coolant (additive concentration) - check

Perkins Models

- Alternator and fan belts - replace
- Engine valve lash – inspect/adjust
- Engine crankcase breather - replace

Kubota Models

WG972

- Spark plugs - replace
- Coolant and vacuum lock hose of LPG vaporizer - replace
- Radiator coolant (L.L.C.) - replace
- Cleaning water jacket and radiator interior
- Valve clearance - check
- Cleaning cylinder head
- Valve seats - check
- Gasoline fuel hose and clamp bands - replace
- Carburetor and fuel tank inside - clean

D-1105

- Fuel injection nozzle injection pressure - check

Downloaded from www.Manualslib.com manuals search engine

https://truckmanualshub.com/

P1-2
Replace the Drive Hub Oil - GS-69, GS-84 and GS-90

Drive hub specifications require that this procedure be performed after the first 50 hours of operation. After the initial oil replacement, specifications require that this procedure be performed every 1000 hours.

Replacing the drive hub oil is essential for good machine performance and service life. Failure to replace the drive hub oil at yearly intervals may cause the machine to perform poorly and continued use may result in component damage

1 Select the drive hub to be serviced. Drive the machine until one of the two plugs is at the lowest point.

2 Remove the plugs and drain the oil into a suitable container.

3 Drive the machine until one of the two plugs is at the highest point.

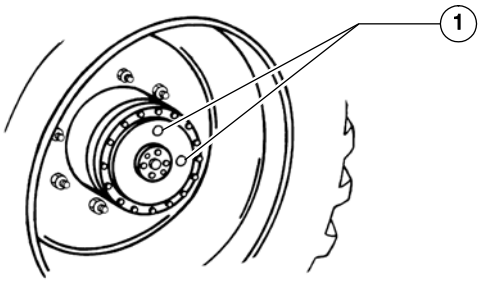

1 drive hub plugs

4 Fill the hub until the oil level is even with the bottom of the lowest plug hole. Refer to Specifications, *Machine Specifications*.

5 Install the plugs into the drive hub.

6 Repeat this procedure for each drive hub.

P2-1
Perform Engine Maintenance – 2000 Hours

Engine specifications require that this procedure be performed every 2000 hours.

Required maintenance procedures and additional engine information are available in the manufacturer's manuals. Refer to Specifications, *Engine Operator and Maintenance Manuals*.

Deutz Models

- V-Belts - replace
- Glow plugs - replace
- Cooling system coolant - replace
- Extended life coolant (ELC) - replace

Perkins Models

- Alternator - inspect
- Engine mounts - inspect
- Starting motor - inspect
- Engine crankcase breather - replace

Downloaded from www.Manualslib.com manuals search engine

https://truckmanualshub.com/

Programmed Maintenance Procedures

Kubota Models

D1105, WG972

- Radiator coolant (L.L.C.) - replace
- Battery - replace
- Radiator hoses and clamp bands - replace
- Fuel pipes and clamp bands - replace
- Intake air line - replace

WG972

- Fuel filter - replace
- LPG fuel hose and clamp bands - replace
- Coolant and vacuum lock hose of LPG vaporizer - replace

GM Models

- Intake manifold - check for vacuum leaks
- Timing belt - replace

P2-2
Replace the Hydraulic Filters

Engine specifications require that this procedure be performed every 2000 hours.

Replacement of the hydraulic tank return filter is essential for good machine performance and service life. A dirty or clogged filter may cause the machine to perform poorly and continued use may cause component damage. Extremely dirty conditions may require that the filter be replaced more often.

CAUTION Beware of hot oil. Contact with hot oil may cause severe burns.

Tank breather filter (if equipped):

1 Remove and discard the hydraulic tank breather cap.

2 Install and new cap onto the tank.

GS-30, GS-32, GS-46, GS-47, GS-69, GS-84, GS-90

Replace the Hydraulic Return Filter

1 Clean the area around the oil filter. Remove the filter with an oil filter wrench.

2 Apply a thin layer of fresh oil to the gasket of the new oil filter.

3 Install the new filter and tighten it securely by hand.

4 Use a permanent ink marker to write the date and number of hours from the hour meter on the oil filter.

5 Raise the platform approximately 3 feet / 1 m.

6 Inspect the filter and related components to be sure that there are no leaks.

7 Clean up and properly dispose of any oil that may have spilled during the installation procedure.

Downloaded from www.Manualslib.com manuals search engine

https://truckmanualshub.com/

GS-69, GS-84, GS-90

Replace the Medium and High Pressure Hydraulic Filter(s)

1 Locate the medium and high pressure filter(s).

2 Remove the filter housing using a wrench on the nut provided on the bottom of the housing.

3 Remove the filter element from the housing.

4 Inspect the housing seal and replace it if necessary.

5 Install the new filter and hand tighten the housing onto the filter head.

6 Use a permanent ink marker to write the date and number of hours from the hour meter on the oil filter.

7 Inspect the filter assembly to be sure that there are no leaks.

8 Clean up and properly dispose of any oil that may have spilled during the installation procedure.

P2-3
Check the Free-wheel Configuration - GS-84 and GS-90

Genie requires that this procedure be performed every 2000 hours.

Proper use of the free-wheel configuration is essential to safe machine operation. The free-wheel configuration is used primarily for towing. A machine configured to free-wheel without operator knowledge may cause death or serious injury and property damage.

WARNING Collision hazard. Select a work site that is firm and level.

NOTICE Component damage hazard. If the machine must be towed, do not exceed 2 mph / 3.2 km/h.

Non-Steer wheels:

1 Chock the steer wheels to prevent the machine from rolling.

2 Center a lifting jack of ample capacity (20,000 lbs / 10,000 kg) under the drive chassis between the non-steer tires.

3 Lift the wheels off the ground and then place jack stands under the drive chassis for support.

Downloaded from www.Manualslib.com manuals search engine

https://truckmanualshub.com/

Programmed Maintenance Procedures

4 Disengage the drive hubs by turning over the drive hub disconnect caps on each non-steer wheel hub.

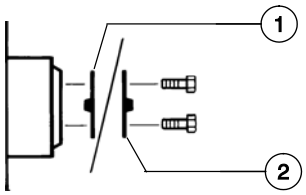

1 brake disengaged position
2 brake engaged position

5 Manually rotate each non-steer wheel.

⊙ Result: Each non-steer wheel should rotate with minimum effort.

6 Re-engage the drive hubs by turning over the hub disconnect caps. Rotate each wheel to check for engagement. Raise the machine, remove the jack stands and lower the machine.

⚠WARNING Collision hazard. Failure to re-engage the drive hubs could result in death or serious injury and property damage.

Steer wheels:

7 Chock the non-steer wheels to prevent the machine from rolling.

8 Center a lifting jack of ample capacity (20,000 lbs / 10,000 kg) under the drive chassis between the steer tires.

9 Lift the wheels off the ground and then place jack stands under the drive chassis for support.

10 Disengage the drive hubs by turning over the drive hub disconnect caps on each steer wheel hub.

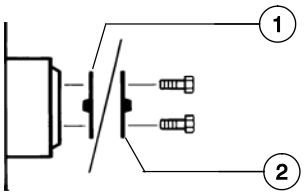

1 brake disengaged position
2 brake engaged position

11 Manually rotate each steer wheel.

⊙ Result: Each steer wheel should rotate with minimum effort.

12 Re-engage the drive hubs by turning over the hub disconnect caps. Rotate each wheel to check for engagement. Raise the machine, remove the jack stands and lower the machine.

⚠WARNING Collision hazard. Failure to re-engage the drive hubs could result in death or serious injury and property damage.

Downloaded from www.Manualslib.com manuals search engine

https://truckmanualshub.com/

P2-4
Check the Scissor Arm Wear Pads (and Slider Blocks, if equipped)

Genie requires that this procedure be performed every 2000 hours.

Maintaining the condition of the scissor arm wear pads is essential to safe machine operation. Continued use of worn out wear pads may result in component damage and unsafe operating conditions.

Note: Perform this procedure with the machine on a firm, level surface that is free of obstructions.

GS-1530, GS-1532, GS-1930 and GS-1932:

1 Measure the distance between the number one inner arm cross tube and the chassis deck at the ground controls side of the non-steer end of the machine. Refer to illustration 1.

⊙ Result: The measurement is 0.90 inch / 22.9 mm or more. Proceed to step 2.

⊠ Result: The measurement is less than 0.90 inch / 22.9 mm. Replace both wear pads. Refer to Repair Procedure in the appropriate Service and Repair Manual for your machine, *How to Replace the Scissor Arm Wear Pads.*

2 Measure the distance between the number one inner arm cross tube and the chassis deck at the battery pack side of the non-steer end of the machine. Refer to illustration 1.

⊙ Result: The measurement is 0.90 inch / 22.9 mm or more. Proceed to step 3.

⊠ Result: The measurement is less than 0.90 inch / 22.9 mm. Replace both wear pads. Refer to Repair Procedure in the appropriate Service and Repair Manual for your machine, *How to Replace the Scissor Arm Wear Pads.*

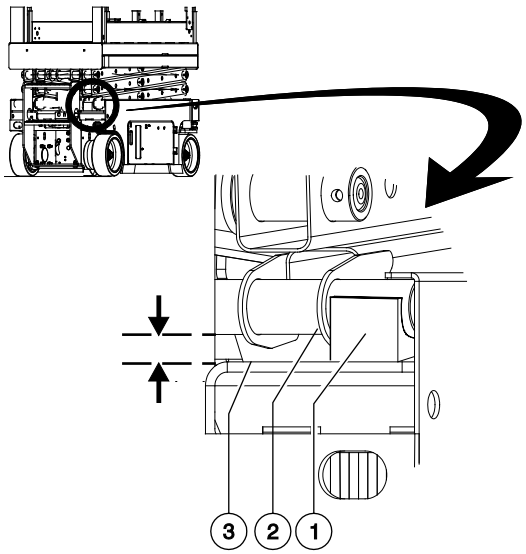

Illustration 1

1 wear pad
2 inner arm cross tube
3 chassis deck

3 Apply a thin layer of dry film lubricant to the area of the chassis where the scissor arm wear pads make contact.

Cross tube to chassis specification	
Measurement, minimum	0.90 inch 22.9 mm

Downloaded from www.Manualslib.com manuals search engine

https://truckmanualshub.com/

Programmed Maintenance Procedures

GS-2032, GS-2632, GS-3232, GS-2046, GS-2646, GS-3246 and GS-4047:

1 Measure the distance between the number one outer arm cross tube and the fork lift tube at the ground controls side of the non-steer end of the machine. Refer to Illustration 2.

⊙ Result: The measurement is 0.88 inch / 22.4 mm or more. Proceed to step 2.

⊠ Result: The measurement is less than 0.88 inch / 22.4 mm. Replace both wear pads. Refer to Repair Procedure in the appropriate Service and Repair Manual for your machine, *How to Replace the Scissor Arm Wear Pads.*

2 Measure the distance between the number one outer arm cross tube and the fork lift tube at the battery pack side of the non-steer end of the machine. Refer to Illustration 2.

⊙ Result: The measurement is 0.88 inch / 22.4 mm or more. Proceed to step 3.

⊠ Result: The measurement is less than 0.88 inch / 22.4 mm. Replace both wear pads. Refer to Repair Procedure in the appropriate Service and Repair Manual for your machine, *How to Replace the Scissor Arm Wear Pads.*

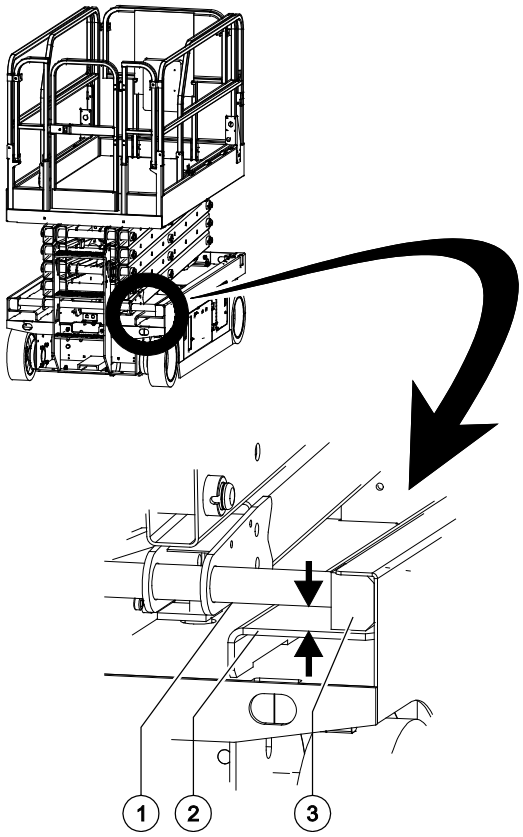

Illustration 2

1 Outer arm cross tube
2 fork lift tube
3 wear pad

3 Apply a thin layer of dry film lubricant to the area of the chassis where the scissor arm wear pads make contact.

Cross tube to chassis specification	
Measurement, minimum	0.88 inch 22.4 mm

Downloaded from www.Manualslib.com manuals search engine

https://truckmanualshub.com/

GS-2669 (all models), GS-3369 (all models), GS-4069 (all models)

1 Measure the thickness of each platform scissor arm slider blocks at the non-steer end of the machine.

⊙ Result: The measurement is 3.875 inch / 9.843 cm or more. Proceed to step 2.

⊠ Result: The measurement is less than 3.875 inch / 9.843 cm. Replace both slider blocks.

2 Measure the thickness of each chassis scissor arm upper and lower slider wear pads at the non-steer end of the machine.

⊙ Result: The measurement is 1/4 inch / 6.35 mm or more.

⊠ Result: The measurement is less than 11/32 inch / 8.71 mm. Replace both upper and lower slider wear pads.

GS-3384, GS-3390, GS-4390, GS-5390

1 Measure the thickness of each chassis wear pad at the steer end of the machine.

⊙ Result: The measurement is 5/16 inch / 8 mm or more. Proceed to step 2.

⊠ Result: The measurement is less than 5/16 inch / 8 mm. Replace both wear pads.

2 Measure the thickness of each chassis wear pad at the non-steer end of the machine.

⊙ Result: The measurement is 5/16 inch / 8 mm or more. Proceed to step 3.

⊠ Result: The measurement is less than 5/16 inch / 8 mm. Replace both wear pads.

3 Measure the thickness of each platform scissor arm wear pad at the steer end of the machine.

⊙ Result: The measurement is 5/16 inch / 8 mm or more. Proceed to step 4.

⊠ Result: The measurement is less than 5/16 inch / 8 mm. Replace both wear pads.

4 Measure the thickness of each platform scissor arm wear pad at the non-steer end of the machine.

⊙ Result: The measurement is 5/16 inch / 8 mm or more.

⊠ Result: The measurement is less than 5/16 inch / 8 mm. Replace both wear pads.

Downloaded from www.Manualslib.com manuals search engine

https://truckmanualshub.com/

Programmed Maintenance Procedures

P2-5
Grease the Steer Axle Wheel Bearings - GS-69 BE and GS-69 DC

Genie requires that this procedure be performed every 2000 hours.

Perform this procedure more often if dusty conditions exist.

Maintaining the steer axle wheel bearings is essential for safe machine operation and service life. Operating the machine with loose or worn wheel bearings may cause an unsafe operating condition and continued use may result in component damage. Extremely wet or dirty conditions or regular steam cleaning and pressure washing of the machine may require that this procedure be performed more often.

1 Loosen the wheel lug nuts. Do not remove them.

2 Block the non-steer wheels, then center a lifting jack under the steer axle.

3 Raise the machine 6 inches / 15 cm and place blocks under the drive chassis for support.

4 Remove the lug nuts. Remove the tire and wheel assembly.

5 Check for wheel bearing wear by attempting to move the wheel hub side to side, then up and down.

⊙ Result: There is no side to side or up and down movement. Proceed to step 10.

⊠ Result: There is side to side or up and down movement Proceed to step 6.

6 Remove the dust cap from the hub. Remove the cotter pin from the castle nut.

7 Tighten the castle nut to 150 ft-lbs / 203 Nm to seat the bearings.

8 Fully loosen the castle nut and re-tighten to 35 ft-lbs / 48 Nm.

9 Check for wheel bearing wear by attempting to move the wheel hub side to side, then up and down.

⊙ Result: There is no side to side or up and down movement. Proceed to step 10.

⊠ Result: There is side to side or up and down movement. Proceed to step 10 and replace the wheel bearings with new ones.

Note: When replacing a wheel bearing, both the inner and outer bearings, including the pressed-in races, must be replaced.

10 Remove the dust cap from the hub. Remove the cotter pin from the castle nut.

11 Remove the castle nut.

12 Pull the hub off of the spindle. The spindle washer, thrust washer and outer bearing should fall loose from the hub.

Downloaded from www.Manualslib.com manuals search engine

https://truckmanualshub.com/

13 Place the hub on a flat surface and gently pry the bearing seal out of the hub. Remove the rear bearing.

14 Pack both bearings with clean, fresh grease.

15 Place the large inner bearing into the rear of the hub.

16 Install a new bearing grease seal into the hub by pressing it evenly into the hub until it is flush.

17 Slide the hub onto the yoke spindle.

NOTICE Component damage hazard. Do not apply excessive force or damage to the lip of the seal may occur.

18 Place the outer bearing into the hub.

19 Install the spindle washer, thrust washer and castle nut.

20 Tighten the slotted nut to 150 ft-lbs / 203 Nm to seat the bearings.

21 Fully loosen the castle nut and re-tighten to 35 ft-lbs / 48 Nm.

22 Install a new cotter pin. Bend the cotter pin to lock it in place.

Note: Always use a new cotter pin when installing a castle nut.

23 Install the dust cap.

P2-6
Test or Replace the Hydraulic Oil

Genie requires that this procedure be performed every 2000 hours.

Replacement or testing of the hydraulic oil is essential for good machine performance and service life. Dirty oil and a clogged suction strainer or hydraulic filters may cause the machine to perform poorly and continued use may cause component damage. Extremely dirty conditions may require oil changes to be performed more frequently.

Note: Before replacing the hydraulic oil, the oil may be tested by an oil distributor for specific levels of contamination to verify that changing the oil is necessary. If the hydraulic oil is not replaced at the 2000 hour inspection, test the oil quarterly. Replace the oil when it fails the test.

Note: When removing a hose assembly or fitting, the O-ring (if equipped) on the fitting and/or hose end must be replaced. All connections must be torqued to specification during installation. Refer to Specifications, *Hydraulic Hose and Fitting Torque Specifications.*

Downloaded from www.Manualslib.com manuals search engine

https://truckmanualshub.com/

Programmed Maintenance Procedures

Testing the oil:

1 Complete the hydraulic oil testing with an oil distributor.

⊙ If the hydraulic oil passes testing at the 2000 hour maintenance interval, the oil must be tested every quarter by an oil distributor until the oil fails the test and is replaced.

⊠ If the hydraulic oil fails testing at the 2000 hour maintenance interval, the oil must be replaced. After the oil has been replaced, continue the scheduled quarterly maintenance inspection.

Replacing the hydraulic oil:

1 Remove the drain plug from the hydraulic tank and completely drain the tank into a container of suitable capacity. Refer to Specifications, *Hydraulic Fluid Capacities Specifications*.

2 Fill the tank with the proper hydraulic oil for your machine. Refer to Specifications, *Hydraulic Specifications*.

3 **Engine Models**: Prime the pump. Refer to Repair Procedure in the appropriate Service and Repair Manual for your machine, *How to Prime the Pump*.

4 Clean up and properly dispose of any oil that may have spilled.

Note: When replacing the hydraulic oil, it is recommended that the hydraulic tank be cleaned using a mild solvent and all hydraulic filters and strainers be replaced.

Note: Always use pipe thread sealant when installing the suction hose fittings and the drain plug.

Note: After the oil has been replaced, continue the scheduled quarterly maintenance inspection.

P3-1
Perform Engine Maintenance – 3000 Hours

Engine specifications require that this procedure be performed every 3000 hours.

Required maintenance procedures and additional engine information are available in the manufacturer's manuals. Refer to Specifications, *Engine Operator and Maintenance Manuals*.

Deutz Models

All Models:

- Injection valve- replace
- Toothed belt - replace
- V-belt and tensioning pulley - replace

D 2.9 L4 Models:

- Charge air cooler entry- drain lube oil/condensate

Ford Models

- Coolant filler cap - clean/replace

Perkins Models

- Water pump - inspect
- Fuel Injector - test/change
- Cooling system coolant (Heavy Duty) - change

Kubota Models

- Injection pump - check
- Fuel injection timing - check

Downloaded from www.Manualslib.com manuals search engine

https://truckmanualshub.com/

This page intentionally left blank.

Downloaded from www.Manualslib.com manuals search engine

https://truckmanualshub.com/

California Proposition 65

WARNING

Operating, servicing and maintaining this equipment can expose you to chemicals including engine exhaust, carbon monoxide, phthalates, and lead, which are known to the State of California to cause cancer and birth defects or other reproductive harm. These chemicals can be emitted from or contained in other various parts and systems, fluids and some component wear by-products. To minimize exposure, avoid breathing exhaust, do not idle the engine except as necessary, service your equipment and vehicle in a well-ventilated area and wear gloves or wash your hands frequently when servicing your equipment or vehicle and after operation. For more information go to www.P65Warnings.ca.gov/passenger-vehicle.

Breathing diesel engine exhaust exposes you to chemicals known to the State of California to cause cancer and birth defects or other reproductive harm.

- Always start and operate the engine in a well-ventilated area.
- If in an enclosed area, vent the exhaust to the outside.
- Do not modify or tamper with the exhaust system.
- Do not idle the engine except as necessary.

For more information go to www.P65warnings.ca.gov/diesel.

www.genielift.com

Distributed By:

Downloaded from www.Manualslib.com manuals search engine