https://truckmanualshub.com/

TRACTORS

2810/T290/T300/T330

SERVICE MANUAL

Chapter 1. Introduction ----------01

Chapter 2. Disassembly and reassembly of major point ------02

Chapter 3. Engine accessories ----------03

Chapter 4. Clutch system ---------- 04

Chapter 5. Transmission ---------- 05

Chapter 6. Front axle (4WD) ----------06

Chapter 7. Rear axle and Brakes ----------07

Chapter 8. Power steering system---------- 08

Chapter 9. Hydraulic system ----------09

Chapter 10. Electric accessories and instruments ----------10

Chapter 11. Service standard and other information ---------11

https://truckmanualshub.com/

INTRODUCTION----------1-1

SAFETY INTRODUCTION----------1-2

WARNING SIGNS IN THIS MANUAL ----------1-5

SAFETY SIGNS ----------1-6

SAFETY DECALS ----------1-11

UNIVERSAL SYMBOLS ----------1-14

SECTION 1. TRACTOR TYPES AND PUNCHED IDENTIFICATION MARKS ----------1-15

SECTION 2. SPECIFICATIONS----------1-17

SECTION 3. GEAR TRAIN DIAGRAMS----------1-20

SECTION 4. PRECAUTIONS FOR TRACTOR OPERATIONS---1-21

1. INSTRUMENTS ----------1-21

2. CONTROLS ---------- 1-23

3. FILLING DIAGRAM AND CAPACITY TABLE----------1-24

4. MAINTENANCE CHART ----------1-25

https://truckmanualshub.com/

Chapter 1 .Introduction

This tractor service manual is for qualified service personnel engaged in servicing and overhauling 2810/T290/T300/T330 tractor.Use of this publication is not recommended for field operators since they usually do not have access to special tools and shop equipment essential for most servicing.

Servicing procedures outlined herein contain sufficient information to return all component parts of a tractor to new condition. In discussion of each component parts,it is assumed that a complete overhaul is been performed,consequently,

complete disassembly and reassembly are outlined.The mechanic is relied upon to decide how far disassembly must be carried when complete overhaul is not required.

Study unfamiliar service procedures thoroughly and clearly understood before attempting disassembly. Specific data essential for proper overhaul,such as running clearances and torque values,have been provided in interline of Inspection and reassembly procedures of each group section.

This manual was compiled from latest information available at time of publication.

Manufacturer reserves the right to make changes at any time without notice.

Whenever the terms "left"and "right" are used, They means as viewed by the operator when seated in the operator's seat.

SAFETY INSTRUCTION

ALWAYS PRACTICE SAFETY BY THINKING BEFORE ACTION

AVOID FIRE HAZARDS.

-Keep fire extinguishers easily available and in good operating condition.

All relevant personnel should know how to operate fire fighting equipment.

-Keep a first aid kit in an easily accessible location.

-Do not smoke while handling fuel,or other highly flammable material.

-Do not use an open pail for transporting fuel.

-Use of an approved fuel container.

-Dispose of all fuel-soaked rags in covered containers where cigarettes cannot be dropped carelessly.

-Do not smoke and avoid open flame when charging,jumping,or boosting batteries.

-Batteries give off gas which is flammable and explosive.

-Do not charge batteries in a closed area. Provide proper ventilation to avoid explosion of accumulated gases.

Avoid acid burns.

-Wear safety goggles when handling battery electrolyte.It contains sulfuric acid which is a poison and can cause blindness.Avoid it contacting eyes,skin,or clothing. sulfuric acid will eat through clothing and can cause severe burns to skin.

AVOID HIGH-PRESSURE FLUIDS

1) Before beginning work on hydraulic system components,turn off engine and operate hydraulic control levers to relieve internal hydraulic pressure.

2) Oil under pressure can penetrate skin and lead to personal injury.Treat sources of oil pressure with extreme care,wearing safety goggles.

3) If hydraulic leak develops,correct immediately.Escaping hydraulic oil can have extremely high pressure. A stream of high pressure oil may easily penetrate skin just like modern needless vaccination equipment,but with the exception that hydraulic fluid may cause blood poisoning.

It is imperative that connections are tight and that all lines and pipes should be in good condition.

If injured by escaping hydraulic fluid,see a doctor at once.

STAY CLEAR OF PTO

https://truckmanualshub.com/

1) Entanglement in rotating drive line can cause serious injury or death.

2) Keep tractor master shield and drive line shield in place at all times except for special applications as directed in the implement operator's manual.

3) Wear fairly tight tight fitting clothing.Stop the engine and be sure PTO driveline is stopped before making adjustment,connections,or cleaning out PTO drive equipment.

SERVICE TIRES SAFELY

Tire changing can be dangerous and should be done by trained personnel using proper tools and equipment.

Do not re-inflate a tire that has been run flat or seriously under-inflated.Have it checked by qualified personnel.

Use wheel handling equipment adequate for weight involved when removing and installing wheels.

https://truckmanualshub.com/

WARNING SIGNS IN THIS MANUAL

The following warning symbols in this manual draw additional attention to items of importance for the safe and correct operation of the tractor.

SIGN	MEANING OF SIGN
DANGER	Serious hazard with a very high level of risk of either serious injury or death
WARNING	Hazard or unsafe practice that can lead to severe injury or death.
CAUTION	Hazard or unsafe practice that can lead in injury or death.
IMPORTANT	Instructions for the correct operation of the machine which, if followed, will ensure that it performs at it’s best

https://truckmanualshub.com/

RECOGNIZE SAFETY INFORMATION

This symbol, Safety-Alert Symbol, means ATTENTION! YOUR SAFETY IS INVOLVED. The message that follows the symbol contains important information about safety. Carefully read the message

SIGNAL WORDS.

A signal word**–DANGER, WARNING OR CAUTION–**is used with safety alert symbol.

DANGER identifies the most serious hazards. Safety signs with signal Word –DANGER OR WARNING–are typically near specific hazards. General precautions are listed on CAUTION safety signs.

DANGER

WARNING

CAUTION

READ SAFETY INSTRUCTION

Carefully read all safety instructions given in this manual for your safety. Tempering with any of the safety devices can cause serious injuries or death. Keep all safety signs in good condition. Replace missing or damaged safety signs.

Keep your tractor in proper condition and do not allow any unauthorized modifications to be carried out on the Tractor, which may impair the function/safety and affect Tractor life.

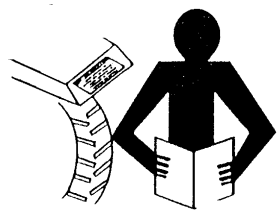

PROTECTION CHILDREN

Keep children and others away from the Tractor while operating.

BEFORE YOU REVERSE

- Look behind Tractor for children.
- Do not let children to ride on Tractor or any implement.

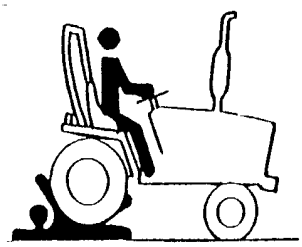

https://truckmanualshub.com/

USE OF ROPS AND SEAT BELT

The Roll Over Protective Structure(ROPS) has been certified to industry and/or government standards. Any damage or alternation to the ROPS, mounting hard-ware, or seat belt voids the certification and will reduce or eliminate protection for the operator in the event of a roll-over. The ROPS, mounting hardware, and seat belt should be checked after the first 100 hours of Tractor and every 500 hours thereafter for any evidence of damage, wear or cracks. In the event of damage or alteration, the ROPS must be replaced prior to further operation of the Tractor.

The seat belt must be worn during machine operation when the machine is equipped with a certified ROPS.

Failure to do so will reduce or eliminate protection for the operator in the event of a roll over.

PRECAUTION TO AVOID TIPPING

Do not drive where the Tractor could slip or tip.

Stay alert for holes and rocks in the terrain, and other hidden hazards.

Slow down before you make a sharp turn.

Driving forward out of a ditch or mired condition could cause Tractor to tip over backward. Back out of these situations if possible

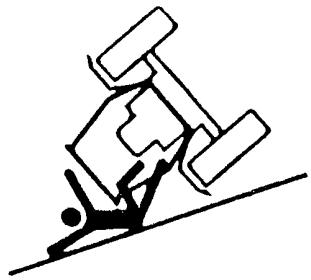

PARK TRACTOR SAFELY

Before working on the Tractor ;

Lower all equipment to the ground.

Stop the engine and remove the key

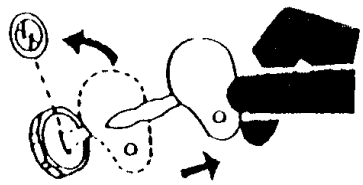

KEEP RIDERS OFF TRACTOR

Do not allow riders on the Tractor.

Riders on Tractor are subject to injury such as being stuck by foreign objects and being thrown off of the Tractor

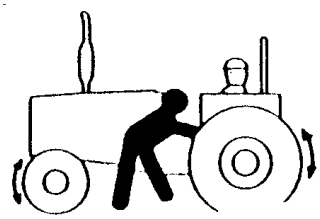

https://truckmanualshub.com/

HANDLE FUEL SAFELY-AVOID FIRES

Handle fuel with care; it is highly flammable. Do not refuel the Tractor while smoking or near open flame or sparks.

Always stop engine before refueling Tractors.

Always keep your tractor clean of accumulated grease, and debris. Always clean up spilled fuel.

STAY CLEAR OF ROTATING SHAFTS

Entanglement in rotating shaft can cause serious injury or death.

Keep PTO shield in place at all times.

Wear close fitting clothing. Stop the engine and be sure PTO drive is stopped before making adjustments, connections, or cleaning out PTO driven equipment.

ALWAYS USE SAFETY LIGHTS AND DEVICES

Use of hazard warning lights and turn signals are recommended when towing equipment on public roads unless prohibited by state or local regulations.

Use slow moving vehicle (SMV) sign when driving on public road during both day & night time, unless prohibited by law

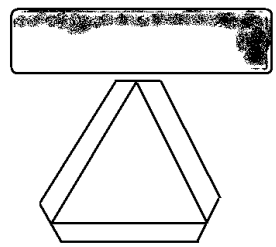

PRACTICE SAFE MAINTENANCE

Understand service procedure before doing work.

Keep the surrounding area of the Tractor clean and dry.

Do not attempt to service Tractor when it is in motion.

Keep body and clothing away from rotating shafts.

Always lower equipment to the ground. Stop the engine.

Remove the key. Allow Tractor to cool before any work repair is caused on it.

Securely support any Tractor elements that must be raised for service work.

Keep all parts in good condition and properly installed.

Replace worn or broken parts. Replace damage/missing decals.

Remove any buildup of grease or oil from the Tractor.

Disconnect battery ground cable(–) before making adjustments on electrical systems or welding on Tractor

https://truckmanualshub.com/

AVOID HIGH-PRESSURE FLUIDS

Escaping fluid under pressure can penetrate the skin causing serious injury. Keep hands and body away from pinholes and nozzles, which eject fluids under high pressure. If ANY fluid is injected into the skin. Consult your doctor immediately.

PREVENT BATTERY EXPLOSIONS

Keep sparks, lighted matches, and open flame away from the top of battery. Battery gas can explode.

Never check battery charge by placing a metal object across the poles.

PREVENT ACID BURNS

Sulfuric acid in battery electrolyte is poisonous. It is strong enough to burn skin, cause holes in clothing and cause blindness if found entry into eyes.

For adequate safety always;

1. Fill batteries in a well-ventilated area.

2. Wear eye protection and acid proof hand gloves

3. Avoid breathing direct fumes when electrolyte is added.

4. Do not add water to electrolyte as it may splash off causing severe burns.

If you spill acid on yourself;

1.Flush your skin with water.

2.Flush your eyes with water for 10-15 minutes. Get medical attention immediately.

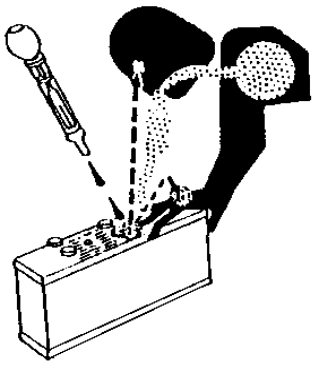

SERVICE TRACTOR SAFELY

Do not wear a necktie, scarf or loose clothing when you work near moving parts. If these items were to get caught, severe injury could result.

Remove rings and other jeweler to prevent electrical shorts and entanglement in moving parts.

WORK IN VENTILATED AREA

Do not start the Tractor in an enclosed building unless the doors & windows are open for proper ventilation, as tractor fumes can cause sickness or death. If it is necessary to run an engine in an enclosed area remove the exhaust fumes by connecting exhaust pipe extension.

https://truckmanualshub.com/

TRACTOR RUNAWAY

1. The tractor can start even if the transmission is engaged position causing Tractor to runaway and serious injury to the people standing nearby the tractor.

For additional safety keep the pull to stop knob (fuel shut off control) in fully pulled out position. Transmission in neutral position, Foot brake engaged and PTO lever in disengaged position while attending to Safety Starter Switch or any other work on Tractor.

SAFETY STARTER SWITCH

1. Clutch operated safety switch is provided on all Tractors which allow the starting system to become operational only when the Clutch pedal is fully pressed.

2. Do not By-pass this safety starter switch or work on it. Only Authorized Dealers are recommended to work on safety starter switch.

3. On some models Safety Starter switch is provided on transmission High-low shifter lever and in PTO shifter lever.The tractor can be started only if High-low shifter lever is in neutral position.

Safety Starter Switch is to be replaced after every 2000 hours/4 years, whichever is earlier

https://truckmanualshub.com/

SAFETY DECALS

The following safety decals ARE INSTALLED ON THE MACHINE.

If a decal become damaged,illegible or is on the machine,replace it.The decal part number is listed in the parts lists.

WARNING

- **Before starting and operating know the operating and safety instructions in the operators Manual and on the tractor.**
- **Clear the area of bystanders.**
- **Locate and know operation of controls.**
- **Start engine only from Operator's seat with depressed clutch pedal, transmission in the neutral, PTO disengaged and hydraulic control in lower position**
- **Slow down on turns, rough ground and slopes to avoid upset.**
- **Do not permit anyone but the operator to ride on the tractor. There is no safe place for rider.**
- **Lock brakes together, use warning lights and SMV emblem while driving on roads.**
- **Lower equipment, place gear shift levers in neutral, stop engine, remove the key and apply parking brake before leaving the tractor seat.**
- **Air pressures are specified by the manufacturer.**

FAILURE TO FOLLOW ANY OF THE INSTRUCTIONS ABOVE CAN CAUSE SERIOUS INJURY TO THE OPERATOR.

Location: On FENDER LH

Part No.: 1260-904-070-1A

WARNING

TO AVOID POSSIBLE PERSONAL INJURY, THIS GUARD MUST BE KEPT IN PLACE

Location: ON PTO guard

Part No.: 1260-904-069-0A

https://truckmanualshub.com/

CAUTION

TO PROTECT ENGINE AND HYDRAULIC COMPONENTS.

- Idle Engine for 1 minute before shut down or full load operation.
- **Do not exceed 1/2 throttle for first 5 minutes of operation**

Location: On Dash cover side RH

Part No.: 1260-904-064-0

WARNING

KEEP HANDS AND CLOTHING AWAY FROM ROTATING FAN AND BELTS TO PREVENT SERIOUS INJURY

Location: On Radiator bracket side LH & RH

Part No.: 1260-904-061-0

CAUTION

BEFORE OPERATE THE TRACTOR,READ THE OPERATOR'S MANUAL THOROUGHLY,TO UNDERSTAND THE IMPORTANT FUNCTIONS AND CONTROLS.

Location: On dash cover side LH

Part No.:1260-904-067-0A

WARNING

The cooling system operates under pressure.

- **It is dangerous to remove the radiator cap while the system is hot.**
- **Always turn the cap slowly to the first stop and allow pressure to escape before removing the cap completely.**
- **When operating below 32°F, use suitable anti-freeze solution as coolant**

Location: On Radiator bracket side LH&RH

Part No.:1260-904-063-0

https://truckmanualshub.com/

DANGER

BLINDNESS CAN RESULT FROM BATTERY EXPLOSION.

KEEP SPARKS OR OPEN FRAMES AWAY FROM BATTERY.

DO NOT JUMP START.

BURNS CAN RESULT FROM BATTERY ACID.

IN CASE OF CONTACT FLUSH IMMEDIATELY WITH WATER

Location: On battery bracket RH

Part No.: 1260-904-066-0

WARNING

- **Pull only from drawbar. Pulling from any other point can cause rear overturn.**
- **Do not operate with unshielded PTO.**
- **Disengage PTO and stop engine before servicing tractor or attaching and detaching implements.**
- **When towing equipment use a Safety chain**

FAILURE TO FOLLOW ANY OF THE INSTRUCTIONS ABOVE CAN CAUSE SERIOUS INJURY TO THE OPERATOR OR OTHER PERSONS.

Location: On rear frame

Part No.: 1260-904-065-0A

WARNING

- Start engine only from operators seat. If safety start switch is bypassed engine can start with transmission in gear.
- Do not connect or short across terminal on starter solenoid.

Attach booster cables as shown on battery decal and operator's manual.

Starting in gear causing runaway can result in serious injury.

Location: On dash over side LH

Part no: 1260- 904-062-0A

UNIVERSAL SYMBOLS

Some of the universal Symbols have been shown below with an indication of their meaning.

	Engine speed (rev/minX100)		**Pressured-open slowly**		**Corrosive substance**
	Hours, recorded		**Continuous Variable**		**”Tortoise” slow or minimum setting**
	Engine coolant temperature		**Warning**		**”Hare” fast or maximum setting**
	Fuel level		**Hazard warning**		**Transmission oil pressure**
	Engine stop control	N	**Neutral**		**Turn signal**
	Lights		**Fan**		**Transmission oil temperature**
	Horn		**Power take off engaged**	P	**parking brake**
	Engine oil pressure		**Power take off disengaged**		**Work lamps**
	Air filter		**Lift arm/raise**		**Differential lock**
	Battery charge		**Lift arm/lower**		**See operator’s manual**

https://tractormanuals.club.com/

SECTION 1. TRACTOR TYPES AND PUNCHED IDENTIFICATION MARKS

The tractor serial number is shown on the left hand side of the tractor as shown in the picture. The engine number is stamped on the top of the engine block.

Tractor Serial Number

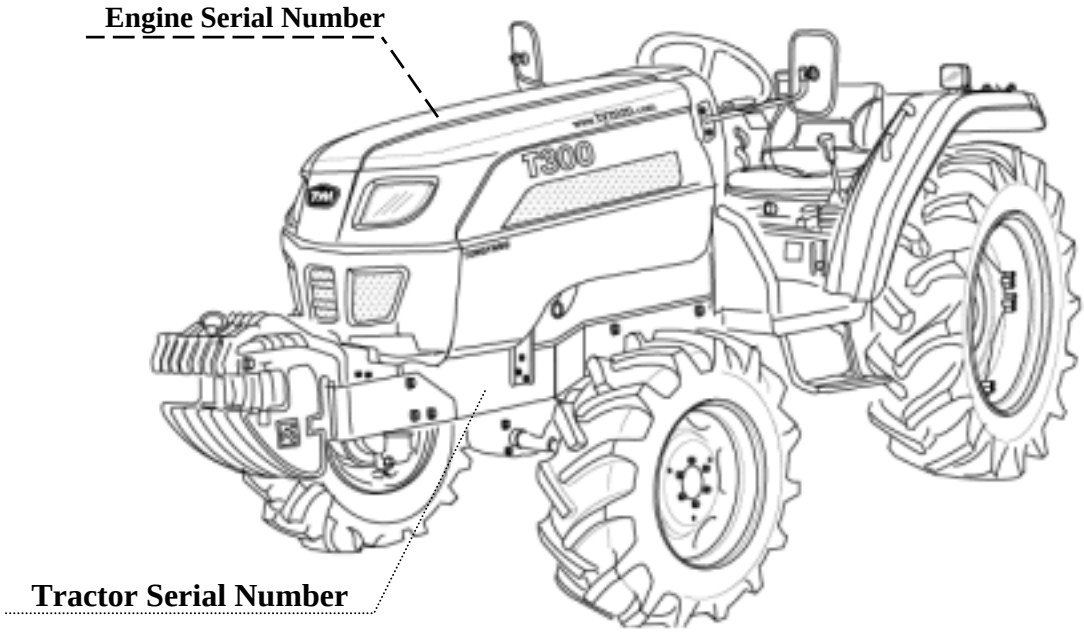

1.MODEL NAME PLATE

The plate indicates the model and type of the tractor.

① Model name

② Production I.D No.

The production I.D reference number is as shown below

30NC V 01 0001

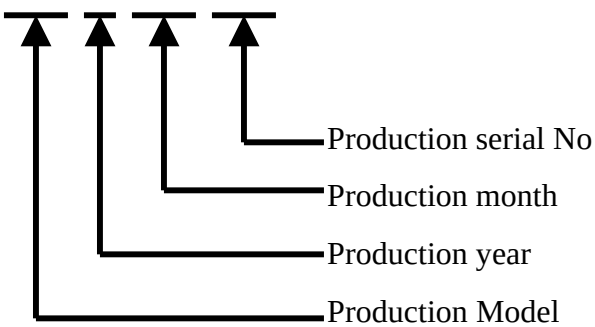

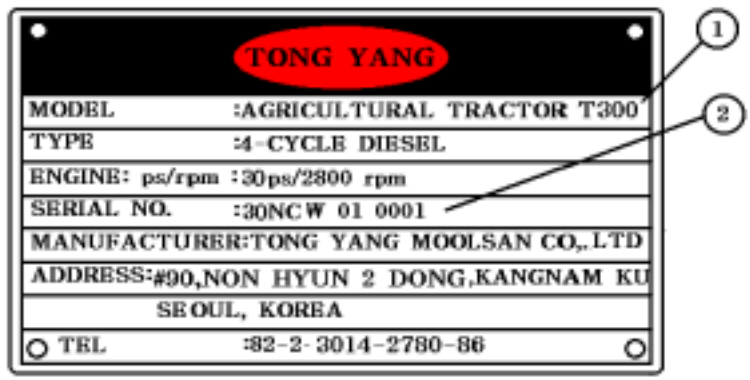

3.Engine model and engine serial number plate on the head cover.

https://truckmanualshub.com/

https://truckmanualshub.com/

MODEL		2810	T290/T300/T330
Engine	Maker	DAEDONG	KUBOTA
	Model	3A139A-DY1	D1503
	Type	Vertical,water cooled 4 cycle Diesel	
	Out put(ps/rpm)	28	31
	Rated Speed	2,700rpm	2800rpm
	Number of Cylinder	3	
	Displacement	1,393	1,499
	Bore and Stroke	3.14inX3.64in (80mmX92.4mm)	3.26inX3.64in (83mmX92.4mm)
	Compression ratio	22:1	23:1
	Firing order	1-2-3	
	Injection pump	Throttle type	
	Lubrication type	Forced	
	Cooling system	Water cooled,forced circulation	
	Coolant capacity	1.85US gal (7L)	
	Air cleaner	Dry type with paper element	
	Muffler	Horizontal Round	
	Fuel	Diesel	
	Fuel Tank capacity	8.7 US gal (33L)	
Electrical	Battery	12V60AH	
	Starting system	Electronic with cell motor	
	Starter Capacity	1.2KW	
Drive Train	Alternator	12V50A	
	Transmission	Constant mesh(Synchromeshed 3rd and 4th in main shift in both forward and reverse)	
	MFWD(4WD)	Standard	
	Differential lock	Bevel gears with diff-Lock	
	Brakes	Wet Disk	
	Steering	Hydrostatic Power	

MODEL			2810	T290/T300/T330
Clutch	Main		Dry single disc,mechanic	
	PTO		Multiple wet disk	
Dimensions	Overall length		3150(124”)	3290(129”)
	Overall width		1315(51.8”)	
	Overall Height		2,366(93.1”)	
	Wheel base		1640(64.6)	
	Min. Ground Clearance		325(12.8”)	294(11.6”)
	Tire size	Front	7-16 4PLY	
		Rear	11.2-24 4PLY	
Axle type		Front	Center pin	
		Rear	Central axle	

Implement	Operation	Hydraulic
	Mounting method	3-Point hitch
	Drawing method	Trailer hitch
	3-Point hitch category	Category 1
	Self-control	Position control

https://truckmanualshub.com/

Traveling speeds:Km/h (Mile/h)

		Speed			
Range shift	Main shift	T290/T300/T330		2810NEW	
		Forward	Reverse	Forward	Reverse
L	1	0.55	0.53	0.55	0.51
	2	0.75	0.73	0.72	0.70
	3	0.96	0.94	0.93	0.90
	4	1.33	1.30	1.28	1.25
M	1	1.72	1.68	1.67	1.61
	2	2.37	2.30	2.28	2.22
	3	3.04	2.96	2.93	2.86
	4	4.20	4.08	4.05	3.94
H	1	5.50	5.35	5.31	5.17
	2	7.55	7.34	7.29	7.08
	3	9.71	9.44	9.37	9.11
	4	13.41	13.03	12.94	12.59

PTO shaft

Model	T290/T300/T330	2810NEW
Speed(PTO rpm/Engine rpm)	540/2541	
Shaft Diameter.Spline teeth	1 3/8, 6 spline	

https://truckmanualshub.com/

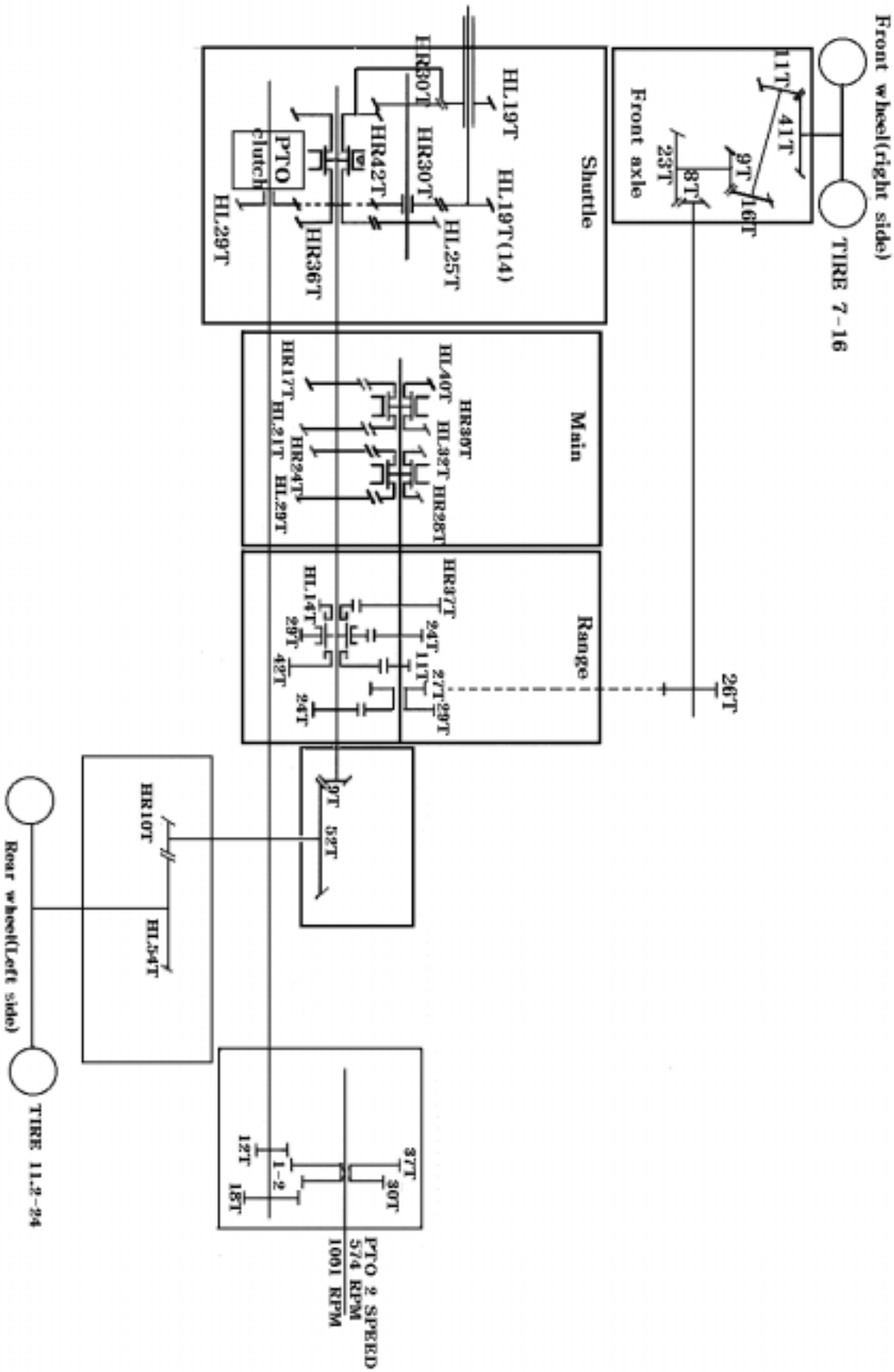

FIG.1-3 GEAR TRAIN DIAGRAM

SECTION 4. PRECAUTION FOR TRACTOR OPERATION

https://truckmanualshub.com/

1. INSTRUMENTS

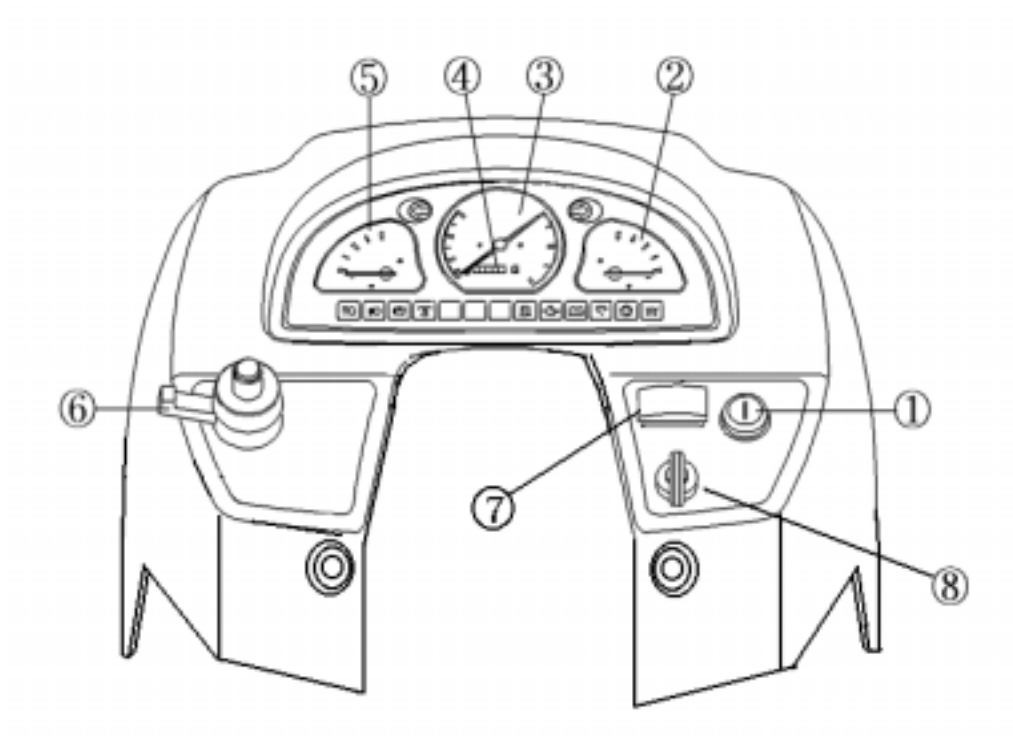

①key switch ②temperature gauge ③tachometer ④Hour meter ⑤Fuel gauge

⑥Light switch,indicators and horn ⑦hazard warning light switch

⑧ PTO Mode switch

Note;

- Oil pressure warning light and charge light on the monitor array will light when the main switch is turned from OFF to ON
- All lights on the panel go out automatically when the engine is started and its speed is increased to a specific level.
- Do not panic if some lights on the monitor light array do not go out while the engine is at idle speed just after its starting.They will go out automatically when the engine speed reaches as a specific level.

MONITOR LIGHT ARRAY

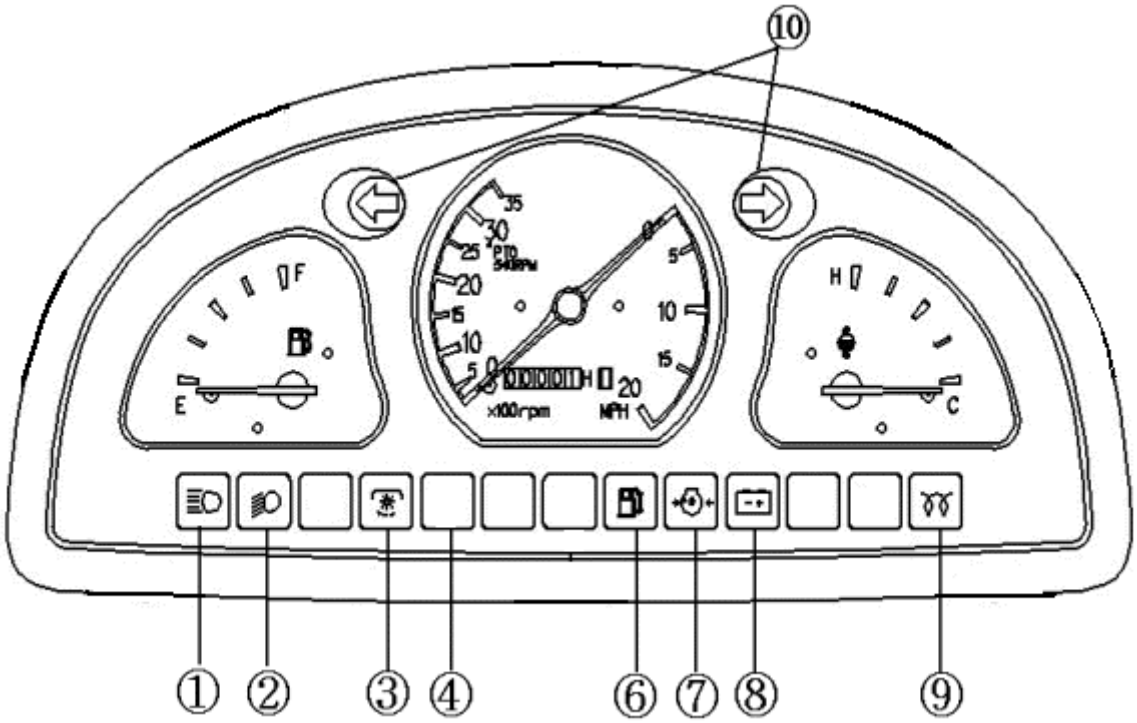

①High Beam Lamp ②Low Beam Lamp ③PTO Monitor Lamp ④Cruise Control Lamp
⑥Fuel Empty Warning Lamp ⑦Oil pressure lamp ⑧Charge lamp ⑨Glow signal Lamp
⑩Turn Signal Lamp

https://truckmanualshub.com/

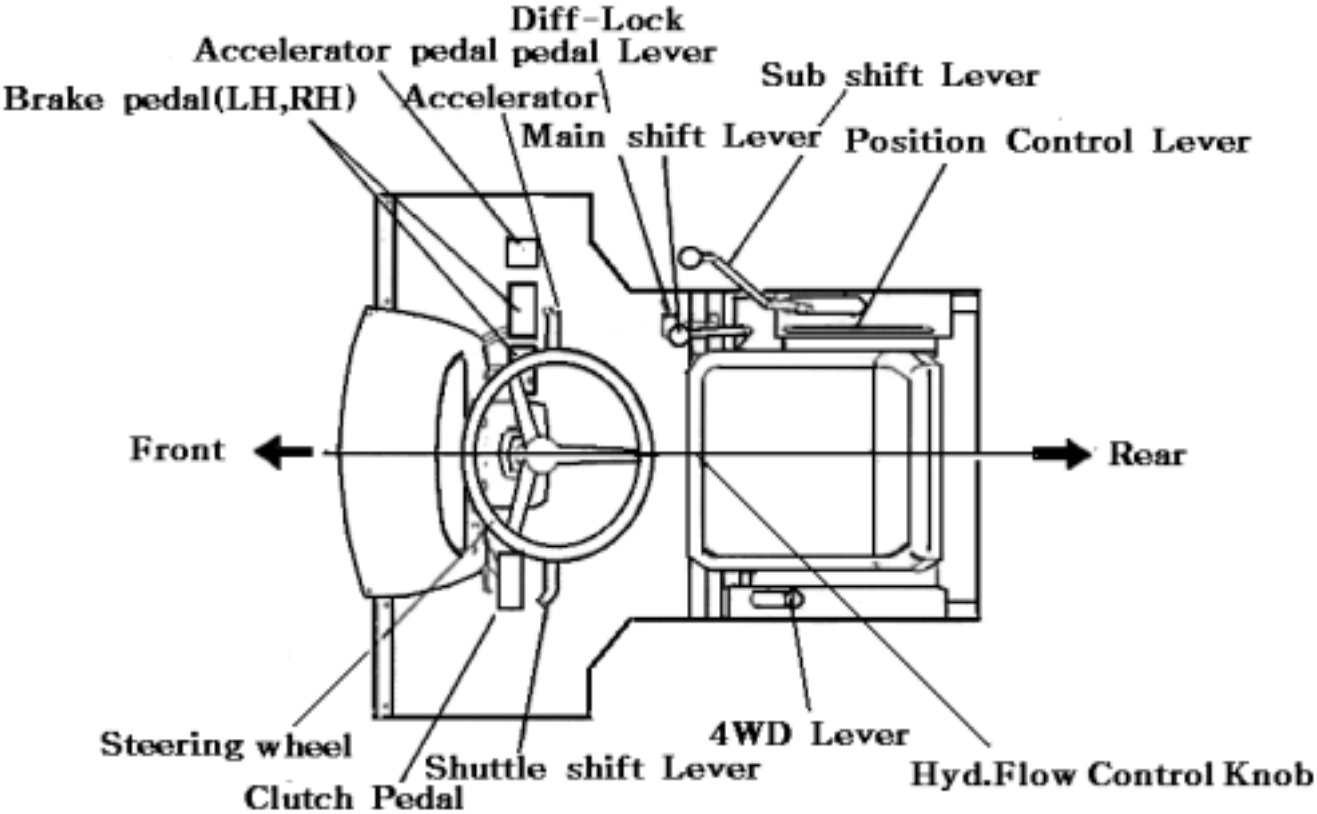

3. FILLING DIAGRAM & CAPACITY TABLE

https://truckmanualshub.com/

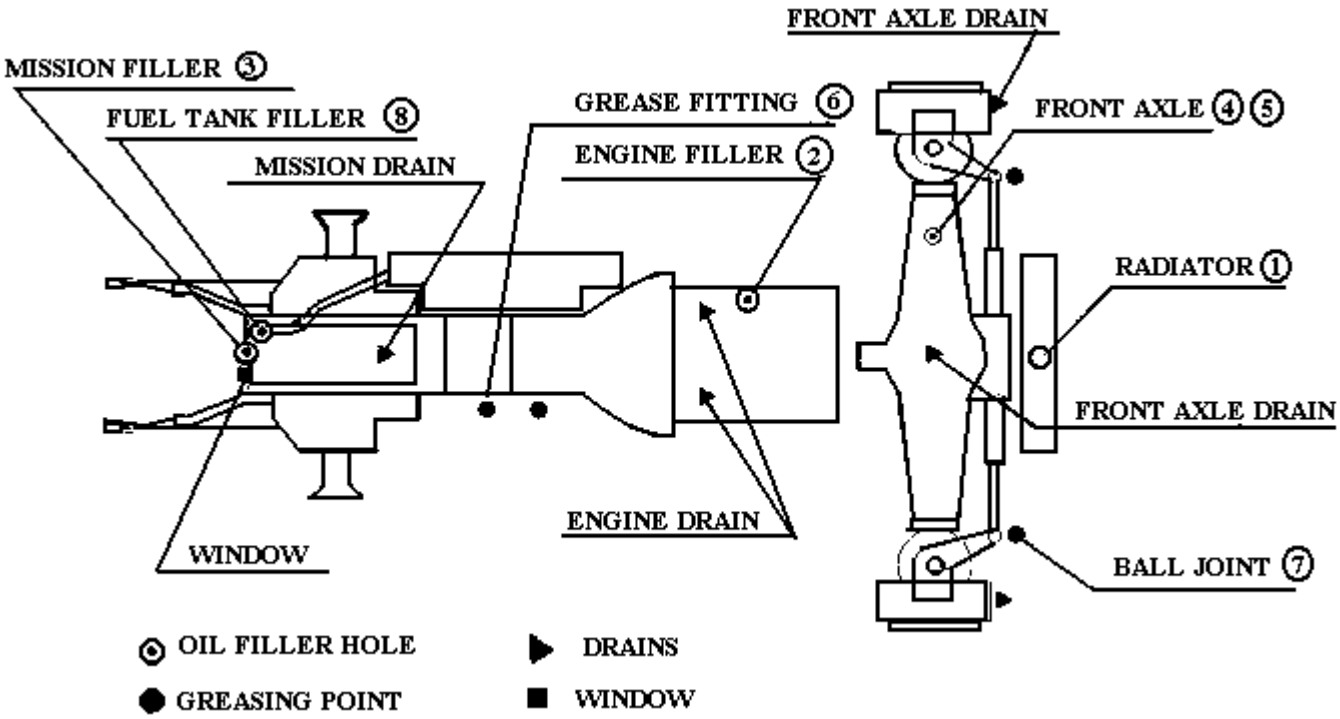

TABLE 1-7

No.	Filling point	Fillings	Quantity Liter (gal.)	
	MODEL		T290/T300/T330	2810NEW
1	RADIATOR	Fresh clean Water(L.L.C)	7ℓ	7ℓ
2	ENGINE	Engine oil	5.7ℓ (1.51 gal)	5.7ℓ (1.51 gal)
3	TRANSMISSION CASE	Gear oil #80	32ℓ(8.453 US gal)	32ℓ(8.453 US gal)
4	FRONT AXLE	Gear oil #80 or #90	8.2ℓ(2.166US gal)	8.2ℓ(2.166US gal)
5	FINAL DRIVE CASE(B)			
6	Clutch pedal shaft	Grease	As required	As required
7	BALL JOINT	Grease	As required	As required
8	FUEL TANK	Diesel fuel	33ℓ(8.717 US gal)	33 ℓ(8.717 US gal)

Tire size and inflation

TABLE 1-8

Wheels	TIRE SIZE	INFLATION (p s i)
FRONT	7-16	25.6
REAR	11.2-24	17

4. MAINTENANCE CHART

https://truckmanualshub.com/

○ inspection,replenish,and adjustment

● Replacement △ Cleaning and/or washing

★ Consult your Dealer

□ ENGINE

Inspection items	Daily	Inspection and servicing intervals Hour of operation (X10 on hour meter)												Intervals after that	Judgment criteria mm(in)
		5	10	15	20	25	30	35	40	45	50	55	60		
Engine oil	○	●		●		●		●		●		●		Replace after every 100hours	Level is between upper and lower limits
Oil filter		●				●				●					
Air cleaner			△		△		△		△		△		●	Clean after every 100hrs.Replace element that has been washed more than 5 times	
Radiator coolant	○													Replace every year	Fill coolant up to radiator throat
Radiator	○														
Radiator fin & screen	○				△				△				△		Clean cooling fins and cores
Fuel	○													Everyday and before work	Tank should be full
Fuel filter	○	△	○	△	○	△	●	○	○	△	○	△	●	Wash after every 100hrs.and replace after 300 hrs.	
Fan belt	○														About 5(0.20in) deflection pushed with a finger
Hose clamps	○														
Electrolyte level	○		○		○		○		○		○		○	Check after every 100hrs.and replenish if necessary	

○ inspection,replenish,and adjustment

https://truckmanualshub.com/

● Replacement △ Cleaning and/or washing

★ Consult your Dealer

□ TRANSMISSION

Inspection items	Daily	Inspection and servicing intervals Hour of operation (X10 on hour meter)												Intervals after that	Judgment criteria mm(in)
		5	10	15	20	25	30	35	40	45	50	55	60		
Transmission oil	○	●						●						Replace after initial 50 hrs,then after every 300 hrs.	Clean hydraulic suction filter at the same time.
Clutch pedal free play															Free Play:20 to 30mm
Brake pedal free play															Free Play:30 to 40mm
Brake performance															Interlocked brakes should work simultaneously
Lever performance															Every lever should work positively
Steering wheel free play	○														Ab.50(1.97) on circumstance
Toe-in							★						★	Check every 0 hrs	2 to 6 mm(0.08~0.24 in)
Front wheel hub greasing														Inject grease after every 300 hrs	
Retightening ball joints of steering system	○												○	Check after every 300 hrs	
Wheel tightening bolts	○														All should be tighten
Greasing each nipple		○	○	○	○	○	○	○	○	○	○	○	○	Replenish every 50 hrs (Everyday in dusty condition)	
Loose bolts and nuts	○														
Electric wiring	○			○			○							Check every year	

https://truckmanualshub.com/

Inspection items	Daily	Inspection and servicing intervals Hour of operation (X10 on hour meter)												Intervals after that	Judgment criteria mm(in)
		5	10	15	20	25	30	35	40	45	50	55	60		
Electric Parentheses															All should work properly
Adjusting accelerator pedal and throttle lever								★					★	Check after 300 hours	
Oil leaks in clutch housing														Check every year by removing the plug installed in the front bottom of clutch chamber	
Hydraulic fluid filter		●							●					Replace after initial 100 hrs.and then after every 300 hrs	
4WD front axle housing oil			●		○		○		○		○		○	Check after every 100 hrs.Replace after every 600hrs	
Rubber pipes				○		○		○		○			○	Check after every 100 hrs.	

1) Every terminal should be connected securely

2) Wiring should not interfere with other parts.

3) Fatigued wiring should be replaced.

4) Wiring should be held in each clamp properly.

https://truckmanualshub.com/

Chapter 2

Disassembly and reassembly of major components

SECTION 1. GENERAL PRECAUTIONS AND SEPARATION AND REINSTALLATION----------2-1

1. Before operation----------2-1

2. Precautions to be followed when installing standardized parts. ----------2-1

SECTION 2. OPERATION CHART FOR DISASSEMBLY AND REASSEMBLY BY MAJOR BLOCKS----------2-4

SECTION 3. SEPARATION OF MAJOR COMPONENTS ---------2-5

1. Separation of the front axle and axle bracket ----------2-5

2. Separation of the engine and front axle bracket ----------2-6

3. Separation of the engine and front transmission ----------2-7

4. Separation of the front transmission and Spacer transmission----------2-10

5. Separation of the Spacer transmission and rear trans mission----------2-14

6. Separation of the rear transmission and rear axle housing ----------2-17

7. Separation of the rear transmission and Cylinder case ----------2-18

https://truckmanualshub.com/

Chapter 2

Disassembly and reassembly of major components

SECTION 1. GENERAL PRECAUTIONS FOR SEPARATION AND REINSTALLATION

1.BEFORE OPERATION

1) Always be safety-conscious in selecting clothes to wear and suitable tools to use.

2) Before disassembly, be sure that you familiarize yourself with the assembled condition for subsequence in reassembly.

3) Keep parts and tools in proper order during operations.

4) When servicing electrically charged parts,be sure to disconnect the negative battery terminal.

5) To prevent oil or water leaks,use the liquid gasket as required.

6) When lifting up only the front or rear part of the tractor,be sure to wedge the grounded wheels.

8) When the tractor is jacked up, be sure to support the entire tractor with something like a stand.Lifting it up with a jack only is dangerously unstable procedure.

9) When replacing parts,use authorized, genuine TYM parts only.TYM assumes no responsibility for accidents,operating problems or damage caused by the use of imitation parts.

Also,the use of unauthorized parts will result in relatively poor machine performance.

2. PRECAUTIONS TO BE FOLLOWED WHEN INSTALLING STANDARDIZED PARTS.

(1) Roller or Ball bearings

1) When a bearing is fitted in by the outer race,use an installer which is an specially designed to push only the outer race and vice versa.

2) The installer must be designed to install the bearing on the shaft in a parallel position.

3) When installing a bearing which appears the same on both sides, install it so that the face which has the identification number faces in a direction for easy visual identification.All the bearings which are to be installed in the transmission case should be placed so that their identification number faces outward.

4) If a shaft or hole where a bearing is to be installed has a stopper, the bearing should be pushed in completely until it is seated against the stopper.

5) Installed bearings should turn smoothly.

(2) Oil seals

1) Oil seals installer should be designed so as not to deform the oil seals.

https://truckmanualshub.com/

2) During installation,be careful not to damage the lips,and assure that it is pushed in parallel to the shaft or hole.

3) When oil seals are installed,there should be no turnover of the lips nor dislocation of the springs.
4) When a multi-lip seal is installed, the grooves between lips should be filed with grease, not adhesive.

(3) O-rings

1) O-rings should be coated with grease before installing.
2) Installed O-rings should have no slack or twist.
3) Installed O-rings should maintain proper air tightness.

(4) Snap rings
1) Snap ring installers should be designed so as not to permanently deform the snap rings.
2) Installed snap rings should be seated securely in the groove.
3) Be careful not to overload the snap ring to the extent that it is permanently deformed.
4) How to install the snap ring:
When installing a snap ring,install it as shown in the figure with its round edge side turned toward the part to be retained.This round edge is formed when the snap ring is pressed out.

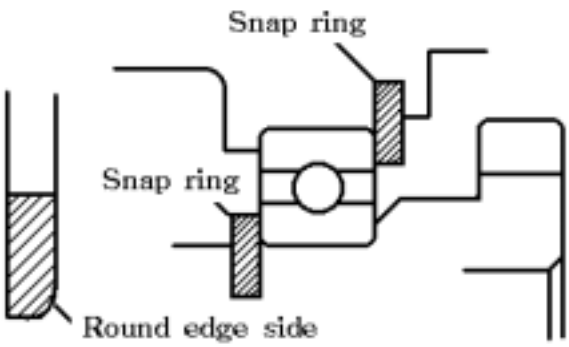

Fig.2-1

(5) Spring(roll) pins

1) Spring pins should be driven in properly as tightly.
2) Spring pins should be installed so that their seams should face the direction from which the load is applied.

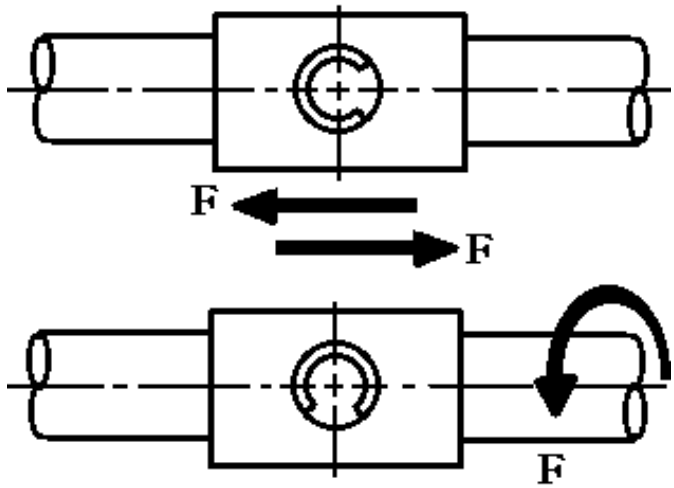

Fig.2-2

3) The roll pins installed in the transmission or other parts where much force is applied should be retained with the wire.

(6) Cotter pins
When installed, cotter pins should be bent securely at the ends as shown in the figure

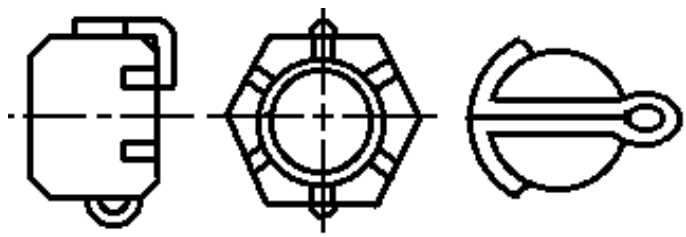

Fig.2-3

(7) Bolts and nuts

1) Special bolts are installed at several locations,so be sure not to interchange them other bolts.
2) Bolts and nuts should be tightened to their specified torque wrench.
3) When locking the bolts or nuts with wire or a lock washer,

https://truckmanualshub.com/

,Be sure to wind the wire paying sufficient attention to its winding direction and bend the lock washer for secure looking.

4) When locking bolts and nuts with an adhesive,apply the adhesive on the thread and tighten securely.

5) Apply an adhesive(THREE BOND TB1104) to parts through which there is any possibility of oil leaks,such as stud bolts and tapped-through parts.

6) Each lock nut must be tightened securely.

7) When tightening bolts and nuts, refer to the tightening torque table.

(8) After installation, each grease fitting should be filled with grease.

1) When installing grease fittings of type B and C,be sure to turn the fitting tips in a direction that will provide easy access for a grease gun.

(9) Other precautions

1) Be sure not to damage any finished surfaces or parts.

2) Always refrain from forcing installation.

3) Each lever knob should be installed coated with an adhesive (SUPER THREE CEMENT TB1702)

4) Each contact surface should be coated with an adhesive(THREE BOND TB 1215) and tightened evenly with bolts.
Adhesive coated surfaces should be installed within 30 minutes after application of the adhesive.

The contact surfaces should be flawless and free from foreign matter,and especially from grease before application of the adhesive.

5) Precautions for applying adhesives.

- The surface or the thread where and adhesive is to applied should be completely free of chips.

- The surface or the thread where an adhesive is to be applied should be completely free of oil-ness.

https://machmanuals.com/

SECTION 2. OPERATION CHART FOR DISASSEMBLY AND REASSEMBLY BY MAJOR BLOCKS

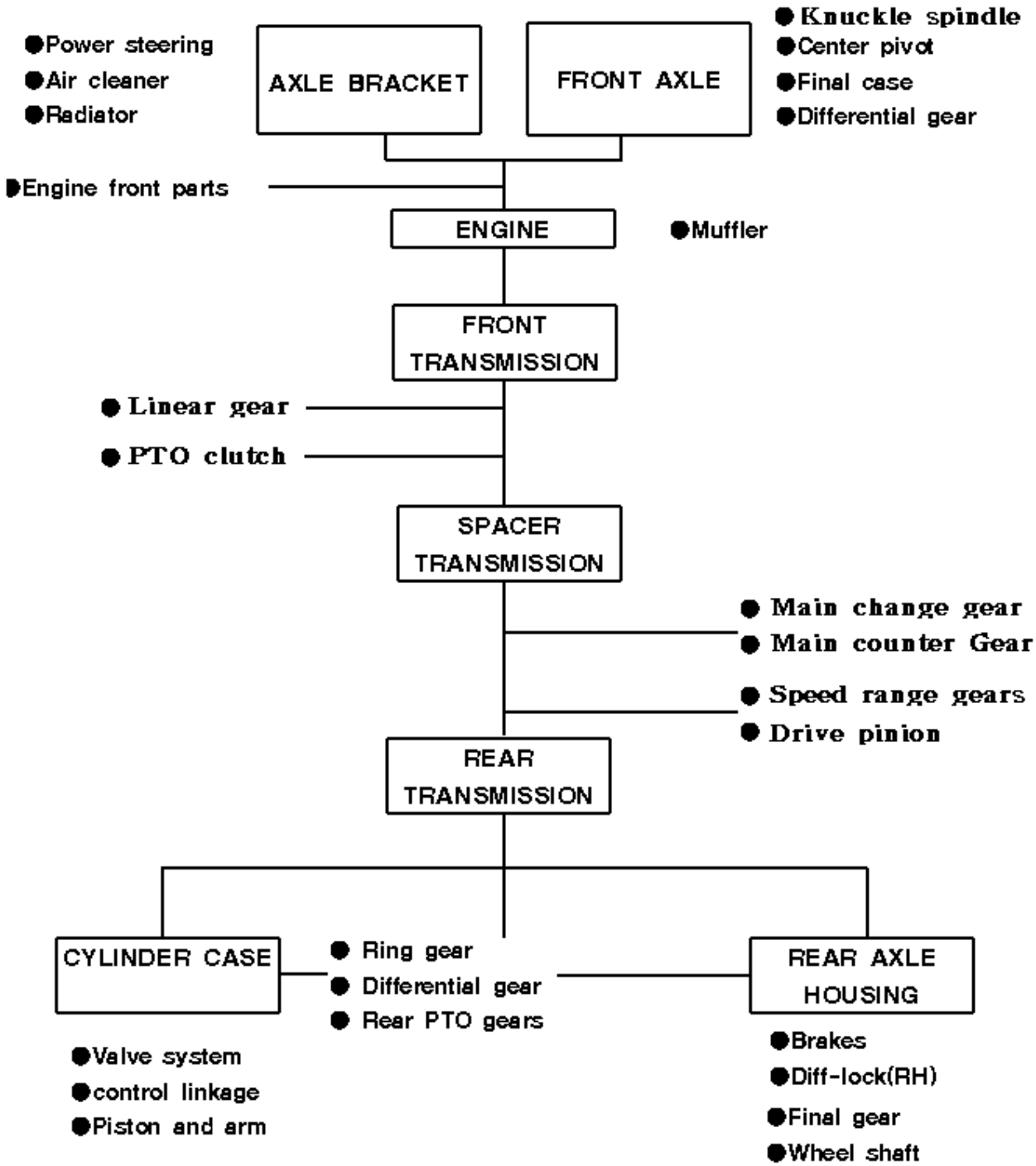

https://truckmanualshub.com/

SECTION 3. SEPARATION OF MAJOR COMPONENTS

1.SEPARATION OF THE FRONT AXLE AND AXLE BRACKET

Parts which can be inspected during This operation
-Center pivot
-Final case
-Differential gear

(1) Removal
1) Hold the front hitch or the front bracket securely with a crane or stands.
2) Support the front axle with a jack
3) Remove both right-hand and left-hand tie rods.
4) Remove the pivot metal bolts.
5) Remove the front axle assembly forward.

FIG.2-4 Front axle

Note:
When working on the 4WD version,the drive shaft should be removed ahead of time.

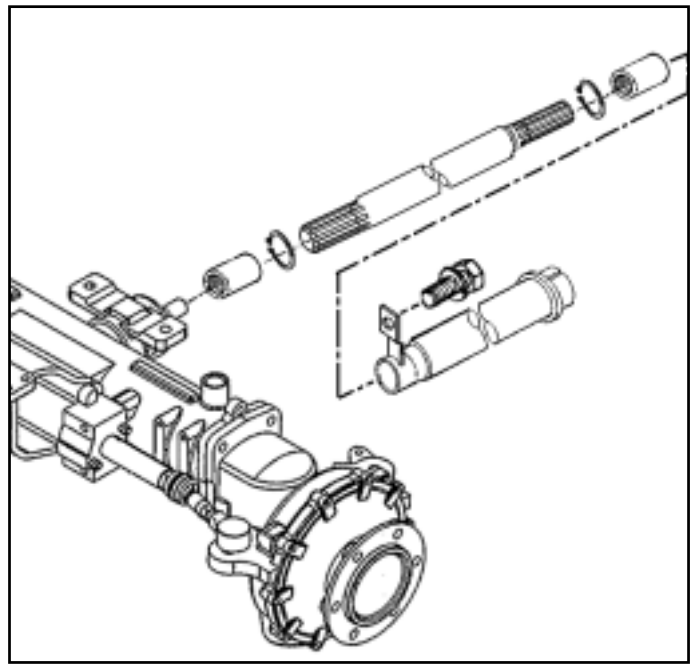

FIG.2-5 Drive shaft

(2) Installation
1) Install the front axle assembly.

2) Install both pivot metals(supports)

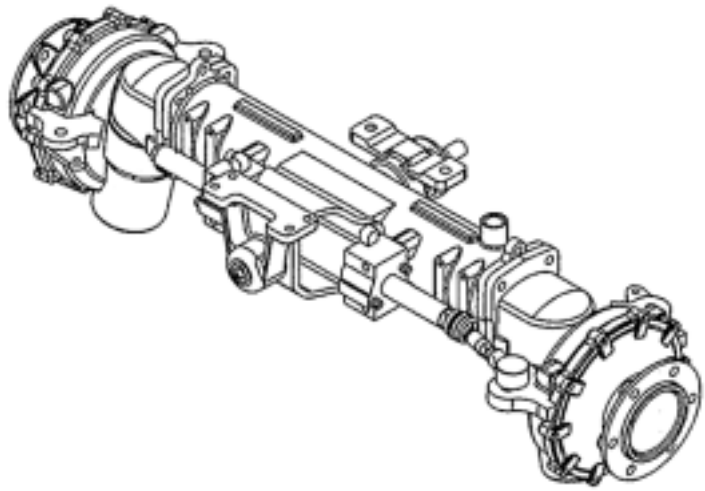

FIG.2-6 Front axle

Note:

Apply grease to the bushing and fill the oil seal with grease ahead of time.Install the oil seal carefully not to allow its lips to turn over.

3) install both of the right and left tie rod.

1.SEPARATION OF THE ENGINE AND THE FRONT AXLE BRACKET

https://truckmanualshub.com/

Parts which can be inspected during This operation
-Air cleaner
-Radiator
-Power steering system
-Engine front part.

(1) Removal

1) Hold or support the engine with a crane or stands.
2) Hold or support the front bracket or the axle bracket in a manner that the part other than the engine can be removed if required.
3) Remove the side covers (RH and LH) and engine hood.

FIG.2-7 Wiring harness

4) Disconnect the positive and negative battery cables.

FIG.2-8 Battery

5) Open the front grille.
6) Detach the head light wiring.
7) Remove the other wiring
8) Remove the inlet pipe from the air cleaner.
9) Remove the air cleaner.

Note:
Here the air cleaner can be moved as an assembly.

10) Remove the upper hose,lower hose.and drain hose from the radiator.

Note:
The radiator should be drained of the coolant ahead of time.

11) Remove the fuel filter.

Fig.2-9 Fuel filter

12) Remove the radiator from the axle bracket

Fig.2-10 Radiator

https://truckmanualshub.com/

13) Remove the battery and battery bracket.
14) Remove the two hoses for the power steering system.
15) Remove the mounting bolts of the right hand pivot metal(support) ahead of time.
16) At this stage,the power steering unit can be removed by disconnecting both right-hand and left hand tie-rods and removing the unit mounting bolts.

Note:
When the pipes related to the hydraulic system are removed,their openings should be covered with plastic caps or the like to keep out dust or other foreign matter.

(2) installation
Reassemble in reverse order of removal.
1) Install the axle bracket on the engine.
2) Retighten the right-hand pivot metal (support) mounting bolts.
3) Connect the piping of the power steering system.
4) Install the battery bracket and battery.
5) Install the radiator and oil cooler on the front axle bracket.
6) Connect the upper, lower and drain radiator hoses.
7) Install the air cleaner assembly and the inlet pipe of the air cleaner.
8) Connect the wiring of the head lights and other harness.
9) Connect the ground strap and the battery cables.
10) Install the engine hood.
11) Install the side covers.
12) Fill the radiator with coolant.

3.SEPARATION OF THE ENGINE AND THE FRONT TRANSMISSION.

Parts which can be inspected during this operation.
-Fly wheel
-Main clutch

(1) Removal
1) Drain the transmission of the oil
(In the case of the 4WD version),remove the front wheel drive shaft.

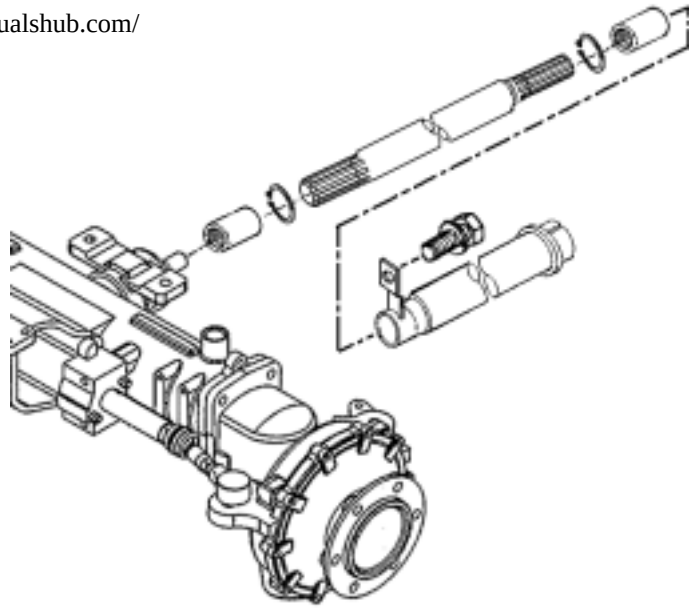

FIG.2-11

2) Support the engine on the bottom with a jack or stands.
3) Hold the transmission with a garage jack or a crane so that the transmission side can be moved when needed.
4) Remove both side covers (RH and LH) and engine hood.

FIG.2-12

FIG.2-13

5) Disconnect the battery cables.

https://truckmanualshub.com/

FIG.2-14

6) Disconnect the panel instrument set removing bolts(4 nos.)

FIG.2-15

Note:

-Tilt the steering column rearwards.

-Lift up the panel set and disconnect the wiring couplers.

7) Remove the cover.

FIG.2-16

8) Disconnect the hydraulic hose from the power steering (orbitrol)

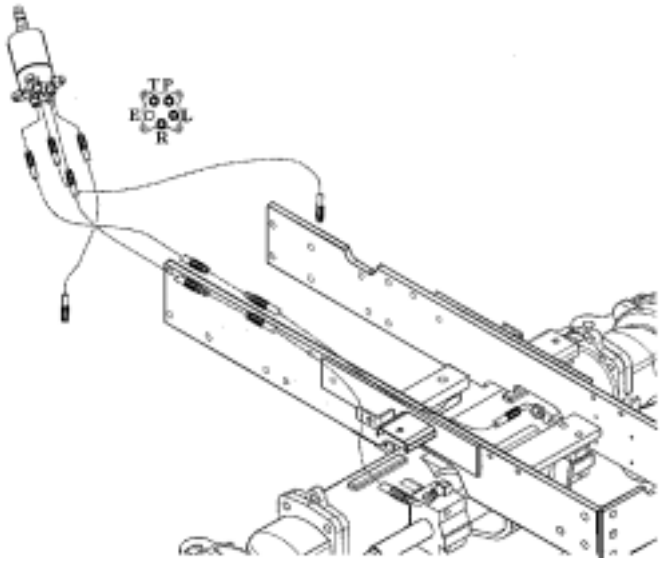

FIG.2-17

Note:

- Disconnect the linear shift control cable
- Disconnect the cable from both the steering lever side and transmission.

10) Remove the mounting bolts and dismounting the dash panel

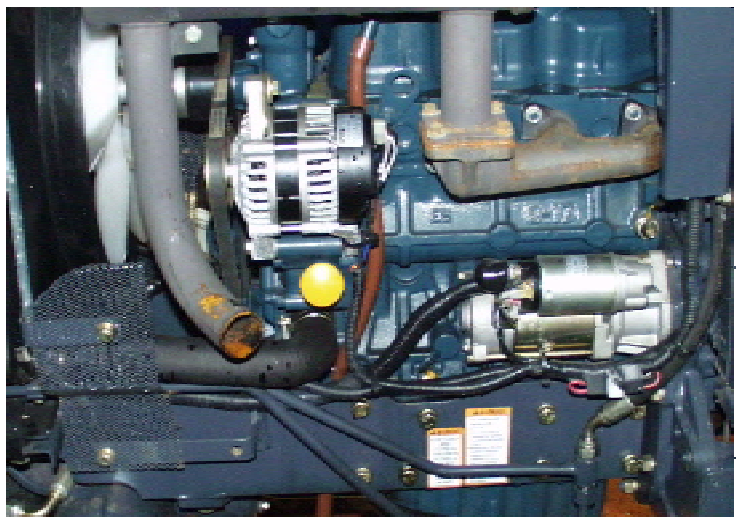

FIG.2-18 hardware Disassembly

11) Disconnect the rubber hose from the suction pipe.

https://truckmanualshub.com/

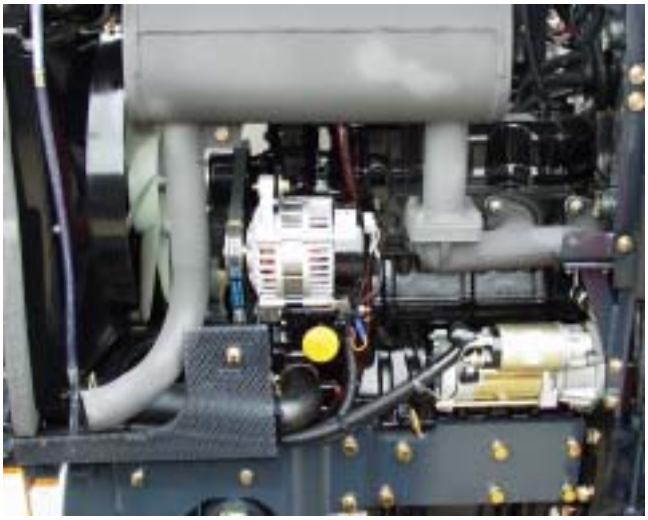

12) Wedge both sides of the front axle to prevent the engine from tilting.

FIG.2-19 Wedging

13) Remove the clutch housing and engine tightening bolts and move the engine forward.

FIG.2-20 Engine

(2) Engine separation from the chassis.

When separating the engine from the chassis,the following steps are required as well as the ones mentioned above.

1)Lift the engine with the hoist and hold the front axle bracket with a stands or the like.
2) Disconnect the upper, Lower ,and drain hoses from the radiator.
3) Disconnect the two power steering system hoses.
4) Remove the fuel hose.
5) Disconnect the the inlet pipe.
6) Loosen the right hand pivot metal tightening bolts beforehand.
7) Separate the engine from the front axle bracket.

(3) INSTALLATION

REASSEMBLY IN REVERSE ORDER OF REMOVAL.

1) Install the engine on the front axle bracket.
2) Retighten the right hand pivot metal tightening bolts.
3) Connect hoses.
4) Assemble the engine and the front transmission.

Note:
- Apply small mount of grease to each of the sliding parts. Be careful not to apply excessive amount of grease as this could cause clutch slipping.
- During operation, be sure to avoid any of the reassembly operations that may place load upon the input gear.

5) Install the hydraulic system piping.
6) Install the dash panel.
7) Install the wiring and rods.
8) Install the covers.
9) Connect the panel set wiring and then install the panel.
10) Connect the wiring for the engine.
11) Connect the battery terminals.
12) Install the engine hood and side cover.

4.SEPARATION OF THE FRONT TRANSMISSION AND SPACER TRANSMISSION

https://truckmanualshub.com/

Parts which can be inspected during This operation
-PTO clutch
-Linear shift gears and related parts
-Main change gears

1) Removal

A:Removal of the whole floor.

1) Remove the side covers(LH and RH).

2) Disconnect the negative battery cable.

3) Detach all the wiring relevant to the removal of the floor.

FIG.2-21

4) Disconnect the throttle lever cable from the fuel injection pump and accelerator pedal cable from the pedal.
5) Disconnect the clutch rod and brake rods under the floor.
6) Disconnect the steering cylinder at the hydraulic pump

7) Remove the slow-return check valve knob

FIG.2-23 Slow return check valve

8) Remove the diff-lock pedal

FIG.2-25 Diff-lock pedal

9) Remove the parking brake.

https://truckmanualshub.com/

10) Remove the main shift and transmission range shift levers.The levers can be separated in the middle.

11) Remove the control rods of the PTO shift and 4WD shift levers from the transmission.

12) Remove the position control levers.

FIG.2-26 Range shift lever

FIG.2-27 position control lever

13) When the tractor is equipped with an optional remote control valve,remove the remote control valve link.

14) Drain the fuel system of fuel.

15) Remove four rubber mounts.

FIG.2-28 Rubber mounting

16) Lift up the floor slightly with a hoist.

17) Disconnect the linear shift control cable, fuel hoses,and gauge coupler between the fuel tank and floor.

FIG.2-29

18) Lift the floor gradually taking care not to allow the shaft of the slow return check valve and its hole in the floor to interfere with each other.

https://truckmanualshub.com/

FIG.2-31 Slow return check valve

Note:
Lift up the floor gradually making sure that all relevant wiring. Piping, and links are disconnected.

FIG.2-32 Floor

B: Division of the chassis.
1) Drain the transmission of oil
2) Remove the front wheel drive shaft

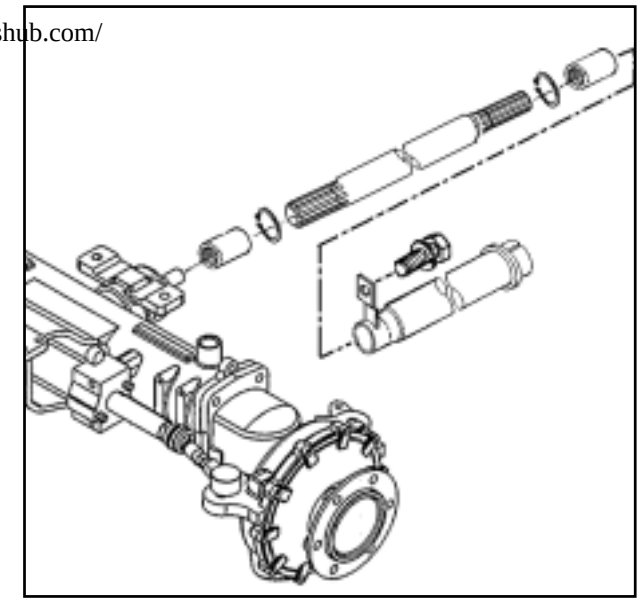

FIG.2-33 Front wheel drive

3) Disconnect the brake rods.

FIG.2-34 Brake rod.

4) When the tractor is equipped with an optional remote control valve ,remove the remote control piping.

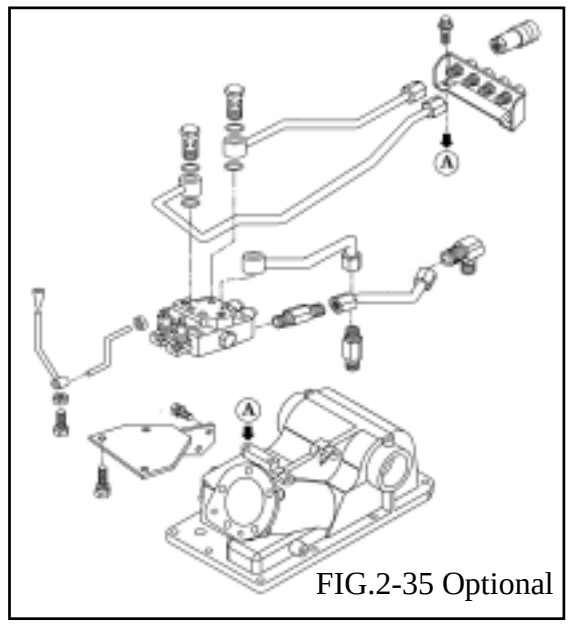

FIG.2-35 Optional

5) Remove the suction and delivery pipes.
6) Remove the delivery pipe for the PTO clutch.
7) Remove the reverse shift metal(support)

https://truckmanualshub.com/

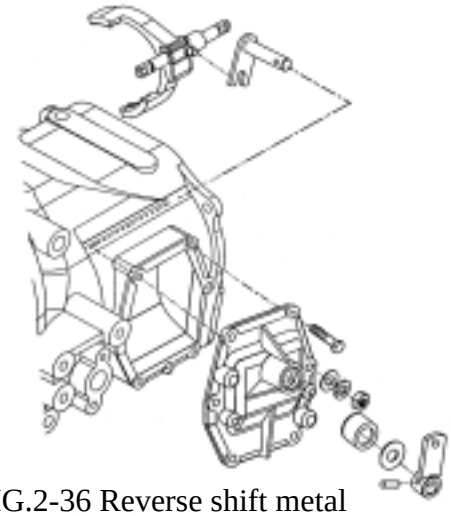

FIG.2-36 Reverse shift metal

8) Hold the clutch housing and space transmission case with a crane or jack.
9) Remove the bolts which tighten the front transmission and spacer transmission cases.
10) Move the rear part of the tractor rearwards by turning the rear wheels by hand, and then the spacer and rear transmission assembly will be separated from the front transmission.

Note:
When moving the rear part of the tractor. be careful not to allow the garage jack to shift from the spacer transmission case.

Remarks

The rear transmission and spacer transmission cases should be separated and the reverse shift metal(support) removed in order to take care out or provide access to the main shift and transmission range shift gears. For further details,refer to Chapter 5. Transmission.

2.installation

Reassemble in reverse order of disassembly.

(1) Assemble the front and spacer transmission. Make sure that the turning lock of the PTO clutch is securely seated in the groove in the spacer transmission case.
(2) Install the reverse shift metal(support)
(3) Install the PTO clutch delivery piping.
(4) Install brake rods.

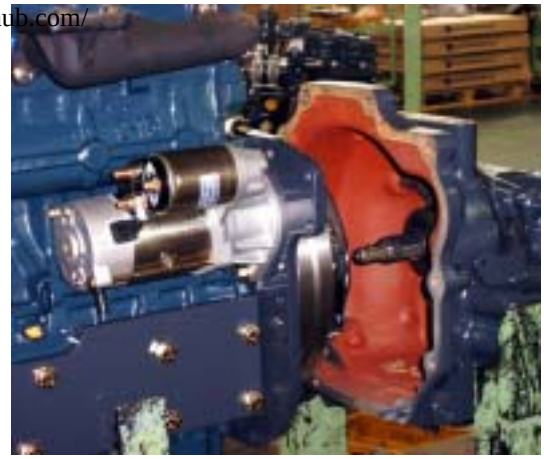

FIG.2-37 Transmission

(5) Install the front wheel drive shaft.
(6) Position the floor taking care not to allow wiring or other parts to be pinched under it
(7) With the floor lifted up a little, install the fuel hose and fuel gauge coupler on the fuel sub-tank and connect the linear shift control cable.
(8) Fix the floor at the four rubber mounts.
(9) Install all levers,knobs, and Rods.
(10) Connect the power steering wheels.
(11) Connect the accelerator wires.
(12) Install wiring
(13) Connect the negative battery cable.
(14) Install the side covers(RH and LH)
(15) Fill the transmission case with oil
T290/T300T330/2810NEW : 32ℓ

https://truckmanualshub.com/

5.SEPARATION OF THE SPACER TRANSMISSION AND REAR TRANSMISSION

Parts which can be inspected during This operation
- Drive pinion gear
- Speed range gear(Transmission range shift)
- Main change gear.
- 4WD drive gear

1) Removal
(1) remove side cover(LH and RH)
(2) Disconnect the negative battery cable
(3) Remove the slow-return check valve knob.

FIG.2-40 slow return check valve knob

(4) Remove the diff-lock pedal
(5) Remove the parking brake
(6) Remove the speed range shit and transmission range shift levers.
The lever can be separated in the middle
(7) Disconnect the PTO change and 4WD change rods from the transmission.

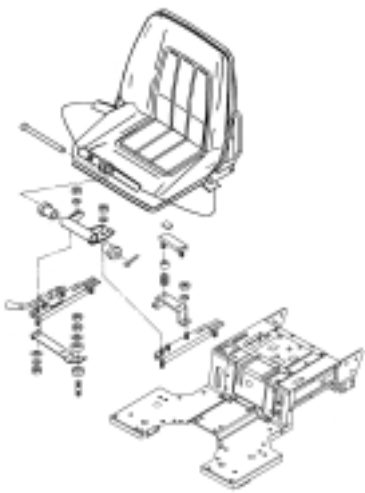

FIG.2-41 operator's seat

(8) Remove the operator's seat
(9) remove the position control lever
(10) Remove the lever guide.
(11) When the tractor is equipped with an optional remote control valve,remove the remote control valve and relevant parts from the bracket.

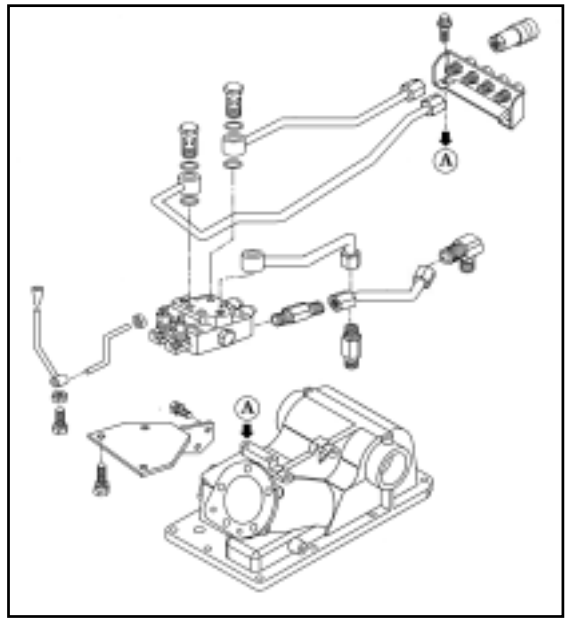

FIG.2-42 Remote control valve (optional)

(12) remove the back panel.
(13) remove the fuel tank cover
(14) Drain the fuel of fuel tank.
(15) Remove the fuel tank and tank stay.
(16) Remove the floor frame.
(17) Drive in a chock between the front axle housing and axle bracket.

FIG.2-43.Chock

(18) Place a jack under the bottom of the spacer transmission case to support
(19) Lift up the rear transmission and remove the right and left rear wheel

https://truckmanualshub.com/

(20) Remove two rubber mounts.

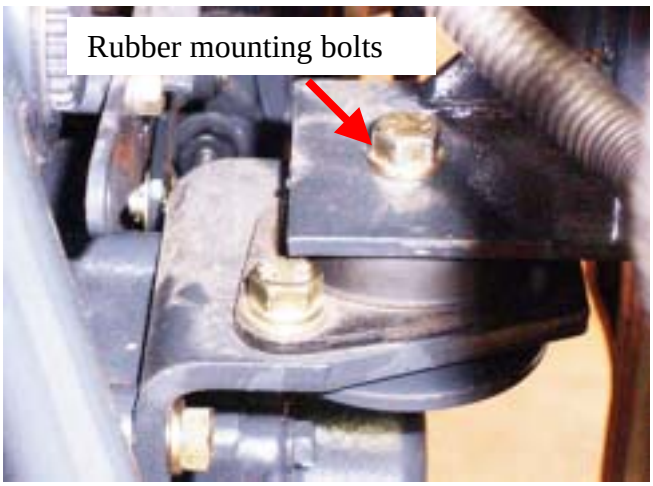

FIG.2-44 Frame rubber mounts.

(21) Lift up the rear end of the floor/fender assembly by about 10 mm,and place wood between the spacer transmission case and floor panel
(22) Drain the transmission of oil
(23) Remove the assembly of the remote control valve and piping.
(24) Remove the suction and delivery pipe

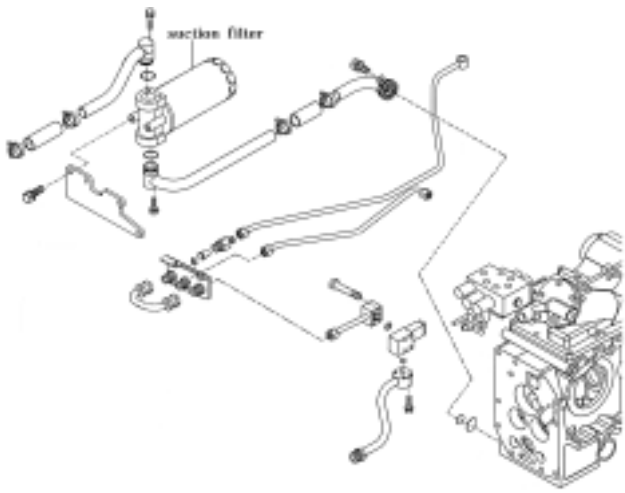

FIG.2-45 suction filter

(25) Remove the front wheel drive shaft
(26) Remove the brake rods.
(27) Remove the main change metal and sub change metal(Support)
(28) Remove the 4WD shift metal

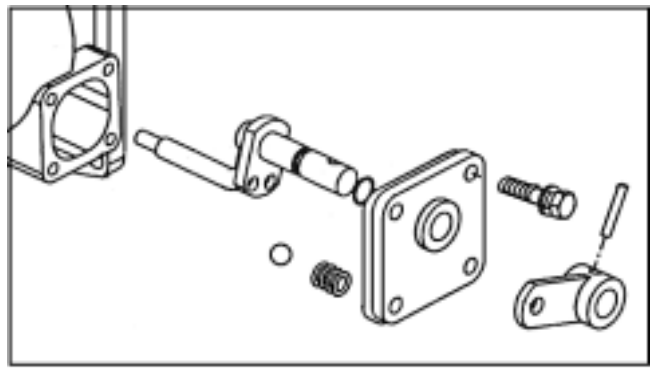

FIG.2-46 sub change metal

(29) Remove all the spacer-rear transmission case tightening bolts and nuts except the bottom bolt.

(30) Install the rear wheels(LH and RH) and the remained bolts.Then turn the rear wheels by hand to move the rear transmission case away from the spacer transmission case.

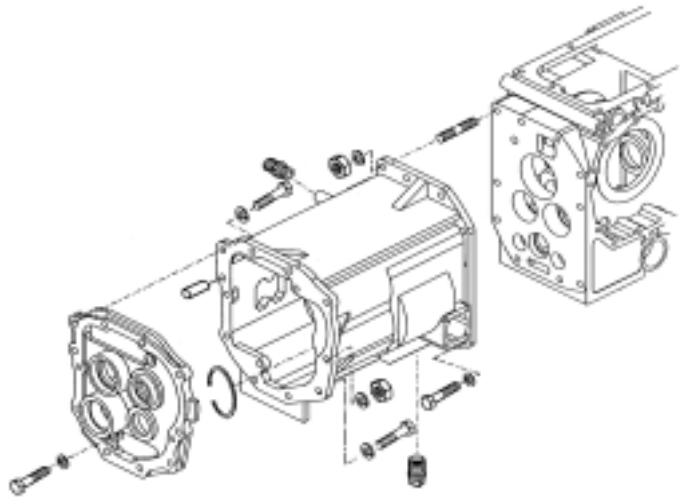

FIG.2-47 space transmission bolt

https://truckmanualshub.com/

(31) Install the rear wheels(LH and RH) and the remained bolts.Then turn the rear wheels by hand to move the rear transmission case away from the spacer transmission case.

2) Installation

Reassemble in reverse order of disassembly.

Note:

•The 4WD drive shaft should be installed on the rear transmission ahead of time.

(1) Join the rear and spacer transmission cases.

Note:

During the operation,be careful not to damage needle bearings, the cut –away part in the gear should be turned downward without fail so as to clear the gear to be positioned underneath.

(2) Install the main change shifter link and each change metal.

(3) install the brake rods and front drive shaft.

(4) Install the hydraulic piping.

(5) Install two rear rubber mounts.

(6) Install exterior parts.

(7) Fill the transmission case with oil

T290/T300/T330/2810NEW:32ℓ

6.SEPARATION OF THE REAR TRANSMISSION AND REAR AXLE HOUSING

Parts which can be inspected during This operation

- Diff Lock
- Brakes
-Final gears

1) Removal

As both sides can be disassembled in the same way,only side with the diff-lock installed will be explained here.

(1) Drain the transmission case of oil

(2) Lift up the rear transmission and remove the rear wheel on the diff-lock side.

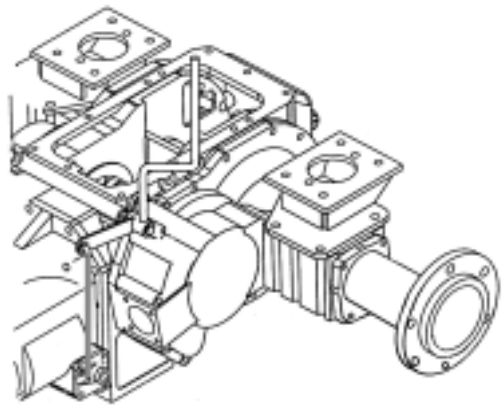

FIG.2-51 Rear wheel

(3) Remove the diff-lock pedal

FIG.2-52 Diff-lock pedal

(4) Remove the brake rods.

https://truckmanualshub.com/

(5) Remove the 3-point linkage and related parts.

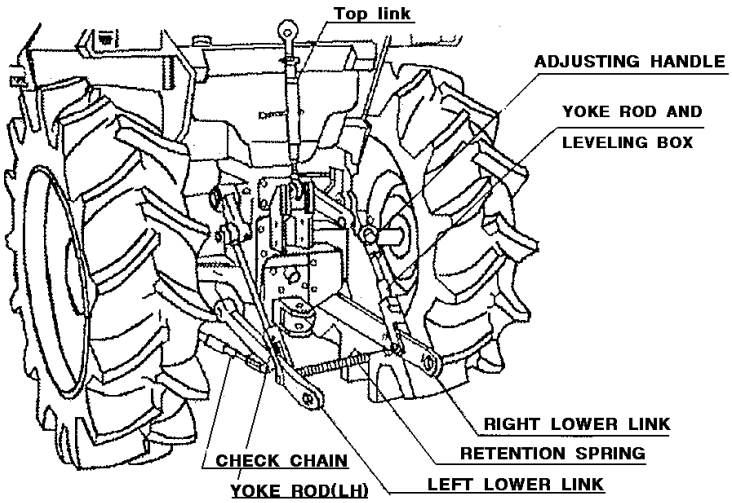

FIG.2-53 3-point linkage

(6) Support the floor panel with a trestle or the like.

(7) Remove the rubber mount along with the bracket.

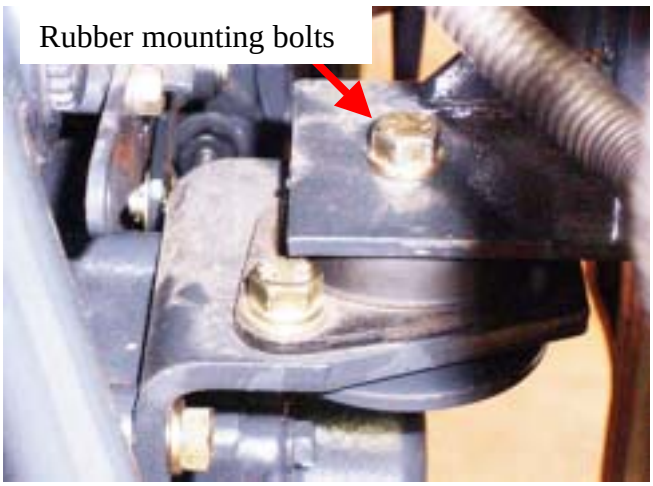

FIG.2-54 Frame rubber mounts.

(8) Remove the rear axle housing tightening bolts.

(9) Remove the brake case from the rear transmission case.

(10) Detach the brake assembly from the rear transmission case.

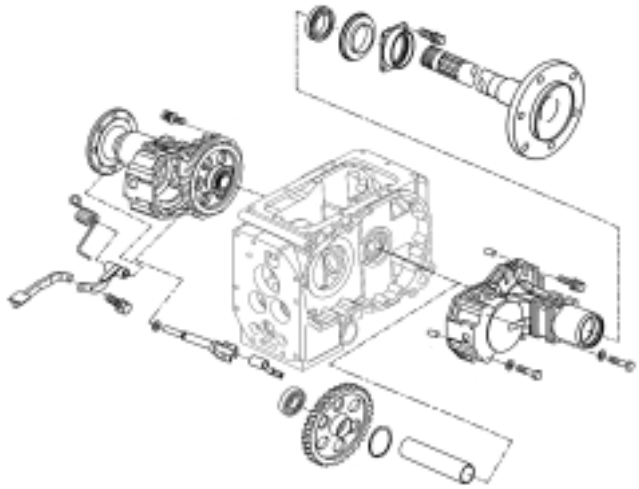

FIG.2-55 Rear axle housing

2) Installation

Reassemble in reverse order of disassembly.

(1) join the rear axle and rear transmission

Note:

Make sure that the diff-lock shifter is fitted into the groove in the dif-lock metal

(2) Reinstall the other removed parts.

(3) Mount the rear wheel.

(4) Refill the transmission with oil up to the specified level

-Level up to fill the oil can be sought from the rear side of rear transmission case(Window)

7.SEPARATION OF THE REAR TRANSMISSION AND CYLINDER CASE

https://tractormanualshub.com/

Parts which can be inspected during This operation
- Control valve
- Control linkage
- Piston and lift crank linkage
- PTO change gears.

Inspection and service of the rear transmission should be performed following the instructions in the paragraph : 5 SEPARATION OF THE REAR TRANSMISSION AND SPACER TRANSMISSION

1)Removal
(1) Remove the operator's seat.

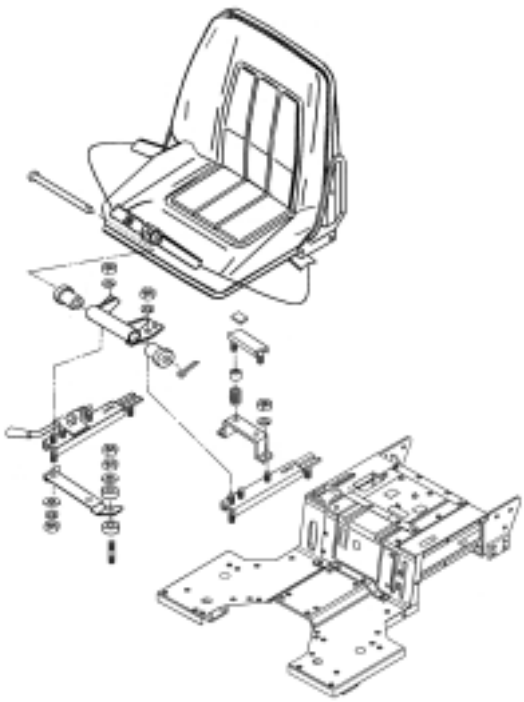

FIG.2-58 operator's seat

(2) Remove the position lever
(3) Remove the lever guide(RH)
(4) When the tractor is equipped with an optional remote control valve,remove the remote control lever and related parts from the bracket.
(5) Remove the back panel
(6) Remove the tank cover
(7) Remove the wiring for the rear combination lamps and trailer socket coupler.
(8) Drain the fuel of fuel tank.
(9) Remove the fuel tank and tank stay bracket .
(10) Detach the delivery pipe from the cylinder case.
(12) Remove the slow-return check valve along with the shaft.
(13) Remove the 3-point lift link and related parts from the lift arm.
(14) Remove the Cylinder case tightening bolts.
(15) Detach the cylinder case assembly from the rear transmission

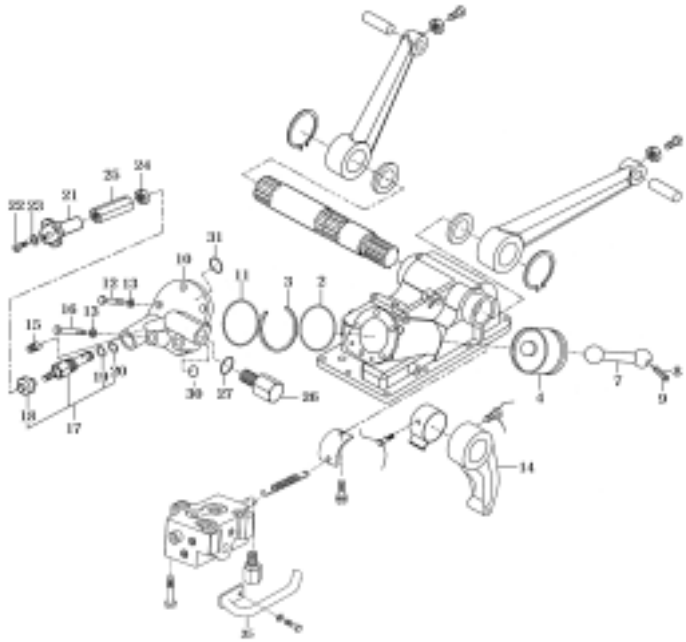

FIG.2-59 cylinder case

2) Installation
Reassemble the reverse order of disassemble.
(1) Tighten the cylinder case on the rear transmission case to the specified torque.

Tightening torque	5.4~6.87 Kgf.m (39.8~50.6lb.fts)

(2) After reassembly, make sure that the system functions properly.

https://truckmanualshub.com/

Chapter 3

ENGINE ACCESSORIES

SECTION 1. RADIATOR ----------3-1

1. General description ----------3-1

2. Radiator ----------3-2

3. Specifications---------- ----------3-3

4. Removal of the radiator----------3-3

5. Inspection of each part ----------3-3

6. Radiator reassembly ----------3-5

7. Daily inspection ----------3-5

8. Trouble shooting ----------3-6

SECTION 2. AIR CLEANER SYSTEM---------- 3-7

1. General description----------3-7

2. Double elementary air-cleaner ----------3-8

3. Inspection of each part----------3-9

4. Cleaning of the air cleaner----------3-9

5. Element installation----------3-10

https://truckmanualshub.com/

Chapter 3.Engine accessories

SECTION 1. RADIATOR

1.General description

The pressure cooling system includes mainly the radiator,water pump,multi-blade fan, and

the thermostat.During the warm-up period,the thermostat remains closed and coolant is directed through by-pass to the suction side of the water pump.

Coolant then circulates through the cylinder block and water pump only to provide a uniform and fast warm-up period. Once the engine has reached operating temperature,the thermostat opens and coolant is pumped from the bottom of the radiator via the lower hose into the cylinder block. Here it circulates through the block and around the cylinders.

From the cylinder block,coolant is directed through the cylinder head and into the thermostat housing.With the thermostat open,coolant passes through the housing and upper radiator hose into the top of the radiator where it is circulated to dissipate heat.

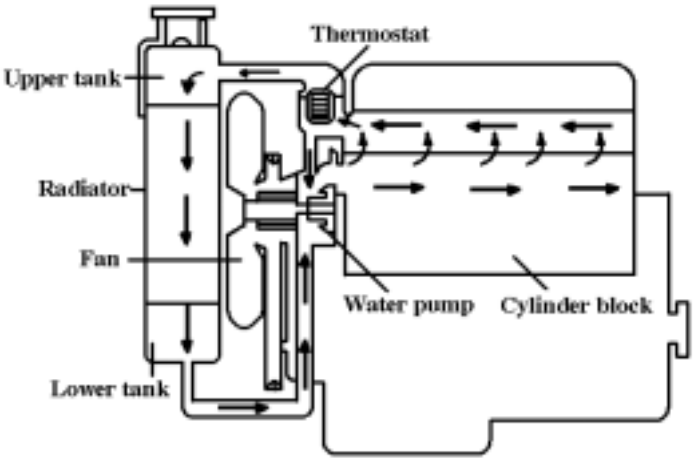

FIG.3-1

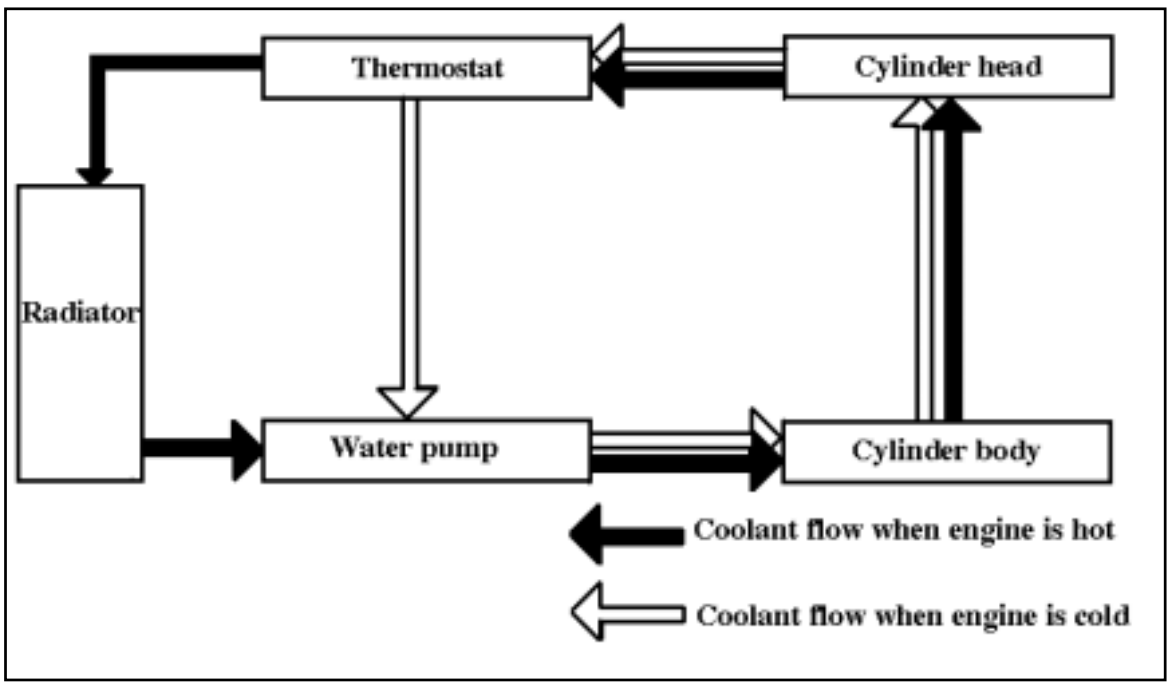

FIG.3-2

2. Radiator

https://truckmanualshub.com/

The radiator consists of radiator cores, a tank to Flow coolant,side plates to install the radiator, and a fan guide.
Fin-tube type cores are used and the cores and tank is made of anti corrosive copper and Copper alloy.

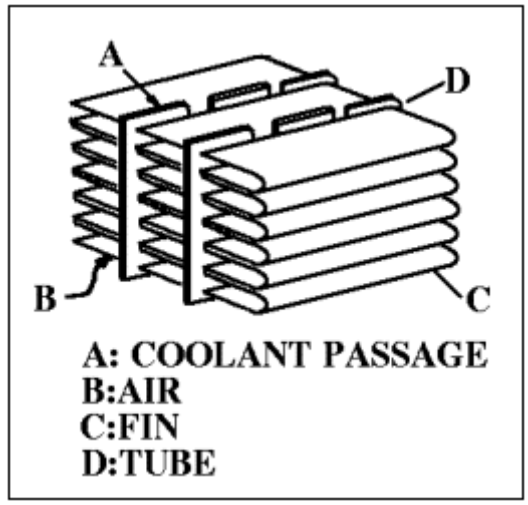

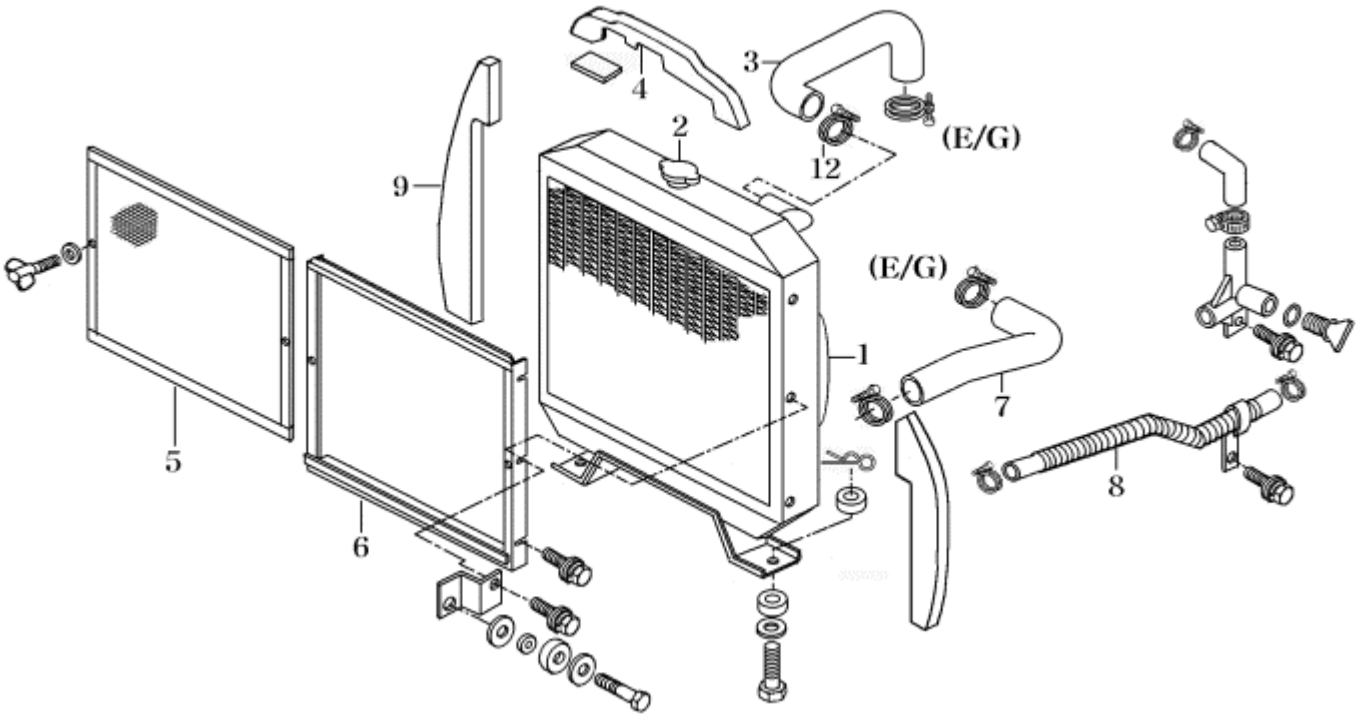

FIG.3-3

① Radiator assy ② Radiator cap ③Hose,Radiator ④Insulator
⑤Net comp ⑥Net bracket ⑦Hose radiator ⑧Hose
⑨Insulator ⑫Clamp

3. SPECIFICATIONS

https://truckmanualshub.com/

Description	T290/T300/T330/2810NEW
Radiator core type	Flat water tube with corrugate fins
Core train number	4 trains
Radiator fin pitch	4.2 mm
Thermal radiator area	8.185㎡
Pressure valve opening pressure	0.9±0.15Kgf/ ㎠
Coolant capacity	7 ℓ(contains in cylinder block)
Test pressure	1.8 Kgf/㎠

4. REMOVAL OF THE RADIATOR

1) Release the clamp and remove the upper hose.

2) Release the clamp and remove the lower hose.

3) Release the hose clamp and remove the water drain hose.

Note:
- Refer to the paragraph"SEPARATION OF THE ENGINE AND THE FRONT AXLE BRACKET in chapter 2 for operation up to this step.

-When removing the radiator,take care not to damage the radiator cores and oil cooler.

5. INSPECTION OF EACH PART

(1) Inspection for radiator water leaks.

Water leaks are liable to occur at the fitting portion between the upper tank and the core section or between the lower tank and the core section.

If any water leak should occur there,repair the leak by soldering.Besides making a visual check,a more complete inspection should be accomplished as follows:

a. Leak test with compressed air.

Place the radiator as shown in the figure. Close the openings for water inlet and with something like a rubber plug and apply compressed air (1kgf/㎠ or 14.2psi) through the drain pipe into the radiator.

Excessively compressed air may damage the cores, so perform the air delivery carefully,watching the pressure gauge. Water leaks are inspected by watching for rising air bubbles.

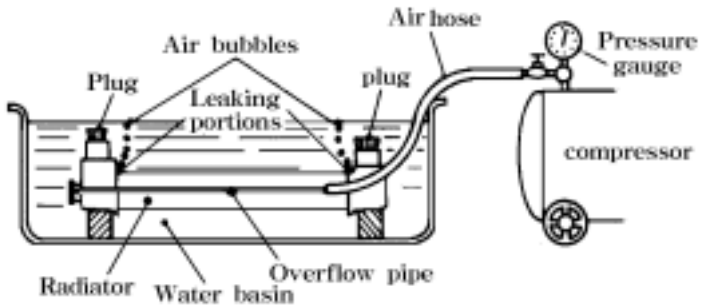

FIG.3-4

b.Leak test with a radiator cap tester

With the inlet and outlet pipes plugged up and the radiator filled with water,replace radiator cap with a radiator cap tester as shown in the figure.
Pump up the pressure in the radiator to the specified value and check to see if there are any leaks in the radiator.
When the radiator is water-tight,the pressure indicated on the pressure gauge does not increase,but if there are leaks,the pressure decreases.This tester is also applicable for leak tests for the whole cooling system,not only for the radiator.The test method is the same as mentioned above.

https://truckmanualshop.com/

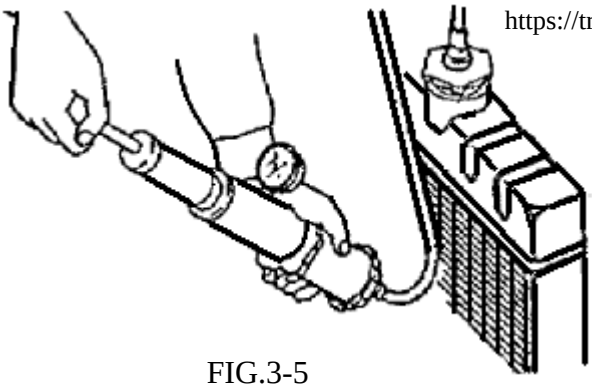

FIG.3-5

Testing Pressure	1.8Kgf/ /㎠

2) Inspection for radiator clogging

To inspect the radiator cores to see if they are clogged with fur or rust,remove the radiator cap and check for transparency of the coolant,and for rust or fur formation around the radiator throat inside the radiator.

If some rust or fur has formed or the coolant transparency is very poor,the radiator should be cleaned.

a. Cleaning the radiator inside.

-Place the radiator upside down and supply pressurized water from a faucet to the lower tank, draining through the upper tank,as shown in the figure to wash out accumulated deposits.

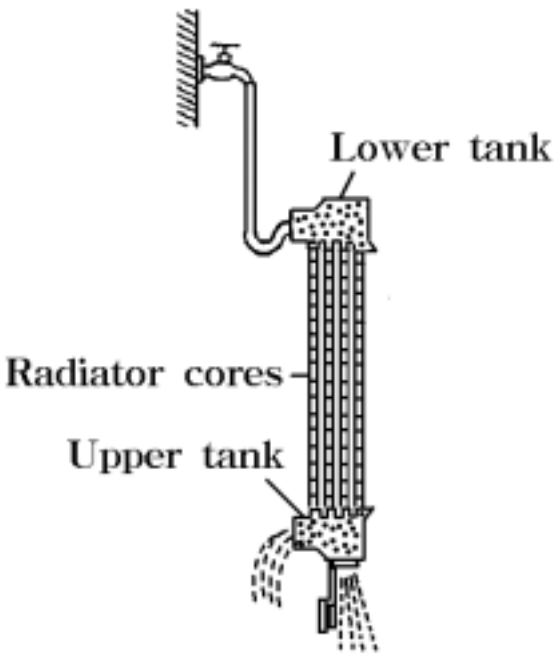

FIG.3-6

-Clean with a detergent

When cleaning the radiator with a detergent, follow the instructions given by its manufacturer. Different detergents have different characteristics.

b. Cleaning the radiator exterior

- Cleaning the net (wire mesh)

After the tractor has been operated in dusty conditions,check the net daily and clean it if necessary.

-Cleaning the radiator cores

Clean the radiator cores by applying water spray or compressed air so as to for a right angle with the radiator cores,moving water application in parallel.

Note:

When cleaning the radiator cores with pressurized water,be sure to apply it at a right angle to the cores. Slanted application might deform their cooling fins.

3) Visual inspection of the exterior parts

When the radiator exterior is corroded,cracked,or badly damaged,replace the radiator.Also replace damaged or fatigued water hoses.

Retighten loose hose clamps securely if water is leaking through the hose clamps securely ,or replace them if necessary.

4) Inspection of the radiator cap.

Check the radiator cap to see if it functions normally,using a radiator cap tester as following.

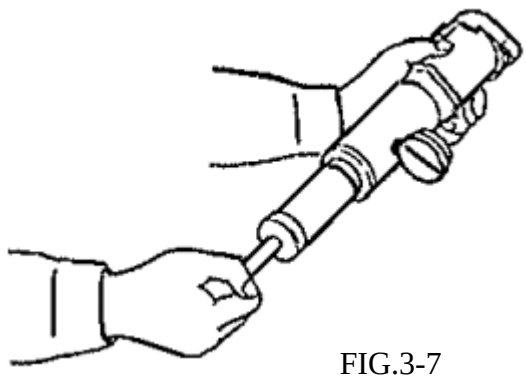

FIG.3-7

Pressure valve Opening pressure	1.05 Kgf/㎠ (14.93 psi)
Vacuum valve Opening pressure	0.04-0.05 Kgf/㎠ (0.57-0.71psi)

https://truckmanualshub.com/

-Function test:

The pressure type radiator cap has a pressure valve and a vacuum as shown in the figure.

Both valves are held against there seats by springs while the pressure in the cooling system remains within a specified range,thus keeping the cooling system air-tight.

When the pressure in the radiator rises higher than the specified valves,it overcomes the force of the pressure valve spring and open the pressure valve to release excess pressure through the overflow pipe as shown in the figure.

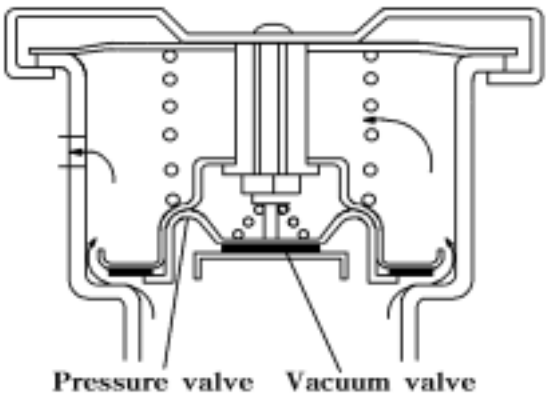

FIG.3-8

When the coolant temperature falls enough to cause the vapor to condense in the cooling system and decrease the coolant volume,the radiator pressure becomes negative.When this occurs,the vacuum valve opens to let outside air into the radiator as shown in the figure,

thus preventing the radiator from being deformed.

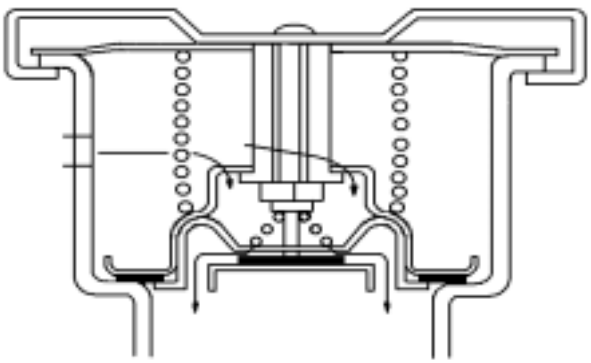

FIG.3-9

6. RADIATOR REASSEMBLY

Reassemble the radiator in the reverse order of disassembly.

Note:
- The rubber hoses should be clamped securely and must not interfere with the cooling fan.
- The radiator cores must not interfere with the cooling fan.

7. DAILY INSPECTION

1) Coolant level inspection and coolant replacement

When the radiator is hot after operation,be sure to wait until the coolant cools down sufficiently before removing the radiator cap.
If this is not done,heated vapor might burst out and cause burns.Use fresh water from a faucet as the coolant. When the coolant is replenished or changed,let the engine idle for a while for the coolant to circulate sufficiently in the cooling system and replenish if necessary after stopping the engine.

2)Antifreeze

When The weather is cold,use an antifreeze to prevent the engine from freezing.The freezing point differs according to the mixture ration of water and antifreeze.Therefore,prepare an antifreeze solution which will have a freezing point 5℃ lower than the estimated lowest atmospheric temperature in your environment.

Precaution for filling antifreeze.
- The radiator interior should be washed clean ahead of time.
- As concerns of mixing ratio of an antifreeze, follow its manufacture's instructions.
- Antifreeze should be blended well with water before filling.
- When the coolant level is lowered due to evaporation,maintain the level by adding water, not by using an antifreeze solution.
- When the coolant level is lowered due to leaks, maintain the level by adding an antifreeze solution of the same mixing ratio.
- As antifreeze corrodes point,take care not to spill it on painted parts.
-The tractor is filled with a permanent type antifreeze (Mobile Long Life Coolant) when shipping(mixing ratio:50%)

https://truckmanualshub.com/

8. TROUBLE SHOOTING

TABLE 3-1

Problems	Causes	Countermeasures
1) Overheating	(1) Low coolant level	(1)Replenish coolant and inspect water leaks.
	(2) Fatigued pressure valve spring	(2)Replace radiator cap.
	(3) Loose or broken fan belt	(3)Adjust belt tension or replace.
	(4) Oily fan belt	(4)Replace.
	(5) Poor thermostat	(5)Replace.
	(6) Poor water pump or water leaks	(6)Repair or replace.
	(7) Clogged water passages	(7)Clean radiator and water passages.
	(8) Improper injection timing	(8) Adjust injection timing.
	(9) Clogged air ways	(9) Clean radiator exterior.
	(10) Fuel gas enters water jacket due to broken cylinder gasket	(10) Inspect cylinder head and replace cylinder gasket
2) Overcooling	(1) Poor thermostat	(1)Replace
	(2) Excessive low atmospheric temperature	(2) Decrease radiator working area by radiator masking.
3)Lose of coolant	(1) Leaking radiator	(1)Repair or replace
	(2) Loosely clamped or broken water hose	(2)Retighten or replace
	(3) Fatigued pressure valve spring	(3)Replace radiator cap
	(4) Leaking water pump	(4)Repair or replace
	(5) Water leakage through cylinder head gasket	(5) Inspect cylinder head and Replace gasket
	(6) Cracked cylinder head or body	(6)Replace
4) Noisy cooling fan	(1) Poor water pump bearing	(1)Replace
	(2) Loose or bent fan	(2)Retighten or replace
	(3) Unbalanced fan	(3)Replace.
	(4) Poor fan belt	(4)Replace.

SECTION 2. AIR CLEANING SYSTEM

https://tinykmanualshub.com/

1.GENERAL DESCRIPTION

Unfiltered air contains many particles harmful to the engine such as dust ,sand,or other foreign matter. When such foreign matter have entered in to the engine,They have mixed into the lubricant and promote wear of lubrication parts in addition to damaging the piston cylinders.To eliminate these harmful particles,an air cleaner has been installed.The air cleaner Which is installed on the T series tractor is a dry,cyclone type and is constructed as shown in the figure.

Under the influence of suction generated by the engine,unfiltered air flows through air inlet tube(4) and is forced into a high-speed centrifugal motion.By this circulating action most of the dust and dirt particles are separated from the air and collected in the dust unloading valve(3).The remaining dust is removed as the air flows through the paper element(1) before being drawn into the engine.

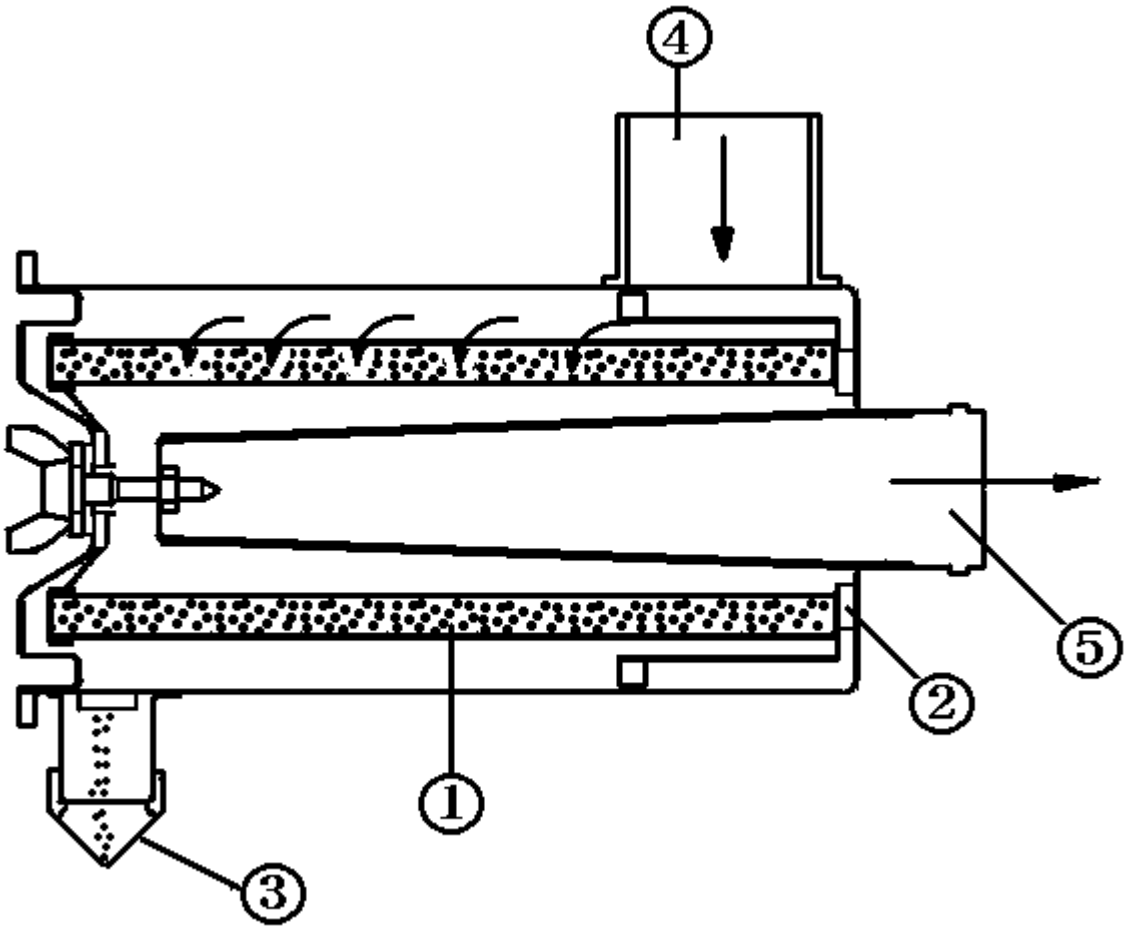

FIG.3-10

① Paper element ② Packing ③Dust unloading valve
④Air inlet ⑤Air outlet

https://truckmanualshub.com/

2.ELEMENT AIR CLEANER

(1) SPECIFICATIONS.

Model		2810NEW/T290/T300/T330
Type		Dry,paper element filtering type
Rated intake air volume (㎡/min.(cu.ft/min)		2.6(91.8)
air venting resistance (㎜Ag)		120 or less
Cyclone efficiency (%)		45 or over
Total filtering efficiency (%)		99.9 or over
Dust holding capacity(gr)		700
Filtering area(㎡)(sq.in)	Outer element	1.32(2046)
	inner element	0.16(248)
Filter material	Outer element	AS 42
	inner element	AS 44
Remarks		Tested dust : SAE FINE Dust density : 1.0 gr/㎡(0.93gr/sq.ft)

2) DISASSEMBLY

(1) Element removal

Remove the wing bolt which clamps the paper element and take out the element.

1:Air cleaner
2: Cover
3: Washer
4: Body comp
6: Element,air(Ext.)
7: Element,air(In)
8: Wing Nut
9. Packing
10:Packing
12: pipe,inlet
16: Clamp,75
27: Hose,inlet
28: Gasket

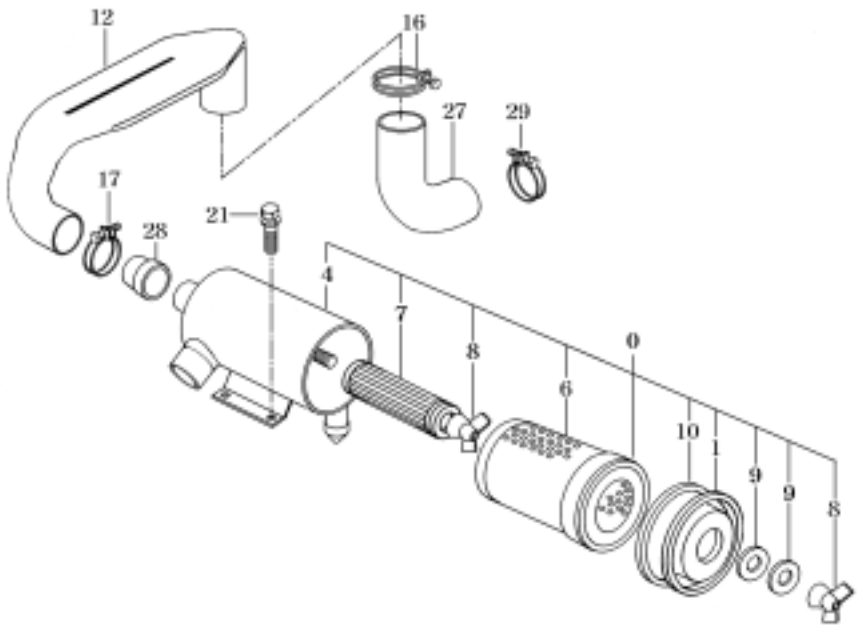

FIG.3-11

https://truckmanualshub.com/

3. INSPECTION OF EACH PART

1) Inspection of the cleaner body

(1) Check the cleaner exterior for cracks, deformation,or damage and repair or replace if necessary.

(2) Check each packing for fatigue or damage and replace if necessary.

2) Inspection of rubber hoses

Check the rubber hoses for fatigue or damage and replace if necessary.

3) Inspection of the paper element

To check the element for damage,Dry it sufficiently after washing and put an electric bulb in to the element and look for damage.

FIG.3-12 Element check

Note:

Especially note the glue portions of the paper and metal parts.

4. CLEANING THE AIR CLEANER

Clean the air cleaner after 100 hours of operation or less depending on conditions in the following manner.

1) When the air cleaner is cleaned or the element is replaced,dust accumulated inside the air cleaner body should be removed with a cloth.As inhaled dust causes engine wear,remove a dust accumulated inside the inlet pipe,the rubber hose which connects in the inlet pipe and the air cleaner,the inlet manifold,and inlet port.

(1)When accumulated dust is dry.

-When removing the dust in the element,hold the element by a hand and pat the side wall with other hand.Never hit the element against a stone or a concrete wall because that might cause its side wall to peel off.

-apply compressed air from inside of the element to blow dust off while turning the element by hand.

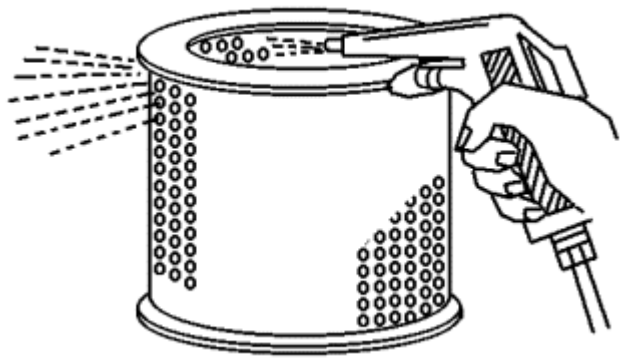

FIG.3-13 Element

Note:

The compressed air to be applied should not have a pressure of more than 7kg/㎠(99.6psi)

Maintain sufficient distance between the air gun and the element.

(2)When accumulated dust is oily.

-Use a solution of TC 101 element detergent or the quality household neutral detergent. Leave the element in the solution for approximately 30 minutes and then wash it by dipping it in and out of the solution.

https://truckmanualshub.com/

-After soaking,rise it in fresh water.

-Let it in a shaded and well ventilated place. Forced drying by heat or compressed air is prohibited.

Note:
Water applied to rinse the element should not have a pressure of more than 2.8kgf/cm^2 (39.8psi).
An element which has been washed 5 times must be replaced with a new one.

5.ELEMENT INSTALLATION
Install the element in the reverse order of disassembly,but follow these instructions.

1) Each tightening bolt must be secured and care must be taken not to miss the packing and washers.
2) Before installing the element,clean the rubber packing on the top of the element.

Note:
The wing bolt retaining the element should be tightened sufficiently so that it will not become loose during operation

https://truckmanualshub.com/

CHAPTER 4
Clutch system

SECTION 1. GENERAL DESCRIPTION ---------- 4-1

SECTION 2. SPECIFICATIONS ---------- 4-2

SECTION 3. DISASSEMBLY,INSPECTION,AND REASSEMBLY---4-3

1. Main clutch ----------4-3

2. Clutch shaft and related parts----------4-6

3.Final adjustment of the clutch pedal----------4-7

SECTION 4. TROUBLESHOOTING----------4-8

Chapter 4. clutch system

GENERAL DESCRIPTION.

The clutch is a device to engage and disengage the power of the engine.The construction of the clutch is as shown in the figure. It is composed of the flywheel which holds the clutch disc,the pressure plate,diaphragm springs,the clutch cover,and input gear.

The plate is held against the flywheel by the pressure springs and pushes the clutch disc against the flywheel.The clutch disc,which is sandwiched between the pressure plate and the flywheel,is mounted on the splined part of the input gear.It can move in an axial direction,but is locked in the rotational direction.It transmits engine power to the transmission by means of friction.Twelve coil spring are installed between the clutch cover and the pressure plate along the circumference,which are the pressure springs.

To disengage the engine power,the force of the diaphragm spring acting on the pressure plate must be eliminated.For this purpose the release lever is installed.By depressing the clutch pedal, the release lever pushes off the pressure plate from the clutch disc,thus providing clearance between the friction surfaces of the flywheel,the clutch disc,and the pressure plate.Thus the engine is disengaged.

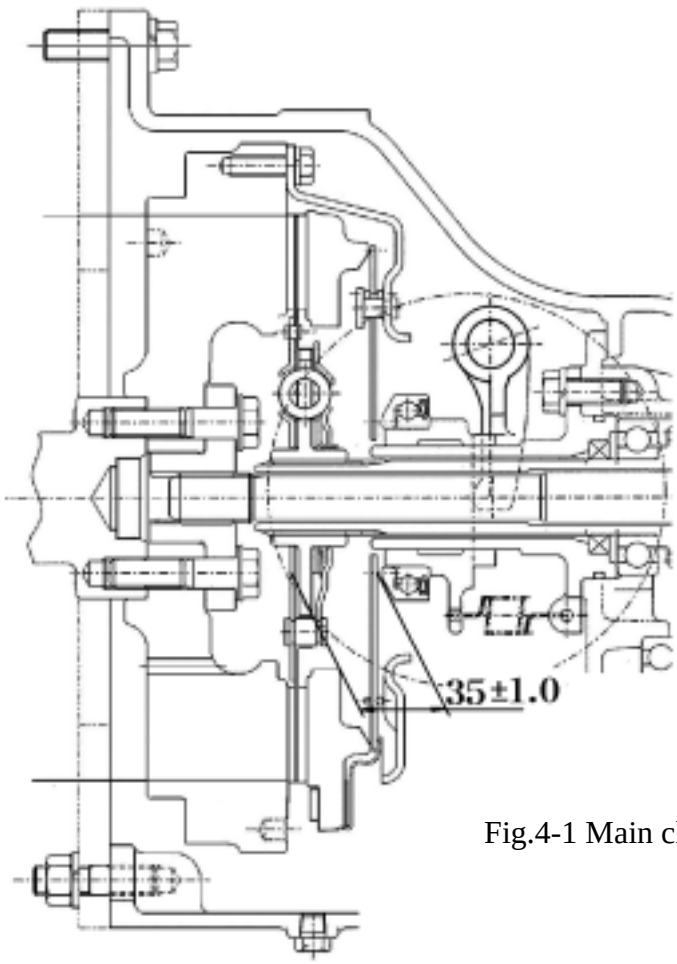

Fig.4-1 Main clutch disc.

https://truckmanualshub.com/

Table 4-1

Parts	Items		Description and assembly standard values
Clutch disc.	Type		Dry single
	Facing material		Y-02, Y-07
	Outer dia. ×inner dia. (㎜)		Ø225±1.0×Ø150±0.8
	spline hub	Large dia. (㎜) (in)	Ø25.0 (0.984)
		Small dia. (㎜) (in)	Ø21.7 (0.854)
		No.of splines	13
	Disc thickness (free) ㎜ (in)		8.4 ±0.3 (0.331)
	Surface deviation (㎜) (in)		0.4 MAX (0.016)
	Lateral deviation (㎜) (in)		0.7 MAX (0.028)
	Vertical deviation (㎜) (in)		1.0 MAX (0.039)
Clutch pedal	Clearance between lever plate and release bearing (㎜) (in)		2.0 (0.079)
	Clutch pedal free play(㎜) (in)		20 30 (0.79 1.18)

https://truckmanualshub.com/

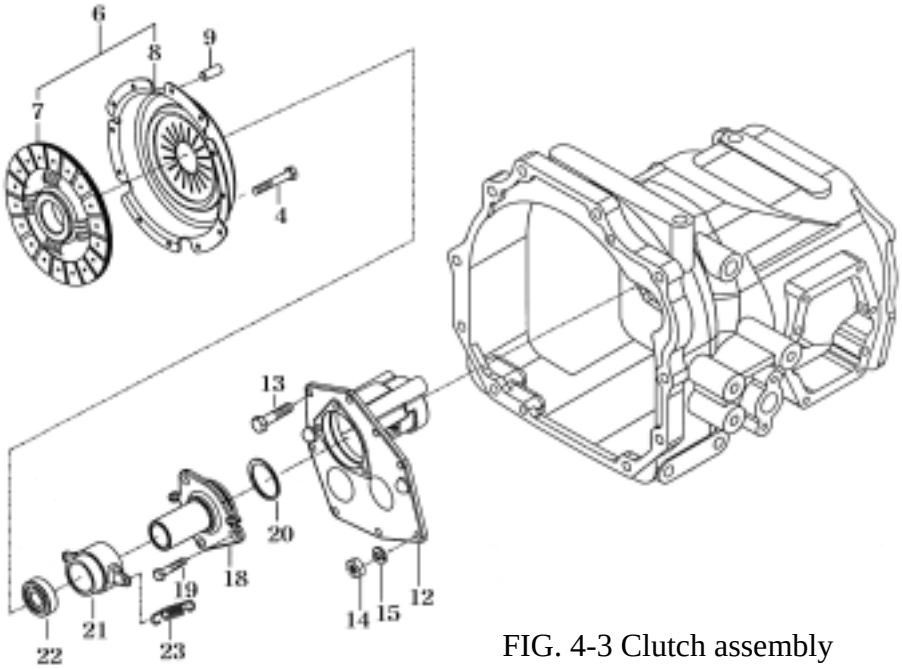

4.bolt(S)
6.Main clutch
7.Clutch disc
8.Clutch cover
9.Pin(B)
12.Input metal
13.Seal bolt
14.Nut
15.Washer spring
18.Metal sleeve
19.Seal bolt
20.O-ring
21.Sleeve
22.Clutch release bearing
23.Tension spring

FIG. 4-3 Clutch assembly

1.MAIN CLUTCH

1-1. Disassembly

Note:

Generally it is impossible to separate diaphragm spring type clutch cover.

It is principle to replace the clutch with assembly if pressure plate,diaphragm spring are needed to be replaced.

1) DISASSEMBLY

Separate the engine from the front transmission referring to the paragraph "SEPARATION OF MAJOR COMPONENT in chapter 2.“

2) Remove the clutch assembly from the flywheel.

Note:

When removing the bolts,loosen them gradually in diagonal sequence.

Take care not to let oil get on the clutch facing.

1-2. Inspection of the clutch disc.

Install the disc on the input gear and inspect the rotation play.If the measurement deviates from the specified value,Replace the disc.

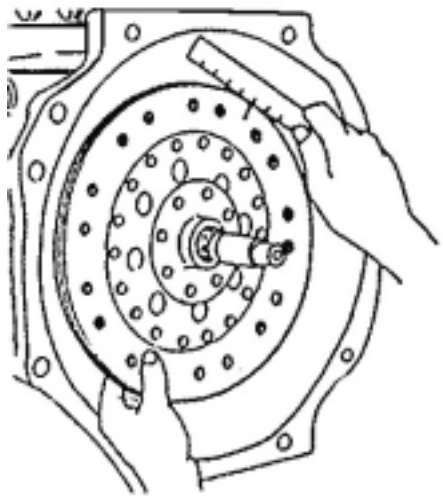

Fig 4-4 Clearance for spline.

http://truckmanuals-net.com/

1-3. Inspection of pressure plate and flywheel.

1) Inspect the diaphragm spring surface for up-and-down,scratches,stepped wear,or oil stains.
2) Check the height differences of diaphragm springs.
3) If damage is found on the pressure plate. The clutch cover must be replaced.
4) Shallow scratches may be repaired with a sand paper,but excessive wear or damage must be replaced.

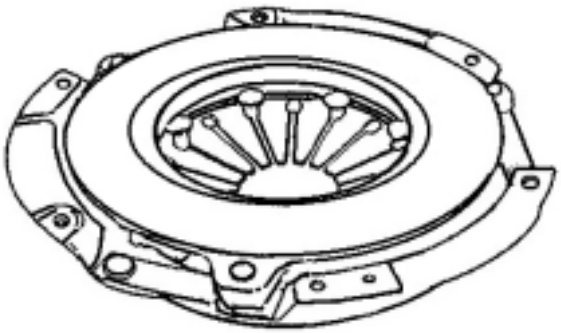

Fig. 4-5 pressure plate,flywheel.

Note:
The causes of oil stains must be located and necessary corrective measures must be taken.

1-4. Inspection of pressure plate

1) Inspect the pressure plate friction surface for up-and-down,scratches,stepped wear,or oil stains.
2) Measure the deviations of pressure plate.If the measurements are beyond the usable limits,replace the pressure plate.

3) If Wearing only outside but inside of diameter is within usable limits,replace regardless clearance.

1-5.Inspection of guide ball bearing (flywheel)

1. If the bearing does not turn smoothly due to damage or seizure,replace the bearing.

1-6.Reassembly of main clutch

Reassemble them in reverse order of disassembly in accordance with the following instructions.

1) Be sure to keep oil off of the clutch disc,the pressure plate,and the flywheel.

2) Apply a thin coat of molybdenum disulfide-based grease to resolving or sliding parts prior to reassembly.

3) When installing the clutch disc on the flywheel,turn the longer protrusion of the hub towards the flywheel.The reverse installation will damage the clutch cover or the disc.When installing the dual clutch assembly,use a special tool.

Note:
Tighten the bolts with specified Torque.

4) The dimension between flywheel surface ⓐ and clutch face is 36.0 ±1.0 (P type), 35.0 ±1.0 (IP type).
And needless to adjust.

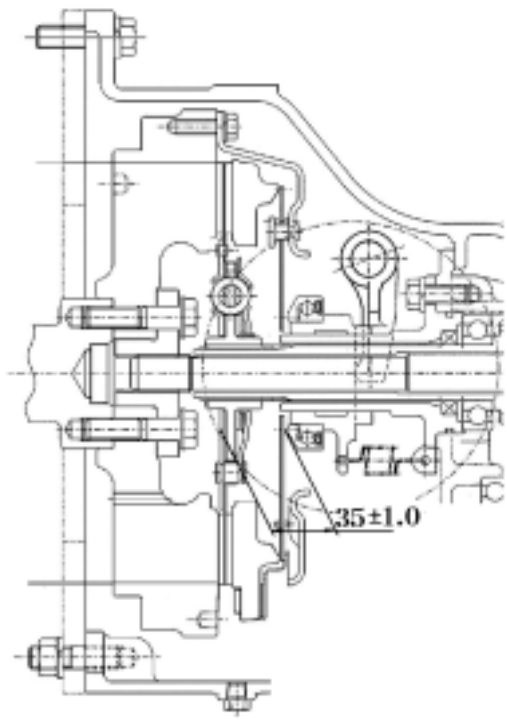

https://truckmanualshub.com/

2.CLUTCH SHAFT AND RELATED PARTS.

1) disassembly

(1) Remove the tension spring and extract the sleeve

(2) Remove the wire which is retaining the taper pin.

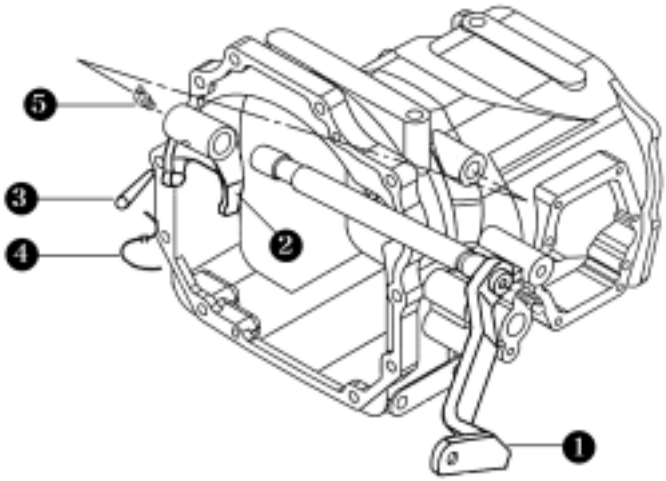

①Clutch shaft comp ②Release fork

③Taper pin ④Wire ⑤Grease fitting

Fig4-8 Main clutch and related parts

(3)Remove the grease fittings from the clutch shaft ends.

(4)Turn the release fork upward and pull out the taper pin.Then draw the clutch shaft.

2) Inspection

(1)Inspection of release bearing

The release bearing is of the grease-sealed type,but when the grease in the bearing reaches a low level or the bearing does not turn smoothly due to damage or seizure, replace the bearing.

Note:

The release bearing should not be washed.

(2)Inspection of sleeve

Ensure smooth movement of the sleeve.If it does not move smoothly,clean and grease it. Use heat-proof grease.

(3) Inspection of tension springs.

If there are some broken tension springs, replace them.

(4) Inspection of the fork.

Inspect the contact faces of the fork and the sleeve.If there is abnormal wear,make repairs or replace the fork or the sleeve.

(5) Inspection of the clutch shaft.

The clutch shaft must be revolve smoothly

3) Reassembly

Reassemble the disassembled parts in reverse order of disassembly,pursuant to the following instructions.

(1) Each sliding part should be coated with heat-proof grease.

(2) The clutch fork taper pin should be locked securely with wire.

(3) Smooth movement of each part should be conformed.

(4) The release bearing must be installed in the correct direction.

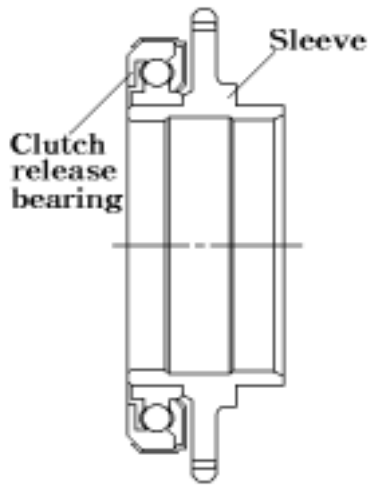

Fig 4-9 Release bearing

https://truckmanualshub.com/

3.FINAL ADJUSTMENT OF THE CLUTCH PEDAL

Clutch pedal play

1) Loosen the lock nuts on the clutch rod and adjust the clutch rod length to achieve 20 30㎜ (0.79 1.18 in.) pedal play.Retighten the lock nut securely.

Note:

One lock nut has a right hand thread and the other has left-hand threads,so take care not to interchange them.

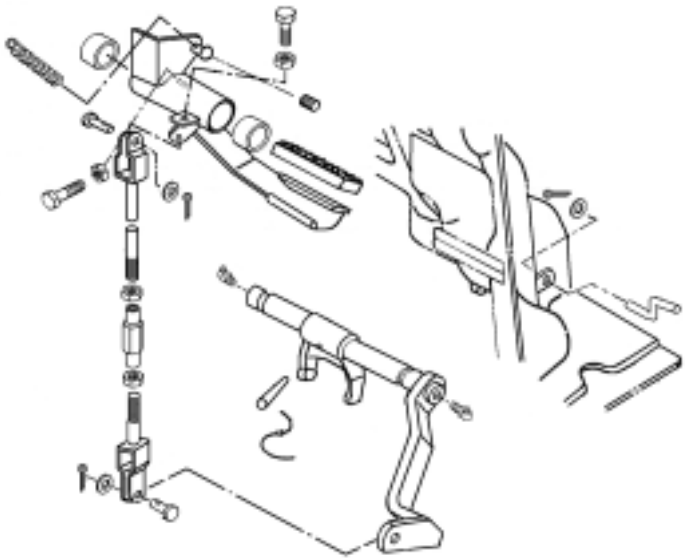

Fig 4-10 Main clutch

Note:

Adjust the turnbuckle through the opening in the panel with the rubber cap removed.

Fig 4-11 Dash cover

2) Adjust the clearance between the safety switch and the bolt head to 38 ±1㎜(1.496 in.) so that the switch will turn on only when the clutch is disengaged to allow the engine to start.

3) Inspect the clutch action.

-Inspection of clutch action and slippage.

While the engine is running,the transmission gears must be shifted smoothly with the brakes applied.

-Inspection of clutch slippage

While accelerating the engine gradually, the engine must stop when the clutch is engaged gradually with the parking brakes applied and the speed shift levers to 4X4.

 https://truckmanualshub.com/

1.PROBLEM :Clutch slippage.

The initial stage of clutch slippage is very hard to notice,but the following symptoms

1) The tractor is not generating adequate power when performing heavy duty operations.
2) Output is not commensurate to increate in engine speed when the engine is accelerated suddenly during operation.
3) Increased fuel consumption.

These symptoms are apt to be mistaken for engine problems.Clutch slippage that is not repaired will result in serious damage such as excessive wear of the clutch facing,the clutch cover,and even flywheel or clutch seizure.

TEST METHOD

If the parking brakes are applied and the transmission gears shifted to top speed and the engine stops,then the clutch is normal.But if the engine does not stop,it shows that the clutch is slipping.

Probable causes	Countermeasures
-No play in the release bearing	Adjust
-Broken or fatigued pressure spring	Replace
-Excessive wear of clutch facing	Replace
-Oil stained or hardened clutch facing	Repair or replace
-Deviation of flywheel or pressure plate	Repair or replace

2.PROBLEM :Poor disengage

When the clutch does not disengage properly,the transmission gears make noise when shifted,or shifting or the gears is difficult.

Probable causes	Countermeasures
-Worn or rusted splined section of the clutch disc hub	Remove rust or replace and apply grease
-Excessive deviation of the clutch disc	Replace
-Insufficient play of the release bearing	Adjust
-Excessive play of the release bearing	Adjust
-Dried pilot bearing	Replace

3. PROBLEM :juddering

Probable causes	Countermeasures
-Oil-stained clutch facing	Replace
-Fatigued pressure springs	Replace
-Hardened clutch facing	Replace
-Deviation in clutch facing	Repair or replace.
-Deviation or deflected wear of pressure plate or flywheel	Replace
-Difference in release lever heights	Adjust

https://truckmanualshub.com/

4. PROBLEM: Abnormal noises

There are abnormal noises emanating from the clutch.

Probable causes	Countermeasures
-Broken or insufficiently lubricated release bearing	Replace
-Seized or worn pilot bearing	Replace
-Cracked disc plate	Replace

5. PROBLEM: Dashing or shifting

The tractor does not starting moving smoothly but dashes or is likely to stop when the clutch is operated during a operation.

Probable causes	Countermeasures
-Oil stained clutch facing	Replace
-Worn clutch facing or loose rivets	Replace
-Deviation or deflected wear of flywheel or pressure plate	Repair or replace
-Fatigued pressure spring	Replace

https://truckmanualshub.com/

CHAPTER 5
Transmission

SECTION 1.GENERAL DESCRIPTION----------5-1
1.Wheel driving system----------5-1
2.PTO drive system----------5-1
3.Power train diagrams----------5-2
4.Construction and function of synchromesh mechanism---------- 5-2

SECTION 2. SPECIFICATIONS----------5-2
1. Wheel drive system----------5-2
2. PTO drive system----------5-2

SECTION 3.DISASSEMBLY,INSPECTION,AND REASSEMBLY--5-3

1. input shaft and reverse change gear(Front transmission) ------ 5-5
2. Main change,sub-change,and 4WD change gears. ----------5-11
3. Rear transmission----------5-16
4. PTO clutch----------5-18
5. Shifters and related parts----------5-20

SECTION 4. TROUBLESHOOTING----------5-25

1. Wheel drive system----------5-25
2. PTO drive system---------- ----------5-26
3. Power train diagrams----------5-27

https://truckmanualshub.com/

Chapter 5 .Transmission

SECTION 1.GENERAL DESCRIPTION

1. WHEEL DRIVE SYSTEM

The wheel driving system is composed of the following major components:

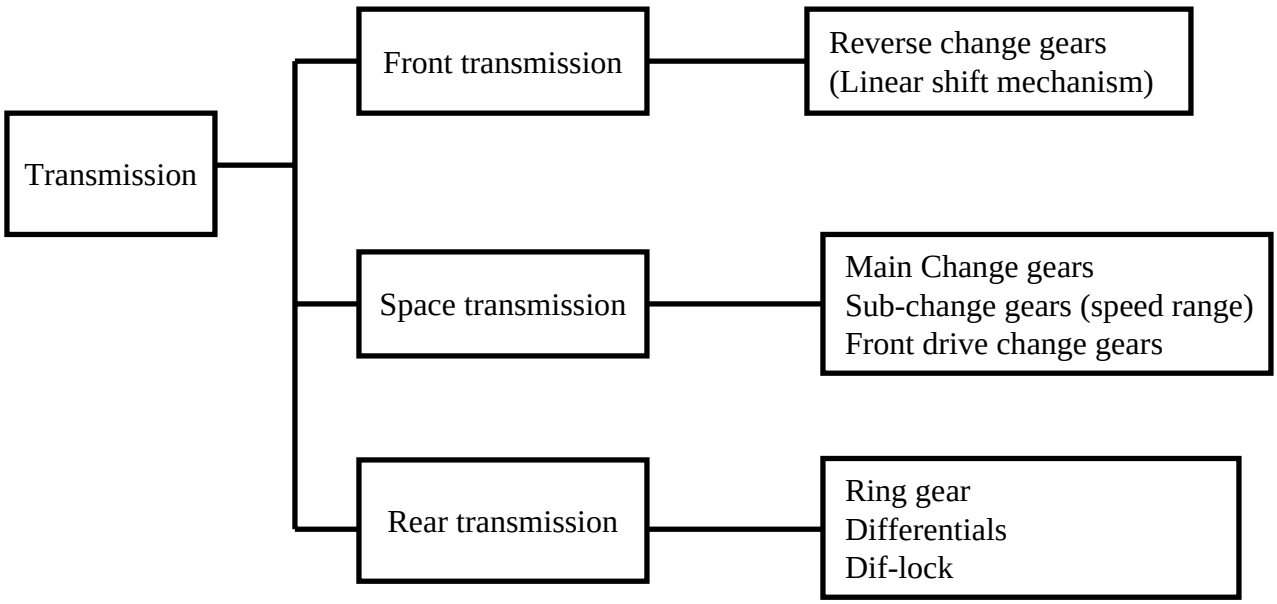

Fig.5-1 Wheel drive system

1) The standard transmission produces 12 speeds forward and reverse :F1 and R1 by reverse change gears;4 speeds by main change gears;3 speed by sub-change gears.

2) Synchromesh transmission has 3rd and 4th speed stages of the main change gears synchronized. Therefore,between these stages,gear shifting while traveling is possible (synchromesh version)

Note:

1st and 2nd speed stages of main change must be surely stopped traveling.

2. PTO DRIVE SYSTEM

1) The PTO drive system is composed of the independent PTO clutch and the PTO change gears.

2) The PTO change gears are housed behind the ring gear,which produce 1 PTO speed.

https://truckmanualshub.com/

3.POWER TRAIN DIAGRAMS

Refer to page 5-49 and 50 at the end of this chapter.

4.CONSTRUCTION AND FUNCTION OF THE SYNCHROMESH MECHANISM

①Shifter

②Hub

③Block pin

④Synchro-ring

⑤Synchro-cup

⑥Thrust piece

⑦spring

⑧spline of hub(2)

⑨spline of synchro-cup(2)

⑩constant mesh gear

⑪spline of gear(10)

⑫constant mesh gear

⑬Spline of gear(12)

⑭Spline hub

⑮Spline of spline hub(14)

16.Snap ring C(for shaft)

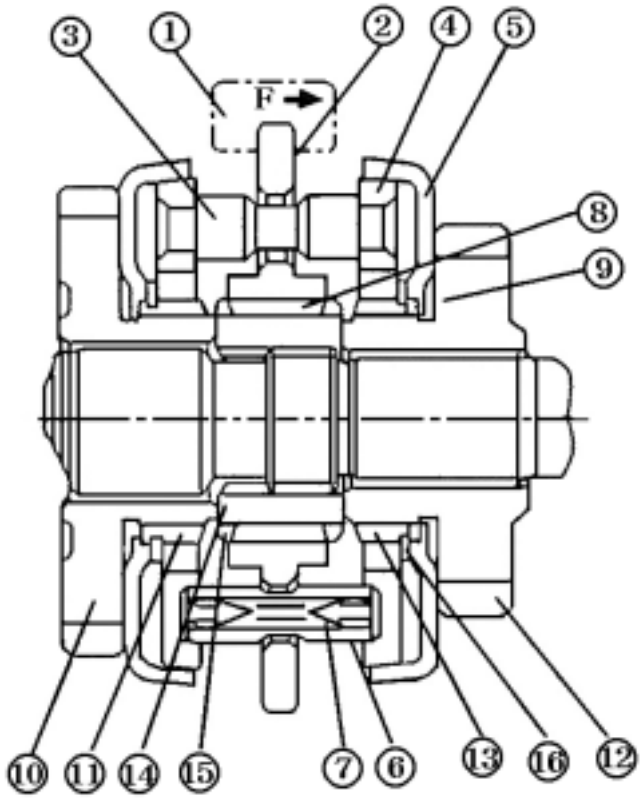

Fig.5-2 Synchromesh

2)The synchromesh mechanism includes the components staged below

(1)Synchro-hub

The synchro-hub is composed of the hub(2), block pin(3),synchro-ring(4),thrust piece(6),and spring(7).Synchro-ring(4)has a conical friction surface on its circumstance.Block pin(3) prevents hub(2) from sliding until the torque, imposed upon the pin due to the speed differential caused when shifting gears,disappears. Thrust piece(6)is composed of an outer split pin and an inner and is held together as one unit by the expansion force of the spring.
It has a tapered shape as shown in Fig.5-15

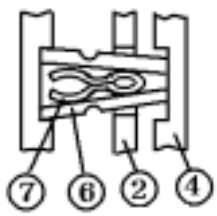

when the hub is position to side and also serves as a lock pin to keep the synchro mechanism engage.

(2) Synchro-cup

It has a conicial friction surface which forms a pair with synchro-ring(4).It meshes with the gears(10) and (11) through the splined part.

3)Function principles(operating procedures)

The synchromesh mechanism operates in the 4 stages mentioned below to complete the transmission from NEUTRAL to ENGAGEMENT

https://truckmanualshub.com/

1st stage:

When force(F) is applied to shifter(1) through the gear shift lever,hub(2) is pushed in the direction of the arrow.Following movement of the hub,other parts such as block pin(3), synchro-ring(4),and thrust piece(6) also move in the same direction by means of spring(7), without allowing the hub to clear the groove in thrust piece(6) until such time as the friction surface of synchro-ring (4)comes into contact with the friction surface of synchro-cup (5).

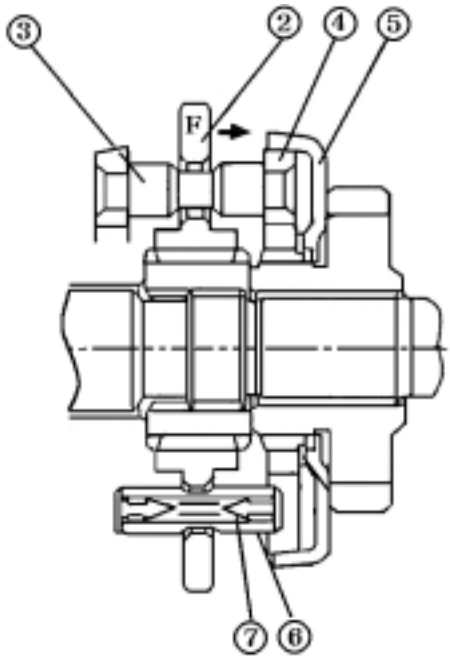

Fig. 5-4 1st stage

2nd stage:

At the moment when both the friction surfaces come into contact,the ring turns by as much as the surplus space in hub(2) for block pin(3)as shown in Fig.5-5

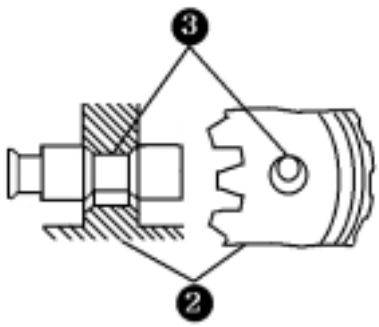

Fig.5-5 Block-pin

3rd stage:

When hub(2)is pushed further,the tapered surface in the hole of the hub and the tapered surface on the block pin are pressed tightly against each other,this pushes synchro-ring(4) against synchro-cup(5).Consequently,as shown fig.5-6,the synchro-ring and the synchro-cup are pressed more tightly against each other by the resultant turning force of the rear wheel and the thrust of the shifter.Ultimately,the revolving speeds of the synchro-ring and the synchro-cup become the same.

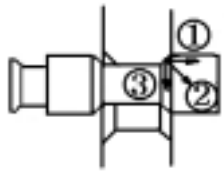

(1)Thrust
(2)Resultant force
(3)Turning force

Fig. 5-6 Synchro-ring and cup

4th stage :

When synchro-ring(4) and synchro-cup(5) reach the same speed,the friction force disappears.Then the resistance between hub(2)and block pin(3) also disappears to allow the hub to clear the groove on the block pin and to sit on the large diameter area of the pin. At the same time,thrust piece(6) which has a tapered shape and hub(2) advance smoothly on the pin to complete the meshing between spline(8) of the hub and spline(13) of the gear.

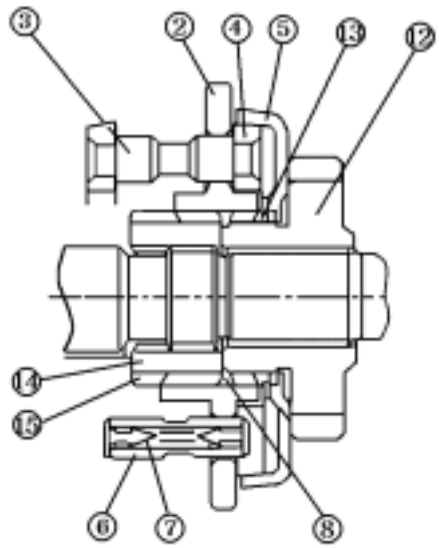

Fig. 5-7 Complete Synchro-ring and cup

SECTION 2. SPECIFICATIONS

https://truckmanualshub.com/

1. WHEEL DRIVE SYSTEM

Speed shift range			Engine rated rpm: 2800 RPM
Reduction ratios.	Speed shift range	forward reverse	0.4524 (19/42) 0.4398 (19/30 ×25/36)
	Main speed shift	1st 2nd 3rd 4th	0.4250 (17/40) 0.5833 (21/36) 0.7500 (24/32) 1.0357 (29/28)
	Speed range shift	Low Mid High	0.2619 (11/42) 0.8276 (24/29) 2.6429 (37/14)
	Drive pinion-Ring gear		1 /4.363
Operation methods	Linear shift		Column shift
	Main speed shift		Side shift (RH)
	Speed range shift		Side shift (RH)
Oil capacity	Transmission case	T290/T300/T330/2810NEW	32 ℓ
		Oil	THF 500

2) PTO DRIVE SYSTEM

MODEL		T290/T300/T330/2810NEW
TYPE		INDEPENDANT
CLUTCH		Multiple Wet Disk
Rear PTO	Speed shift range	4
	Reduction ratio	12/37,15/34,18/30,21/27
	PTO shaft speed	540 @ Engine 2,541rpm
	PTO shaft size	Φ35 mm, 6 straight splines
	Rotation direction	CW viewed from the rear
PTO clutch	Type	Wet,multi-disc,hydraulic-operated clutch
	Number of clutch plates	7
	Used oil	THF500 (In common with transmission oil)

https://truckmanualshub.com/

SECTION 3. DISASSEMBLY,INSPECTION,AND REASSEMBLY

1. INPUT SHAFT AND REVERSE CHANGE GEARS (FRONT TRANSMISSION)

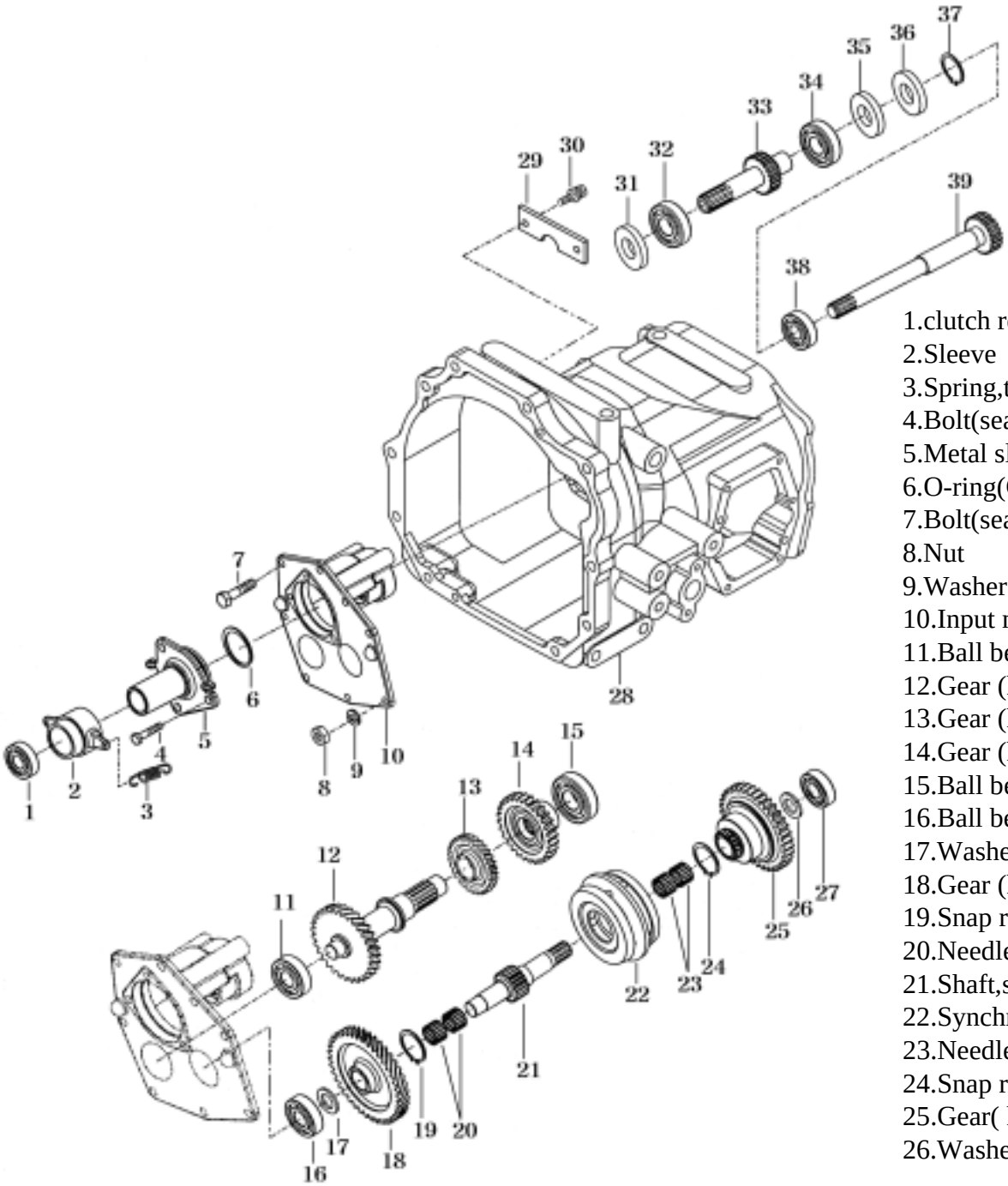

1.clutch release bearing
2.Sleeve
3.Spring,tension
4.Bolt(seal)
5.Metal sleeve
6.O-ring(G)
7.Bolt(seal)
8.Nut
9.Washer spring
10.Input metal
11.Ball bearing
12.Gear (helical/30)
13.Gear (helical/30)
14.Gear (helical/25)
15.Ball bearing
16.Ball bearing(HL1)
17.Washer(20X34X03)
18.Gear (helical/42)
19.Snap ring
20.Needle bearing
21.Shaft,shuttle(215)
22.Synchronizer
23.Needle bearing
24.Snap ring
25.Gear(helical/36)
26.Washer(20X34X03)

Fig.5-8

27.Ball bearing(HL1) 28.Front transmission case 29.Plate(1.25X90) 30. Seal bolt 31.Oil seal

32.Ball bearing(HL1) 33. Gear(helical/19) 34.Ball bearing 35.Oil seal 36.Oil seal(D) 37.Snap ring

38.Ball bearing 39.Gear (helical/19)

https://truckmanualshub.com/

1.1 DISASSEMBLY

(1)Removal of input shaft and related parts
separate the engine from the front transmission referring to the paragraph 3.(1) of SECTION 4. SEPARATION OF MAJOR COMPONENT in Chapter 2.

a. Remove input metal as an assembly using two push bolts(M8X2)

Note:
Be sure to screw in the bolts evenly

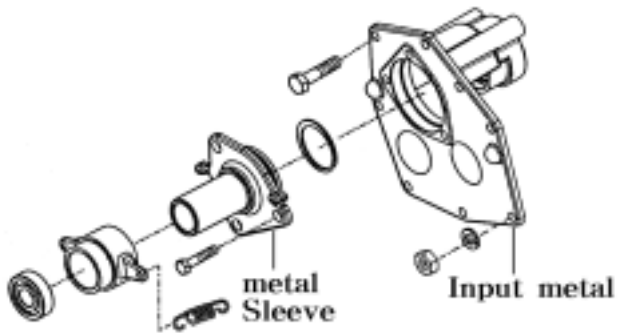

Fig.5-9 Input metal and related parts

b. Remove plate.(The tightening bolts are applied with adhesive on their threads.)

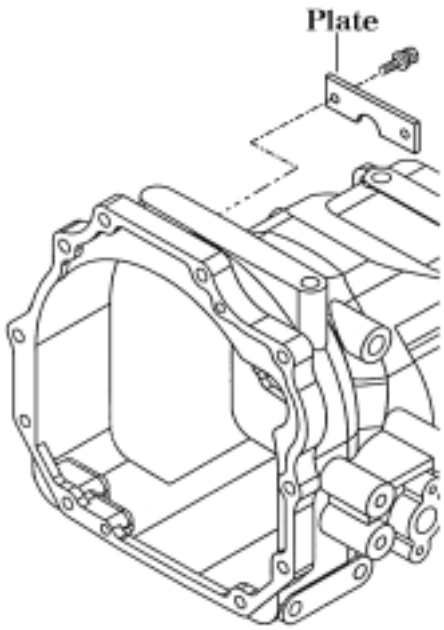

Fig.5-10 Plate

c. Pull out input gear(19T) rearwards.
d. Remove the sleeve metal tightening bolts and take off sleeve metal.
e. Draw PTO drive gear forwards.
f. Pull out main change shaft firstly,and remove counter shaft and PTO shaft.

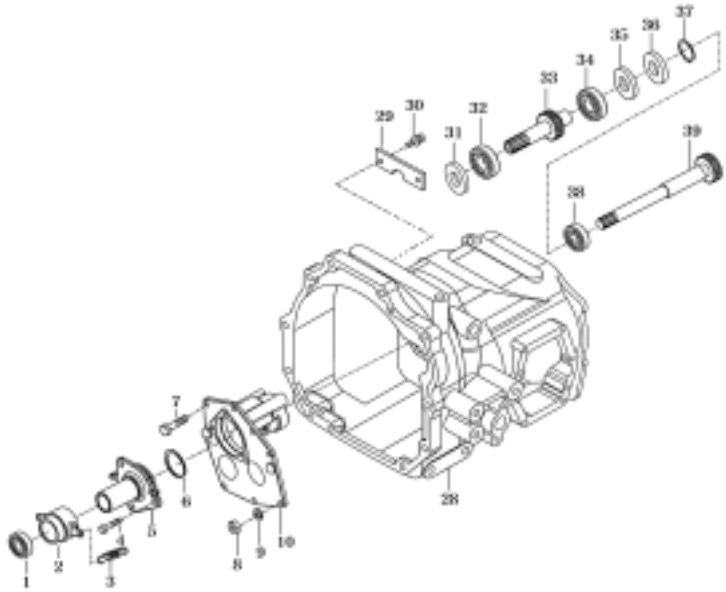

Fig.5-11

https://truckmanualshub.com/

1.2 INSPECTION

Before and after disassembly,inspect each part for points mentioned below,and replace if necessary.

Inspection items	Standard values	Usable limits
Backlash of each gear (measured in meshed condition)	0.1 - 0.2 ㎜ (0.004-0.008 in)	0.5 ㎜ (0.020 in)
Stepped wear of teeth	0 ㎜(0 in)	0.3 ㎜ (0.012 in)
Assembled width of synchromesh assembly	51.17 ㎜ (2.015 in)	-
Synchro-hub thrust for shifting	13.0-18.8 Kgf (28.7-41.5lbs)	9.5 Kgf (20.9lbs)

-Inspect bearings such as ball bearings and needle bearings for abnormalities in rotation such as irregularity,hitching,etc.by turning them with pressure applied by hand.Replace defective ones.

-Seriously worn or damaged parts should also be placed.

1.3 REASSEMLBY https://truckmanualshub.com/

(1) Sub Assembly of reverse shaft and related parts.

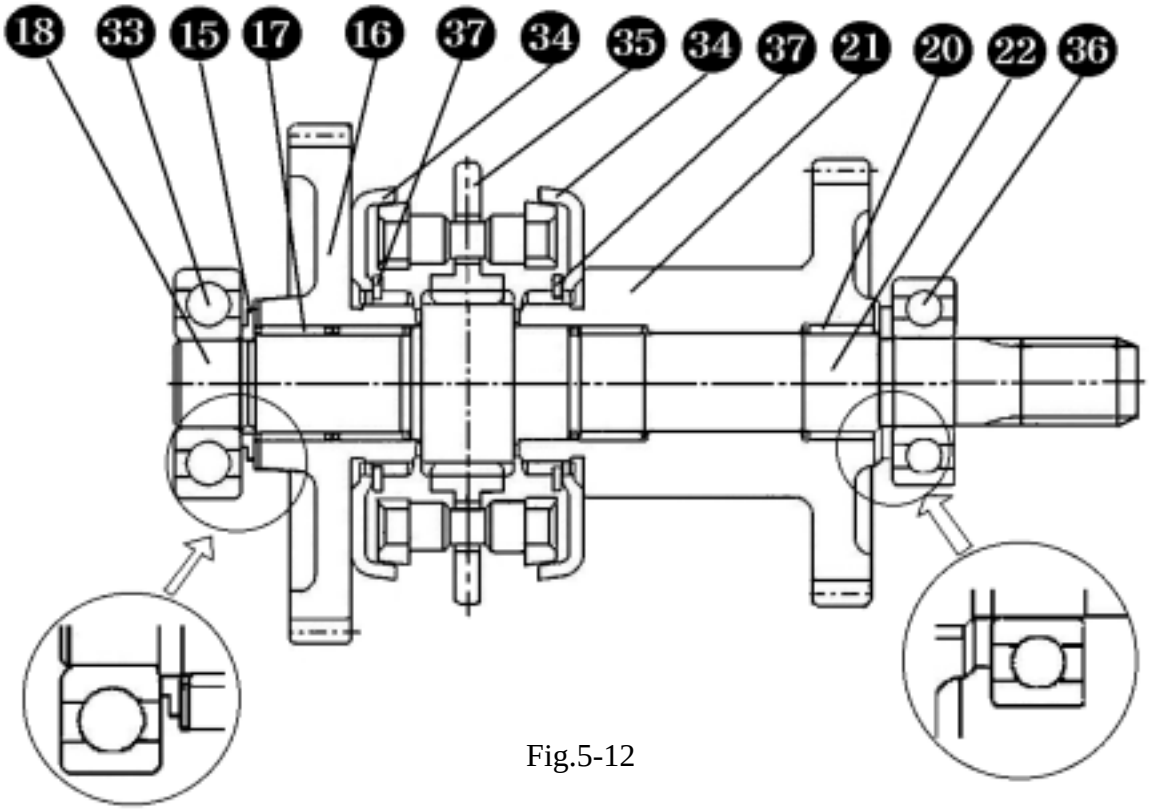

Fig.5-12

a.Install Synchro-cups(34) on gear(16) and gear(21) respectively and retain them securely with snap rings C

b.Install synchro-hub comp(35) and above sub- assemblies on reverse shaft(18)

Note:

As each synchromesh assembly maintains a specified installed width,be sure not to mix different pairs of the synchro-hub comp,and the synchro-cup

c. Install washers (15 and 22) and install the bearings positively.

Note:

As these washers have their own directions of installation,be strict to install them correctly.

(2) installation of each sub-assembled shaft:

http://truckmanualshub.com/

Install each sub- assembled shift into the reverse metal(Support).

Note:
When installing the PTO clutch assembly,apply a thin coat of grease to the seal rings and install it taking care not to damage these rings.

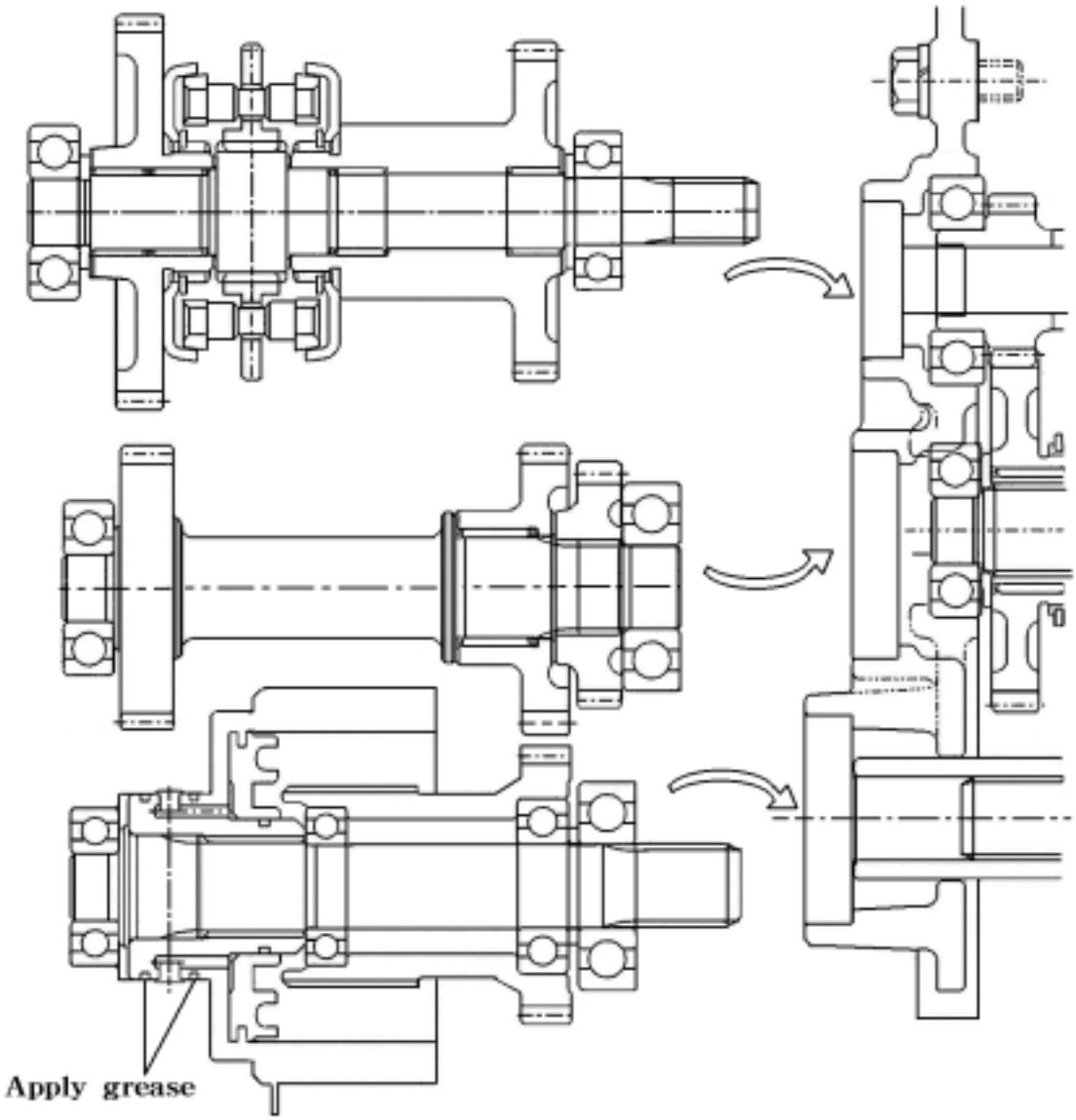

Fig.5-13

https://truckmanualshub.com/

(3) installation of input metal and related parts.

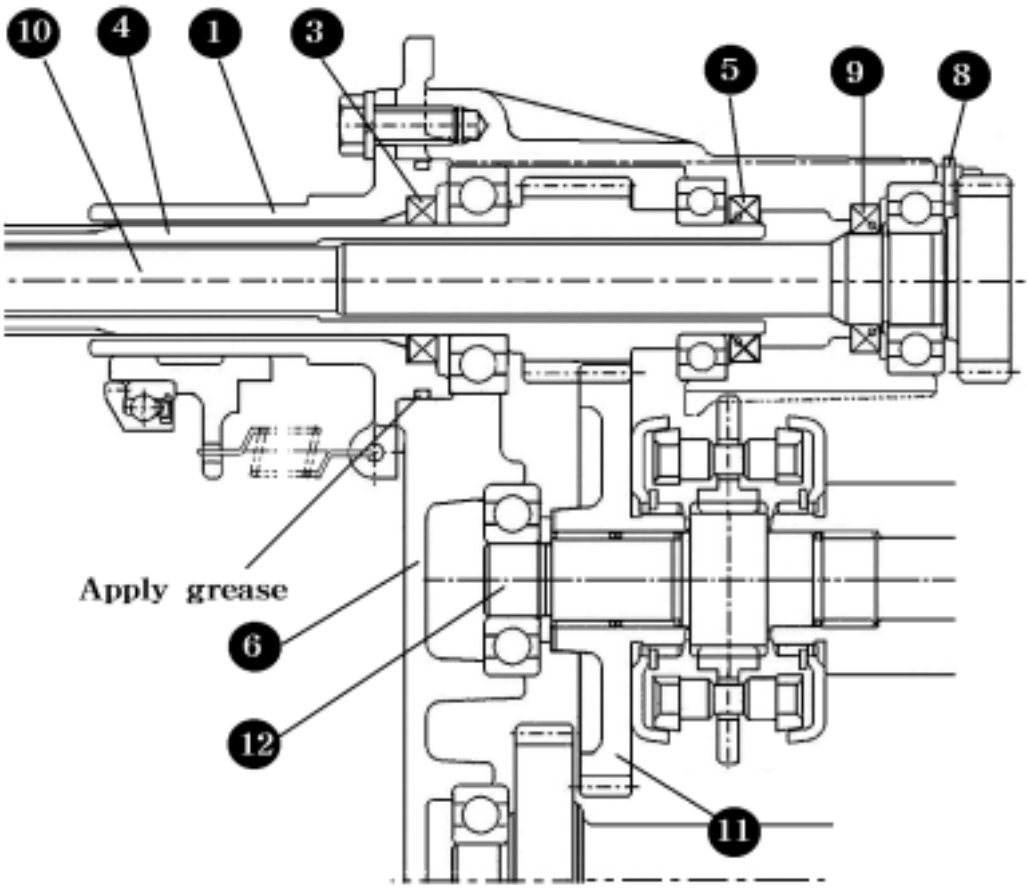

Fig.5-14

Reassemble in reverse order of disassembly,following the next instructions.

a.Install the idle shaft(120 so that the end with the tapped hole faces rearwards,that is ,on the snap ring installed side.

b.Apply adhesive to the threads of the bolts (M8 ×20) which tighten the bearing retaining plate.

c.Oil seals should be installed in their correct direction.As an oil seal is a special eccentric seal,be careful not interchange these seals.

d. Before installing sleeve metal(support)(1) on input metal(support)(6),apply grease to the O-ring to prevent its damage.

https://truckmanualshub.com/

(4) installation of PTO shaft

① Pay attention to the direction of installation and check to see all the parts turns smoothly.

② When pushing the RBB's(6205 and 6005)into the gear,be careful only to push their outer races.

④ When installing the PTO clutch assembly,Apply a thin coat of grease to the seal rings and install it taking care not to damage these rings.

⑤ When installing seal rings,apply fresh oil ahead of time and install them carefully so as not to damage them.

⑥ PTO brake disc should be assembled to the groove of front transmission case.

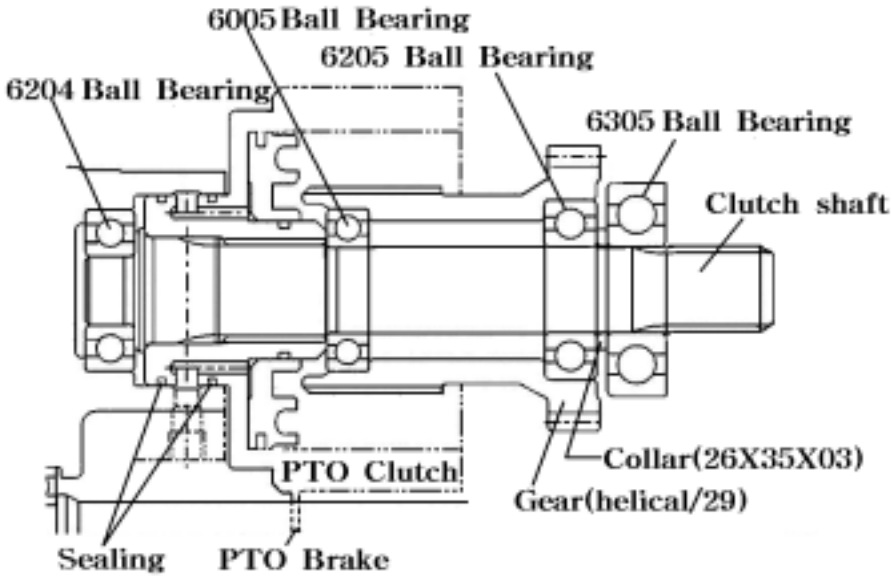

Fig.5-15

(1) When pushing the RBB’s (6205)in to the gear,be careful only to push their inner races.

(2) Pay attention to the direction of installation and check to see all the parts turns smoothly.

https://truckmanualshub.com/

2. PTO CLUTCH

2-1. DISASSEMBLY

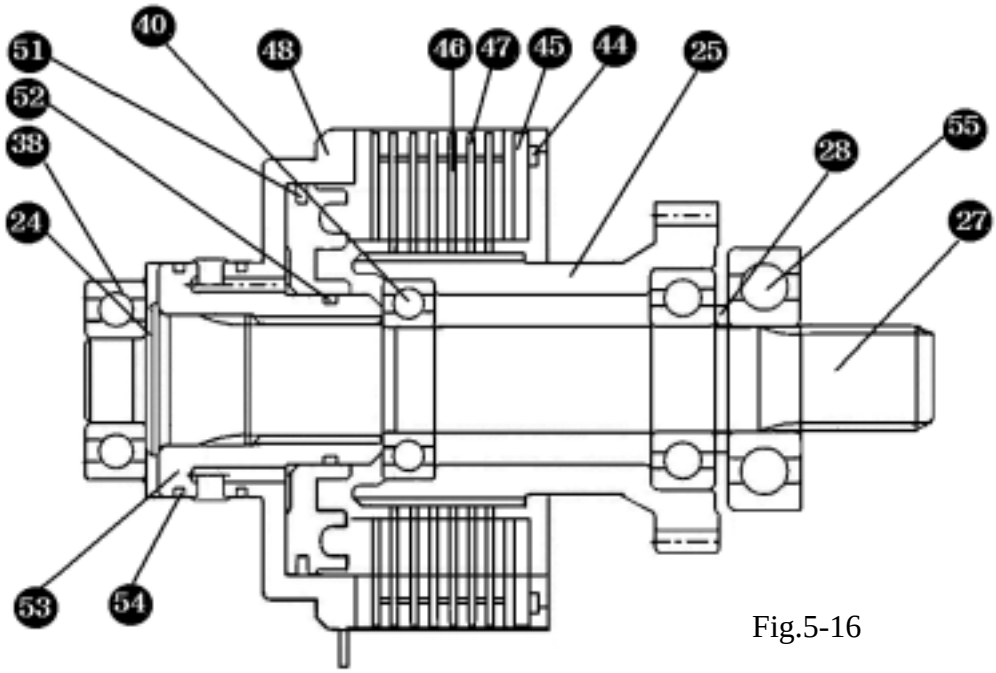

Fig.5-16

(38)RBB (40)RBB (44) Snap ring (45)Back-up plate (46) Disc assembly (47)Driven plate

(48) Piston (51) Seal ring (52) Seal ring (53) Cover assembly (54)Seal ring

Note:
Disassembly of the PTO clutch assembly should be done in a clean,dust-free place.Exercise special attention to avoid damage of the seal rings,etc

a. Pull out PTO drive shaft rearwards.
b.Pull out PTO drive gear forwards.
c.Remove snap ring (D95 for hole),and take bake-up plate,disc assembly,and driving plates.
d.While holding return spring(43) compressed with a special tool,remove snap ring

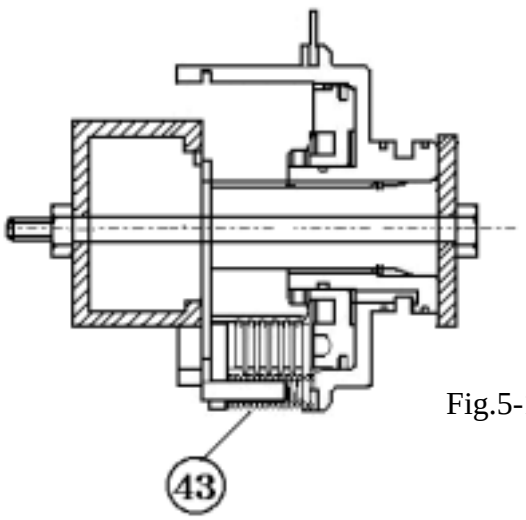

Fig.5-17

e. Disassemble into separate parts;piston,return sparing,brake disc,and cover assembly.

2.2 INSPECTION

a. Cover assembly
-Replace a cover assembly which has a damaged or worn sliding surface.
-If there is any damage to the cover assembly and the piston seal ring,these parts should also be replaced.

b. Disc assembly
- If the thickness of a disc assembly exceeds the usable limit mentioned below or combined width of the disc assembly and driven plate is less than 23.8mm(0.937 in),replace both the disc assembly and driven plate.

https://truckmanualshub.com/

-Inspection for disc thickness and serration wear.

Inspection Items	Specified values	Usable limit
Disc thickness	2.2±0.1mm (0.087 in)	1.9mm (0.075 in)
Surface flatness	-	0.2mm (0.008 in)

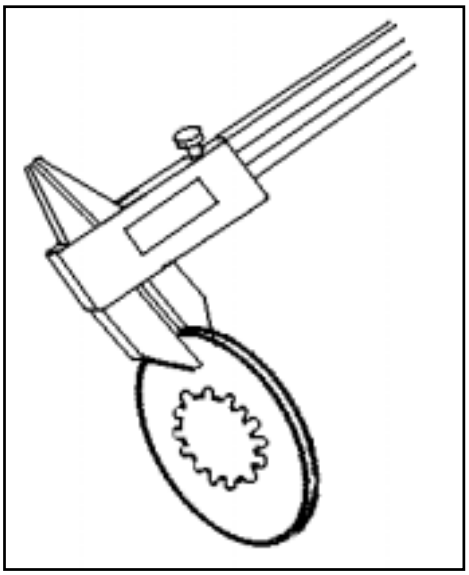

Fig.5-18

c. Driven plate
-Inspection for deformation and burning.
-A seriously damaged or worn disc should be replaced.

Inspection Items	Specified values	Usable limit
Surface flatness	-	0.2mm (0.008 in)

d. Brake disc
-Inspection for deformation and burning.
-A seriously damaged or worn disc should be replaced.

Inspection Items	Specified values	Usable limit
Disc thickness	3±0.1mm (0.118 in)	2.5 mm (0.098 in)
Surface flatness	-	0.2mm (0.008 in)

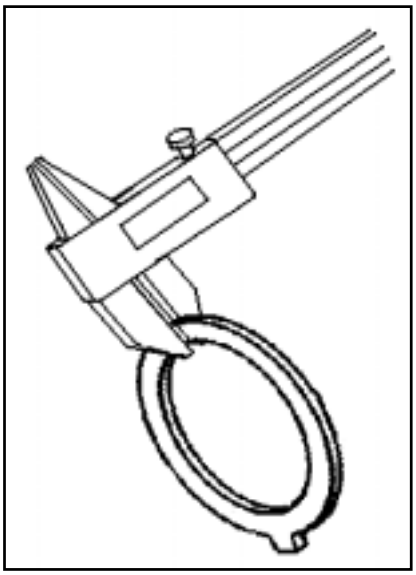

Fig.5-19

e. If the combined thickness of the return plate and brake disc deviates from the specified value, replace both parts.

Inspection Items	Specified values	Usable limit
Combined thickness of return plate and brake disc	5.5 ±0.18 (0.217 in)	5mm (0.2 in)

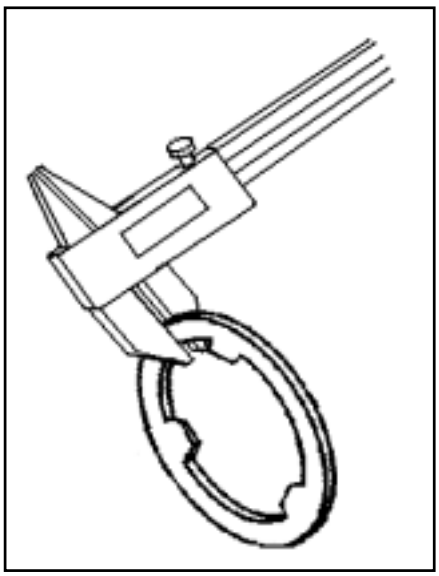

Fig.5-20

f. Also inspect other parts for wear and deformation and replace them if necessary

Note:
Seal ring and the two seal rings should be replaced as a pair

https://truckmanualshub.com/

2.3 REASSEMBLY

Reassemble the parts in reverse order of disassembly,following these instructions.

Note:
-Each parts should be washed clean before reassembly.
-Apply multi-purpose,quality grease to needle bearings in advance.
-Each bolt and nut should be tightened to the respective specified torque table.
-Every time a gear is installed,its smooth rotation should be checked.
-Every snap ring should be seated securely in its groove.

a. When installing seal rings, apply fresh oil ahead of time and install them carefully so as not to damage them.

b. Install the return plate with the press-processed side turn towards the brake disc.

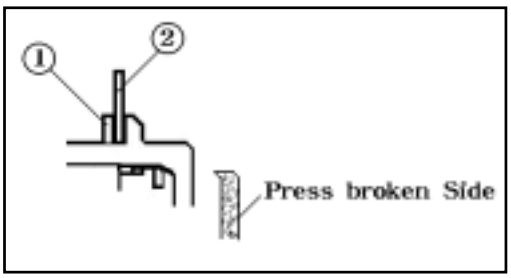

Fig.5-21

① Return plate ②Brake Disc

c. When installing the return spring,use a special tool; the snap ring should be securely seated in the groove.

d.When pushing the RBB's (6205 and 6005) into the gear,be careful only to push their outer races.

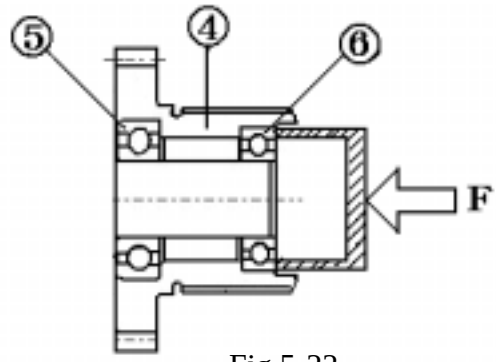

Fig.5-22

4.Bearing ball (6205) 5.Gear,helical 35T
6.Bearing,ball (6005)

e. Install washer in correct direction.

f. After reassembly,check to see that gear turns smoothly by locking the PTO clutch

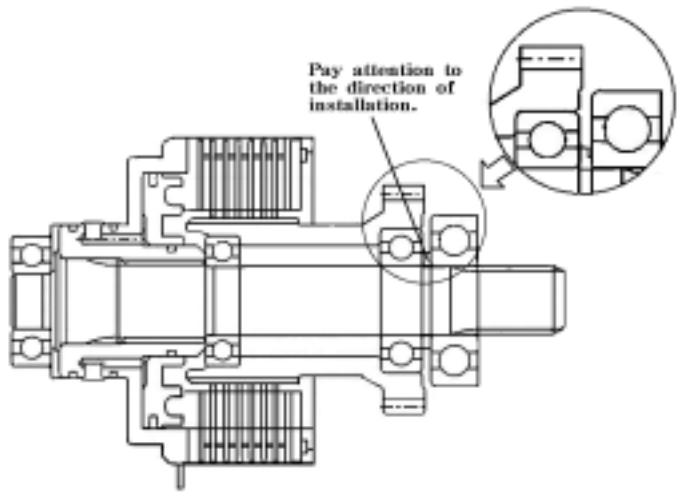

Fig.5-23

3.MAIN CHANGE,SUB-CHANGE,AND 4WD CHANGE GEARS.

https://forklifttransmission.com/

(1)Synchromesh transmission version.

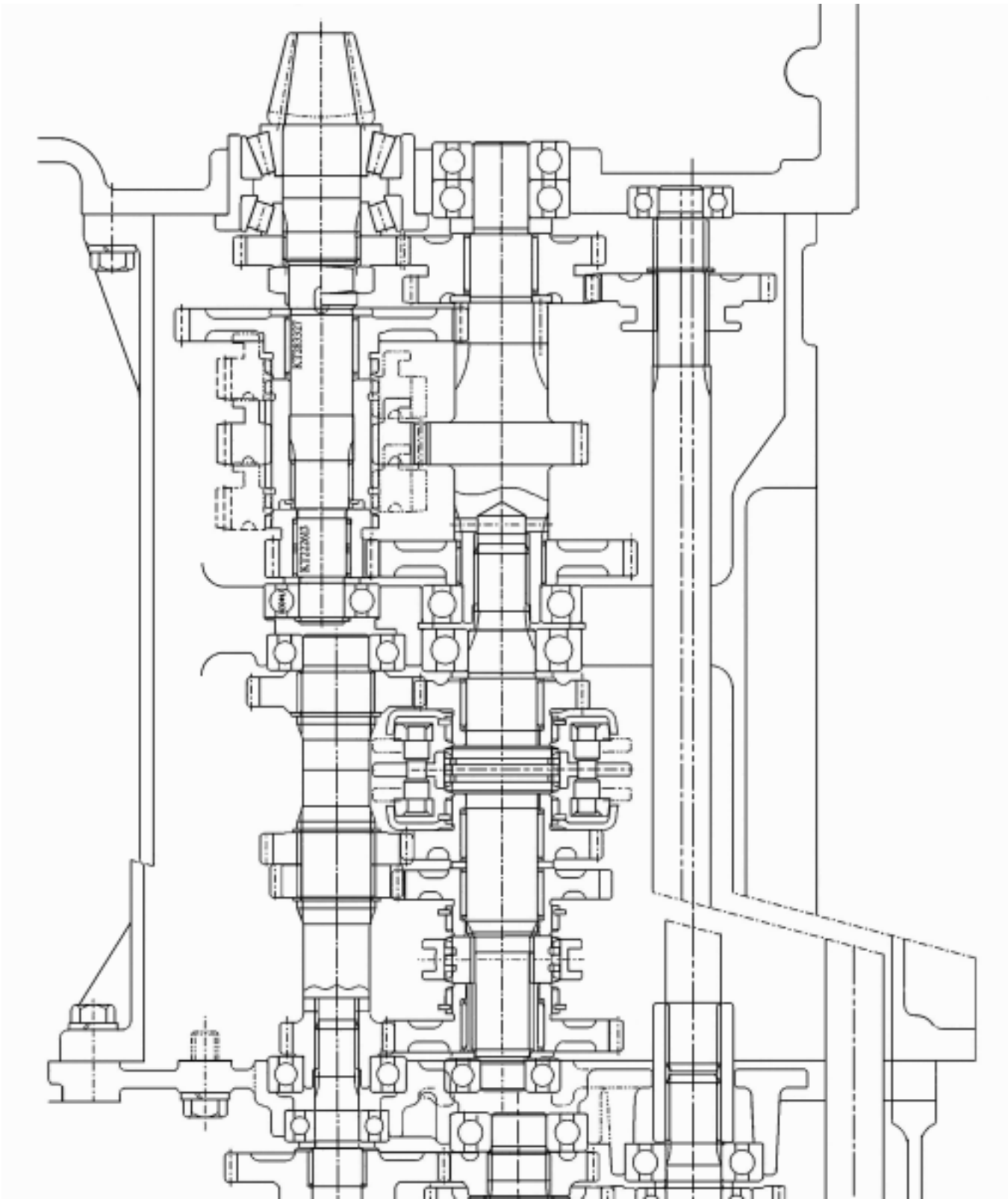

Fig.5-24 Synchromesh transmission version

https://truckmanualshub.com/

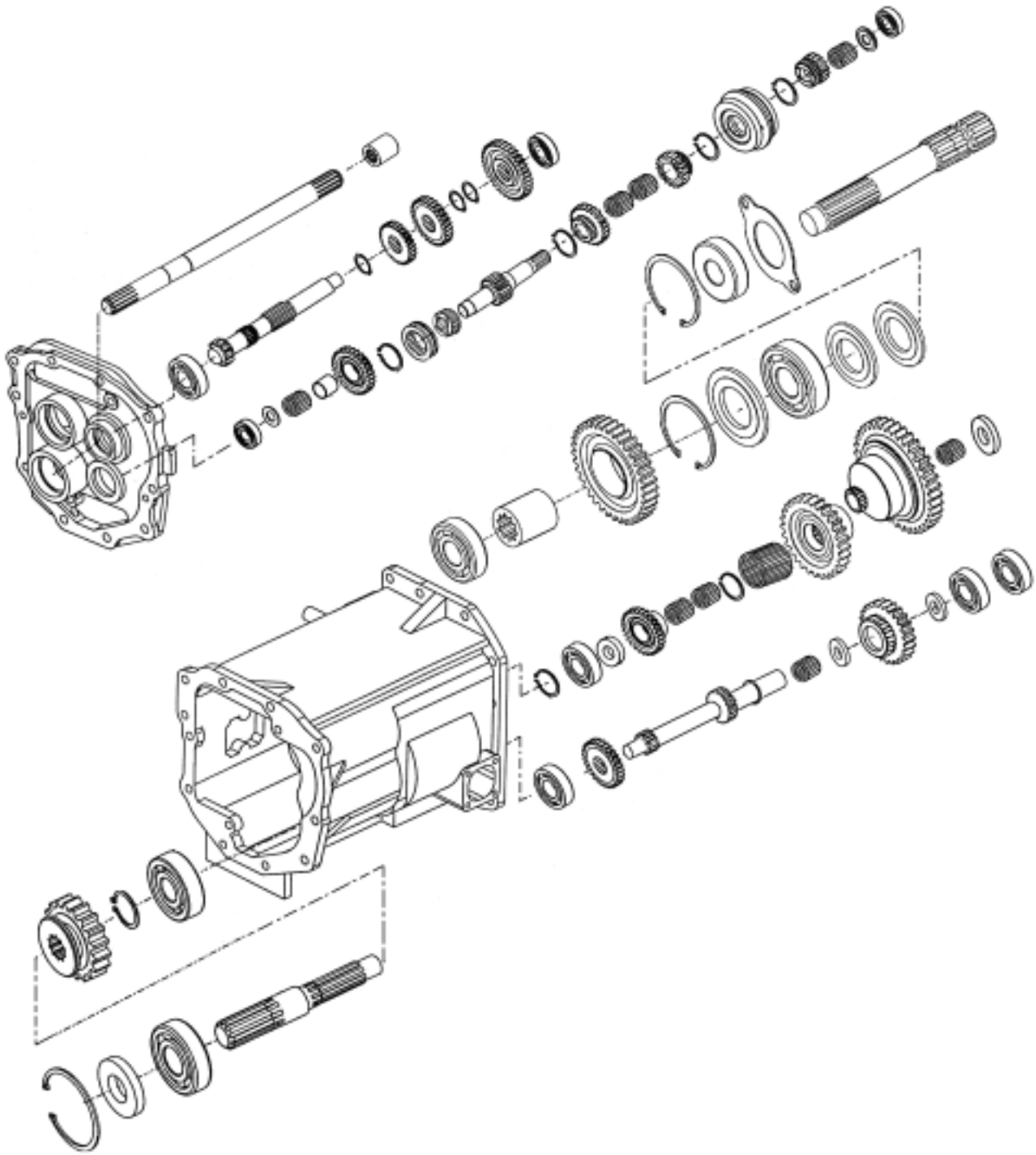

Fig.5-25 Main change gear and related parts.

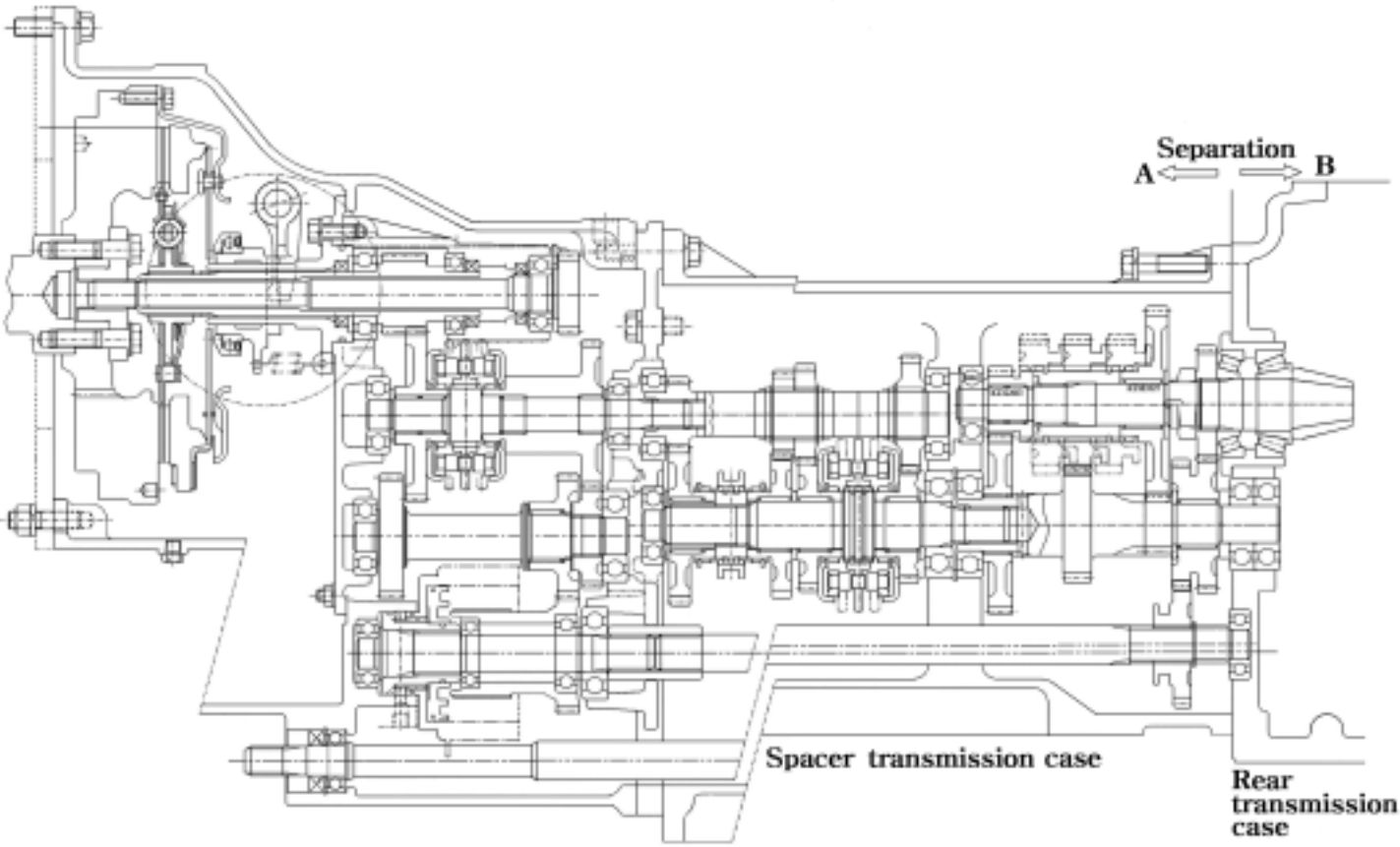

Fig.5-26

Separation the spacer transmission case and rear transmission case from each other referring paragraph 5.(1) in SECTION 4.SEPARATION OF MAJOR COMPONENTS in chapter 2.

With this operation,the transmission is divided into parts A and B part A includes main speed shift and mechanism and part B includes speed shifting and 4WD shifting mechanisms.(fig.5-26)

Note:

The separation of the gears mentioned in the figure is possible without dividing the front transmission and the spacer transmission from each other

(1) Disassembly of main change gears(main speed shift) part of sub-change gears(speed range shift) and shifters.

http://tractorshop.com/

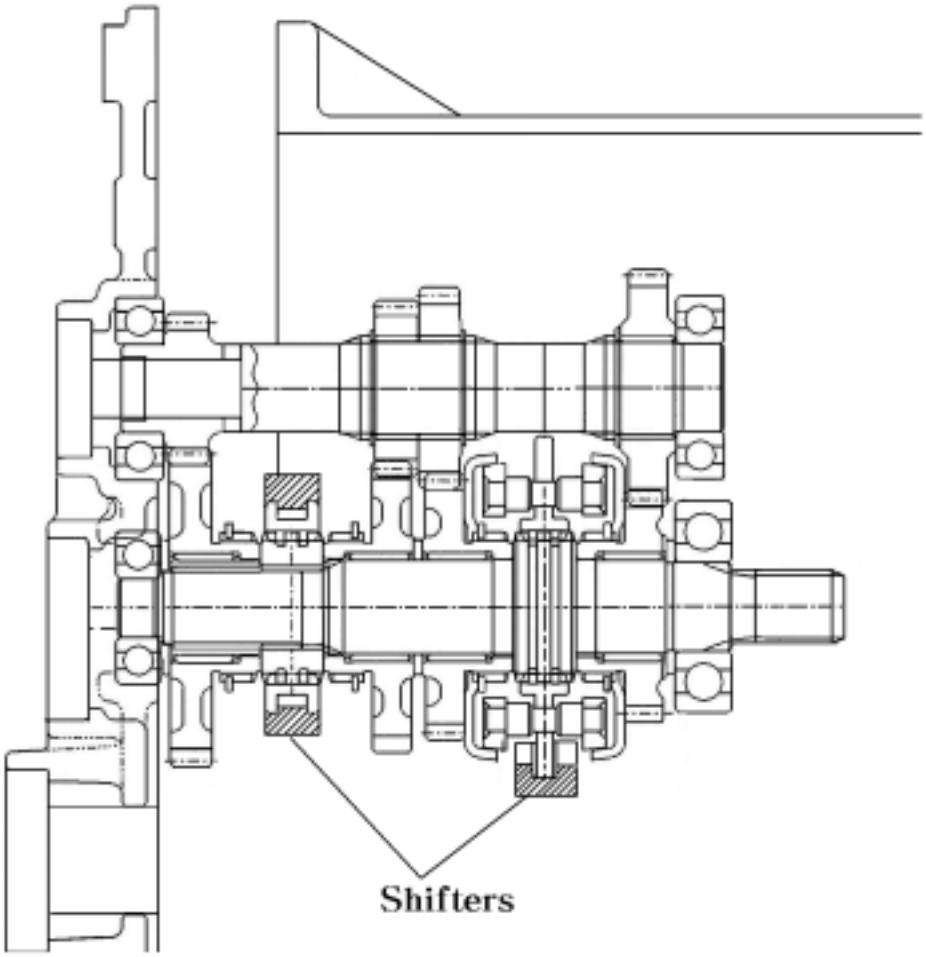

Fig.5-27

a. Remove the tightening bolts and pull out the assembly of the space metal(18)

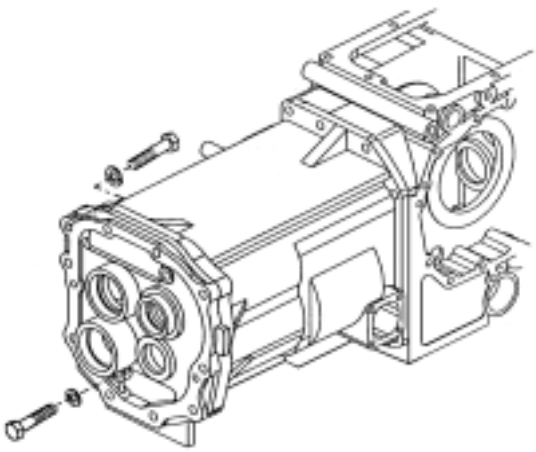

Fig.5-28

b.Pull out assembly of the reverse shifter metal,main speed shift gears,and shifters rearwards by tapping it with a plastic hammer.

Note:
Take care not allow the gear to drop as it is free when the above assemble is removed.

c.Remove the shift stays from the shift metal and remove the gears assemblies as shown Fig.5-29.

d. Remove bearings and gears from each shaft.

https://truckmanualshub.com/

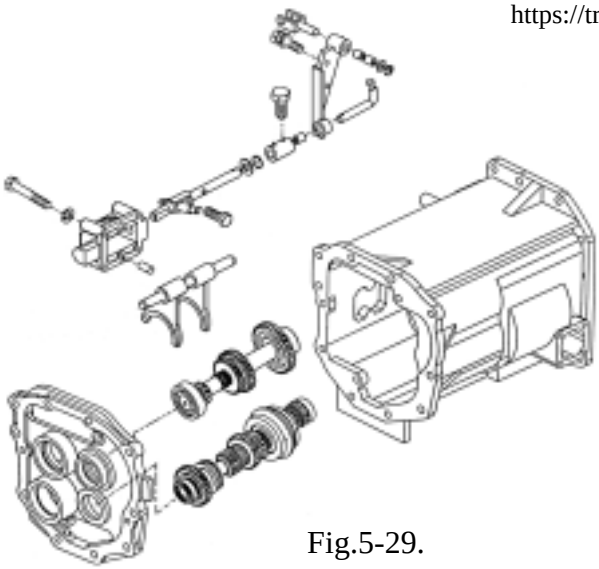

Fig.5-29.

Fig.5-30

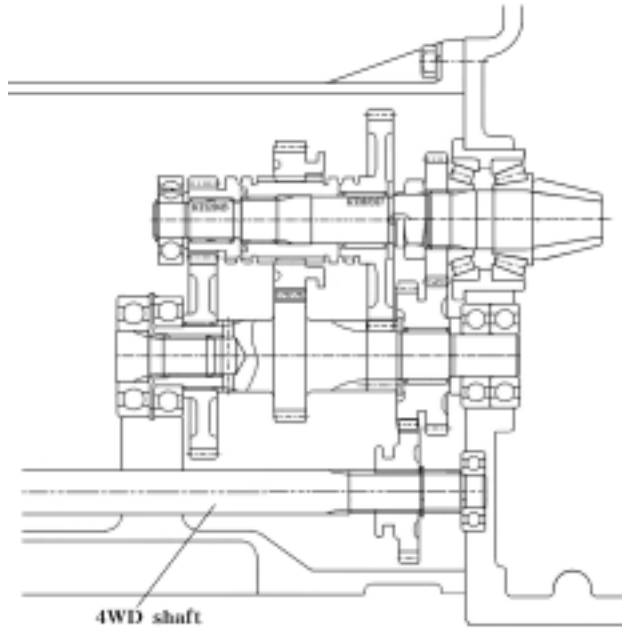

Fig.5-31

2.Disassembly of the sub-change gears
(Speed range shift)

a.Remove the sub-shifter and shifter stay.

b.Remove the space transmission case

c. Pull out the PTO shaft ,4WD shaft and gear

d. Remove the snap ring from the end of the pinion gear shaft

e. Remove the hub

f. Remove the sub-change gears.

https://truckmanualshub.com/

Before and after disassembly,inspect each part for points mentioned below,and replace if necessary.

Inspection Item	Standard Value	Usable limits
Backlash of each gear(measured in meshed condition)	0.1-0.2mm(0.004-0.008in)	0.5mm (0.020 in)
Stepped wear of teeth	0mm	0.3 mm (0.012 in)
Assembled width of synchromesh assembly 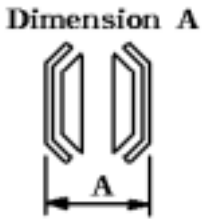	51.17 $^{+0.18}_{-0.424}$ (2.015in)	-
Synchro-hub thrust for shifting Neutral →Engaging	13.0-18.8Kgf (28.7-41.4lbs)	9.5Kgf (20.9 lbs)
Thrust play of fixed gears	0 mm	0.5 mm (0.020 in)
Wear in each shifter		0.5 mm (0.020 in)

- Inspect bearings such as ball bearings and needle bearings for abnormalities in rotation such as irregularity,hitching,etc. by turning them with pressure applied by hand.Replace defective ones.

- Serious worn or damaged parts should also be replaced.

https://truckmanualshub.com/

3.3 REASSEMBLY

Reassemble the parts in reverse order of disassembly,following these instructions.

Note:

-Each part should be washed clean before reassembly.

-Apply multi-purpose,quality grease to needle bearings in advance.

-Each bolt and nuts should be tightened to the respective specified torque in accordance with the tightening torque table.

-Every time a gear installed,its smooth rotation should be checked.

-Every snap ring should be seated securely in its groove.

-As each synchromesh assembly maintains a specified width,be sure not to mix different pairs of the synchro-hub comp.and the synchro-cup.

-Remember to install the snap rings.

(1) Installation of main change gears

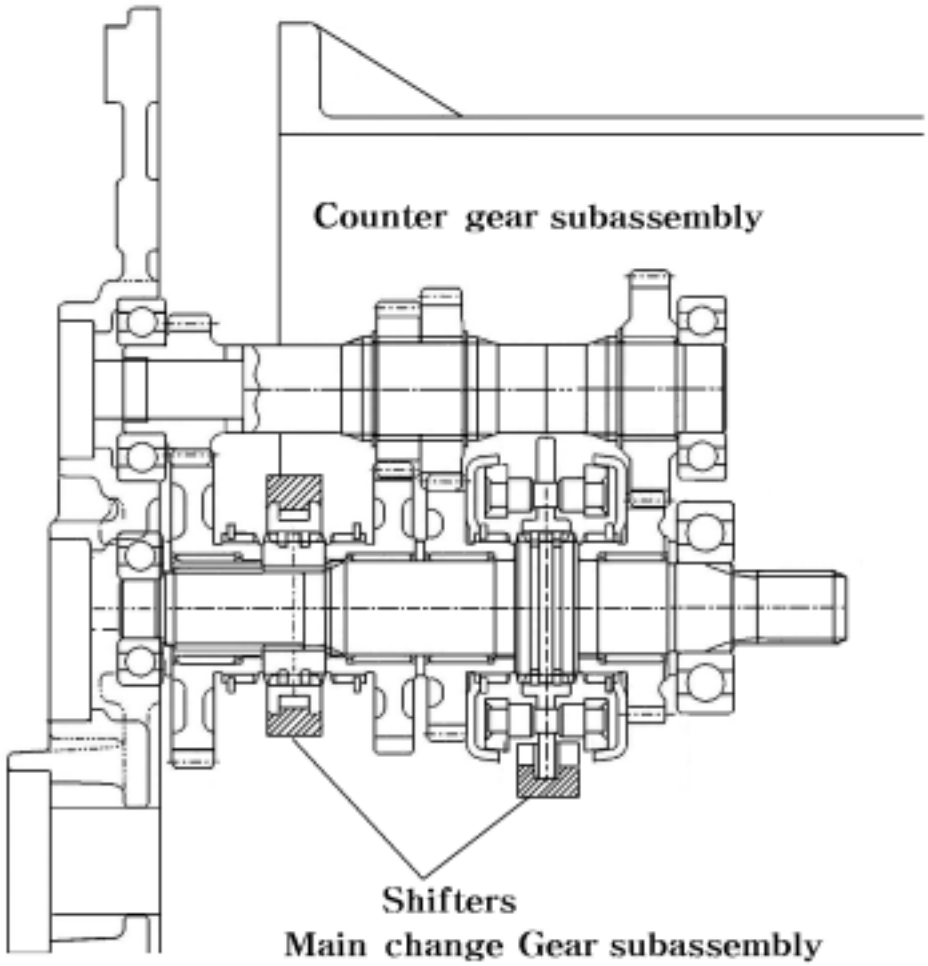

Fig.5-32

https://truckmanualshub.com/

a.While holding the gear in the position shown in the drawing,install the assembly of the main change gears and related parts in position by tapping it slightly on the front of a plastic hammer and then the gears by tapping it on the rear.

b. Sub assemble the shifter stay,spring, and steel ball(Fig.5-33) and install the sub-assembly on the spacer transmission case(Fig.5-34).

c. Align the holding parts in the reverse shift metal with RBB's of the sub assemblies of the counter gears and main change gears, straight pins,etc.,and install the reverse shift metal on the spacer transmission case.

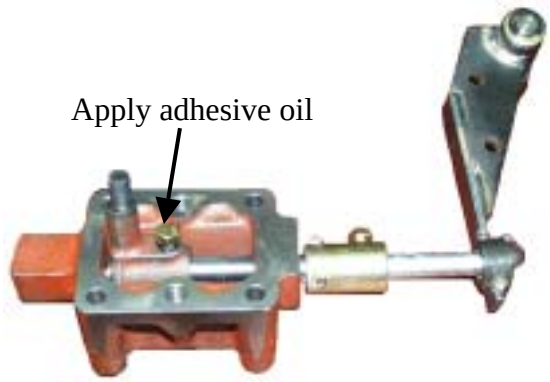

Fig.5-33 Main shift lever linkage

Fig.5-34

(2)Reassembly of sub-change gears(speed range shift)

-Reassemble the parts in reverse order of disassembly following next precautions.
and tighten the lock of nut is 8 11kgf·cm

-Be sure to rotate the pinion several times and crimp the lock until the crimped part touched the bottom of the groove

a.Never forget to install needle roller bearing and collar

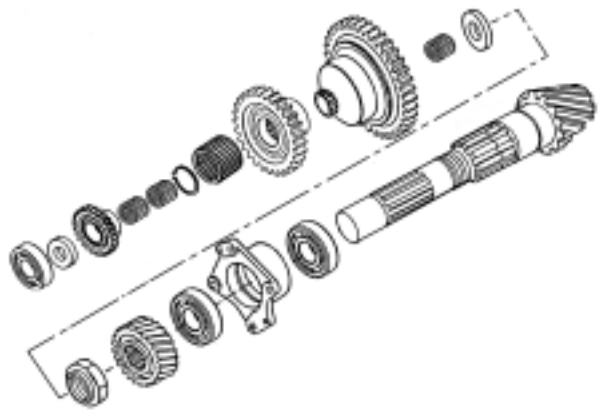

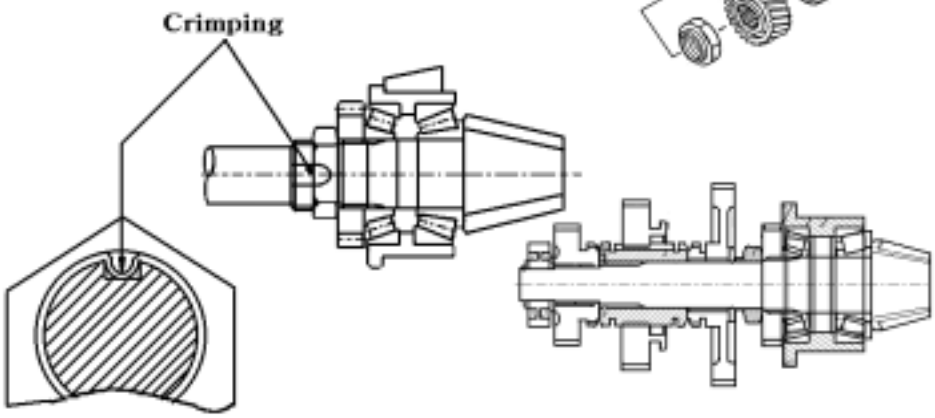

Fig.5-35

https://truckmanualshub.com/

b. Pay attention to the installed direction of gear

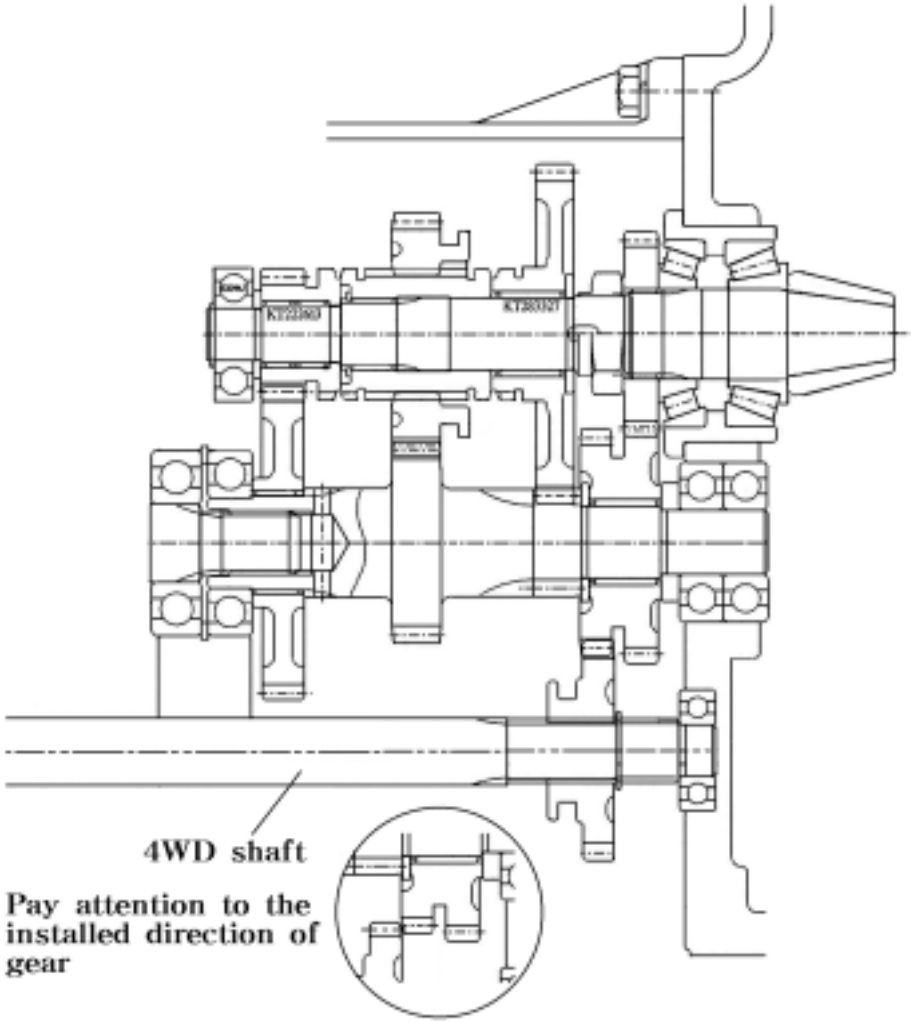

Fig.5-36

https://truckmanualshub.com/

4. Rear transmission case

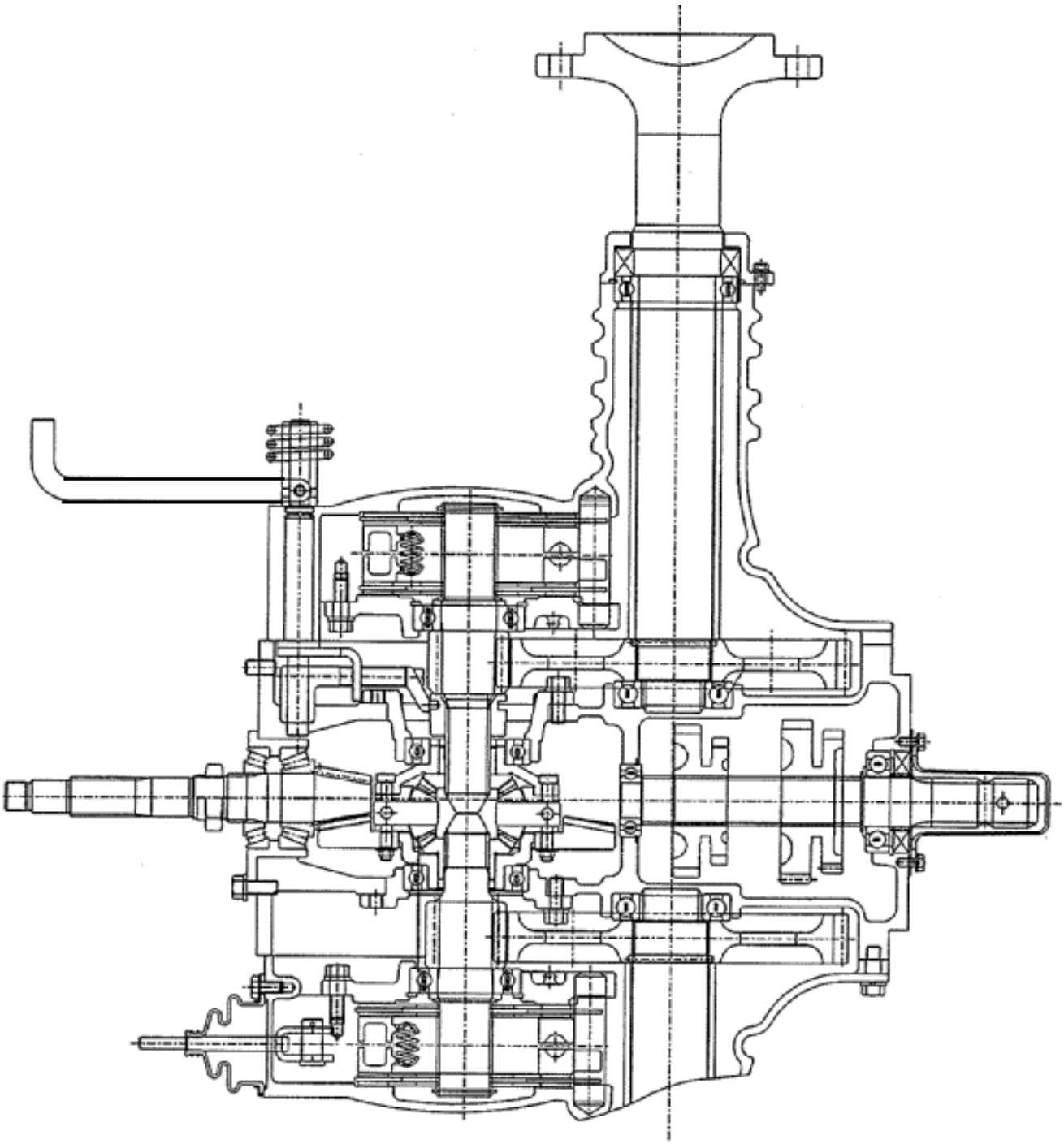

Fig.5-38

https://truckmanualshub.com/

3-1. DISASSEMBLY

Separate the spacer transmission and the rear transmission from each other and then remove the hydraulic cylinder case.referring to paragraph 7.(1) of SECTION 4. SEPARATION OF MAJOR COMPONENTS in Chapter 2.

(1) Ring gear,Drive pinion,and related parts.

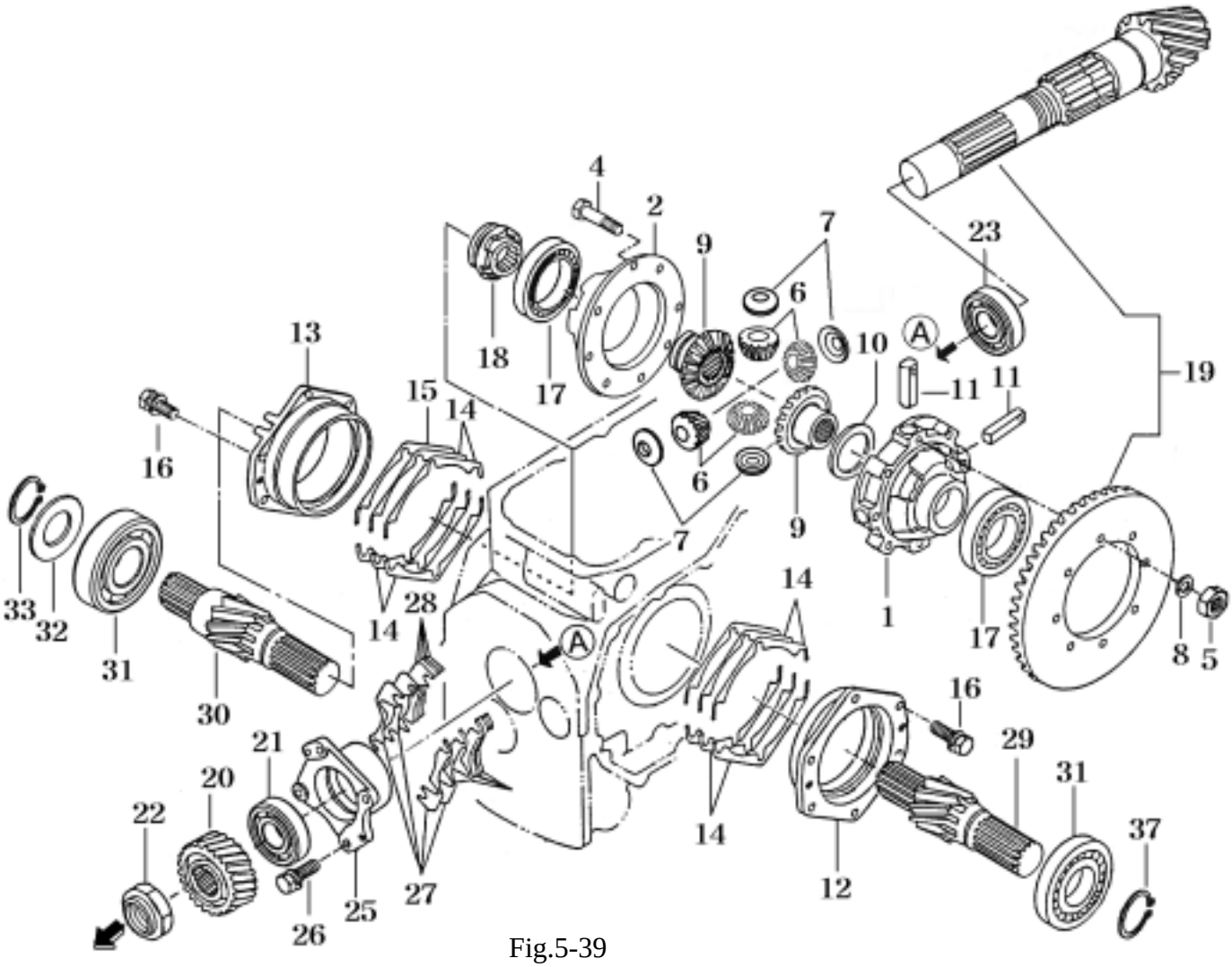

Fig.5-39

1.Diff case (L) 2.Diff case(R) 4.Bolt 5.Nut 6.Diff pinion(12) 7.Collar 8.Lock plate
9.Bevel gear(20) 10.Thrust collar(45X58X1) 11.Shaft diff pinion 12. Metal Diff case(L)
13.Metal Diff case(R) 14.Shim(A) 15.Shim(B) 16.Bolt(S) 17.Ball bearing
18.Diff lock clutch 19.Bevel (9-52) 20.Gear spur/25 21.TRB 22.Nut 23.TRB
25. Metal pinion 26.Bolts 27.Shim(0.1) 28.Shim(0.2) 29.Wheel pinion(10/LH)
30. Wheel pinion(10/RH) 31.Ball bearing(HL1) 32.Collar(39.8X52X04)
33.Snap ring(Shaft) 34.Snap ring(Hole)

https://truckmanualshub.com/

a.Dismount diff-case (RH) and diff-case metal(LH) by installing push bolt as shown in Fig.5-40

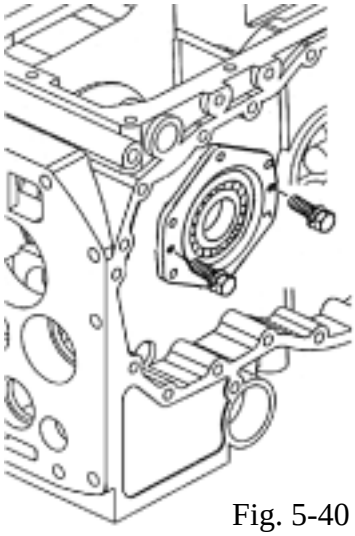

Fig. 5-40

b.The number of installed shims(14) should be written down or memorized for later reference.

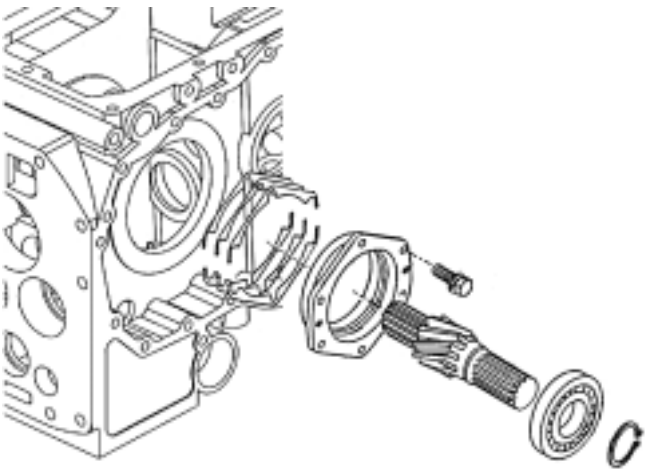

Fig. 5-41

c. Remove ring gear(2) as a set.

d.When disassembling the ring gear set further, remove bearing(31) with a puller.

e. Pull out diff pinion shaft(11) and take out dif-pinions(6) and dif-side gears(8).

f. Remove the pinion metal(support) tightening bolts and take put drive pinion(19) and related parts as an assembly.The number of installed shims should be written down or memorized for later reference.

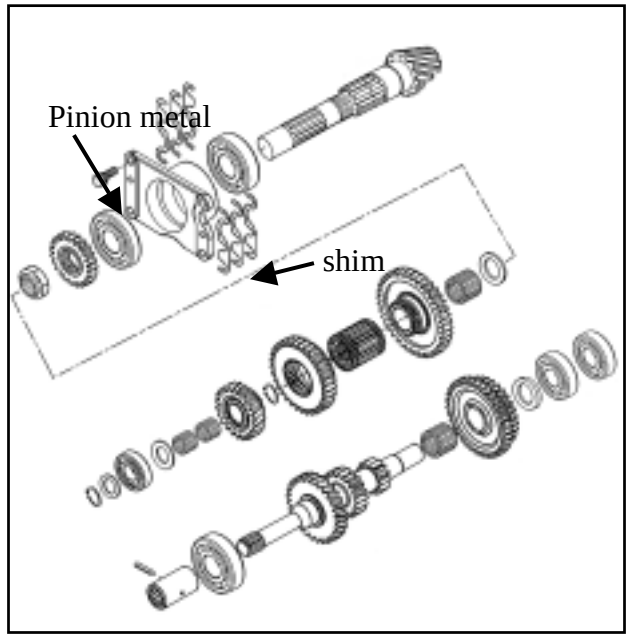

Fig.5-42

g. Release the lock of nut and remove the nut

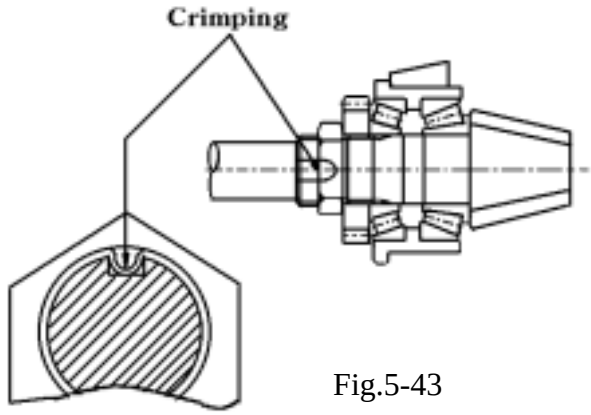

Fig.5-43

h.Push out drive pinion(19) from drive pinion metal on a press.

i.Remove the bearing from the drive pinion with a special tool.

https://truckmanualshub.com/

(2) PTO shaft and related parts.

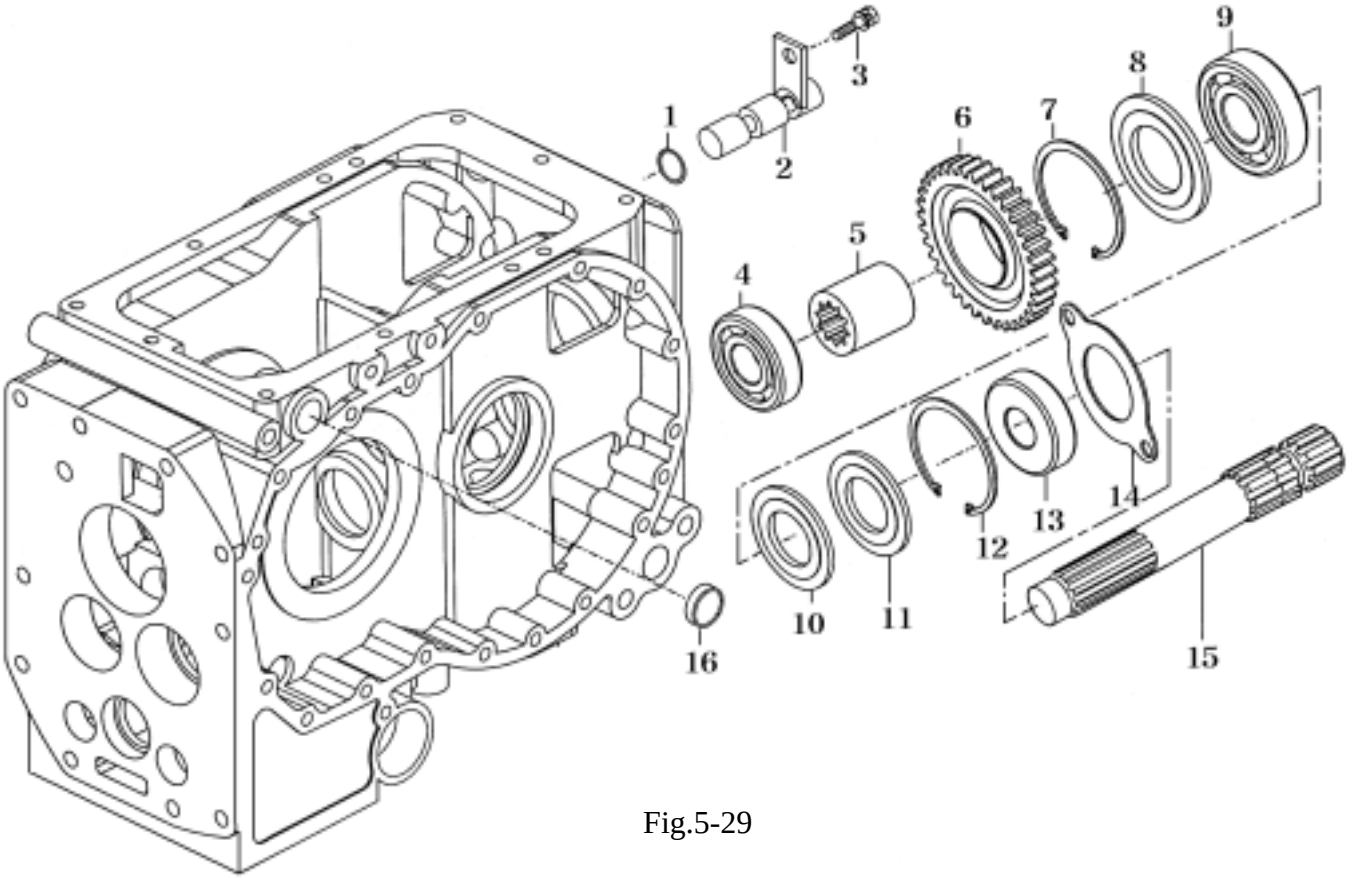

Fig.5-29

1.O-ring	2.Plug(PTO)	3.Bolt	4.Ball bearing(HL1)	5.Collar	6.Gear spur/37
7.Snap ring	8.Collar(35X50X2)		9.Ball bearing	10.Shim(B)	11.Shim(0.5)
12.Snap ring	13.Seal oil		14. Cover(plate)	15. PTO shaft	16.Seal

a.Remove the rear hitch and the trailer hitch
b.Remove bolt (3) and Extract PTO plug(2) rearwards
c.Extract PTO shaft(15) rearwards and remove the change gears and related parts.
d.Remove gear,spur /37(6)

https://truckmanualshub.com/

3-2. INSPECTION

Before and after disassembly,inspect each part for the items mentioned below.Parts which deviate from the specified values should be replaced.

-Wash clean all disassembled parts and check them for wear,damage,deformation,Burning ,etc. Defective parts should be corrected or replaced.

-As the drive pinion and the ring gear make a pair,they should be replaced together even if only one is found to be defective.

-Backlash between the drive pinion and the ring gear

Backlash	0.1-0.2 mm (0.004-0.008 in)

-Backlash between the diff-pinion and the dif-side gear.

Backlash	0.1-0.2 mm (0.004-0.008 in)

-When the backlash exceeds 0.5mm,also inspect the thrust collar for wear,defective collars should be replaced.

-Disengaging the resistance of PTO shifters.

Standard Value	18-22Kgf (40-49lbs)
Usable limit	17 Kgf (38 lbs)

* Measured at the shifter

3-3. REASSEMBLY

Reassemble the parts in reverse order of disassembly, following these instructions.

(1) Ring gear,Drive pinion,and related parts.

a. Apply oil to the drive pinion and related parts ahead of time.Then install them and tighten the assembly to the specified torque.

Tightening torque	1.4Kgf.m (9.36 ft.lbs)

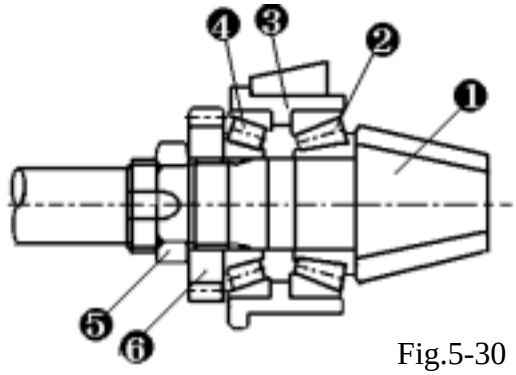

Fig.5-30

(1) Drive pinion
(2) Tapered roller bearing
(3) Drive pinion metal
(4) Tapered roller bearing
(5) Nut (M30X1.0)
(6) Gear

b.Be sure that the starting torque of the drive pinion meets the specified level.

Starting torque	8-11 Kgf.m (0.08-0.11KN.cm)

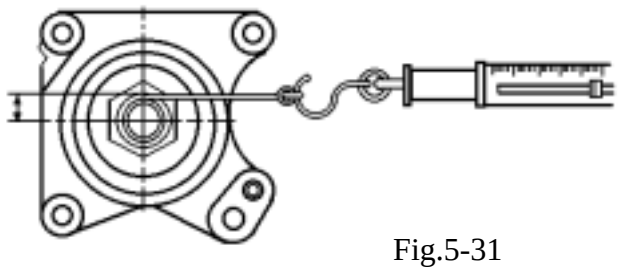

Fig.5-31

c.After the starting torque has been adjusted to the specified level,crimp the lock of the nut at one point as illustrated.

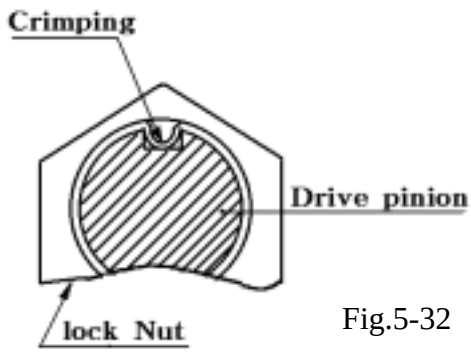

Fig.5-32

d. Tighten the drive pinion metal(support) by providing it with the same shimming thickness that it had when it was disassembled.

https://truckmanualshub.com/

When the drive pinion or the ring gear has been replaced, the proper number of shims to be installed should be determined based upon the following procedure:

Drive pinion metal tightening torque	5.5-7 Kgf.m (39.8-69 ft.lbs)

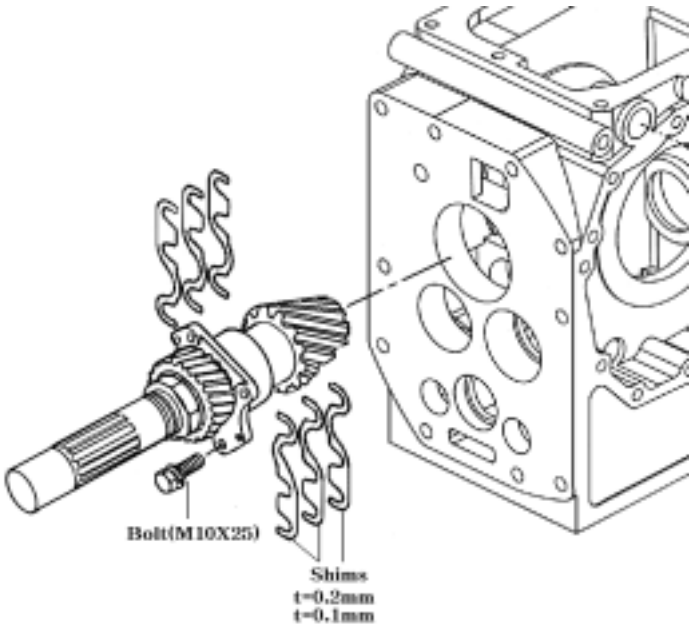

Fig.5-33

Note:

When assembling without replacing the pinion gear and ring gear with new ones,provide the same shimming thickness as that provided before disassembly.

e. Install the differential gears.

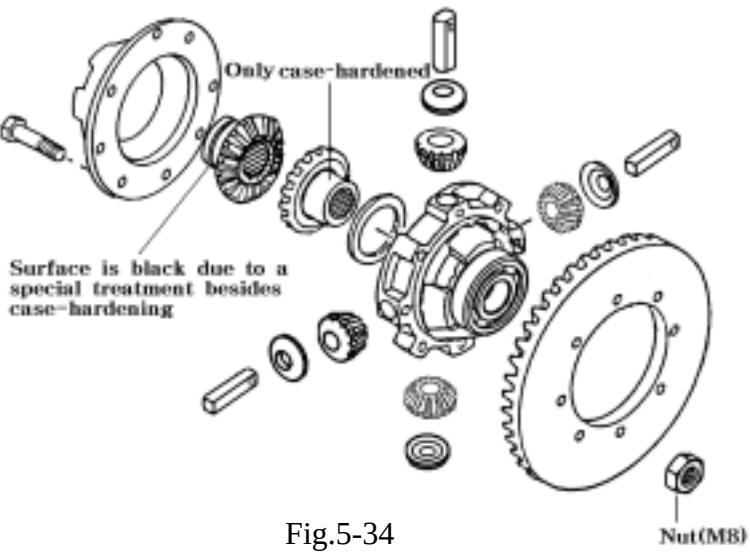

Fig.5-34

Ring gear tightening torque	9.0-11 Kgf.m (39.8-69 ft.lbs)

Note:

- As shown in Fig5-34,there are two kinds of differential side gears.Although are case hardened,the one installed on the side of the diff-lock is treated further and colored black. Take care not to mix them when assembling.
- Apply multi-purpose,quality grease to the parts mentioned below:

• Tooth surfaces of dif-pinions and dif-side gears
• Friction surfaces of dif-pinion shafts and dif-pinions.

f.The Backlash between dif-pinion and dif-side gear should be within as range of 0.1 to 0.2mm(0.004-0.008 in) and these parts should turn smoothly.

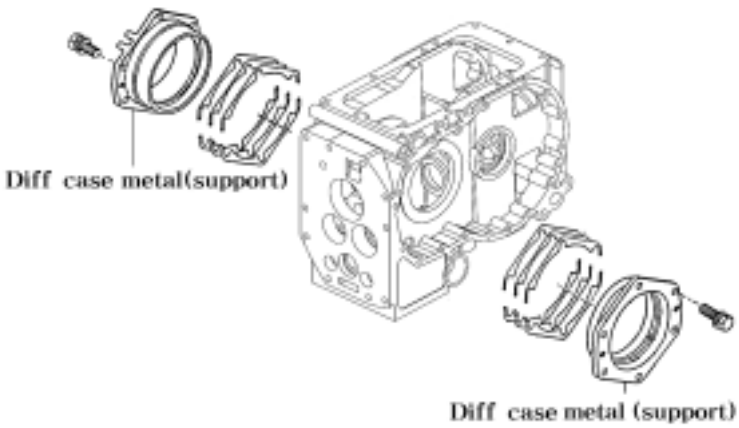

Fig.5-35

g. Install the differential gear assembly.

Diff-case metal tightening torque.	5.5-7 Kgf.m (39.8-69 ft.lbs)

https://truckmanualshub.com/

Note:

When reassembling the used pinion and ring gear,reinstall the same thickness of shims as was installed before disassembly in each shimming position.

h.Backlash adjustment between the drive pinion and the ring pair(Fig5-35)

i.As the drive pinion and the ring gear make a pair,be sure not to mate them with other parts from differential tractors.

ⅱ Adjust the shimming to backlash of 0.1-0.2 mm (0.004-0.008 in). The standard shimming is 0.4mm (0.016 in) on both sides.

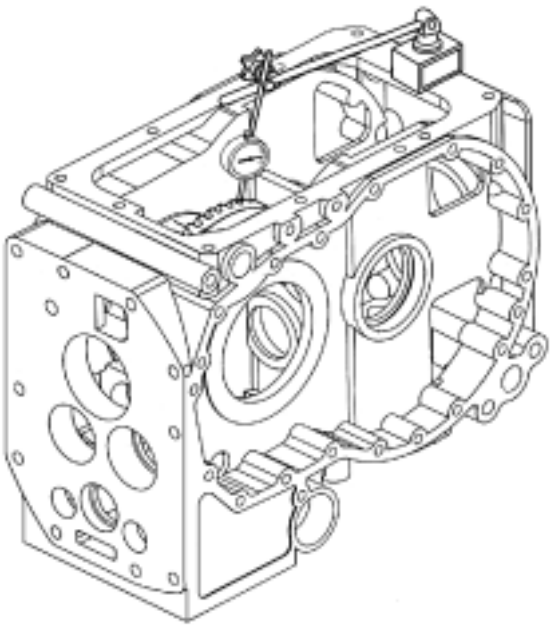

Fig.5-36

Note:

Strike the circumference of the ring gear both sides with a copper hammer by turning the ring gear manually,and check to see that the backlash remains unchanged.The backlash should be checked at four points 90 degrees apart to each other.

iii.inspection of the tooth bearing

Apply an even coat of oil-dissolved minimum on the drive pinion teeth and turn the drive pinion on the ring gear to check the tooth bearing by observing the bearing traces on the ring gear.

Correct Contact 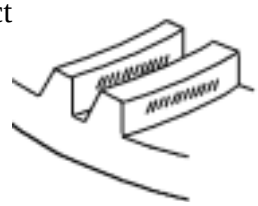	When drive pinion and ring gear are meshed correctly with each other and their backlash is within specified range,contact is in middle of ring gear tooth and is approximately 75% of total tooth width.
Tip contact 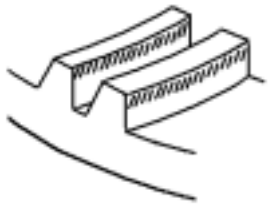	Excessive backlash.Move differential case and shims from right side to left side.See”Assembly and installation”.
Root contact 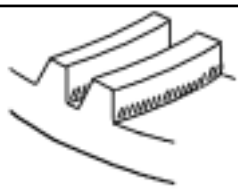	Inadequate backlash.Move differential case shims from left side to right side.See”Assembly and installation”.
Toe contact 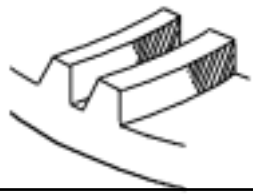	Too little engagement.Remove some drive pinion support shims.See Transmission:REAR TRANSMISSION ASSEMBLY-Setting cone center.
Heel contact	Too much engagement.Add some drive pinion support shims.See TRANSMISSION:”REAR TRANSMISSION ASSEMBLY-Setting cone center.”

INSTALLATION OF A NEW PAIR OR RING GEAR AND DRIVE PINION

1.use a new pair of ring gear and drive pinion delivered from the manufacturer.Never mix its components with those of other pairs.

Note:

Every ring gear-dive pinion pairs is adjusted and inspected for tooth contact individually at factory.

2.Adjust the backlash between the ring gear and drive pinion to be 0.1-0.2mm(0.004-0.008 in) by shimming the drive pinion metal and right and left dif-case metal and make sure that their tooth contact is proper

(2) PTO shaft and related parts. https://truckmanualshub.com/

a.Pushing the PTO counter gear end into the bearing until the stop on the gear is securely seated against the bearing.The seal should be coated with an adhesive (THREE BOND TB1215) on the circumference before installing.
b.Install the oil seal on the PTO shaft,paying attention to its installed direction.
c.After installation,the slide coupling should smoothly slide and mesh with the designated gears.

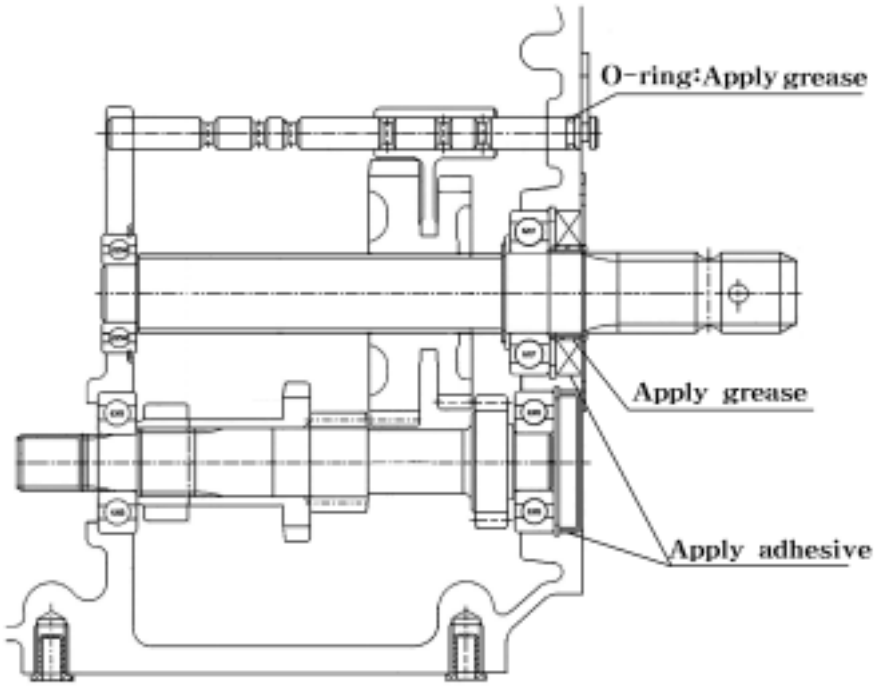

Fig.5-37 PTO 2 speed

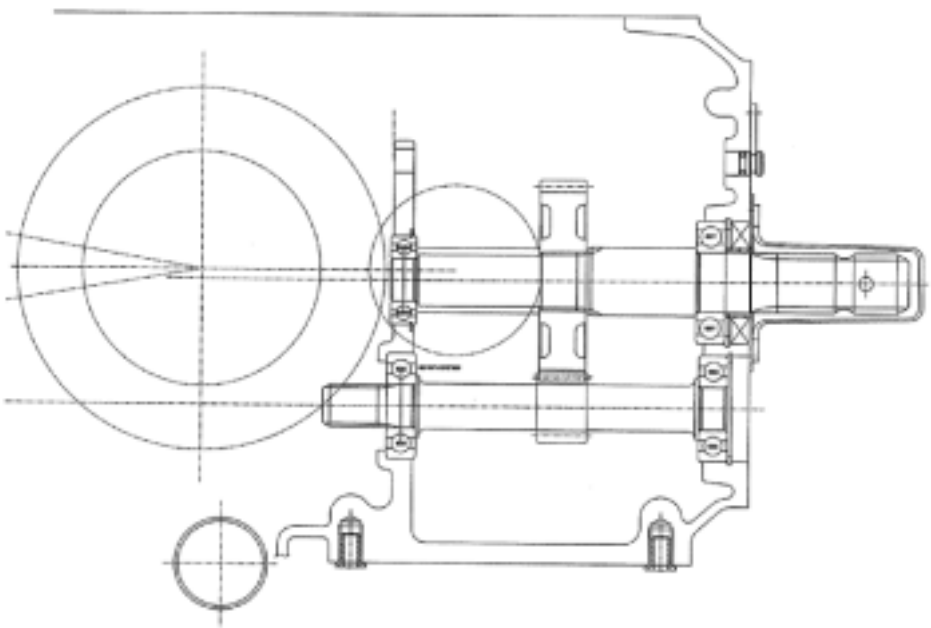

Fig.5-38 PTO 1 speed

5. SHIFTERS AND RELATED PARTS.

https://truckmanualshub.com/

5.1. CONSTRUCTION

(1)Forward and reverse control linkage mechanism(Linear speed shifter)
(synchromesh transmission version)

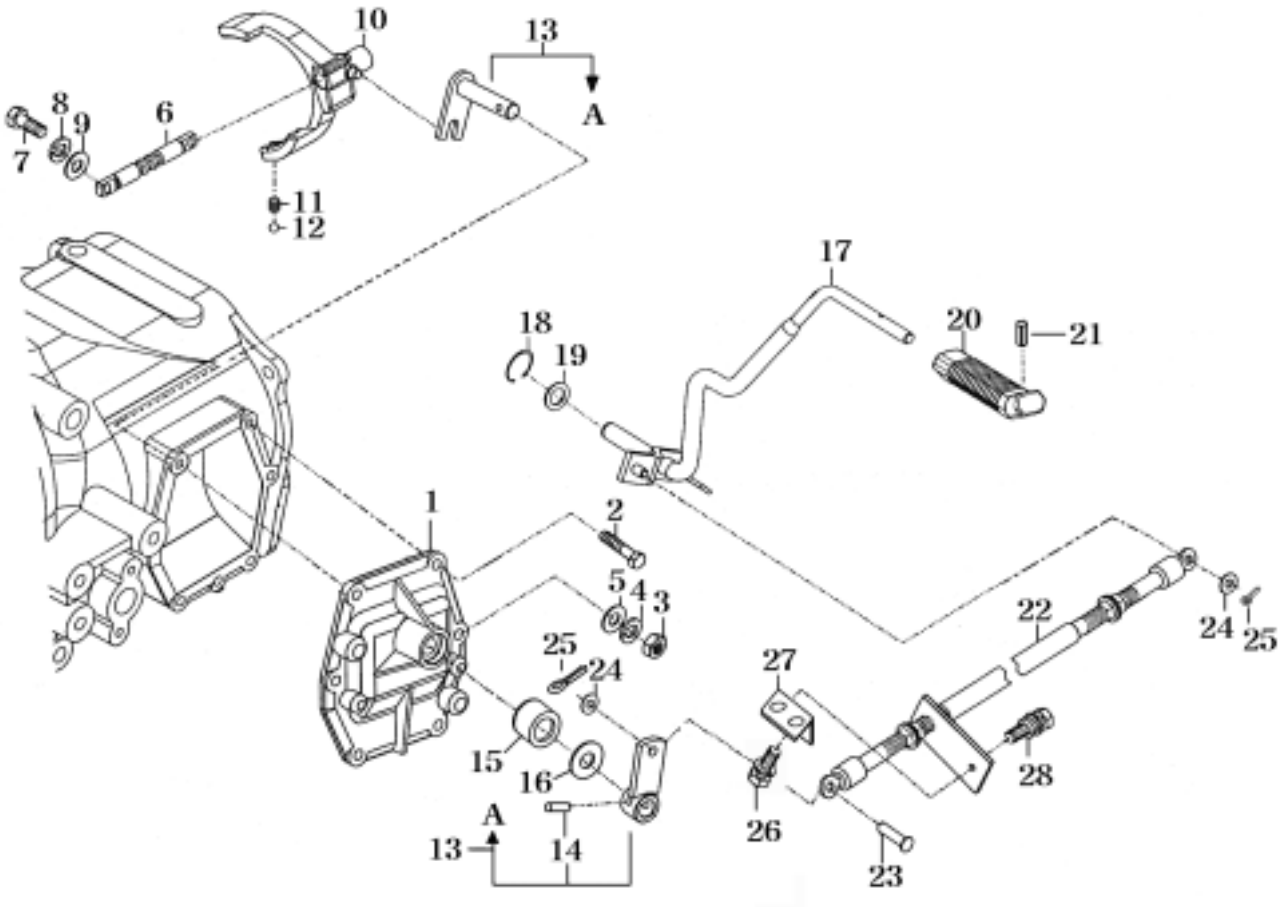

Fig.5-39

1.Metal(shifter,reverse) 2.Bolt(S) 3.Nut 4.Washer spring 5.Washer plain 6. Stay shifter reverse
7.Reamer bolt 8.Washer spring 9.Washer plain 10. Fork(shift/shuttle) 11. Shifter spring
12.Steel ball 13.Arm(reverse) 14. Split pin 15. Oil seal 16.Washer 17.Lever(Bar/14) 18.Snap ring
19.Washer(15X24X2) 20. Grip 21.Pin spring 22.Cable 23.Pin 24.Washer plain 25.pin split
26.Bolt(S) 27. Plate 28.Bolt(SP)

https://truckmanualshub.com/

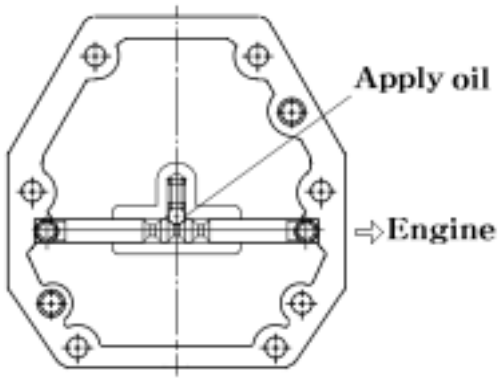

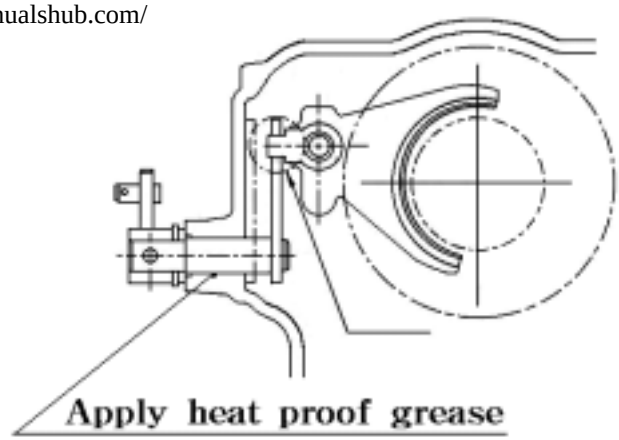

Fig.5-40

(2) Main change mechanism(Main speed shift)
(Synchromesh transmission version)

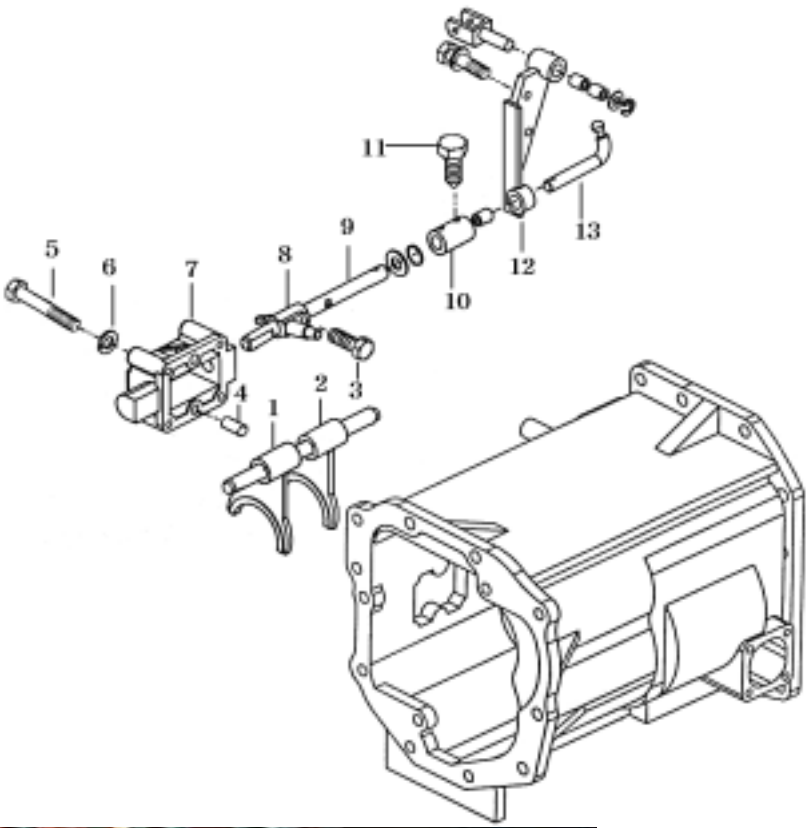

1.Fork (1-2 speed)
2.Fork(Main shift/Synchro)
3.Bolt
4.Pin(A)
5.Bolt
6.Washer
7.Metal(Main shift)
8.Shift Arm
9.Rod
10.Coupling(40)
11.Set bolt
12.Main shift bracket
13.Rod change speed

Fig.5-41

Fig.5-42

Fig.5-43

(3) Range shifter (Speed range shift) mechanism https://truckmanualshub.com/

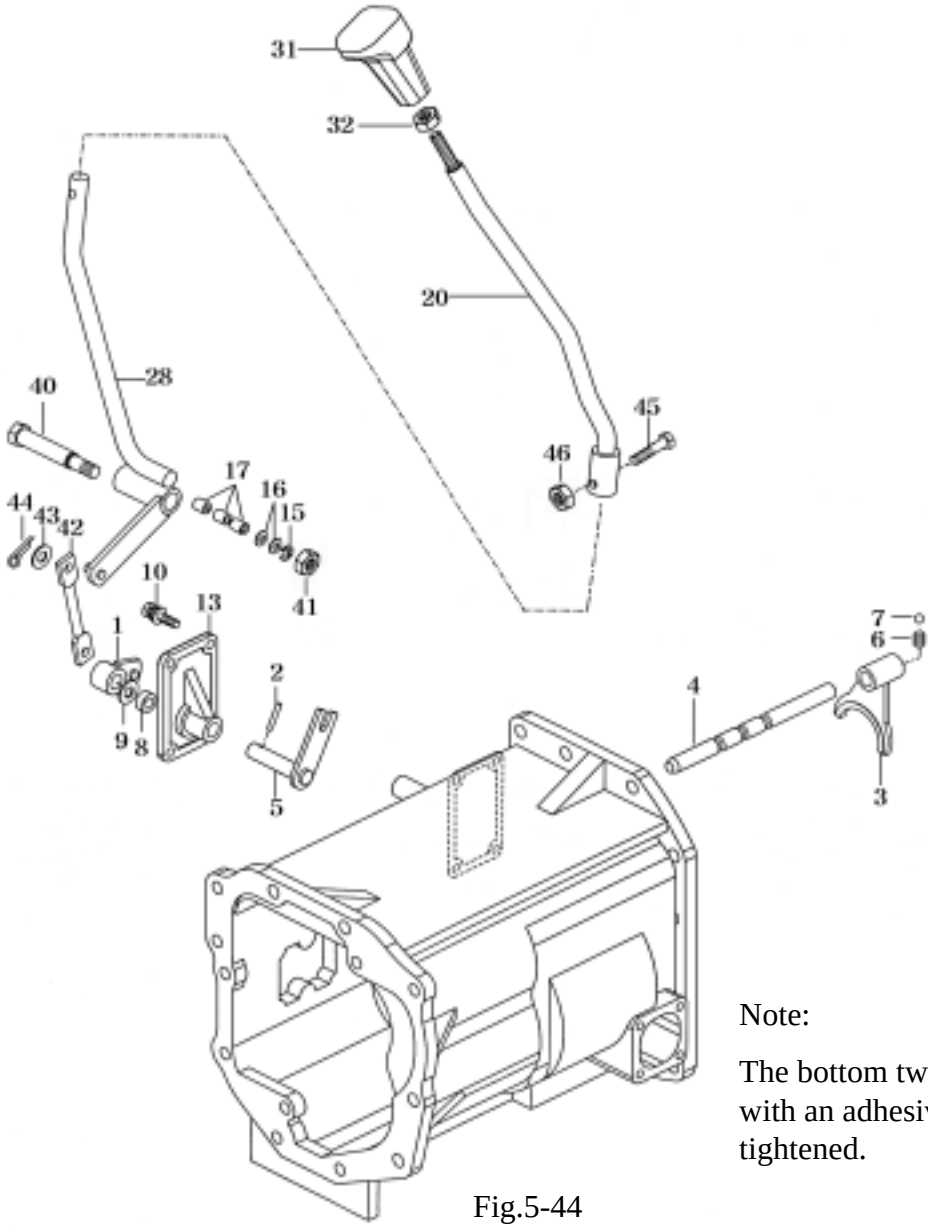

1.Arm(sub shift)
2.Pin taper
3.Fork(Sub shift)
4.Shift stay(Sub shift)
5.Hook
6.Shifter spring
7.Steel ball
8.Oil seal(D)
9.Washer
10.Bolt
13.Metal sub
15.E type stop ring
16.Shim(03X16X26)
17.Bush,chain guide
18.E type stop ring
20.Lever(Sub shift/upper)
28.Lever(Sub shift/lower)
31.Grip
32.Nut
40.Pin(100)
42.Rod

Note:

The bottom two tightening bolts should be coated with an adhesive on their threads before being tightened.

Fig.5-44

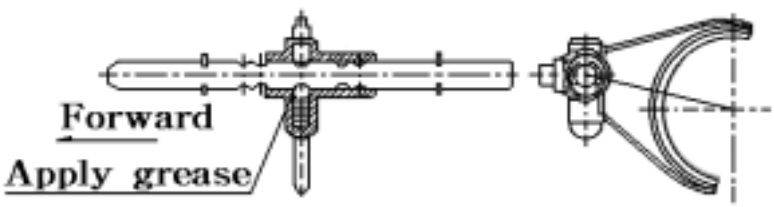

Fig.5-45

https://truckmanualshub.com/

(4) Front drive change (4 WD shaft) mechanism

1.Boss
2.Spring shifter
3.Steel ball
4.Bolt(S)
5.Packing
7.Shifter arm
8.O-ring
9.Arm(4WD)
10.Spring pin
11.Lever(4WD)
12.Bush(Chain guide)
14.Grip
18.E-type stop ring
19.Rod
20.Shim(03X16X26)
22.Split Pin
23.Washer
27.Nut(fine)
28.Pin
29.Washer
30.Washer

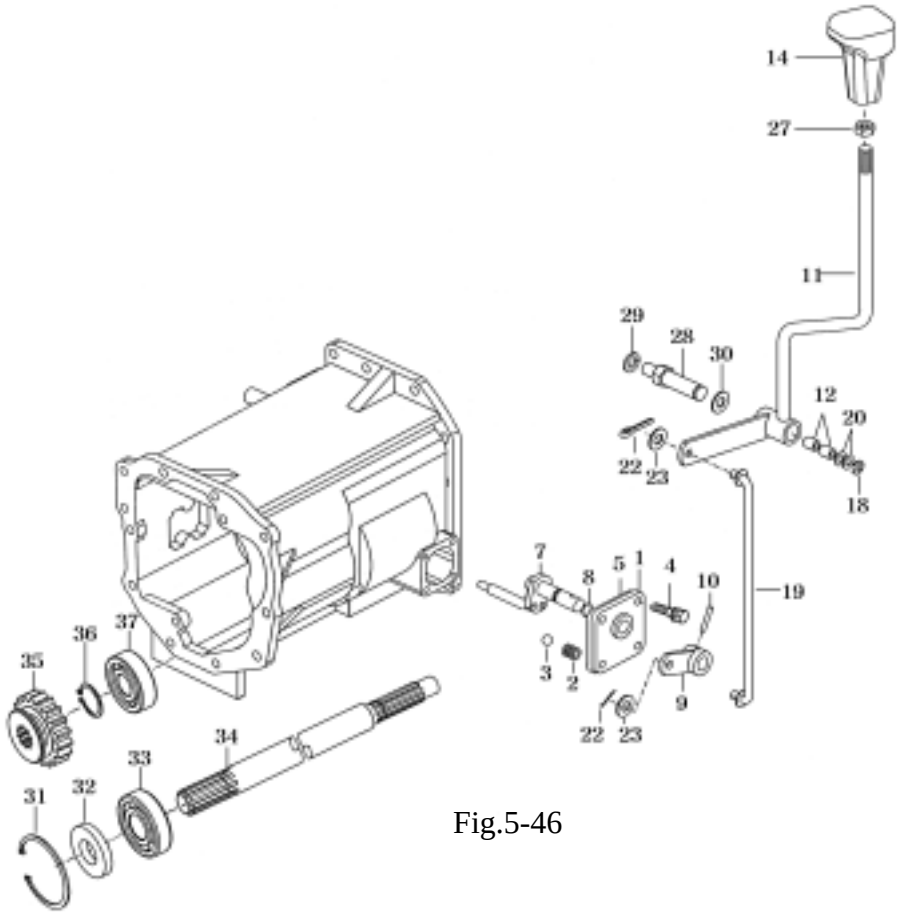

Fig.5-46

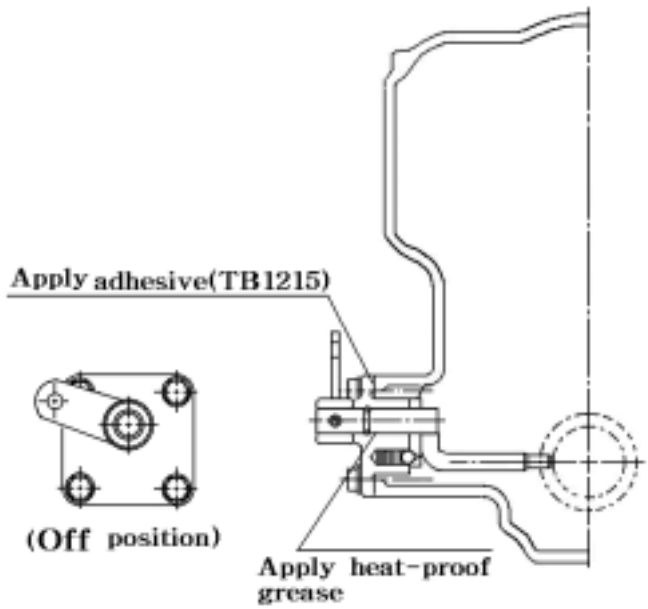

Fig.5-47

https://truckmanualshub.com/

(5) Rear PTO shift mechanism

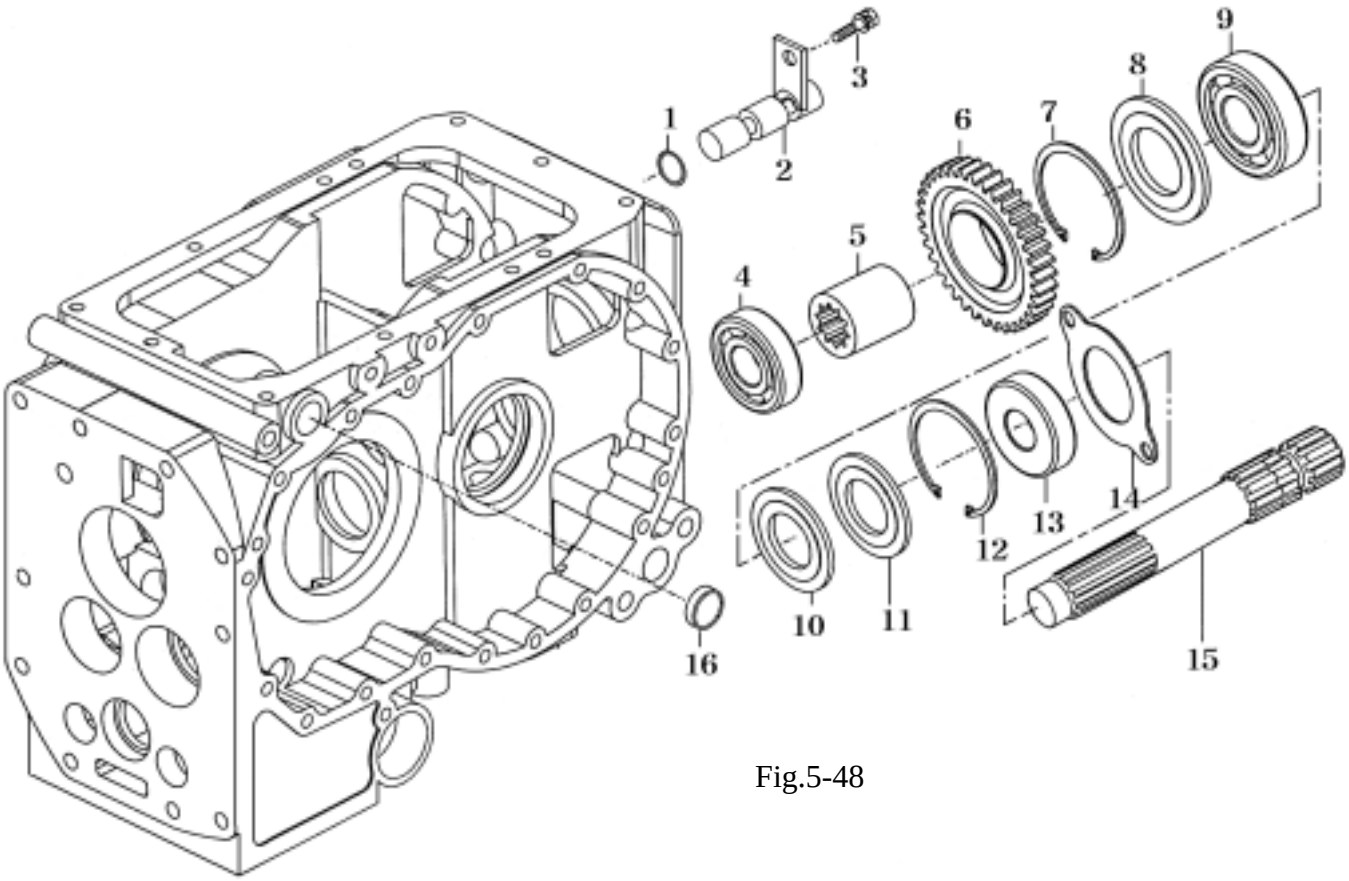

Fig.5-48

1.O-ring 2.Plug(PTO) 3.Bolt 4.Ball bearing(HL1) 5.Collar 6.Gear spur/37
7.Snap ring 8.Collar(35X50X2) 9.Ball bearing 10.Shim(B) 11.Shim(0.5)
12.Snap ring 13.Seal oil 14. Cover(plate) 15. PTO shaft 16.Seal

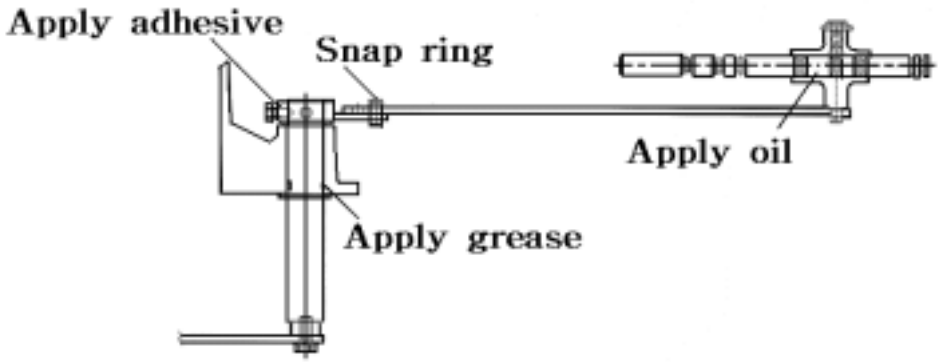

Fig.5-49

https://truckmanualshub.com/

(6) REAR PTO counter shaft mechanism

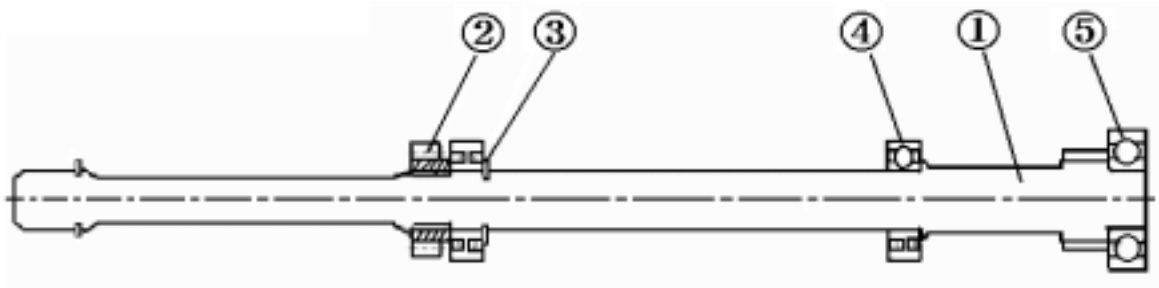

Fig.5-50

1.Gear,spur 12 2.Gear spur 14 3. Snap ring(shaft) 4. Ball bearing(6205) 5. Ball bearing(6305)

Note:
- When pushing the R.B.B's(6305,6205) into the gear ,spur 12,be careful only to push their inner races.
- The snap ring C should be securely seated in the groove and the press-processed side turned towards the outer side.
- Be sure not to mix different pairs of the gear(spur/14).
- Every time a gear is installed,its smooth rotation should be checked.

a. REAR PTO shaft

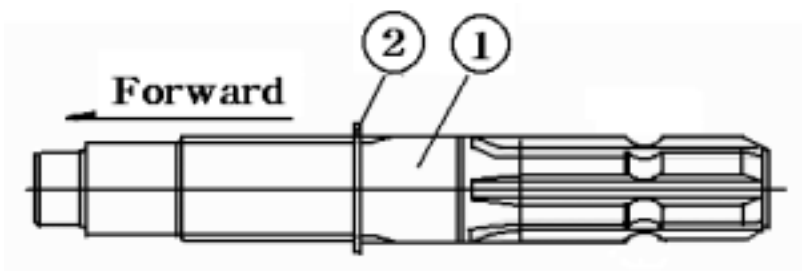

1.Shaft PTO

2.Snap ring

Fig.5-51

Note:
The snap ring C should be securely seated in the groove and the press-processed side turned towards the outer side.

b.REAR PTO shift stay

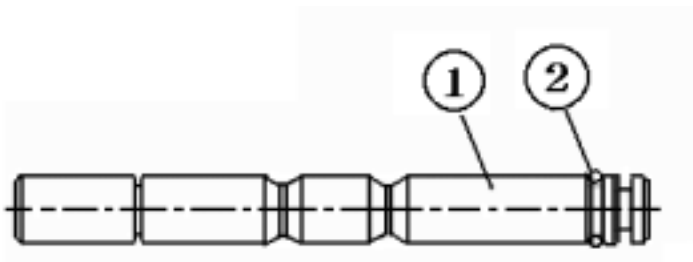

1.Stay PTO shift

2.O- ring

Fig.5-52

Note:
- When installing the O-ring to rear transmission case,take care not to damage it or allow to fall.

https://truckmanualshub.com/

(7) Drive pinion Sub assembly

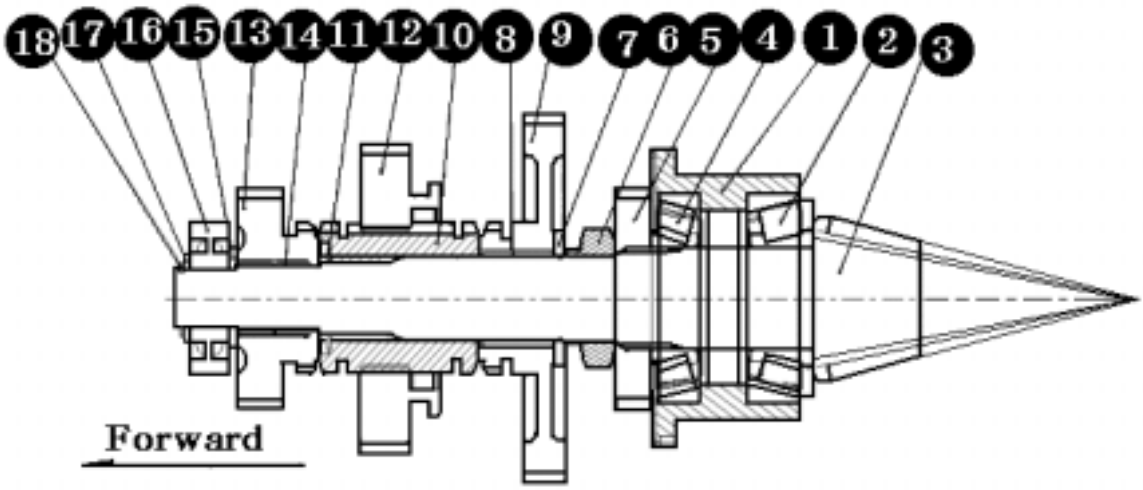

Fig.5-53

1.Metal pinion 2.Taper roller bearing 3.pinion drive 10 4.Taper roller bearing
5.Gear spur 23T 6.Nut(M30X1.5) 7.Washer(28X46X03) 8.Needle bearing
9.gear spur 40T 10.Hub(28X51X59) 11.Snap ring (shaft) 12.Gear spur 33T
13.gear helical 22T 14.needle bearing 15.Washer(20X34X03) 16.Ball bearing
17.Washer(20X30X1.8) 18.Snap ring (shaft)

Note:

a.Apply oil to the drive pinion and related parts ahead of time.Then install them and tighten the assembly to the specified torque.

b.Be sure that the starting torque of the drive pinion meets the specified level.
Starting torque is 8-11 Kgf.m (0.08-0.11KN.cm)

c.After the starting torque has been adjusted to the specified level,crimp the lock of the nut at one point as illustrated.

d. Be sure that these parts should turn smoothly

When the drive pinion or the ring gear has been replaced, the proper number of shims to be installed should be determined based upon the following procedure:

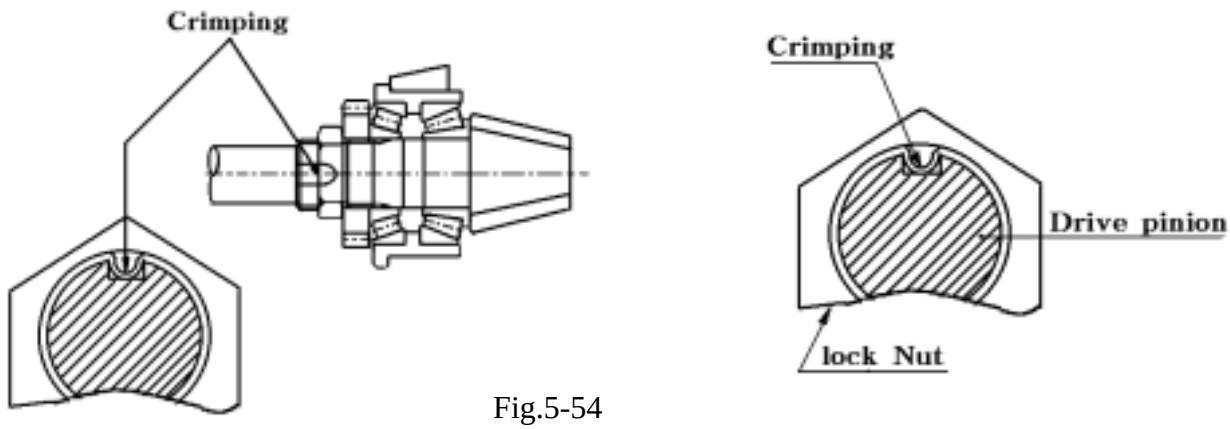

Fig.5-54

https://truckmanualshub.com/

(8). Sub change counter shaft

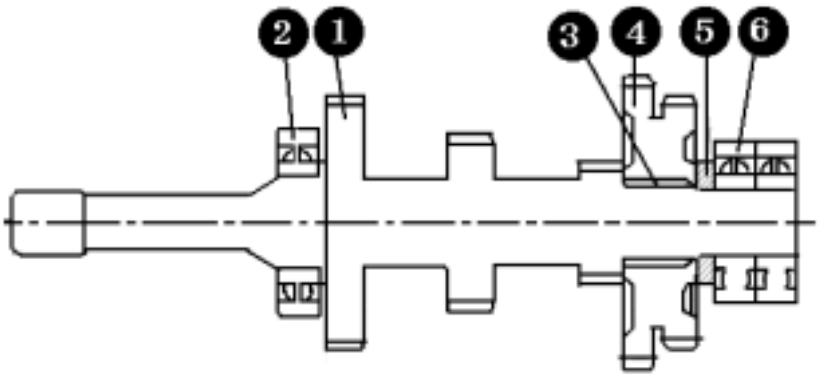

1.Gear range(13X20X29T)
2.Ball bearing(6207)
3.Needle bearing
4.Gear spur(30X35T)
5.Washer(25X46X07)
6. Ball bearing(6305)

Note:
1.Apply grease when installing Needle bearing
2.pay attention to the installed direction of gear(spur/30-35)
3.After installation,be sure to slide smoothly

8.Differential gears.

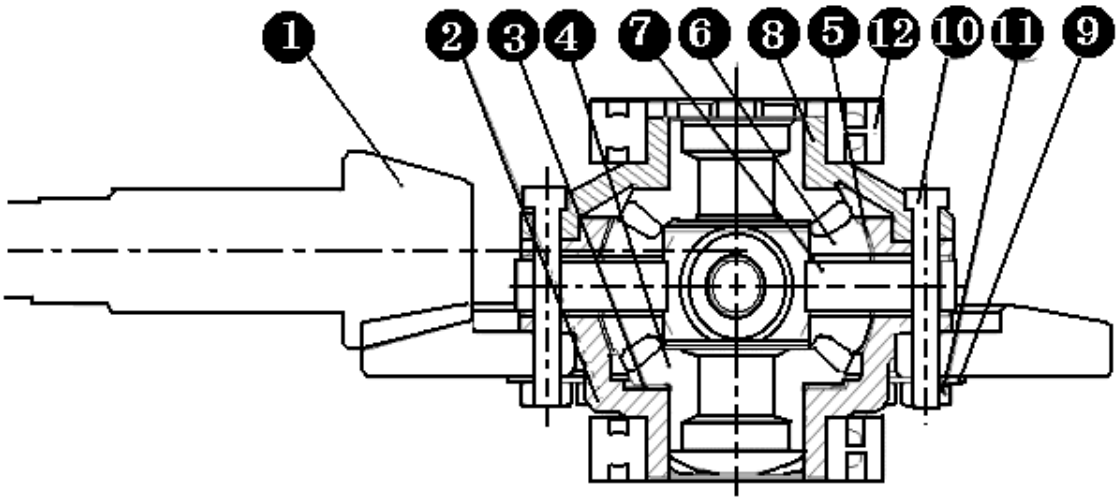

Fig.5-55

1.Bevel 10X51 2.Case Diff(L) 3.Gear bevel(20) 5.Thrust collar,pinion
6.pinion Diff(12) 7.Shaft diff pinion 8.Case Diff (R) 9.plate lock
10.Bolt,differential 11.Nut 12.Ball bearing(6011)

Note:
1.When assembling without replacing the pinion gear and ring gear with new ones,provide the same shimming thickness as that provided before disassembly.
2.Backlash between dif-pinion and dif-side gear should be within as range of 0.1 to 0.2mm (0.004-0.008 in) and these parts should turn smoothly.
3.When reassembling the used pinion and ring gear,reinstall the same thickness of shims as was installed before disassembly in each shimming position.
4.Backlash adjustment between the drive pinion and the ring pair(Fig5-8) i.As the drive pinion and the ring gear make a pair,be sure not to mate them with other parts from differential tractors.
5.Adjust the shimming to backlash of 0.1-0.2 mm (0.004-0.008 in). The standard shimming is 0.4mm (0.016 in) on both sides.

https://truckmanualshub.com/

5-2 PRECAUTIONS FOR DISASSEMBLY, INSPECTION,AND ASSEMBLY

(1) Disassembly

When drawing a shifter stay from its shifter,be careful not to lose the steel ball.It can jump out of the shifter.

(2) Inspection

-Shifter –disengaging load:

Main change and sub change:18-22 Kgf (40-49lbs)

4WD change:25-29 kgf (55-64 lbs)

-Usable limit of shifter-disengaging load:

Main change & Sub-change:17 Kgf (38lbs)

4WD change: 24Kgf(53lbs)

-Wearing limit of each shifter: 0.5 mm (0.02 in)

(3) Reassembly

a.lubricate the grooves in the shifters.

b.Each shifter should be installed in the correct direction.

c. When installing the shifter on the shifter stay,Use the special tool as shown in Fig.5-56

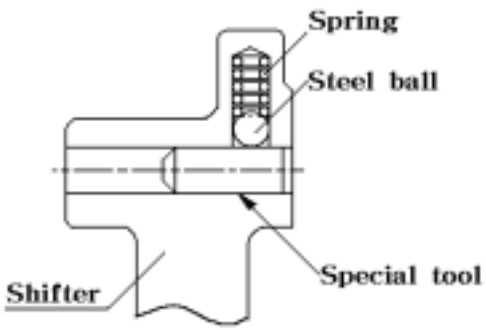

Fig.5-56

https://truckmanualshub.com/

SECTION 4. TROUBLESHOOTING

1. WHEEL DRIVE SYSTEM

Problems	Causes	Countermeasures
Transmission makes noise in neutral	Insufficient or improper lubricant	Replenish or replace
	Excessive splines of change shaft,spline hub,etc	Replace
	Worn or broken bearings	Replace
	Slide couplings interfering with the gears due to worn or deformed shifters	Replace
Gears make a noise when shifted.	Improperly disengaged clutch	Repair or replace (Clutch pedal play)
	Wear in width of gears,splined hubs,collars,etc	Replace
	Defective Change shift fork	Replace
Gears disengage by themselves	Broken shifter springs	Replace
	Wear in width of gears,splined hubs,collars,etc	Replace
	Worn shifters	Replace
Gears do not engage or disengage	Improper disengaged shift lever	Repair or replace
	Gears are locked due to foreign matter between them	Remove the foreign matter

https://truckmanualshub.com/

2. PTO DRIVE SYSTEM

problem	Causes	Counter measures
PTO does not spin with PTO shifted to ON	PTO shift lever is in neutral	Shift lever positively to ON
	Defective PTO switch	replace
	Clogged PTO valve	Wash clean
	Poor Pump	Replace
	Defective solenoid valve	Replace
PTO spins but does not produce sufficient torque.	Worn clutch disc	Replace
	Broken or fatigues seal ring at clutch sleeve	Replace
	Loose joint or broken O-ring of delivery valve	Retighten or replace
	Poor pump	Replace
	Clogged PTO valve	Wash clean
PTO does not stop when PTO switch is shifted to OFF	Defective PTO valve solenoid	Replace
	Poor PTO valve (contamination)	Wash clean
	Broken clutch piston return spring	Replace
	Poor switch	Replace
PTO follows too much when PTO switch is shifted to OFF	Improper oil	Replace
	Insufficient warming up	Let tractor warm up sufficiently
	Poor PTO clutch brake	Replace
	Weak or broken piston return spring	Replace
	Poor PTO valve(contamination)	Wash clean
	Deflected clutch plate	Replace

Power Train diagram

https://truckmanualshub.com/

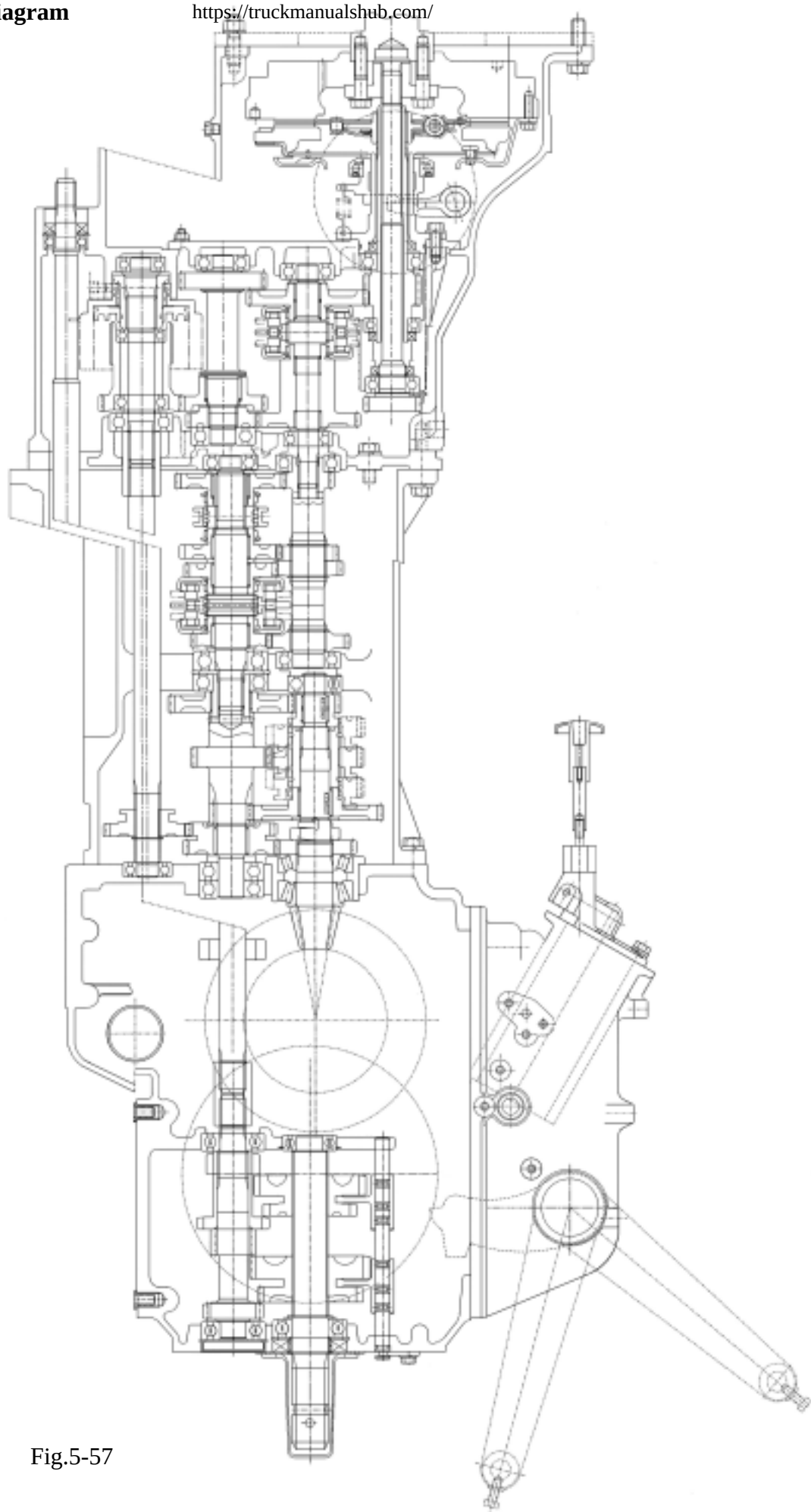

Fig.5-57

https://truckmanualshub.com/

CHAPTER 6
FRONT AXLE

CHAPTER 6. FRONT AXLE(4WD)----------6-1

SECTION 1.GENERAL DESCRIPTION----------6-1

SECTION 2. SPECIFICATIONS----------6-2

SECTION 3.DISASSEMBLY,INSPECTION,AND REASSEMBLY--6-3

1. Center pivot----------6-3
1-1. Disassembly----------6-4
1-2. Inspection----------6-4
1-3. Reassembly----------6-4

2. Front differential----------6-6
2-1. Disassembly----------6-7
2-2. Inspection----------6-7
2-3. Reassembly----------6-8

3. Final case----------6-10
3-1. Disassembly----------6-11
3-2. Inspection----------6-12
3-3. Reassembly----------6-13

SECTION 4.TROUBLE SHOOTING----------6-15

https://truckmanualshub.com/

Chapter 6 Front axle(4WD)

1. GENERAL DESCRIPTION

The 4WD front axle is a center pivot type.The front wheel drive mechanism is incorporated as a part of the axle.

The front wheel drive power is taken off the rear transmission and transmitted to the differential in the front axle where the power is divided into right and left and to the respective final cases.

In the final cases,the transmitted revolution is reduced by the bevel gears to drive the front wheel.

The 4WD mechanism with bevel gears provides wider steering angle and greater durability.

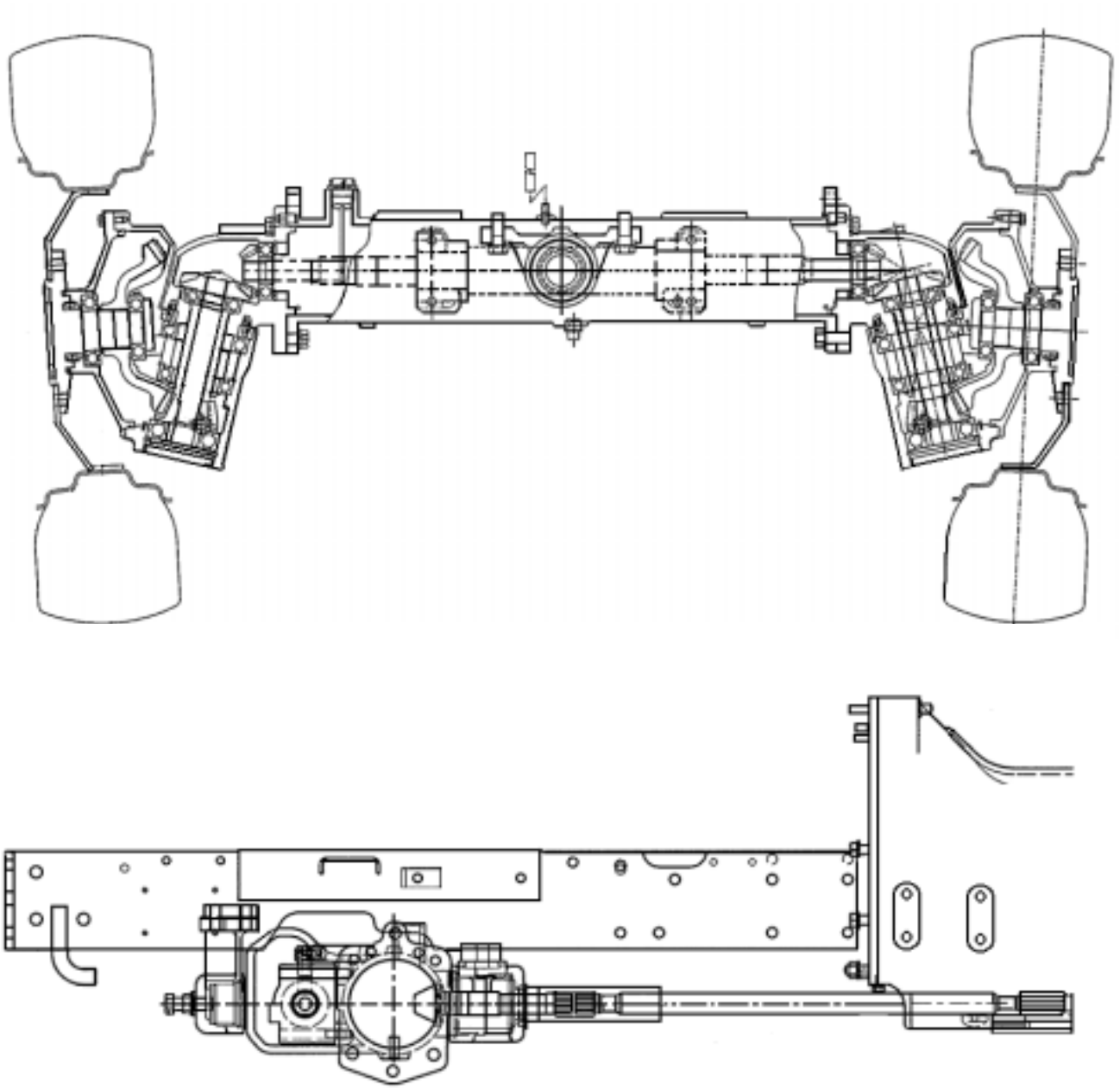

Fig 6-1

https://truckmanualshub.com/

SECTION 2. SPECIFICATIONS

		23/2810,T300/T330
Wheel alignment	Toe-in (mm)	2~6
	Camber	3°±1°
	Caster	3°±1°
Front axle	Pivot metal (F) bore (mm)	Φ55
	Pivot metal (R) bore (mm)	Φ80
	Pivot metal (F) bush (mm)	50X55X20
	Pivot metal (R) bush (mm)	75X80X30
	Housing (F) Diameter (mm)	Φ50
	Housing (R) Diameter (mm)	Φ75
	Front wheel steering angles	52°

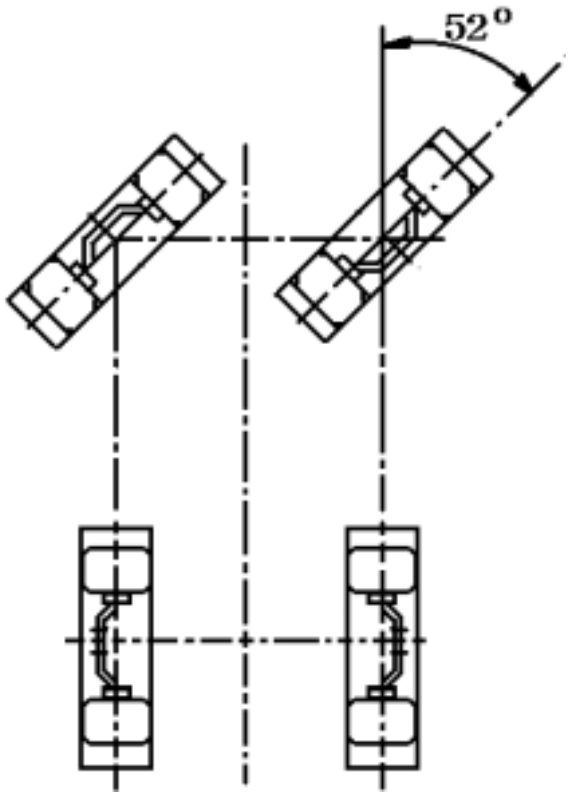

Fig.6-2

https://truckmanualshub.com/

SECTION 3. DISASSEMBLY,INSPECTION,AND REASSEMBLY

1. CENTER PIVOT

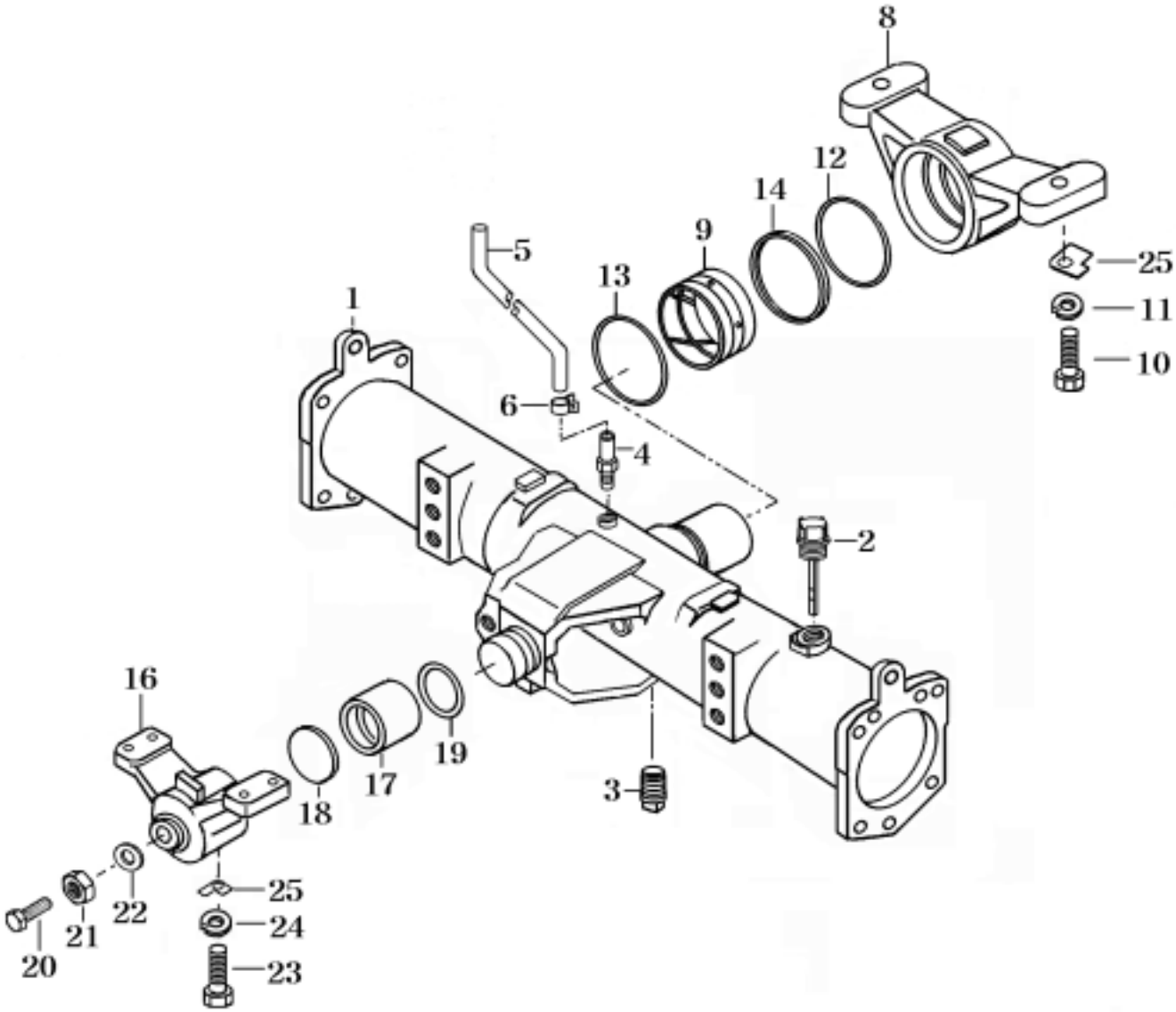

Fig.6-3

1.Housing,front axle
2.Oil cap
3.Plug
4.connector
5.Hose(820)
6.Clamp,(worm/14.5)
8.Metal,pivot(R)
9.Bush(75X80X30)
10.Bolt (M16X40)
11.Washer,spring(M16)
12.O-ring(P)
13.O-ring
14.Spacer (R)
16.Metal pivot(F)
17.Bush(50X55X20)
18.Spacer (F)
19.O-ring(G 55)
20.Bolt
21.Nut
22.Seal washer
23.Bolt(M12X40)
24.Washer spring
25.Washer

https://truckmanualshub.com/

1.1.DISASSEMBLY

1) Dismount the front wheel drive shaft, referring to the pertinent paragraph in chapter 2.
2) Remove the right and left tie rods.
3) Suspend the front axle bracket with a chain.
4) Remove the front metal clamping bolts.The front axle can then be separated from the axle bracket.
5) Remove the front and rear pivot metals.

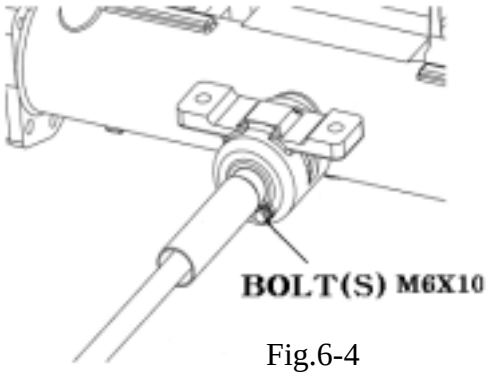

Fig.6-4

1.2.INSPECTION

1) FRONT AXLE SHAFT DIAMETER

Measure the diameter at a roll bush contact point with a micro-meter or vernier calipers.If the measured value is less than usable limit,replace the housing front axle or bush in Metal pivot (F)or Metal pivot (R) .

	Front	rear
Standard value as assembled	Ø50	Ø75
Usable limit	Ø49.9	Ø74.9

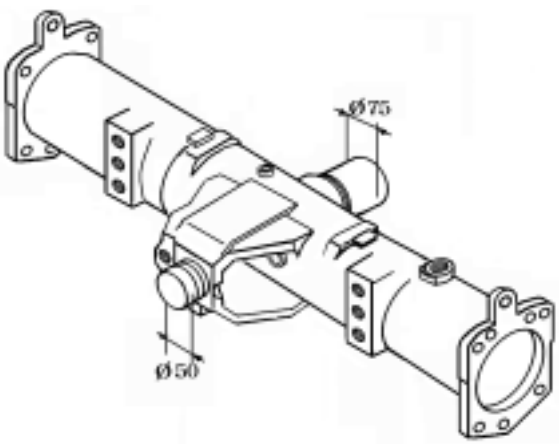

Fig.6-5

2) FRONT AXLE BUSH BORE DIAMETER

Measure the bore diameter of the roll bush in the pivot metal(F).If the measured value exceeds the usable limit,replace the bush.

	Front	rear
Standard value as assembled	Ø50	Ø75
Usable limit	Ø50.35	Ø75.35

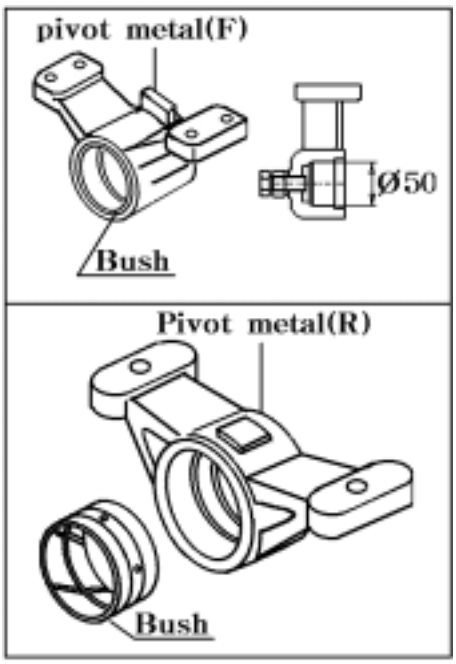

Fig.6-6

3) Worn or damaged oil seals,O-rings, bearings,etc.should be replaced.

1.3 REASSEMBLY

Reassemble the parts in reverse order of disassembly,following these instructions.

1) Lips of the oil seals,bush contact surfaces, and O-rings should be coated with grease in advance.
2) When installing the roll bushes,abide by the following precautions.

-Use an installer and press in the bush on a press.
-The bore surface should be coated with grease in advance.
-The shim of the roll bush should reach position as shown Fig.6-7.In other words the seam should be in a position which is free from any load.

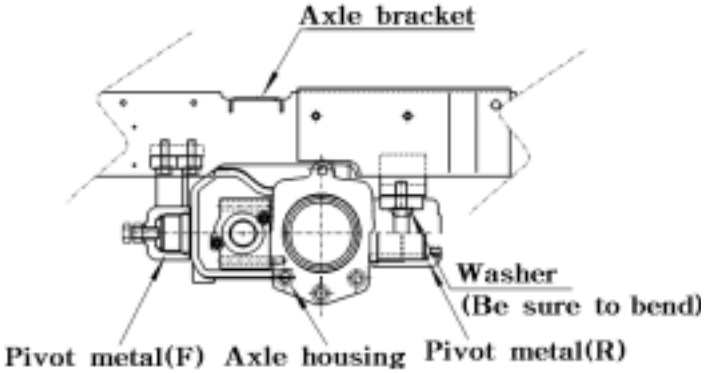

Fig.6-7

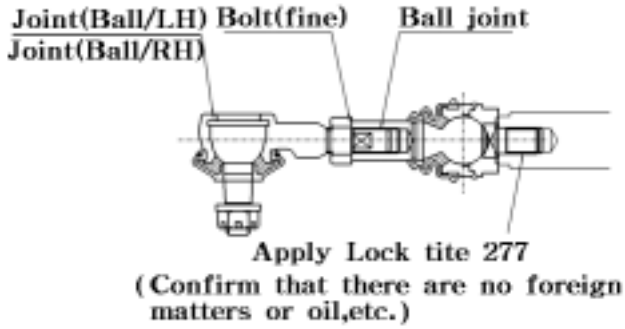

Fig.6-9

Note:
Slanted or forced installation of the bush should be avoided,and the bore surface of the bush should not damaged.

3) Pay particular attention to the installed direction of thrust collar,that is,with the sharply-edged face turned towards the bevel gear case.
4) When the thrust collar has been replaced or the fore-and aft play of the front axle exceeds the usable limit,correct play by screwing in the adjust bolt on the top of the pivot metal(F).

Note:
After correcting the pivot metal play,tighten the lock nut of the adjusting bolt to a torque of 11.7~13.7KN-cm(1200~1400 kgf-cm)

5) The reassembled front axle should rock smoothly while pivoting.
6) When the tie-rods are reinstalled,the toe-in should be adjusted.At the same time,the steering angles of the both wheels should also be adjusted.
7) Be sure the dimension C and D is same size and Adjust E and F as same dimension.

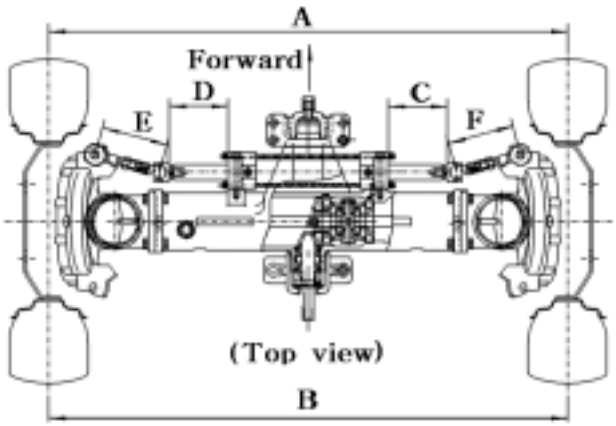

Fig.6-8

https://truckmanualshub.com/

2. FRONT DIFFERENTIAL

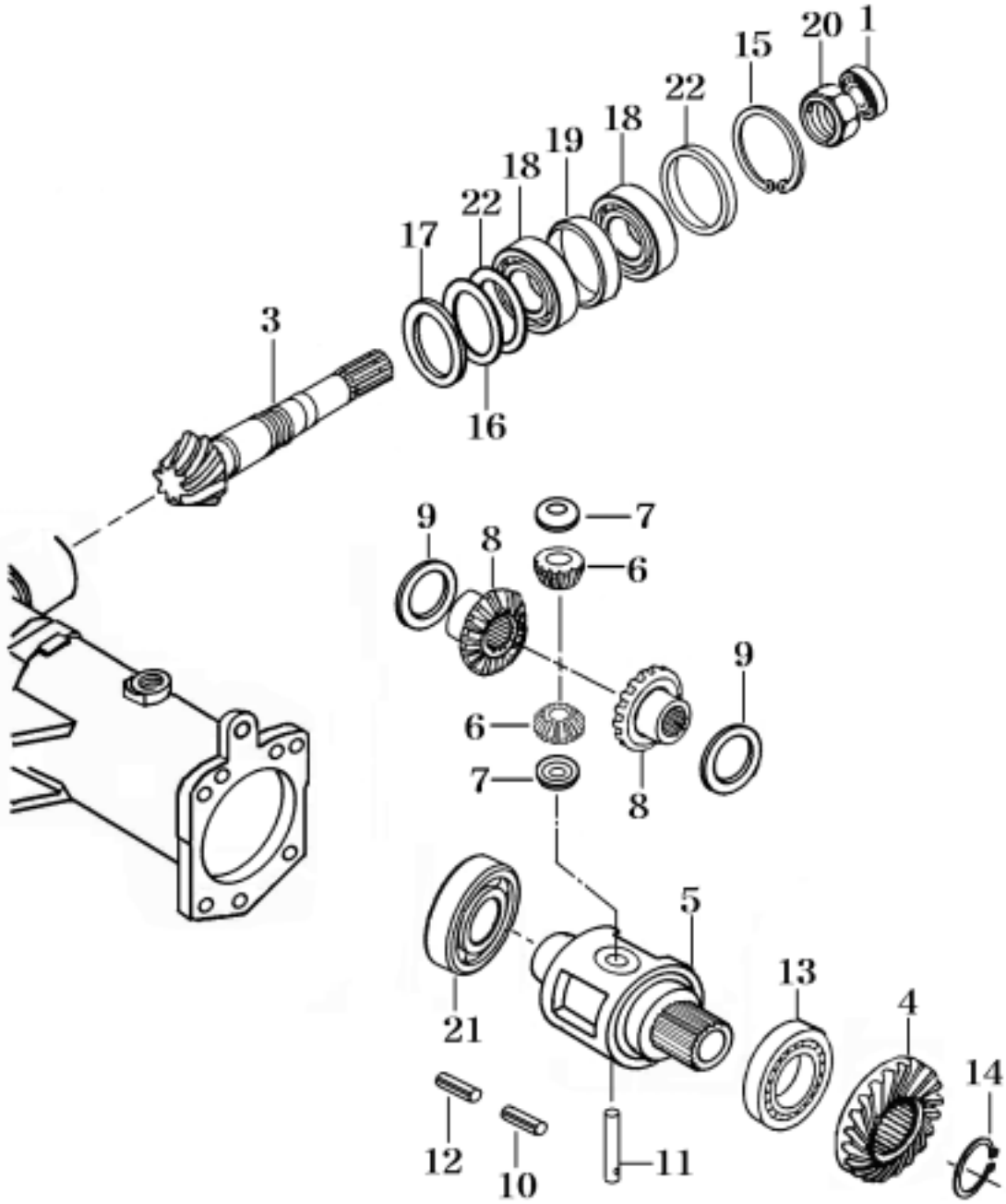

Fig.6-10

1.Oil seal 3.Pinion bevel 8T 4.Gear bevel 35T 5.Case front Diff 6.Pinion Diff (12)
7.Thrust collar 8.Gear diff side (20) 9.Washer thrust 10.Pin spring 11.Shaft diff pinion
12. Pin spring 13.Bearing Ball(6212) 14.Snap ring 15.Snap ring(hole) 16.Shim(A)
17.Shim(B) 18.Bearing taper roller 19.collar 20.Nut(M30) 21. Bearing ball(6211)
22.Shim

2.1 DISASSEMBLY

1) As concerns operation prior to removal of the front axle,refer to the paragraph covering disassembly of the center pivot
2) Remove both wheels
3) Remove the drain plug from the final case and drain oil from the final case.
4) remove both final case assembly (A and B) from the front axle(Fig.6-11)

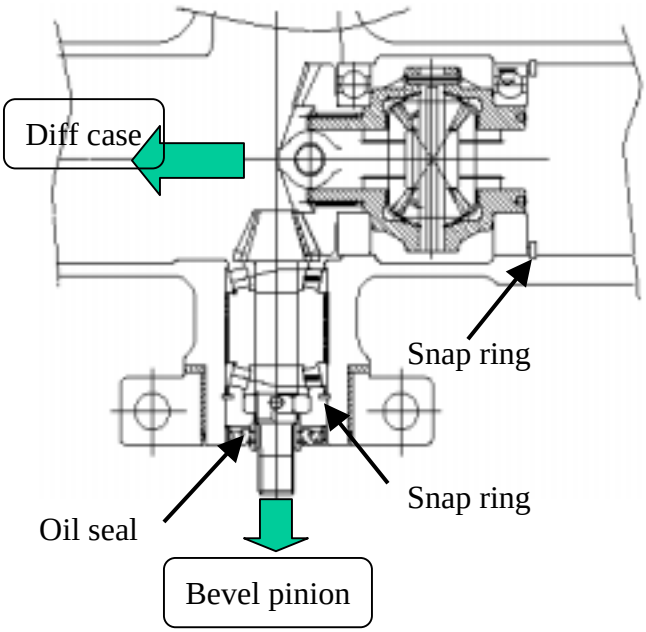

Fig.6-11

5) Remove the oil seal,assuring parallelism of the ring gear and bearing

Note:
The number of shims(1) installed and the the shimming thickness should be noted for later reference.

Fig.6-12

6) Remove the bearings from the Axle housing And the ring gear,and then the ring gear can be separated from the Axle housing.
7) Remove the straight pin(4) which retains the axle housing.

Note: Discard the removed straight pin and oil seal and install a new pin and Oil seal when reassembled,because this pin and oil seal is apt to be damaged when removed.

8) Remove the snap ring and the bevel pinion can then be removed together with the TRB's (Fig.6-11)
9) When separating the TRB's from the bevel pinion,release the calking of the lock nut and remove the bearings.

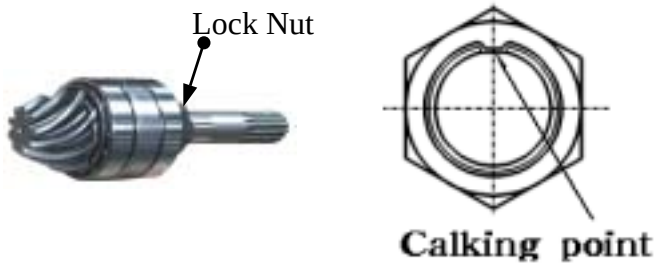

Fig.6-13

Note:
The lock nut should be calked at a point completely apart from the threads may damage the threads of the bevel pinion.

2.2 INSPECTION

1) visually check the bearing surfaces of the bevel pinion and ring gear teeth.

Note:
The bevel pinion and the ring gear should be replaced as a pair.

2) seriously worn or damaged parts should be replaced.

https://truckmanualshub.com/

2-3.REASSEMBLY

Reassembly the parts in reverse order of disassembly,following these instructions.

1)Each friction surface should be coated with grease in advance.
2)The bevel pinion and the ring gear make a distinct pair after a mesh adjustment performed at the factory. Consequently, when reassembling the pair,be sure to pair parts with a same reference number.

-Tighten the lock nut to the specified starting torque of the single unit of the bevel pinion.

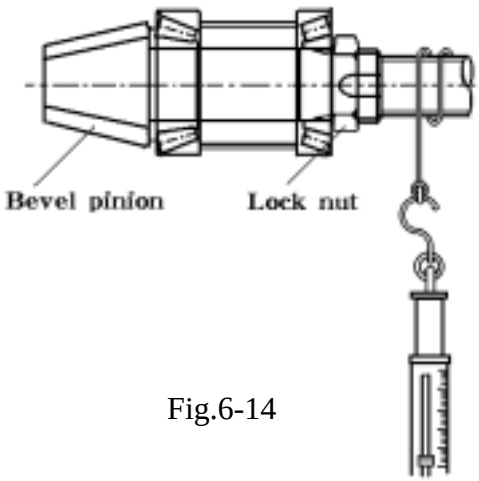

Fig.6-14

Note:
As a general rule,a disassembled lock nut should be replaced and a new one should be installed.However,when there is no alternative but to reuse the disassembled lock nut assure that it can lock securely.

Note:
Measure the starting torque a manner as shown in the figure 6-14.

Specified starting torque	6 -7 Kgf-cm (0.43-0.51 ft.lbs)

-When any of the bevel pinion,ring gear,TRB, collar,etc.has been replaced, inspect the bevel pinion assembly for thrust play in the front axle housing.

Specified thrust play mm(in)	0.1-0.3 (0.004-0.011 in)

Note:

TRB and collar should be replaced as a pair.

(1) Bevel pinion (8)

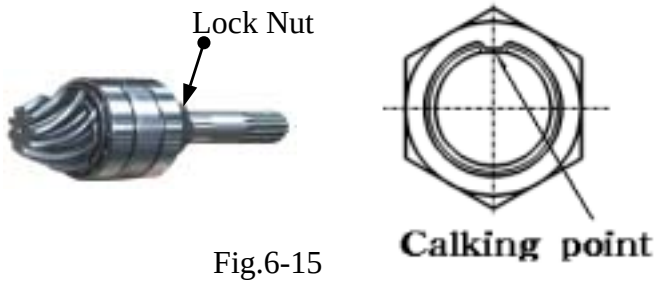

Fig.6-15

(2) FRONT DIFF CASE

a.When installing washer and thrust washer,apply fresh Molibdenium grease ahead of time.
b.Apply fresh Molibdenium grease to teeth of diff-pinion and dif-side gear.
c.Each parts should be washed clean,and There should be no sharp edge to the surface of thrust washer.
d.When assemble the spring pin,Be sure the spring pin should be different direction (Ø5 and Ø3)
e. When any of the bevel pinion,ring gear,TRB, collar,etc.has been replaced,inspect the bevel pinion assembly for thrust play in the front axle housing.

Specified thrust play mm(in)	0.1-0.3 (0.004-0.011 in)

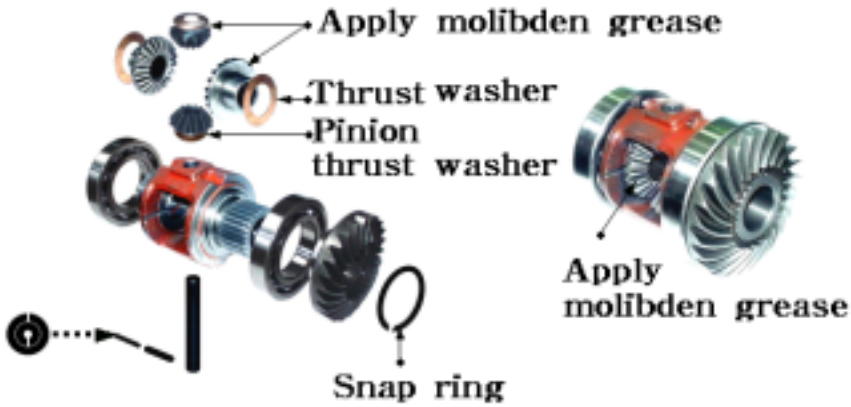

Fig.6-16

3) DIF CASE AND BEVEL PINION

1.shim

2.shim

3.shim

4.Parallel pin

Fig.6-17

1) Each friction surface should be coated with grease in advance.
2) The bevel pinion and the ring gear make a distinct pair after a mesh adjustment performed at the factory. Consequently, when reassembling the pair,be sure to pair parts with a same reference number.
3) When installing the TRB's from the bevel pinion,Be sure the calking of the lock nut and the bearings.
4) Install the snap ring and the bevel pinion can then be installed together with the TRB's (Fig.6-17)

Note: Discard the removed straight pin and oil seal and install a new pin and Oil seal when reassembled,because this pin and oil seal is apt to be damaged when removed.

5) Install the bearings from the Axle housing And the ring gear,and then the ring gear can be assembled from the Axle housing.
6) Install the straight pin(4) which retains the axle housing.
7) When any of the bevel pinion,ring gear,TRB, collar,etc.has been replaced,inspect the bevel pinion assembly for thrust play in the front axle housing through drain plug hole.

Specified thrust play mm(in)	0.1-0.2 (0.004-0.008 in)

https://truckmanualshub.com/

3. FINAL CASE

3-1. Front gear case 1.

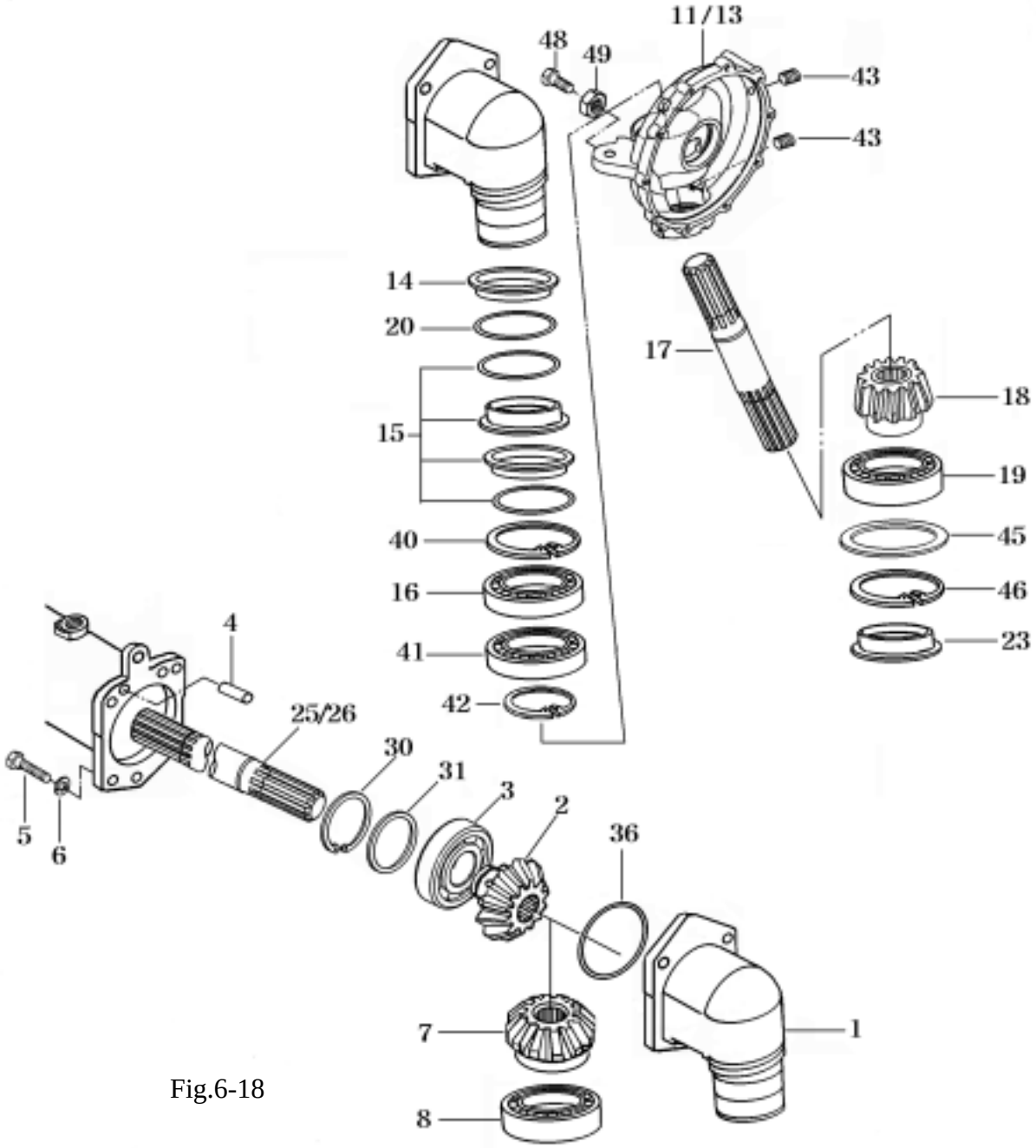

Fig.6-18

1.Final drive case(A) 2.Gear bevel(9) 3.RBB(6208) 4.Pin,parallel 5.Bolt(fine) 6.Washer spring
7.Gear bevel(16) 8.RBB(6207) 11.Final drive case(B)(L) 13.Final drive case(B)(R)
14. Housing seal 15.Seal 16.RBB(6014) 17.shaft 18.Gear bevel(12) 19.RBB(6308)
20.O-ring 23.Cap 90 25.Shaft RH(296) 26. shaft LH(480) 30.C-ring
31.collar(68X80X2) 35.Space(47.5) 40.Snap ring 41.RBB(6012) 42.Snap ring
43.Plug 45.shim 46 Snap ring 48.Bolt 49.Nut

3-2. Front gear case 2.

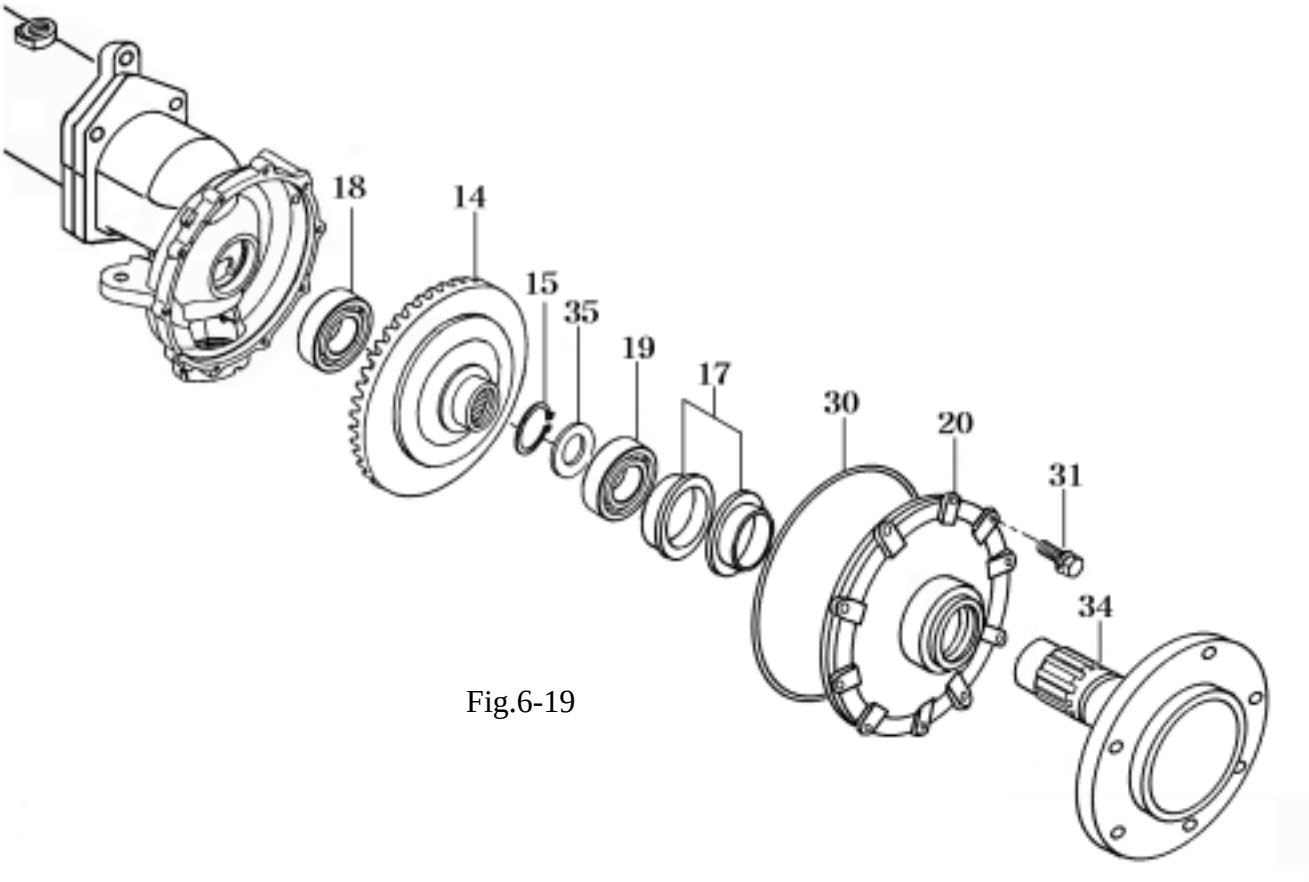

Fig.6-19

14.Gear bevel 38 15.Snap ring 17.Seal 18.Gear bevel 11 19.RBB(6210)
20.Cover wheel shaft 30.O-ring 31.Bolt 34.Shaft wheel 35.Washer(50X60X2)

3.1 Disassembly

1) Drain oil from the final case by removing the drain plug.
2) Remove the tie rod or the tie rod end.
3) Remove the final drive case clamping bolts and take out the assembly of the wheel shaft,
4) Remove the wheel shaft cover clamping bolts and cap (90)

Note: Discard the removed Cap(90) and install a new cap(90) when reassembled,because this cap is apt to be damaged when removed.

5) Detach the snap ring C from the bevel gear.
6) Extract the wheel shaft bearing together with the bevel gear,using a bearing puller

Fig.6-20

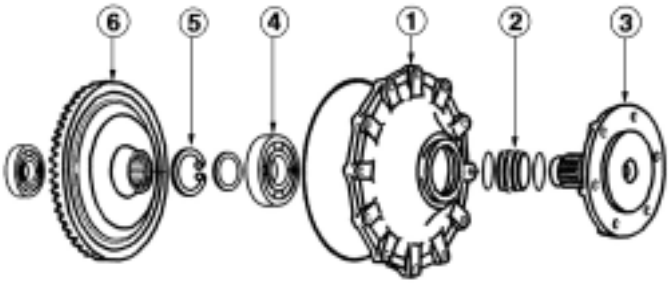

Fig.6-21

7) Remove the stop ring and the wheel shaft can be extracted.

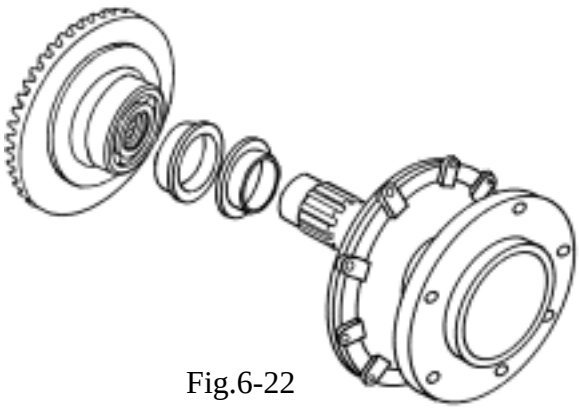

Fig.6-22

8) Remove the seal from the the wheel shaft cover

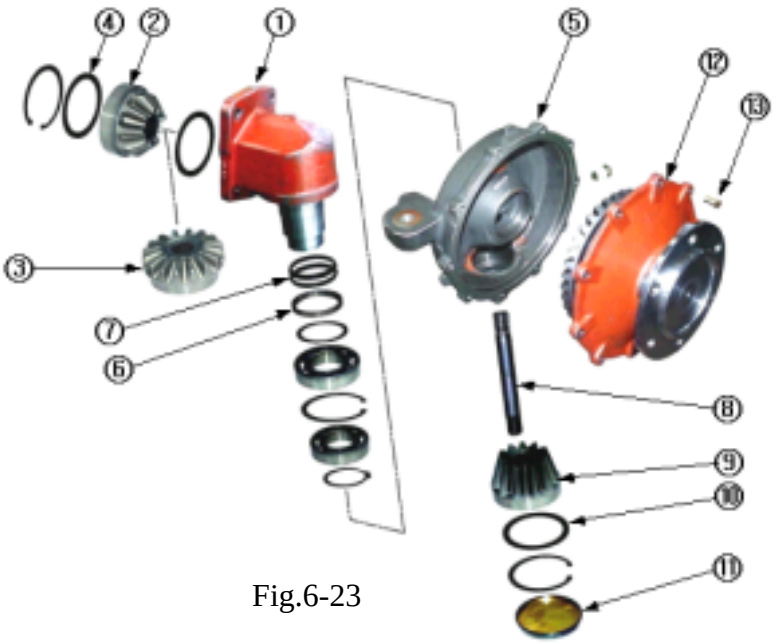

Fig.6-23

9) Remove the cap (11) from the bottom of the final case B and detach the snap ring(hole). Then the counter shaft(8) and RBB can be removed.

Note:
The removed cap(90) (black plug) should be discarded and replaced when reassembled.

3.2 INSPECTION

1) Wheel shaft cover
- Inspect mechanical oil seal,O-rings, Gears, cases,etc. and replace them if worn or damaged.
- Measure the diameter the part which makes contact with the wheel shaft,with a micro-meter or vernier-calipers.When the measured value less than the usable limit,replace the wheel shaft cover.

Standard value	62
Usable limit	61.9

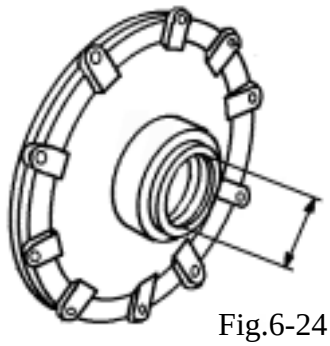

Fig.6-24

2) Final Drive case (B)
- Measure the diameter the part which makes contact with the Final drive case (A),with a micro-meter or vernier-calipers.When the measured value less than the usable limit, replace the wheel shaft cover.

Standard value	110
Usable limit	110.1

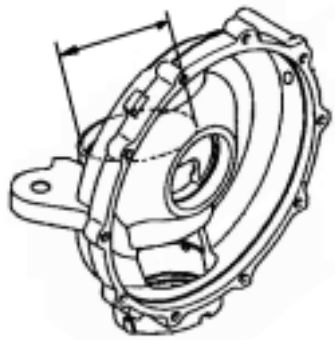

Fig.6-25

https://truckmanualshub.com/

3.3 REASSEMBLY

Reassemble the parts in reverse order of disassembly, following these instructions.

1) Apply an adhesive (THREE BOND TB1215) to the following parts.
   a.Contact surfaces between the final case B and wheel shaft cover.
   b.Contact surfaces between the final case A and front axle.
2) The installed wheel shaft should turn smoothly.
3) When installing unitized seals on the wheel shaft cover and the rotating part between the final cases (A and B),apply force only to the outer circumference of the seal as shown in Fig.6-26 to avoid deformation.

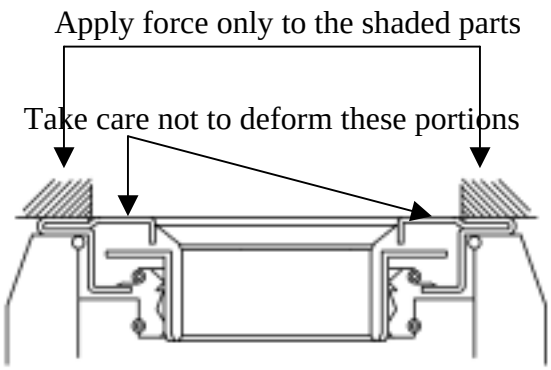

Fig.6-26

4) The oil seal should be coated with grease in advance.Then install them carefully,assuring that their lips are not turned over.
5) The reassembled final case (B) should turn smoothly until it makes contact the stopper.
6) When the wheel(tire) is reinstalled,turn it by hand to make sure that all the mechanism turns smoothly without making any noise.
7) After adjustment of the toe-in,perform road tests.There should be no abnormalities such as vibration,abnormal noises,defected steering wheel operation,etc.

-Wheel shaft cover

1) Every snap ring(5) should be seated securely in its groove.
2) Be sure the numbers of Bevel gear is correct (teeth numbers are 41)

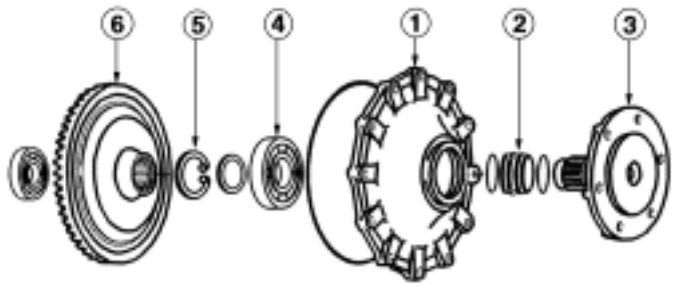

Fig.6-27

-Final drive case A

1) Each parts should be washed clean before reassembly.
2) Apply multi-purpose,quality grease to bearings in advance
3) Every time a gear and bearings are installed, its smooth rotation should be checked
4) Adjust Back lash between bevel gear 9 (2) and bevel gear 16 (3) with collar(4) .

Back lash mm(in)	0.1-0.2 (0.004-0.008 in)

5) Apply oil to the housing ahead of time to install the mechanical seal.
6) Be sure that the length of shaft (8) is 192 mm.
7) Tighten the bolts to the specified torque.

Tightening torque	130-180Kgf.cm

8) Adjust backlash between gear bevel 38 and gear bevel 11(9) with collar(10)

Back lash mm(in)	0.1-0.2 (0.004-0.008 in)

9) Apply an adhesive to the Cap (90),and be sure not to deform when installing.

Note: Refer to Fig.6-23

https://truckmanualshub.com/

- FINAL DRIVE CASE AND HOUSING

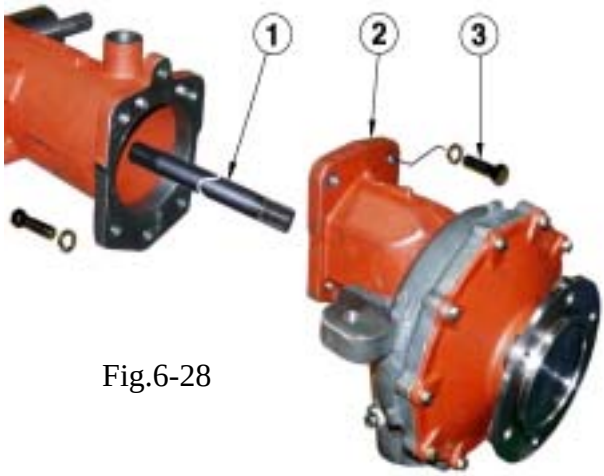

Fig.6-28

1) When installing the shaft,Be sure that the gears are not damaged.

2) Be sure the differences between the LH and RH shaft.

	LH	RH
Specified length	479mm	295mm

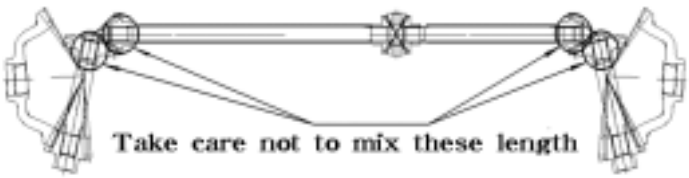

Fig.6-29

3) Tighten the bolts to specified torque.

Tightening torque	1300-1500 Kgf.cm

- STEERING CYLINDER

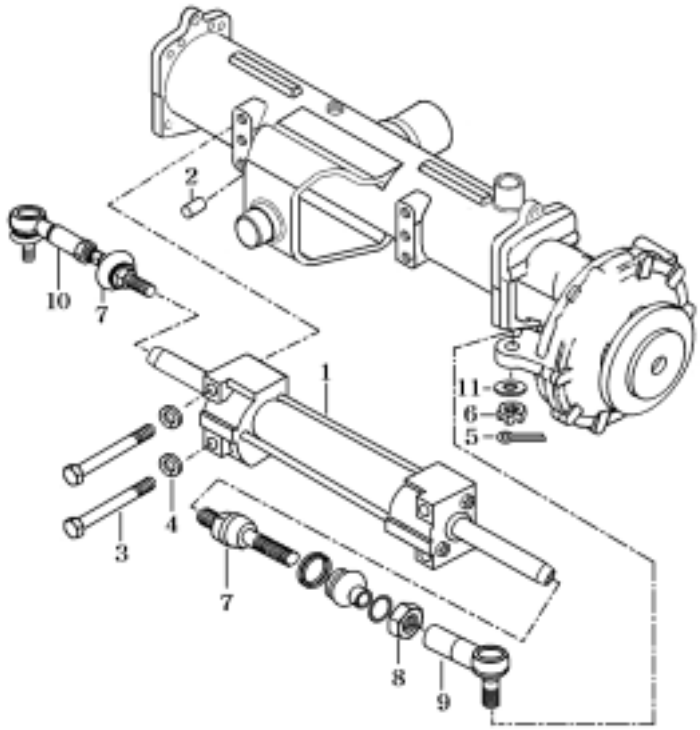

Fig.6-30

1) When installing the steering cylinder,Be sure that the rods are not damaged.
2) Install the pin(2) before assembling the cylinder.
3) Apply an adhesive Locktite and tighten the bolts to specified torque

Tightening torque	900-1100 Kgf.cm

4) Apply an adhesive locktite to the ball joint (7) and tighten the ball joint to specified torque

Tightening torque	1600-1800 Kgf.cm

5) Be sure to bend the split pin (5) after installing the ball joint

https://truckmanualshub.com/

PROBLEMS AND PROBABLE CAUSES	COUNTERMEASURES
● Steering wheel hard to turn	
1)Too low tire inflation 2)Broken thrust bearing 3)Stuck or broken ball joint of tire-rod end 4)Seizure or poor lubrication of axle end bush	Inflate to specified value Replace Grease or replace Grease or replace
● Vibrating or pulling steering wheel	
1)Unbalanced wheels 2)Wheel deflation 3)Unequal diameter of both tires 4)Loose,worn,or damaged wheel axle bearing 5)Loose,worn,or damaged wheel steering wheel shaft 6)Worn final case bush 7)Loose final case-front axle tightening bolt 8)Loose front wheel(tire)tightening nuts1)	Adjust balance Repair or replace Adjust inflation or replace Repair or replace Retighten or replace Replace Retighten Retighten
● Steering wheel tends to turn to the right or left while traveling on straight paved road.	
1) Deflected wear of tire 2)Different tire diameters 3)Damaged final case bearing	Replace Adjust inflation or replace Replace
● Excessive or eccentric wear of tire	
1)Improper tire inflation 2)Worn front wheel shaft bearing 3)Poorly adjusted toe-in 4)Front wheel drive is always engaged	Adjust Replace Readjust correctly:2-6mm (0.08-0.24 in) Engage FWD only when required
● Noise	
1)Loose fasteners 2)Worn or damaged final case bearing 3)Worn bush 4)Wear or poor movement of tie-rod end 5)Excessive backlash of differential and bevel gear	Tighten correctly to specified torque Replace Replace Lubricate or replace Adjust
● Different steering angles in both directions	
1)Lengths of RH and LH tie-rods are different	Adjust

https://truckmanualshub.com/

CHAPTER 7
Rear axle and brakes

SECTION 1.GENERAL DESCRIPTION----------7-1

SECTION 2. SPECIFICATIONS----------7-2

SECTION 3.DISASSEMBLY,INSPECTION,AND REASSEMBLY--7-3
1.Rear axle housing and brake system----------7-3
1.1. Disassembly----------7-4
1.2. Inspection----------7-4
1.3. Reassembly----------7-5
SECTION 4.TROUBLE SHOOTING----------7-7

https://truckmanualshub.com/

Chapter 7. Rear axle and brakes

1. GENERAL DESCRIPTION

The rear axle system is of the central axle type,which contains the final reduction gears, differential gears with diff-lock,and brakes.The power from the engine is transmitted to the right and left wheel pinions through the differential gears,and reduced in the revolution to the rear wheels by the wheel gears. A wet,multi-Disc, mechanical operated brake system is employed.Each of the brakes has 2 friction plates and can produce significant braking force with excellent durability. The two actuators work to push their friction plates in opposite directions,that is,outward,so that stable braking force can be realized in both forward and reverse movements of the tractor. A dif-lock mechanism which is housed in the right-hand rear axle housing is employed to lock the differential gears and is activated by depressing the dif-lock pedal,resulting in the same rotary speeds of both wheels.

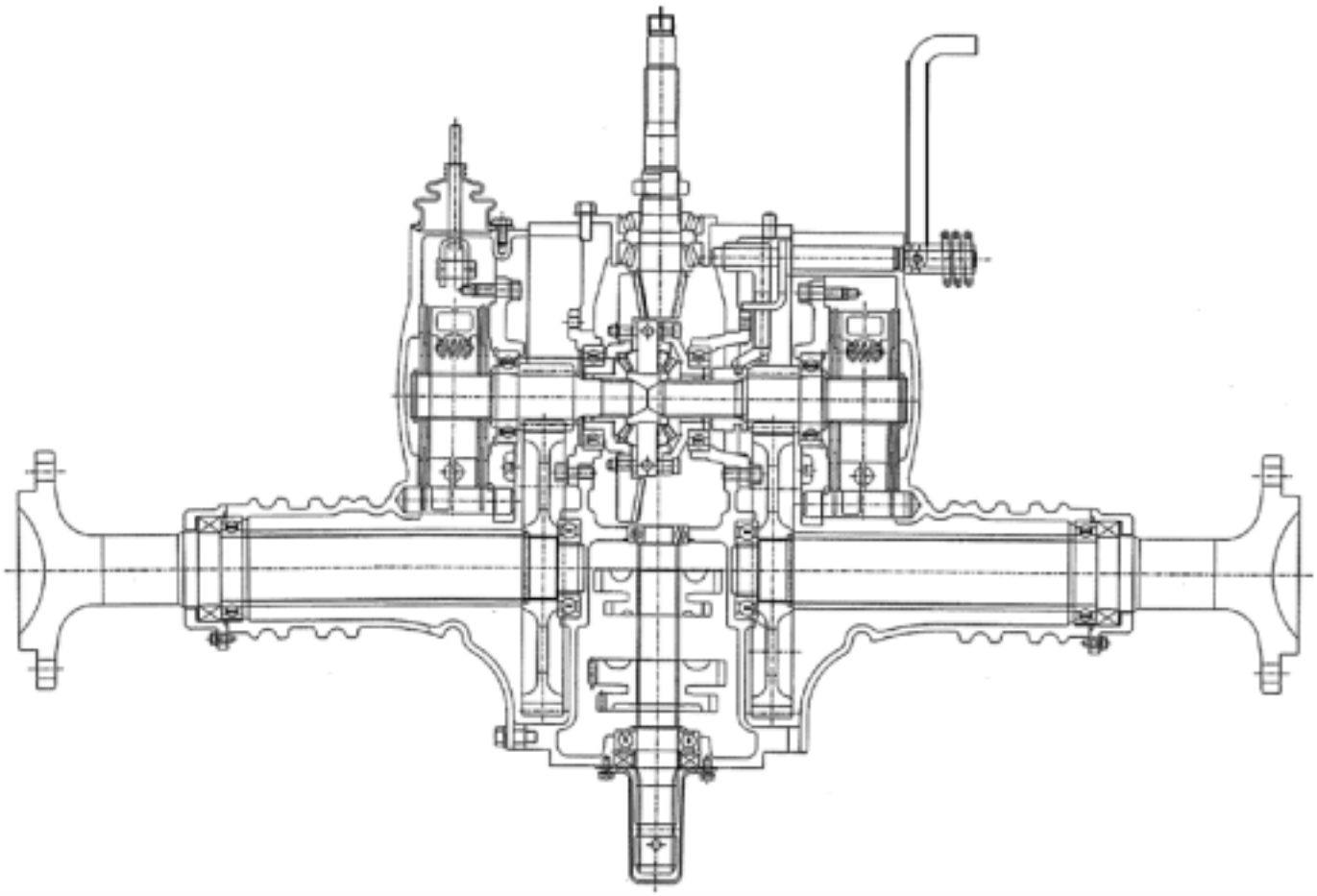

Fig.7-1

https://truckmanualshub.com/

SECTION 2. SPECIFICATIONS

MODEL			2810NEW/T290/T300/T330
Final reduction gears		Type	Helical gears
		Reduction ratio	5.5
Brake system	Friction Plate	Type	Wet,multi-disc,Mechanically operated
		Outer diameter	Φ184mm(Φ7.24 in)
		Thickness	3.4±0.1 mm(0.134 in)
		Lining material	Paper base
		Number of plates	4 on each side
	Separator Plate	Outer diameter	Φ188mm(Φ7.4 in)
		Thickness	2.5±0.09 mm(0.098 in)
		Number of plates	2 on each side
		Metal brake assembly Installed thickness	36 ±0.1 mm(1.417 in)
		Total brake thickness	60.5 mm(2.382 in)

https://truckmanualshub.com/

SECTION 3.DISASSEMBLY,INSPECTION,AND REASSEMBLY

Separate the rear axle housing from the rear transmission referring to paragraph 6.(1) of SECTION 4. SEPARATION OF MAJOR BLOCKS in Chapter 2

1) REAR AXLE HOUSING AND BRAKE SYSTEM

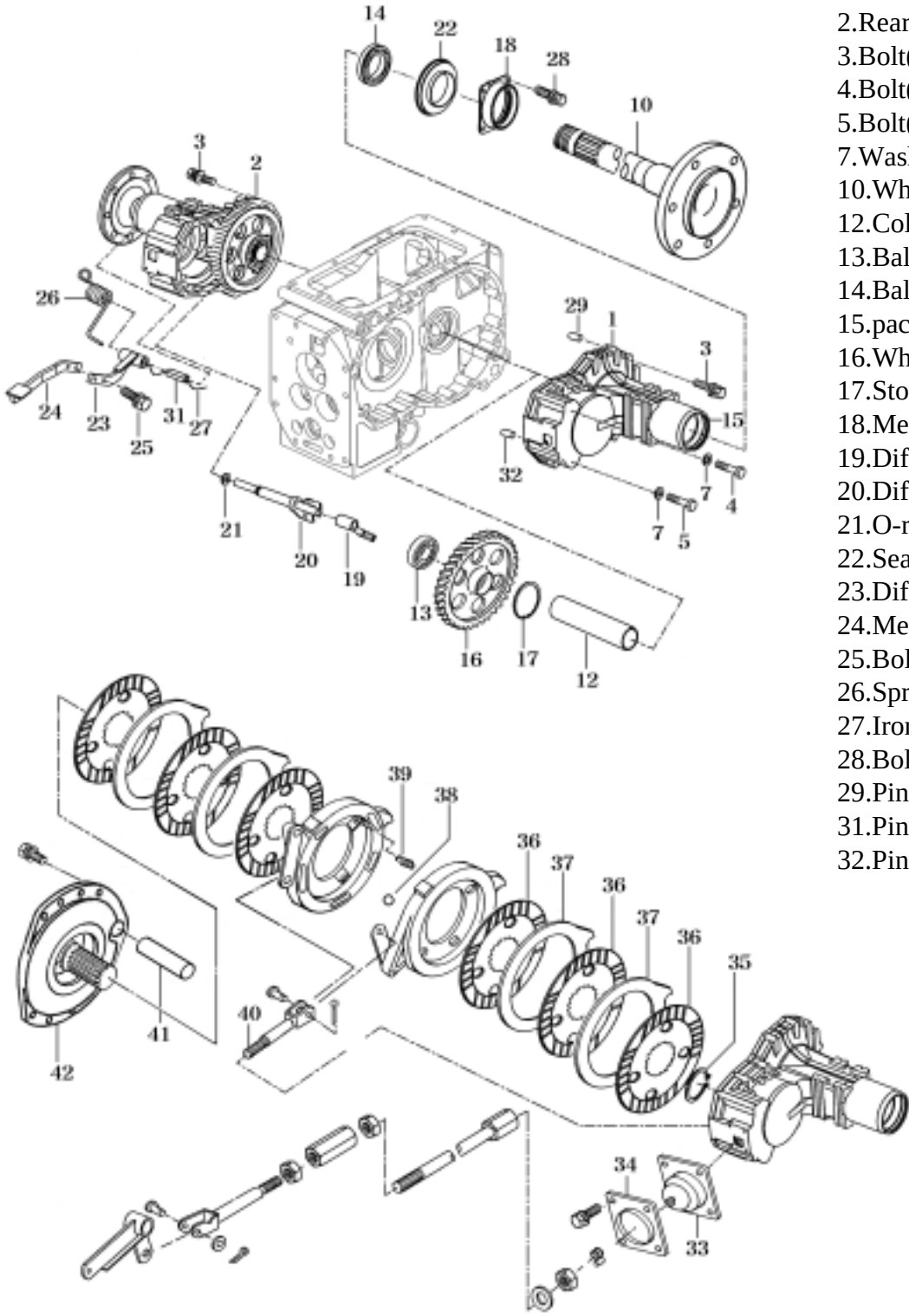

1.Rear axle Housing(L)
2.Rear axle housing (R)
3.Bolt(S)
4.Bolt(S)
5.Bolt(S)
7.Washer spring
10.Wheel shaft
12.Collar(56X65X240)
13.Ball bearing(HL1)
14.Ball bearing(HL1N)
15.packing wheel shaft metal
16.Wheel gear(Helical/54T)
17.Stop ring
18.Metal wheel shaft seal
19.Dif-Lock shifter
20.Dif-Lock cam
21.O-ring
22.Seal shaft
23.Diff Lock Hub
24.Metal (Dif-Lock)
25.Bolt(S)
26.Spring
27.Iron wire
28.Bolt
29.Pin
31.Pin spring
32.Pin(A)

Fig.7-2

1.1 Disassembly

https://truckmanualshub.com/

1) Release the bolt and nut and remove them.
2) Extract the bearing(13) with a puller and remove wheel gear(16)

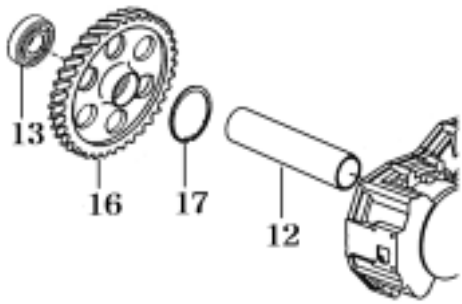

Fig.7-4

3) Remove the collar and pull out wheel shaft(3)

Note:
Removed oil seal(22) should be replaced with a new one when reassembled

4) Detach the brake rod from actuator
5) Remove plate and the rubber boot
6) Remove the brake metal tightening bolts and remove brake metal(42) with wheel pinion and the disc brake assembly on it
7)Remove the snap ring(35) of wheel pinion(10) (Fig.7-6) And individually separate the friction plates,actuator and separator plates from each other.
6) The actuator can be disassembled by removing Spring(39)

Note:
Be careful to keep the friction surfaces of the linings, Actuators and separator plates free from damage and foreign matter.

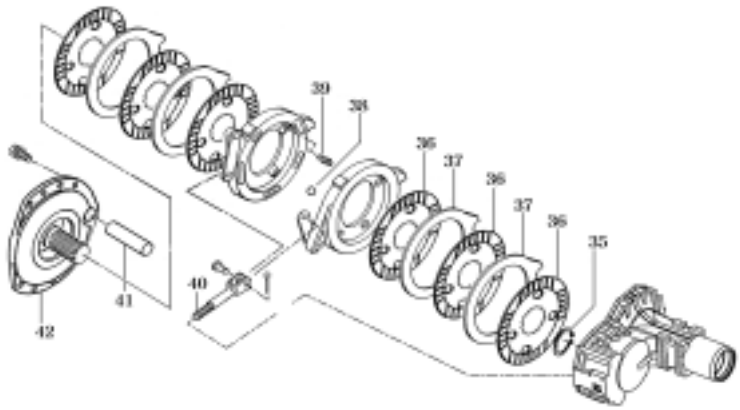

Fig.7-6

1.2. INSPECTION

1) Friction plates.
Replace the plates whose surfaces have been become glossy by carbonization or whose thickness exceeds the usable limit.

Fig.7-7

Standard thickness:mm(in)	3.4±0.1(0.134)
Usable limit:mm (in)	3.0 (0.118)

Note:
Also replace those whose grooves have been worn out completely even if only on one side

https://truckmanualshub.com/

2) Metal brake

Check the pressure plate,and brake rod for abnormality.Replace defective parts.Replace the metal brake whose thickness exceeds the usable limit.

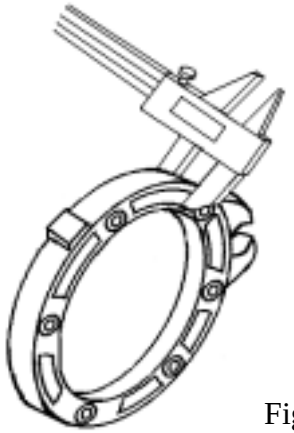

Fig.7-8

Standard thickness:mm(in)	18(0.708)
Usable limit:mm (in)	17.5((0.688)

Note:
Slight scratches on the friction surface can be corrected with sandpaper(#1000)

3) Separator plate.
Measure the thickness and replace the plate whose thickness exceeds the usable limit or whose surfaces are damaged (Fig.7-9)

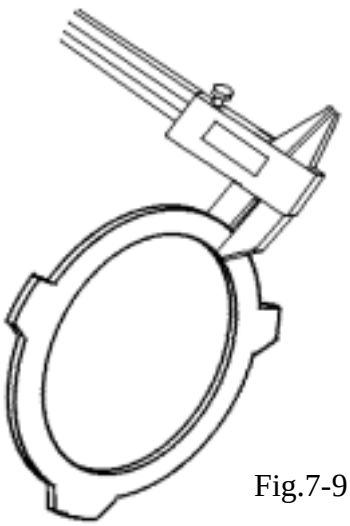

Fig.7-9

Standard thickness:mm(in)	2.5±0.09 (0.098)
Usable limit:mm (in)	2.2(0.087)

4) Wheel shaft

Check the shaft for abnormalities like wear, damage,etc,and replace a defective one.

5) Bearings
Check them for abnormalities like hitching, irregularity,etc.in rotation after being washed clean.Replace defective ones.

6) Oil seals
Removed oil seal should be replaced with a new one when reassembled.

1.3 REASSEMBLY.

Reassemble the parts in reverse order of disassembly ,follow these precautions.

1) Make sure that oil grooves,friction surfaces,etc of the brakes are free from matter such as dust, iron powder,etc.to avoid brake lining damage.
2) When installing the brake unit on the wheel pinion,friction plates and separator plates should be arranged in correct order and never forget to retain the unit with the snap ring.
3) Brake metal tightening bolts should be tightened to the specified torque with a torque wrench.

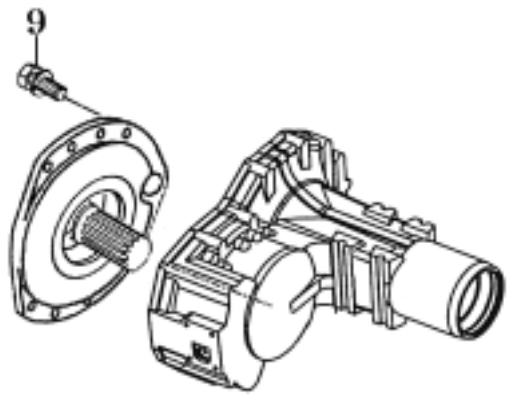

(Fig.7-10)

Tightening torque	5.5-7 Kgf.m (39.8-50.6ft-lbs)

https://truckmanualshub.com/

4) Replace the oil seal.

Install the bearing,snap ring,and collar into the axle housing,and then press in the oil seal by applying force only to the circumference as shown in the figure(Fig.7-11)

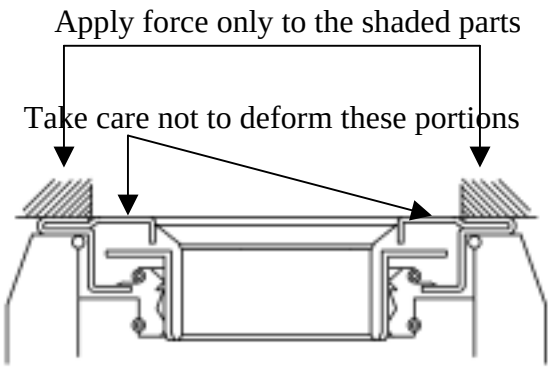

Fig.7-11

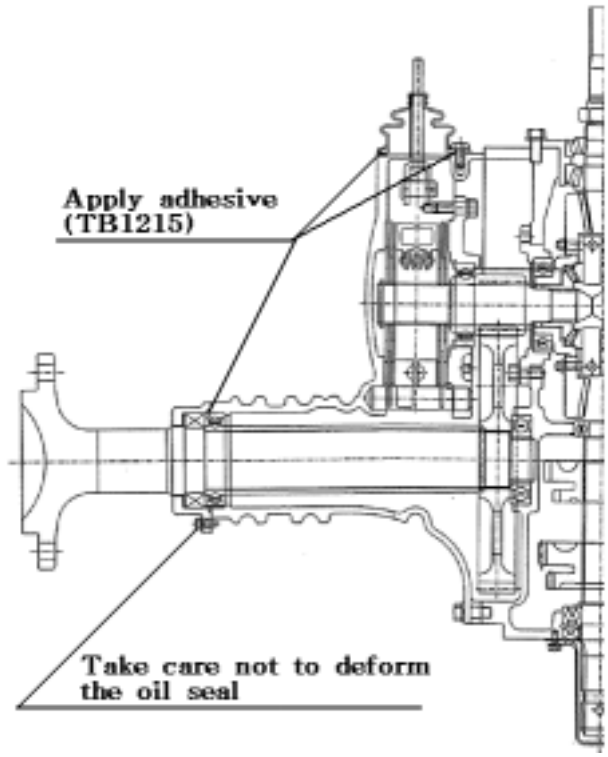

Fig.7-12

5) press in the wheel shaft.
6) Install the wheel gear and bearing on the wheel shaft and retain them with nut.
7) Apply adhesive (THREE BOND 1215) to the contact surfaces of the brake metal and housing and then retain the plates by tightening the nuts to the specified torque.

Tightening torque	0.6-0.8 Kgf.m (4.3-5.8ft-lbs)

https://truckmanualshub.com/

Problem	Causes	countermeasures
1) Rear axle		
Noises	· Worn or damaged bearing · Worn gear or wheel shaft	Replace Replace
2) Brake system		
(1)Insufficient braking force	· Insufficient depressing of brake pedals · Improper pedal free play · Worn friction plates	Depress pedals positively Adjust Replace
(2)Brake noise	· Insufficient brake oil · Broken actuator spring · Eccentric wear of actuator	Replenish Replace Replace
(3)Brake overheating	· Insufficient oil · Excessive pedal free play · Improper operation	Replenish Adjust Operate brakes properly
(4)Brake cannot be disengaged completely.	· Improper brake pedal free play · Broken actuator spring · Broken pedal spring	Adjust Replace Replace
(5)Not uniform braking	· Improper free play adjustment · Worn actuator ball	Adjust Replace
(6)Excessive pedal play	· Improper adjustment of brake rod · Worn actuator-fork tightening bolt · Worn brake shaft or brake arm	Adjust Replace Replace

https://truckmanualshub.com/

Chapter 8
Power assisted steering system

SECTION 1.GENERAL DESCRIPTION----------8-1

SECTION 2. SPECIFICATIONS----------8-2
2.1 Gear pump---------- 8-2
2.2 Steering valve----------8-2
2.3 Oil tank---------- 8-2

SECTION 3. FUNCTION----------8-3
3.1 Open center non load reaction----------8-4
3.2 major component of steering valve assembly----------8-5

SECTION 4.DISASSEMBLY,INSPECTION,AND REASSEMBLY
4.1 Major component----------8-6
4.2 Special tools----------8-6
4.3 Disassembly----------8-7
4.4 Inspection----------8-7
4.5 Reassembly----------8-8

SECTION 5. TROUBLESHOOTING----------8-12

https://truckmanualshub.com/

Chapter 8. Power assisted steering system.

SECTION 1. GENERAL DESCRIPTION

The hydraulics of this power-assisted steering system are actuated by a specially designed steering valve system.

Non Load reaction valve blocks the L,R cylinder ports in neutral condition and does not transmits the reaction load of the tire to the steering wheel in neutral.Generally the system is used for the vehicles that treat heavy equipment or low speed traveling.

Hydraulic circuit consists of Independent system.

The oil from tank flows into gear pump of orbitrol via filter,and the quantity of oil in the proportion to the rotations of steering wheel flows into steering Cylinder Via "R"-port at right turn and via "L"-port at left turn.

As follow figure shows components composition of power steering system on the vehicle with the Orbitrol

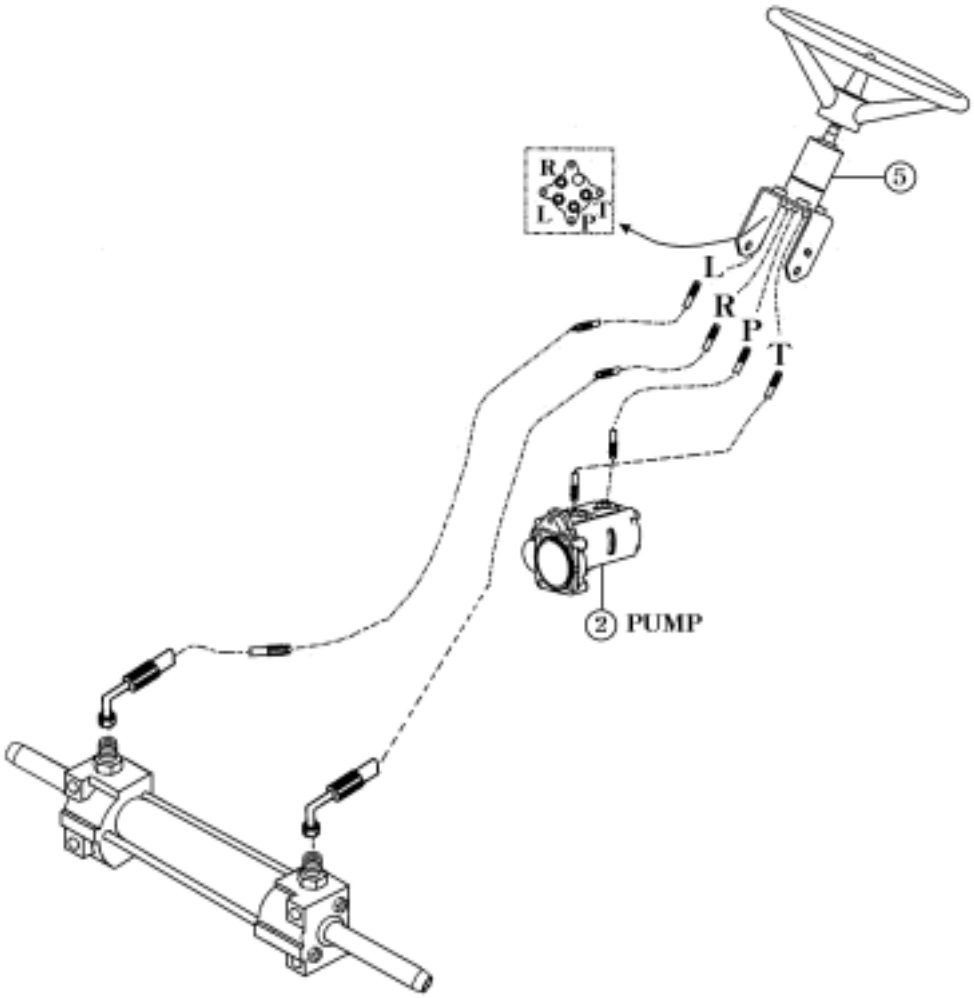

Fig.8-1

2. Gear pump 5. Steering Control Unit

https://truckmanualshub.com/

SECTION 2. SPECIFICATIONS

1) GEAR PUMP

MODEL	T290/T300/T330		2810NEW	
Delivery (cc/rev)	9.0	4.8	9.0	4.8
Maximum pressure(kgf/㎠)	210	180	210	180
Rated operation speed (rpm)	500~3500		500~3500	
Rotation direction	C.C.W as viewed from shaft			

2. Power steering valve Unit(orbitrol)

MODEL	T290/T330/T330	2810NEW
Model number	UBS110B08AWD	
Displacement (cc/rev)		69
Rated flow (ℓ/min)		16
Maximum system pressure (kgf/㎠)		140
Max. back pressure(kgf/㎠)		10
Max. temperature(℃)		95
Input torque (N.m)		0.2
Main relief pressure setting (kgf/㎠)		110 (at 8ℓ/min)
Recommended filtration (ISO4406)		22/20/17
Weight (kgf)		2.7

3. OIL TANK

MODEL	
TANK	TRANS MISSION
Fluid volume (ℓ)	35
Fluid	THF500

https://truckmanualshub.com/

SECTION 3. FUNCTION

1.Open Center Non Load Reaction

1.Neutral Position

When the steering control valve is in the neutral position,inlet flow(P) from the priority valve moves the flow selector spool against its spring.This flow is blocked at the control valve control spool.The signal port is connected to the reservoir(T) through orifices in the control spool.The priority valve will only supply enough oil to the control valve to compensate for internal leakage and maintain low stand-by pressure.The oil at each side of the steering cylinder is connected to each side of the metering pump,this allows a degree of self centering when turning out of a bend.

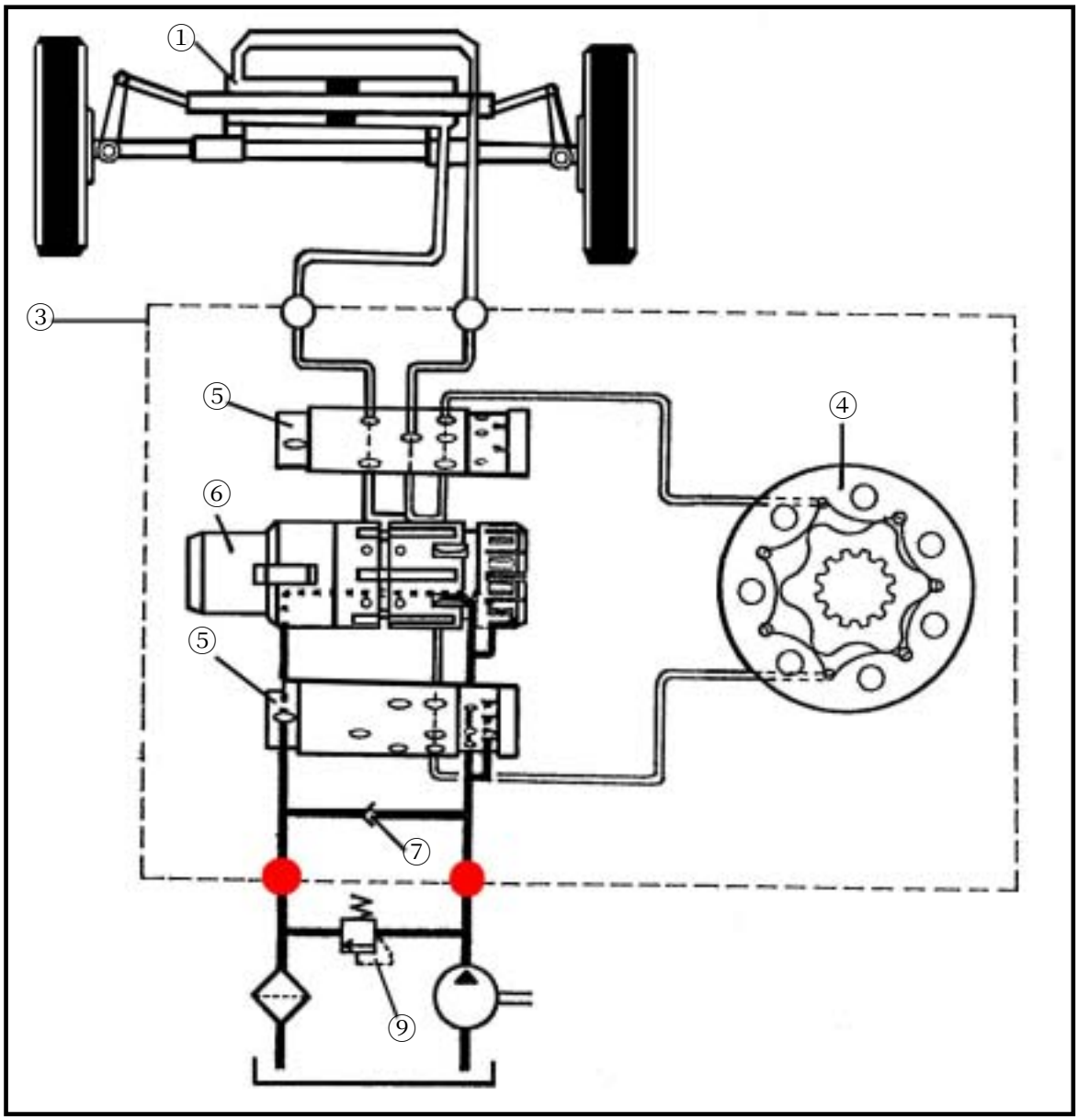

①Steering cylinder ③Steering unit ④rotor ⑤sleeve ⑥Main spool
⑦Check valve ⑨Main relief valve

Fig.8-2 Neutral position

https://truckmanualshub.com/

2)Right Turn

When the steering control valve shaft is rotated to the right,the control valve moves off center.This connects the inlet port (P) to one port of each metering pump section and also connects the other port of each metering pump section to the cylinder.The amount that the spool moves off center depends on how fast the steering wheel is rotated and also how much effort is required to turn the wheel.

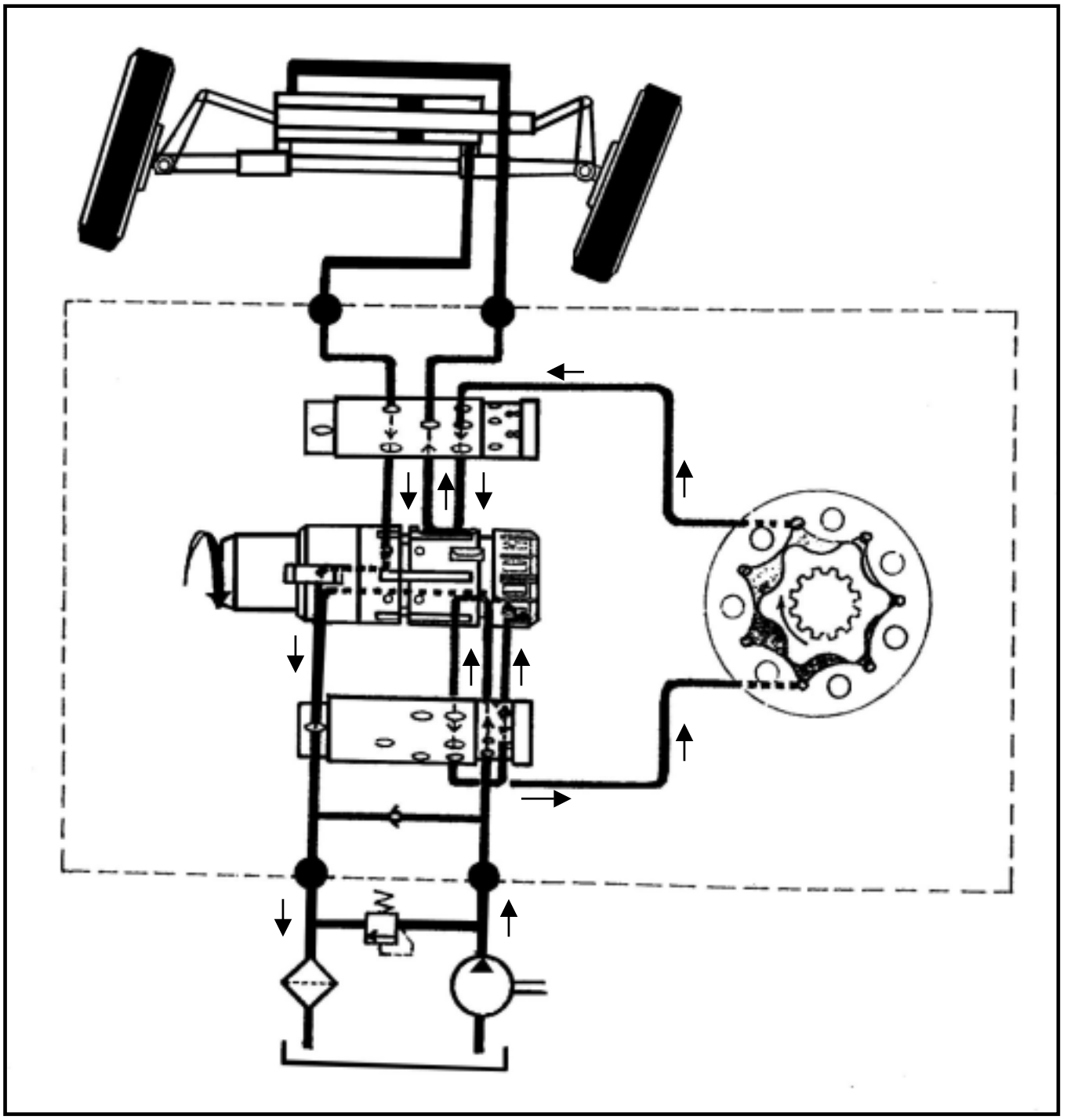

Fig.8-3 Right turn position

https://truckmanualshub.com/

3)Left turn

When the steering control valve shaft is rotated to the left,the control valve spool moves off center.This connects the inlet port(P) to the one port of each metering pump section and also connects the other port of each metering pump section to the cylinder.The amount that the spool shifts off center depends on how fast the steering wheel is turned and how much effort is required to turn the wheel.

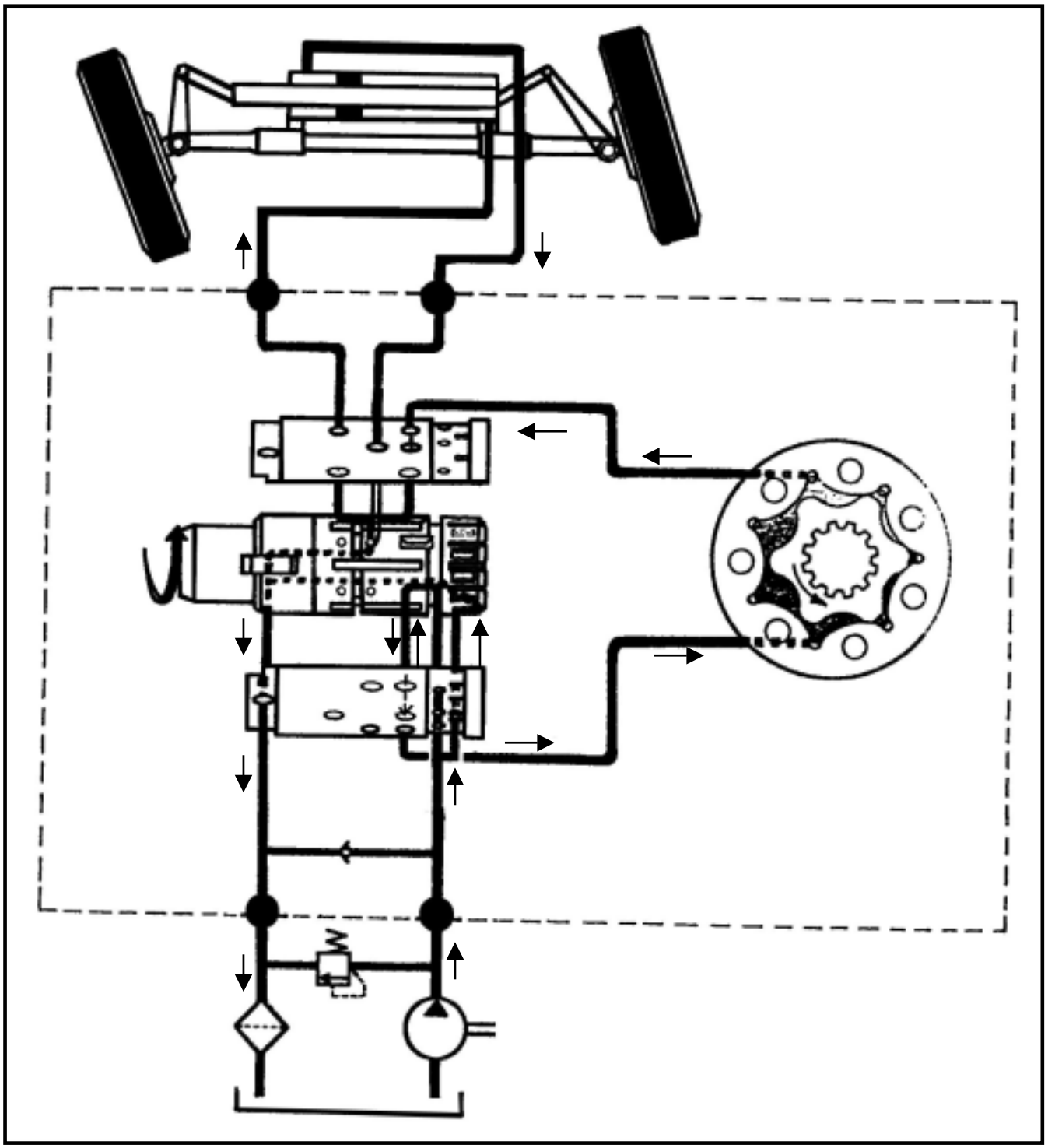

Fig. 8-4 Left turn position

4) Manual steering https://truckmanualshub.com/

When there is no piston pump supply pressure the flow selector is moved to the left by its spring.This connects together the inlet and outlet ports of the lower gyrotor pump and disconnects this pump from the system.When the steering is operated manually,only the upper gyrotor pump section is used to direct flow to the steering cylinder. This reduces operator effort to an acceptable level,however the number of turns from lock to lock is increased.

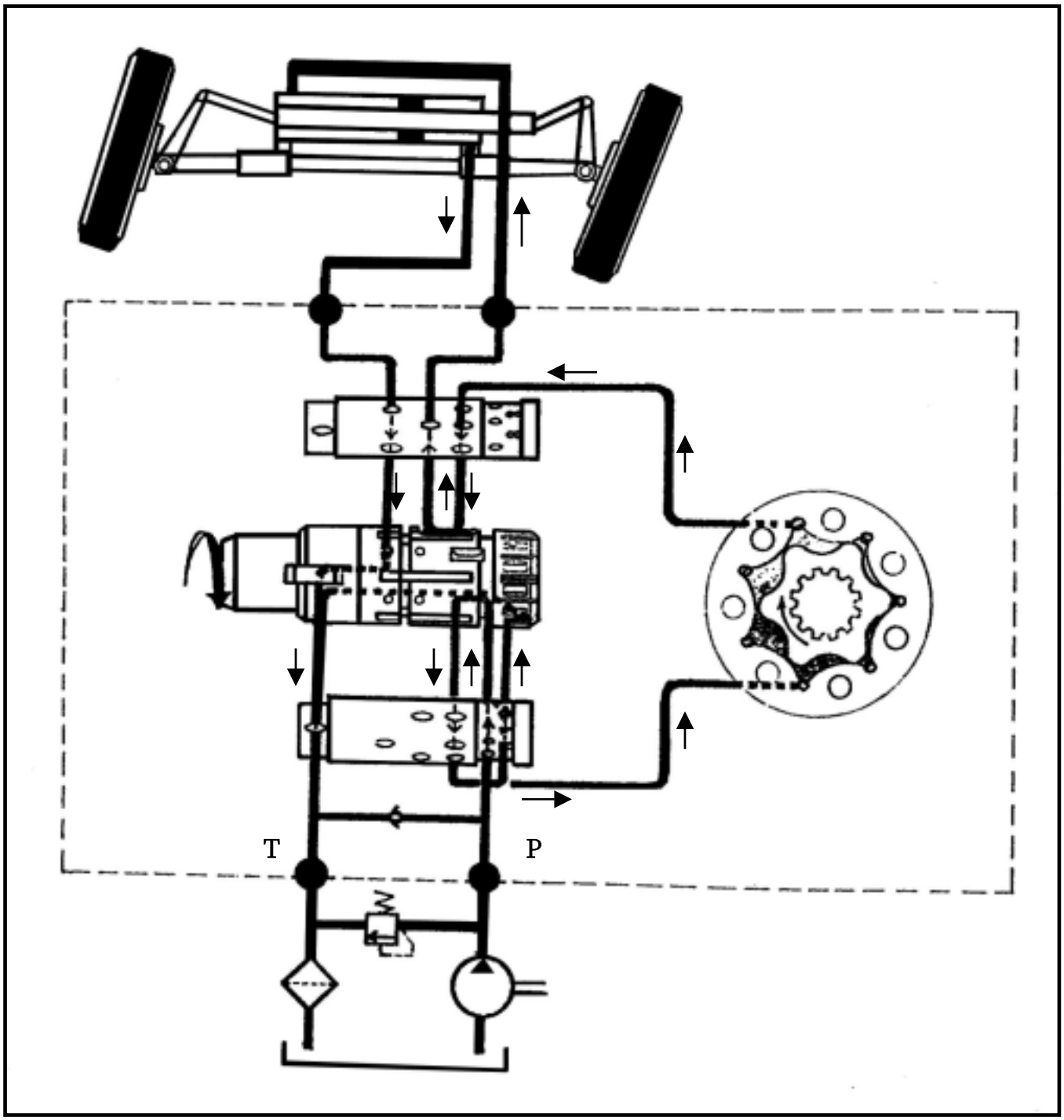

Fig. 8-5 Manual steering

SECTION 4. Disassembly,Inspection,And Reassembly

https://truckmanualshub.com/

1. Major component of steering valve (orbitrol)

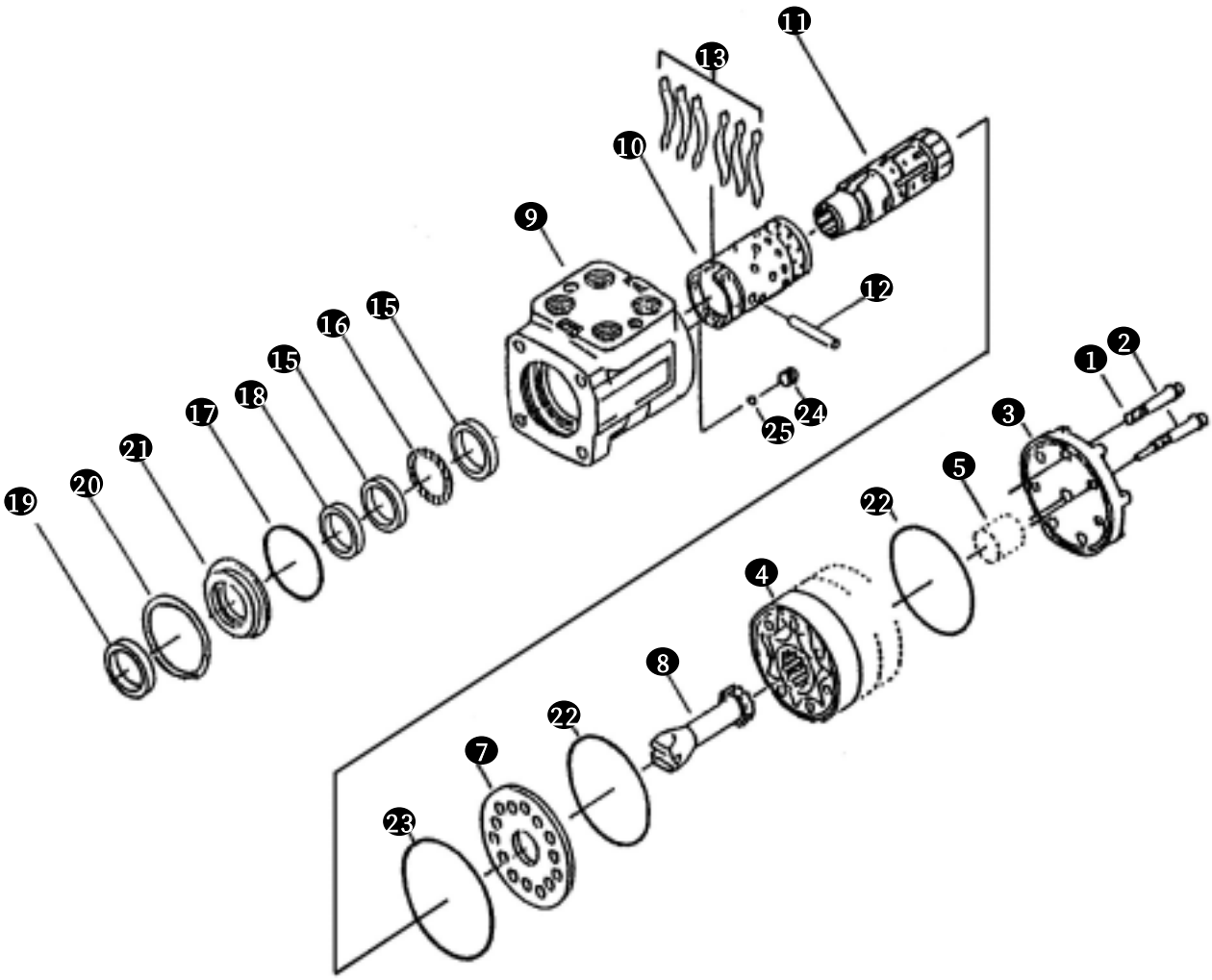

Fig.8-6

1.Cover bolt(6)
2. Cover bolt(1)
3. End cap(1)
4.Gyrotor(1)
5. Spacer(1)
7.Spacer plate(1)
8.Driver shaft(1)
9.Pump body(1)
10.Sleeve(1)
11.Spool(1)
12.Pin(1)
13.Center springs(6)
15.Thrust washer(2)
16.Thrust bearing(1)
17. O-ring(1)
18.Seal ring(1)
19.Dust seal(1)
20.Retaining ring(1)
21.Seal bushing(1)
22.O-ring(1)
23. O-ring(1)
24.Screw(1)
25.Ball(1)

2.SPECIAL TOOLS

https://truckmanualshub.com/

①Torque wrench(Torque 5kgf·m) ----------1
②5/12″-12 socket ----------1
③“- ”Driver(big) ---------- 1
④“- ”Driver(small) ----------1
⑤Centering spring installer ---------- 1
(P/N : 600057)
⑥plastic hammer ---------- 1
⑦grease
⑧jaw vice ---------- 1
⑨marking pen ---------- 1

3.Disassembly

STEP 1.

secure the steering hand pump body in a clean soft jaw vice.,do not over tighten the vice.Remove the fittings,remove and discard the o-rings.Make a note of the position of the sensing hose fitting.

STEP 2.

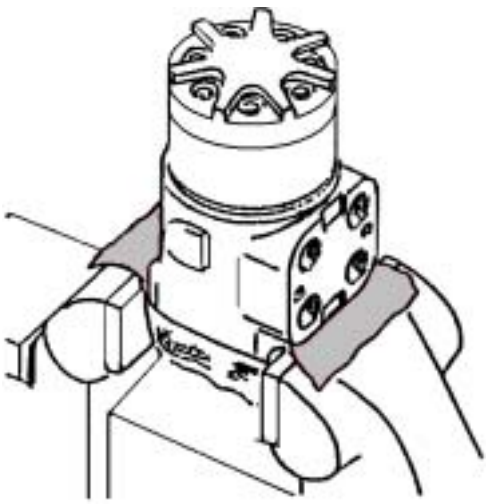

Put alignment marks (A) on body, plate, stator and end cap.Remove bolts and end cap,remove and discard o-ring.

STEP 3.

Remove spacer,stator and rotor,remove and discard o-ring.Remove drive shaft and plate.Remove and discard o-ring.Remove the pump from the vice and place on a clean work surface.

STEP 4.

For pumps equipped with cross over check valves,mark position and remove spring, valve pins and balls.

IMPORTANT:
Do not use a magnet to remove balls.

STEP 5.

Use a screw driver to release the spiral retaining ring from the groove in the pump body.Remove the spiral retaining ring,seal bushing,o-ring and seal ring.Remove dust seal from seal bushing.

STEP 6.

Remove thrust washer,thrust bearing and thrust washer.

STEP 7.

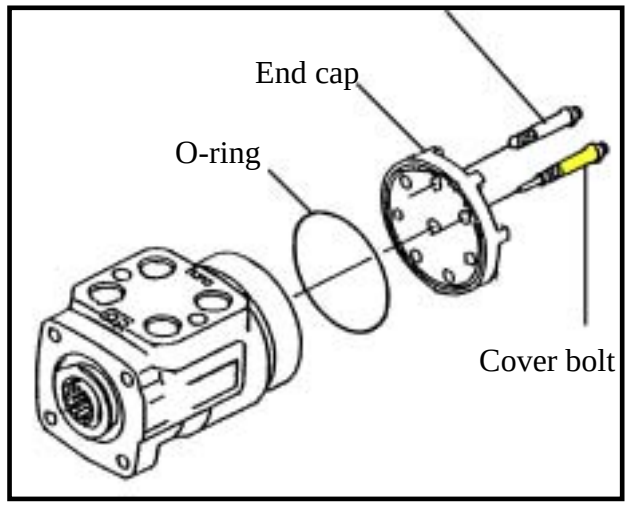

Turn spool and sleeve assembly until pin is parallel to the hydraulic fitting mounting face.Remove spool and sleeve assembly from the body.

STEP 8.

Remove pin from the spool and sleeve assembly.Remove spool from sleeve and remove centering springs.

STEP 9.

https://truckmanualshub.com/

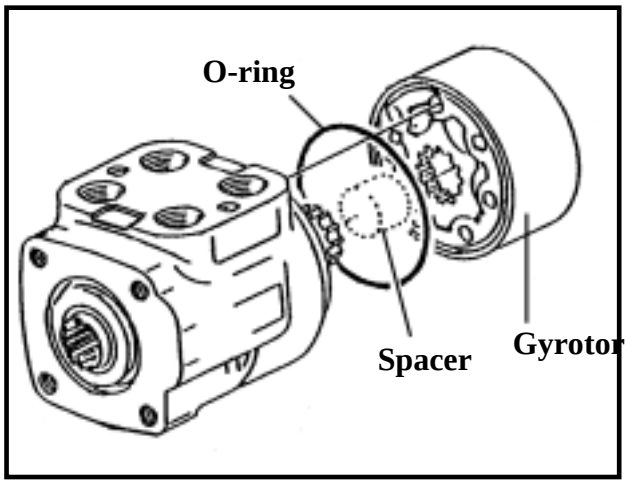

Remove plug and install a machine screw into the threaded end of check valve seat.Pull check valve seat from the pump body and remove and discard o-rings from check valve seat.Remove check valve ball and check ball retainer.DO NOT remove the relief valves(if equipped) from the pump body.

NOTE:DO NOT remove the check valve from the pump body inlet port(D)

Assembly

NOTE:During assembly lubricate at all parts with clean transmission oil.

STEP 10.

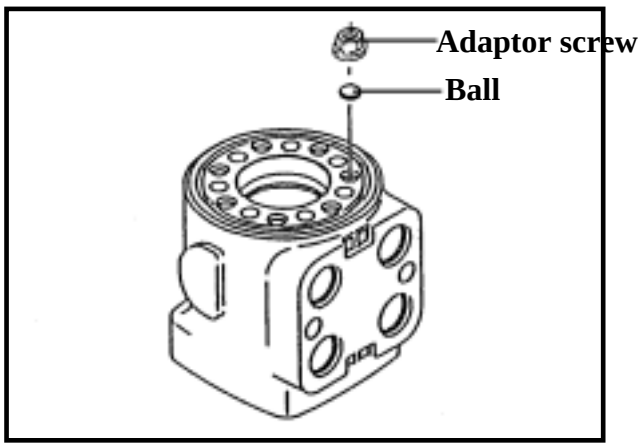

Lubricate and install new o-rings onto check valve seat.Install check ball retainer,check ball and check valve seat into the pump body.Make sure the threaded end of check valve is facing outward.Install and tighten plug to a torque of 11Nm(100 lb in).

STEP 11.

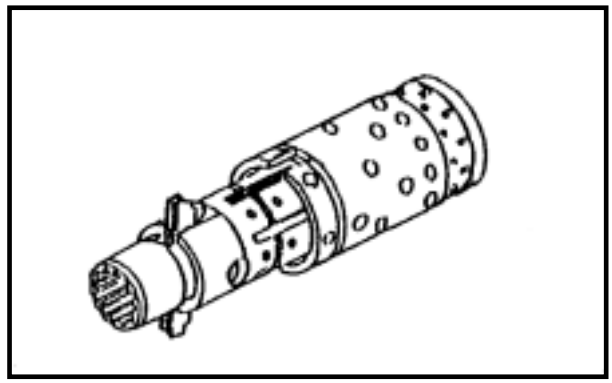

Install spool into sleeve.Make sure the alignment marks are aligned.

IMPORTANT: Heat from your hands may expand spool preventing the spool being installed.

Allow the spool to cool and repeat STEP 11.

STEP 12.

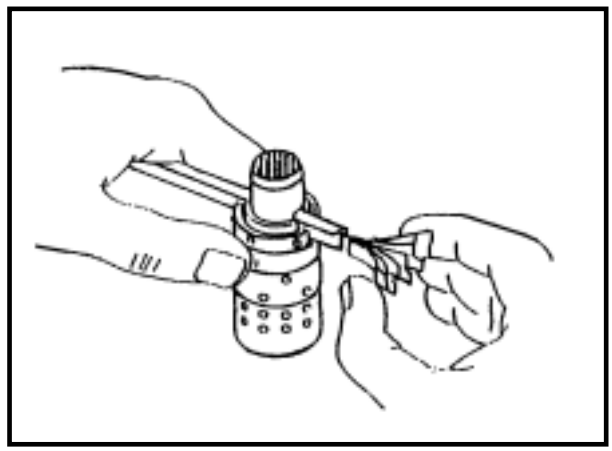

Install the centering spring installer through the slot in the sleeve assembly.Arrange the four centering springs as shown,install one end the springs into the slot in the centering spring installer. Make sure the notched side of the springs is towards the sleeve assembly. Compress by hand the the other end of the springs and push into the sleeve assembly.

https://truckmanualshub.com/

NOTE: Make sure the centering spring notches locate correctly into the sleeve.

STEP 13

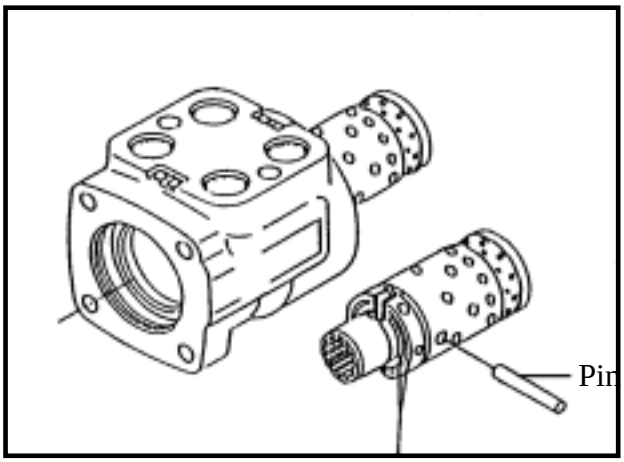

install pin into sleeve assembly and install sleeve into the pump body.

NOTE:Heat from your hands may expand spool and sleeve assembly,preventing the assembly being installed,DO NOT use force to install spool and sleeve assembly.Allow the assembly to cool and repeat STEP 13.

STEP 14.

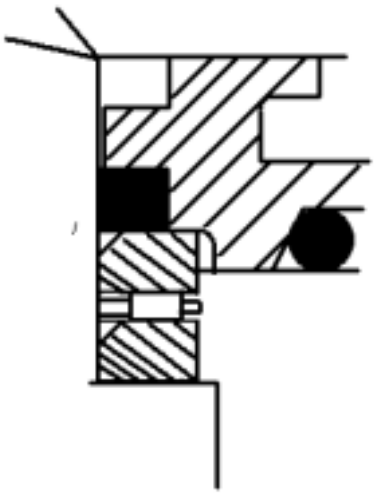

Install thrust washer,thrust bearing and thrust

washer onto spool.lubricate a new o-ring and seal ring.install o-ring into the pump body and install seal ring onto spool.Install the seal bushing with a slight twisting motion,use a soft faced hammer and tap the bushing into position against the thrust washer.

STEP 15.

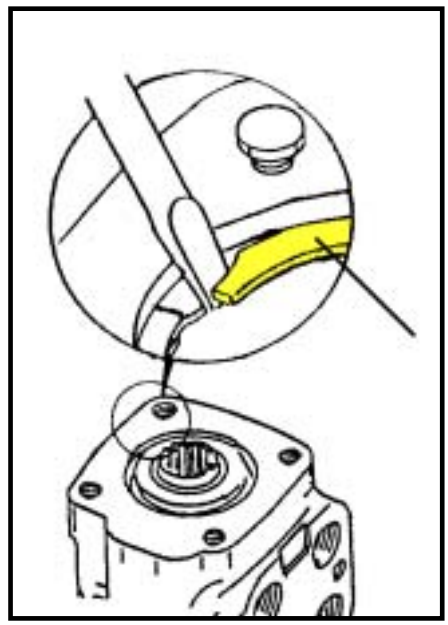

Install spiral retaining ring into the the groove in the pump body.Use a screwdriver to make sure the spiral retaining ring is located correctly into the groove in the pump body.

STEP 16.

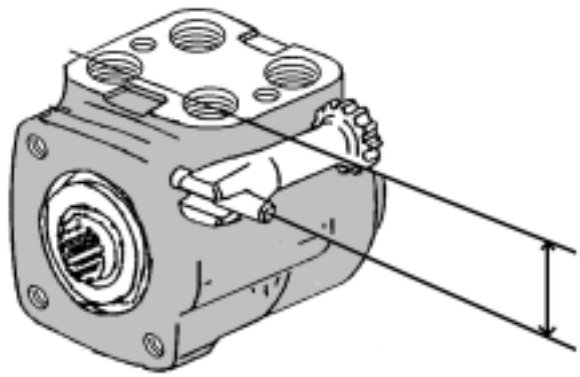

Carefully turn sleeve assembly until pin is parallel to hydraulic fitting mounting face as shown.

STEP 17

https://truckmanualshub.com/

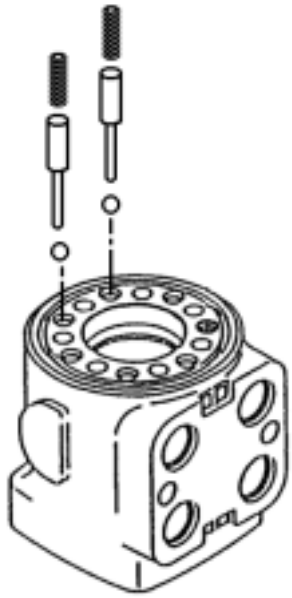

For pumps equipped with cross over check valves,install balls,valve pins and springs in the position noted in STEP 4.

STEP 18

Lubricate and install new o-ring into the groove in pump body.Install plate,align marks made in STEP 2,make sure the o-ring groove in plate is facing outwards.

STEP 19

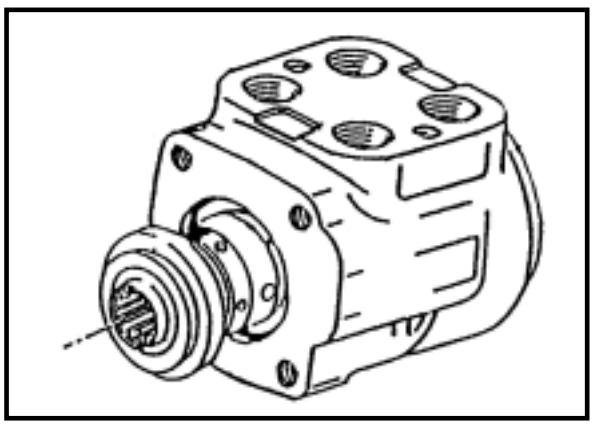

With pin parallel to fitting mounting face.install drive shaft,make sure the slot in drive shaft locates onto pin.

STEP 20

Install rotor onto drive shaft.Make sure one of the rotor teeth is aligned with the connector mounting face.Lubricate and install a new o-ring into the groove in plate.Align the marks made in STEP 2, and install stator.Make sure the o-ring groove in stator is facing outwards.

NOTE: Pin must remain parallel with the connector mounting face as shown.

IMPORTANT: If rotor is installed incorrectly.the steering hand pump will operate as a motor when installed onto the tractor and the engine is running.The steering wheel will rotate continually which may cause damage and injury.

STEP 21

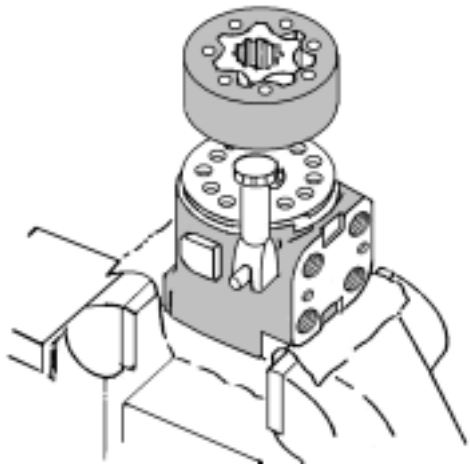

Install spacer into rotor.Lubricate and install a new o-ring into the groove in stator.

STEP 22

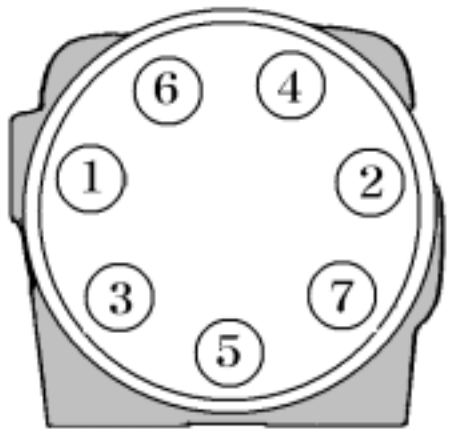

https://truckmanualshub.com/

Align the marks made in STEP 2,and install the end cap.Install and evenly tighten the torx hand screws in two stages to a torque of 17 Nm(12 lb ft) then to 25 to 30 Nm (19 to 22lb ft) in the sequence shown.

NOTE: The torx head bolts must by dry and clean of oil.

STEP 23

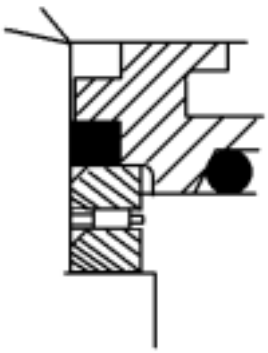

Install a new dust seal into seal bushing.

STEP 24

Install clean transmission oil into the return port and supply port.Cover all the ports with a clean cloth and slowly turn the pump input shaft clockwise and counterclockwise.

STEP 25

Repeat STEP 24 until the steering hand pump is primed of oil.

STEP 26

Lubricate new o-rings with clean transmission oil. Install the o-rings onto the fittings.Install and tighten the fittings.

Volume(cc/rev)	Tighten torque(kgf·m)
51 230	2.3
277	2.4
369 737	2.9

https://truckmanualshub.com/

SECTION 5. TROUBLESHOOTING

Problems and probable causes	Counter measures
1. Steering wheel is very heavy to turn	
1) Poor assemble between steering column and unit.	
(1)Spline of column and unit are assembled tightly.	-Replace column spline
(2)Spool of unit is seized by spline of column .	-Check column assembly face and spline length (MAX 6.5㎜)
(3)Poor rotation of column	-Replenish oil or Exchange
2) Insufficient pump pressure or fluid volume	
(1)Check pump delivery (Unit volume×120 rpm×1.15)	-Exchange pump
(2)Check oil tank fluid volume	-Replenish oil
(3)Check pump pressure	-Adjust relief pressure
3)Trouble internal steering unit valve	
(1)Low setting pressure of relief valve	-Adjust fluid level properly
(2)Ball-nut heavy to work	-Wash clean or replace
4)Trouble machine mechanism.	
(1)Poor link work	-Wash and replenish oil
(2)Excessive sector gear pre-load	-Adjust backlash
2. Return to neutral is too slow	
1)Poor assemble steering column and unit	
(1)Poor assemble to center between column and unit	-Loosen the bolt and fix again with center
(2)Column assembly face depressed unit bushing	-Replace column or repair
2)Depressed control set (spool+sleeve)	
(1)Excessive fluid volume	
(2)Excessive pressure	-Adjust fluid level properly
(3)Dust	-Adjust pressure -Wash
3) High pressure ratio of "T" port (tank port)	
(1) Tank port hall is small	-MAX. Pressure ratio 20 bar
(2) Tank port pipe is linked to other lines	-Wash and clean pipe line -Separate unit pipe line and reinstall

https://truckmanualshub.com/

Problems and probable causes	Counter measures

3. Free play of steering wheel

1)Too low elastic of centering spring (Remove P port pipe line and check left and right turning) (1)Damaged spring or poor elastic	-Replace spring
2) Depressed control set (1) Excessive fluid and pressure (2) Depressed by foreign material (3) Depressed from external when assemble with column	 -Adjust fluid level and pressure properly -Wash -Check column and adjust

4. Steering wheel resistance with turning

(1)Worn of spline gear column	-Replace column
(2)Depressed control set	-Wash,and Adjust fluid level and pressure properly
(3)Air trapped in cylinder and pipe line	-Deflate the air
(4)Excessive backlash column	-Adjust column
(5)Poor turning of column,or wear of bearing .	-Replace column and replenish oil

5.Too much free play of steering wheel(Rough touching on tire causes vibration)

(1)Air trapped in steering cylinder and pipe line.	-Deflate the air
(2)Worn ball bearing	-Replace

6.Free play steering wheel

(1)Insufficient oil in the tank	-Replenish oil
(2)Worn,damage steering cylinder	-Replace oil seal and cylinder
(3)Loose spacer in unit	-assemble spacer parts.

7.Kick-back of steering wheel

(1)Loose check valve in "P" port or don't operate	-Adjust check valve
(2) Trouble in system	-consult workshop

Problems and probable causes	Counter measures

8.Serious kick-back each side

(1)Poor assemble the gyrotor lower the unit	-Reassemble

9. Steering wheel is very heavy to begin turning

(1)Oil density is too high or cool	-Replace oil

10. External Oil leakage

(1)column (2)End cap gyrotor (3)Tightening Bolt	-Replace oil seal,slide ring -Replace o-ring -Replace copper washer (Torque 1st:175 kgf·cm. 2nd:280 kgf·cm)

https://truckmanualshub.com/

Chapter 9
Hydraulic system

SECTION 1. GENERAL DESCRIPTION ----------9-1

SECTION 2. SPECIFICATIONS ----------9-2

SECTION 3. MAJOR COMPONENT OF THE HYDRAULIC SYSTEM ----------9-3

1.Hydraulic system ---------- 9-3
2.Flow-divider ---------- 9-4
3.Flow-control valve(Slow-return check valve) ----------9-6
4.Safety valve(main relief valve)---------- 9-8
5.Gear pump ---------- 9-9
6.Filter---------- 9-14

SECTION 4. REMOTE HYDRAULIC CONTROL----------9-15

1.Remote hydraulic control valve(optional)----------9-15

SECTION 5.HYDRAULIC SYSTEM ----------9-16

1.Hydraulic cylinder ----------9-16
2.Linkage(Internal)----------9-18
3.Linkage(External)---------- 9-19
4.main control valve----------9-20
4.1.General description----------9-20
4.2.Specifications----------9-20
4.3.Construction----------9-20
4.4.Operation ----------9-23

SECTION 5. SERVICE INSTRUCTION----------9-27

SECTION 6. TROUBLESHOOTING ---------- 9-29

Chapter 9 Hydraulic system

SECTION 1. GENERAL DESCRIPTION

The hydraulic system is composed of a gear pump,valves,oil filter,cylinder(actuator),piping,etc.The implement lift is operated by a control valve which is actuated by the control lever through a link mechanism.

ON and OFF of the PTO is controlled by a hydraulic,wet,multi-disc clutch whose circuit is opened and closed by an electromagnetic valve in the flow-divider.

The construction and circuit of the hydraulic system are shown in Fig.9-1 and 9-2

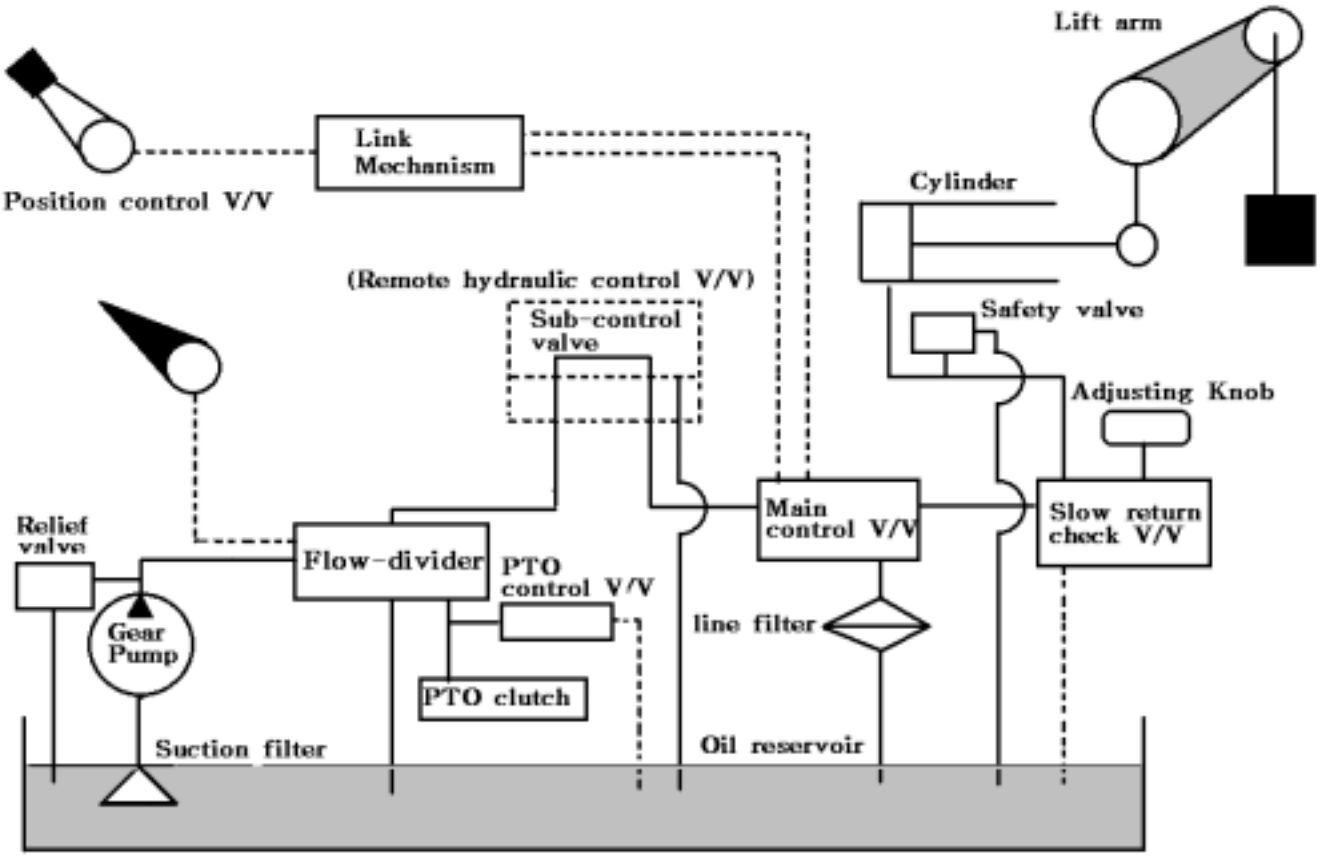

Fig.9-1 hydraulic system construction

https://truckmanualshub.com/

		T300/T330	2810NEW
Piston and cylinder	Lift(kgf) (At lower link top end)	1,330	900
Control valve	Cylinder port leaks (cc/min) (under a pressure of 9800kpa(100 kgf/cm²) With gear oil SAE 80W	5 (0.305cu.in)	10
main relief valve	Cracking pressure (kgf/cm²)	145	120
	Relief pressure(kgf/cm²)	170	145
Gear pump	Delivery(91% efficiency):litre(cu.in)mm at 2600rpm	31.1	20.4
	Fluid	TDH oil or Donax TD	
Suction filter	Rated flow (ℓ /min)	57	41
	Filtration density(mesh)	35	150
	Filtration area (cm²)	11,000	790
Line filter	Rated flow (ℓ /min)	32	32
	Filtration density(mesh)	80	80
	Filtration area (cm²)	31	31

NOTE: Recommendable Transmission oil

Manufacturer :Product

CALTEX :Textran TDH Premium

Texaco :TDH oil

Chevron :Chevron 1000THF

ESSO :Torque Fluid 56

MOBIL :Mobil fluid 423

SHELL :Donax TD

CASTROL :CASTROL AGRI MULTITRANS

TOTAL :Transmission MP

SECTION 3. MAJOR COMPONENT OF THE HYDRAULIC SYSTEM

https://truckmanualshub.com/

1.HYDRAULIC SYSTEM

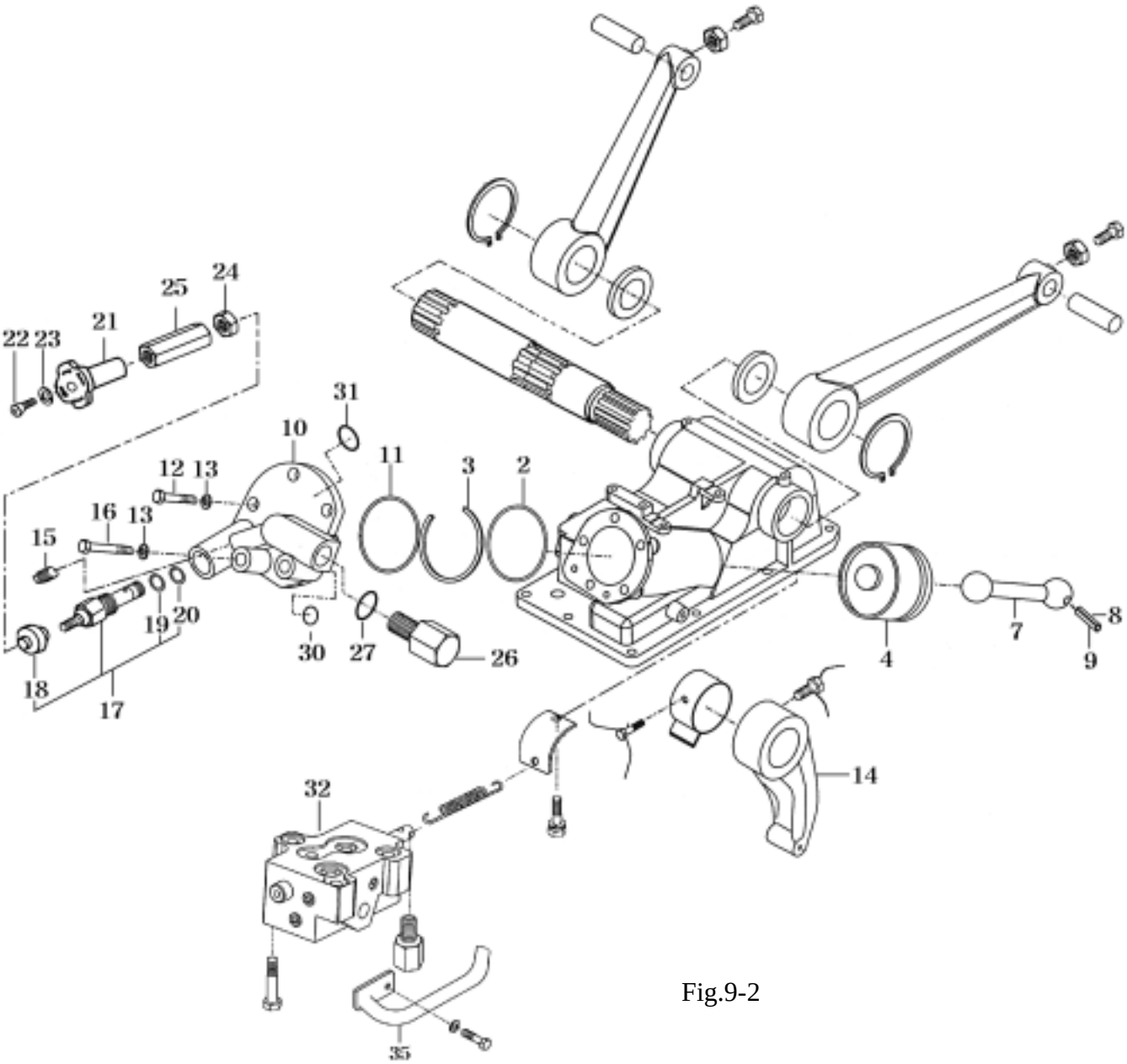

Fig.9-2

2.O-ring(PG6) 3.Ring-back up 4.Piston 7.Rod 8. Pin spring 9.Iron wire
10.Cylinder head 11.O-ring 12. Bolt 13.Washer spring 14.Lift crank
15.Plug 16.Bolt 17.Flow con.valve 18.Dust seal
19. O-ring(P) 20.O-ring(P) 21.Knob 22.screw 23.Washer spring 24.Nut
25.Shaft(Slow return) 26.Plug(M22) 27.O-ring(P) 30.O-ring(P)
31.O-ring(P) 32.Main control valve 35. Oil pipe

https://truckmanualshub.com/

2.FLOW-DIVIDER

GENERAL DESCRIPTION

This valve is installed to bypass working fluid of a specified pressure from the main circuit into the PTO circuit through a fixed orifice.It includes a changeover valve for engaging and disengage the PTO clutch by means of a solenoid and a sequential valve for PTO circuit's over the main circuit.

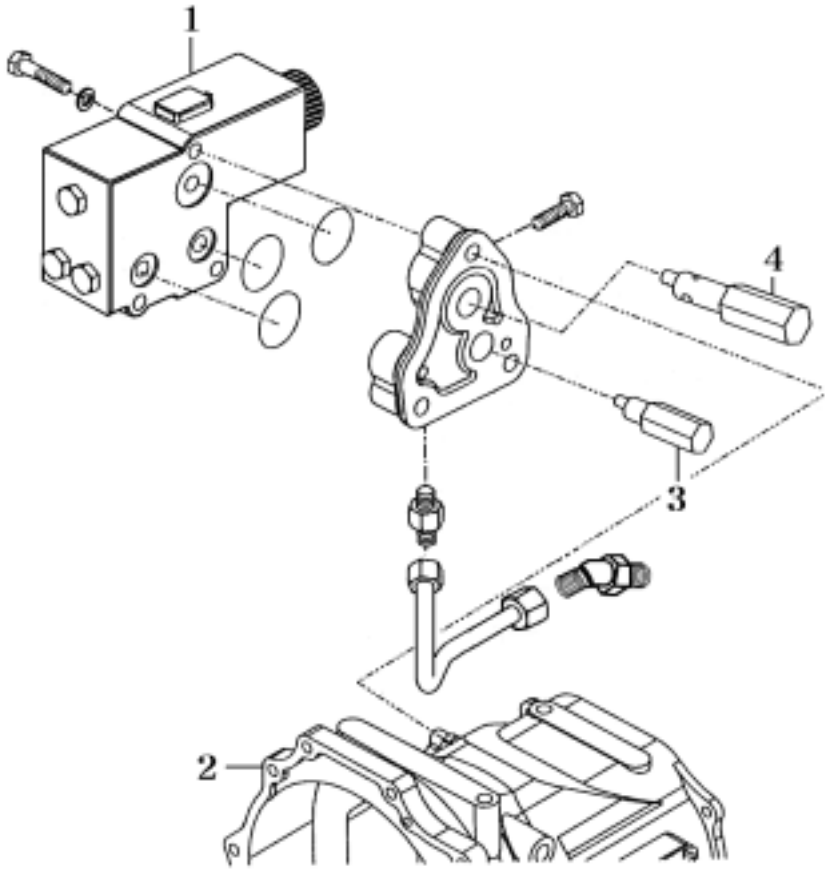

(1) Flow-divider

(2) Transmission case

(3) Relief Valve

(4) Pressure control valve

Fig.9-3

(1)Solenoid

This solenoid is switched on or off by operating the PTO switch.With this lever operation,the solenoid shifts the changeover valve to the left or the right to bypass or block the flow to port B.

(2)PTO changeover valve

This valve is composed of the spool and spring.When the solenoid is switched on,the spool is moved to the left by overcoming the spring force and allows the fluid from the pump to flow from port P to port B through the fixed orifice.

https://truckmanualshub.com/

-When the solenoid is switched 「ON」

The fluid from the pump flows to port B through port P,the pressure-reducing valve,and the changeover valve.

The pressure of the PTO clutch circuit and that of passage(2) are the same and will be set as P_2 .The pressurized fluid acts on the left-hand side of the valve,passing through port ; its pressure will be set as P_1 .

As passage (1) and passage (2) are interconnected,then $P_1 = P_2$.

The force imposed upon the left-hand side of the valve is P1 whereas the force imposed upon the right side of the valve is P1 plus the spring force.Consequently the spool is pushed leftwards.

Here port A is blocked, so the fluid from the pump is branched off to the PTO clutch.

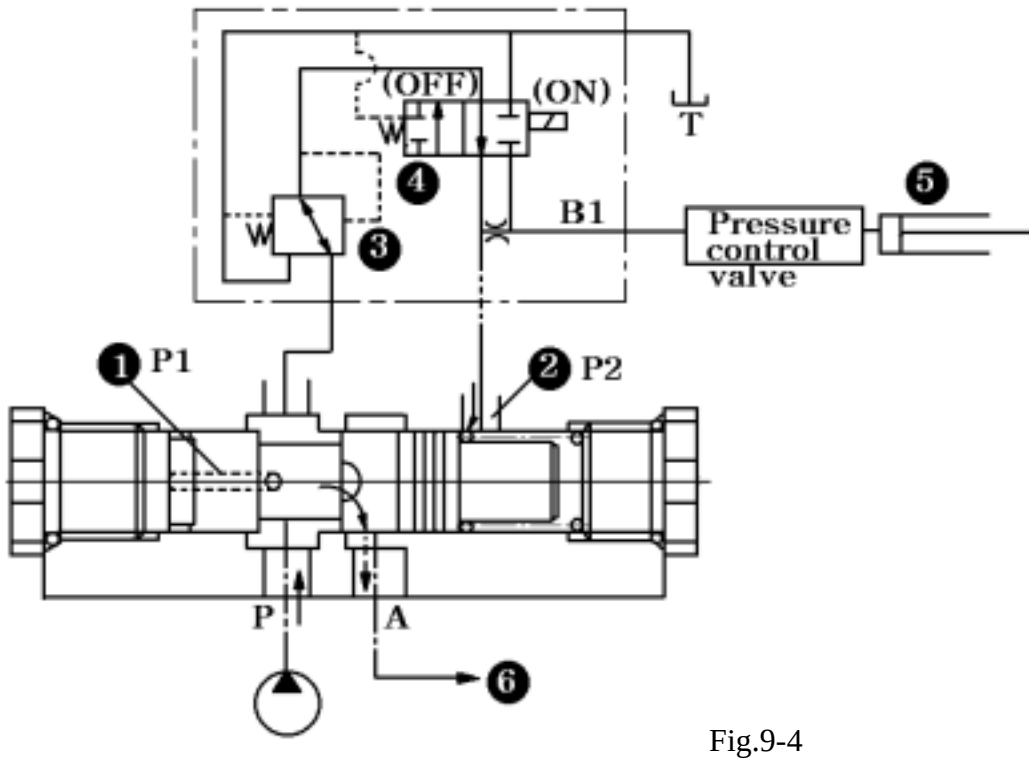

Fig.9-4

(1)Passage 1

(2)passage 2

(3)Pressure-reducing valve

(4)Changeover valve

(5)PTO clutch

(6)To control valve.

-When the solenoid is switched 「OFF」: https://truckmanualshub.com/

The fluid in the PTO clutch is unloaded to the bank through port B.Consequently pressure P2

at passage(2) becomes zero,whereas the pressure at passage (1) is P1.Then the force imposed upon the left side of spool (P1)overcomes the force imposed upon the right side

(P2+spring force),so that the spool is pushed rightwards to connect port P and part A. Therefore no fluid from the pump is branched off to the PTO clutch; that is,all fluid flows to the control valve.

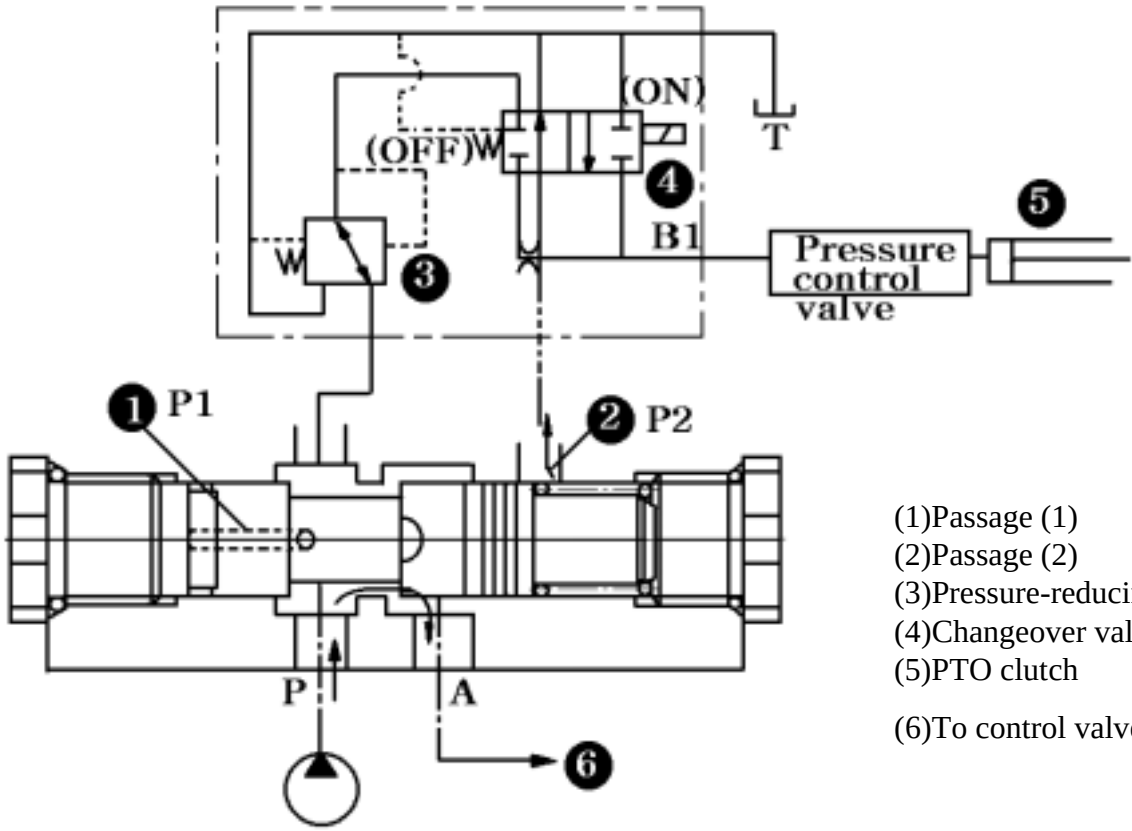

(1)Passage (1)
(2)Passage (2)
(3)Pressure-reducing valve
(4)Changeover valve
(5)PTO clutch
(6)To control valve

Fig. 9-5 PTO solenoid switch 「OFF」 position

(1) Pressure-reducing valve.

This valve is composed of the spool,spring,and piston and bleeds off the surplus fluid from the pump into the tank by actuating the spool when the fluid pressure exceeds the regulated pressure at port B

(2) Fixed orifice

This orifice controls the fluid flow at B in accordance with the pressure differential between the secondary pressure of the pressure reducing valve and the PTO clutch actuating pressure.

https://truckmanualshub.com/

3.FLOW-CONTROL VALVE(SLOW-RETURN CHECK VALVE)

3.1. GENERAL DESCRIPTION

This valve regulates the lowering speed of the lift by controlling the unloading flow from the lift cylinder to the tank.

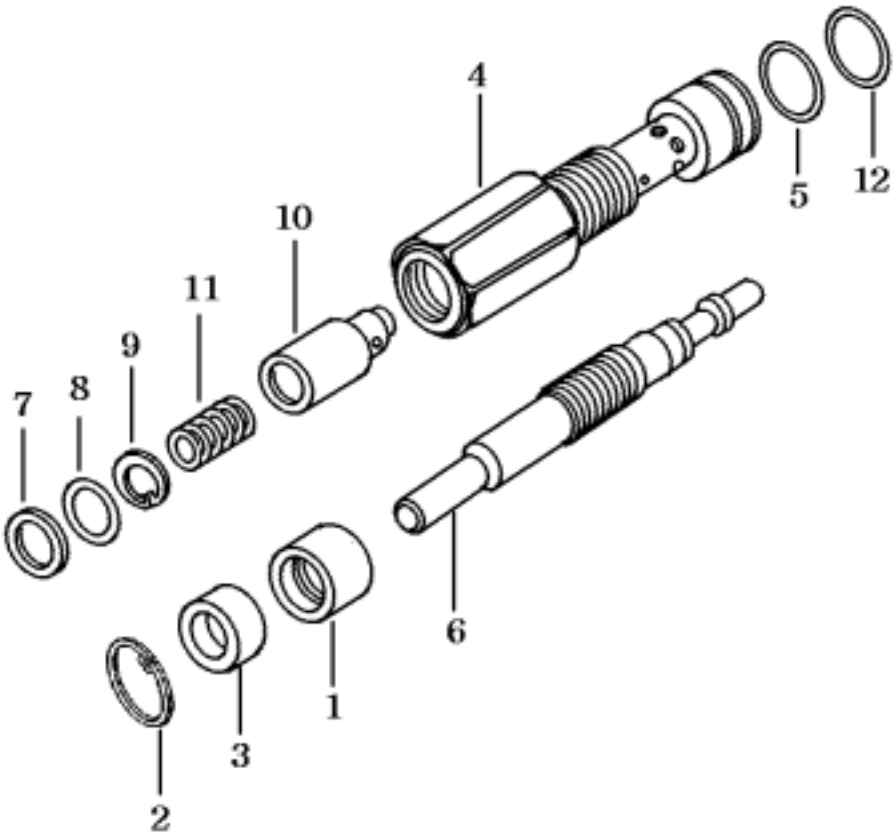

①Dust seal
②Snap ring
③Collar
④Body
⑤0-ring
⑥Adjust screw
⑦Back-up ring
⑧0-ring
⑨Stop ring
⑩Poppet
⑪Spring
⑫0-ring

Fig. 9-6 Slow-return check valve Diagram

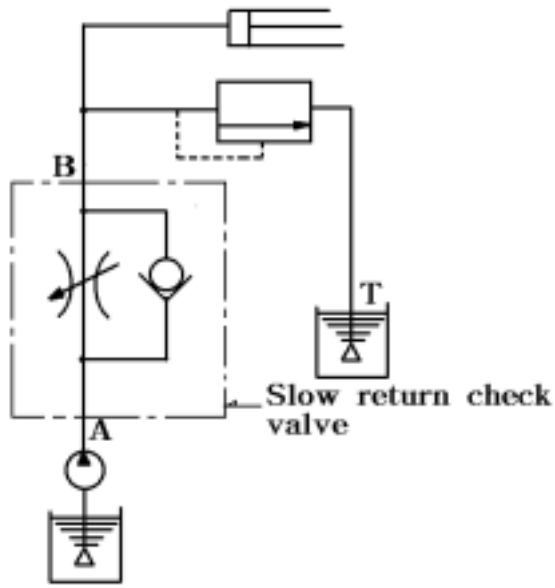

https://truckmanualshub.com/

3.2 OPERATIONS

1) DOWN position

The fluid from port B pushes up stop ring (9) of poppet(10) until the ring comes into contact with adjust screw(6),as it reaches chamber(R). Consequently,the extent choke (C) is opened is determined by the positioning of adjust screw (6):that is,when adjust screw(6) is screwed in clockwise,the opening of chock(C) decreases and the lowering speed of the lift arm slows down;whereas the opening of choke(C) increases and the lowering speed of the lift is accelerated when the adjust screw is unscrewed counterclockwise.When the adjust screw screwed in completely,the poppet comes into contact with body seat(S) and the choke is closed completely,so the lift arm stops.

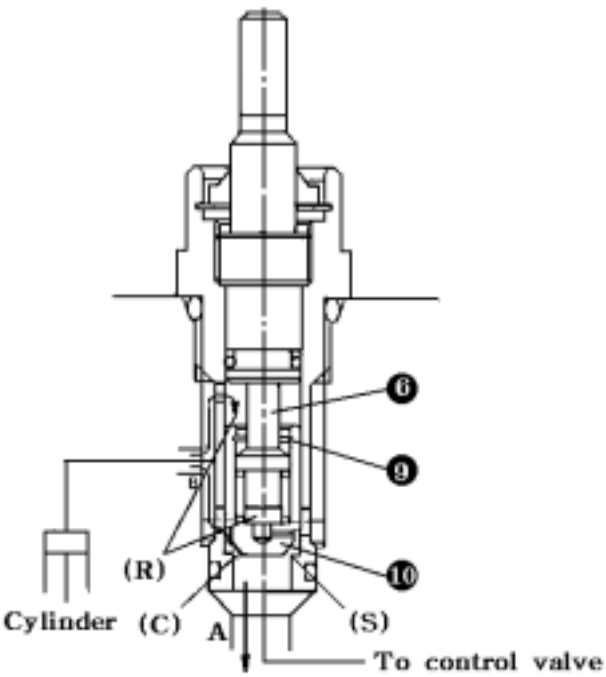

Fig. 9-7 Down position

2) Up position

The flow port A,overcoming the force of spring(11),pushes up poppet (10) and choke(C)is fully opened regardless of the position of adjust screw(6).Thus the fluid flows to port B and the cylinder,which results in raising the lift arm.

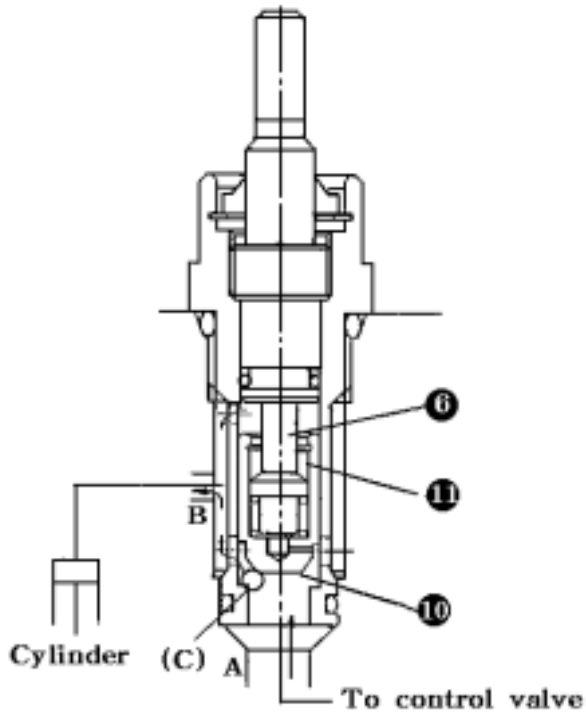

Fig. 9-8 Up position

https://truckmanualshub.com/

4. MAIN RELIEF VALVE

1)GENERAL DESCRIPTION

This valve regulates the maximum pressure in the whole hydraulic circuit.The regulated pressure can be set with the adjust screw.

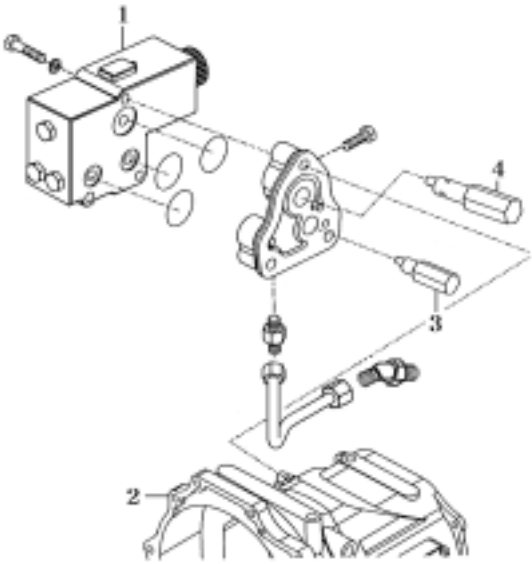

Fig. 9-9 Main Relief valve

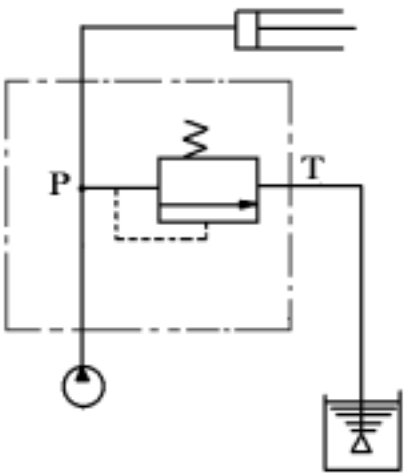

Fig 9-10 relief valve circuit.

2) PRECAUTIONS FOR DISASSEMBLY AND REASSEMBLY

(1)Tightening torque of lock nut (9)5.0 6.0 kgf·㎝²(36.2 43.4 ft.lbs)

(2)Install seat(2)and then tap ball(3)(5/16) lightly so as to provide tight seating.

(3)Wrap the valve threads with sealing tape and tighten the valve up to a specified torque of 5-6Kgf.m(36-43 ft.lbs)

(4)Before disassembly, the current screwing-in depth of the adjust screw should be written down or memorized for later reference.

3) MEASUREMENT OF THE RELIEF PRESSURE

(1)3 POINT TO TEST RELIEF PRESSURE

①Remove the plug in the delivery pipe on the right-hand side of the transmission case and install a compression gauge to measure the pressure.

Keep the engine speed at 2600 rpm and shift the position control lever at the highest position.

②Control valve coupler.

③Remove the plug in the hyd. pump flange and engage the pressure gauge and measure it.

Measurement the Pressure must be done 3 times and should be set within specified pressure.

Specified relief pressure	145 ±5 kgf·㎝²

5.GEAR PUMP https://truckmanualshub.com/

1) GENERAL DESCRIPTION

This pump induces fluid from one side and delivers it from the other side,by rotating two gears meshed with each other. The actual delivery is as mentioned below,considering the consequences of fluid temperature and volume efficiency in accordance with revolution speed. That is dual pump system.

2) Gear pump

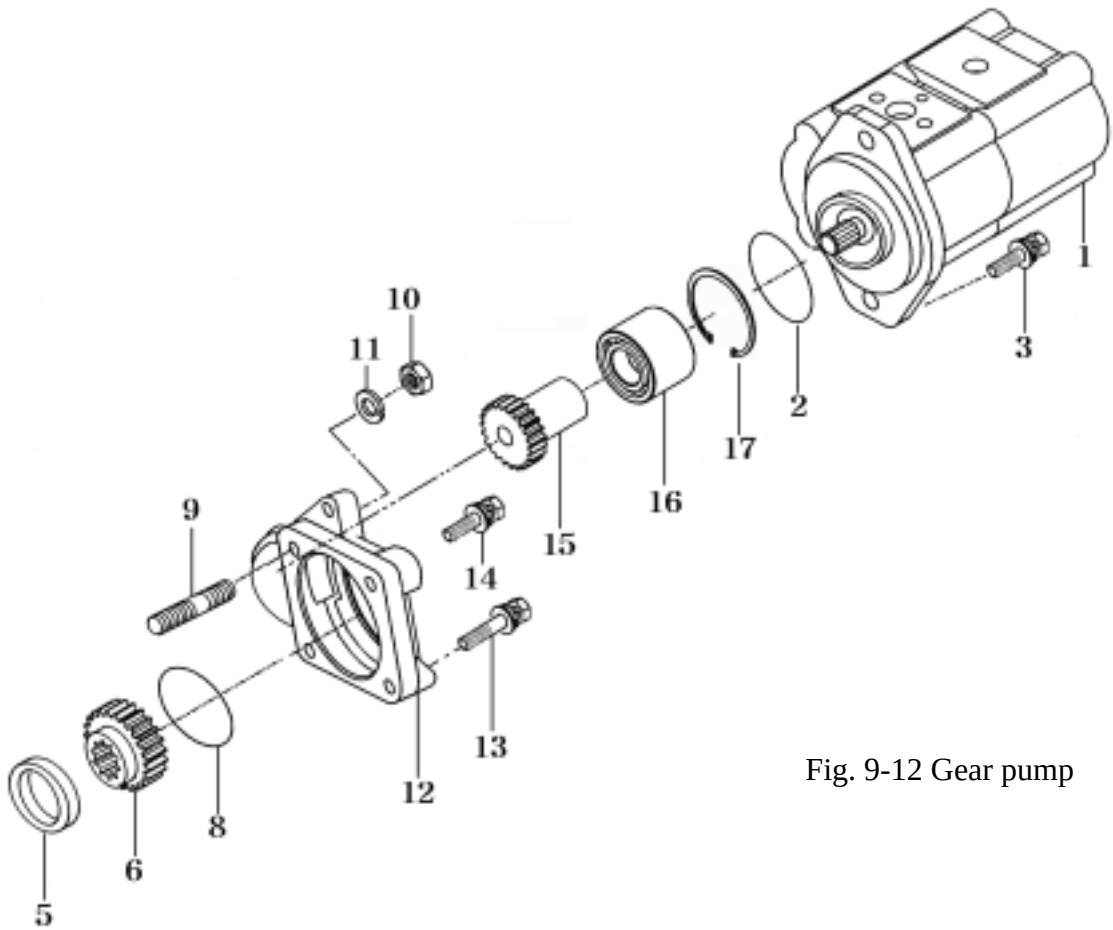

Fig. 9-12 Gear pump

1.Flange 2.Housing 3.Drive gear 4.Gear 5.Bushing 6.Bushing seal
7.Bushing 8.0-ring 9.Cover 10.Cap ring 11.0-ring 12.Housing
13.Drive gear 14.Gear 15.Oil seal 16.Socket bolt 17.Washer 18.Key
19.Snap ring 20.Ball

3) OPERATIONS.

This pump induces fluid from one side and delivers it from the other side,by rotating two gears meshed with each other. The actual delivery is as mentioned Fig.9-13, Considering the consequences of fluid Temperature and volume efficiency in accordance with revolution speed.

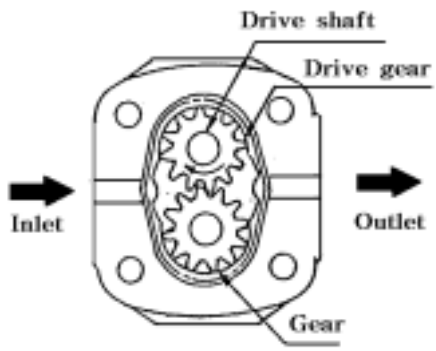

Fig. 9-13 Gear pump

https://truckmanualshub.com/

4)DISASSEMBLY

NOTE:

①Before disassembling the pump,wash the outside clean.In the course of disassembling operation,all disassembled parts should be kept aside in a clean place such as on clean paper or cloth and be handled carefully so as to prevent them from becoming dirty or damaged.

Check all disassembled parts for damage and wash undamaged or usable parts in clean diesel fuel or kerosene. Inspect all parts referring to these point,and repair or replace defective parts.

(1)DISASSEMBLY

①Remove the key.

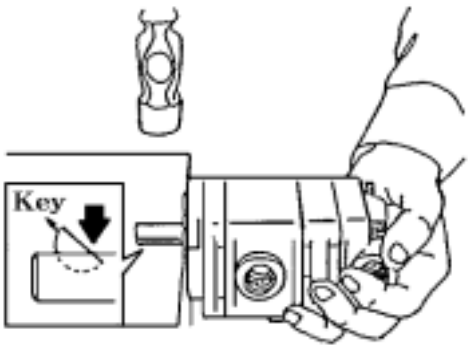

Fig. 9-14 Drive shaft key.

②Hold the pump in a vice with the mounting flange turned downward,and remove the bolts

Fig. 9-15 Cover bolt

③Remove front and rear pump.
Be sure not to be damaged the o-ring or steel ball

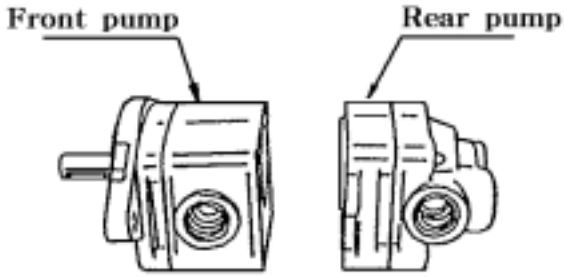

Fig. 9-16 Front and rear pump

④Remove the rear pump
▶Detach the cover
▶Remove the o-ring
▶Remove the bushing,drive gear,gear and bushing.Take care of removing the bushing which is marked and recorded.
▶Remove the bushing seal from the bushing.

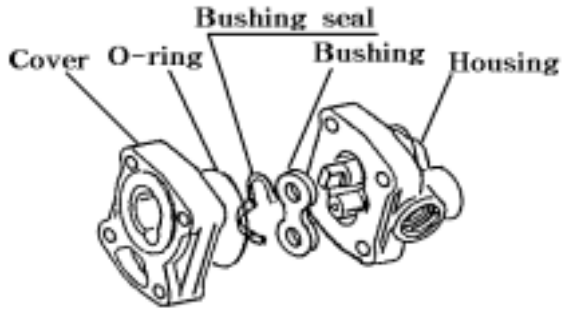

Fig. 9-17 Front and rear pump

⑤Remove the front pump same as rear pump disassembly.
⑥Remove the snap ring and extract oil seal from the flange.

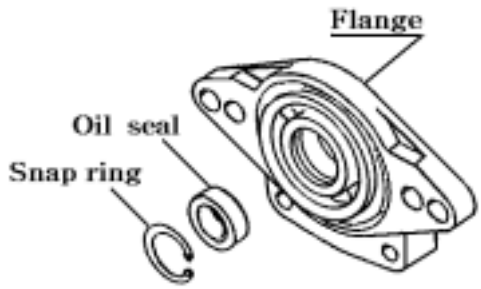

Fig. 9-18 Front and rear pump

https://truckmanualshub.com/

3) REASSEMBLY

① Install the rear pump.

▶Install the bushing seal to bushing.

▶Install the bushing,drive gear,gear,and bushing to the housing.

▶Install the o-ring to the cover.

▶Install the cover to the housing.

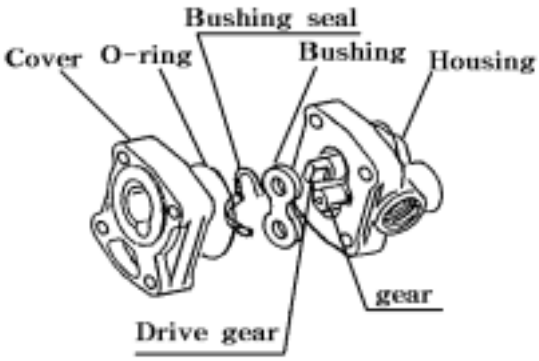

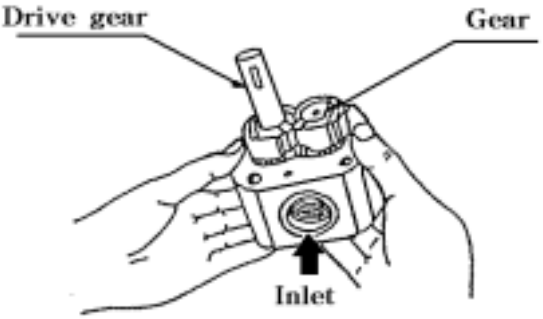

Fig. 9-19 Front and rear pump.

②Install the front pump with rear pump.

③After installing the cap ring,and O-ring to the front pump,and install the rear pump.

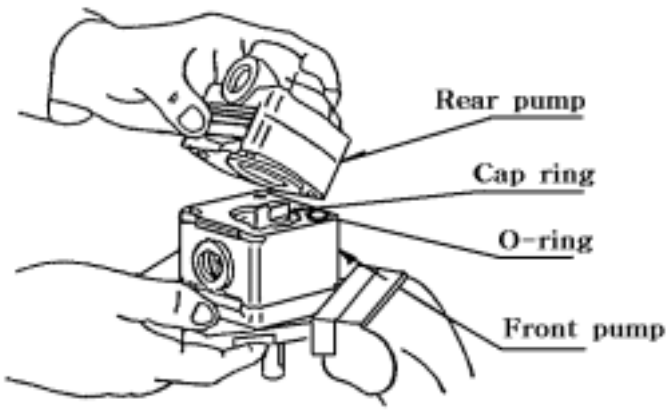

Fig. 9-20 Drive gear,gear,Gasket

④Tightening sequence and torque of the pump cover tightening bolts.

▶Tightening torque: 2.5 2.8kgf·m

Fig. 9-21 Cover bolt

⑤ Install the oil seal,snap ring,and key.

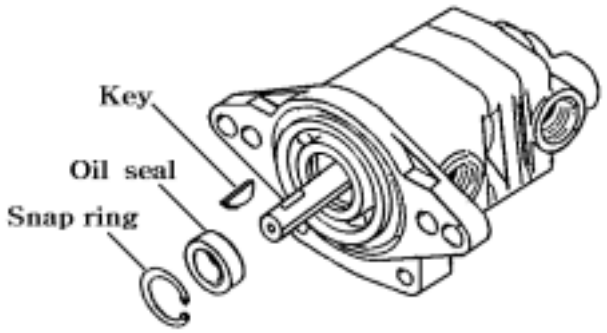

Fig. 9-22 Oil seal,snap ring,key.

⑥The gears should turn smoothly with a turning torque of less than 30 kgf.cm (2.2ft.lbs)

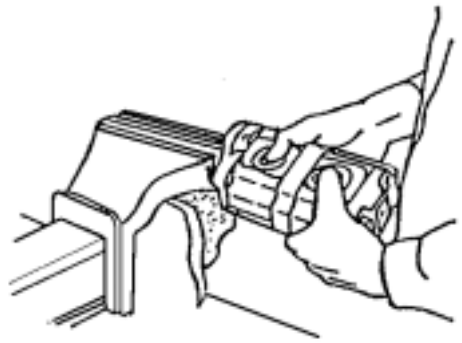

Fig. 9-23 Inspection after reassembly.

4) INSPECTION AND REPAIR https://truckmanualshub.com/

(1)Check all disassembled parts for damage and wash undamaged or usable parts in clean diesel fuel or kerosene except rubber parts.Inspect all parts referring to these points,and repair or replace defective parts.

(2) Housing(casing)

①The gear pump is originally designed so that the gears come into light contact with the side of the pump body

②Therefore some evidence of contact can be found around the intake port of a pump once used.

③The normal contact tracing is less than half the length of the gear housing bore and less than 0.05 mm(0.0020 in)in width.If width A is more than 0.1 mm(0.004 in), replace the gear pump set.

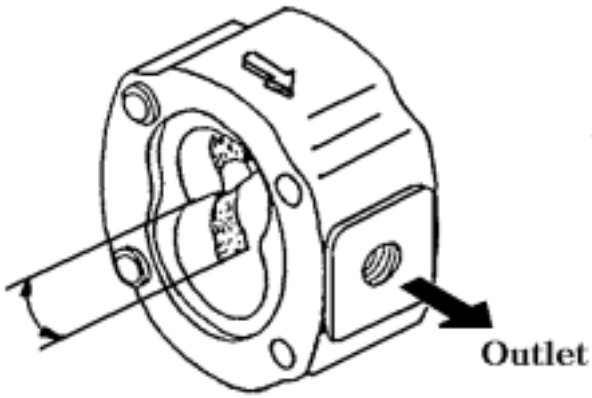

Fig. 9-24 Housing (casing)

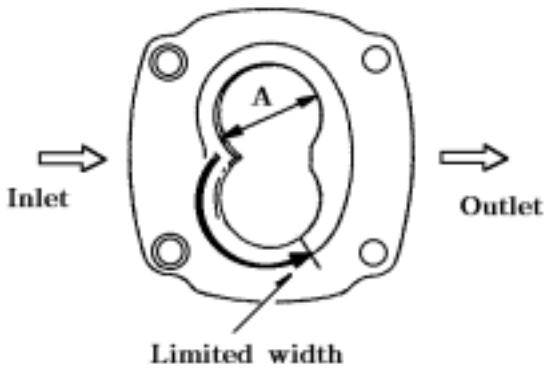

Fig. 9-25 Housing (casing)

(3) Bushing

① With clean working fluid,surfaces are rarely scratched and should be smooth.

② If there are many scratches on the bore walls,or on parts which are in contact with the gears,which can be readily felt or when the latter parts are darkened,the gear pump set should be replaced.

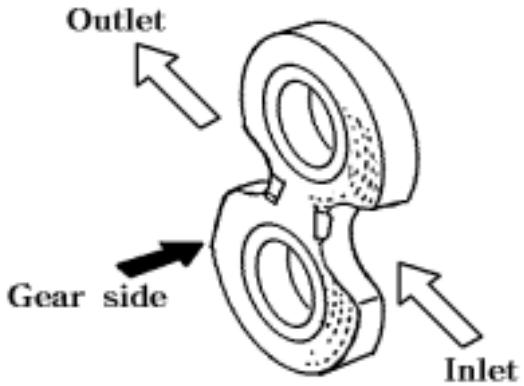

Fig. 9-26 Bushing

Problem and causes are as below

a.contaminated fluid

b.overload by relief valve damage

c.cavitation or airation

d.overheat of fluid.

e.Low density of fluid

④Some evidence of contact can be found around the intake port of a bushing once used.The normal contact tracing is less than half the length of the bushing bore and less than 0.03mm(0,0012 in)in width.If width is more than o.o3 mm (0.0012 in).Replace the bushing.

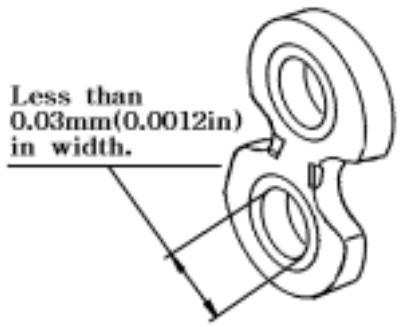

Fig. 9-27 Bushing

(4) GEAR https://truckmanualshub.com/

①With clean working fluid,surfaces are rarely scratched and should be smooth.

②If roughness can be felt by a finger nail,they are darkened,or the shaft diameter is less than 0.03 mm replace the shaft.

③Usable shaft diameter is as below

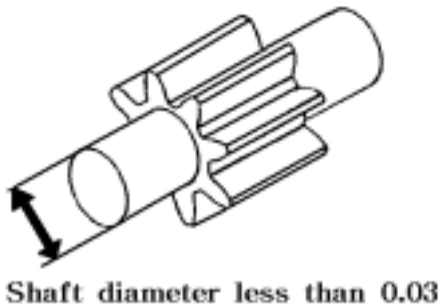

Fig.9-28 gear shaft

(5) Oil seal

The oil seal prevents oil leaks by its inner seal lip and dust from invading by its outer dust lip.Therefore if an oil seal has damaged or deformed lips,it should be replaced.

(6)MEASUREMENT OF THE PUMP

The best way to measure for the pump is to use a special tester.

But if it's not available,Use installed tractor

Remove the plug in the delivery pipe on the right-hand side of the transmission case and install a compression gauge to measure the pressure.

Keep the engine speed at 2600 rpm and shift the position control lever at the highest position.

https://truckmanualshub.com/

6. FILTER

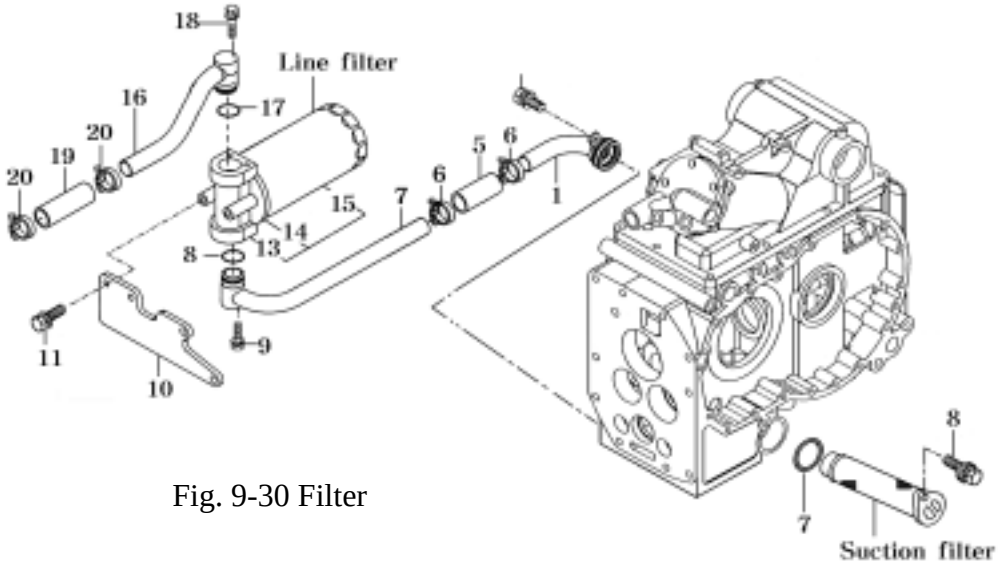

Fig. 9-30 Filter

1)GENERAL DESCRIPTION

The tractor is equipped with two oil filters: suction filter(1) and line filter(4),for better filtration.

2)SPECIFICATIONS

-Suction filter

Applicable oil	DONAX TD or RPM THF 500
Rated flow rate(ℓ/min.)	45
Filtration density (mesh)	150 mesh
Filtration area(㎠)	790
Working oil temperature (℃)	-30 130℃

3) Line filter

Applicable oil	DONAX TD or RPM THF 500
Rated flow rate(ℓ/min.)	32
Filtration density (mesh)	80 mesh
Working oil temperature (℃)	-30 130℃

4) REPLACEMENT

Check the O-rings for damage or deformation and replace defective ones.When installing the filters,be sure to install the O-rings properly with grease applied.

Fig. 9-31

https://truckmanualshub.com/

SECTION 4. REMOTE HYDRAULIC CONTROL (OPTIONAL)

Maximum flow (ℓ/min)	26
Maximum pressure(kgf/㎠)	400
System pressure (kgf/㎠)(at 26 ℓ/min)	145
A and B port leak(cc/min) ①under a load of 100kgf/㎠ ② Oil temperature:50 ºC	Less than 9
Recommended fluid	DONAX TD or RPM THF500
Operating temperature range(ºC)	-30 130℃

1.Remote hydraulic control valve(OPTIONAL)

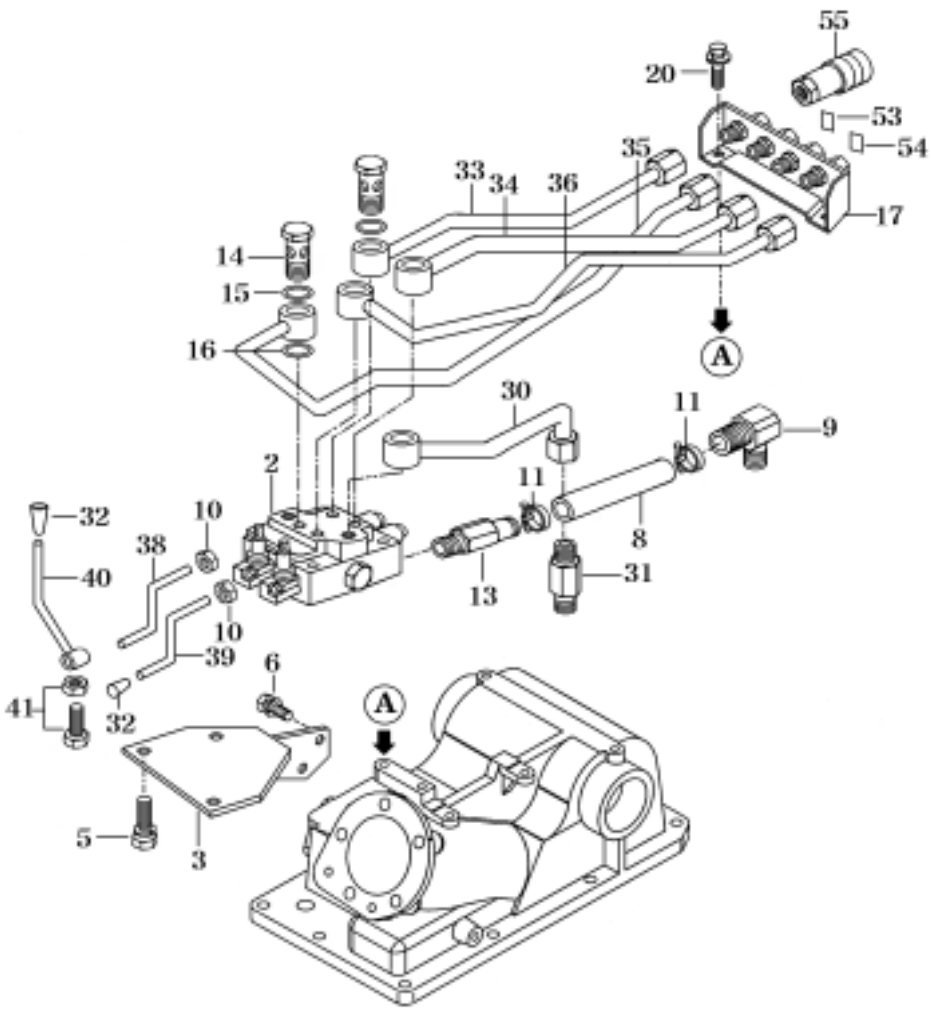

2.Remote control valve
3.Stay comp
5.Bolt
6.Bolt
8.Hose return
9.Adapter
10.Nut
11.Band
13.Adapter
14.Bolt
15.O-ring
16.O-ring
17.Stay
20.Bolt
30.Pipe
31.Union
33.Pipe,A1
34.Pipe,A2
35.Pipe,B1
36.Pipe,B2
38.Lever
39.Lever
40.Lever
41.Bolt
53.Label
55. Coupling

Fig. 9-32 Remote hydraulic pump

 https://truckmanualshub.com/

1.HYDRAULIC CYLINDER

1)Hydraulic system must be washed clean,and care must be taken not to let any foreign substances.
2)The O-ring and back-up ring should be coated with grease ahead of time.Install with care so as not to damage them.
3)Install the Piston from the cylinder head side.
4)The lift arms should be assembled mutually by reference to their matching marks.
5)When installing the control valve,apply grease to the O-rings and avoid their dislocation or binding during tightening the valve to the specified torque 130 180㎏f-㎝
6)The safety valve should be installed levelly,and make sure there is no oil leak through the filter seal . Tightening torque is 700 800 ㎏f-㎝
7)The spool should move smoothly after assemble the control valve.
8)The lift crank should be installed levelly,and make sure there is no interference through the pipe.

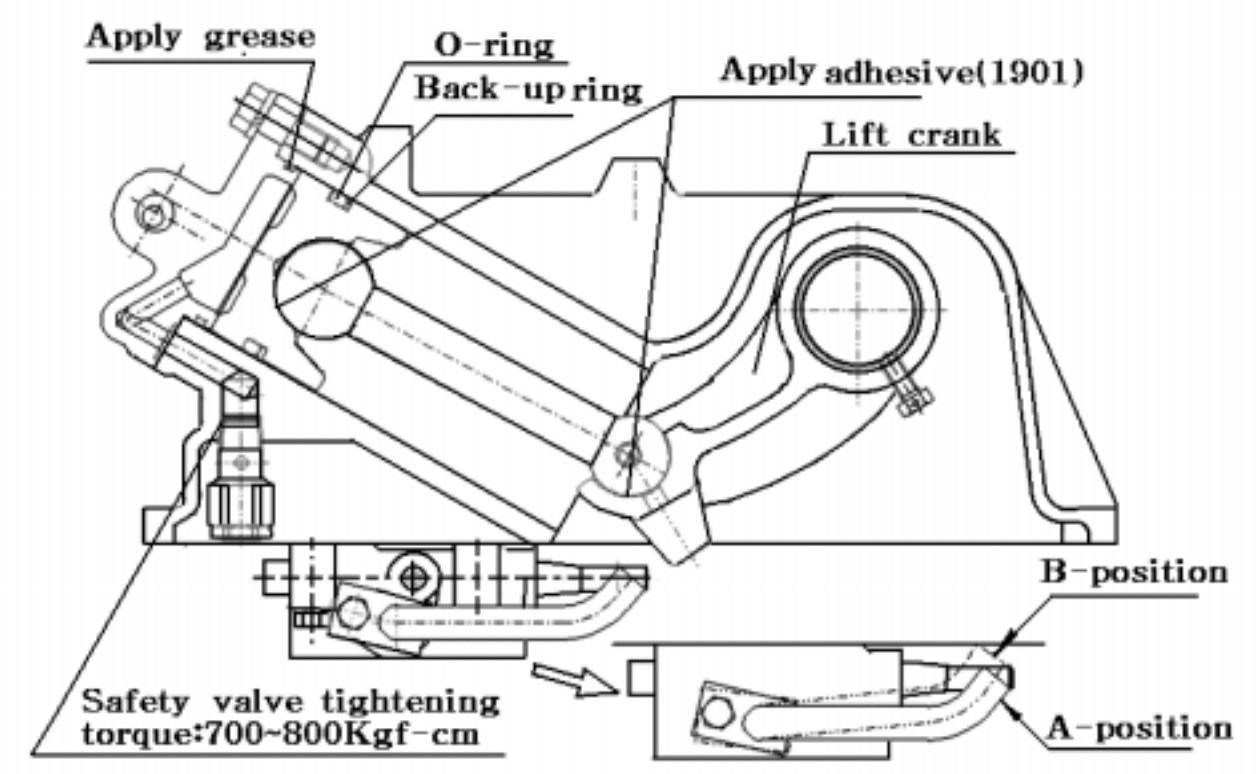

Fig.9-33. Hydraulic cylinder.

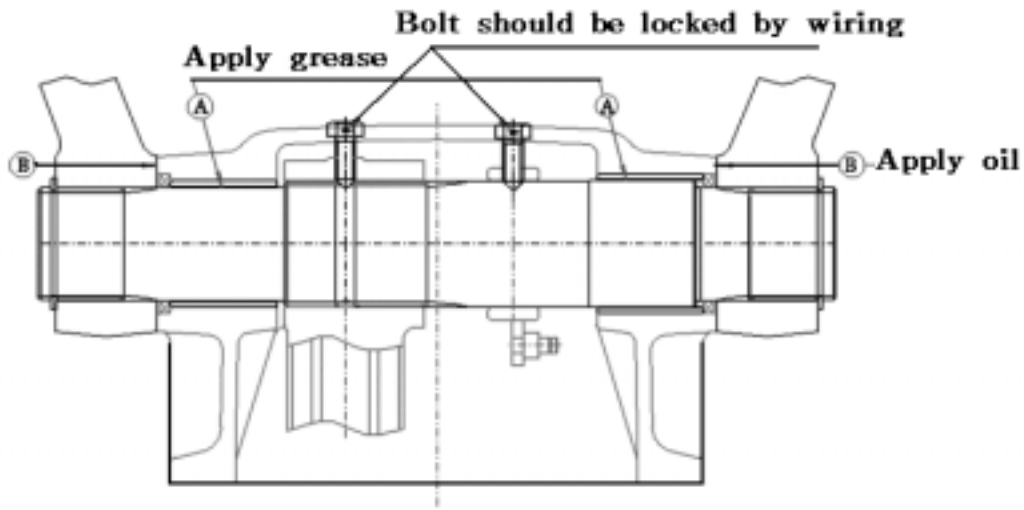

Fig.9-34.Lift arm

9)Adjust the angle of the roll bush from horizontal is 30°
10)Apply grease to the roll bush.
11)Apply grease to the cylinder case and lift arm face Which touched with each other.
12) When assemble the lift crank on the lift shaft, mesh their splines using the alignment marks which were put there before disassembly.
13)Hex bolt (M8×20) should be locked by wiring after installation .
14)Be sure the lift shaft should be moved smoothly after installation.
15)The clearance of lift arm should be less than 3 mm

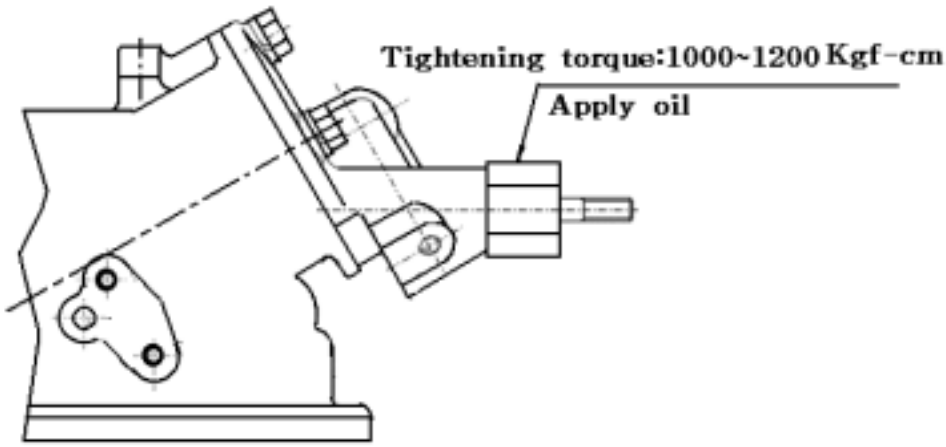

Fig. 9-35 Slow return check valve.

16)Rap the plug with sealing tape.
17)Tighten the slow return valve to the specified torque 1000 1200 kgf-cm and be sure not to damage the O-ring.

https://truckmanualshub.com/

2. LINKAGE (INTERNAL)

1)Before installing the linkage,apply grease to relayed drive parts.

2)Drive in the roll pin into the linkage pin through the rod and lock the pin with wire.

3)Be sure not to over operate within specified spool stroke(12mm between up and down at neutral position)

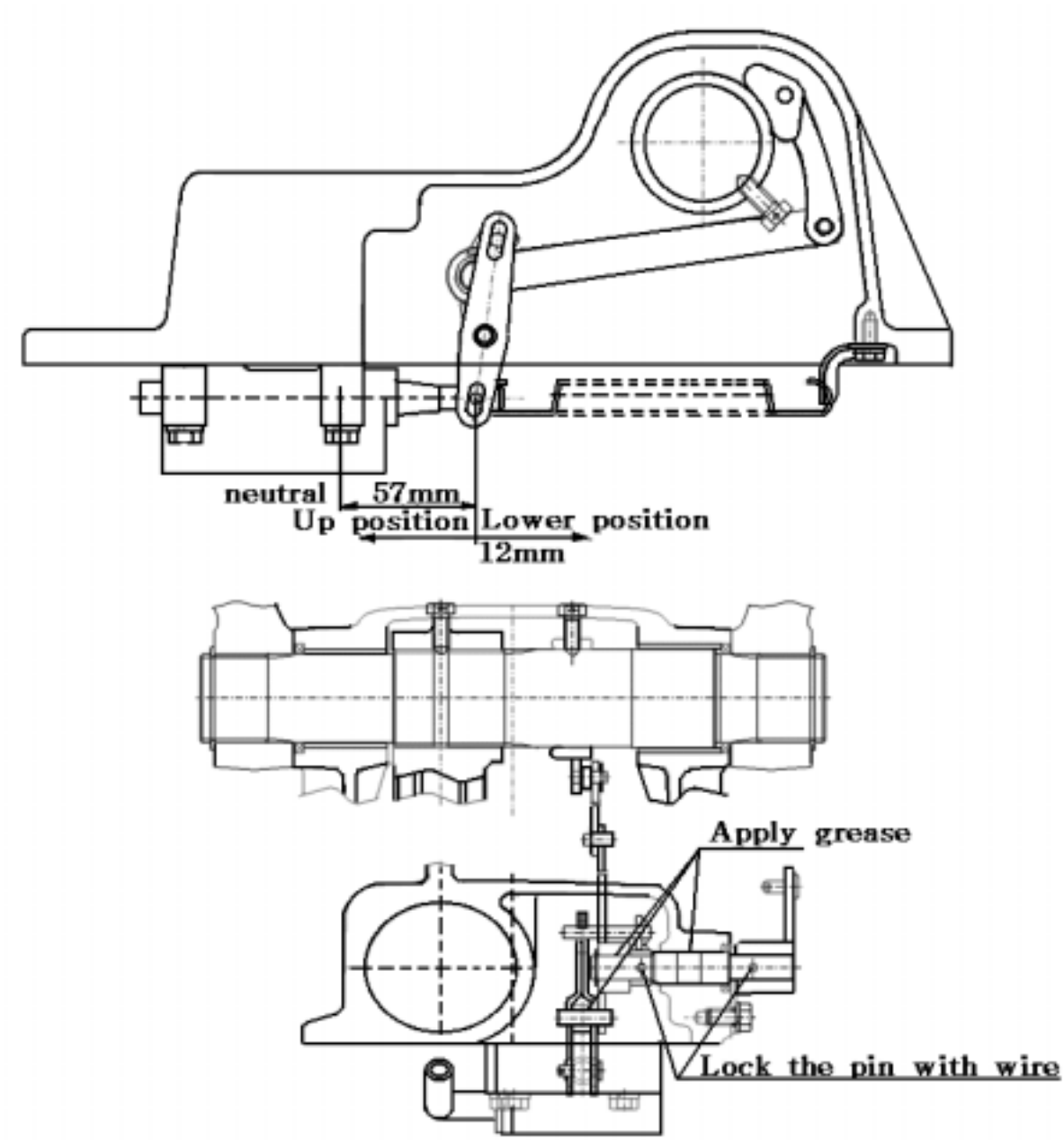

Fig.9-36 Linkage (internal)

https://truckmanualshub.com/

3.LINKAGE (EXTERNAL)

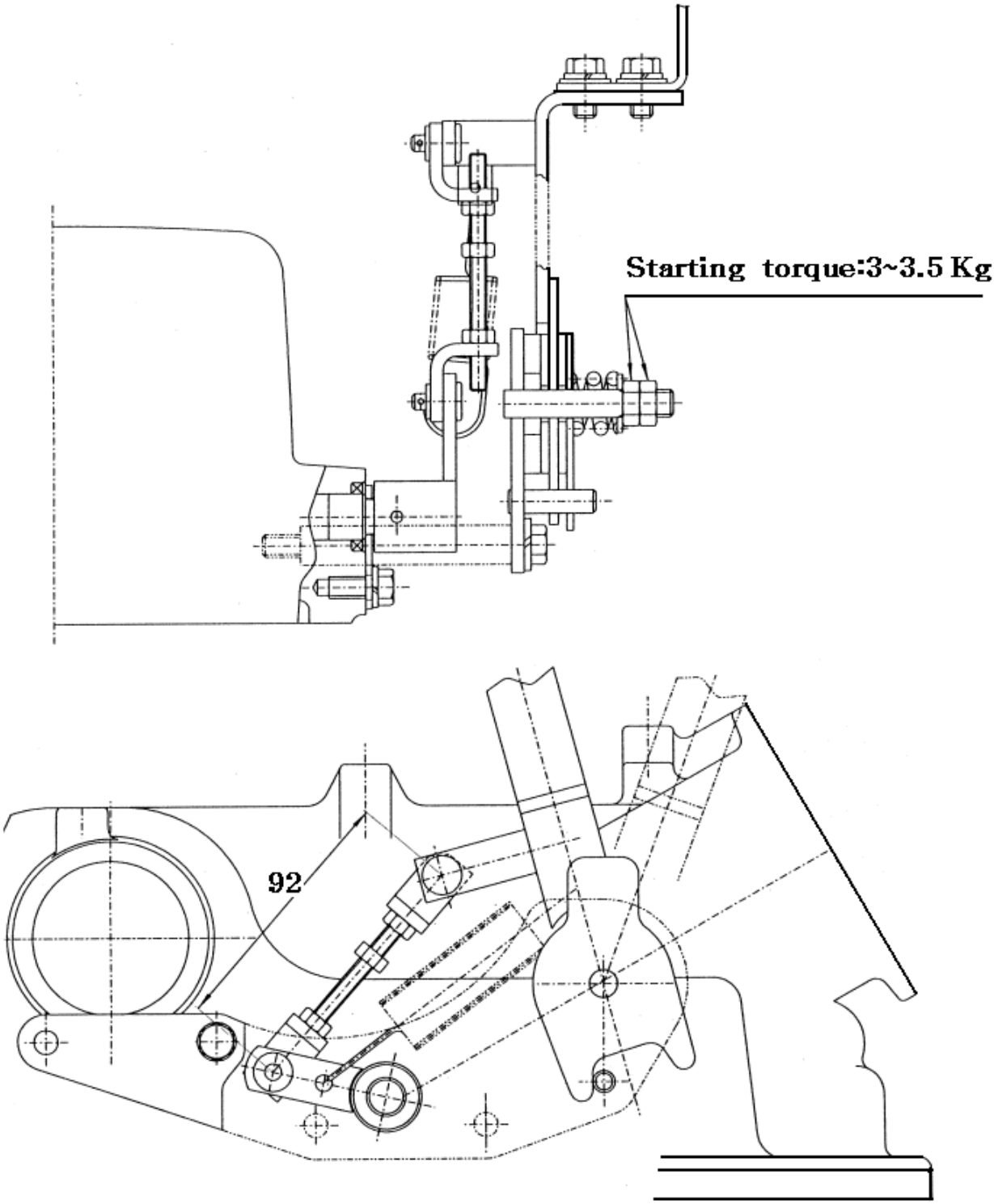

Fig. 9-37 Linkage(external)

https://truckmanualshub.com/

4. MAIN CONTROL VALVE

4.1 GENERAL DESCRIPTION

This valve controls the lifting and lowering operation of the hydraulic cylinder.It has especially been developed to control the working height of the implement.It consists of a feed back valve;direction control valve,flow-control unloading valve,and holding check valve.

4.2 SPECIFICATIONS

Maximum operating pressure	300 Kgf.cm(4267 psi)
Maximum flow	30 liters (1831 cu.in)/min
C-port leaks	10 milliliters (0.61 cu.in)/min (Fluid temp : 50℃:pressure :100Kgf.cm(1422 psi)

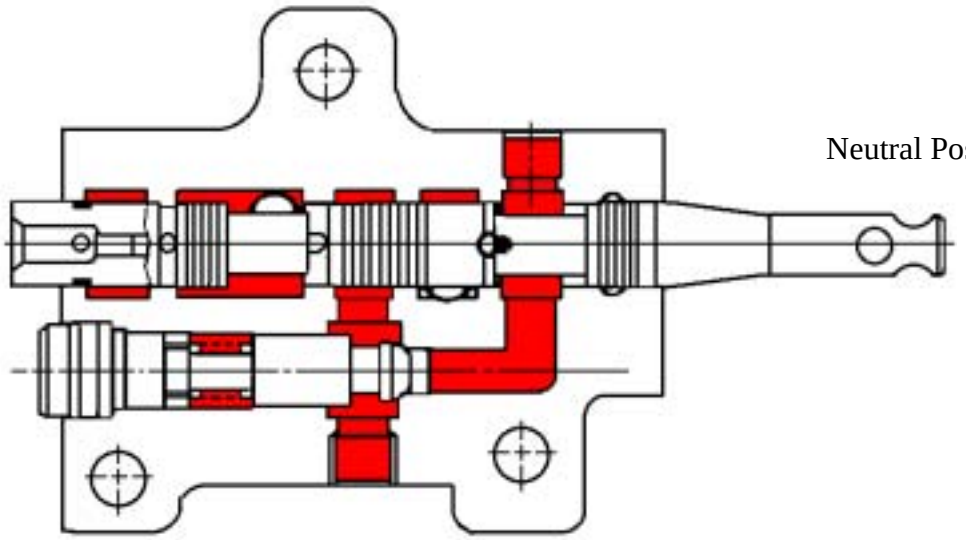

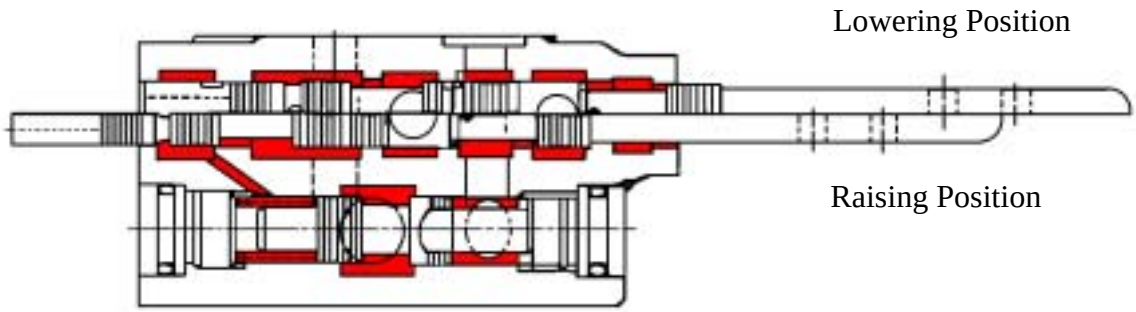

Fig.9-38

https://truckmanualshub.com/

4.3 DISASSEMBLY AND INSPECTION

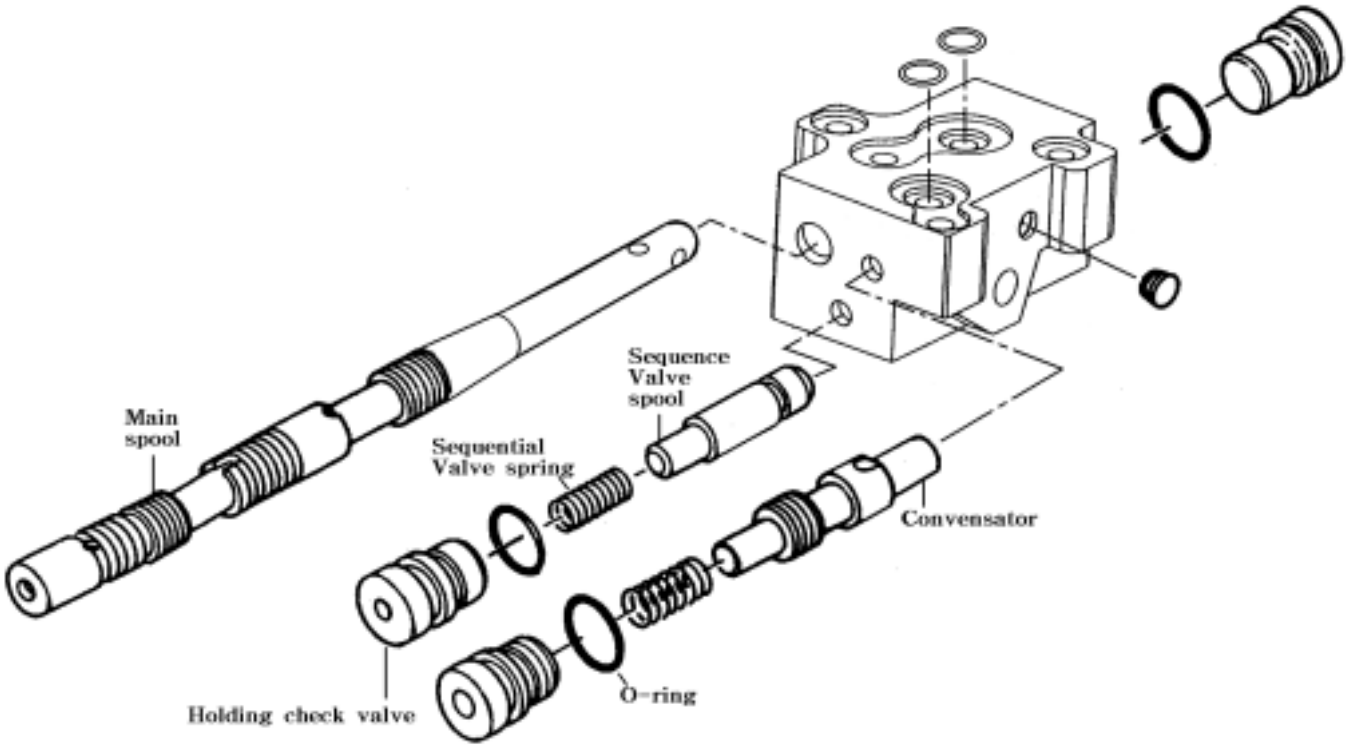

4.4 OPERATION

1)Neutral position

In the neutral position,convensater spool(711) in open(Unload),Main spool(311) and check valve(511,531) is closed and its pressure is enough to rest the force of lift arm..

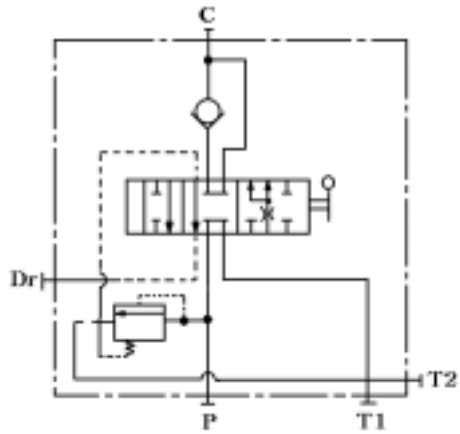

Circuit diagram in the neutral position

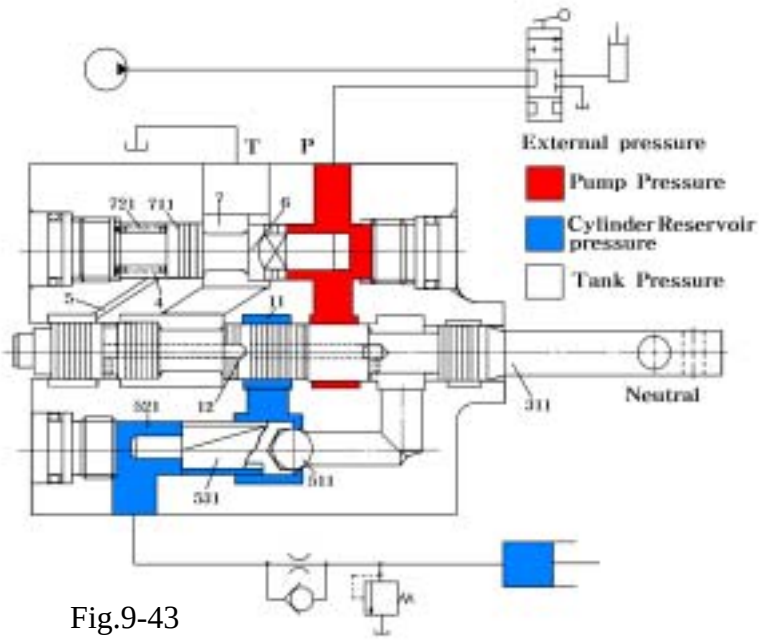

Fig.9-43

https://truckmanualshub.com/

2) Lifting position

As main spool is moved to lifting position pump pressure is increased and open the check valve(511,531).The lift arm moved to lifting position by flowing to cylinder and operate piston.

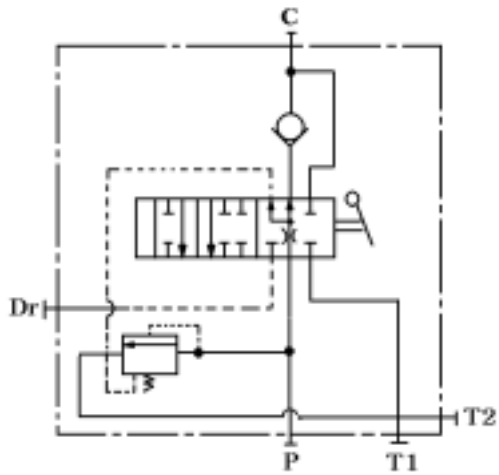

Circuit diagram in the lifting position

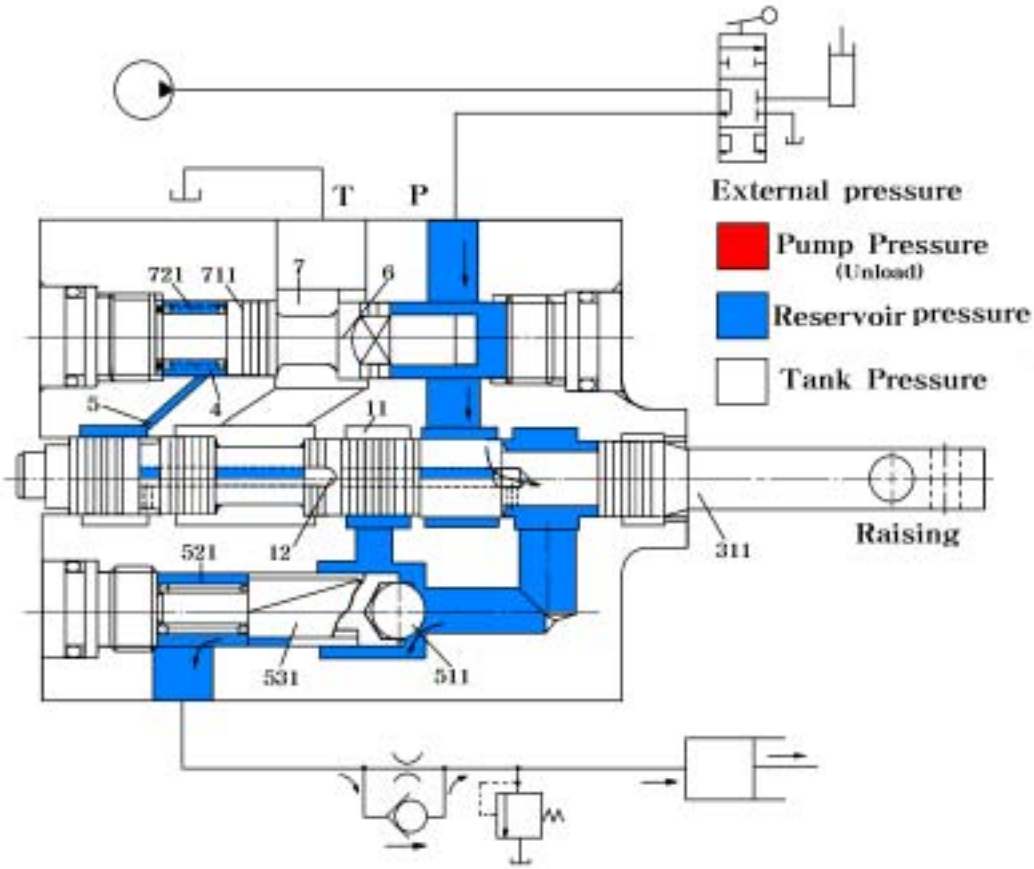

Fig.9-44

https://truckmanualshub.com/

2) Lowering position

If main spool moved to lower positions,pump is unloading and the lift arm moved to lower position by flowing to tank in the cylinder

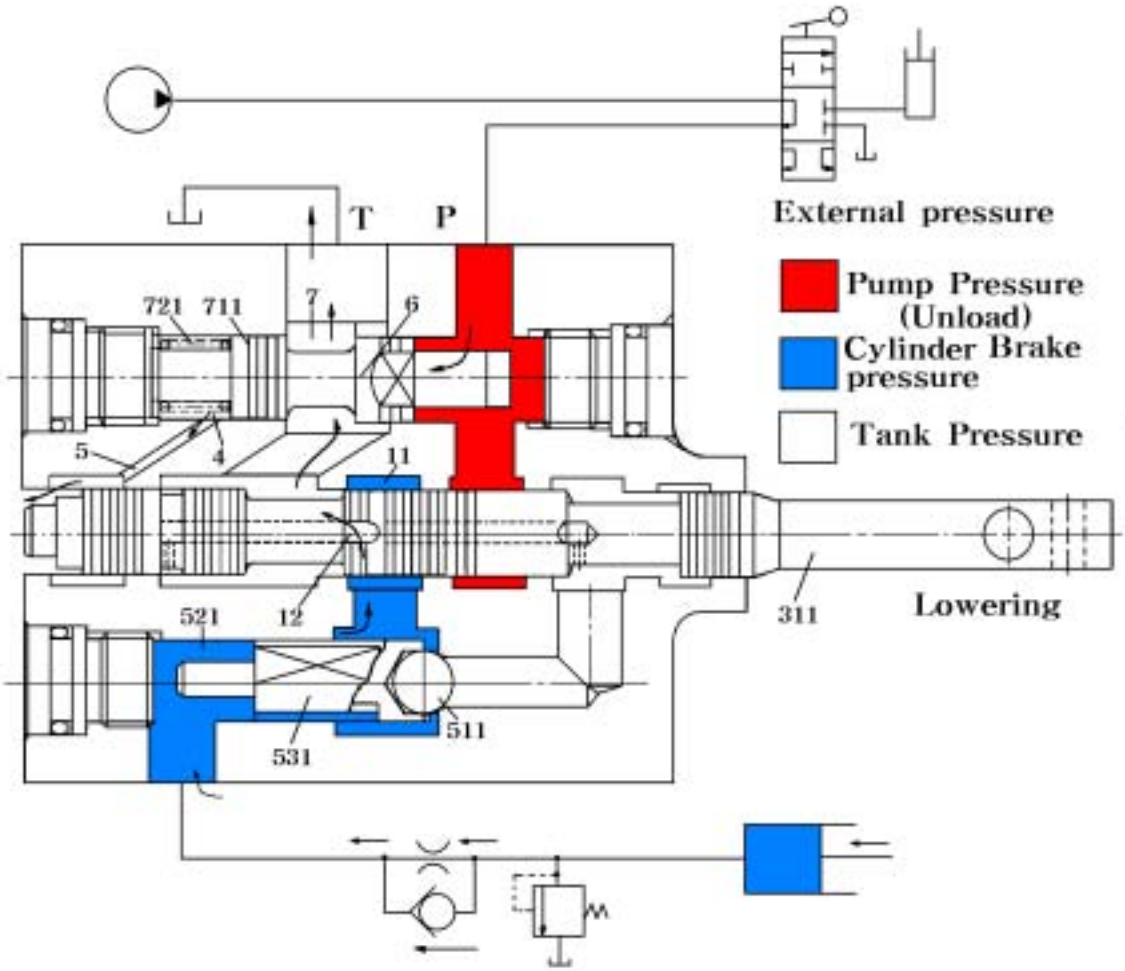

Fig.9-45

https://truckmanualshub.com/

5. SERVICING INSTRUCTIONS.

1) Required tools
-6mm set screw wrench and torque Wrench
-19mm spanner and torque wrench
-22mm spanner and screw wrench
-conventional screw driver[3mm(0.12 in) in blade width]
-plastic rod [Ø10mm(Ø0.394 in)]
Oil stone,cleanser,tweezers,etc.

2) Tightening torque

Description	Size	Tightening torque Kgf.m(ft.lbs)
Plug	M16	3.5 (25.3)
Plug	M14	2.5 (18.1)
Sunk Plug	PT /4	2.5 (18.1)
Spool head	M6	0.8 (5.8)
Stopper bolt	M6	0.8 (5.8)

3) Disassembly

-Main spool and related parts.

Remove the snap ring E and draw out the main spool carefully.

Note:
The main spool and spool head are screw-fitted, so they can be separated from each other.But they are tightened with adhesive applied,so they should not be disassembled unless required.

-**Holding check valve and related parts**.
Remove the plug and take out the spring.The poppet can come out only by slanting the casing, and if not,remove it with pliers.

-**Unloading valve(1): compensator**
Remove the plugs from both sides and take out the spring and spool.

-**Unloading valve(2)**
Remove the plugs from both sides and take out the spring and spool.

Note:
The spool and stopper bolt are tightened with each other with adhesive applied to their threads, so they should not be separated unless required. by removing the stopper bolt,the poppet and spring can be taken out of the spool.

-**Pilot spool and related parts.**
Remove the plugs from both sides and take out the spring and push rod.

The pilot spool set can be pushed out from the push rod side with a Ø10 mm(Ø0.394 in) rod. When pushing,put the rod on the sleeve,not the spool.

Note:
The spool and sleeve cannot be separated from each other.

4) Reassembly
-Inspection of the disassembled parts.

Place all the disassembled parts side by side on a clean surface.Check o-rings for damage and replace defective ones.Inspect the friction surfaces of the spools,poppets,and casing for flaws like scratches.Correct slight flaw with an oil stone and wash corrected parts in a cleanser.

-Main spool and related parts.
When the head is disassembled,it should be tighten and locked securely using adhesive. Before retaining the spool with the snap ring E, make sure that the spool slides smoothing within the casing.

-Holding check valve and related parts

https://truckmanualshub.com/

Put the poppet into hole B as shown in the figure and make sure that the poppet slides smoothly.Then put the spring in and tighten the plug,on which the O-ring must be installed,to the specified torque.

-unloading valve(1) and related parts.

Install the spool into hole C(Fig.9-19) in the correct direction.Put the spring in and tighten the plug to the specified torque.

-Unloading valve(20 and related parts.

Install the spool and confirm that the returns smoothly by the spring force after it is compressed by pushing the stopper bolt end and check that it slides smoothly.

-Pilot spool and related parts.

Be careful not to damage the O-ring during pilot spool installation.After assembly,make sure that the spool slides smoothly by pushing the push rod.

Problems	Causes	Countermeasures
1.Lift does not rise	1) Insufficient engine speed	Raise engine speed slightly
	2) Insufficient transmission oil	Maintain oil level by replenishing with the same kind of oil
	3) Air taken in through suction	Tighten securely or replace broken parts.
	4) Clogged suction filter	Clean.
	5) Broken or poor hydraulic pump	Inspection pump and repair or replace if necessary.Pay particular attention to shaft seal because a broken seal sometimes intakes air.
	6) Poor link mechanism	Inspect,adjust,repair,or replace if necessary.(Refer to section 3)
	7) Excessive load on lift	Decrease load
	8) Broken cylinder	Replace
	9) Too low viscosity of transmission oil	As it will cause oil leaks or internal wear,replace with gear oil of SAE80
	10)Maladjusted relief valve	Readjust. (Cracking:refer to the specifications)
	11)Excessive internal leaks	Inspect cylinder and valves.Replace damaged seals,and repair. (Check each part systematically)
	12)Broken flow divider (Stuck sequential valve spool)	Disassemble and wash spool clean. If it is damaged seriously,replace it as an assembly.If damage is minor,correct surface with oil stone and finish by lapping.
	13)Broken control valve (Even when spool is shifted to up position,lift does not rise)	
	①Stuck compensator plunger (unloading valve 1)	Lap after repairing flaws with oil stone
	②Clogged orifices or slanted orifices in pilot passage.	Clean them with compressed air or a sharp point.
	③Stuck poppet(unloading valve 2)	Correct minor flaws with oil stone
	④Bitten or stuck check valve plunger	Lap after repairing flaws with oil stone
	14)Broken slow-return check valve	
	①Stuck poppet	Lap after disassembling,cleaning, and repairing flaws with oil stone

https://truckmanualshub.com/

Problems	Causes	Countermeasures
2.Too low rising speed of lift	1)Above causes can also be possible	Repair according to above instructions.
	2) Too small a spool stroke in control valve	Inspect,readjust,or replace link mechanism if necessary.
	3)Broken compensator spring (unloading valve 1) in control valve	Replace spring.
	4)Stuck poppet (unloading valve 2)	Correct minor flaws with an oil stone
3.Lift lowers even when adjust knob is closed fully with adjust Handle (While engine is stopped)	1)Stuck poppet	Lap after disassembling,cleaning,repairing flaws with oil stone
	2)Poor valve seat	Replace valve
	3)Poor 0-ring	Replace
4.Lift does not lower	1)Slow-return-check valve knob is turned to the lock position	Turn knob to fast position
	2)Stuck poppet of slow-Return-check valve	Lap after disassembling, cleaning,repairing flaws with oil stone
	3)Seized lift shaft	Apply grease and repair or replace bushings or shaft if necessary.
	4)Stuck main spool	Lap lightly after disassembling, cleaning, and repairing flaws with oil stone or replace as an assembly.
5.Too slow lift lowering speed	1)Above mentioned causes can also be possible.	Repair or adjust according to instructions mentioned above.
	2)Insufficiently lowered control lever	Lower lever sufficiently
	3)Excessively closed slow-return check valve	Open valve sufficiently
6.When hydraulic control lever is raised,relief,valve beeps.	1) Maladjusted lever stopper check valve	Readjust lever stopper guide position
	2) Poor link mechanism	Inspect,readjust,repair,or replace link mechanism if necessary.
7.Fluid overheating	1)Excessively high working pressure	Inspect and adjust
	2)Too high or low viscosity of working fluid.	Replace with fluid of adequate viscosity.
	3)Insufficient fluid	Maintain specified level by replenishing

https://truckmanualshub.com/

Problems	Causes	Countermeasures
8.Pump noise	1) Partially clogged suction filter or suction piping.	Clean.
	2) Air inhaled through suction piping and intake pipe connections for pump	Inspect and retighten.
	3) Loosened pump cover tightening bolts.	Inspect and retighten
	4) Too rich oil viscosity	Replace with fluid of adequate viscosity.
	5) Broken or worn pump parts	Inspect and replace defective parts.
9.Excessive wear,deflection or damage of pump	1) Dirty fluid	Eliminate foreign matter and inspect filters.
	2) Circuit pressure exceeds pump capacity	Adjust relief valve or replace if necessary
	3) Oil-less operation due to Insufficient oil quantity	Inspect transmission oil level and maintain specified oil level by replenishing.In either case,clean, and repair pump parts and replace damaged ones if necessary.
10.Oil leaks outside pump	Broken or fatigues oil seal or O-ring	Replace
11.Oil leaks from piping or joints	Poorly connected piping	Inspect,clean,and eliminate dust. Repair flaws with oil stone if necessary. Retighten.
	Poor O-ring	Replace
	Broken piping	Replace with a new one after washing clean related parts.
12.Oil leaks around lift arm	Poor oil seals	Replace oil seal or bushing if necessary
13.Independent PTO clutch slips or is too slow in engaging	1) Clogged fixed orifice of Flow divider	Disassemble and wash clean.
	2) Port B regulated pressure is too slow	Inspect and reset pressure
	3) Clogged PTO pressure control valve or stuck	Disassemble and wash clean. Repair flaws with oil stone if necessary or replace with a new one.
	4) Poor flow divider solenoid valve	Disassemble and repair or replace with new one if necessary .

https://truckmanualshub.com/

Problems	Causes	Countermeasures
14.Independent PTO clutch is too quick in engaging	1) Stuck pressure-reducing valve spool	Lap after correcting flaws with oil stone
	2) Fatigued or broken pressure-reducing valve spring	Replace.
	3) Worn or broken sealing of PTO clutch	Replace
	4) Worn friction plates or driven plates	Replace
	5) Overheated fluid	Refer to paragraph for "fluid overheating"
	6) Port B regulated pressure is too high of Flow-divider	Inspect and reset pressure
	7) Stuck pressure-reducing valve spool	Lap after correcting flaws with oil stone
	8) Clogged orifice in pressure-reducing valve spool	Clear clogged with compressed air or with a sharp point.

https://truckmanualshub.com/

Chapter 10 Electrical accessory and instruments

SECTION 1. GENERAL DESCRIPTION ----------10-1

SECTION 2. SPECIFICATIONS ---------- 10-1

SECTION 3. BATTERY----------10-2
1.1. Inspection----------10-2
1.2. Inspection of electrolyte level----------10-2
1.3. Inspection of electrolyte specific gravity----------10-2
1.4. Battery testing chart----------10-3
SECTION 4. Meters and switches----------10-5
1. Meters----------10-5
1.1 Removal----------10-5
1.2 Tacho/Hour meter----------10-5
1.3 Fuel gauge and fuel gauge sensor----------10-5
1.4 Thermometer----------10-6
2. Starter switch----------10-6
3.Combination switch----------10-6
4.Stop light switch----------10-8
5.Relay unit----------10-8
6.Fuse----------10-8
7.Controller Unit ----------10-9
8.Trailer socket(7P) ----------10-11

SECTION 5. EARTHING POINT----------10-12

SECTION 6. WIRING DIAGRAM----------10-14

SECTION 7. TROUBLESHOOTING----------10-15

https://truckmanualshub.com/

Chapter 10 Electrical accessory and instruments

SECTION 1. GENERAL DESCRIPTION

The basic electrical system of tractors consists of the engine cranking system ,battery charging system,lighting system,meters,switches,etc.
For further information concerning the engine cranking equipment and battery charging equipment, please refer to the engine manual.
The battery is a power source to activate the engine cranking system,lighting system,and other electrical equipment.The lighting system is used to activate the illumination lights,indicators,and signal lights.The meter is a device that enables the operator to be aware of the present operating conditions;oil pressure gauge,water temperature gauge(thermometer),fuel gauge,etc.are installed.
All the controls,meters, and indicators are arranged around the operator’s seat for easy Maneuverability readability,and convenience.

SECTION 2. SPECIFICATIONS

MODEL			T290/T300/T330/2810NEW	
PART NAME			Specification(w)	Quantity
1.lighting system	Head lights		50/40	2
	Front combination lights	Turn signal lights Small lights	21 5	2 2
	Rear combination lights	Turn signal lights Stop lights Tail light	21 21 5	2 2 2
2. Monitoring system	Meter assembly	Hour meter Fuel gauge Thermometer Pilot light	- - - (3.4)	1 - - 15
	Horn		-	1
3.Fuses	Fuses(A)	In main fuse box (with spare fuse)	15 10	4 6
	Fusible links	0.85 1.25	- -	1 1
4.Battery			12V75AH	1

SECTION 3. BATTERY

https://truckmanualshub.com/

1.INSPECTION

1.1 INSPECTION OF ELECTROLYTE LEVEL

As the battery repeats charging and discharging during operation.The water content in the electrolyte gradually evaporates, and as a result,the level should be inspected at the specific level;replenish with distilled water.

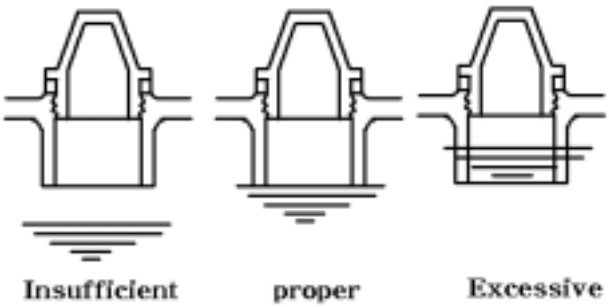

Fig.10-1 electrolyte level

1.2 INSPECTION OF ELECTROLYTE SPECIFIC GRAVITY

The specific gravity of the electrolyte lowers as the battery discharges,so the battery condition can be determined by measuring the specific gravity.The specific gravity can be measured generally with a suction type hydrometer which must be read properly as shown in Fig. 10-2

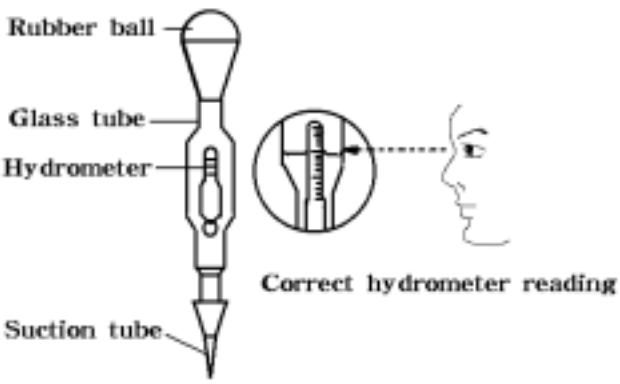

Fig.10-2 electrolyte gravity

Note:
When the distilled water is added,charge the battery to mix it well into the electrolyte before measuring the specific gravity.

a.Temperature correction of the hydrometer reading

The specific gravity of the battery electrolyte(diluted sulfuric acid) varies with the temperature of the electrolyte at a rate 0.0007 specific gravity point for each 1℃ change in temperature.Therefore, when the specific gravity of the electrolyte in the battery is measured with a suction type hydrometer,a temperature correction should be made,using the following formula to permit the direct comparison of the measured valve with the standard specific gravity at 20 ℃.

S_{20} :St+0.0007(t-20)

S_{20} :Specific gravity at standard temperature of 20 ℃.

t : Temperature of the electrolyte at the time of measurement

St : Specific gravity of the electrolyte measured at t ℃.

1.3 BATTERY CHARGING

If the specified gravity of the battery electrolyte in lower than 1.220 (at 20 ℃),the battery should be recharged,because leaving an undercharged battery without recharging it will lead to permanent battery damage.The battery is subject to self-discharge at a rate as shown in the table below.Therefore it should be recharged from time to time when storing the battery unused for a long period of time.

When recharging the battery,wash clean the outside of the battery case and the battery posts.Check the level of the electrolyte in each cell and replenish with distilled water as necessary.

Temperature	Self-discharge rate per day (%)	Decrease in specific gravity per day
30 ℃	1	0.002
20 ℃	0.15	0.001
5 ℃	0.025	0.005

https://truckmanualshub.com/

1.4 BATTERY TESTING CHARTS

Step 1.

VISUAL INSPECTION

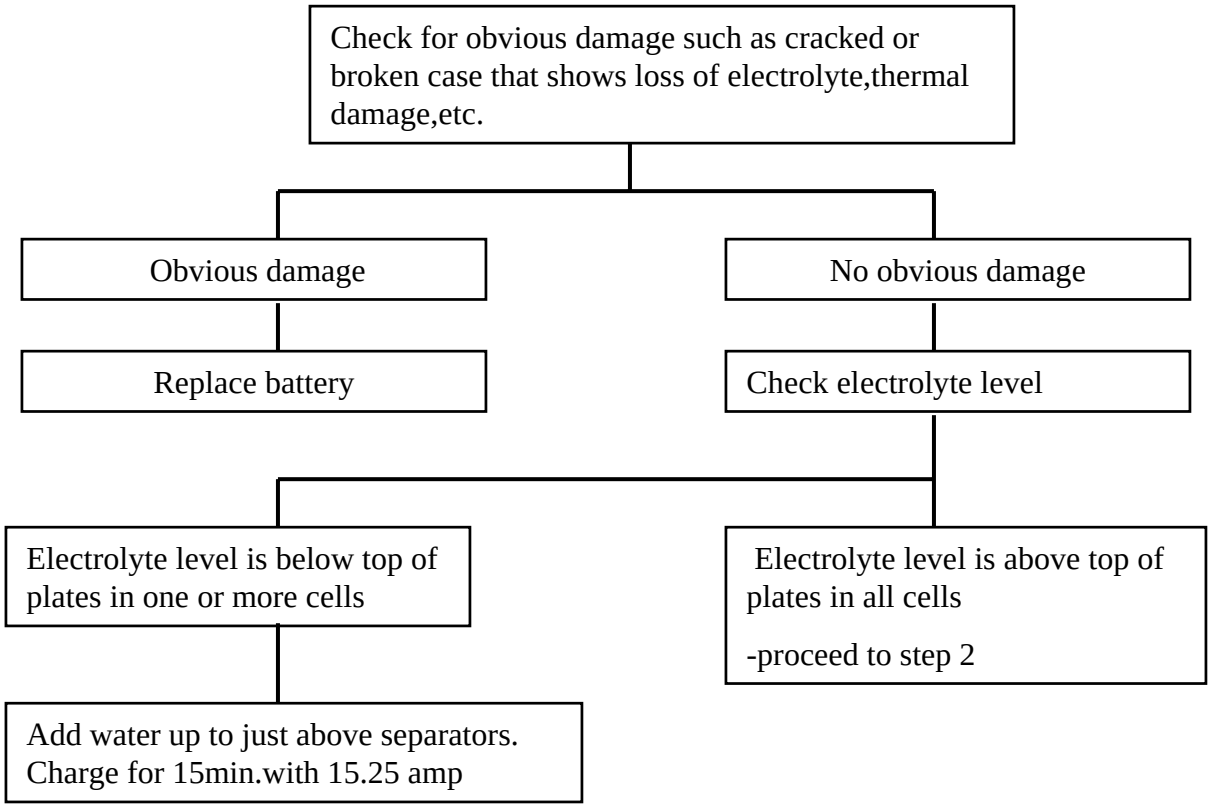

Step 2

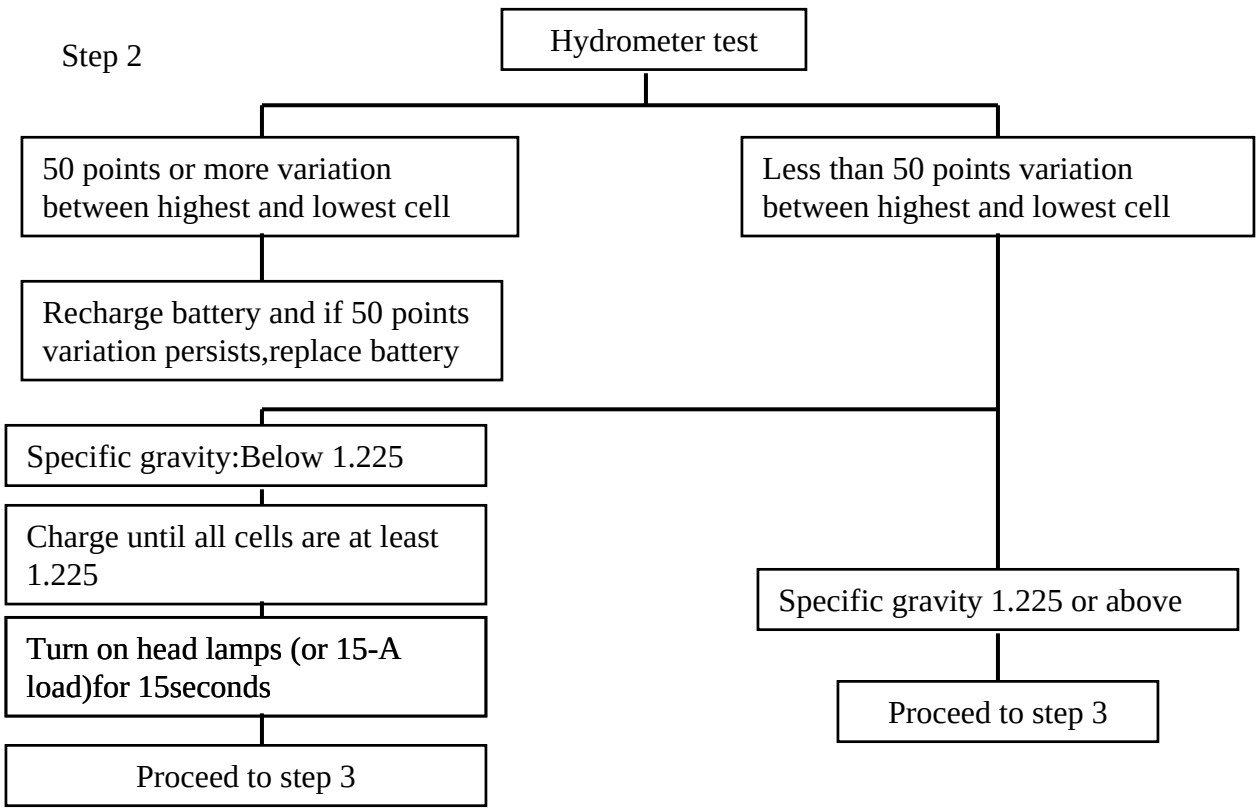

https://truckmanualshub.com/

Step 3

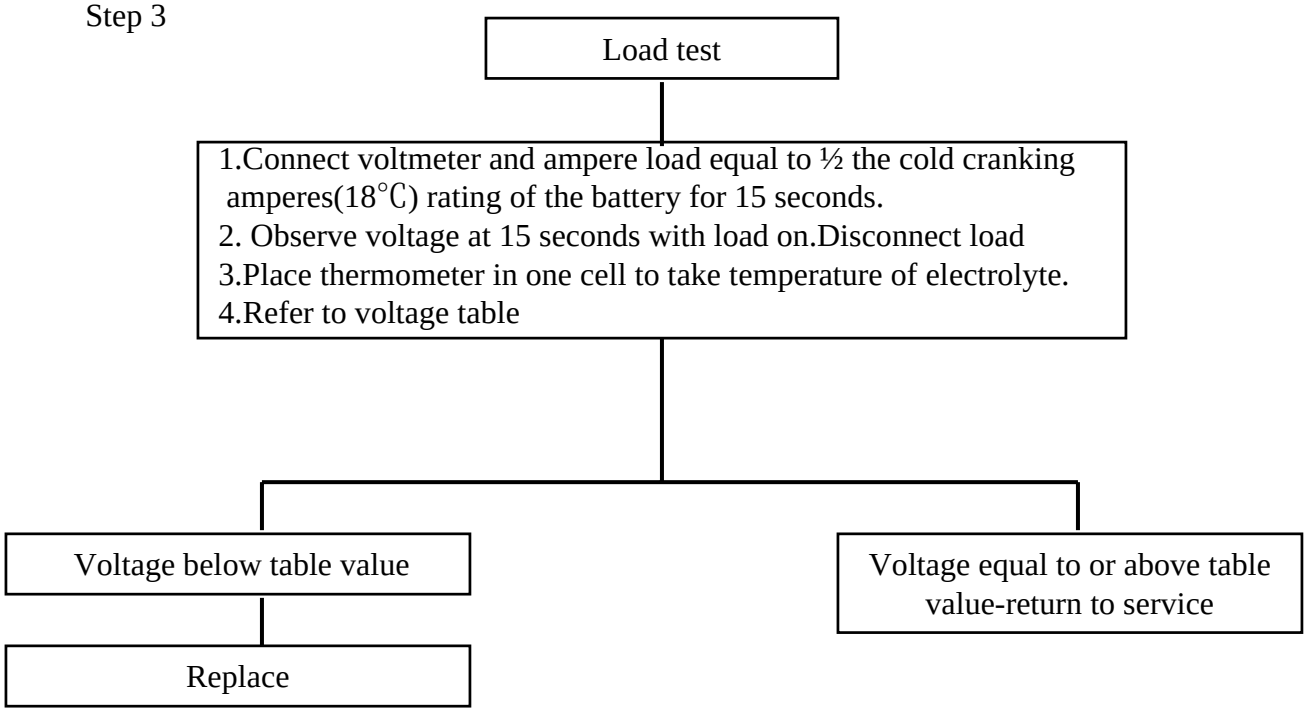

Voltage table	
Estimated electrolyte temperature	Minimum required voltage under 15 sec.load (Use ½ these values for 6-V batteries)
70 °F (21 °C) and above	9.6
60 °F (16 °C)	9.5
50 °F (10 °C)	9.4
40 °F (4 °C)	9.3
30 °F (-1 °C)	9.1
20 °F (-7 °C)	8.9
10 °F (-12 °C)	8.7
0 °F (-18 °C)	8.3

https://truckmanualshub.com/

1.METERS

1.1 Removal

a. Disconnect the cable from the negative post.
b. Remove the philips screw which hold the meter panel and lift up the panel assembly a little

Fig.10-3 Meter panel

c. Then the meter panel can be detached by removing the wire harness couplings.

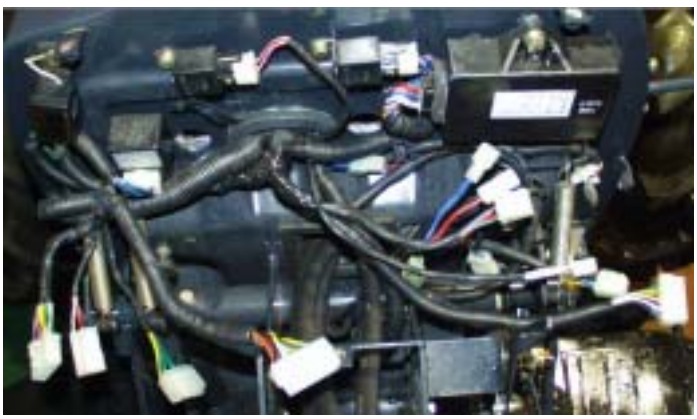

Fig.10-4 Wire harness

1.2 Tacho/hour meter and sensor

a.Construction

An electric tachometer is employed along with a Tachosensor.The tach/hour meter converts engine revolutions to electric signals,which is sent to the tachometer.The tachometer displays the engine revolutions visually.The tachosensor generates 14 pulses per one engine revolution.

The generated pulses are converted into voltage output through a converter.Then the voltage is divided into three different phase coils through a IC circuit.The tachometer pointer is swung by the compound magnetic field generated by the three point.

b. Inspection

-Tachometer

The allowable error of a tachometer reading is specified as shown on the table below.If the reading deviates from the specified value.replace the meter assembly.

Engine speed(rpm)	1000	2500
Allowable error(rpm)	±150	±150

1.3 Fuel gauge and Fuel gauge sensor

a.Construction

When the fuel tank is full,the float is at the top and has moved the variable resister to a position of least resistance.This feeds maximum current into the meter circuit and the pointer swings fully to the F position.Consequently when the fuel level in the tank is low,everything acts in reverse.

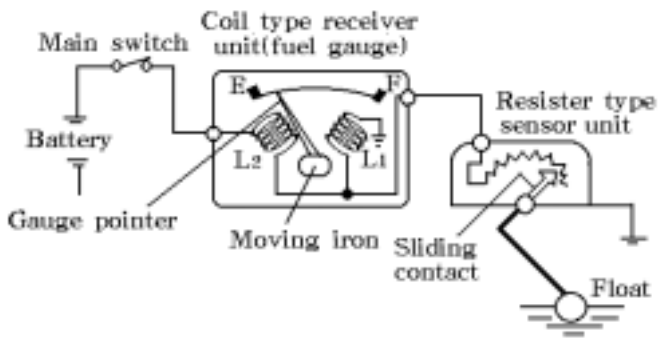

Fig.10-5 Fuel gauge sensor

b.Inspection https://truckmanualshub.com/

-Fuel meter
Connect the fuel gauge to form a circuit with the resisters as shown Fig.10-6 and check to see if the gauge pointer swings to each position: F.1/2 and E by changing the resistance value.
If it does not,change the gauge assembly.

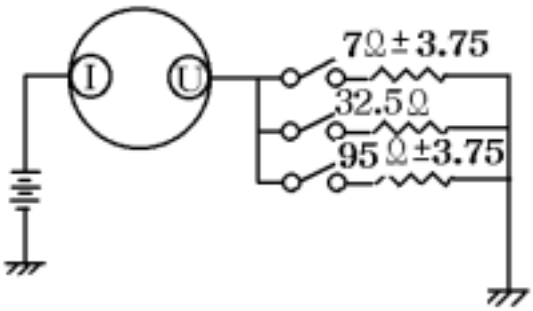

Fig.10-6

-Fuel gauge sensor(variable resistor)
Check each resistance value with a tester at each float position as shown in Fig.10-7.if the measured values are deviated from respective specified values,replace the sensor assembly.

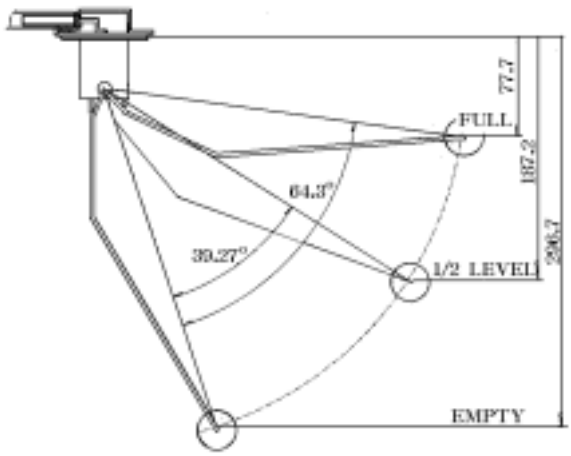

Fig.10-7

Standard pointer position	F	(1/2)	E
Regulated resistance(Ω)	7	32.5	95
Sensor Unit resistance(Ω)	7	(-)	95

Note:
1) Figures in parentheses are reference value
2) Inspect each position in order F to E
3) Read values in three minutes.

1.4.Thermometer

a. Construction
This is the same moving magnet type meters as the fuel gauge.As the coolant temperature becomes higher,the resistance in the thermo unit(sensor) become lower,which results in more current to the meter circuit and swinging the meter pointer to the high temperature side on the scale.Of course,as the coolant temperature become lower,everything acts in reverse.

b. Inspection
Normally the thermometer resisters higher values as the coolant temperature rises after the engine is running.If it does not,check the wiring first.If the wiring is normal.Replace assembly.

2. STARTER SWITCH

(1) Removal
a. Remove the dash cover(Upper)
b. Remove the ring nut holding the starter switch using a conventional screw driver.
c. Pull out the key switch as shown in Fig.10-8

Fig.10-8

(2) Inspection

https://truckmanualshub.com/

a.The main switch circuit,switching positions, and terminals are as shown in the figures. Check the continuity across respective terminals referring to the switch circuit diagram. Replace a defective switch as an assembly

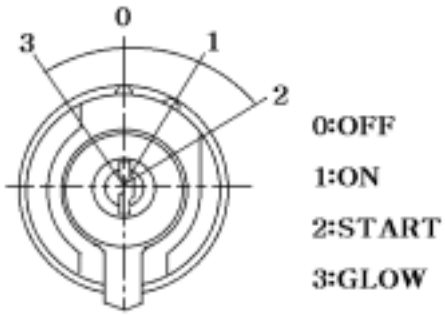

Fig.10-9

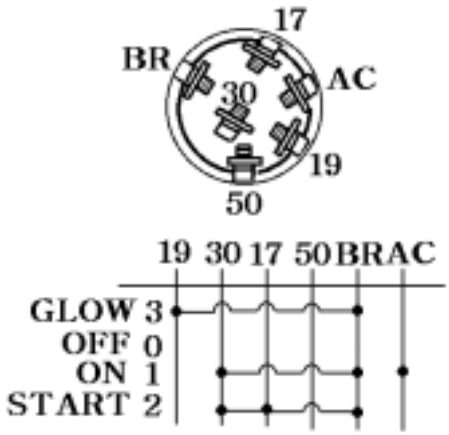

Fig.10-10

3. COMBINATION SWITCH

1) Removal

(1) Remove the meter panel
(2) Remove the light switch knob and turn signal switch lever.

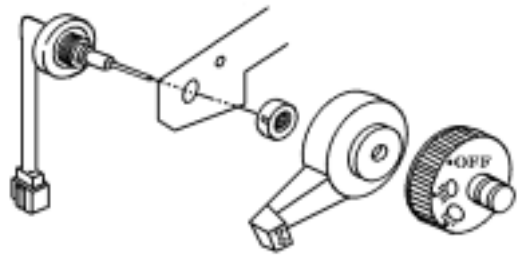

Fig.10-12

(3) Release the ring nut with a conventional screw drive(-) and remove the combination switch.

2) Inspection
Each switch circuit is as shown,so check each switch for a continuity across respective terminals with a tester.Replace a defective switch as an assembly.

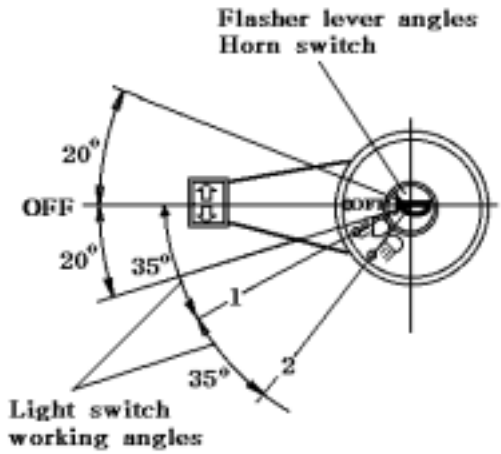

Fig.10-13 combination switch

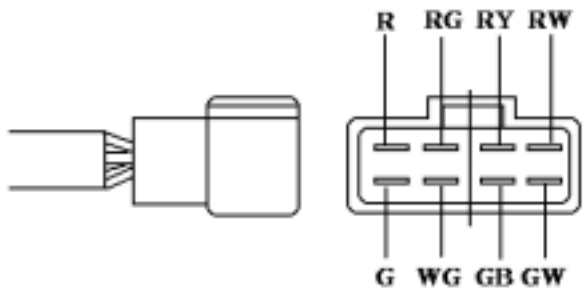

Fig.10-14 Harness socket

https://truckmanualshub.com/

-Lighting

Color code	R (Red)	RG (Red/ Green)	RW (Red/ White)	RY (Red/ Yellow)
	B1*1	T	1	2
OFF **2				
1	●	●	●	
2	●	●		●

*1 :Terminals

**2: Switching positions

-Flasher

Color code	G (Green)	WG (White/ Green)	GB (Green/ Black)
	B2*1	R	L
1**2	●	●	
OFF			
2	●		●

*1 :Terminals

**2: Switching positions

-Horn switch

Color code	R(Red)	GW(Green/White)
	B1*1	H
Free**2		
Push	●	●

*1 :Terminals

**2: Switching positions

4. STOP LIGHT SWITCH

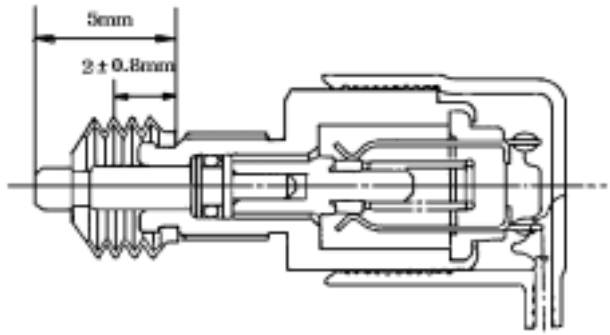

Fig.10-15 Stop light switch

Capacity	10~20A (DC12V)
Stroke to ON	3 ±0.5mm
Total stroke	8mm

5.RELAY UNIT

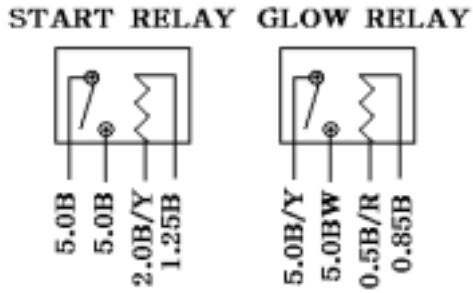

Fig.10-16 Relay unit

6. FUSE

Fuses are installed in the main fuse box and one for the headlights.Three fusible links are installed to prevent the wiring from burning due to a short circuit.

Fig.10-17 Fuse box

https://truckmanualshub.com/

Each fuse is connected as follows

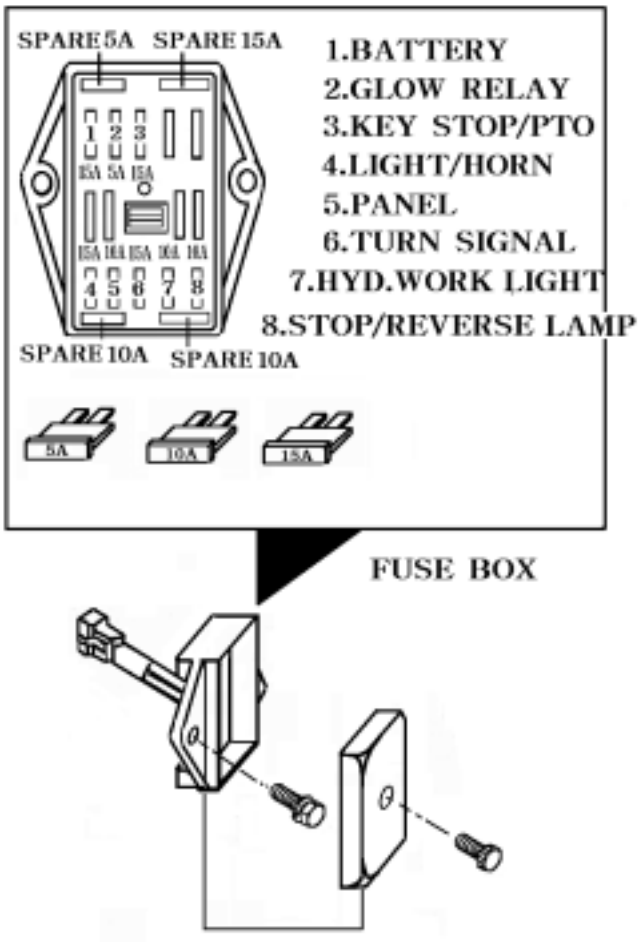

Fig.10-18

The circuit has 8 blade type fuses in its wiring circuit.When a fuse has blown replace it with one of the same value.

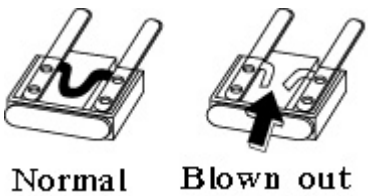

Fig.10-19

Note:

Using a large capacity fuse or wire burn out the wiring system.

Use fuse tongs to replace fuses

https://truckmanualshub.com/

8.Trailer socket

A hella’s 7-pin trailer socket is equipped as a standard equipment.Lamp on a trailer can be operated through the socket.

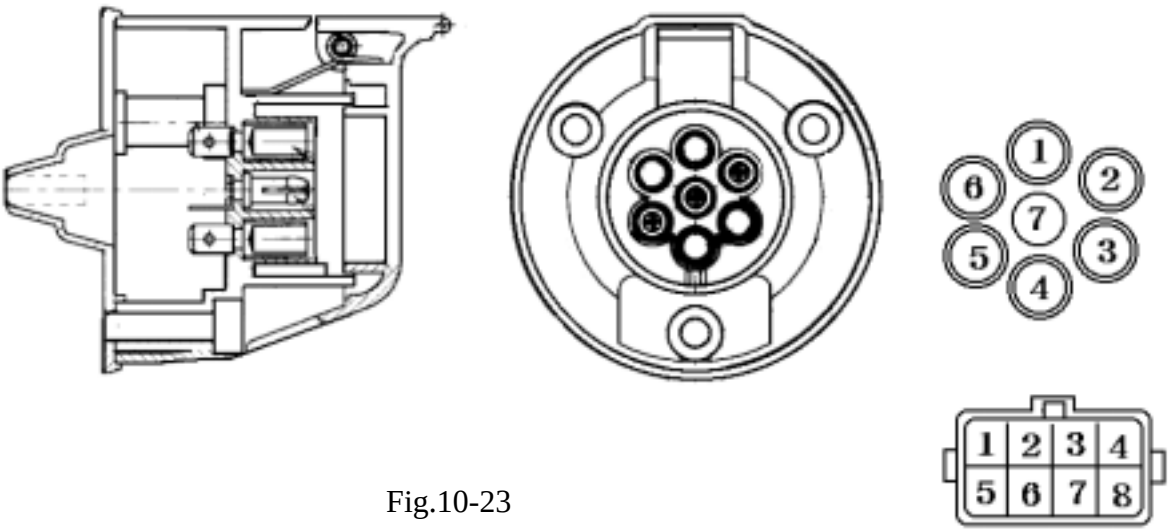

Fig.10-23

Socket No.	Description	Color	Specification	Wire Housing
1	Earth	B	AVSS 2.0	1
2	Small light(Tail light)	Y	AVSS 0.85	2
3	Turn signal (LH)	GB	AVSS 0.85	3
4	Stop Light	WL	AVSS 0.85	4
5	Turn signal (RH)	GY	AVSS 0.85	5
6	Rear Light (Number plate)	YW	AVSS 0.85	6
7	Reserve light	WG	AVSS 0.85	7

Note:

Lamp on the trailer should be of the same size or smaller than those on the trailer.

https://truckmanualshub.com/

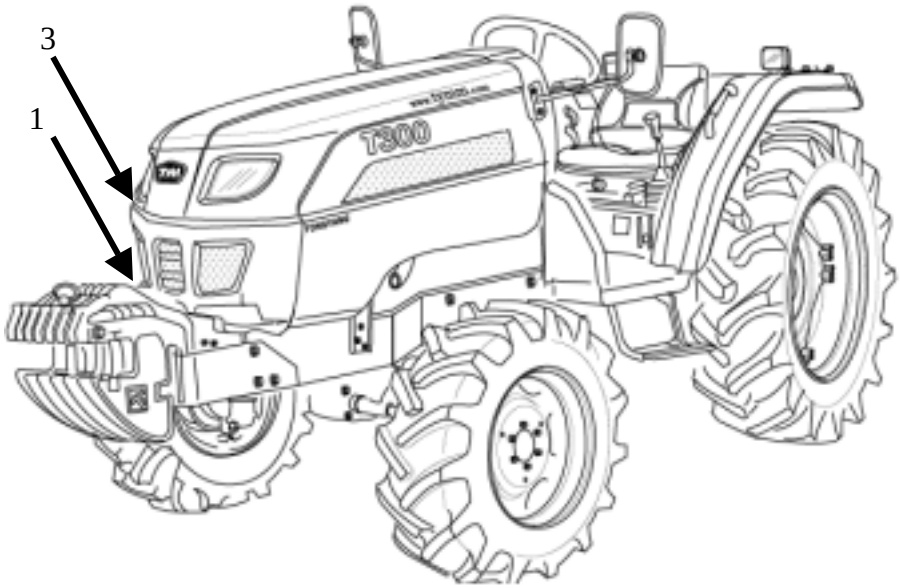

Fig.10-24

1) Front axle bracket (RH)

Earthed at upper upper tapped hole in the axle bracket A.

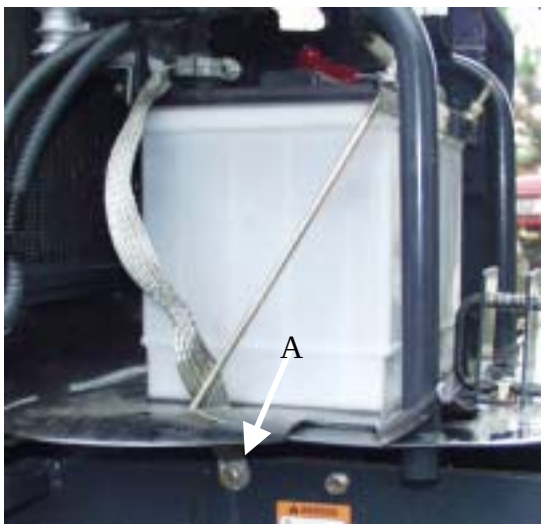

Fig.10-25

2) Contact surfaces of the axle bracket and engine where they tightened together

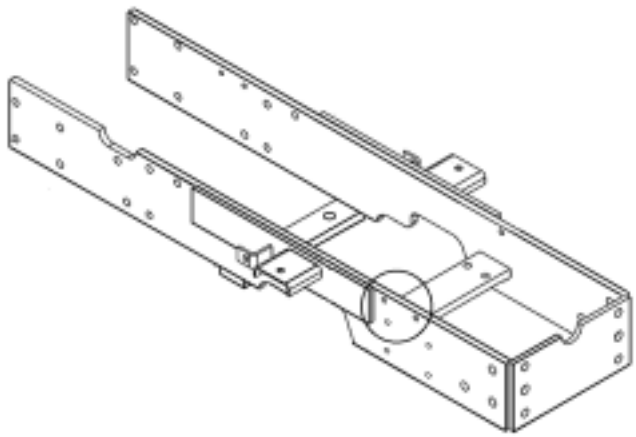

Fig.10-26

3) Right surface of the frame comp.Where the battery bracket is to be installed.

https://truckmanualshub.com/

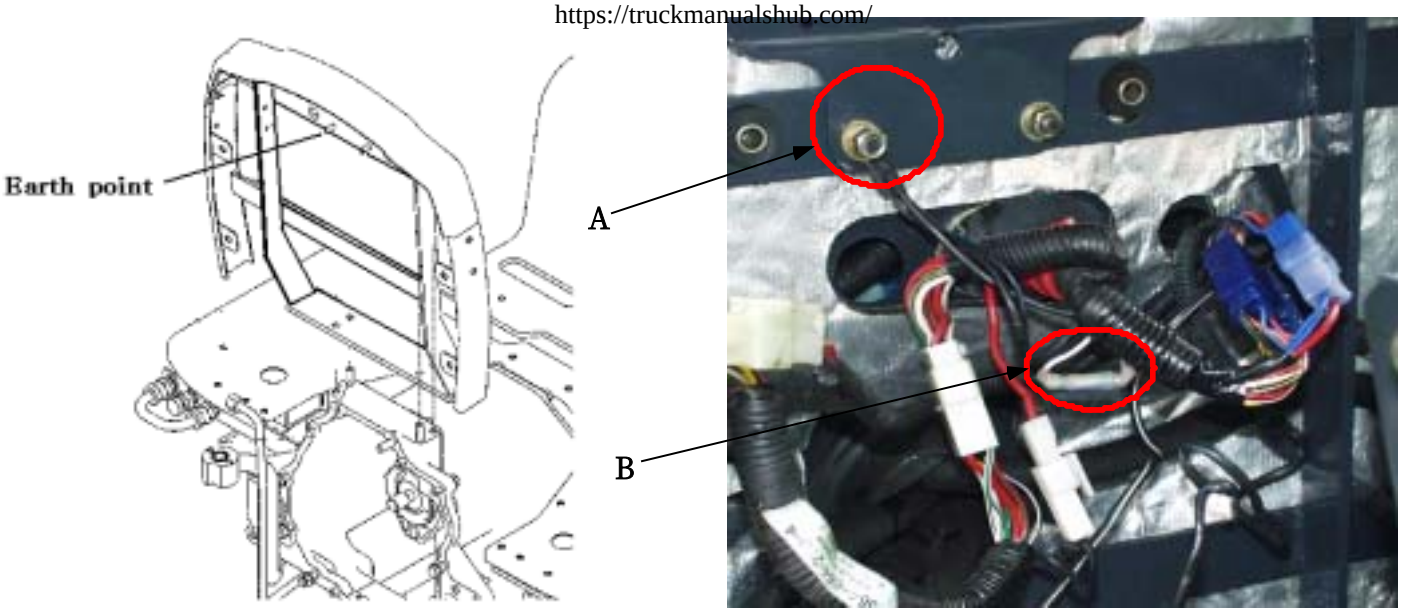

Fig.10-27 Hood frame

https://truckmanualshub.com/

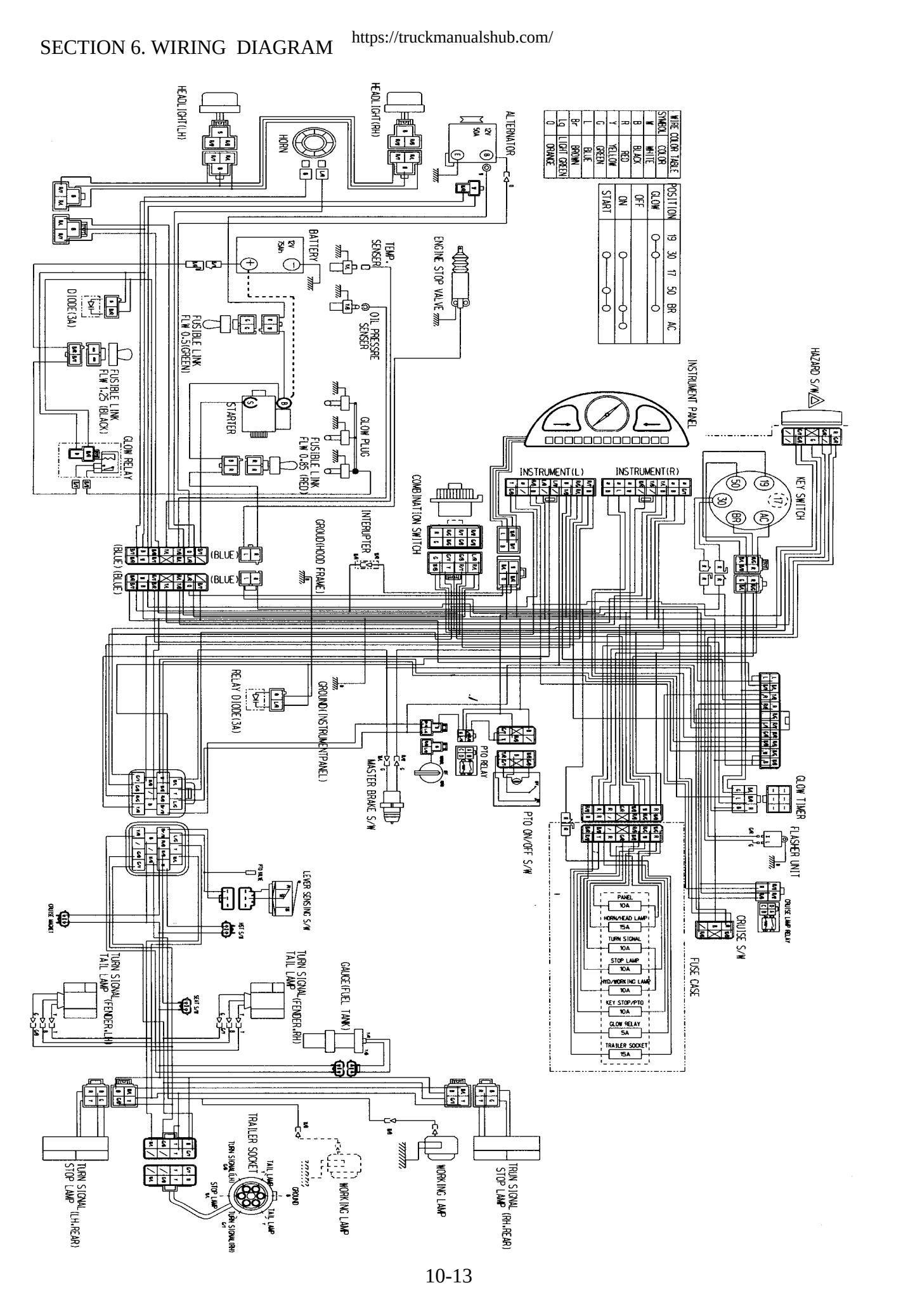

SECTION 7. TROUBLESHOOTING https://truckmanualshub.com/

Important: Whenever effecting a repair the reason for the cause of the problem must be investigated and corrected to avoid repeating failure.

The following table lists problems and their possible causes with the recommended remedial action

1. LIGHTING SYSTEM

Problems	Causes	Countermeasures
Several or all lights do not illuminate	Discharged battery	Check battery and charge or renew
	Loose or defective battery cable connection	Inspect,clean,and tighten connection
	Loose wire harness connectors	Check and ensure connectors securely engaged
	Burnt out fuse or fusible link	Inspect and renew.Check circuit before re-connecting power
	Faulty wiring	Check lighting Circuit wiring and repair or renew
	Defective light switch	Check and renew
	Several light bulbs burnt out due to defective voltage regulation	Check and renew voltage regulator (Alternator)
Individual lights do not illuminate	Burnt out bulb	Check and renew
	Defective or corroded bulb contact	Inspect,clean or renew
	Burnt out fuse	Inspect and renew.Check circuit before reconnecting power
	Loose or broken wires	Inspect ,secure,repair,or renew wiring
	Poor ground connection	Inspect,clean, and tighten ground connection
Lights burnt out repeatedly	Faulty voltage regulator	Check and renew voltage regulator (Alternator)
Turn signal lights do not illuminate	Blown fuse	Inspect and renew.Check circuit before re-connecting power
	Inoperative flasher unit	Check and renew
	Inoperative turn signal switch	Check and renew
	Defective wiring or connections	Inspect circuit,clean,and tighten connection. Repair or renew wiring if necessary

https://truckmanualshub.com/

Problems	Causes	Countermeasures
Individual turn signal light does not illuminate	Burnt out bulb	Check and renew
	Corroded or loose bulb contacts	Inspect,clean,and renew
	Poor ground connection or damage wiring	Inspect,clean,and tighten connections or renew wiring
Turn signal pilot light is inoperative	Faulty bulb	Check and renew
	Defective flasher unit	Check and renew
	Faulty wiring or connections	Inspect,clean,and tighten connections or renew wiring
Stop lights does not illuminate	Inoperative stop light switch	Check and renew
	See “Individual lights do not illuminate”	See “Individual lights do not illuminate
Inoperative work light	Work light switch is not turned on	Ensure work light illuminates
	See “Individual lights do not illuminate	See “Individual lights do not illuminate

2. INSTRUMENTATION

Problems	Causes	Countermeasures
Inoperative or erratic meters	Loose or broken wiring	Inspect Circuit, tighten connections or renew wiring
	Defective meters	Inspect and renew
	Defective sensors	Check and renew
	Defective Voltage regulator	Check and renew voltage regulator (Alternator)
Monitor light does not illuminate	Loose or broken wiring	Inspect circuit,tighten connections or renew wiring
	Faulty main switch	Check and renew
	Burnt out bulb	Check and renew
	Burnt out fuse	Check and renew
	Defective switch	Check and renew
	Loose or broken wiring	Check and renew
PTO does not operate	Burnt out fuse	Inspect and renew.Check circuit
	Loose or broken wires or connections	Inspect circuit,tighten connections,or renew wiring
	Defective PTO switch	Check and renew
	Defective PTO solenoid	Check and renew

Problems	Causes	Countermeasures
Inoperative horn	Burnt out fuse	Inspect and renew.Check circuit before re-connecting power
	Loose or broken wires of connections	Inspect circuit,tighten connections,or renew wiring
	Defective horn switch	Check and renew
	Defective horn	Check and renew

3.GLOW SYSTEM

Problems	Causes	Countermeasures
All glow plugs do not heat red	Discharged Battery	Check battery and charge or renew
	Loose or defective battery cable connections	Inspect,clean,and tighten connections
	Loose wire harness connections	Check and ensure connectors securely engaged
	Burnt out fusible link	Inspect and renew.Check circuit before re-connecting power
	Faulty wiring	Check glow plug circuit wiring and repair or renew
	Defective main switch	Check and renew
Individual glow plug does not glow	Defective glow plug	Check and renew
	Defective or corroded glow plug contacts	Inspect,Clean,or renew
	Loose or broken wires	Inspect,secure,repair,or renew wiring
Glow monitor light does not illuminate	Defective glow timer	Check and renew
	Defective glow monitor light or monitor and warning check unit	See”Light system troubleshooting”

https://truckmanualshub.com/

4. STARTING SYSTEM

Problems	Causes	Countermeasures
Starter motor does not spin	Discharged battery	Check battery and charge or renew
	Defective stop light switch	Check and renew
	Defective key switch	Check and renew
	Defective starter motor connections or loose battery connections	Check,clean and tighten connections
	Faulty starter motor	Inspect,repair,or renew
	Defective master brake pedal	Inspect and try to push brake pedal
	Faulty reverse or forward pedal	Inspect ,adjust neutral
	Defective push switch	Check and renew
	Defective controller	Check and renew
Engine cranks slowly	Discharged battery	Check battery and charge or renew
	Excessive resistance in starter circuit	Check circuit connections and repair or renew faulty wiring
	Defective starter motor	Refer to the engine manual
	Tight engine	Refer to the engine manual

5. CHARGING SYSTEM

Problems	Causes	Countermeasures
Battery is low in charge or discharge	Loose or worn alternator drive belt	Check and adjust belt tension or renew
	Defective battery:It will not accept or hold charge.Electrolyte level is low	Check condition of battery and renew
	Excessive resistance due to loose charging system connections	Check,clean,and tighten circuit connections
	Defective alternator	Check and repair or renew
Alternator is charging at high rate (Battery is overheating)	Defective battery	Check condition of battery and renew
	Defective Alternator	Check and repair or renew
No output from alternator	Alternator drive belt is broken	Renew and tension correctly
	Loose connection or broken cable in charge system	Inspect system,tighten connections and repair or renew faulty wiring
	Defective voltage regulator	Check and renew
	Defective alternator	Check and repair or renew

https://truckmanualshub.com/

Problems	Causes	Countermeasures
Intermittent or low alternator output	Alternator drive belt is slipping	Check and adjust belt tension or renew
	Loose connection or broken cable in charge system	Inspect system,tighten connections and repair or renew faulty wiring
	Defective alternator	Check and repair or renew
Warning light dims	Faulty external charging circuit connections	Inspect system,clean and tighten connections
	Faulty rotor slip rings or brushes	Inspect and repair or renew
	Defective monitor and warning unit	Check and renew
	Faulty rectifier or rectifying diodes	Check and renew
Warning light is normal but battery is discharged	Defective voltage regulator	Check and renew
	Faulty starter	Check and renew
	Faulty rectifier or rectifying diodes	Check and renew
Warning light is lit during operation	Loose or worn alternator drive belt	Check and adjust tension or renew
	Defective diodes	Check and renew
	Faulty rotor,slip rings,or brushes	Inspect,repair,or renew
	Defective starter	Check and renew
	Defective rectifier or rectifying diodes	Check and renew
Warning light flashes intermittently	Faulty external charging circuit	Inspect circuit,clean,and tighten connections.Repair or renew faulty wiring
	Alternator’s internal connections	Inspect and test circuitry,Repair or renew

https://truckmanualshub.com/

CHAPTER 11. Service standards and other information

SECTION 1. SERVICE STANDARDS ---------- 11-1

1.Engine accessories ---------- 11-1

2.Clutch damper ---------- 11-2

3.Transmission ---------- 11-2

4.Front axle ---------- 11-3

5.Rear Axle ---------- 11-4

6.Power steering system ---------- 11-4

7.Hydraulic system ---------- 11-4

8.Electrical equipment ---------- 11-7

SECTION 2. TIGHTENING AND STARTING TORQUE SPECIFIED FOR PARTS. ---------- 11-10

SECTION 3. CONVERSION TABLES ----------11-11

https://truckmanualshub.com/

CHAPTER 11. Service standards and other information

SECTION 1. SERVICE STANDARDS.

Part names and inspection items	Nominal dimensions	Standard value for reassembly	Usable limits	Service instructions and remarks

1.ENGINE ACCESSORIES(CHAPTER 3)

1) RADIATOR

Coolant capacity	7 ℓ		Radiator alone
	12.7 ℓ		Whole cooling system
Radiator cap valve operating pressure	0.9 ±0.15kgf·㎠		

2) AIR CLEANER

Element capacity	Rated intake air : 2.6 ㎡ Air passing resistance : 340㎜Aq or less Filtering efficiency Total : 99.9% or more Cyclone : 55% or more Dust holding capacity : 180g or more	

OUTER ELEMENT

1. Clean or wash the element after 100 hours of operation.Replace a damaged on or one which has been used more than 500 hours.

a.Cleaning (when dust is dry)
Apply compressed air of 7Kgf/㎠ or lower to the inside of the element to blow dust outwards.
Never strike element to dust.

b.Washing(when dust is wet or oily)
Dissolve element cleanser or neutral detergent of good quality in water.Keep the element immersed in the solution about 30 minutes and then wash it by shaking gently.
-Then,rinse it in fresh water;Water pressure should be less than 2.8 Kgf/㎠.
-Leave the washed element in a shaded,well-ventilated place to dry itself.
Never force-dry heat or compressed air.

2. An element which has been washed five times should be replaced with a new one.
3. When the tractor is used in dusty situation,Inspect the element everyday and clean if necessary

https://truckmanualshub.com/

Part names and inspection items		Nominal dimensions	Standard value for reassembly	Usable limits	Service instructions and remarks

2. MAIN CLUTCH (CHAPTER 4)

CLUTCH DISC ASSEMBLY (Dry single plate) Facing wear			8.4 ±0.3㎜	6.5 ㎜	Rivet head depression should maintained at more than 0.2 ㎜
Play between hub spline and input gear in rotational direction				0.3 ㎜	Should be measured on the hub.
Clutch cover (Dual type) Pressure plate flatness			0.05 ㎜ or less		
Spline hub	No.of teeth	13			
	Large diameter		Ø25.0 ㎜		
	Small diameter		Ø21.7 ㎜		
Distance from release lever			0.7 ㎜	1.0 ㎜	
Distance from flywheel surface to release lever top		35.0 ±1.0 ㎜ (IP TYPE)			
Free play of CLUTCH PEDAL			20 30 ㎜		Adjust with the clutch rod (turn buckle)
Total stroke			97 ㎜		
Clearance between safety switch and push arm			12 ±1 ㎜		

https://truckmanualshub.com/

Part names and inspection items	Nominal dimensions	Standard value for reassembly	Usable limits	Service instructions and remarks

3. TRANSMISSION (CHAPTER 5)

1) FRONT AND SPACER TRANSMISSIONS

TRANSMISSION OIL CAPACITY				32 ℓ
SHIFTER DISENGAGING LOAD				
Main shift		4 - 7 kgf		Measured at the shifters (both for synchromesh and sliding-select gear)
Front wheel drive		4 - 6 kgf		Measure at the shifter
PTO shift		8 - 10 kgf		Measure at the shifter
SYNCHRONIZER ASSEMBLY				
Assembled width	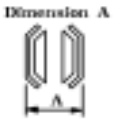	51.17 ㎜		
Synchro-hub thrust load		13.0-18.8 kgf	9.5 kgf	from neutral to engaging
Individual gears back lash		0.1 0.2 ㎜	0.5 ㎜	
Independent Rear PTO clutch	Disk thickness	2.6 ±0.1 ㎜	2.3 ㎜	
	Disk flatness		0.2 ㎜	
	Driven plate flatness		0.2 ㎜	
	Brake disk thickness	3.0 ±0.1㎜	2.5 ㎜	
	Brake disk flatness		0.2 ㎜	

https://truckmanualshub.com/

Part names and inspection items	Nominal dimensions	Standard value for reassembly	Usable limits	Service instructions and remarks

2) REAR TRANSMISSION

(1) DRIVE PINION & RING GEAR

Starting torque		0.08 - 0.11 kg·m		
Backlash		0.1 0.2 ㎜	0.5 ㎜	
Drive pinion and ring gear support shimming	Adjustment of relative positioning between drive pinion and ring gear		Available shims on drive pinion metal(support) Shim A : 0.1 ㎜ Shim B : 0.2 ㎜ Available shims on dif-case Shim A : 0.1 ㎜ Shim B : 0.2 ㎜	

(2) DIFFERENTIAL

Backlash between dif-pinion and dif-side gear		0.1 0.2 ㎜	0.5 ㎜	Pinion thrust collar or gear

https://truckmanualshub.com/

Part names and inspection items		Nominal dimensions	Standard value for reassembly	Usable limits	Service instructions and remarks

4.FRONT AXLE (CHAPTER 6)

1) Front drive axle (4WD)

Tire inflation		Front : 2.2 kgf/㎠ Rear : 1.8 kgf/㎠			
Wheel alignment		①Toe-in : 2 6 ㎜ ②Camber : 3 °±1 ° ③Caster : 3 °±1 ° ④Rocking angle : 5 °±1 ° ⑤Steering angle : 52°±1°			
Front center pivot	shaft.dia.		Ø 50 ㎜	Ø 49.9 ㎜	wear limit : 0.1 ㎜
	bush	50 × 55 × 20	Ø 50 ㎜	Ø 55.35 ㎜	wear limit : 0.2 ㎜
Rear center pivot	shaft.dia.		Ø 75 ㎜	Ø 74.9 ㎜	wear limit : 0.1 ㎜
	bush	75 ×80 ×30	Ø 75 ㎜	Ø 75.2 ㎜	wear limit : 0.2 ㎜
Play in bush			0.3 ㎜		
Thrust play			0 0.2 ㎜	0.5 ㎜	Adjust with adjusting bolt
DIFFERENTIAL	Pinion gear		0.05 0.06 kgf·m		
	Starting torque		6~7 kgf-cm		
Thrust play			0.1 0.3 ㎜		shim:0.1, 0.2 ㎜
Drive pinion/ring gear backlash			0.1 0.2 ㎜		shim:0.1, 0.2 ㎜

https://truckmanualshub.com/

Part names and inspection items	Nominal dimensions	Standard value for reassembly	Usable limits	Service instructions and remarks

5.REAR AXLE (CHAPTER 7)

1) DISK BRAKE

FRICTION PLATE THICKNESS (WEAR AND CARBONIZER)		3.4 ± 0.1 ㎜	3.4 ㎜	

2)SEPARATE PLATE

Thickness (wear and damage)		2.5 ± 0.09 ㎜	2.5 ㎜	

3) BRAKE ROD TURN BUCKLE

Pedal play at the top		30 40 ㎜		

6. POWER STEERING SYSTEM(CHAPTER 8)

1) GEAR PUMP

Capacity	6.9 cc/rev (22.5 ℓ/min)	Theoretical value/revolution N=2500 rpm, P=150 kgf/㎠ Oil temperature : 50 ± 5 ℃
Direction of revolution	CCW at 500 3500 rpm	

7.HYDRAULIC SYSTEM (CHAPTER 9)

1) PISTON AND CYLINDER

cylinder and bore		Ø 75 ㎜		0-ring : Ø65㎜

https://truckmanualshub.com/

Part names and inspection items	Nominal dimensions	Standard value for reassembly	Usable limits	Service instructions and remarks

2) Dynamic lift

T290/T300/2810		2000 kgf·㎠		

3) Cylinder case bush

Left side	55 ×60 ×50	Ø 55 ㎜	Ø 55.2 ㎜	Wear limit: 0.2 ㎜
Right side	60 ×65 ×50	Ø 60 ㎜	Ø 60.2 ㎜	Wear limit: 0.2 ㎜

4) Flow divider

Capacity of PTO clutch port	5.0~6.0 ℓ/min	Pressure:1 kgf/㎠
Setting pressure of PTO clutch port	18 kgf/㎠ over	Capacity:0.9 ℓ/min

5) Flow divider assembly

Solenoid	Rated voltage	DC 12 V			
	Rated current	2.1 A			
	Switch-over frequency limit	2 times / sec			
Clearance between change over valve and casing			0.025 ㎜		
Free length of change over valve spring		15.5 ㎜	15.0 ㎜		
Clearance between sequential valve spool and casing			0.021 ㎜		
Free length of pressure reducing valve spring		30.0 ㎜	29.0 ㎜		

Sequence valve spring free length.		22.0 ㎜	21.5 ㎜	

https://truckmanualshub.com/

Part names and inspection items	Nominal dimensions	Standard value for reassembly	Usable limits	Service instructions and remarks

6) SLOW RETURN CHECK VALVE(Flow control valve)

Maximum pressure	280 kgf/㎠	Gear oil SAE #80 #90 at a temperature of 50 ± 5℃
Cylinder port leaks	1 cc/min.at a pressure of 90 kgf/㎠	

7) MAIN CONTROL VALVE

Cylinder port leaks	5 cc/min or less under a pressure of 100 kgf/㎠			Gear oil SAE #80 #90 at a temperature of 50 ± 5℃
Clearance between main spool and casing			0.01 ㎜	

8) MAIN RELIEF VALVE

T290/T300/T330/ 2810NEW		145 ±5 kgf/㎠		

9) MAIN GEAR PUMP

T290/T300/T330/ 2810NEW		21.5 ℓ/min		Efficiency of 92 % at 2600 rpm

10) SUCTION FILTER

Rated flow		45 ℓ/min		
Filtration density		150 mesh		
Filtration area		790㎠		

11) LINE FILTER

Rated flow		32 ℓ/min		
Filtration density		80 mesh		
Filtration Area		31 ㎠		

https://truckmanualshub.com/

8.ELECTRICAL EQUIPMENT

1)BATTERY

(1)BATTERY TERMINAL POST

Terminal voltage	-	12 V	10.8 V	Charge or replace
Corrosion	-	-	-	Repair or replace

(2) BATTERY CELLS

Damage	-	-	-	Replace battery

(3) ELECTROLITE

Cloudy fluid	-	-	-	Replace battery
Specific gravity	-	1.24 - 1.26	-	Correct
Level	-	As specified on case	-	Replace with distilled water.

2) METER PANEL AND OTHER SWITCHES.

(1) STARTER SWITCH.

Continuity Across Each Terminal	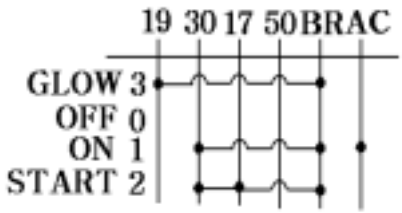	Replace a defective switch assembly.

2) COMBINATION SWITCH

Continuity Across Each Terminal	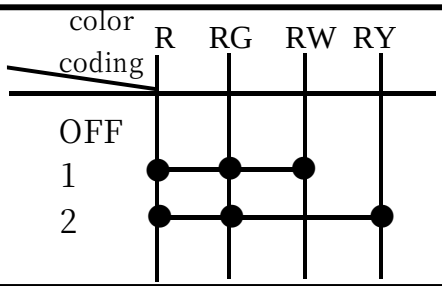	Replace a defective switch assembly.

(3) Turn signal switch https://truckmanualshub.com/

●Turn signal switch	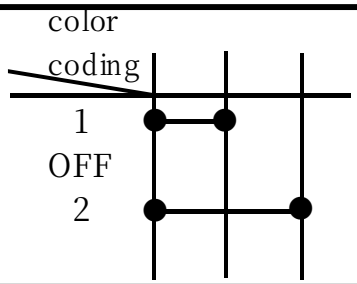	Replace a defective switch assembly.

(4) Horn switch

●Horn switch	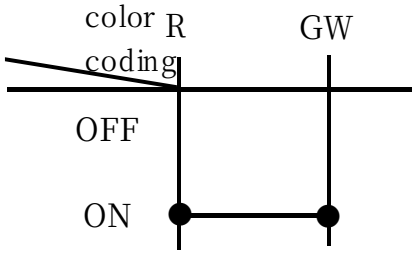	Replace a defective switch assembly.

(5) PARKING AND LIGHT SWITCH

Continuity across each terminal	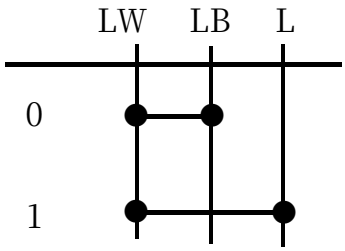	Replace a defective switch assembly.

(6) PTO SWITCH

Continuity across each terminal	Switched on when lever is moved by about 3 mm (0.12 in) across R and LR	Replace a defective switch assembly.

(7) STOP LIGHT SWITCH

Continuity across each terminal	Switched on when actuator is pushed in by about 3 mm(0.12 in)assembly	Replace a defective switch assembly.

(8) PARKING BRAKE SWITCH

Continuity across each terminal	Switched on when lever is pulled up by about 3 mm(0.12 in)	Replace a defective switch assembly.

https://truckmanualshub.com/

Continuity across each terminal	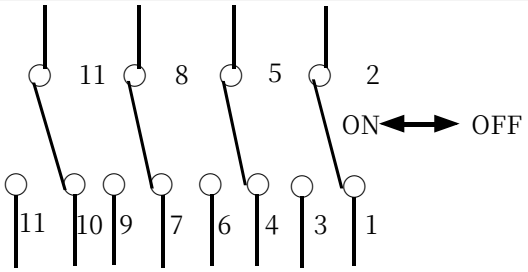	Replace a defective switch assembly.

https://truckmanualshub.com/

SECTION 2.TIGHTENING AND STARTING TORQUE SPECIFIED FOR MAJOR PARTS

1. T290/T300/T330/2810NEW

TIGHTENING PARTS	BOLT AND NUT (HARDNESS)	TIGHTENING TORQUE (kgf·m)
1)Front axle housing (4WD type)		
①Axle bracket Engine tightening bolts	M 16 (7T)	16.0 18.0
②Front pivot metal(support)tightening bolts	M 12 (7T)	9.0 11.0
③Rear pivot metal(support) tightening bolts	M 14 (7T)	13.0 15.0
④Front axle final case tightening bolts.	M 12 (7T)	9.0 11.0
⑤Bearing cover tightening bolts.	M 18 (7T)	2.0 2.4
⑥Wheel shaft cover tightening bolts.	M 110 (7T)	5.5 7.0
⑦Front wheel tightening bolts.	M 16 (7T)	16.0 18.0
⑧Bevel gear case tightening bolts	M 8	1.3 1.8
⑨Dif-metal(support) tightening bolts	M 8	1.3 1.8
⑩Ring gear dif metal(support)tightening bolts	M 8	1.3 1.8
Bevel pinion lock nut		
2)Transmission		
①Front transmission Engine tightening bolts and nuts	M 12 (7T)	9.0 11.0
②Front transmission Spacer transmission tightening bolts and nuts	M 12 (7T)	9.0 11.0
③Space transmission Rear transmission tightening bolts and nuts	M 12 (7T)	9.0 11.0
④Input metal(support)tightening bolts and nuts.	M 12 (7T)	9.0 11.0
⑤Drive pinion metal(support) tightening bolts.	M 10 (7T)	5.5 7.0
Drive pinion tightening nut		
⑥Dif-case metal(support)tightening bolts.	M 12	5.5 7.0
⑦Dif case ring gear tightening nuts.	M 12 (7T)	9.0 11.0

https://truckmanualshub.com/

SECTION 3. CONVERSION TABLES

Millimeters to inches							
mm	in	mm	in	mm	in	mm	in
1	0.0394	26	1.0236	51	2.0079	76	2.9921
2	0.0787	27	1.0630	52	2.0472	77	3.0315
3	0.1181	28	1.1024	53	2.0866	78	3.0709
4	0.1575	29	1.1417	54	2.1260	79	3.1102
5	0.1969	30	1.1811	55	2.1654	80	3.1496
6	0.2362	31	1.2205	56	2.2047	81	3.1890
7	0.2756	32	1.2598	57	2.2441	82	3.2283
8	0.3150	33	1.2992	58	2.2835	83	3.2677
9	0.3543	34	1.3386	59	2.3228	84	3.3071
10	0.3937	35	1.3780	60	2.3622	85	3.3465
11	0.4331	36	1.4173	61	2.4016	86	3.3858
12	0.4724	37	1.4567	62	2.4409	87	3.4252
13	0.5118	38	1.4961	63	2.4803	88	3.4646
14	0.5512	39	1.5354	64	2.5197	89	3.5039
15	0.5906	40	1.5748	65	2.5591	90	3.5433
16	0.6299	41	1.6142	66	2.5984	91	3.5827
17	0.6693	42	1.6535	67	2.6378	92	3.6220
18	0.7087	43	1.6929	68	2.6772	93	3.6614
19	0.7480	44	1.7323	69	2.7165	94	3.7008
20	0.7874	45	1.7717	70	2.7559	95	3.7402
21	0.8268	46	1.8110	71	2.7953	96	3.7795
22	0.8661	47	1.8504	72	2.8346	97	3.8189
23	0.9055	48	1.8898	73	2.8740	98	3.8583
24	0.9449	49	1.9291	74	2.9134	99	3.8976
25	0.9843	50	1.9685	75	2.9528	100	3.9370

Inches to millimeters					
in	mm	in	mm	in	mm
1/64	0.3969	25/64	9.9219	13/16	20.6375
1/32	0.7938	13/32	10.3188	53/64	21.0344
3/64	1.1906	27/64	10.7156	27/32	21.4313
1/16	1.5875	7/16	11.1125	55/64	21.8281
5/64	1.9844	29/64	11.5094	7/8	22.2250
3/32	2.3813	15/32	11.9063	57/64	22.6219
7/64	2.7781	31/64	12.3031	29/32	23.0188
1/8	3.1750	1/2	12.7000	59/64	23.4156
9/64	3.5719	33/64	13.0969	15/16	23.8125
5/32	3.9688	17/32	13.4938	61/64	24.2094
11/64	4.3656	35/64	13.8906	31/32	24.6063
3/16	4.7625	9/16	14.2875	63/64	25.0031
13/64	5.1594	37/64	14.6844		
7/32	5.5563	19/32	15.0813		
15/64	5.9531	39/64	15.4781		
1/4	6.3500	5/8	15.8750		
17/64	6.7469	41/64	16.2719		
9/32	7.1438	21/32	16.6688		
19/64	7.5406	43/64	17.0656		
5/16	7.9375	11/16	17.4625		
21/64	8.3344	45/64	17.8594		
11/32	8.7313	23/32	18.2563		
23/64	9.1281	47/64	18.6531		
3/8	9.5250	3/4	19.0500		
		49/64	19.4469		
		25/32	19.8438		
		51/64	20.2406		

	Length										
					Feet to Meters						
ft	0	1	2	3	4	5	6	7	8	9	ft
	m	m	m	m	m	m	m	m	m	m	
0	0.0000	0.3050	0.6100	0.9150	1.2200	1.5250	1.8300	2.1350	2.4400	2.7450	0
10	8.0532	3.3550	3.6600	3.9650	4.2700	4.5750	4.8800	5.1850	5.4900	5.7950	10
20	21.1097	6.4050	6.7100	7.0150	7.3200	7.6250	7.9300	8.2350	8.5400	8.8450	20
30	34.1661	9.4550	9.7600	10.0650	10.3700	10.6750	10.9800	11.2850	11.5900	11.8950	30
40	47.2225	12.5050	12.8100	13.1150	13.4200	13.7250	14.0300	14.3350	14.6400	14.9450	40
50	60.2790	15.5550	15.8600	16.1650	16.4700	16.7750	17.0800	17.3850	17.6900	17.9950	50
60	73.3354	18.6050	18.9100	19.2150	19.5200	19.8250	20.1300	20.4350	20.7400	21.0450	60
70	86.3919	21.6550	21.9600	22.2650	22.5700	22.8750	23.1800	23.4850	23.7900	24.0950	70
80	99.4483	24.7050	25.0100	25.3150	25.6200	25.9250	26.2300	26.5350	26.8400	27.1450	80
90	112.5047	27.7550	28.0600	28.3650	28.6700	28.9750	29.2800	29.5850	29.8900	30.1950	90
100	125.5612	30.8050	31.1100	31.4150	31.7200	32.0250	32.3300	32.6350	32.9400	33.2450	100

					Meters to Feet						
m	0	1	2	3	4	5	6	7	8	9	m
	ft	ft	ft	ft	ft	ft	ft	ft	ft	ft	
0	0.0000	3.2808	6.5616	9.8424	13.1232	16.4040	19.6848	22.9656	26.2464	29.5272	0
10	32.8080	36.0888	39.3696	42.6504	45.9312	49.2120	52.4928	55.7736	59.0544	62.3352	10
20	65.6160	68.8968	72.1776	75.4584	78.7392	82.0200	85.3008	88.5816	91.8624	95.1432	20
30	98.4240	101.7048	104.9856	108.2664	111.5472	114.8280	118.1088	121.3896	124.6704	127.9512	30
40	131.2320	134.5128	137.7936	141.0744	144.3552	147.6360	150.9168	154.1976	157.4784	160.7592	40
50	164.0400	167.3208	170.6016	173.8824	177.1632	180.4440	183.7248	187.0056	190.2864	193.5672	50
60	196.8480	200.1288	203.4096	206.6904	209.9712	213.2520	216.5328	219.8136	223.0944	226.3752	60
70	229.6560	232.9368	236.2176	239.4984	242.7792	246.0600	249.3408	252.6216	255.9024	259.1832	70
80	262.4640	265.7448	269.0256	272.3064	275.5872	278.8680	282.1488	285.4296	288.7104	291.9912	80
90	295.2720	298.5528	301.8336	305.1144	308.3952	311.6760	314.9568	318.2376	321.5184	324.7992	90
100	328.0800	331.3608	334.6416	337.9224	341.2032	344.4840	347.7648	351.0456	354.3264	357.6072	100

					Mile to kilometers						
miles	0	1	2	3	4	5	6	7	8	9	miles
	Km	Km	Km	Km	Km	Km	Km	Km	Km	Km	
0	0.000	1.609	3.218	4.827	6.436	8.045	9.654	11.263	12.872	14.481	0
10	16.090	17.699	19.308	20.917	22.526	24.135	25.744	27.353	28.962	30.571	10
20	32.180	33.789	35.398	37.007	38.616	40.225	41.834	43.443	45.052	46.661	20
30	48.270	49.879	51.488	53.097	54.706	56.315	57.924	59.533	61.142	62.751	30
40	64.360	65.969	67.578	69.187	70.796	72.405	74.014	75.623	77.232	78.841	40
50	80.450	82.059	83.668	85.277	86.886	88.495	90.104	91.713	93.322	94.931	50
60	96.540	98.149	99.758	101.367	102.976	104.585	106.194	107.803	109.412	111.021	60
70	112.630	114.239	115.848	117.457	119.066	120.675	122.284	123.893	125.502	127.111	70
80	128.720	130.329	131.938	133.547	135.156	136.765	138.374	139.983	141.592	143.201	80
90	144.810	146.419	148.028	149.637	151.246	152.855	154.464	156.073	157.682	159.291	90
100	160.900	162.509	164.118	165.727	167.336	168.945	170.554	172.163	173.772	175.381	100

					kilometers to Miles						
Km	0	1	2	3	4	5	6	7	8	9	Km
	Miles	Miles	Miles	Miles	Miles	Miles	Miles	Miles	Miles	Miles	
0	0.000	0.621	1.242	1.863	2.484	3.105	3.726	4.347	4.968	5.589	0
10	6.210	6.831	7.452	8.073	8.694	9.315	9.936	10.557	11.178	11.799	10
20	12.420	13.041	13.662	14.283	14.904	15.525	16.146	16.767	17.388	18.009	20
30	18.630	19.251	19.872	20.493	21.114	21.735	22.356	22.977	23.598	24.219	30
40	24.840	25.461	26.082	26.703	27.324	27.945	28.566	29.187	29.808	30.429	40
50	31.050	31.671	32.292	32.913	33.534	34.155	34.776	35.397	36.018	36.639	50
60	37.260	37.881	38.502	39.123	39.744	40.365	40.986	41.607	42.228	42.849	60
70	43.470	44.091	44.712	45.333	45.954	46.575	47.196	47.817	48.438	49.059	70
80	49.680	50.301	50.922	51.543	52.164	52.785	53.406	54.027	54.648	55.269	80
90	55.890	56.511	57.132	57.753	58.374	58.995	59.616	60.237	60.858	61.479	90
100	62.100	62.721	63.342	63.963	64.584	65.205	65.826	66.447	67.068	67.689	100

	Area					Square inches to square centimeters					
in2	0	1	2	3	4	5	6	7	8	9	in2
	cm2	cm2	cm2	cm2	cm2	cm2	cm2	cm2	cm2	cm2	
0	0.000	6.462	12.924	19.386	25.848	32.310	38.772	45.234	51.696	58.158	0
10	64.620	71.082	77.544	84.006	90.468	96.930	103.392	109.854	116.316	122.778	10
20	129.240	135.702	142.164	148.626	155.088	161.550	168.012	174.474	180.936	187.398	20
30	193.860	200.322	206.784	213.246	219.708	226.170	232.632	239.094	245.556	252.018	30
40	258.480	264.942	271.404	277.866	284.328	290.790	297.252	303.714	310.176	316.638	40
50	323.100	329.562	336.024	342.486	348.948	355.410	361.872	368.334	374.796	381.258	50
60	387.720	394.182	400.644	407.106	413.568	420.030	426.492	432.954	439.416	445.878	60
70	452.340	458.802	465.264	471.726	478.188	484.650	491.112	497.574	504.036	510.498	70
80	516.960	523.422	529.884	536.346	542.808	549.270	555.732	562.194	568.656	575.118	80
90	581.580	588.042	594.504	600.966	607.428	613.890	620.352	626.814	633.276	639.738	90
100	646.200	652.662	659.124	665.586	672.048	678.510	684.972	691.434	697.896	704.358	100

						Square centimeters to Square inches					
cm2	0	1	2	3	4	5	6	7	8	9	cm2
	in2	in2	in2	in2	in2	in2	in2	in2	in2	in2	
0	0.000	0.155	0.310	0.465	0.620	0.775	0.930	1.085	1.240	1.395	0
10	1.550	1.705	1.860	2.015	2.170	2.325	2.480	2.635	2.790	2.945	10
20	3.100	3.255	3.410	3.565	3.720	3.875	4.030	4.185	4.340	4.495	20
30	4.650	4.805	4.960	5.115	5.270	5.425	5.580	5.735	5.890	6.045	30
40	6.200	6.355	6.510	6.665	6.820	6.975	7.130	7.285	7.440	7.595	40
50	7.750	7.905	8.060	8.215	8.370	8.525	8.680	8.835	8.990	9.145	50
60	9.300	9.455	9.610	9.765	9.920	10.075	10.230	10.385	10.540	10.695	60
70	10.850	11.005	11.160	11.315	11.470	11.625	11.780	11.935	12.090	12.245	70
80	12.400	12.555	12.710	12.865	13.020	13.175	13.330	13.485	13.640	13.795	80
90	13.950	14.105	14.260	14.415	14.570	14.725	14.880	15.035	15.190	15.345	90
100	15.500	15.655	15.810	15.965	16.120	16.275	16.430	16.585	16.740	16.895	100

						Cubic inches to Cubic Centimeters					
in3	0	1	2	3	4	5	6	7	8	9	in3
	cm3(cc)	cm3(cc)	cm3(cc)	cm3(cc)	cm3(cc)	cm3(cc)	cm3(cc)	cm3(cc)	cm3(cc)	cm3(cc)	
0	0.000	16.387	32.774	49.161	65.548	81.935	98.322	114.709	131.096	147.483	0
10	163.870	180.257	196.644	213.031	229.418	245.805	262.192	278.579	294.966	311.353	10
20	327.740	344.127	360.514	376.901	393.288	409.675	426.062	442.449	458.836	475.223	20
30	491.610	507.997	524.384	540.771	557.158	573.545	589.932	606.319	622.706	639.093	30
40	655.480	671.867	688.254	704.641	721.028	737.415	753.802	770.189	786.576	802.963	40
50	819.350	835.737	852.124	868.511	884.898	901.285	917.672	934.059	950.446	966.833	50
60	983.220	999.607	1015.994	1032.381	1048.768	1065.155	1081.542	1097.929	1114.316	1130.703	60
70	1147.090	1163.477	1179.864	1196.251	1212.638	1229.025	1245.412	1261.799	1278.186	1294.573	70
80	1310.960	1327.347	1343.734	1360.121	1376.508	1392.895	1409.282	1425.669	1442.056	1458.443	80
90	1474.830	1491.217	1507.604	1523.991	1540.378	1556.765	1573.152	1589.539	1605.926	1622.313	90
100	1638.700	1655.087	1671.474	1687.861	1704.248	1720.635	1737.022	1753.409	1769.796	1786.183	100

						Cubic Centimeters to cubic inches					
cm3(cc)	0	1	2	3	4	5	6	7	8	9	cm3(cc)
	in3	in3	in3	in3	in3	in3	in3	in3	in3	in3	
0	0.0000	0.0610	0.1221	0.1831	0.2441	0.3051	0.3662	0.4272	0.4882	0.5492	0
10	0.6103	0.6713	0.7323	0.7933	0.8544	0.9154	0.9764	1.0374	1.0985	1.1595	10
20	1.2205	1.2815	1.3426	1.4036	1.4646	1.5256	1.5867	1.6477	1.7087	1.7697	20
30	1.8308	1.8918	1.9528	2.0138	2.0749	2.1359	2.1969	2.2579	2.3190	2.3800	30
40	2.4410	2.5020	2.5631	2.6241	2.6851	2.7461	2.8072	2.8682	2.9292	2.9902	40
50	3.0513	3.1123	3.1733	3.2343	3.2954	3.3564	3.4174	3.4784	3.5395	3.6005	50
60	3.6615	3.7225	3.7836	3.8446	3.9056	3.9666	4.0277	4.0887	4.1497	4.2107	60
70	4.2718	4.3328	4.3938	4.4548	4.5159	4.5769	4.6379	4.6989	4.7600	4.8210	70
80	4.8820	4.9430	5.0041	5.0651	5.1261	5.1871	5.2482	5.3092	5.3702	5.4312	80
90	5.4923	5.5533	5.6143	5.6753	5.7364	5.7974	5.8584	5.9194	5.9805	6.0415	90
100	6.1025	6.1635	6.2246	6.2856	6.3466	6.4076	6.4687	6.5297	6.5907	6.6517	100

https://truckmanualshub.com/

	Volume				Gallons(U.S) to Liters						
US gal	0	1	2	3	4	5	6	7	8	9	US gal
	Liters	Liters	Liters	Liters	Liters	Liters	Liters	Liters	Liters	Liters	
0	0.000	3.785	7.571	11.356	15.142	18.927	22.712	26.498	30.283	34.069	0
10	37.854	41.639	45.425	49.210	52.996	56.781	60.566	64.352	68.137	71.923	10
20	75.708	79.493	83.279	87.064	90.850	94.635	98.420	102.206	105.991	109.777	20
30	113.562	117.347	121.133	124.918	128.704	132.489	136.274	140.060	143.845	147.631	30
40	151.416	155.201	158.987	162.772	166.558	170.343	174.128	177.914	181.699	185.485	40
50	189.270	193.055	196.841	200.626	204.412	208.197	211.982	215.768	219.553	223.339	50
60	227.124	230.909	234.695	238.480	242.266	246.051	249.836	253.622	257.407	261.193	60
70	264.978	268.763	272.549	276.334	280.120	283.905	287.690	291.476	295.261	299.047	70
80	302.832	306.617	310.403	314.188	317.974	321.759	325.544	329.330	333.115	336.901	80
90	340.686	344.471	348.257	352.042	355.828	359.613	363.398	367.184	370.969	374.755	90
100	378.540	382.325	386.111	389.896	393.682	397.467	401.252	405.038	408.823	412.609	100

	Liters to Gallons(U.S)										
Liters	0	1	2	3	4	5	6	7	8	9	Liters
	US gal	US gal	US gal	US gal	US gal	US gal	US gal	US gal	US gal	US gal	
0	0.000	0.264	0.528	0.793	1.057	1.321	1.585	1.849	2.114	2.378	0
10	2.642	2.906	3.170	3.435	3.699	3.963	4.227	4.491	4.756	5.020	10
20	5.284	5.548	5.812	6.077	6.341	6.605	6.869	7.133	7.398	7.662	20
30	7.926	8.190	8.454	8.719	8.983	9.247	9.511	9.775	10.040	10.304	30
40	10.568	10.832	11.096	11.361	11.625	11.889	12.153	12.417	12.682	12.946	40
50	13.210	13.474	13.738	14.003	14.267	14.531	14.795	15.059	15.324	15.588	50
60	15.852	16.116	16.380	16.645	16.909	17.173	17.437	17.701	17.966	18.230	60
70	18.494	18.758	19.022	19.287	19.551	19.815	20.079	20.343	20.608	20.872	70
80	21.136	21.400	21.664	21.929	22.193	22.457	22.721	22.985	23.250	23.514	80
90	23.778	24.042	24.306	24.571	24.835	25.099	25.363	25.627	25.892	26.156	90
100	26.420	26.684	26.948	27.213	27.477	27.741	28.005	28.269	28.534	28.798	100

	Gallons(IMP.) to Liters										
Imp. ga	0	1	2	3	4	5	6	7	8	9	Imp. gal
	Liters	Liters	Liters	Liters	Liters	Liters	Liters	Liters	Liters	Liters	
0	0.0000	4.5460	9.0920	13.6380	18.1840	22.7300	27.2760	31.8220	36.3680	40.9140	0
10	45.4600	50.0060	54.5520	59.0980	63.6440	68.1900	72.7360	77.2820	81.8280	86.3740	10
20	90.9200	95.4660	100.0120	104.5580	109.1040	113.6500	118.1960	122.7420	127.2880	131.8340	20
30	136.3800	140.9260	145.4720	150.0180	154.5640	159.1100	163.6560	168.2020	172.7480	177.2940	30
40	181.8400	186.3860	190.9320	195.4780	200.0240	204.5700	209.1160	213.6620	218.2080	222.7540	40
50	227.3000	231.8460	236.3920	240.9380	245.4840	250.0300	254.5760	259.1220	263.6680	268.2140	50
60	272.7600	277.3060	281.8520	286.3980	290.9440	295.4900	300.0360	304.5820	309.1280	313.6740	60
70	318.2200	322.7660	327.3120	331.8580	336.4040	340.9500	345.4960	350.0420	354.5880	359.1340	70
80	363.6800	368.2260	372.7720	377.3180	381.8640	386.4100	390.9560	395.5020	400.0480	404.5940	80
90	409.1400	413.6860	418.2320	422.7780	427.3240	431.8700	436.4160	440.9620	445.5080	450.0540	90
100	454.6000	459.1460	463.6920	468.2380	472.7840	477.3300	481.8760	486.4220	490.9680	495.5140	100

	Liters to Gallons(IMP)										
Liters	0	1	2	3	4	5	6	7	8	9	Liters
	gal	gal	gal	gal	gal	gal	gal	gal	gal	gal	
0	0.0000	0.2200	0.4400	0.6600	0.8800	1.1000	1.3200	1.5400	1.7600	1.9800	0
10	2.2000	2.4200	2.6400	2.8600	3.0800	3.3000	3.5200	3.7400	3.9600	4.1800	10
20	4.4000	4.6200	4.8400	5.0600	5.2800	5.5000	5.7200	5.9400	6.1600	6.3800	20
30	6.6000	6.8200	7.0400	7.2600	7.4800	7.7000	7.9200	8.1400	8.3600	8.5800	30
40	8.8000	9.0200	9.2400	9.4600	9.6800	9.9000	10.1200	10.3400	10.5600	10.7800	40
50	11.0000	11.2200	11.4400	11.6600	11.8800	12.1000	12.3200	12.5400	12.7600	12.9800	50
60	13.2000	13.4200	13.6400	13.8600	14.0800	14.3000	14.5200	14.7400	14.9600	15.1800	60
70	15.4000	15.6200	15.8400	16.0600	16.2800	16.5000	16.7200	16.9400	17.1600	17.3800	70
80	17.6000	17.8200	18.0400	18.2600	18.4800	18.7000	18.9200	19.1400	19.3600	19.5800	80
90	19.8000	20.0200	20.2400	20.4600	20.6800	20.9000	21.1200	21.3400	21.5600	21.7800	90
100	22.0000	22.2200	22.4400	22.6600	22.8800	23.1000	23.3200	23.5400	23.7600	23.9800	100

https://truckmanualshub.com/

MASS

Pounds to Kilograms

lbs	0	1	2	3	4	5	6	7	8	9	lbs
	Kg	Kg	Kg	Kg	Kg	Kg	Kg	Kg	Kg	Kg	
0	0.000	0.454	0.907	1.361	1.814	2.268	2.722	3.175	3.629	4.082	0
10	4.536	4.990	5.443	5.897	6.350	6.804	7.258	7.711	8.165	8.618	10
20	9.072	9.526	9.979	10.433	10.886	11.340	11.794	12.247	12.701	13.154	20
30	13.608	14.062	14.515	14.969	15.422	15.876	16.330	16.783	17.237	17.690	30
40	18.144	18.598	19.051	19.505	19.958	20.412	20.866	21.319	21.773	22.226	40
50	22.680	23.134	23.587	24.041	24.494	24.948	25.402	25.855	26.309	26.762	50
60	27.216	27.670	28.123	28.577	29.030	29.484	29.938	30.391	30.845	31.298	60
70	31.752	32.206	32.659	33.113	33.566	34.020	34.474	34.927	35.381	35.834	70
80	36.288	36.742	37.195	37.649	38.102	38.556	39.010	39.463	39.917	40.370	80
90	40.824	41.278	41.731	42.185	42.638	43.092	43.546	43.999	44.453	44.906	90
100	45.360	45.814	46.267	46.721	47.174	47.628	48.082	48.535	48.989	49.442	100

Kilograms to pound

Kg	0	1	2	3	4	5	6	7	8	9	Kg
	lbs	lbs	lbs	lbs	lbs	lbs	lbs	lbs	lbs	lbs	
0	0.000	2.205	4.409	6.614	8.818	11.023	13.228	15.432	17.637	19.841	0
10	22.046	24.251	26.455	28.660	30.864	33.069	35.274	37.478	39.683	41.887	10
20	44.092	46.297	48.501	50.706	52.910	55.115	57.320	59.524	61.729	63.933	20
30	66.138	68.343	70.547	72.752	74.956	77.161	79.366	81.570	83.775	85.979	30
40	88.184	90.389	92.593	94.798	97.002	99.207	101.412	103.616	105.821	108.025	40
50	110.230	112.435	114.639	116.844	119.048	121.253	123.458	125.662	127.867	130.071	50
60	132.276	134.481	136.685	138.890	141.094	143.299	145.504	147.708	149.913	152.117	60
70	154.322	156.527	158.731	160.936	163.140	165.345	167.550	169.754	171.959	174.163	70
80	176.368	178.573	180.777	182.982	185.186	187.391	189.596	191.800	194.005	196.209	80
90	198.414	200.619	202.823	205.028	207.232	209.437	211.642	213.846	216.051	218.255	90
100	220.460	222.665	224.869	227.074	229.278	231.483	233.688	235.892	238.097	240.301	100

Kilograms to Newton

Kg	0	1	2	3	4	5	6	7	8	9	Kg
	N	N	N	N	N	N	N	N	N	N	
0	0.000	9.807	19.614	29.421	39.228	49.035	58.842	68.649	78.456	88.263	0
10	98.070	107.877	117.684	127.491	137.298	147.105	156.912	166.719	176.526	186.333	10
20	196.140	205.947	215.754	225.561	235.368	245.175	254.982	264.789	274.596	284.403	20
30	294.210	304.017	313.824	323.631	333.438	343.245	353.052	362.859	372.666	382.473	30
40	392.280	402.087	411.894	421.701	431.508	441.315	451.122	460.929	470.736	480.543	40
50	490.350	500.157	509.964	519.771	529.578	539.385	549.192	558.999	568.806	578.613	50
60	588.420	598.227	608.034	617.841	627.648	637.455	647.262	657.069	666.876	676.683	60
70	686.490	696.297	706.104	715.911	725.718	735.525	745.332	755.139	764.946	774.753	70
80	784.560	794.367	804.174	813.981	823.788	833.595	843.402	853.209	863.016	872.823	80
90	882.630	892.437	902.244	912.051	921.858	931.665	941.472	951.279	961.086	970.893	90
100	980.700	990.507	1000.314	1010.121	1019.928	1029.735	1039.542	1049.349	1059.156	1068.963	100

Newton to Kilograms

N	0	1	2	3	4	5	6	7	8	9	N
	Kg	Kg	Kg	Kg	Kg	Kg	Kg	Kg	Kg	Kg	
0	0.000	1.020	2.039	3.059	4.079	5.099	6.118	7.138	8.158	9.177	0
10	10.197	11.217	12.236	13.256	14.276	15.296	16.315	17.335	18.355	19.374	10
20	20.394	21.414	22.433	23.453	24.473	25.493	26.512	27.532	28.552	29.571	20
30	30.591	31.611	32.630	33.650	34.670	35.690	36.709	37.729	38.749	39.768	30
40	40.788	41.808	42.827	43.847	44.867	45.887	46.906	47.926	48.946	49.965	40
50	50.985	52.005	53.024	54.044	55.064	56.084	57.103	58.123	59.143	60.162	50
60	61.182	62.202	63.221	64.241	65.261	66.281	67.300	68.320	69.340	70.359	60
70	71.379	72.399	73.418	74.438	75.458	76.478	77.497	78.517	79.537	80.556	70
80	81.576	82.596	83.615	84.635	85.655	86.675	87.694	88.714	89.734	90.753	80
90	91.773	92.793	93.812	94.832	95.852	96.872	97.891	98.911	99.931	100.950	90
100	101.970	102.990	104.009	105.029	106.049	107.069	108.088	109.108	110.128	111.147	100

https://truckmanualshub.com/

	Pressure	Pounds per square inches to Kilograms per square centimeters									
b/in2(PSI)	0	1	2	3	4	5	6	7	8	9	lb/in2(PSI)
	Kg/cm2	Kg/cm2	Kg/cm2	Kg/cm2	Kg/cm2	Kg/cm2	Kg/cm2	Kg/cm2	Kg/cm2	Kg/cm2	
0	0.0000	0.0703	0.1406	0.2109	0.2812	0.3516	0.4219	0.4922	0.5625	0.6328	0
10	0.7031	0.7734	0.8437	0.9140	0.9843	1.0547	1.1250	1.1953	1.2656	1.3359	10
20	1.4062	1.4765	1.5468	1.6171	1.6874	1.7578	1.8281	1.8984	1.9687	2.0390	20
30	2.1093	2.1796	2.2499	2.3202	2.3905	2.4609	2.5312	2.6015	2.6718	2.7421	30
40	2.8124	2.8827	2.9530	3.0233	3.0936	3.1640	3.2343	3.3046	3.3749	3.4452	40
50	3.5155	3.5858	3.6561	3.7264	3.7967	3.8671	3.9374	4.0077	4.0780	4.1483	50
60	4.2186	4.2889	4.3592	4.4295	4.4998	4.5702	4.6405	4.7108	4.7811	4.8514	60
70	4.9217	4.9920	5.0623	5.1326	5.2029	5.2733	5.3436	5.4139	5.4842	5.5545	70
80	5.6248	5.6951	5.7654	5.8357	5.9060	5.9764	6.0467	6.1170	6.1873	6.2576	80
90	6.3279	6.3982	6.4685	6.5388	6.6091	6.6795	6.7498	6.8201	6.8904	6.9607	90
100	7.0310	7.1013	7.1716	7.2419	7.3122	7.3826	7.4529	7.5232	7.5935	7.6638	100

	Kilograms per square centimeters to Pounds per square inches										
Kg/cm2	0	1	2	3	4	5	6	7	8	9	Kg/cm2
	lb/in2(psi)	lb/in2(psi)	lb/in2(psi)	lb/in2(psi)	lb/in2(psi)	lb/in2(psi)	lb/in2(psi)	lb/in2(psi)	lb/in2(psi)	lb/in2(psi)	
0	0.00	14.22	28.45	42.67	56.89	71.12	85.34	99.56	113.78	128.01	0
10	142.23	156.45	170.68	184.90	199.12	213.35	227.57	241.79	256.01	270.24	10
20	284.46	298.68	312.91	327.13	341.35	355.58	369.80	384.02	398.24	412.47	20
30	426.69	440.91	455.14	469.36	483.58	497.81	512.03	526.25	540.47	554.70	30
40	568.92	583.14	597.37	611.59	625.81	640.04	654.26	668.48	682.70	696.93	40
50	711.15	725.37	739.60	753.82	768.04	782.27	796.49	810.71	824.93	839.16	50
60	853.38	867.60	881.83	896.05	910.27	924.50	938.72	952.94	967.16	981.39	60
70	995.61	1009.83	1024.06	1038.28	1052.50	1066.73	1080.95	1095.17	1109.39	1123.62	70
80	1137.84	1152.06	1166.29	1180.51	1194.73	1208.96	1223.18	1237.40	1251.62	1265.85	80
90	1280.07	1294.29	1308.52	1322.74	1336.96	1351.19	1365.41	1379.63	1393.85	1408.08	90
100	1422.30	1436.52	1450.75	1464.97	1479.19	1493.42	1507.64	1521.86	1536.08	1550.31	100

	Kilograms per square centimeters to Kilo pascal										
Kg/cm2	0	1	2	3	4	5	6	7	8	9	Kg/cm2
	Kpa	Kpa	Kpa	Kpa	Kpa	Kpa	Kpa	Kpa	Kpa	Kpa	
0	0.0	98.1	196.1	294.2	392.3	490.4	588.4	686.5	784.6	882.6	0
10	980.7	1078.8	1176.8	1274.9	1373.0	1471.1	1569.1	1667.2	1765.3	1863.3	10
20	1961.4	2059.5	2157.5	2255.6	2353.7	2451.8	2549.8	2647.9	2746.0	2844.0	20
30	2942.1	3040.2	3138.2	3236.3	3334.4	3432.5	3530.5	3628.6	3726.7	3824.7	30
40	3922.8	4020.9	4118.9	4217.0	4315.1	4413.2	4511.2	4609.3	4707.4	4805.4	40
50	4903.5	5001.6	5099.6	5197.7	5295.8	5393.9	5491.9	5590.0	5688.1	5786.1	50
60	5884.2	5982.3	6080.3	6178.4	6276.5	6374.6	6472.6	6570.7	6668.8	6766.8	60
70	6864.9	6963.0	7061.0	7159.1	7257.2	7355.3	7453.3	7551.4	7649.5	7747.5	70
80	7845.6	7943.7	8041.7	8139.8	8237.9	8336.0	8434.0	8532.1	8630.2	8728.2	80
90	8826.3	8924.4	9022.4	9120.5	9218.6	9316.7	9414.7	9512.8	9610.9	9708.9	90
100	9807.0	9905.1	10003.1	10101.2	10199.3	10297.4	10395.4	10493.5	10591.6	10689.6	100

	Kilo pascal to kilogram per square centimeters										
Kpa	0	100	200	300	400	500	600	700	800	900	Kpa
	Kg/cm2	Kg/cm2	Kg/cm2	Kg/cm2	Kg/cm2	Kg/cm2	Kg/cm2	Kg/cm2	Kg/cm2	Kg/cm2	
0	0.000	1.020	2.039	3.059	4.079	5.099	6.118	7.138	8.158	9.177	0
1000	10.197	11.217	12.236	13.256	14.276	15.296	16.315	17.335	18.355	19.374	1000
2000	20.394	21.414	22.433	23.453	24.473	25.493	26.512	27.532	28.552	29.571	2000
3000	30.591	31.611	32.630	33.650	34.670	35.690	36.709	37.729	38.749	39.768	3000
4000	40.788	41.808	42.827	43.847	44.867	45.887	46.906	47.926	48.946	49.965	4000
5000	50.985	52.005	53.024	54.044	55.064	56.084	57.103	58.123	59.143	60.162	5000
6000	61.182	62.202	63.221	64.241	65.261	66.281	67.300	68.320	69.340	70.359	6000
7000	71.379	72.399	73.418	74.438	75.458	76.478	77.497	78.517	79.537	80.556	7000
8000	81.576	82.596	83.615	84.635	85.655	86.675	87.694	88.714	89.734	90.753	8000
9000	91.773	92.793	93.812	94.832	95.852	96.872	97.891	98.911	99.931	100.950	9000
10000	101.970	102.990	104.009	105.029	106.049	107.069	108.088	109.108	110.128	111.147	10000

	Torque					Foot pounds to Kilogram meters					
	0	1	2	3	4	5	6	7	8	9	ft lbs
	Kg-m	Kg-m	Kg-m	Kg-m	Kg-m	Kg-m	Kg-m	Kg-m	Kg-m	Kg-m	
		0.138	0.276	0.414	0.552	0.690	0.828	0.966	1.104	1.242	
10	1.380	1.518	1.656	1.794	1.932	2.070	2.208	2.346	2.484	2.622	10
20	2.760	2.898	3.036	3.174	3.312	3.450	3.588	3.726	3.864	4.002	20
30	4.140	4.278	4.416	4.554	4.692	4.830	4.968	5.106	5.244	5.382	30
40	5.520	5.658	5.796	5.934	6.072	6.210	6.348	6.486	6.624	6.762	40
50	6.900	7.038	7.176	7.314	7.452	7.590	7.728	7.866	8.004	8.142	50
60	8.280	8.418	8.556	8.694	8.832	8.970	9.108	9.246	9.384	9.522	60
70	9.660	9.798	9.936	10.074	10.212	10.350	10.488	10.626	10.764	10.902	70
80	11.040	11.178	11.316	11.454	11.592	11.730	11.868	12.006	12.144	12.282	80
90	12.420	12.558	12.696	12.834	12.972	13.110	13.248	13.386	13.524	13.662	90
100	13.800	13.938	14.076	14.214	14.352	14.490	14.628	14.766	14.904	15.042	100

	Kilogram meters to Foot pounds										
	0	1	2	3	4	5	6	7	8	9	Kg-m
	ft-lbs	ft-lbs	ft-lbs	ft-lbs	ft-lbs	ft-lbs	ft-lbs	ft-lbs	ft-lbs	ft-lbs	
		7.230	14.470	21.690	28.930	36.170	43.400	50.630	57.870	65.100	
10	72.300	79.530	86.770	93.990	101.230	108.470	115.700	122.930	130.170	137.400	10
20	144.600	151.830	159.070	166.290	173.530	180.770	188.000	195.230	202.470	209.700	20
30	216.900	224.130	231.370	238.590	245.830	253.070	260.300	267.530	274.770	282.000	30
40	289.200	296.430	303.670	310.890	318.130	325.370	332.600	339.830	347.070	354.300	40
50	361.500	368.730	375.970	383.190	390.430	397.670	404.900	412.130	419.370	426.600	50
60	433.800	441.030	448.270	455.490	462.730	469.970	477.200	484.430	491.670	498.900	60
70	506.100	513.330	520.570	527.790	535.030	542.270	549.500	556.730	563.970	571.200	70
80	578.400	585.630	592.870	600.090	607.330	614.570	621.800	629.030	636.270	643.500	80
90	650.700	657.930	665.170	672.390	679.630	686.870	694.100	701.330	708.570	715.800	90
100	723.000	730.230	737.470	744.690	751.930	759.170	766.400	773.630	780.870	788.100	100

	Kilogram meters to newtonmeters										
	0	1	2	3	4	5	6	7	8	9	Kg-m
	N-m	N-m	N-m	N-m	N-m	N-m	N-m	N-m	N-m	N-m	
		9.810	19.610	29.420	39.230	49.030	58.810	68.650	78.450	88.260	
10	98.100	107.910	117.710	127.520	137.330	147.130	156.910	166.750	176.550	186.360	10
20	196.200	206.010	215.810	225.620	235.430	245.230	255.010	264.850	274.650	284.460	20
30	294.300	304.110	313.910	323.720	333.530	343.330	353.110	362.950	372.750	382.560	30
40	392.400	402.210	412.010	421.820	431.630	441.430	451.210	461.050	470.850	480.660	40
50	490.500	500.310	510.110	519.920	529.730	539.530	549.310	559.150	568.950	578.760	50
60	588.600	598.410	608.210	618.020	627.830	637.630	647.410	657.250	667.050	676.860	60
70	686.700	696.510	706.310	716.120	725.930	735.730	745.510	755.350	765.150	774.960	70
80	784.800	794.610	804.410	814.220	824.030	833.830	843.610	853.450	863.250	873.060	80
90	882.900	892.710	902.510	912.320	922.130	931.930	941.710	951.550	961.350	971.160	90
100	981.000	990.810	1000.610	1010.420	1020.230	1030.030	1039.810	1049.650	1059.450	1069.260	100

	Newtonmeters to Kilogrammeters										
	0	10	20	30	40	50	60	70	80	90	N-m
	Kg-m	Kg-m	Kg-m	Kg-m	Kg-m	Kg-m	Kg-m	Kg-m	Kg-m	Kg-m	
0	0.000	1.020	2.040	3.060	4.080	5.100	6.120	7.140	8.160	9.180	0
100	10.200	11.220	12.240	13.260	14.280	15.300	16.320	17.340	18.360	19.380	100
200	20.400	21.420	22.440	23.460	24.480	25.500	26.520	27.540	28.560	29.580	200
300	30.600	31.620	32.640	33.660	34.680	35.700	36.720	37.740	38.760	39.780	300
400	40.800	41.820	42.840	43.860	44.880	45.900	46.920	47.940	48.960	49.980	400
500	51.000	52.020	53.040	54.060	55.080	56.100	57.120	58.140	59.160	60.180	500
600	61.200	62.220	63.240	64.260	65.280	66.300	67.320	68.340	69.360	70.380	600
700	71.400	72.420	73.440	74.460	75.480	76.500	77.520	78.540	79.560	80.580	700
800	81.600	82.620	83.640	84.660	85.680	86.700	87.720	88.740	89.760	90.780	800
900	91.800	92.820	93.840	94.860	95.880	96.900	97.920	98.940	99.960	100.980	900
1000	102.000	103.020	104.040	105.060	106.080	107.100	108.120	109.140	110.160	111.180	1000

Temperature	Fahrenheit to Centigrade		
˚F	˚C	˚F	˚C
-20	-28.9	95	35.0
-15	-26.1	100	37.8
-10	-23.3	105	40.6
-5	-20.6	110	43.3
0	-17.8	115	46.1
1	-17.2	120	48.9
2	-16.7	125	51.7
3	-16.1	130	54.4
4	-15.6	135	57.2
5	-15.0	140	60.0
10	-12.2	145	62.8
15	-9.4	150	65.6
20	-6.7	155	68.3
25	-3.9	160	71.1
30	-1.1	165	73.9
35	1.7	170	76.7
40	4.4	175	79.4
45	7.2	180	82.2
50	10.0	185	85.0
55	12.8	190	87.8
60	15.6	195	90.6
65	18.3	200	93.3
70	21.1	205	96.1
75	23.9	210	98.9
80	26.7	212	100.0
85	29.4		
90	32.2		

Centigrade to Fahrenheit			
˚C	˚F	˚C	˚F
-30	-22.0	36	96.8
-28	-18.4	38	100.4
-26	-14.8	40	104.0
-24	-11.2	42	107.6
-22	-7.6	44	111.2
-20	-4.0	46	114.8
-18	-0.4	48	118.4
-16	3.2	50	122.0
-14	6.8	52	125.6
-12	10.4	54	129.2
-10	14.0	56	132.8
-8	17.6	58	136.4
-6	21.2	60	140.0
-4	24.8	62	143.6
-2	28.4	64	147.2
0	32.0	66	150.8
2	35.6	68	154.4
4	39.2	70	158.0
6	42.8	72	161.6
8	46.4	74	165.2
10	50.0	76	168.8
12	53.6	78	172.4
14	57.2	80	176.0
16	60.8	82	179.6
18	64.4	84	183.2
20	68.0	86	186.8
22	71.6	88	190.4
24	75.2	90	194.0
26	78.8	92	197.6
28	82.4	94	201.2
30	86.0	96	204.8
32	89.6	98	208.4
34	93.2	100	212.0