FRAME & BUMPERS

TABLE OF CONTENTS

page

FRAMES & BUMPERS
SPECIFICATIONS
TORQUE 1
FRONT AIR DAM
REMOVAL 2
INSTALLATION 2
FRONT BUMPER
REMOVAL 2
INSTALLATION 2
FRONT FASCIA
REMOVAL 3
INSTALLATION 4
REAR BUMPER
REMOVAL 5
INSTALLATION 6
FASCIA-FRONT SRT-10
REMOVAL 6
INSTALLATION 8
FASCIA-REAR SRT-10
REMOVAL 11
INSTALLATION 13
FRAME
WARNING
WARNINGS 14
STANDARD PROCEDURE
LIGHT DUTY FRONT FRAME RAIL TIP REPLACEMENT 15
HYDROFORM FENDER RAIL REPAIR 23
REAR FRAME H-SECTION REPLACEMENT . 32
SPECIFICATIONS
WELD PROCESS 38
FRAME DIMENSIONS 39
TORQUE 45
FRONT CROSSMEMBER
REMOVAL 46
INSTALLATION 48
FRONT SKID PLATE
REMOVAL 49
INSTALLATION 50
FRONT TOW HOOK ASSEMBLY
REMOVAL 51
INSTALLATION 52
TRANSMISSION CROSSMEMBER
REMOVAL 53
INSTALLATION 55
TRAILER HITCH
REMOVAL 56
INSTALLATION 58
TRANSFER CASE SKID PLATE
REMOVAL 60
INSTALLATION 61

FRAMES & BUMPERS

SPECIFICATIONS

TORQUE

TORQUE SPECIFICATIONS

DESCRIPTION	N·m	Ft. Lbs.
Front bumper center bracket nuts	95	70
Front bumper stud plate nuts	95	70
License plate hitch reinforcement bolts	54	40
Rear bumper support bracket stud plate nuts	54	40
Rear bumper support bracket to hitch bolts	54	40
Rear bumper to hitch bolts	54	40

FRONT AIR DAM

REMOVAL

1. Remove the two outboard screws.
2. Remove the three middle screws and remove the air dam.

INSTALLATION

1. Position the air dam onto the bumper and seat the carrot type fasteners fully.
2. Starting at the center screw install the three middle screws.
3. Install the two outboard screws.

FRONT BUMPER

REMOVAL

1. Using a grease pencil or equivalent, mark the position of the bumper (5) on the frame rail tip (7) to aid installation.
2. Disconnect the fog lamp electrical connector at the left frame rail.
3. Support the bumper with a suitable lifting device.
4. Remove the center bracket (5) nuts and bolts (8 and 9) and remove bumper.

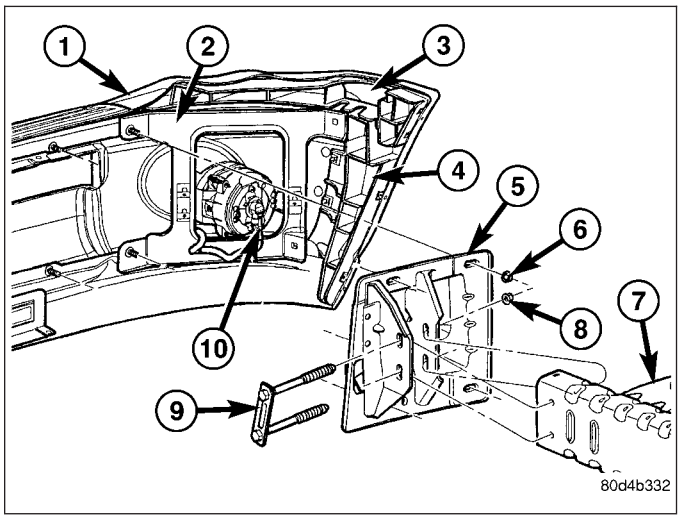

INSTALLATION

1. Install the bumper onto the frame rails (7) and position the wheelhouse splash shield into the support brackets (4).
2. Install the bolts and nuts (8 and 9).
3. Line up the bumper with the marks made previously and tighten the bolts and nuts to 95 N·m (70 ft. lbs.).
4. Check and adjust the bumper alignment as necessary (Refer to 23 - BODY/BODY STRUCTURE/ GAP AND FLUSH - SPECIFICATIONS).

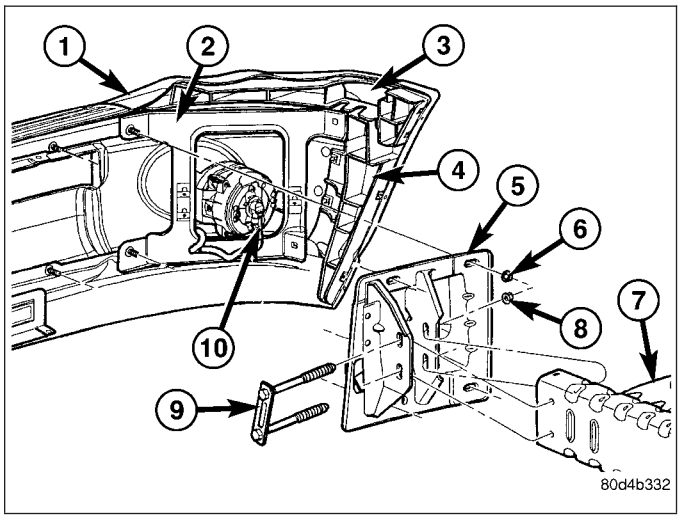

FRONT FASCIA

REMOVAL

ST/SLT/SLT+

1. Remove the two screws (4) at each trailing edge of the fascia.
2. Remove the four push pin fasteners (5) from the upper edge of the close out panel.
3. Using a trim stick (special tool #C-4755) or equivalent, carefully release the six lower clips and remove the close out panel.
4. Using a trim stick or equivalent, carefully remove the step pad (1).
5. Remove and discard the four push pin fasteners (5) and remove the fascia.

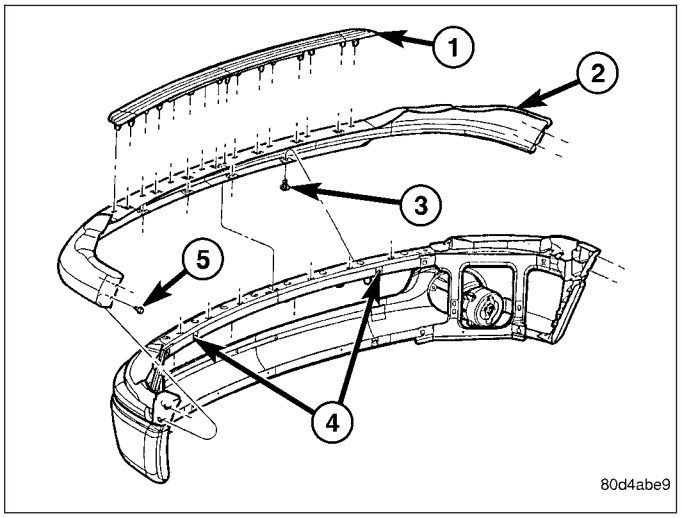

SPORT

1. Raise and support the vehicle (Refer to LUBRICATION & MAINTENANCE/HOISTING - STANDARD PROCEDURE).

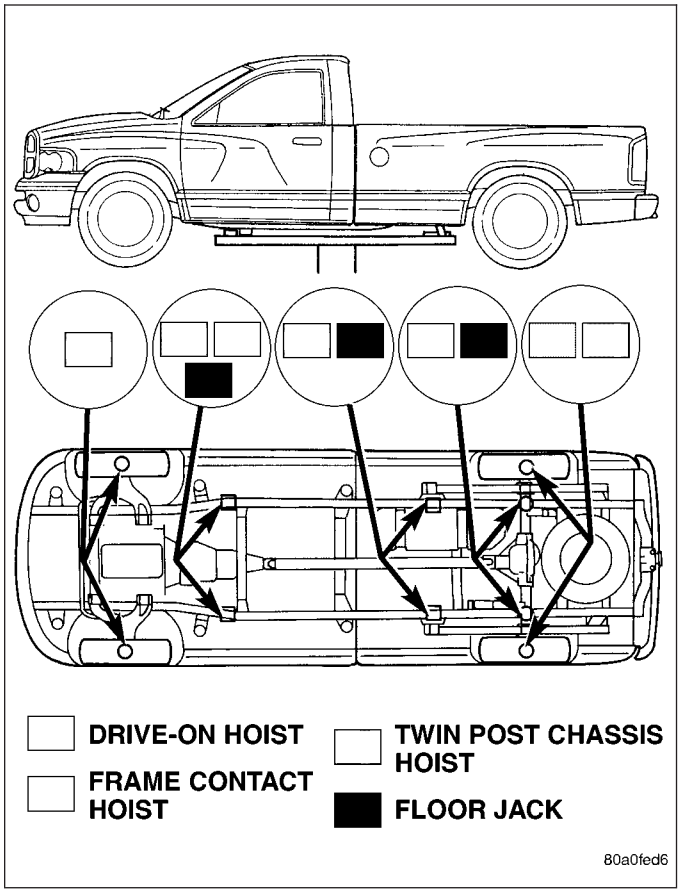

2. Remove the three screws (3) at each trailing edge of the fascia.
3. Remove the five lower screws (8).
4. Remove and discard the four upper push pins (7).
5. Using a trim stick (special tool #C-4755) or equivalent, carefully release the six lower clips and remove the close out panel.
6. Using a trim stick or equivalent, carefully remove the step pad (1).
7. Spread the fascia (2) out at the wheels and remove from the vehicle.

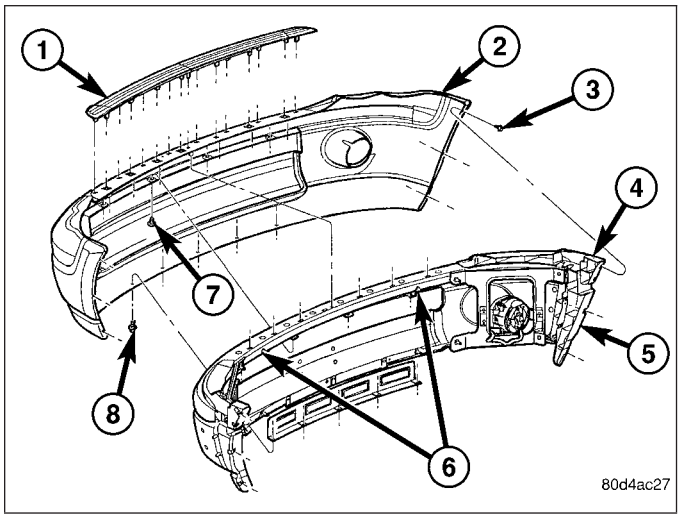

INSTALLATION

ST/SLT/SLT+

NOTE: The left and right inboard bumper to bracket attachments must be secured before installing the fascia and step pad.

1. Install the fascia.
2. Position the close out panel and seat the 6 lower clips fully.
3. Install four new upper push pin fasteners (5).
4. Position the step pad (1) onto the fascia (2) and fully seat the attachment clips.
5. Align the fascia to the fender with a 19 mm (0.75 inch) gap and install the two screws at each trailing edge of the fascia.

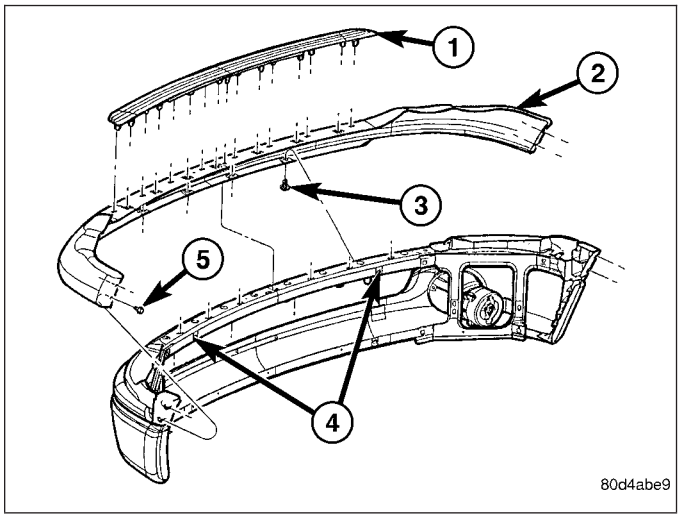

SPORT

NOTE: The left and right inboard bumper to bracket attachments must be secured before installing the fascia and step pad.

1. Position the fascia (2) onto the bumper.
2. Position the step pad (1) onto the fascia (2) and fully seat the attachment clips.
3. Install four new upper push pin fasteners (7).
4. Install the five lower screws (8).
5. Install the three screws (3) at each trailing edge of the fascia.

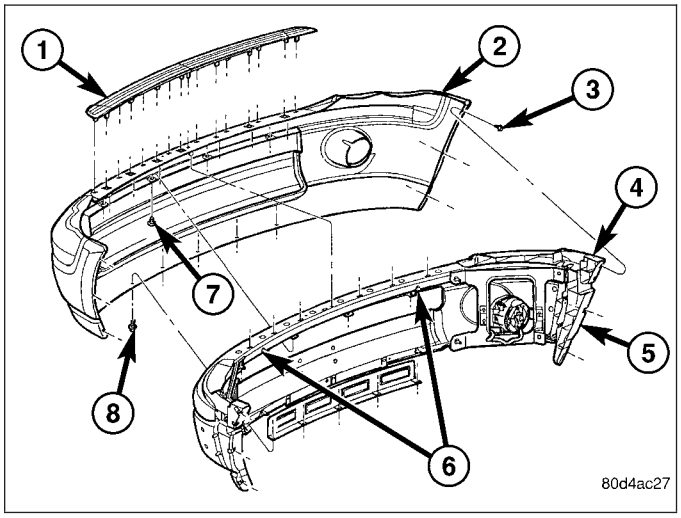

REAR BUMPER

REMOVAL

1. Raise and support the vehicle (Refer to LUBRICATION & MAINTENANCE/HOISTING - STANDARD PROCEDURE).

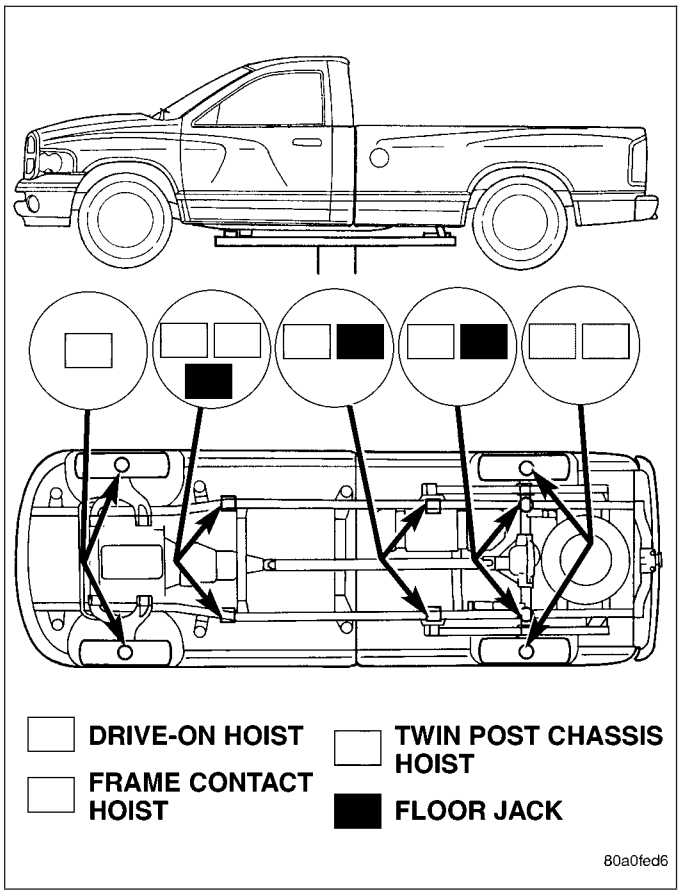

2. Remove the license plate.
3. Remove the bolts behind the plate.
4. Disconnect the license plate light electrical connectors.
5. Disconnect the trailer light connector electrical connection (if equipped).
6. Remove the two bolts along the front upper edge of the bumper near the frame tips.
7. Support the bumper with a suitable lifting device.
8. Remove the bolts attaching the bumper support brackets (4) to the trailer hitch (1).

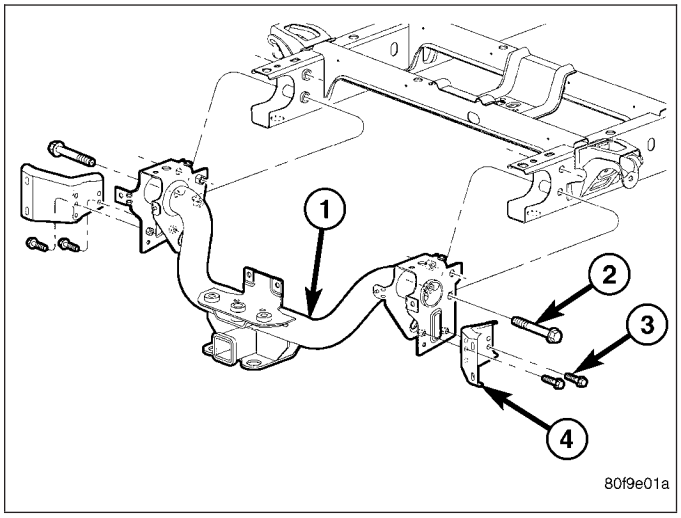

INSTALLATION

1. Align the holes in the bumpers to the trailer hitch pins and install the bumper.
2. Loosely install the hitch bolts (2) in the support bracket (4).
3. Install the front upper edge to the trailer hitch bolts (2) and tighten to 54 N·m (40 ft. lbs.).
4. Install the license plate reinforcement to hitch bolts (2) and tighten to 54 N·m (40 ft. lbs.).
5. Tighten the left bumper bracket bolts (3) to 54 N·m (40 ft. lbs.).
6. Tighten the right bumper bracket bolts (3) to 54 N·m (40 ft. lbs.).
7. Connect the trailer light connector electrical connection (if equipped).
8. Connect the license plate light electrical connectors.
9. Install the license plate.

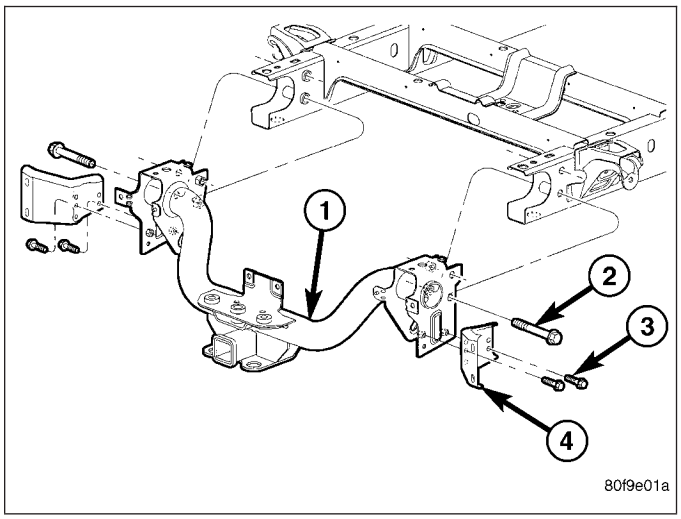

FASCIA-FRONT SRT-10

REMOVAL

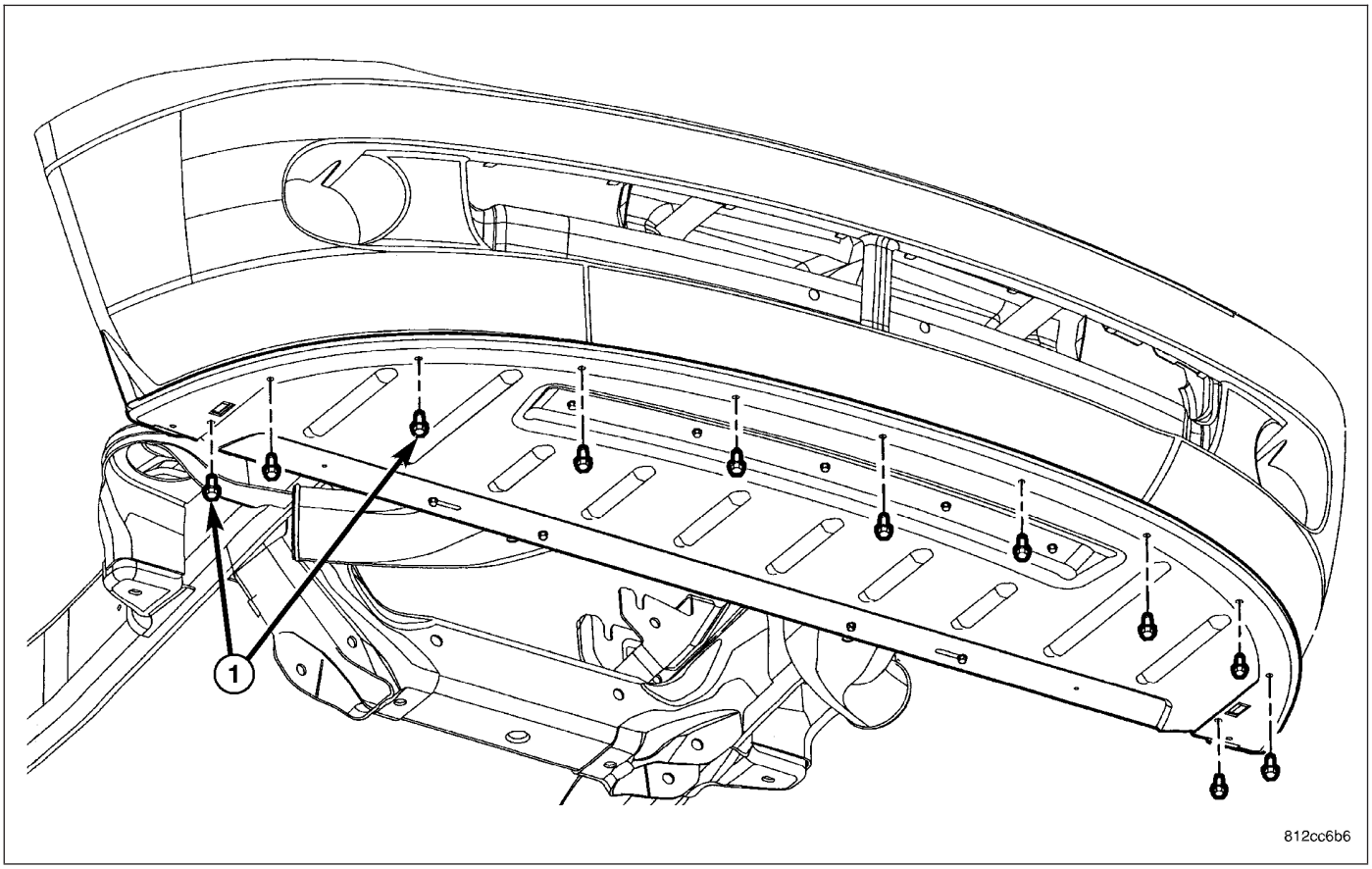

1. Remove the belly pan screws (1).

2. Remove the screws (1 & 2) from the wheel well.

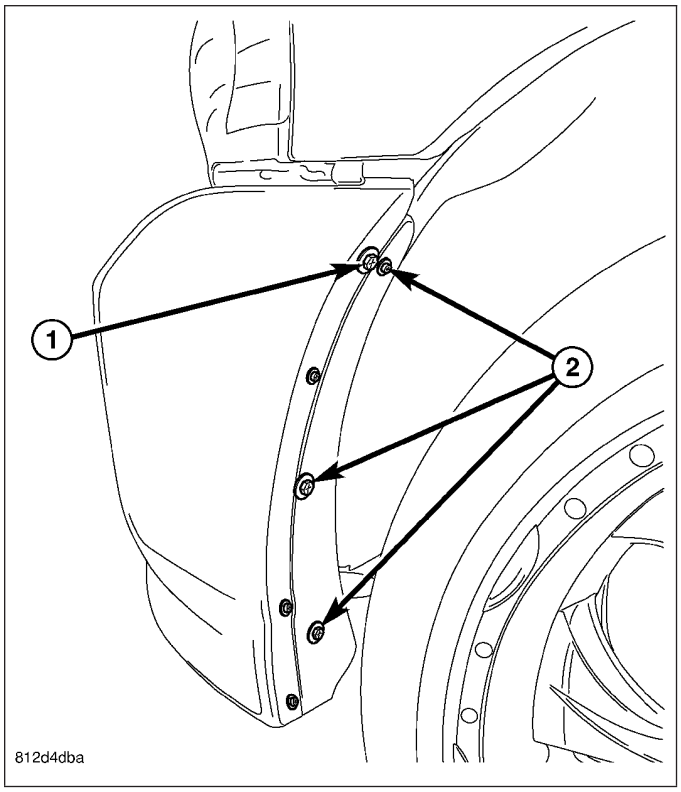

3. Remove the push pin fasteners attaching the upper fascia to the fascia retainer (1).

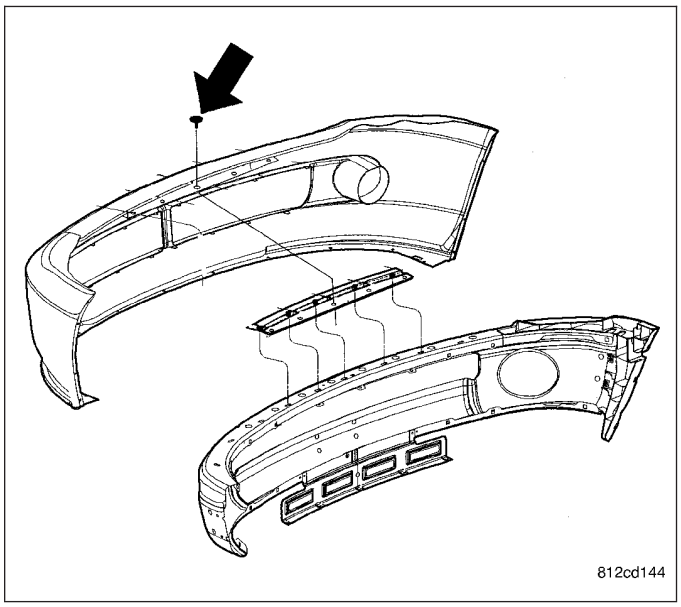

4. Lift the fascia off of the support brackets (1 & 2) and remove the fascia.

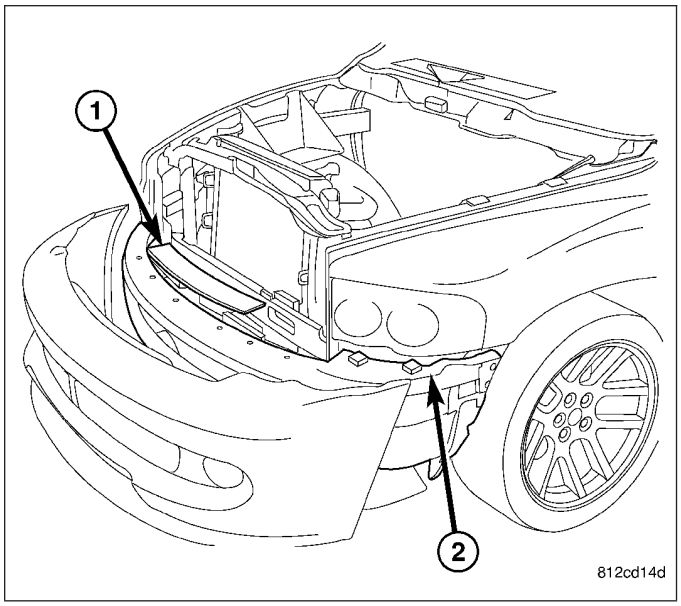

INSTALLATION

1. Position the fascia onto the vehicle.

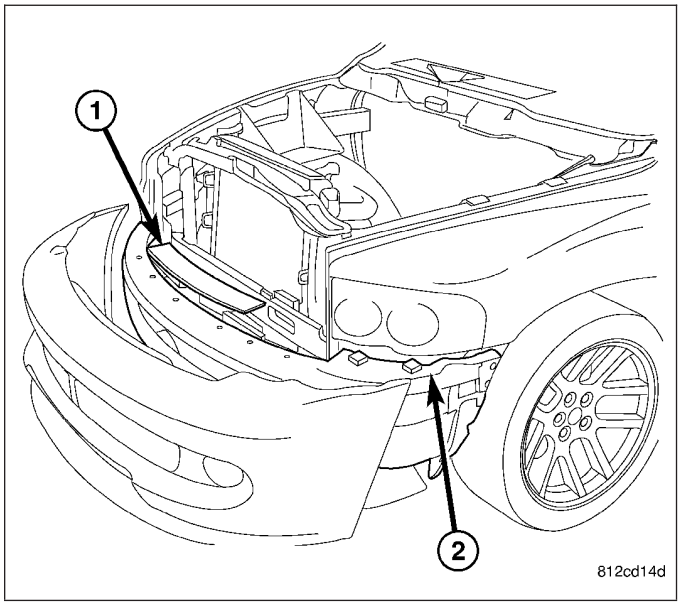

2. Position the fascia (2) over the side support bracket (1) on one side then around and over the other side support bracket (1).

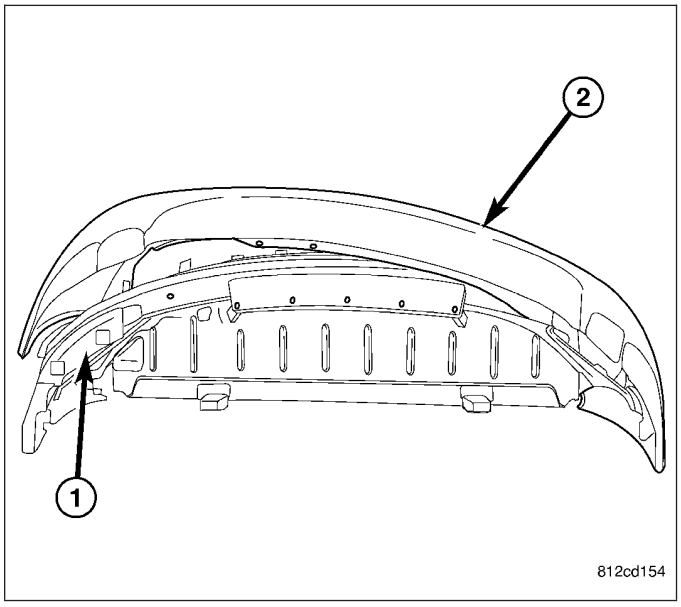

3. Position the belly pan (2) over the lip of the fascia (1).

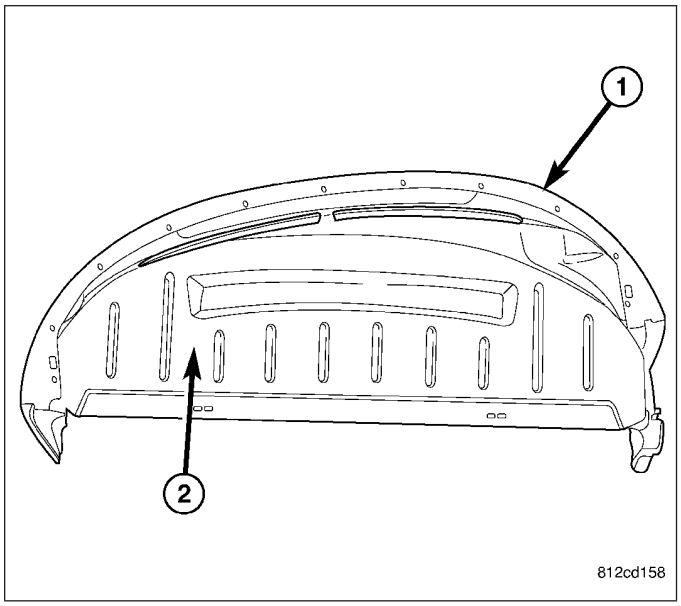

4. Install the push pin fasteners into the fascia retainer.

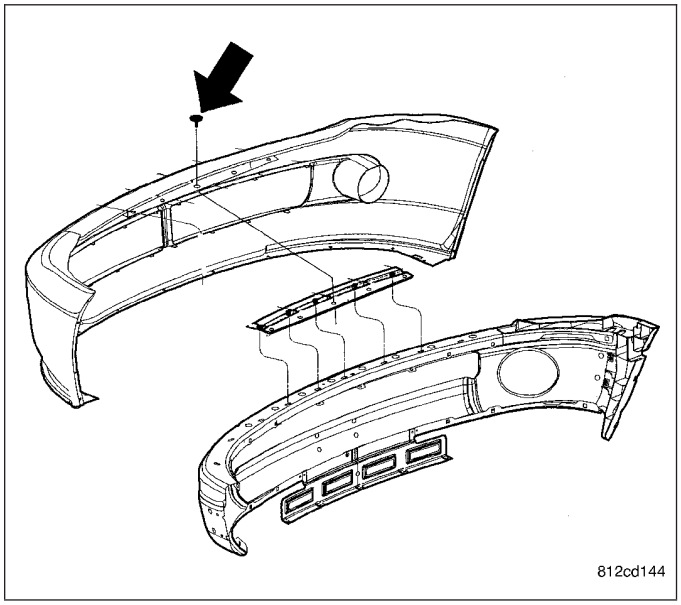

5. Install the screws (1 & 2) into the wheel well.

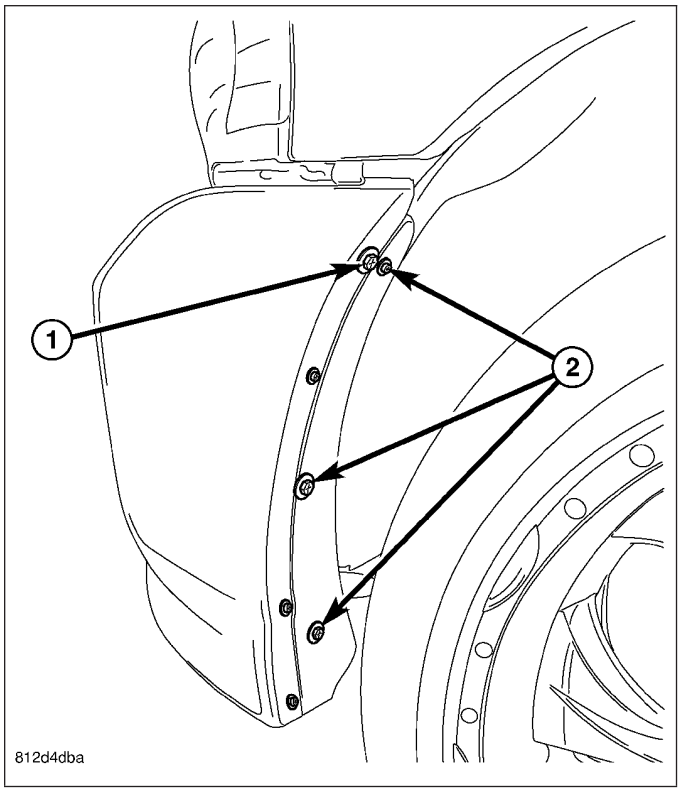

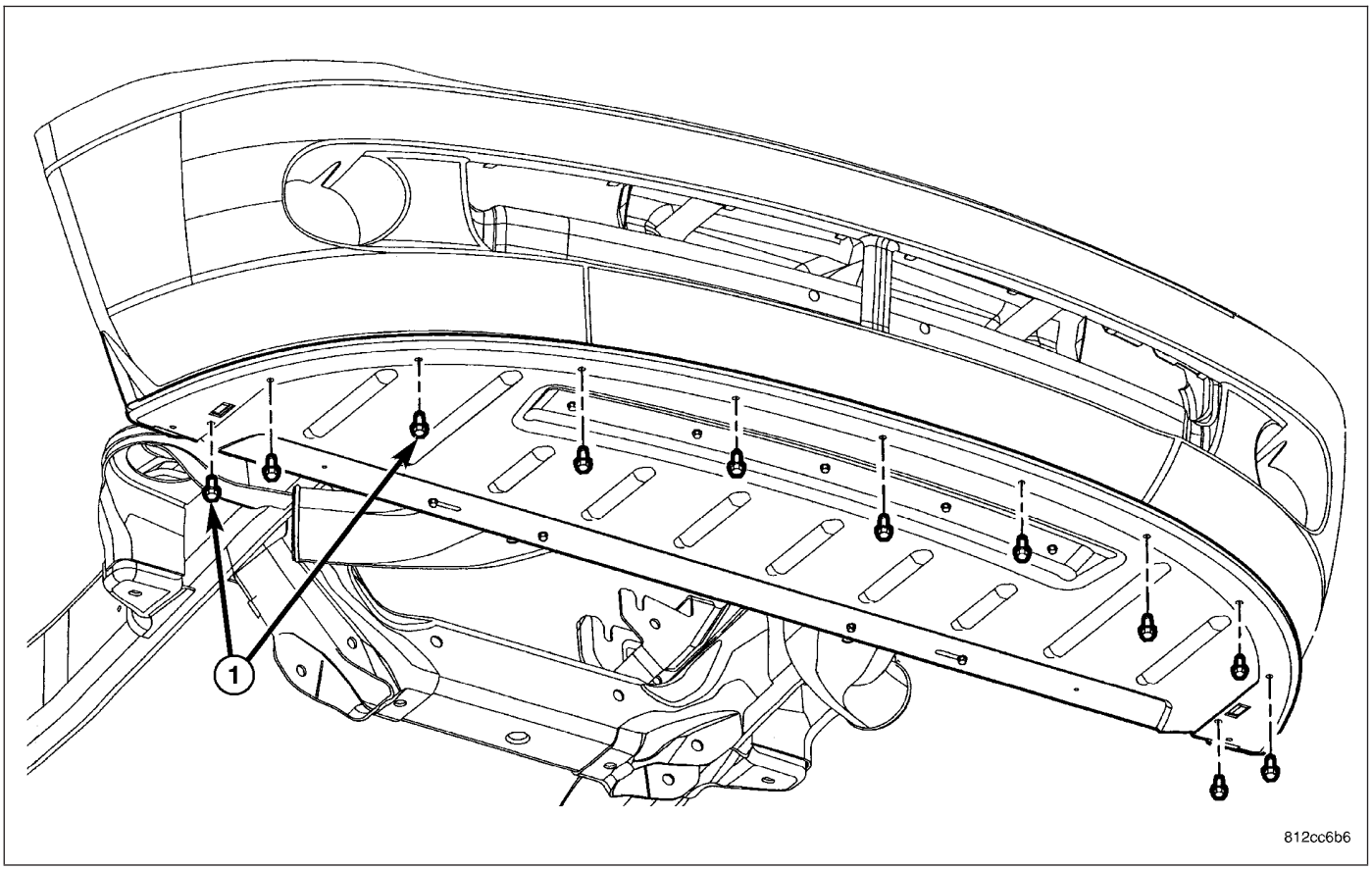

6. Install the screws (1) into the belly pan.

FASCIA-REAR SRT-10

REMOVAL

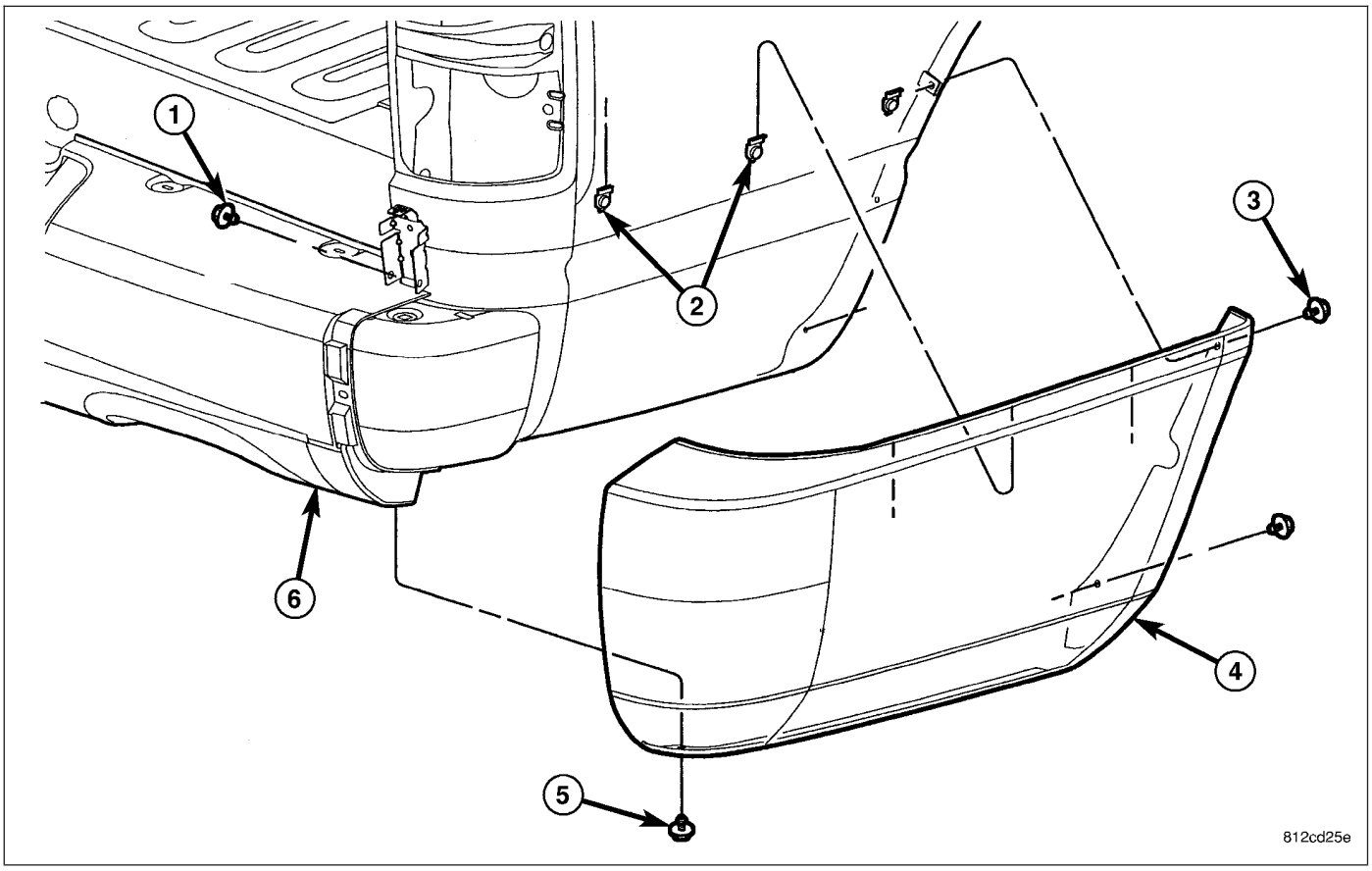

1. Remove the screws (2 and 4).
2. Separate end cap (3) and lift off of the support brackets (1).

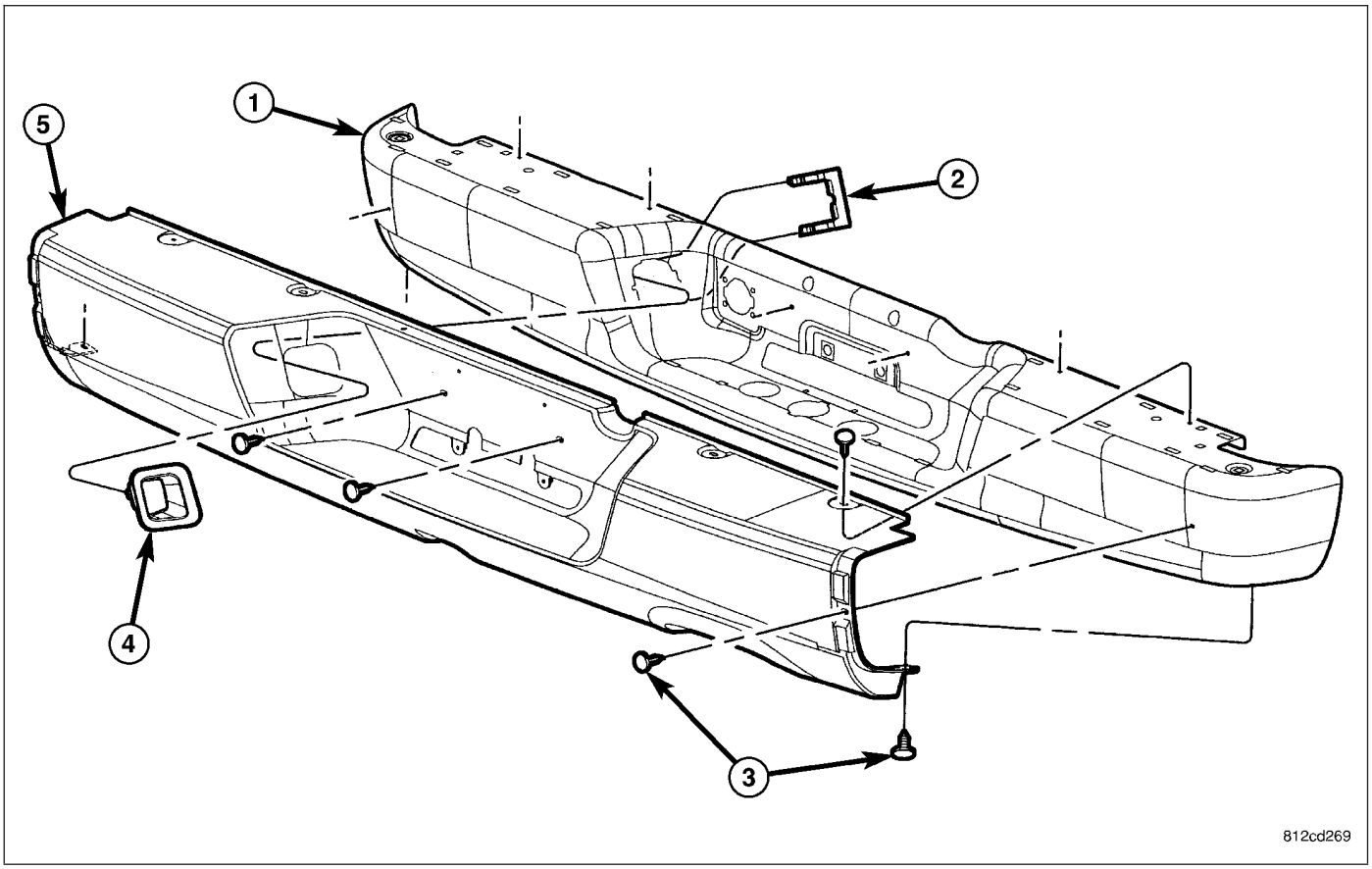

3. Remove the license plate lamp clips (2).
4. Remove the license plate lamps (4) and disconnect the electrical connectors.
5. Remove the push pin fasteners (3) and remove the fascia.

INSTALLATION

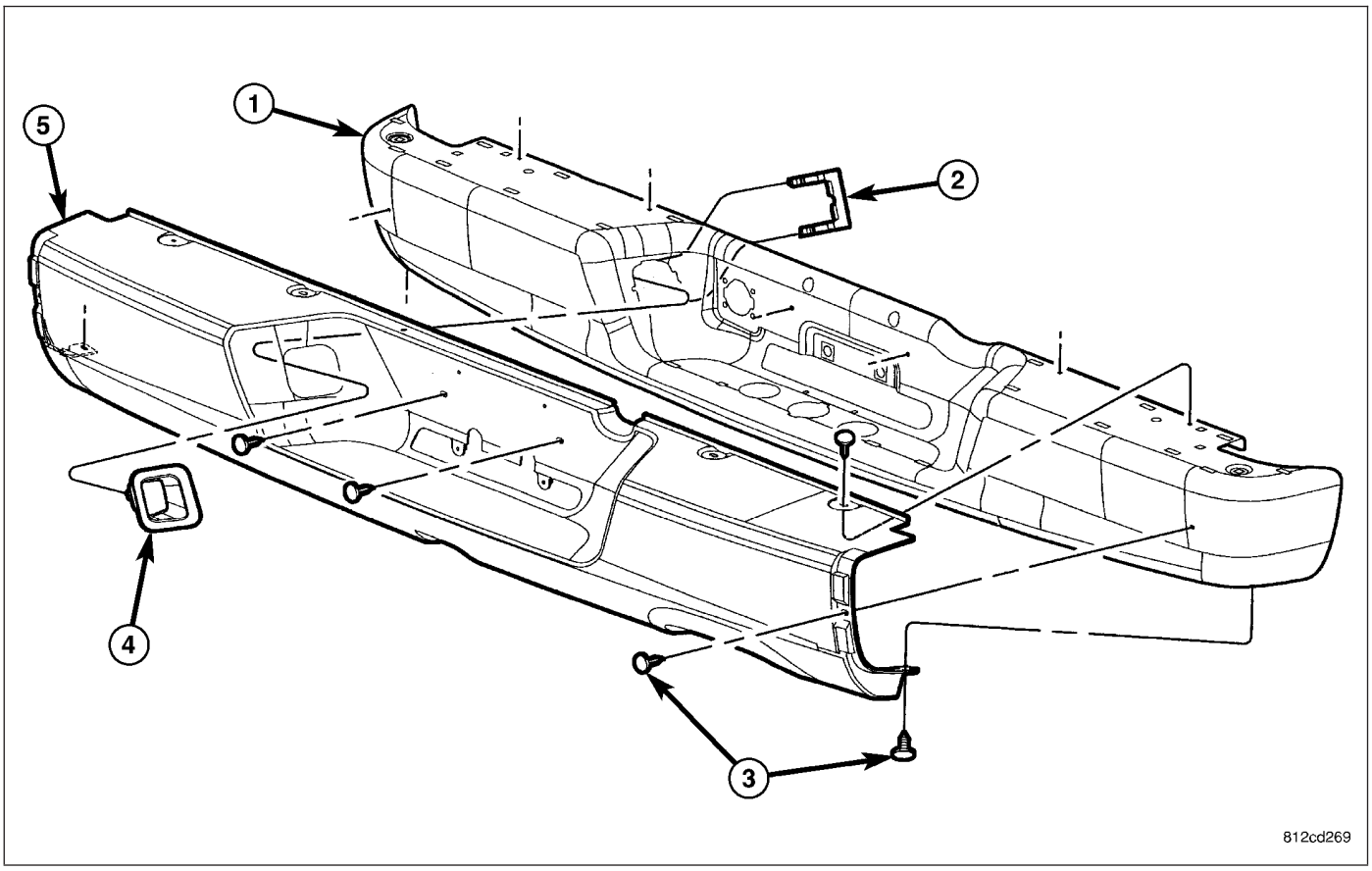

1. Install the fascia (5) and install the push pin fasteners (3).
2. Connect the electrical connectors and install the license plate lamps (4).
3. Install the lamp clips (2).

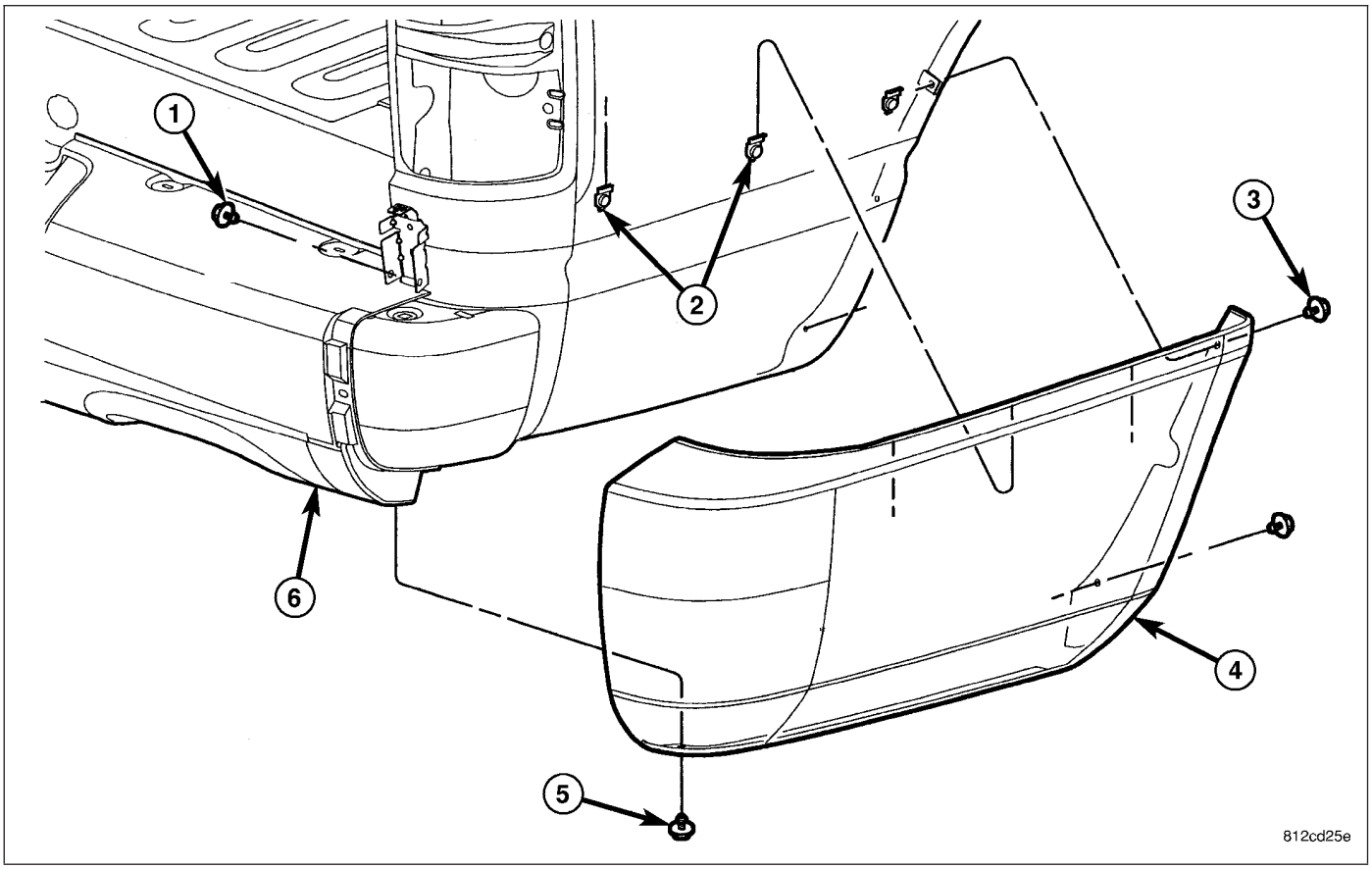

4. Position the end caps (3) over the support brackets (1) and install.
5. Install the screws (2 and 4).

FRAME

WARNING

WARNINGS

Use eye protection when grinding or welding metal. Failure to do this could result in serious personal injury or death.

Before proceeding with frame repair involving grinding or welding, verify that the vehicle fuel system is not leaking or in contact with the repair area. Failure to do this could result in serious personal injury or death.

Do not allow an open flame or heat and metal spatter from arc welding to contact plastic body panels. Fire, explosion can result causing serious personal injury or death.

When welded frame components are replaced, ensure that a complete penetration weld is achieved during installation. If not, dangerous operating conditions can result.

Stand clear of cables or chains on pulling equipment during frame straightening operations. Failure to do this can result in serious personal injury or death.

Do not venture under a hoisted vehicle that is not supported on safety stands. Walking under an unsupported vehicle can result in serious personal injury or death.

1500 series Dodge Ram Trucks (2002 and later) are not designed for snow plow equipment. The front collision repair tips must not be installed on any truck equipped with a snow plow, or even intended to be equipped with a snow plow.

Do not reuse damaged fasteners. The quality of repair would be suspect. Failure to use only production fasteners or fasteners of equivalent hardness can result in loosening or failure of the part. Do not drill any holes in the frame that are not specifically outlined in this, or in other DaimlerChrysler procedures as frame rail failure can result causing serious personal injury or death. When using heat to straighten frame components, do not exceed 566°C (1050°F). If temperature is exceeded, metal fatigue can happen and result in serious personal injury or death.

STANDARD PROCEDURE

LIGHT DUTY FRONT FRAME RAIL TIP REPLACEMENT

CAUTION: This procedure is designed to replace the front frame rail tips that have been damaged in the crush initiator zones. Prior to any cutting, the vehicle must be mounted on the appropriate frame repair equipment ("frame rack"), checked with three dimensional measuring equipment, and the necessary pull corrections made. If damage remains in the frame beyond the area covered by this service part after the pull, the frame must be replaced in its entirety.

CAUTION: Inspect the tire winch assembly for damage. If any one or more of the following are evident, replace the winch assembly.
- **Indications of cracked or bulging plastic.**
- **Housing flanges are bent or cracked.**
- **If winch was loose before repair.**
- **If the rivet heads are separated from the housing in any way.**

NOTE: Procedures for 4X2 and 4X4 are common except as noted in this procedure.

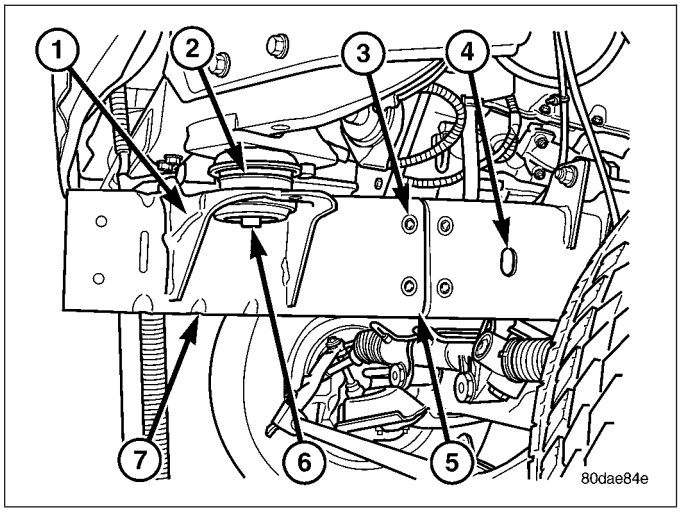

1. Before proceeding with this repair procedure review the required service warnings and precautions. (Refer to 13 - FRAME & BUMPERS/FRAME - WARNING)
2. Disconnect and isolate the battery negative cable.
3. Remove the front wheelhouse splash shield. (Refer to 23 - BODY/EXTERIOR/FRONT WHEELHOUSE SPLASH SHIELD - REMOVAL)
4. Remove the bolts and position aside the wire harness and grounds, if required.
5. Remove the front bumper. (Refer to 13 - FRAME & BUMPERS/BUMPERS/FRONT BUMPER - REMOVAL)
6. Loosen and lower the stabilizer bar mount and bar. (Refer to 2 - SUSPENSION/FRONT/STABILIZER BAR - REMOVAL)
7. Remove the front cab mount bolt (6) to the Front End Sheet Metal (FESM) bracket.

8. Make a vertical mark (6) on the inside and outside face of the frame rail 112 mm (4.5 in.) from the forward edge of the PLP hole (3) in the sides of the rail.
9. Using a straightedge, connect the two lines on the top and bottom of the rail.
10. Using the service tip as a guide, recheck your cut lines to ensure the service tip will fit when the cut is made.

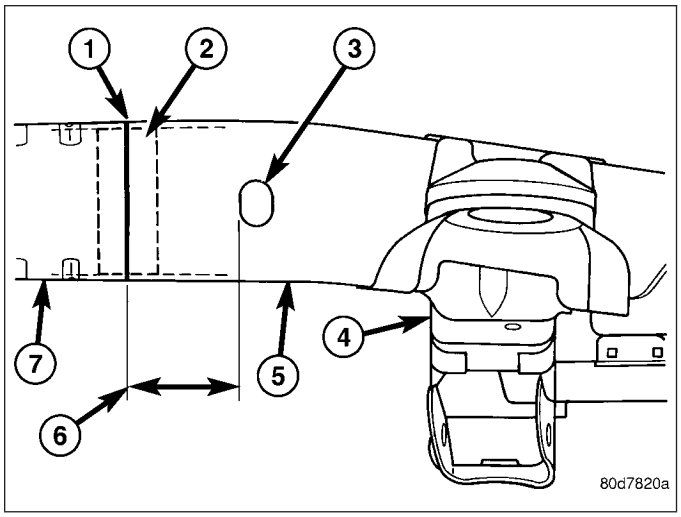

CAUTION: Do not use any flame or plasma cutting equipment to cut the frame in this procedure. This is due to the inaccurate nature of the cut-line and the fact that the high temperatures achieved during flame or plasma cutting will change the metal characteristics and may weaken the frame and/or repair location.

11. Using a reciprocating saw or equivalent, carefully cut and remove the damaged frame rail tip (7).
12. Assemble the service sleeve. Refer to SERVICE SLEEVE ASSEMBLY at the end of this procedure.

NOTE: Any burned surface coatings will need to be removed from the sleeve prior to installation and application of corrosion preventative coatings.

13. Smooth and square the cut edges of the original frame.
14. Dress the cut edge of the existing frame in preparation for the new rail tip.
15. Drill four 13 mm (0.5 in.) diameter holes (9) in the new tip (1) and four more in the existing frame (2) to accommodate ring-fillet welds. Center these holes (8) 19 mm (0.75 in.) from the cut face of the rail and (6) 38 mm (1.5 in.) from the top and bottom of the rail.

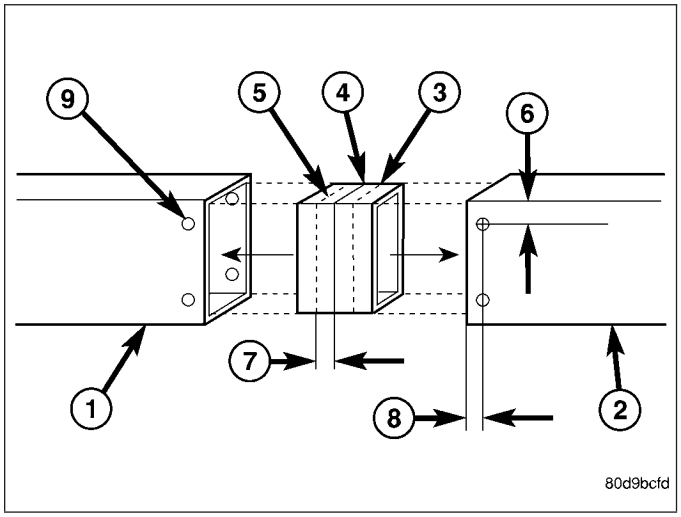

16. Bevel the edges of the new tip, existing frame, and ring-fillet holes 25° - 30° (3). Scribing a line 2 mm from the cut edge and then grinding back to the mark will simplify the bevel creation process and accuracy.
17. Remove any burrs at the holes and beveled edges.
18. Dry fit the new rail to ensure alignment and fit and make any adjustments as necessary.
19. Remove all internal and external OEM e-coat within 51 mm (2.0 in.) of the weld joint on the replacement tip and the existing frame rail.

NOTE: Any burned surface coatings will need to be removed prior to application of corrosion preventative coatings.

CAUTION: Shield the surrounding area and components from exposure to the welding spatter and heat.

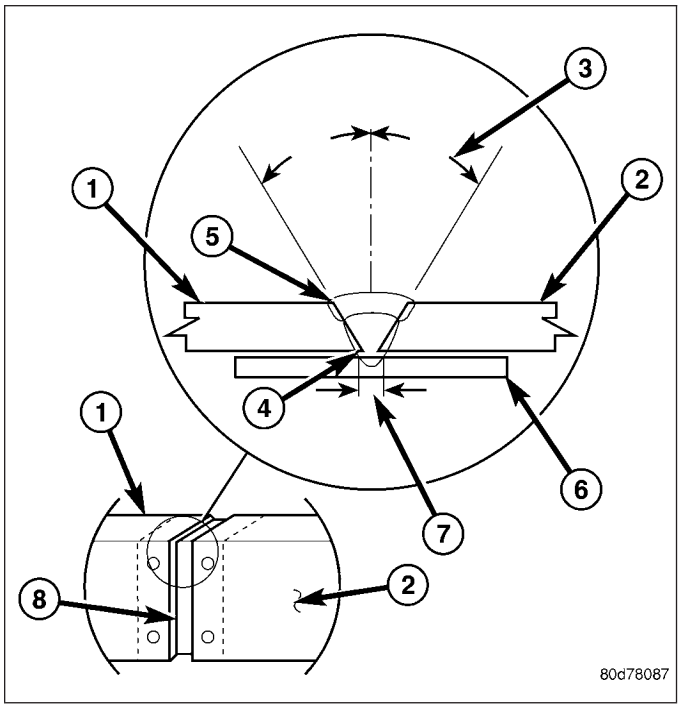

20. On 4X4 models use the service sleeve (3) as a template to drill a hole in the frame tip (1) to accommodate the sway bar mounting bolt (6).

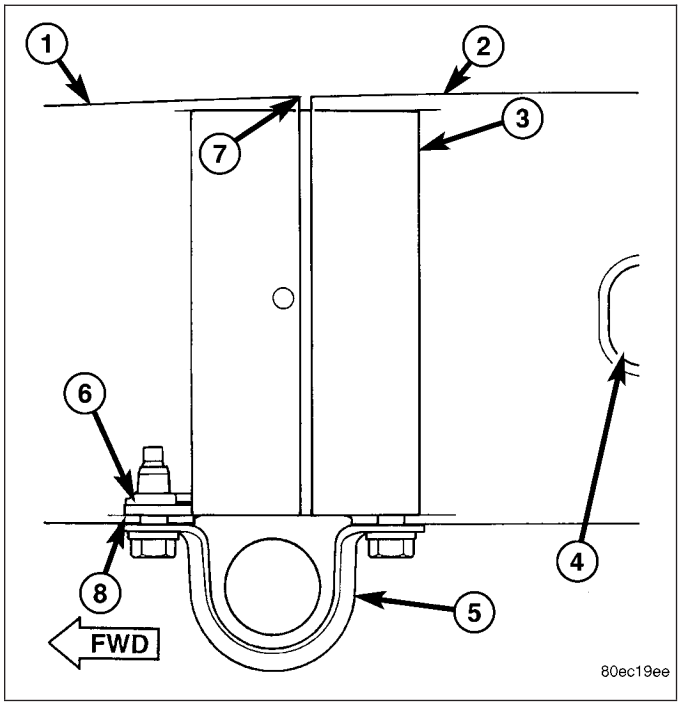

21. Slide the service sleeve (3) into the replacement frame tip (1) and align to the 2 mm (0.08 in.) off center line made previously during the sleeve assembly and tack the ring fillet welds to hold them in place.

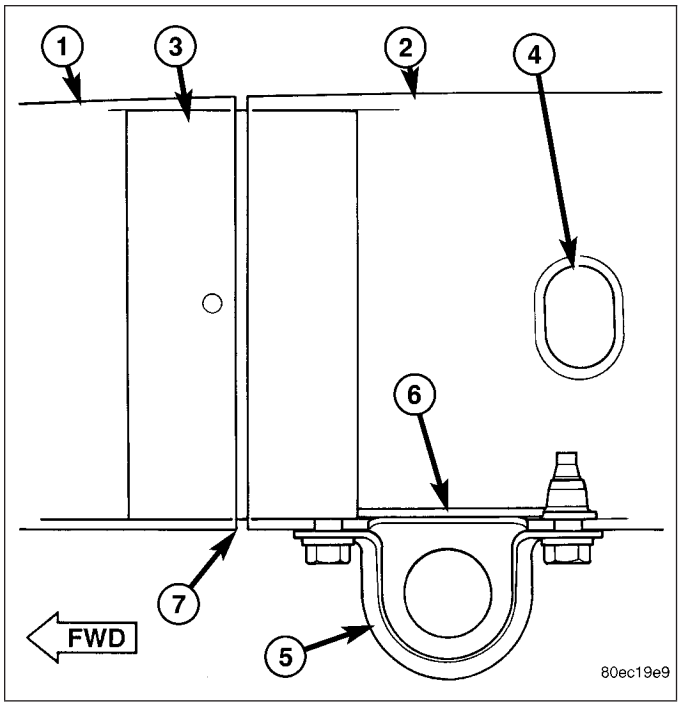

22. On 4X4 models, install the sway bar tapping plate (5) and secure with tack welds.

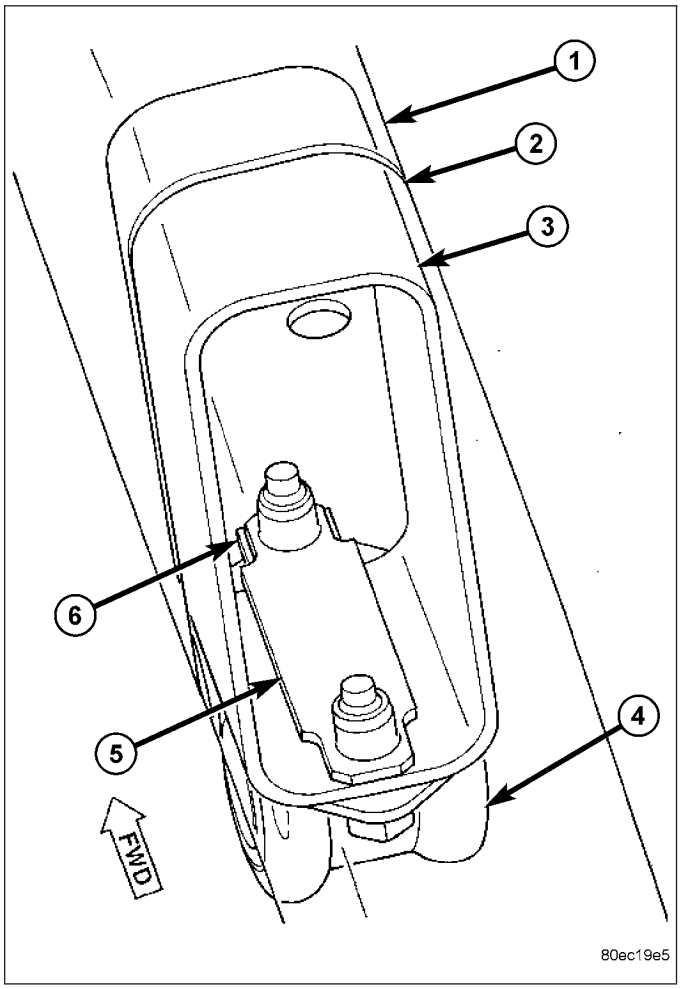

23. Apply ring-fillet welds (3) into the ring-fillet weld holes on the replacement frame tip. (Refer to 13 - FRAME & BUMPERS/FRAME - SPECIFICATIONS - WELDING)
24. Start the ring-fillet welds at location (1) and follow around the circumference of the ring-fillet weld hole and end weld overlapping start point (2).

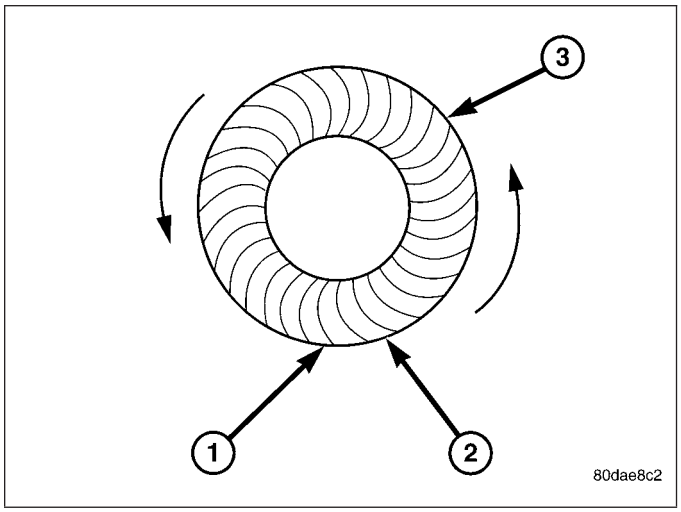

25. Install the upper FESM insulator onto the replacement tip and position the service sleeve/replacement tip into the existing frame rail.
26. Loosely install the lower FESM insulator and cab mounting bolt.
27. Using the appropriate measuring equipment, verify the front end sheet metal bracket's location in all three (X,Y, and Z) planes of space, and adjust if required.

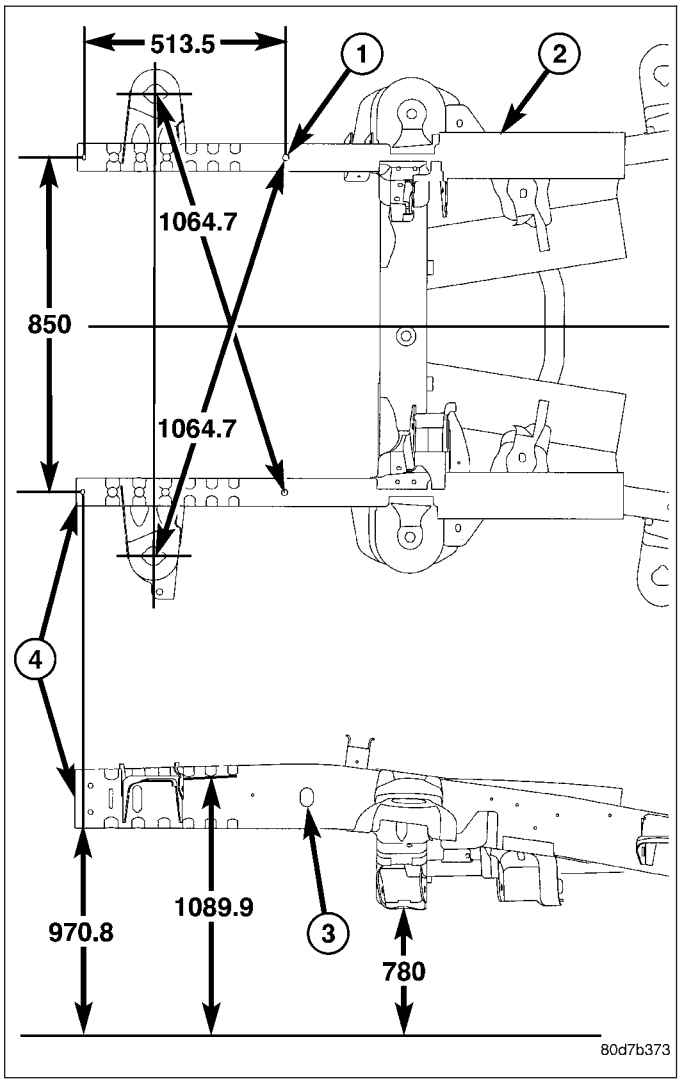

CAUTION: Shield the surrounding area and components from exposure to the welding spatter and heat.

28. When correctly fitted and a weld root gap of 4 mm minimum to 6 mm maximum (0.16 in - 0.24 in) is established, tack the ring fillet welds to hold the tip in position, then complete the ring fillet welds (3).

NOTE: Ring-fillet welds may be filled in with weld material if an improved cosmetic appearance is desired.

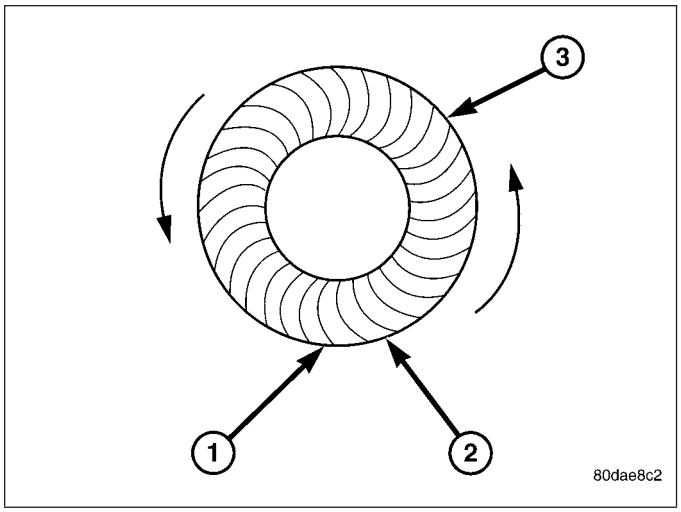

29. Confirm alignment of the replacement frame rail tip (4).

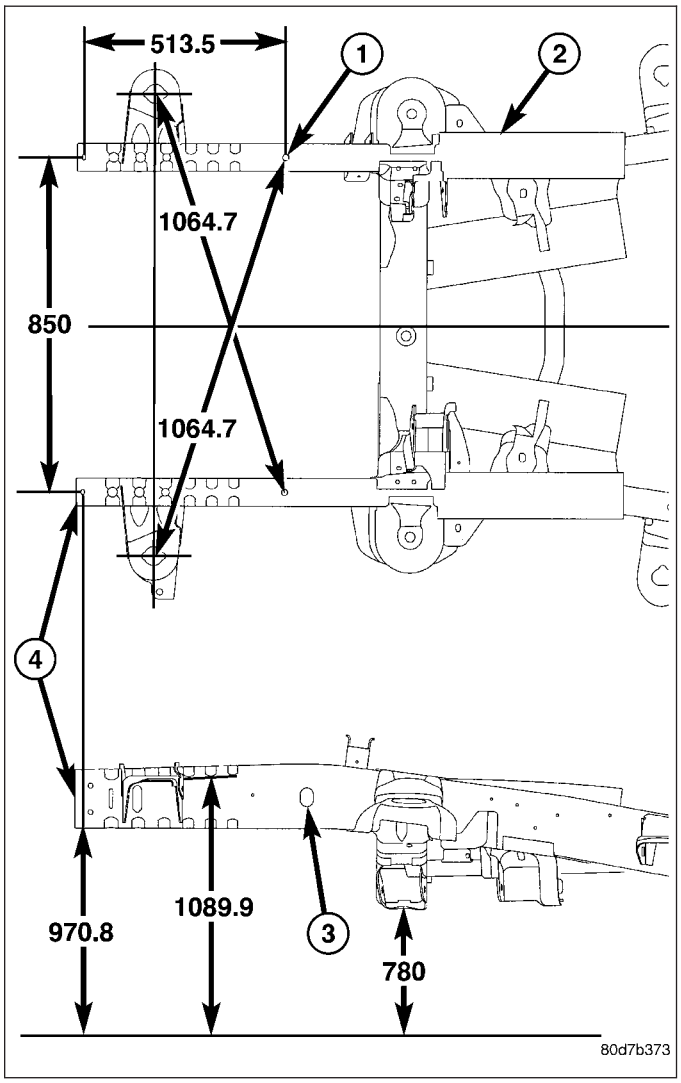

30. Final welding should be performed in a skip (stitch) type method to minimize the heat buildup and frame distortion, utilizing the Weld Process Specifications at the end of this section. The preferred method is GMAW (MIG). (Refer to 13 - FRAME & BUMPERS/FRAME - SPECIFICATIONS - WELDING)
    a. Apply root pass welds (4) to the root joint one quadrant at a time, switching to the opposite side of the frame for each quadrant.
    b. Clean the welds of any flux and other impurities before proceeding with the cover pass welds (5).
    c. Apply the cover pass welds (5) in the same manner as described above.

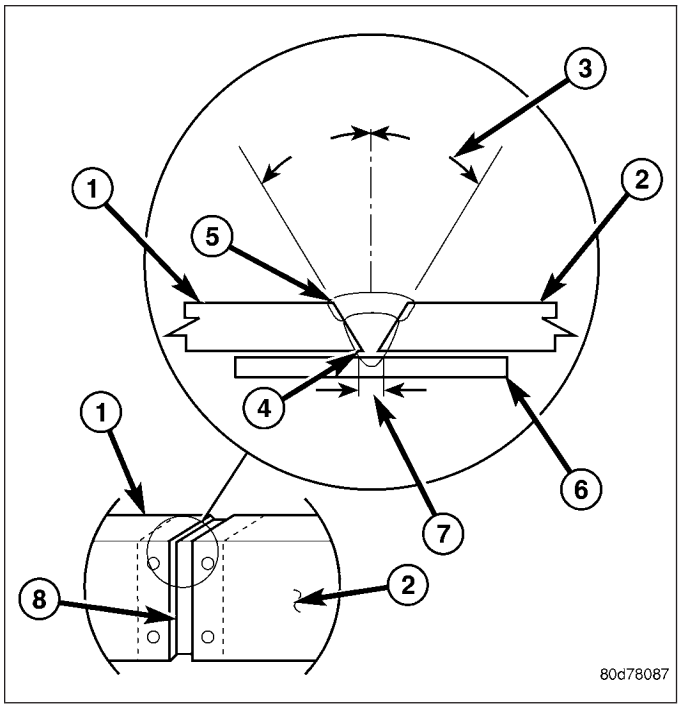

31. Confirm alignment of the replacement frame rail tip (4).

NOTE: Any burned surface coatings will need to be removed prior to application of corrosion preventative coatings.

32. Dress the welded area and apply corrosion resistant coatings inside and out.
    a. Apply etch-primer to the inside of the frame rail repair area.
    b. Inside the rail, inject a creeping wax based rust inhibitor compound through the existing holes in the frame ensuring 100% coverage including the space between the original frame rail and the reinforcing sleeve.
    c. Apply a durable top coat to the outside of the repair area.
33. Tighten the front cab mounting bolt to the FESM bracket to 81 N·m (60 ft. lbs.).
34. Install the stabilizer bar. (Refer to 2 - SUSPENSION/FRONT/STABILIZER BAR - INSTALLATION)
35. Install the front bumper. (Refer to 13 - FRAME & BUMPERS/BUMPERS/FRONT BUMPER - INSTALLATION)
36. Install the wire harness and ground strap if previously removed and install the bolt.
    a. If necessary, re-drill and tap the ground strap mounting hole

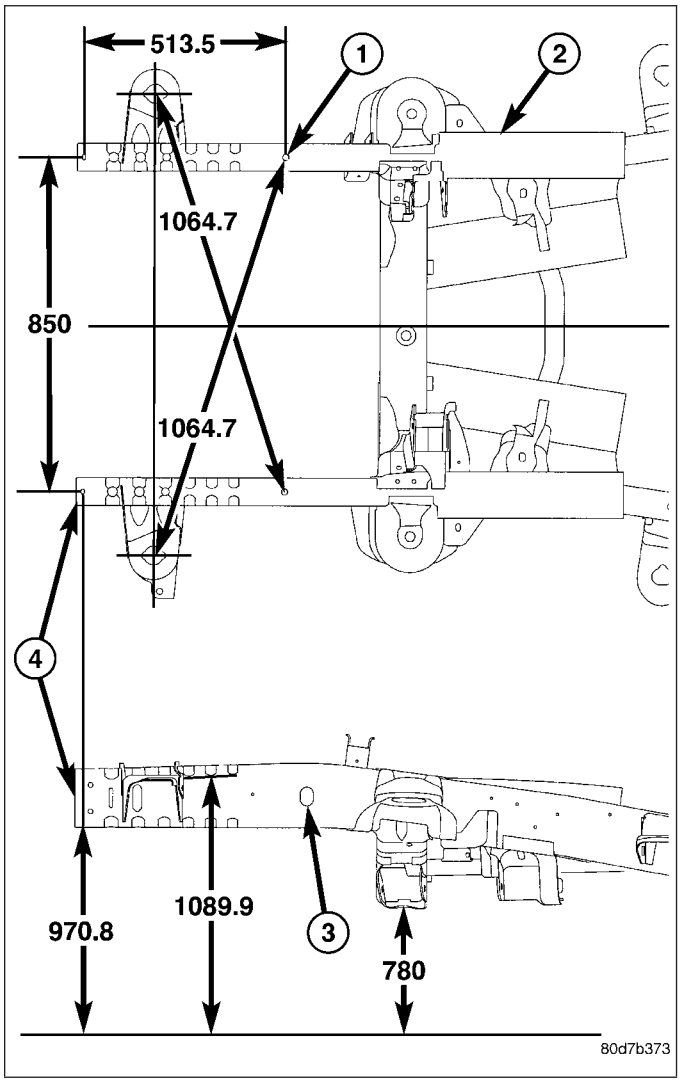

37. Install the front wheelhouse splash shield. (Refer to 23 - BODY/EXTERIOR/FRONT WHEELHOUSE SPLASH SHIELD - INSTALLATION)

SERVICE SLEEVE ASSEMBLY

NOTE: Two sleeve halves are included with each kit. Modifications as follow, are necessary to create the correct sleeve assembly for each application.

1. On 4X2 models, the ″lower″ sleeve (1) is made by cutting off the tab (5) and cutting out a notch (4) in the bottom sleeve portion. Round the corners of the cut out to keep stress cracks from forming. On 4X4 models the ″lower″ sleeve is used as provided.

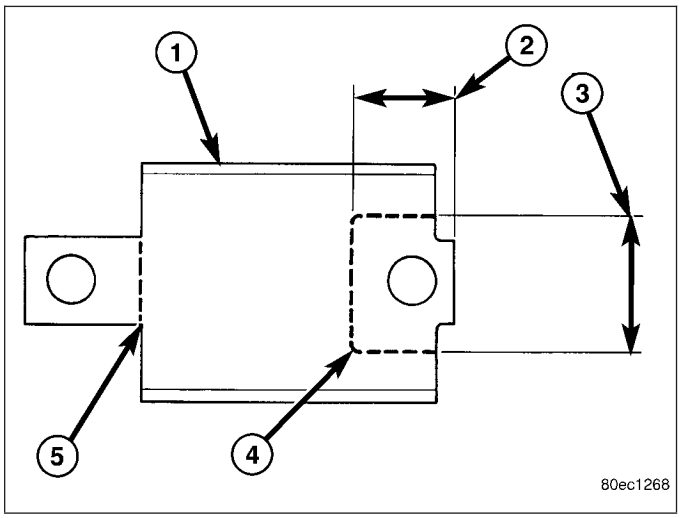

2. On both 4X2 and 4X4 models cut off the front tab (2) on the upper sleeve portion (1).
3. The sleeve halves are shipped slightly oversized to allow custom fitting to each replacement frame rail tip. It is necessary to grind the mating surfaces to achieve the desired snug fit into the replacement tip (rail tube has increasing height rearward of the cut line). Once the two sleeve halves are fitted, bevel the edges 25° - 30°.

NOTE: Scribing a line 2 mm from the cut edge and then grinding back to the mark will simplify the bevel creation process and accuracy.

4. Remove any burrs at the beveled edges.

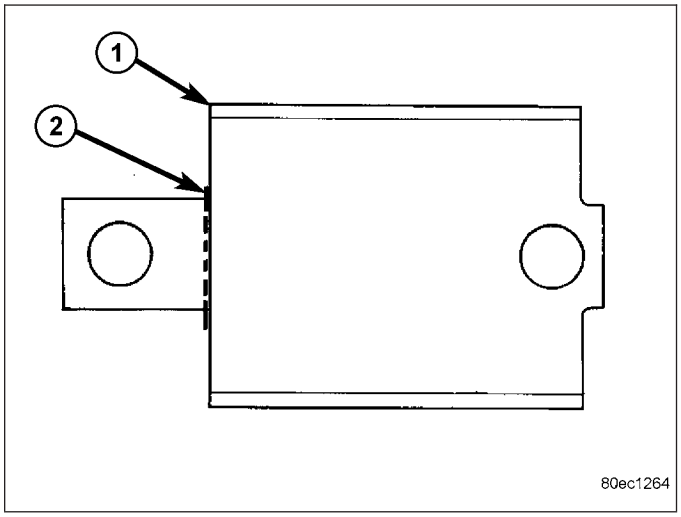

5. Using the Weld Process Specifications table (Refer to 13 - FRAME & BUMPERS/FRAME - SPECIFICATIONS - WELDING), weld the two halves of the repair sleeve together.
6. Clean the welds of any flux and other impurities and grind smooth before proceeding with the installation of the sleeve.
7. Find the centerline of the sleeve and scribe a centerline mark (1). Mark two additional lines (4) 2 mm (0.08 in.) on either side of the centerline mark to help ensure the required 4 mm - 6 mm (0.16 in. - 0.24 in.) weld root gap.

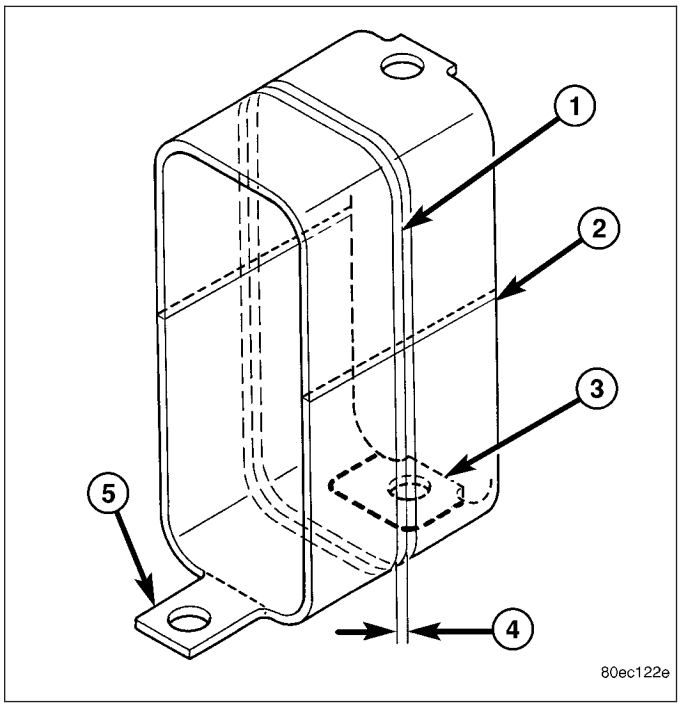

HYDROFORM FENDER RAIL REPAIR

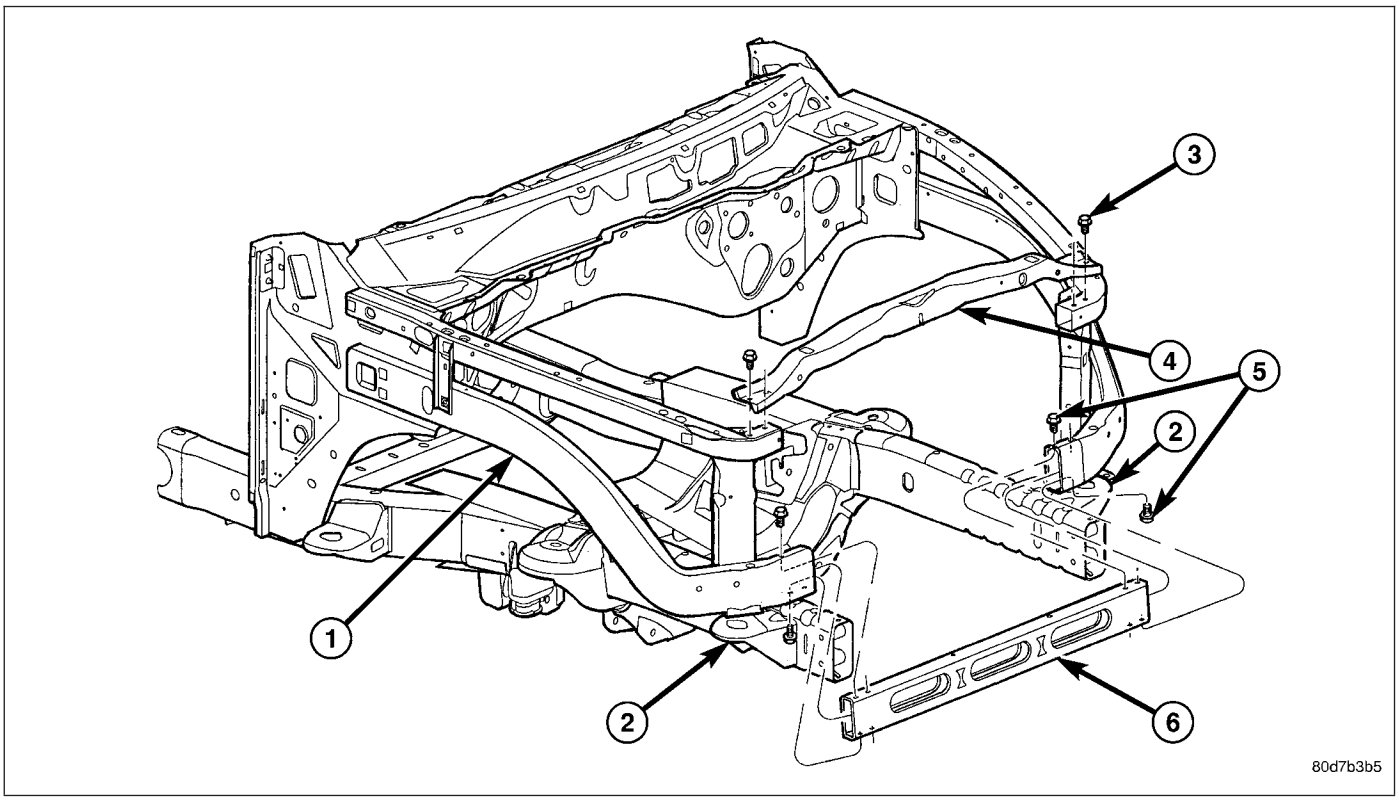

CAUTION: This repair procedure assumes damage to the right or left hydroform fender rail (1). Prior to any repairs, the vehicle must be mounted on the appropriate frame repair equipment ("frame rack"), checked with three dimensional measuring equipment, and necessary pull corrections made. If damage exists in the hydroform fender rail, or cab beyond the area covered by this service procedure after dimensional corrections are made, the hydroform must be replaced in its entirety. Refer to 23 - BODY/BODY STRUCTURE/ WELD LOCATIONS - SPECIFICATIONS, when replacing the entire hydroform.

CAUTION: Inspect the tire winch assembly for damage. If any one or more of the following are evident, replace the winch assembly.
- **Indications of cracked or bulging plastic.**
- **Housing flanges are bent or cracked.**
- **If winch was loose before repair.**
- **If the rivet heads are separated from the housing in any way.**

1. Before proceeding with this repair procedure review the required service warnings and precautions (Refer to 13 - FRAME & BUMPERS/FRAME - WARNING).

2. Disconnect and isolate the battery negative cable.
3. Remove the front wheelhouse splash shield (Refer to 23 - BODY/EXTERIOR/FRONT WHEELHOUSE SPLASH SHIELD - REMOVAL).
4. Remove the fender (Refer to 23 - BODY/EXTERIOR/FRONT FENDER - REMOVAL).

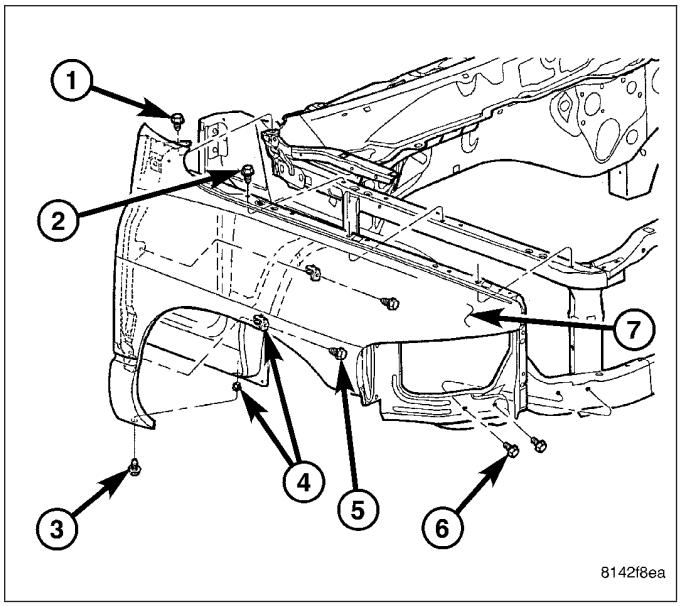

5. Remove the A/C condenser, if required (Refer to 24 - HEATING & AIR CONDITIONING/PLUMBING/A/C CONDENSER - REMOVAL).
6. Remove the A/C lines, if required. Refer to the Heating and Air Conditioning section of the manual for recommended procedures.

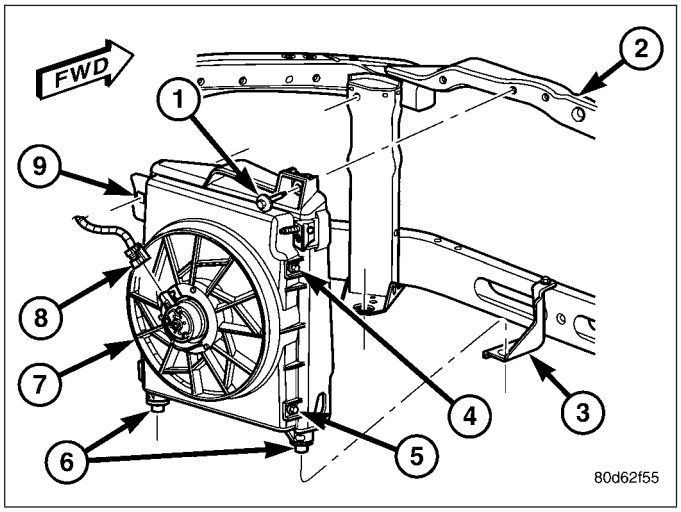

7. Remove the radiator assembly (4) (Refer to 7 - COOLING/ENGINE/RADIATOR - REMOVAL).

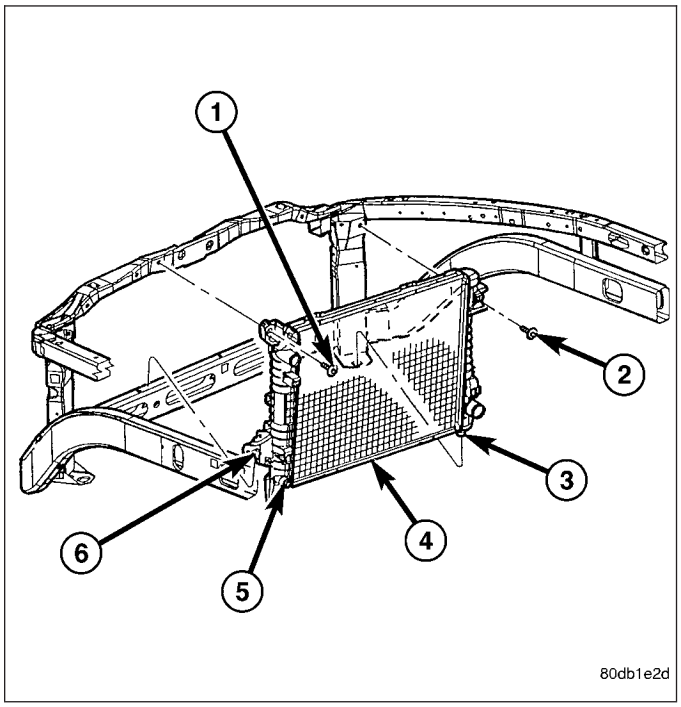

8. Remove the air cleaner and support bracket (1 - if required) (Refer to 9 - ENGINE/AIR INTAKE SYSTEM/AIR CLEANER ELEMENT - REMOVAL).

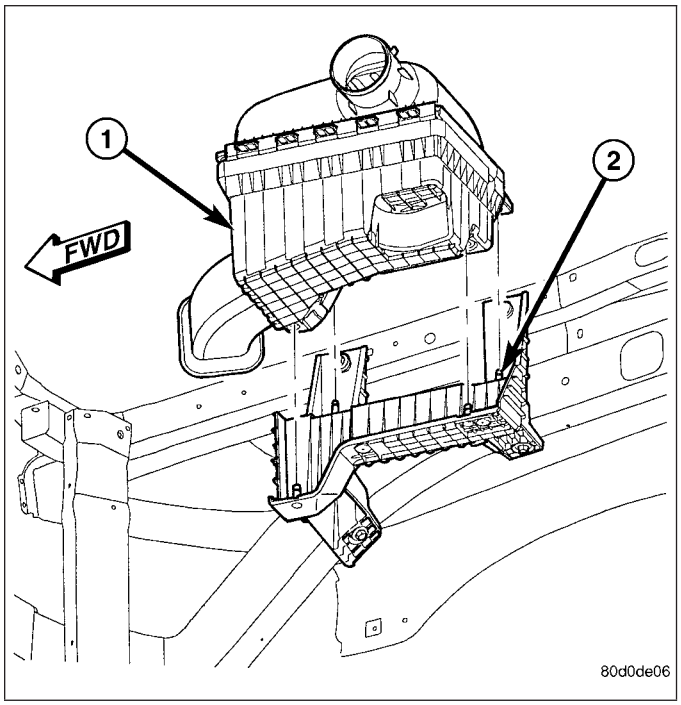

9. Remove the integrated power module (Refer to 8 - ELECTRICAL/POWER DISTRIBUTION/INTEGRATED POWER MODULE - REMOVAL).
10. Remove the bolts and position aside the wire harness and grounds, if required.

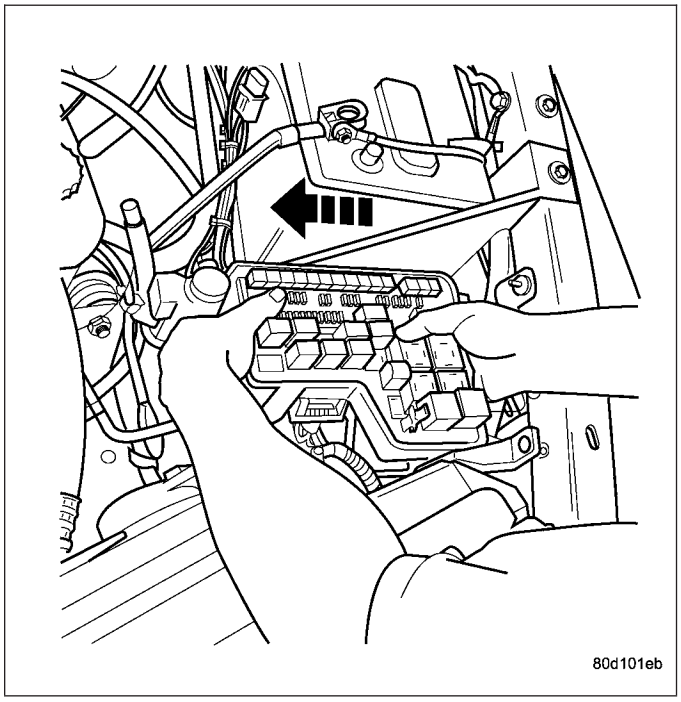

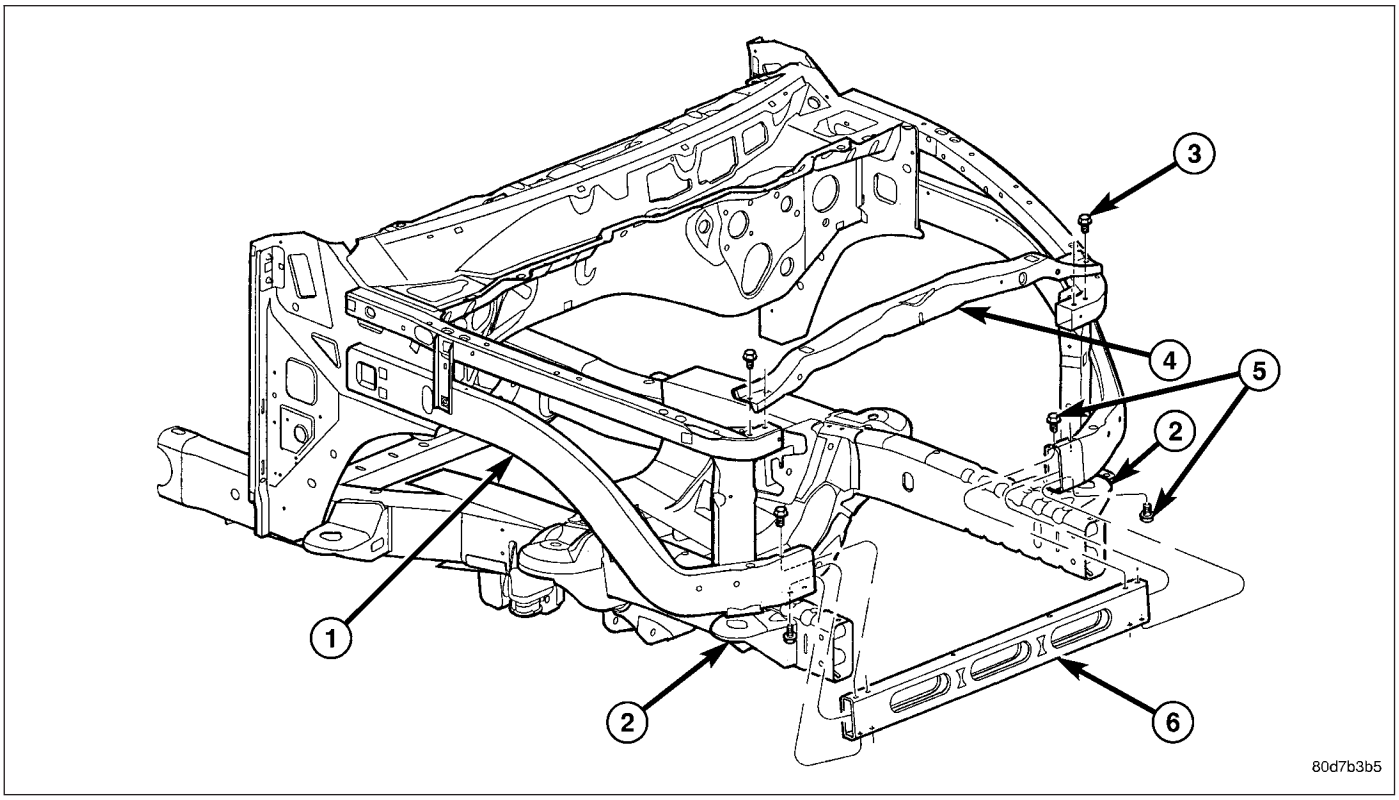

11. Remove the upper radiator crossmember (4). (Refer to 23 - BODY/EXTERIOR/UPPER RADIATOR CROSS-MEMBER - REMOVAL).

12. Remove the headlamp unit (5) (Refer to 8 - ELECTRICAL/LAMPS/LIGHTING - EXTERIOR/ HEADLAMP UNIT - REMOVAL).

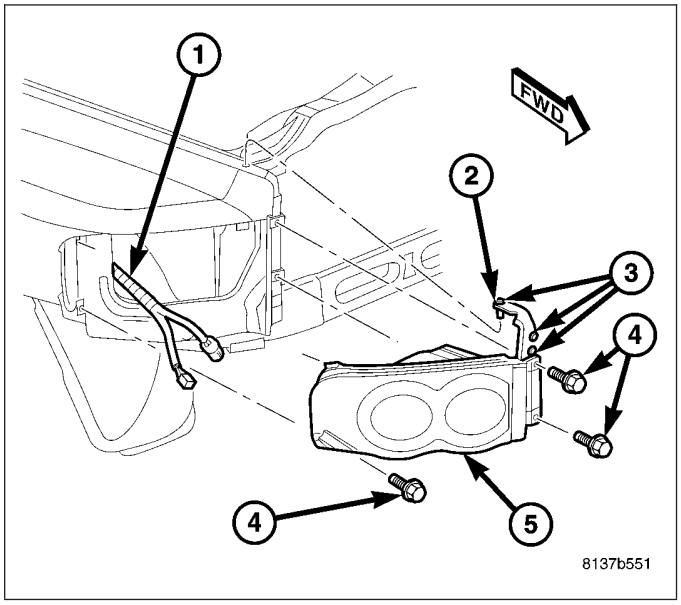

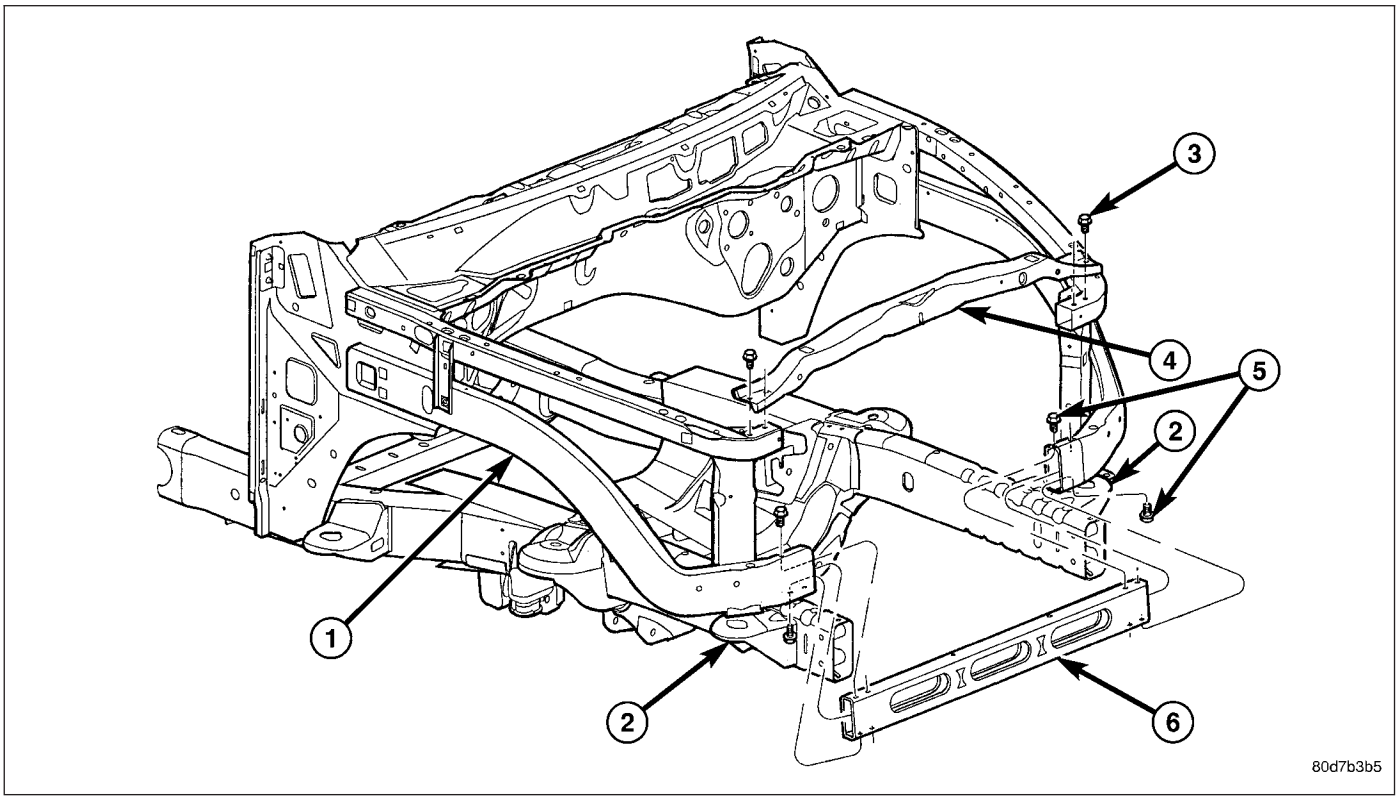

13. Remove the front cab mount to the Front End Sheet Metal bracket (FESM) bolt (2).
14. Remove the bolts (5) attaching the lower radiator crossmember (6) to the hydroform fender rail (1).

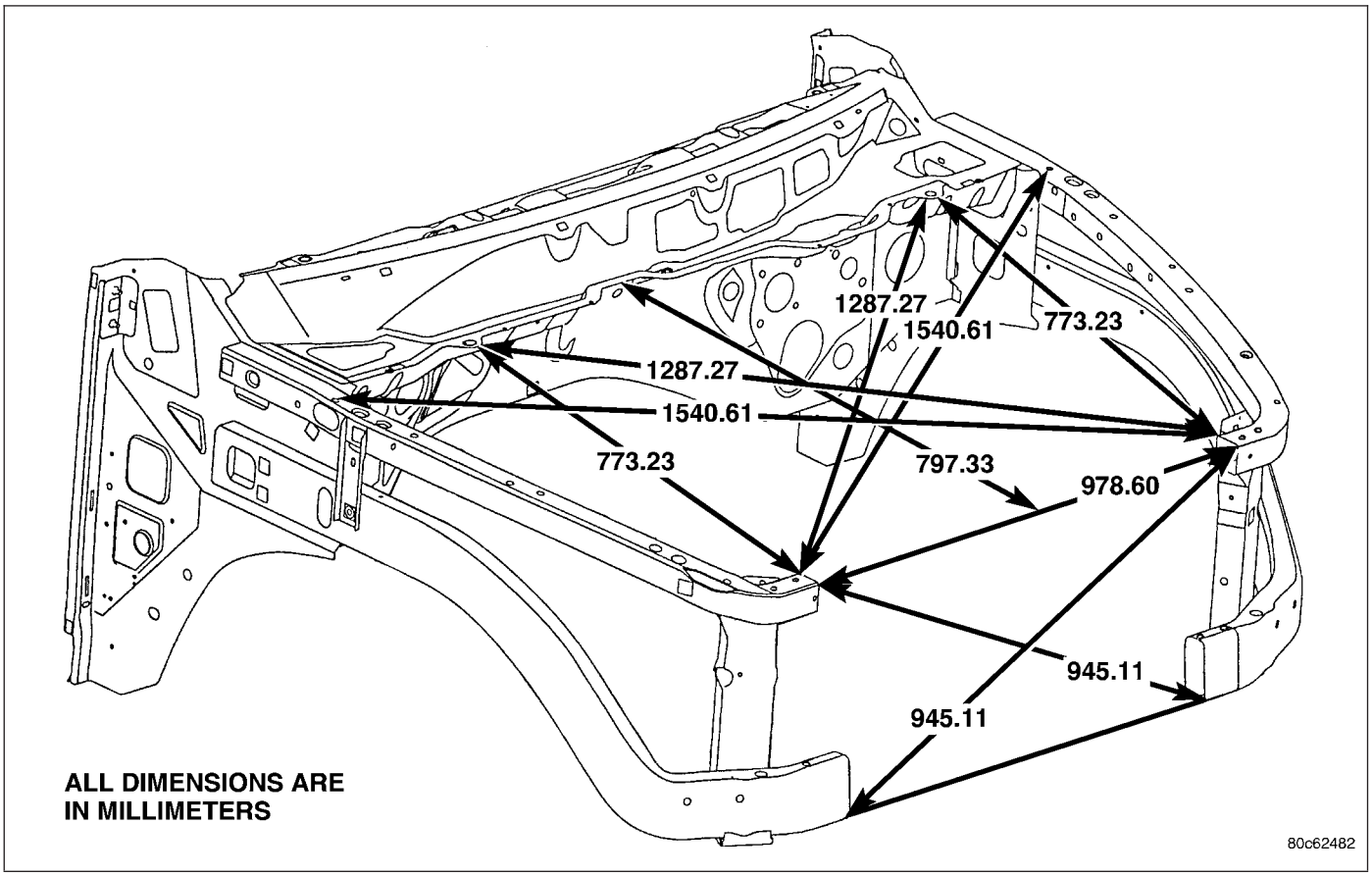

CAUTION: Do not use any flame or plasma cutting equipment to cut the frame in this procedure. The inaccurate and high temperatures achieved during flame or plasma cutting will change the metal characteristics and may weaken the frame and/or repair location.

15. Using a reciprocating saw or equivalent, cut the fender rail and shotgun at a straight and square section of the hydroform and remove.
16. Smooth and square the cut edges.
17. Using the damaged structure as a reference cut the service part at the same location as the first cut. Smooth and square the cut edges.

NOTE: The repair structure should butt up to the remaining structure and provide the same overall vehicle geometry.

18. Fabricate 51 mm (2.0 in.) long repair inserts using scrap from the old structure or the replacement part. It will be necessary to split the inserts on each of their four sides to fit into the hydroform.
19. Remove any paint or e-coat from the inserts and also to the interior and exterior of the hydroforms.
20. Cut plug weld holes as described below.
    - On the upper rail, cut one 13 mm (0.5 in.) hole on each side of the rail, 25 mm (1.0 in.) from the butt joint of the tubes.
    - On the lower rail, cut one 13 mm (0.5 in.) hole on the top and bottom sides of the rail 25 mm (1.0 in.) from the butt joint of the tube.
    - On the lower rail, cut two 13 mm (0.5 in.) holes on the inner and outer sides of the rail 25 mm (1.0 in.) from the butt joint of the tube.

CAUTION: Shield the surrounding area and components from exposure to the welding spatter and heat.

21. Install the insert 1” into the replacement part and tack into place with a weld. (Refer to 13 - FRAME & BUMPERS/FRAME - SPECIFICATIONS - WELDING)
22. Insert the service part into place and using the appropriate measuring equipment, verify the front end sheet metal bracket’s location in all three (X,Y, and Z) planes of space.
23. Complete all 360° plug welds.

NOTE: Before the final welding, use three dimensional measuring equipment to ensure the part is in the correct location. Verify that tap plate extrusion at the bottom of the vertical post lines up with the isolator and hole in the frame perch mount. Also ensure the lower radiator closure tube is bolted into the forward shotgun ends.

24. Complete welding by making a 360° butt weld around the fender rails.
25. Metal finish the exposed welds on the hydroforms.
26. Dress the welded area and apply corrosion resistant coatings inside and out.
    a. Inside the rail, inject a creeping wax based rust inhibitor compound to the inside of the hydroforms ensuring 100% coverage including the mating face between the fender rail sections and insert such that corrosion protection is restored in the internal cavity.
    b. Apply a durable top coat to the outside of the repair area.

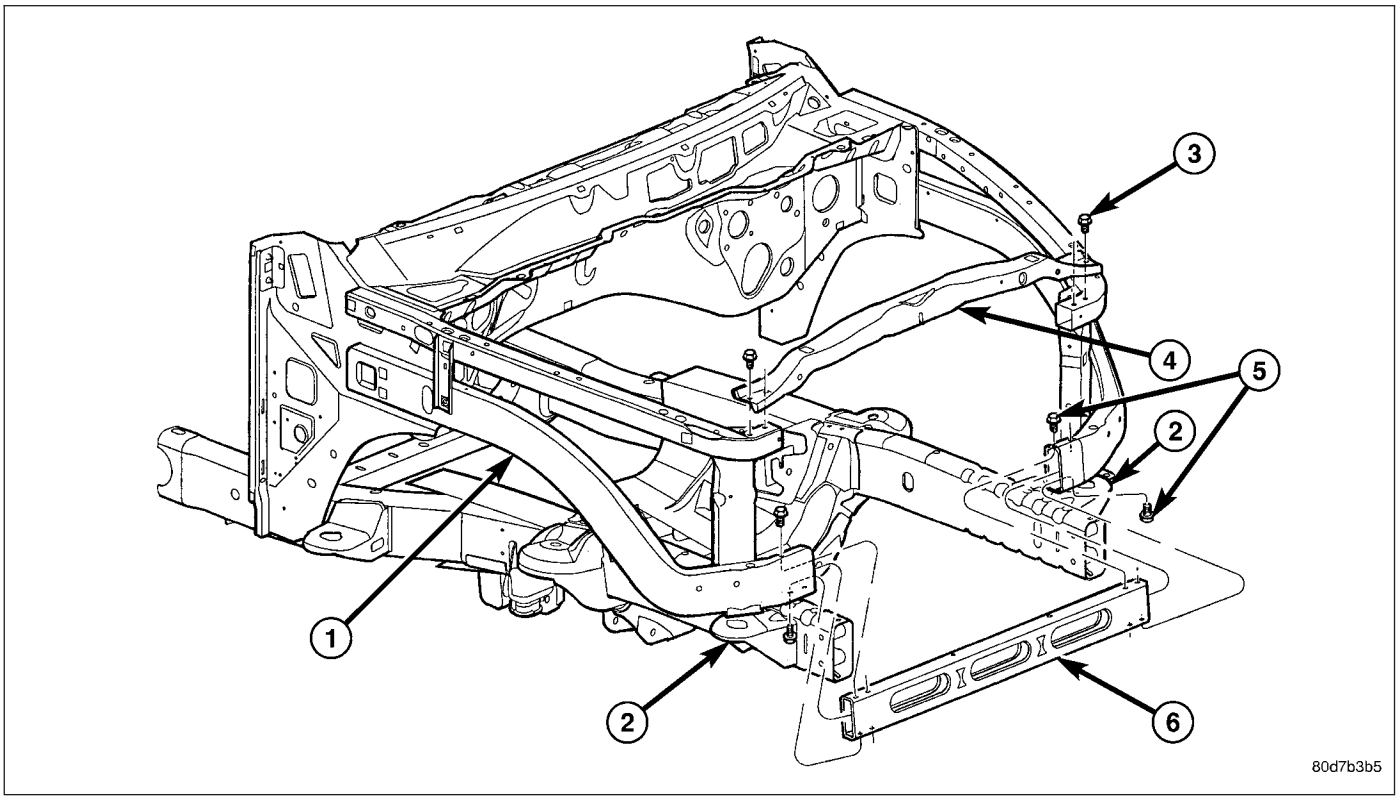

27. Install the front cab mount bolt (2) if previously removed and tighten to 81 N·m (60 ft. lbs.).
28. Install the lower radiator crossmember (6) bolts (5) and tighten to 28 N·m (21 ft. lbs.).
29. Install the headlamp unit (Refer to 8 - ELECTRICAL/LAMPS/LIGHTING - EXTERIOR/HEADLAMP UNIT - INSTALLATION).

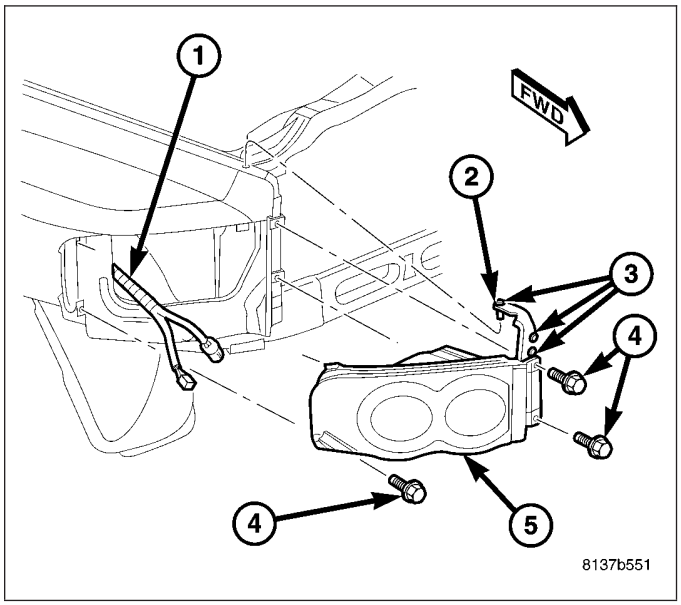

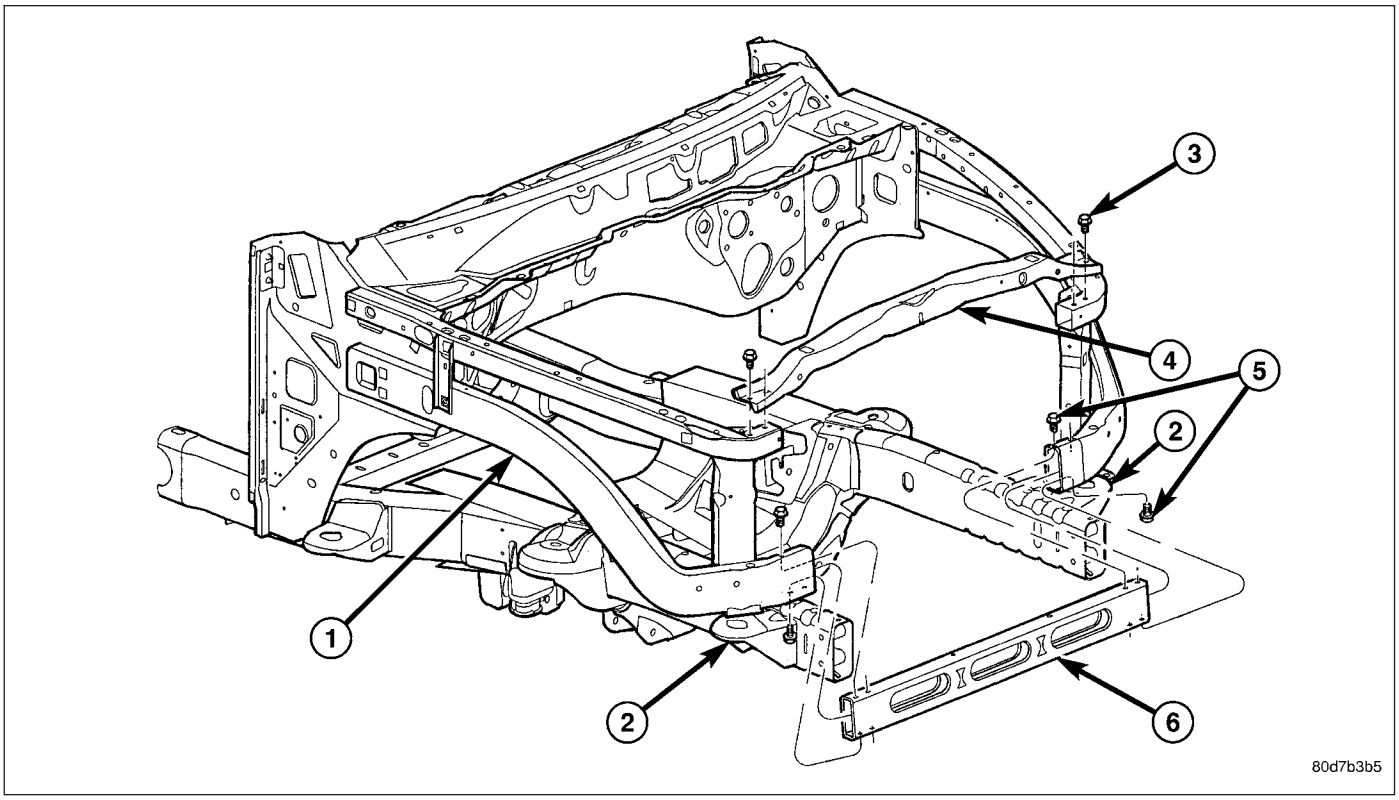

30. Install the upper radiator crossmember (4) (Refer to 23 - BODY/EXTERIOR/UPPER RADIATOR CROSSMEMBER - INSTALLATION).
31. Install the wire harness and ground if previously removed and install the bolts.
32. Install the integrated power module, if previously removed (Refer to 8 - ELECTRICAL/POWER DISTRIBUTION/INTEGRATED POWER MODULE - INSTALLATION)

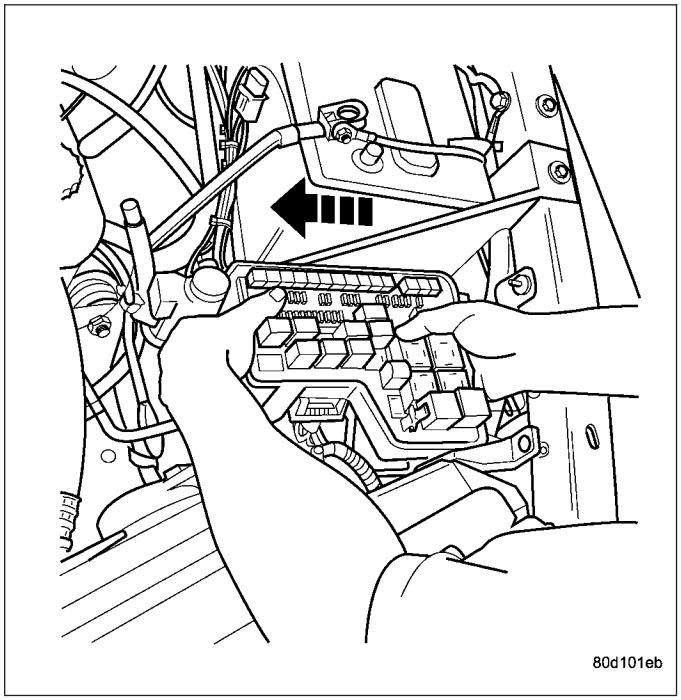

33. Install the air cleaner bracket and air cleaner (1), if previously removed (Refer to 9 - ENGINE/AIR INTAKE SYSTEM/AIR CLEANER ELEMENT - INSTALLATION).

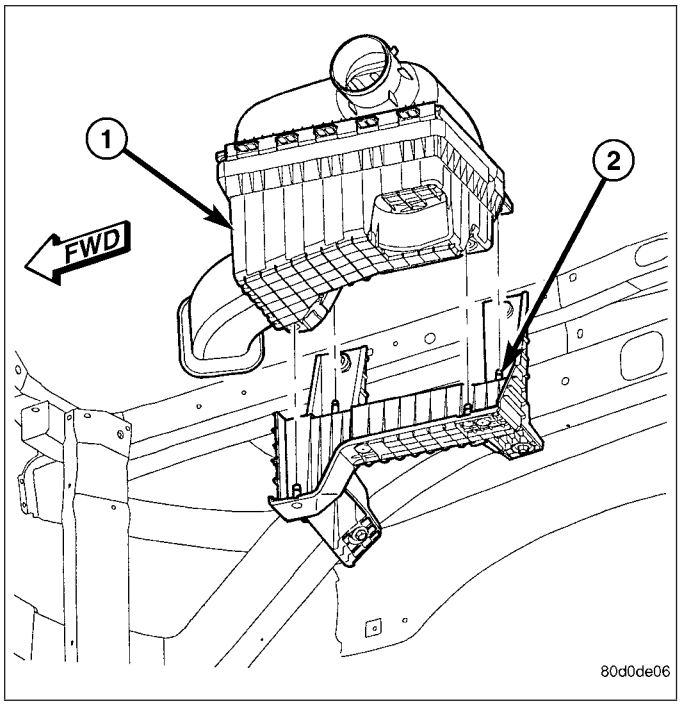

34. Install the radiator assembly (4) (Refer to 7 - COOLING/ENGINE/RADIATOR - INSTALLATION).

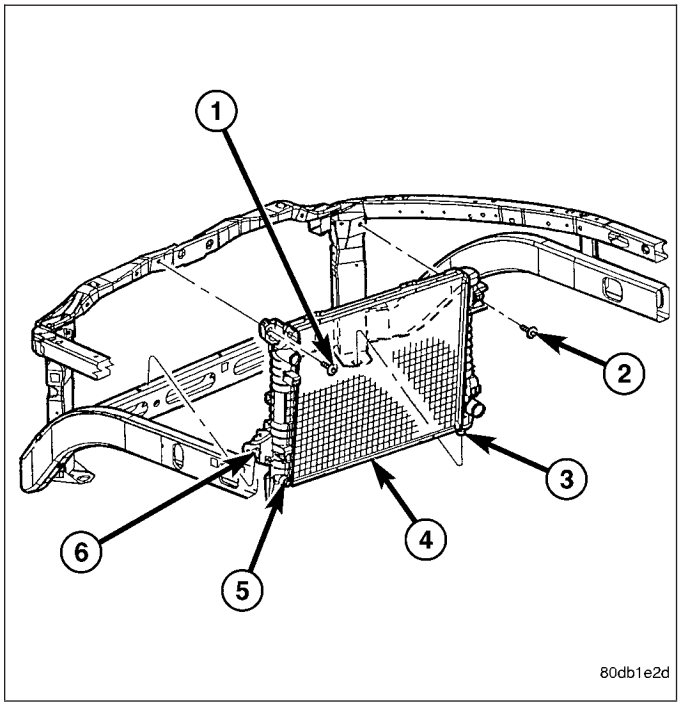

35. Install the A/C lines, if previously removed. Refer to the Heating and Air Conditioning section of the manual for the recommended procedures.
36. Install the A/C condenser, if previously removed (Refer to 24 - HEATING & AIR CONDITIONING/ PLUMBING/A/C CONDENSER - INSTALLATION).

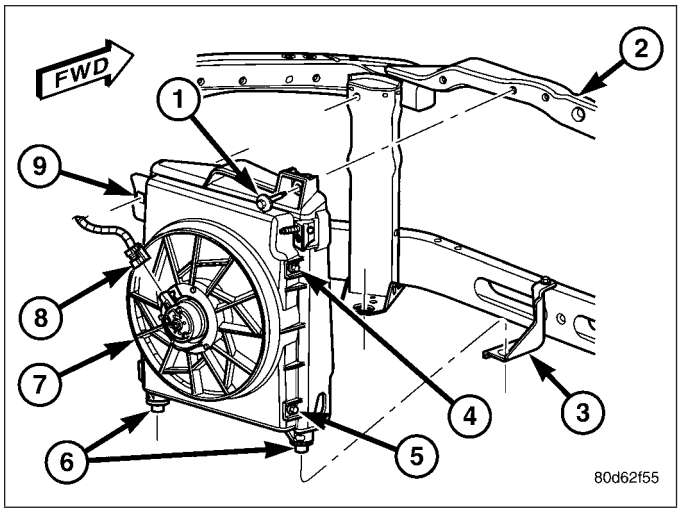

37. Install the fender (Refer to 23 - BODY/EXTERIOR/FRONT FENDER - INSTALLATION).
38. Install the front wheelhouse splash shield. (Refer to 23 - BODY/EXTERIOR/FRONT WHEELHOUSE SPLASH SHIELD - INSTALLATION)
39. Reconnect the battery negative cable.

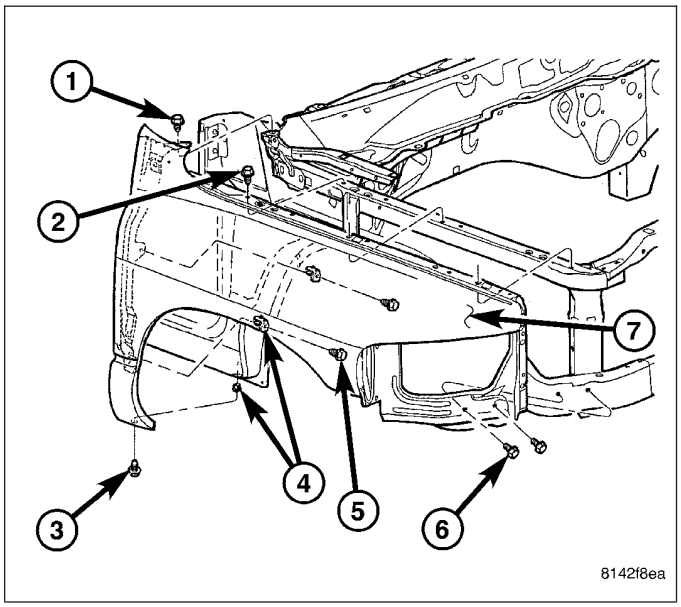

REAR FRAME H-SECTION REPLACEMENT

CAUTION: This procedure is designed to replace the H-section/spare tire support located at the rear of the frame assembly. Prior to any cutting, the vehicle must be mounted on the appropriate frame repair equipment ("frame rack"), checked with three dimensional measuring equipment, and the necessary pull corrections made. If damage remains in the frame beyond the area covered by this service part after the pull, the frame must be replaced in its entirety.

1. Before proceeding with this repair procedure review the required service warnings and precautions. (Refer to 13 - FRAME & BUMPERS/FRAME - WARNING)

2. Disconnect and isolate the battery negative cable.
3. Remove the cargo box (1) (Refer to 23 - BODY/ EXTERIOR/CARGO BOX - REMOVAL).

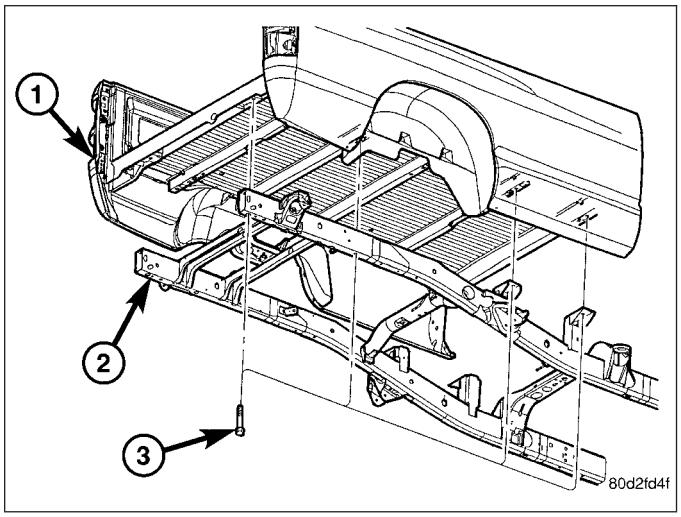

4. Remove the trailer hitch (1) (Refer to 13 - FRAME & BUMPERS/FRAME/TRAILER HITCH - REMOVAL).

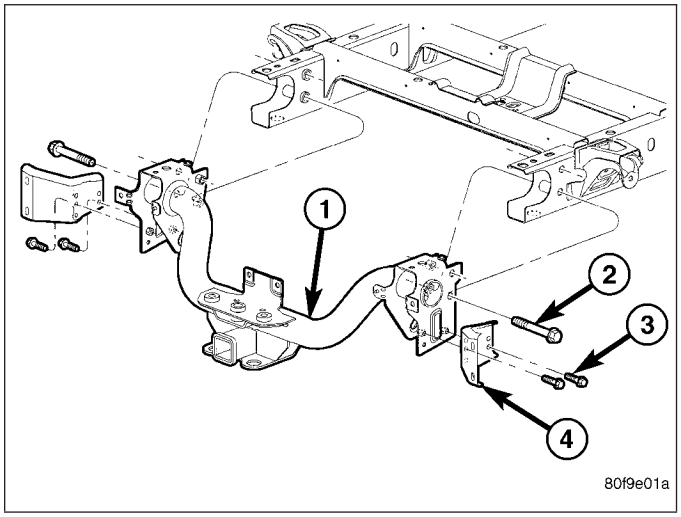

5. Raise and support the frame so the tires are off floor.

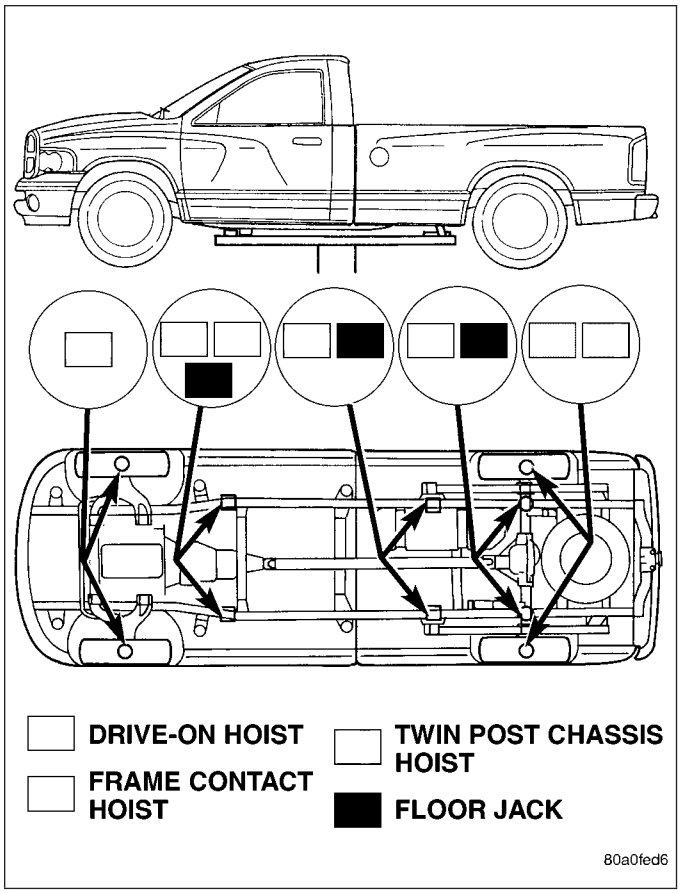

6. Remove the shock absorbers (3) (Refer to 2 - SUSPENSION/REAR/SHOCK - REMOVAL).

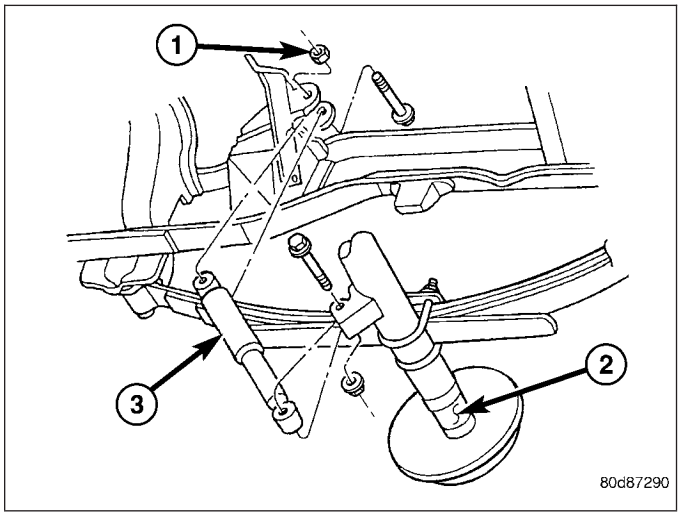

7. Remove the rear leaf spring shackle bolts (6) and let the axle rest on the ground.

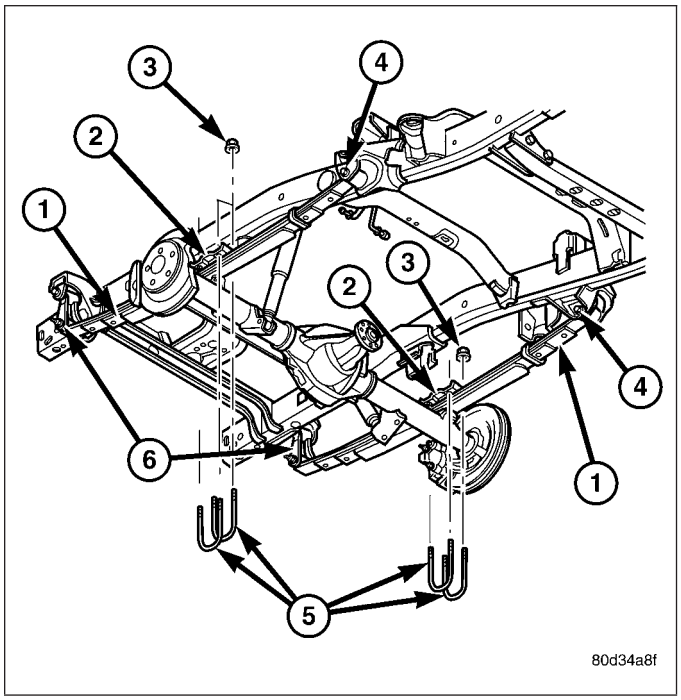

8. Remove the spare wheel.
9. Remove the clip (2) and remove the spare tire winch tube (3).

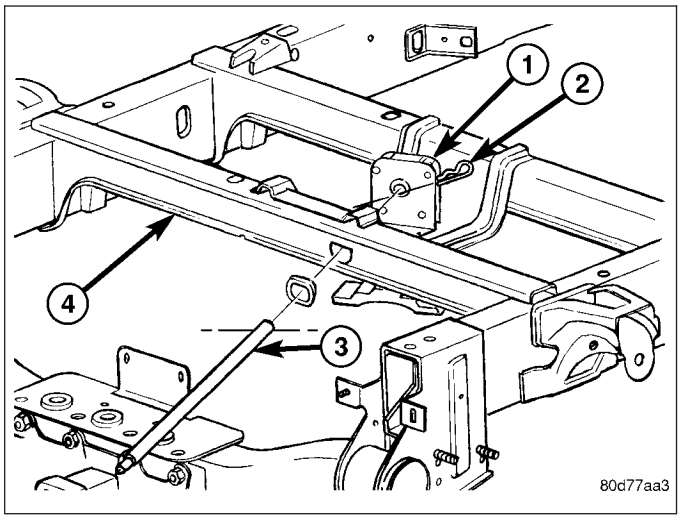

10. Remove the bolts (2) and remove the spare tire winch (1).
11. Position the wire harness forward of the work area.

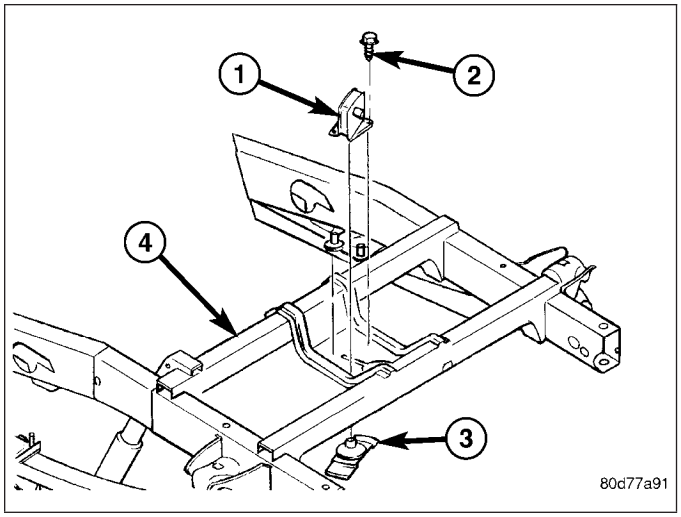

CAUTION: Do not use any flame or plasma cutting equipment to cut the frame in this procedure. The inaccurate and high temperatures achieved during flame or plasma cutting will change the metal characteristics and may weaken the frame and/or repair location.

12. Carefully remove the H-section welds using a grinder or equivalent tool.
13. Remove the H-section and clean any remaining welds from the frame.
14. Trial fit the replacement part.
15. Remove all e-coat from within 25 mm (1.0 in.) of the weld area.
16. Using the appropriate measuring equipment, position the replacement part and verify correct positioning in all three (X,Y, and Z) planes of space. (Refer to 13 - FRAME & BUMPERS/FRAME - SPECIFICATIONS - FRAME DIMENSIONS)

CAUTION: Shield the surrounding area and components from exposure to the welding spatter and heat.

17. Weld the replacement H-section into position. The welding should be performed in a skip (stitch) type method to minimize the heat buildup following I-CAR or the American Welding Society welding procedures and utilizing the process specifications at the end of this section. (Refer to 13 - FRAME & BUMPERS/FRAME - SPECIFICATIONS - WELDING)
18. Dress the welded area and apply corrosion resistant coatings inside and out.
    a. Inside the rail, inject a creeping wax based rust inhibitor compound through the existing holes in the frame ensuring 100% coverage including the mating face between the frame and replacement H-section.
    b. Apply a durable top coat to the outside of the repair area.
19. Position the wiring harness back.

CAUTION: Inspect the tire winch assembly (1) for damage. If any one or more of the following are evident, replace the winch assembly.
- **Indications of cracked or bulging plastic.**
- **Housing flanges are bent or cracked.**
- **If winch was loose before repair.**
- **If the rivet heads are separated from the housing in any way.**

20. Install the spare tire winch (1) and install the bolts (2).
21. Tighten the bolts to 41 N·m (30 ft. lbs.).

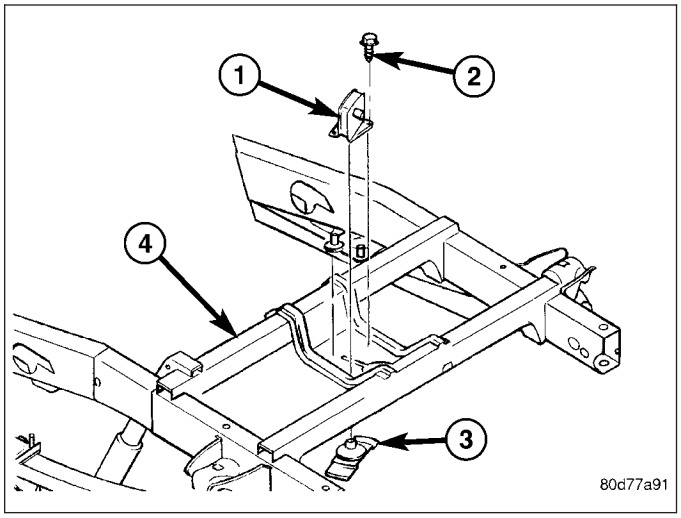

22. Install the spare tire winch tube (3) and install the clip (2).
23. Install the spare tire.

CAUTION: Check operation of the spare tire winch by manipulating it up and down. If the winch binds or jambs, replace the winch assembly.

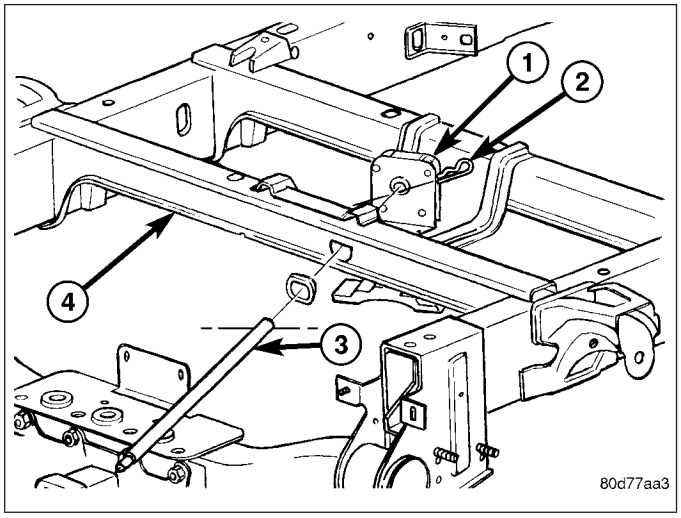

24. Lift the axle into position and install the rear shackle bolts ((6).
25. Tighten the bolts to 163 N·m (120 ft. lbs.).

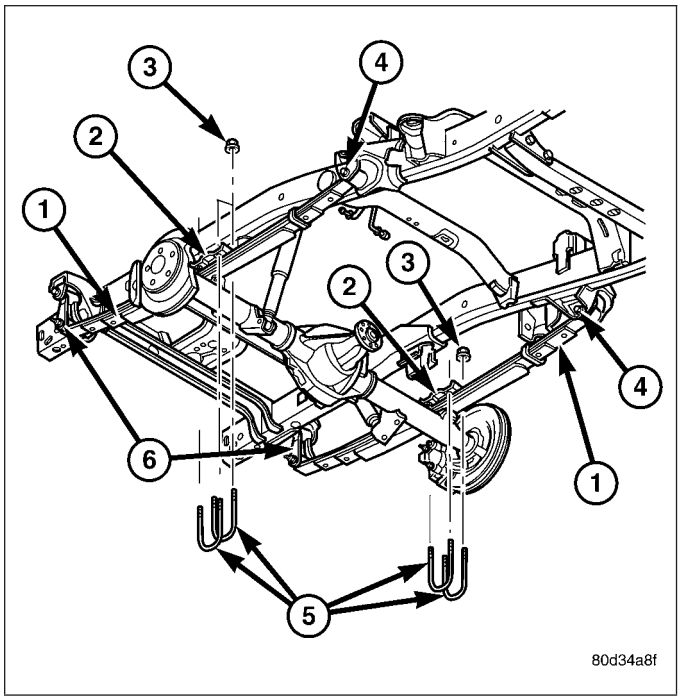

26. Install the lower shock absorber bolts (Refer to 2 - SUSPENSION/REAR/SHOCK - INSTALLATION).

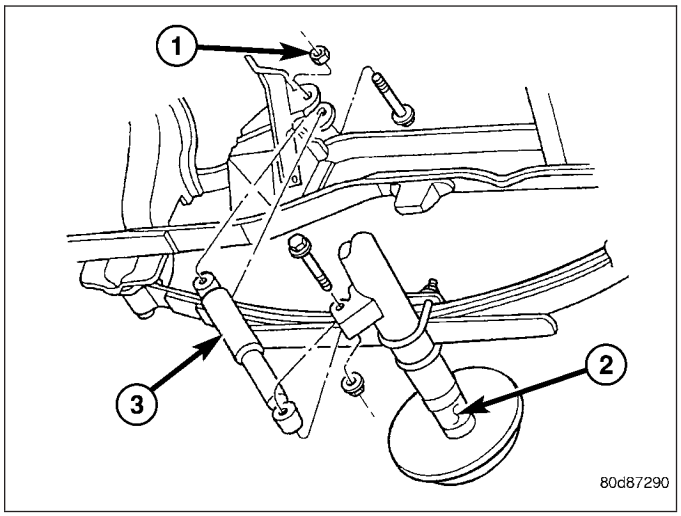

27. Install the trailer hitch (1) (Refer to 13 - FRAME & BUMPERS/FRAME/TRAILER HITCH - INSTALLATION).

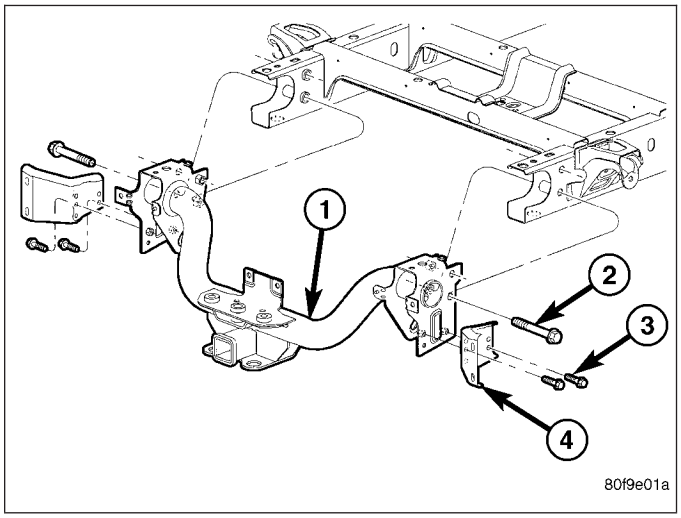

28. Install the cargo box (1) (Refer to 23 - BODY/EXTERIOR/CARGO BOX - INSTALLATION).
29. Reconnect the battery negative cable.

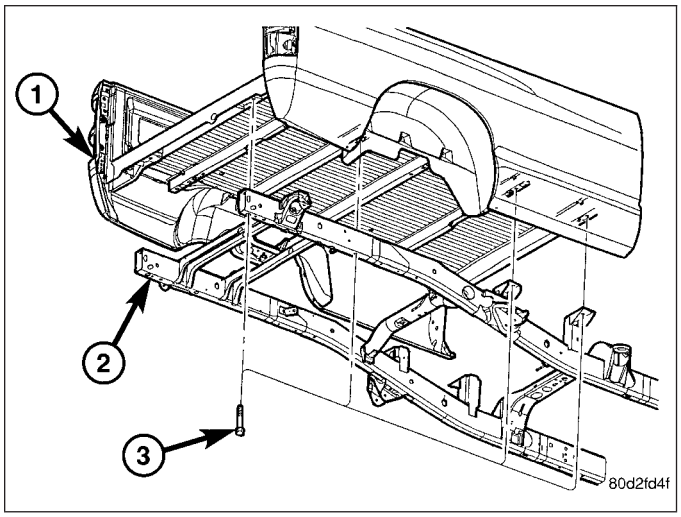

SPECIFICATIONS

WELD PROCESS

CAUTION: All welds should conform to DaimlerChrysler vehicle engineering process standard "ps 9472".

WELDING PARAMETERS

WELDING PROCESS	FLUX CORED ARC	GAS METAL ARC (MIG)*	SHIELDED METAL ARC (STICK)
Material Thickness	3.7 mm to 4.2 mm	3.7 mm to 4.2 mm	3.7 mm to 4.2 mm
Electrode Type	Lincoln Electrical Co. Product #: NR-211 MP **(Do Not Substitute)**	AWS ER70S-3 **(Do Not Substitute)**	** AWS E 7018
Electrodes Size Inches	.045 Tubular	.035 Solid	3/32″
Electrode Stick Out	3/8″ - 1/2″	1/2″ - 5/8″	N/A
Polarity	Electrode ″-″ Work Piece ″+″	Electrode ″+″ Work Piece ″-″	Electrode ″+″ Work Piece ″-″
Shielding Gas	Self Shielded	75% Ar 25% CO2	Self Shielded
Gas Flow Rate	N/A	25 - 35 CFM	N/A
Wire Feed Speed (inches per minute)	110 - 130 Vertical Down 70 - 90 Flat & Overhead	245 - 250 Vertical Down 210 - 225 Flat & Overhead	N/A
Approximate Amperage			
Vertical	110 - 130	175	85 (3/32″ Diameter)
Flat & Overhead	70 - 90	155	90 (3/32″ Diameter)
Voltage	15 - 18	19 - 20	N/A
Direction of Welding			
Vertical	Vertical Down Hill (only)	Vertical Down Hill (only)	Vertical - Up Hill (only)
Flat & Overhead	Flat - Push or Drag	Flat - Push or Drag	Flat - Drag

***First choice - Gas Metal Arc Welding Process:** Butt joints - apply two layers (passes) of weld metal. First pass should only fill approximately ½ the thickness. Vertical position welds - maintain electrode wire at leading edge of weld puddle while traveling down hill to produce maximum penetration into the sleeve. These techniques work for FCAW as well.

****E7018** new electrodes may be exposed to the atmosphere for up to ten hours with no harmful effect. Reconditioning schedules should come from the manufacturer.

FRAME DIMENSIONS

NOTE: Frame dimensions are listed in metric scale. All dimensions are from center to center of Principal Locating Point (PLP), or from center to center of PLP and fastener location.

VEHICLE PREPARATION

Position the vehicle on a level work surface. Using screw or bottle jacks, adjust the vehicle PLP heights to the specified dimension above a level work surface. Vertical dimensions can be taken from the work surface to the locations indicated were applicable.

INDEX

DESCRIPTION	FIGURE
Frame Dimensional Graphics, Side And Top View	1
140.5 In Wheelbase - Heavy Duty - 2 Wheel Drive	2
140.5 In Wheelbase - Heavy Duty - 4 Wheel Drive	3
160.5 In Wheelbase - Heavy Duty - 2 Wheel Drive	4
160.5 In Wheelbase - Heavy Duty - 4 Wheel Drive	5

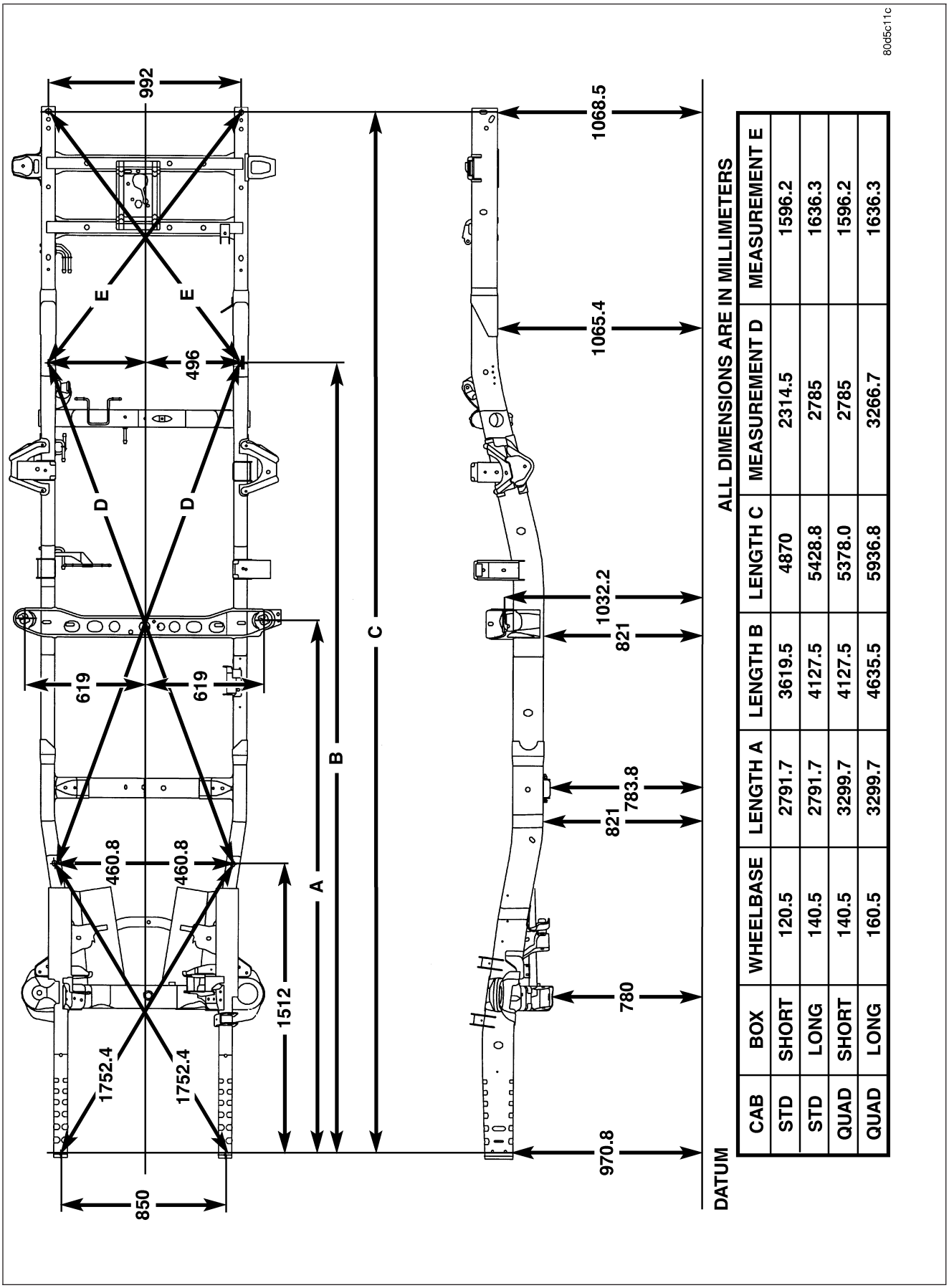

ALL DIMENSIONS ARE IN MILLIMETERS

CAB	BOX	WHEELBASE	LENGTH A	LENGTH B	LENGTH C	MEASUREMENT D	MEASUREMENT E
STD	SHORT	120.5	2791.7	3619.5	4870	2314.5	1596.2
STD	LONG	140.5	2791.7	4127.5	5428.8	2785	1636.3
QUAD	SHORT	140.5	3299.7	4127.5	5378.0	2785	1596.2
QUAD	LONG	160.5	3299.7	4635.5	5936.8	3266.7	1636.3

Fig. 1 FRAME DIMENSIONS

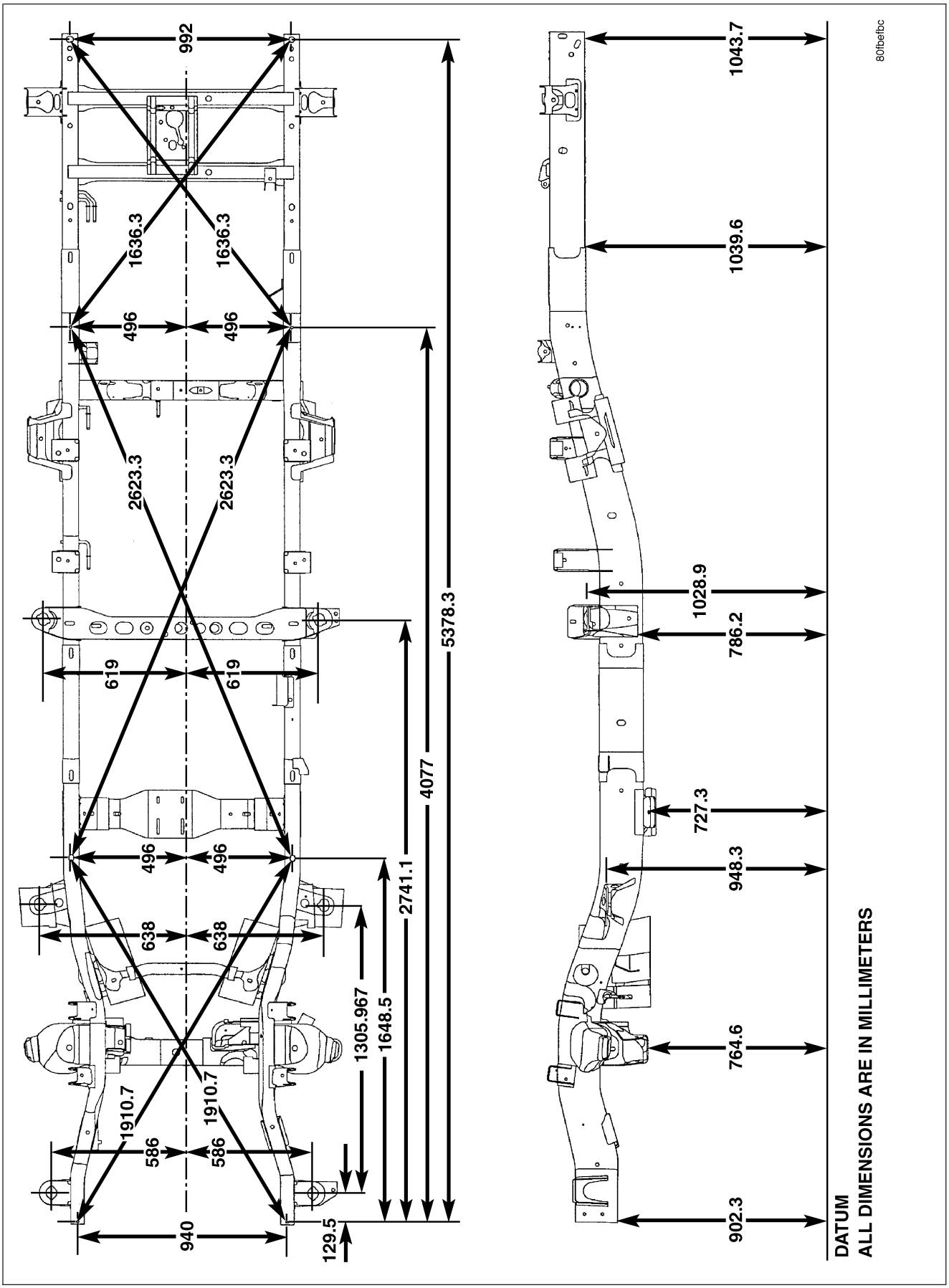

Fig. 2 140.5 IN WHEELBASE - HEAVY DUTY - 2 WHEEL DRIVE

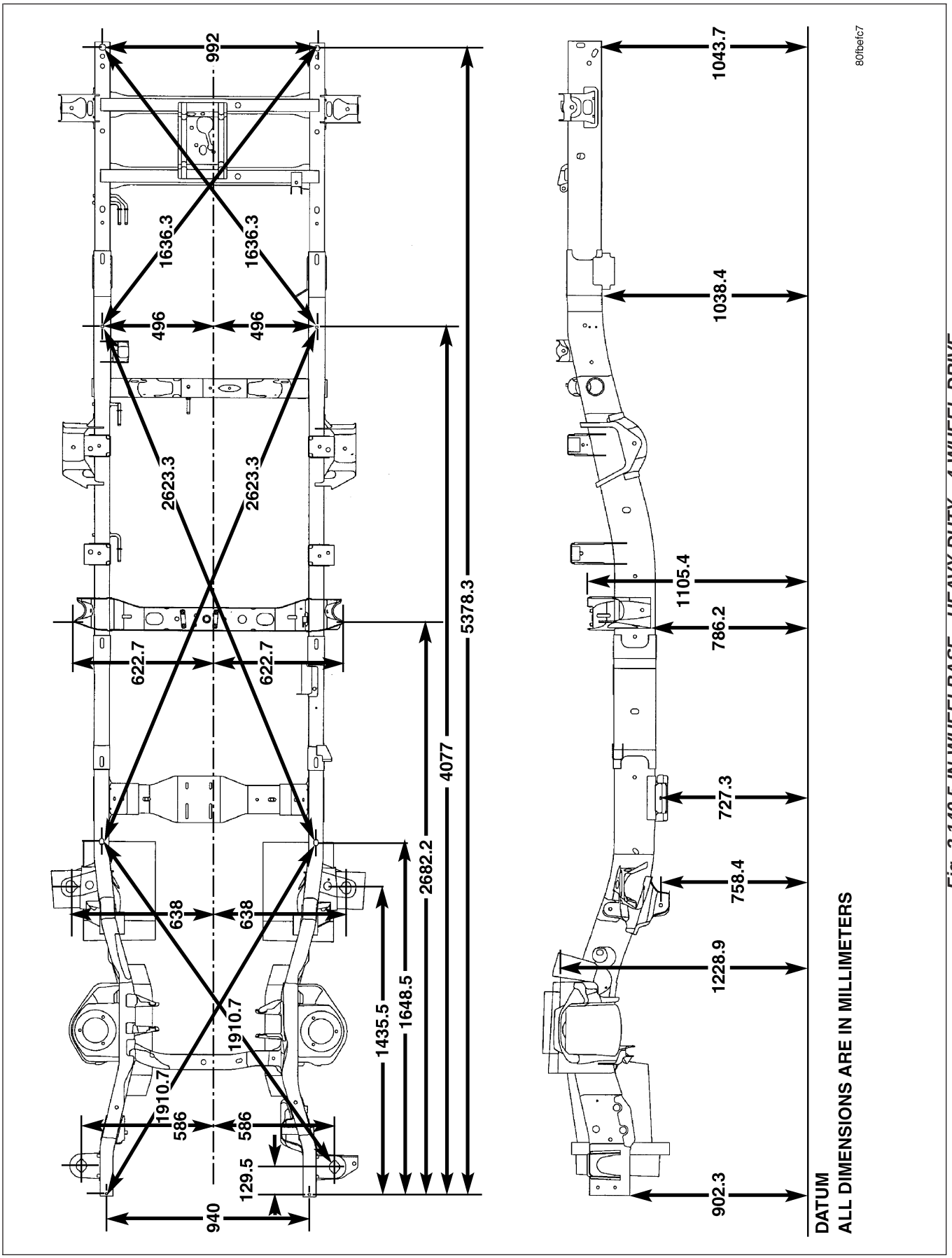

Fig. 3 140.5 IN WHEELBASE - HEAVY DUTY - 4 WHEEL DRIVE

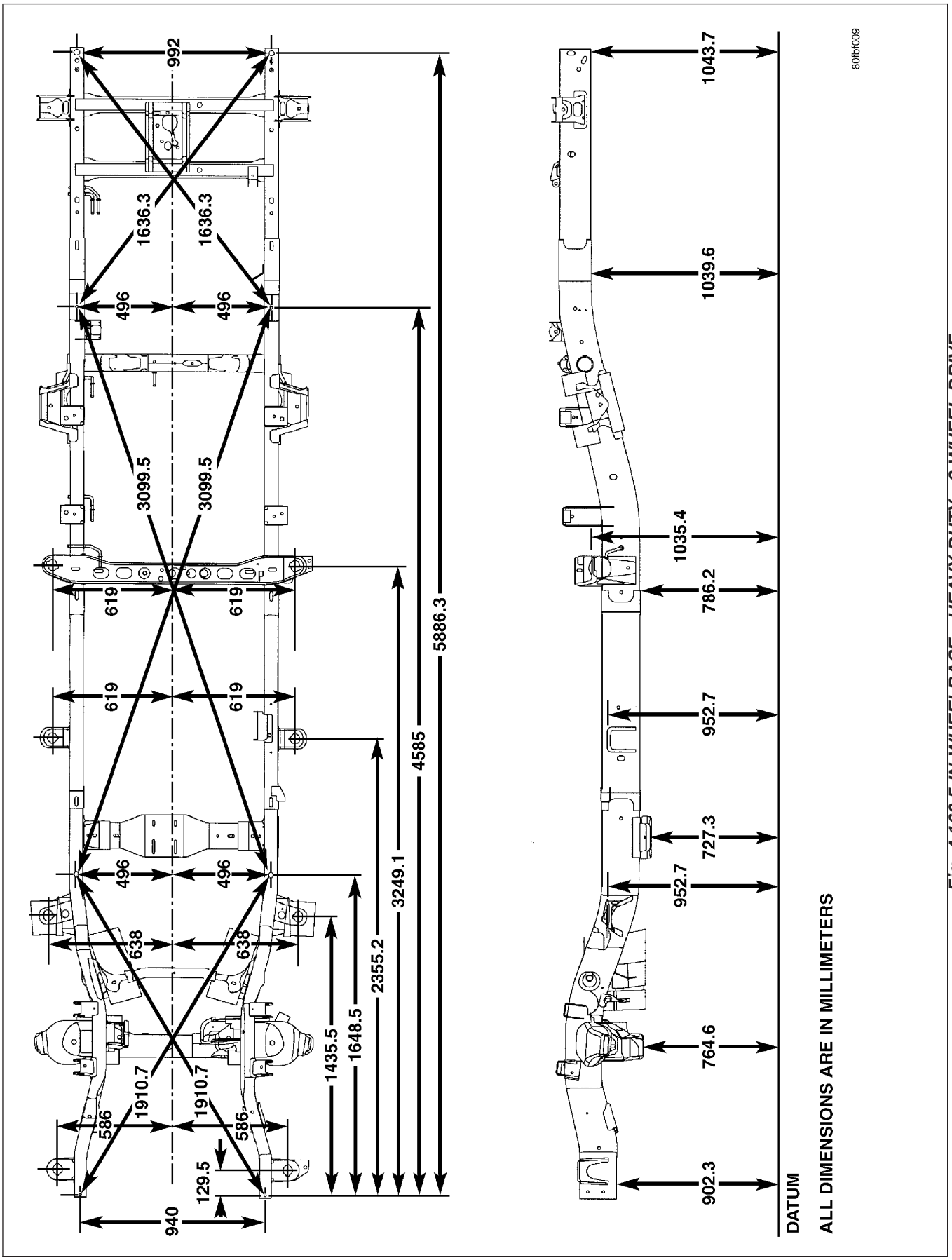

Fig. 4 160.5 IN WHEELBASE - HEAVY DUTY - 2 WHEEL DRIVE

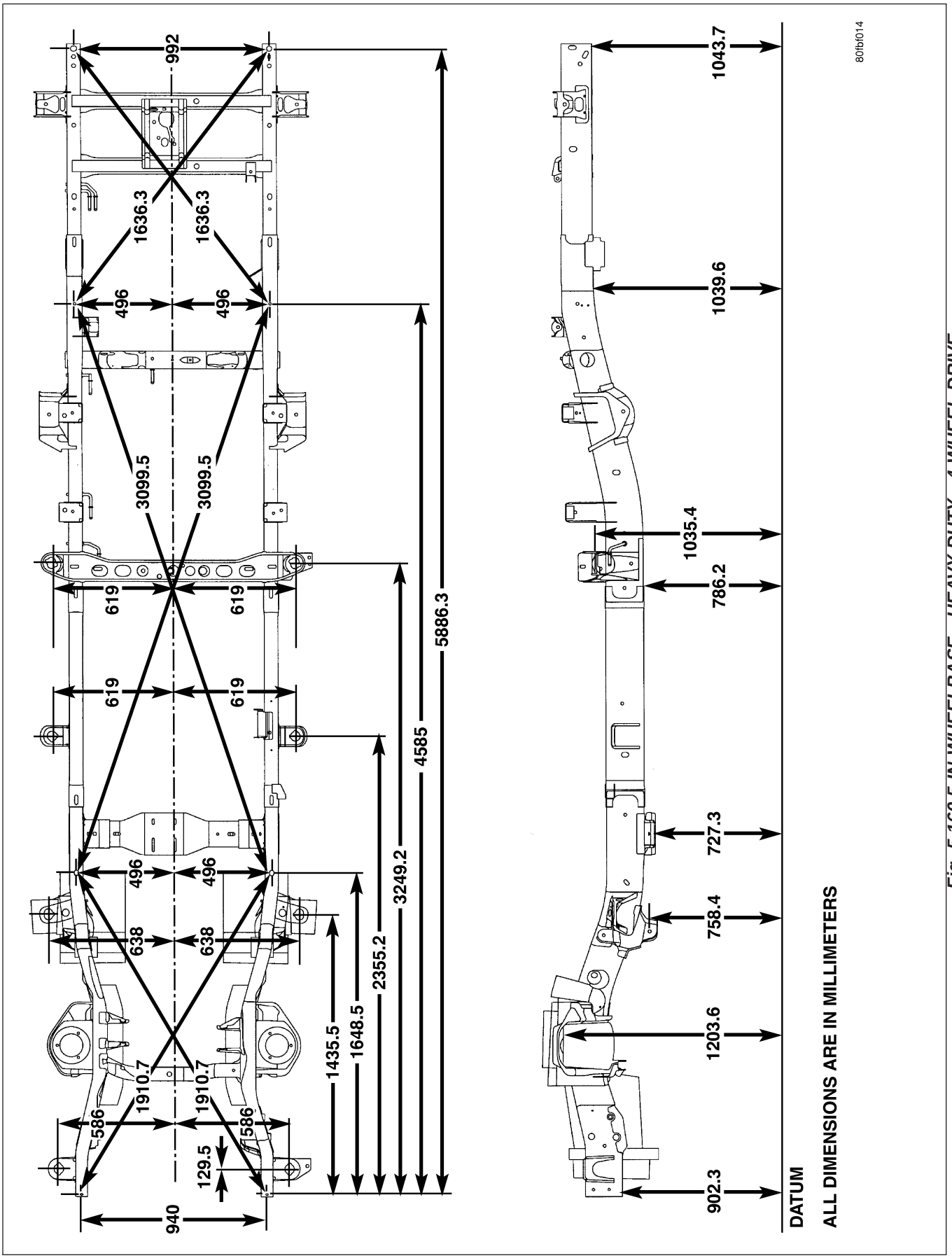

Fig. 5 160.5 IN WHEELBASE - HEAVY DUTY - 4 WHEEL DRIVE

TORQUE

TORQUE SPECIFICATIONS

DESCRIPTION	N·m	Ft. Lbs.
Cab mount bolts	81	60
Cargo box bolts	108	80
Front crossmember bolts - 2WD (light duty only)	61	45
Front crossmember bolts - 2WD (heavy duty only)	75	55
Front crossmember bolts - 4WD (light duty only)	102	75
Front skid plate bolts	34	25
Lower bumper support bracket bolt	54	40
Radiator crossmember bolts - lower	28	21
Radiator crossmember bolts - upper	28	21
Rear crossmember (light duty only)	102	75
Rear crossmember (heavy duty only)	115	85
Rear spring shackle bolts	163	120
Spare tire winch bolts	41	30
Trailer hitch reinforcement bracket bolt	170	125
Transfercase skid plate bolts	34	25
Transercase skid plate crossmember bolts	34	25
Transmission mount to crossmember nuts	54	40

FRONT CROSSMEMBER

REMOVAL

1. Raise and support the vehicle (Refer to LUBRICATION & MAINTENANCE/HOISTING - STANDARD PROCEDURE).

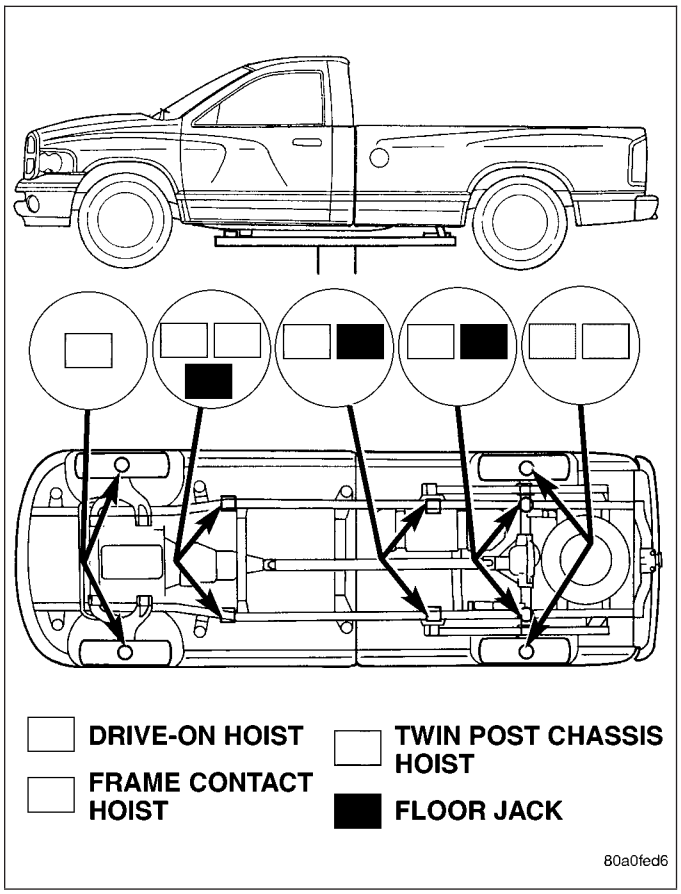

2. Remove the front skid plate (2 - if equipped) (Refer to 13 - FRAME & BUMPERS/FRAME/FRONT SKID PLATE - REMOVAL).

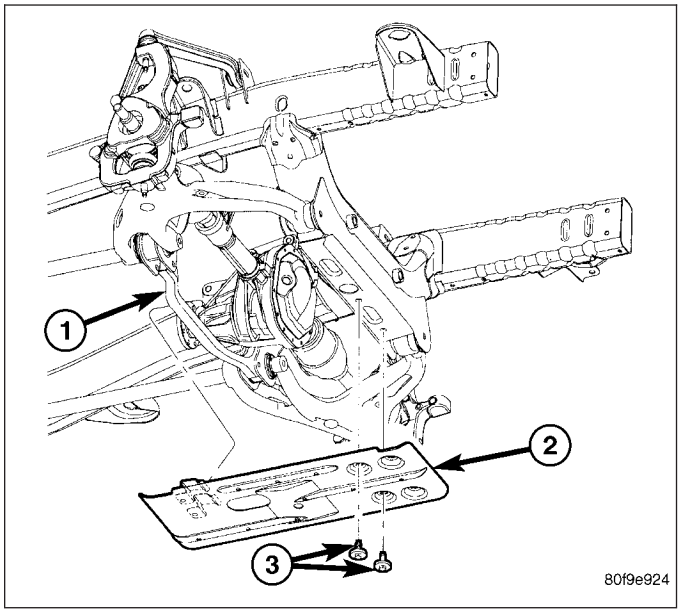

3. On the 2WD models, remove the bolts (2) and remove the crossmember (1).

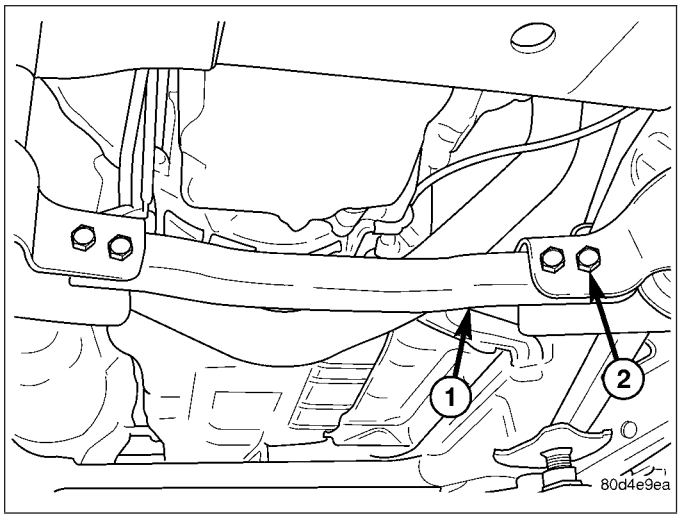

CAUTION: Do not use any flame or plasma cutting equipment to cut the frame in this procedure. This is due to the inaccurate nature of the cut-line and the fact that the high temperatures achieved during flame or plasma cutting will change the metal characteristics and may weaken the frame and/or repair location.

4. On SRT-10 vehicles, remove the welds using a grinder or equivalent.

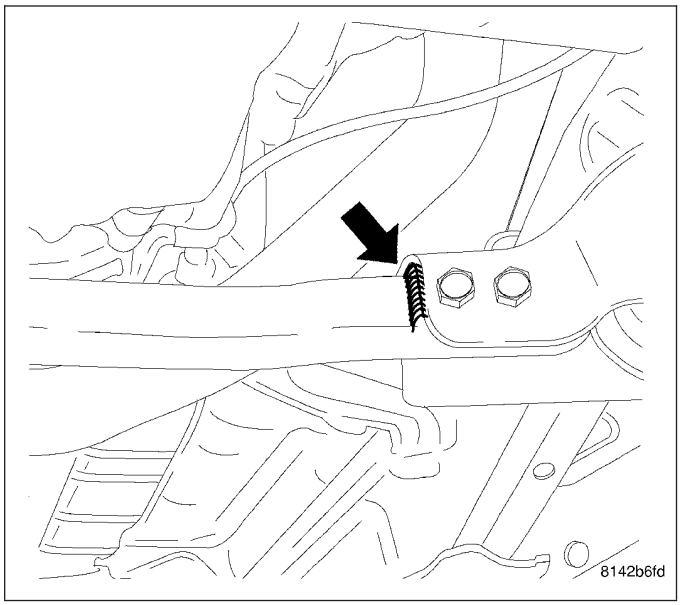

5. On the 4WD models, remove the bolts (1) and remove the crossmember (2).

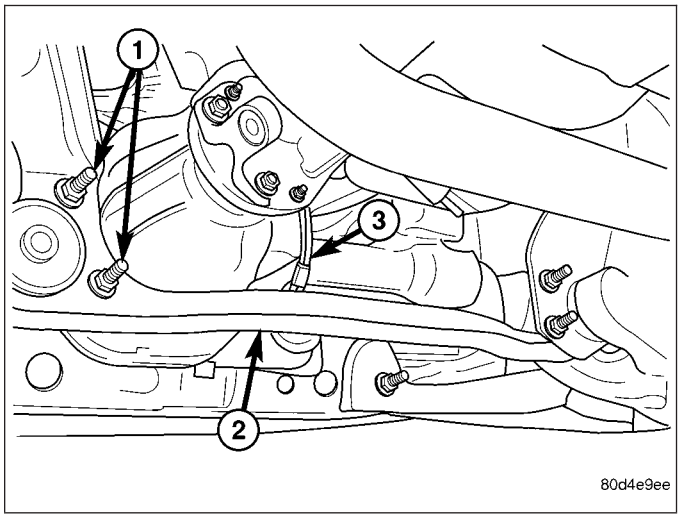

INSTALLATION

1. Install the crossmember (1).
2. Install the bolts (2);
   - On light duty 2WD vehicles, tighten the bolts to 61 N·m (45 ft. lbs.).
   - On heavy duty 2WD vehicles, tighten the bolts to 75 N·m (55 ft. lbs.).

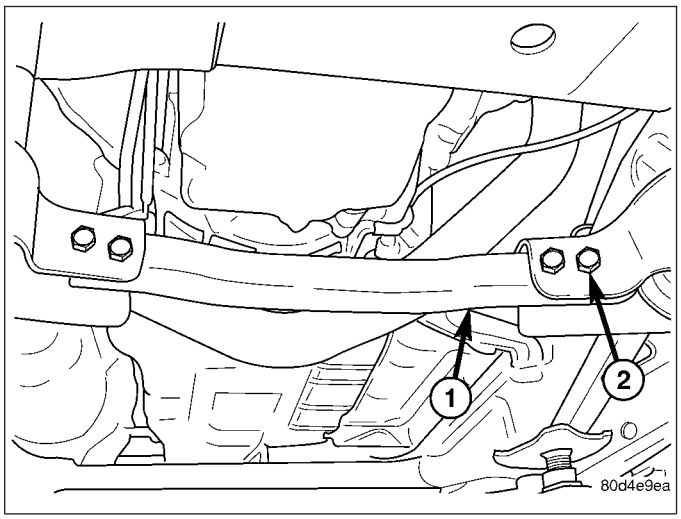

3. On 4WD models, install the crossmember (2).
4. Install the bolts (1) and tighten to 102 N·m (75 ft. lbs.).

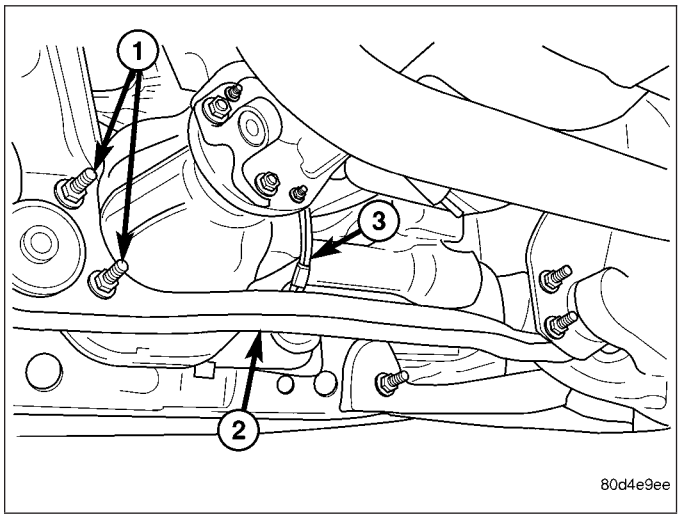

5. Remove all OEM e-coat within 51 mm (2.0 in.) of the weld on both the crossmember and the frame.

CAUTION: Shield the surrounding area and components from exposure to the welding spatter and heat.

6. Using the Weld Process Specifications table (Refer to 13 - FRAME & BUMPERS/FRAME - SPECIFICATIONS - WELDING), apply new welds to the SRT-10 crossmember.

NOTE: Any burned surface coatings will need to be removed prior to application of corrosion preventative coatings.

7. Dress the welded area and apply corrosion resistant coatings.
   a. Apply etch-primer to the repair area.
   b. Apply a durable top coat to the outside of the repair area.

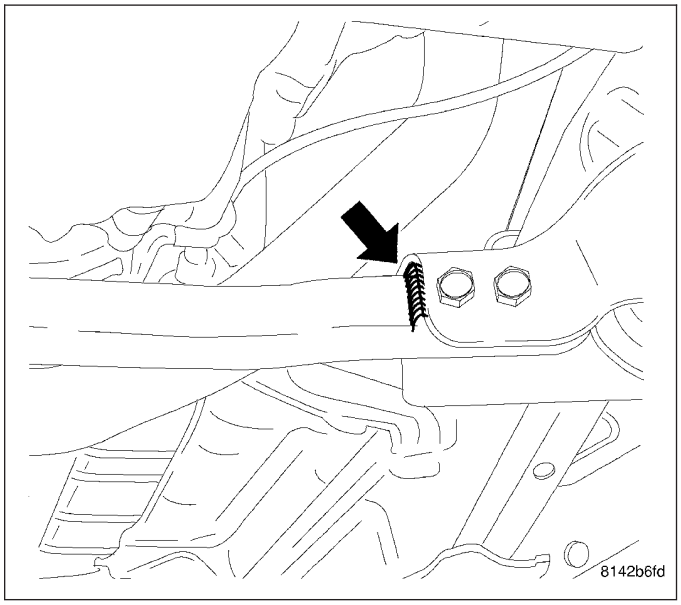

8. Install the front skid plate, if equipped (2) (Refer to 13 - FRAME & BUMPERS/FRAME/FRONT SKID PLATE - INSTALLATION)

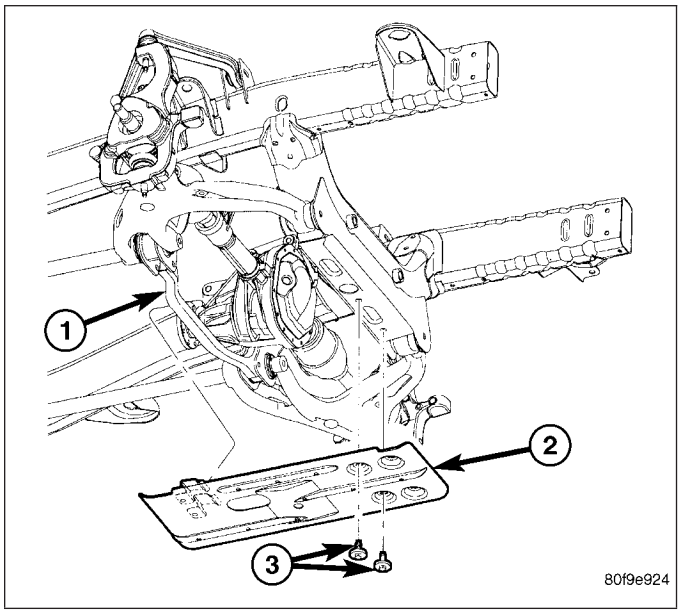

FRONT SKID PLATE

REMOVAL

1. Raise and support the vehicle (Refer to LUBRICATION & MAINTENANCE/HOISTING - STANDARD PROCEDURE).

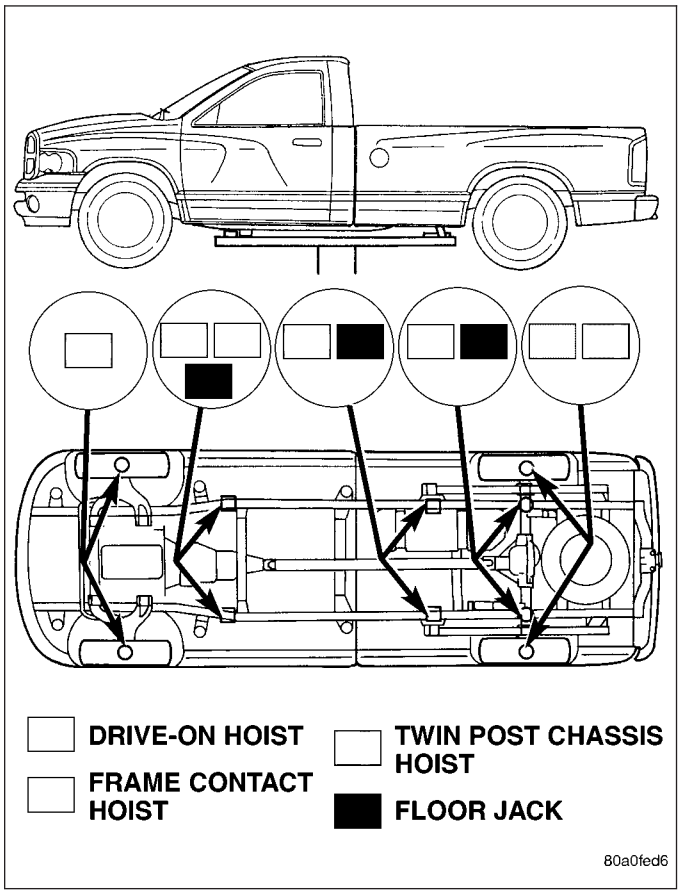

2. Remove the bolts (3).
3. Slide skid plate (2) back off of the crossmember (1) and remove.

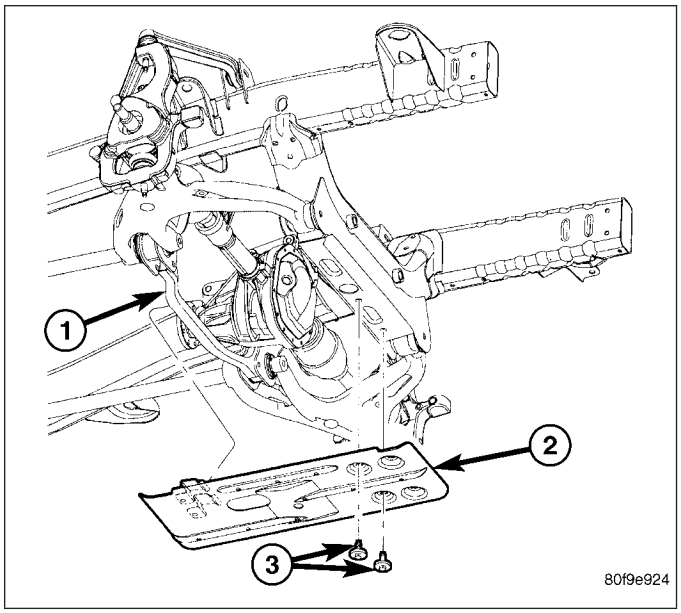

INSTALLATION

1. Snap the rear tabs over the front crossmember (1) and install the skid plate (2).
2. Install the bolts (3) and tighten to 34 N·m (25 ft. lbs.).

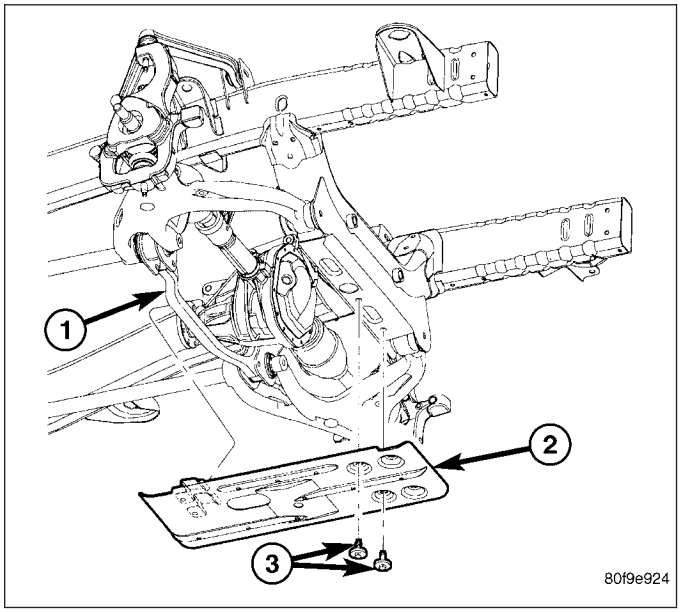

FRONT TOW HOOK ASSEMBLY

REMOVAL

1. Remove front bumper (Refer to 13 - FRAME & BUMPERS/BUMPERS/FRONT BUMPER - REMOVAL).

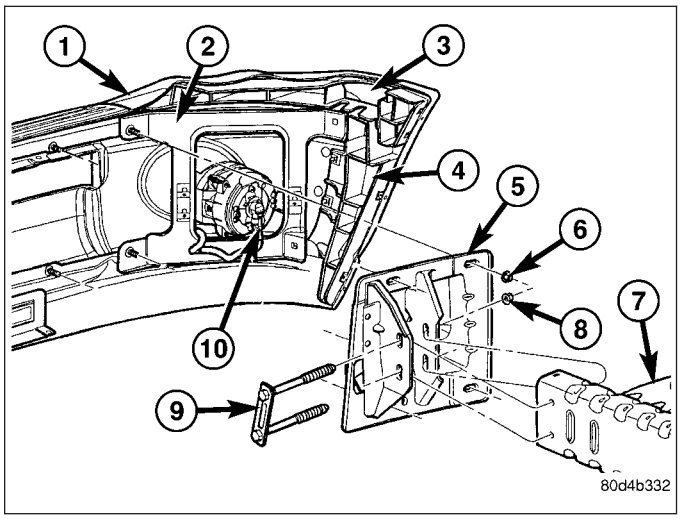

2. Remove the bolts (2) and remove the tow hook assembly (3).

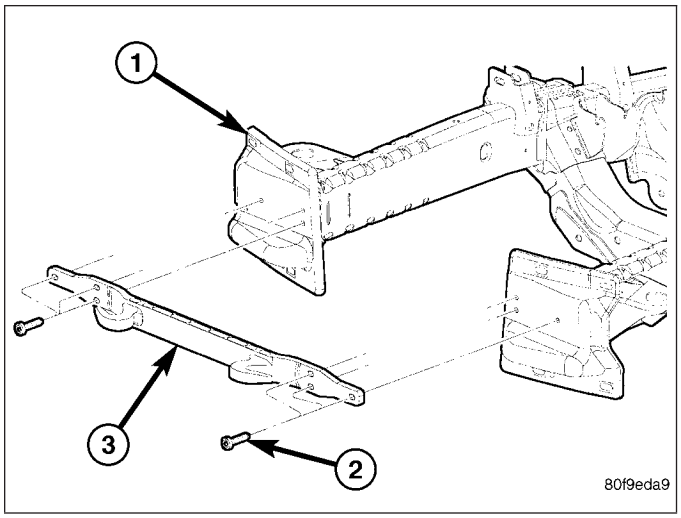

3. If the vehicle is a **Heavy Duty**, then remove the bolts (1) and remove the tow hook (2).

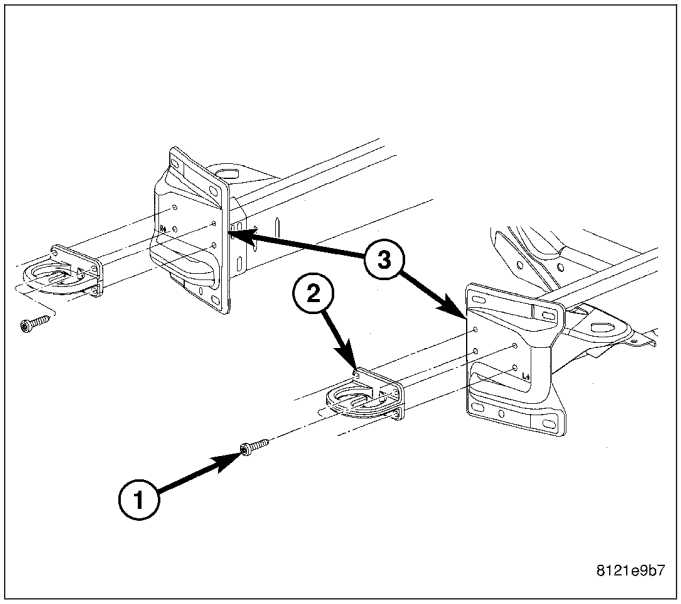

INSTALLATION

1. Install the tow hook assembly (3) and bolts (2) hand tight.

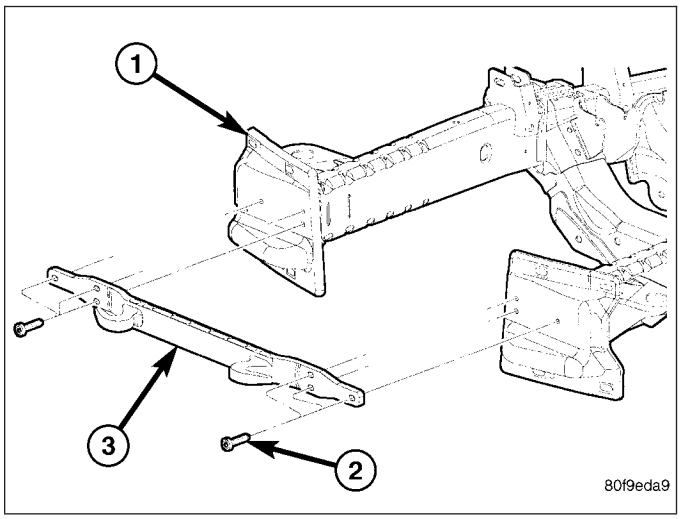

2. If vehicle is a **Heavy Duty**, install the tow hook (2) and bolts (1) hand tight.

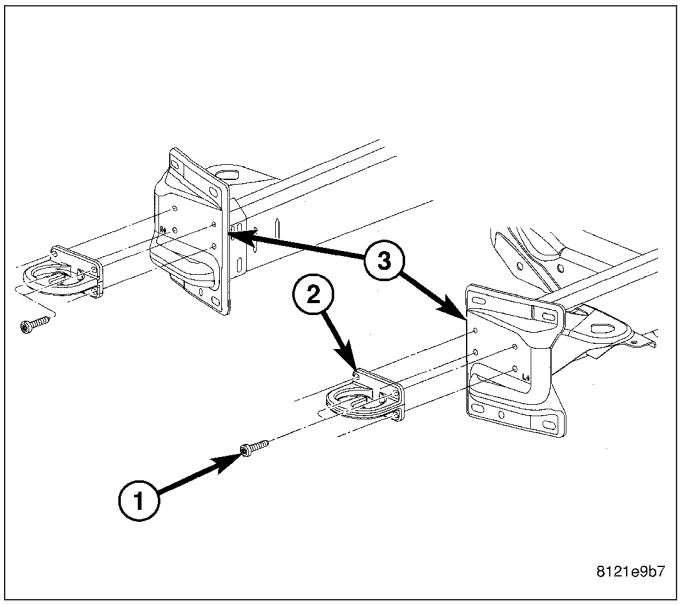

3. Install the front bumper (Refer to 13 - FRAME & BUMPERS/BUMPERS/FRONT BUMPER - INSTALLATION).
4. Line up the tow hooks/tow hook assembly and tighten the bolts to 68 N·m (50 ft. lbs.).

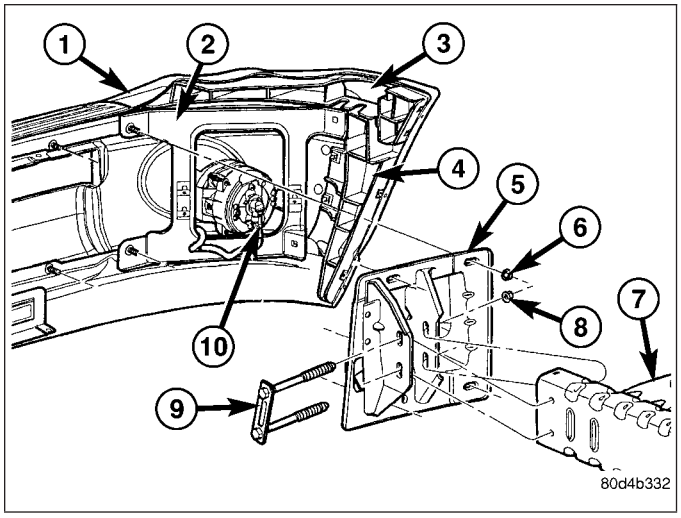

TRANSMISSION CROSSMEMBER

REMOVAL

1. Raise and support the vehicle (Refer to LUBRICATION & MAINTENANCE/HOISTING - STANDARD PROCEDURE).

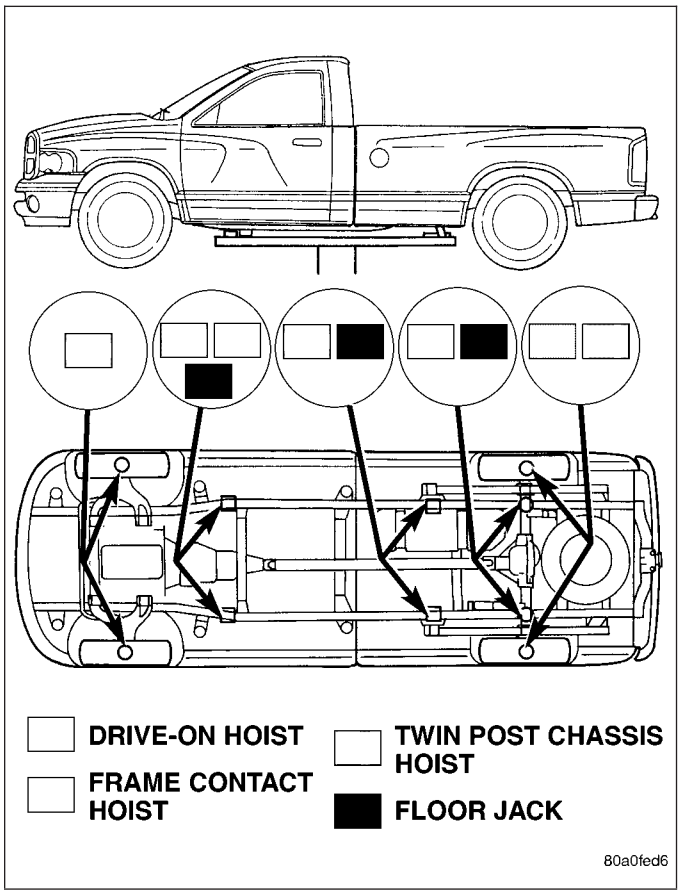

2. Remove the transfer case skid plate (3 - if equipped) (Refer to 13 - FRAME & BUMPERS/FRAME/TRANSFER CASE SKID PLATE - REMOVAL).

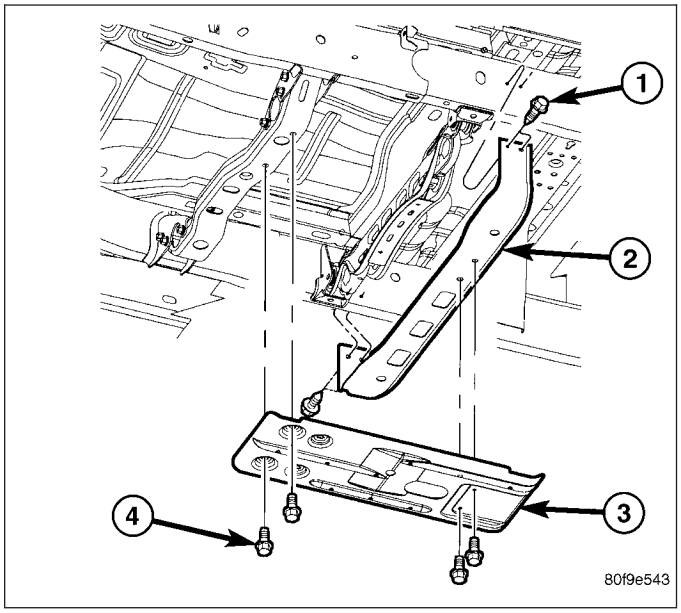

3. Support the transmission (1) with a transmission jack (2) or suitable lifting device.

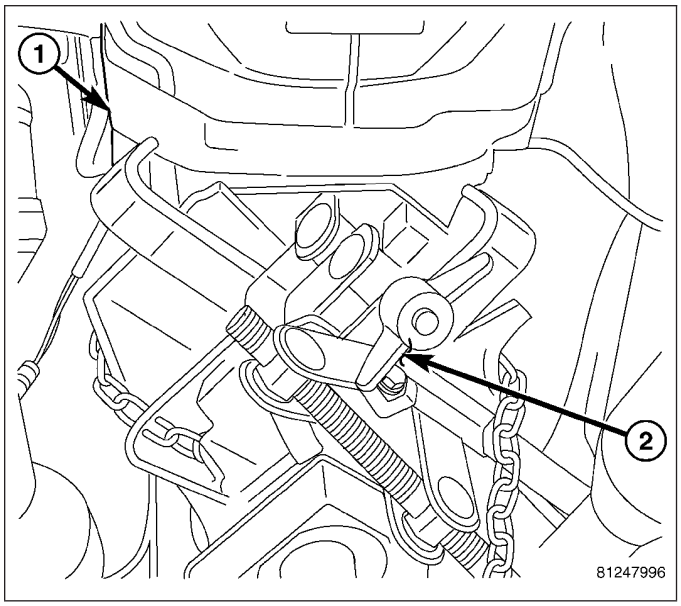

4. **2WD Vehicles** - Remove the transmission mount nuts (3).
5. Remove the bolts and remove the crossmember (2).

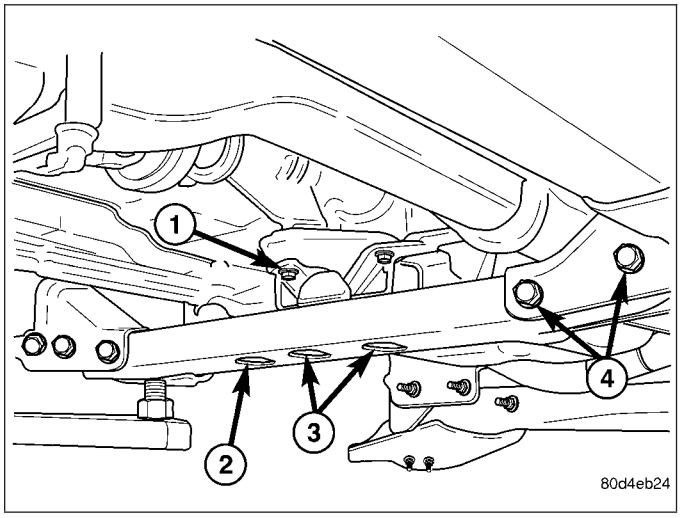

6. **4WD Vehicles** - Remove the transmission mount nuts (5).
7. Remove the bolts and remove the crossmember (3).

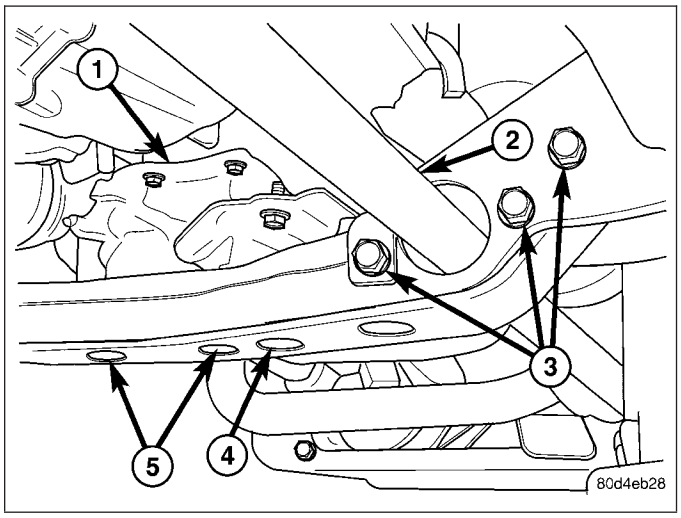

INSTALLATION

1. On **Light Duty Vehicles**, install the crossmember (2) and the bolts (4). Tighten the bolts to 102 N·m (75 ft. lbs.).
2. Install the transmission mount nuts and tighten to 54 N·m (40 ft. lbs.).

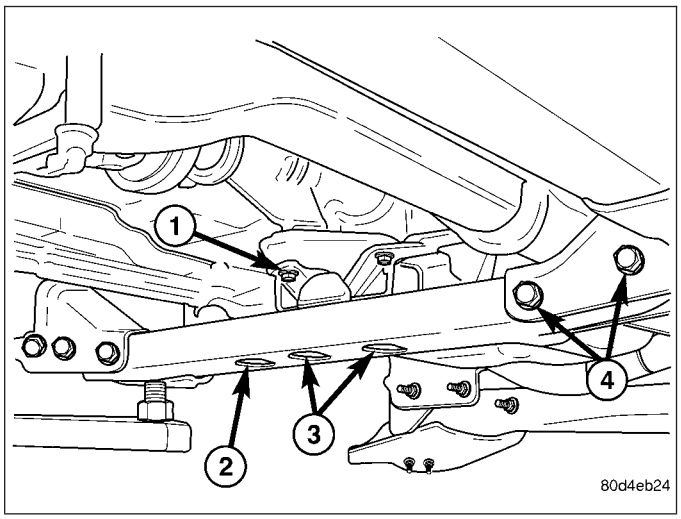

3. On **Heavy Duty Vehicles**, install the crossmember (4) and the bolts (3). Tighten the bolts to 115 N·m (85 ft. lbs.).
4. Install the transmission mount nuts and tighten to 54 N·m (40 ft. lbs.).

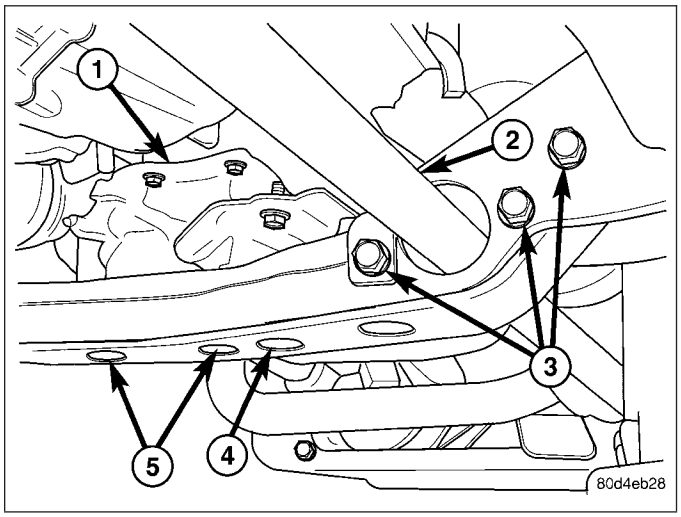

5. Remove the transmission support (2).

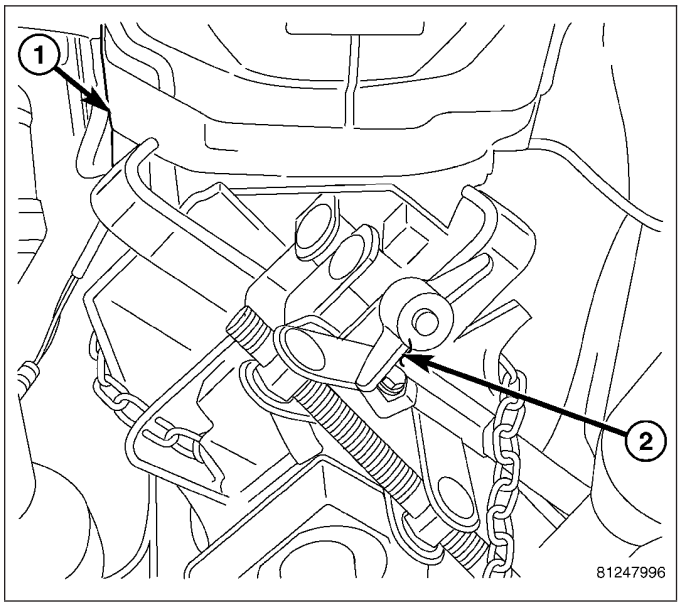

6. Install the transfer case skid plate (3 - if equipped) (Refer to 13 - FRAME & BUMPERS/FRAME/ TRANSFER CASE SKID PLATE - INSTALLATION).

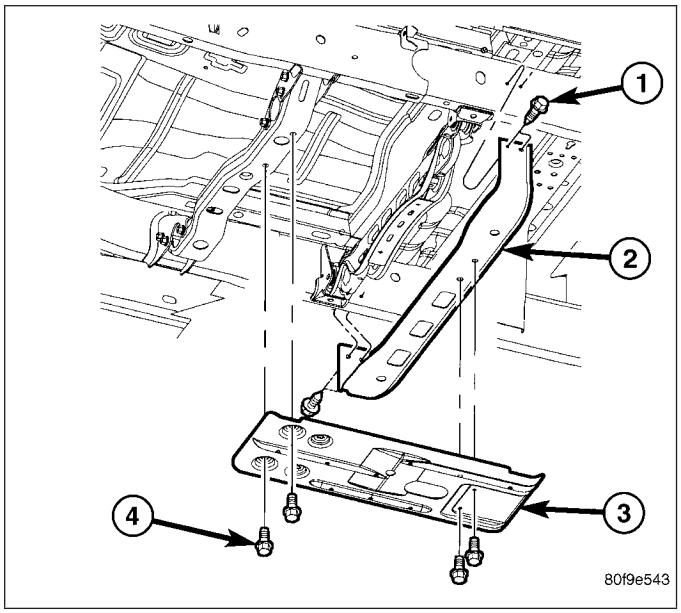

TRAILER HITCH

REMOVAL

1. Remove the rear bumper (Refer to 13 - FRAME & BUMPERS/BUMPERS/REAR BUMPER - REMOVAL).

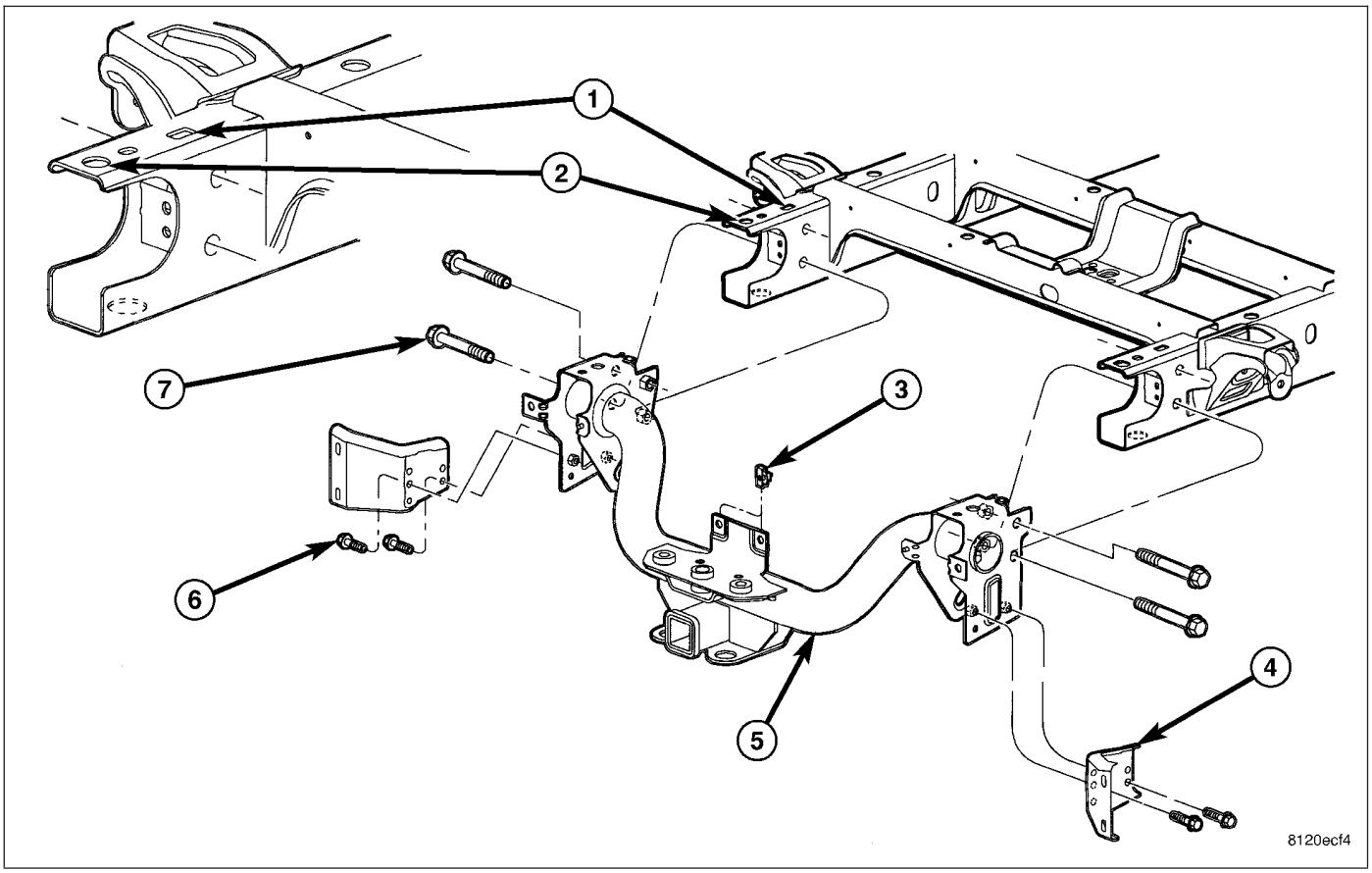

2. On **Light Duty Vehicles**, remove the hitch bolts (7)

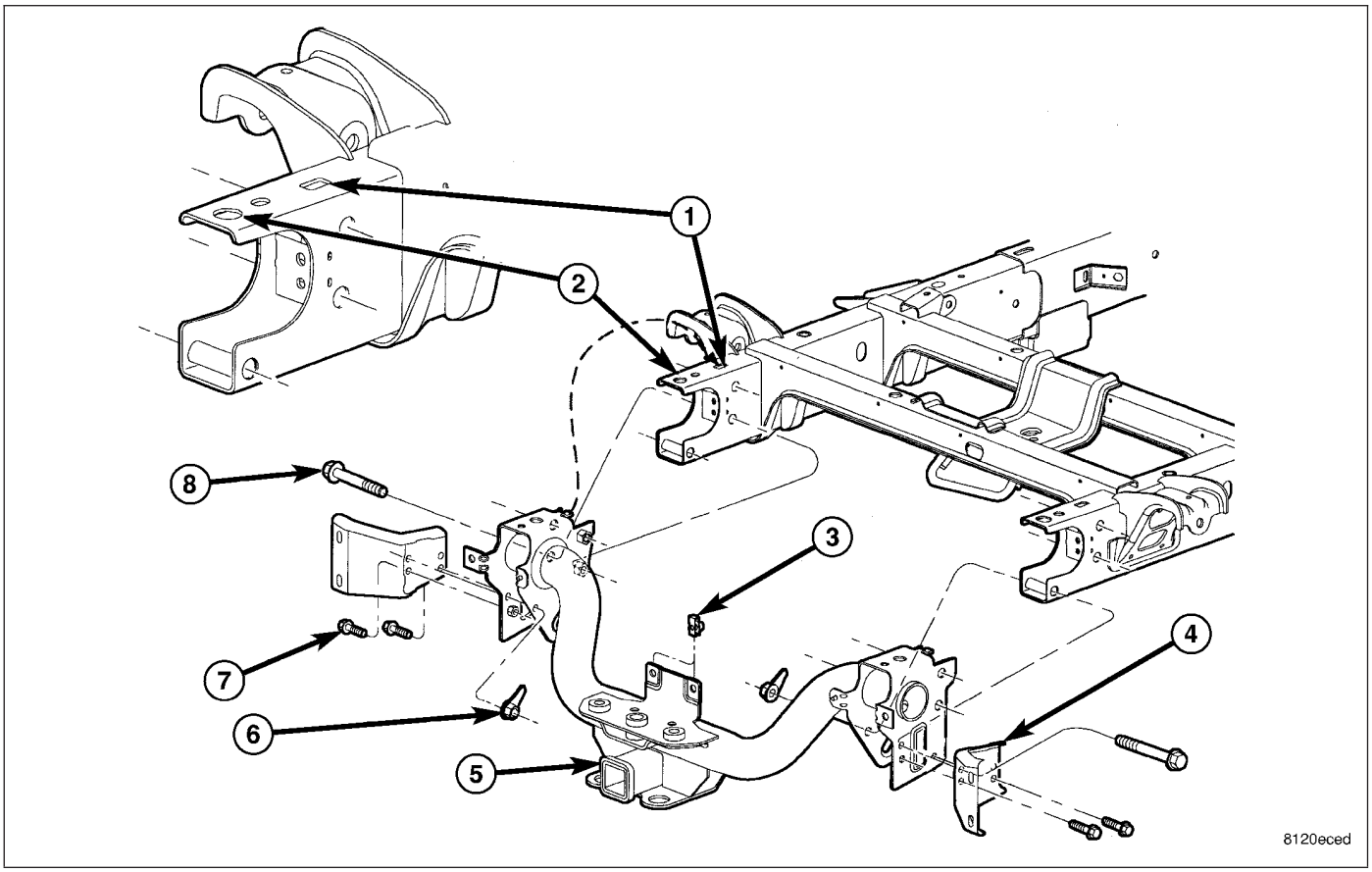

3. On **Heavy Duty Vehicles**, remove the hitch bolts (8)
4. Disconnect all wire harness support push pins.
5. Remove the rear two cargo box bolts (3) and loosen the remaining bolts (Refer to 23 - BODY/ EXTERIOR/CARGO BOX - REMOVAL).
6. Using a suitable lifting device, lift and support the rear of the cargo box and remove the hitch.

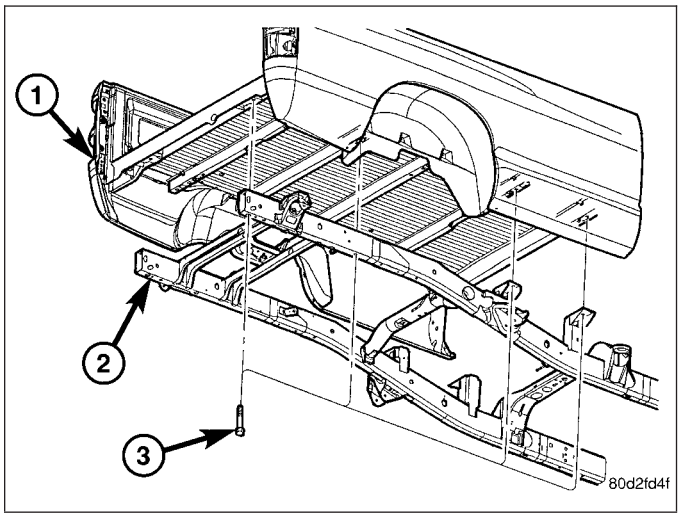

INSTALLATION

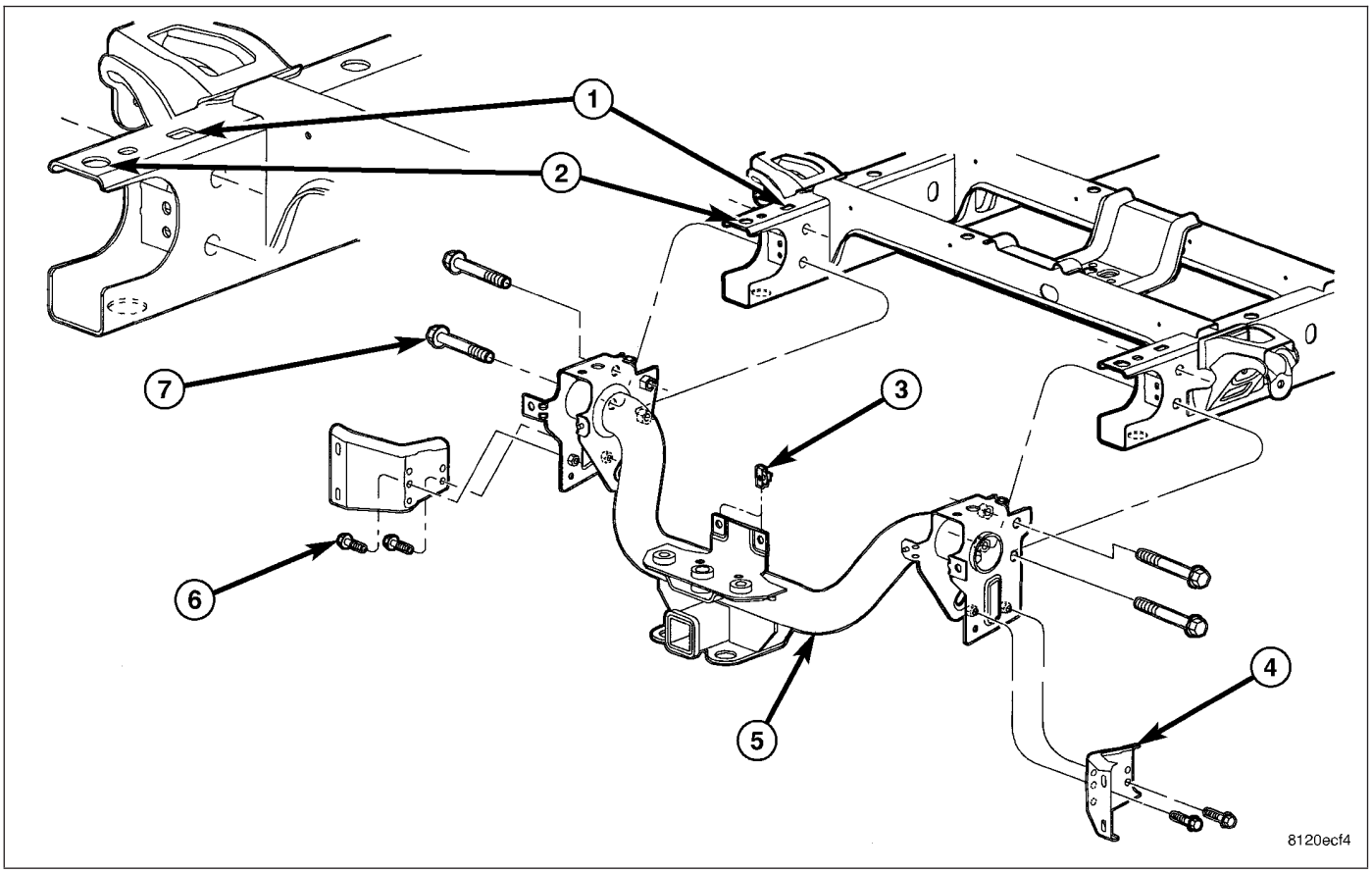

1. On **Light Duty Vehicles**, install the hitch (5) onto the frame rails and make sure the locators (1 and 2) on the inside of the hitch brackets are engaged with the holes in the top of the frame rails properly.
2. Install the hitch bolts (7) and tighten to 170 N·m (125 ft. lbs.).
3. Connect all wire harness support push pins.

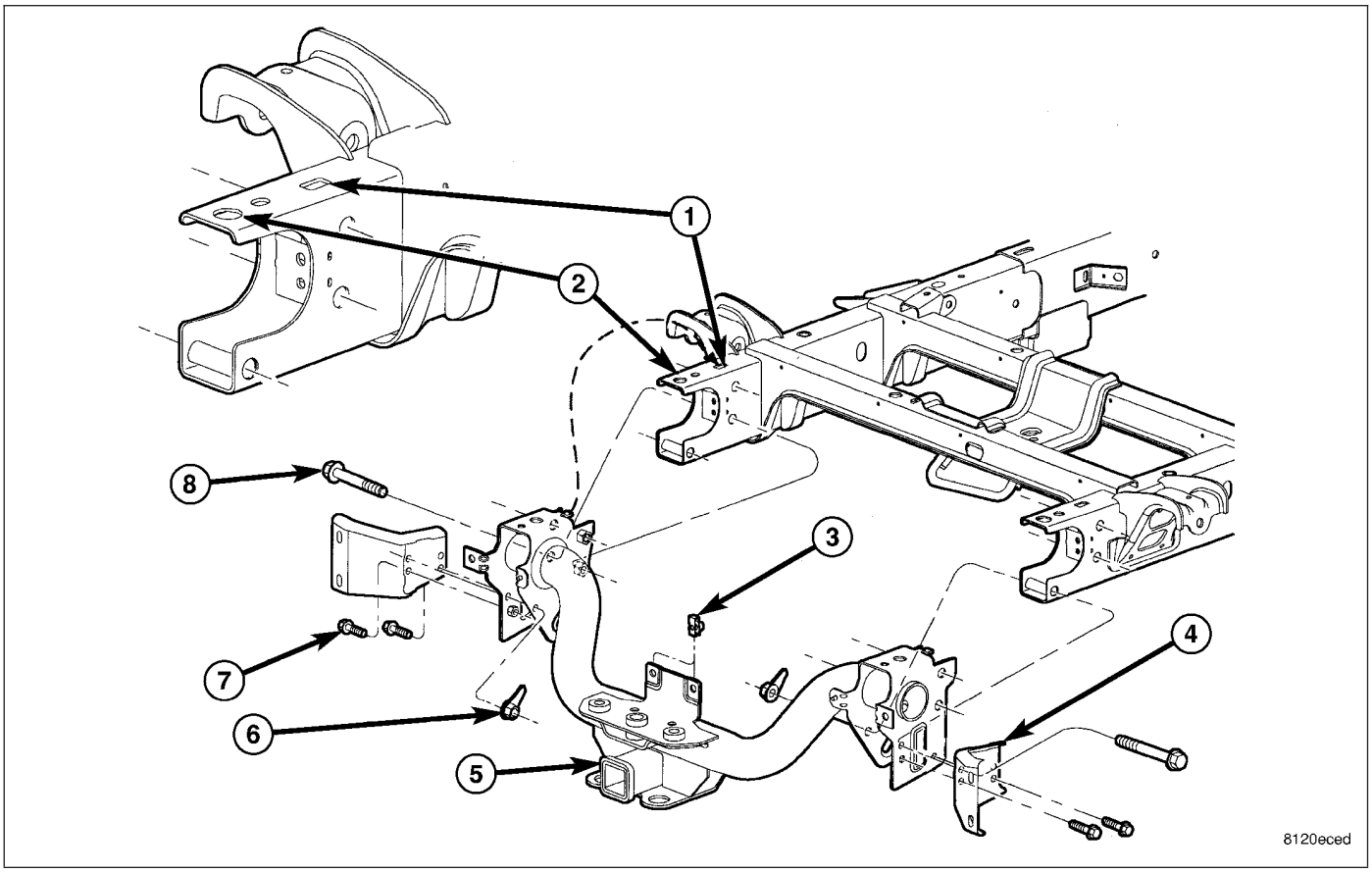

4. On **Heavy Duty Vehicles**, install the hitch (5) onto the frame rails and make sure the locators (1 and 2) on the inside of the hitch brackets are engaged with the holes in the top of the frame rails properly.
5. Install the hitch bolts (8) and tighten to 170 N·m (125 ft. lbs.).
6. Connect all wire harness support push pins.
7. Lower the cargo box and install the rear bolts (3) (Refer to 23 - BODY/EXTERIOR/CARGO BOX - INSTALLATION).
8. Install the rear bumper (Refer to 13 - FRAME & BUMPERS/BUMPERS/REAR BUMPER - INSTALLATION).

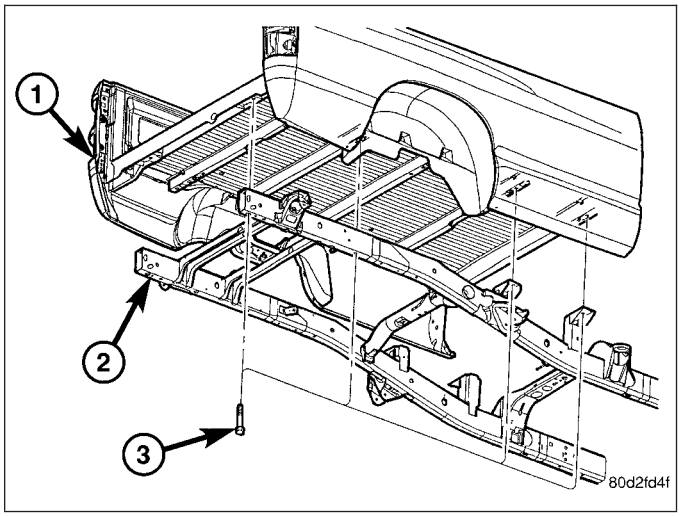

TRANSFER CASE SKID PLATE

REMOVAL

1. Raise and support the vehicle (Refer to LUBRICATION & MAINTENANCE/HOISTING - STANDARD PROCEDURE).

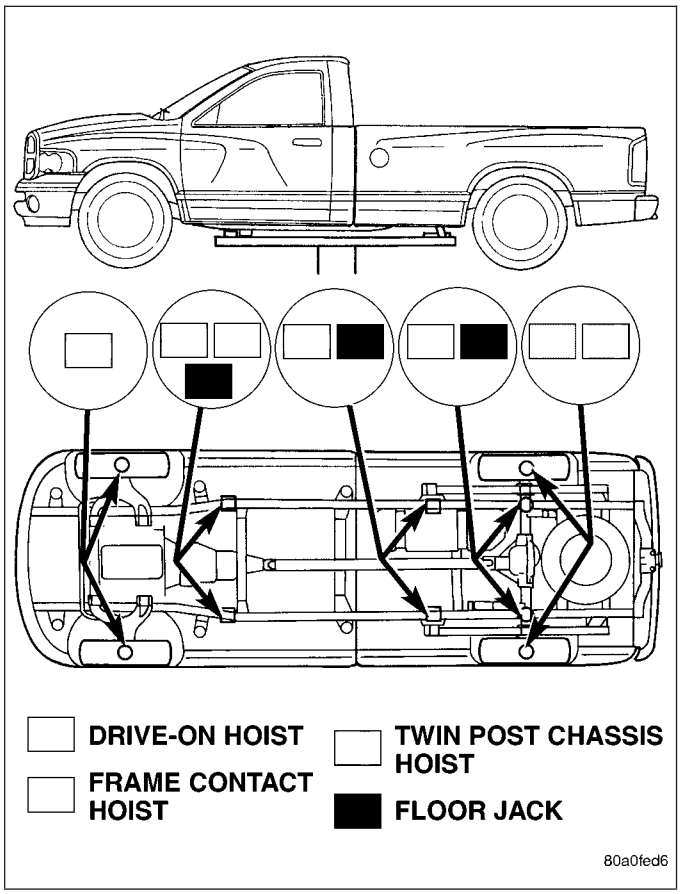

2. Support the skid plate (3) and remove the bolts (4).
3. Remove the skid plate (3).
4. Support the skid plate crossmember (2) and remove the bolts (1).
5. Remove the skid plate crossmember (2).

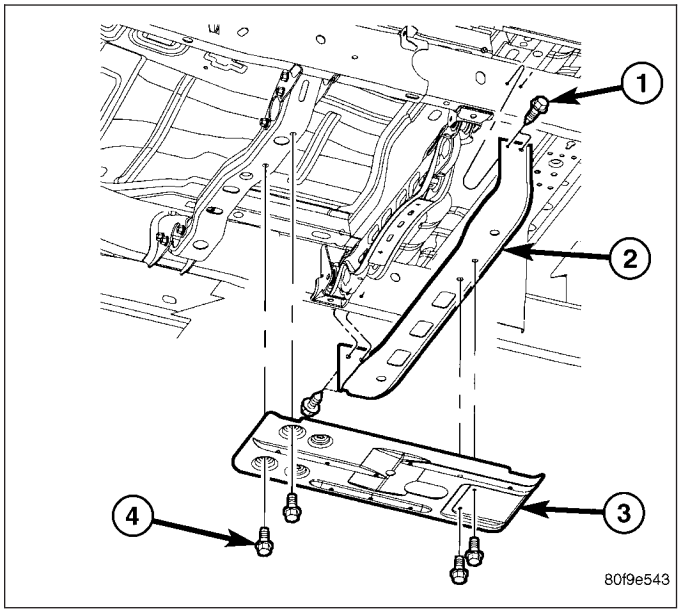

INSTALLATION
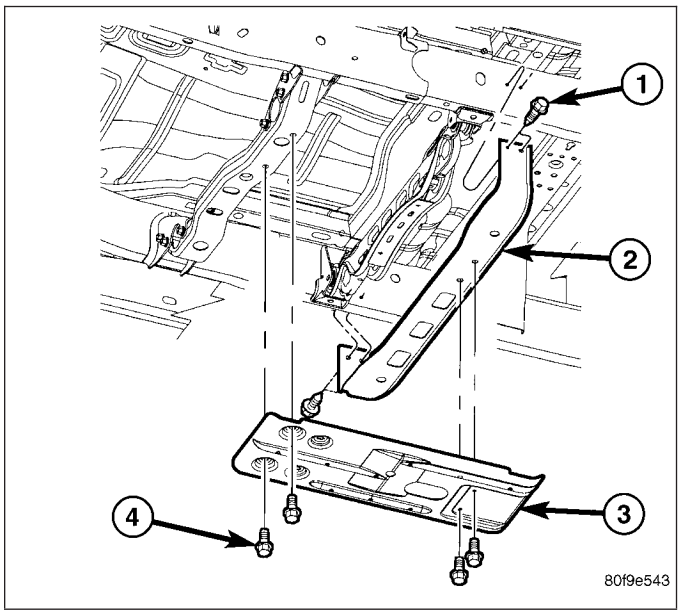
1. Install the skid plate crossmember (2) and bolts (1).
2. Tighten the bolts (1) to 34 N·m (25 ft. lbs.).
3. Install the skid plate (3) and bolts (4).
4. Tighten the bolts (4) to 34 N·m (25 ft. lbs.).