https://truckmanualshub.com/

Genie®
A TEREX BRAND

Service Manual

Serial Number Range

GTH-844™

from GTH0813-16606

Part No. 218230
Rev B
May 2014

https://truckmanualshub.com/

Introduction

Important

Read, understand and obey the safety rules and operating instructions in the appropriate operator's manual before attempting any maintenance or repair procedure.

This manual provides detailed scheduled maintenance information for the machine owner and user. It also provides troubleshooting fault codes and repair procedures for qualified service professionals.

Basic mechanical, hydraulic and electrical skills are required to perform most procedures. However, several procedures require specialized skills, tools, lifting equipment and a suitable workshop. In these instances, we strongly recommend that maintenance and repair be performed at an authorized dealer service center.

Compliance

Machine Design Life
Unrestricted with proper operation, inspection and scheduled maintenance.

Technical Publications

Genie has endeavored to deliver the highest degree of accuracy possible. However, continuous improvement of our products is a Genie policy. Therefore, product specifications are subject to change without notice.

Readers are encouraged to notify Genie of errors and send in suggestions for improvement. All communications will be carefully considered for future printings of this and all other manuals.

Contact Us:

www.genielift.com
e-mail: awp.techpub@terex.com

Serial Number Information

Genie offers the following Service Manuals for these models:

Title	Part No.
GTH-844A (from serial number 8418 to 16605)	97487
GTH-844B (from serial number 6946 to 16605)	97487

Copyright © 2012 by Terex Industries

218230 Rev B May 2014
Second Edition, Second Printing

"Genie" is a registered trademark of Terex South Dakota, Inc. in the USA and many other countries. "GTH" is a trademark of Terex South Dakota, Inc.

Printed on recycled paper

Printed in U.S.A.

https://truckmanualshub.com/

Revision History

Revision	Date	Section	Procedure / Schematic Page / Description
A	11/2012		New Release
A1	03/13	3	3-19
B	05/14	Specifications	Hydraulic Oil
		Maintenance	B-10 Fork Level and Auxiliary hose tension
		Repair	1-6 Fork Level and Auxiliary hydraulic hoses
		Schematics	Telematics connector legend; electrical schematic; hydraulic schematic- single and dual joysticks Harness Maps

REFERENCE EXAMPLES:

Kubota Engine_Section 2_Specifications.
A-6,B-3,C-7_Section 3_Maintenance Procedure.
3-2, 6-4, 9-1_Section 4_Repair Procedure.
Fault Codes_Section 5.
6-35, 6-56, 6-104_Section 6_Schematic Page #.

Electronic Version

Click on any procedure or page number highlighted in blue to view the update.

https://truckmanualshub.com/

REVISION HISTORY, CONTINUED

Revision	Date	Section	Procedure / Schematic Page / Description

REFERENCE EXAMPLES:

Kubota Engine_Section 2_Specifications.
A-6,B-3,C-7_Section 3_Maintenance Procedure.
3-2, 6-4, 9-1_Section 4_Repair Procedure.
Fault Codes_Section 5.
6-35, 6-56, 6-104_Section 6_Schematic Page #.

Electronic Version

Click on any procedure or page number highlighted in blue to view the update.

https://truckmanualshub.com/

Serial Number Legend

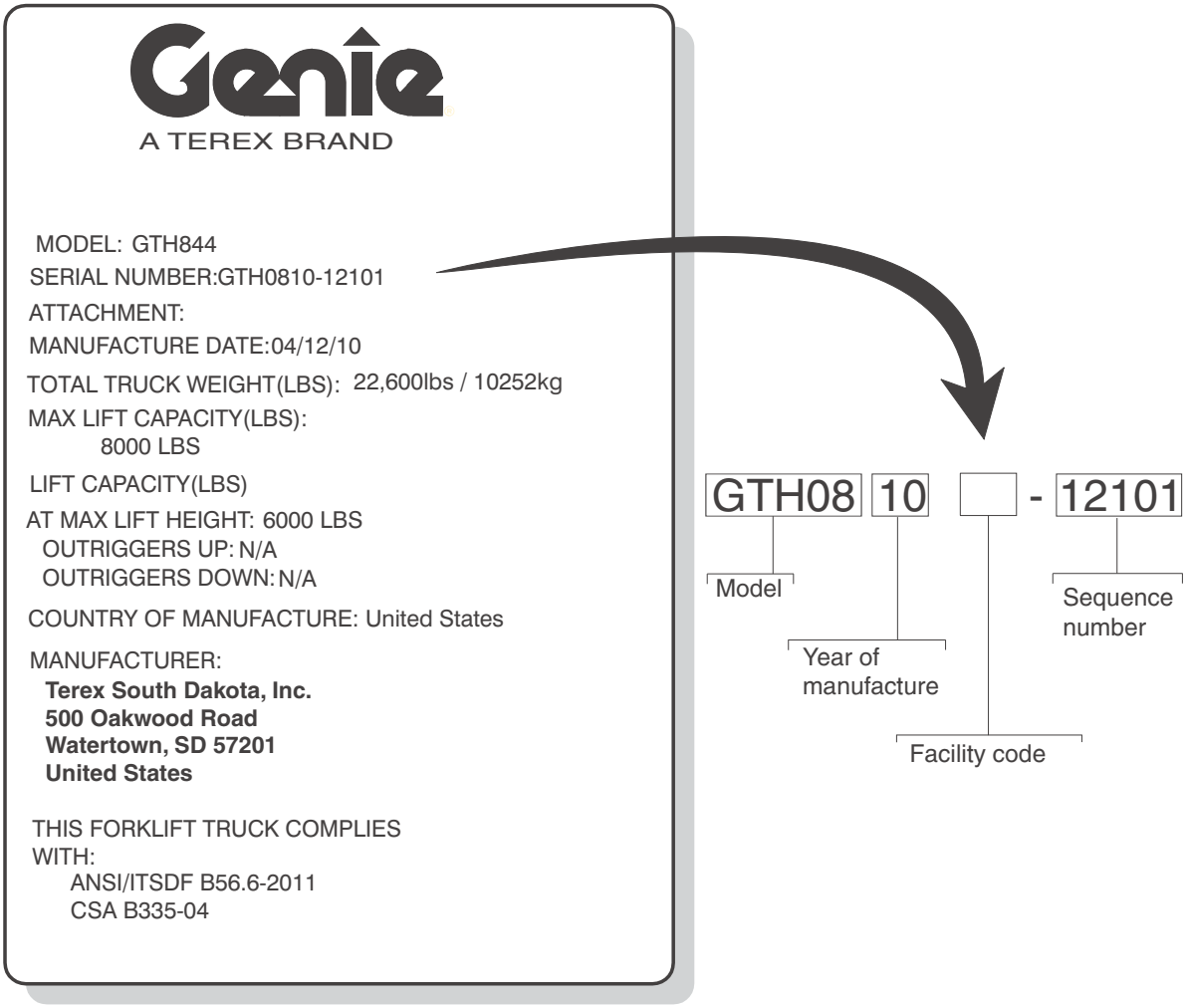

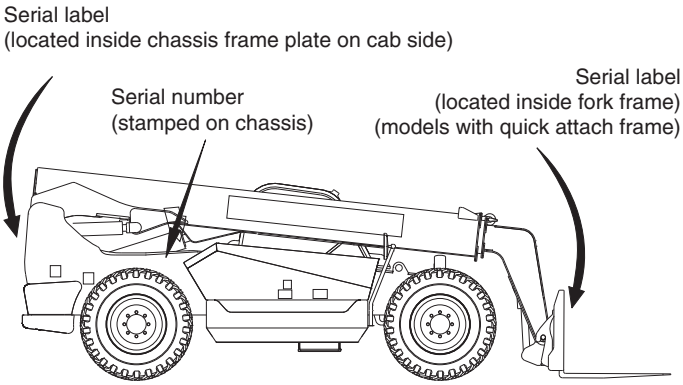

https://truckmanualshub.com/

This page intentionally left blank.

https://truckmanualshub.com/

Safety Rules

Danger

Failure to obey the instructions and safety rules in this manual and the appropriate operator's manual on your machine will result in death or serious injury.

Many of the hazards identified in the operator's manual are also safety hazards when maintenance and repair procedures are performed.

Do Not Perform Maintenance Unless:

- ☑ You are trained and qualified to perform maintenance on this machine.
- ☑ You read, understand and obey:
  - manufacturer's instructions and safety rules
  - employer's safety rules and worksite regulations
  - applicable governmental regulations
- ☑ You have the appropriate tools, lifting equipment and a suitable workshop.

Personal Safety

Any person working on or around a machine must be aware of all known safety hazards. Personal safety and the continued safe operation of the machine should be your top priority.

Read each procedure thoroughly. This manual and the decals on the machine, use signal words to identify the following:

Safety alert symbol—used to alert personnel to potential personal injury hazards. Obey all safety messages that follow this symbol to avoid possible injury or death.

DANGER Indicates an imminently hazardous situation which, if not avoided, will result in death or serious injury.

WARNING Indicates a potentially hazardous situation which, if not avoided, could result in death or serious injury.

CAUTION Indicates a potentially hazardous situation which, if not avoided, may cause minor or moderate injury.

NOTICE Indicates a potentially hazardous situation which, if not avoided, may result in property damage.

Be sure to wear protective eye wear and other protective clothing if the situation warrants it.

Be aware of potential crushing hazards such as moving parts, free swinging or unsecured components when lifting or placing loads. Always wear approved steel-toed shoes.

https://truckmanualshub.com/

SAFETY RULES

Workplace Safety

Be sure to keep sparks, flames and lighted tobacco away from flammable and combustible materials like battery gases and engine fuels. Always have an approved fire extinguisher within easy reach.

Be sure that all tools and working areas are properly maintained and ready for use. Keep work surfaces clean and free of debris that could get into machine components and cause damage.

Be sure any forklift, overhead crane or other lifting or supporting device is fully capable of supporting and stabilizing the weight to be lifted. Use only chains or straps that are in good condition and of ample capacity.

Be sure that fasteners intended for one time use (i.e., cotter pins and self-locking nuts) are not reused. These components may fail if they are used a second time.

Be sure to properly dispose of old oil or other fluids. Use an approved container. Please be environmentally safe.

Be sure that your workshop or work area is properly ventilated and well lit.

https://truckmanualshub.com/

Table of Contents

Introduction

Important Information ..... *ii*

Serial Number Legend ..... *iii*

Section 1 **Safety Rules**

General Safety Rules ..... *v*

Section 2 **Specifications**

Machine Specifications ..... 2 - 1

Performance Specifications ..... 2 - 2

Hydraulic Specifications ..... 2 - 3

Hydraulic Component Specifications ..... 2 - 4

Manifold Component Specifications ..... 2 - 5

Air Conditoner Refrigerant Specification ..... 2 - 5

Deutz TCD3.6 Engine ..... 2 - 6

Perkins 1104D-E44TA Engine ..... 2 - 7

Perkins 854-E34TA Engine ..... 2 - 8

Dana VDT12000 Transmission ..... 2 - 9

Carraro 26.27M Drive Axle ..... 2 - 9

Hydraulic Hose and Fitting Torque Specifications ..... 2 - 10

SAE and Metric Fasteners Torque Charts ..... 2 - 11

Section 3 **Scheduled Maintenance Procedures**

Introduction ..... 3 - 1

Pre-delivery Preparation Report ..... 3 - 3

Maintenance Inspection Report ..... 3 - 5

https://truckmanualshub.com/

TABLE OF CONTENTS

Section 3 **Scheduled Maintenance Procedures**, continued

Checklist A Procedures

A-1 Inspect the Manuals and Decals ..... 3 - 5
A-2 Perform Pre-operation Inspection ..... 3 - 6
A-3 Perform Function Tests ..... 3 - 6
A-4 Lubricate the Boom ..... 3 - 6
A-5 Perform Engine Maintenance - All Models ..... 3 - 7
A-6 Perform Transmission Maintenance ..... 3 - 8
A-7 Perform 30 Day Service ..... 3 - 8
A-8 Perform Axle Maintenance ..... 3 - 9
A-9 Perform Transmission Maintenance ..... 3 - 9
A-10 Perform Axle Maintenance ..... 3 - 9

Checklist B Procedures

B-1 Inspect the Battery ..... 3 - 10
B-2 Inspect the Electrical Wiring ..... 3 - 11
B-3 Check the Exhaust System ..... 3 - 12
B-4 Inspect the Engine Air Filter ..... 3 - 13
B-5 Inspect the Tires, Wheels and Lug Nut Torque ..... 3 - 13
B-6 Perform Hydraulic Oil Analysis ..... 3 - 14
B-7 Inspect the Fuel and Hydraulic Tank Cap Venting Systems ..... 3 - 14
B-8 Perform Engine Maintenance - Deutz Models ..... 3 - 15
B-9 Check the Boom Wear Pads ..... 3 - 16
B-10 Inspect the Fork Level and Auxiliary Hoses ..... 3 - 17
B-11 Perform Axle Maintenance ..... 3 - 17

https://truckmanualshub.com/

TABLE OF CONTENTS

Section 3 **Scheduled Maintenance Procedures**, continued

Checklist C Procedures

C-1 Perform Engine Maintenance - Deutz Models ..... 3 - 18
C-2 Perform Engine Maintenance - Perkins Models ..... 3 - 18
C-3 Perform Engine Maintenance - Perkins Models ..... 3 - 19
C-4 Inspect and Lubricate the Sequencing Chains ..... 3 - 19

Checklist D Procedures

D-1 Inspect the Forks ..... 3 - 21
D-2 Adjust the Boom Sequencing Chains ..... 3 - 21
D-3 Replace the Hydraulic Tank Return Filter Element ..... 3 - 22
D-4 Perform Transmission Maintenance ..... 3 - 23
D-5 Perform Engine Maintenance - Deutz Models ..... 3 - 23
D-6 Perform Engine Maintenance - Perkins Models ..... 3 - 24
D-7 Perform Axle Maintenance ..... 3 - 24
D-8 Perform Engine Maintenance - Perkins Models ..... 3 - 25

Checklist E Procedures

E-1 Test or Replace the Hydraulic Oil ..... 3 - 26
E-2 Perform Engine Maintenance - Perkins Models ..... 3 - 27
E-3 Perform Engine Maintenance - Perkins Models ..... 3 - 27
E-4 Perform Engine Maintenance - Deutz Models ..... 3 - 28
E-5 Perform Engine Maintenance - Perkins Models ..... 3 - 28
E-6 Perform Engine Maintenance - Deutz Models ..... 3 - 29
E-7 Perform Engine Maintenance - Perkins Models ..... 3 - 29

https://truckmanualshub.com/

TABLE OF CONTENTS

Section 4 **Repair Procedures**

Introduction ..... 4 - 1

Boom Components

1-1 Boom Proximity Switches ..... 4 - 2
How to Test a Proximity Switch
How to Adjust the Boom Angle Proximity Switch

1-2 Boom ..... 4 - 3
How to Replace the Boom Wear Pads
How to Remove the Lifting Fork Frame
How to Replace the Retraction Chain
How to Replace the Extension Chains
How to Remove the Boom
How to Disassemble the Boom

1-3 Boom Lift Cylinder ..... 4 - 10
How to Remove the Lift Cylinder

1-4 Boom Extension Cylinder ..... 4 - 12
How to Remove the Extension Cylinder

1-5 Fork Level Cylinder ..... 4 - 12
How to Remove the Fork Level Cylinder

1-6 Hydraulic Hoses ..... 4 - 13
How to Adjust the Fork Level and/or Auxiliary Hoses
How to Replace the Fork Level and/or Auxiliary Hoses

Operator's Compartment

2-1 Operator's Compartment ..... 4 - 16
How to Remove the Operator's Compartment

https://truckmanualshub.com/

Section 4 **Repair Procedures,** continued

2-2 Machine Controls ..... 4 - 18
How to Remove the Steering Column
How to Remove the Steering Wheel
How to Remove the Steer Orbitral
How to Remove the Joystick - Single Joystick
How to Remove the Joystick - Dual Joysticks
How to Remove the Brake Pedal Assembly
How to Remove the Gauge Cluster Assembly

Fuel and Hydraulic Tanks

3-1 Fuel and Hydraulic Tanks ..... 4 - 22
How to Remove the Fuel and Hydraulic Tank Assembly

Engines

4-1 Engines ..... 4 - 23
How to Repair the Perkins 1104D-E44TA Engine
How to Repair the Perkins 854E-34TA Engine
How to Repair the Deutz TCD3.6 Engine

4-2 Engine Fault Codes ..... 4 - 32
How to Retrieve Engine Fault Codes

Transmission

5-1 Transmission ..... 4 - 24
How to Repair the Transmission

Hydraulic Pumps

6-1 Hydraulic Pump ..... 4 - 26
How to Test the Function Pump
How to Remove the Function Pump
How to Install the Function Pump
How to Prime the Function Pump
How to Adjust the Function Pump Standby Pressure
How to Adjust the Function Pump Pressure Compensator

https://truckmanualshub.com/

TABLE OF CONTENTS

Section 4 **Repair Procedures**, continued

Manifolds

7-1 Primary Function Manifold Components - Models with Single Joystick ..... 4 - 30

7-2 Primary Function Manifold Components - Models with Dual Joysticks ..... 4 - 34

7-3 Secondary Function Manifold Components ..... 4 - 38

7-4 Auxiliary Manifold (option) and Brake Manifold Components ..... 4 - 40

7-5 Valve Adjustments - Secondary Function Manifold ..... 4 - 41
How to Set the Steer System Pressure
How to Set the Parking Brake System Pressure
How to Set the Differential Lock/Joystick Pressure
How to Set the Rear Lock-up System Pressure

7-6 Valve Coils ..... 4 - 45
How to Test a Coil
Valve Coil Resistance Specification
How to Test a Coil Diode

Axle Components

8-1 Axles ..... 4 - 47
How to Remove the Axle

https://truckmanualshub.com/

TABLE OF CONTENTS

Section 5 **Fault Codes**

Introduction ..... 5 - 1
Diagnostic Display ..... 5 - 2
Engine Fault Codes - Deutz Models ..... 5 - 3
Engine Fault Codes - Perkins 1104D Models ..... 5 - 13

Section 6 **Schematics**

Introduction ..... 6 - 1
Fuse Panel Layout ..... 6 - 2
Electrical Component & Wire Color Legend ..... 6 - 3
Telematics Connector Legend ..... 6 - 5
Electrical and Hydraulic Symbols Legends ..... 6 - 6
Harness Map - Control System Power_SJ ..... 6 - 8
Harness Map - Control System Ground_SJ ..... 6 - 9
Harness Map - Control System Power_DJ ..... 6 - 12
Harness Map - Control System Ground_DJ ..... 6 - 13
Harness Map - Deutz TCD3.6 Engine Battery Power & Ground ..... 6 - 16
Harness Map - Perkins 1104D Engine Battery Power & Ground ..... 6 - 17
Harness Map - Perkins 854E Engine Battery Power & Ground ..... 6 - 20

https://truckmanualshub.com/

Section 6 **Schematics,** continued

Harness Map - Options
Aux Hydraulics, Beacon & 3rd Gear Lockout ..... 6 - 21
Harness Map - Options
Work Lights ..... 6 - 24

Harness Map - Options
Road Lights ..... 6 - 25

Harness Map - Options
Enclosed Cab with Heater ..... 6 - 28

Harness Map - Options
Enclosed Cab with HVAC ..... 6 - 29

Electrical Schematic - View 1 ..... 6 - 32

Electrical Schematic - View 2 ..... 6 - 33

Hydraulic Schematic - Single Joystick ..... 6 - 36
(before serial number 19529)

Hydraulic Schematic - Single Joystick ..... 6 - 37
(from serial number 19529)

Hydraulic Schematic - Dual Joysticks ..... 6 - 40
(before serial number 19529)

Hydraulic Schematic - Dual Joysticks ..... 6 - 41
(from serial number 19529)

https://truckmanualshub.com/

Specifications

Machine Specifications

Fluid capacities	
Fuel tank	35 gallons 132.5 liters
Hydraulic tank	40 gallons 151.4 liters
Hydraulic system (including tank)	55 gallons 208.2 liters

For operational specifications, refer to the Operator's Manual.

Tires and wheels	
Tire size	13.00 x 24
Tire ply rating	12
Weight, rough terrain tire (air filled)	315 lbs 142.9 kg
Weight, rough terrain tire (foam filled)	967 ±35 lbs 439 ±16 kg
Tire pressure (models with air-filled tires)	62 psi 4.3 bar
Lug nut torque	295 ft-lbs 400 Nm
Lug pattern	8 x 10.826
Wheel diameter	24 in 60.1 cm
Wheel width	9 in 22.9 cm

Continuous improvement of our products is a Genie policy. Product specifications are subject to change without notice.

https://truckmanualshub.com/

SPECIFICATIONS

Performance Specifications

Drive speed, maximum	
Deutz 3.6 TCD Engines	15 mph 24.1 km/h
Perkins 1104D Engine	14 mph 22.5 km/h
Perkins 854 Engine	16 mph 25.7 mph
Draw bar pull	21,000 lbs 9525 kg
Lift capacity, maximum	8000 lbs 3629 kg

Boom function speeds, maximum	
Boom up	12 to 14 seconds
Boom down	9 to 11 seconds
Boom extend	13 to 15 seconds
Boom retract	8 to 10 seconds
Fork rotate	3 to 6 seconds
Fork tilt up	6 to 8 seconds
Fork tilt down	5 to 7 seconds

Continuous improvement of our products is a Genie policy. Product specifications are subject to change without notice.

https://truckmanualshub.com/

SPECIFICATIONS

Hydraulic Specifications

Hydraulic Fluid Specifications

Genie specifications require hydraulic oils which are designed to give maximum protection to hydraulic systems, have the ability to perform over a wide temperature range, and the viscosity index should exceed 140. They should provide excellent antiwear, oxidation, corrosion inhibition, seal conditioning, and foam and aeration suppression properties.

Cleanliness level, minimum	15/13
Water content, maximum	250 ppm

Recommended Hydraulic Fluid

Hydraulic oil type	Chevron Rando HD Premium MV
Viscosity grade	32
Viscosity index	200

Optional fluids

Biodegradable	Petro Canada Environ MV 46
Fire resistant	UCON Hydrolube HP-5046
Mineral based	Shell Tellus S2 V 32 Shell Tellus S2 V 46 Chevron Hydraulic Oil 5606A

Note: Genie specifications require additional equipment and special installation instructions for the approved optional fluids. Consult the Genie Service Department before use.

NOTICE Optional fluids may not have the same hydraulic lifespan and may result in component damage.

Note: Extended machine operation can cause the hydraulic fluid temperature to increase beyond it's maximum allowable range. If the hydraulic fluid temperature consistently exceeds 200°F / 90°C an optional oil cooler may be required.

NOTICE Do not top off with incompatible hydraulic fluids. Hydraulic fluids may be imcompatible due to the differences in base additive chemistry. When incompatible fluids are mixed, insoluble materials may form and deposit in the hydraulic system, plugging hydraulic lines, filters, control valves and may result in component damage.

Note: Do not operate the machine when the ambient air temperature is consistently above 120°F / 49°C.

Hydraulic Fluid Temperature Range

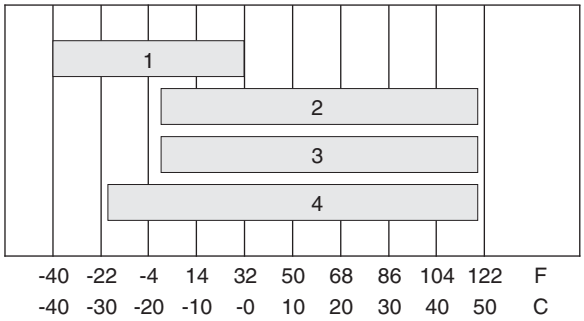

1 Chevron hydraulic oil 5606A
2 Petro-Canada Environ MV 46
3 UCON Hydrolube HP-5046D
4 Chevron Rando HD Premium MV

Continuous improvement of our products is a Genie policy. Product specifications are subject to change without notice.

https://truckmanualshub.com/

Chevron Rando HD Premium MV oil fluid properties

ISO grade	32
Viscosity index	200
Kinematic Viscosity cSt @ 200°F / 100°C cSt @ 104°F / 40°C	 7.5 33.5
Brookfield Viscosity cP @ -4°F / -20°C cP @ -22°F / -30°C	 1040 3310
Flash Point	375°F / 190°C
Pour Point	-58°F / -50°C
Maximum continuous operating temperature	171°F / 77°C

Note: An hydraulic oil heating system is recommended when the ambient termperature is consistently below 0°F / -18°C.

Note: Do not operate the machine when the ambient temperature is below -20°F / -29°C with Rando HD Premium MV.

Chevron 5606A hydraulic oil fluid properties

ISO grade	15
Viscosity index	300
Kinematic Viscosity cSt @ 200°F / 100°C cSt @ 104°F / 40°C cSt @ -40°F / -40°C	 5.5 15.0 510
Brookfield Viscosity cP @ -4°F / -20°C cP @ -22°F / -30°C	 1040 3310
Flash Point	180°F / 82°C
Pour Point	-81°F / -63°C
Maximum continuous operating temperature	124°F / 51°C

Note: Use of Chevron 5606A hydraulic fluid, or equivalent, is required when ambient termperatures are consistently below 0°F / -18°C unless an oil heating system is used.

NOTICE Continued use of Chevron 5606A hydraulic fluid, or equivalent, when ambient temperatures are consistently above 32°F / 0°C may result in component damage.

Continuous improvement of our products is a Genie policy. Product specifications are subject to change without notice.

https://truckmanualshub.com/

Petro-Canada Environ MV 46 oil fluid properties

ISO grade	46
Viscosity index	154
Kinematic Viscosity cSt @ 200°F / 100°C cSt @ 104°F / 40°C	 8 44.4
Flash Point	482°F / 250°C
Pour Point	-49°F / -45°C
Maximum continuous operating temperature	180°F / 82°C

UCON Hydrolube HP-5046 hydraulic oil fluid properties

ISO grade	46
Viscosity index	192
Kinematic Viscosity cSt @ 200°F / 100°C cSt @ 104°F / 40°C cSt @ -40°F / -40°C	 22 46 1300
Flash Point	None
Pour Point	-81°F / -63°C
Maximum continuous operating temperature	189°F / 87°C

Continuous improvement of our products is a Genie policy. Product specifications are subject to change without notice.

https://truckmanualshub.com/

SPECIFICATIONS

Hydraulic Components Specifications

Function Pump	
Type:	variable displacement piston pump
Displacement	0 to 3.1 cu in 0 to 51 cc
Flow rate @ 2500 rpm	34 gpm 128 L/min
Pump pressure, maximum	3190 psi 220 bar
Pressure compensator	3190 psi 220 bar
Standby pressure	450 psi 31 bar

Primary Function Manifold	
System relief valve pressure, maximum (measured at test port TP)	35000 psi 241 bar
Fork tilt relief valve pressure, maximum	3500 psi 241 bar
Flow regulator, Sway circuit	2 gpm 7.5 L/min
Secondary Function Manifold	
Steer relief valve pressure, maximum (measured at test port TS)	2650 psi 182.7 bar
Parking brake relief valve pressure, maximum (measured at test port TPB)	350 psi 24.1 bar
Diff lock relief valve pressure, maximum (measured at test port TJ)	400 psi 27.5 bar
Rear lock-up relief valve pressure, maximum (measured at test port TR)	50 psi 3.4 bar

Continuous improvement of our products is a Genie policy. Product specifications are subject to change without notice.

https://truckmanualshub.com/

SPECIFICATIONS

Manifold Component Specifications

Plug torque	
SAE No. 2	50 in-lbs / 6 Nm
SAE No. 4	13 ft-lbs / 18 Nm
SAE No. 6	18 ft-lbs / 24 Nm
SAE No. 8	50 ft-lbs / 68 Nm
SAE No. 10	55 ft-lbs / 75 Nm
SAE No. 12	75 ft-lbs / 102 Nm

Air Conditioner Refrigerant Specifications

System Full Charge	
R134a	1 lb 14 oz

Continuous improvement of our products is a Genie policy. Product specifications are subject to change without notice.

https://truckmanualshub.com/

SPECIFICATIONS

Deutz TCD3.6 L4 Engine

Displacement	221 cu in 3.62 liters
Number of cylinders	4
Bore & stroke	3.86 x 4.72 inches 98 x 120 mm
Horsepower	99 @ 2300 rpm 73.8 kw @ 2300 rpm
Peak Torque	288 lb-ft @ 1600 rpm 390 Nm @ 1600 rpm
Firing order	1 - 3 - 4 - 2
Compression ratio	17.2:1
Combustion	Direct injection
Governor	Electronic
Low idle Frequency	1000 rpm 200 Hz
High idle Frequency	2400 rpm 500 Hz
Lubrication system	
Minimum oil pressure (warm, at low idle)	23.5 psi 1.6 bar
Oil capacity (including filter)	9.5 quarts 9 liters

Oil viscosity requirements

Units ship with 15W-40 API CJ4 low ash oil.
Extreme operating temperatures may require the use of alternative engine oils. For oil requirements, refer to the Engine Operator's Manual on your machine.

Fuel requirement

For fuel requirements, refer to the engine Operator's Manual on your machine.

Fuel injection pressure, maximum	23200 psi 1600 bar
Engine coolant	
Capacity	4.5 gallons 17 liters
Type	Extended Life
Alternator	
Output	95 A, 12V DC
Starter Motor	
Normal load	300-400 A
Relay max	60 A
Relay continuous	12 A
Cranking speed	>100 rpm
Glow Plugs	
Initial load (0-6 sec)	80 amps
Continuous load (>6 sec)	<40 amps
Battery	
Type	12V DC
Group	C31
Quantity	1
Cold cranking ampere @ 0°F	1000A
Reserve capacity @ 25A rate	200 minutes

Continuous improvement of our products is a Genie policy. Product specifications are subject to change without notice.

https://truckmanualshub.com/

SPECIFICATIONS

Perkins 1104D-E44TA Engine

Displacement	269 cu in 4.4 liters
Number of cylinders	4
Bore and stroke	4.13 x 5 inches 105 x 127 mm
Horsepower	99 @ 2200 rpm 73.8 kW @ 2200 rpm
Peak Torque	310 lb-ft @ 1400 rpm 420 Nm @ 1400 rpm
Firing order	1 - 3 - 4 - 2
Compression ratio	16.2:1
Combustion	E-TVCS
Governor	Electronic
Low idle Frequency	1000 rpm 200 Hz
High idle Frequency	2500 rpm 500 Hz
Lubrication system	
Oil pressure (hot @ 2300 rpm)	43-58 psi 2.96-4 bar
Minimum pressure	7.1 psi
Oil capacity (including filter)	10 quarts 9.6 liters

Oil viscosity requirements

Units ship with 15W-40.
Extreme operating temperatures may require the use of alternative engine oils. For oil requirements, refer to the Engine Operation and Maintenance Manual on your machine.

Fuel requirement

For fuel requirements, refer to the engine Operation Manual on your machine.

Fuel injection pressure	23700 psi 1635 bar
Engine coolant	
Capacity	4.6 gallons 17.4 liters
Type	Extended Life
Alternator	
Output	85 A, 14V DC
Starter Motor	
Normal load	68 A
Relay max	50 A
Relay continuous	20 A
Cranking speed	130 - 200 rpm
Glow Plugs	
Initial load (0-4 sec)	20 A (EA)
Continuous load (>4 sec)	15 A (EA)
Battery	
Type	12V DC
Group	C31
Quantity	1
Cold cranking ampere @ 0°F	1000A
Reserve capacity @ 25A rate	200 minutes

Continuous improvement of our products is a Genie policy. Product specifications are subject to change without notice.

https://truckmanualshub.com/

SPECIFICATIONS

Perkins 854E-E34TA Engine

Displacement	207 cu in 3.4 liters
Number of cylinders	4
Bore and stroke	3.9 x 4.3 inches 99 x 110 mm
Horsepower	99 @ 2500 rpm 73.8 kW @ 2500 rpm
Peak Torque	288 lb-ft @ 1400 rpm 390 Nm @ 1400 rpm
Firing order	1 - 3 - 4 - 2
Compression ratio	17:1
Governor	Electronic
Low idle Frequency	1000 rpm 100 Hz
High idle Frequency	2700 rpm 270 Hz
Lubrication system	
Minimum oil pressure	12 psi 0.83 bar
Maximum oil capacity (including filter)	8.8 quarts 8.3 liters

Oil viscosity requirements

Units ship with 15W-40 API CJ4 low ash oil.
Extreme operating temperatures may require the use of alternative engine oils. For oil requirements, refer to the Engine Operation and Maintenance Manual on your machine.

Fuel requirement

For fuel requirements, refer to the engine Operation Manual on your machine.

Fuel Injection Pressure	23000 psi 1585 bar
Engine coolant	
Capacity	4.9 gallons 18.5 liters
Type	Extended Life
Alternator	
Output	120 A, 12V DC
Starter Motor	
Normal load	68 A
Relay max	50 A
Relay continuous	20 A
Cranking speed	130 - 200 rpm
Glow Plugs	
Initial load (0-10 sec)	80 amps
Continuous load (>10 sec)	40 amps
Battery	
Type	12V DC
Group	C31
Quantity	1
Cold cranking ampere @ 0°F	1000A
Reserve capacity @ 25A rate	200 minutes

Continuous improvement of our products is a Genie policy. Product specifications are subject to change without notice.

https://truckmanualshub.com/

SPECIFICATIONS

Dana VDT12000 Transmission

Transmission Type	3 speed powershift converter
Speeds, Forward	3
Speeds, Reverse	3
Torque Converter	
Maximum input	3100 rpm
Size	12 inches
Lubrication	
Oil capacity, transmission	14.3 quarts 13.5 liters
Oil capacity, drop box	1.1 quart 1 liter

Oil viscosity requirements

Units ship with Chevron Ursa Hydraulic 10W. Extreme operating temperatures may require the use of alternative transmission oils. For oil requirements, refer to the *Dana VDT12000 Service Manual* (Dana part number TSM-0022).

Dana VDT12000 Service Manual
Genie part number 218706

Carraro 26.27M Drive Axle

Steering	Integrated steer cylinder
Joints	Heavy duty double U-joints
Steering angle, maximum	45°
Front Axle Lubrication	
Front differential	7.4 quarts 7 liters
Axle planetary end (each)	0.8 quarts 0.8 liters
Rear Axle Lubrication	
Rear differential	7.9 quarts 7.5 liters
Axle planetary end (each)	0.8 quarts 0.8 liters
Oil viscosity requirements	
Differential	Chevron Supreme 80W90 LS
Planetary ends	Chevron Supreme 80W90 LS

For additional axle information, refer to the *Carraro 26.27M Axle Maintenance and Repair Manual.*

Carraro 26.27M Axle Maintenance and Repair Instructions
Genie part number 218710

Continuous improvement of our products is a Genie policy. Product specifications are subject to change without notice.

https://truckmanualshub.com/

SPECIFICATIONS

Hydraulic Hose and Fitting Torque Specifications

Your machine is equipped with Parker Seal-Lok® fittings and hose ends. Genie specifications require that fittings and hose ends be torqued to specification when they are removed and installed or when new hoses or fittings are installed.

SAE O-ring Boss Port
(tube fitting - installed into Aluminum)

SAE Dash size	Torque
-4	11 ft-lbs / 14.9 Nm
-6	23 ft-lbs / 31.2 Nm
-8	40 ft-lbs / 54.2 Nm
-10	69 ft-lbs / 93.6 Nm
-12	93 ft-lbs / 126.1 Nm
-16	139 ft-lbs / 188.5 Nm
-20	172 ft-lbs / 233.2 Nm
-24	208 ft-lbs / 282 Nm

Seal-Lok® fittings

1 Replace the O-ring. The O-ring must be replaced anytime the seal has been broken. The O-ring cannot be re-used if the fitting or hose end has been tightened beyond finger tight.

Note: The O-rings used in the Parker Seal Lok® fittings and hose ends are custom-size O-rings. They are not standard SAE size O-rings. They are available in the O-ring field service kit (Genie part number 49612).

2 Lubricate the O-ring before installation.

3 Be sure that the face seal O-ring is seated and retained properly.

4 Position the tube and nut squarely on the face seal end of the fitting and tighten the nut finger tight.

5 Tighten the nut or fitting to the appropriate torque per given size as shown in the table.

6 Operate all machine functions and inspect the hoses and fittings and related components to confirm that there are no leaks.

SAE O-ring Boss Port
(tube fitting - installed into Steel)

SAE Dash size	Torque
-4	16 ft-lbs / 21.7 Nm
-6	35 ft-lbs / 47.5 Nm
-8	60 ft-lbs / 81.3 Nm
-10	105 ft-lbs / 142.4 Nm
-12	140 ft-lbs / 190 Nm
-16	210 ft-lbs / 284.7 Nm
-20	260 ft-lbs / 352.5 Nm
-24	315 ft-lbs / 427.1 Nm

Seal-Lok® Fittings
(hose end)

SAE Dash size	Torque
-4	18 ft-lbs / 24.4 Nm
-6	27 ft-lbs / 36.6 Nm
-8	40 ft-lbs / 54.2 Nm
-10	63 ft-lbs / 85.4 Nm
-12	90 ft-lbs / 122 Nm
-16	120 ft-lbs / 162.7 Nm
-20	140 ft-lbs / 190 Nm
-24	165 ft-lbs / 223.7 Nm

https://truckmanualshub.com/

SPECIFICATIONS

SAE FASTENER TORQUE CHART

• This chart is to be used as a guide only unless noted elsewhere in this manual •

SIZE	THREAD	Grade 5				Grade 8				A574 High Strength Black Oxide Bolts	
		LUBED		DRY		LUBED		DRY		LUBED	
		in-lbs	Nm	in-lbs	Nm	in-lbs	Nm	in-lbs	Nm	in-lbs	Nm
1/4	20	80	9	100	11.3	110	12.4	140	15.8	130	14.7
	28	90	10.1	120	13.5	120	13.5	160	18	140	15.8
		LUBED		DRY		LUBED		DRY		LUBED	
		ft-lbs	Nm	ft-lbs	Nm	ft-lbs	Nm	ft-lbs	Nm	ft-lbs	Nm
5/16	18	13	17.6	17	23	18	24	25	33.9	21	28.4
	24	14	19	19	25.7	20	27.1	27	36.6	24	32.5
3/8	16	23	31.2	31	42	33	44.7	44	59.6	38	51.5
	24	26	35.2	35	47.4	37	50.1	49	66.4	43	58.3
7/16	14	37	50.1	49	66.4	50	67.8	70	94.7	61	82.7
	20	41	55.5	55	74.5	60	81.3	80	108.4	68	92.1
1/2	13	57	77.3	75	101.6	80	108.4	110	149	93	126
	20	64	86.7	85	115	90	122	120	162	105	142
9/16	12	80	108.4	110	149	120	162	150	203	130	176
	18	90	122	120	162	130	176	170	230	140	189
5/8	11	110	149	150	203	160	217	210	284	180	244
	18	130	176	170	230	180	244	240	325	200	271
3/4	10	200	271	270	366	280	379	380	515	320	433
	16	220	298	300	406	310	420	420	569	350	474
7/8	9	320	433	430	583	450	610	610	827	510	691
	14	350	474	470	637	500	678	670	908	560	759
1	8	480	650	640	867	680	922	910	1233	770	1044
	12	530	718	710	962	750	1016	990	1342	840	1139
1 1/8	7	590	800	790	1071	970	1315	1290	1749	1090	1477
	12	670	908	890	1206	1080	1464	1440	1952	1220	1654
1 1/4	7	840	1138	1120	1518	1360	1844	1820	2467	1530	2074
	12	930	1260	1240	1681	1510	2047	2010	2725	1700	2304
1 1/2	6	1460	1979	1950	2643	2370	3213	3160	4284	2670	3620
	12	1640	2223	2190	2969	2670	3620	3560	4826	3000	4067

METRIC FASTENER TORQUE CHART

• This chart is to be used as a guide only unless noted elsewhere in this manual •

Size (mm)	Class 4.6				Class 8.8				Class 10.9				Class 12.9			
	LUBED		DRY		LUBED		DRY		LUBED		DRY		LUBED		DRY	
	in-lbs	Nm	in-lbs	Nm	in-lbs	Nm	in-lbs	Nm	in-lbs	Nm	in-lbs	Nm	in-lbs	Nm	in-lbs	Nm
5	16	1.8	21	2.4	41	4.63	54	6.18	58	6.63	78	8.84	68	7.75	91	10.3
6	19	3.05	36	4.07	69	7.87	93	10.5	100	11.3	132	15	116	13.2	155	17.6
7	45	5.12	60	6.83	116	13.2	155	17.6	167	18.9	223	25.2	1.95	22.1	260	29.4
	LUBED		DRY		LUBED		DRY		LUBED		DRY		LUBED		DRY	
	ft-lbs	Nm	ft-lbs	Nm	ft-lbs	Nm	ft-lbs	Nm	ft-lbs	Nm	ft-lbs	Nm	ft-lbs	Nm	ft-lbs	Nm
8	5.4	7.41	7.2	9.88	14	19.1	18.8	25.5	20.1	27.3	26.9	36.5	23.6	32	31.4	42.6
10	10.8	14.7	14.4	19.6	27.9	37.8	37.2	50.5	39.9	54.1	53.2	72.2	46.7	63.3	62.3	84.4
12	18.9	25.6	25.1	34.1	48.6	66	64.9	88	69.7	94.5	92.2	125	81	110	108	147
14	30.1	40.8	40	54.3	77.4	105	103	140	110	150	147	200	129	175	172	234
16	46.9	63.6	62.5	84.8	125	170	166	226	173	235	230	313	202	274	269	365
18	64.5	87.5	86.2	117	171	233	229	311	238	323	317	430	278	377	371	503
20	91	124	121	165	243	330	325	441	337	458	450	610	394	535	525	713
22	124	169	166	225	331	450	442	600	458	622	612	830	536	727	715	970
24	157	214	210	285	420	570	562	762	583	791	778	1055	682	925	909	1233

https://truckmanualshub.com/

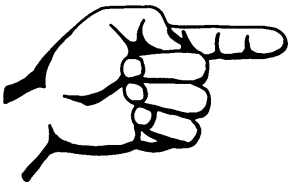

This page intentionally left blank.

https://truckmanualshub.com/

Scheduled Maintenance Procedures

Observe and Obey:

- ☑ Maintenance inspections shall be completed by a person trained and qualified on the maintenance of this machine.
- ☑ Scheduled maintenance inspections shall be completed daily, quarterly, semi-annually, annually and every 2 years as specified on the *Maintenance Inspection Report.* The frequency and extent of periodical examinations and tests may also depend on national regulations.

⚠WARNING Failure to perform each procedure as presented and scheduled could result in death, serious injury or substantial damage.

- ☑ Immediately tag and remove from service a damaged or malfunctioning machine.
- ☑ Repair any machine damage or malfunction before operating the machine.
- ☑ Use only Genie approved replacement parts.
- ☑ Machines that have been out of service for a period longer than 3 months must complete the quarterly inspection.
- ☑ Unless otherwise specified, perform each maintenance procedure with the machine in the following configuration:
  - Machine parked on a firm, level surface
  - Boom in the stowed position
  - Key switch in the off position with the key removed
  - Wheels chocked

About This Section

This section contains detailed procedures for each scheduled maintenance inspection.

Each procedure includes a description, safety warnings and step-by-step instructions.

Read each procedure thoroughly. This manual and the decals on the machine, use signal words to identify the following:

Symbols Legend

Safety alert symbol—used to alert personnel to potential personal injury hazards. Obey all safety messages that follow this symbol to avoid possible injury or death.

⚠DANGER Indicates an imminently hazardous situation which, if not avoided, will result in death or serious injury.

⚠WARNING Indicates a potentially hazardous situation which, if not avoided, could result in death or serious injury.

⚠CAUTION Indicates a potentially hazardous situation which, if not avoided, may cause minor or moderate injury.

NOTICE Indicates a potentially hazardous situation which, if not avoided, may result in property damage.

⊙ Indicates that a specific result is expected after performing a series of steps.

⊗ Indicates that an incorrect result has occurred after performing a series of steps.

https://truckmanualshub.com/

SCHEDULED MAINTENANCE PROCEDURES

Maintenance Symbols Legend

Note: The following symbols have been used in this manual to help communicate the intent of the instructions. When one or more of the symbols appear at the beginning of a maintenance procedure, it conveys the meaning below.

Indicates that tools will be required to perform this procedure.

Indicates that new parts will be required to perform this procedure.

Indicates that a cold engine will be required to perform this procedure.

Indicates that a warm engine will be required to perform this procedure.

Indicates that dealer service will be required to perform this procedure.

Pre-delivery Preparation Report

The pre-delivery preparation report contains checklists for each type of scheduled inspection.

Make copies of the *Pre-delivery Preparation* report to use for each inspection. Store completed forms as required.

Maintenance Schedule

There are five types of maintenance inspections that must be performed according to a schedule—daily, quarterly, semi-annually, annually, and two year. The *Scheduled Maintenance Procedures Section and the Maintenance Inspection Report* have been divided into five subsections—A, B, C, D, and E. Use the following chart to determine which group(s) of procedures are required to perform a scheduled inspection.

Inspection	Checklist
Daily or every 8 hours	A
Quarterly or every 250 hours	A + B
Semi-annually or every 500 hours	A + B + C
Annually or every 1000 hours	A + B + C + D
Two year or every 2000 hours	A + B + C + D + E

Maintenance Inspection Report

The maintenance inspection report contains checklists for each type of scheduled inspection.

Make copies of the *Maintenance Inspection Report* to use for each inspection. Store completed forms for three years.

https://truckmanualshub.com/

Pre-Delivery Preparation

Fundamentals

It is the responsibility of the dealer to perform the Pre-delivery Preparation.

The Pre-delivery Preparation is performed prior to each delivery. The inspection is designed to discover if anything is apparently wrong with a machine before it is put into service.

A damaged or modified machine must never be used. If damage or any variation from factory delivered condition is discovered, the machine must be tagged and removed from service.

Repairs to the machine may only be made by a qualified service technician, according to the manufacturer's specifications.

Scheduled maintenance inspections shall be performed by qualified service technicians, according to the manufacturer's specifications and the requirements listed in the responsibilities manual.

Instructions

Use the operator's manual on your machine.

The Pre-delivery Preparation consists of completing the Pre-operation Inspection, the Maintenance items and the Function Tests.

Use this form to record the results. Place a check in the appropriate box after each part is completed. Follow the instructions in the operator's manual.

If any inspection receives an N, remove the machine from service, repair and reinspect it. After repair, place a check in the R box.

Legend

Y = yes, completed
N = no, unable to complete
R = repaired

Comments

Pre-Delivery Preparation	Y	N	R
Pre-operation inspection completed			
Maintenance items completed			
Function tests completed			

Model

Serial number

Date

Machine owner

Inspected by (print)

Inspector signature

Inspector title

Inspector company

Genie®
A TEREX BRAND

Terex South Dakota, Inc USA
500 Oak Wood Road
PO Box 1150
Watertown, SD 57201-6150
(605) 882-4000

Genie UK
The Maltings, Wharf Road
Grantham, Lincolnshire
NG31-6BH England
(44) 1476-584333

Copyright © 2011 Terex Corporation. Genie® is a registered trademark of Terex South Dakota, Inc. 218230 Rev A

https://truckmanualshub.com/

Maintenance Inspection Report

Model

Serial number

Date

Hour meter

Machine owner

Inspected by (print)

Inspector signature

Inspector title

Inspector company

Instructions

- Make copies of this report to use for each inspection.
- Select the appropriate checklist(s) for the type of inspection to be performed.

☐	**Daily or 8 hour Inspection:**	**A**
☐	**Quarterly or 250 hour Inspection:**	**A+B**
☐	**Semi-annually or 500 hour Inspection:**	**A+B+C**
☐	**Annually or 1000 hour Inspection:**	**A+B+C+D**
☐	**2 Year or 2000 hour Inspection:**	**A+B+C+D+E**

- Place a check in the appropriate box after each inspection procedure is completed.
- Use the step-by-step procedures in this section to learn how to perform these inspections.
- If any inspection receives an “N”, tag and remove the machine from service, repair and re-inspect it. After repair, place a check in the “R” box.

Legend

Y = yes, acceptable
N = no, remove from service
R = repaired

Checklist A - 8 hours		**Y**	**N**	**R**
A-1	Manuals and decals			
A-2	Pre-operation inspect			
A-3	Function tests			
A-4	Lubricate boom			
A-5	Engine maintenance - All models			
A-6	Transmission maintenance			
Perform after 40 hours:				
A-7	30 day service			
Perform after 50 hours:				
A-8	Axle maintenance			
Perform after 100 hours:				
A-9	Transmission			
Perform after 150 hours:				
A-10	Axle maintenance			

Checklist B - 250 hours*		**Y**	**N**	**R**
B-1	Battery			
B-2	Electrical wiring			
B-3	Exhaust system			
B-4	Engine air filter			
B-5	Tires and wheels			
B-6	Hydraulic oil			
B-7	Tank venting systems			
B-8	Engine maintenance - Deutz models			
B-9	Boom wear pads			
B-10	Inspect hose tension			
Perform every 300 hours:				
B-11	Axle maintenance			

* procedures may also include a time interval

Checklist C - 500 hours*		**Y**	**N**	**R**
C-1	Engine maintenance - Perkins models			
C-2	Engine maintenance - Perkins models			
C-3	Inspect and lubricate sequencing chains			

Checklist D - 1000 hours*		**Y**	**N**	**R**
D-1	Forks			
D-2	Sequencing chains			
D-3	Hydraulic return filter			
D-4	Transmission			
D-5	Engine maintenance - Deutz models			
D-6	Engine maintenance - Perkins models			
Perform every 1500 hours:				
D-7	Axle maintenance			
D-8	Engine maintenance - Perkins models			

Checklist E - 2000 hours*		**Y**	**N**	**R**
E-1	Hydraulic oil			
E-2	Engine maintenance - Perkins models			
Perform every 3000 hours:				
E-3	Engine maintenance - Perkins models			
E-4	Engine maintenance - Deutz models			
Perform every 4000 hours:				
E-5	Engine maintenance - Perkins models			
Perform every 5000 hours:				
E-6	Engine maintenance - Deutz models			
Perform every 12,000 hours:				
E-7	Engine maintenance - Perkins models			

Comments

https://truckmanualshub.com/

Checklist A Procedures

A-1
Inspect the Manuals and Decals

Note: Genie specifications require that this procedure be performed every 8 hours or daily, whichever comes first.

Maintaining the operator's and safety manuals in good condition is essential to safe machine operation. Manuals are included with each machine and should be stored in the container provided in the operator's compartment. An illegible or missing manual will not provide safety and operational information necessary for a safe operating condition.

In addition, maintaining all of the safety and instructional decals in good condition is mandatory for safe machine operation. Decals alert operators and personnel to the many possible hazards associated with using this machine. They also provide users with operation and maintenance information. An illegible decal will fail to alert personnel of a procedure or hazard and could result in unsafe operating conditions.

1 Check to make sure that the operator's and safety manuals are present and complete in the storage container in the operator's compartment.

2 Examine the pages of each manual to be sure that they are legible and in good condition.

⊙ Result: The operator's manual is appropriate for the machine and all manuals are legible and in good condition.

⊠ Result: The operator's manual is not appropriate for the machine or all manuals are not in good condition or is illegible. Remove the machine from service until the manual is replaced.

3 Open the operator's manual to the decals inspection section. Carefully and thoroughly inspect all decals on the machine for legibility and damage.

⊙ Result: The machine is equipped with all required decals, and all decals are legible and in good condition.

⊠ Result: The machine is not equipped with all required decals, or one or more decals are illegible or in poor condition. Remove the machine from service until the decals are replaced.

4 Always return the manuals to the storage container after use.

Note: Contact your authorized Genie distributor or Genie if replacement manuals or decals are needed.

https://truckmanualshub.com/

CHECKLIST A PROCEDURES

A-2
Perform Pre-operation Inspection

Note: Genie specifications require that this procedure be performed every 8 hours or daily, whichever comes first.

Completing a Pre-operation Inspection is essential to safe machine operation. The Pre-operation Inspection is a visual inspection performed by the operator prior to each work shift. The inspection is designed to discover if anything is apparently wrong with a machine before the operator performs the function tests. The Pre-operation Inspection also serves to determine if routine maintenance procedures are required.

Complete information to perform this procedure is available in the appropriate operator's manual. Refer to the Operator's Manual on your machine.

A-3
Perform Function Tests

Note: Genie specifications require that this procedure be performed every 8 hours or daily, whichever comes first.

Completing the function tests is essential to safe machine operation. Function tests are designed to discover any malfunctions before the machine is put into service. A malfunctioning machine must never be used. If malfunctions are discovered, the machine must be tagged and removed from service.

Complete information to perform this procedure is available in the appropriate operator's manual. Refer to the Operator's Manual on your machine.

A-4
Lubricate the Boom

Note: Genie specifications require that this procedure be performed every 8 hours or daily, whichever comes first.

Greasing the specified locations is essential for good machine performance and service life. Operating the machine with little or no grease may cause the machine to perform poorly and continued use may cause component damage.

1 Fully extend and raise the boom, then retract the boom, checking to insure it operates smoothly. There should be a light film of lubricant on wear pad contact surfaces.

⊙ Result: Boom operates smoothly and a thin film of lubricant is visible. Proceed to step 5.

⊠ Result: Boom does not extend or retract smoothly and no lubricant is visible on wear pad contact surfaces. Proceed to step 2.

2 Apply a thin layer of grease to the underside of the number 3 boom tube where it makes contact with the number 2 boom tube lower wear pads.

https://truckmanualshub.com/

3 Apply a thin layer of grease to the underside of the number 2 boom tube where it makes contact with the number 1 boom tube lower wear pads.

4 Lubricate the top and side boom tube wear pads.

5 Return the boom to the stowed position.

Grease specification
EP NLGI 2 (lithium based) or equivalent
Lube-A-Boom grease, 7 lb pail (recommended) Genie part number 110147
Chevron Ultra-Duty EP 2 grease (alternate)

A-5
Perform Engine Maintenance - All Models

Note: Engine specifications require that this procedure be performed every 8 hours or daily, whichever comes first.

Engine oil level - check
Coolant level - check/add
Fuel system filter/water separator - drain
Engine tightness - check or leaks
Exhaust system - check for leaks

Required maintenance procedures and additional engine information is available in the *Perkins 1100D Operation and Maintenance Manual* (Perkins part number SEBU8172-00), *Perkins 854 Operation and Maintenance Manual* (Perkins part number SEBU8726-01), OR the *Deutz TCD3.6 Operation Manual* (Deutz part number 0312 3907).

Perkins 1100D Operation and Maintenance Manual Genie part number 123702
Perkins 854 Operation and Maintenance Manual Genie part number 218708
Deutz TCD3.6 Operation Manual Genie part number 218707

https://truckmanualshub.com/

CHECKLIST A PROCEDURES

A-6
Perform Transmission Maintenance

Note: Transmission specifications require that this procedure be performed every 8 hours or daily, whichever comes first.

Transmission oil level - check/add*
Drop box oil level - check/add*

*check oil with engine running at idle and oil at 180-200° F / 65-93° C

Required maintenance procedures and additional transmission information is available in the *Dana VDT12000 Service Manual* (Dana part number TSM-0022).

Dana VDT12000 Service Manual	
Genie part number	218706

A-7
Perform 30 Day Service

The 30 day maintenance procedure is a one-time sequence of procedures to be performed after the first 30 days or 40 hours of usage. After this interval, refer to the maintenance checklists for continued scheduled maintenance.

1 Perform the following maintenance procedures:
- B-5 Inspect the Tires, Wheels and Lug Nut Torque
- D-3 Replace the Hydraulic Tank Return Filter Element
- Check belt tension
- Check the engine mounts
- Check hose clamps

https://truckmanualshub.com/

CHECKLIST A PROCEDURES

A-8
Perform Axle Maintenance

Note: Axle specifications require that this procedure be performed after 50 hours.

Oil level - check/add

Required maintenance procedures and additional axle information is available in the *Carraro 26.27M Axle Maintenance and Repair Manual* (Carraro part number CA270077).

Carraro 26.27M Axle Maintenance and Repair Instructions	
Genie part number	218710

A-9
Perform Transmission Maintenance

Note: Manufacturer specifications require that this one-time procedure be performed after 100 hours of operation.

Change transmission filter

Required maintenance procedures and additional axle information is available in the *Dana VDT12000 Service Manual* (Dana part number TSM-0022).

Dana VDT12000 Service Manual	
Genie part number	218706

A-10
Perform Axle Maintenance

Note: Axle specifications require that this one-time procedure be performed after 150 hours of operation.

Change axle oil
Clean magnetic oil plugs
Oil breather - clean
Grease axle (if required)

Required maintenance procedures and additional axle information is available in the *Carraro 26.27M Axle Maintenance and Repair Manual* (Carraro part number CA270077).

Carraro 26.27M Axle Maintenance and Repair Instructions	
Genie part number	218710

https://truckmanualshub.com/

Checklist B Procedures

B-1
Inspect the Batteries

Note: Genie requires that this procedure be performed every 250 hours or quarterly, whichever comes first.

Proper battery condition is essential to good engine performance and operational safety. Improper fluid levels or damaged cables and connections can result in engine component damage and hazardous conditions.

WARNING Electrocution/burn hazard. Contact with hot or live circuits could result in death or serious injury. Remove all rings, watches and other jewelry.

WARNING Bodily injury hazard. Batteries contain acid. Avoid spilling or contacting battery acid. Neutralize battery acid spills with baking soda and water.

Note: Perform this test after fully charging the batteries.

Note: For a more accurate determination of the battery condition, fully charge the batteries and allow the batteries to rest 24 hours before performing this procedure to allow the battery cells to equalize.

1 Put on protective clothing and eye wear.

2 Remove the cover from the auxiliary power unit batteries located at the ground controls side of the machine.

Note: Perform the remaining steps on the auxiliary power unit batteries and the engine starting battery.

3 Be sure that the battery cable connections are free of corrosion.

Note: Adding terminal protectors and a corrosion preventative sealant will help eliminate corrosion on the battery terminals and cables.

4 Be sure that the battery retainers and cable connections are tight.

5 Be sure that the battery separator wire connections are tight.

6 Fully charge the battery(s) and allow the battery(s) to rest at least 6 hours.

7 Remove the battery vent caps and check the specific gravity of each battery cell with a hydrometer. Note the results.

8 Check the ambient air temperature and adjust the specific gravity reading for each cell as follows:

- Add 0.004 to the reading of each cell for every 10° / 5.5° C above 80° F / 26.7° C.
- Subtract 0.004 from the reading of each cell for every 10° / 5.5° C below 80° F / 26.7° C.

Result: All battery cells display an adjusted specific gravity of 1.277 or higher. The battery is fully charged. Proceed to step 12.

Result: One or more battery cells display a specific gravity of 1.217 or below. Proceed to step 9.

https://truckmanualshub.com/

9 Perform an equalizing charge OR fully charge the battery(s) and allow the battery(s) to rest at least 6 hours.

10 Remove the battery vent caps and check the specific gravity of each battery cell with a hydrometer. Note the results.

11 Check the ambient air temperature and adjust the specific gravity reading for each cell as follows:

- Add 0.004 to the reading of each cell for every 10° / 5.5° C above 80° F / 26.7° C.
- Subtract 0.004 from the reading of each cell for every 10° / 5.5° C below 80° F / 26.7° C.

⊙ Result: All battery cells display a specific gravity of 1.277 or greater. The battery is fully charged. Proceed to step 12.

⊠ Result: The difference in specific gravity readings between cells is greater than 0.1 OR the specific gravity of one or more cells is less than 1.177. Replace the battery.

12 Check the battery acid level. If needed, replenish with distilled water to 1/8 inch / 3 mm below the bottom of the battery fill tube. Do not overfill.

13 Install the vent caps and neutralize any electrolyte that may have spilled.

B-2
Inspect the Electrical Wiring

Note: Genie requires that this procedure be performed every 250 hours or quarterly, whichever comes first.

Maintaining electrical wiring in good condition is essential to safe operation and good machine performance. Failure to find and replace burnt, chafed, corroded or pinched wires could result in unsafe operating conditions and may cause component damage.

WARNING Electrocution hazard. Contact with hot or live circuits could result in death or serious injury. Remove all rings, watches and other jewelry.

1 Inspect the following areas for burnt, chafed, corroded and loose wires:

- Inside of the operator's compartment
- Underside of the chassis
- Boom assembly

2 Inspect for a liberal coating of dielectric grease in the following locations:

- All harness connectors

3 Start the engine and raise the boom so there is enough room to access and remove all the covers attached to the chassis.

https://truckmanualshub.com/

CHECKLIST B PROCEDURES

4 Attach a lifting strap from an overhead crane to the boom. Support the boom. Do not apply any lifting pressure.

5 Remove all engine covers, hydraulic tank covers and chassis covers.

DANGER Crushing hazard. Death or serious injury could result if the boom should unexpectedly fall while working underneath the boom. Do not stand or work beneath a boom that is not properly supported.

6 Inspect the following areas for burnt, chafed, corroded, pinched and loose wires:

- Engine
- Transmission
- Manifolds
- Chassis

7 Inspect for a liberal coating of dielectric grease in all connections between the engine, transmission and the operator's compartment.

8 Install all covers removed in step 5.

9 Remove the lifting strap from the overhead crane.

10 Start the engine and lower the boom to the stowed position. Turn the machine off.

B-3
Check the Exhaust System

Note: Genie requires that this procedure be performed every 250 hours or quarterly, whichever comes first.

Maintaining the exhaust system is essential to good engine performance and service life. Running the engine with a damaged or leaking exhaust system can cause component damage and unsafe operating conditions.

WARNING Bodily injury hazard. Do not inspect while the engine is running. Remove the key to secure from operation.

CAUTION Bodily injury hazard. Beware of hot engine components. Contact with hot engine components may cause severe burns.

1 Open the engine access cover.

2 Be sure that all fasteners are tight.

3 Inspect all welds for cracks.

4 Inspect for exhaust leaks; i.e., carbon buildup around seams and joints.

5 Close the engine access cover.

https://truckmanualshub.com/

B-4
Inspect the Engine Air Filter

Note: Genie requires that this procedure be performed every 250 hours or quarterly, whichever comes first. Perform this procedure more often if dusty conditions exist.

Maintaining the engine air filter in good condition is essential to good engine performance and service life. Failure to perform this procedure can lead to poor engine performance and component damage.

Note: Perform this procedure with the engine off.

1 Release the latches on the front cover of the air cleaner assembly. Remove the cover.

2 Gently twist and pull out the external or primary filter element.

3 Remove the inner or secondary filter element.

4 Clean the inside of the canister and the gasket with a damp cloth.

5 Inspect the primary and secondary air filter elements. If needed, blow from the inside out using low pressure dry compressed air, or carefully tap out dust.

6 Install the secondary filter element first, then install the primary filter element.

7 Install the front cover onto the air cleaner assembly and secure the latches.

B-5
Inspect the Tires, Wheels and Lug Nut Torque

Note: Genie requires that this procedure be performed every 250 hours or quarterly, whichever comes first.

Maintaining the tires and wheels in good condition, including proper wheel fastener torque, is essential to safe operation and good performance. Tire and/or wheel failure could result in a machine tip-over. Component damage may also result if problems are not discovered and repaired in a timely fashion.

WARNING Bodily injury hazard. An overinflated tire can explode and could result in death or serious injury.

WARNING Tip over hazard. Do not use temporary flat tire repair products.

Note: The tires on some machines are foam filled and do not need air added to them.

1 Check all tire treads and sidewalls for cuts, cracks, punctures and unusual wear.

2 Check each wheel for damage, bends and cracks.

3 Check each lug nut for proper torque. Refer to Section 2, *Specifications*.

4 Check the air pressure in each tire. Refer to Section 2, *Specifications*.

https://truckmanualshub.com/

CHECKLIST B PROCEDURES

B-6
Perform Hydraulic Oil Analysis

Note: Genie requires that this procedure be performed every 250 hours or quarterly, whichever comes first.

Replacement or testing of the hydraulic oil is essential for good machine performance and service life. Dirty oil may cause the machine to perform poorly and continued use may cause component damage. Extremely dirty conditions may require oil changes to be performed more often. Refer to Section 2, *Specifications*.

Note: Before replacing the hydraulic oil, the oil may be tested by an oil distributor for specific levels of contamination to verify that changing the oil is necessary. **If the hydraulic oil is not replaced at the two year inspection, test the oil quarterly. Replace the oil when it fails the test.** See E-1, *Test or Replace the Hydraulic Oil.*

B-7
Inspect the Fuel and Hydraulic Tank Cap Venting Systems

Note: Genie requires that this procedure be performed every 250 hours or quarterly, whichever comes first. Perform this procedure more often if dusty conditions exist.

Free-breathing fuel and hydraulic tank caps are essential for good machine performance and service life. A dirty or clogged tank vent system may cause the machine to perform poorly and continued use may cause component damage. Extremely dirty conditions may require that the vent system be inspected more often.

DANGER Explosion and fire hazard. Engine fuels are combustible. Perform this procedure in an open, well-ventilated area away from heaters, sparks, flames and lighted tobacco. Always have an approved fire extinguisher within easy reach.

Note: Perform this procedure with the engine off.

1 Identify the vent tube breather from the fuel tank under the chassis center cover.

2 Check for proper venting.

⊙ Result: Air passes through the vent tube. Proceed to step 4.

⊗ Result: If air does not pass through the vent tube, clean or replace the tube. Proceed to step 3.

Note: When checking for positive tank cap venting, air should pass freely through the tube.

https://truckmanualshub.com/

3 Using a mild solvent, carefully wash the tube venting system. Dry using low pressure compressed air. Repeat this procedure beginning with step 2.

4 Install the fuel tank cap onto the fuel tank.

5 Remove the breather cap from the hydraulic tank.

6 Check for proper venting. The cap is pressureized to 3 psi.

⊙ Result: Air passes through the hydraulic tank cap. Proceed to step 8.

⊠ Result: If air does not pass through the cap, clean or replace the cap. Proceed to step 7.

Note: When checking for positive tank cap venting, air should pass freely through the cap.

7 Using a mild solvent, carefully wash the cap venting system. Dry using low pressure compressed air. Repeat this procedure beginning with step 6.

8 Install the breather cap onto the hydraulic tank.

B-8
Perform Engine Maintenance - Deutz Models

Note: Engine specifications require that this procedure be performed every 250 hours.

Engine oil and filter - change

Engines with exhaust after-treatment system
Deutz DQC II LA approved oil
API CJ-4 low ash approved oil
Deutz DQC III LA approved oil in extreme conditions.

Engines without exhaust after-treatment system
Deutz DQC II LA approved oil
API CJ-4 low ash approved oil
Deutz DQC III approved oil in extreme conditions
Deutz DQC III LA approved oil in extreme conditions

Required maintenance procedures and additional engine information is available in the *Deutz TCD3.6 Operation Manual* (Deutz part number 0312 3907).

Deutz TCD3.6 Operation Manual	
Genie part number	218707

https://truckmanualshub.com/

CHECKLIST B PROCEDURES

B-9
Check the Boom Wear Pads

Note: Genie specifications require that this procedure be performed every 250 hours of operation.

1 Extend the boom until the wear pads are accessible.

Note: It may be necessary to remove the wear pad retainer plates to expose the wear pads.

2 Inspect the end of each upper wear pad.

Result: The wear pad grooves are visible on the end of the wear pad.

Result: The grooves on the end of the wear pad are no longer visible. Replace both wear pads. Refer to the Repair Procedure, *How to Replace the Boom Wear Pads*.

3 Repeat the procedure for the lower wear pads.

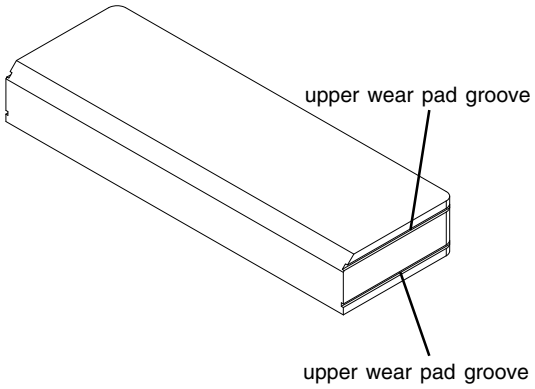

4 Measure each side wear pad.

Result: The measurement is within specification.

Result: The measurement is less than specification. Replace all side wear pads. Refer to the Repair Procedure, *How to Replace the Boom Wear Pads*.

Boom Wear Pad Specifications, GTH-844	
Side wear pad thickness, minimum	3/8 inch 9.5 mm

https://truckmanualshub.com/

B-10
Inspect the Fork Level and Auxiliary Hydraulic Hoses Tension

Note: Genie specifications require that this procedure be performed every 250 hours of operation.

1 Fully retract the boom.

2 Fully lower the tips of the lifting forks.

3 Remove the cover from the fork end of the boom.

4 Inspect the fork level and/or auxiliary hydraulic hoses for proper tension. Each hose should have the same amount of droop and should not rest on the boom tube.

Result: The hose/s rest on the boom tube or have an unequal amount of droop. Refer to the Repair Procedure, *How to Adjust the Fork Level and Auxiliary Hydraulic Hose Tension.*

B-11
Perform Axle Maintenance

Note: Axle specifications requires that this procedure be performed every 300 hours of operation.

Oil level - check/add
Oil breather - clean

Required maintenance procedures and additional axle information is available in the *Carraro 26.27M Axle Maintenance and Repair Manual* (Carraro part number CA270077).

Carraro 26.27M Axle Maintenance and Repair Instructions	
Genie part number	218710

https://truckmanualshub.com/

Checklist C Procedures

C-1
Perform Engine Maintenance - Perkins Models

Note: Engine specifications require that this procedure be performed every 500 hours.

1104 Engine
V-belts - inspect/adjust/replace

854 Engine
Engine oil and filter - change
API CJ-4 low ash approved oil
Fuel system primary filter (water separator) element - replace
Fuel system secondary filter - replace
Fan clearance - check

Required maintenance procedures and additional engine information is available in the *Perkins 1104 Operation and Maintenance Manual* (Perkins part number SEBU7833-01) OR the, *Perkins 854 Operation and Maintenance Manual* (Perkins part number SEBU8726-01).

Perkins 1104 Operation and Maintenance Manual
Genie part number 117765

Perkins 854 Operation and Maintenance Manual
Genie part number 218708

C-2
Perform Engine Maintenance - Perkins Models

Note: Engine specifications require that this procedure be performed every 500 hours or annually.

1104 Engine
Engine oil and filter - change
API CH-4 or API CI-4 approved oil
Fuel system primary filter (water separator) element - replace
Fuel system secondary filter - replace
Hoses and clamps - inspect/replace
Radiator - clean

854 Engine
Radiator - clean

Required maintenance procedures and additional engine information is available in the *Perkins 1104 Operation and Maintenance Manual* (Perkins part number SEBU7833-01) OR the, *Perkins 854 Operation and Maintenance Manual* (Perkins part number SEBU8726-01).

Perkins 1104 Operation and Maintenance Manual
Genie part number 117765

Perkins 854 Operation and Maintenance Manual
Genie part number 218708

https://truckmanualshub.com/

C-3
Inspect and Lubricate the Sequencing Chains

Genie specifications require that this procedure be performed every 500 hours or semi-annually, whichever comes first. In extremely dusty or hostile environments, it may be necessary to lubricate the chains more often.

Maintaining the sequencing chains in good condition is essential to safe operation and good machine performance. Failure to detect damage to the chains could result in a hazardous operating condition.

Environments in which Genie Telehandlers operate can vary widely from outdoor moisture and temperature extremes, to mildly corrosive or highly corrosive industrial atmospheres, in addition to abrasive exposures such as sand and grit.

In addition, dynamic shock loading can impose abnormal loads above the endurance limit of the chains. Examples of dynamic shock loading are:

- High velocity movement of load, followed by sudden abrupt stops.
- Carrying loads in suspension over irregular surfaces and rough terrain.
- Attempting to "inch" loads which are beyond the rated capacity of the vehicle.

The load cycles and environmental conditions make it impossible to predict chain life. It is therefore necessary to conduct regular inspections.

1 Park the machine on a firm level surface, level the boom and engage the parking brake.

2 Fully extend the boom.

3 Inspect the chains for the following conditions:

- **Elongation**

  BL666 chain - Measure 16 pitches of the extend chain for machines using BL666 chain.

Note: For identification, this chain typically measures 3/4 inch between pin centers when new.

Note: Both the extend and retract chains should be measured.

Note: Measurement should be taken in the area where the chain articulates most frequently over the sheaves.

Result: The distance measures 12.36 inches / 313mm or less. The chain is within specifications. Continue with inspection.

Result: If the distance is greater than 12.36 inches / 313mm, the machine shall be removed from service until the chain is replaced.

Note: The boom chain's normal life expectancy can be expressed as a maximum percent of elongation of 3%.

https://truckmanualshub.com/

- **Edge wear**
  Check the chain for wear on the link plate edges caused by running back and forth over the sheave. The maximum reduction of material should not exceed 5%.
- **Cracked plates**
  Check link side plates for any cracks. These are generally a sign of chain fatigue.
- **Turning pins**
  Check the pins. The position of the riveting must be parallel with the top and bottom of the side plate.

If any of these conditions are discovered during the inspection, the chain must be replaced.

After inspection and before being returned to service, the chains must be lubricated with a quality chain lubricant.

Note: Do not use grease to lubricate chains.

The chain plates should be brushed with a wire brush prior to lubrication to clear the space between the plates.

The lubricant must penetrate the chain joint to prevent wear. Applying lubricant to the external surfaces will prevent rust, but the chains should be articulated to make sure the lubricant penetrates to the working surfaces between the pins and links.

Lubricant may be applied with a brush, sprayed or poured on, but the chain should be well flooded with lubricant and the boom should be extended and retracted to insure that the lubricant penetrates to the working surfaces. All excess lubricant should be wiped away from the external surfaces.

Note: Do not use solvents to remove excess lubricant.

https://truckmanualshub.com/

Checklist D Procedures

D-1
Inspect the Forks

Note: Genie specifications require that this procedure be performed every 1000 hours or annually, whichever comes first OR whenever permanent deformation of the forks is suspected.

Maintaining the lifting forks in good condition is essential to safe operation and good machine performance. Failure to detect damage to the forks could result in a hazardous operating condition.

1 Thoroughly clean the lifting forks.

2 Inspect the forks for the following:

- Surface cracks
- Straightness of the blade and shank
- Fork angle at 90 ± 3 degrees
- Relative height of fork tips shall not differ more than 3% of blade length
- Excessive wear to the forks, fork mount or legible markings

Result: If any of the above criteria are not met, the fork shall be removed from service until it is repaired or replaced.

a shank
b blade

D-2
Adjust the Boom Sequencing Chains

Note: Genie specifications require that this procedure be performed every 1000 hours or annually, whichever comes first.

1 Raise the boom to the horizontal position.

2 Extend the boom fully, then retract the boom approximately 1 inch / 25 mm.

3 On either side of the middle boom section, estimate the center. Place one end of a tape measure on the top surface of the boom directly above the estimated center.

4 Select a reference point on the sequencing chain. Measure the distance between the chain and the top surface of the boom. Note the measurement (1). Refer to the following illustrations.

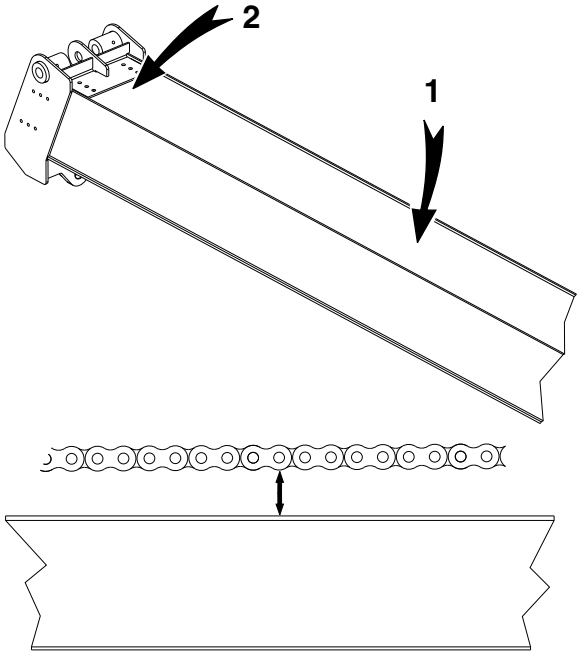

https://truckmanualshub.com/

CHECKLIST D PROCEDURES

5 Move to the fork end of the same boom section that was just measured.

6 Measure the distance between the top surface of the boom and the same reference point used on the sequencing chain in step 4. Note the measurement (2).

Result: The difference between measurements 1 and 2 is 0.25 to 0.5 inch / 6.35 to 12.7 mm. No adjustment to the chain is necessary. Proceed to step 10.

Result: The difference between measurements 1 and 2 is less than a 0.25 inch / 6.35 mm OR is greater than 0.5 inch / 12.7 mm. The chain requires adjustment. Proceed to step 7.

Note: The measurements taken in step 4 and step 6 must be taken from the same plane on the boom.

7 Working at the fork end of the large boom tube, locate the adjustable chain anchor on the top of boom section.

8 Place an adjustable wrench across the flat part of the chain, just ahead of the chain anchor. Tighten the wrench onto the chain.

9 Using a 1 7/16 inch wrench, adjust the nut as required to tighten or loosen the chain. Repeat this procedure beginning with step 4.

10 The procedure is complete.

D-3
Replace Hydraulic Tank Return Filter Element

Note: Genie specifications require that this procedure be performed every 1000 hours or annually, whichever comes first

Replacing the hydraulic return filter element is essential to good machine performance and service life. A dirty or clogged filter element may cause the machine to perform poorly and continued use may cause component damage. Extremely dirty conditions may require that the filter element be replaced more often.

CAUTION Bodily injury hazard. Beware of hot oil. Contact with hot oil may cause severe burns.

Note: Perform this procedure with the engine off.

1 Start the engine. Raise the boom to allow access to the hydraulic tank.

2 Remove the access cover to the tank.

3 Release the pressure in the oil reservoir by loosening the filler/breather cap.

4 Unscrew the return filter.

5 Install the new filter element.

6 Tighten the filler/breather cap.

7 Record the hours the filter element was replaced and keep with your maintenance records.

8 Start the engine.

9 Inspect the filter assembly to be sure that there are no leaks.

10 Clean up any oil that may have spilled during the installation procedure.

https://truckmanualshub.com/

D-4
Perform Transmission Maintenance

Note: Transmission specifications require that this procedure be performed every 1000 hours.

Transmission - change oil and filter
Drop box - change oil and filter

Required maintenance procedures and additional transmission information is available in the *Dana VDT12000 Service Manual* (Dana part number TSM-0022).

Dana VDT12000 Service Manual	
Genie part number	218706

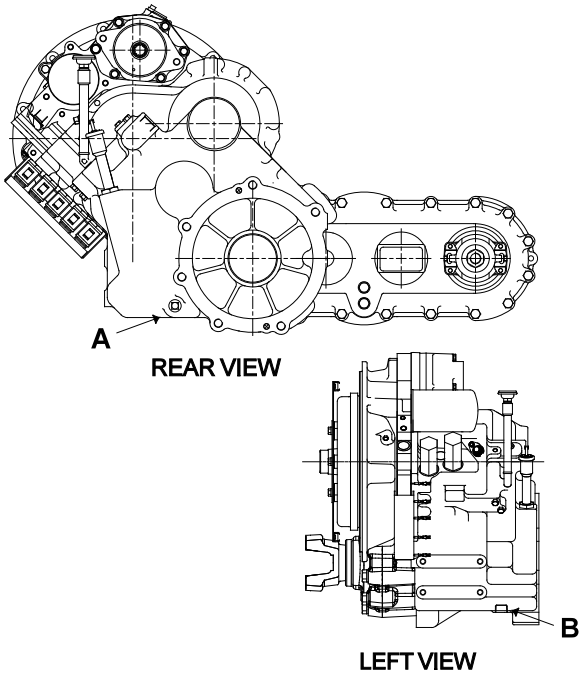

A oil drain, drop box
B oil drain, transmission

D-5
Perform Engine Maintenance - Deutz Models

Note: Engine specifications require that this procedure be performed every 1000 hours or annually, whichever comes first.

Charge air cooler entry area - drain lube oil/ condensate
Cold starting device - check
Engine mounts - check
Hose clamps and hoses - check
V-rib belt and tensioning pulley - check
Fuel filter cartridge - replace
Filter insert for fuel pre-filter - replace

Required maintenance procedures and additional engine information is available in the *Deutz TCD3.6 Operation Manual* (Deutz part number 0312 3907).

Deutz TCD3.6 Operation Manual	
Genie part number	218707

https://truckmanualshub.com/

CHECKLIST D PROCEDURES

D-6
Perform Engine Maintenance - Perkins Models

Note: Engine specifications require that this procedure be performed every 1000 hours.

1104 Engine
Engine valve lash - inspect/adjust

854 Engine
Water pump - inspect

Required maintenance procedures and additional engine information is available in the *Perkins 1104 Operation and Maintenance Manual* (Perkins part number SEBU7833-01) OR the, *Perkins 854 Operation and Maintenance Manual* (Perkins part number SEBU8726-01).

Perkins 1104 Operation and Maintenance Manual	
Genie part number	117765
Perkins 854 Operation and Maintenance Manual	
Genie part number	218708

D-7
Perform Axle Maintenance

Note: Axle specifications require that this procedure be performed every 1500 hours of operation.

Change axle oil
Clean magnetic oil plugs

Required maintenance procedures and additional axle information is available in the *Carraro 26.27M Axle Maintenance and Repair Manual* (Carraro part number CA270077).

Carraro 26.27M Axle Maintenance and Repair Instructions	
Genie part number	218710

https://truckmanualshub.com/

CHECKLIST D PROCEDURES

D-8
Perform Engine Maintenance - Perkins Models

Note: Engine specifications require that this procedure be performed every 1500 hours.

854 Engines
Engine crankcase breather element - replace

Required maintenance procedures and additional engine information is available in the *Perkins 1104 Operation and Maintenance Manual* (Perkins part number SEBU7833-01) OR the, *Perkins 854 Operation and Maintenance Manual* (Perkins part number SEBU8726-01).

Perkins 1104 Operation and Maintenance Manual	
Genie part number	117765
Perkins 854 Operation and Maintenance Manual	
Genie part number	218708

https://truckmanualshub.com/

Checklist E Procedures

E-1
Test or Replace the Hydraulic Oil

Note: Genie specifications require that this procedure be performed every 2000 hours or two years, whichever comes first

Replacement or testing of the hydraulic oil is essential for good machine performance and service life. Dirty oil may cause the machine to perform poorly and continued use may cause component damage. Extremely dirty conditions may require oil changes to be performed more frequently. Refer to Section 2, *Specifications*.

NOTICE Component damage hazard. The work area and surfaces where this procedure will be performed must be clean and free of debris that could get into the hydraulic system.

Note: Before replacing the hydraulic oil, the oil may be tested by an oil distributor for specific levels of contamination to verify that changing the oil is necessary. **If the hydraulic oil is not replaced at the two year inspection, test the oil quarterly. Replace the oil when it fails the test.**

1 Lower the boom to the stowed position.

2 Remove oil cap from top of hydraulic tank.

3 Using an approved hand-operated pump, drain the hydraulic tank into a suitable container. Refer to Section 2, *Specifications*.

CAUTION Bodily injury hazard. Beware of hot oil. Contact with hot oil may cause severe burns.

4 Remove the drain plug from the rear of the tank.

5 Rinse out the inside of the tank using a mild solvent.

6 Install the drain plug and securely tighten. Do not over tighten.

7 Fill the tank with hydraulic oil until the fluid level is in the center of the sight glass at the rear of the tank.

8 Clean up any oil that may have spilled.

https://truckmanualshub.com/

CHECKLIST E PROCEDURES

E-2
Perform Engine Maintenance - Perkins Models

Note: Engine specifications require that this procedure be performed every 2000 hours.

1104 Engine
Aftercooler core - inspect
Alternator - inspect
Engine mounts - inspect
Starting Motor - inspect
Turbocharger - inspect
Water pump - inspect

854 Engine
Aftercooler core - inspect
Engine mounts - inspect
Starting motor - inspect
Turbocharger - inspect

Required maintenance procedures and additional engine information is available in the *Perkins 1104 Operation and Maintenance Manual* (Perkins part number SEBU7833-01) OR the, *Perkins 854 Operation and Maintenance Manual* (Perkins part number SEBU8726-01).

Perkins 1104 Operation and Maintenance Manual	
Genie part number	117765
Perkins 854 Operation and Maintenance Manual	
Genie part number	218708

E-3
Perform Engine Maintenance - Perkins Models

Note: Engine specifications require that this procedure be performed every 3000 hours .

1104 Engine
Alternator Belt - Inspect/Adjust/Replace
Fuel Injector - test/change

854 Engine
Alternator - inspect
Alternator and Fan Belts - replace
Diesel Particulate Filter - clean
Radiator Pressure Cap - clean/replace

Required maintenance procedures and additional engine information is available in the *Perkins 1104 Operation and Maintenance Manual* (Perkins part number SEBU7833-01) OR the, *Perkins 854 Operation and Maintenance Manual* (Perkins part number SEBU8726-01).

Perkins 1104 Operation and Maintenance Manual	
Genie part number	117765
Perkins 854 Operation and Maintenance Manual	
Genie part number	218708

https://truckmanualshub.com/

CHECKLIST E PROCEDURES

E-4
Perform Engine Maintenance - Deutz Models

Note: Engine specifications require that this procedure be performed every 3000 hours.

V-rib belt and tensioning pulley- replace

Required maintenance procedures and additional engine information is available in the *Deutz TCD3.6 Operation Manual* (Deutz part number 0312 3907).

Deutz TCD3.6 Operation Manual	
Genie part number	218707

E-5
Perform Engine Maintenance - Perkins Models

Note: Engine specifications require that this procedure be performed every 4000 hours.

854 Engine
Aftercooler Core - Clean/Test

Required maintenance procedures and additional engine information is available in the *Perkins 1104 Operation and Maintenance Manual* (Perkins part number SEBU7833-01) OR the, *Perkins 854 Operation and Maintenance Manual* (Perkins part number SEBU8726-01).

Perkins 1104 Operation and Maintenance Manual	
Genie part number	117765
Perkins 854 Operation and Maintenance Manual	
Genie part number	218708

https://truckmanualshub.com/

CHECKLIST E PROCEDURES

E-6
Perform Engine Maintenance - Deutz Models

Note: Engine specifications require that this procedure be performed every 5000 hours.

General engine overhaul

Required maintenance procedures and additional engine information is available in the *Deutz TCD3.6 Operation Manual* (Deutz part number 0312 3907).

Deutz TCD3.6 Operation Manual	
Genie part number	218707

E-7
Perform Engine Maintenance - Perkins Models

Note: Engine specifications require that this procedure be performed every 12,000 hours or every three years, whichever comes first.

1104 and 854 Engines
Cooling System Coolant
(Extended life coolant) - change

Required maintenance procedures and additional engine information is available in the *Perkins 1104 Operation and Maintenance Manual* (Perkins part number SEBU7833-01) OR the, *Perkins 854 Operation and Maintenance Manual* (Perkins part number SEBU8726-01).

Perkins 1104 Operation and Maintenance Manual	
Genie part number	117765
Perkins 854 Operation and Maintenance Manual	
Genie part number	218708

https://truckmanualshub.com/

This page intentionally left blank.

https://truckmanualshub.com/

Repair Procedures

Observe and Obey:

- ☑ Repair procedures shall be completed by a person trained and qualified on the repair of this machine.
- ☑ Immediately tag and remove from service a damaged or malfunctioning machine.
- ☑ Repair any machine damage or malfunction before operating the machine.

Before Repairs Start:

- ☑ Read, understand and obey the safety rules and operating instructions in the appropriate operator's manual on your machine.
- ☑ Be sure that all necessary tools and parts are available and ready for use.
- ☑ Use only Genie approved replacement parts.
- ☑ Read each procedure completely and adhere to the instructions. Attempting shortcuts may produce hazardous conditions.
- ☑ Unless otherwise specified, perform each repair procedure with the machine in the following configuration:
  - Machine parked on a firm, level surface
  - Boom in the stowed position
  - Key switch in the off position with the key removed
  - Wheels chocked

About This Section

Most of the procedures in this section should only be performed by a trained service professional in a suitably equipped workshop. Select the appropriate repair procedure after troubleshooting the problem.

Perform disassembly procedures to the point where repairs can be completed. To re-assemble, perform the disassembly steps in reverse order.

Symbols Legend

Safety alert symbol—used to alert personnel to potential personal injury hazards. Obey all safety messages that follow this symbol to avoid possible injury or death.

DANGER Indicates an imminently hazardous situation which, if not avoided, will result in death or serious injury.

WARNING Indicates a potentially hazardous situation which, if not avoided, could result in death or serious injury.

CAUTION Indicates a potentially hazardous situation which, if not avoided, may cause minor or moderate injury.

NOTICE Indicates a potentially hazardous situation which, if not avoided, may result in property damage.

⊙ Indicates that a specific result is expected after performing a series of steps.

⊠ Indicates that an incorrect result has occurred after performing a series of steps.

https://truckmanualshub.com/

Boom Components

1-1 Boom Proximity Switch

The boom angle switch is a proximity switch. This switch functions by sensing a change in the electromagnetic field of the switch, due to the introduction of metal into the field. A proximity switch is, simply, a metal detector.

The switch generates an electromagnetic field at the face of the switch. This field senses when steel has been moved close to the switch as well as when the steel has been moved away, which is how the switch contacts open and close.

These switches are of a fail-safe design. Should the switch or the switch wire circuit be faulty, the machine will not function outside its designed range of use.

The boom proximity switch is a component of the drive circuit and the chassis sway circuit. Both the drive and the chassis sway functions are disabled when the boom is raised to 60° or higher.

How to Test a Proximity Switch

1 Remove the switch from the machine. Do not disconnect the switch wire harness from the machine.

2 Start the engine.

3 Move the switch away from any ferrous or metallic object

⊙ Result: The light of the limit switch assembly is not illuminated.

4 Move the switch close to any ferrous or metallic object

⊙ Result: The light of the proximity switch assembly turns on. The switch is functioning correctly.

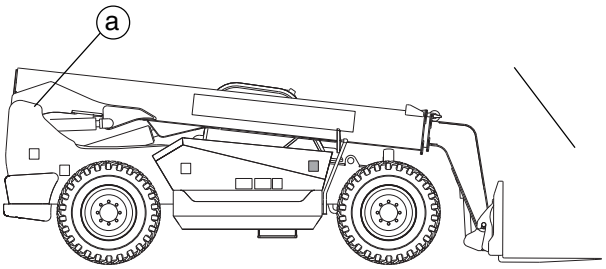

a boom angle proximity switch (located on engine side)

https://truckmanualshub.com/

How to Adjust the Boom Angle Proximity Switch

The boom angle proximity switch is attached to a mounting bracket, located between the boom and the chassis directly beneath the boom pivot pin. The switch location is adjustable.

1 Start the engine.

2 Raise the boom to 60°. Confirm with a digital level.

3 Working at the pivot end of the boom, locate the boom angle proximity switch. Loosen the fasteners, securing the proximity switch assembly to the chassis, just enough to allow the bracket to move.

4 Move the proximity switch assembly until the light of the proximity switch turns on, then move the proximity switch assembly until the light of the proximity switch just turns off.

5 Securely tighten the fasteners. Do not over tighten.

6 Lower the machine to 55°.

Result: The light of the proximity switch assembly is illuminated.

7 Raise the boom to 60°. Confirm with a digital level.

Result: The light of the proximity switch assembly is not illuminated. The proximity switch is properly calibrated.

Result: The light of the proximity switch assembly is illuminated. The proximity switch is not calibrated correctly. Repeat this procedure beginning with step 4.

1-2 Boom

How to Replace the Boom Wear Pads

1 **Lower wear pads:** Using a lifting strap from an overhead crane or a fork lift of sufficient capacity, lift the boom tube just enough to remove the weight from the pads.

2 Remove the wear pad retainer plates and remove the wear pads from the boom.

3 Lubricate the wear surface of the new pads. Refer to Maintenance Procedure A-4, *Lubricate the Boom*.

Note: Do not lubricate the side wear pads.

4 Install the wear pads. Install and securely tighten the retainer plates. Do not over tighten.

How to Remove the Lifting Fork Frame

1 With the boom in the stowed position, attach a lifting strap from an overhead crane to the top of the lifting fork frame at the front of the boom. Support the frame. Do not apply any lifting pressure.

2 Working from the rear of the frame, lift the spring-assisted handle of the lock securing the lower fork frame lock pin to the fork frame mount. Use a soft metal drift to remove the pin.

https://truckmanualshub.com/

BOOM COMPONENTS

3 Using the overhead crane, lift and remove the fork frame from the boom.

CAUTION Crushing hazard. The fork frame could fall if not properly supported when the lock pin is removed from the machine.

How to Replace the Retraction Chain

Note: Perform this procedure on a firm, level surface with the boom in the stowed position and the wheels chocked.

1 Start the engine and allow the engine to idle.

2 Raise the boom to a horizontal position.

3 Fully retract the boom.

4 Extend the boom approximately 1 inch / 2.5 cm.

5 Turn the machine off and remove the key from the key switch.

6 Working at the fork end of the boom, loosen the fasteners securing the single-chain tensioners to the top of boom tube number 1. After noting the orientation and assembly order of the components, remove the fasteners and pull the tensioners free of the boom. Refer to Illustration 1.

7 Remove the inspection cover from the pivot end of the boom. Locate the chain anchor of the boom retraction chain where it attaches to the chain anchor mount at the lower side of boom tube 3. Refer to Illustration 2.

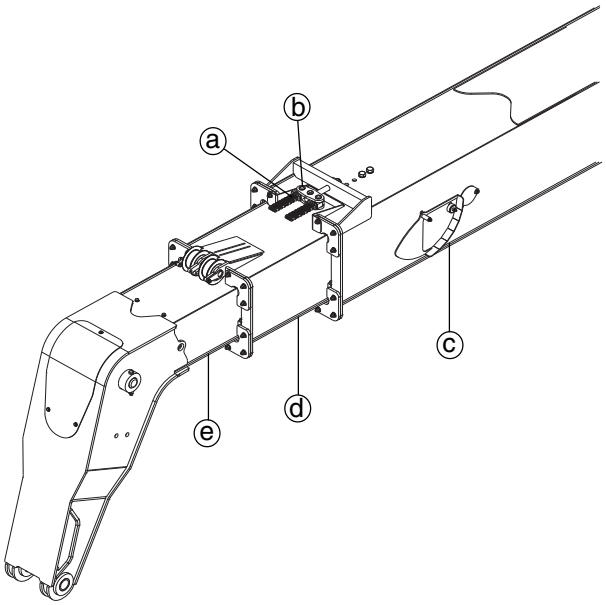

Illustration 1

a extension chains
b single-chain tensioner
c boom tube number 1
d boom tube number 2
e boom tube number 3

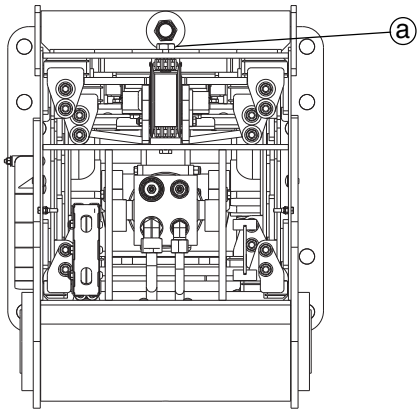

Illustration 2

a chain anchor

https://truckmanualshub.com/

8 Remove a cotter pin securing the chain anchor pivot pin to the anchor mount of the boom tube. Remove the pivot pin and pull the chain free of the mount.

9 Working at the fork end of the boom, securely connect a 30 foot / 10 m length of rope to the end of the chain. Securely tie off the other end of the rope to the boom structure.

10 Working at the pivot end of the boom, pull the chain out of the boom.

Note: Rope coming loose from the chain during removal may result in a difficult reassembly. Be sure the rope is securely attached to the chain and boom structure before pulling the chain out of the boom.

11 Remove the rope from the end of the chain and securely attach the rope to the new chain.

12 Working at the fork end of the boom, use the rope to carefully pull the chain through the boom just until the end of the chain is accessible. Remove the rope from the chain.

13 Working at the pivot end of the boom, install the chain into the chain anchor mount. Secure the chain anchor to the mount using the pivot pin and cotter pin removed in step 8. Secure the cotter pin.

14 Working at the pivot end of the boom, route the chain over the roller and install the chain onto the boom assembly using the pivot pin removed in step 11. Securely tighten the fasteners. Do not over tighten.

15 Install the chain tensioners into the tensioner mount at the fork end of boom tube number 1. Install the mounting components, removed in step 8. Evenly tighten the chain tensioners to the top of the boom tube until they are securely tightened.

16 Adjust the chains. Refer to Maintenance Procedure D-2, *Adjust the Boom Sequencing Chains*.

NOTICE Component damage hazard. Chains can be damaged if the boom is used while the chains are out of adjustment. Do not return the machine to use until the chains have been correctly adjusted.

How to Replace the Extension Chains

Note: Perform this procedure on a firm, level surface with the boom in the stowed position and the wheels chocked.

1 Start the engine and allow the engine to idle.

2 Raise the boom to a horizontal position.

3 Fully retract the boom.

4 Turn the machine off and remove the key from the key switch.

5 Working at the fork end of the boom, loosen the fasteners securing the single-chain tensioners to the top of boom tube number 1. After noting the orientation and assembly order of the components, remove the fasteners and pull the tensioners free of the boom. Refer to Illustration 1.

https://truckmanualshub.com/

BOOM COMPONENTS

6 Select a chain tensioner. Remove the bow tie clip securing the chain anchor pin to the chain assembly. Remove the chain anchor pin from the assembly and remove the chain anchor from the tensioner assembly.

7 Repeat this procedure, beginning with step 6, for the other chains.

8 Working at the fork end of the boom, select a chain. Securely connect a 30 foot / 10 m length of rope to the end of the chain. Securely tie off the other end of the rope to the boom structure.

9 Remove the inspection cover from the pivot end of the boom and locate the chain anchors of the extension chains at the top of boom tube 3.

10 Remove the fasteners securing the extension chain anchors to the boom tubes.

11 Working at the pivot end of the boom, pull the chain out of the boom.

Note: Rope coming loose from the chain during removal may result in a difficult reassembly. Be sure the rope is securely attached to the chain and boom structure before pulling the chain out of the boom.

12 On a workbench, remove the bow tie clip securing the chain anchor pin to the chain assembly. Remove the pin and chain anchor pin from the assembly.

13 Install the chain anchor, pin and clip onto the new chain.

14 Remove the rope from the end of the old chain and securely attach the rope to the new chain.

15 Working at the fork end of the boom, use the rope to carefully pull the chain through the boom just until the end of the chain is accessible.

16 Working at the pivot end of the boom and using the fasteners removed in step 5, install the chain anchor onto the boom tube. Securely tighten the fasteners. Do not over tighten.

17 Remove the rope from the chain and install the chain into the chain anchor of the tensioner assembly. Secure the chain to the chain anchor using the pin and clip removed in step 6.

18 Repeat this procedure, beginning with step 5, for the other chains.

19 Install the inspection cover, removed in step 9, onto the boom. Install and securely tighten the fasteners. Do not over tighten.

20 Install the chain tensioners into the tensioner mount at the fork end of boom tube number 1. Install the mounting components, removed in step 6. Evenly tighten the chain tensioners to the top of the boom tube until they are securely tightened.

21 Adjust the chains. Refer to Maintenance Procedure D-2, *Adjust the Boom Sequencing Chains*.

NOTICE Component damage hazard. Chains can be damaged if the boom is used while the chains are out of adjustment. Do not return the machine to use until the chains have been correctly adjusted.

https://truckmanualshub.com/

How to Remove the Boom

⚠WARNING Bodily injury hazard. This procedure requires specific repair skills, lifting equipment and a suitable workshop. Attempting this procedure without these skills and tools could result in death or serious injury and significant component damage. Dealer service is strongly recommended.

Note: When removing a hose assembly or fitting, the O-ring on the fitting and/or hose end must be replaced and then torqued to specification during installation. Refer to Section 2, *Hydraulic Hose and Fitting Torque Specifications.*

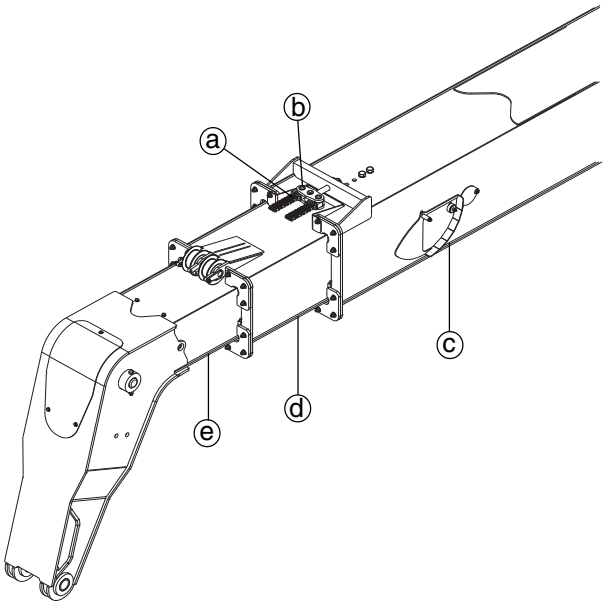

a extension chains
b single-chain tensioner
c boom tube number 1
d boom tube number 2
e boom tube number 3

1 Remove the lifting fork and frame. See 1-2, *How to Remove the Lifting Fork Frame*.

2 Attach a lifting strap from an overhead 10 ton / 10,000 kg crane to the fork end of the boom. Support the boom. Do not apply any lifting pressure.

3 Select a fork level cylinder. Remove the fasteners securing the fork level cylinder rod-end pivot pin to the boom.

4 Using a lifting strap from another overhead crane, support the rod-end of the fork level cylinder. Do not apply any lifting pressure.

5 Use a soft metal drift to remove the fork level cylinder pivot pin.

6 Lower the fork level cylinder onto the chassis.

⚠WARNING Crushing hazard. Keep hands clear of the cylinder manifold when lowering the cylinder.

7 Repeat this procedure beginning with step 3 for the other fork level cylinder.

8 Identify the hydraulic hoses from the lift cylinder. Tag, disconnect and plug the hoses at the lift cylinder manifold. Cap the fittings on the cylinder manifold.

9 Remove the fasteners securing the lift cylinder barrel-end pivot pin to the chassis.

10 Support and secure the barrel end of the lift cylinder to the boom.

https://truckmanualshub.com/

11 Use a soft metal drift to remove the lift cylinder pivot pin.

12 Tag, disconnect and plug the hydraulic hoses at the hydraulic hard line connections at the pivot end of the boom. Cap the fittings.

13 Using the overhead crane, raise the boom to a horizontal position.

WARNING Crushing hazard. The lift cylinder will fall if not properly supported when the boom is raised.

14 Remove the fasteners securing the boom pivot pin to the chassis.

15 Using a suitable tool, remove the boom pivot pin.

Note: This may require a hydraulic power unit.

DANGER Crushing hazard. The boom will fall if not properly supported when the pivot pin is removed from the machine.

16 Carefully remove the boom assembly from the machine and place it on a structure capable of supporting it.

DANGER Crushing hazard. The boom could become unbalanced and fall if not properly supported when removed from the machine.

NOTICE Component damage hazard. The weight of the boom assembly may crush the hydraulic hard lines under the boom. Use caution when placing the boom assembly onto a structure capable of supporting it.

How to Disassemble the Boom

WARNING Bodily injury hazard. This procedure requires specific repair skills, lifting equipment and a suitable workshop. Attempting this procedure without these skills and tools could result in death or serious injury and significant component damage. Dealer service is strongly recommended.

Note: When removing a hose assembly or fitting, the O-ring on the fitting and/or hose end must be replaced and then torqued to specification during installation. Refer to Section 2, *Hydraulic Hose and Fitting Torque Specifications.*

1 Remove the extension cylinder. See 1-4, *How to Remove the Extension Cylinder*.

2 Remove the boom. See 1-2, *How to Remove the Boom*.

3 Select a lift cylinder. Remove the fasteners securing the lift cylinder rod-end pivot pin to the boom.

4 Using a lifting strap from an overhead crane, support the lift cylinder. Do not apply any lifting pressure.

5 Use a soft metal drift to remove the lift cylinder rod-end pivot pin. Remove the cylinder from the boom.

WARNING Crushing hazard. The cylinder could become unbalanced and fall if not properly supported when removed from the machine.

6 Repeat this procedure beginning with step 3 for the other lift cylinder.

7 Remove the fastener securing the fork level cylinder rod-end pivot pin to the fork frame mount.

https://truckmanualshub.com/

8 Use a soft metal drift to remove the rod-end pivot pin.

9 Attach a lifting strap from an overhead crane to the barrel end of the fork level cylinder. Support the cylinder. Do not apply any lifting pressure.

10 Tag, disconnect and plug the fork level cylinder hoses from the cylinder manifolds. Cap the fittings.

⚠WARNING Bodily injury hazard. Spraying hydraulic oil can penetrate and burn skin. Loosen hydraulic connections very slowly to allow the oil pressure to dissipate gradually. Do not allow oil to squirt or spray.

NOTICE Component damage hazard. Hoses can be damaged if they are kinked or pinched

11 Remove the fasteners securing the fork level cylinder barrel-end pivot pin to the boom.

12 Use a soft metal drift to remove the pivot pin. Remove the cylinder from the boom.

⚠WARNING Crushing hazard. The cylinder could fall if not properly supported when the pivot pin is removed from the machine.

13 Remove the inspection cover at the pivot end of the boom.

14 Remove the hose keepers from the hose roller assembly.

Note: The hose keepers ensure that the hoses do not jump off the hose rollers.

15 Working at the pivot end of the boom, remove the clamps securing the hoses to the inside of boom tube number 3.

16 Working at the fork end of the boom, remove the clamps securing the hoses to the inside of boom tube number 3.

17 Working at the pivot end of the boom, pull the fork level hydraulic hoses from the boom and lay them to the side.

18 Working at the pivot end of the boom, remove the fasteners securing the hose roller assembly to boom tube number 2. Remove the hose roller assembly from the boom.

19 Working at the fork end of the boom, loosen evenly, then remove, the fasteners securing the chain tensioners to the top of boom tube number 1.

20 Working at the fork end of the boom, remove the fasteners securing the extension chain rollers to the top of boom tube number 2. Remove the chain rollers from the boom.

https://truckmanualshub.com/

BOOM COMPONENTS

21 Working at the pivot end of the boom, remove the fasteners securing the retraction chain block pivot pin to boom tube number 3. Remove the pivot pin. Remove the chain from the roller.

22 Working at the pivot end of the boom, remove the fasteners securing the retraction chain roller to boom tube number 2. Remove the chain roller from the boom.

23 Working at the fork end of the boom, remove the wear pads from boom tube number 2.

24 Support and slide boom tube number 3 out of boom tube number 2. Place boom tube number 3 on a structure capable of supporting it.

⚠WARNING Crushing hazard. Boom tube number 3 could become unbalanced and fall when removed from the boom tube number 2 if not properly supported and attached to the overhead crane.

Note: During removal, the overhead crane strap will need to be adjusted for proper balancing.

25 Working at the fork end of the boom, remove the wear pads from boom tube number 1.

26 Support and slide boom tube number 2 out of boom tube number 1. Place boom tube number 2 on a structure capable of supporting it.

⚠WARNING Crushing hazard. Boom tube number 2 could become unbalanced and fall when removed from the boom tube number 1 if not properly supported and attached to the overhead crane.

Note: During removal, the overhead crane strap will need to be adjusted for proper balancing.

1-3 Boom Lift Cylinder

How to Remove the Lift Cylinder

Note: When removing a hose assembly or fitting, the O-ring on the fitting and/or hose end must be replaced and then torqued to specification during installation. Refer to Section 2, *Hydraulic Hose and Fitting Torque Specifications.*

1 Attach a lifting strap from an overhead 10 ton / 10,000 kg crane to the fork end of the boom. Support the boom. Do not apply any lifting pressure.

2 Tag, disconnect and plug the hydraulic hoses at the lift cylinder manifold. Cap the fittings.

⚠WARNING Bodily injury hazard. Spraying hydraulic oil can penetrate and burn skin. Loosen hydraulic connections very slowly to allow the oil pressure to dissipate gradually. Do not allow oil to squirt or spray.

NOTICE Component damage hazard. Hoses can be damaged if they are kinked or pinched.

3 Attach a lifting strap from an overhead crane to the rod end of the lift cylinder. Support the cylinder. Do not apply any lifting pressure.

https://truckmanualshub.com/

4 Remove the fasteners securing the lift cylinder barrel-end pivot pin to the chassis.

5 Use a soft metal drift to remove the pivot pin.

6 Remove the fasteners securing the lift cylinder rod-end pivot pin to the boom.

7 Use a soft metal drift to remove the pivot pin.

DANGER Crushing hazard. The boom will fall if not properly supported when the pivot pin is removed from the machine.

8 Using the overhead crane, raise the boom to a horizontal position. Remove the cylinder from the machine.

DANGER Crushing hazard. The cylinder will fall if not properly supported when removed from the machine.

1-4 Boom Extension Cylinder

How to Remove the Extension Cylinder

Note: When removing a hose assembly or fitting, the O-ring on the fitting and/or hose end must be replaced and then torqued to specification during installation. Refer to Section 2, *Hydraulic Hose and Fitting Torque Specifications.*

1 Raise the boom to a horizontal position.

2 Tag, disconnect and plug the hydraulic hoses at the boom extension cylinder manifold. Cap the fittings.

WARNING Bodily injury hazard. Spraying hydraulic oil can penetrate and burn skin. Loosen hydraulic connections very slowly to allow the oil pressure to dissipate gradually. Do not allow oil to squirt or spray.

NOTICE Component damage hazard. Hoses can be damaged if they are kinked or pinched.

3 Remove the access covers on the number 1 boom and remove the bolts holding the extend cylinder support at the fork end of the machine.

4 At the pivot end of the machine, remove the retainer plates securing the extension cylinder to the number 2 and number 3 tubes and lift the extension cylinder out of the support sockets.

5 Support the extension cylinder with a suitable lifting device and remove from the boom assembly.

Note: During removal, the overhead crane strap will need to be adjusted for proper balancing.

https://truckmanualshub.com/

BOOM COMPONENTS

1-5
Fork Level Cylinder

How to Remove the Fork Level Cylinder

Note: When removing a hose assembly or fitting, the O-ring on the fitting and/or hose end must be replaced and then torqued to specification during installation. Refer to Section 2, *Hydraulic Hose and Fitting Torque Specifications.*

1 Remove the lifting fork frame. See 1-2, *How to Remove the Lifting Fork Frame*.

2 Remove the fastener securing the fork level cylinder rod-end pivot pin to the fork frame mount.

3 Use a soft metal drift to remove the pivot pin.

4 Attach a lifting strap from an overhead crane to the barrel end of the fork level cylinder. Support the cylinder. Do not apply any lifting pressure.

5 Tag, disconnect and plug the fork level cylinder hoses from the cylinder manifolds. Cap the fittings.

WARNING Bodily injury hazard. Spraying hydraulic oil can penetrate and burn skin. Loosen hydraulic connections very slowly to allow the oil pressure to dissipate gradually. Do not allow oil to squirt or spray.

NOTICE Component damage hazard. Hoses can be damaged if they are kinked or pinched

6 Remove the fasteners securing the fork level cylinder barrel-end pivot pin to the boom.

7 Use a soft metal drift to remove the pivot pin. Remove the cylinder from the machine.

WARNING Crushing hazard. The cylinder could fall if not properly supported when the pivot pin is removed from the machine.

https://truckmanualshub.com/

1-6 Hydraulic Hoses

How to Adjust the Fork Level Cylinder and/or Auxiliary Hoses

1 Fully retract the boom.

2 Fully lower the tips of the lifting forks.

3 Remove the cover from the fork end of the boom.

4 Loosen the hose clamp securing the fork level cylinder or auxiliary hoses.

5 Pull each hose until it is equally tensioned and not touching the boom tube.

6 Tighten the clamp bolt to secure the hoses in place.

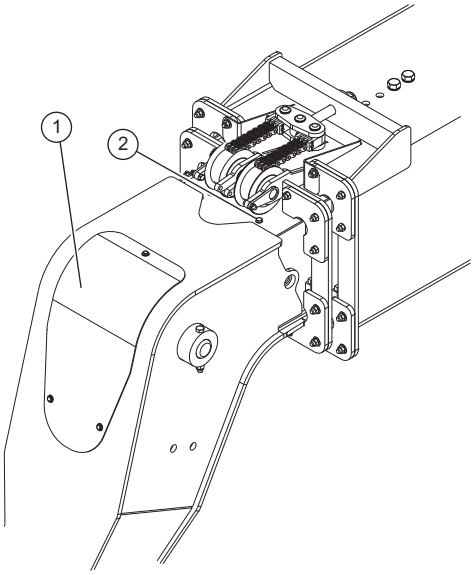

1 front cover
2 hose clamp bolt

How to Replace the Fork Level Cylinder and/or Auxiliary Hoses

Note: When removing a hose assembly or fitting, the O-ring on the fitting and/or hose end must be replaced and then torqued to specification during installation. Refer to Section 2, *Hydraulic Hose and Fitting Torque Specifications.*

1 Fully retract the boom.

2 Fully lower the tips of the lifting forks.

3 Remove the cover from the fork end of the boom.

4 Attach a lifting strap from an overhead crane to the top of the lifting fork frame. Support the frame. Do not apply any lifting pressure.

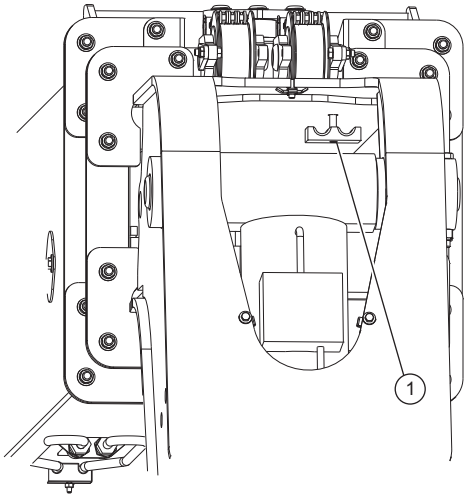

1 hose clamp

https://truckmanualshub.com/

BOOM COMPONENTS

5 Disconnect and plug the fork level cylinder supply hoses at the cylinder manifold or the auxiliary supply hoses at the quick connect fittings. Cap the fittings.

WARNING Bodily injury hazard. Spraying hydraulic oil can penetrate and burn skin. Loosen hydraulic connections very slowly to allow the oil pressure to dissipate gradually. Do not allow oil to squirt or spray.

NOTICE Component damage hazard. Hoses can be damaged if they are kinked or pinched.

6 Working near the center of the boom assembly, tag, disconnect and plug the hydraulic hoses from the hydraulic hard lines under boom tube number number 1. Cap the hard lines.

7 Securely connect a 30 feet / 10 m length of rope to each end of the hoses disconnected in steps 5 and 6. Securely tie off the other end of each section of rope to the boom structure.

8 Remove the hose clamp at the fork end of the boom by loosening the hose clamp bolt located on the top of the boom.

9 Remove the cover from the pivot end of the boom and remove the hose sheave cover.

Note: Partial extension of the boom on some machines may be necessary to access the sheave cover fasteners.

10 Select one of the hoses. Pull the hose out of the boom.

Note: Rope coming loose from either end of the hose or the boom during hose removal may result in a difficult reassembly. Be sure each section of rope is securely attached to both the hose and the boom structure before pulling the hose out of the boom.

11 Remove the rope from each end of the hose. Discard the hose.

12 Securely install a section of rope onto each end of the new hose assembly.

Note: Tag each hose before assembly.

13 Install the new hose assembly into the boom in the same manner the hose was removed. Using the rope, carefully pull the hose through the boom until each end is accessible.

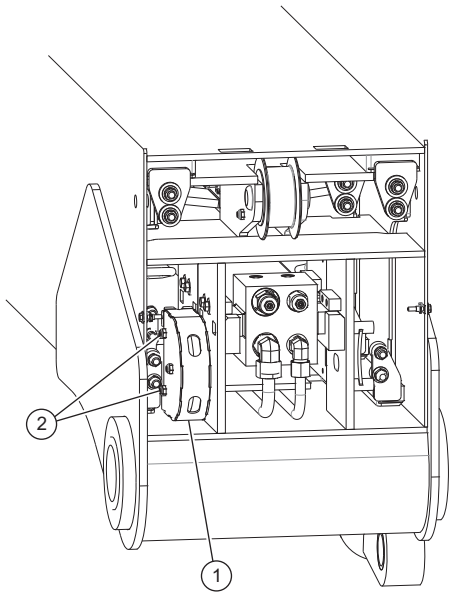

1 hose sheave cover
2 Cover retaining bolts

https://truckmanualshub.com/

14 Install both ends of the hose assembly onto the correct connection points. Torque to specification. Refer to Section 2, *Specifications*.

13 Repeat this procedure for the remaining hose to be replaced, beginning with step 8.

14 Tension the hoses using the Repair procedure, *"How to Adjust the Fork Level and Auxiliary Hydraulic Hoses"*.

14 Repeat this procedure for the auxiliary hydraulic hoses beginning with step 5.

14 Remove the lifting strap from the fork frame.

15 Install hose sheave covers removed in step 9.

15 Install the covers onto both ends of the boom. Install and securely tighten the retaining fasteners.

https://truckmanualshub.com/

Operator's Compartment

2-1 Operator's Compartment

How to Remove the Operator's Compartment

The operator's compartment is used to activate machine functions while sitting in the operator's drivers seat.

Within the operator's compartment there is a transmission column shifter, steering selector, 4-way controller, accelerator pedal, brake pedal and a differential lock switch. All of these components are replaceable.

For further information or assistance, consult the Genie Service Department.

⚠WARNING Bodily injury hazard. This procedure requires specific repair skills, lifting equipment and a suitable workshop. Attempting this procedure without these skills and tools could result in death or serious injury and significant component damage. Dealer service is required.

1 Open the access door above the hydraulic tank.

2 Disconnect the battery from the machine.

⚠WARNING Electrocution hazard. Contact with electrically charged circuits could result in death or serious injury. Remove all rings, watches and other jewelry.

3 Locate the secondary function manifold under the manifold inspection cover. Tag, disconnect and plug the hydraulic hoses at ports BP and BT of the secondary function manifold. Cap the fittings.

4 Locate the brake manifold under the manifold inspection cover. Tag, disconnect and plug the hydraulic hose at the underside of the brake manifold. Cap the fitting.

5 Working under the dashboard, locate the hydraulic hose at port L of the steering orbitral.

6 Working at the front axle, locate the hydraulic hose connected to the front axle steer cylinder at the operator's compartment side of the machine. Tag, disconnect and plug the hydraulic hose. Cap the fitting.

7 Tag, disconnect and plug the hydraulic hoses at ports SUP, SUR and SUT of the secondary function manifold. Cap the fitting.

⚠WARNING Bodily injury hazard. Spraying hydraulic oil can penetrate and burn skin. Loosen hydraulic connections very slowly to allow the oil pressure to dissipate gradually. Do not allow oil to squirt or spray.

8 Tag, disconnect and plug the hydraulic hose at port SULS of the primary function manifold. Cap the fitting.

https://truckmanualshub.com/

9 Tag, disconnect and plug the hydraulic hose at port JP of the secondary function manifold. Cap the fitting.

⚠WARNING Bodily injury hazard. Spraying hydraulic oil can penetrate and burn skin. Loosen hydraulic connections very slowly to allow the oil pressure to dissipate gradually. Do not allow oil to squirt or spray.

10 Tag, disconnect and plug the hydraulic hoses at ports J1, J2, J3 and J4 of the primary function manifold. Cap the fittings.

11 **Models with dual joystick:** Tag, disconnect and plug the hydraulic hoses at ports JT2, JT4, JS3 and JS1 of the primary function manifold. Cap the fittings.

12 Tag, disconnect and plug the hydraulic hoses at ports JE1, JE3, JL2and JL4 of the primary function manifold. Cap the fittings.

13 Remove the fasteners securing the joystick mount to the operator's compartment. Remove the joystick assembly.

14 **Models with single joystick:** With the base of the joystick above the top of the hydraulic tank, tag disconnect and plug the hydraulic hose at port T of the joystick. Cap the fitting.

Note: Removing the hydraulic hose from port T of the joystick with the joystick below the hydraulic oil level in the hydraulic tank will result in excessive hydraulic fluid leaking from the hose. Do not disconnect the hose from the joystick if the joystick is below the hydraulic oil level in the hydraulic tank.

15 **Models with dual joystick:** Locate the tee fitting which joins together the hydraulic hoses from port T of both joysticks to the tank return hydraulic hose.

16 **Models with dual joystick:** With the tee fitting above the top of the hydraulic tank, tag, disconnect and plug the tank return hydraulic hose from the tee fitting. Cap the fitting.

Note: Removing the hydraulic hose from the tee fitting with the tee fitting below the hydraulic oil level in the hydraulic tank will result in excessive hydraulic fluid leaking from the hose. Do not disconnect the hose from the tee fitting if the tee fitting is below the hydraulic oil level in the hydraulic tank.

17 Working inside the chassis, tag and disconnect the wire harnesses at the connectors next to the operator's compartment.

18 Support and secure the operator's compartment to an adjustable table capable of supporting the weight and that will allow the operator's compartment to remain in an upright and stable position.

NOTICE Component damage hazard. Wrapping a strap around the cab and lifting using an overhead crane can put excessive pressure on the glass windows of the cab, causing the windows to break. Do not lift the cab using a strap from an overhead crane if the strap contacts the windows.

Note: Placing a wedge between the operator's compartment and the adjustable table may be required to keep the operator's compartment stable.

19 Remove the lower fasteners securing the operator's compartment to the chassis.

https://truckmanualshub.com/

OPERATOR'S COMPARTMENT

20 Remove the upper fasteners securing the operator's compartment to the chassis.

WARNING Crushing hazard. The operator's compartment will fall if not properly supported when the fasteners are removed from the machine.

21 Slowly move the operator's compartment away from the chassis while feeding all loose hoses, cables and wires through the opening of the chassis.

NOTICE Component damage hazard. Hoses, cables and wires can be damaged if they are kinked or pinched.

Bolt torque specification	
Operator's cab mounting bolts	750 ft-lbs 1017 Nm

2-2 Machine Controls

How to Remove the Steering Column

1 Open the access door above the hydraulic tank.

2 Disconnect the battery from the machine.

WARNING Electrocution hazard. Contact with electrically charged circuits could result in death or serious injury. Remove all rings, watches and other jewelry.

3 Remove the fasteners securing the transmission control lever to the column. Carefully separate the lever from the column.

4 Remove the nut securing the key switch to the dash panel. Gently push the key switch through the opening.

5 Remove the fasteners securing the dash panel to the dashboard.

6 Carefully pull the dash panel towards the seat of the operator's compartment.

7 Tag and disconnect the wire harness from the componments of the dash panel. Remove the dash panel from the machine.

8 Loosen the two lower fasteners securing the dash frame to the operator's compartment.

9 Remove the two upper fasteners securing the dash frame to the operator's compartment.

10 Rotate the dash frame towards the seat of the operator's compartment. Remove the dashboard from the machine.

https://truckmanualshub.com/

11 Tag and disconnect the ground wire of the steer column.

12 Support and secure the steer orbitral to the dash frame.

13 Remove the fasteners securing the steer column and steer orbitral to the dash frame.

14 Lower the steer orbitral and remove the steer column from the machine.

How to Remove the Steering Wheel

1 Open the access door above the hydraulic tank.

2 Disconnect the battery from the machine.

WARNING Electrocution hazard. Contact with electrically charged circuits could result in death or serious injury. Remove all rings, watches and other jewelry.

3 Remove the horn button from the steering wheel. Remove the nut securing the steering wheel to the column and remove the steering wheel.

How to Remove the Steer Orbitral

1 Remove the steering column. See 2-2, *How to Remove the Steering Column*.

2 Working under the dashboard, locate the hydraulic hose at port L of the steering orbitral.

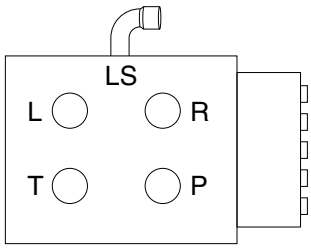

3 Follow the hydraulic hose from port L of the steer orbitral to its connection at the front axle of the machine. Tag, disconnect and plug the hydraulic hose at the front axle. Cap the fitting.

4 Tag, disconnect and plug the hydraulic hoses at ports SUP, SUR and SUT of the secondary function manifold. Cap the fitting.

WARNING Bodily injury hazard. Spraying hydraulic oil can penetrate and burn skin. Loosen hydraulic connections very slowly to allow the oil pressure to dissipate gradually. Do not allow oil to squirt or spray.

5 Tag, disconnect and plug the hydraulic hose at port SULS of the primary function manifold. Cap the fitting.

6 Slowly move the steer orbitral away from the dash frame while feeding all loose hoses through the opening of the chassis.

How to Remove the Joystick - Models with Single Joystick

1 Open the access door above the hydraulic tank.

2 Disconnect the battery from the machine.

WARNING Electrocution hazard. Contact with electrically charged circuits could result in death or serious injury. Remove all rings, watches and other jewelry.

3 Remove the fasteners securing the joystick mount panel to the side console.

https://truckmanualshub.com/

OPERATOR'S COMPARTMENT

4 Tag and disconnect the joystick wire harness from the machine.

5 Tag, disconnect and plug the hoses from ports 1, 2, 3, 4, P and T of the joystick. Cap the fittings.

Note: Removing the hydraulic hose from port T of the joystick with the joystick below the hydraulic oil level in the hydraulic tank will result in excessive hydraulic fluid leaking from the hose. Do not disconnect the hose from the port if the joystick is below the hydraulic oil level in the hydraulic tank.

6 Remove the fasteners securing the joystick to the mount panel. Remove the joystick.

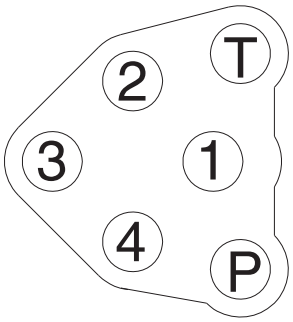

Joystick port orientation

How to Remove the Joystick - Models with Dual Joysticks

1 Open the access door above the hydraulic tank.

2 Disconnect the battery from the machine.

WARNING Electrocution hazard. Contact with electrically charged circuits could result in death or serious injury. Remove all rings, watches and other jewelry.

3 Remove the fasteners securing the joystick mount panel to the side console.

4 Tag and disconnect the joystick wire harness from the machine.

5 Tag, disconnect and plug the hoses from ports 1, 2, 3, 4 and P of the joystick. Cap the fittings.

6 Locate the tee fitting which joins together the hydraulic hoses from port T of both joysticks to the tank return hydraulic hose.

7 With the tee fitting above the top of the hydraulic tank, tag, disconnect and plug the tank return hydraulic hose from the tee fitting. Cap the fitting.

Note: Removing the hydraulic hose from port T of the joystick with the joystick below the hydraulic oil level in the hydraulic tank will result in excessive hydraulic fluid leaking from the hose. Do not disconnect the hose from the port if the joystick is below the hydraulic oil level in the hydraulic tank.

8 Remove the fasteners securing the joystick to the mount panel. Remove the joystick.

https://truckmanualshub.com/

How to Remove the Brake Pedal Assembly

1 Open the access door above the hydraulic tank.

2 Disconnect the battery from the machine.

WARNING Electrocution hazard. Contact with electrically charged circuits could result in death or serious injury. Remove all rings, watches and other jewelry.

3 Fully press and release the brake pedal a minimum of 10 times to release the hydraulic pressure in the brake system.

4 Tag, disconnect and plug the hydraulic hoses at ports BP and BT of the secondary hydraulic manifold. Cap the fittings.

WARNING Bodily injury hazard. Spraying hydraulic oil can penetrate and burn skin. Loosen hydraulic connections very slowly to allow the oil pressure to dissipate gradually. Do not allow oil to squirt or spray.

5 Follow the hydraulic hose from port A of the brake pedal manifold to the brake manifold. Tag, disconnect and plug this hydraulic hose at the brake manifold. Cap the fitting.

6 Remove the fasteners securing the brake pedal assembly to the dash frame.

7 Gentley rotate the brake pedal in an upwards direction and slowly move the brake pedal assembly away from the dash frame while feeding all loose hoses through the opening of the chassis.

How to Remove the Gauge Cluster Assembly

1 Open the engine cover.

2 Disconnect the battery from the machine.

WARNING Electrocution hazard. Contact with electrically charged circuits could result in death or serious injury. Remove all rings, watches and other jewelry.

3 Remove the fasteners securing the transmission control lever to the column. Carefully separate the lever from the column.

4 Reach under the dashboard and gently push the dash cluster through the opening in the dashboard.

5 Tag and disconnect the wire harness from the dash cluster. Remove the dash cluster from the machine.

https://truckmanualshub.com/

Fuel and Hydraulic Tank

3-1
Fuel and Hydraulic Tank

How to Remove the Fuel and Hydraulic Tank Assembly

DANGER Explosion and fire hazard. Engine fuels are combustible. Remove the fuel tank in an open, well-ventilated area away from heaters, sparks, flames and lighted tobacco. Always have an approved fire extinguisher within easy reach.

DANGER Explosion and fire hazard. Never drain or store fuel in an open container due to the possibility of fire.

DANGER Explosion and fire hazard. When transferring fuel, connect a grounding wire between the machine and pump or container.

1 Open the access door to the engine.

2 Disconnect the battery from the machine.

WARNING Electrocution hazard. Contact with electrically charged circuits could result in death or serious injury. Remove all rings, watches and other jewelry.

HYDRAULIC TANK

3 Remove the access cover to the hydraulic tank.

4 Remove the filler cap from the hydraulic tank.

5 Place a drain pan or other suitable container under the hydraulic tank. Refer to Section 2, *Specifications*.

6 Remove the drain plug from the hydraulic tank and completely drain the tank.

CAUTION Bodily injury hazard. Beware of hot oil. Contact with hot oil may cause severe burns.

7 Tag, disconnect and plug the supply and return hoses from the hydraulic tank. Cap the fittings.

8 Proceed to step 14.

FUEL TANK

9 Remove the access cover above the fuel tank and the access door above the filler cap.

10 Tag and disconnect the wire harness from the fuel level terminals.

11 Remove the filler cap from the fuel tank.

12 Using an approved hand-operated pump, drain the fuel tank into a container of suitable capacity. Refer to Section 2, *Specifications*.

DANGER Explosion and fire hazard. When transferring fuel, connect a grounding wire between the machine and pump or container.

Note: Be sure to only use a hand operated pump suitable for use with gasoline and/or diesel fuel.

13 Tag, disconnect and plug the fuel supply and return hoses. Cap the fittings.

14 Remove the clamps holding the vent hose so the vent and hose can be removed with the tank.

15 Support and secure the tank assembly to an appropriate lifting device.

16 Remove the fasteners securing the tank assembly to the chassis. Remove the tank from the machine.

WARNING Crushing hazard. The tank assembly could become unbalanced and fall if not properly supported when removed from the machine.

https://truckmanualshub.com/

Engines

4-1 Engines

How to Repair the Perkins 1104D-E44TA Engine

Repair procedures and additional engine information is available in the *Perkins 1100 Operation and Maintenance Manual* (Perkins part number SEBU8172-00) and the *Perkins 1104 Service Manual* (Perkins part number RENR9401) and the *Perkins 1100 Troubleshooting Manual* (Perkins part number SENR9982-01).

Perkins 1100 Operation and Maintenance Manual	
Genie part number	123702
Perkins 1104 Service Manual	
Genie part number	117764
Perkins 1100 Troubleshooting Manual	
Genie part number	123583

How to Repair the Perkins 854E-34TA Engine

Repair procedures and additional engine information is available in the *Perkins 854 Systems Operation Testing & Adjusting* (Perkins part number UENR0623) or the *Perkins 854 Disassembly & Assembly* (Perkins part number UENR0624)

Perkins 854 Operation Manual	
Genie part number	218711
Perkins 854 Assembly Manual	
Genie part number	218712

How to Repair the Deutz TCD3.6 Engine

Maintenance procedures and additional engine information is available in the *Deutz TCD3.6 Workshop Manual* (Deutz part number 0312 3965).

Deutz TCD3.6 Workshop Manual	
Genie part number	218704

4-2 Engine Fault Codes

How to Retrieve Engine Fault Codes

When the engine Electronic Control Module (ECM) detects an abnormal operating condition, a fault code is immediately stored in the ECM memory. At the same time, a colored warning lamp is illuminated and the fault code is shown on the engine diagnostic display, is located on the dashboard in the operator's compartment.

To learn the specifics of and how to use the fault codes, refer to Section 5, *Fault Codes*.

https://truckmanualshub.com/

Transmission

5-1
Transmission

How to Repair the Transmission

Repair procedures and additional transmission information is available in the *Dana VDT12000 Service Manual*
(Dana part number TSM-0022).

Dana VDT12000 Service Manual	
Genie part number	218706

https://truckmanualshub.com/

This page intentionally left blank.

https://truckmanualshub.com/

Hydraulic Pump

6-1
Hydraulic Pump

How to Test the Function Pump

Note: When removing a hose assembly or fitting, the fitting and/or hose end must be torqued to specification during installation. Refer to Section 2, *Hydraulic Hose and Fitting Torque Specifications.*

WARNING Bodily injury hazard. Spraying hydraulic oil can penetrate and burn skin. Loosen hydraulic connections very slowly to allow the oil pressure to dissipate gradually. Do not allow oil to squirt or spray.

1 Connect a 0 to 5000 psi / 0 to 350 bar pressure gauge to port TP on the secondary function manifold.

2 Start the engine and fully retract the boom. Continue to hold the joystick in the boom retract position and observe the pressure gauge.

Result: If the pressure gauge reads 3200 psi / 220 bar, immediately stop. The pump is good.

Result: If the pressure fails to reach 3200 psi / 220 bar, the pump needs to be adjusted OR or the pump or pump coupling is faulty and will need to be serviced or replaced.

NOTICE Component damage hazard. There is no relief valve in the hydraulic pump and the pump can be damaged if the pressure is allowed to exceed specification. When testing the pump, crank the engine in one second intervals until the correct pressure is confirmed. Do not over-pressurize the pump.

3 Remove the pressure gauge and install plug onto port TP. Torque to specification. Refer to Section 2, *Specifications*.

WARNING Bodily injury hazard. Spraying hydraulic oil can penetrate and burn skin. Loosen hydraulic connections very slowly to allow the oil pressure to dissipate gradually. Do not allow oil to squirt or spray.

https://truckmanualshub.com/

How to Remove the Function Pump

⚠WARNING Bodily injury hazard. This procedure requires specific repair skills, lifting equipment and a suitable workshop. Attempting this procedure without these skills and tools could result in death or serious injury and significant component damage. Dealer service is strongly recommended.

Note: When removing a hose assembly or fitting, the O-ring on the fitting and/or hose end must be replaced and then torqued to specification during installation. Refer to Section 2, *Hydraulic Hose and Fitting Torque Specifications.*

Note: Perform this procedure with the engine off and cool.

1 Open the engine cover.

2 Disconnect the battery from the machine.

⚠WARNING Electrocution hazard. Contact with electrically charged circuits could result in death or serious injury. Remove all rings, watches and other jewelry.

4 Tag and disconnect the case drain hose at the top of the pump. Cap the fitting on the pump.

Note: Placing the open end of the case drain hose below the hydraulic oil level in the hydraulic tank will result in excessive hydraulic fluid leaking from the hose. Do not lower the open end of the case drain hose to below the fluid level of the hydraulic tank until the hose is plugged.

5 Tag, disconnect and plug the large hydraulic pump supply hose at the pump. Cap the fitting on the pump.

Note: Placing the open end of the pump supply hose below the fluid level in the hydraulic tank will result in excessive hydraulic fluid leaking from the hose. Do not lower the open end of the pump supply hose to below the fluid level of the hydraulic tank until the hose is plugged.

6 Tag, disconnect and plug the high pressure hose at the pump. Cap the fitting on the pump.

⚠WARNING Bodily injury hazard. Spraying hydraulic oil can penetrate and burn skin. Loosen hydraulic connections very slowly to allow the oil pressure to dissipate gradually. Do not allow oil to squirt or spray.

7 Remove the fasteners securing the pump to the transmission. Remove the pump from the machine.

https://truckmanualshub.com/

HYDRAULIC PUMP

How to Install the Function Pump

1 Carefully install the hydraulic pump onto the transmission. Install the fasteners and tighten to finger tight.

2 Torque the fasteners evenly to 85 ft-lbs / 115 Nm.

3 Install the smaller high pressure hose onto the pump outlet. Torque the fasteners to 27-37 ft-lbs / 37-50 Nm.

4 Install the larger low pressure hose onto the pump outlet. Install the hose retaining rings and fasteners. Torque the fasteners to 55-66 ft-lbs / 74-90 Nm.

5 Working at the case drain at the top of the pump, fill the pump with hydraulic fluid until the fluid is at the top of the case drain fitting.

6 Install the case drain hose onto the pump and torque to specification. Refer to Section 2, *Specifications*.

7 Securely install the wire harness onto the pump.

8 Check the level of the hydraulic fluid in the hydraulic tank. Add fluid if needed.

9 Prime the pump. See 6-1, *How to Prime the Function Pump.*

10 Start the engine and inspect for leaks.

11 Turn the machine off.

12 Adjust the pump pressure. See 6-1, *How to Adjust the Function Pump Standby Pressure* and *How to Adjust the Function Pump Pressure Pressure Compensator.*

How to Prime the Function Pump

Note: When removing a hose assembly or fitting, the O-ring on the fitting and/or hose end must be replaced and then torqued to specification during installation. Refer to Section 2, *Hydraulic Hose and Fitting Torque Specifications.*

1 Install all hoses onto the hydraulic pump. Torque to specification. Refer to Section 2, *Hydraulic Hose and Fitting Torque Specifications.*

2 Locate the case drain filler plug at the side of the function pump.

3 Remove the plug and slowly fill the case drain port of the pump with hydraulic fluid until the oil level is even with the bottom of the hole. Install the plug and torque to 40 ft-lbs / 54 Nm.

4 Start the engine, allow the engine to run at low idle for 15 seconds then shut off the engine. Wait 15 seconds, then start the engine again. Allow the engine to run at low idle for 15 seconds and then shut off the engine.

5 Check for hydraulic leaks and clean up any oil that may have spilled.

https://truckmanualshub.com/

How to Adjust the Function Pump Standby Pressure

1 Connect a 0 to 1000 psi / 0 to 100 bar pressure gauge to test port 'TP' on the primary function manifold. See 7-1 or 7-2, *Primary Function Manifold Components*.

2 Start the engine and allow the engine to run at low idle.

3 Observe the pressure reading on the pressure gauge.

⊙ Result: The pressure gauge reads 450 ±25 psi / 31 ±1.7 bar. The pump is functioning correctly. Proceed to step 6.

⊠ Result: The pressure gauge fails to read 450 ±25 psi / 31 ±1.7 bar. The pressure setting needs to be adjusted. Proceed to step 4.

4 Loosen the set screw for the standby pressure adjustment screw.

5 Adjust the function pump standby pressure. Turn the adjustment screw clockwise to increase the pressure or counterclockwise to decrease the pressure. Tighten the set screw.

6 Turn the engine off and remove the pressure gauge.

⚠WARNING Bodily injury hazard. Spraying hydraulic oil can penetrate and burn skin. Loosen hydraulic connections very slowly to allow the oil pressure to dissipate gradually. Do not allow oil to squirt or spray.

How to Adjust the Function Pump Pressure Compensator

Note: Two people will be required to perform this procedure.

1 Connect a 0 to 5000 psi / 0 to 350 bar pressure gauge to port 'M1' on the function pump.

2 Start the engine and allow the engine to run at low idle.

3 Fully retract the boom.

4 Continue to activate the boom retract function and observe the pressure reading on the pressure gauge.

⊙ Result: The pressure gauge reads 3200±50 psi / 220±3.4 bar. The pump is functioning correctly. Proceed to step 7.

⊠ Result: The pressure gauge fails to read 3200±50 psi / 220±3.4 bar. The pressure setting needs to be adjusted. Proceed to step 5.

5 Loosen the set screw for the pressure compensator adjustment screw.

6 Adjust the pressure compensator pressure. Turn the adjustment screw clockwise to increase the pressure or counterclockwise to decrease the pressure. Tighten the set screw.

NOTICE Component damage hazard. Do not adjust the pressure compensator higher than specified.

7 Turn the engine off and remove the pressure gauge.

⚠WARNING Bodily injury hazard. Spraying hydraulic oil can penetrate and burn skin. Loosen hydraulic connections very slowly to allow the oil pressure to dissipate gradually. Do not allow oil to squirt or spray.

https://truckmanualshub.com/

Manifolds

7-1
Primary Function Manifold Components - Models with Single Joystick

The primary function manifold is located under the manifold inspection cover.

Index No.	Description	Schematic Item	Function	Torque
1	Solenoid valve, 2 position 4 way	SV1	Function select - boom retract and sway right	2-3 ft-lbs / 3-4 Nm
2	Directional valve,proportional	PE1	Boom extend/retract	65-75 ft-lbs / 88-101 Nm
3	Directional valve, proportional	PE2	Boom up/down	65-75 ft-lbs / 88-101 Nm
4	Solenoid valve, 2 position 4 way	SV3	Function select - boom extend and sway left	2-3 ft-lbs / 3-4 Nm
5	Directional valve, proportional	PE3	Fork tilt up/down	33-37 ft-lbs / 45-50 Nm
6	Relief valve, 3500 psi / 241 bar	RV3	Fork tilt up relief	20 ft-lbs / 27 Nm
7	Check valve, pilot operated 100 psi / 6.9 bar	CV9	Fork tilt down circuit	25 ft-lbs / 34 Nm
8	Check valve, pilot operated 100 psi / 6.9 bar	CV8	Fork tilt up circuit	25 ft-lbs / 34 Nm
9	Relief valve, 3500 psi / 241 bar	RV2	Fork tilt down relief	20 ft-lbs / 27 Nm
10	Relief valve, 3500 psi / 241 bar	RV1	System relief	25 ft-lbs / 34 Nm
11	Check valve, 5 psi / 0.3 bar	CV7	Sway right circuit	12-14 ft-lbs / 16-19 Nm
12	Check valve, 5 psi / 0.3 bar	CV1	Boom retract circuit	12-14 ft-lbs / 16-19 Nm
13	Check valve, 5 psi / 0.3 bar	CV3	Boom down circuit	12-14 ft-lbs / 16-19 Nm
14	Check valve, 5 psi / 0.3 bar	CV6	Tilt down circuit	12-14 ft-lbs / 16-19 Nm
15	Check valve, 5 psi / 0.3 bar	CV5	Tilt up circuit	12-14 ft-lbs / 16-19 Nm

https://truckmanualshub.com/

MANIFOLDS

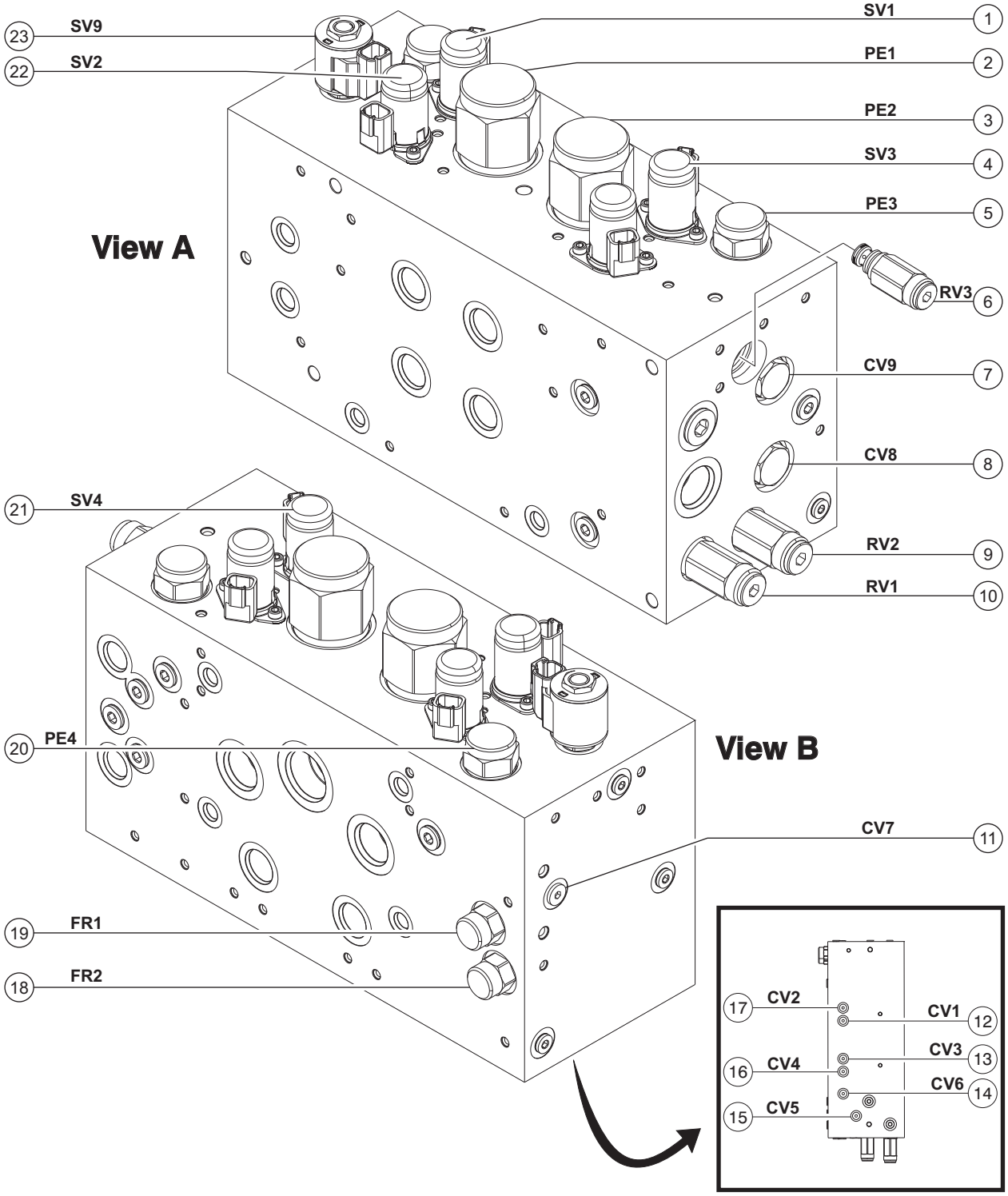

https://truckmanualshub.com/

MANIFOLDS

Primary Function Manifold Components - Models with Single Joystick, continued

16	Check valve, 5 psi / 0.3 bar	CV4	Boom up circuit	12-14 ft-lbs / 16-19 Nm
17	Check valve, 5 psi / 0.3 bar	CV2	Boom extend circuit	12-14 ft-lbs / 16-19 Nm
18	Flow regulator valve, 0.1 gpm / 0.4 L/min	FR2	Sway left circuit / load sense bleed	20 ft-lbs / 27 Nm
19	Flow control valve, adj., 2.0 gpm / 7.6 L/min	FR1	Sway left circuit	20 ft-lbs / 27 Nm
20	Directional valve, proportional 3 position 4 way, pilot operated	PE4	Sway left/right	33-37 ft-lbs / 45-50 Nm
21	Solenoid valve, 2 position 4 way	SV4	Function select - boom up and fork tilt up	2-3 ft-lbs / 3-4 Nm
22	Solenoid valve, 2 position 4 way	SV2	Function select - boom down and fork tilt down	2-3 ft-lbs / 3-4 Nm
23	Solenoid valve, 2 position 2 way	SV9	Function select - sway circuit	20 ft-lbs / 27 Nm

https://truckmanualshub.com/

MANIFOLDS

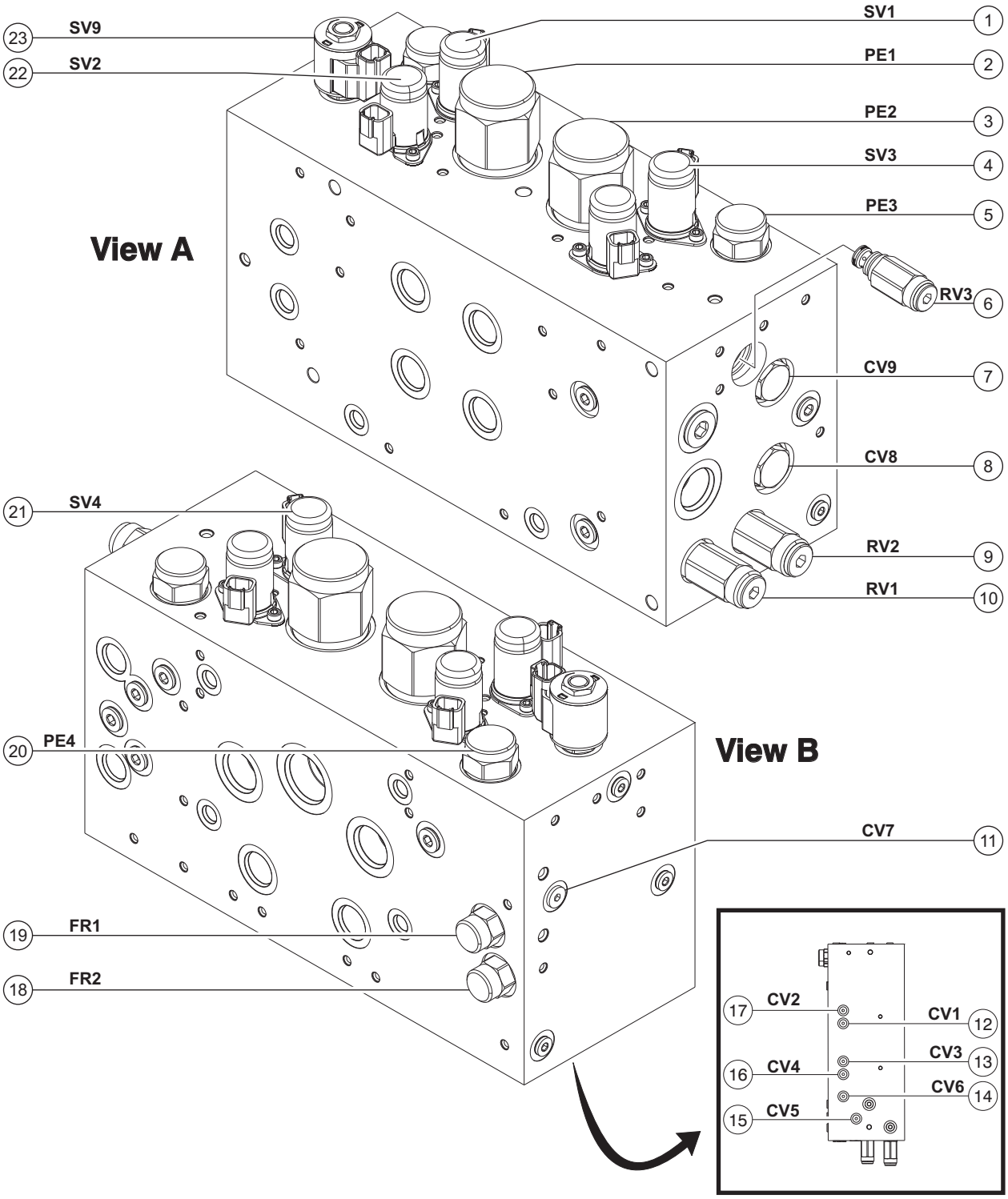

https://truckmanualshub.com/

MANIFOLDS

7-2
Primary Function Manifold Components - Models with Dual Joysticks

The primary function manifold is located under the manifold inspection cover.

Index No.	Description	Schematic Item	Function	Torque
1	Directional valve, proportional	PE1	Boom extend/retract	65-75 ft-lbs / 88-101 Nm
2	Directional valve, proportional	PE2	Boom up/down	65-75 ft-lbs / 88-101 Nm
3	Directional valve, proportional	PE3	Fork tilt up/down	33-37 ft-lbs / 45-50 Nm
4	Check valve, pilot operated 100 psi / 6.9 bar	PC2	Fork tilt down circuit	25 ft-lbs / 34 Nm
5	Relief valve, 3500 psi / 241 bar	RV1	System relief	20 ft-lbs / 27 Nm
6	Relief valve, 3500 psi / 241 bar	RV3	Fork tilt down circuit	25 ft-lbs / 34 Nm
7	Check valve, pilot operated 100 psi / 6.9 bar	PC1	Fork tilt up circuit	25 ft-lbs / 34 Nm
8	Relief valve, 3500 psi / 241 bar	RV2	Fork tilt up relief	20 ft-lbs / 27 Nm
9	Relief valve, 3500 psi / 241 bar	CV7	Sway right check valve	25 ft-lbs / 34 Nm
10	Shuttle valve	LS1	Function select - sway left/right	20 ft-lbs / 27 Nm
11	Flow regulator valve, 0.1 gpm / .38 L/min	FR2	Sway left circuit / load sense bleed	20 ft-lbs / 27 Nm
12	Check valve, 5 psi / 0.3 bar	CV1	Boom retract circuit	12-14 ft-lbs / 16-19 Nm
13	Check valve, 5 psi / 0.3 bar	CV3	Boom down circuit	12-14 ft-lbs / 16-19 Nm
14	Check valve, 5 psi / 0.3 bar	CV2	Boom extend circuit	12-14 ft-lbs / 16-19 Nm

https://truckmanualshub.com/

MANIFOLDS

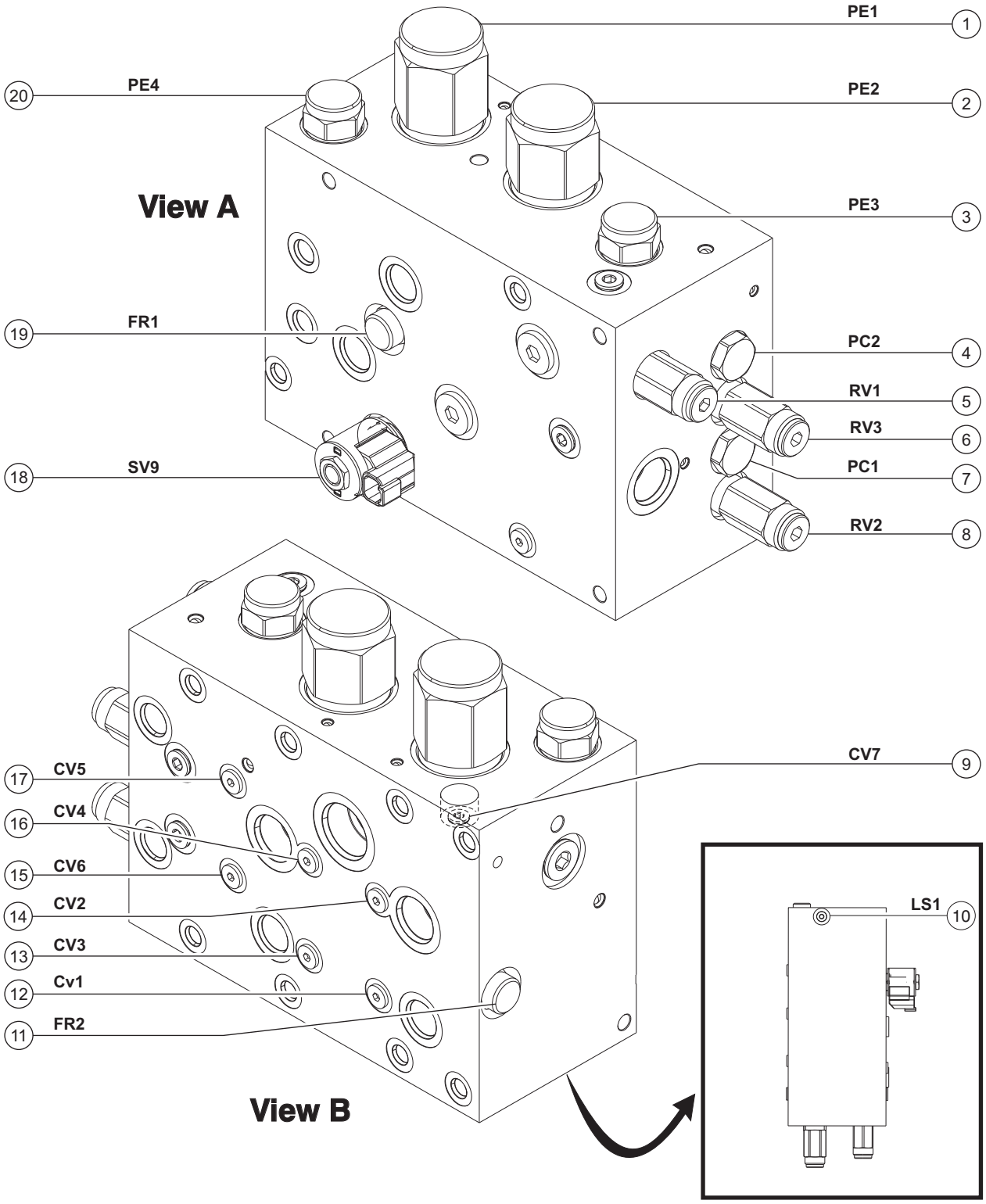

https://truckmanualshub.com/

MANIFOLDS

Primary Function Manifold Components - Models with Dual Joysticks, continued

15	Check valve, 5 psi / 0.3 bar	CV6	Tilt down circuit	12-14 ft-lbs / 16-19 Nm
16	Check valve, 5 psi / 0.3 bar	CV4	Boom up circuit	12-14 ft-lbs / 16-19 Nm
17	Check valve, 5 psi / 0.3 bar	CV5	Tilt up circuit	12-14 ft-lbs / 16-19 Nm
18	Solenoid valve, 2 pos, 2 way	SV9	Function select- sway circuit	12-14 ft-lbs / 16-19 Nm
19	Flow control valve, 2.0 gpm	FR1	Fork up/down circuit	12-14 ft-lbs / 16-19 Nm
20	Directional valve, proportional	PE4	Sway function select	33-37 ft-lbs / 45-50 Nm

https://truckmanualshub.com/

MANIFOLDS

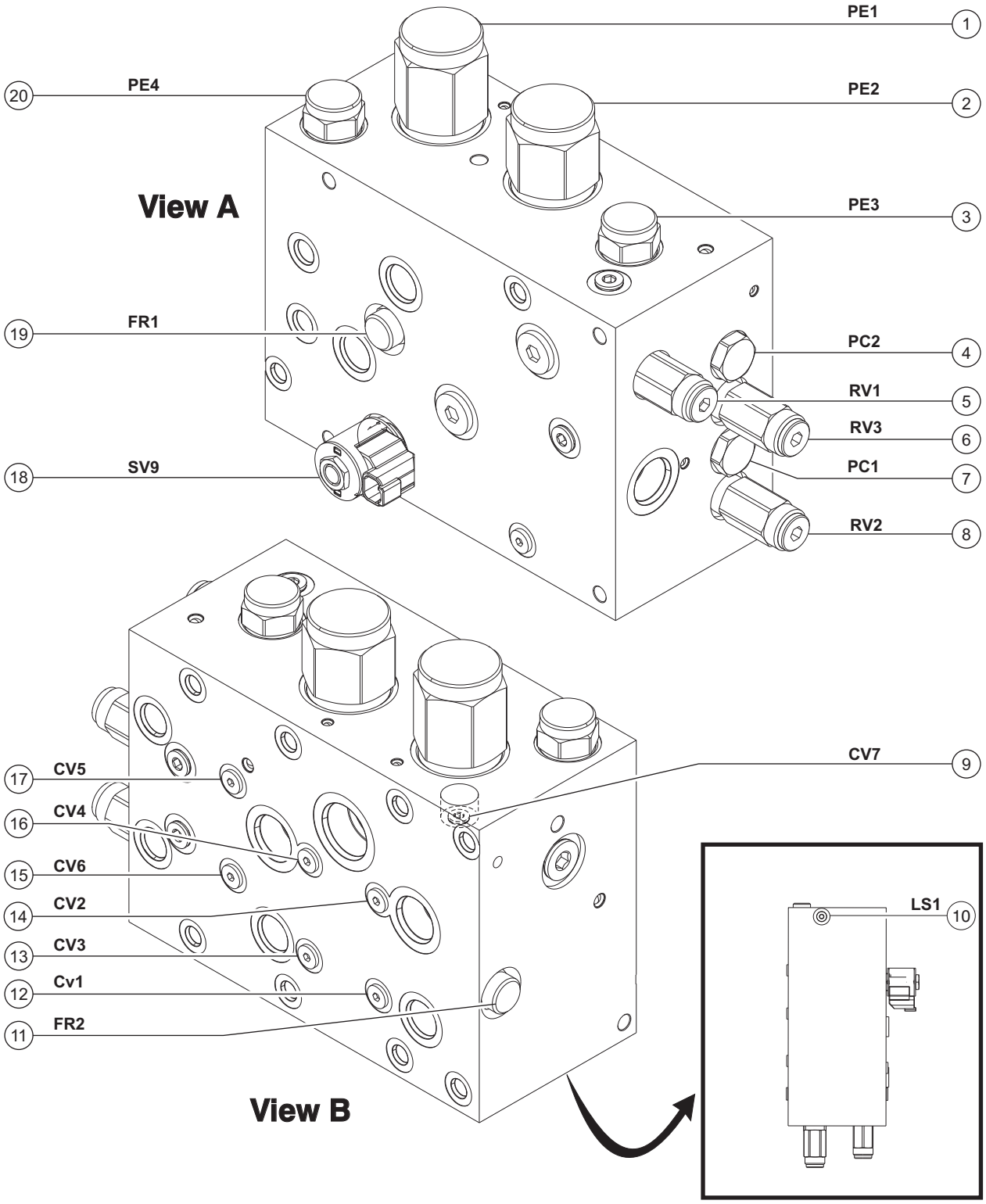

https://truckmanualshub.com/

MANIFOLDS

7-3
Secondary Function Manifold Components

The secondary function manifold is located under the manifold inspection cover.

Index No.	Description	Schematic Item	Function	Torque
1	DO3 valve, 3 position 4 way	SVD1	Steer left/right	60 in-lbs / 6.8 Nm
2	Pressure reducing/relief valve, 50 psi / 3.4 bar	PR2	Rear lock-up circuit	25-27 ft-lbs / 34-37 Nm
3	Pressure reducing/relief valve, 400 psi / 27.5 bar	PR1	Differential lock-up circuit	25-27 ft-lbs / 34-37 Nm
4	Pressure reducing/relief valve, 2650 psi / 183 bar	PR3	Steer circuit	25-27 ft-lbs / 34-37 Nm
5	Pressure reducing/relief valve, 350 psi / 24.8 bar	PR4	Parking brake circuit	25-27 ft-lbs / 34-37 Nm
6	Solenoid valve, 2 position 3 way	SV5	Parking brake release	20 ft-lbs / 27 Nm
7	Check valve, 5 psi / 0.35 bar	CV9	Brake circuit	20 ft-lbs / 27 Nm
8	Check valve, 5 psi / 0.35 bar	CV8	Steering circuit	20 ft-lbs / 27 Nm
9	Pressure switch	S23	Brake warning switch	
10	Pressure switch	S5	Parking brake switch	
11	Solenoid valve, 2 position 3 way	SV7	Rear lock up select	2-3 ft-lbs / 3-4 Nm
12	Solenoid valve, 2 position 3 way	SV6	Differential lock up select	2-3 ft-lbs / 3-4 Nm

https://truckmanualshub.com/

MANIFOLDS

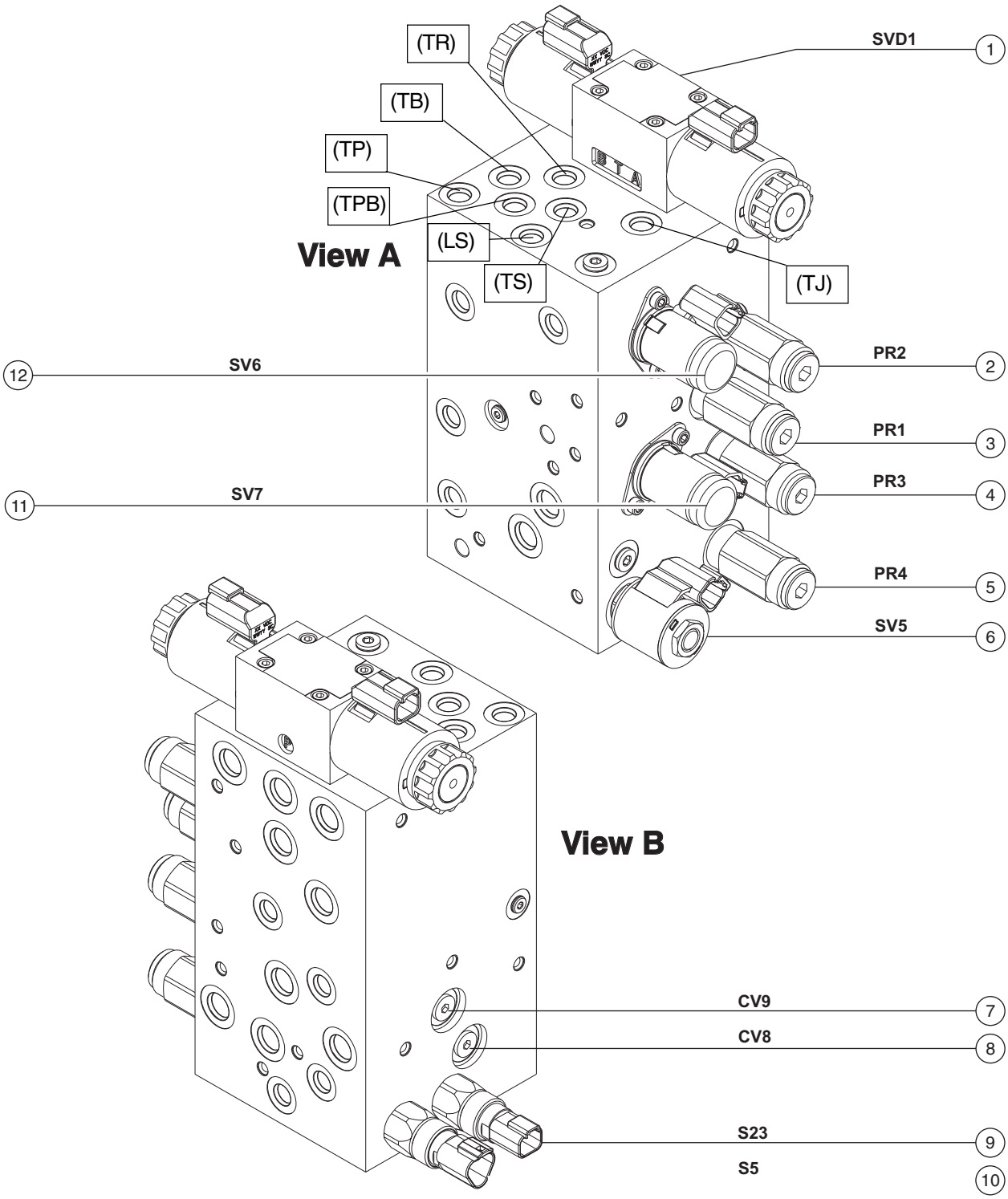

https://truckmanualshub.com/

MANIFOLDS

7-4
Auxiliary Manifold (option) and Brake Manifold Components

The auxiliary manifold is located under the transmission inspection cover.

Index No.	Description	Schematic Item	Function	Torque
1	Check valve, 5 psi / 0.3 bar	CV2	Auxiliary 'A1' circuit	12-14 ft-lbs / 16-19 Nm
2	DO3 valve, 3 position 4 way	SVD1	Auxiliary function enable	60 in-lbs / 6.8 Nm
3	Flow regulator valve	NV1	Function speed control	25 ft-lbs / 34 Nm
4	Check valve, 5 psi / 0.3 bar	CV1	Auxiliary 'A2' circuit	12-14 ft-lbs / 16-19 Nm
5	Pressure switch, 450 psi / 31 bar	S6	Clutch cut-off pressure	11 ft-lbs / 14.9 Nm
6	Pressure switch, 50 psi / 3.4 bar	S16	Brake light pressure (option)	11 ft-lbs / 14.9 Nm

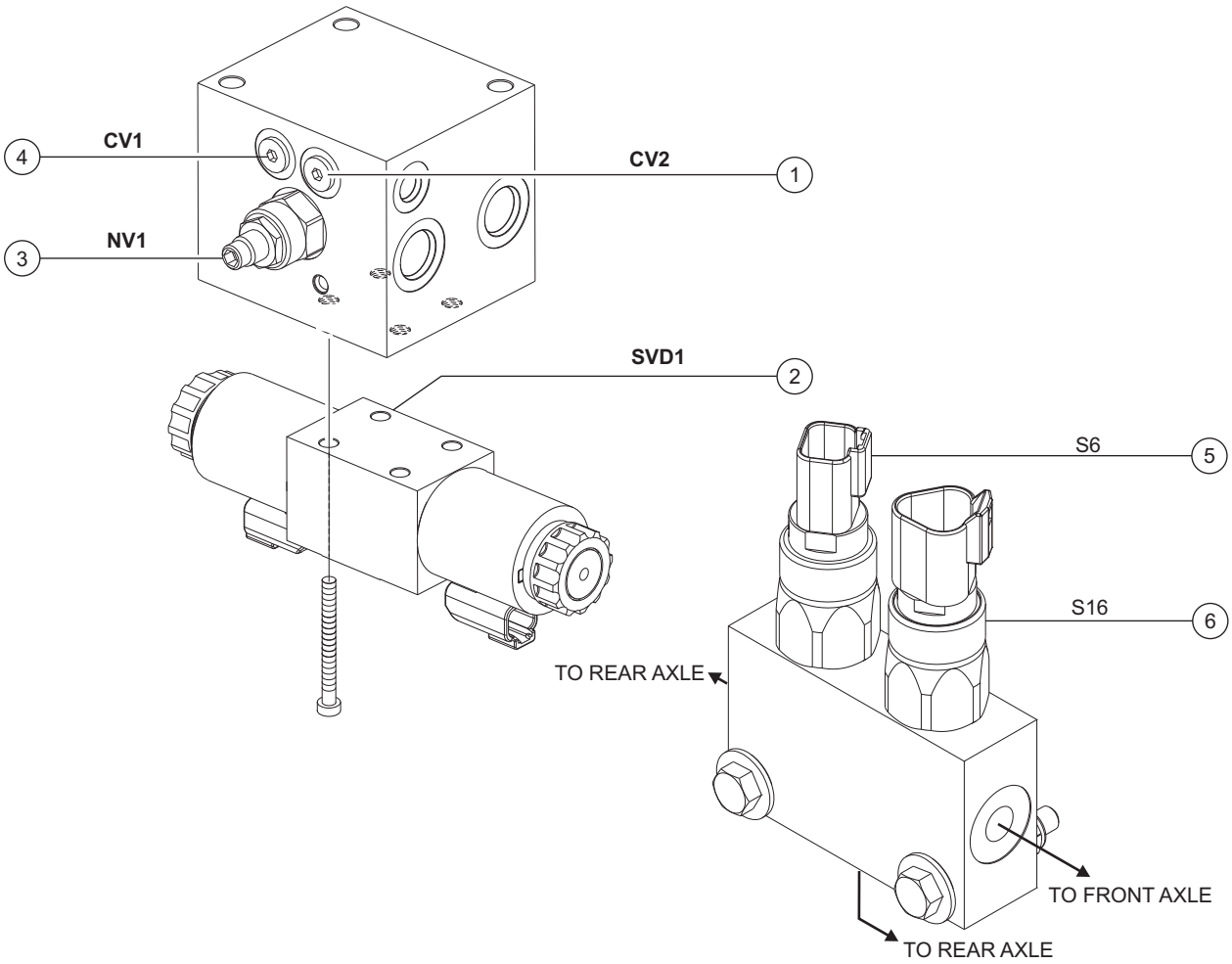

https://truckmanualshub.com/

7-5 Valve Adjustments - Secondary Function Manifold

How to Set the Steer System Pressure

Note: Be sure that the hydraulic oil level is visible in the inspection glass of the hydraulic tank.

1 Install a 0 to 1000 psi / 0 to 100 bar pressure gauge into test port 'TP' at the top of the secondary function manifold. See 7-3, *Secondary Function Manifold Components*.

2 Start the engine. Allow the engine to idle after warming the engine to operating temperature.

3 Without operating any machine controls, observe the reading on the pressure gauge.

⊙ Result: The pressure gauge reads 450 ±25 psi / 31 ±1.7 bar. The pump is functioning correctly.

⊠ Result: The pressure gauge fails to read 450 ±25 psi / 31 ±1.7 bar. The pressure setting needs to be adjusted. See Repair Procedure 6-1, *How to Adjust the Function Pump Pressure*.

4 Turn the machine off. Remove the pressure gauge from the test port.

⚠WARNING Bodily injury hazard. Spraying hydraulic oil can penetrate and burn skin. Loosen hydraulic connections very slowly to allow the oil pressure to dissipate gradually. Do not allow oil to squirt or spray.

5 Install a 0 to 3500 psi / 0 to 250 bar pressure gauge into test port 'TS' at the top of the secondary function manifold. See 7-3, *Secondary Function Manifold Components*.

6 Start the engine. Allow the engine to idle.

7 Fully turn and hold the steering wheel in the left direction and allow the wheels to fully turn to the left. Continue holding the steering while observing the pressure reading on the pressure gauge.

⊙ Result: The pressure gauge reads 2650 psi / 183 bar. The pressure setting is correct. Proceed to step 12.

⊠ Result: The pressure gauge fails to read 2650 psi / 183 bar. The pressure setting needs to be adjusted. Proceed to step 8.

8 Turn the machine off. Hold the steer pressure reducing/relief valve with a wrench and remove the cap (schematic item PR3).

9 Adjust the internal hex socket. Turn it clockwise to increase the pressure or counterclockwise to decrease the pressure.

CAUTION Component damage hazard. Do not adjust the relief valve pressures higher than specifications.

10 Install the relief valve cap.

11 Repeat this procedure beginning with step 6.

12 Turn the machine off. Remove the pressure gauge from the test port.

⚠WARNING Bodily injury hazard. Spraying hydraulic oil can penetrate and burn skin. Loosen hydraulic connections very slowly to allow the oil pressure to dissipate gradually. Do not allow oil to squirt or spray.

https://truckmanualshub.com/

MANIFOLDS

How to Set the Parking Brake System Pressure

Note: Be sure that the hydraulic oil level is visible in the inspection glass of the hydraulic tank.

1 Install a 0 to 1000 psi / 0 to 100 bar pressure gauge into test port 'TP' at the top of the primary function manifold. See 7-1 or 7-2, *Primary Function Manifold Components*.

2 Start the engine. Allow the engine to idle after warming the engine to operating temperature.

3 Without operating any machine controls, observe the reading on the pressure gauge.

⊙ Result: The pressure gauge reads 450 ±25 psi / 31 ±1.7 bar. The pump is functioning correctly.

⊠ Result: The pressure gauge fails to read 450 ±25 psi / 31 ±1.7 bar. The pressure setting needs to be adjusted. See Repair Procedure 6-1, *How to Adjust the Function Pump Pressure*.

4 Turn the machine off. Remove the pressure gauge from the test port.

⚠WARNING Bodily injury hazard. Spraying hydraulic oil can penetrate and burn skin. Loosen hydraulic connections very slowly to allow the oil pressure to dissipate gradually. Do not allow oil to squirt or spray.

5 Install a 0 to 1000 psi / 0 to 100 bar pressure gauge into test port 'TPB' at the top of the secondary function manifold. See 7-3, *Secondary Function Manifold Components*.

6 Start the engine. Allow the engine to idle.

⊙ Result: The pressure gauge reads 350 psi / 24.1. The pressure setting is correct. Proceed to step 11.

⊠ Result: The pressure gauge fails to read 350 psi / 24.1. The pressure setting needs to be adjusted. Proceed to step 7.

7 Turn the machine off. Hold the brake pressure reducing/relief valve with a wrench and remove the cap (schematic item PR4).

8 Adjust the internal hex socket. Turn it clockwise to increase the pressure or counterclockwise to decrease the pressure.

CAUTION Component damage hazard. Do not adjust the relief valve pressures higher than specifications.

9 Install the relief valve cap.

10 Repeat this procedure beginning with step 6.

11 Turn the machine off. Remove the pressure gauge from the test port.

⚠WARNING Bodily injury hazard. Spraying hydraulic oil can penetrate and burn skin. Loosen hydraulic connections very slowly to allow the oil pressure to dissipate gradually. Do not allow oil to squirt or spray.

https://truckmanualshub.com/

How to Set the Differential Lock/Joystick System Pressure

Note: Be sure that the hydraulic oil level is visible in the inspection glass of the hydraulic tank.

1 Install a 0 to 1000 psi / 0 to 100 bar pressure gauge into test port 'TP' at the top of the primary function manifold. See 7-1 or 7-2, *Primary Function Manifold Components*.

2 Start the engine. Allow the engine to idle after warming the engine to operating temperature.

3 Without operating any machine controls, observe the reading on the pressure gauge.

⊙ Result: The pressure gauge reads 450 ±25 psi / 31 ±1.7 bar. The pump is functioning correctly.

⊠ Result: The pressure gauge fails to read 450 ±25 psi / 31 ±1.7 bar. The pressure setting needs to be adjusted. See Repair Procedure 6-1, *How to Adjust the Function Pump Pressure*.

4 Turn the machine off. Remove the pressure gauge from the test port.

⚠WARNING Bodily injury hazard. Spraying hydraulic oil can penetrate and burn skin. Loosen hydraulic connections very slowly to allow the oil pressure to dissipate gradually. Do not allow oil to squirt or spray.

5 Install a 0 to 1000 psi / 0 to 100 bar pressure gauge into test port 'TJ' at the top of the secondary function manifold. See 7-3, *Secondary Function Manifold Components*.

6 Start the engine. Allow the engine to idle.

⊙ Result: The pressure gauge reads 400 psi / 27.5. The pressure setting is correct. Proceed to step 11.

⊠ Result: The pressure gauge fails to read 400 psi / 27.5 bar. The pressure setting needs to be adjusted. Proceed to step 7.

7 Turn the machine off. Hold the diff lock/joystick pressure reducing/relief valve with a wrench and remove the cap (schematic item PR1).

8 Adjust the internal hex socket. Turn it clockwise to increase the pressure or counterclockwise to decrease the pressure.

NOTICE Component damage hazard. Do not adjust the relief valve pressures higher than specifications.

9 Install the relief valve cap.

10 Repeat this procedure beginning with step 6.

11 Turn the machine off. Remove the pressure gauge from the test port.

⚠WARNING Bodily injury hazard. Spraying hydraulic oil can penetrate and burn skin. Loosen hydraulic connections very slowly to allow the oil pressure to dissipate gradually. Do not allow oil to squirt or spray.

https://truckmanualshub.com/

MANIFOLDS

How to Set the Rear Lock-up System Pressure

Note: Be sure that the hydraulic oil level is visible in the inspection glass of the hydraulic tank.

1 Install a 0 to 1000 psi / 0 to 100 bar pressure gauge into test port 'TP' at the top of the primary function manifold. See 7-1 or 7-2, *Primary Function Manifold Components*.

2 Start the engine. Allow the engine to idle after warming the engine to operating temperature.

3 Without operating any machine controls, observe the reading on the pressure gauge.

⊙ Result: The pressure gauge reads 450 ±25 psi / 31 ±1.7 bar. The pump is functioning correctly.

⊠ Result: The pressure gauge fails to read 450 ±25 psi / 31 ±1.7 bar. The pressure setting needs to be adjusted. See Repair Procedure 6-1, *How to Adjust the Function Pump Pressure*.

4 Turn the machine off. Remove the pressure gauge from the test port.

⚠WARNING Bodily injury hazard. Spraying hydraulic oil can penetrate and burn skin. Loosen hydraulic connections very slowly to allow the oil pressure to dissipate gradually. Do not allow oil to squirt or spray.

5 Install a 0 to 500 psi / 0 to 50 bar pressure gauge into test port 'TR' at the top of the secondary function manifold (See 7-3, *Secondary Function Manifold Components)*.

6 Start the engine. Allow the engine to idle.

⊙ Result: The pressure gauge reads 50 psi / 3.4 bar. The pressure setting is correct. Proceed to step 11.

⊠ Result: The pressure gauge fails to read 50 psi / 3.4 bar. The pressure setting needs to be adjusted. Proceed to step 7.

7 Turn the machine off. Hold the rear lockup pressure reducing/relief valve with a wrench and remove the cap (schematic item PR2).

8 Adjust the internal hex socket. Turn it clockwise to increase the pressure or counterclockwise to decrease the pressure.

NOTICE Component damage hazard. Do not adjust the relief valve pressures higher than specifications.

9 Install the relief valve cap.

10 Repeat this procedure beginning with step 6.

11 Turn the machine off. Remove the pressure gauge from the test port.

⚠WARNING Bodily injury hazard. Spraying hydraulic oil can penetrate and burn skin. Loosen hydraulic connections very slowly to allow the oil pressure to dissipate gradually. Do not allow oil to squirt or spray.

https://truckmanualshub.com/

7-6 Valve Coils

How to Test a Coil

A properly functioning coil provides an electromagnetic force which operates the solenoid valve. Critical to normal operation is continuity within the coil. Zero resistance or infinite resistance indicates the coil has failed.

Since coil resistance is sensitive to temperature, resistance values outside specification can produce erratic operation. When coil resistance decreases below specification, amperage increases. As resistance rises above specification, voltage increases.

While valves may operate when coil resistance is outside specification, maintaining coils within specification will help ensure proper valve function over a wide range of operating temperatures.

⚠WARNING Electrocution hazard. Contact with electrically charged circuits could result in death or serious injury. Remove all rings, watches and other jewelry.

Note: If the machine has been in operation, allow the coil to cool at least 3 hours before performing this test.

1 Tag and disconnect the wiring from the coil to be tested.

2 Test the coil resistance using a multimeter set to resistance (Ω). Refer to the Valve Coil Resistance Specification table.

Result: If the resistance is not within the adjusted specification, plus or minus 10%, replace the coil.

Valve Coil Resistance Specification

Note: The following coil resistance specifications are at an ambient temperature of 68°F / 20°C. As valve coil resistance is sensitive to changes in air temperature, the coil resistance will typically increase or decrease by 4% for each 18°F / 20°C that your air temperature increases or decreases from 68°F / 20°C.

Description	Specification
DO3 valve, 3 position 4 way 12V DC with diode (schematic items SVD1)	5.6Ω
Solenoid valve, 2 position 2 way 12V DC with diode (schematic items SV9)	8.8Ω
Solenoid valve, 2 position 3 way 12V DC with diode (schematic items SV5, SV7, SV6)	8.8Ω
Solenoid valve, 2 position 4 way 12V DC with diode (schematic items SV1, SV2, SV3, SV4)	8.8Ω

https://truckmanualshub.com/

MANIFOLDS

How to Test a Coil Diode

Genie incorporates spike suppressing diodes in all of its coils. Properly functioning coil diodes protect the electrical circuit by suppressing voltage spikes. Voltage spikes naturally occur within a function circuit following the interruption of electrical current to a coil. Faulty diodes can fail to protect the electrical system, resulting in a tripped circuit breaker or component damage.

⚠WARNING Electrocution hazard. Contact with electrically charged circuits could result in death or serious injury. Remove all rings, watches and other jewelry.

1 Test the coil for resistance. See 7-8, *How to Test a Coil.*

2 Connect a 10Ω resistor to the negative terminal of a known good 9V DC battery. Connect the other end of the resistor to a terminal on the coil.

Note: The battery should read 9V DC or more when measured across the terminals.

Resistor, 10Ω	
Genie part number	27287

3 Set a multimeter to read DC amperage.

Note: The multimeter, when set to read DC amperage, should be capable of reading up to 800 mA.

4 Connect the negative lead to the other terminal on the coil.

Note: If testing a single-terminal coil, connect the negative lead to the internal metallic ring at either end of the coil.

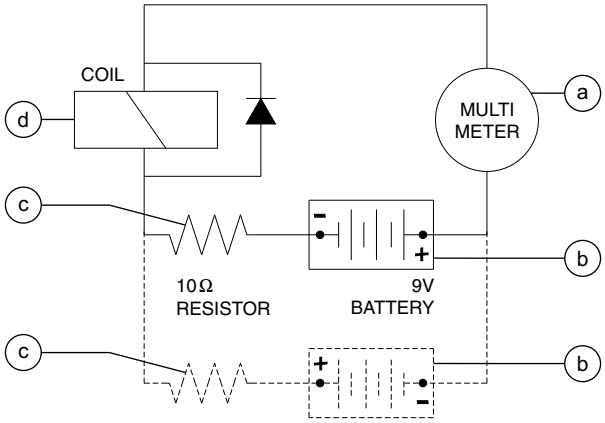

a multimeter
b 9V DC battery
c 10Ω resistor
d coil

Note: Dotted lines in illustration indicate a reversed connection as specified in step 6

5 Momentarily connect the positive lead from the multimeter to the positive terminal on the 9V battery. Note and record the current reading.

6 At the battery or coil terminals, reverse the connections. Note and record the current reading.

⊙ Result: Both current readings are greater than 0 mA and are different by a minimum of 20%. The coil is good.

⊠ Result: If one or both of the current readings are 0 mA, or if the two current readings do not differ by a minimum of 20%, the coil and/or its internal diode are faulty and the coil should be replaced.

https://truckmanualshub.com/

Axle

8-1 Axles

How to Remove the Axle

WARNING Bodily injury hazard. This procedure requires specific repair skills, lifting equipment and a suitable workshop. Attempting this procedure without these skills and tools could result in death or serious injury and significant component damage. Dealer service is required.

1 Chock the wheels.

2 Remove the fasteners securing the driveshaft to the transmission. Lower the end of the driveshaft to the ground.

3 Remove the fasteners securing the driveshaft to the axle. remove the driveshaft from the machine.

4 Tag and remove the hydraulic hoses from the axle.

WARNING Bodily injury hazard. Spraying hydraulic oil can penetrate and burn skin. Loosen hydraulic connections very slowly to allow the oil pressure to dissipate gradually. Do not allow oil to squirt or spray.

5 Loosen the lug nuts of both wheels on the axle to be removed. Do not remove the lug nuts.

6 Raise the end of the machine until the tires are off the ground. Place blocks under the chassis for support.

DANGER Crushing hazard. The chassis will fall if not properly supported.

7 Remove the lug nuts. Remove the tire and wheel assembly from both ends of the axle.

8 Support and secure the axle to an appropriate lifting device.

9 Remove the fasteners securing the sway cylinder rod-end pivot pin to the chassis.

10 Use a soft metal drift to remove the pivot pin.

11 Remove the fasteners securing the axle to the chassis. Remove the axle from the machine.

DANGER Crushing hazard. The axle will fall if not properly supported when the fasteners are removed from the machine.

Bolt torque specification	
Axle mounting bolts	380 ft-lbs 515 Nm

https://truckmanualshub.com/

This page intentionally left blank.

https://truckmanualshub.com/

Fault Codes

Observe and Obey:

- ☑ Troubleshooting and repair procedures shall be completed by a person trained and qualified on the repair of this machine.
- ☑ Immediately tag and remove from service a damaged or malfunctioning machine.
- ☑ Repair any machine damage or malfunction before operating the machine.
- ☑ Unless otherwise specified, perform each repair procedure with the machine in the following configuration:
  - Machine parked on a firm, level surface
  - Boom in the stowed position
  - Key switch in the off position with the key removed
  - Wheels chocked

Before Troubleshooting:

- ☑ Read, understand and obey the safety rules and operating instructions in the appropriate operator's manual on your machine before attempting any maintenance or repair procedure.
- ☑ Be sure that all necessary tools and test equipment are available and ready for use.
- ☑ Read each appropriate fault code thoroughly. Attempting shortcuts may produce hazardous conditions.
- ☑ Be aware of the following hazards and follow generally accepted safe workshop practices.

⚠WARNING Electrocution/burn hazard. Contact with electrically charged circuits could result in death or serious injury. Remove all rings, watches and other jewelry.

Note: Two persons will be required to safely perform some troubleshooting procedures.

https://truckmanualshub.com/

Diagnostic Display

When the engine Electronic Control Module (ECM) detects an abnormal operating condition, a fault code is immediately stored in the ECM memory.

The fault code is displayed on the LCD display which is located on the gauge cluster in the operator's compartment.

The gauge cluster also includes two warning lights.

They are an amber colored light which signals an abnormal engine condition which should be corrected as soon as possible and a red colored light which signals an engine condition which requires the operator to shut down the engine as soon as possible.

The ECM will, in some cases, automatically shut down the engine when the red light is displayed.

Active Fault Codes

Active Fault Codes will be displayed on the gauge cluster whenever a fault is detected. If multiple fault codes are detected, the fault codes will scroll on the display.

Active Codes vs Stored Codes

Active fault codes, indicating an engine condition or conditions which have not been corrected, are displayed at the moment the fault is detected.

Stored fault codes are the cumulative history of fault codes which the ECM has detected. These fault codes may be recalled by service personnel at a later time even if the condition which caused the engine fault has ceased to exist.

Note: Additional hardware will be necessary to access stored codes.

Decoding Fault Codes

The Suspect Parameter Number (SPN) and the Failure Mode Identifier (FMI), when combined, are the basis for an engine fault code. The SPN number indicates the affected component; the FMI number reveals the type of failure that has occurred. Comparing the combination of numbers to the fault code chart on the following pages will help to determine the exact engine fault and a corrective course of action. For additional information, refer to the engine operator's manual which came with your machine.

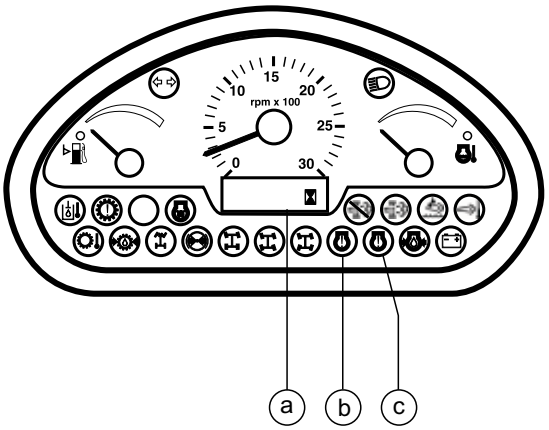

Gauge Cluster

a LCD screen
b red stop engine light
c amber warning light

https://truckmanualshub.com/

Deutz Engine Fault Codes

SPN = Suspect Parameter Number
FMI = Failure Mode Identifier

SPN	FMI	Description
29	3	Hand throttle error, short circuit to battery on idle validation switch or sensor error
	4	Hand throttle error, short circuit to ground on idle validation switch or sensor error
51	3	Temperature to high for power stage of EGR-Valve (2.9;3.6) / Throttle-Valve (6.1,7.8) or position sensor error
	4	Open load actuator EGR-Valve (2.9;3.6) / Throttle-Valve (6.1,7.8) or position sensor error
	5	Target range to low for actuator EGR-Valve (2.9;3.6) or Throttle-Valve (6.1,7.8)
	6	Target range to high for actuator EGR-Valve (2.9;3.6) or Throttle-Valve (6.1,7.8)
	7	The actuator position for EGR-Valve (2.9,3.6) or Throttle-Valve (6.1,7.8) is not plausible
	12	Open load actuator EGR-Valve (2.9;3.6) or Throttle-Valve (6.1,7.8)
91	3	Target range to high for accelerator pedal sensor
	4	Target range to low for accelerator pedal sensor
	8	PWM signal accelerator pedal out of target range, to high
	11	Plausibility check between APP1 and APP2 or APP1 and idle switch
94	1	Low fuel pressure is out of target range; system reaction generated
	3	Target range to high for low fuel pressure sensor
	4	Target range to low for low fuel pressure sensor
97	3	Water in Fuel Sensor - Short Circuit to U-Batt
	12	Water level in fuel prefilter above maximum value
100	0	High oil pressure; system reaction generated
	1	Low oil pressure; system reaction generated
	3	Target range to high for oil pressure sensor
	4	Target range to low for oil pressure sensor
108	3	Target range to high for ambient air pressure sensor
	4	Target range to low for ambient air pressure sensor
110	0	Coolant temperature is out of target range; system reaction generated
	3	Target range to high for coolant temperature sensor
	4	Target range to low for coolant temperature sensor

https://truckmanualshub.com/

Deutz Engine Fault Codes

SPN = Suspect Parameter Number
FMI = Failure Mode Identifier

SPN	FMI	Description
111	1	Coolant level underneath the allowed minimum
157	3	Target range to high for rail pressure sensor
	4	Target range to low for rail pressure sensor
168	0	Battery voltage is out of the target range (to high)
	1	Battery voltage is out of the target range (to low)
	2	Battery voltage is out of the target range; warning condition is generated
	3	Target range to high for battery voltage sensor
	4	Target range to low for battery voltage sensor
172	2	Ambient air temperature sensor value is not plausible
	3	Target range to high for intake air sensor
	4	Target range to low for intake air sensor
174	0	Low fuel temperature is out of target range; system reaction generated
175	0	Oil temperature is out of target range; system reaction generated
	1	Physical Range Check low for Oil Temperature
	2	Oil temperature value is not plausible
	3	Target range to high for oil temperature sensor
	4	Target range to low for oil temperature sensor
190	0	Engine speed target range exceeded; FOC-range 1
	2	Speed sensor of crankshaft and camshaft signals are out of phase
	8	Speed sensor signal not plausible
	11	Engine speed target range exceeded; FOC-range 2
	12	Speed sensor no signal
	14	Engine speed target range exceeded; overrun mode
412	0	Differential pressure sensor value (AGR) out of target range, to high
	1	Differential pressure sensor value (AGR) out of target range, to low
	3	SRC high for EGR cooler downstream temperature sensor
	4	SRC low for EGR cooler downstream temperature sensor
520	9	Timeout Error of CAN-Receive-Frame TSC1TR
597	2	Break Lever Main switch and Break Lever Redundancy switch status not plausible

https://truckmanualshub.com/

Deutz Engine Fault Codes

SPN = Suspect Parameter Number
FMI = Failure Mode Identifier

SPN	FMI	Description
624	3	Short circuit to battery on SVS lamp
	4	Short circuit to ground on SVS lamp
	5	No load error SVS lamp
	12	Temperature to high for power stage of SVS lamp
630	12	Access error EEPROM memory
639	14	CAN-Bus 0 "BusOff"-Status
651	3	General short circuit injector 1
	5	Interruption of electric connection injector 1
652	3	General short circuit injector 2
	5	Interruption of electric connection injector 2
653	3	General short circuit injector 3
	5	Interruption of electric connection injector 3
654	3	General short circuit injector 4
	5	Interruption of electric connection injector 4
655	3	General short circuit injector 5
	5	Interruption of electric connection injector 5
656	3	General short circuit injector 6
	5	Interruption of electric connection injector 6
677	3	Short circuit on high side starter relay
	4	Short circuit on low side starter relay
	5	No load error starter relay
	12	Over load ECU power stage for Starter (overtemp.)
729	5	Air Heater not connected.
1079	13	Sensor supply voltage monitor error
1109	2	Engine off request ignored

https://truckmanualshub.com/

Deutz Engine Fault Codes

SPN = Suspect Parameter Number
FMI = Failure Mode Identifier

SPN	FMI	Description
1180	3	Target range to high for exhaust gas temperature sensor
	4	Target range to low for exhaust gas temperature sensor
	11	Exhaust gas temperature value before turbine (upstream) not plausible
1231	14	CAN-Bus 1 "BusOff"-Status
1235	14	CAN-Bus 2 "BusOff"-Status
1761	1	Urea tank temperature sensor value is out of the target range (to low); warning condition is generated
3031	0	Urea tank temperature sensor value out of the target range (to high)
	1	Urea tank temperature sensor value is out of the target range (to low); warning condition is generated
3224	1	Plausibility error Min for NOx sensor upstream of SCR Cat
	9	Timeout Error of CAN-Receive-Frame AT1IG1Vol; AT1O1; AT1OG1Vol
3234	9	Timeout Error of CAN-Receive-Frame AT1IG1Vol; AT1O1; AT1OG1Vol
	11	Nox sensor value downstream not plausible "stuck in range"
3241	1	Target range to low for SCR catalyst upstream temperature sensor
3251	0	Differential pressure sensor value (DPF) out of target range, to high
	1	Differential pressure sensor value (DPF) out of target range, to low
3253	2	Differential pressure sensor signal (DPF) not plausible
	3	Target range to high for differential pressure sensor (DPF)
	4	Target range to low for differential pressure sensor (DPF)
3361	3	Short circuit to battery at powerstage of Urea dosing valve
	4	Short circuit to ground at powerstage of Urea dosing valve
	7	Dosing valve blocked
3532	3	Target range to high for urea tank level sensor
	4	Target range to low for urea tank level sensor
4243	11	Urea heating procedure not successful
4334	0	Target range to high for urea pump module pressure sensor before pressure build up
	1	Physical range check low for urea pump module pressure sensor
4343	11	General pressure check error (SCR)
4345	11	General backflow line plausibility error (SCR)

https://truckmanualshub.com/

Deutz Engine Fault Codes

SPN = Suspect Parameter Number
FMI = Failure Mode Identifier

SPN	FMI	Description
4360	0	Urea catalyst upstream temperature out of the target range (to high)
	1	Urea catalyst upstream temperature out of the target range (to low)
4361	3	Target range to high for urea catalyst exhaust gas temperature sensor upstream
	4	Target range to low for urea catalyst exhaust gas temperature sensor upstream
4365	0	Urea tank temperature too high
	3	Short circuit to battery error on urea tank sensor
	4	Short circuit to ground error on urea tank sensor
4366	5	SCR main relay short circuit or open load
4374	13	Pressure stabilization error dosing valve (SCR)
4375	3	Short circuit to battery on powerstage for urea pump motor
	4	Short circuit to ground on powerstage for urea pump motor
	5	No load error on powerstage for urea pump motor
4376	3	Short circuit to battery on SCR reversal valve
	4	Short circuit to ground on SCR reversal valve
	5	No load error SCR reversal valve
4765	0	Exhaust gas temperature sensor value upstream (DOC) out of target range, to high
	1	Exhaust gas temperature sensor value upstream (DOC) out of target range, to low
4766	0	Exhaust gas temperature sensor value downstream (DOC) out of target range, to high
	1	Exhaust gas temperature sensor value downstream (DOC) out of target range, to low
4768	2	Exhaust gas temperature sensor signal upstream (DOC) not plausible
	3	Exhaust gas temperature sensor voltage to high
	4	Exhaust gas temperature sensor voltage to low
4769	2	Exhaust gas temperature sensor signal downstream (DOC) not plausible
	3	Target range to high for exhaust gas temperature sensor downstream (DOC)
	4	Target range to low for exhaust gas temperature sensor downstream (DOC)

https://truckmanualshub.com/

Deutz Engine Fault Codes

SPN = Suspect Parameter Number
FMI = Failure Mode Identifier

SPN	FMI	Description
523006	3	Short circuit to battery on Controller Mode Switch (Engine Speed or Fuel-Delivery Control)
	4	Short circuit to ground on Controller Mode Switch (Engine Speed or Fuel-Delivery Control)
523009	9	Incidence of PRV open occurs too often
	10	Opening period of PRV is too long or opening occurs to often
523212	9	Timeout Error of CAN-Receive-Frame ComEngPrt
523350	4	Short circuit injector cylinder bank 1
523352	4	Short circuit injector cylinder bank 2
523354	12	Injector high current output defect
523450	2	Multiple Stage Switch constant speed Voltage value to the switch setting not plausible
	3	Short circuit to battery on Multiple Stage Switch constant speed
	4	Short circuit to ground on Multiple Stage Switch constant speed
523451	2	Multiple Stage Switch engine speed control parameter Voltage value to the switch setting not plausible
	3	Short circuit to battery on Multiple Stage Switch engine speed control parameter
	4	Short circuit to ground on Multiple Stage Switch engine speed control parameter
523452	2	Multiple Stage Switch engine torque limitation curve Voltage value to the switch setting not plausible
	3	Short circuit to battery on Multiple Stage Switch engine torque limitation curve
	4	Short circuit to ground on Multiple Stage Switch engine torque limitation curve
523470	2	PRV forced to open
	7	Maximum rail pressure exceeded (PRV)
	11	Rail pressure out of tolerance range
	12	Open PRV; system reaction generated
	14	Pressure relief valve (PRV) is open
523550	12	T50 Starter switch too long actively
523601	13	Sensor supply voltage 3 error
523605	9	Timeout Error of CAN-Receive-Frame TSC1AE; TSC1AR
523612	12	Internal ECU monitoring detection reported error
	14	Softwarereset CPU

https://truckmanualshub.com/

Deutz Engine Fault Codes

SPN = Suspect Parameter Number
FMI = Failure Mode Identifier

SPN	FMI	Description
523613	0	Rail pressure is out of target range
	1	Minimum rail pressure exceeded (Metering Unit)
	2	Setpoint of metering unit not plausible
523615	3	Short circuit to battery Metering Unit
	4	Short circuit to ground Metering Unit
	5	Open load of metering unit
	12	Temperature to high for power stage of fuel metering unit
523632	0	Pressure overload at SCR-System
	1	Error pressure build-up SCR
	3	Voltage of urea pump module pressure sensor is out of the target range (to high)
	4	Voltage of urea pump module pressure sensor is out of the target range (to low)
	16	Pump pressure SCR during metering to high
	18	Pump pressure SCR during metering to low
523633	11	Nox conversion rate insufficient (SCR-Cat defect, bad AdBule quality)
523698	11	Shutoff request from supervisory monitoring
523718	5	Urea Heater Relay Error - Relay not connected
523720	2	Plausibility error urea supply module heater temperature sensor
	8	Supply Module temperature Duty cycle in failure range
523721	2	plausibility error urea supply module temperature sensor (normal condition)
	8	Supply Module temperature Duty cycle in failure range
	11	Supply Module Temperature measurement not available
523788	12	Timeout message send TrbCH
523803	9	Timeout Error of CAN-Receive-Frame RxEngPres
523867	12	Timeout Error of CAN-Transmit-Frame UAA1 on CAN A
523895	13	check of missing injector adjustment value programming (IMA)
523896	13	check of missing injector adjustment value programming (IMA)
523897	13	check of missing injector adjustment value programming (IMA)
523898	13	check of missing injector adjustment value programming (IMA)

https://truckmanualshub.com/

Deutz Engine Fault Codes

SPN = Suspect Parameter Number
FMI = Failure Mode Identifier

SPN	FMI	Description
523899	13	check of missing injector adjustment value programming (IMA)
523900	13	check of missing injector adjustment value programming (IMA)
523910	14	Air pump doesn't achieved air mass flow setpoint
523911	3	Short circuit to battery on a powerstage of burner dosing valve (DV2)
	4	Short circuit to ground on a powerstage of burner dosing valve (DV2)
	11	Short circuit error in the high side powerstage of burner dosing valve (DV2)
523912	0	Burner dosing valve (DV2) pressure downstream to high, regeneration disabled
	1	Burner dosing valve (DV2) pressure downstream to low, regeneration disabled
	2	Burner dosing valve (DV2) pressure sensor signal downstream not plausible
	3	Target range to high for Burner dosing valve (DV2) pressure sensor downstream
	4	Target range to low for Burner dosing valve (DV2) pressure sensor downstream
523913	3	Voltage of glow plug control diagnostic line to high
	4	Voltage of glow plug control diagnostic line to low
523914	3	Short circuit to battery on glow plug control
	4	Short circuit to ground on glow plug control
	5	Open load glow plug control
	11	Internal error glow plug control
523915	3	Short circuit to battery on a powerstage of HCI dosing valve (DV1)
	4	Short circuit to ground on a powerstage of HCI dosing valve (DV1)
	11	Short circuit in the high side powerstage of HCI dosing valve (DV1)
523916	0	HCI dosing valve (DV1) pressure value downstream out of target range, to high
	1	HCI dosing valve (DV1) pressure value downstream out of target range, to low
	2	HCI dosing valve (DV1) pressure sensor signal downstream not plausible
	3	Target range to high for HCI dosing valve (DV1) pressure sensor downstream
	4	Target range to low for HCI dosing valve (DV1) pressure sensor downstream
523917	0	Pressure sensor value upstream DV1 & DV2 out fo target range, to high
	1	Pressure sensor value upstream DV1 & DV2 out fo target range, to low
	2	Pressure sensor signal upstream DV1 & DV2 not plausible
	3	Target range to high for pressure sensor upstream DV1 & DV2
	4	Target range to low for pressure sensor upstream DV1 & DV2

https://truckmanualshub.com/

Deutz Engine Fault Codes

SPN = Suspect Parameter Number
FMI = Failure Mode Identifier

SPN	FMI	Description
523918	0	Temperature sensor value upstream DV1 & DV2 out of target range, to high
	1	Temperature sensor value upstream DV1 & DV2 out of target range, to low
	2	Temperature sensor signal upstream DV1 & DV2 not plausible
	3	Temperature sensor voltage upstream DV1 & DV2 to high
	4	Temperature sensor voltage upstream DV1 & DV2 to low
523919	0	Airpump pressure sensor value out of target range, to high
	1	Airpump pressure sensor value out of target range, to low
	2	Airpump pressure sensor signal not plausible
	3	Target range to high for airpump pressure sensor
	4	Target range to low for airpump pressure sensor
523920	0	Exhaust gas back pressure sensor value out of target range, to high
	1	Exhaust gas back pressure sensor value out of target range, to low
	2	Exhaust gas back pressure sensor signal not plausible
	3	Target range to high for exhaust gas back pressure sensor
	4	Target range to low for exhaust gas back pressure sensor
523921	0	Burner temperature sensor value out of target range, to high
	1	Burner temperature sensor value out of target range, to low
	3	Burner Temperature sensor voltage to high
	4	Burner Temperature sensor voltage to low
	11	Burner temperature sensor signal not plausible
523922	3	Short circuit to battery on shut of valve
	4	Short circuit to ground on shut of valve
	5	Open load shut off valve
	12	Temperature to high for shut of valve
523935	12	Timeout Error of CAN-Receive-Frame EE3CVOL1; EEC3VOL2
523946	0	Zerofuel calibration during low idle injector 0 out of target range (to high)
	1	Zerofuel calibration during low idle injector 0 out of target range (to low)

https://truckmanualshub.com/

Deutz Engine Fault Codes

SPN = Suspect Parameter Number
FMI = Failure Mode Identifier

SPN	FMI	Description
523947	0	Zerofuel calibration during low idle injector 1 out of target range (to high)
	1	Zerofuel calibration during low idle injector 1 out of target range (to low)
523948	0	Zerofuel calibration during low idle injector 2 out of target range (to high)
	1	Zerofuel calibration during low idle injector 2 out of target range (to low)
523949	0	Zerofuel calibration during low idle injector 3 out of target range (to high)
	1	Zerofuel calibration during low idle injector 3 out of target range (to low)
523950	0	Zerofuel calibration during low idle injector 4 out of target range (to high)
	1	Zerofuel calibration during low idle injector 4 out of target range (to low)
523951	0	Zerofuel calibration during low idle injector 5 out of target range (to high)
	1	Zerofuel calibration during low idle injector 5 out of target range (to low)
523973	14	Tamper detection derating timer below limit 1
523974	14	Tamper detection derating timer below limit 2
523975	14	Urea quality derating timer below limit 1
523976	14	Urea qulaity derating timer below limit 2
523977	14	Urea tank level derating timer below limit 1
523978	14	Urea tank level derating timer below limit 2
523980	14	Bad quality of reduction agent detected
524013	7	Burner flame unintentional killed
524018	14	DPF wasn't regenerated, power reduction phase 1 (manuell regeneration request)
524020	14	Engine power reduction due to low lambda
524022	14	DPF wasn't regenerated, power reduction phase 2 (manuell regeneration request)
524023	14	DPF wasn't regenerated, warning condition (manuell regeneration mode)

https://truckmanualshub.com/

Perkins 1104D Engine Fault Codes

SPN = Suspect Parameter Number
FMI = Failure Mode Identifier

SPN	FMI	Description
91	2	Incorrect throttle switch inputs
	3	Throttle position sensor: voltage above normal or shorted high
	4	Throttle position sensor: voltage below normal or shorted low
	8	Throttle position sensor: abnormal frequency, pulse width or period
100	3	Engine oil pressure sensor: voltage above normal or shorted high
	4	Engine oil pressure sensor :voltage below normal or shorted low
102	3	Boost pressure sensor voltage: voltage above normal or shorted high
	4	Boost pressure sensor voltage: voltage below normal or shorted low
	10	No 5V to sender
105	3	Intake manifold temperature sensor: temperature above normal or shorted high
	4	Intake manifold temperature sensor: temperature below normal or shorted low
105	3	Intake manifold air temperature open/short to battery positive (+)
	4	Intake manifold air temperature short to ground
110	3	Engine coolant temperature open/short to battery positive (+)
	4	Engine coolant temperature short to ground
157	3	Fuel rail pressure open/short to battery positive (+)
	4	Fuel rail pressure short to ground
168	0	System voltage high
	1	System voltage low
	2	ECM battery power intermittent/erratic
172	3	Air inlet temperature voltage high
	4	Air inlet temperature voltage low
174	2	Fuel temperature sensor: data erratic/intermittent or incorrect
190	8	Engine speed signal abnormal
	15	Engine speed: overspeed WARNING
190	0	Engine overspeed
626	5	Ether start aid current low
	6	Ether start aid current high
630	2	System parameters incorrect
631	2	Personality module mismatch
637	11	Engine timing calibration invalid

For further engine fault code troubleshooting and diagnostic information, refer to the *Perkins 1100 Troubleshooting Manual* (Perkins part number SENR9982-01).

Perkins 1100 Troubleshooting Manual
Genie part number 123583

https://truckmanualshub.com/

Perkins 1104D Engine Fault Codes

SPN = Suspect Parameter Number
FMI = Failure Mode Identifier

SPN	FMI	Description
637	139	Engine timing calibration required
639	9	J1939 data link communications
	12	J1939 data link malfunction
651	2	Cylinder #1 injector data incorrect
	5	Cylinder #1 injector open circuit
	6	Cylinder #1 injector short
	7	Cylinder #1 injector not responding
652	2	Cylinder #2 injector data incorrect
	5	Cylinder #2 injector open circuit
	6	Cylinder #2 injector short
	7	Cylinder #2 injector not responding
653	2	Cylinder #3 injector data incorrect
	5	Cylinder #3 injector open circuit
	6	Cylinder #3 injector short
	7	Cylinder #3 injector not responding
654	2	Cylinder #4 injector data incorrect
	5	Cylinder #4 injector open circuit
	6	Cylinder #4 injector short
	7	Cylinder #4 injector not responding
678	3	8V DC supply short to battery positive (+)
	4	8V DC supply shorted to ground
723	8	Secondary engine speed signal abnormal
1188	5	Turbo wastegate drive current low
1196	9	Machine security system module non-communication
1347	5	Fuel rail pump output current low
	6	Fuel rail pump output current high
	7	Fuel rail pressure valve solenoid not responding
2882	2	Mode selector switch: data erratic/intermittent or incorrect
3509	3	5V DC power supply sensor short to battery positive (+)
3509	4	5V DC power supply sensor short to ground

For further engine fault code troubleshooting and diagnostic information, refer to the *Perkins 1100 Troubleshooting Manual* (Perkins part number SENR9982-01).

Perkins 1100 Troubleshooting Manual
Genie part number 123583

https://truckmanualshub.com/

Schematics

Observe and Obey:

- ☑ Troubleshooting and repair procedures shall be completed by a person trained and qualified on the repair of this machine.
- ☑ Immediately tag and remove from service a damaged or malfunctioning machine.
- ☑ Repair any machine damage or malfunction before operating the machine.

Before Troubleshooting:

- ☑ Read, understand and obey the safety rules and operating instructions in the appropriate operator's manual on your machine.
- ☑ Be sure that all necessary tools and test equipment are available and ready for use.

About This Section

There are two groups of schematics in this section. An illustration legend precedes each group of drawings.

Electrical Schematics

WARNING Electrocution hazard. Contact with electrically charged circuits could result in death or serious injury. Remove all rings, watches and other jewelry.

Hydraulic Schematics

WARNING Bodily injury hazard. Spraying hydraulic oil can penetrate and burn skin. Loosen hydraulic connections very slowly to allow the oil pressure to dissipate gradually. Do not allow oil to squirt or spray.

General Repair Process

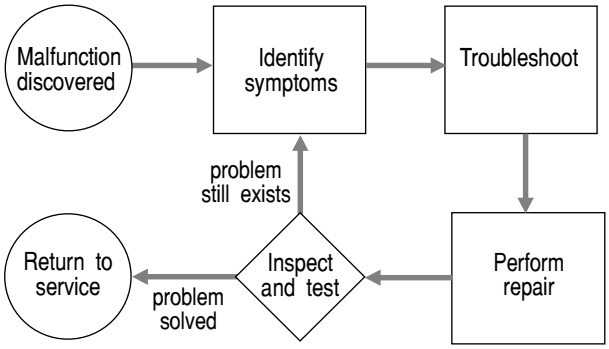

https://truckmanualshub.com/

Fuse Panel Layout

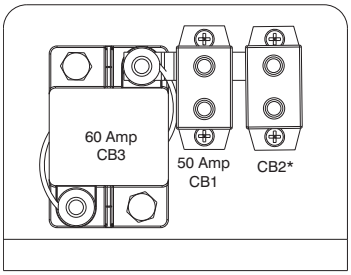

Circuit Breakers located on the Battery Tray

CB1 and CB3 on all engines

CB2 30A
Deutz T3 or T4i
Perkins T3
30A

CB2 50A
Perkins T4i

CB1- Telehandler Control System Power
CB2- Engine Power / ECM
CB3- Glow Plugs

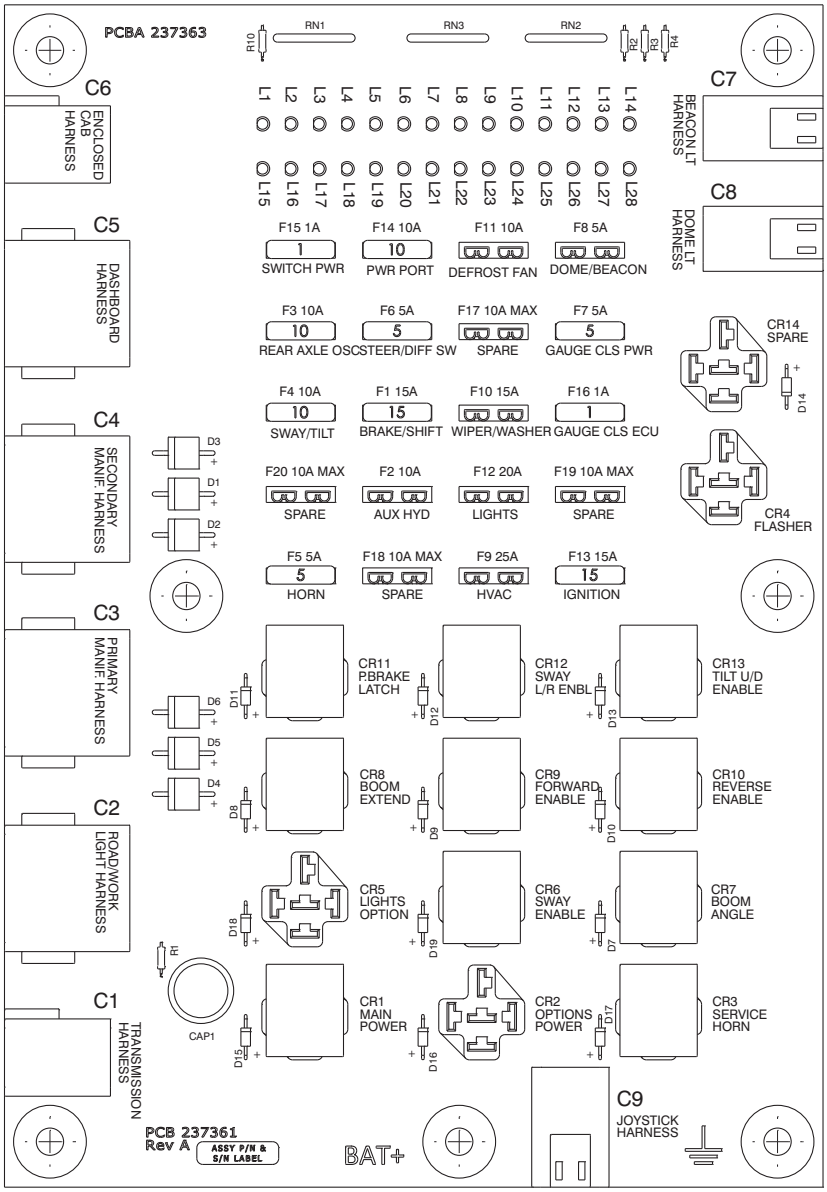

PCB Board Fuse Panel located in the Cab

https://truckmanualshub.com/

Electrical Component Legend

Electrical Component & Wire Color Abbreviation Legend

ALT	Alternator		
B	Battery		
	B1	Main Battery	
CB	Circuit Breaker		
	CB1	50 Amp Circuit Breaker	
	CB2	30 Amp Circuit Breaker	
	CB3	60 Amp Circuit Breaker	
C	Capacitor		
	C1	4700 uf	
CR	Control Relay		
	CR1	Main Power	
	CR2	Options Power	
	CR3	Service Horn	
	CR4	Flasher	
	CR5	Lights Option	
	CR6	Sway Enable	
	CR7	Boom Angle	
	CR8	Boom Extend	
	CR9	Forward Enable	
	CR10	Reverse Enable	
	CR11	Parking Brake Latch	
	CR12	Sway Left/Right Enable	
	CR13	Tilt Up/Down Enable	
	CR15	HVAC Blower L	
	CR16	HVAC Blower M	
	CR17	HVAC Blower H	
D	Diode		
EMS	Engine Management System		
F	Fuse		
	F1	15 Amp - Break/Shift	
	F2	10 Amp - Aux Hydraulics	
	F3	10 Amp – Rear Axle Oscillate	
	F4	10 Amp – Sway/Tilt	
	F5	5 Amp - Horn	
	F6	5 Amp - Steer/Differential Switch	
	F7	5 Amp - Gauge Cluster Power	
	F8	5 Amp - Dome/Beacon Light	
	F9	25 Amp – HVAC	
	F10	15 Amp – Windshield Wiper/Washer	
	F11	10 Amp – Defrost Fan	
	F12	20 Amp – Lights	
	F13	15 Amp – Ignition	
	F14	10 Amp – Power Port	
	F15	1 Amp - Switch Power	
	F16	1 Amp – Gauge Cluster ECU	
	F17	Not Used	
	F18	Not Used	
	F21	HVAC Control Panel	
L	LED Light		
	L1	Ignition Power	ON
	L2	Options Power Relay	ON
	L3	Horn Relay	ON
	L4	Turn Signal	ON
	L5	Road Lights, Work Lights	ON
	L6	Sway Enable Coil Power	ON
	L7	Boom Angle	ON
	L8	Boom Extend	ON
	L9	Brake Pressure	ON
	L10	Backup Light, Alarm	ON
	L11	Parking Brake Latch	ON
	L12	Sway Enable	ON
	L13	Tilt Circuit Power	ON
	L14	Horn Power	ON
	L15	Cab, Tail Light Power	ON
	L16	Rear Axle Float Coil Power	ON
	L17	Rr Ax Fast Power (GTH1056)	ON
	L18	Parking Brake Power	ON
	L19	Forward Coil Power	ON
	L20	Reverse Coil Power	ON
	L21	PB Release Coil Power	ON
	L22	Sway L/R Enable Coil Power	ON
	L23	Tilt U/D Enable Coil Power	ON
	L24	Forward Shift	ON
	L25	Parking Brake Release	OFF
	L26	Brake Light Power	ON
	L27	Hazard Power	ON
	L28	Not Used	
M	Motor		
R	Resistor		
S	Switch		
	S1	Key Start Switch	
	S2	Parking Brake Switch	
	S3	Boom Angle Switch	
	S4	Boom Extend Switch	
	S5	Parking Brake Pressure Switch	
	S6	Service Brake Pressure Switch	
	S7	Sway Enable Pressure Switch	
	S8	Sway Enable Switch	
	S9	Tilt Enable Switch	
	S10	Steer Select Switch	
	S11	Left Stabilizer Switch	
	S12	Right Stabilizer Switch	
	S13	Differential Lock Switch	
	S14	Auxiliary Cont. Switch	
	S15	Horn Switch	
	S16	Brake Light Pressure Switch	
	S17A	Windshield Wiper Motor Switch	
	S17B	Windshield Washer Switch	
	S18A	Windshield Wiper Motor Switch	
	S18B	Windshield Washer Switch	
	S19	Dome Light Switch	
	S21	Enclosed Cab Fan Switch	
	S22	Road / Work Light Switch	
	S23	Brake Pressure Warning Switch	
	S24	Transmission Oil Pressure Switch	
	S25	Transmission Oil Temp. Switch	

https://truckmanualshub.com/

Electrical Component Legend

Electrical Component & Wire Color Abbreviation Legend

TP	Throttle Pedal	
TSS	Turn Signal Shifter	
Y	Valve Coil	
	Y1	Sway Left Enable SV1
	Y2	Tilt Up Enable SV2
	Y3	Sway Right Enable SV3
	Y4	Tilt Down Enable SV4
	Y5	Parking Brake Release SV5
	Y6	Differential Lock SV6
	Y7	Rear Axle Float SV7
	Y8	Rear Axle Fast SV8
	Y9	Sway Enable SV9
	YA	Auxiliary A
	YB	Auxiliary B
	YD	D Transmission
	YE	E Transmission
	YF	Transmission Forward
	YR	Transmission Reverse
	YD1A	4Wheel Steer SVD1A
	YD1B	Crab Steer SVD1B
	YLD	Left Stabilizer Down
	YLU	Left Stabilizer Up
	YRD	Right Stabilizer Down
	YRU	Right Stabilizer Up

Wire Color Legend

BL	Blue
BL/BK	Blue/Black
BL/RD	Blue/Red
BL/WH	Blue/White
BK	Black
BK/RD	Black/Red
BK/WH	Black/White
BK/YL	Black/Yellow
BR	Brown
GR	Green
GR/BK	Green/Black
GR/WH	Green/White
RD	Red
RD/BK	Red/Black
RD/WH	Red/White
OR	Orange
OR/BK	Orange/Black
OR/RD	Orange/Red
WH	White
WH/BK	White/Black
WH/RD	White/Red

https://truckmanualshub.com/

Telematics Connector Legend

Telematics Connector Pin Legend

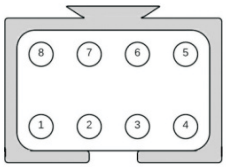

Genie installed Telematics connector is wired with an Active High digital input

A Deutsch plug p/n DT06-08SA mates with the Genie telematics connector

Pin	Circuit Type	Circuit Properties	Genie Machine Function(s)	Telematics Use Case
1	System Power	12 VDC 5 Amp Max. allowed draw	Battery Positive – constant power	Supply power to device
2	System Ground	0 VDC	Battery Negative	Device GND
3	Digital Output 1	12 VDC	Engine Run Hour meter ***12V = engine run, 0V = engine off**	Monitor Engine Hours
4	Digital Output 2	12 VDC	Boom Angle Status ***0V = boom <55^0, 12V = boom >55^0**	Monitor machine utilization
5	Digital Output 3	12 VDC	Parking Brake ***12V = active, 0V = inactive**	Monitor machine utilization
6	Digital Input 1	12 VDC	Remote Machine Disable **** Configurable Active High or Active Low via wiring at the Disable Relay**	Remote Engine Shutdown
7	CAN HIGH	J1939	Databus HIGH J1939	Receive J1939 Engine data
8	CAN LOW	J1939	Databus LOW J1939	Receive J1939 Engine data

Remote Disable Relay Configuration

Telematic device software should monitor that Pin 3 is at 0V before activating Disable Relay

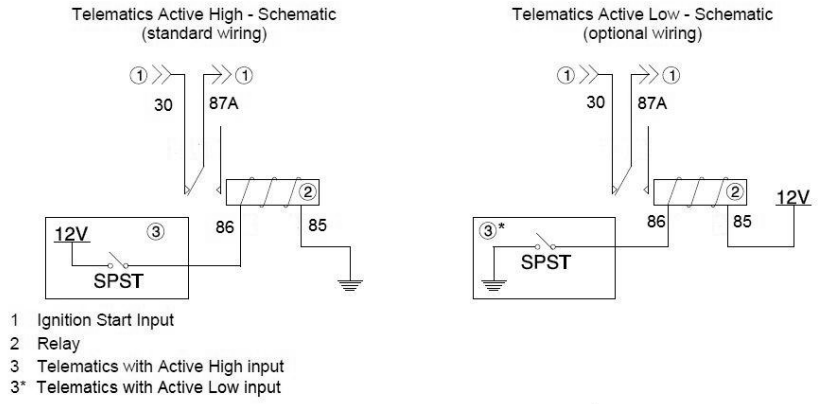

Wireless Certifications

Telematic device(s) should comply with specific wireless carrier certifications where applicable and comply with the following:

N. America – PTCRB, FCC/IC

Europe – CE, R&TTE

https://truckmanualshub.com/

Electrical and Hydraulic Symbols Legend

Electrical Schematic Symbols

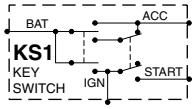

Key switch

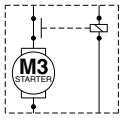

Engine start

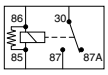

Control relay

Alternator

Fuse

Circuit breaker

Horn or Alarm

Light

Valve coil with diode

Valve coil

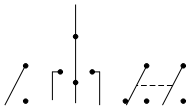

Switch

Diode

Proximity switch

Limit switch

Temperature switch

Fuel level sender

Battery

Pressure switch

Hydraulic Schematic Symbols

Pressure switch

Hydraulic cylinder

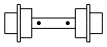

Axle

Orifice

Adjustable orifice

Filter

Check valve

Flow regulator

Relief valve

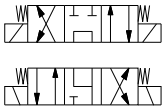

3 position 4 way solenoid valve

2 position 3 way solenoid valve

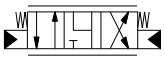

2 position 3 way directional valve, pilot-operated

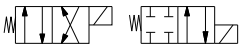

2 position 4 way solenoid valve

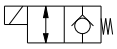

2 position 2 way solenoid valve

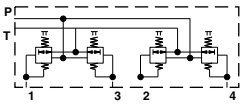

Joystick

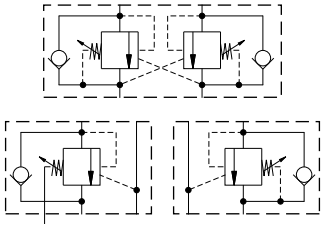

Counterbalance valve

https://truckmanualshub.com/

Harness Map - Control System Power Single Joystick

https://truckmanualshub.com/

Harness Map - Control System Power Single Joystick

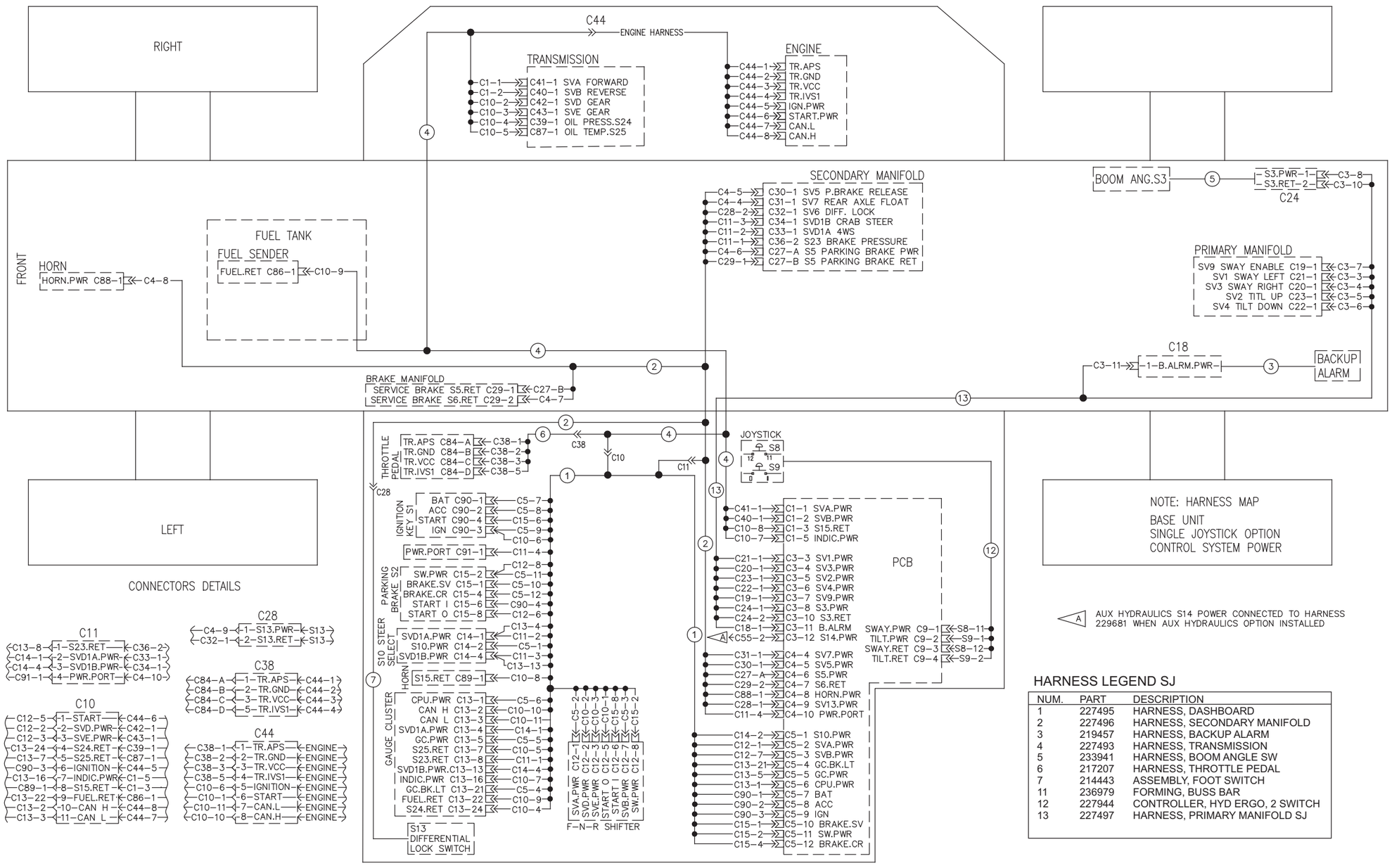

HARNESS LEGEND SJ

NUM.	PART	DESCRIPTION
1	227495	HARNESS, DASHBOARD
2	227496	HARNESS, SECONDARY MANIFOLD
3	219457	HARNESS, BACKUP ALARM
4	227493	HARNESS, TRANSMISSION
5	233941	HARNESS, BOOM ANGLE SW
6	217207	HARNESS, THROTTLE PEDAL
7	214443	ASSEMBLY, FOOT SWITCH
11	236979	FORMING, BUSS BAR
12	227944	CONTROLLER, HYD ERGO, 2 SWITCH
13	227497	HARNESS, PRIMARY MANIFOLD SJ

ES0459D

https://truckmanualshub.com/

Harness Map - Control System Ground Single Joystick

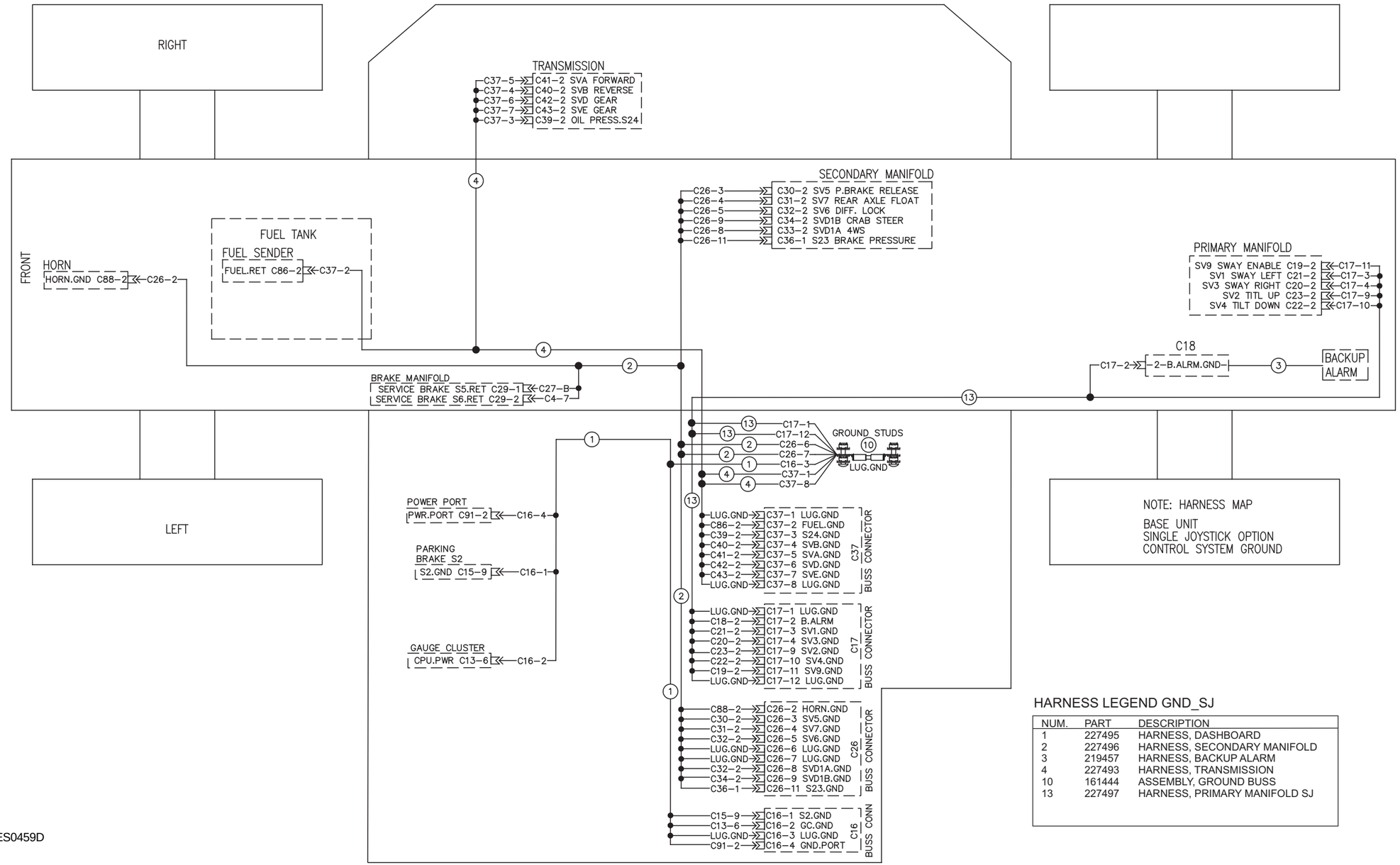

ES0459D

HARNESS LEGEND GND_SJ

NUM.	PART	DESCRIPTION
1	227495	HARNESS, DASHBOARD
2	227496	HARNESS, SECONDARY MANIFOLD
3	219457	HARNESS, BACKUP ALARM
4	227493	HARNESS, TRANSMISSION
10	161444	ASSEMBLY, GROUND BUSS
13	227497	HARNESS, PRIMARY MANIFOLD SJ

https://truckmanualshub.com/

Harness Map - Control System Ground Single Joystick

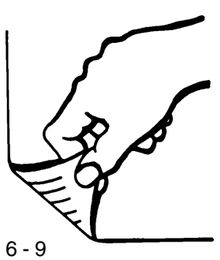

https://truckmanualshub.com/

Harness Map - Control System Power Dual Joystick

https://truckmanualshub.com/

Harness Map - Control System Power Dual Joystick

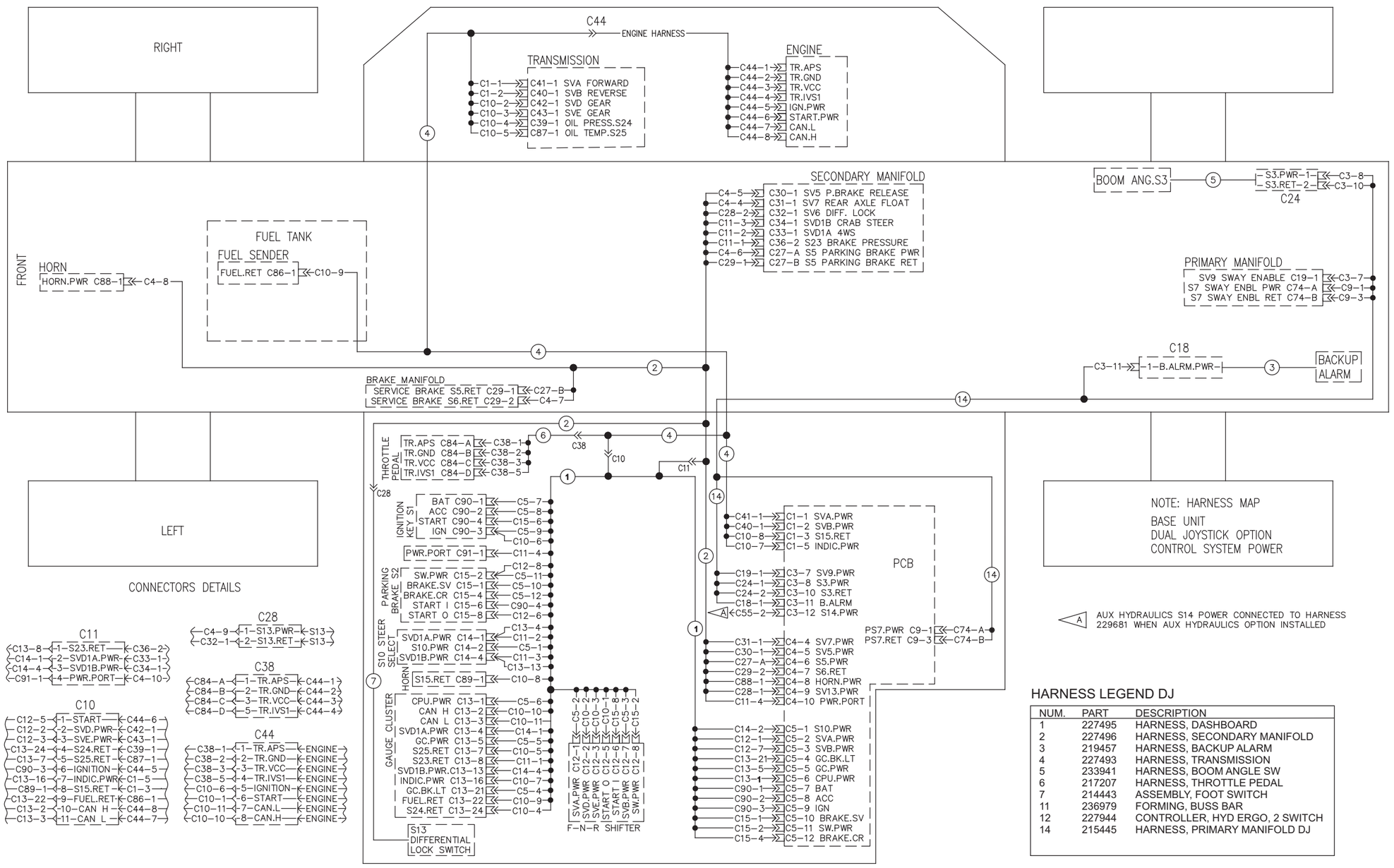

HARNESS LEGEND DJ

NUM.	PART	DESCRIPTION
1	227495	HARNESS, DASHBOARD
2	227496	HARNESS, SECONDARY MANIFOLD
3	219457	HARNESS, BACKUP ALARM
4	227493	HARNESS, TRANSMISSION
5	233941	HARNESS, BOOM ANGLE SW
6	217207	HARNESS, THROTTLE PEDAL
7	214443	ASSEMBLY, FOOT SWITCH
11	236979	FORMING, BUSS BAR
12	227944	CONTROLLER, HYD ERGO, 2 SWITCH
14	215445	HARNESS, PRIMARY MANIFOLD DJ

ES0459D

https://truckmanualshub.com/

Harness Map - Control System Ground Dual Joystick

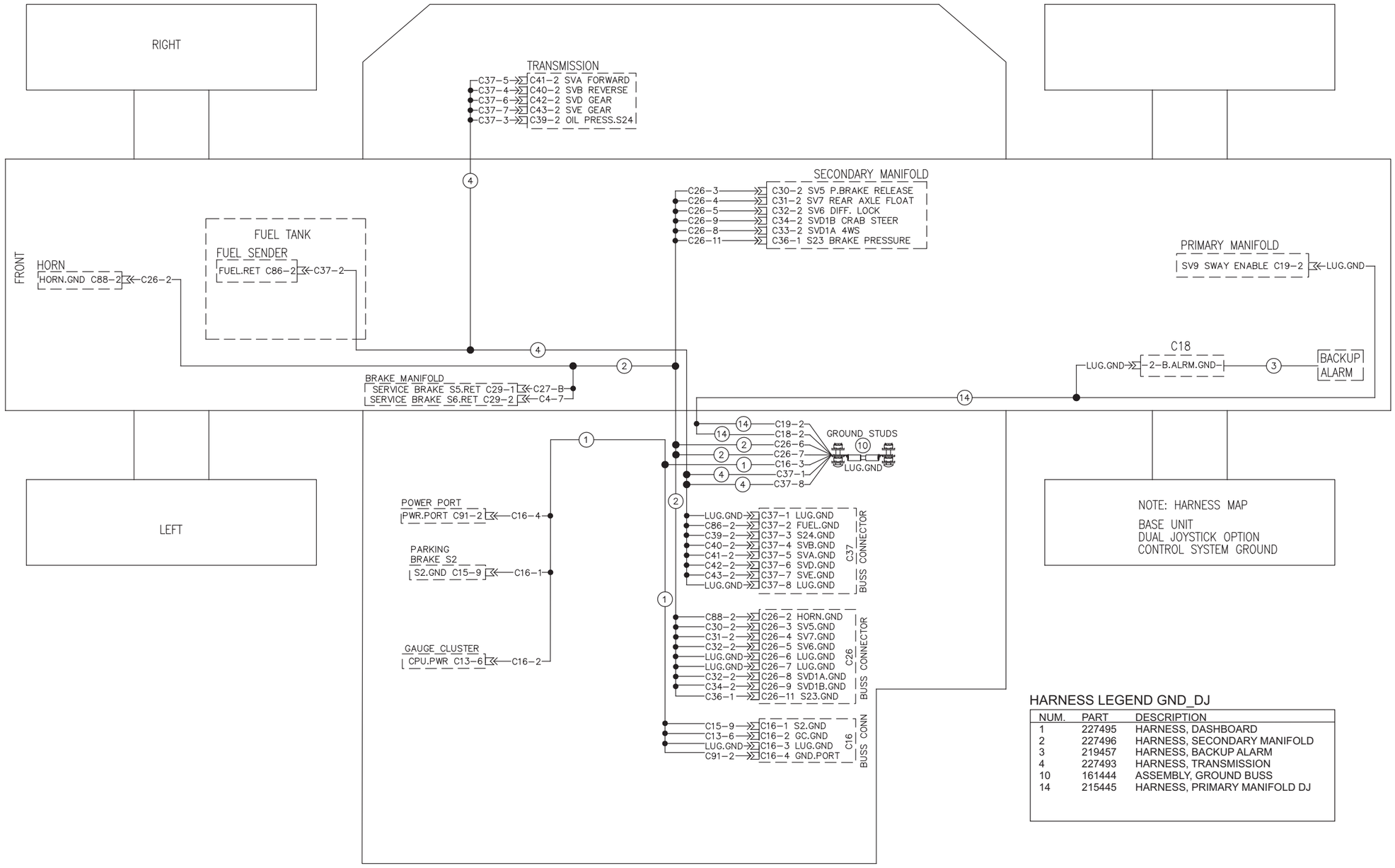

HARNESS LEGEND GND_DJ

NUM.	PART	DESCRIPTION
1	227495	HARNESS, DASHBOARD
2	227496	HARNESS, SECONDARY MANIFOLD
3	219457	HARNESS, BACKUP ALARM
4	227493	HARNESS, TRANSMISSION
10	161444	ASSEMBLY, GROUND BUSS
14	215445	HARNESS, PRIMARY MANIFOLD DJ

ES0459D

https://truckmanualshub.com/

Harness Map - Control System Ground Dual Joystick

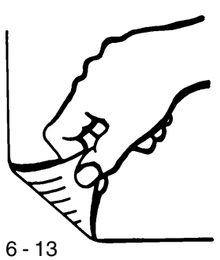

https://truckmanualshub.com/

Harness Map - Deutz TCD3.6 Engine
Battery Power and Ground

https://truckmanualshub.com/

Harness Map - Deutz 3.6TCD Engine
Battery Power and Ground

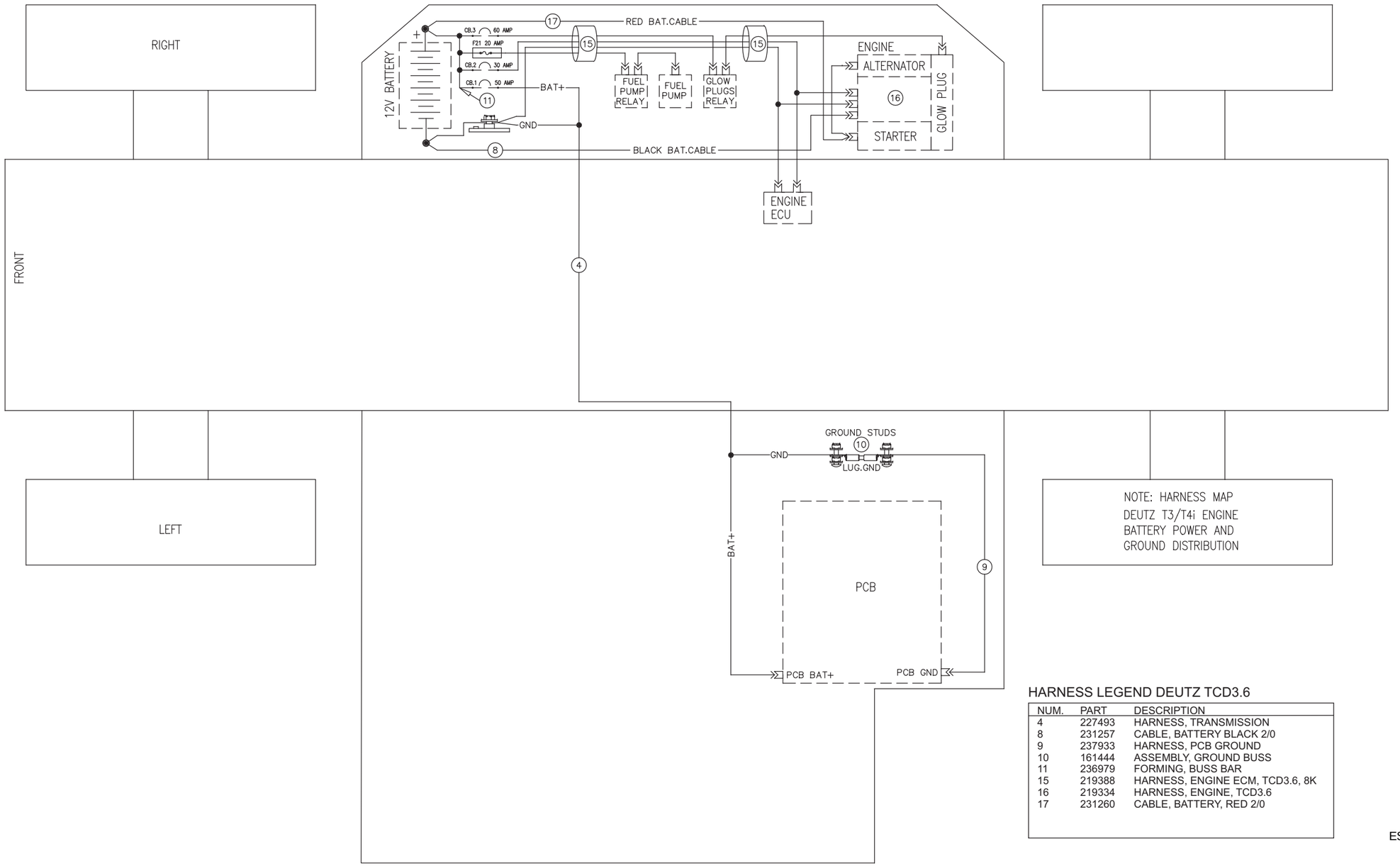

HARNESS LEGEND DEUTZ TCD3.6

NUM.	PART	DESCRIPTION
4	227493	HARNESS, TRANSMISSION
8	231257	CABLE, BATTERY BLACK 2/0
9	237933	HARNESS, PCB GROUND
10	161444	ASSEMBLY, GROUND BUSS
11	236979	FORMING, BUSS BAR
15	219388	HARNESS, ENGINE ECM, TCD3.6, 8K
16	219334	HARNESS, ENGINE, TCD3.6
17	231260	CABLE, BATTERY, RED 2/0

ES0459D

https://truckmanualshub.com/

Harness Map - Perkins 1104D Engine
Battery Power and Ground

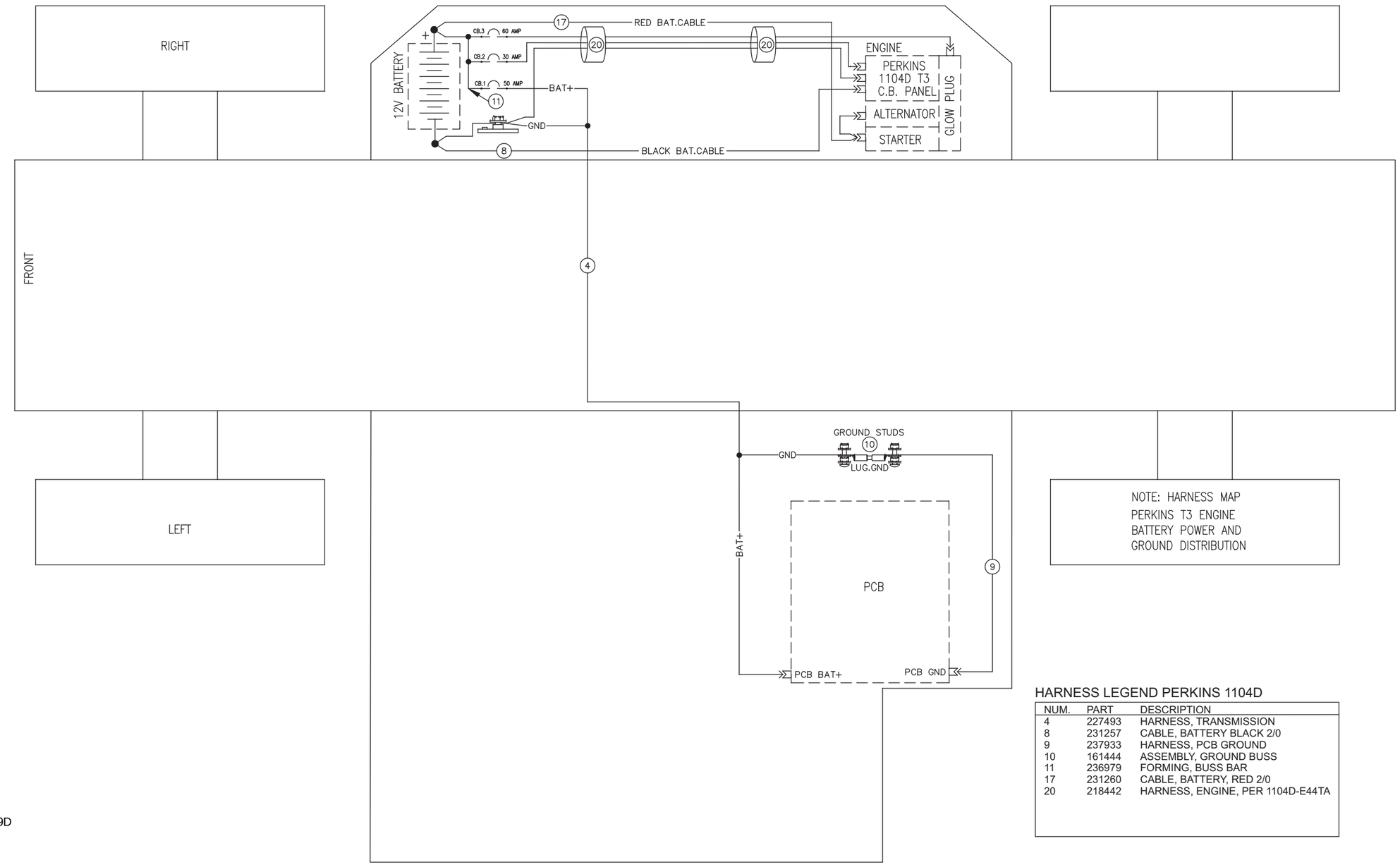

HARNESS LEGEND PERKINS 1104D

NUM.	PART	DESCRIPTION
4	227493	HARNESS, TRANSMISSION
8	231257	CABLE, BATTERY BLACK 2/0
9	237933	HARNESS, PCB GROUND
10	161444	ASSEMBLY, GROUND BUSS
11	236979	FORMING, BUSS BAR
17	231260	CABLE, BATTERY, RED 2/0
20	218442	HARNESS, ENGINE, PER 1104D-E44TA

ES0459D

https://truckmanualshub.com/

Harness Map - Perkins 1104D Engine
Battery Power and Ground

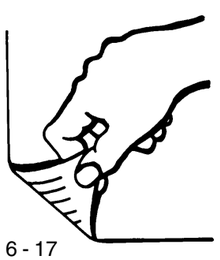

https://truckmanualshub.com/

Harness Map - Perkins 854E Engine
Battery Power and Ground

https://truckmanualshub.com/

Harness Map - Perkins 854E Engine
Battery Power and Ground

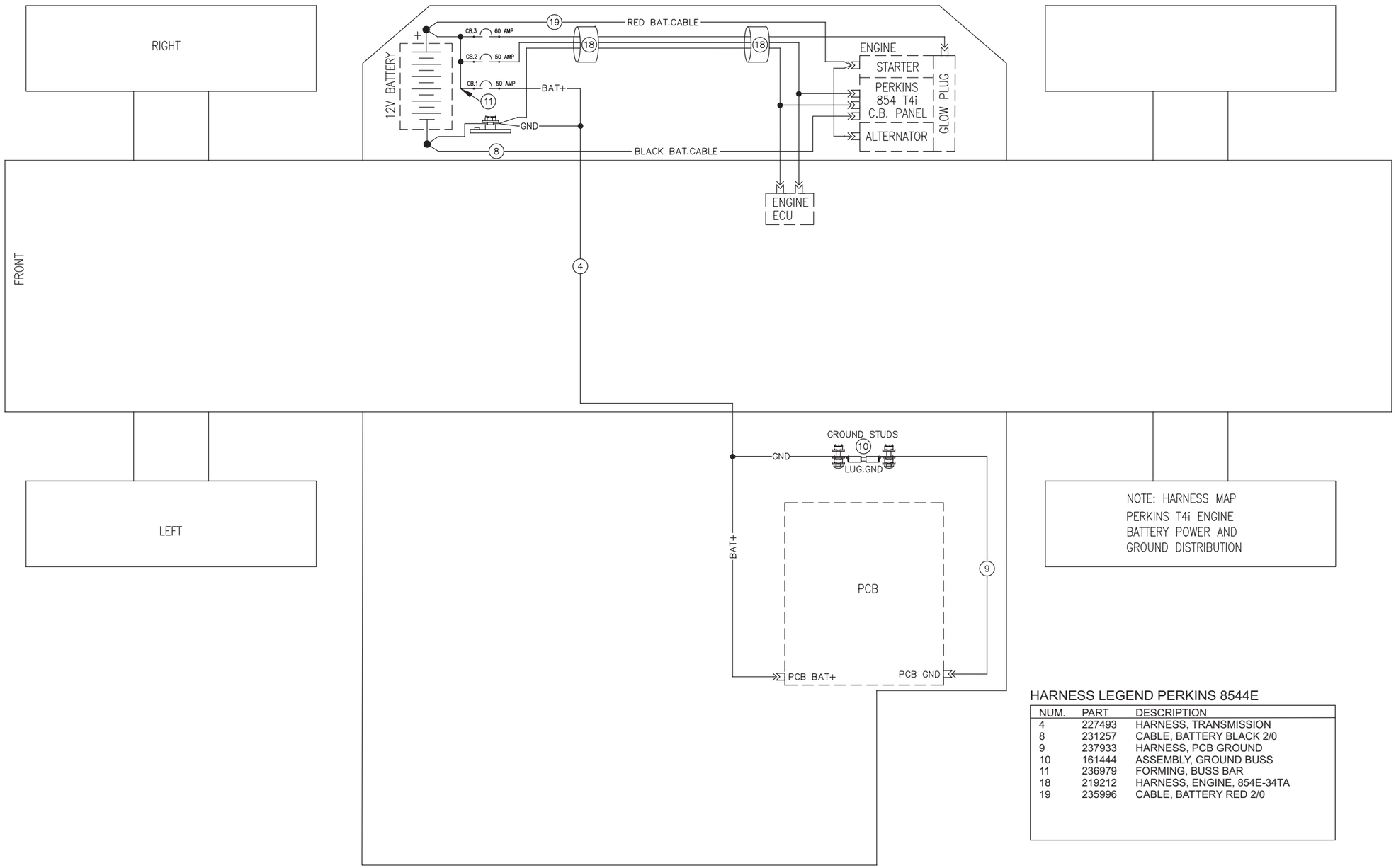

HARNESS LEGEND PERKINS 8544E

NUM.	PART	DESCRIPTION
4	227493	HARNESS, TRANSMISSION
8	231257	CABLE, BATTERY BLACK 2/0
9	237933	HARNESS, PCB GROUND
10	161444	ASSEMBLY, GROUND BUSS
11	236979	FORMING, BUSS BAR
18	219212	HARNESS, ENGINE, 854E-34TA
19	235996	CABLE, BATTERY RED 2/0

ES0459D

https://truckmanualshub.com/

Harness Map - Options
Auxiliary Hydraulics, Beacon and 3rd Gear Lockout

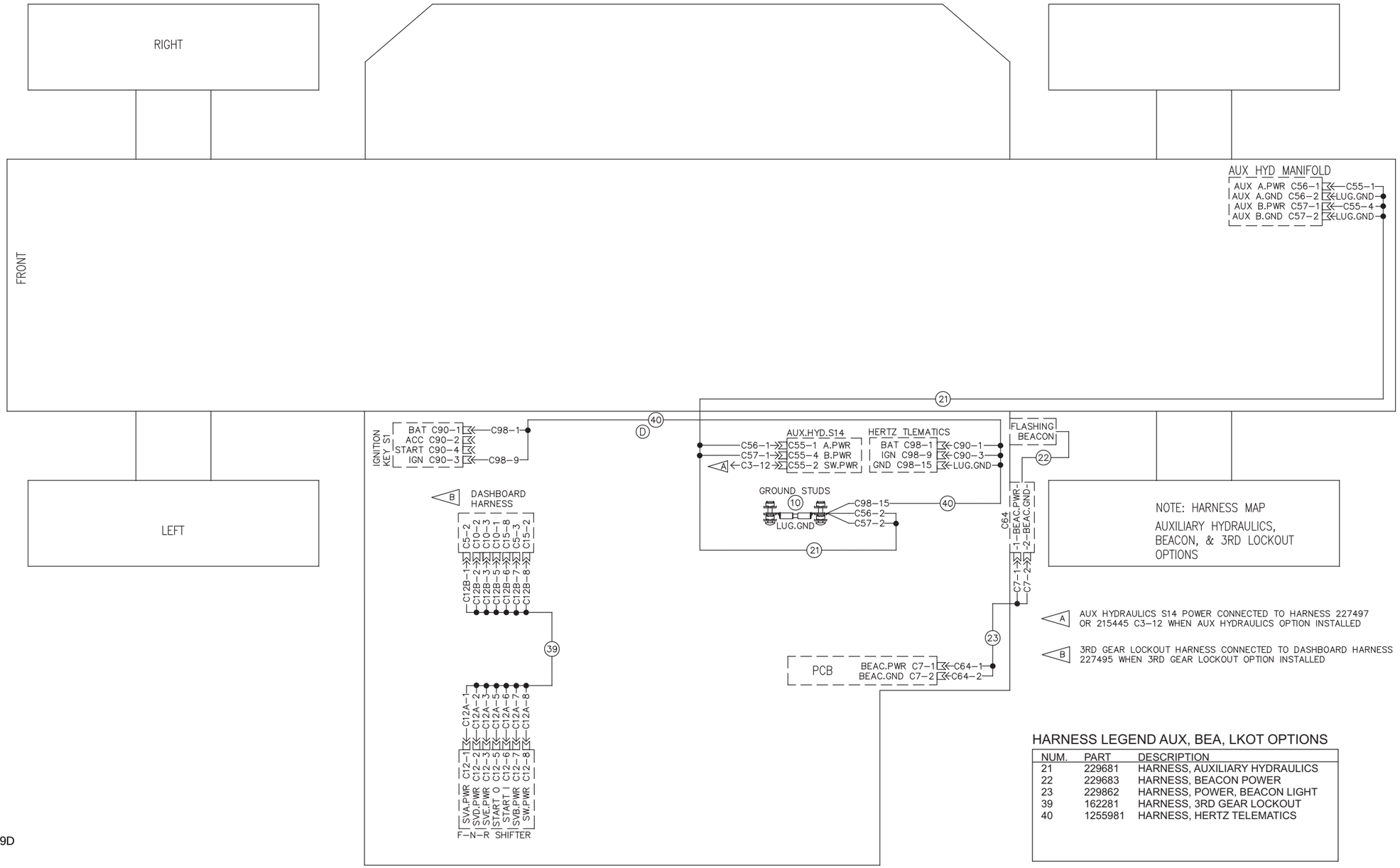

ES0459D

HARNESS LEGEND AUX, BEA, LKOT OPTIONS

NUM.	PART	DESCRIPTION
21	229681	HARNESS, AUXILIARY HYDRAULICS
22	229683	HARNESS, BEACON POWER
23	229862	HARNESS, POWER, BEACON LIGHT
39	162281	HARNESS, 3RD GEAR LOCKOUT
40	1255981	HARNESS, HERTZ TELEMATICS

https://truckmanualshub.com/

Harness Map - Options
Auxiliary Hydraulics, Beacon and 3rd Gear Lockout

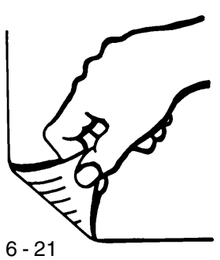

https://truckmanualshub.com/

Harness Map - Options
Work Lights

https://truckmanualshub.com/

Harness Map - Options
Work Lights

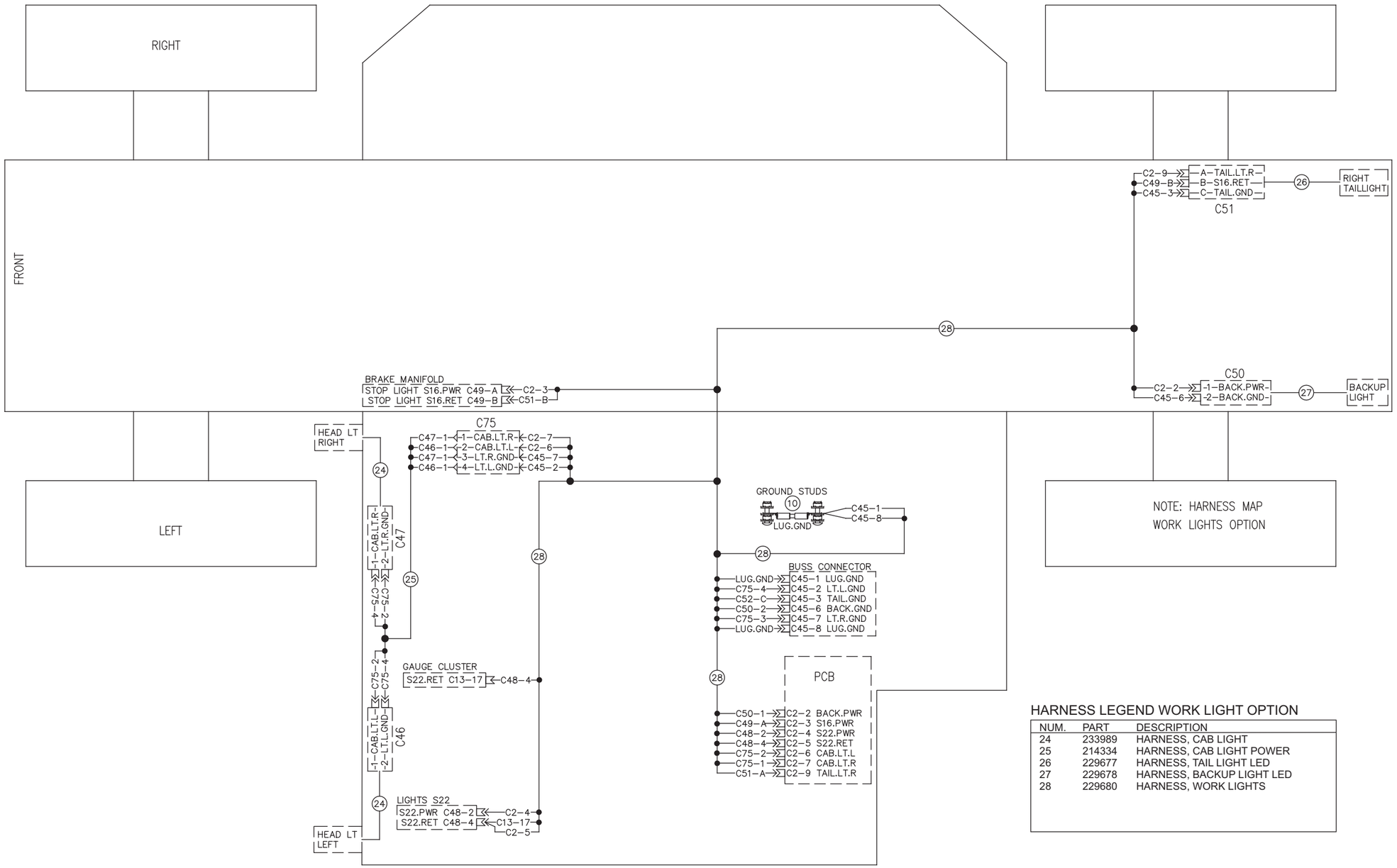

HARNESS LEGEND WORK LIGHT OPTION

NUM.	PART	DESCRIPTION
24	233989	HARNESS, CAB LIGHT
25	214334	HARNESS, CAB LIGHT POWER
26	229677	HARNESS, TAIL LIGHT LED
27	229678	HARNESS, BACKUP LIGHT LED
28	229680	HARNESS, WORK LIGHTS

ES0459D

https://truckmanualshub.com/

Harness Map - Options
Road Lights

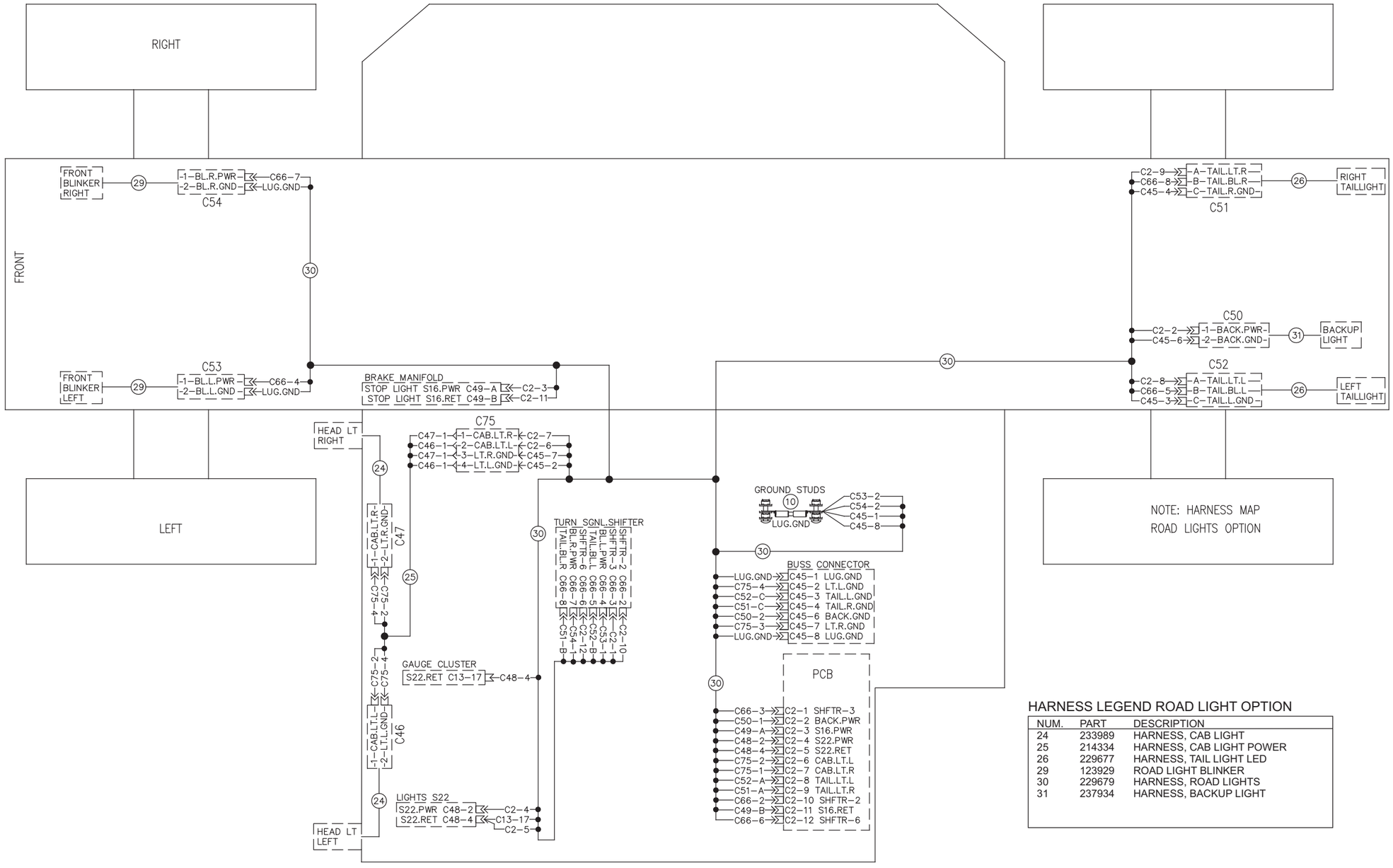

ES0459D

HARNESS LEGEND ROAD LIGHT OPTION

NUM.	PART	DESCRIPTION
24	233989	HARNESS, CAB LIGHT
25	214334	HARNESS, CAB LIGHT POWER
26	229677	HARNESS, TAIL LIGHT LED
29	123929	ROAD LIGHT BLINKER
30	229679	HARNESS, ROAD LIGHTS
31	237934	HARNESS, BACKUP LIGHT

https://truckmanualshub.com/

Harness Map - Options
Road Lights

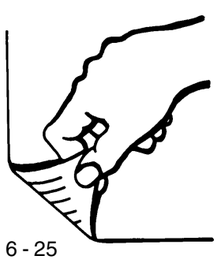

https://truckmanualshub.com/

Harness Map - Options
Enclosed Cab with Heater

https://truckmanualshub.com/

Harness Map - Options
Enclosed Cab with Heater

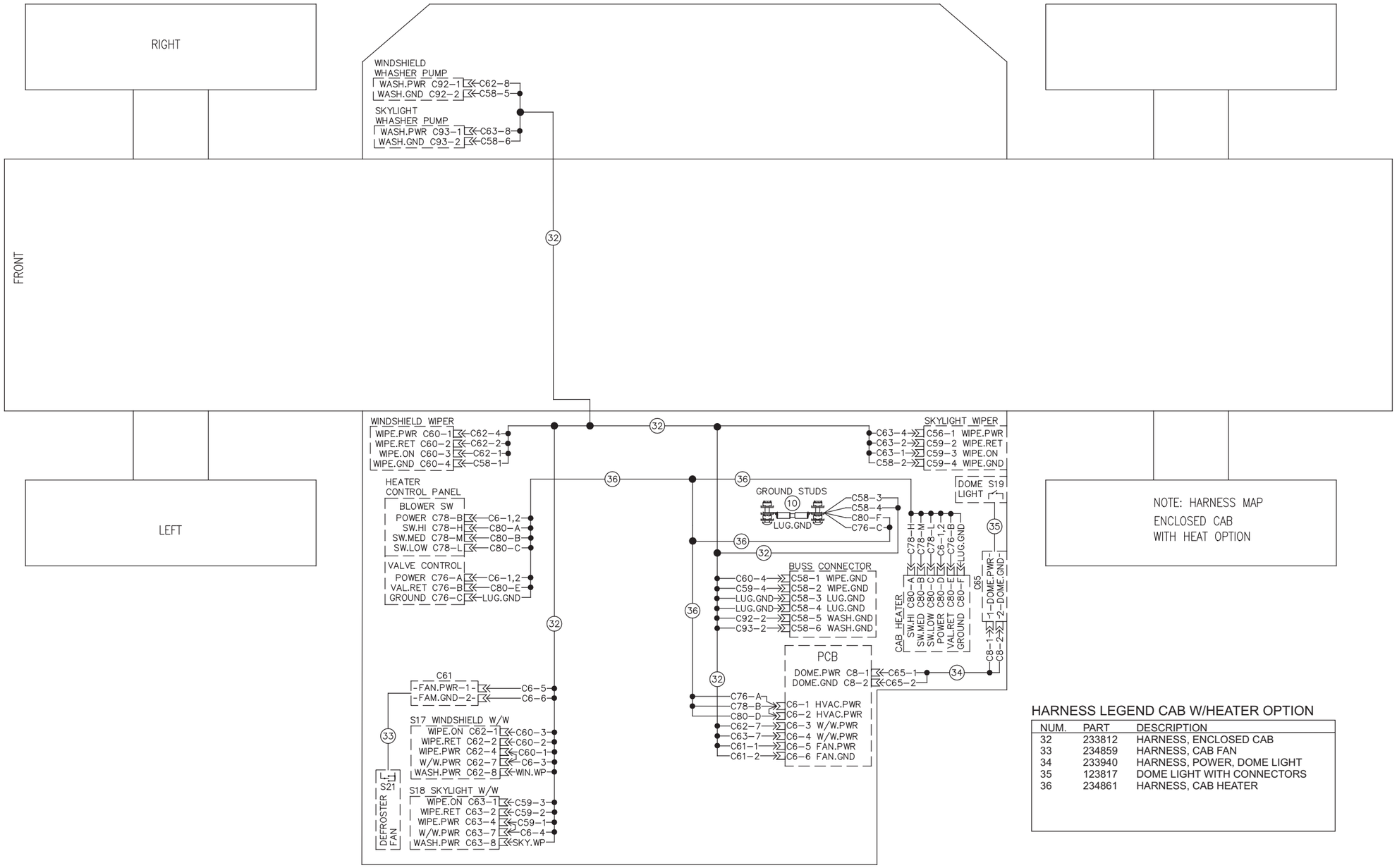

HARNESS LEGEND CAB W/HEATER OPTION

NUM.	PART	DESCRIPTION
32	233812	HARNESS, ENCLOSED CAB
33	234859	HARNESS, CAB FAN
34	233940	HARNESS, POWER, DOME LIGHT
35	123817	DOME LIGHT WITH CONNECTORS
36	234861	HARNESS, CAB HEATER

ES0459D

https://truckmanualshub.com/

Harness Map - Options
Enclosed Cab with HVAC

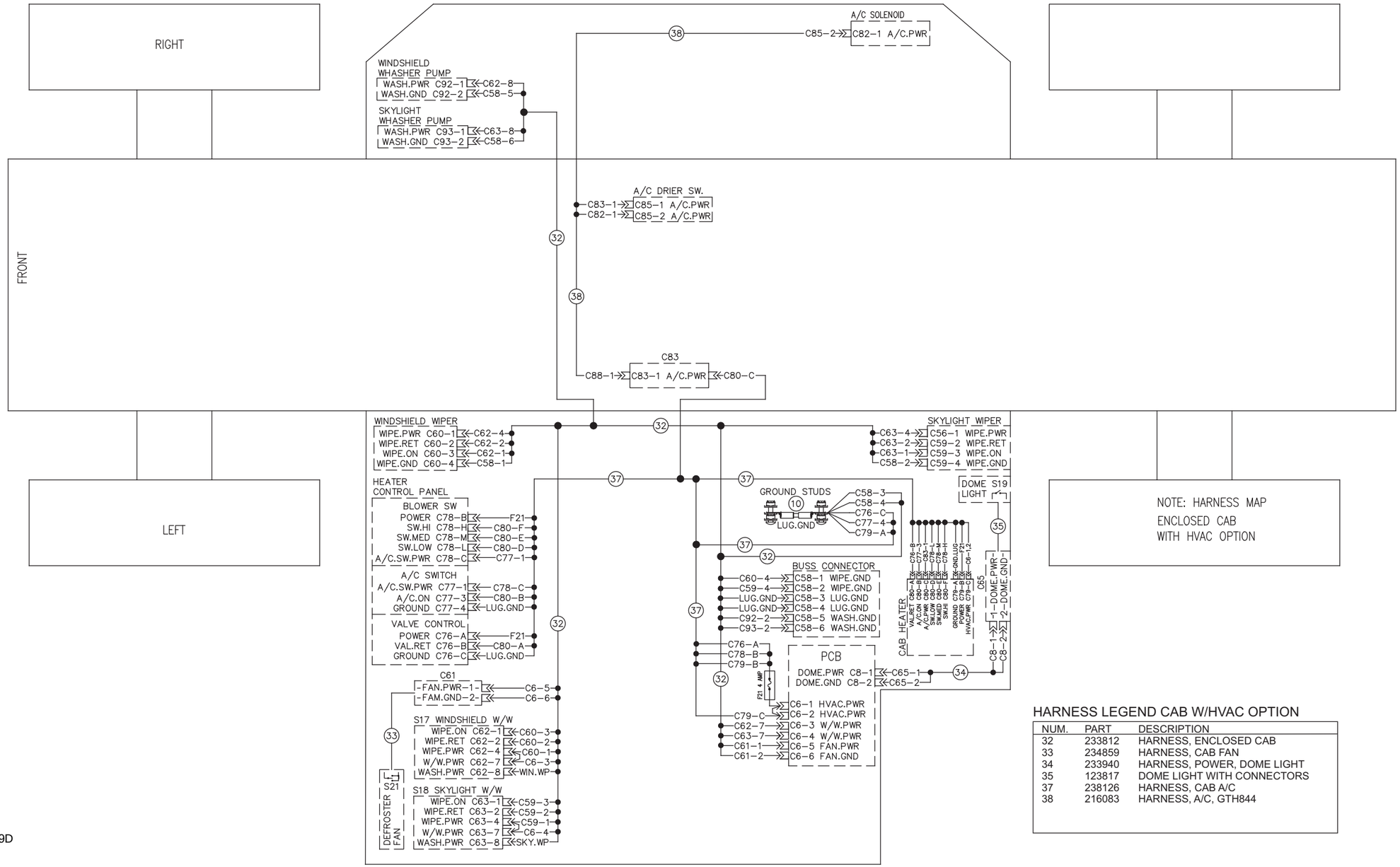

ES0459D

HARNESS LEGEND CAB W/HVAC OPTION

NUM.	PART	DESCRIPTION
32	233812	HARNESS, ENCLOSED CAB
33	234859	HARNESS, CAB FAN
34	233940	HARNESS, POWER, DOME LIGHT
35	123817	DOME LIGHT WITH CONNECTORS
37	238126	HARNESS, CAB A/C
38	216083	HARNESS, A/C, GTH844

https://truckmanualshub.com/

Harness Map - Options
Enclosed Cab with HVAC

https://truckmanualshub.com/

Electrical Schematic - View 1

https://truckmanualshub.com/

Electrical Schematic - View 1

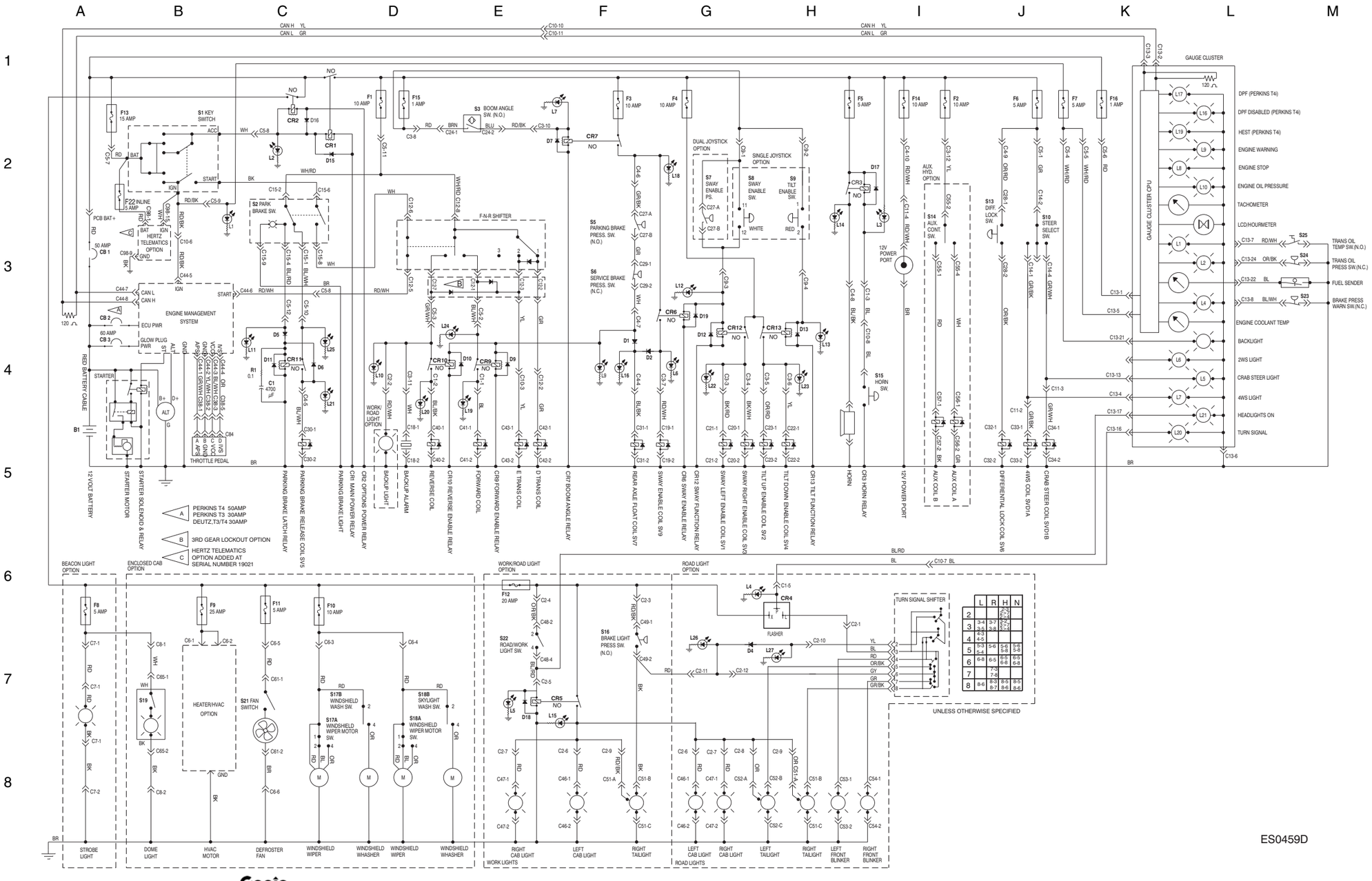

https://truckmanualshub.com/

Electrical Schematic - View 2

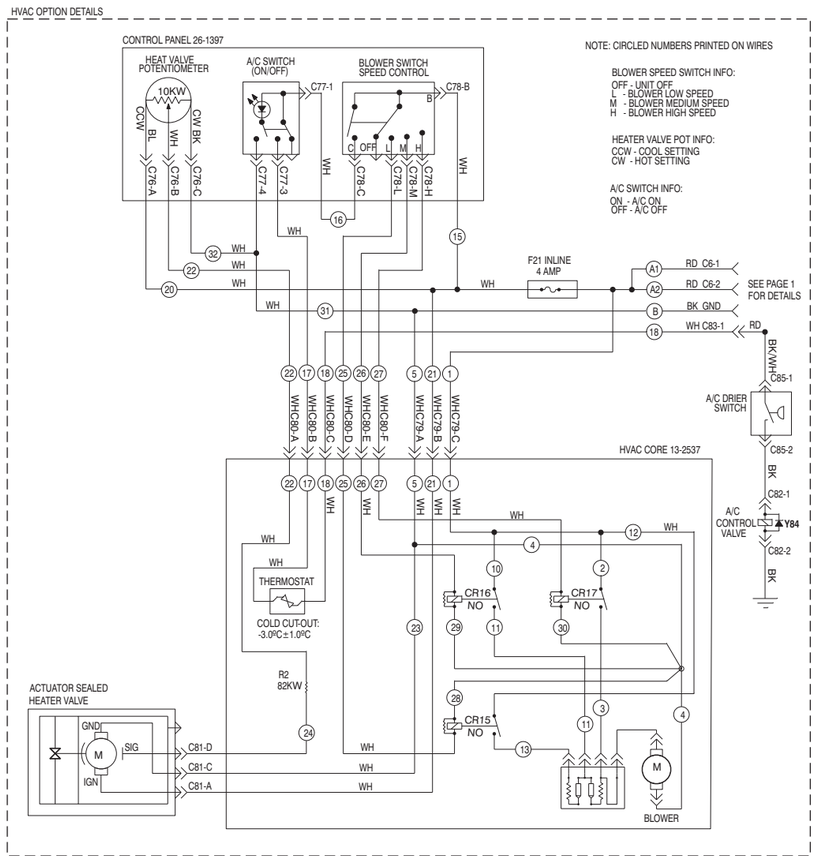

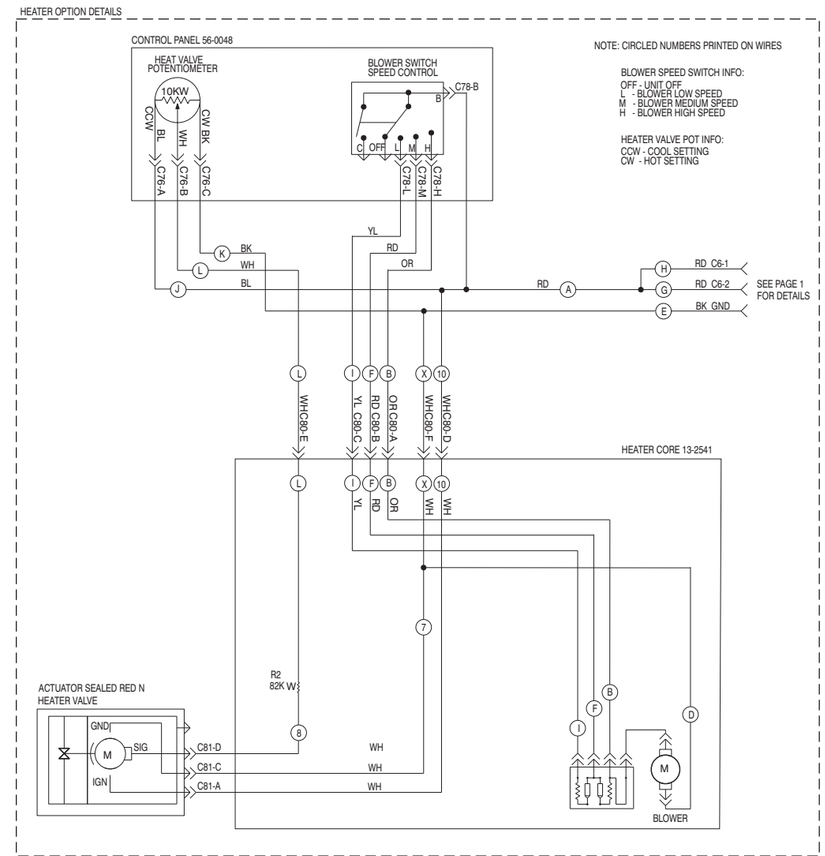

ES0459D

https://truckmanualshub.com/

Electrical Schematic - View 2

https://truckmanualshub.com/

Hydraulic Schematic - Single Joystick (before serial number 19529)

https://truckmanualshub.com/

Hydraulic Schematic - Single Joystick (before serial number 19529)

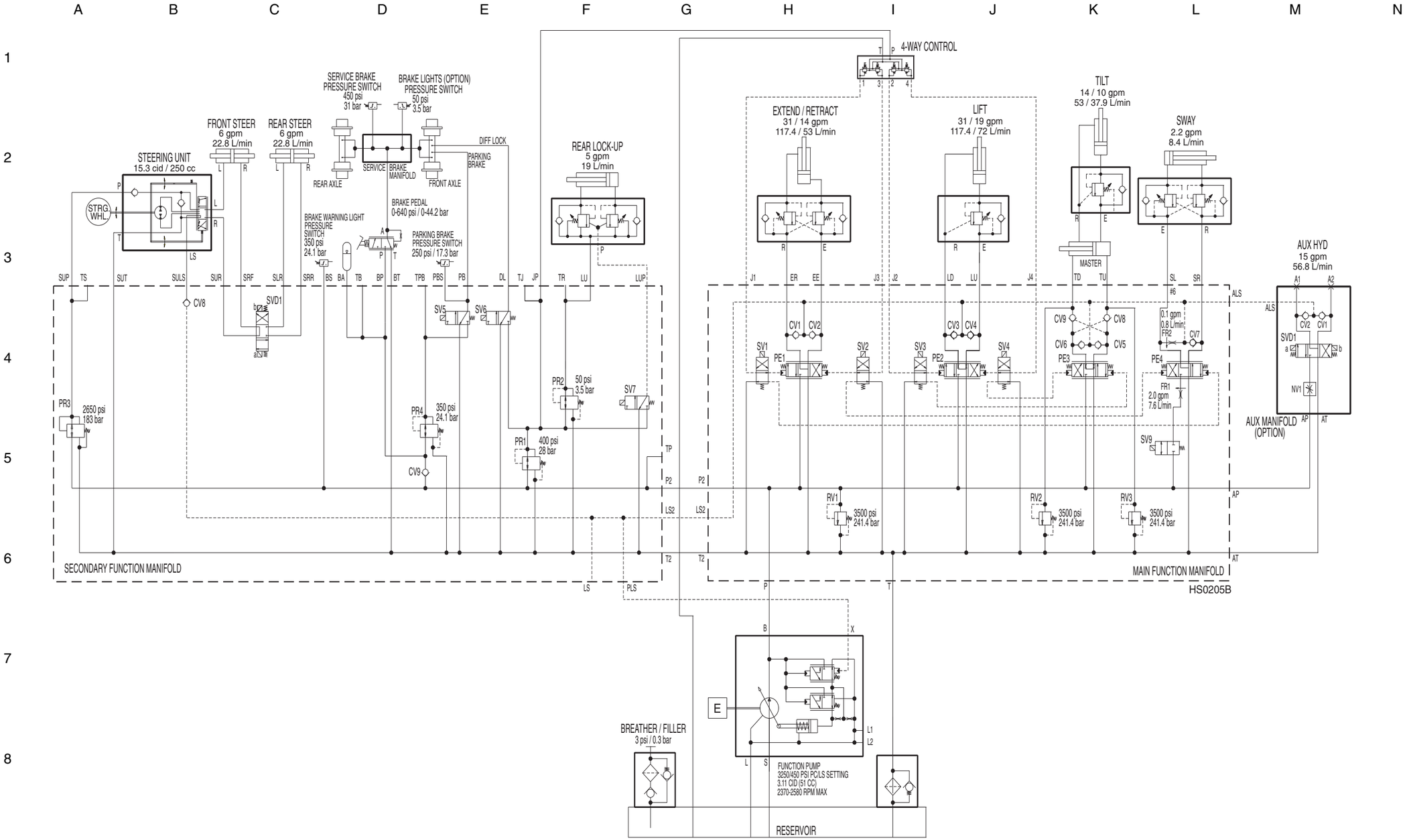

https://truckmanualshub.com/

Hydraulic Schematic - Single Joystick (from serial number 19529)

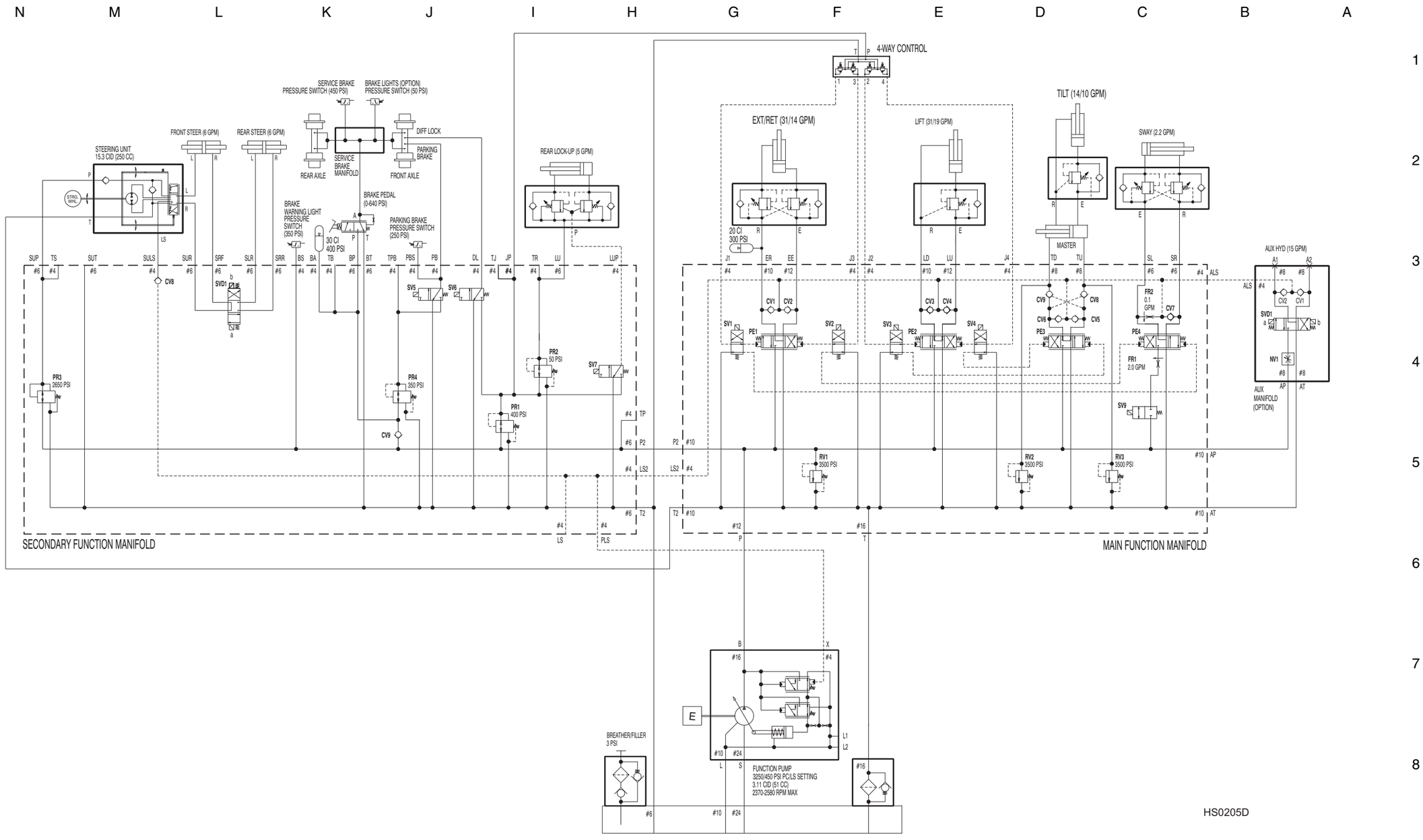

https://truckmanualshub.com/

Hydraulic Schematic - Single Joystick from serial number 19529)

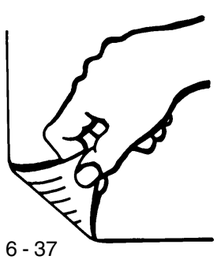

https://truckmanualshub.com/

Hydraulic Schematic - Dual Joystick (before serial number 19529)

https://truckmanualshub.com/

Hydraulic Schematic - Dual Joystick (before serial number 19529)

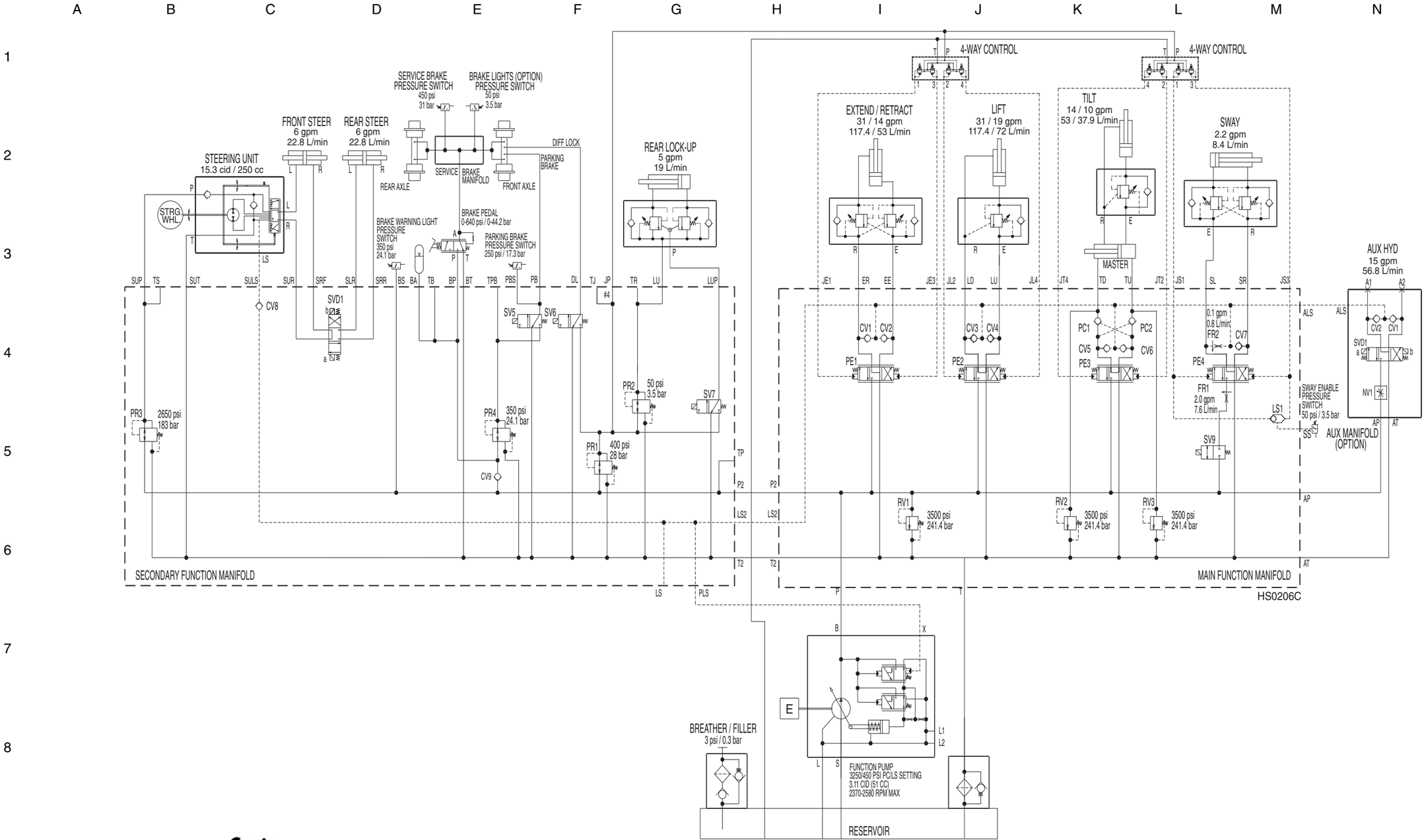

https://truckmanualshub.com/

Hydraulic Schematic - Dual Joystick (from serial number 19529)

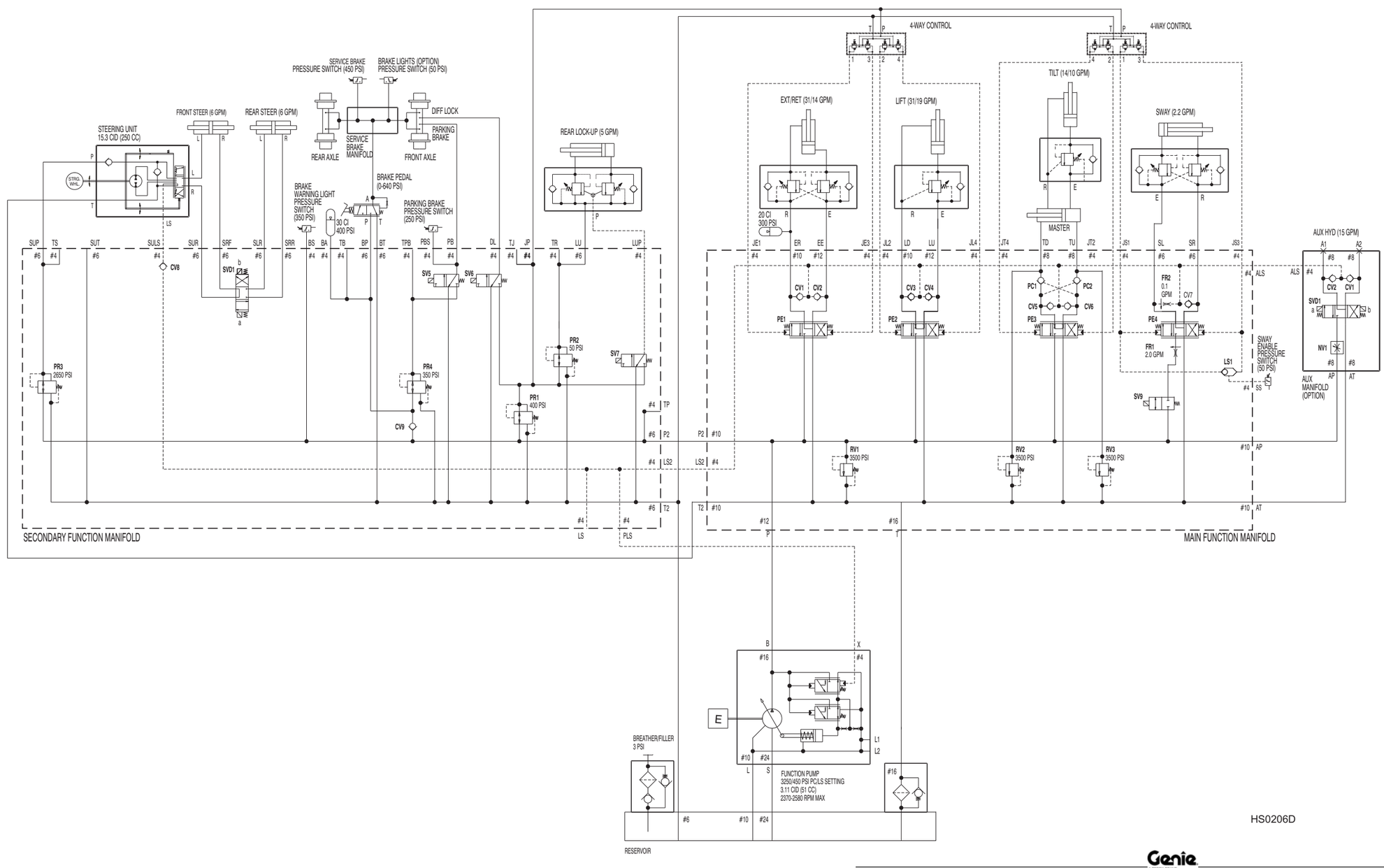

https://truckmanualshub.com/

Hydraulic Schematic - Dual Joystick (from serial number 19529)

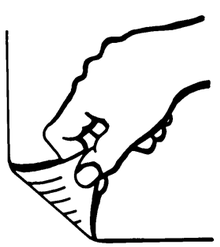

https://truckmanualshub.com/

California Proposition 65

Warning

The exhaust from this product contains chemicals known to the State of California to cause cancer, birth defects or other reproductive harm.

Distributed By:

Genie North America
Phone 425.881.1800
Toll Free USA and Canada 800.536.1800
Fax 425.883.3475

Genie Australia Pty Ltd.
Phone +61 7 3375 1660
Fax +61 7 3375 1002

Genie China
Phone +86 21 53852570
Fax +86 21 53852569

Genie Malaysia
Phone +65 98 480 775
Fax +65 67 533 544

Genie Japan
Phone +81 3 3453 6082
Fax +81 3 3453 6083

Genie Korea
Phone +82 25 587 267
Fax +82 25 583 910

Genie Brasil
Phone +55 11 41 665 755
Fax +55 11 41 665 754

Genie Holland
Phone +31 183 581 102
Fax +31 183 581 566

Genie Scandinavia
Phone +46 31 575100
Fax +46 31 579020

Genie France
Phone +33 (0)2 37 26 09 99
Fax +33 (0)2 37 26 09 98

Genie Iberica
Phone +34 93 579 5042
Fax +34 93 579 5059

Genie Germany
Phone 0800 180 9017
Phone +49 422 149 1818
Fax +49 422 149 1820

Genie U.K.
Phone +44 (0)1476 584333
Fax +44 (0)1476 584334

Genie Mexico City
Phone +52 55 5666 5242
Fax +52 55 5666 3241

https://truckmanualshub.com/

Service Manual
GTH-844

(from serial number GTH0813-16606)

Part No.
218230

Rev B

Genie
A TEREX BRAND