https://truckmanualshub.com/

	CODE	MODEL	ENGINE
–	A	i30/38	LSC 3 CYLINDER
–	B	i28/36	MHI 4 CYLINDER

–	MEC	MECHANICAL TRANSMISSION
–	HST	HYDROSTAT TRANSMISSION

–	M/PTO	MID MOUNT PTO

https://truckmanualshub.com/

NOT AVAILABLE IN THE STATES NOW
STANDARD

https://truckmanualshub.com/

FUEL TANK

FIG. 2-1 **G. 040**

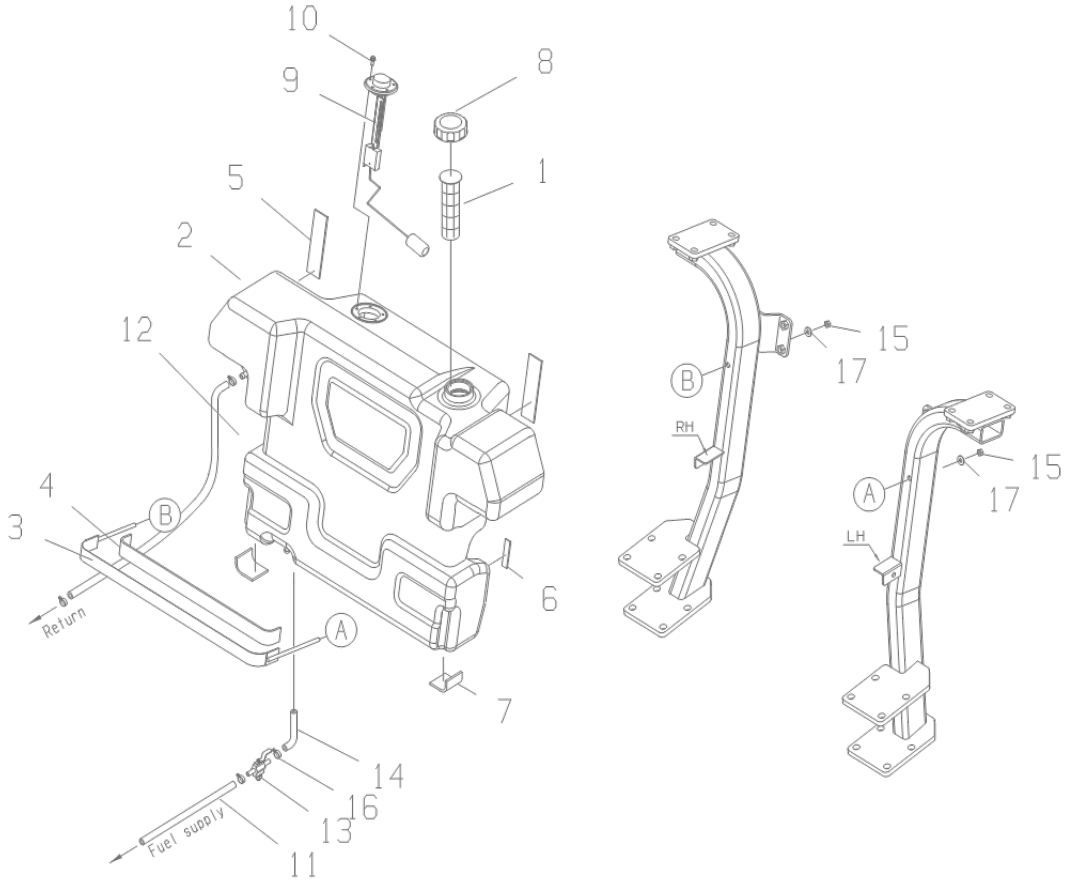

https://truckmanualshub.com/

FUEL TANK

A-NOT AVAILABLE / B-i28,i36

A-NOT AVAILABLE / B-i28,i36

FIG. 2-1

NO.	PART NO.	PART NAME & DESCRIPTION		QTY A	QTY B	QTY C	APP.NO	REM.
1~10	A1040241	FUEL TANK ASSY		1	1			
1	A1040052	STRAINER,FUEL TANK		1	1			
2	A1040242	TANK, FUEL	40 LITER	1	1			
3	A1040245	BAND, FUEL TANK		1	1			
4	A1040231	SPONGE,BAND	651x40x5t	1	1			
5	A1040220	SPONGE,RUBBER	150x40x5t	2	2			
6	A1040243	SPONGE,BACK LPW	65x15x5t	2	2			
7	A1040244	SPONGE,BOTTOM	74x50x5t	2	2			
8	A1040170	CAP ASSY		1	1			
9	A1040246	GAUGE,FUEL		1	1			
10	S153051613	SCREW,W/WASHER		5	5			
11	A1040074	HOSE, FUEL	Φ8.5-1630 mm	1	1			
12	A1040097	HOSE, FUEL RETURN	Φ8.5-2200 mm	1	1			
13	A1040127	COCK,FUEL TANK		1	1			
14	A1040229	HOSE, VALVE COCK	Φ8.5-50 mm	1	1			
15	A1877079	NUT, LOCK		2	2			
16	A1970380	CLAMP, HOSE		6	6			
17	S365082013	WASHER, PLN. L-RD.	Φ20x8.4x2.6t	2	2			

https://truckmanualshub.com/

ENGINE CONTROL

FIG. 2-2B **G. 100**

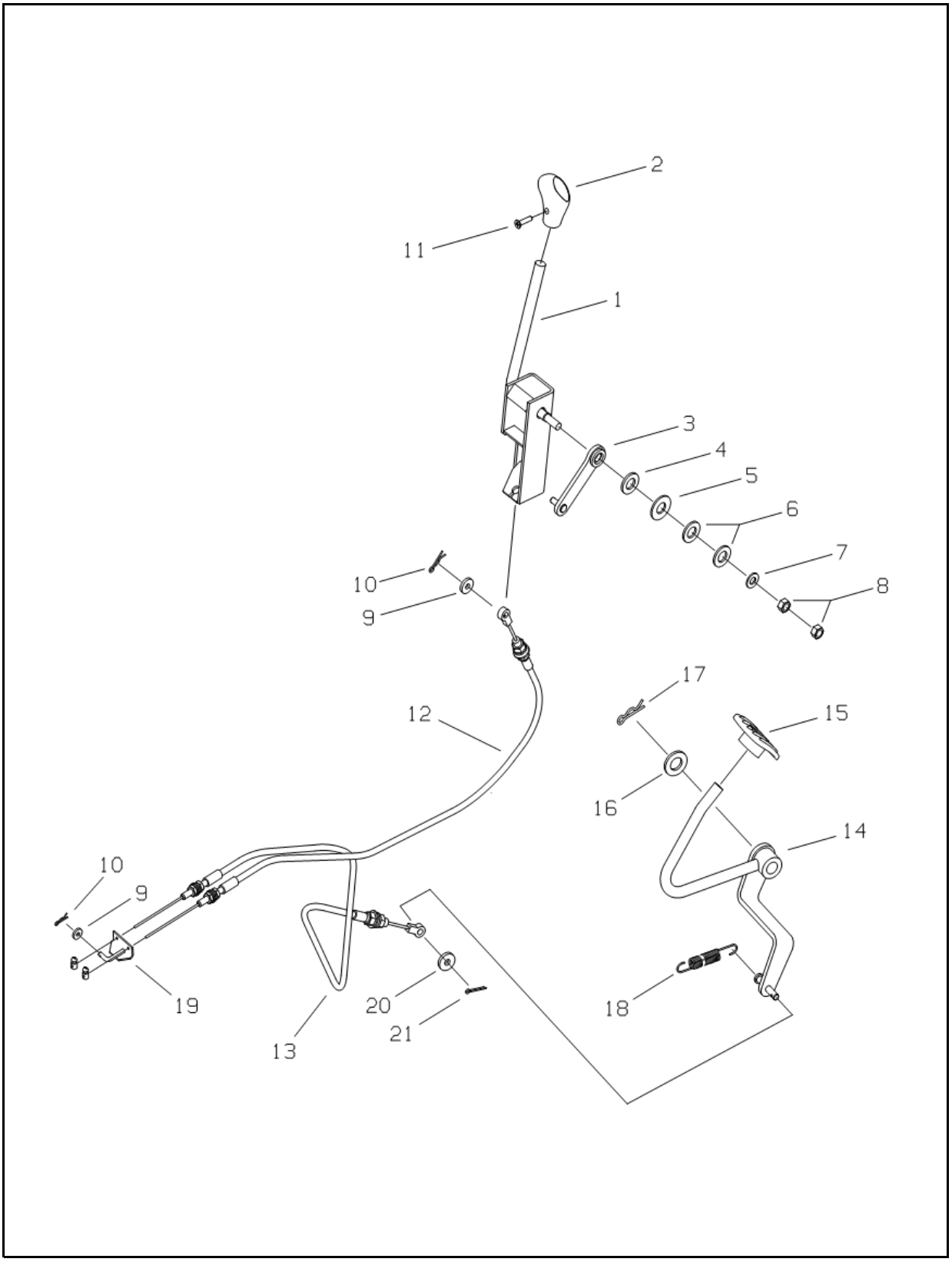

https://truckmanualshub.com/

ENGINE CONTROL

A-NOT AVAILABLE / B-i28,i36

A-NOT AVAILABLE / B-i28,i36

FIG. 2-2B (S4L)

NO.	PART NO.	PART NAME & DESCRIPTION		QTY A	QTY B	QTY C	APP.NO	REM.
1	A1100125	LEVER, ACC.		*	1			
2	A1970393	KNOB, ACC		*	1			
3	A1100131	ARM, ENGINE CONTROL		*	1			
4	S364120013	WASHER, PLAIN	M12	*	1			
5	A1100058	PLATE, FRICTION		*	1			
6	S373120023	PLATE, SPRING		*	2			
7	S364080013	WASHER, PLAIN	M8	*	1			
8	S313080013	NUT, HEX.	M8x1.25P	*	2			
9	A1970286	WASHER, PLASTIC		*	2			
10	S443060013	PIN, SNAP		*	2			
11	S226501011	SCREW, WASHER		*	1			
12	A1100046	WIRE, ACCE. LEVER		*	1			
13	A1100054	WIRE, ACCE. PEDAL		*	1			MEC
14	A1100100	PEDAL, ACCELERATOR		*	1			MEC
15	A1100102	KNOB, ACC PEDAL		*	1			MEC
16	S365123013	WASHER, PLAIN	M12	*	1			MEC
17	S443120013	PIN, SNAP		*	1			MEC
18	3A1100008	SPRING, RETURN		*	1			MEC
19	A1100059	ROD, ENGINE CONTROL		*	1			
20	S363060013	WASHER, PLAIN	M6	*	1			MEC
21	S441251613	PIN, SPLIT		*	1			MEC

https://truckmanualshub.com/

MUFFLER

FIG. 2-3B **G. 150**

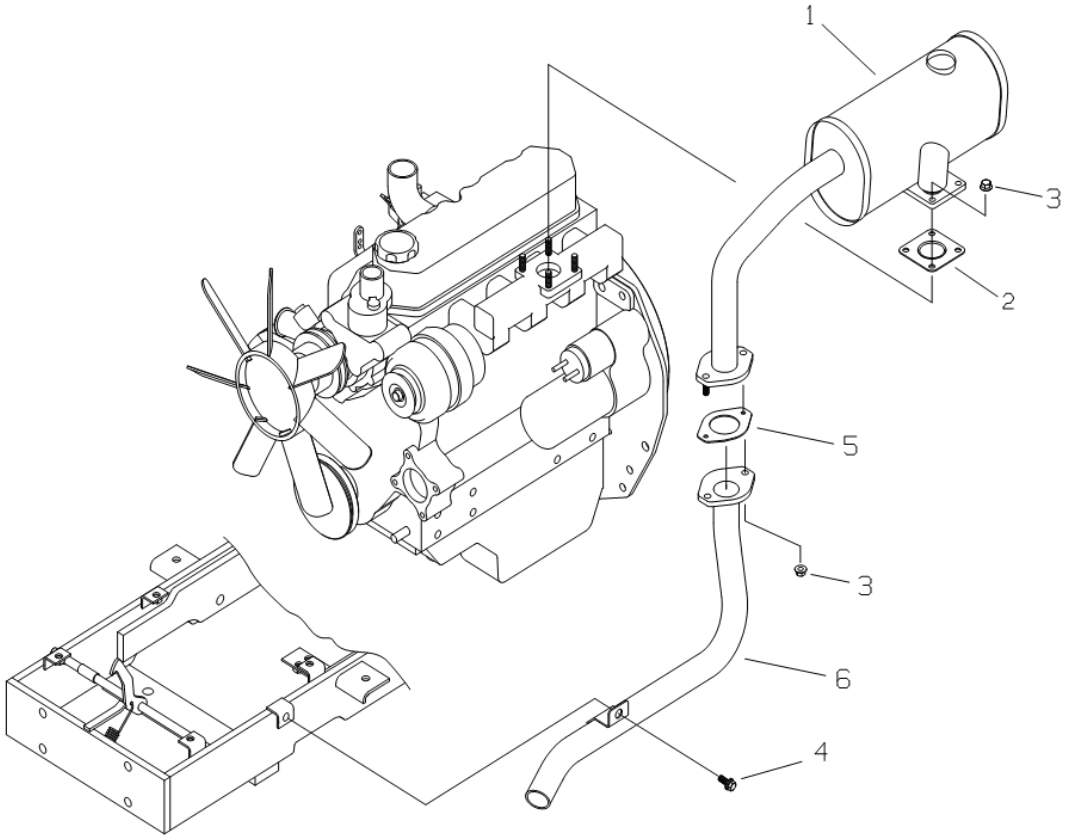

https://truckmanualshub.com/

MUFFLER

A-NOT AVAILABLE / B-i28,i36

A-NOT AVAILABLE / B-i28,i36

FIG. 2-3B (S4L)

NO.	PART NO.	PART NAME & DESCRIPTION		QTY A	QTY B	QTY C	APP.NO	REM.
1	A1151154	MUFFLER ASSY		*	1			
2	A1151101	GASKET, MUFFLER		*	1			
3	S345080013	NUT, FLANGE	M8	*	6			
4	S155082033	BOLT, HEX. W/WASHER	M8x1.25x20L	*	1			
5	A1151100	GASKET, MUFFLER		*	1			
6	A1151166	PIPE, TAIL		*	1			

https://truckmanualshub.com/

RADIATOR

FIG. 2-4B **G. 170**

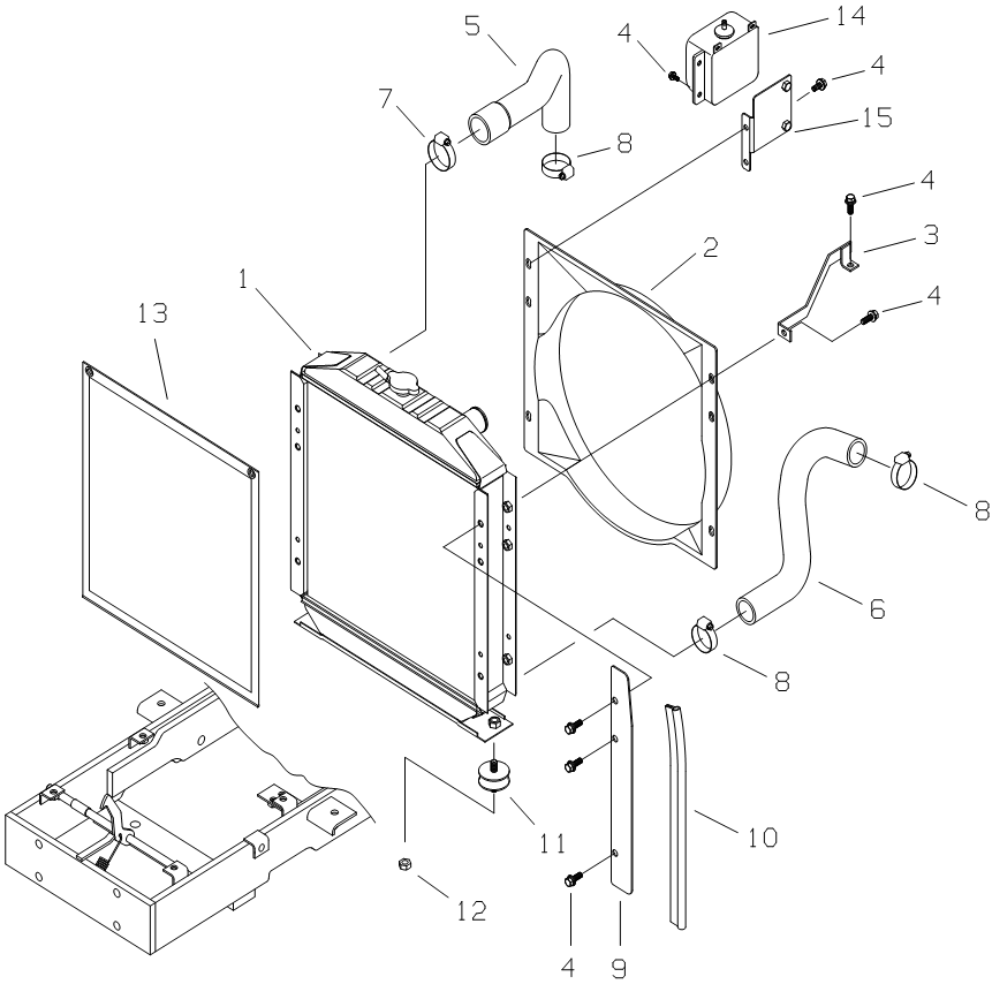

https://truckmanualshub.com/

RADIATOR

FIG. 2-4B **G. 170**

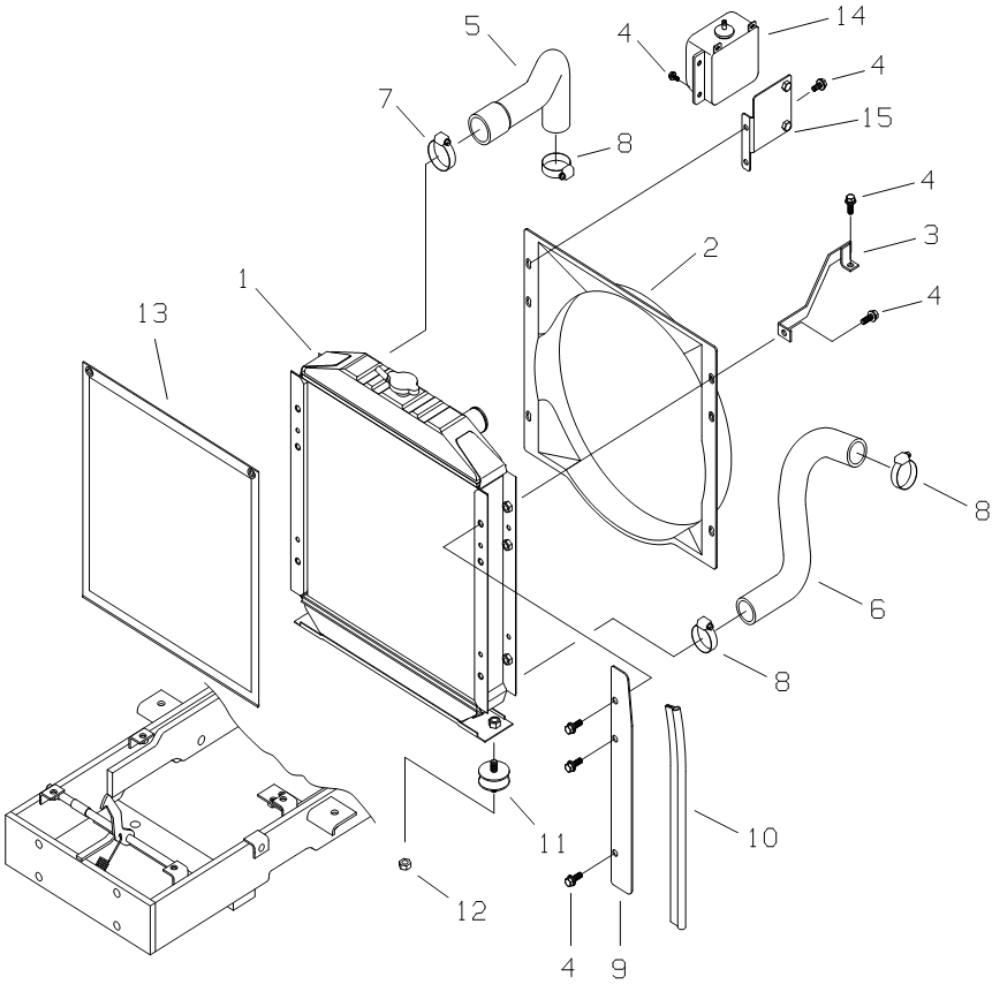

https://truckmanualshub.com/

RADIATOR

A-NOT AVAILABLE / B-i28,i36

A-NOT AVAILABLE / B-i28,i36

FIG. 2-4B (S4L)

NO.	PART NO.	PART NAME & DESCRIPTION		QTY A	QTY B	QTY C	APP.NO	REM.
1	A1170278	RADIATOR ASSY		*	1			
2	A1170268	SHROUD, FAN		*	1			
3	A1170262	BRACKET, RADIATOR		*	1			
4	S155082033	BOLT, HEX. W/WASHER	M8x1.25x20L	*	13			
5	A1170248	HOSE, WATER OUTLET		*	1			
6	A1170249	HOSE, WATER SUCTION		*	1			
7	A1970201H	CLAMP, HOSE		*	1			
8	A1970201G	CLAMP, HOSE		*	3			
9	A1170234	PLATE, WING		*	2			
10	A1170253	WEATHER STRIP		*	2			
11	A1970360	RUBBER, DAMPING		*	2			
12	S346100013	NUT, FLANGE B-TY	M10x1.25P	*	2			
13	A1170233	NET, RADIATOR		*	1			
14	A1170031	TANK, RESERVOIR		*	1			
15	A1170270	BRACKET, RESERVOIR TANK		*	1			

https://truckmanualshub.com/

RADIATOR

A-NOT AVAILABLE / B-i28,i36

A-NOT AVAILABLE / B-i28,i36

FIG. 2-4B (S4L)

NO.	PART NO.	PART NAME & DESCRIPTION		QTY A	QTY B	QTY C	APP.NO	REM.
1	A1170239	RADIATOR ASSY		*	1			
	A1170240	RADIATOR ASSY		*	1			
2	A1170250	SHROUD, FAN		*	1			
	A1170268	SHROUD, FAN		*	1			
3	A1170242	BRACKET, RADIATOR		*	1			
	A1170262	BRACKET, RADIATOR		*	1			
4	S155082033	BOLT, HEX. W/WASHER	M8x1.25x20L	*	13			
5	A1170248	HOSE, WATER OUTLET		*	1			
6	A1170249	HOSE, WATER SUCTION		*	1			
7	A1970201H	CLAMP, HOSE		*	1			
8	A1970201G	CLAMP, HOSE		*	3			
9	A1170234	PLATE, WING		*	2			
10	A1170253	WEATHER STRIP		*	2			
11	A1970360	RUBBER, DAMPING		*	2			
12	S346100013	NUT, FLANGE B-TY	M10x1.25P	*	2			
13	A1170233	NET, RADIATOR		*	1			
14	A1170031	TANK, RESERVOIR		*	1			
15	A1170270	BRACKET, RESERVOIR TANK		*	1			

https://truckmanualshub.com/

AIR CLEANER

FIG. 2-5 **G. 190**

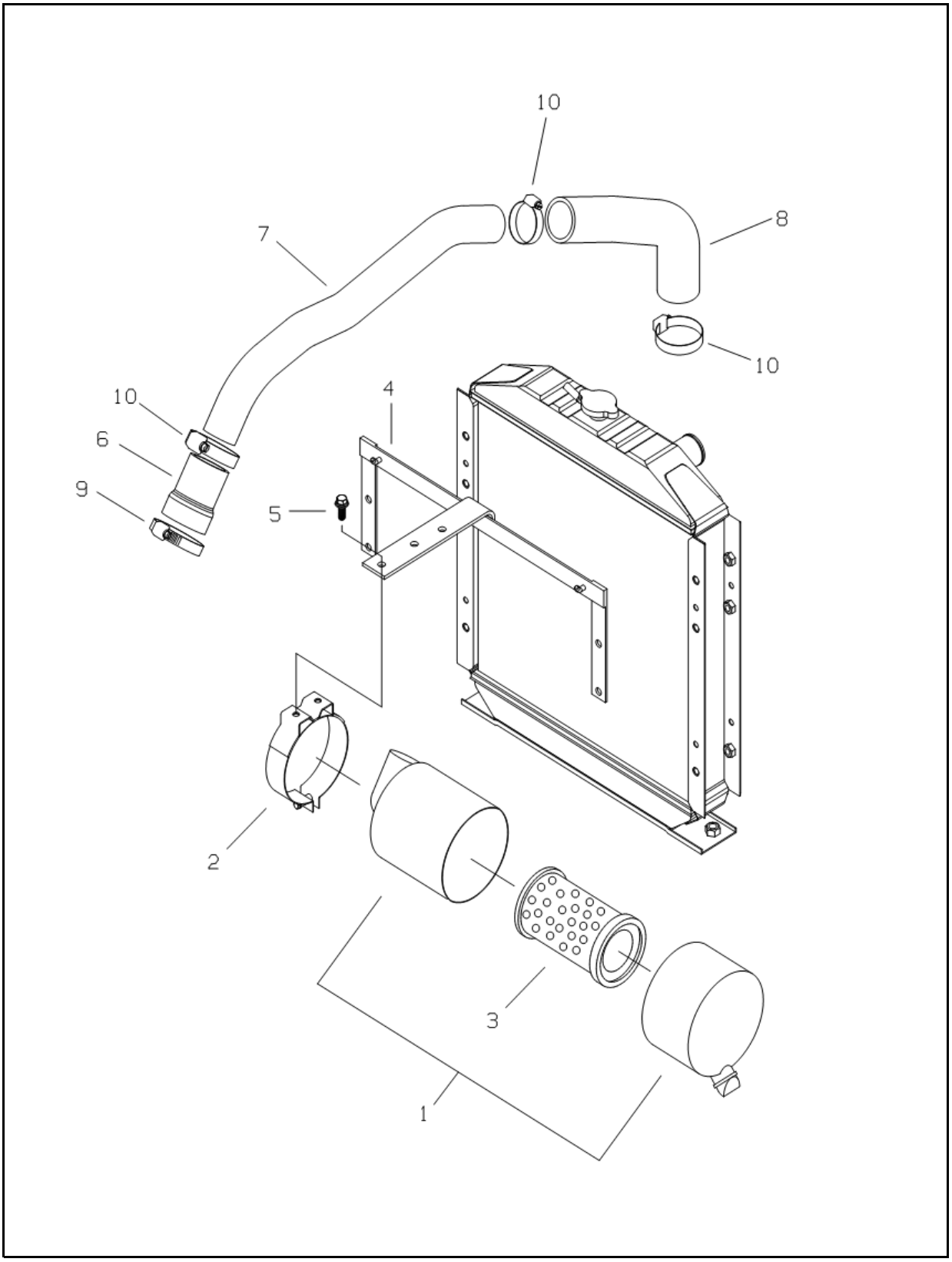

https://truckmanualshub.com/

AIR CLEANER

A-NOT AVAILABLE / B-i28,i36

A-NOT AVAILABLE / B-i28,i36

FIG. 2-5

NO.	PART NO.	PART NAME & DESCRIPTION		QTY A	QTY B	QTY C	APP.NO	REM.
1	A1190110	AIR CLEANER ASSY		1	1			
2	A1190113	BAND, AIR CLEANER		1	1			
3	A1190111	ELEMENT, PRIMARY		1	1			
4	A1190201	BRACKET, AIR CLEANER		1	*			L3A
	A1190181	BRACKET, AIR CLEANER		*	1			S4L
5	S155082033	BOLT, HEX. W/WASHER	M8x1.25x20L	2	2			
6	A1190163	HOSE, A AIR INTAKE		1	1			
7	A1190207	PIPE, AIR INTAKE		1	*			L3A
	A1190167	PIPE, AIR INTAKE		*	1			S4L
8	A1190179	HOSE, A AIR INTAKE		1	1			
9	A1970201K	CLAMP, HOSE		1	1			
10	A1970201J	CLAMP, HOSE		3	3			

https://truckmanualshub.com/

ENGINE FRAME

FIG. 2-6B **G. 210,215**

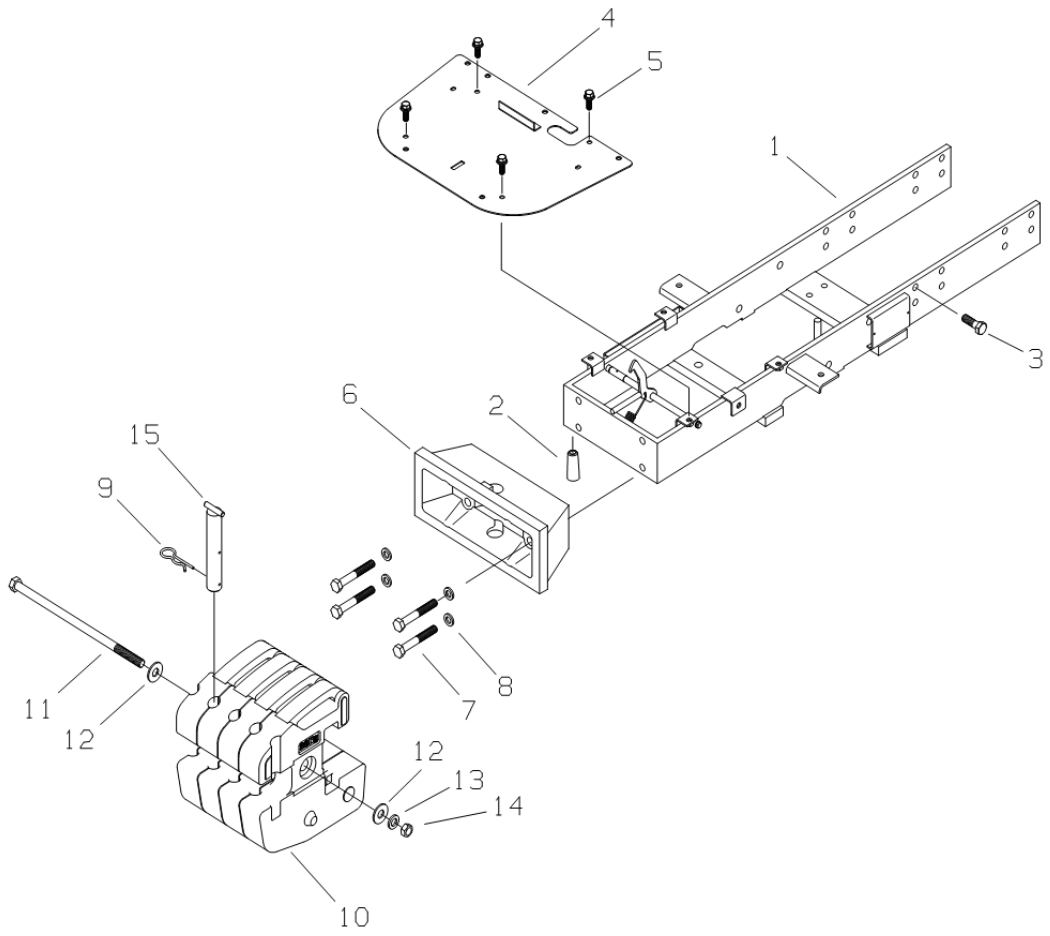

https://truckmanualshub.com/

ENGINE FRAME

A-NOT AVAILABLE / B-i28,i36

A-NOT AVAILABLE / B-i28,i36

FIG. 2-6B (S4L)

NO.	PART NO.	PART NAME & DESCRIPTION		QTY A	QTY B	QTY C	APP.NO	REM.
1	A1210158	FRAME, ENGINE		*	1			
2	A0710037	GRIP		*	1			
3	S154123533	BOLT, HEX. W/WASHER		*	16			
4	A1210124	PLATE, BOTTOM		*	1			
5	S155082033	BOLT, HEX.	M8x1.25x20L	*	4			
6	A1215040	BUMPER		*	1			
7	S104141143	BOLT, HEX.		*	4			
8	S361140013	WASHER, SPRING	M14	*	4			
9	A1970350	PIN,SNAP		*	1			
10	A1215030	WEIGHT, FRONT		*	4			
11	A1215028	BOLT, HEX		*	1			
12	3A0010847	WASHER, STOP		*	2			
13	S361160013	WASHER, SPR. 1-TY	M16	*	1			
14	S314160013	NUT, HEX. S. 2-TY	M16x1.5P	*	2			
15	A1215031	PIN, FRONT HOOK		*	1			

https://truckmanualshub.com/

ENGINE FRAME

FIG. 2-6B **G. 210,215**

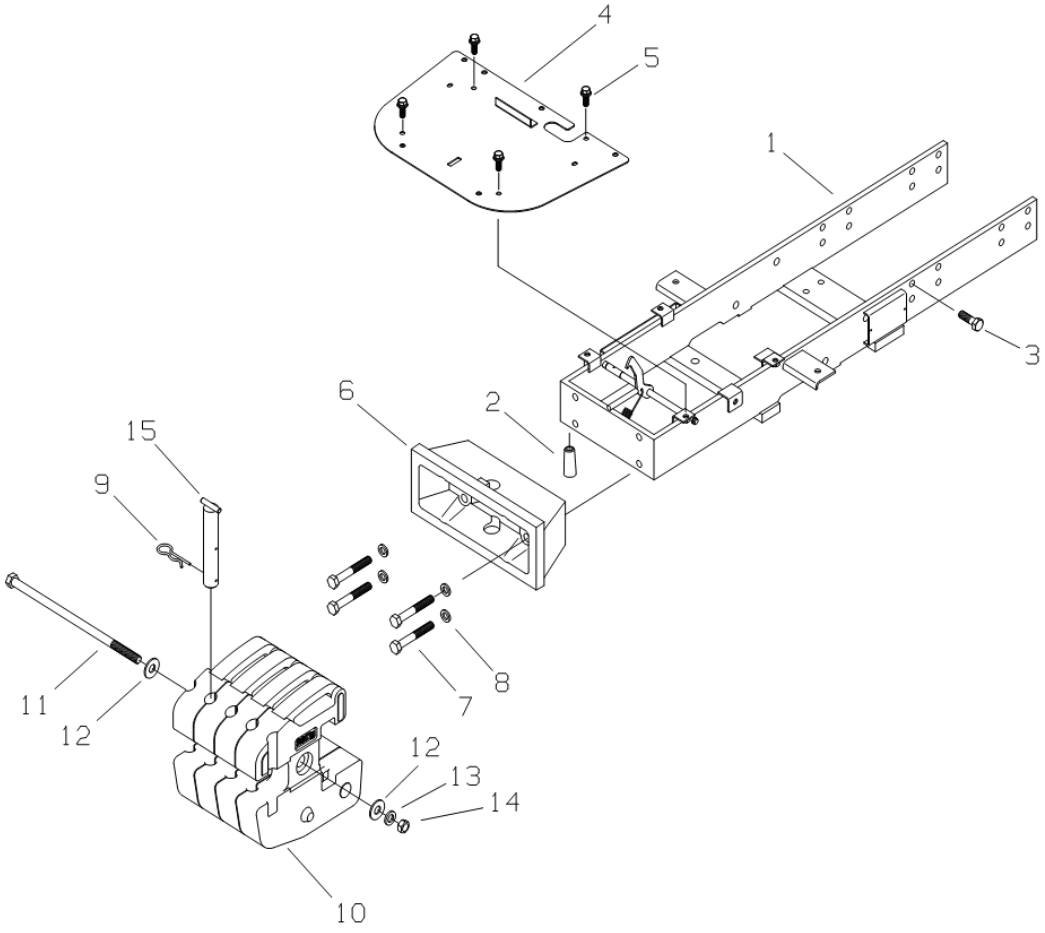

https://truckmanualshub.com/

ENGINE FRAME

A-NOT AVAILABLE / B-i28,i36

A-NOT AVAILABLE / B-i28,i36

FIG. 2-6B (S4L)

NO.	PART NO.	PART NAME & DESCRIPTION		QTY A	QTY B	QTY C	APP.NO	REM.
1	A1210130	FRAME, ENGINE		*	1			
2	A0710037	GRIP		*	1			
3	S154123533	BOLT, HEX. W/WASHER		*	16			
4	A1210124	PLATE, BOTTOM		*	1			
5	S155082033	BOLT, HEX.	M8x1.25x20L	*	4			
6	A1215040	BUMPER		*	1			
7	S104141143	BOLT, HEX.		*	4			
8	S361140013	WASHER, SPRING	M14	*	4			
9	A1970350	PIN,SNAP		*	1			
10	A1215030	WEIGHT, FRONT		*	4			
11	A1215028	BOLT, HEX		*	1			
12	3A0010847	WASHER, STOP		*	2			
13	S361160013	WASHER, SPR. 1-TY	M16	*	1			
14	S314160013	NUT, HEX. S. 2-TY	M16x1.5P	*	2			
15	A1215031	PIN, FRONT HOOK		*	1			

https://truckmanualshub.com/

CLUTCH

FIG. 3-1A **G. 250**

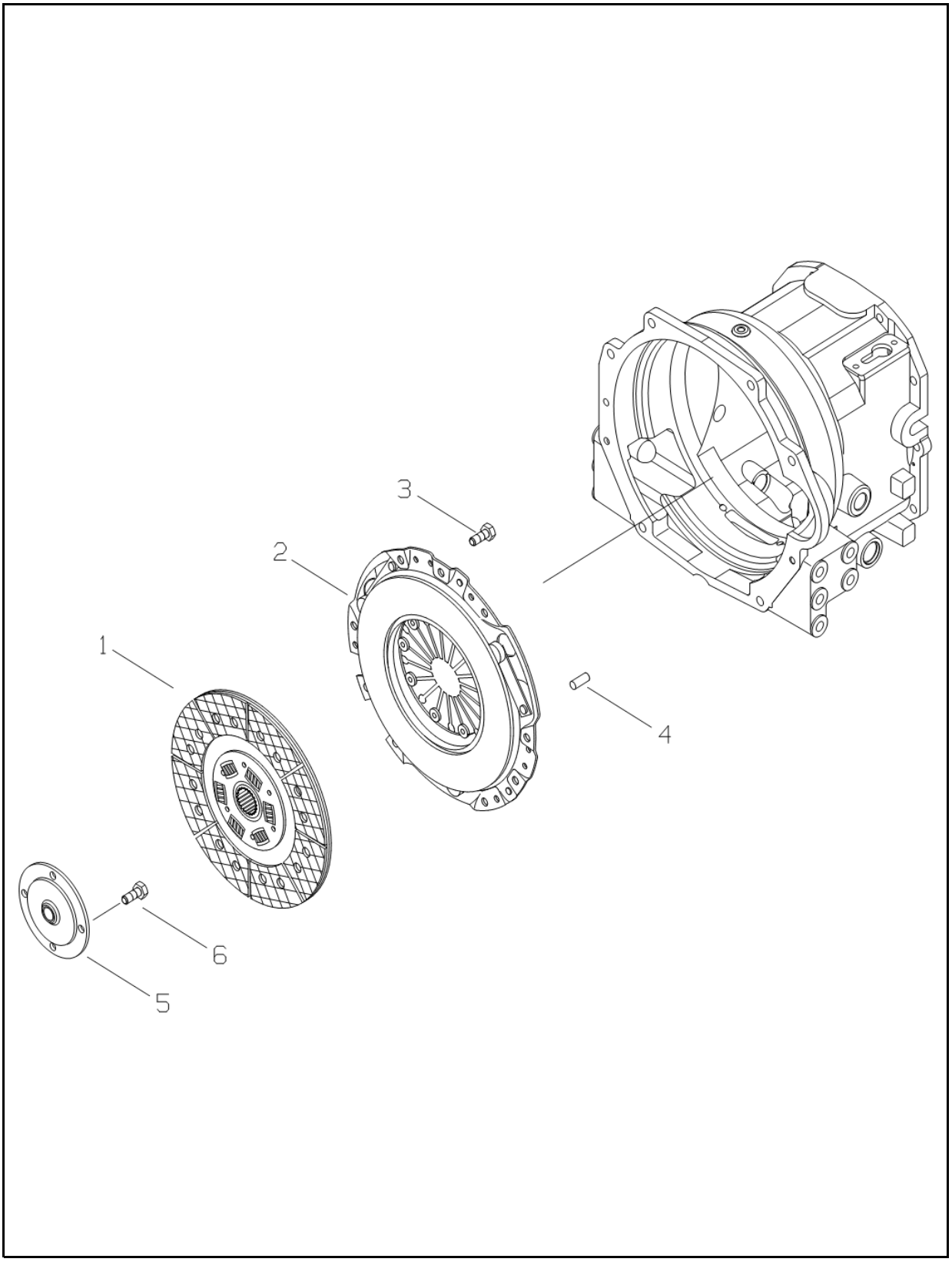

https://truckmanualshub.com/

CLUTCH

A-NOT AVAILABLE / B-i28,i36

A-NOT AVAILABLE / B-i28,i36

FIG. 3-1A (MEC)

NO.	PART NO.	PART NAME & DESCRIPTION		QTY A	QTY B	QTY C	APP.NO	REM.
1~2	A1250111	CLUTCH ASSY		1	1			
1	A1250107	CLUTCH DISK ASSY		1	1			
2	A1250094	CLUTCH COVER ASSY		1	1			
3	S153082533	BOLT, HEX. W/WASHER	M8x1.25x25L	6	6			
4	S423081610	PIN, PAR. A-TY.	D8x16L	3	3			
5	A1281428	SLEEVE, FLYWHEEL		1	1			
6	S153102533	BOLT, HEX, W/WASHER	M10X1.5X25L	4	4			

https://truckmanualshub.com/

DAMPER

FIG. 3-1B G. 250

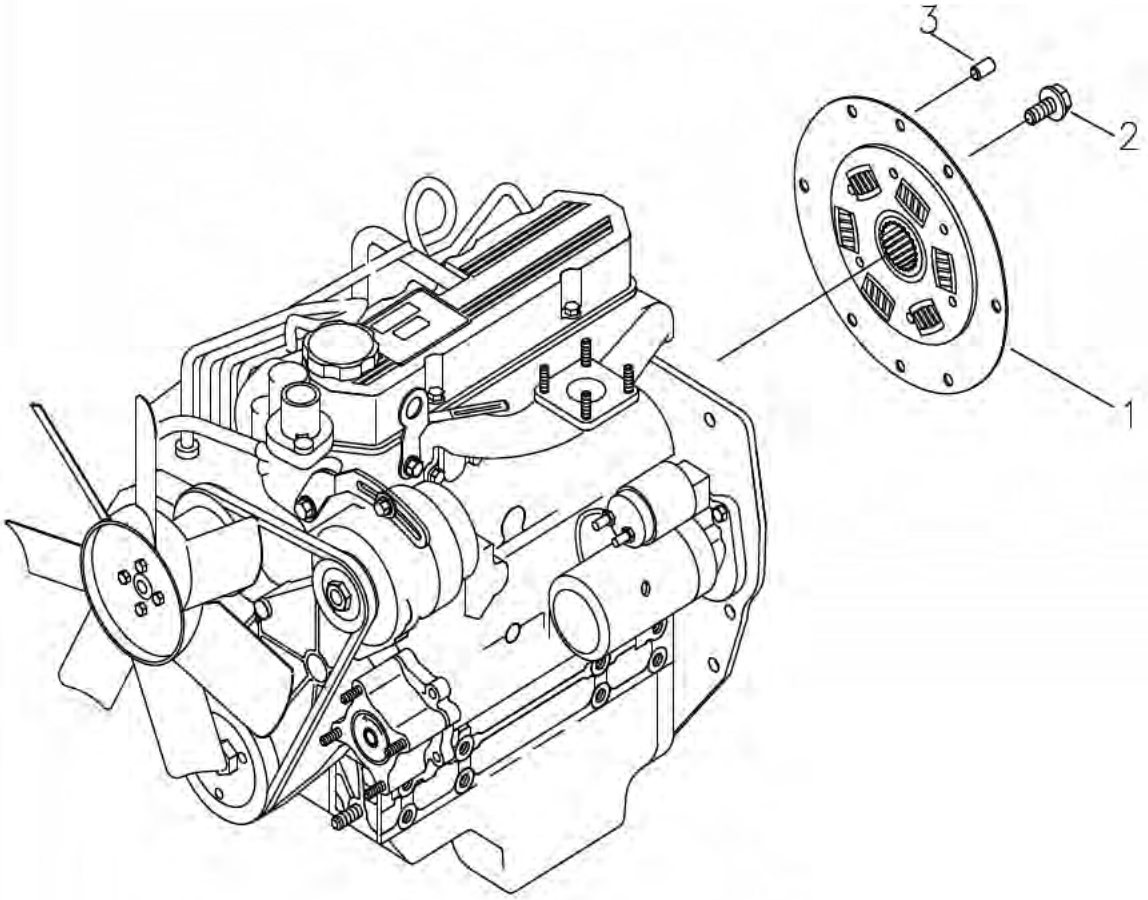

https://truckmanualshub.com/

DAMPER

A-NOT AVAILABLE / B-i28,i36

A-NOT AVAILABLE / B-i28,i36

FIG. 3-1B (HST)

NO.	PART NO.	PART NAME & DESCRIPTION		QTY A	QTY B	QTY C	APP.NO	REM.
1	A1250158	DAMPER ASSY		1	1			
2	S153082533	BOLT, HEX	M8x1.25x25L	6	6			
3	S423081610	PIN, DOWEL	D8x16L	3	3			

https://truckmanualshub.com/

CLUTCH HOUSING

FIG. 3-2A **G. 250**

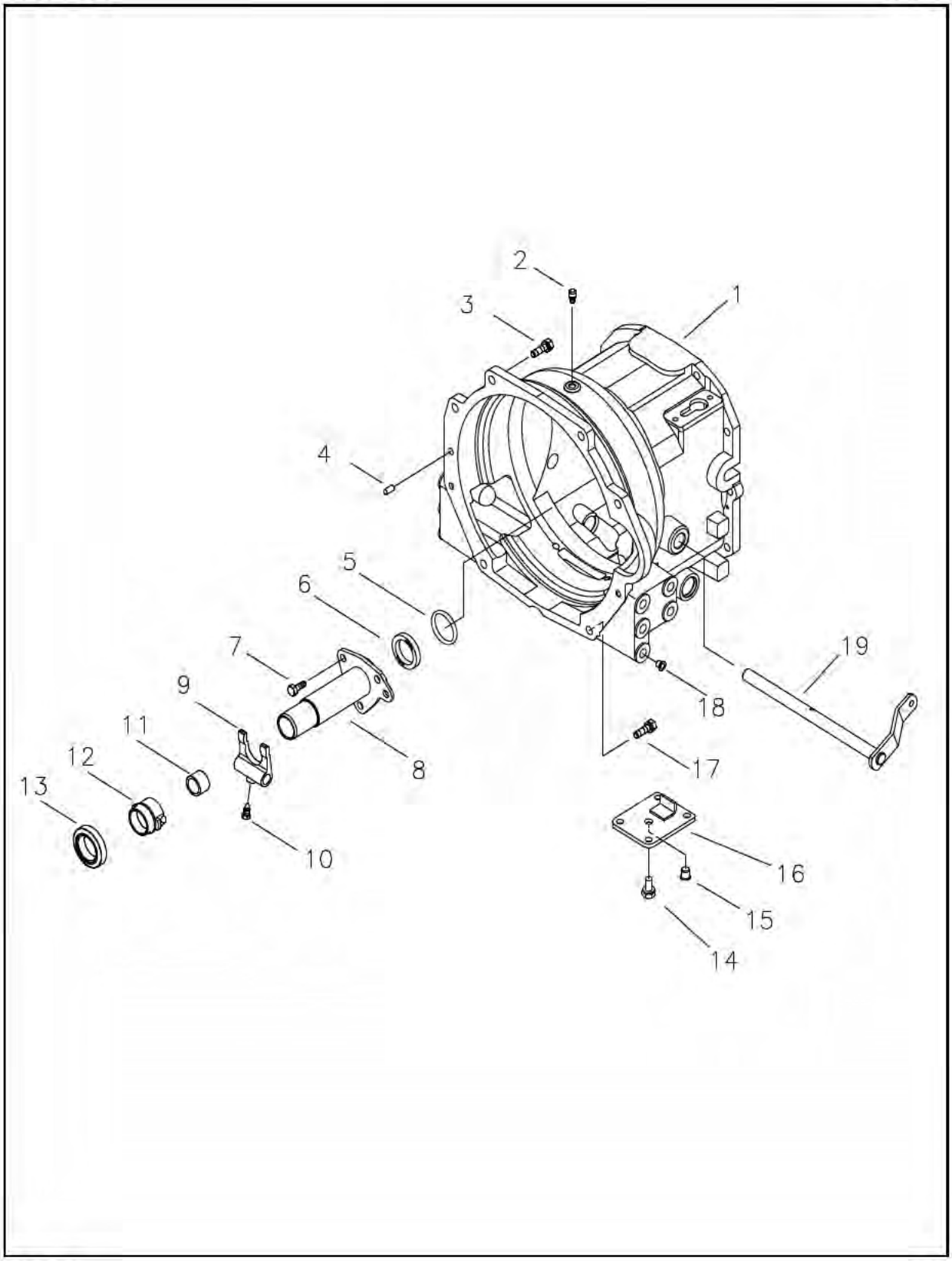

https://truckmanualshub.com/

CLUTCH HOUSING

A-NOT AVAILABLE / B-i28,i36

A-NOT AVAILABLE / B-i28,i36

FIG. 3-2A (MEC)

NO.	PART NO.	PART NAME & DESCRIPTION		QTY A	QTY B	QTY C	APP.NO	REM.
1	A1250161	HOUSING, CLUTCH		1	*			L3A
	A1250157	HOUSING, CLUTCH		*	1			S4L
2	A1250049	PLUG, AIR BENT		1	1			
3	S153123533	BOLT, HEX	M12X1.75X35L	6	6			
4	S423102010	PIN, PAR. A-TY		2	*			
5	S804060010	O-RING		1	1			
6	A0651302	SEAL, OIL	TC30458	1	1			
7	S154102533	BOLT, HES. W/WASHER	M10X1.25X25L	4	4			
8	A1250159	COVER, MAIN SHAFT		1	1			
9	A1250045	LEVER, CLUTCH SHIFT		1	1			
10	A1250047	BOLT, LOCKING	M12x1.25	1	1			
11	A1250113	BUSHING,SELF LUB	MB3830DU(OD42xID38x30)	1	1			
12	A1250112	HUB, RELEASE BEARING		1	1			
13	A1250062	BEARING, RELEASE	TK45-4BU3(OD73.6xID45x18)	1	1			
14	S154102033	BOLT, HEX	M10X1.25X20L	4	4			
15	3A1250009	PLUG		1	1			DO
	A1250123	PIN, SPLIT		1	1			EX
16	A1280232	COVER, HST HOUSING		1	1			
17	S153126033	BOLT, HEX. W/WASHER	M12X1.75X60L	2	2			
18	3A1970068	PLUG	D12	6	6			
19	A1260100	SHAFT, CLUTCH LEVER		1	1			

https://truckmanualshub.com/

HST

FIG. 3-2B G. 270

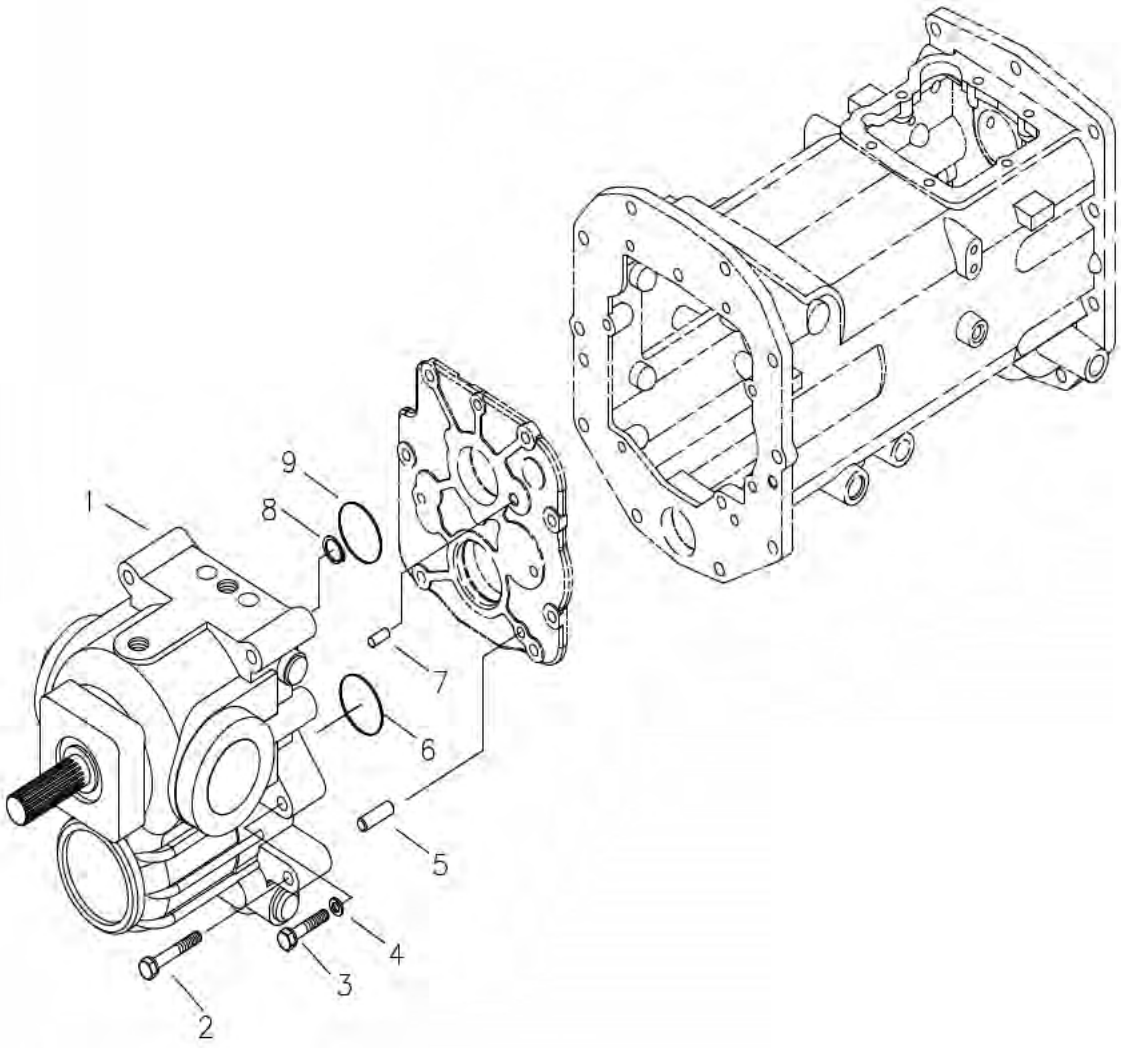

https://truckmanualshub.com/

FIG. 3-2B (HST)

NO.	PART NO.	PART NAME & DESCRIPTION		QTY A	QTY B	QTY C	APP.NO	REM.
1	A1270007	HST UNIT		1	1			23CC
2	S154107033	BOLT, HEX. W/WASHER	M10x1.25x70L	2	2			
3	S103105043	BOLT, HEX	M10x1.25x50L	2	2			
4	S361100013	WASHER, SPRING		2	2			
5	S423103210	PIN, PAR. A-TY		1	1			
6	S802070010	O-RING		1	1			
7	S423102010	PIN, PAR. A-TY		1	1			
8	S810020001	RING, SNAP		1	1			
9	S802065010	O-RING		1	1			

https://truckmanualshub.com/

CLUTCH PEDAL

FIG. 3-3 G. 260

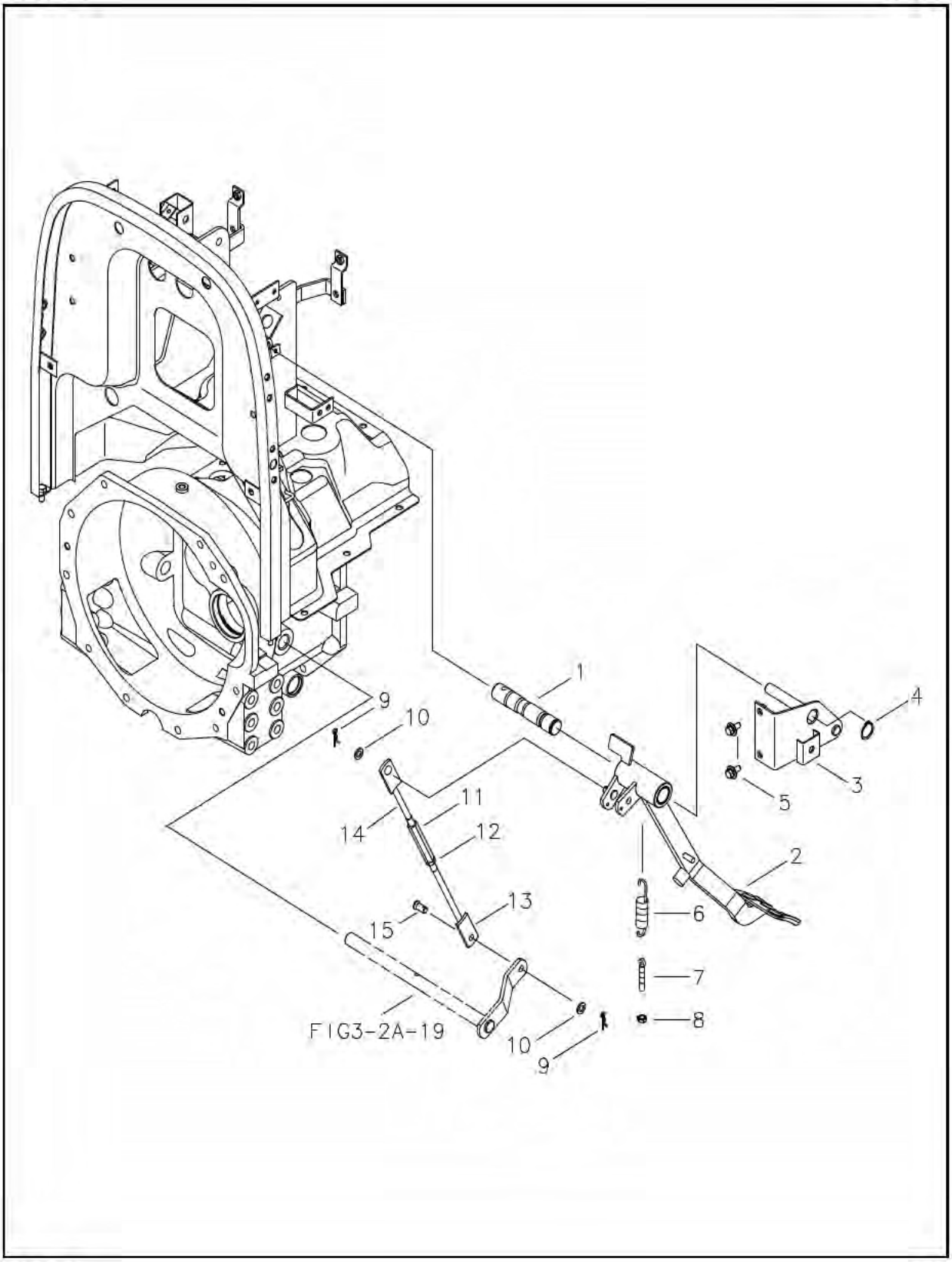

https://truckmanualshub.com/

CLUTCH PEDAL

A-NOT AVAILABLE / B-i28,i36

A-NOT AVAILABLE / B-i28,i36

FIG. 3-3 (MEC)

NO.	PART NO.	PART NAME & DESCRIPTION		QTY A	QTY B	QTY C	APP.NO	REM.
1	A1670311	SHAFT, BRAKE PEDAL		1	1			
2	A1260115	PEDAL, CLUTCH		1	1			
3	A1260099	STOPPER, CLUTCH PEDAL		1	1			
4	S810025001	RING, SNAP		1	1			
5	S159082033	BOLT, HEX	M8X1.25X20	2	2			
6	A1260112	SPRING		1	1			
7	A1260109	BOLT, ADJUSTER	M8X1.25	1	1			
8	A0610274	NUT, LOCK	M8X1.25	1	1			
9	S443100013	PIN, SNAP		2	2			
10	S363100013	WASHER, PLN		2	2			
11~14	A1260104	CLUTCH LINK ASSY		1	1			
11	A1260078	ADJUSTER, CONTROL		1	1			
12	S314100013	NUT, HEX		1	1			
13	A1260103	LINK(B)		1	1			
14	A1260102	LINK(A)		1	1			
15	A1260111	PIN, CLUTCH		1	1			

https://truckmanualshub.com/

TRANSMISSION CASE

FIG. 3-4A **G. 280**

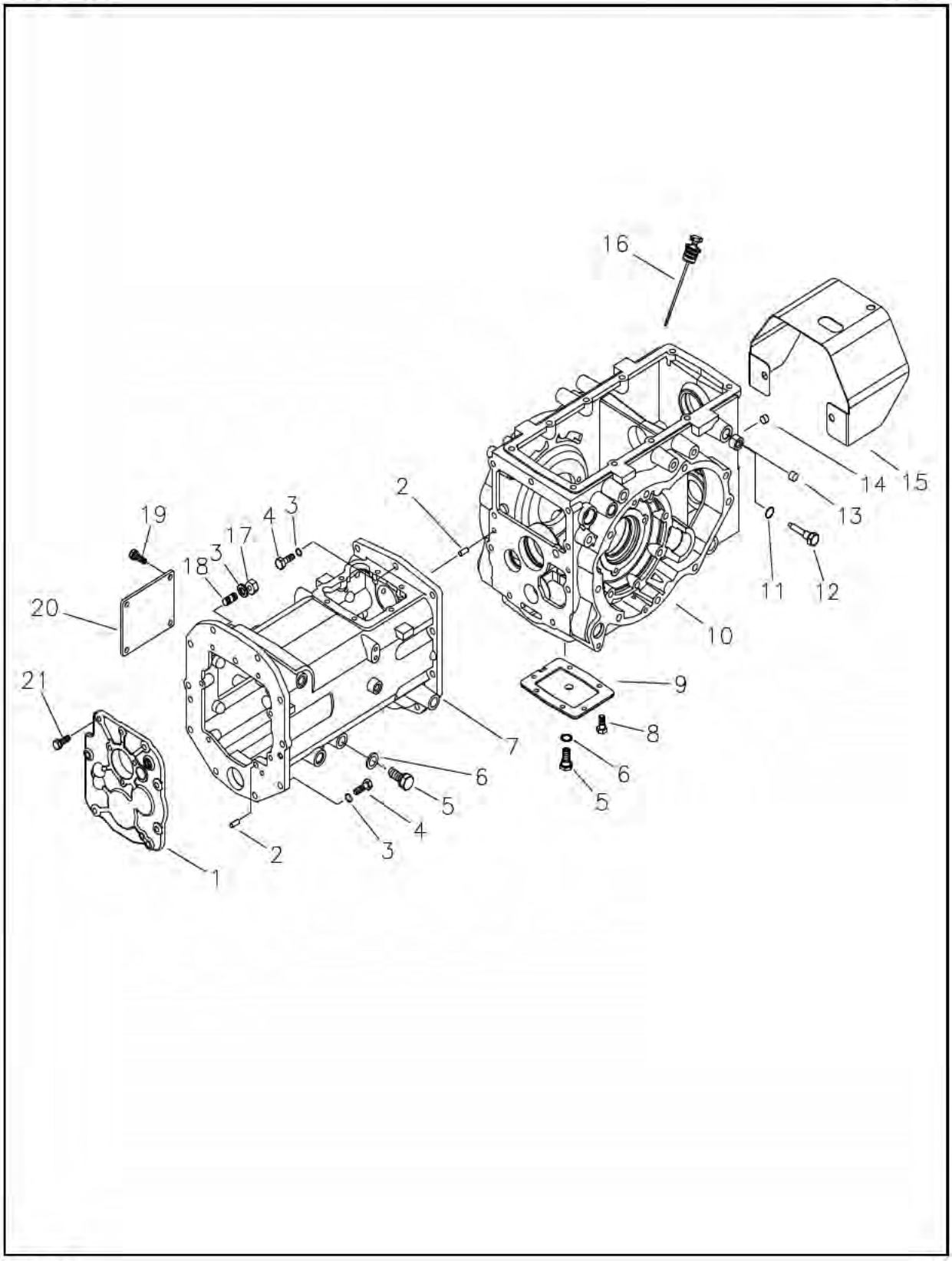

https://truckmanualshub.com/

TRANSMISSION CASE

A-NOT AVAILABLE / B-i28,i36

A-NOT AVAILABLE / B-i28,i36

FIG. 3-4A (MEC)

NO.	PART NO.	PART NAME & DESCRIPTION		QTY A	QTY B	QTY C	APP.NO	REM.
1	A1280228	COVER, CENTER CASE		1	1			
2	S423102010	PIN, PAR. A-TY		6	6			
3	S361120013	WASHER, PLN		19	19			
4	S105123533	BOLT, HEX	M12X1.75X35L	15	15			
5	3A1250013	PLUG, DRAIN		2	2			
6	A10263360	SEAL		2	2			
7	A1280235	CASE, CENTER		1	1			
8	S154102533	BOLT, HEX W/WASHER		6	6			
9	A1280202	COVER, M/PTO		1	1			
10	A1280225	CASE, AXLE		1	1			
11	S801010A10	O-RING		1	1			EX
12	A1291195	BOLT, SELF LOCK		1	1			EX
13	3A1290009	CAP, RAIL		1	1			EX
14	Q0710004	CAP, RAIL		1	1			EX
15	A1280092	COVER, PTO		1	1			DO
	A1280245	SHIELD, PTO		1	1			EC
16	A1280161	GUAGE, OIL LEVEL		1	1			
17	S305120013	NUT, HEX. 2-TY.		4	4			
18	S139123523	BOLT, STUD		4	4			
19	S154102033	BOLT, HEX. W/WASHER	M10X1.25X20L	4	4			
20	A1280210	COVER, MAIN FORK		1	1			
21	S154103033	BOLT, HEX. W/WASHER	M10X1.25X30L	7	7			

https://truckmanualshub.com/

TRANSMISSION CASE

FIG. 3-4B **G. 280**

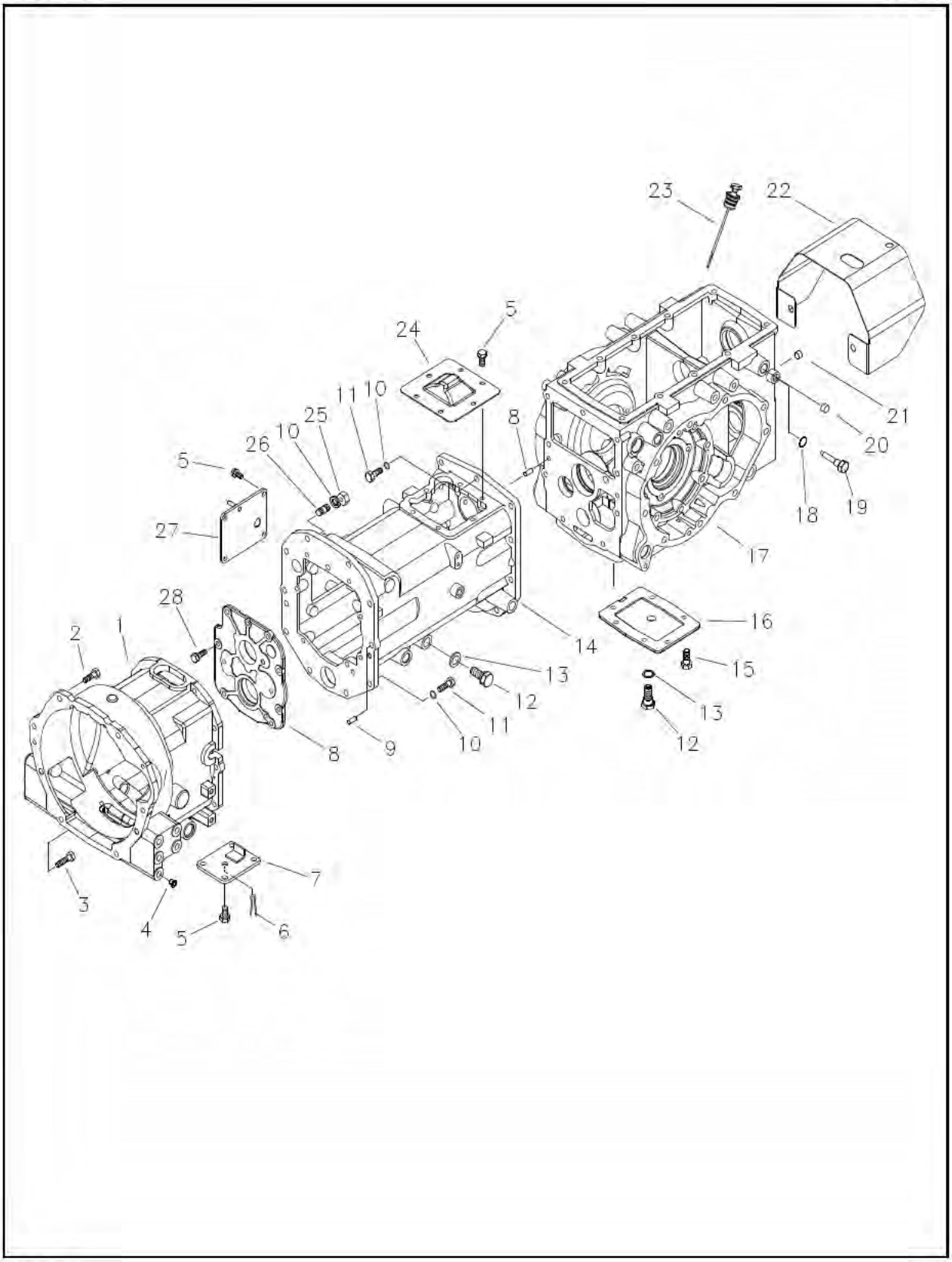

https://truckmanualshub.com/

TRANSMISSION CASE

A-NOT AVAILABLE / B-i28,i36

A-NOT AVAILABLE / B-i28,i36

FIG. 3-4B (HST)

NO.	PART NO.	PART NAME & DESCRIPTION		QTY A	QTY B	QTY C	APP.NO	REM.
1	A1280223	HOUSING, HST			1			
2	S153123533	BOLT, HEX	M12X1.75X35		6			
3	S153126033	BOLT, HEX	M12X1.75X60		2			
4	3A1970068	PLUG	D12		6			
5	S154102033	BOLT, HEX. W/WASHER			14			
6	A1250123	PIN, SPLIT			1			
7	A1280232	COVER, HOUSING			1			
8	A1280227	COVER, C/CASE FRONT			1			
9	S423102010	PIN, PAR. A-TY			4			
10	S361120013	WASHER, PLN			19			
11	S105123543	BOLT, HEX.			15			
12	3A1250013	PLUG, DRAIN			2			
13	A10263360	SEAL			2			
14	A1280224	CASE, CENTER			1			
15	S154102533	BOLT, HEX. W/WASHER			6			
16	A1280202	COVER, M/PTO			1			
17	A1280225	CASE, AXLE			1			
18	S801010A10	O-RING			1			
19	A1291195	BOLT, SELF LOCK			1			
20	3A1290009	CAP, RAIL			1			
21	Q0710004	CAP, RAIL			1			
22	A1280092	COVER, PTO			1			
	A1280245	SHIELD, PTO			1			EC
23	A1280161	GUAGE, OIL LEVEL			1			
24	A1280230	COVER, PTO CLUTCH			1			
25	S305120013	NUT, HEX. 2-TY.			4			
26	S139123523	BOLT, STUD			4			
27	A1280229	COVER, C/CASE RH			1			
28	S154103033	BOLT, HEX. W/WASHER			5			

https://truckmanualshub.com/

MAIN SHAFT

FIG. 3-5 G. 281

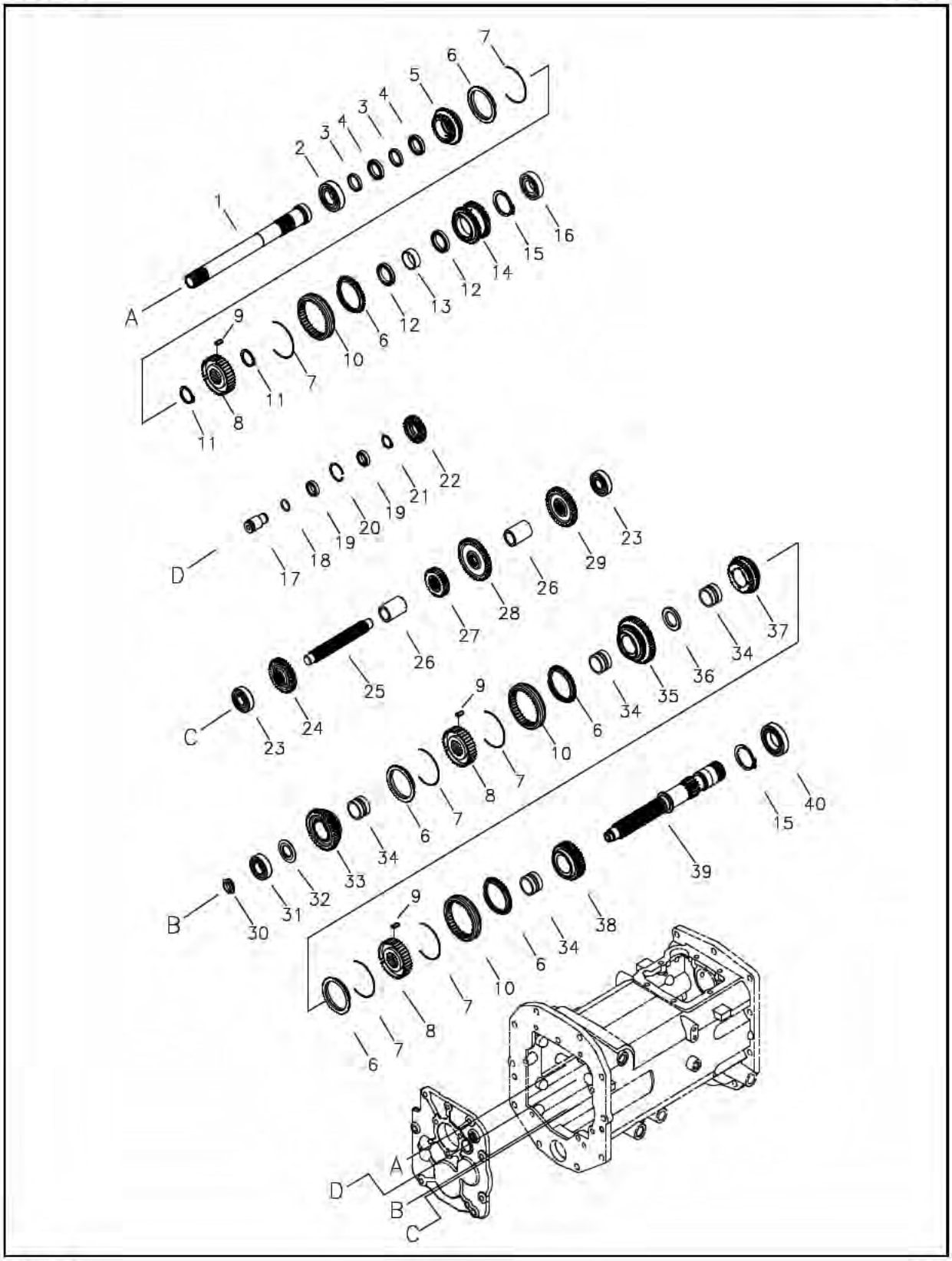

https://truckmanualshub.com/

주 축
MAIN SHAFT

FIG. 3-5 G. 281

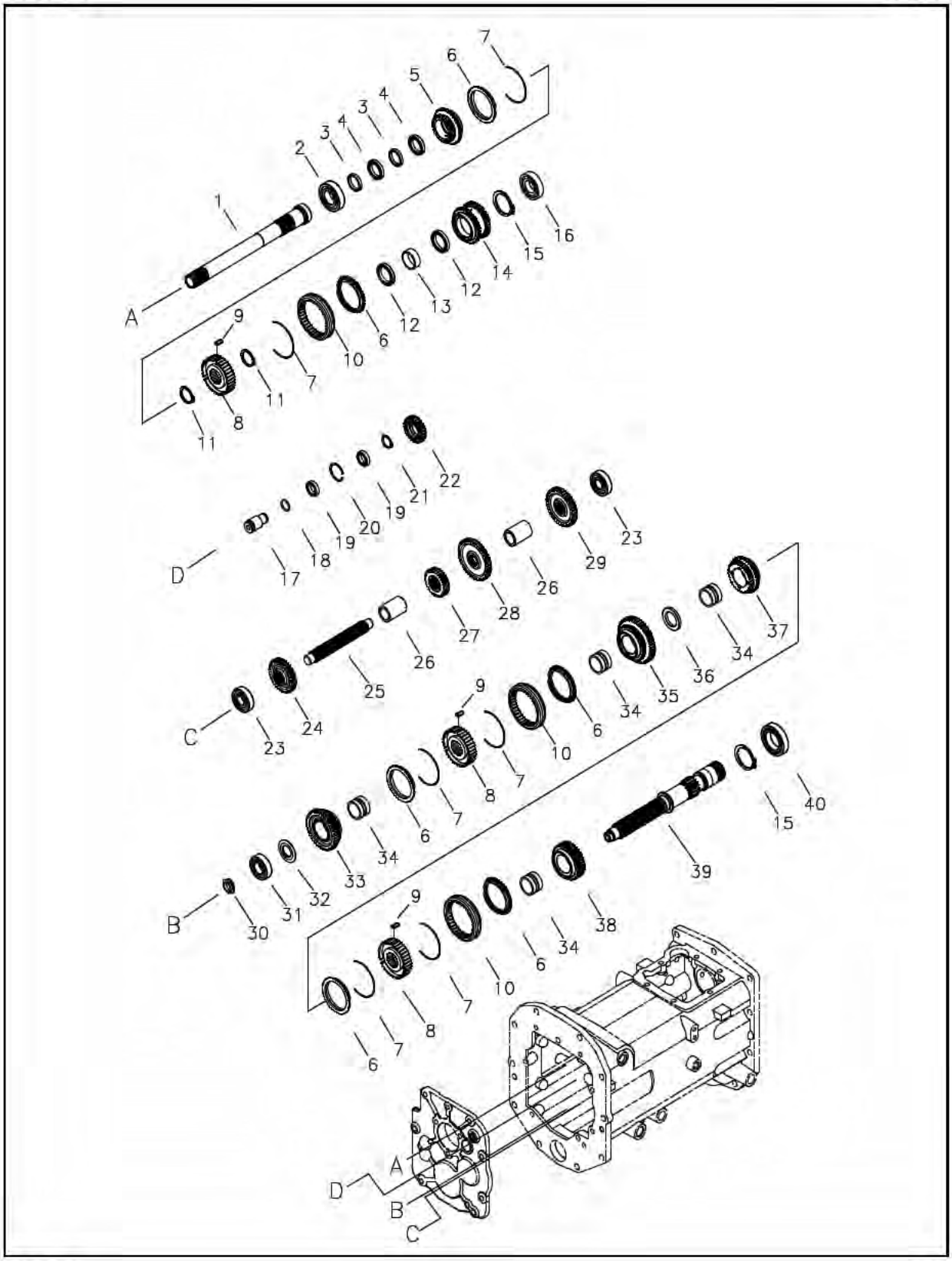

https://truckmanualshub.com/

MAIN SHAFT

A-NOT AVAILABLE / B-i28,i36

A-NOT AVAILABLE / B-i28,i36

FIG. 3-5 (MEC)

NO.	PART NO.	PART NAME & DESCRIPTION		QTY A	QTY B	QTY C	APP.NO	REM.
1	A1281654	SHAFT, F-R DRV		1	1			
2	A0862060	BEARING, BALL	#6206	1	1			
3	A1285199	GEAR, REV/DRV		2	2			
4	A0868060	BEARING, BALL	#6806	2	2			
5	A1281652	GEAR, REV. DRV (28T)		1	1			
6	A1281354	RING, CYNCHRONIZER		6	6			
7	A1281021	SPING		6	6			
8	A1281384	HUB, SHIFT		3	3			
9	3A1281020	PIECE		9	9			
10	A1281361	SLEEVE		3	3			
11	S810032001	RING, SNAP		2	2			
12	A0868070	BEARING, BALL		2	2			
13	A1281655	SPACER,F-R DRVN(SP-1)		1	1			
14	A1281653	GEAR, FWD DRV (37T)		1	1			
15	S810040001	RING, SNAP		2	2			
16	A0869080	BEARING, BALL	#6908	1	1			
17	A1281591	SHAFR, R/IDLE		1	1			
18	S801021010	O-RING		1	1			
19	A0868040	BEARING, BALL		2	2			
20	S811032001	RING, SNAP		1	1			
21	S810020001	RING, SNAP		1	1			
22	A1281666	GEAR, REV IDLE (26T)		1	1			
23	A0863040	BEARING, BALL		2	2			
24	A1281658	GEAR, MAIN 2ND DRV (35T)		1	1			
25	A1281664	SHAFT, MAIN DRV		1	1			
26	A1285297	SPACER		2	2			
27	A1281656	GEAR MAIN 1ST DRV (28T)		1	1			
28	A1281662	GEAR MAIN 4TH DRV (44T)		1	1			
29	A1285290	GEAR,RANGE DRVN (40T)		1	1			
30	A1281602	NET, LOCK	M20X1.5	1	1			
31	A0862050	BEARING, BALL	#6205	1	1			
32	A1281597	SPACER,F-R DRVN(SP-1)		1	1			
33	A1281659	GEAR, MAIN 2ND DRVN (42T)		1	1			
34	A1281081	SLEEVE, GEAR		4	4			
35	A1281657	GEAR, MAIN 1ST DRVN (49T)		1	1			
36	A1281573	SPACER		1	1			
37	A1281663	GEAR, MAIN 4TH DRVN (33T)		1	1			
38	A1281661	GEAR, MAIN 3RD DRVN (37T)		1	1			
39	A1281701	SHAFRT, MAIN DRVN W/GEAR		1	1			
40	A0860080HL	BEARING, BALL	#6008HL	1	1			

https://truckmanualshub.com/

주 축

A-NOT AVAILABLE / B-i28,i36

MAIN SHAFT

A-NOT AVAILABLE / B-i28,i36

FIG. 3-5 **(MEC)**

NO.	PART NO.	PART NAME & DESCRIPTION			QTY A	QTY B	QTY C	APP.NO	REM.
1	A1281654	전후진 구동축	SHAFT, F-R DRV		1	1			
2	A0862060	볼베어링	BEARING, BALL	#6206	1	1			
3	A1285199	스페이서	GEAR, REV/DRV		2	2			
4	A0868060	볼베이링	BEARING, BALL	#6806	2	2			
5	A1281652	후진구동기어 (28T)	GEAR, REV. DRV (28T)		1	1			
6	A1281354	싱크로나이저링	RING, CYNCHRONIZER		6	6			
7	A1281021	스프링	SPING		6	6			
8	A1281384	변속 허브	HUB, SHIFT		3	3			
9	3A1281020	피이스	PIECE		9	9			
10	A1281361	슬리브	SLEEVE		3	3			
11	S810032001	스냅링	RING, SNAP		2	2			
12	A0868070	볼베어링	BEARING, BALL		2	2			
13	A1281655	스페이서	SPACER,F-R DRVN(SP-1)		1	1			
14	A1281653	전진 구동 기어(37T)	GEAR, FWD DRV (37T)		1	1			
15	S810040001	스냅링	RING, SNAP		2	2			
16	A0869080	볼베어링	BEARING, BALL	#6908	1	1			
17	A1281591	후진 아이들 축	SHAFR, R/IDLE		1	1			
18	S801021010	오-링	O-RING		1	1			
19	A0868040	볼베어링	BEARING, BALL		2	2			
20	S811032001	스냅링	RING, SNAP		1	1			
21	S810020001	스냅링	RING, SNAP		1	1			
22	A1281666	주변속 후진 기어 (26T)	GEAR, REV IDLE (26T)		1	1			
23	A0863040	볼베어링	BEARING, BALL		2	2			
24	A1281658	2단 구동기어(35T)	GEAR, MAIN 2ND DRV (35T)		1	1			
25	A1281664	주변속 구동축	SHAFT, MAIN DRV		1	1			
26	A1285297	스페이서	SPACER		2	2			
27	A1281656	1단 구동기어(28T)	GEAR MAIN 1ST DRV (28T)		1	1			
28	A1281662	4단 구동 기어(44T)	GEAR MAIN 4TH DRV (44T)		1	1			
29	A1285290	부변속 피동 기어 (40T)	GEAR,RANGE DRVN (40T)		1	1			
30	A1281602	너트	NET, LOCK	M20X1.5	1	1			
31	A0862050	볼베어링	BEARING, BALL	#6205	1	1			
32	A1281597	스페이서	SPACER,F-R DRVN(SP-1)		1	1			
33	A1281659	2단 피동기어(42T)	GEAR, MAIN 2ND DRVN (42T)		1	1			
34	A1281081	기어 슬리브	SLEEVE, GEAR		4	4			
35	A1281657	1단 피동기어 (49T)	GEAR, MAIN 1ST DRVN (49T)		1	1			
36	A1281573	스페이서	SPACER		1	1			
37	A1281663	4단 피동기어 (33T)	GEAR, MAIN 4TH DRVN (33T)		1	1			
38	A1281661	3단 피동기어 (37T)	GEAR, MAIN 3RD DRVN (37T)		1	1			
39	A1281665	주변속 피동축	SHAFRT, MAIN DRVN W/GEAR		1	1			
40	A0860080	볼베어링	BEARING, BALL	#6008	1	1			

https://truckmanualshub.com/

RANGE GEAR SHAFT

FIG. 3-6A G. 285

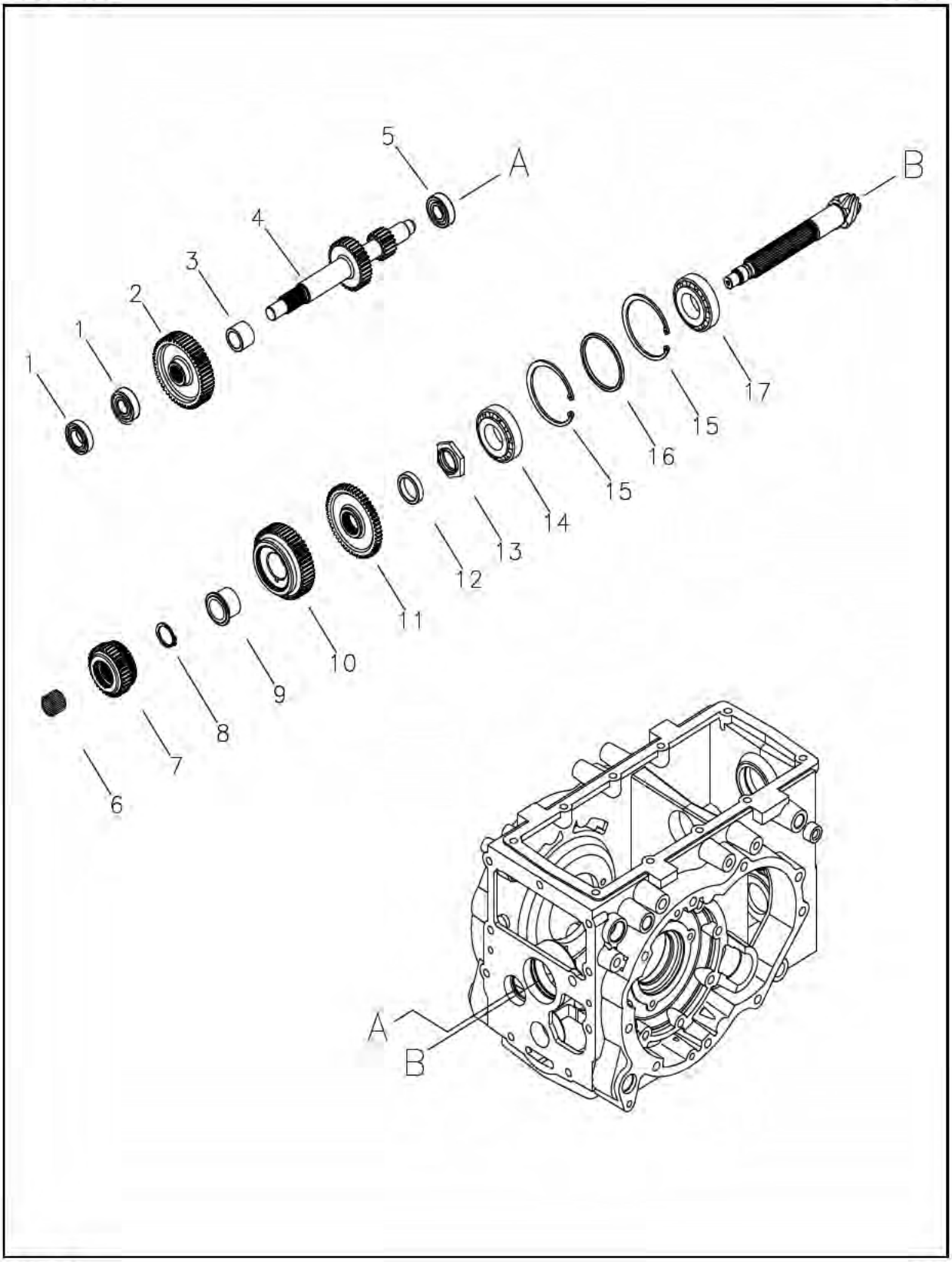

https://truckmanualshub.com/

RANGE GEAR SHAFT

A-NOT AVAILABLE / B-i28,i36

A-NOT AVAILABLE / B-i28,i36

FIG. 3-6A (MEC)

NO.	PART NO.	PART NAME & DESCRIPTION		QTY A	QTY B	QTY C	APP.NO	REM.
1	A0862040	BEARING, BALL	#6204	2	2			
2	A1285303	GEAR, RANGE DRVN (52T)		1	1			
3	A1285296	SPACER		1	1			
4	A1285307	SHAFT, RANGE DRV		1	1			
5	A0863040	BEARING, BALL	#6304	1	1			
6	3A1970274	BEARING NEEDLE		1	1			
7	A1285305	GEAR, RANGE DRV		1	1			
8	S810032001	RING, SNAP		1	1			
9	A1281046	SLEEVE, GEAR		1	1			
10	A1285292	GEAR, RANGE 2ND DRVN (36T)		1	1			
11	A1288154	GEAR, 4WD DRV (54T)		1	1			
12	A1285309	SPACER		1	1			
13	A1287079	NUT, LOCK		1	1			
14	A1326067	BEARING, TAPER	#30207J	1	1			
15	S811072001	RING, SNAP		2	2			
16	A1326068	SPACER	64.3X72X4.5t	1	1			
17	A1326032	BEARING, TAPER	#32207C	1	1			

https://truckmanualshub.com/

RANGE GEAR SHAFT

FIG. 3-6B G. 285

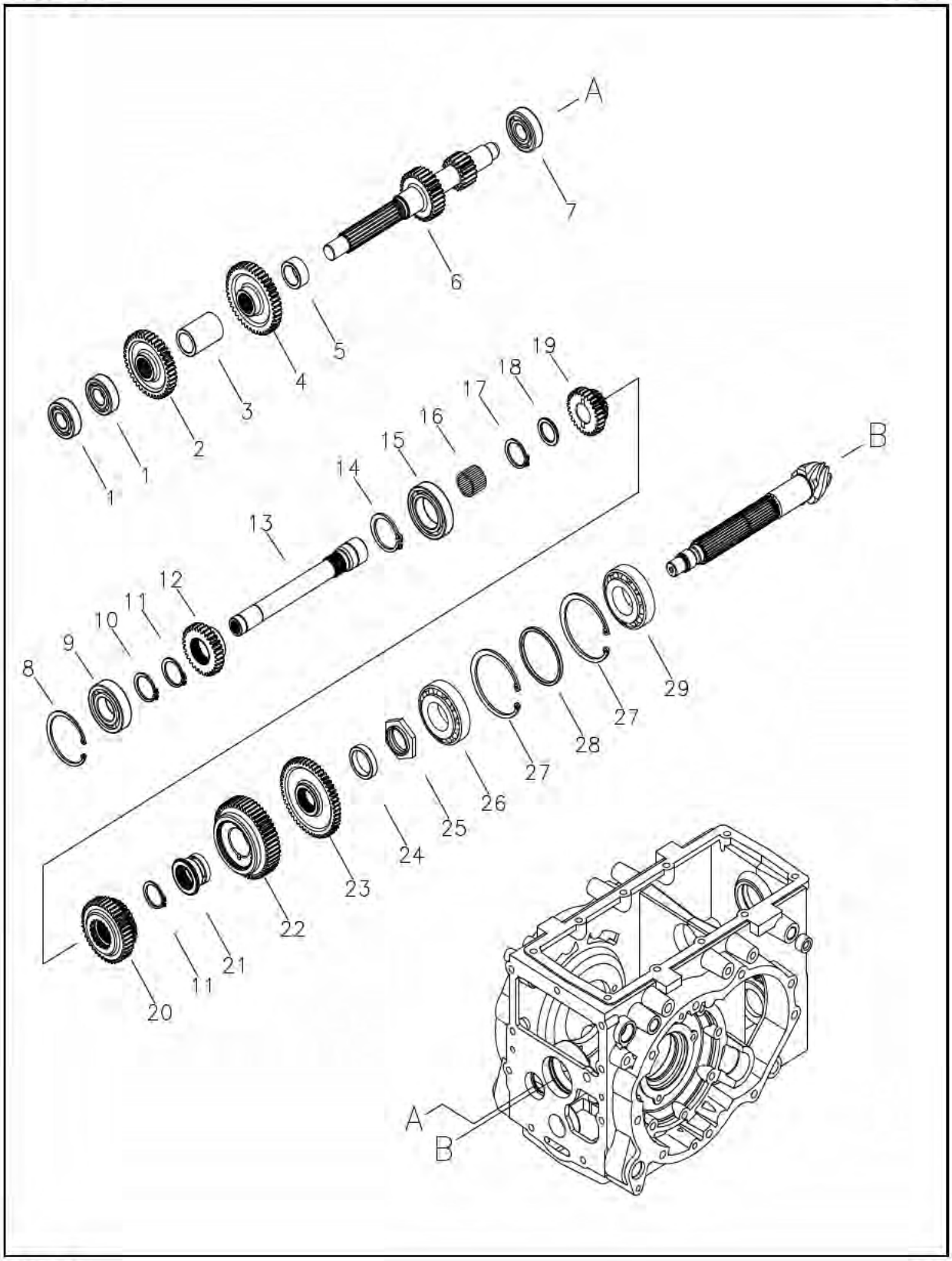

https://truckmanualshub.com/

RANGE GEAR SHAFT

A-NOT AVAILABLE / B-i28,i36

A-NOT AVAILABLE / B-i28,i36

FIG. 3-6B (HST)

NO.	PART NO.	PART NAME & DESCRIPTION		QTY A	QTY B	QTY C	APP.NO	REM.
1	A0862040	BEARING, BALL	#6204	2	2			
2	A1285290	GEAR, RANGE DRVN. (40T)		1	1			
3	A1285297	SPACER		1	1			
4	A1285294	GEAR, RANGE 3RD DRV (43T)		1	1			
5	A1285296	SPACER		1	1			
6	A1285293	SHAFT, RANGE DRV (29/18T)		1	1			
7	A0863040	BEARING, BALL	#6304	1	1			
8	S811062001	RING, SNAP		1	1			
9	A0862060	BEARING, BALL	#6206	1	1			
10	S810030001	RING, SNAP		1	1			
11	S810032001	RING, SNAP		2	2			
12	A1285289	GEAR, RANGE DRV. (30T)		1	1			
13	A1285288	SHAFT, RANGE DRIVE		1	1			
14	S810040001	RING, SNAP		1	1			
15	A0860080	BEARING, BALL	#6008	1	1			
16	3A1970274	BEARING, NEEDLE		1	1			
17	S810025001	RING, SNAP		1	1			
18	A1281598	SPACER		1	1			
19	A1285295	GEAR, RANGE 3RD DRVN (27T)		1	1			
20	A1285291	GEAR, RANGE 2ND DRVN (41T)		1	1			
21	A1281046	SLEEVE, GEAR		1	1			
22	A1285292	GEAR, RANGE 2ND DRVN (36T)		1	1			
23	A1288154	GEAR, 4WD DRV (54T)		1	1			
24	A1285309	SPACER		1	1			
25	A1287079	NUT, LOCK	M35X1.5	1	1			
26	A1326067	BEARING, TAPER	#30207J	1	1			
27	S811072001	RING, SNAP		2	2			
28	A1326068	SPACER	64.3X72X4.5t	1	1			
29	A1326032	BEARING, TAPER	#32207C	1	1			

https://truckmanualshub.com/

PTO SHAFT

FIG. 3-7A G. 283,287

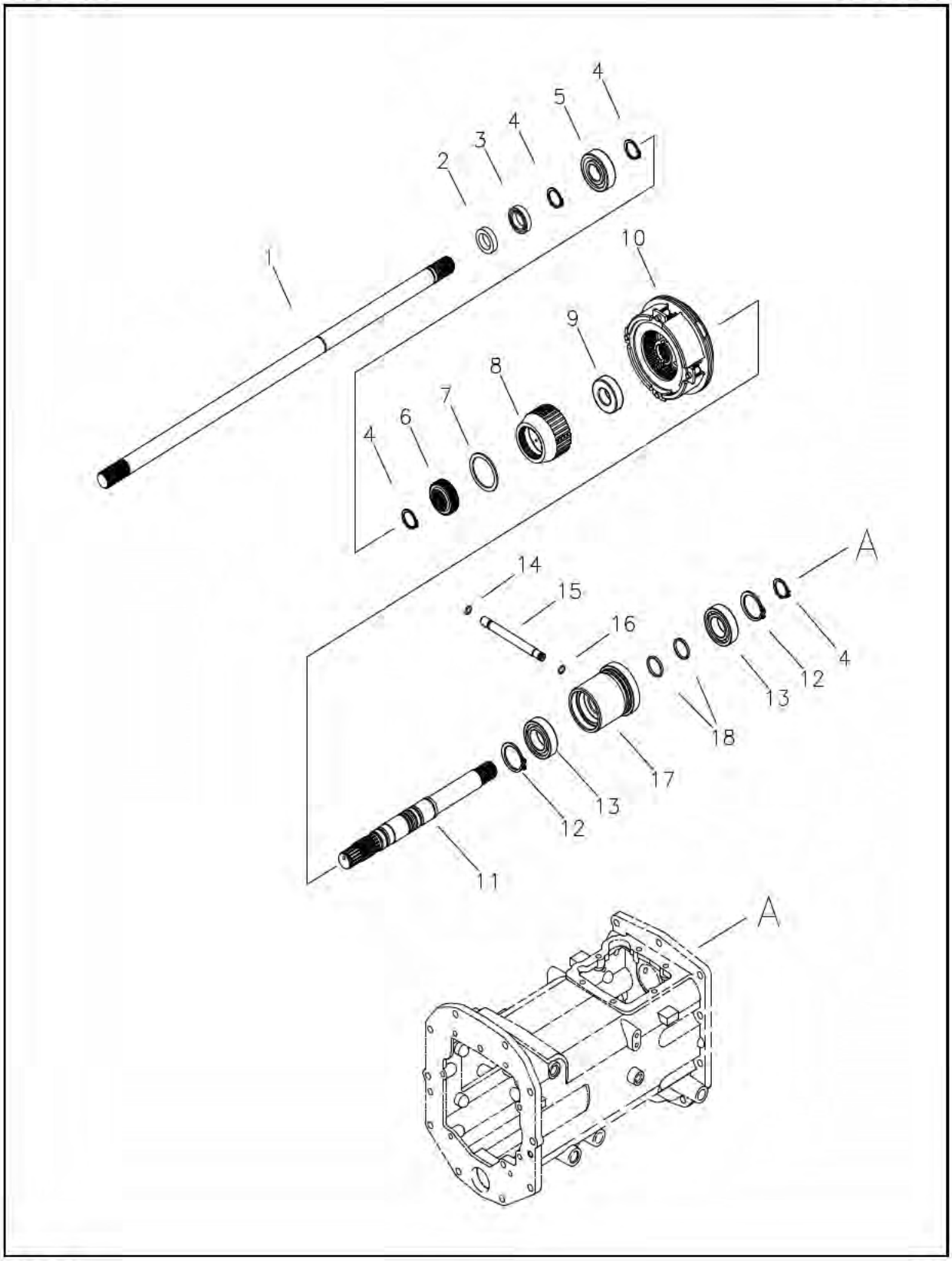

https://truckmanualshub.com/

PTO SHAFT

A-NOT AVAILABLE / B-i28,i36

A-NOT AVAILABLE / B-i28,i36

FIG. 3-7A (MEC)

NO.	PART NO.	PART NAME & DESCRIPTION		QTY A	QTY B	QTY C	APP.NO	REM.
1	A1283243	SHAFT, MAIN PTO		1	1			
2	A0651201	OIL, SEAL	TC30207	1	1			
3	A0868040	BEARING, BALL	#6804	1	1			
4	S810020001	RING, SNAP		4	4			
5	A0862040	BEARING, BALL	#6204	1	1			
6	A1287368	JOINT, HYD. CLUTCH HUB		1	1			
7	S810040001	RING, SNAP		1	1			
8	A1827369	HUB, PTO HYD. CLUTCH		1	1			
9	A0860040	BEARING, BALL	#6004	1	1			
10	A1287283	CLUTCH ASSY		1	1			
11	A1287393	SHAFT, PTO DRIVE		1	1			
12	S810025001	RING, SNAP		2	2			
13	A0860050	BEARING, BALL	#6005	2	2			
14	S804008010	O-RING		1	1			
15	A1287372	PIPE, H/CLUTCH INPUT		1	1			
16	S804007010	O-RING		1	1			
17	A1827394	SLEEVE, HYD CLUTCH CIRCUIT		1	1			
18	A1281229	RING, PISTON		2	2			

https://truckmanualshub.com/

PTO SHAFT

FIG. 3-7B **G. 283,287**

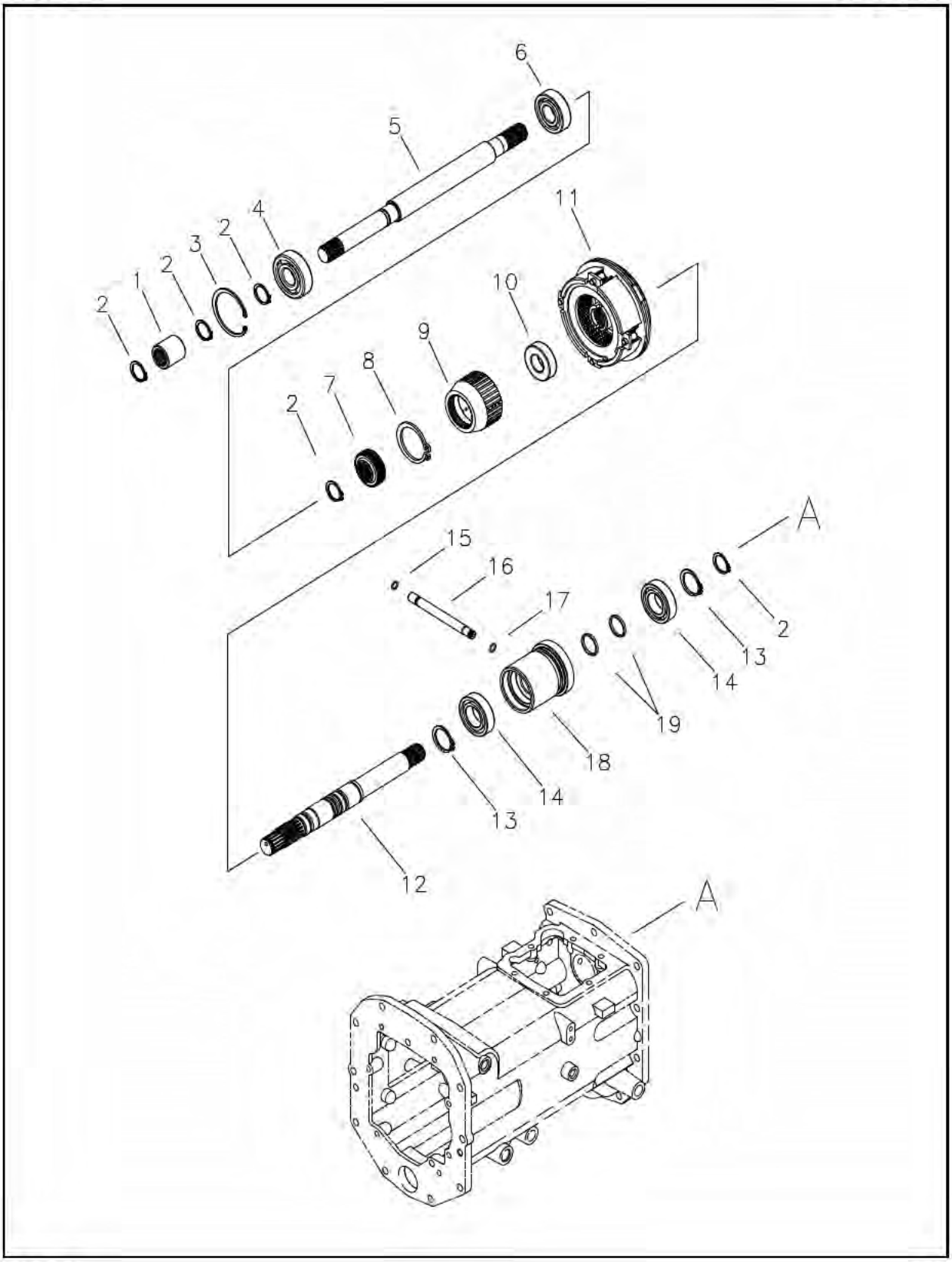

https://truckmanualshub.com/

PTO SHAFT

A-NOT AVAILABLE / B-i28,i36

A-NOT AVAILABLE / B-i28,i36

FIG. 3-7B (HST)

NO.	PART NO.	PART NAME & DESCRIPTION		QTY A	QTY B	QTY C	APP.NO	REM.
1	A1283242	JOINT		1	1			
2	S810020001	RING, SNAP		5	5			
3	S811052001	RING, SNAP		1	1			
4	A0863040	BEARING, BALL	#6304	1	1			
5	A1283240	SHAFT, MAIN PTO		1	1			
6	A0862040	BEARING, BALL	#6204	1	1			
7	A1287368	JOINT, HYD. CLUTCH HUB		1	1			
8	S810040001	RING, SNAP		1	1			
9	A1827369	HUB, PTO HYD. CLUTCH		1	1			
10	A0860040	BEARING, BALL	#6004	1	1			
11	A1287283	CLUTCH ASSY		1	1			
12	A1287393	SHAFT, PTO DRIVE		1	1			
13	S810025001	RING, SNAP		2	2			
14	A0860050	BEARING, BALL	#6005	2	2			
15	S804008010	O-RING		1	1			
16	A1287372	PIPE, H/CLUTCH INPUT		1	1			
17	S804007010	O-RING		1	1			
18	A1827394	SLEEVE, HYD CLUTCH CIRCUIT		1	1			
19	A1281229	RING, PISTON		2	2			

https://truckmanualshub.com/

PTO DRIVE SHAFT

FIG. 3-8B **G. 287**

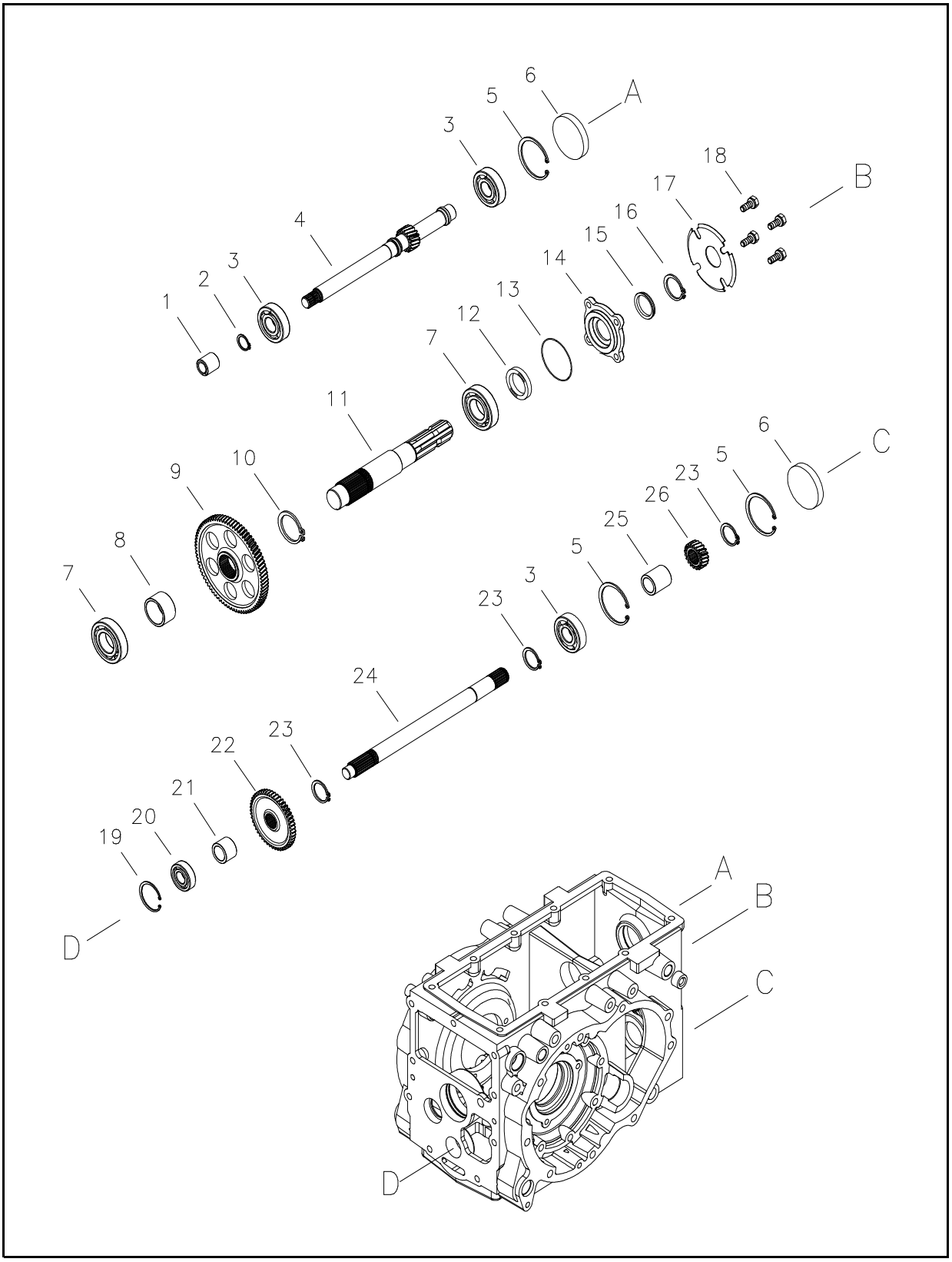

https://truckmanualshub.com/

PTO DRIVE SHAFT

A-NOT AVAILABLE / B-i28,i36

A-NOT AVAILABLE / B-i28,i36

FIG. 3-8B (PTO/1, M/PTO)

NO.	PART NO.	PART NAME & DESCRIPTION		QTY A	QTY B	QTY C	APP.NO	REM.
1	A1283228	JOINT		1	1			
2	S810020001	RING, SNAP		1	1			
3	A0863050HL	BEARING, BALL	#6305HL	3	3			
4	A1287364	SHAFT, PTO DRV W/GEAR(17R)		1	1			
5	S811062001	RING, SNAP		3	3			
6	A1283016	CAP, RUBBER		2	2			
7	A0862070	BEARING, BALL	#6207	2	2			
8	A1287310	SPACER		1	1			
9	A1287304	GEAR, PTO DRVN (79L)		1	1			
10	S810040001	RING, SNAP		1	1			
11	A1287373	SHAFT, PTO		1	1			
12	A0651353	OIL SEAL		1	1			
13	S804070010	O-RING		1	1			
14	A1280231	COVER, PTO SHAFT		1	1			
15	A0653232	SEAL, DUST		1	1			
16	S810035001	RING, SNAP		1	1			
17	A1280184	GUIDE, PTO COVER		1	1			
18	S154102533	BOLT, HEX. W/WASHER		4	4			
19	S811047001	RING, SNAP		1	1			
20	A0862040	BEARING, BALL	#6204	1	1			
21	A1288065	SPACER		1	1			
22	A1287366	GEAR, M/PTO DRV. (49T)		1	1			
23	S811025001	RING, SNAP		3	3			
24	A1287365	SHAFT, M/PTO DRV		1	1			
25	A1287311	SPACER		1	1			
26	A1287305	GEAR, MID PTO COUNTER		1	1			

https://truckmanualshub.com/

FRONT WHEEL DRIVE SHAFT

FIG. 3-9B **G. 288,380**

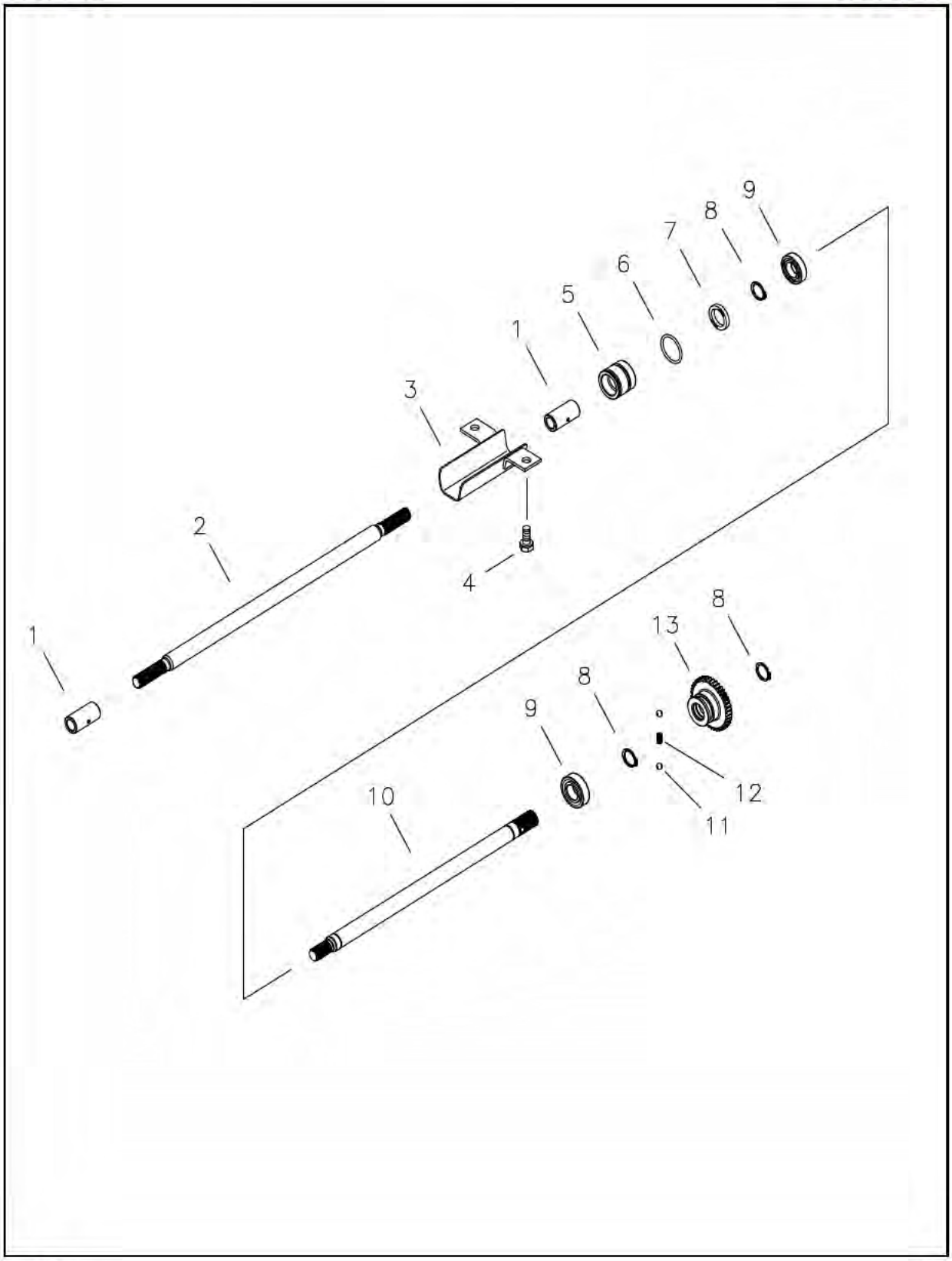

https://truckmanualshub.com/

FRONT WHEEL DRIVE SHAFT

A-NOT AVAILABLE / B-i28,i36

A-NOT AVAILABLE / B-i28,i36

FIG. 3-9B EX

NO.	PART NO.	PART NAME & DESCRIPTION		QTY A	QTY B	QTY C	APP.NO	REM.
1	A1380021	4WD JOINT		2	2			
2	A1380033	SHAFT, 4WD FRONT		1	1			
3	A1380036	COVER, 4WD SHAFT		1	1			
4	S153123033	BOLT, HEX W/WASHER		2	2			
5	A1288161	HOUSING, SEAL		1	1			
6	S801041010	O-RING		1	1			
7	A0651253	SEAL, OIL		1	1			
8	S810025001	RING, SNAP		3	3			
9	A0862050	BEARING, BALL	#6205	2	2			
10	A1288156	SHAFT, 4WD DRIVE		1	1			
11	A20063390	BALL, SHIFTER FORK		2	2			
12	A1287356	SPRING		1	1			
13	A1288155	GEAR, 4WD DRVN (41T)		1	1			

https://truckmanualshub.com/

SHIFT LEVER & FORK

FIG. 3-10A **G. 290**

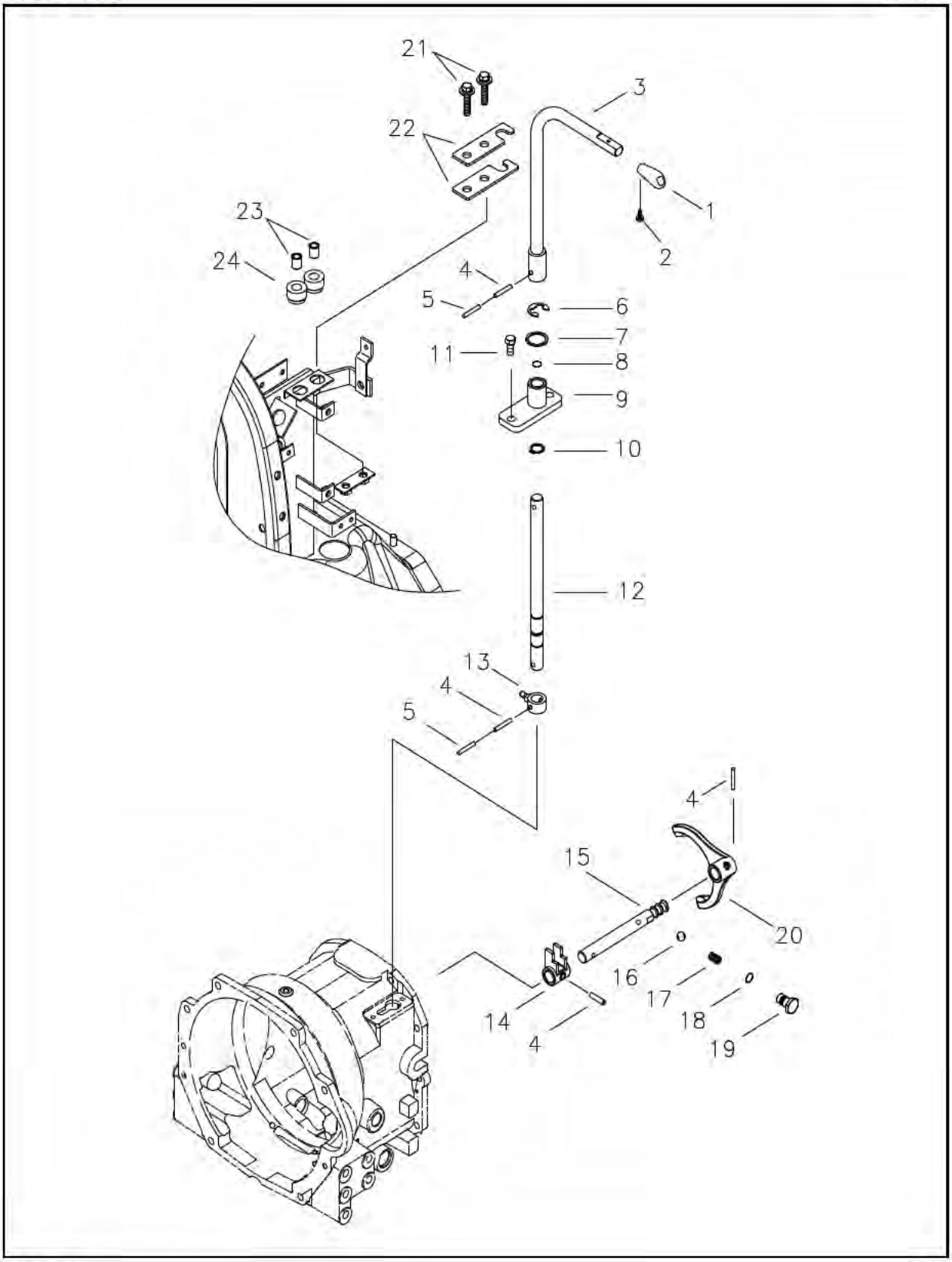

https://truckmanualshub.com/

SHIFT LEVER & FORK

A-NOT AVAILABLE / B-i28,i36

A-NOT AVAILABLE / B-i28,i36

FIG. 3-10A (MEC)

NO.	PART NO.	PART NAME & DESCRIPTION		QTY A	QTY B	QTY C	APP.NO	REM.
1	A1970394	KNOB, F-R		1	1			
2	S226501011	SCREW, W/SPR. W/WASHER		1	1			
3	A1292246	HAND LEVER, CHANGE		1	1			
4	S446062510	PIN, SPR.		3	3			
5	A0621025	PIN, SPR.		1	1			
6	S814015001	RING, SNAP		1	1			
7	S364160013	WASHER, PLN		1	1			
8	S801012010	O-RING		1	1			
9	A1292208	PLATE, F-R		1	1			
10	S810016001	RING, SNAP		1	1			
11	S153082533	BOLT, HEX		2	2			
12	A1290168	LEVER, F-R		1	1			
13	A1290100	ARM, MAIN		1	1			
14	A1290133	ADAPTER, MAIN SHIFT		1	1			
15	A1290173	RAIL, F-R		1	1			
16	A20063390	BALL, SHIFTER FORK		1	1			
17	3A1290011	SPRING		1	1			
18	S801010A10	O-RING		2	2			
19	A1291145	BOLT, RAIL		2	2			
20	A1290085	FORK, MAIN (3-4)		1	1			
21	S159084013	BOLT, HEX. W/WASHER		2	2			
22	A1292224	GUIDE, F-R LEVER		2	2			
23	A1830575	SPACER		2	2			
24	A1830574	MOUNT, RUBBER		2	2			

https://truckmanualshub.com/

HST CONTROL

FIG. 3-10B **G. 292**

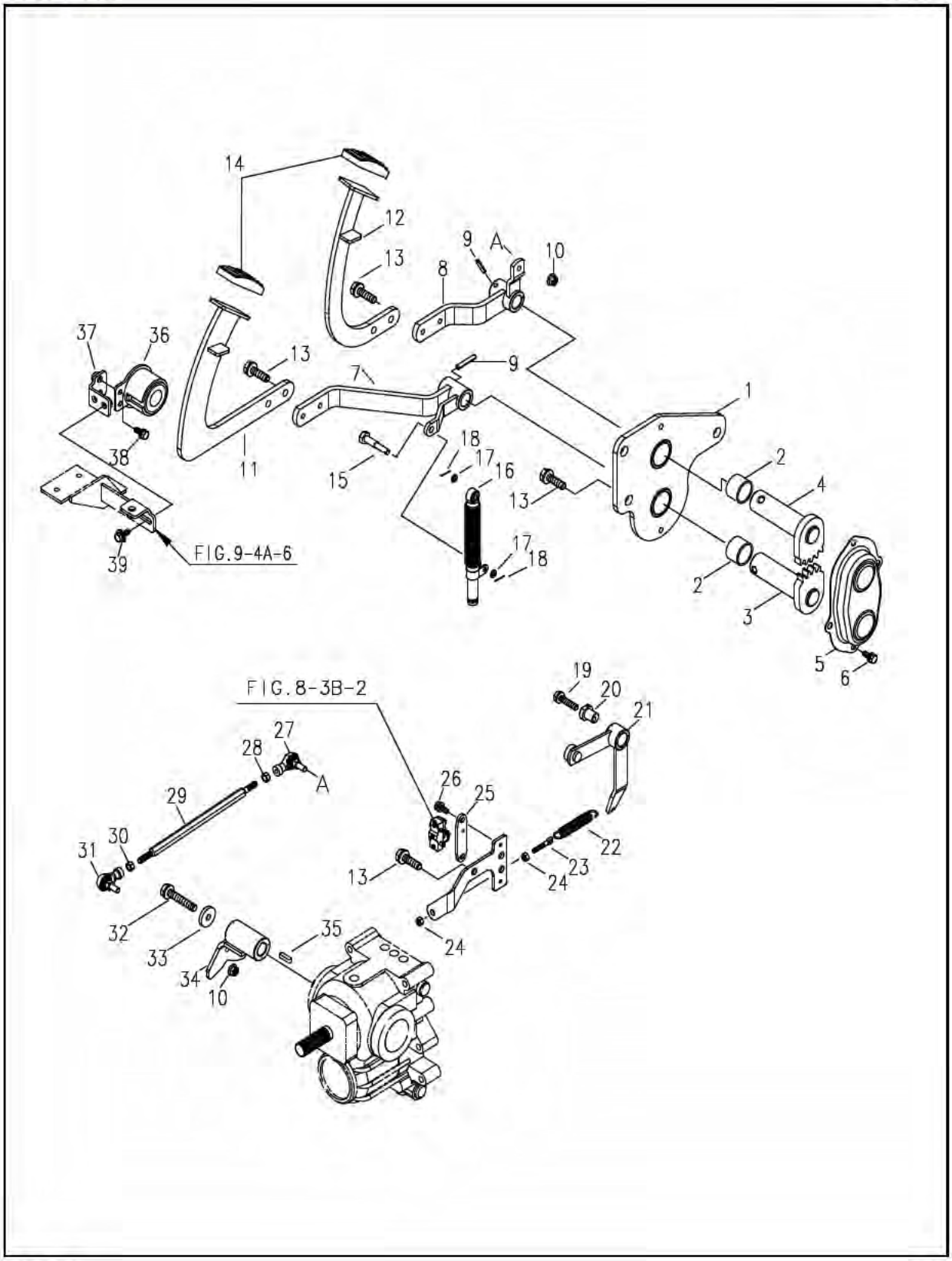

https://truckmanualshub.com/

HST CONTROL

A-NOT AVAILABLE / B-i28,i36

A-NOT AVAILABLE / B-i28,i36

FIG. 3-10B (HST)

NO.	PART NO.	PART NAME & DESCRIPTION		QTY A	QTY B	QTY C	APP.NO	REM.
1~9	A1292277	HST CONTROLLER ASSY		1	1			
1	A1292253	PLATE, BASE		1	1			
2	A0677625	BUSHING	Φ22xΦ25x25L	2	2			
3	A1292202	SHAFT A		1	1			
4	A1292203	SHAFT B		1	1			
5	A1292204	COVER, DUST		1	1			
6	S153061233	BOLT, HEX	M6x1.0x16L	2	2			
7	A1292278	ARM A, PEDAL		1	1			
8	A1292279	ARM B, PEDAL		1	1			
9	S446063612	PIN, SPRING	Φ6x36L	2	2			
10	A1877079	NUT, LOCK	M8x1.25	2	2			
11	A1292234	PEDAL, FORWARD		1	1			
12	A1292235	PEDAL, REWARD		1	1			
13	S154102533	BOLT, HEX	M10x1.25x25L	8	8			
14	A1291214	PAD, PEDAL		2	2			
15	A0621027	PIN		1	1			
16	A1291238	DAMPER		1	1			
17	S363080013	WASHER	Φ8.4xΦ15.5x1.6t	2	2			
18	S441202013	PIN, SPLIT	Φ1.4x20L	2	2			
19	S154105533	BOLT, HEX	M10x1.25x55L	1	1			
20	A1292192	SHAFT, CONTROL ARM		1	1			
21	A1292206	NEUTRAL ARM SUB ASSY		1	1			
22	A0691101	SPRING		1	1			
23	A1260113	BOLT, ADJUSTER	M8x1.25	1	1			
24	S313080013	NUT, HEX	M8x1.25	2	2			
25	A1292193	PLATE		1	1			
26	S153061633	BOLT, HEX	M6x1.0x16L	2	2			
27~31	A1292274	ROD ASSY		1	1			
27	A0731033R	END, ROD	M8x1.25	1	1			
28	S313080013	NUT, HEX	M8x1.25	1	1			
29	A1292275	ROD, HST CONTROL		1	1			
30	A0610059	NUT, HEX	M8.1.25(L)	1	1			
31	A0731033L	END, ROD	M8x1.25	1	1			
32	S154107033	BOLT, HEX	M10x1.25x70L	1	1			
33	A0661122	WASHER	Φ11xΦ36x6.0t	1	1			
34	A1292280	CAM, HST		1	1			
35	S405051610	KEY	5x5x16L	1	1			
36	A1750280	MAGNET		1	1			
37	A1292259	BRACKET, MAGNET		1	1			
38	S153083033	BOLT, HEX	M8x1.25x30L	2	2			
39	S159082533	BOLT, HEX	M8x1.25x25L	2	2			

https://truckmanualshub.com/

SHIFT LEVER & FORK

FIG. 3-11A **G. 290,293**

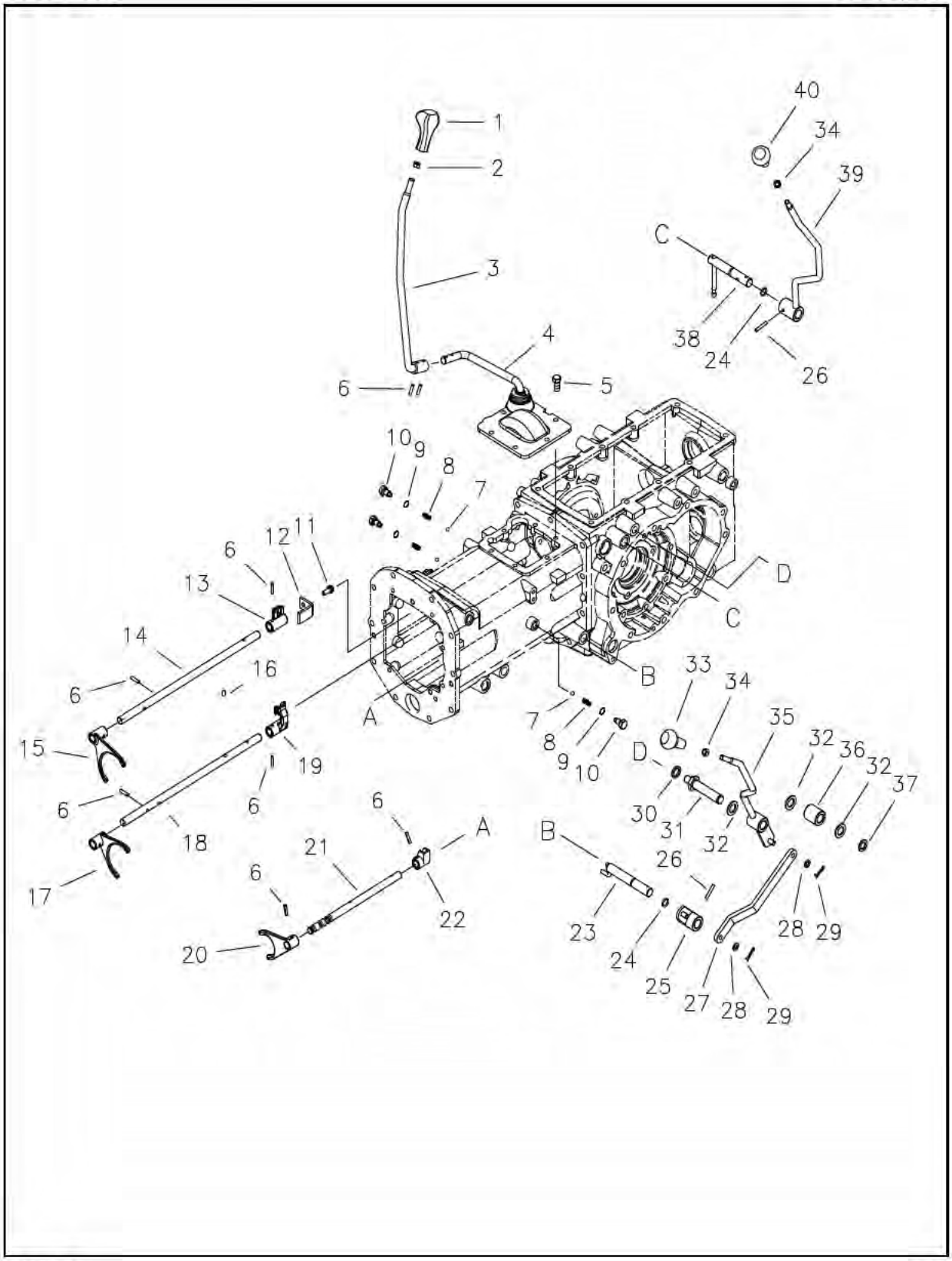

https://truckmanualshub.com/

SHIFT LEVER & FORK

A-NOT AVAILABLE / B-i28,i36

A-NOT AVAILABLE / B-i28,i36

FIG. 3-11A (MEC)

NO.	PART NO.	PART NAME & DESCRIPTION		QTY A	QTY B	QTY C	APP.NO	REM.
1	A1970334	GRIP, MAIN CHANGE		1	1			
2	S301120043	NUT, HEX. 1-TY		1	1			
3	A1292247	HAND LEVER, MAIN		1	1			
4	A1292263	LEVER ASSY, MAIN		1	1			
5	S154103033	BOLT,HEX,W/WASHER		5	5			
6	S446062510	PIN, SPRING	D6x25	8	8			
7	A20063390	BALL		3	3			
8	3A1290011	SPRING		3	3			
9	S801010A10	O-RING		3	3			
10	A1291145	BOLT, RAIL	M12x1.75x23L	3	3			
11	S153082033	BOLT, HEX. W/WASHER	M8X1.25X20L	1	1			
12	A1290182	HOLDER, ADAPTER		1	1			
13	A1290174	ADAPTER, MAIN SHIFT		1	1			
14	A1290170	RAIL, MAIN CHANGE (1-2)		1	1			
15	A1290171	FORK, MAIN SHIFT (1-2)		1	1			
16	A1290091	PIN		1	1			
17	A1290172	FORK, MAIN SHIFT		1	1			
18	A1290169	RAIL, MAIN CHANGE		1	1			
19	A1290175	ADAPTER, MAIN		1	1			
20	A1291229	FORK, RANGE H		1	1			
21	A1291315	RAIL, RANGE		1	1			
22	A1291149	ADAPTER, SUB CHANGE		1	1			
23	A1291297	LEVER, 4WD		1	1			
24	S801016010	O-RING		2	2			
25	A1293178	ARM, PTO		1	1			
26	S446063512	RING, SNAP		2	2			
27	A1293193	LINK		1	1			
28	S363100013	WASHER, PLN S-RD		2	2			
29	S443100013	PIN, SNAP		2	2			
30	S361160013	WASHER, SPR. 1-TY		1	1			
31	A1293183	SHAFT, HAND LEVER		1	1			
32	S363200013	WASHER, PLN S-RD		3	3			
33	A1970375	KNOB, 4WD		1	1			
34	S314100013	NUT, HEX. 1-TY		1	1			
35	A1293192	HAND LEVER, 4WD		1	1			
36	A1293188	SPACER		1	1			EX
37	S810020001	RING, SNAP		1	1			
38	A1291164	LEVER, SUB CHANGE		1	1			
39	A1293191	HAND LEVER, RANGE		1	1			
40	A1970405	KNOB, RANGE		1	1			

https://truckmanualshub.com/

SHIFT LEVER & FORK

FIG. 3-11B G. 290,293

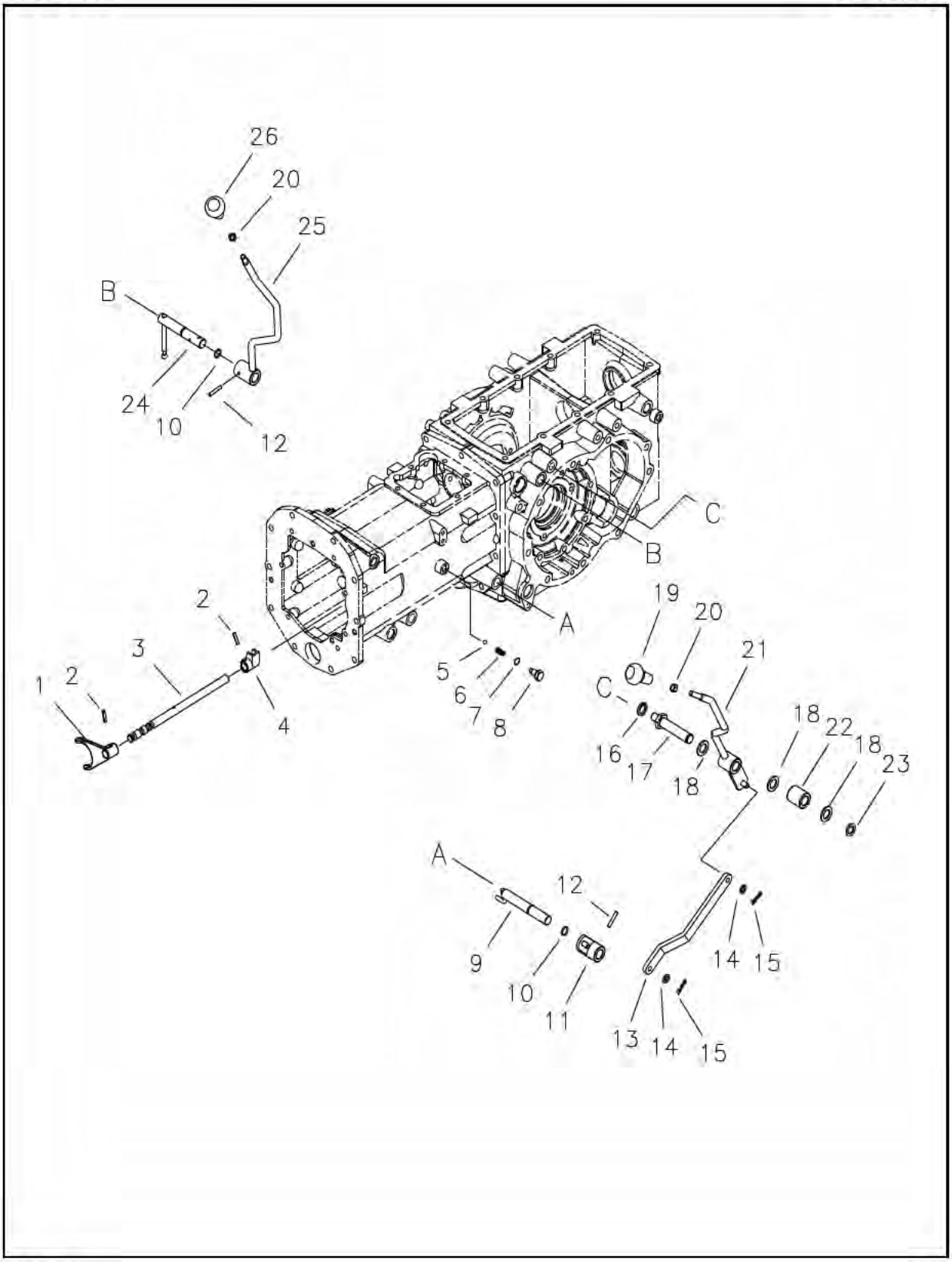

https://truckmanualshub.com/

SHIFT LEVER & FORK

A-NOT AVAILABLE / B-i28,i36

A-NOT AVAILABLE / B-i28,i36

FIG. 3-11B (HST)

NO.	PART NO.	PART NAME & DESCRIPTION		QTY A	QTY B	QTY C	APP.NO	REM.
1	A1291229	FORK, RANGE H		1	1			
2	S446062510	PIN, SPRING	D6x25	8	8			
3	A1291298	RAIL, RANGE		1	1			
4	A1291149	ADAPTER, SUB CHANGE		1	1			
5	A20063390	BALL		1	1			
6	3A1290011	SPRING		1	1			
7	S801010A10	O-RING		1	1			
8	A1291145	BOLT, RAIL	M12x1.75x23L	1	1			
9	A1291297	LEVER, 4WD		1	1			
10	S801016010	O-RING		2	2			
11	A1293178	ARM, PTO		1	1			
12	S446063512	RING, SNAP		2	2			
13	A1293193	LINK		1	1			
14	S363100013	WASHER, PLN S-RD		2	2			
15	S443100013	PIN, SNAP		2	2			
16	S361160013	WASHER, SPR. 1-TY		1	1			
17	A1293183	SHAFT, HAND LEVER		1	1			
18	S363200013	WASHER, PLN S-RD		3	3			
19	A1970375	KNOB, 4WD		1	1			
20	S314100013	NUT, HEX. 1-TY		2	2			
21	A1293192	HAND LEVER, 4WD		1	1			
22	A1293188	SPACER		1	1			
23	S810020001	RING, SNAP		1	1			
24	A1291164	LEVER, SUB CHANGE		1	1			
25	A1293191	HAND LEVER, RANGE		1	1			
26	A1970403	KNOB, RANGE		1	1			

https://truckmanualshub.com/

MID PTO SHAFT & LEVER

FIG. 3-12 **G. 287,293**

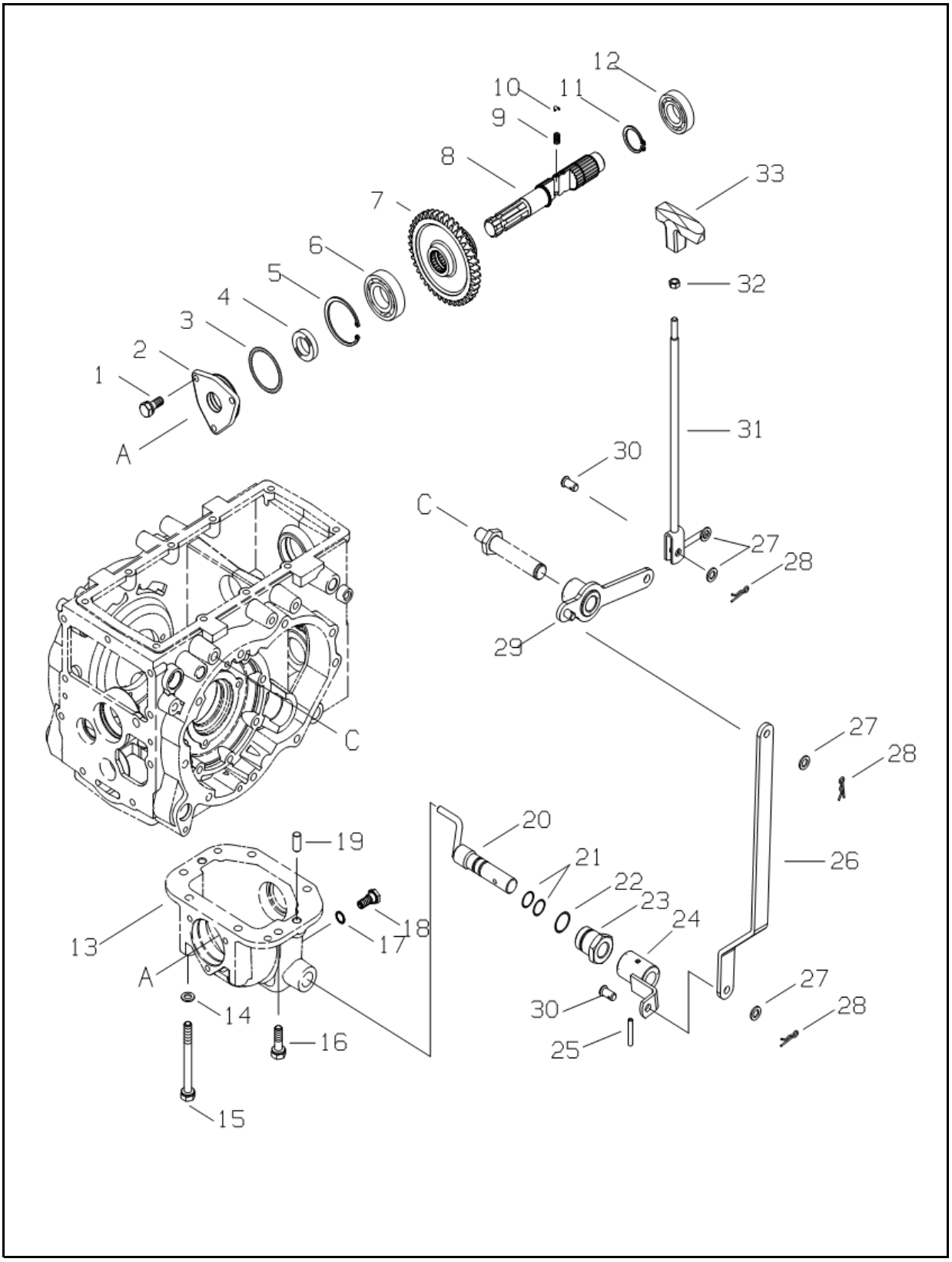

https://truckmanualshub.com/

MID PTO SHAFT & LEVER

A-NOT AVAILABLE / B-i28,i36

A-NOT AVAILABLE / B-i28,i36

FIG. 3-12 **(M/PTO)**

NO.	PART NO.	PART NAME & DESCRIPTION		QTY A	QTY B	QTY C	APP.NO	REM.
1	S153082033	BOLT, HEX, W/WASHER	M8x1.25x20		3			
2	A1280199	COVER, M/PTO SHAFT			1			
3	S801052010	O-RING			1			
4	A0651253	SEAL, OIL			1			
5	S811062001	RING, SNAP	D62x2.0t		1			
6	A0863050	BEARING, BALL	#6305(OD62xID25x17)		1			
7	A1287367	GEAR, M/PTO DRVN (53T)			1			
8	A1287345	SHAFT, M/PTO DRIVEN			1			
9	3A1290011	SPRING			1			
10	A20063390	BALL, SHIFT FORK			1			
11	S810030001	RING, SNAP			1			
12	A0862050	BEARING, BALL	#6205		1			
13	A1280200	CASE, M/PTO			1			
14	S361100013	WASHER, SPR. 1-TY.			2			
15	S104101043	BOLT, HEX.			2			
16	S154103033	BOLT, HEX. W/WASHER			4			
17	A10263360	SEAL			1			
18	3A1250013	PLUG, MAGNET			1			
19	S423102010	PIN, PAR. A-TY. (h7)			2			
20	A1291291	LEVER, MID PTO			1			
21	S801012010	O-RING			2			
22	S804028010	O-RING			1			
23	A1291296	ADAPTER, LEVER			1			
24	A1291292	ARM, MID PTO			1			
25	S446063512	PIN, SPR. W-TY			1			
26	A1293195	ROD, MID PTO			1			
27	S363100013	WASHER, PLN S-RD			4			
28	S443100013	PIN, SNAP A-TY			3			
29	A1293194	ARM, MID PTO			1			
30	S427102013	PIN, HEAD B-TY.			1			
31	A1293175	HAND LEVER, 4WD			1			
32	S313080013	NUT, HEX.			1			
33	A1970397	KNOB, CREEPER			1			

https://truckmanualshub.com/

DIFF - LOCK

FIG. 4-1A **G. 320**

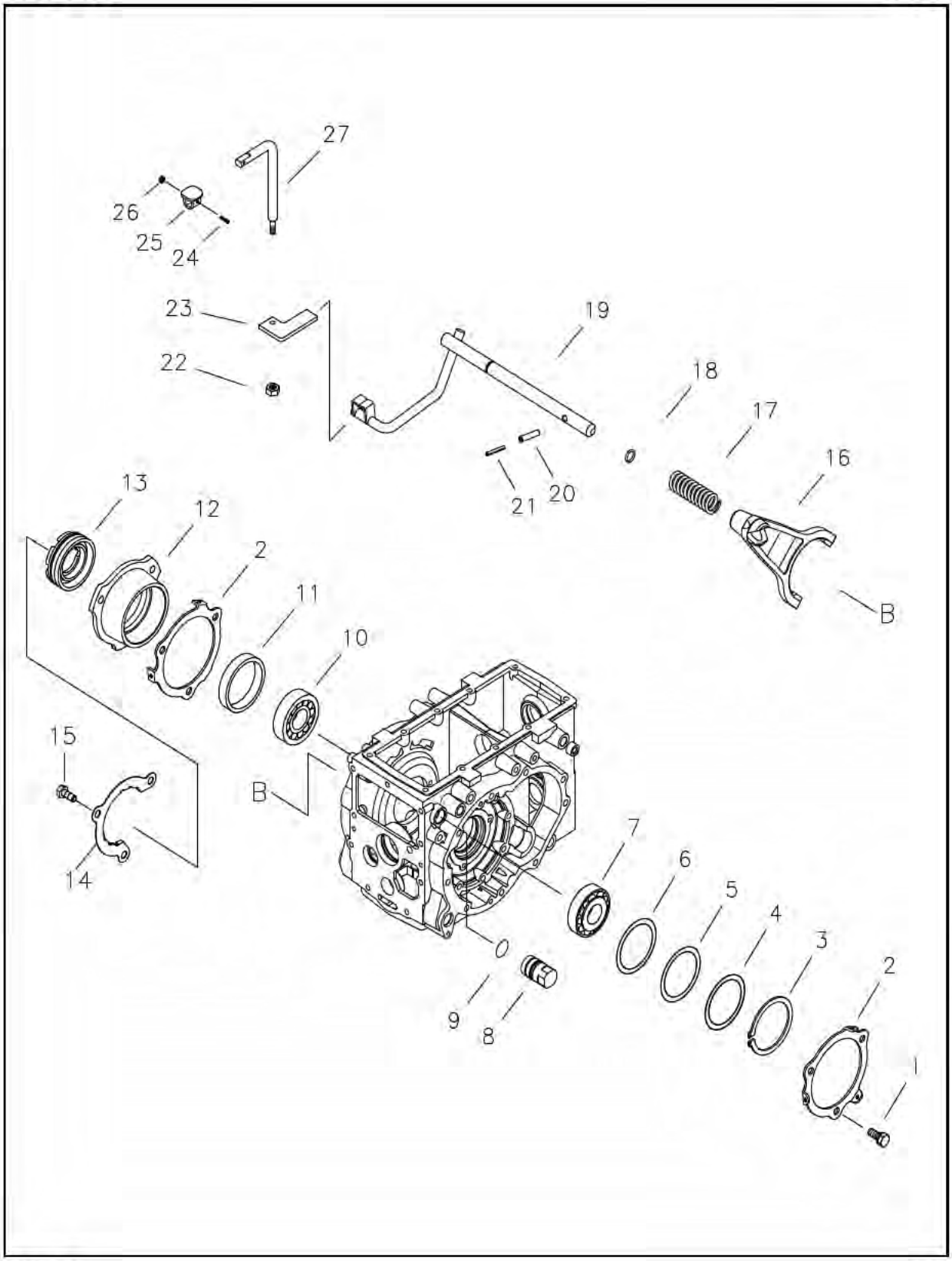

https://truckmanualshub.com/

DIFF - LOCK

A-NOT AVAILABLE / B-i28,i36

A-NOT AVAILABLE / B-i28,i36

FIG. 4-1A (MEC)

NO.	PART NO.	PART NAME & DESCRIPTION		QTY A	QTY B	QTY C	APP.NO	REM.
1	S154102533	BOLT, HEX.		3	3			
2	A1650074	HOLDER, SPRING		2	2			
3	S811090001	RING, SNAP		1	1			
4	3A1970119	SHIM	0.07t	AR	AR			
5	3A1970120	SHIM	0.2t	AR	AR			
6	3A1970121	SHIM	0.5t	3	3			
7	A0862100	BEARING, BALL	#6210	1	1			
8	A1320004	ADAPTER, R/DIFF. SHAFT		1	1			
9	S804030010	O-RING		1	1			
10	A26799980	BEARING, TAPER	#30210	1	1			
11	A1326041	SPACER	98.1X77.1X12	1	1			
12	A1326048	SUPPORT, DIFF.		1	1			
13	3A1326005	SCREW		1	1			
14	A1326050	PLATE, LOCK		1	1			
15	S165102543	BOLT, HEX. F-THR		3	3			
16	A1326063	FORK, DIFF LOCK		1	1			
17	A1326047	SPRING, DIFF. LOCK		1	1			
18	S801016010	O-RING		1	1			
19	A1320028	PEDAL, DIFF LOCK		1	1			
20	S440684012	PIN, SPRING		1	1			
21	S446054012	PIN, SPRING		1	1			
22	S345100043	NUT, FLANGE B-TY.	M10X1.25	1	1			
23	A1320011	PLATE, DIFF. PEDAL		1	1			
24	S227403011	SCREW, W/WASHER		1	1			
25	A1970358	PEDAL, DIFF.		1	1			
26	S343040013	NUT, FLANGE B-TY.		1	1			
27	A1320010	PEDAL, DIFF LOCK		1	1			

https://truckmanualshub.com/

DIFF - LOCK

FIG. 4-1B **G. 320**

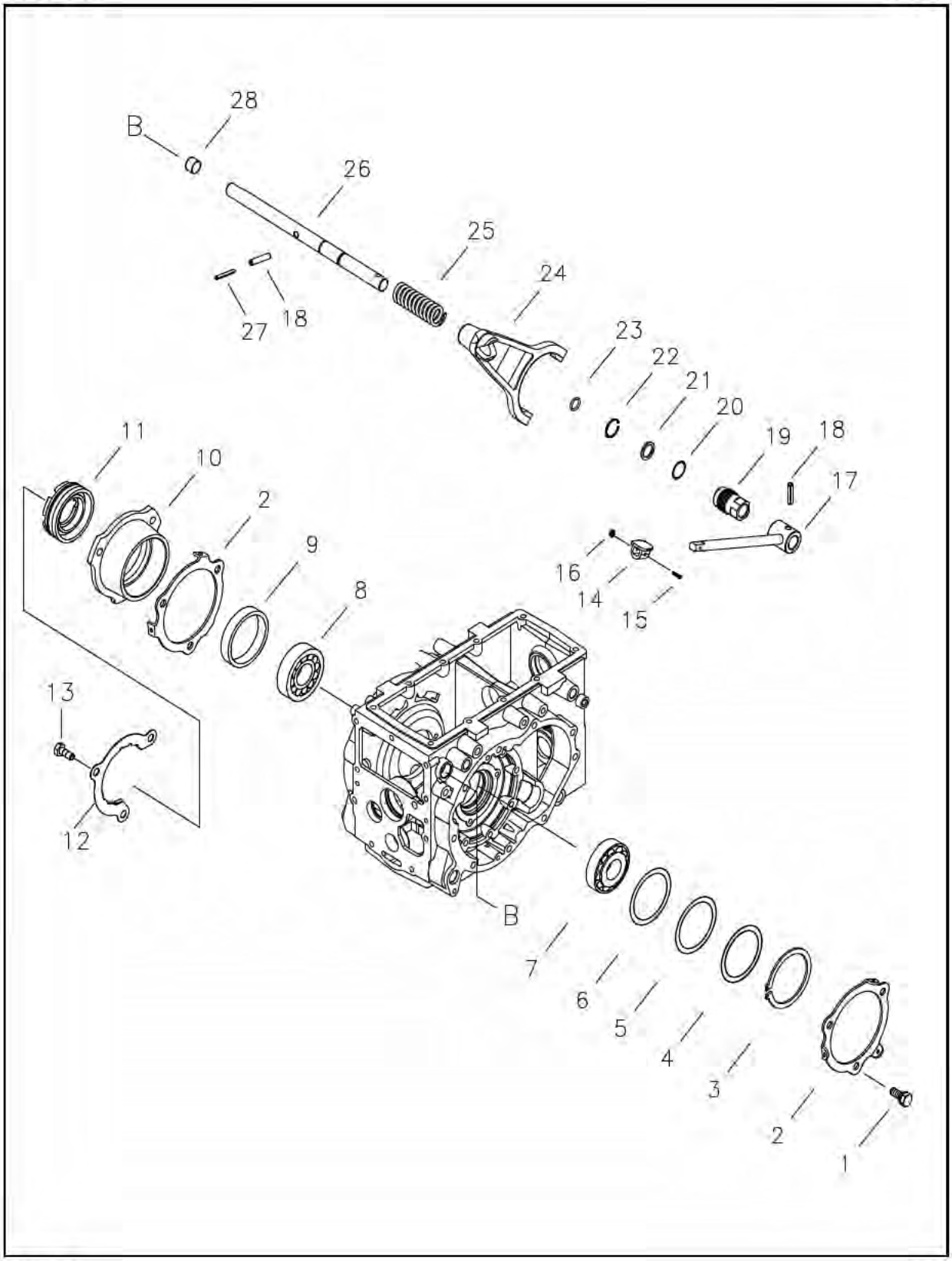

https://truckmanualshub.com/

DIFF - LOCK

A-NOT AVAILABLE / B-i28,i36

A-NOT AVAILABLE / B-i28,i36

FIG. 4-1B (HST)

NO.	PART NO.	PART NAME & DESCRIPTION		QTY A	QTY B	QTY C	APP.NO	REM.
1	S154102533	BOLT, HEX.		3	3			
2	A1650074	HOLDER, SPRING		2	2			
3	S811090001	RING, SNAP		1	1			
4	3A1970119	SHIM	0.07t	AR	AR			
5	3A1970120	SHIM	0.2t	AR	AR			
6	3A1970121	SHIM	0.5t	3	3			
7	A0862100	BEARING, BALL	#6210	1	1			
8	A26799980	BEARING, TAPER	#30210	1	1			
9	A1326041	SPACER	98.1X77.1X12	1	1			
10	A1326048	SUPPORT, DIFF.		1	1			
11	3A1326005	SCREW		1	1			
12	A1326050	PLATE, LOCK		1	1			
13	S165102543	BOLT, HEX. F-THR		3	3			
14	A1970358	PEDAL, DIFF.		1	1			
15	S227403011	SCREW, W/WASHER		1	1			
16	S343040013	NUT, FLANGE B-TY.		1	1			
17	A1320021	PEDAL, DIFF.		1	1			
18	S446084012	PIN, SPRING		2	2			
19	A1320004	ADAPTER, R/DIFF. SHAFT		1	1			
20	S804028010	O-RING		1	1			
21	A1320020	WASHER		1	1			
22	S812020001	RING, SNAP		1	1			
23	S801016010	O-RING		1	1			
24	A1326063	FORK, DIFF LOCK		1	1			
25	A1326047	SPRING, DIFF. LOCK		1	1			
26	A1320022	SHAFT, DIFF LOCK		1	1			
27	S446054012	PIN, SPRING		1	1			
28	3A1290009	CAP, RAIL		1	1			

https://truckmanualshub.com/

REAR DIFFERENTIAL

FIG. 4-2 **G. 310**

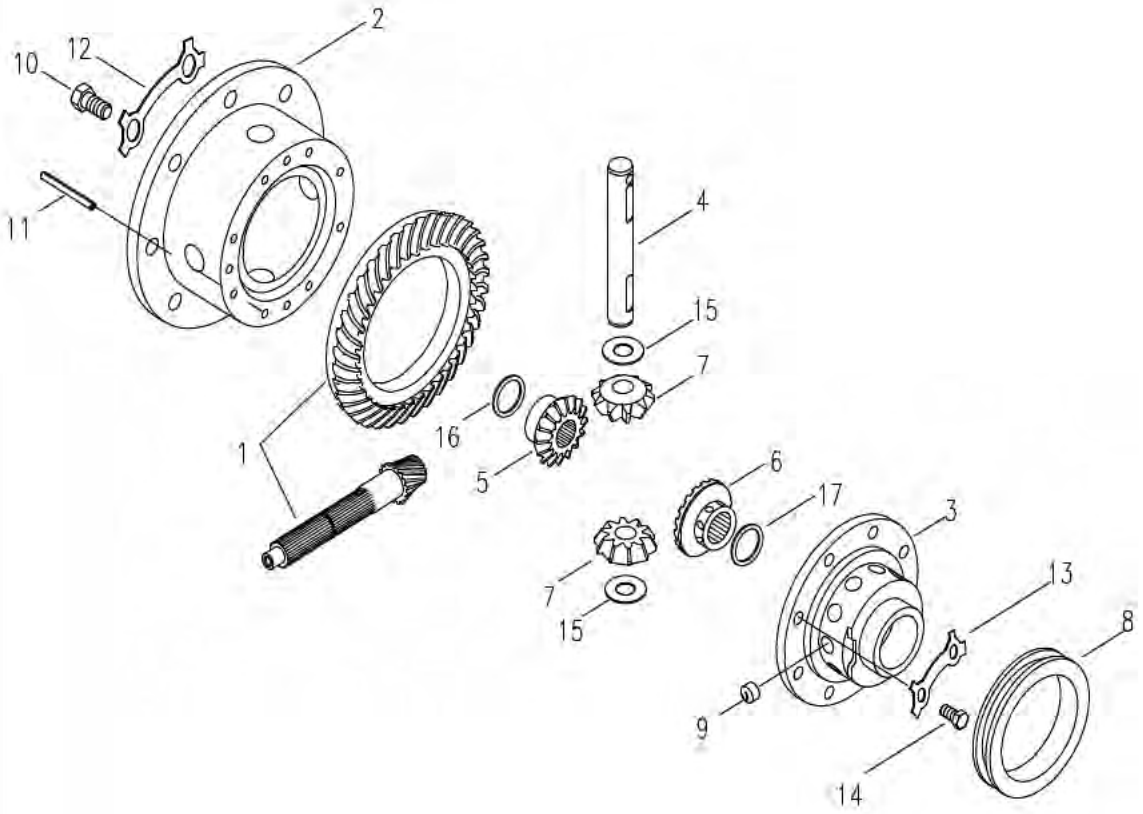

https://truckmanualshub.com/

REAR DIFFERENTIAL

A-NOT AVAILABLE / B-i28,i36

A-NOT AVAILABLE / B-i28,i36

FIG. 4-2

NO.	PART NO.	PART NAME & DESCRIPTION		QTY			APP.NO	REM.
				A	B	C		
1-17	A1310014	DIFF ASSY		1	1			
1	A1310015	PINION & RING GEAR SET		1	1			
2	A1324091	CASE, DIFF. (1)		1	1			
3	A1324074	CASE, DIFF. (2)		1	1			
4	A1324075	SHAFT (1)		1	1			
5	A1324117	GEAR, DIFF. SIDE (LH)	16t	1	1			
6	A1324118	GEAR, DIFF. SIDE (RH)		1	1			
7	A1324116	GEAR, PINION. MATE	10t	2	2			
8	3A1324007	HUB, DIFF-LOCK		1	1			
9	3A1324014	ROLLER	D12x1.5	10	10			
10	A1324090	BOLT, HEX	M12x1.25x23	8	8			
11	S446065010	PIN, SPRING	D6x50	1	1			
12	3A1324012	PLATE, LOCKING	1.0t	4	4			
13	A1324079	WASHER, LOCK (2)	1.0t	4	4			
14	S105082043	BOLT, HEX	M8x1.25	8	8			
15	3A1970123	WASHER, THRUST	OD42.07xID19.45x0.8t	2	2			
16	3A1970122	WASHER, THRUST	OD71.44xID41.47x0.8t	1	1			
17	3A1324003	WASHER, THRUST (LH)	OD74xID55x0.8t	1	1			

https://truckmanualshub.com/

FRONT AXLE ASSY

FIG. 5-1 **G. 400**

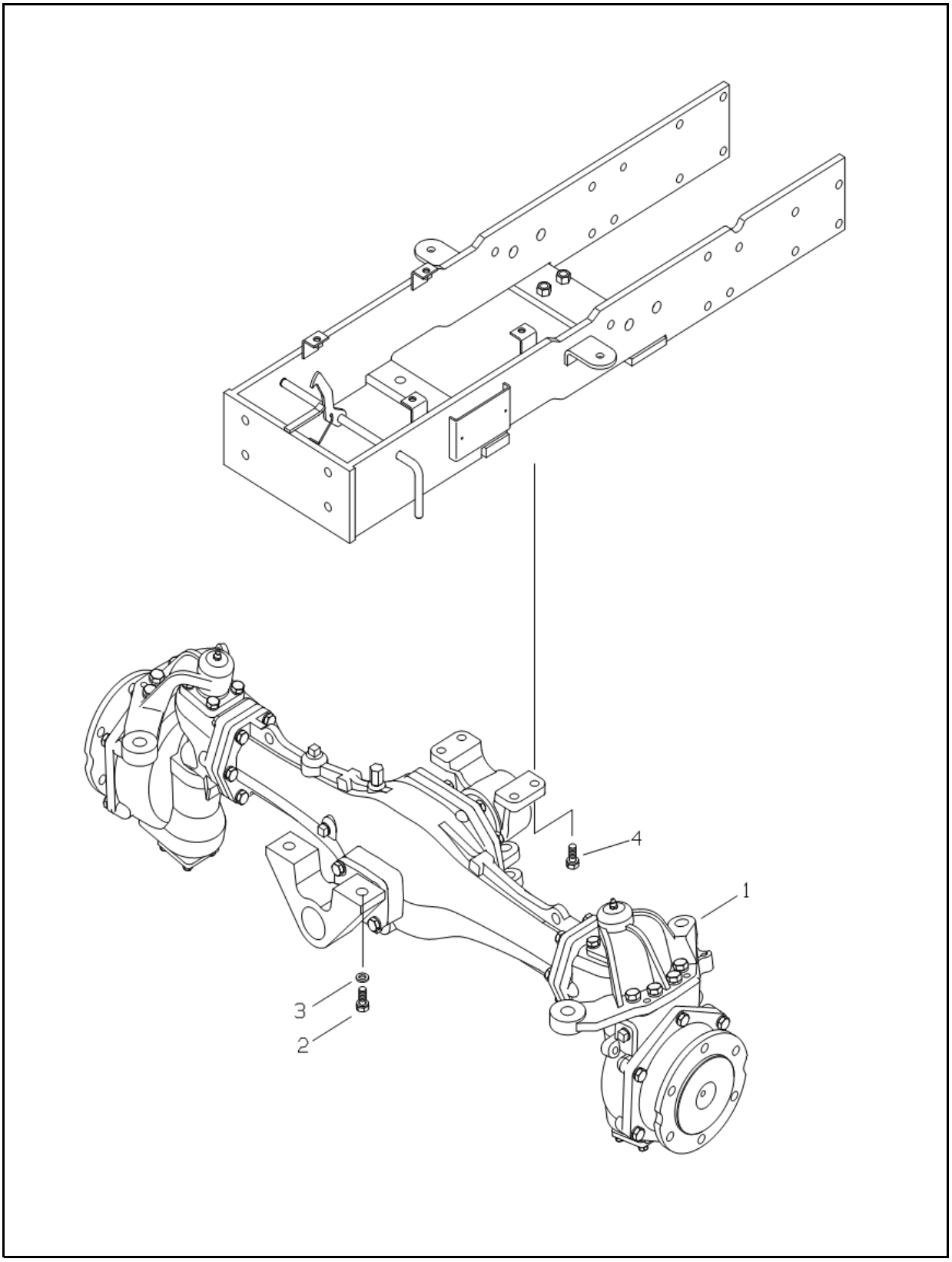

https://truckmanualshub.com/

FRONT AXLE ASSY

A-NOT AVAILABLE / B-i28,i36

A-NOT AVAILABLE / B-i28,i36

FIG. 5-1

NO.	PART NO.	PART NAME & DESCRIPTION		QTY A	QTY B	QTY C	APP.NO	REM.
1	A1400327	FRONT AXLE ASS'Y		1	*			DO
	A1400260	FRONT AXLE ASS'Y		*	1			EX
2	S103164043	BOLT, HEX.	M16x1.5x40	2	2			
3	S361160013	WASHER, SPRING	Φ28xΦ16.2xΦ4t	2	2			
4	S154124533	BOLT, HEX.	M12x1.25x45	4	4			

https://truckmanualshub.com/

FRONT AXLE CASE

FIG. 5-2 **G. 400**

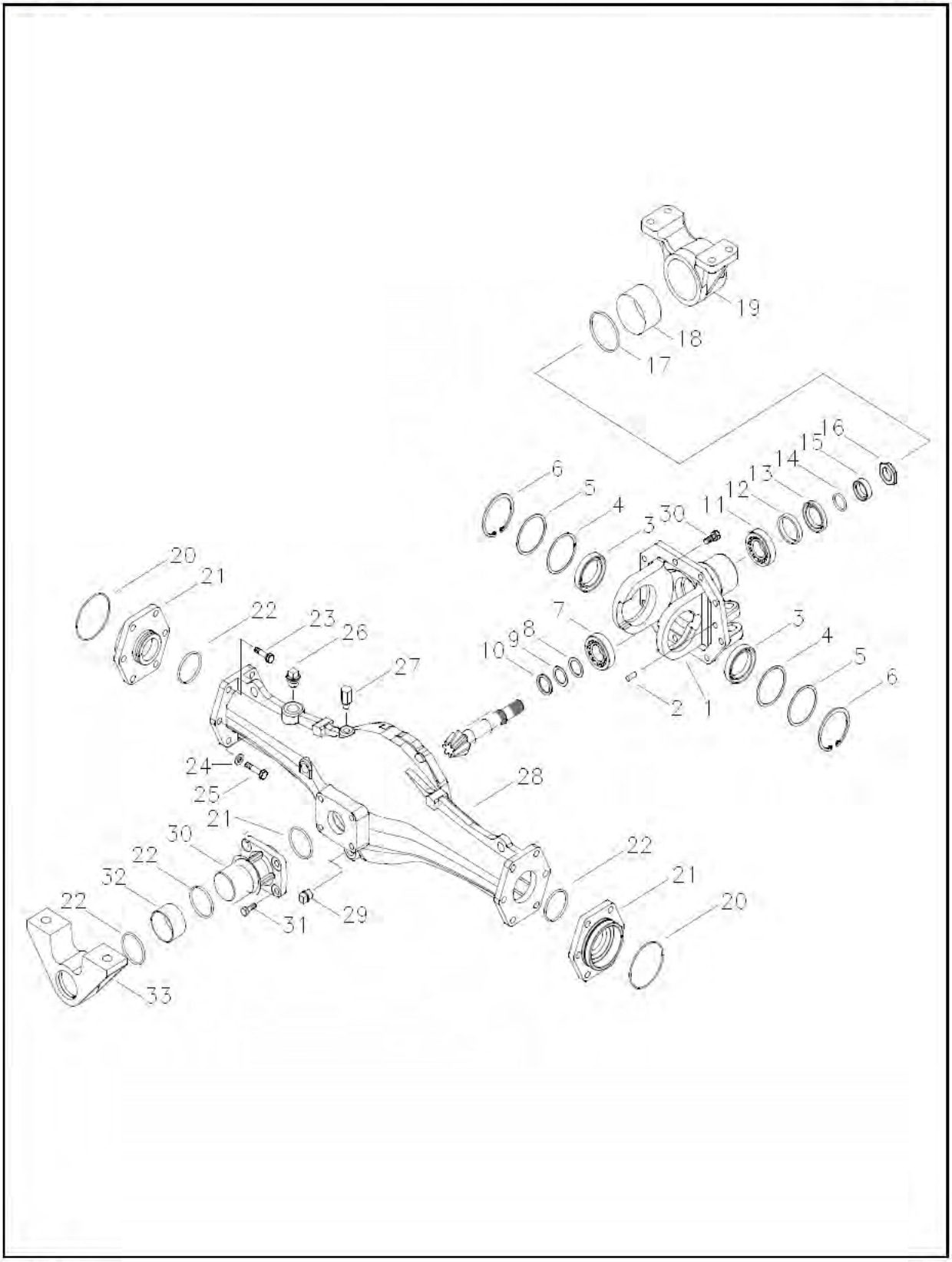

https://truckmanualshub.com/

FRONT AXLE CASE

A-NOT AVAILABLE / B-i28,i36

A-NOT AVAILABLE / B-i28,i36

FIG. 5-2

NO.	PART NO.	PART NAME & DESCRIPTION		QTY A	QTY B	QTY C	APP.NO	REM.
1	A1400312	HOLDER, DIFF ASSY		1	1			
2	S423102010	PIN, PAR. A-TY. (h7)	Φ10x20	2	2			
3	A0860090	BEARING, BALL	#6009	2	2			
4	A0660425	LINER		AR	AR			
5	A0660427	LINER		AR	AR			
6	S811075001	RING, SNAP	Φ79.5	2	2			
7	A1400307	BEARING, TAPER ROLLER	#30305C	1	1			
8	A0870605	LINER		AR	AR			
9	A0870601	LINER		AR	AR			
10	A1281472	WASHER, THRUST		1	1			
11	A0670156	BEARING, TAPER ROLLER	#30205J	1	1			
12	A1400315	SPACER		1	1			
13	A0651353	SEAL, OIL	TC35×52×9	1	1			
14	S802025010	O-RING(G25)	D24.4x3.1	1	1			
15	A1400023	BUSHING, SEAL		1	1			
16	A1281034	NUT, LOCK		1	1			
17	S802065010	O-RING(G65)	D64.4x3.1	*	1			
18	A0678640	BUSHING, DU		1	1			
19	A1400271	BRACKET, F/AXLE REAR		1	1			
20	S804080010	O-RING	D79.5x2.0	2	2			
21	A1400294	CONNECTOR		2	2			
22	S802050010	O-RING(G55)	D49.4x3.1	5	5			
23	Q1550013	BOLT. HEX. W/WASHER	M10×1.25x40	10	10			
24	S361100013	WASHER, SPR. 1-TYPE	Φ18.4xΦ10.2x2.5t	2	2			
25	A1400318	BOLT, REAMER	M10×1.25x47	2	2			
26	3A1970051	PLUG, TAPER	PT3/8	1	1			
27	3A1400004	BREATHER, AIR		1	1			
28	A1400311	CASE, F/AXLE		1	1			
29	3A1970052	PLUG, TAPER		2	2			
30	A1400267	HOLDER, FRONT PIVOT		1	1			
31	S154103033	BOLT. HEX. W/WASHER	M10x1.25x30	12	12			
32	A0678330	BUSHING, DU		1	1			
33	A1400270	BRACKET, F/AXLE FRONT		1	1			

https://truckmanualshub.com/

FRONT AXLE CASE

FIG. 5-3 **G. 400**

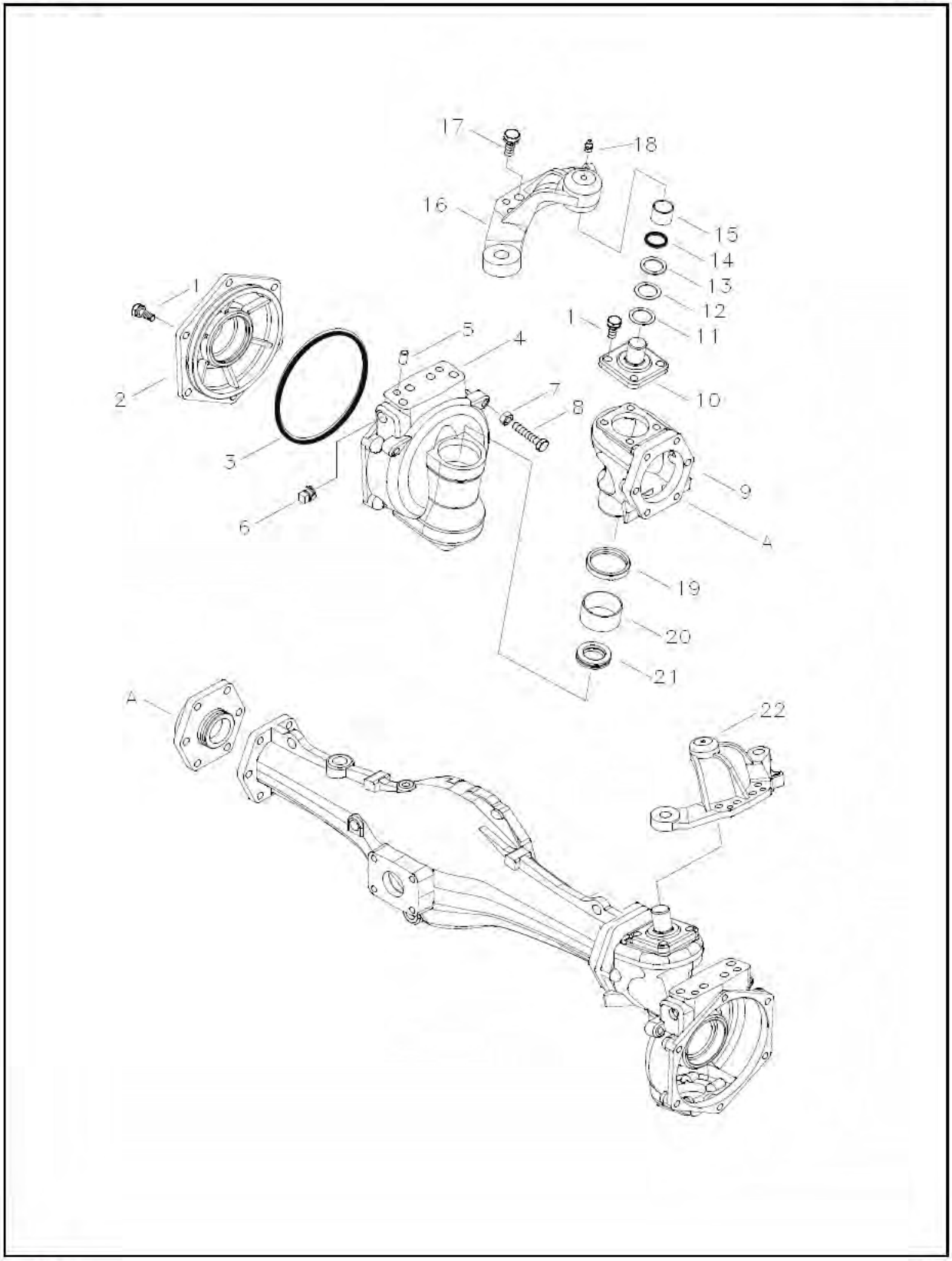

https://truckmanualshub.com/

FRONT AXLE CASE

A-NOT AVAILABLE / B-i28,i36

A-NOT AVAILABLE / B-i28,i36

FIG. 5-3

NO.	PART NO.	PART NAME & DESCRIPTION		QTY A	QTY B	QTY C	APP.NO	REM.
1	S154102533	BOLT, HEX. W/WASHER	M10x1.25x25	20	20			
2	A1400264	COVER, GEAR CASE		*	2			
	A1400330	COVER, GEAR CASE		2	*			
3	S802165010	O-RING	D164.3x5.7	2	2			
4	A1400262	CASE, GEAR		*	2			
	A1400329	CASE, GEAR		2	*			
5	S423102010	PIN, PAR. A-TY. (h7)	Φ10x20	4	4			
6	3A1970052	PLUG, TAPER		2	2			
7	S302100043	NUT, HEX. 1-TY.	M10x1.25	2	2			
8	S165105043	BOLT, HEX. F-THRD	M10x1.25x50	2	2			
9	A1400335	CASE, KINGPIN		*	2			
	A1400328	CASE, KINGPIN		2	*			
10	A1400266	HOLDER, ARM		2	2			
11	A0870601	LINER		AR	AR			
12	A0870605	LINER		AR	AR			
13	A0870608	LINER		2	2			
14	S801025010	O-RING (P)	D24.7x3.5	*	2			
15	A0677825	BUSHING, DU		2	2			
16	A1400314	ARM, KNUCKLE(RH)		1	1			
17	S153123033	BOLT, HEX. W/WASHER	M12x1.75x30	8	8			
18	3A1970069	NIPPLE, GREASE		2	2			
19	A1405029	SEAL, OIL	TC40x60x12	*	2			
	A1400332	SEAL, GROUP	TC40x60x12	2	*			
20	A0678330	BUSHING, DU		2	2			
21	A0670143	BEARING, THRUST	#51106	2	2			
22	A1400313	KNUCKLE ARM(LH)		1	1			

https://truckmanualshub.com/

FRONT DIFFERENTIAL

FIG. 5-4 **G. 400**

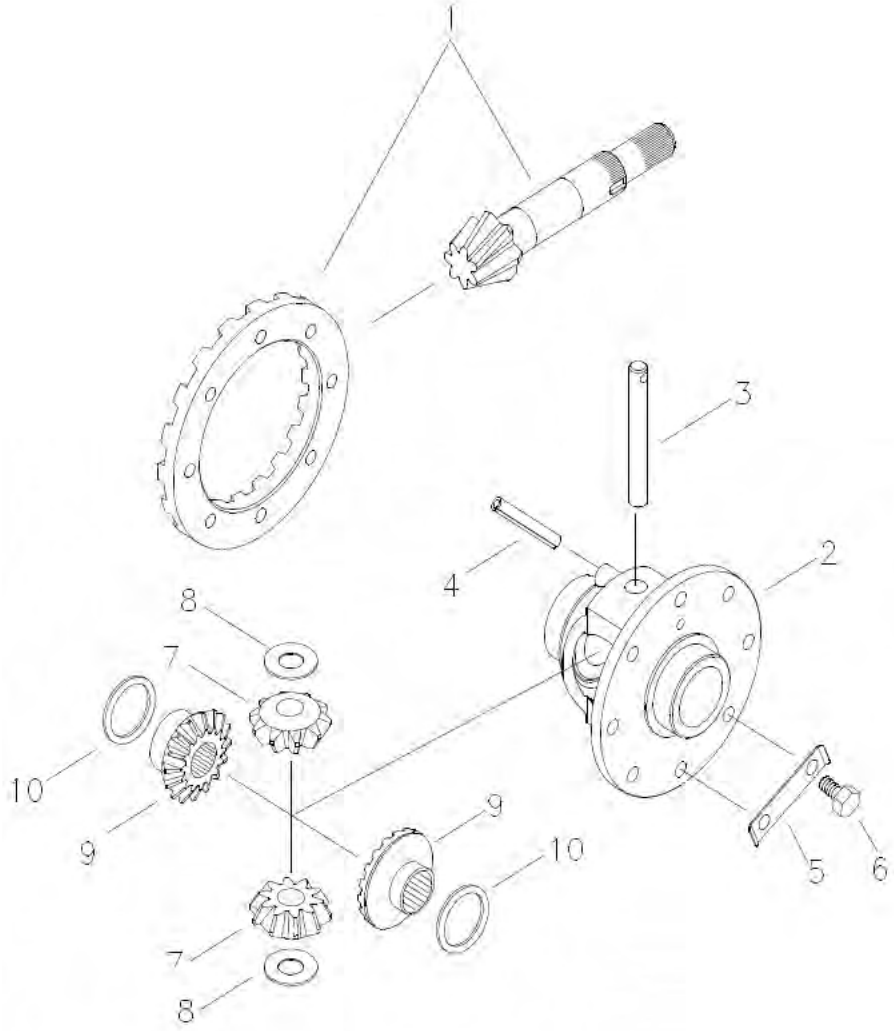

https://truckmanualshub.com/

FRONT DIFFERENTIAL

A-NOT AVAILABLE / B-i28,i36

A-NOT AVAILABLE / B-i28,i36

FIG. 5-4

NO.	PART NO.	PART NAME & DESCRIPTION		QTY			APP.NO	REM.
				A	B	C		
1~10	A1410043	DIFF, ASSY F/AXLE		1	1			
1	A1410056	PINION & RING GEAR SET		1	1			
2	A1410060	CASE, DIFF		1	1			
3	A1410058	SHAFT, MATE GEAR		1	1			
4	S446065012	PIN, SPRING	Φ6.4x50	1	1			
5	A1410051	PLATE, LOCK		4	4			
6	S163081643	BOLT, HEX. F-THRD	M8x1.25x16	8	8			
7	A1410057	GEAR MATE(10T)		2	2			
8	A1410059	WASHER, THRUST#2	1.2t	2	2			
9	A1410048	GEAR DIFF SIDE(16T)		2	2			
10	A1410052	WASHER, THRUST#1	1.2t	2	2			

https://truckmanualshub.com/

FRONT DRIVE

FIG. 5-5 **G. 400**

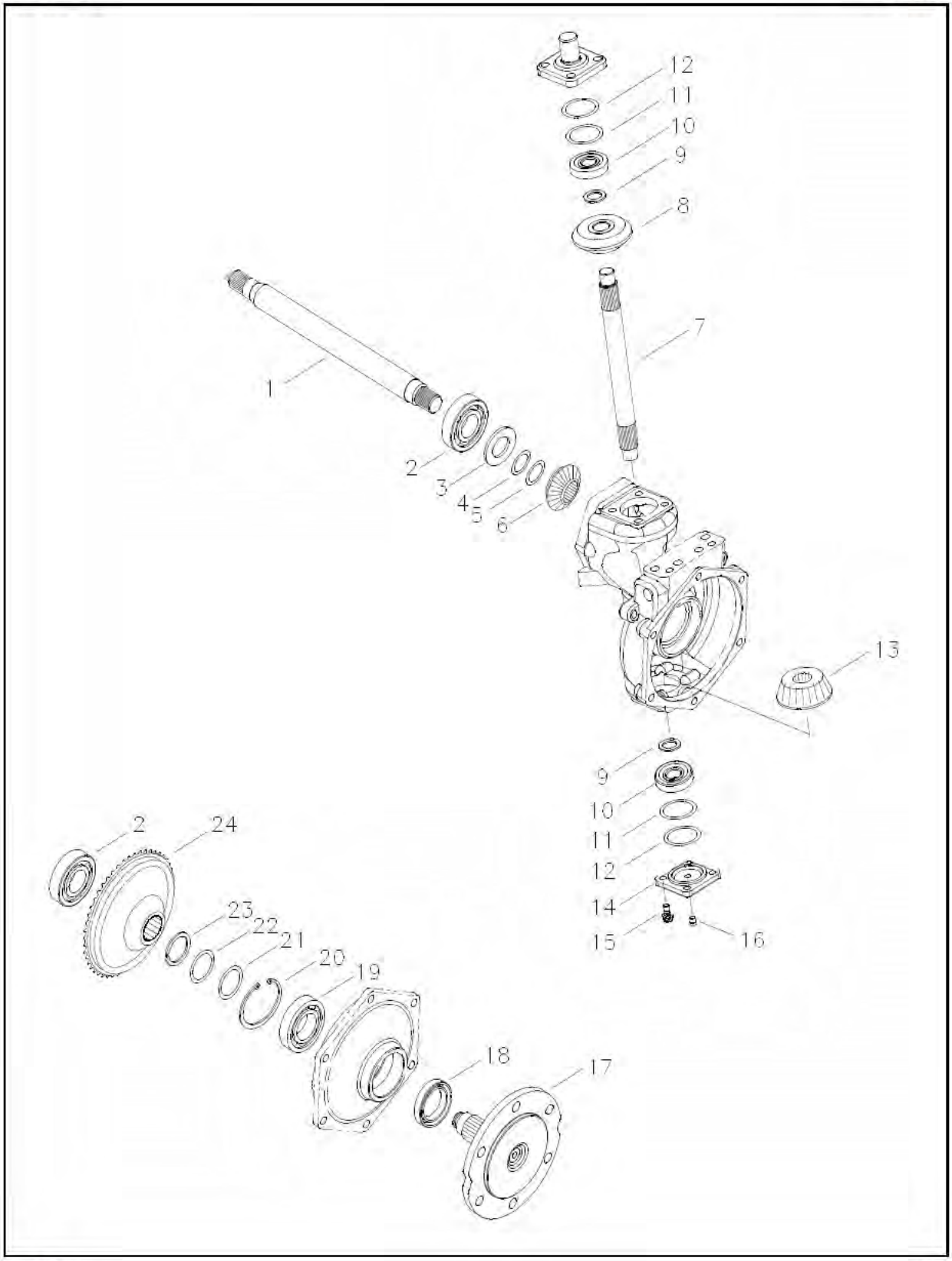

https://truckmanualshub.com/

FRONT DRIVE

A-NOT AVAILABLE / B-i28,i36

A-NOT AVAILABLE / B-i28,i36

FIG. 5-5

NO.	PART NO.	PART NAME & DESCRIPTION		QTY A	QTY B	QTY C	APP.NO	REM.
1	A1400272	SHAFT, F/DIFF		2	2			
2	A0863060H1	BEARING, BALL	#6306HL	4	4			
3	A12871472	WASHER, THRUST		2	2			
4	A0870601	LINER		AR	AR			
5	A0870605	LINER		AR	AR			
6	A1400275	BEVEL GEAR(13T)		2	2			
7	A1400273	SHAFT, KINGPIN		2	2			
8	A1400276	BEVEL GEAR(16T)		2	2			
9	A1400308	SPACER		4	4			
10	A1400309	BEARING, TAPER ROLLER	#30304J	4	4			
11	A0870461	LINER		AR	AR			
12	A0870465	LINER		AR	AR			
13	A1400277	BEVEL GEAR(13T)		2	2			
14	A1400265	COVER, KINGPIN		2	2			
15	S153082033	BOLT, HEX W/WASHER	M8x1.25x20	8	8			
16	3A1970052	PLUG, TAPER	PT3/8	2	2			
17	A1400274	SHAFT, F/AXLE		*	2			
	A1400331	SHAFT, F/AXLE		2	*			
18	A1287211	SEAL, OIL		*	2			
	A1400332	SEAL, GROUP		2	*			
19	A0862070	BEARING, BALL	#6207	2	2			
20	S811072001	RING, SNAP	Φ76.5	2	2			
21	A0870451	LINER		AR	AR			
22	A0870455	LINER		AR	AR			
23	S812035001	RING, SNAP	Φ32.5	2	2			
24	A1400278	BEVEL GEAR(35T)		2	2			

https://truckmanualshub.com/

REAR AXLE

FIG. 5-6 **G. 480**

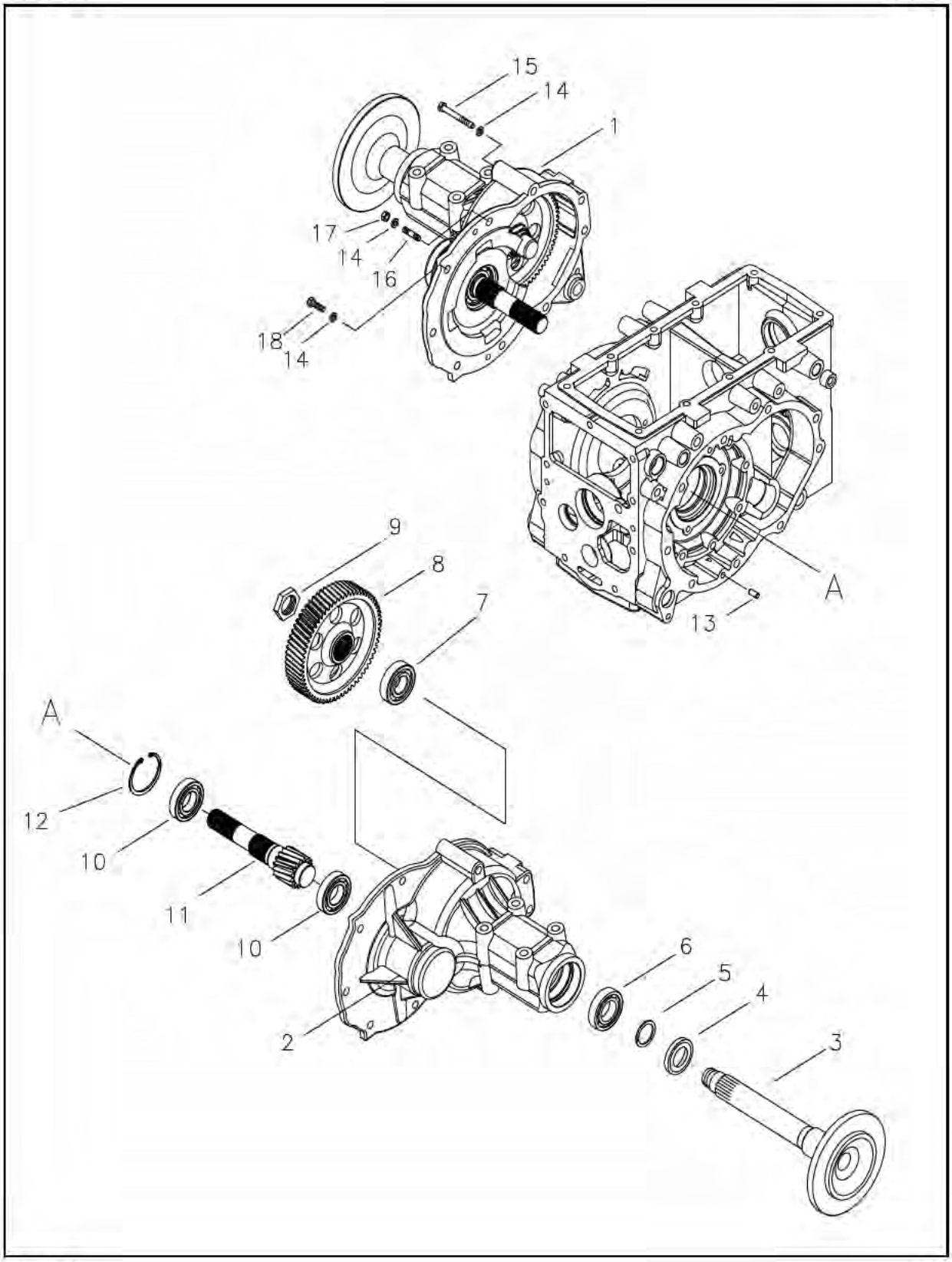

https://truckmanualshub.com/

REAR AXLE

A-NOT AVAILABLE / B-i28,i36

A-NOT AVAILABLE / B-i28,i36

FIG. 5-6

NO.	PART NO.	PART NAME & DESCRIPTION		QTY			APP.NO	REM.
				A	B	C		
1,3~12	A1480130	FINAL DRIVE ASSY (RH)		1	1			
2~12	A1480129	FINAL DRIVE ASSY (LH)		1	1			
1	A1480132	CASE, F/DRIVE(RH)		1	1			
2	A1480131	CASE, F/DRIVE(LH)		1	1			
3	A1481066	SHAFT, REAR AXLE		1	1			
4	A1450014	SEAL, OIL		1	1			
5	S812045001	RING, SNAP	Φ41.9	1	1			
6	A0832009XJ	BEARING, TAPER (#32009XJ)	#32009XJ	1	1			
7	A0830209J	BEARING, TAPER (#30209J)	#30209J	1	1			
8	A1481085	GEAR, FINAL DRVN.(65T)	65T, L	1	1			
9	A1481040	NUT, LOCK	M40X1.0	1	1			
10	A0862080HL	BEARING, BALL	#6208HL	2	2			
11	A1481084	SHAFT, FINAL DRV. W/GEAR(16T)	16T, R	1	1			
12	S811080001	RING, SNAP		1	1			
13	S423102010	PIN_PAR A-TY	Φ10×20	4	4			
14	S102141243	BOLT, HEX.	M14x2.0x120	8	8			
15	S362140013	WASHER, SPR. 2-TY.	Φ24.7xΦ14.2x4.2t	18	18			
16	S137144023	BOLT, STUD	M14x2.0x40	4	4			
17	S301140043	NUT, HEX. 1-TY.	M14x2.0	4	4			
18	S101144043	BOLT, HEX.	M14x2.0x40	6	6			

https://truckmanualshub.com/

FRONT & REAR WHEEL (TIRE)

FIG. 5-7 **G. 490**

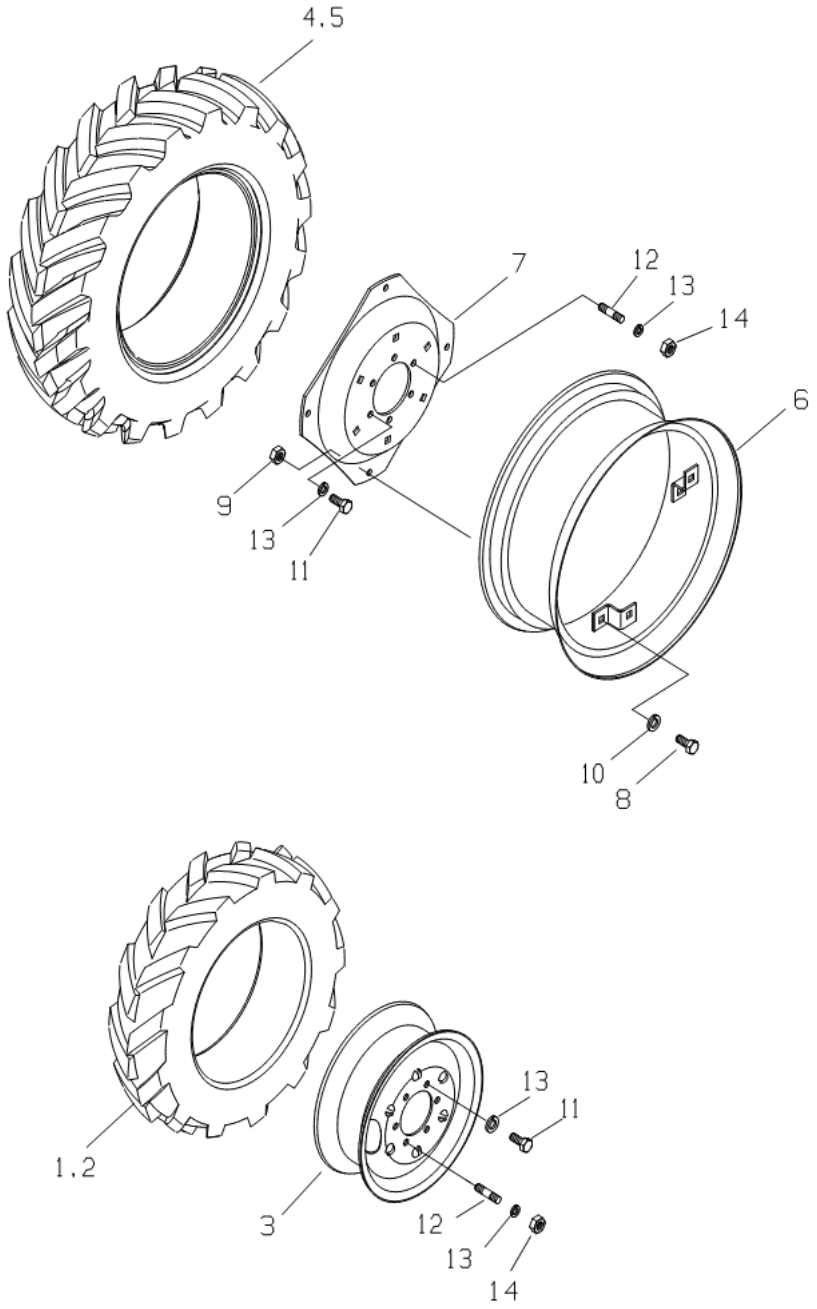

https://truckmanualshub.com/

FRONT & REAR WHEEL (TIRE)

A-NOT AVAILABLE / B-i28,i36

A-NOT AVAILABLE / B-i28,i36

FIG. 5-7

NO.	PART NO.	PART NAME & DESCRIPTION		QTY			APP.NO	REM.
				A	B	C		
1~2	A1490053	FRONT TIRE ASSY	7-16 4PR	2	2			I36,i38
1	A1494069	TIRE, FRONT(7-16 4PR)	7-16 4PR	1	1			
2	A1490036	TUBE, FRONT	7-16 4PR	1	1			
1~2	A1490143	FRONT TIRE ASSY	7-14 4PR	2	2			i28,i30
1	A1490103	TIRE, FRONT(7-14 4PR)	7-14 4PR	1	1			
2	A1490009	TUBE, FRONT	7-14 4PR	1	1			
3	A1490207	FRONT RIM ASSY	W6X16	2	2			i36,i38
3	A1490197	FRONT RIM ASSY	W5X14	2	2			i28,i30
4~5	A1490068	REAR TIRE ASSY	12.4-24 6PR	2	2			i36,i38
4	A00010525	TUBE, INNER (W/VALVE)	12.4-24 6PR	1	1			
5	A1494065	TIRE REAR(12.4-24 FM2 6PR)	12.4-24 6PR	1	1			
4~5	A1494055	REAR TIRE ASSY	11.2-24 8PR	2	2			i28,i30
4	A1494044	TUBE, REAR	11.2-24 8PR	1	1			
5	A1494043	TIRE, REAR(11.2-24 8P H)	11.2-24 8PR	1	1			
6~10	A1490022	REAR RIM ASSY	W10X24	2	2			i36,i38
6	A1490023	RIM	W10X24	1	1			
7	A1490024	DISK	W10X24	1	1			
8	A1970077	BOLT, HEX	M16X1.5X37	4	4			
9	S306160013	NUT, HEX. 2TY	M15X1.5	4	4			
10	S361160013	WASHER, SPR. 1-TY.	D28Xd16.2X4t	4	4			
6~10	A1490150	RIM & DISK ASSY	W10X24	2	2			i28,i30
6	A5000518	RIM	W10X24	1	1			
7	A1490148	DISK	W10X24	1	1			
8	A5002174	BOLT, WHEEL DISK	M16X1.5X82	6	6			
9	A5002175	NUT, WHEEL DISK	M16X1.5	6	6			
10	A5002232	WASHER, CON. SPR.	D34Xd16X5t	6	6			
11	S103163043	BOLT, HEX.	M16X1.5X30L	16	16			
12	S167162523	BOLT, STUD	M16X1.5X25L	8	8			
13	S361160013	WASHER, SPR. 1-TY.	D28Xd16.2X4t	24	24			
14	S302160043	NUT, HEX. 1-TY	M16X1.5	8	8			
`								

https://truckmanualshub.com/

TIE ROD

FIG. 6-1 **G. 610**

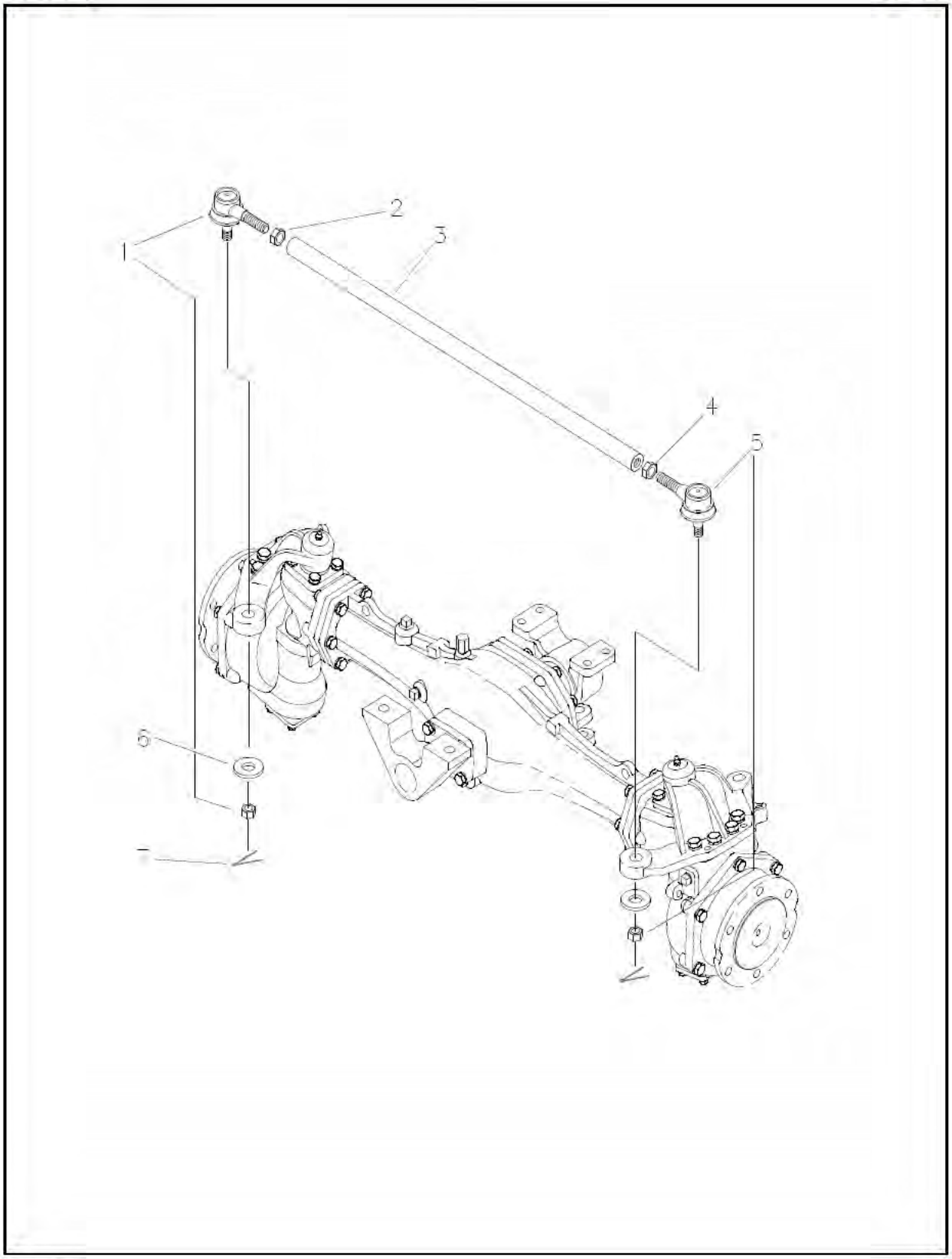

https://truckmanualshub.com/

TIE ROD

A-NOT AVAILABLE / B-i28,i36

A-NOT AVAILABLE / B-i28,i36

FIG. 6-1

NO.	PART NO.	PART NAME & DESCRIPTION		QTY			APP.NO	REM.
				A	B	C		
1~5	A1610045	TIE ROD ASSY	888L	1	1			
1	A1610035	END ASSY, LH		1	1			
2	A1610016	NUT, HEX. LH	M18×1.5(L)	1	1			
3	A1610046	PIPE, TIE ROD		1	1			
4	S306180043	NUT, HEX. RH	M18×1.5	1	1			
5	A1610036	END ASSY, RH		1	1			
6	S365164013	WASHER, PLN.	3t	2	2			
7	S441403613	PIN, SPLIT	Φ4×36	2	2			

https://truckmanualshub.com/

STEERING LINES

FIG. 6-2A **G. 630**

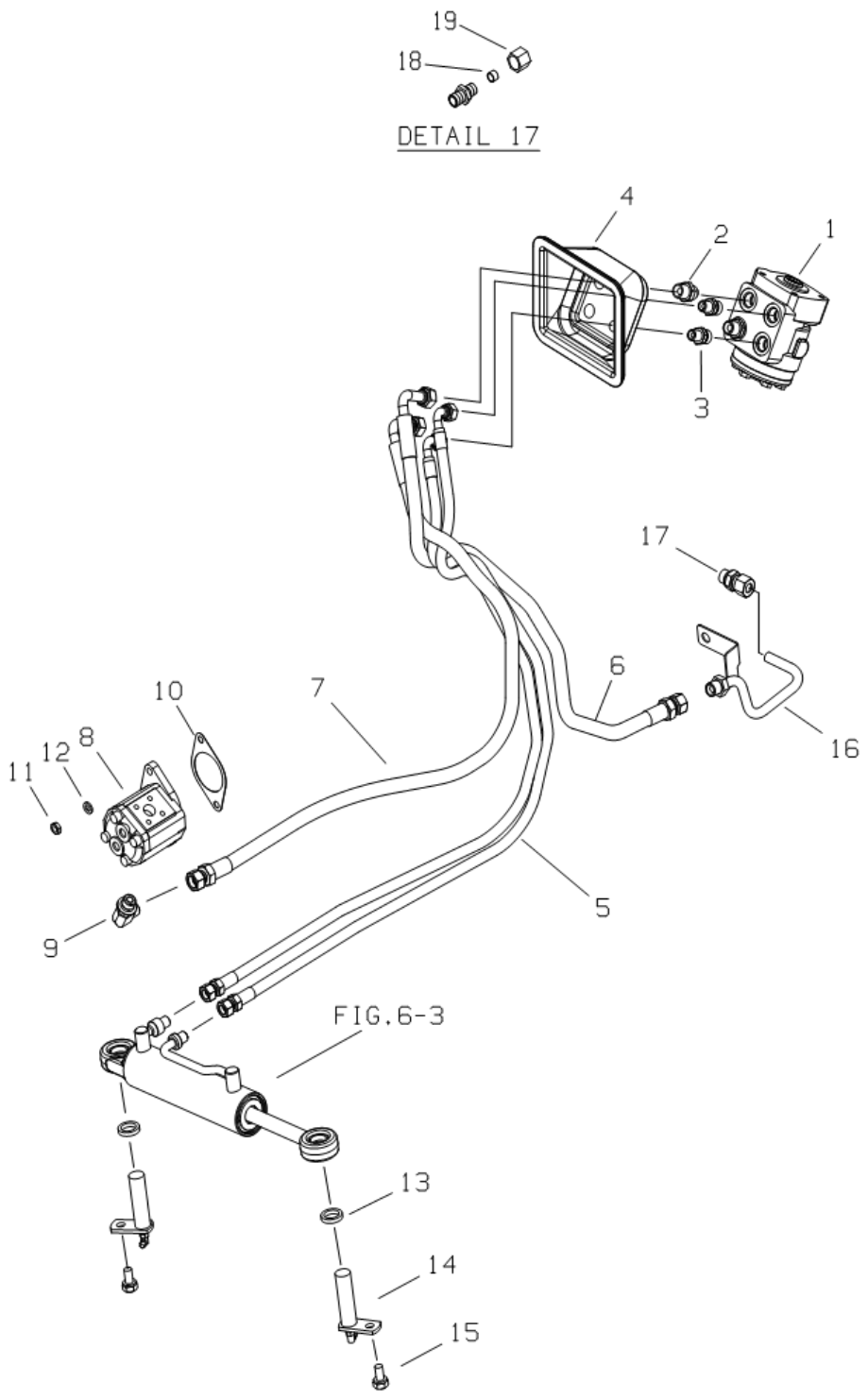

https://truckmanualshub.com/

STEERING LINES

A-NOT AVAILABLE / B-i28,i36

A-NOT AVAILABLE / B-i28,i36

FIG. 6-2A

NO.	PART NO.	PART NAME & DESCRIPTION		QTY A	QTY B	QTY C	APP.NO	REM.
1	A1630628	UNIT, STEERING	62CC/REV	1	1			
2	A1630538	JOINT, HOSE	HOFCM-0303G	1	1			
3	A1630524	JOINT, HOSE	HOFCM-0203G	2	2			
4	A1630530	COVER, STEERING HOSE		1	1			
5	A1630569	HOSE, STEERING CYLINDER	1/4"	2	2			
6	A1630576	HOSE, STR. DRAIN	3/8"	1	1			
7	A1630527	HOSE, PRESSURE HOSE	3/8"	1	1			
8	A1630540	PUMP, STEERING	6CC/REV	1	*			
	A1630539	PUMP, STEERING	6CC/REV	*	1			
9	A1630543	JOINT	HOFBM-0303G	1	*			
	A1630541	JOINT	HOFBM-0303G	*	1			
10	A1630547	PACKING, PUMP		1	1			
11	S313080013	NUT, HEX	M8x1.25	2	2			
12	S361080013	WASHER, SPRING	Φ15.4xΦ8.2x2t	2	2			
13	A1630135	SPACER, CYLINDER PIN		2	2			
14	A1630327	PIN ASSY, CYLINDER		2	2			
15	S154102033	BOLT,HEX W/WASHER		2	2			
16,17	A1630620	DRAIN PIPE ASSY		1	1			MEC
16	A1630621	PIPE, P/S DRAIN		1	1			MEC
17	A1630144	JOINT	BOM12-03G	1	1			MEC
18	A1630169	SLEEVE	Φ12	1	1			
19	A1630170	NUT, HEX		1	1			

https://truckmanualshub.com/

STEERING LINES

FIG. 6-2A **G. 630**

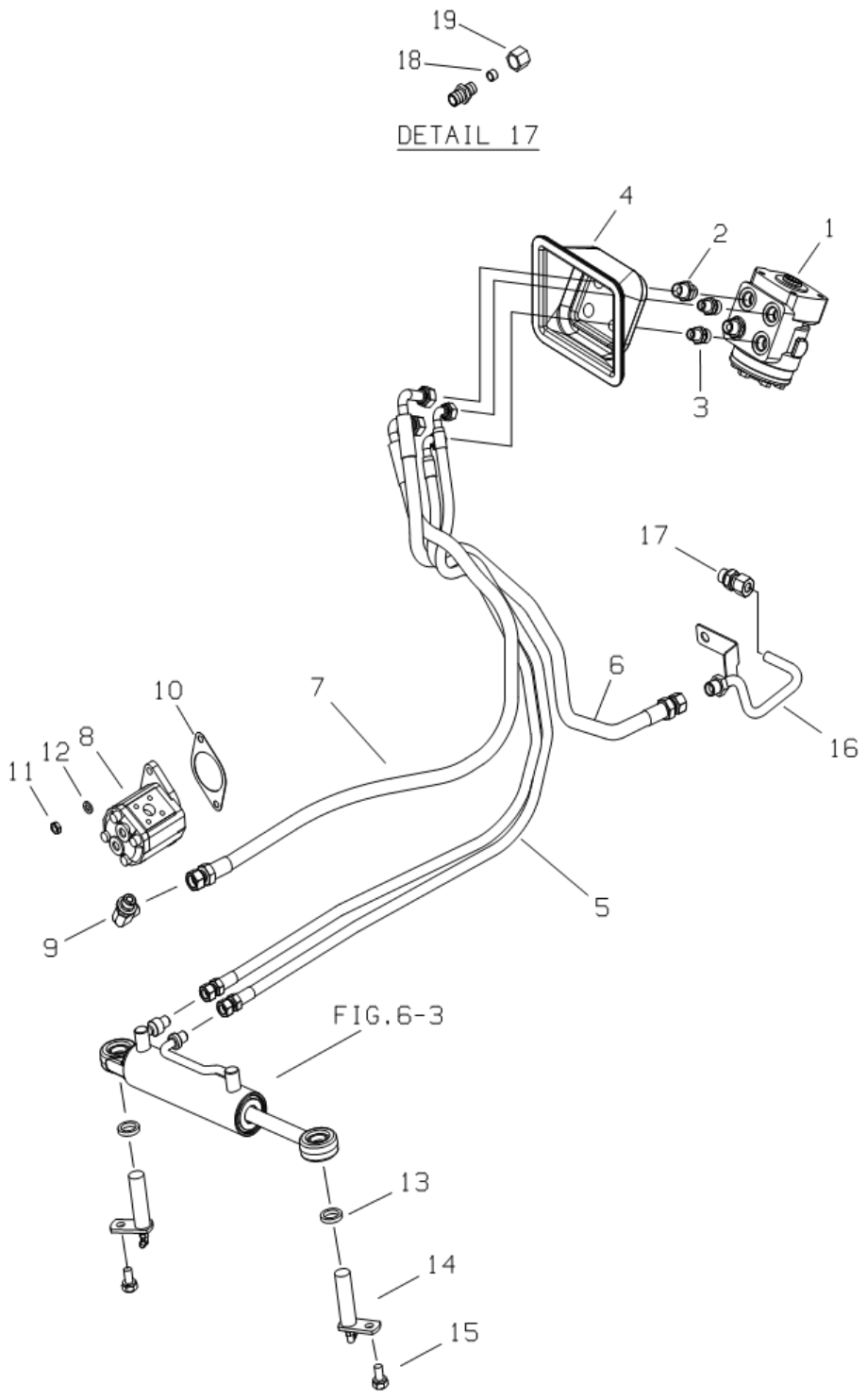

https://truckmanualshub.com/

STEERING LINES

A-NOT AVAILABLE / B-i28,i36

A-NOT AVAILABLE / B-i28,i36

FIG. 6-2A

NO.	PART NO.	PART NAME & DESCRIPTION		QTY A	QTY B	QTY C	APP.NO	REM.
1	A1630586	UNIT, STEERING	62CC/REV	1	1			
2	A1630538	JOINT, HOSE	HOFCM-0303G	1	1			
3	A1630524	JOINT, HOSE	HOFCM-0203G	2	2			
4	A1630530	COVER, STEERING HOSE		1	1			
5	A1630569	HOSE, STEERING CYLINDER	1/4"	2	2			
6	A1630576	HOSE, STR. DRAIN	3/8"	1	1			
7	A1630527	HOSE, PRESSURE HOSE	3/8"	1	1			
8	A1630540	PUMP, STEERING	6CC/REV	1	*			
	A1630539	PUMP, STEERING	6CC/REV	*	1			
9	A1630543	JOINT	HOFBM-0303G	1	*			
	A1630541	JOINT	HOFBM-0303G	*	1			
10	A1630547	PACKING, PUMP		1	1			
11	S313080013	NUT, HEX	M8x1.25	2	2			
12	S361080013	WASHER, SPRING	Φ15.4xΦ8.2x2t	2	2			
13	A1630135	SPACER, CYLINDER PIN		2	2			
14	A1630327	PIN ASSY, CYLINDER		2	2			
15	S154102033	BOLT,HEX W/WASHER		2	2			
16,17	A1630620	DRAIN PIPE ASSY		1	1			MEC
16	A1630621	PIPE, P/S DRAIN		1	1			MEC
17	A1630144	JOINT	BOM12-03G	1	1			MEC
18	A1630169	SLEEVE	Φ12	1	1			
19	A1630170	NUT, HEX		1	1			

https://truckmanualshub.com/

STEERING WHEEL & COLUMN

FIG. 6-3 **G. 630**

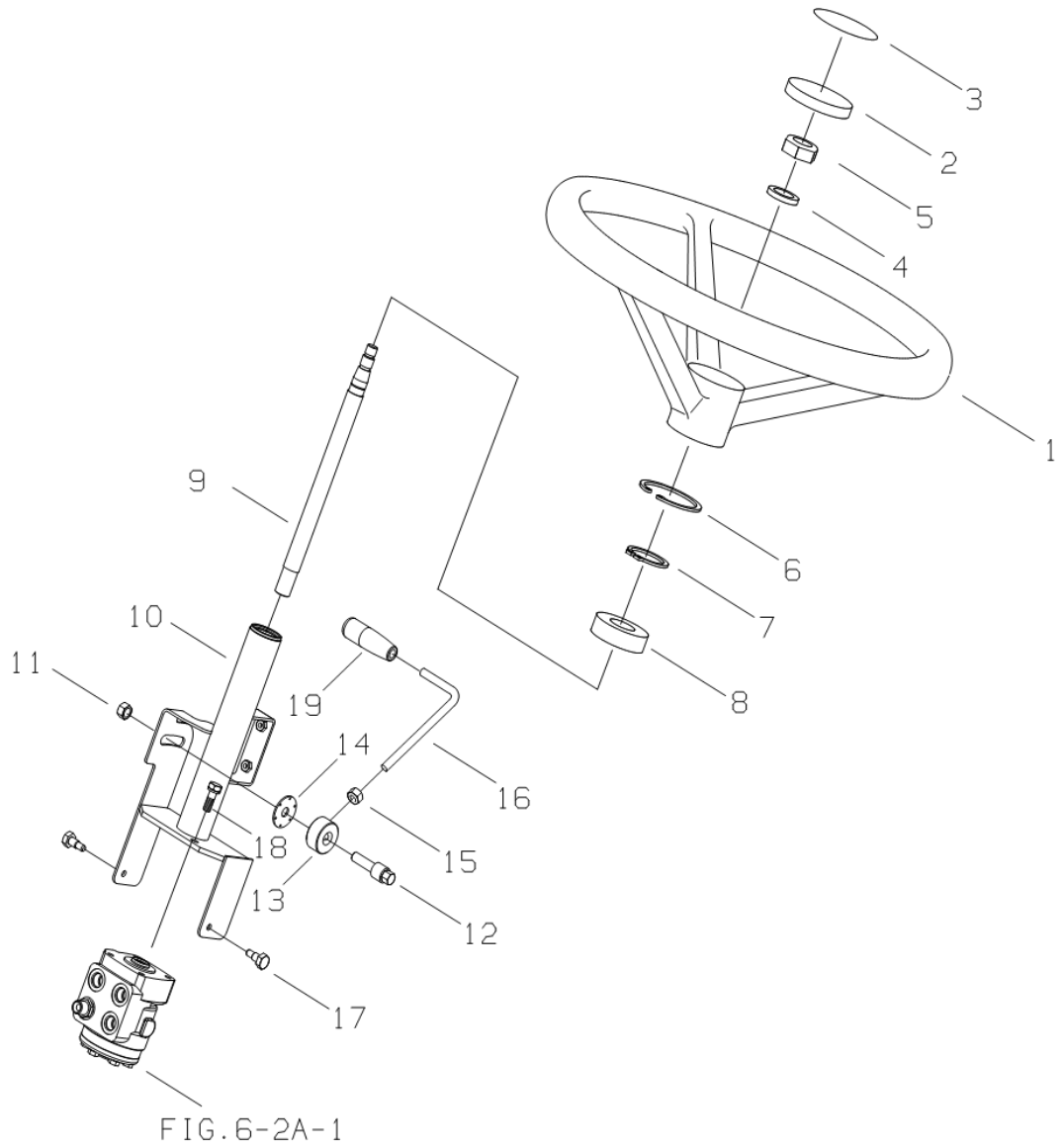

https://truckmanualshub.com/

STEERING WHEEL & COLUMN

A-NOT AVAILABLE / B-i28,i36

A-NOT AVAILABLE / B-i28,i36

FIG. 6-3

NO.	PART NO.	PART NAME & DESCRIPTION		QTY A	QTY B	QTY C	APP.NO	REM.
1~3	A1630579	WHEEL ASSY, STEERING	D380	1	1			
1	A1630580	WHEEL, STEERING		1	1			
2	A5000583	CAP, WHEEL		1	1			
3	A1981069	DECAL, LS EMBLEM		1	1			
4	S361140013	WASHER, SPRING	Φ24.5xΦ14.2x3.5t	1	1			
5	S314140013	NUT, HEX.	M14xP1.5	1	1			
6~10	A1630531	STEERING COLUMN ASSY		1	1			
6	S811037001	RING, SNAP	D37	1	1			
7	S810020001	RING, SNAP(S)	D20	1	1			
8	A0869044	BEARING, BALL		1	1			
9	A1630533	SHAFT, STEERING		1	1			
10	A1630532	COLUMN, STEERING		1	1			
11	A0610260	NUT	M12X1.25	1	1			
12	A1630553	BOLT, TILTING GUIDE		1	1			
13	A1630554	ARM, TILTING LOCKING		1	1			
14	A1630419	PLATE, TILTING LOCKING		1	1			
15	S306100013	NUT	M10X1.25	1	1			
16	A1630534	LEVER, TILTING LOCKING		1	1			
17	A1630537	BOLT, TILTING HINGE		2	2			
18	S153102533	BOLT, HEX.	M10X1.25X25	2	2			
19	A1970242	GRIP, LEVER		1	1			

https://truckmanualshub.com/

STEERING CYLINDER

FIG. 6-4 **G. 630**

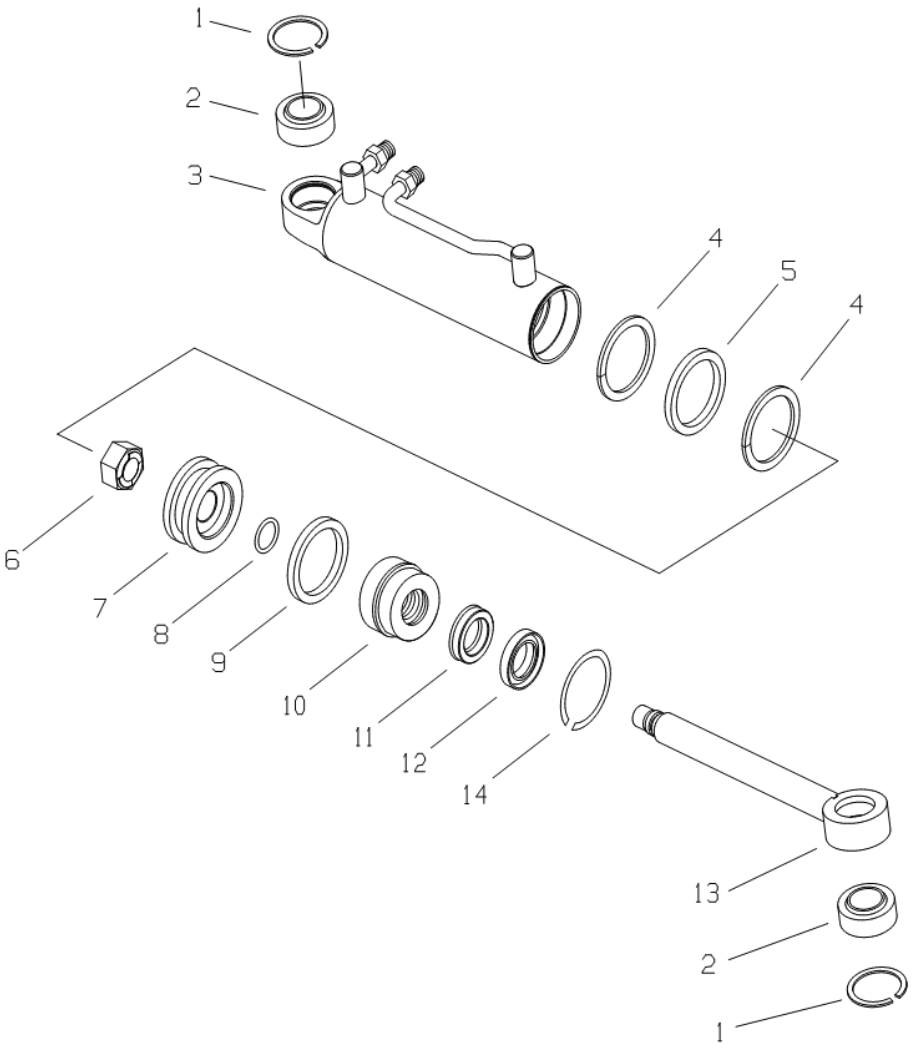

https://truckmanualshub.com/

STEERING CYLINDER

A-NOT AVAILABLE / B-i28,i36

A-NOT AVAILABLE / B-i28,i36

FIG. 6-4

NO.	PART NO.	PART NAME & DESCRIPTION		QTY A	QTY B	QTY C	APP.NO	REM.
1~14	A1630473	STEERING CYLINDER	293~446L	1	1			
1	S813035001	RING, SNAP	Φ35	2	2			
2	A1630159	BUSHING, BALL		2	2			
3	A1630474	CYLINDER ASSY		1	1			
4	A1630480	RING, BACK UP	Φ45	2	2			
5	S801039010	O-RING	D38.7×3.5	1	1			
6	A1630479	NUT, LOCK	M12×1.25	1	1			
7	A1630476	PISTON, STR. CYLINDER		1	1			
8	S801014010	O-RING (P)	D13.8×2.4	1	1			
9	S801040010	O-RING	D39.7×3.5	1	1			
10	A1630477	SLEEVE, STR. CYLINDER		1	1			
11	A1630481	U-PACKING	Φ18	1	1			
12	A1630482	SEAL, DUST	Φ18	1	1			
13	A1630475	ROD, STR. CYLINDER	Φ18	1	1			
14	A1630478	RING, WIRE	Φ2	1	1			

https://truckmanualshub.com/

COOLER

FIG. 6-5 **G. 640**

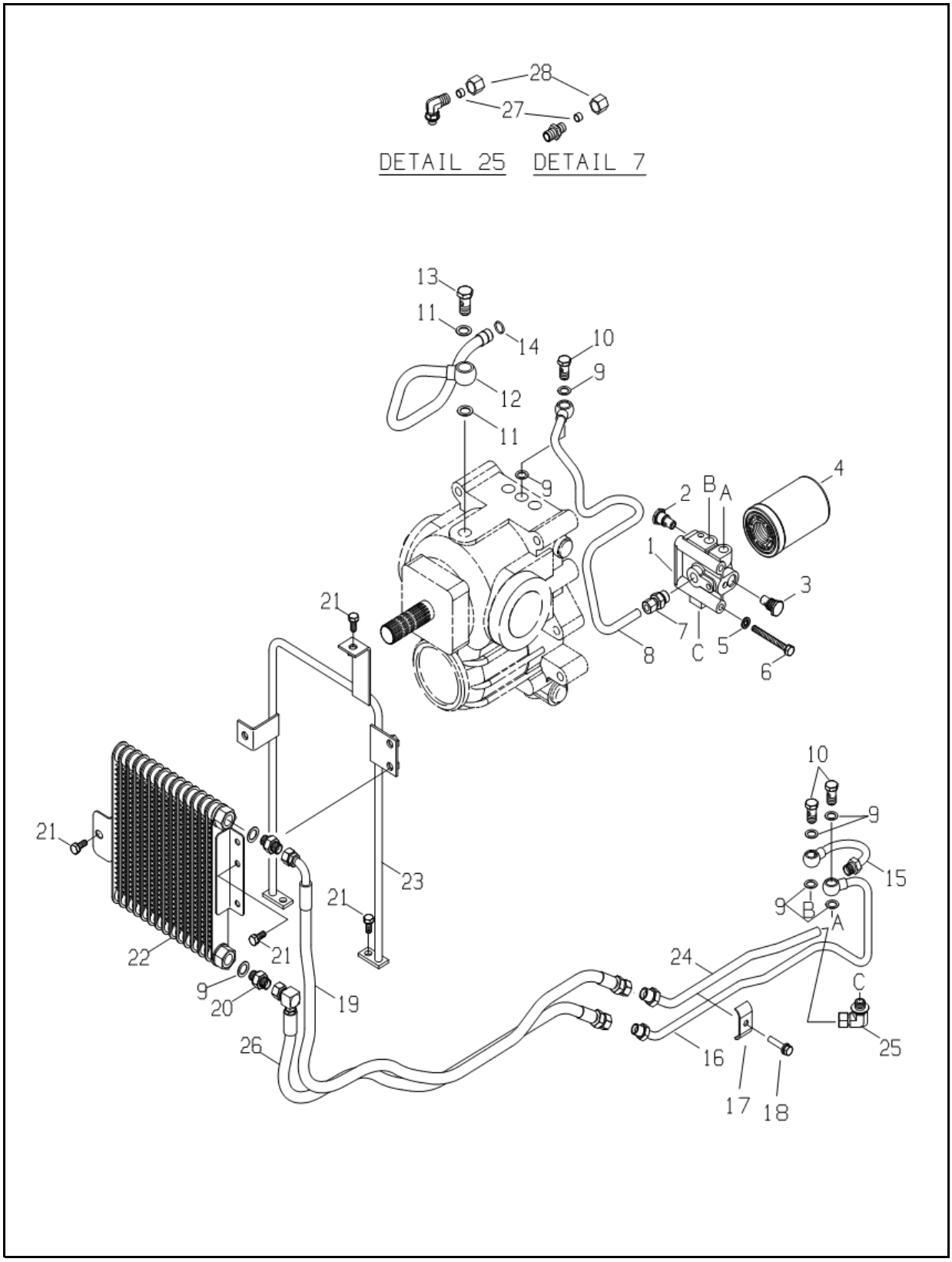

https://truckmanualshub.com/

COOLER

A-NOT AVAILABLE / B-i28,i36

B-i28,i36

FIG. 6-5 (HST)

NO.	PART NO.	PART NAME & DESCRIPTION		QTY A	QTY B	QTY C	APP.NO	REM.
1~3	A1640091	FILTER FLANGE ASSY		*	1			
1	A1640092	FLANGE, FILTER		*	1			
2	A1640058	VALVE, OIL COOLER		*	1			
3	A1640059	VALVE, OIL FILTER		*	1			
4	A1640093	FILTER, HYD.	1 3/8-12UNF-28	*	1			
5	S361100013	WASHER	M10	*	2			
6	S102101243	BOLT, HEX	M10x1.5x120L	*	2			
7~8	A1640062	INLET PIPE SUB ASSY		*	1			28cc
7	A1630150	JOINT	PF1/2	*	1			
8	A1640061	PIPE, INLET	Φ12	*	1			28cc
9	A1823245	SEAL, BONDED		*	8			
10	A1630201	BOLT, UNION	PF3/8	*	3			
11	A1823252	SEAL, BONDED		*	2			
12	A1640033	PIPE, OUTLET	Φ15	*	1			
13	A1823161	BOLT, EYE	PF1/2	*	1			
14	S804016010	O-RING	S16	*	1			
15	A1640063	UNION, HOSE	PF3/8	*	1			
16	A1640096	PIPE, COOLER RETURN	Φ12	*	1			
17	A5001357	CLAMP, PIPE A		*	1			
18	S155063033	BOLT, HEX	M6X1.0X30	*	1			
19	A1640100	HOSE, COOLER IN	PF3/8	*	1			
20	A1640064	UNION, HOSE		*	2			
21	S155082033	BOLT, HEX	M8x1.25x20L	*	8			
22	A3180673	COOLER		*	1			
23	A1640076	SUPPORT , COOLER		*	1			
24~25	A1640098	COOLER INLET PIPE ASSY		*	1			
24	A1640101	PIPE, COOLER INLET	Φ12	*	1			
25	A1630101	ELBOW	PF3/8	*	1			
26	A1640099	HOSE, COOLER OUT	PF3/8	*	1			
27	A1630169	SLEEVE	Φ12	*	1			
28	A1630170	NUT		*	1			

https://truckmanualshub.com/

COOLER

FIG. 6-5 **G. 640**

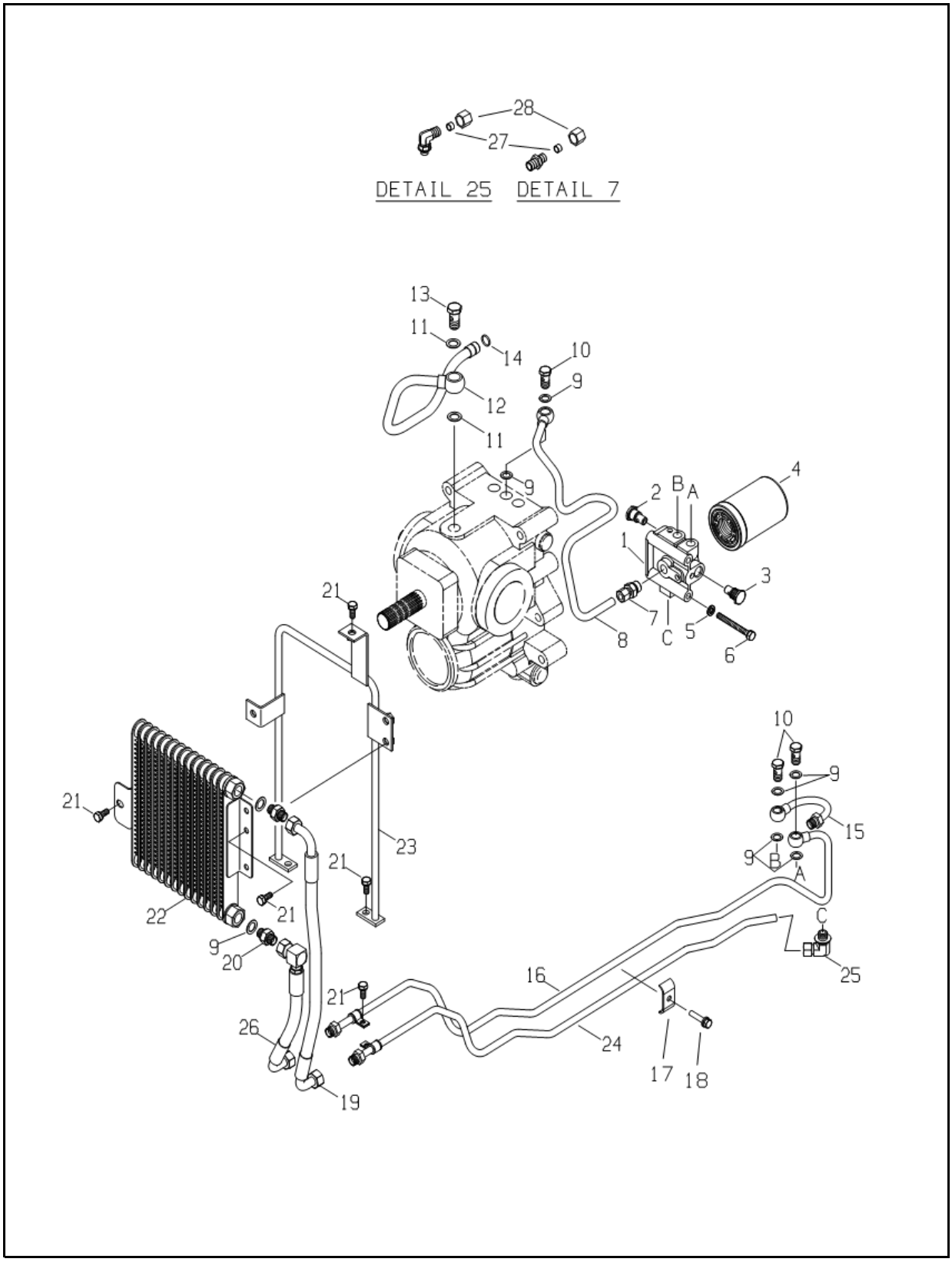

https://truckmanualshub.com/

COOLER

A-NOT AVAILABLE / B-i28,i36

B-i28,i36

FIG. 6-5 (HST)

NO.	PART NO.	PART NAME & DESCRIPTION		QTY A	QTY B	QTY C	APP.NO	REM.
1~3	A1640091	FILTER FLANGE ASSY		*	1			
1	A1640092	FLANGE, FILTER		*	1			
2	A1640058	VALVE, OIL COOLER		*	1			
3	A1640059	VALVE, OIL FILTER		*	1			
4	A1640093	FILTER, HYD.	1 3/8-12UNF-28	*	1			
5	S361100013	WASHER	M10	*	2			
6	S102101243	BOLT, HEX	M10x1.5x120L	*	2			
7~8	A1640062	INLET PIPE SUB ASSY		*	1			28cc
7	A1630150	JOINT	PF1/2	*	1			
8	A1640061	PIPE, INLET	Φ12	*	1			28cc
9	A1823245	SEAL, BONDED		*	8			
10	A1630201	BOLT, UNION	PF3/8	*	3			
11	A1823252	SEAL, BONDED		*	2			
12	A1640033	PIPE, OUTLET	Φ15	*	1			
13	A1823161	BOLT, EYE	PF1/2	*	1			
14	S804016010	O-RING	S16	*	1			
15	A1640063	UNION, HOSE	PF3/8	*	1			
16	A1640088	PIPE, COOLER RETURN	Φ12	*	1			
17	A5001357	CLAMP, PIPE A		*	1			
18	S155063033	BOLT, HEX	M6X1.0X30	*	1			
19	A1640079	HOSE, COOLER IN	PF3/8	*	1			
20	A1640064	UNION, HOSE		*	2			
21	S155082033	BOLT, HEX	M8x1.25x20L	*	8			
22	A3180673	COOLER		*	1			
23	A1640076	SUPPORT , COOLER		*	1			
24~25	A1640089	COOLER INLET PIPE ASSY		*	1			
24	A1640090	PIPE, COOLER INLET	Φ12	*	1			
25	A1630101	ELBOW	PF3/8	*	1			
26	A1640080	HOSE, COOLER OUT	PF3/8	*	1			
27	A1630169	SLEEVE	Φ12	*	1			
28	A1630170	NUT		*	1			

https://truckmanualshub.com/

BRAKE

FIG. 7-1 **G. 650**

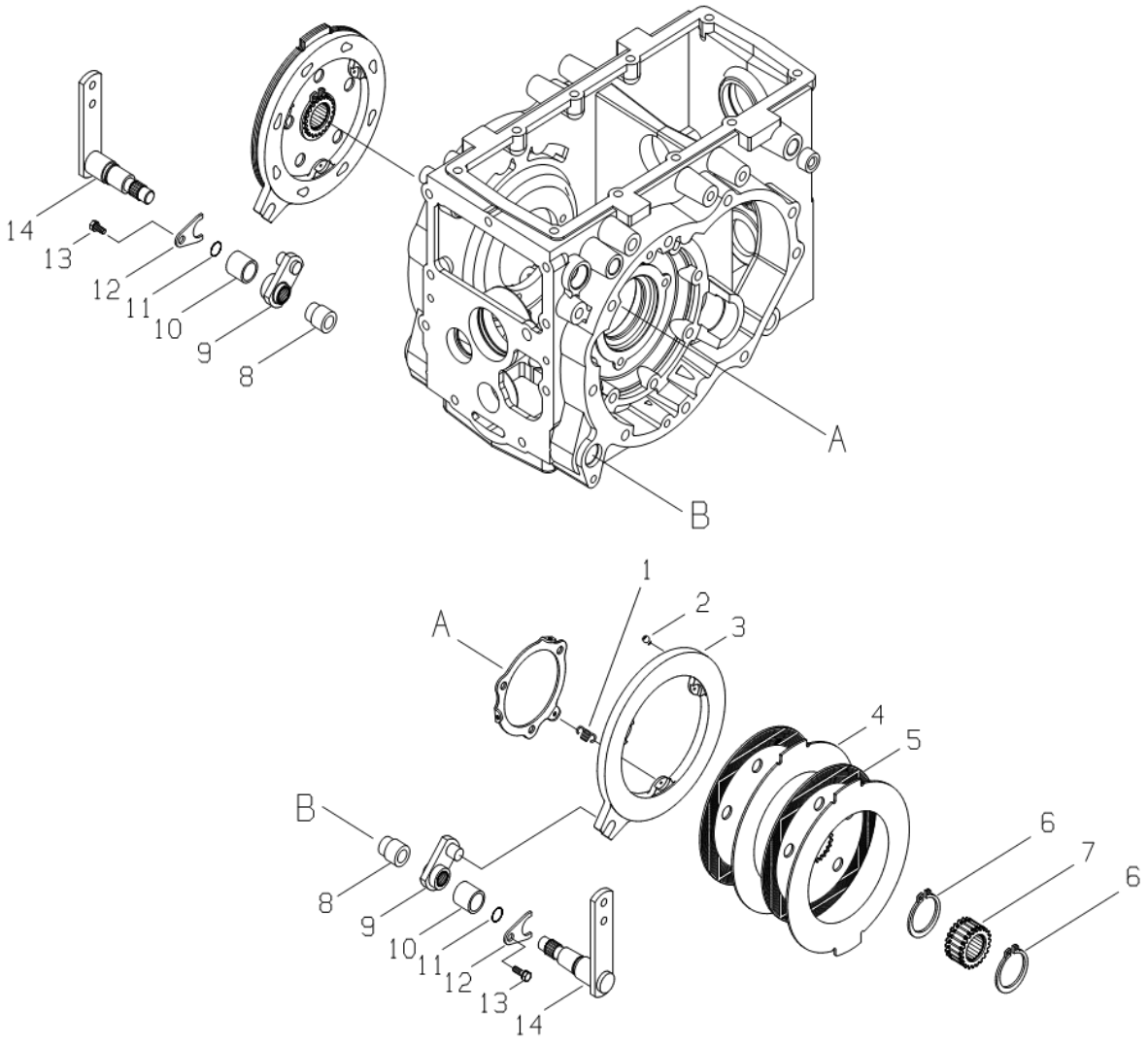

https://truckmanualshub.com/

BRAKE

A-NOT AVAILABLE / B-i28,i36

A-NOT AVAILABLE / B-i28,i36

FIG. 7-1

NO.	PART NO.	PART NAME & DESCRIPTION		QTY A	QTY B	QTY C	APP.NO	REM.
1~7	A1650071	BRAKE ASS'Y(RH)		1	1			
	A1650072	BRAKE ASS'Y(LH)		1	1			
1	3A1653010	SPRING		3	3			
2	3A1653007	BALL		8	8			
3	A1650076	PLATE, CAM(RH)		1	1			
	A1650077	PLATE, CAM(LH)		1	1			
4	A1650107	PLATE, PRESSURE		2	2			
5	A1653063	DISC, PAPER		2	2			
6	S810058001	RING, SNAP		2	2			
7	A1650078	BOSS, SPLINE		1	1			
8	A1650102	BUSHING, BRAKE LEVER		2	2			
9	A1650079	ARM, BRAKE INNER		2	2			
10	A0677815	BUSHING, DU		2	2			
11	S801025010	O-RING (P)		2	2			
12	A1650091	LOCK, PLATE		2	2			
13	S154102033	BOLT, HEX. W/WASHER		2	2			
14	A1650112	LEVER, BRAKE		2	2			

https://truckmanualshub.com/

BRAKE PEDAL

FIG. 7-2A **G. 670**

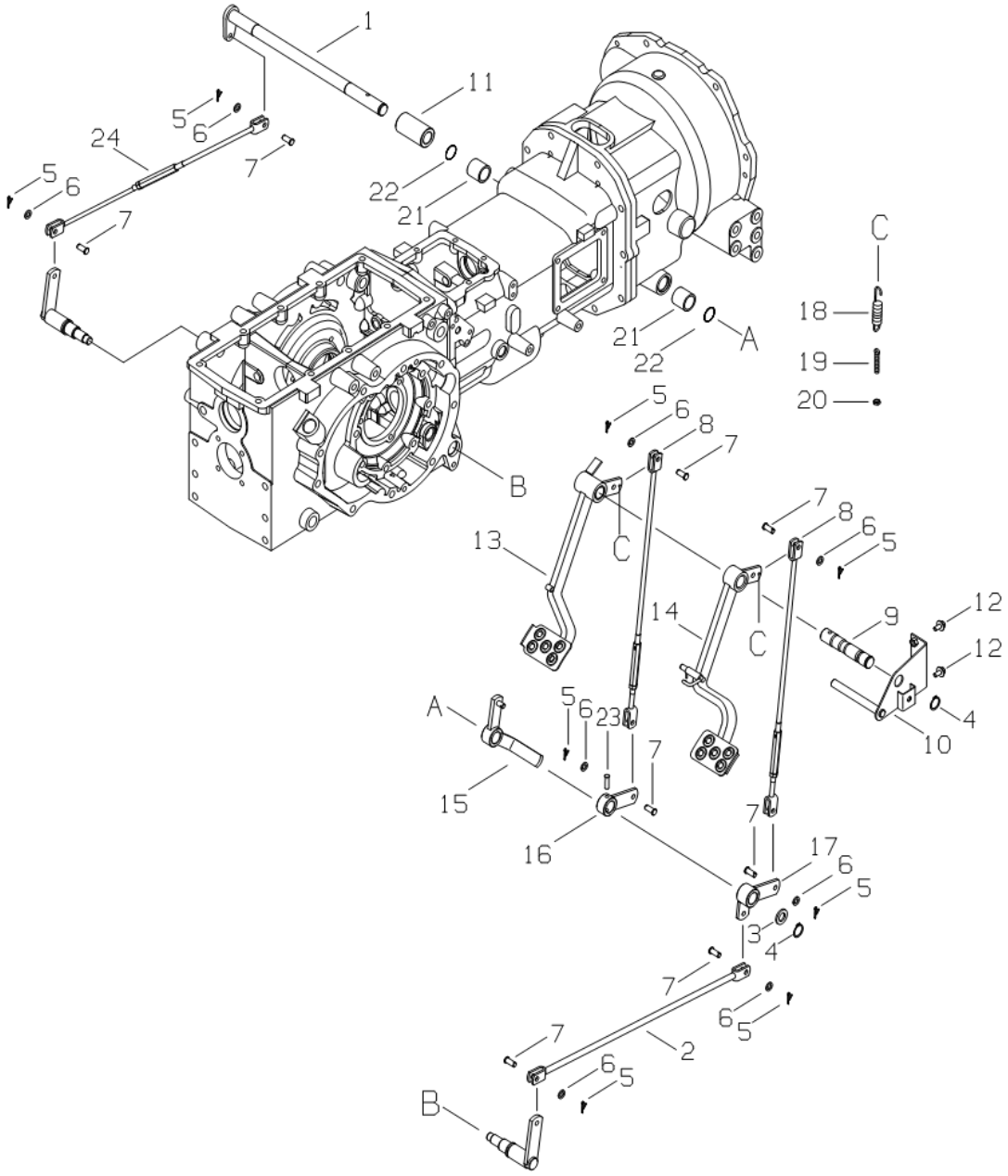

https://truckmanualshub.com/

BRAKE PEDAL

A-NOT AVAILABLE / B-i28,i36

A-NOT AVAILABLE / B-i28,i36

FIG. 7-2A (MEC)

NO.	PART NO.	PART NAME & DESCRIPTION		QTY A	QTY B	QTY C	APP.NO	REM.
1	A1670302	SHAFT, BRAKE PEDAL		1	1			
2	A1670407	BRAKE ROD		1	1			
3	S364240013	WASHER, PLN.		1	1			
4	S810025001	RING, SNAP		2	2			
5	S441252013	PIN, SPLIT		8	8			
6	S364100013	WASHER, PLN. S-RD.		8	8			
7	A1670118	PIN		8	8			
8	A1670307	BRAKE ROD ASSY		2	2			
9	A1670311	SHAFT, BRAKE PEDAL		1	1			
10	A1670310	STOPPER, BRAKE PEDAL		1	1			
11	A1670303	SPACER		1	1			
12	S159082033	BOLT, HEX.W/WASHER		2	2			
13	A1670362	PEDAL, BRAKE(LH)		1	1			
14	A1670361	PEDAL, BRAKE(RH)		1	1			
15	A1670306	ARM, PARKING BRAKE(STD)		1	1			
16	A1670305	ARM, BRAKE(LH)		1	1			
17	A1670304	ARM, BRAKE(RH)		1	1			
18	A1260112	SPRING		2	2			
19	A1260109	BOLT, HEX.		2	2			
20	A0610274	NUT, LOCK		2	2			
21	A1970203	BUSHING, DU		2	2			
22	S801025010	O-RING		2	2			
23	S446084012	PIN, SPRING		1	1			
24	A1670356	ROD, BRAKE ASSY		1	1			

https://truckmanualshub.com/

BRAKE PEDAL

FIG. 7-2B **G. 670**

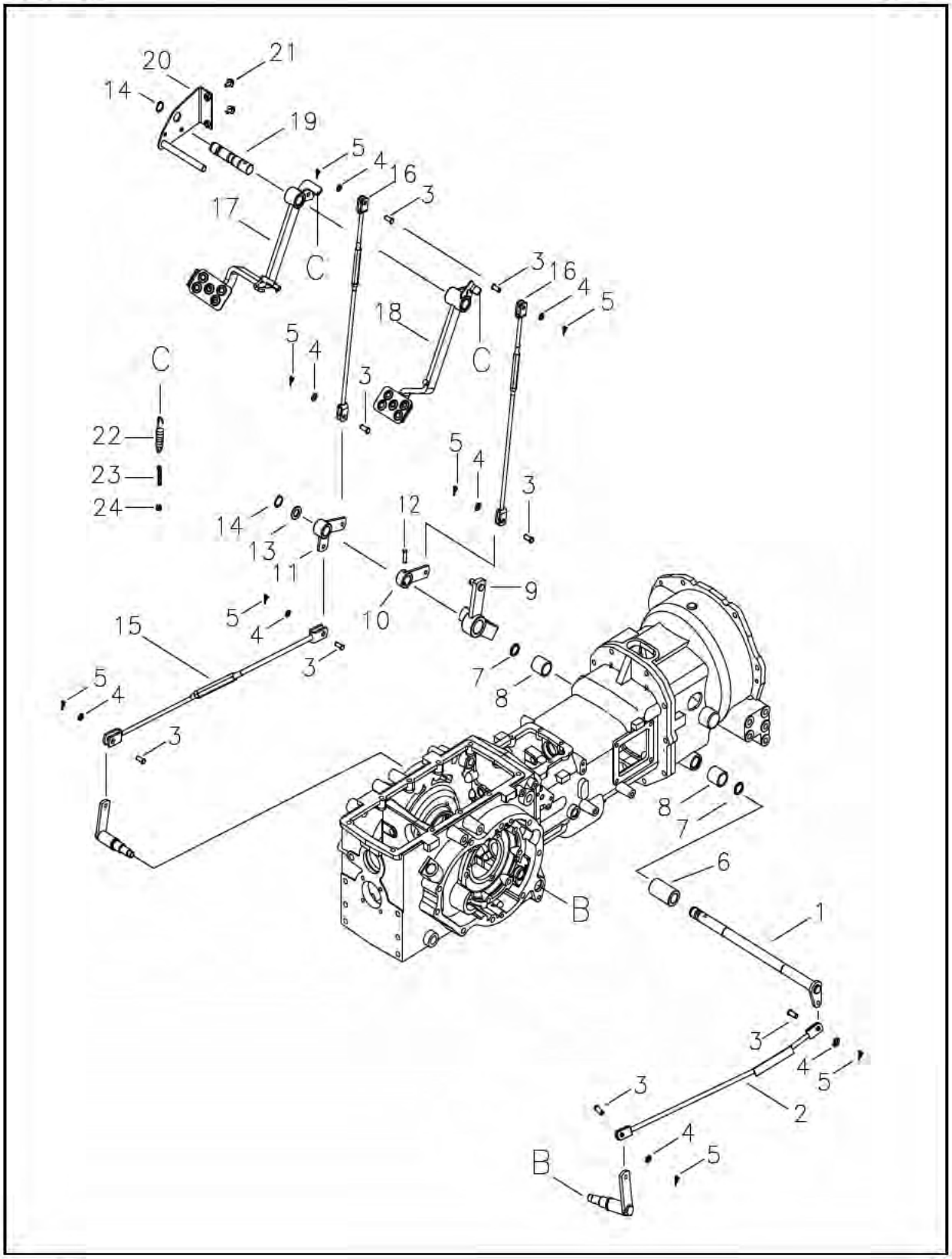

https://truckmanualshub.com/

BRAKE PEDAL

A-NOT AVAILABLE / B-i28,i36

A-NOT AVAILABLE / B-i28,i36

FIG. 7-2B (HST)

NO.	PART NO.	PART NAME & DESCRIPTION		QTY A	QTY B	QTY C	APP.NO	REM.
1	A1670302	SHAFT, BRAKE PEDAL		1	1			
2	A1670410	BRAKE ROD		1	1			
3	A1670118	PIN		8	8			
4	S364100013	WASHER, PLN. S-RD.		8	8			
5	S441252013	PIN, SPLIT		8	8			
6	A1670303	SPACER		1	1			
7	S801025010	O-RING		2	2			
8	A1970203	BUSHING, DU		2	2			
9	A1670351	ARM, PARKING BRAKE		1	1			
	A1670340	SPACER		1	1			EC
10	A1670305	ARM, BRAKE(LH)		1	1			
11	A1670320	ARM, BRAKE(RH)		1	1			
12	S446084012	PIN, SPRING		1	1			
13	S364240013	WASHER, PLN.		1	1			
14	S810025001	RING, SNAP		2	2			
15	A1670356	ROD, BRAKE		1	1			
16	A1670307	BRAKE ROD ASSY		2	2			
17	A1670360	PEDAL, BRAKE(LH)		1	1			
18	A1670363	PEDAL, BRAKE(RH)		1	1			
19	A1670311	SHAFT, BRAKE PEDAL		1	1			
20	A1260099	STOPPER, CLUTCH PEDAL		1	1			
21	S159082033	BOLT, HEX, W/WASHER		2	2			
22	A1260112	SPRING		2	2			
23	A1260109	BOLT, ADJUSTER		2	2			
24	A0610274	NUT, LOCK		2	2			

https://truckmanualshub.com/

PARKING BRAKE

FIG. 7-3A **G. 670**

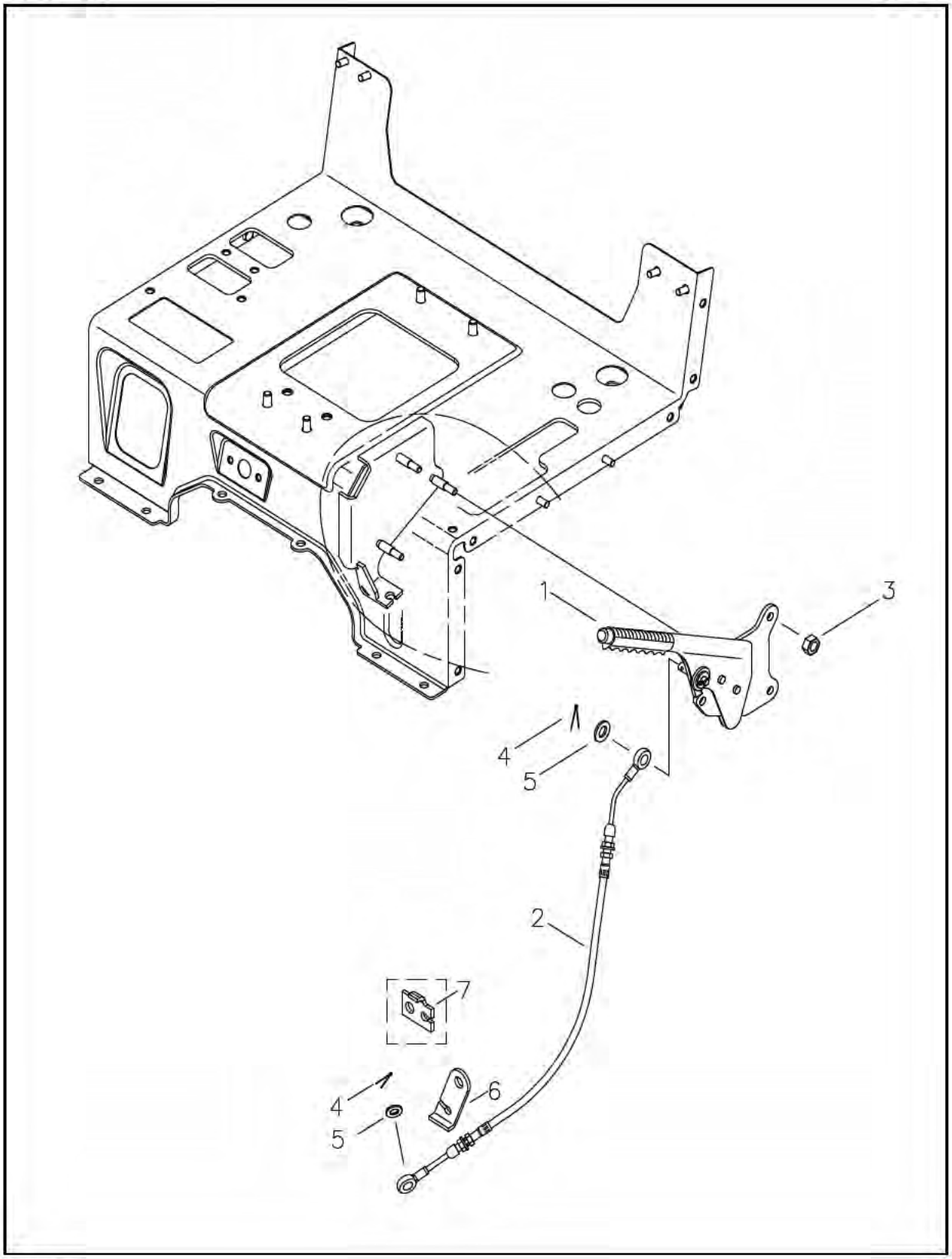

https://truckmanualshub.com/

PARKING BRAKE

A-NOT AVAILABLE / B-i28,i36

A-NOT AVAILABLE / B-i28,i36

FIG. 7-3A

NO.	PART NO.	PART NAME & DESCRIPTION		QTY A	QTY B	QTY C	APP.NO	REM.
1	A1670078	PARKING BRAKE ASSY		1	1			
2	A1670269	WIRE, PARKING BRAKE		1	1			
	A1670222	WIRE, PARKING BRAKE		1	1			HST
3	S345080013	NUT, FLANGE B-TY.		3	3			
4	S441252013	PIN, SPLIT		2	2			
5	S364100013	WASHER, PLN. S-RD.		2	2			
6	A1670390	PLATE, P/BRAKE WIRE		1	1			
7	A1670352	BRACKET, P/BRAKE WIRE		1	1			HST

https://truckmanualshub.com/

ELECTRICAL WIRING

FIG. 8-1A **G. 730**

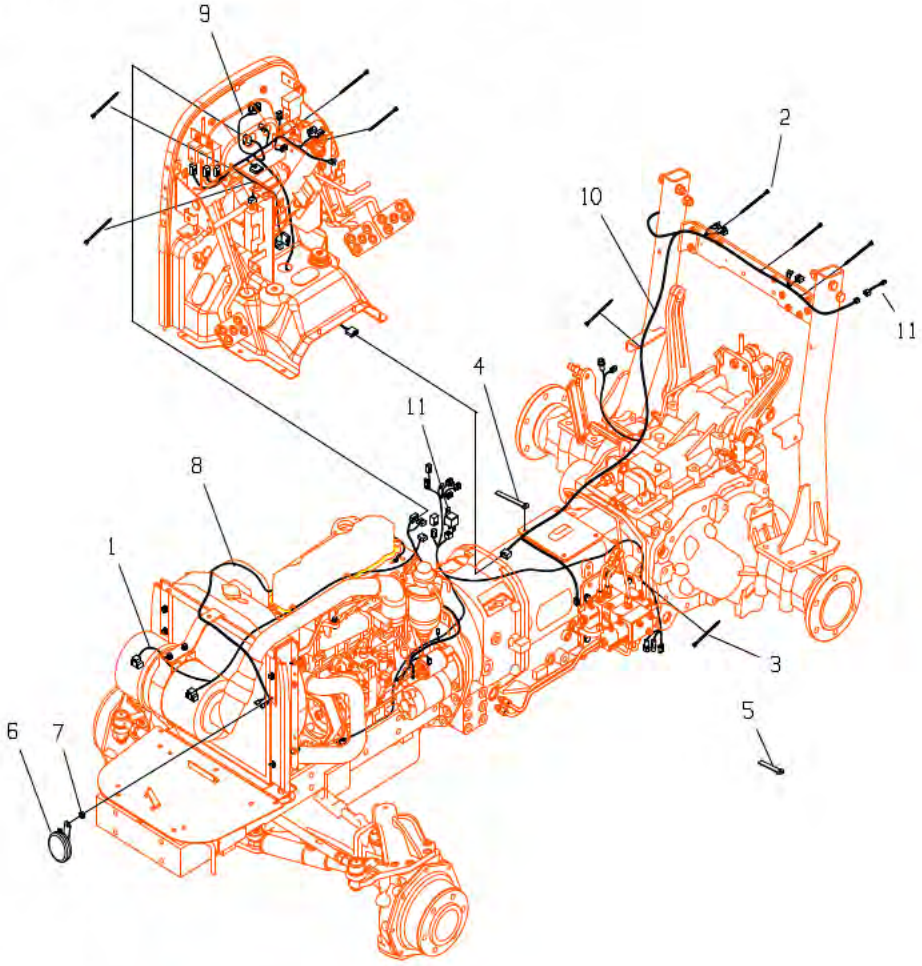

https://truckmanualshub.com/

ELECTRICAL WIRING

A-NOT AVAILABLE / B-i28,i36

A-NOT AVAILABLE / B-i28,i36

FIG. 8-1A

NO.	PART NO.	PART NAME & DESCRIPTION		QTY			APP.NO	REM.
				A	B	C		
1	A1730152	HARNESS, FRONT LIGHT		1	1			
2	A0640009	BAND, WIRE		5	5			
3	A0640028	BAND, WIRE		3	3			
4	A0640103	CLAMP		1	1			
5	A0640015	CLAMP		4	4			
6	A5002054	HORN		1	1			
7	S313100013	NUT, HEX	M10x1.25P	1	1			
8	A1730213	HARNESS, ENGINE		1	*			L3A
	A1730212	HARNESS, ENGINE		*	1			S4L
9	A1730210	HARNESS, MAIN		1	*			MEC
	A1730215	HARNESS, MAIN (HST)		*	1			ASAE
	A1730259	HARNESS, MAIN (HST)		1	1			EC
10	A1730214	HARNESS, REAR		1	*			MEC
	A1730216	HARNESS, REAR		*	1			HST
11	A1730220	WIRE, LAMP		2	2			EC

https://truckmanualshub.com/

BATTERY

FIG. 8-2 **G. 740**

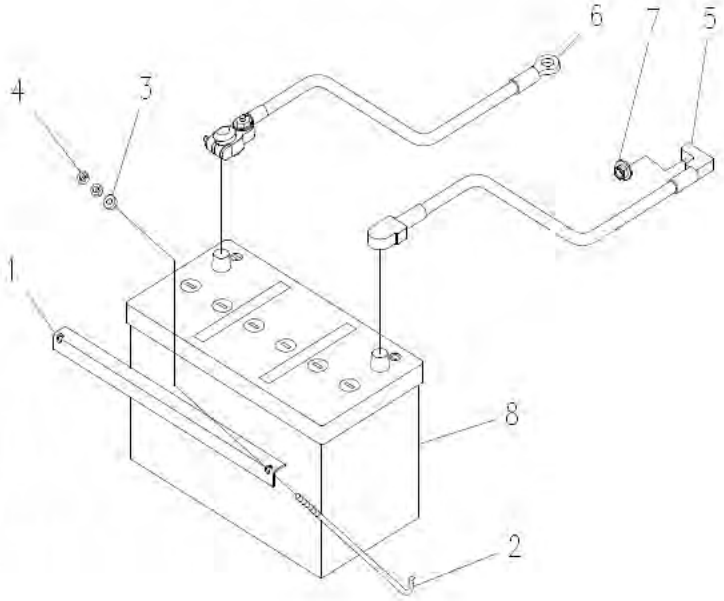

https://truckmanualshub.com/

BATTERY

A-NOT AVAILABLE / B-i28,i36

A-NOT AVAILABLE / B-i28,i36

FIG. 8-2

NO.	PART NO.	PART NAME & DESCRIPTION		QTY A	QTY B	QTY C	APP.NO	REM.
1	A1740003	CLAMP, BATTERY		1	1			
2	A1741021	ROD, BATTERY CLAMP		2	2			
3	S363060013	WASHER, PLAIN	M6	2	2			
4	S305060013	NUT, HEX	M6x1.0P	4	4			
5	A1740020	CABLE, BATTERY (+) POS.		1	1			
6	A1740030	CABLE, BATTERY (-) NEG.		1	1			
7	S345080013	NUT, FLANGE B-TY.	M8x1.25P	1	1			
8	A1740002	BATTERY, MF	12V-80AH	1	1			
	A1740034	BATTERY, MF	12V-64AH	1	1			

https://truckmanualshub.com/

INSTRUMENT PANEL

FIG. 8-3A-1 **G. 750**

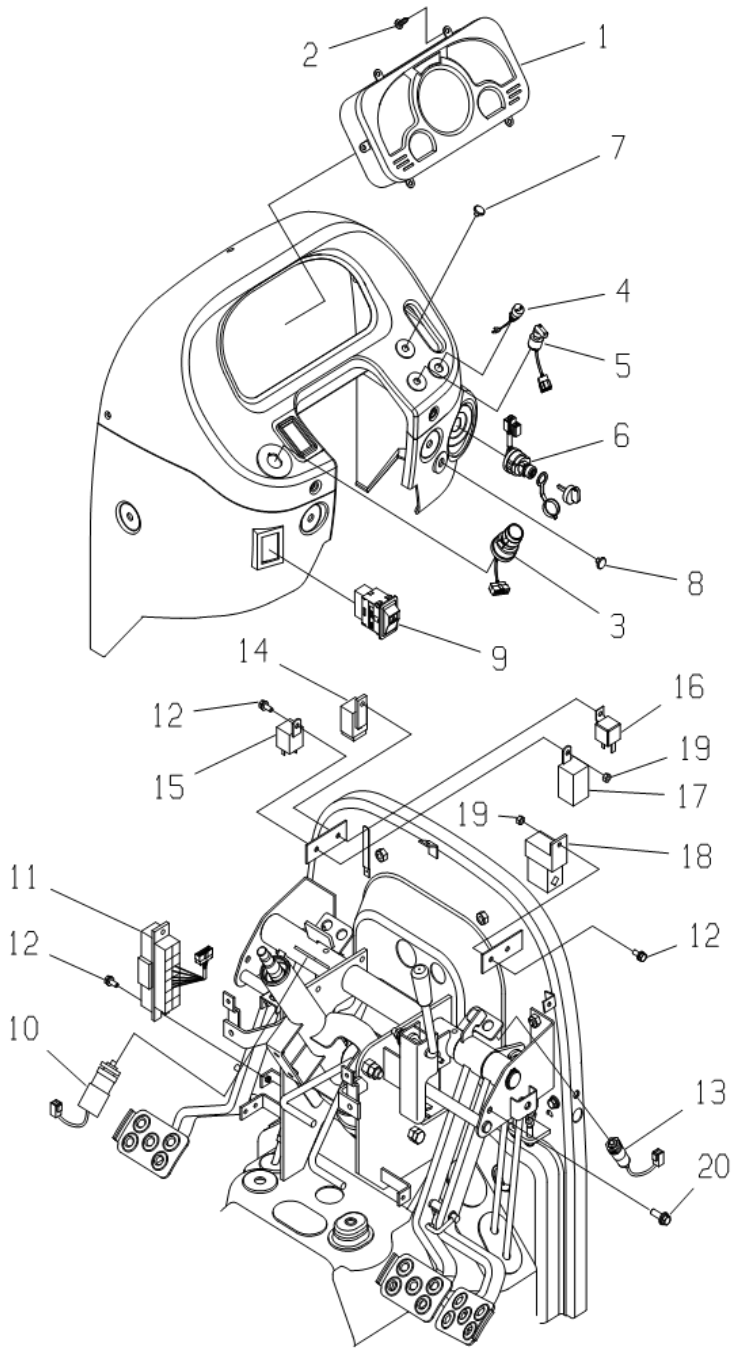

https://truckmanualshub.com/

INSTRUMENT PANEL

A-NOT AVAILABLE / B-i28,i36

A-NOT AVAILABLE / B-i28,i36

FIG. 8-3A-1 (MEC)

NO.	PART NO.	PART NAME & DESCRIPTION		QTY A	QTY B	QTY C	APP.NO	REM.
1	A1750325	METER PANEL ASSY		1	*			
	A1750279	METER PANEL ASSY		*	1			
2	S237401611	SCREW, TP.CRS.TRUSS		6	6			
3	A1750281	SWITCH, COMBI		1	1			
4	A1750282	SWITCH, HORN		1	1			
5	A1750152	SWITCH, PTO SELLECTOR		1	1			
6	A1750150	KEY SWITCH ASSY		1	1			
7	A0710062	CAP		1	1			
8	A1750230	CAP, RUBBER		1	1			
9	A1750161	SWITCH, EMERGENCY		1	1			
10	A1750122	SWITCH, START/PTO		1	1			
11	A1750225	FUSE BOX ASSY		1	1			
12	S155061633	BOLT, HEX	M6x1.0x16L	5	5			
13	A0740010	SWITC, BRAKE		1	1			
14	Q1800018	RELAY, START		1	1			
15	Q1800024	RELAY		1	*			
16	Q1800023	RELAY, GLOW		1	1			
17	Q1800017	TIMER, GLOW		1	1			
18	A30G0005	RELAY		1	1			
	A1750326	FLASHER		1	1			EC
19	S305060013	NUT, HEX	M6x1.0P	3	3			
20	S155082533	BOLT, HEX	M8x1.25x25L	2	2			

https://truckmanualshub.com/

ELECTRIC SWITCH

FIG. 8-3A-2 **G. 750**

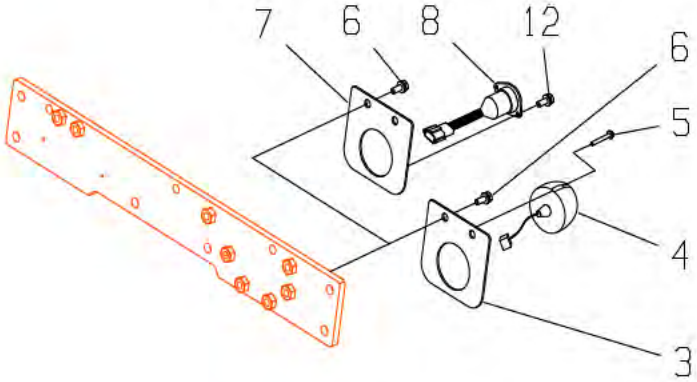

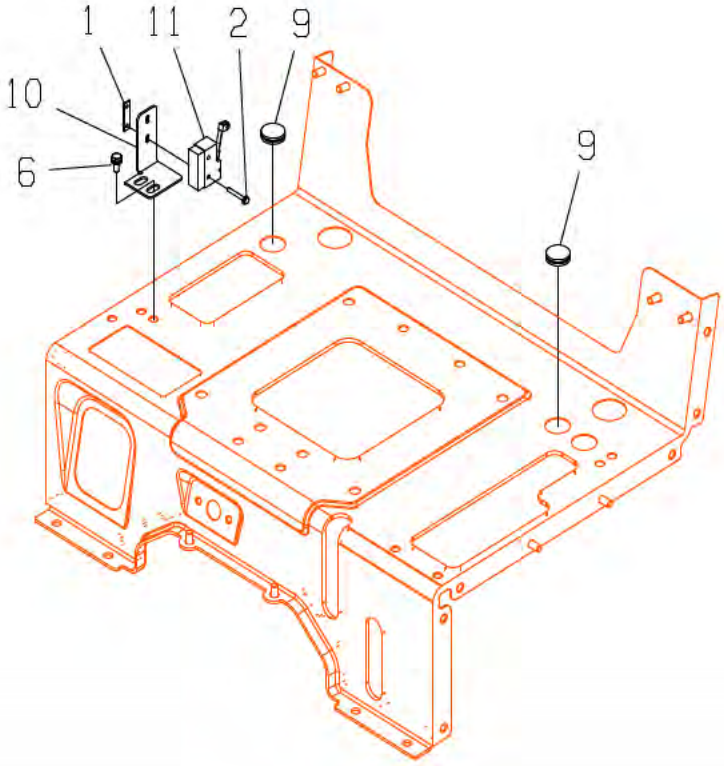

https://truckmanualshub.com/

ELECTRIC SWITCH

A-NOT AVAILABLE / B-i28,i36

A-NOT AVAILABLE / B-i28,i36

FIG. 8-3A-2 (MEC)

NO.	PART NO.	PART NAME & DESCRIPTION		QTY A	QTY B	QTY C	APP.NO	REM.
1	A1750104	PLATE		1	1			
2	S227403011	SCREW, W/SPR.	M4x0.7x30L	2	2			
3	A1750288	BRACKET, 7-POLE		1	1			
4	A1730144	7-POLE CONNECTOR ASS'Y		1	1			
5	S226503511	SCREW	M5x0.8x35L	3	3			
6	S155082533	BOLT, HEX	M8x1.25x25L	4	4			
7	A1750289	BRACKET, 7-POLE		1	1			ASAE
8	A1750171	7-POLE CONNECTOR ASS'Y		1	1			ASAE
9	A1970243	CAP, RUBBER		2	2			
10	A1750297	BRACKET, PTO SWITCH		1	1			
11	A1750229	SWITCH, PTO LEVER		1	1			
12	S155081633	BOLT, HEX	M8x1.25x16L	2	2			ASAE

https://truckmanualshub.com/

INSTRUMENT PANEL

FIG. 8-3B-1 **G. 750**

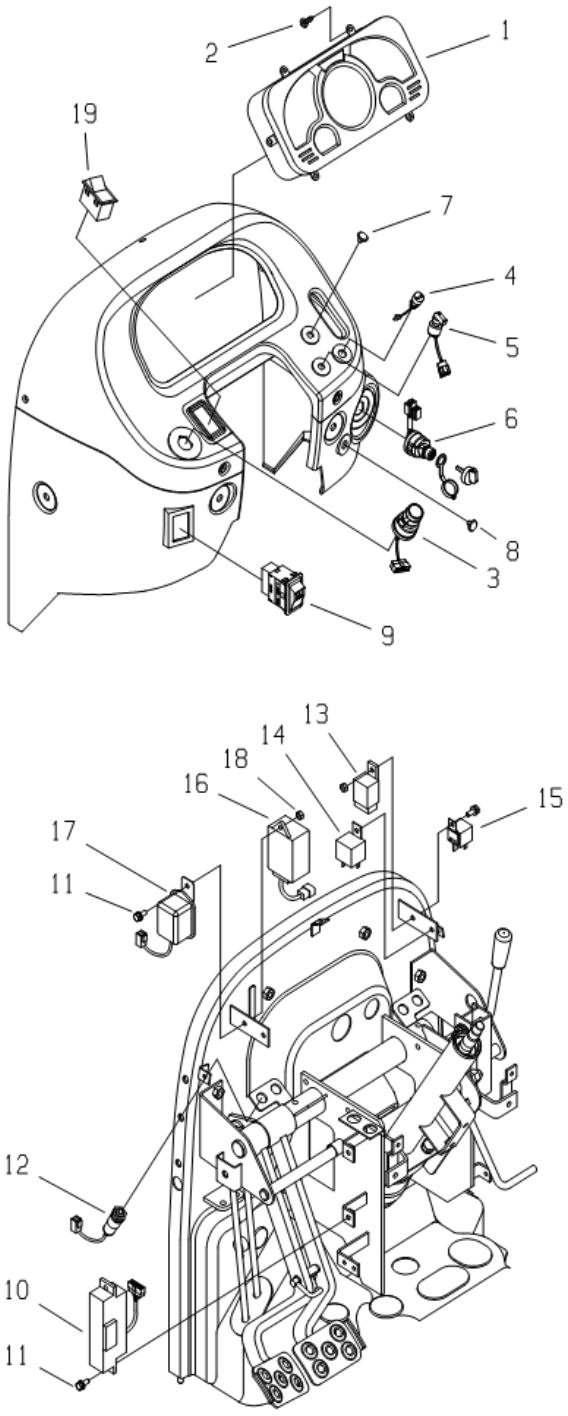

https://truckmanualshub.com/

INSTRUMENT PANEL

A-NOT AVAILABLE / B-i28,i36

A-NOT AVAILABLE / B-i28,i36

FIG. 8-3B-1 (HST)

NO.	PART NO.	PART NAME & DESCRIPTION		QTY A	QTY B	QTY C	APP.NO	REM.
1	A1750325	METER PANEL ASSY		1	*			
	A1750279	METER PANEL ASSY		*	1			
2	S237401611	SCREW, TP.CRS.TRUSS		6	6			
3	A1750281	SWITCH, COMBI		1	1			
4	A1750282	SWITCH, HORN		1	1			
5	A1750152	SWITCH, PTO SELLECTOR		1	1			
6	A1750150	KEY SWITCH ASSY		1	1			
7	A0710062	CAP		1	1			
8	A1750230	CAP, RUBBER		1	1			
9	A1750161	SWITCH, EMERGENCY		1	1			
10	A1750225	FUSE BOX ASSY		1	1			
11	S155061633	BOLT, HEX	M6x1.0x16L	5	5			
12	A0740010	SWITC, BRAKE		2	2			
13	Q1800018	RELAY, START		1	1			
14	Q1800024	RELAY		1	*			
15	Q1800023	RELAY, GLOW		1	1			
16	A1750283	RELAY, HST		1	1			
17	A1750284	FLASHER		1	1			
	A1750251	FLASHER		1	1			EC
18	S305060013	NUT, HEX	M6x1.0P	3	3			
19	A1750285	SWITCH, CRUISE		1	1			

https://truckmanualshub.com/

ELECTRIC SWITCH

FIG. 8-3B-2 **G. 750**

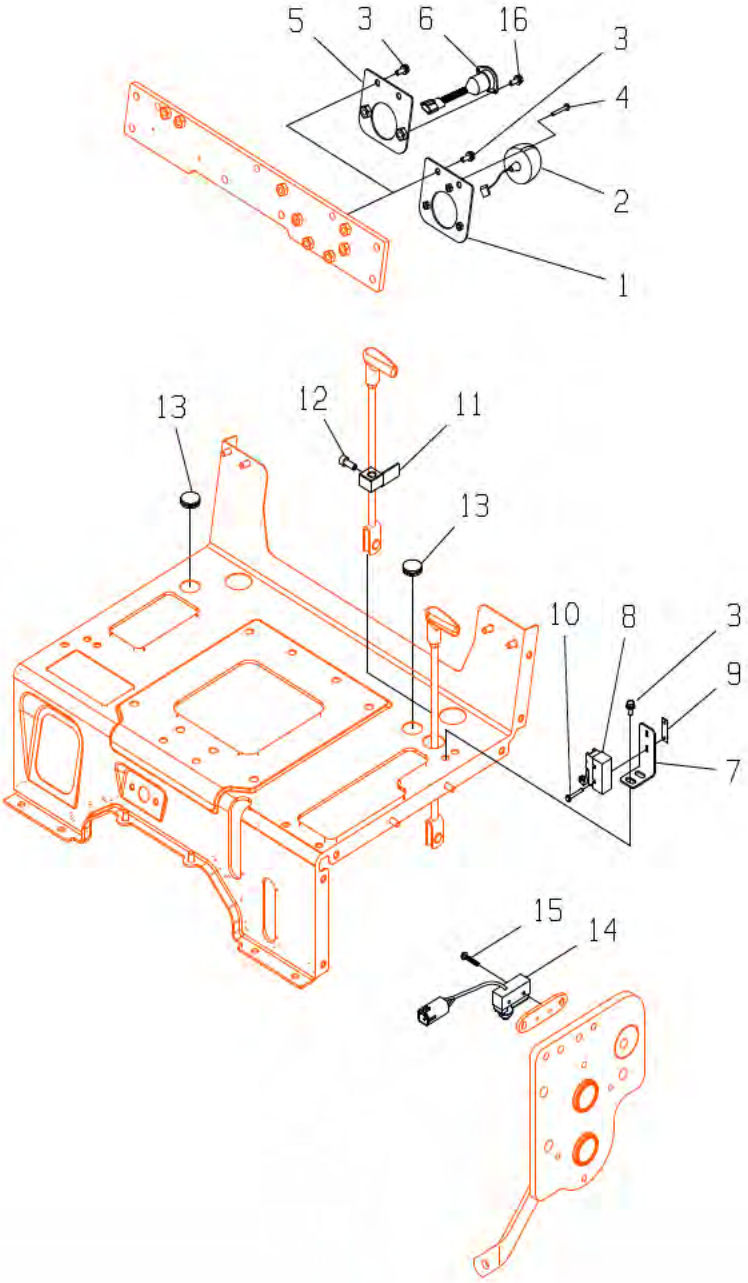

https://truckmanualshub.com/

ELECTRIC SWITCH

A-NOT AVAILABLE / B-i28,i36

A-NOT AVAILABLE / B-i28,i36

FIG. 8-3B-2 (HST)

NO.	PART NO.	PART NAME & DESCRIPTION		QTY A	QTY B	QTY C	APP.NO	REM.
1	A1750288	BRACKET, 7-POLE		1	1			
2	A1730225	7-POLE CONNECTOR ASS'Y		1	1			
3	S155082533	BOLT, HEX	M8x1.25x25L	2	2			
4	S226503511	SCREW	M5x0.8x35L	3	3			
5	A1750289	BRACKET, 7-POLE		1	1			ASAE
6	A1750171	7-POLE CONNECTOR ASS'Y		1	1			ASAE
7	A1750287	BRACKET, MID PTO SW.		1	1			M/PTO
8	A1750300	SWITCH, MICRO		1	1			M/PTO
9	A1750104	PLATE		1	1			M/PTO
10	S227403011	SCREW, W/SPR.	M4x0.7x30L	2	2			M/PTO
11	A1750286	BRACKET, CONTACT SW.		1	1			M/PTO
12	S202081211	SCREW, SET. SOC.	M8x1.25P	1	1			M/PTO
13	A1970243	CAP, RUBBER		1	1			
14	A1750227	SWITCH, NEUTRAL		1	1			
15	S227402511	SCREW, W/SPR.	M4x0.7x25L	2	2			
16	S155081633	BOLT, HEX	M8x1.25x16L	2	2			ASAE

https://truckmanualshub.com/

LAMP

FIG. 8-4A **G. 760**

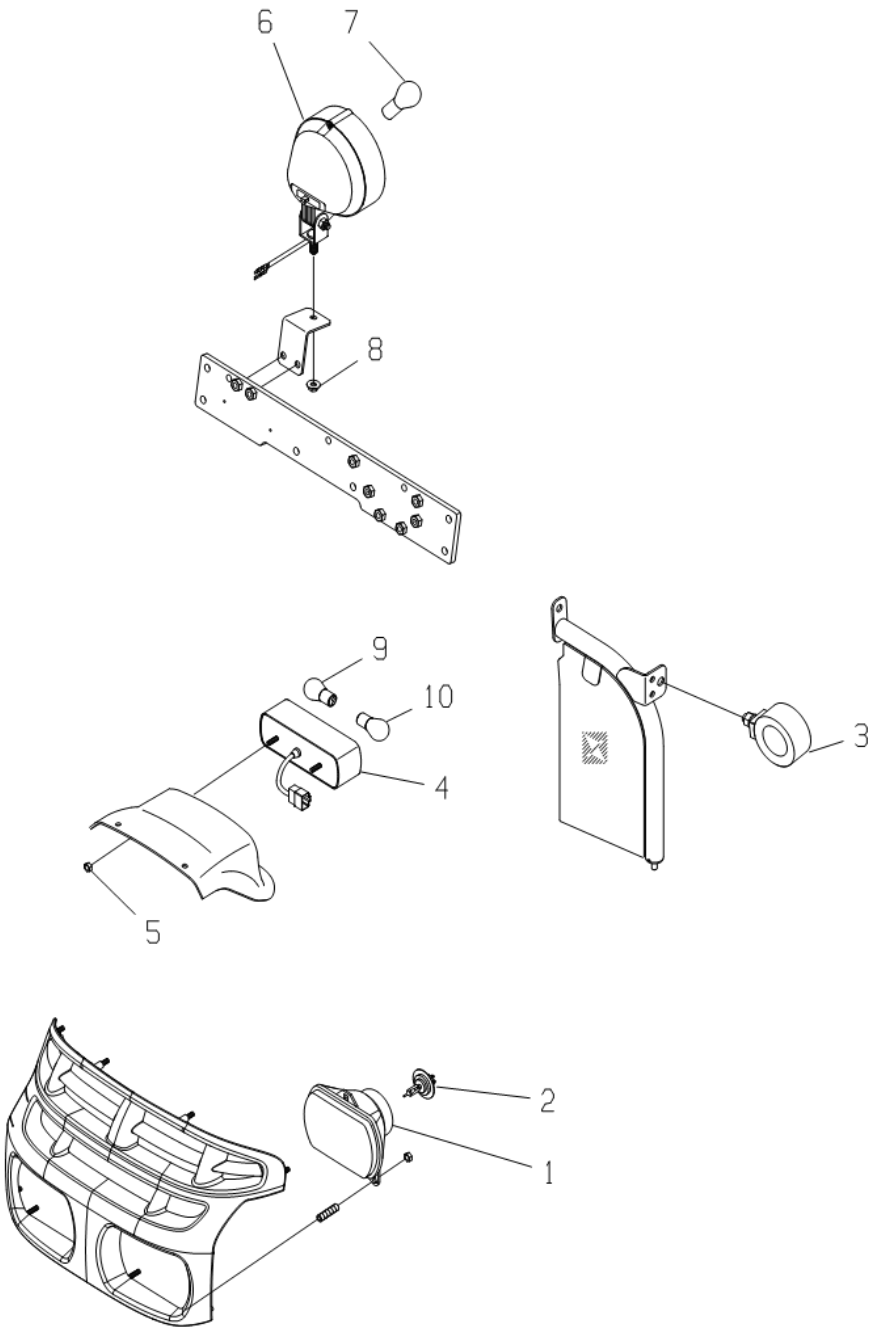

https://truckmanualshub.com/

LAMP

A-NOT AVAILABLE / B-i28,i36

A-NOT AVAILABLE / B-i28,i36

FIG. 8-4A

NO.	PART NO.	PART NAME & DESCRIPTION		QTY A	QTY B	QTY C	APP.NO	REM.
1	A1760044	HEAD LAMP		2	2			
2	A1760048	BULB	12V, 40/45W	2	2			
3	A1760068	LAMP, TURN		2	2			
4	A1760026	COMBI LAMP ASSY (RH)		1	1			
	A1760027	COMBI LAMP ASSY (LH)		1	1			
5	S305060013	NUT, HEX	M6x1.0P	4	4			
6	A1760028	LAMP, WORKING		1	1			
7	A1760043	BULB	12V/23W	1	1			
8	S313080013	NUT, HEX	M8x1.25P	1	1			
9	A1760042	BULB	12V, 8W	2	2			
10	A1760016	BULB	12V, 21/5W	2	2			

https://truckmanualshub.com/

HYDRAULIC HOUSING

FIG. 9-1B **G. 820**

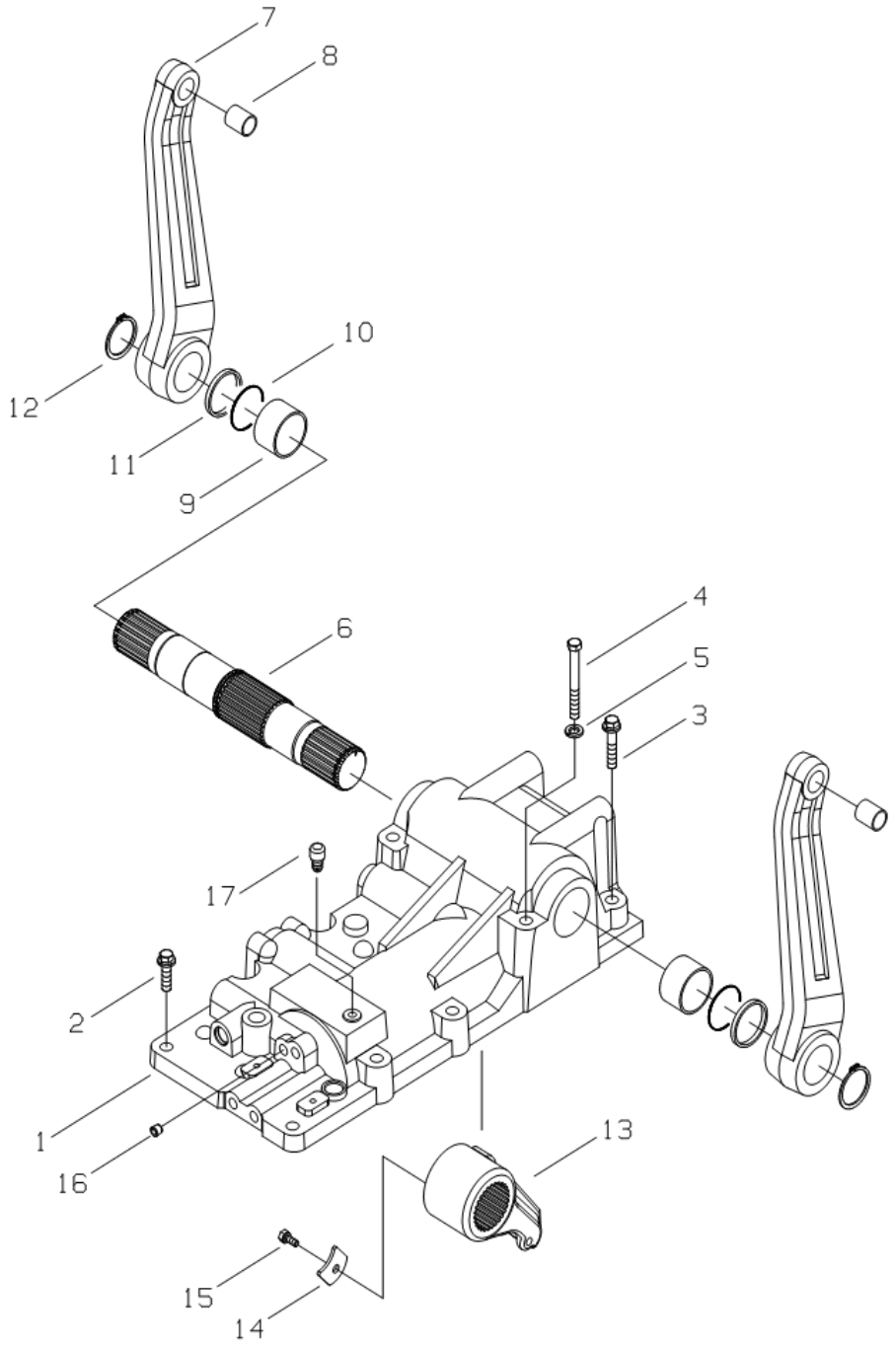

https://truckmanualshub.com/

HYDRAULIC HOUSING

A-NOT AVAILABLE / B-i28,i36

A-NOT AVAILABLE / B-i28,i36

FIG. 9-1B (W/DRAFT)

NO.	PART NO.	PART NAME & DESCRIPTION		QTY A	QTY B	QTY C	APP.NO	REM.
1	A1820055	HOUSING, HYD.		1	1			
2	S153124033	BOLT, HEX.	M12X1.75X40	4	4			
3	S153126033	BOLT, HEX.	M12X1.75X60	4	4			
4	S102121143	BOLT, HEX.	M12X1.75X110	2	2			
5	S361120013	WASHER, SPRING	Φ21.5xΦ12.2x3t	2	2			
6	A1821038	SHAFT, HYD. LIFT		1	1			
7	A1821040	ARM, LIFT		2	2			
8	3A1821007	BUSHING, DU		2	2			
9	3A1821005	BUSHING, DU		2	2			
10	S802045010	O-RING	D45	2	2			
11	A1821041	COLLAR		2	2			
12	S810042001	RING, SNAP(S)	D42	2	2			
13	A1821051	ARM, POWER		1	1			
14	A1826094	PLATE, LOCK		1	1			
15	S153081633	BOLT, HEX.	M8X1.25X16	1	1			
16	A0610168	PLUG, TAPER	PT1/4	1	1			
17	A1250049	PLUG, AIR VENT		1	1			

https://truckmanualshub.com/

LIFT CONTROL VALVE & LINK

FIG. 9-2B **G. 822**

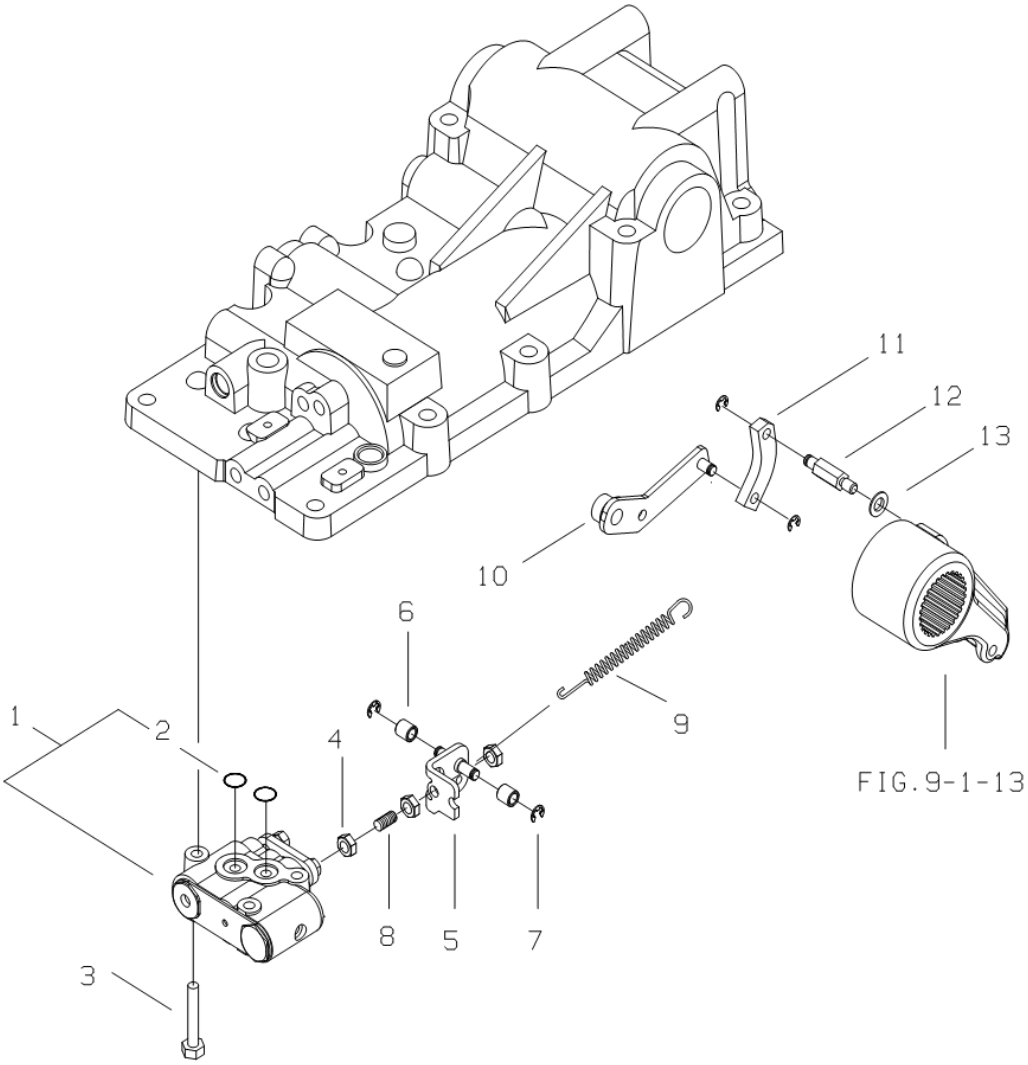

https://truckmanualshub.com/

LIFT CONTROL VALVE & LINK

A-NOT AVAILABLE / B-i28,i36

A-NOT AVAILABLE / B-i28,i36

FIG. 9-2B

NO.	PART NO.	PART NAME & DESCRIPTION		QTY			APP.NO	REM.
				A	B	C		
1	A1822151	VALVE, CONTROL		1	1			
2	S801016020	O-RING	D16	2	2			
3	S153085033	BOLT, HEX.	M8X1.25X50	3	3			
4	S313080043	NUT, HEX.	M8X1.25	3	3			
5~7	A1822133	CLEVIS ASSY		1	1			
5	A1822112	CLEVIS		1	1			
6	3A1822006	ROLLER		2	2			
7	S814006003	RING, SNAP(E)	D6	4	4			
8	S202084012	SCREW, SET SOC.	M8X1.25X40	1	1			
9	A1822086	SPRING		1	1			
10	A1824044	LINK, POSITION FEED BACK		1	1			
11	3A1822010	LINK, E		1	1			
12	A1824052	PIN		1	1			
13	S361080013	WASHER, SPRING	Φ15.4xΦ8.2x2t	1	1			

https://truckmanualshub.com/

TM CONTROL VALVE

FIG. 9-3 **G. 822**

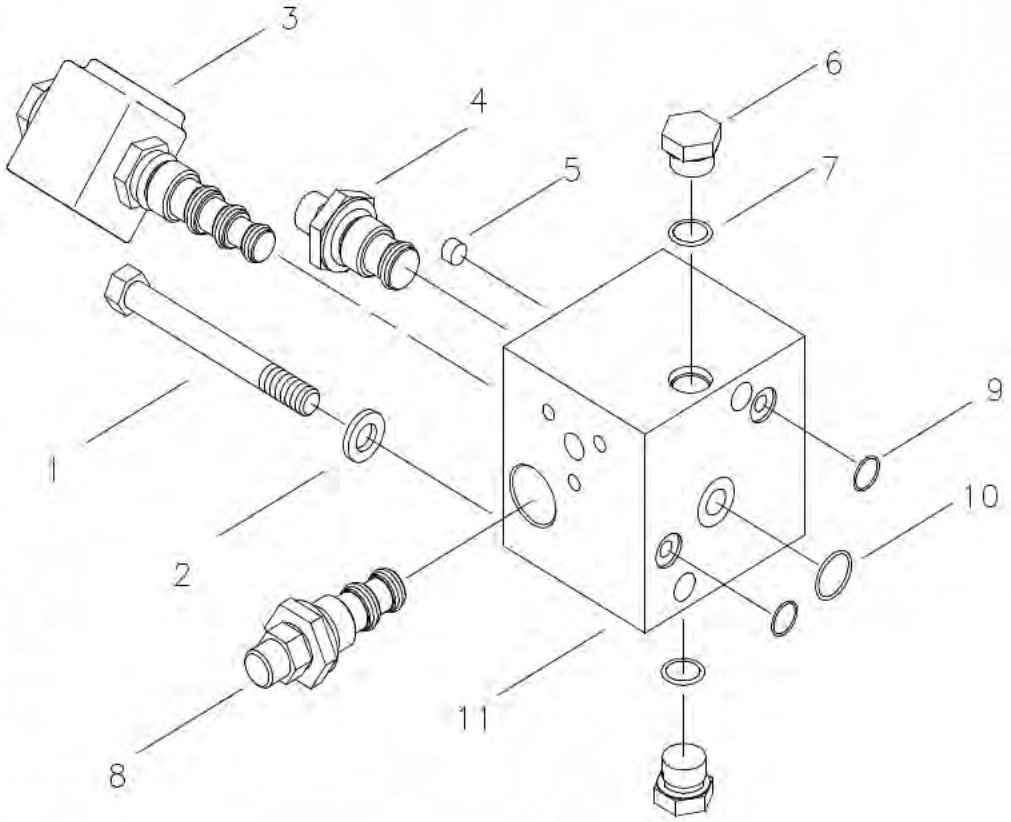

https://truckmanualshub.com/

TM CONTROL VALVE

A-NOT AVAILABLE / B-i28,i36

A-NOT AVAILABLE / B-i28,i36

FIG. 9-3 PT

NO.	PART NO.	PART NAME & DESCRIPTION		QTY A	QTY B	QTY C	APP.NO	REM.
1	S107109043	BOLT, HEX	M10×1.25×90	2	2			
2	S361100013	WASHER, SPRING	Φ18.4×Φ10.2×2.5t	2	2			
3~11	A1822089	IND . PTO VALVE ASSY		1	1			
3	A1822091	VALVE, SOLENOID		1	1			
4	A1822105	VALVE, SEQUENCE		1	1			
5	A1822095	ORIFICE	Φ1.3	1	1			
6	A1822094	PLUG	PF1/4	2	2			
7	S801011010	O-RING	D10.8x2.4	2	2			
8	A1822093	REDUCING VALVE		1	1			
9	S801010011	O-RING	D9.8x2.4	2	2			
10	S801018010	O-RING	D17.8x2.4	1	1			
11	A1822090	BODY, PTO VALVE		1	1			

https://truckmanualshub.com/

FRONT OUTLET & LOADER VALVE

FIG. 9-4A **G. 822**

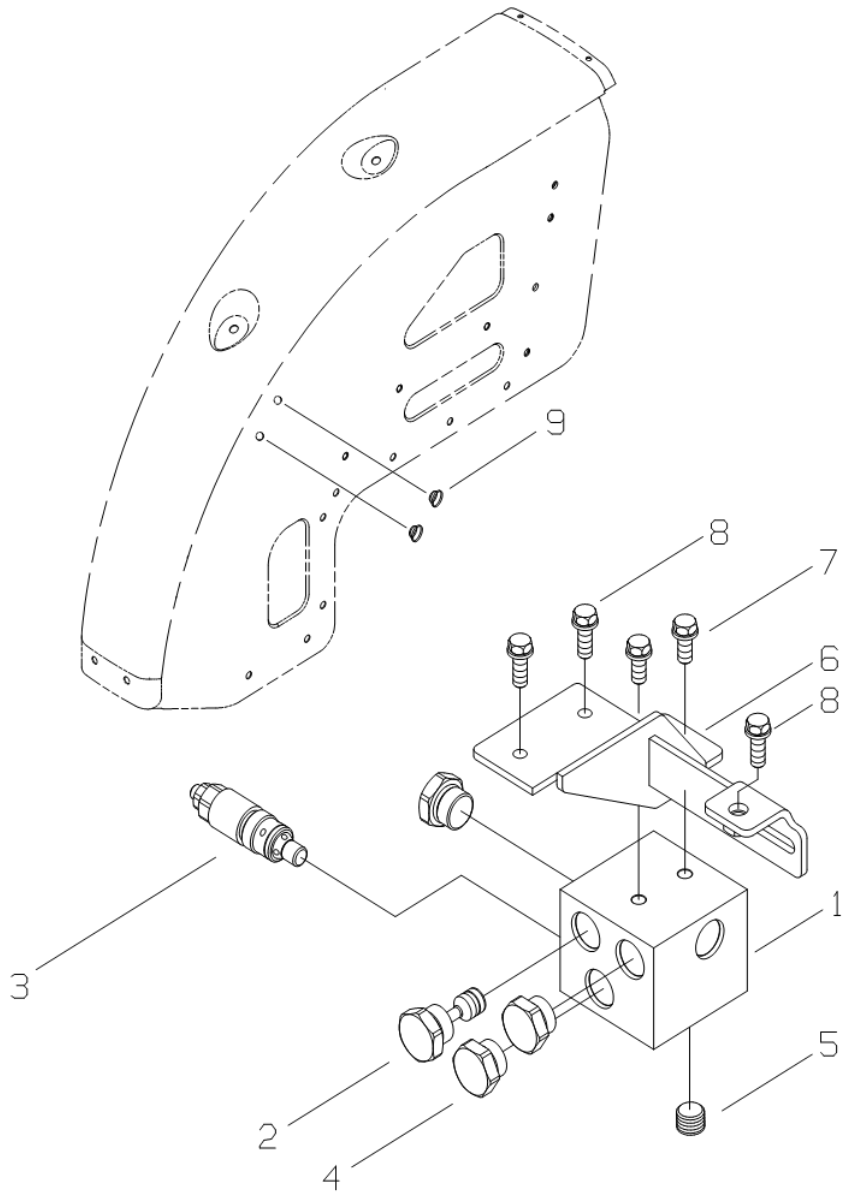

https://truckmanualshub.com/

FRONT OUTLET & LOADER VALVE

A-NOT AVAILABLE / B-i28,i36

A-NOT AVAILABLE / B-i28,i36

FIG. 9-4A (F/ OUTLET VALVE)

NO.	PART NO.	PART NAME & DESCRIPTION		QTY A	QTY B	QTY C	APP.NO	REM.
1~5	A1822127	FRONT OUTLET VALVE ASSY		1	1			
1	A1822128	BLOCK, F/OUTLET VALVE		1	1			
2	A1822131	PLUG, CARRY OVER		1	1			
3	A1822077	VALVE, RELIEF		1	1			
4	A5001244	PLUG		3	3			
5	A0610168	PLUG		1	1			
6	A1822186	BRACKET, F/OUTLET VALVE		1	1			
7	S153082033	BOLT, HEX.	M8X1.25X20	2	2			
8	S153082533	BOLT, HEX.	M8X1.25X25	3	3			
9	A0610083	PLUG		2	2			

https://truckmanualshub.com/

HYDRAULIC LINES

FIG. 9-5A **G. 823**

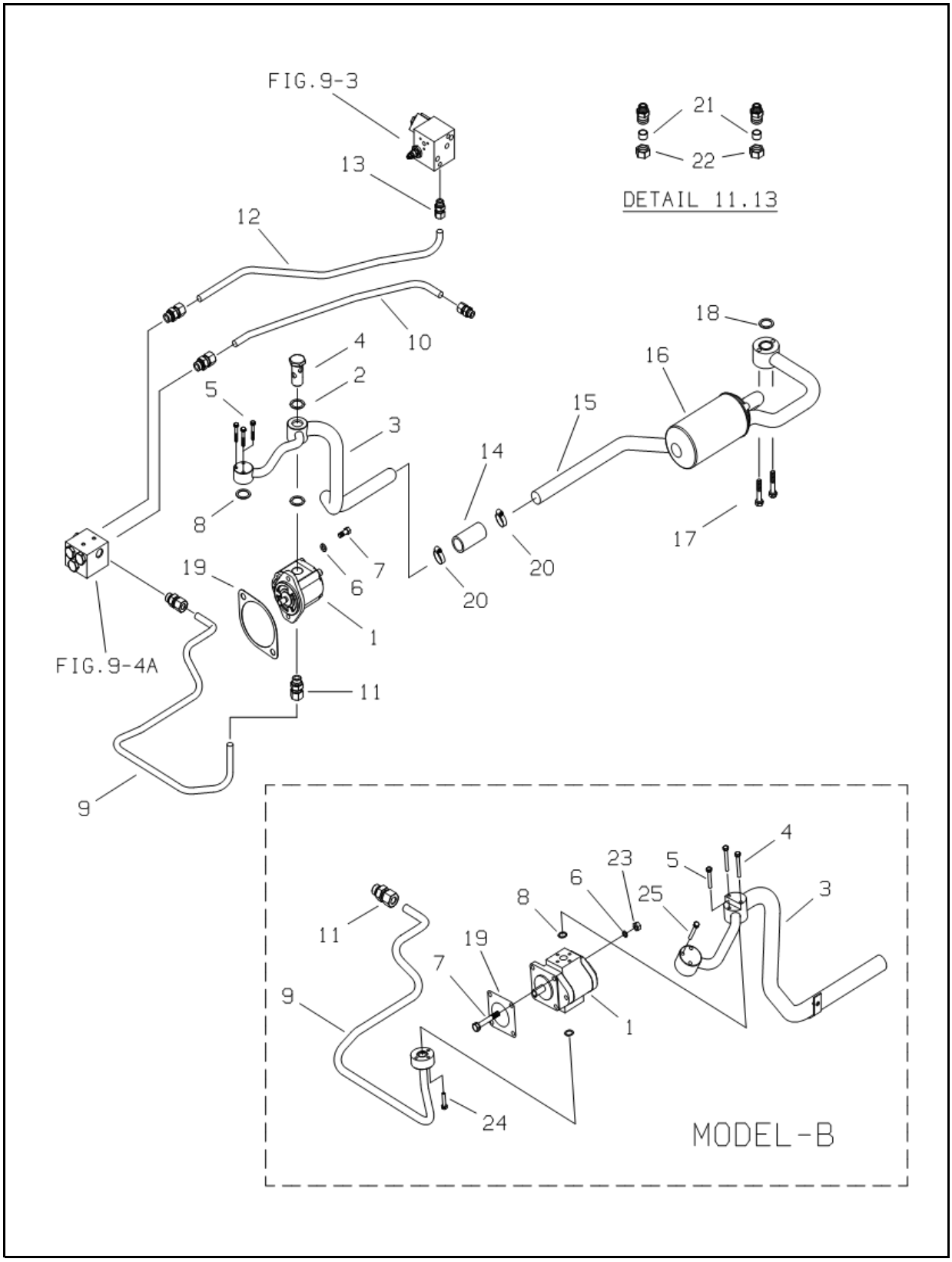

https://truckmanualshub.com/

HYDRAULIC LINES

A-NOT AVAILABLE / B-i28,i36

A-NOT AVAILABLE / B-i28,i36

FIG. 9-5A (F/OUTLET)

NO.	PART NO.	PART NAME & DESCRIPTION		QTY A	QTY B	QTY C	APP.NO	REM.
1	A1823433	PUMP, MAIN		1	*			
	A1823279	PUMP. HYDRAULIC		*	1			
2	A1823168	WASHER, COPPER		2	*			
3	A1823624	PIPE, FRONT SUCTION		1	*			
	A1823635	PIPE, FRONT SUCTION		*	1			
4	3A1823003	BOLT, UNION		1	*			
	S153065033	BOLT, HEX.	M6X1.0X50	*	2			
5	S153064033	BOLT, HEX.	M6X1.0X40	3	1			
6	S361100013	WASHER, SPRING	Φ18.4xΦ10.2x2.5t	2	*			
	S361080013	WASHER, SPR. 1-TY	Φ15.4xΦ8.2x2t	*	4			
7	S107102543	BOLT, HEX.	M10X1.5X25	2	*			
	A1970325	BOLT, HEX.	M8X1.25X150	*	2			
8	S801018010	O-RING	D18	1	3			
9,11	A1823625	F/PRESSURE PIPE ASSY		1	*			
	A1823442	F/PRESSURE PIPE ASSY		*	1			
9	A1823626	PIPE, FRONT PRESSURE		1	*			
	A1823443	PIPE, F/PRESSURE		*	1			
10,11	A1823577	V/V DRAIN PIPE ASSY		1	1			
10	A1823578	PIPE, V/V DRAIN		1	1			
11~13	A1823554	M/PRESSURE PIPE ASSY		1	1			
11	A1823144	JOINT	BOM15-04G	5	1			
12	A1823555	PIPE, MIDDLE PRESSURE		1	1			
13	A1823189	JOINT	BOM15-03G	1	1			
14	A1823059	HOSE, SUCTION PIPE		1	1			
15	A1823631	PIPE, REAR SUCTION		1	1			
16	A1823315	FILTER, SUCTION		1	1			
17	S154106033	BOLT, HEX.	M10X1.5X60	2	2			
18	S804030010	O-RING	D30	1	1			
19	A1823103	PACKING, PUMP		1	*			
	3A1823010	PACKING, HYD. PUMP		*	1			
20	A1970201G	CLAMP, HOSE	27-50	2	2			
21	A1823033	SLEEVE	Φ15	1	1			
22	A1823034	NUT, HEX		1	1			
23	S313080013	NUT, HEX. S. 2-TY.	M8X1.5	*	4			
24	S153063033	BOLT. HEX.	M6X1.0X30	*	3			
25	S153064533	BOLT, HEX.	M6X1.0X45	*	3			

https://truckmanualshub.com/

HYDRAULIC LINKAGE

FIG. 9-6B **G. 824**

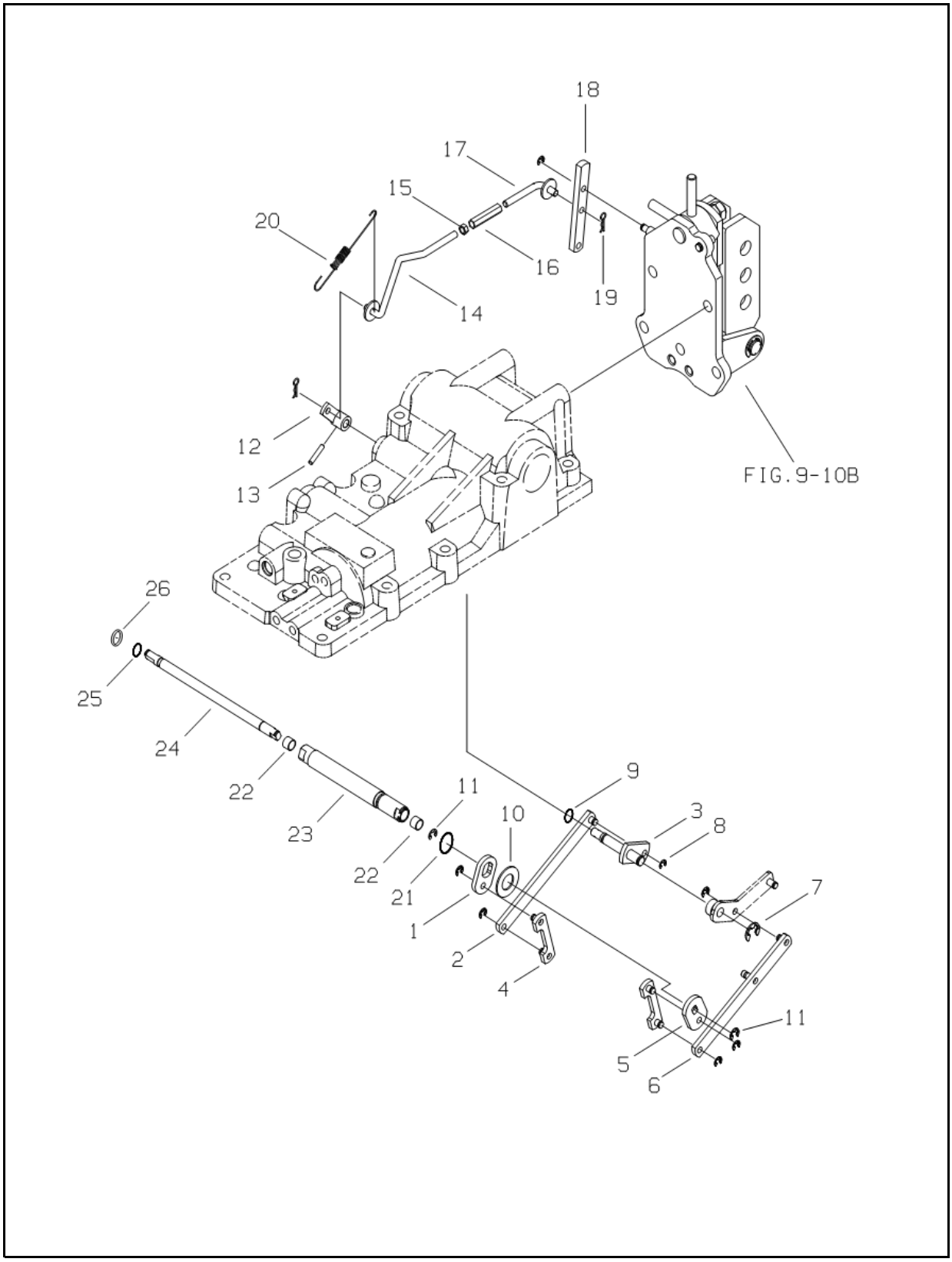

https://truckmanualshub.com/

HYDRAULIC LINKAGE

A-NOT AVAILABLE / B-i28,i36

A-NOT AVAILABLE / B-i28,i36

FIG. 9-6B (W/DRAFT)

NO.	PART NO.	PART NAME & DESCRIPTION		QTY A	QTY B	QTY C	APP.NO	REM.
1	A1824053	PLATE, DRAFT		1	1			
2	A1824042	LINK, DRAFT		1	1			
3	A1824047	SHAFT, DRAFT CONTROL		1	1			
4	A1824043	LINK(E)		2	2			
5	A1823054	PLATE, POSITION		1	1			
6	A1824041	LINK, POSITION		1	1			
7	S814009003	RING, SNAP(E)	D9	1	1			
8	S814006003	RING, SNAP(E)	D6	7	7			
9	S801009010	O-RING	D9	1	1			
10	A1824057	RING, SNAP(S)		1	1			
11	S810012001	RING, SNAP	D12	2	2			
12	A1824051	ARM		1	1			
13	S446042012	PIN, SPRING	Φ4X20	1	1			
14~19	A1824048	DRAFT LINK ASSY		1	1			
14	A1824049	ROD(A)		1	1			
15	S313080043	NUT, HEX.	M8X1.25	1	1			
16	3A1824014	JOINT		1	1			
17	A1824050	ROD(B)		1	1			
18	3A1824011	LINK, PAC		1	1			
19	S443080013	PIN, SNAPE A-TYPE	M8X1.25	2	2			
20	A1824094	SPRING		1	1			
21	S801016010	O-RING	D16	1	1			
22	A0676910	BUSHING, DU		2	2			
23	A1824082	SHAFT, DRAFT		1	1			
24	A1824045	SHAFT, POSITION		1	1			
25	S801010011	O-RING	D10	1	1			
26	A1824056	RING, BACKUP		1	1			

https://truckmanualshub.com/

HYDRAULIC CONTROL LEVER

FIG. 9-7B **G. 825**

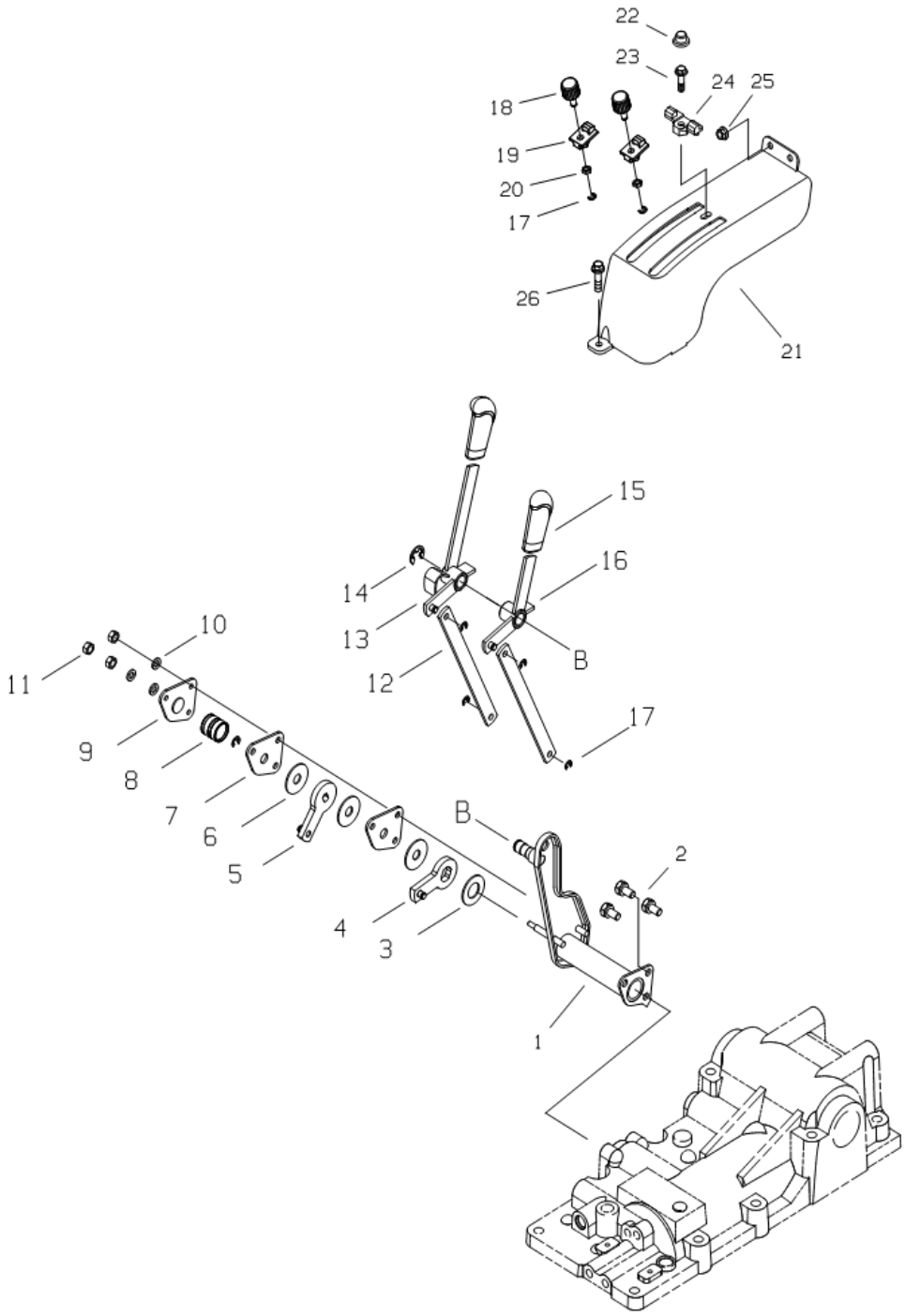

https://truckmanualshub.com/

HYDRAULIC CONTROL LEVER

A-NOT AVAILABLE / B-i28,i36

A-NOT AVAILABLE / B-i28,i36

FIG. 9-7B (W/ DRAFT)

NO.	PART NO.	PART NAME & DESCRIPTION		QTY A	QTY B	QTY C	APP.NO	REM.
1	A1825254	BRACKET, HYD. LEVER		1	1			
2	S154102033	BOLT, HEX.	M8X1.25X20	3	3			
3	A1825171	FRICTION PLATE		1	1			
4	A1825260	ARM, DRAFT LEVER		1	1			
5	A1825174	ARM, POSITION LEVER		1	1			
6	A1825172	FRICTION PLATE		3	3			
7	A1825170	PLATE, LOCKING		2	2			
8	A1825086	SPRING		1	1			
9	A1825167	COVER, SPRING		1	1			
10	S361060013	WAHSER, SPRING 1-TY		3	3			
11	S305060013	NUT, HEX.	M6X1.0	3	3			
12	A1825183	LINK, HYD. LEVER		2	2			
13	A1825200	LEVER, POSITION		1	1			
14	S814015003	RING, SNAP(E)		1	1			
15	A5002309	GRIP, LEVER		2	2			
16	A1825262	LEVER, DRAFT		1	1			
17	S814006003	RING, SNAP(E)	D6	6	6			
18	A1825056	GRIP, LEVER STOP		2	2			
19	A1825129	STOPPER, LEVER		2	2			
20	S305080043	NUT, HEX.	M8X1.25	3	3			
21	A1825194	GUIDE, HYD. LEVER		1	1			
22	A18830283	CAP, BOLT		1	1			
23	S155083033	BOLT, HEX.	M8X1.25X20	1	1			
24	A1825196	STOPPER, HYD.LEVER		1	1			
25	S345080013	NUT, FLANGE	M8X1.25	2	2			
26	S159082033	BOLT, HEX.	M8X1.25X20	1	1			

https://truckmanualshub.com/

HYDRAULIC CYLINDER

FIG. 9-8 **G. 826**

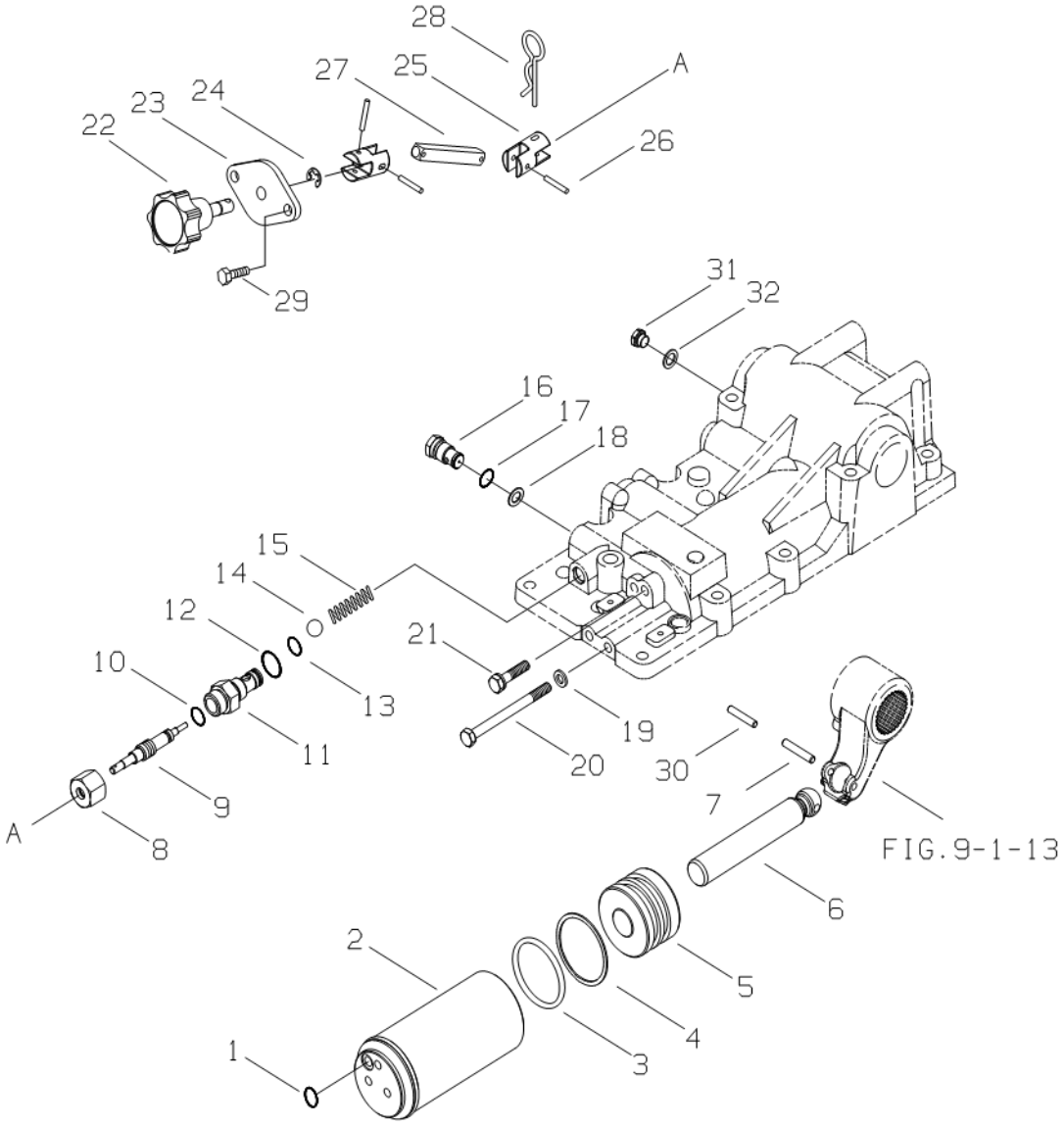

https://truckmanualshub.com/

HYDRAULIC CYLINDER

A-NOT AVAILABLE / B-i28,i36

A-NOT AVAILABLE / B-i28,i36

FIG. 9-8

NO.	PART NO.	PART NAME & DESCRIPTION		QTY A	QTY B	QTY C	APP.NO	REM.
1	S801014020	O-RING	D14	1	1			
2	A1826137	CYLINDER, HYDRAULIC		1	1			
3	A1826123	O-RING		2	2			
4	A1826124	RING, BACK-UP		2	2			
5	A1826122	PISTON		1	1			
6	A1826127	ROD, PISTON		1	1			
7	S446085510	PIN, SPRING	Φ8X55L	1	1			
8~13	A1826131	FLOW, REGULATOR ASSY		1	1			
8	A1826081	NUT		1	1			
9	A1826132	SCREW, ADJUST		1	1			
10	S801006020	O-RING	D6	1	1			
11	A1826079	BODY, REGULATOR		1	1			
12	S801014020	O-RING	D14	1	1			
13	S801010020	O-RING	D10	1	1			
14	A20063480	BALL, STEEL		1	1			
15	A1826058	SPRING		1	1			
16	A1826037	VALVE, SAFETY		1	1			
17	S801018010	O-RING	D18	1	1			
18	A1826036	SEAL		1	1			
19	S361100013	WASHER, SPRING	Φ18.4X10.2X2.5T	2	2			
20	S104101243	BOLT, HEX.	M10X1.5X12	2	2			
21	S154104533	BOLT, HEX.	M10X1.5X45	1	1			
22~27	A1826133	REGULATOR KNOB ASSY		1	1			
22	A1826136	KNOB		1	1			
23	A5002204	FLANGE, KNOB		1	1			
24	S814006001	RING, SNAP	D6	1	1			
25	A1826134	END, CONNECTOR		2	2			
26	S446032012	PIN, SPRING 2-TY.	Φ3X20	3	3			
27	A1826135	CONNECTOR		1	1			
28	S443160013	PIN, SNAP A-TYPE	Φ16X54	1	1			
29	S155062033	BOLT, HEX.	M6X1.0X20	2	2			
30	S446055510	PIN, SPRING	Φ5X55L	1	1			
31	A1823190	PLUG		1	1			
32	A1823158	SEAL, COPPER	M19X1.5T	1	1			

https://truckmanualshub.com/

REMOTE CONTROL VALVE & LINE

FIG. 9-9A **G. 827**

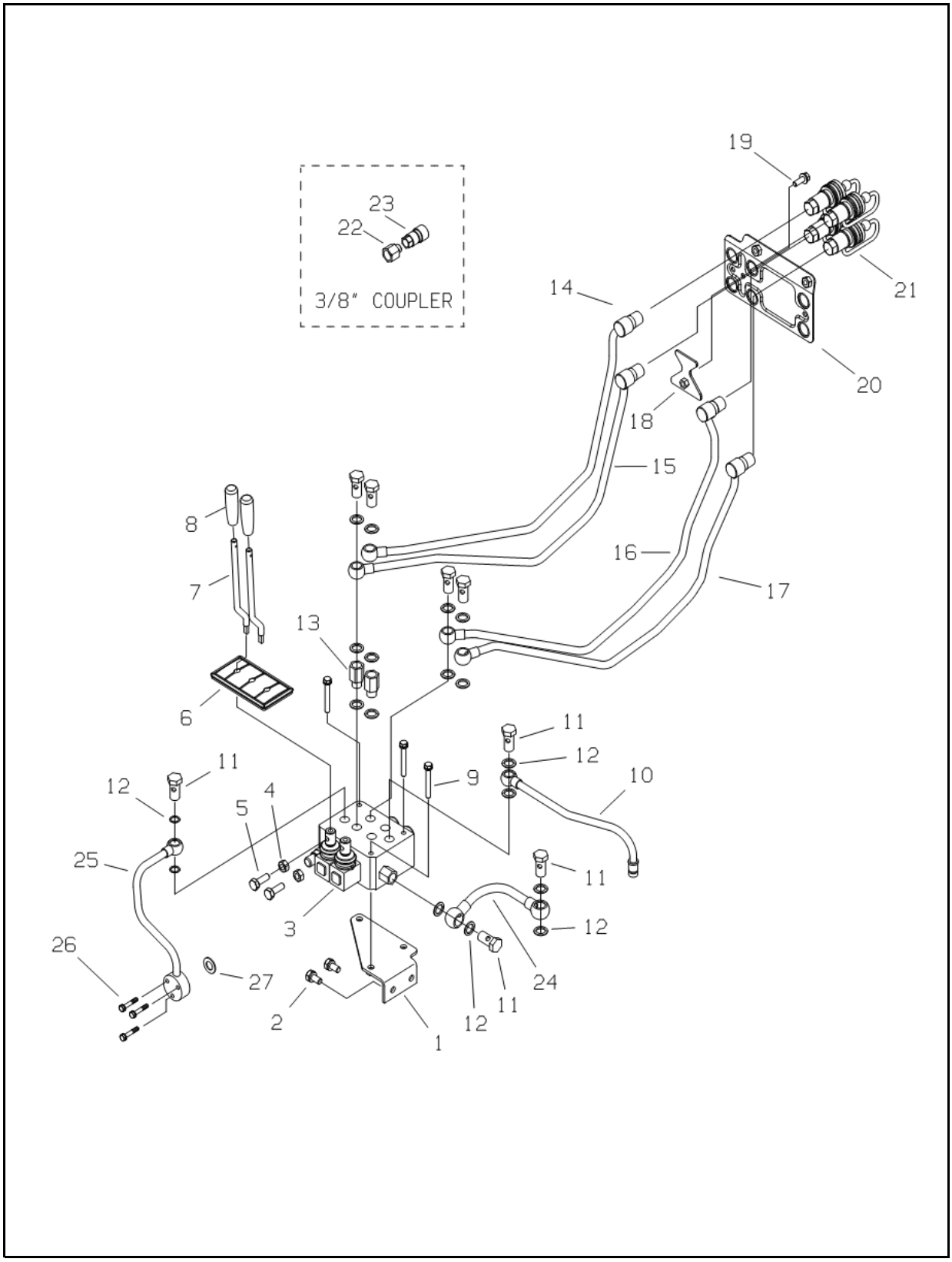

https://truckmanualshub.com/

REMOTE CONTROL VALVE & LINE

A-NOT AVAILABLE / B-i28,i36

A-NOT AVAILABLE / B-i28,i36

FIG. 9-9A (SD5/2)

NO.	PART NO.	PART NAME & DESCRIPTION		QTY A	QTY B	QTY C	APP.NO	REM.
1	A1827297	BRACKET, VALVE		1	1			
2	S154102033	BOLT, HEX.	M10X1.25X20	2	2			
3	A1827260	VALVE, REMOTE COTROL	SD5/2	1	1			
4	S305100013	NUT, HEX.	M10X1.5	2	2			
5	S101102543	BOLT, HEX.	M10X25	2	2			
6	A1827276	COVER, REMOTE LEVER		1	1			
7	A1827296	LEVER, REMOTE		2	2			
8	A1970242	GRIP, VALVE LEVER		2	2			
9	S153086033	BOLT, HEX.	M8X1.25X60	3	3			
10	A1827291	PIPE, REMOTE V/V DRAIN		1	1			
11	A1630201	BOLT, UNION		8	8			
12	A1823245	SEAL, BONDED		18	18			
13	A1827152	CONNECTOR, UNION		2	2			
14	A1827338	PIPE, 1ST(U)		1	1			
15	A1827337	PIPE, 1ST(D)		1	1			
16	A1827340	PIPE, 2ND(U)		1	1			
17	A1827339	PIPE, 2ND(D)		1	1			
18	A1827343	BRACKET, REMOTE PIPE		1	1			
19	S159082533	BOLT, HEX.	M8X1.25X25	1	1			
20	A1827244	BRACKET, R/CTRL. PIPE		1	1			
21	A1827177	QUICK COUPLER 1/2		4	4			
22~23	A1827285	QUICK COUPLER SUB ASSY		4	4			
22	A1827286	ADAPTER		1	1			
23	A1827168	QUICK COUPLER		1	1			
24	A1823560	PIPE, R/C PRESSURE OUT		1	1			
25	A1823559	PIPE, R/C V/V IN		1	1			
26	S153063533	BOLT, HEX.	M6X1.0X35	3	3			
27	S801016010	O-RING		1	1			

https://truckmanualshub.com/

UPPER LINK BRACKET

FIG. 9-10B **G. 828**

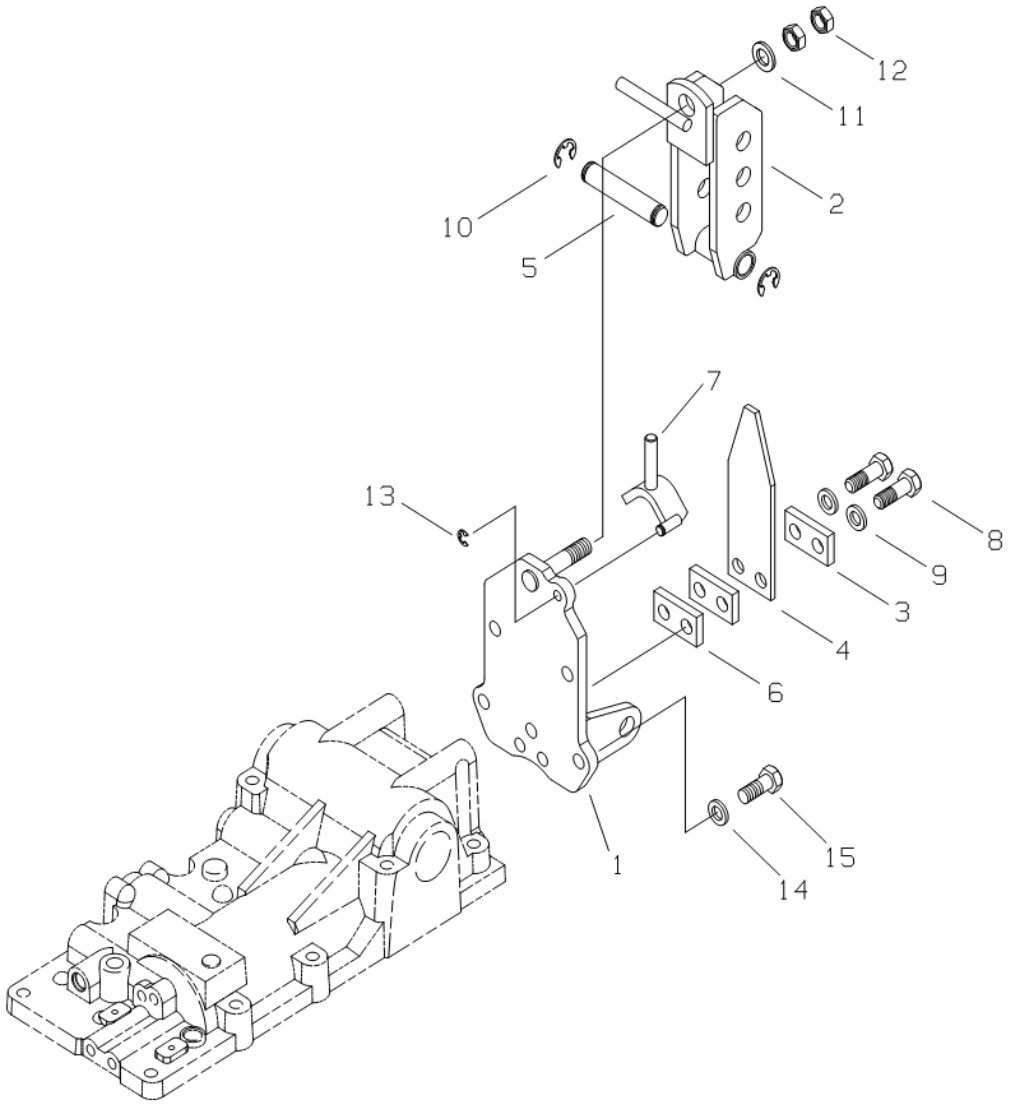

https://truckmanualshub.com/

UPPER LINK BRACKET

A-NOT AVAILABLE / B-i28,i36

A-NOT AVAILABLE / B-i28,i36

FIG. 9-10B

NO.	PART NO.	PART NAME & DESCRIPTION		QTY A	QTY B	QTY C	APP.NO	REM.
1~14	A1828062	UPPER, LINK BRACKET ASSY		1	1			
1	A1828063	BRACKET		1	1			
2	A1828048	BRACKET, UPPER LINK		1	1			
3	A1828056	PLATE		2	2			
4	A1828050	SPRING, LEAF		1	1			
5	A1828051	PIN		1	1			
6	A1828052	PLATE		1	1			
7	A1828053	STOPPER		1	1			
8	S107144043	BOLT, HEX.	M14X2.0X40	2	2			
9	S362140013	WASHER, SPRING	Φ24.7X14.2X4.2T	2	2			
10	S814015003	RING, SNAP	D15	2	2			
11	S364160053	WASHER, PLN. F-RD		1	1			
12	S314160013	NUT, HEX.	M16X1.5	2	2			
13	S814008010	RING, SNAP	D8	1	1			
14	S361140013	WASHER, SPRING	Φ24.5X14.2X3.5T	4	4			
15	S101143543	BOLT, HEX.	M14X2.0X35	4	4			

https://truckmanualshub.com/

DRAWBAR HITCH

FIG. 9-11B **G. 891**

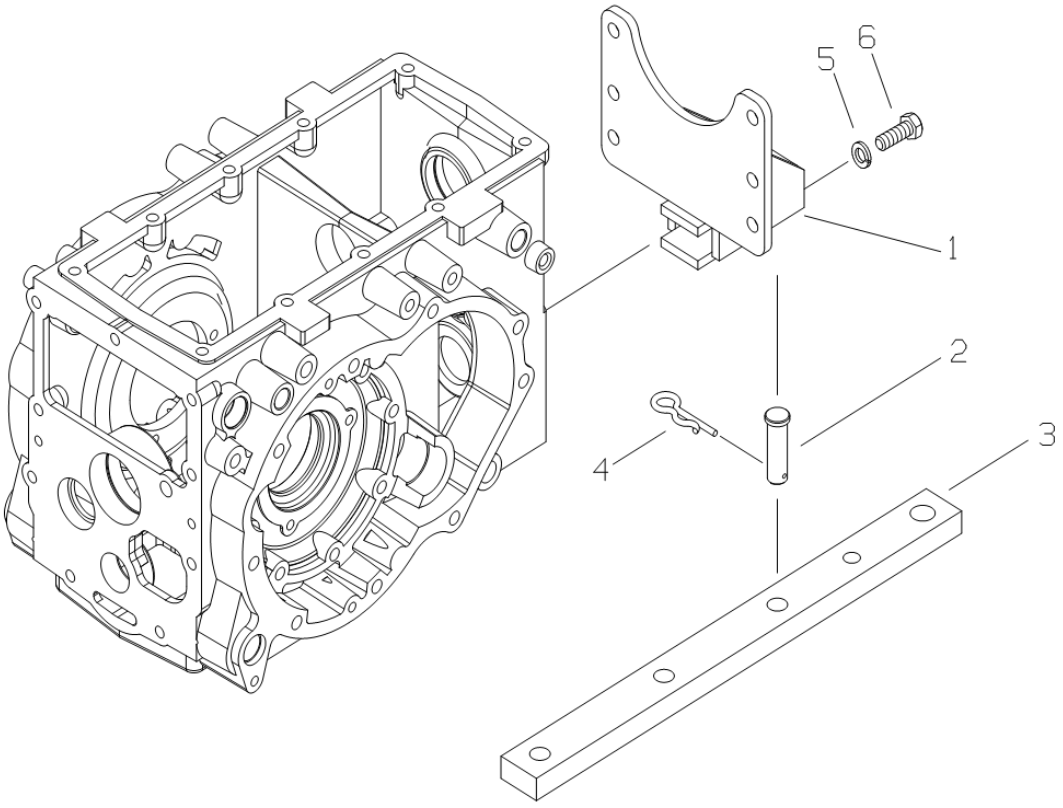

https://truckmanualshub.com/

DRAWBAR HITCH

A-NOT AVAILABLE / B-i28,i36

A-NOT AVAILABLE / B-i28,i36

FIG. 9-11B (TELESCOPIC DRAWBAR)

NO.	PART NO.	PART NAME & DESCRIPTION		QTY A	QTY B	QTY C	APP.NO	REM.
1	A1891049	SUPPORT, DRAWBAR		1	1			
2	A1891030	PIN	Φ25	1	1			
3	A1891050	DRAWBAR		1	1			
4	3A1970091	PIN, SNAP		1	1			
5	S361140013	WASHER, SPRING	Φ24.5XΦ14.2X3.5t	6	6			
6	S101144043	BOLT, HEX	M14X2.0X40	6	6			

https://truckmanualshub.com/

UPPER & LOWER LINK

FIG. 9-12A **G. 896**

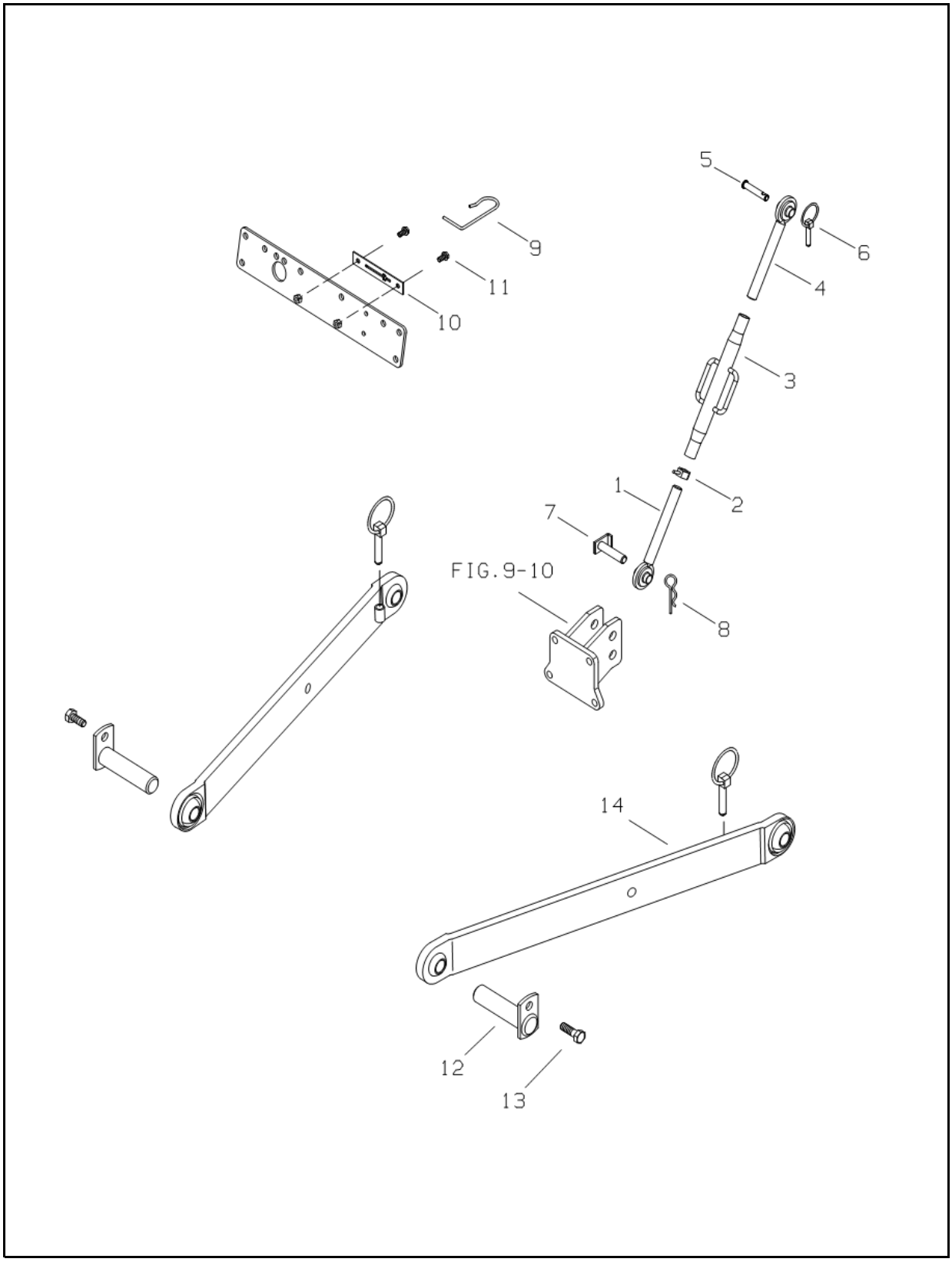

https://truckmanualshub.com/

UPPER & LOWER LINK

A-NOT AVAILABLE / B-i28,i36

A-NOT AVAILABLE / B-i28,i36

FIG. 9-12A (GENERAL)

NO.	PART NO.	PART NAME & DESCRIPTION		QTY A	QTY B	QTY C	APP.NO	REM.
1~6	A1896599	UPPER LINK ASSY	470-750	1	1			
1	A1896601	END, UPPER LINK(F)	M24X3	1	1			
2	3A1970092	NUT, LOCK	M24X3	1	1			
3	A1896600	TURN BUCKLE	M24X3	1	1			
4	A1896602	END, UPPER LINK(R)	M24X3(CAT1)	1	1			
5	3A1896013	PIN UPPER LINK(R)		1	1			
6	3A1896081	PIN, LINK		3	3			
7	A1896189	PIN, UPPER LINK(F)		1	1			
8	3A1970091	PIN, SNAP		1	1			
9	A1896540	HOOK, UPPER LINK		1	1			
10	A1896519	BRACKET, HOOK		1	1			
11	S159082533	BOLT, HEX		2	2			
12	A1896477	PIN, LOWER LINK HITCH		2	2			
13	S154102533	BOLT, HEX. W/WASHER	M10X1.25X25	2	2			
14	A1896522	LOWER, LINK		2	2			

https://truckmanualshub.com/

LIFT ROD

FIG. 9-13 **G. 896**

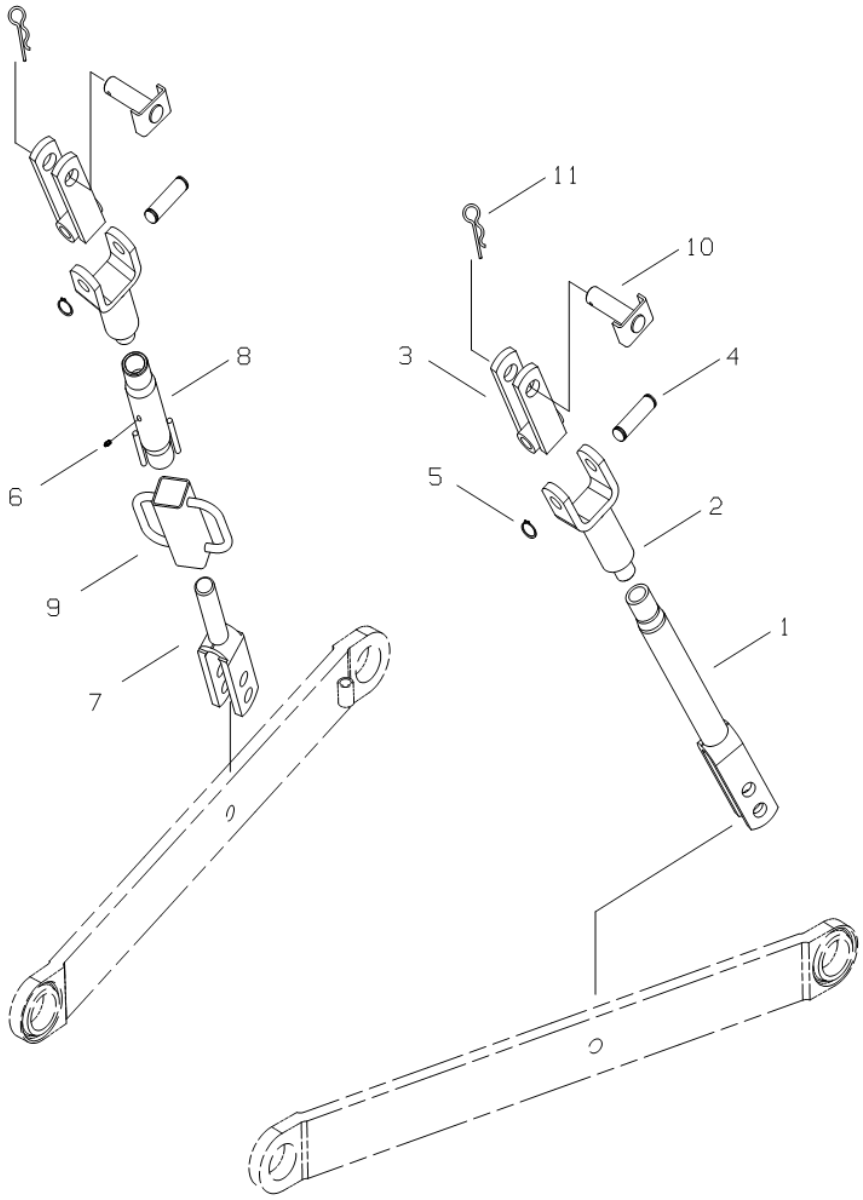

https://truckmanualshub.com/

LIFT ROD

A-NOT AVAILABLE / B-i28,i36

A-NOT AVAILABLE / B-i28,i36

FIG. 9-13

NO.	PART NO.	PART NAME & DESCRIPTION		QTY A	QTY B	QTY C	APP.NO	REM.
1~5	A1896528	LIFT ROD ASSY(LH)		1	1			
1	A1896529	ROD, LOWER LIFT(LH)		1	1			
2	A1896524	ROD, UPPER LIFT		1	1			
3	A1896087	JOINT, LIFT ROD		1	1			
4	A1896593	PIN, LIFT ROD		1	1			
5	S810016003	RING, SNAP		1	1			
2~9	A1896523	LIFT ROD ASSY(RH)		1	1			
6	A0730009	NIPPLE		1	1			
7	A1896525	ROD, LOWER LIFT(RH)		1	1			
8	A1896526	SLEEVE, LIFT ROD		1	1			
9	A1896527	HANDLE, LIFT ROD		1	1			
10	A1896530	PIN, LIFT ROD(UPPER)		2	2			
11	3A1970091	PIN, SNAP		2	2			

https://truckmanualshub.com/

CHECK LINK

FIG. 9-14 **G. 896**

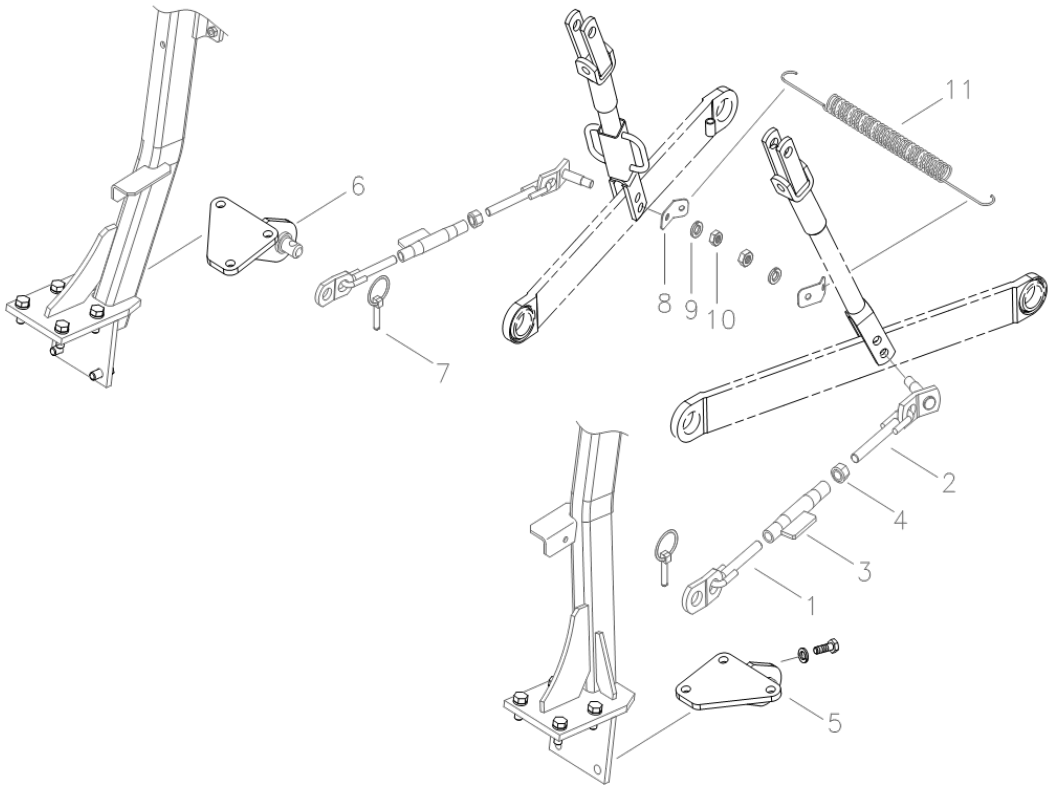

https://truckmanualshub.com/

CHECK LINK

A-NOT AVAILABLE / B-i28,i36

A-NOT AVAILABLE / B-i28,i36

FIG. 9-14

NO.	PART NO.	PART NAME & DESCRIPTION		QTY A	QTY B	QTY C	APP.NO	REM.
1~4	A1896471	CHECK CHAIN ASSY		2	2			
1	A1896589	CHAIN(F)		1	1			
2	A1896536	CHAIN(R)		1	1			
3	A1896597	TURN BUCKLE		1	1			
4	S301160013	NUT		1	1			
5	A1896587	BRACKET, CHECK CHAIN(LH)		1	1			
6	A1896588	BRACKET, CHECK CHAIN(RH)		1	1			
7	3A1896081	PIN, LINK		2	2			
8	A1896333	BRACKET, SPRING		2	2			
9	S361140013	WASHER, SPRING	Φ24.5XΦ14.2X3.5t	2	2			
10	S314140013	NUT, HEX	M14X1.5	2	2			
11	A1896539	SPRING, LOWER LINK		1	1			

https://truckmanualshub.com/

※ Contents에서 **목차불러오기** 실행후 각 그룹 위에 삽입함.

■ 엔진 주변 부품 ENGINE
FIG 2~

■ 동력 전달 TM
FIG 3~

■ 차동 장치 DIFF. LOCK
FIG 4~

■ 앞차축, 뒷차축 FRONT, REAR AXLE
FIG 5~

■ 조향 장치 STEERING SYSTEM
FIG 6~

■ 브레이크 장치 BRAKE
FIG 7~

■ 전기 장치 ELECTRICAL SYSTEM
FIG 8~

■ 유압 장치 HYDRAULIC SYSTEM
FIG 9~

■ 외장 SHEET METAL, INTERIOR
FIG 10~

■ 공구, 데칼 TOOLS & DECAL
FIG 11
FIG 12

■ 선택 사양 OPTION
FIG 13

https://truckmanualshub.com/

4/1/2006

https://truckmanualshub.com/

https://truckmanualshub.com/

https://truckmanualshub.com/

https://truckmanualshub.com/

4/1/2006

https://truckmanualshub.com/

본 체 부 품

■ 엔진 주변 부품

연료 탱크 ---------- FIG. 2-1 G. 040
조속장치 ---------- FIG. 2-2 G. 100
소음기 ---------- FIG. 2-3 G. 150
라디에이터 ---------- FIG. 2-4 G. 170
에어크리너 ---------- FIG. 2-5 G. 190
엔진 프레임 ---------- FIG. 2-6 G. 100

■ 동력 전달

클러치 ---------- FIG. 3-1 G. 250 (MEC)
댐퍼 ---------- FIG. 3-1 G. 250 (HST)
클러치 하우징 ---------- FIG. 3-2 G. 250 (MEC)
유압미션 ---------- FIG. 3-2 G. 270 (HST)
클러치페달 ---------- FIG. 3-3 G. 260 (MEC)
트랜스미션 케이스 ---------- FIG. 3-4 G. 280 (MEC)
트랜스미션 케이스 ---------- FIG. 3-4 G. 280 (HST)
주 축 ---------- FIG. 3-5 G. 281 (MEC)
부변속 축 ---------- FIG. 3-6 G. 285 (MEC)
부변속 축 ---------- FIG. 3-6 G. 285 (HST)
피티오 축 ---------- FIG. 3-7 G. 283,287 (MEC)
피티오 축 ---------- FIG. 3-7 G. 283,287 (HST)
피티오 구동축 ---------- FIG. 3-8 G. 287 (PTO/3)
피티오 구동축 ---------- FIG. 3-8 G. 287 (PTO/1, M/PTO)
전륜 구동 축 ---------- FIG. 3-9 G. 288
전륜 구동 축 ---------- FIG. 3-9 G. 288, 380
변속레버 및 포크 ---------- FIG. 3-10 G. 290 (MEC)
HST 컨트롤 ---------- FIG. 3-10 G. 292 (HST)
변속레버 및 포크 ---------- FIG. 3-11 G. 290,293 (MEC)
변속레버 및 포크 ---------- FIG. 3-11 G. 290,293 (HST)
변속레버 및 포크 ---------- FIG. 3-11 G. 290-293 (PTO/3, GSP)
미들 피티오 축 및 레버 ---------- FIG. 3-12 G. 287,293 (M/PTO)

■ 차동 장치

차동 고정장치 ---------- FIG. 4-1 G. 320 (MEC)
차동 고정장치 ---------- FIG. 4-1 G. 320 (HST)
차동장치 ---------- FIG. 4-2 G. 310

■ 앞차축, 뒷차축

앞차축 조립체 ---------- FIG. 5-1 G. 400
앞차축 케이스 ---------- FIG. 5-2 G. 400
앞차축 케이스 ---------- FIG. 5-3 G. 400
앞차축 차동장치 ---------- FIG. 5-4 G. 400
앞차축 구동장치 ---------- FIG. 5-5 G. 400
뒷차축 최종구동 ---------- FIG. 5-6 G. 400
앞, 뒤 타이어 ---------- FIG. 5-7 G. 490

■ 조향 장치

https://truckmanualshub.com/

본 체 부 품

타이로드 ---------- FIG. 6-1 G. 610
조향라인 ---------- FIG. 6-2 G. 630
조향 휠 및 칼럼 ---------- FIG. 6-3 G. 630
조향 실린더 ---------- FIG. 6-4 G. 630
쿨러 ---------- FIG. 6-5 G. 640 (HST)

■ 브레이크 장치

브레이크 ---------- FIG. 7-1 G. 650
브레이크페달 ---------- FIG. 7-2 G. 670 (MEC)
브레이크페달 ---------- FIG. 7-2 G. 670 (HST)
주차브레이크 ---------- FIG. 7-3 G. 670
주차브레이크 ---------- FIG. 7-3 G. 670

■ 전기 장치

전기 배선 ---------- FIG. 8-1 G. 730
축전지 ---------- FIG. 8-2 G. 740
계기 판넬 ---------- FIG. 8-3A-1 G. 750 (MEC)
전기 스위치 ---------- FIG. 8-3A-2 G. 750 (MEC)
계기 판넬 ---------- FIG. 8-3B-1 G. 750 (HST)
전기 스위치 ---------- FIG. 8-3B-2 G. 750 (HST)
램프 ---------- FIG. 8-4 G. 760

■ 유압 장치

유압 하우징 ---------- FIG. 9-1 G. 820 (W/O DRAFT)
유압 하우징 ---------- FIG. 9-1 G. 820 (W/D DRAFT)
리프트 제어밸브 및 링크 ---------- FIG. 9-2 G. 822 (W/O DRAFT)
리프트 제어밸브 및 링크 ---------- FIG. 9-2 G. 822
TM 제어 밸브 ---------- FIG. 9-3 G. 822
유압인출 및 로더밸브 ---------- FIG. 9-4 G. 822 (F/ OUTLET VALVE)
유압인출 및 로더밸브 ---------- FIG. 9-4 G. 822 (LOADER VALVE)
유압 라인 ---------- FIG. 9-5 G. 823 (F/OUTLET)
유압 라인 ---------- FIG. 9-5 G. 823 (LOADER VALVE)
유압 제어 링크 ---------- FIG. 9-6 G. 824 (W/O DRAFT)
유압 제어 링크 ---------- FIG. 9-6 G. 824 (W/DRAFT)
유압 제어 레버 ---------- FIG. 9-7 G. 825 (W/O DRAFT)
유압 실린더 ---------- FIG. 9-8 G. 826
원격 유압 밸브 및 라인 ---------- FIG. 9-9 G. 827 (SD5/2)
원격 유압 밸브 및 라인 ---------- FIG. 9-9 G. 827 (SD5/1)
원격 유압 밸브 및 라인 ---------- FIG. 9-9 G. 827
상부 링크 브라켓트 ---------- FIG. 9-10 G. 828
상부 링크 브라켓트 ---------- FIG. 9-10 G. 828
드로바 히치 ---------- FIG. 9-11 G. 891 (FIXED HITCH)
드로바 히치 ---------- FIG. 9-11 G. 891 (TELESCOPIC DRAWBAR)
드로바 히치 ---------- FIG. 9-11 G. 891 (CLEVIS DRAWBAR (CE))
상부 및 하부 링크 ---------- FIG. 9-12 G. 896 (GENERAL)
상부 및 하부 링크 ---------- FIG. 9-12 G. 896 (AUTO/H)

https://truckmanualshub.com/

본 체 부 품

리프트 로드 ---------- FIG. 9-13 G. 896
체크링크 ---------- FIG. 9-14 G. 896
수평제어 유압라인 ---------- FIG. 9-15 G. 896

■ 외장

후드 ---------- FIG. 10-1A-1 G. 830 (C-LOOK)
후드 ---------- FIG. 10-1A-2 G. 830 (C-LOOK)
후드 ---------- FIG. 10-1B-1 G. 830 (M-LOOK)
후드 ---------- FIG. 10-1B-2 G. 830 (M-LOOK)
후드 ---------- FIG. 10-1C-1 G. 830 (R-LOOK)
후드 ---------- FIG. 10-1C-2 G. 830 (R-LOOK)
후드 ---------- FIG. 10-2 G. 830 (MEC)
후드 ---------- FIG. 10-2 G. 830 (HST)
발판 ---------- FIG. 10-3A-1 G. 840 (MEC)
발판 ---------- FIG. 10-3A-2 G. 840 (MEC)
발판 ---------- FIG. 10-3B-1 G. 840 (HST)
발판 ---------- FIG. 10-3B-2 G. 840 (HST)
발판 ---------- FIG. 10-3B-3 G. 840 (HST)
발판 ---------- FIG. 10-3B-4 G. 840 (HST)
의자 ---------- FIG. 10-4 G. 850
의자 ---------- FIG. 10-4 G. 850
펜더 ---------- FIG. 10-14 G. 870
펜더 ---------- FIG. 10-14B-1 G. 870 (HST)
펜더 ---------- FIG. 10-14B-2 G. 870 (HST)
펜더 ---------- FIG. 10-14B-3 G. 870 (HST)
펜더 ---------- FIG. 10-14B-4 G. 870 (HST)
보호구조물 ---------- FIG. 10-15 G. 880 (R/ROPS)
보호구조물 ---------- FIG. 10-15 G. 880 (R/ROPS)
보호구조물 ---------- FIG. 10-15 G. 880 (F/ROPS)
안전프레임 ---------- FIG. 10-15 G. 880 (F/ROPS)

■ 공구, 데칼

공구 ---------- FIG. 11-1 G. 920
데칼 ---------- FIG. 12-1 G. 980

https://truckmanualshub.com/

HOOD

FIG. 10-1C-2 **G. 830**

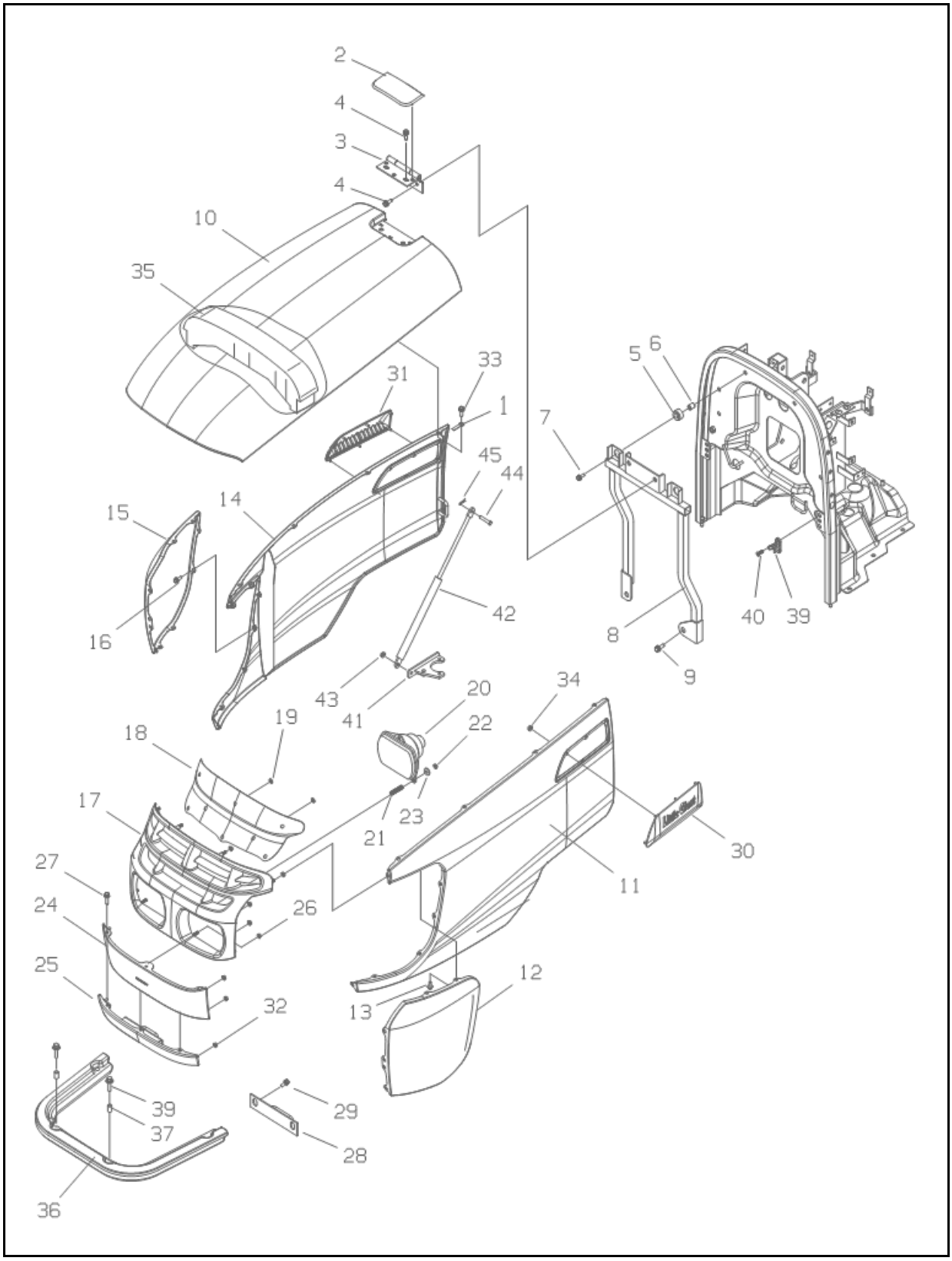

https://truckmanualshub.com/

HOOD

A-NOT AVAILABLE / B-i28,i36

A-NOT AVAILABLE / B-i28,i36

FIG. 10-1C-2 AG (R-LOOK)

NO.	PART NO.	PART NAME & DESCRIPTION		QTY A	QTY B	QTY C	APP.NO	REM.
1	A0640015	CLAMP, RING		3	3			
2	A1830257	COVER, HINGE		1	1			
3	A1830258	HINGE		1	1			
4	S159082033	BOLT, HEX. W/WASHER		4	4			
5	A1830574	MOUNT RUBBER		2	2			
6	A1830575	SPACER, RUBBER MOUNT		2	2			
7	S159083533	BOLT, HEX. W/WASHER		2	2			
8	A1830663	SUPPORT, BONNET		*	1			S4L
	A1830729	SUPPORT, BONNET		1	*			L3A
9	S154102533	BOLT, HEX. W/WASHER		2	2			
10	A1830718	HOOD, BONNET		1	1			
11~13	A1830719	SIDE COVER ASSY LH		1	1			
11	A1830721	COVER, SIDE LH		1	1			
12	A1830622	SIDE GRILLE, LH		1	1			
13	S155061233	BOLT, HEX W/WASHER		6	6			
14~16	A1830720	SIDE COVER ASSY RH		1	1			
14	A1830722	COVER, SIDE RH		1	1			
15	A1830723	SIDE GRILLE, RH		1	1			
16	S155061233	BOLT, HEX W/WASHER		6	6			
17~29	A1830723	GRILLE ASSY		1	1			
17	A1830616	GRILLE, UPPER		1	1			
18	A1830619	NET, GRILLE		1	1			
19	A1970340	NUT, SPEED		8	8			
20	A1760044	HEAD LAMP ASSY		2	2			
21	A1760003	SPRING		6	6			
22	A1970309	NUT, LOCK		6	6			
23	S364060013	WASHER, PLN. F-RD		6	6			
24	A1830617	GRILLE, CENTER		1	1			
25	A1830724	GRILLE, UNDER		1	1			
26	S345060013	NUT, FLANGE		3	3			
27	S155061633	BOLT, HEX		3	3			
28	A1830777	HANGER		1	1			
29	S159082033	BOLT, HEX W/WASHER		2	2			
30	A1830620	COVER, EXHAUST LH		1	1			
31	A1830621	COVER, EXHAUST RH		1	1			
32	S345060013	NUT, FLANGE		14	14			
33	S159061633	BOLT, HEX		8	8			
34	S345050013	NUT, FLANGE	M5x0.8	6	6			
35	A1830660	SEAL, UPPER R-LOOK		1	1			
36	A1830657	SEAL, UNDER R-LOOK		1	1			
37	A1830659	SPACER		4	4			
38	S159083533	BOLT, HEX. W/WASHER		4	4			
39	A1830442	GUIDE, HOOD		2	2			
40	S220802511	SCREW		4	4			
41	A1830649	BRACKET, GAS SPRING		*	1			S4L

https://truckmanualshub.com/

HOOD

FIG. 10-1C-2 **G. 830**

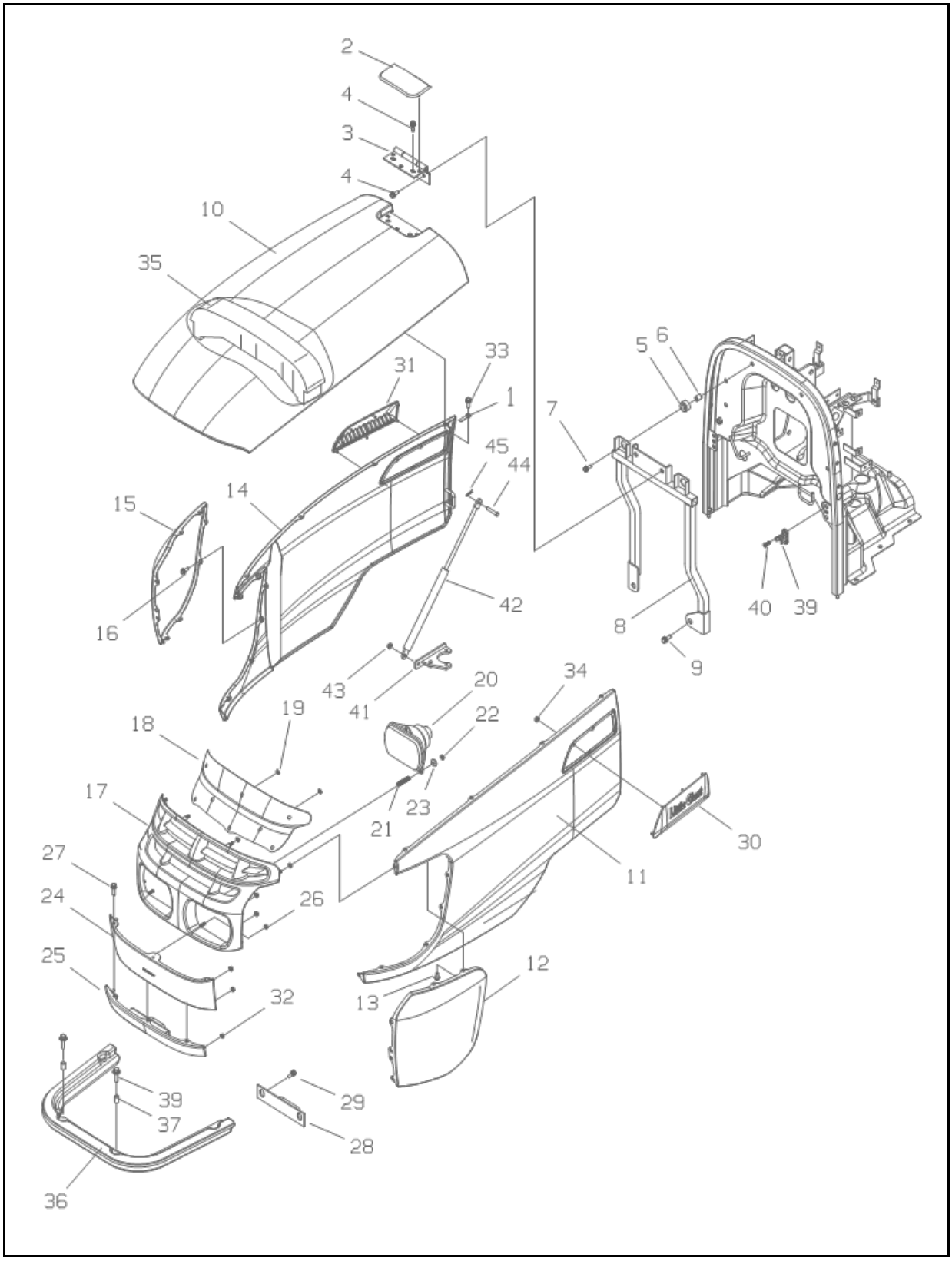

https://truckmanualshub.com/

HOOD

A-NOT AVAILABLE / B-i28,i36

A-NOT AVAILABLE / B-i28,i36

FIG. 10-1C-2 AG (R-LOOK)

NO.	PART NO.	PART NAME & DESCRIPTION		QTY A	QTY B	QTY C	APP.NO	REM.
41	A1830732	BRACKET, GAS SPRING		1	*			L3A
42	A1830673	GAS CYLINDER		1	1			
43	S345080013	NUT, FLANGE B-TYPE		1	1			
44	S427083523	PIN, HEAD B-TYPE		1	1			
45	S443080013	PIN, SNAP A-TYPE		1	1			

https://truckmanualshub.com/

BODY PANEL

FIG. 10-2A **G. 830**

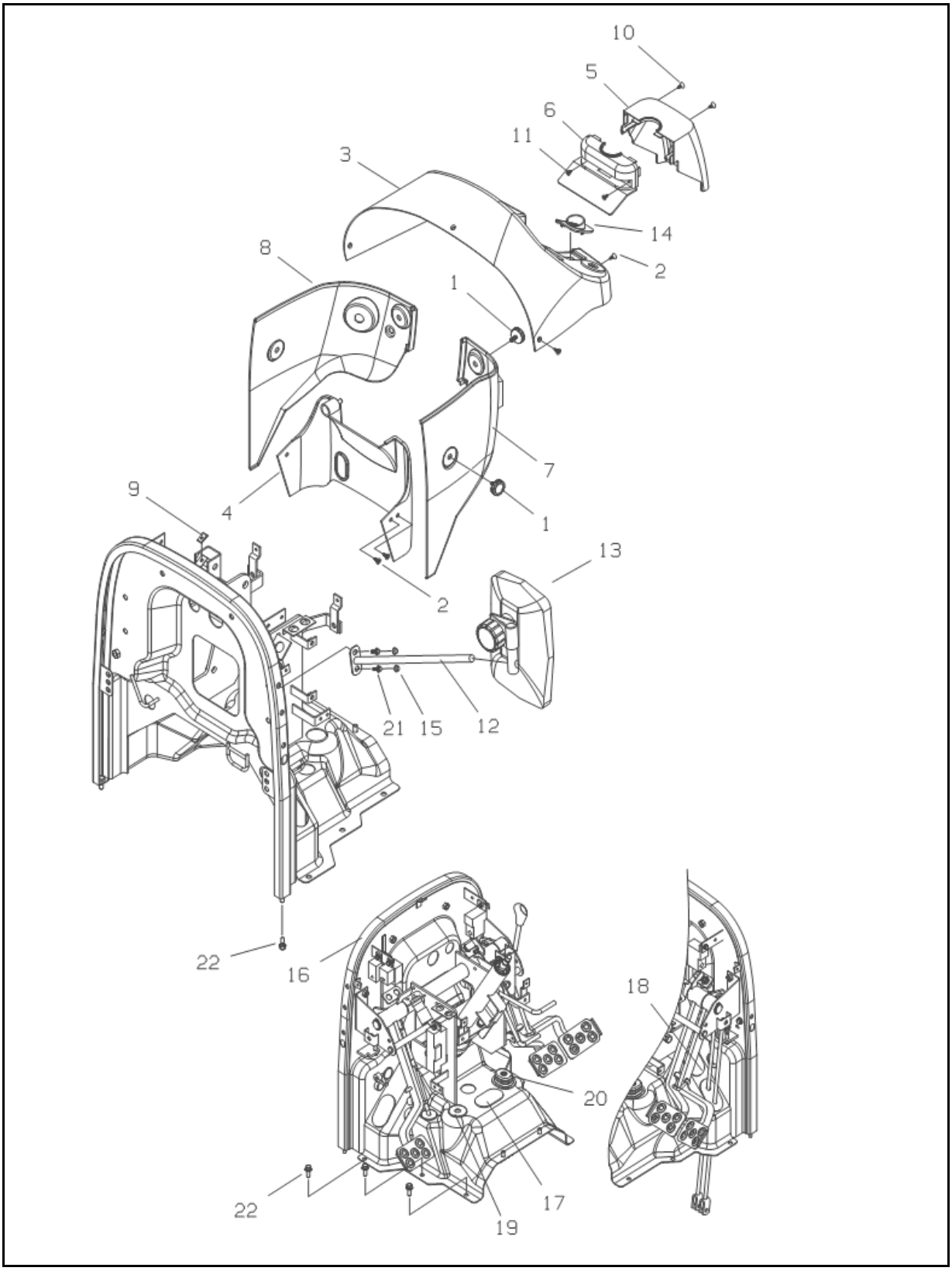

https://truckmanualshub.com/

BODY PANEL

A-NOT AVAILABLE / B-i28,i36

A-NOT AVAILABLE / B-i28,i36

FIG. 10-2A (MEC)

NO.	PART NO.	PART NAME & DESCRIPTION		QTY A	QTY B	QTY C	APP.NO	REM.
1	A0711065	KNOB		4	4			
2	A1830417	SCREW, TP. CRS, CSNK.		8	8			
3	A1830558	PANEL, BODY UPPER		1	1			
4	A1830559	PANEL, BODY UNDER		1	1			
5	A1830560	COVER, STEERING FRONT		1	1			
6	A1830576	COVER, STEERING REAR		1	1			
7	A1830582	PANEL, BODY LH		1	1			
8	A1830583	PANEL, BODY RH		1	1			
9	A1970279	PLATE, LOCK		8	8			
10	S219602011	SCREW		2	2			
11	S237401611	SCREW, TP.CRS,PAN		2	2			
12	A1830573	STAY, REAR VIEW MIRROR		1	1			
13	A1920070	MIRROR, REAR VIEW		1	1			
14	A1830561	COVER, F-R CHANGE		1	1			
15	A1830283	CAP, BOLT		2	2			
16~20	A1835009	FEDAL FRAME ASSY		1	1			
16	A1830563	PEDAL FRAME		1	1			
17	A1830568	CAP, BRAKE ROD		1	1			
18	A1830579	CAP, CREEPER LEVER		1	1			
19	A1830569	GROMMET, F-R SHIFT		1	1			
20	A1830570	RUBBER, CREPER LEVER		1	1			
21	S159082033	BOLT, HEX. W/WASHER		2	2			
22	S159082533	BOLT, HEX. W/WASHER		8	8			

https://truckmanualshub.com/

BODY PANEL

FIG. 10-2B **G. 830**

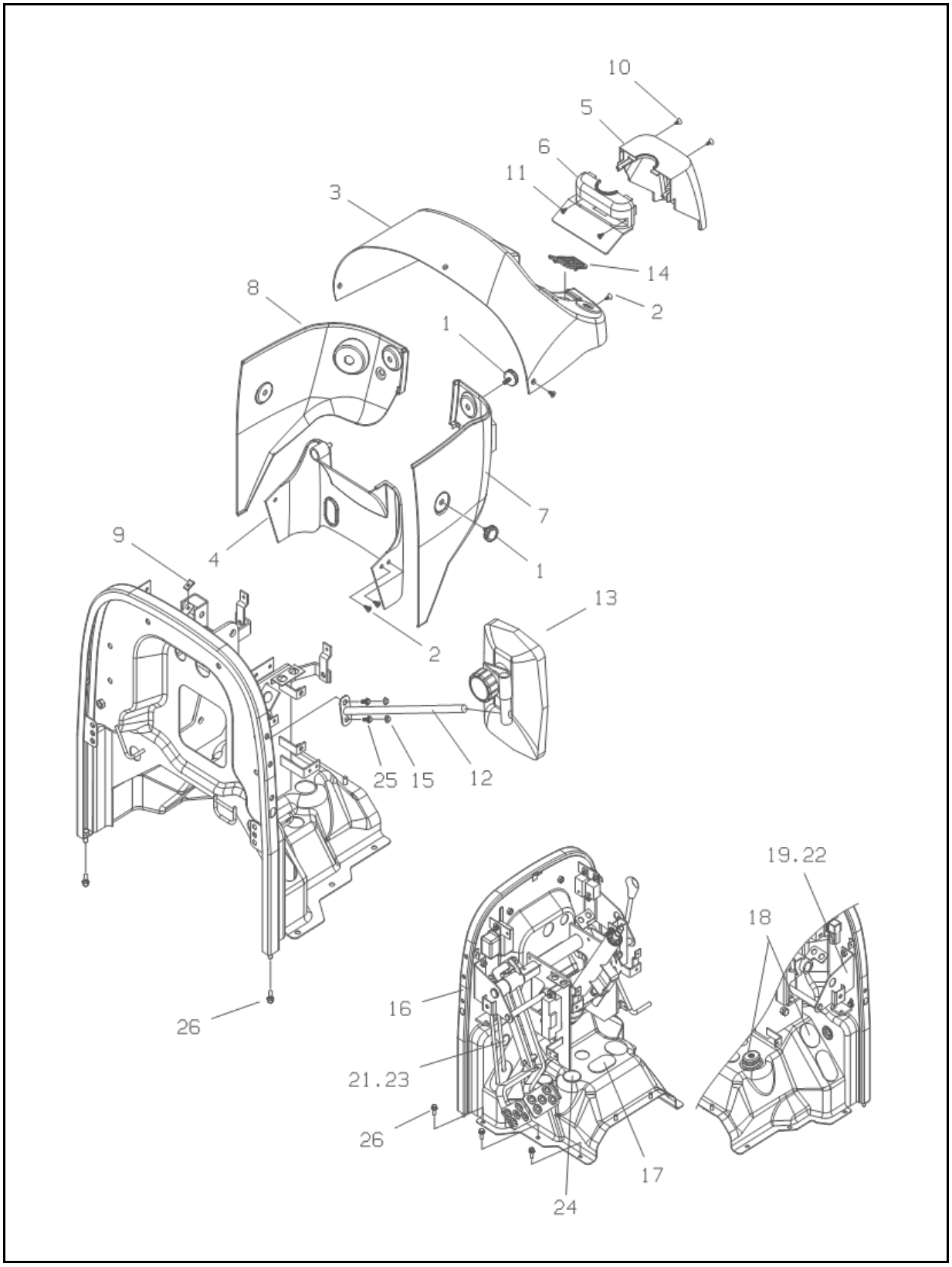

https://truckmanualshub.com/

BODY PANEL

A-NOT AVAILABLE / B-i28,i36

A-NOT AVAILABLE / B-i28,i36

FIG. 10-2B (HST)

NO.	PART NO.	PART NAME & DESCRIPTION		QTY A	QTY B	QTY C	APP.NO	REM.
1	A0711065	KNOB		4	4			
2	A1830417	SCREW, TP. CRS, CSNK.		8	8			
3	A1830558	PANEL, BODY UPPER		1	1			
4	A1830559	PANEL, BODY UNDER		1	1			
5	A1830560	COVER, STEERING FRONT		1	1			
6	A1830576	COVER, STEERING REAR		1	1			
7	A1830582	PANEL, BODY LH		1	1			
8	A1830583	PANEL, BODY RH		1	1			
9	A1970279	PLATE, LOCK		8	8			
10	S219602011	SCREW		2	2			
11	S237401611	SCREW, TP. CRS, PAN		2	2			
12	A1830573	STAY, REAR VIEW MIRROR		1	1			
13	A1920070	MIRROR, REAR VIEW		1	1			
14	A1830562	COVER, CRUISE S/W		1	1			
15	A1830283	CAP, BOLT		2	2			
16~24	A1835005	FEDAL FRAME ASSY		1	1			
16	A1830563	FEDAL FRAME		1	1			
17	A1830568	CAP, BRAKE ROD		1	1			
18	A1830579	CAP, CREEPER LEVER		2	2			
19	A1670310	STOPPER, BRAKE PEDAL		1	1			
20	A1830577	CAP, CLUTCH ROD		1	1			
21	A3260012	RUBBER		1	1			
22	S159082033	BOLT, HEX		2	2			
23	S345080013	NUT, FLANGE		1	1			
24	A1830578	CAP, F-R SHAFT		1	1			
25	S159082033	BOLT, HEX. W/WASHER		2	2			
26	S159082533	BOLT, HEX. W/WASHER		8	8			

https://truckmanualshub.com/

STEP

FIG. 10-3B-4 **G. 840**

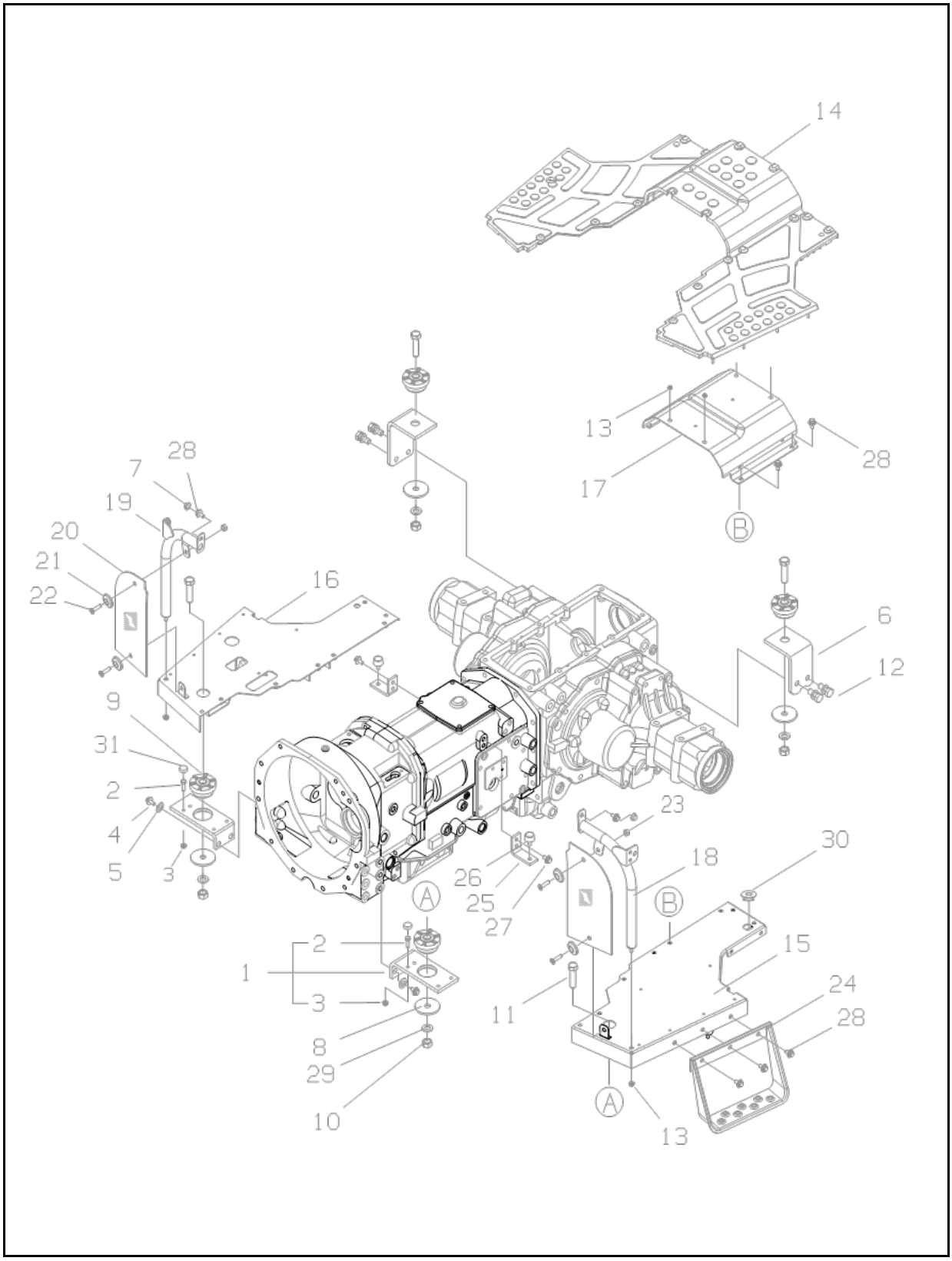

https://truckmanualshub.com/

STEP

A-NOT AVAILABLE / B-i28,i36

A-NOT AVAILABLE / B-i28,i36

FIG. 10-3B-4 AG (HST)

NO.	PART NO.	PART NAME & DESCRIPTION		QTY A	QTY B	QTY C	APP.NO	REM.
1	A1840233	BRACKET, STEP FRONT		2	2			
2	S105082543	BOLT, HEX.		1	1			
3	S345080013	NUT, FLANGE B-TY.		1	1			
4	S101143543	BOLT, HEX.		4	4			
5	S361140013	WASHER, SPR. 1-TY.		4	4			
6	A1840282	BRACKET, REAR MTG.		2	2			
7	A1830283	CAP, BOLT		2	2			
8	A1840236	WASHER, REBOUND		4	4			
9	A1840248	MOUNT		4	4			
10	S306160043	NUT, HEX. 2-TYPE		4	4			
11	S103166043	BOLT, HEX		4	4			
12	S153123533	BOLT, HEX, W/WASHER		4	4			
13	S345080013	NUT, FLANGE B-TY.		6	6			
14	A1840279	MAT, STEP		1	1			
15	A1840320	STEP, LH		1	1			
16	A1840322	STEP, RH		1	1			
17	A1840252	STEP, CENTER		1	1			
18	A1840241	FRAME, MUD GUARD LH		1	1			
19	A1840242	FRAME, MUD GUARD RH		1	1			
20	A1840243	PLATE, MUD GUARD		2	2			
21	A1862006	SPACER, GLASS		4	4			
22	S220802511	SCREW, CROSS, CSNK.		4	4			
23	A1877079	NUT, LOCK		4	4			
24	A1840247	STEP, SUB		1	1			
25	A1840244	BRACKET, CENTER MT'G		2	2			
26	A1840245	RUBBER, CENTER MT'G		2	2			
27	S153082033	BOLT, HEX. W/WASHER		4	4			
28	S159082033	BOLT, HEX. W/WASHER		9	9			
29	S361160013	WASHER, SPR. 1-TY.		4	4			
30	A1869060	GROMMET, WIPER FRONT		1	1			
31	A1840246	STOPPER, FRONT MT'G		2	2			

https://truckmanualshub.com/

SEAT

FIG. 10-4B **G. 850**

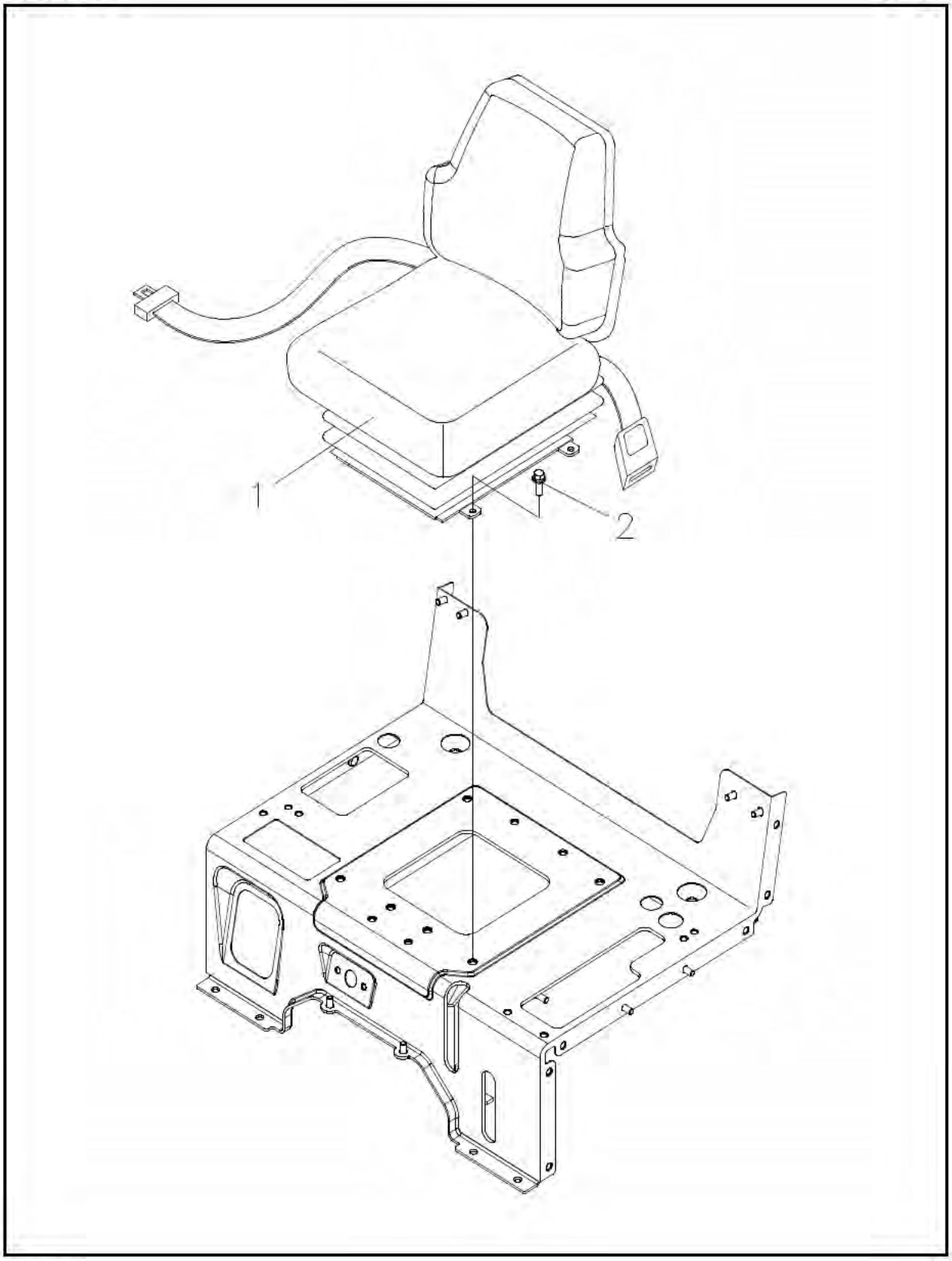

https://truckmanualshub.com/

SEAT

A-NOT AVAILABLE / B-i28,i36

A-NOT AVAILABLE / B-i28,i36

FIG. 10-4B EX

NO.	PART NO.	PART NAME & DESCRIPTION		QTY A	QTY B	QTY C	APP.NO	REM.
1	A1850238	SEAT & BELT ASSY		1	1			MEC
	A1850245	SEAT & BELT ASSY		1	1			HST
2	S154102533	BOLT, HEX	M10X25L	4	4			

https://truckmanualshub.com/

FENDER

FIG. 10-14B-4 **G. 870**

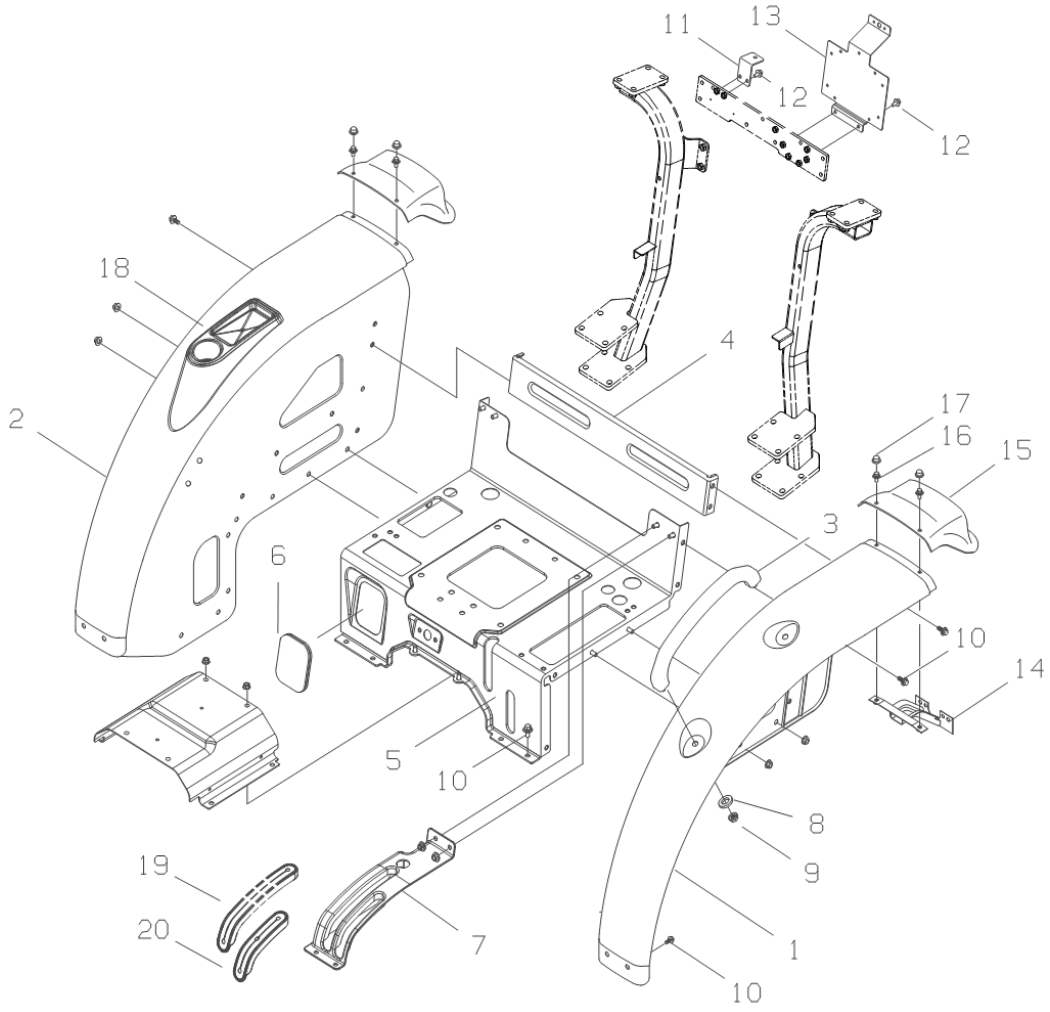

https://truckmanualshub.com/

FENDER

A-NOT AVAILABLE / B-i28,i36

A-NOT AVAILABLE / B-i28,i36

FIG. 10-14B-4 AG (HST)

NO.	PART NO.	PART NAME & DESCRIPTION		QTY A	QTY B	QTY C	APP.NO	REM.
1	A1870471	FENDER, LH		1	1			
2	A1870472	FENDER, RH		1	1			
3	A1870410	HANDLE		1	1			
4	A1870406	SUPPORT, FENDER		1	1			
5	A1870470	COVER, CENTER		1	1			
6	A1870454	COVER, DUST MAIN LEVER		1	1			
7	A1870446	GUIDE, LEVER		1	1			
8	S365082013	WASHER, PLN. L-RD.	DI8.4XD20X1.6t	4	4			
9	S345080013	NUT, FLANGE B-TY.	M8X1.25	12	12			
10	S159082033	BOLT, HEX. W/WASHER	M8X1.25	31	31			
11	A1870375	BRACKET, WORKING LIGHT		1	1			
12	S159082533	BOLT, HEX. W/WASHER		4	4			
13	A1920068	BRACKET, NUMBER		1	1			EC
14	A1870408	BRACKET, EXTENTION		2	2			
15	A1870407	EXTENTION, REAR		2	2			
16	S159061613	BOLT, HEX. W/WASHER		4	4			
17	A1830653	CAP, BOLT		4	4			
18	A1870443	HOLDER, CUP		1	1			
19	A1870448	SEAL, PTO LEVER		1	1			
20	A1870447	SEAL, RANGE SEVER		1	1			

https://truckmanualshub.com/

ROPS

FIG. 10-15B **G. 880**

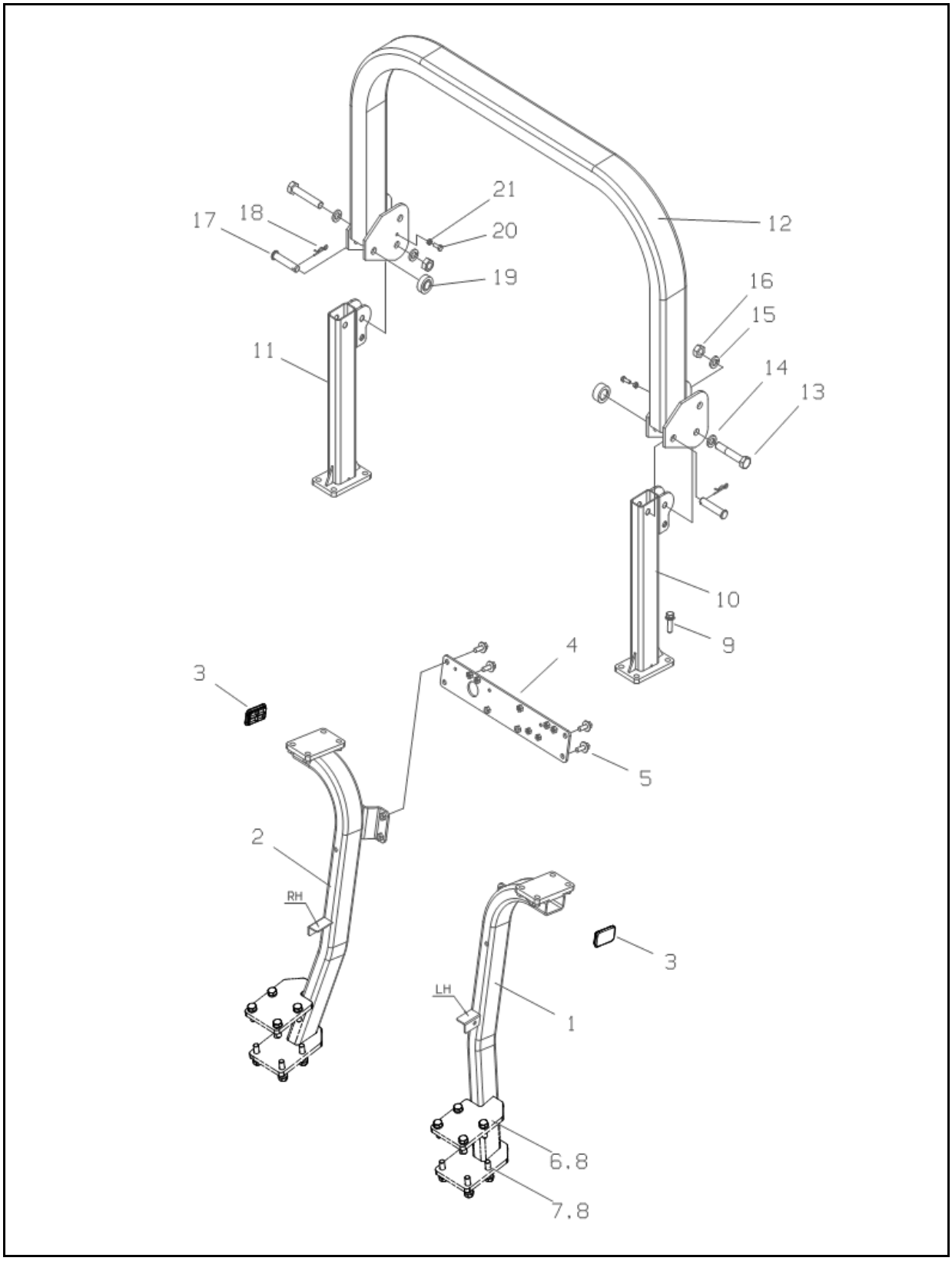

https://truckmanualshub.com/

ROPS

A-NOT AVAILABLE / B-i28,i36

A-NOT AVAILABLE / B-i28,i36

FIG. 10-15B (R/ROPS)

NO.	PART NO.	PART NAME & DESCRIPTION		QTY A	QTY B	QTY C	APP.NO	REM.
1	A1880148	FRAME, ROPS LOWER LH		1	1			
2	A1880149	FRAME, ROPS LOWER RH		1	1			
3	A1880155	COVER, RUBBER		2	2			
4	A1880158	FRAME, ROPS REAR		1	1			
5	S154102533	BOLT, HEX. W/WASHER		4	4			
6	S101144043	BOLT, HEX		8	8			
7	S101145043	BOLT, HEX		6	6			
8	S361140013	WASHER, SPR. I-TY		14	14			
9	S155124533	BOLT, HEX. W/WASHER		8	8			
10~21	A1880151	ROPS UPPER ASSY		1	1			
10	A1880153	PILLAR MID LH, REAR ROPS		1	1			
11	A1880154	PILLAR MID RH, REAR ROPS		1	1			
12	A1880152	FRAME, ROPS UPPER		1	1			
13	S101148043	BOLT, HEX	M14X2X80L	2	2			
14	S363140013	WASHER, PLN. S-RD.	D24Xd15X2.5t	2	2			
15	S361140013	WASHER, SPR. 1-TY.	D24.5Xd14.2X3.5t	2	2			
16	S301140043	NUT, HEX. 1-TY.	M14X2	2	2			
17	S427148023	PIN, HEAD B-TY	Φ14X80L	2	2			
18	S443140013	PIN, SNAP A-TY.	Φ14X40.6L	2	2			
19	A1877077	RUBBER, LOWER		2	2			
20	S163062043	BOLT, HEX. F-THRD.	M6X1.0X20L	2	2			
21	S301060043	NUT, HEX. 1-TY.	M6X1.0	2	2			

https://truckmanualshub.com/

TOOL

FIG. 11-1 **G. 920**

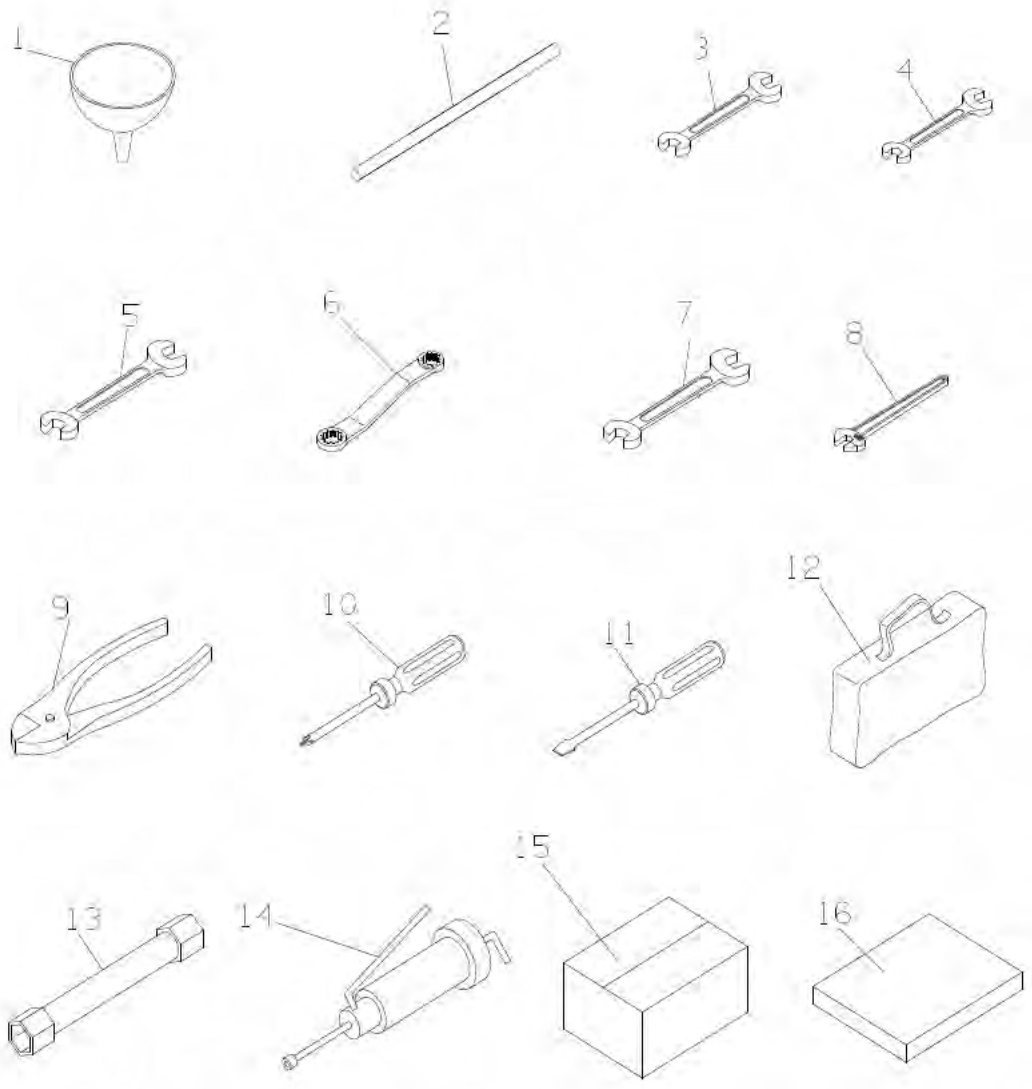

https://truckmanualshub.com/

TOOL

A-NOT AVAILABLE / B-i28,i36

A-NOT AVAILABLE / B-i28,i36

FIG. 11-1

NO.	PART NO.	PART NAME & DESCRIPTION		QTY			APP.NO	REM.
				A	B	C		
1	A0770017	FUNNEL		1	1			
2~13	A1920001	TOOL KIT, TRACTOR	FOR 39,45,51	1	1			
2	3A0010200	TOMMY BAR	D15X350	1	1			
3	A0770026	SPANNER (12X14)	12 X 14	1	1			
4	A0770028	SPANNER (17X19)	17X19	1	1			
5	A0770030	SPANNER, DOUBLE END	22X24	1	1			
6	A0770049	WRENCH	22X24	1	1			
7	A14583371	SPANNER, DOUBLE END	10X13 H HRC	1	1			
8	A14584300	SPANNER, MONKEY	300MM	1	1			
9	A14584400	PLIER	200MM	1	1			
10	A14584500	DRIVER (+)	#3-150 H	1	1			
11	A14584600	DRIVER (-)	6X100 H	1	1			
12	A1920004	TOOL BAG		1	1			
13	A1970227	SPANNER, BOX (24X27)	24X27	1	1			
14	A1970224	GUN, GREASE	TOP TYPE(400	1	1			
15	A500350160	CARTON BOX (TRACTOR)	500*350*160	1	1			
16	A1920084	MANUAL, USER		1	1			

https://truckmanualshub.com/

DECAL

DECAL

A-NOT AVAILABLE / B-i28,i36

A-NOT AVAILABLE / B-i28,i36

FIG. 12-1F

G. 980 FIG. 12-1F

(MEC)

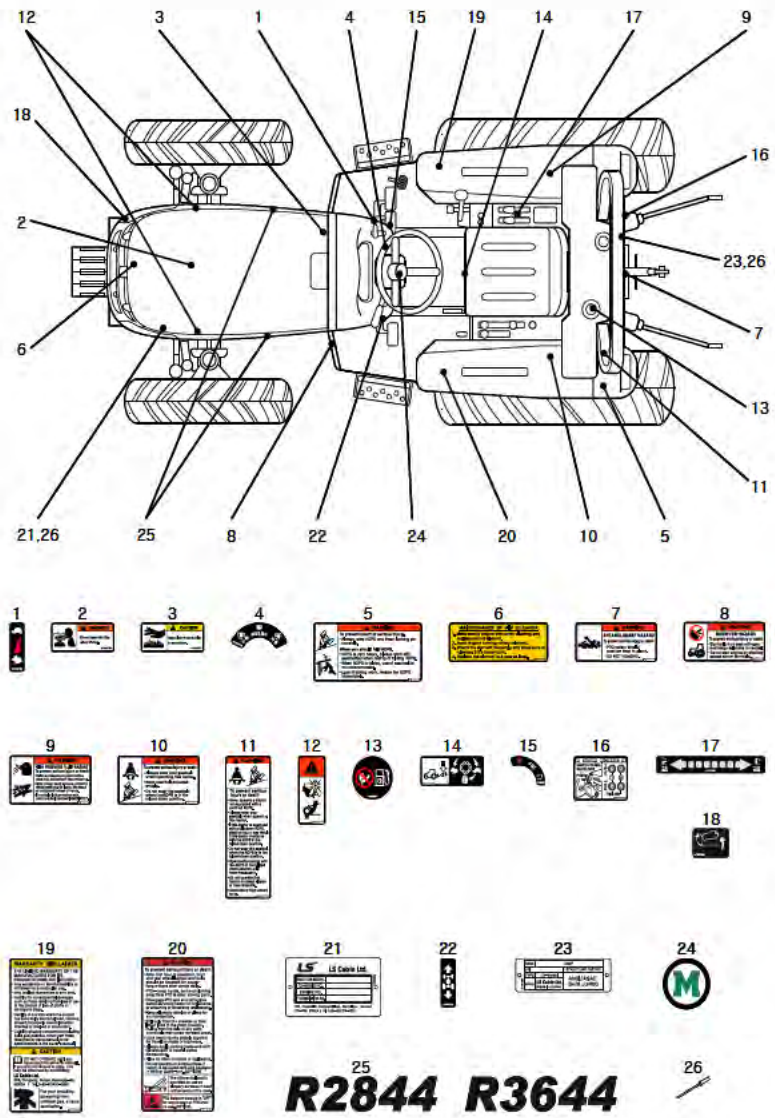

NO.	PART NO.	PART NAME & DESCRIPTION	QTY A	QTY B	QTY C	APP. NO	REM.
01	A1980722	DECAL, ACC. LEVER	1	1			
02	A1980734	DECAL, WARNING	1	1			
03	A1980736	DECAL, CAUTION	1	1			
04	A1980818	DECAL, PTO SELECTOR	1	1			
05	A1980891	DECAL, ROPS WARNING	1	1			
06	A1980932	DECAL, AIR CLEANER	1	1			
07	A1980935	DECAL, PTO WARNING	1	1			
08	A1980936	DECAL, START WARNING	1	1			
09	A1980937	DECAL, HYD. OIL WARNING	1	1			
10	A1980940	DECAL, FRAME SEATBELT WARNING	1	1			
11	A1980941	DECAL, ROPS WARNING	1	1			
12	A1980999	DECAL, FAN/BELT WARNING	2	2			
13	A1981000	DECAL, FUEL	1	1			
14	A1981018	DECAL, FLOW CONTROL	1	1			
15	A1981029	DECAL, KEY SWITCH (R)	1	1			
16	A1981037	DECAL, AUX. CONTROL	1	1			
17	A1981064	DECAL, HYD. POSITION & DRAFT	1	1			
18	A1981065	DECAL, HOOD OPEN (RH)	1	1			
19	A1981075	DECAL, WARRANTY	1	1			
20	A1981076	DECAL, DRIVER CAUTION (E)	1	1			
21	A1980943	NAME PLATE	1	1			
22	A1980721	DECAL, F-R CHANGE	1	1			
23	A1981097	NAME PLATE, ROPS (i38RF)	1	1			
24	A1981038	DECAL, MONTANA EMBLEM (HANDLE)	1	1			
25	A1981166	DECAL, MODEL NAME (R2844)	2	*			
	A1981168	DECAL, MODEL NAME (R3644)	*	2			
26	S466321010	RIVET, BLIND	4	4			

https://truckmanualshub.com/

DECAL

DECAL

A-NOT AVAILABLE / B-i28,i36

A-NOT AVAILABLE / B-i28,i36

FIG. 12-1G

G. 980 FIG. 12-1G

(HST)

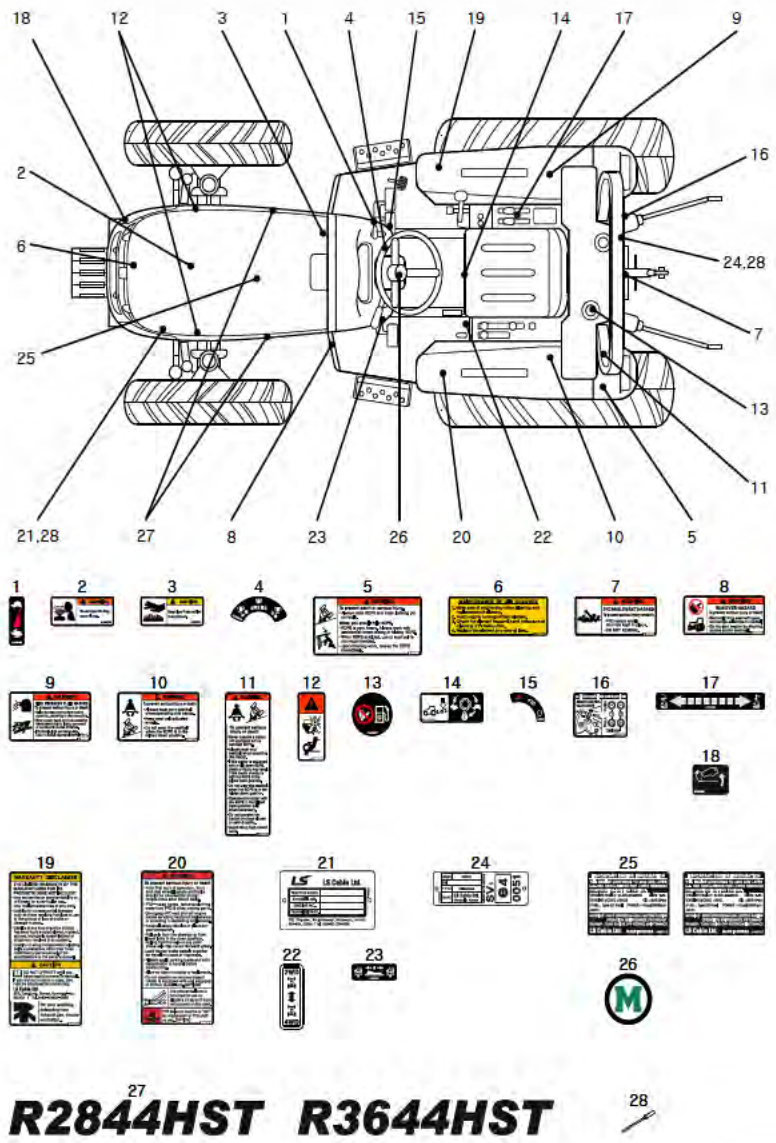

NO.	PART NO.	PART NAME & DESCRIPTION	QTY A	QTY B	QTY C	APP. NO	REM.
01	A1980722	DECAL, ACC. LEVER	1	1			
02	A1980734	DECAL, WARNING	1	1			
03	A1980736	DECAL, CAUTION	1	1			
04	A1980818	DECAL, PTO SELECTOR	1	1			
05	A1980891	DECAL, ROPS WARNING	1	1			
06	A1980932	DECAL, AIR CLEANER	1	1			
07	A1980935	DECAL, PTO WARNING	1	1			
08	A1980936	DECAL, START WARNING	1	1			
09	A1980937	DECAL, HYD. OIL WARNING	1	1			
10	A1980940	DECAL, FRAME SEATBELT WARNING	1	1			
11	A1980941	DECAL, ROPS WARNING	1	1			
12	A1980999	DECAL, FAN/BELT WARNING	2	2			
13	A1981000	DECAL, FUEL	1	1			
14	A1981018	DECAL, FLOW CONTROL	1	1			
15	A1981029	DECAL, KEY SWITCH (R)	1	1			
16	A1981037	DECAL, AUX. CONTROL	1	1			
17	A1981064	DECAL, HYD. POSITION & DRAFT	1	1			
18	A1981065	DECAL, HOOD OPEN (RH)	1	1			
19	A1981075	DECAL, WARRANTY	1	1			
20	A1981076	DECAL, DRIVER CAUTION (E)	1	1			
21	A1980943	NAME PLATE	1	1			
22	A1980573	DECAL, 4WD	1	1			
23	A1981031	DECAL, CRUISE CONRTOL	1	1			
24	A1981032	NAME PLATE, ROPS (R45RF)	1	1			
25	A1981114	DECAL, EPA (S4QS)	1	*			
	A1981115	DECAL, EPA (S4QL)	*	1			
26	A1981038	DECAL, MONTANA EMBLEM (HANDLE)	1	1			
27	A1981167	DECAL, MODEL NAME (R2844HST)	2	*			
	A1981169	DECAL, MODEL NAME (R3644HST)	*	2			
28	S466321010	RIVET, BLIND	4	4			

https://truckmanualshub.com/

엔 진 부 품

■ i28, i36

실린더 헤드 ---------- FIG. 01-01
밸브 메커니즘 ---------- FIG. 04-01
록커 커버, 캠축 ---------- FIG. 04-02
크랭크케이스 조립체 ---------- FIG. 07-01
크랭크케이스 ---------- FIG. 07-02
크랭크케이스 ---------- FIG. 11
오일팬 ---------- FIG. 13
메인 무빙 파트 ---------- FIG. 17
타이밍 기어 ---------- FIG. 23
흡기, 배기 다지관 ---------- FIG. 30
오일 펌프 ---------- FIG. 35
오일 시스템 ---------- FIG. 36
냉각 시스템 ---------- FIG. 45
연료 시스템 ---------- FIG. 61-01
노즐, 노즐 홀더 ---------- FIG. 61-02
분사 펌프 ---------- FIG. 61-03-01
연료 필터 ---------- FIG. 62
가버너 ---------- FIG. 63-01
가버너 ---------- FIG. 63-01
전장 파트 ---------- FIG. 66-01
스타터 ---------- FIG. 66-02
컨트롤 시스템 ---------- FIG. 87
계기 ---------- FIG. 90
가스켓 키트 ---------- FIG. 94

https://truckmanualshub.com/

CYLINDER HEAD

FIG. 01-01

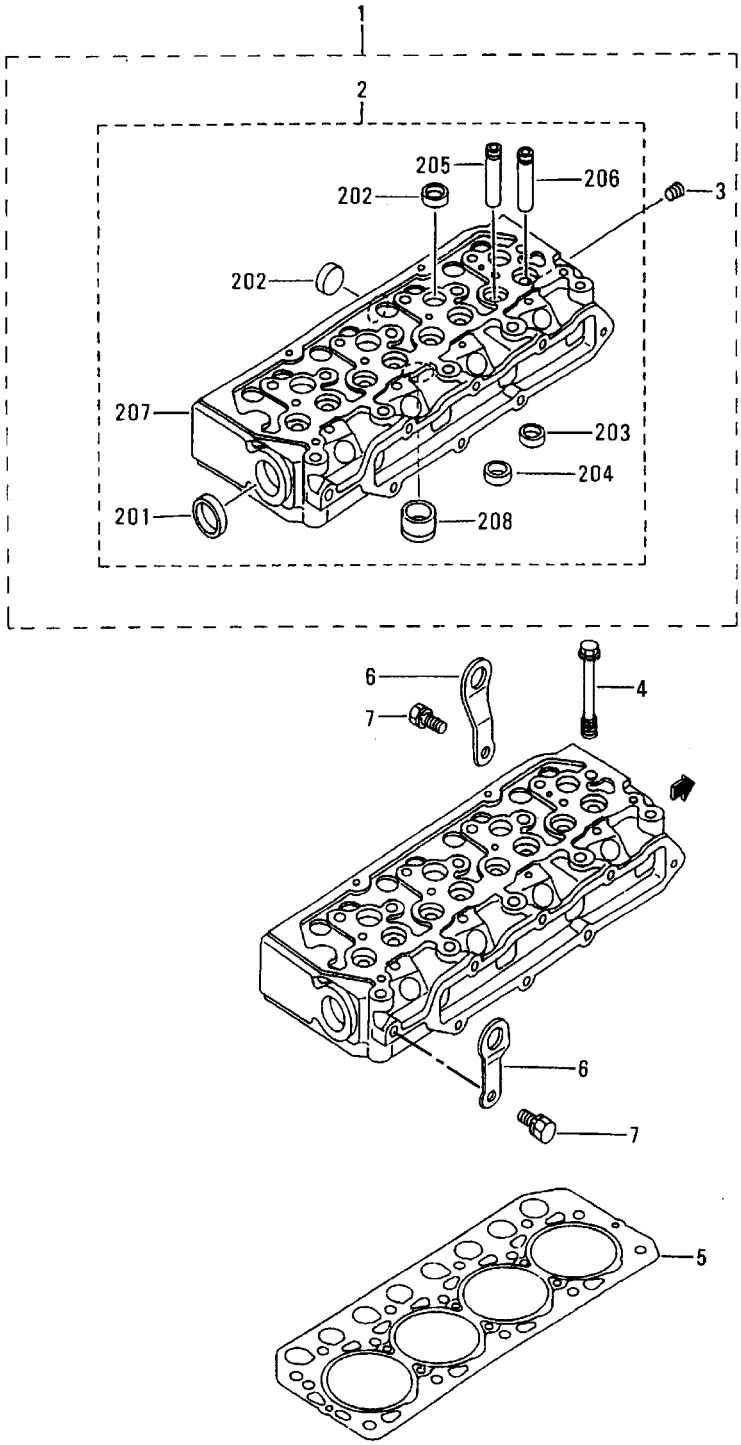

https://truckmanualshub.com/

CYLINDER HEAD

A-i28 / B-i36

FIG. 01-01

NO.	PART NO.	PART NAME & DESCRIPTION		QTY A	QTY B	QTY C	APP.NO	REM.
1	31A01-21060	HEAD ASSY, CYLIDER		1	*			
	31A01-51040	HEAD ASSY, CYLIDER		*	1			
2	*	HEAD SUB ASSY		1	1			
01	MD000245	CAP, SEALING		1	1			
02	MF665538	CAP, SEALING		7	7			
03	*	SEAT, VALVE INLET		4	4			
04	*	SEAT, VALVE EXHAUST		4	4			
05	31A01-02500	GUIDE, EXHAUST VALVE		4	4			
06	31A01-02600	GUIDE, INLET VALVE		4	4			
07	*	CYLINDER HEAD		1	1			
08	31A03-01101	JET, COMBUSTION		1	*			
	31A03-01500	JET, COMBUSTION		*	4			
3	MS661140	PLUG, TAPER		1	1			
4	31A01-11100	BOLT, CYLINDER HEAD		14	14			
5	31A01-33300	GASKET, CYL. HEAD		1	1			
6	MM408470	HANGER, ENGINE		2	2			
7	F1805-10020	BOLT, W/WASHER		2	2			

https://truckmanualshub.com/

VALVE MECHANISM

FIG. 04-01

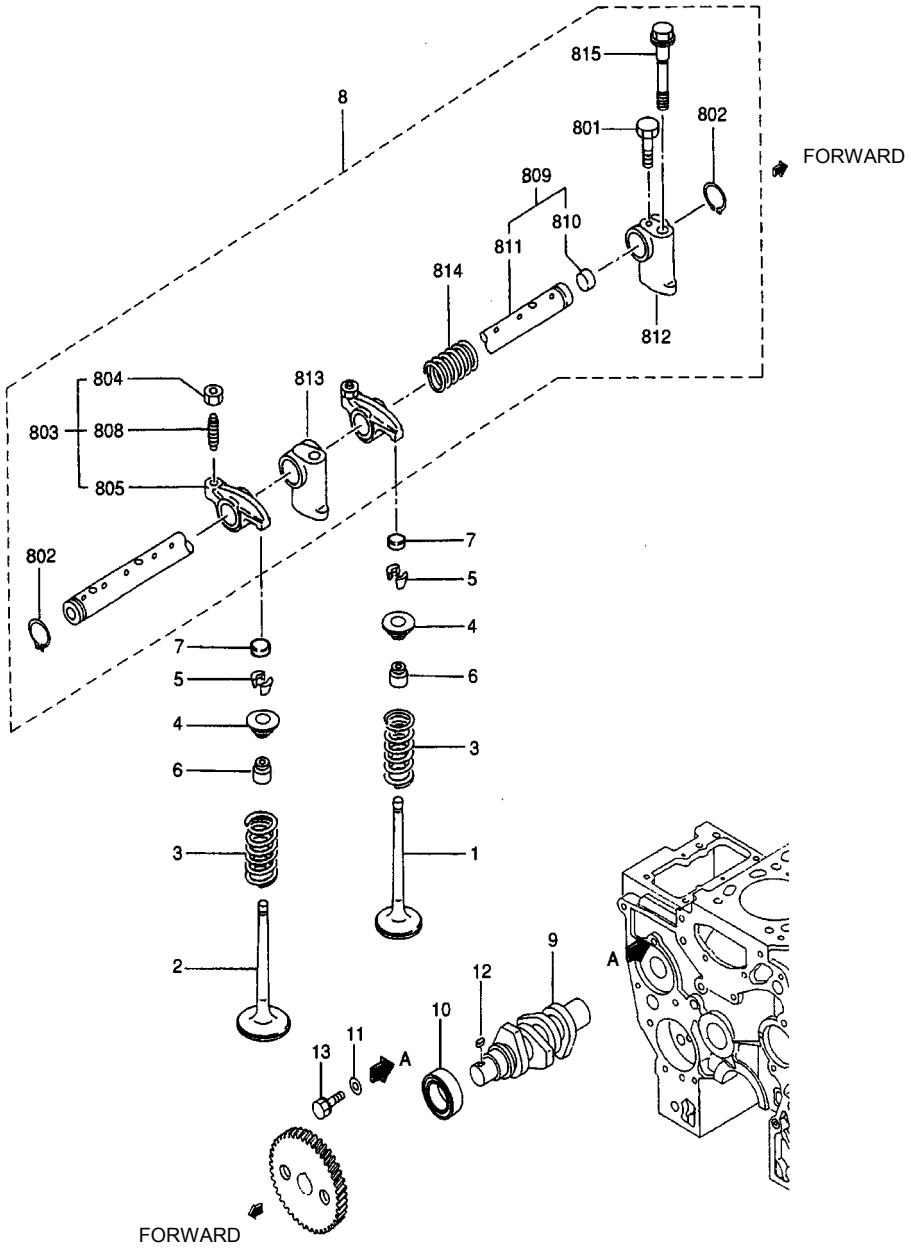

https://truckmanualshub.com/

VALVE MECHANISM

A-i28 / B-i36

FIG. 04-01

NO.	PART NO.	PART NAME & DESCRIPTION		QTY A	QTY B	QTY C	APP.NO	REM.
1	31A04-30100	VALVE, INLET		4	4			
2	31A04-20200	VALVE, EXHAUST		4	4			
3	31A04-01301	SPRING, VALVE		8	8			
4	MM433306	RETAINER, VALVE STEM		8	8			
5	MD016483	VALVE, LOCK		16	16			
6	MD115472	SEAL, VALVE STEM		8	8			
7	31A04-00700	CAP, VALVE		8	8			
8	31A04-30042	ROCKER & SHAFT ASSY		1	1			
01	F1035-05010	BOLT		1	1			
02	MF522010	RING, SNAP		2	2			
03	31A04-11023	ROCKER ASSY		8	8			
04	F2325-08000	NUT, JAM		8	8			
05	*	ROCKER, ARM		8	8			
08	32A04-02400	SCREW, ROCKER		8	8			
09	31A04-21010	SHAFT ASSY, ROCKER		1	1			
10	MD021204	CAP, SEALING		2	2			
11	*	SHAFT, ROCKER		1	1			
12	31A04-34100	BRACKET, ROCKER SHAFT		1	1			
13	31A04-34300	BRACKET, ROCKER SHAFT		3	3			
14	32C04-04500	SPRING, ROCKER		3	3			
15	32C04-06100	BOLT, ROCKER BRACKET		4	4			
9	31A65-11200	SHAFT, FUEL INJ PUMP		1	1			
10	MD703856	BEARING, RADIAL BALL		1	1			
11	MD000425	WASHER		1	1			
12	MF476018	KEY, SUNK		1	1			
13	F1805-08016	BOLT, W/WASHER		1	1			

https://truckmanualshub.com/

ROCKER COVER & CAMSHAFT

FIG. 04-02

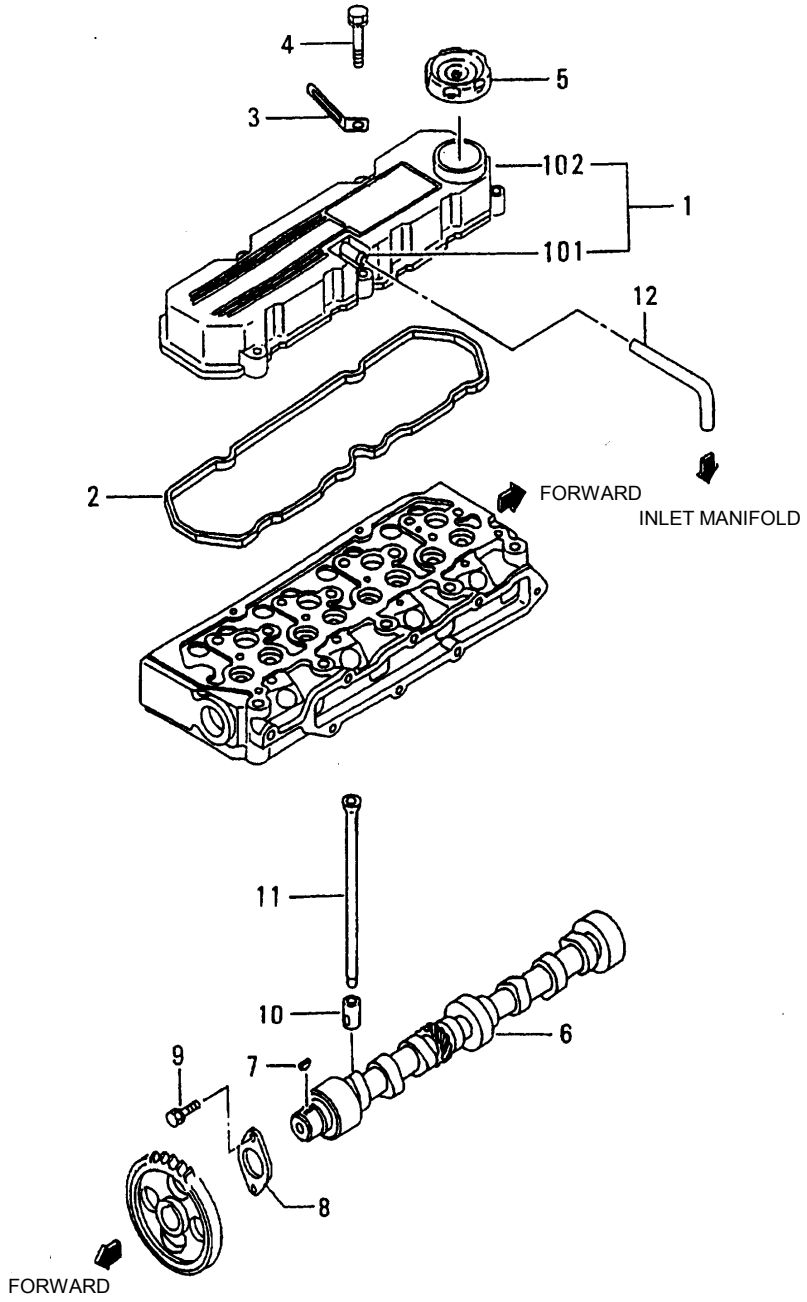

https://truckmanualshub.com/

ROCKER COVER & CAMSHAFT

A-i28 / B-i36

FIG. 04-02

NO.	PART NO.	PART NAME & DESCRIPTION		QTY A	QTY B	QTY C	APP.NO	REM.
1	31A04-20031	COVER ASSY, ROCKER		1	1			
01	*	PIPE		1	1			
02	*	COVER, ROCKER		1	1			
2	31A04-33202	GASKET, ROCKER COVER		1	1			
3	MS470059	CLIP		1	1			
4	F1805-08040	BOLT, W/WASHER		5	5			
5	MD008784	CAP, OIL FILTER		1	1			
6	31A05-00201	CAMSHAFT		1	1			
7	MF476215	KEY, WOODRUFF		1	1			
8	30405-31402	PLATE, THRUST		1	1			
9	F1805-08016	BOLT, W/WASHER		2	2			
10	MM402737	TAPPET		8	8			
11	31A05-01300	ROD, PUSH		8	8			
12	MM400380	BREATHER, PIPE		1	1			

https://truckmanualshub.com/

CRANKCASE ASSY

FIG. 07-01

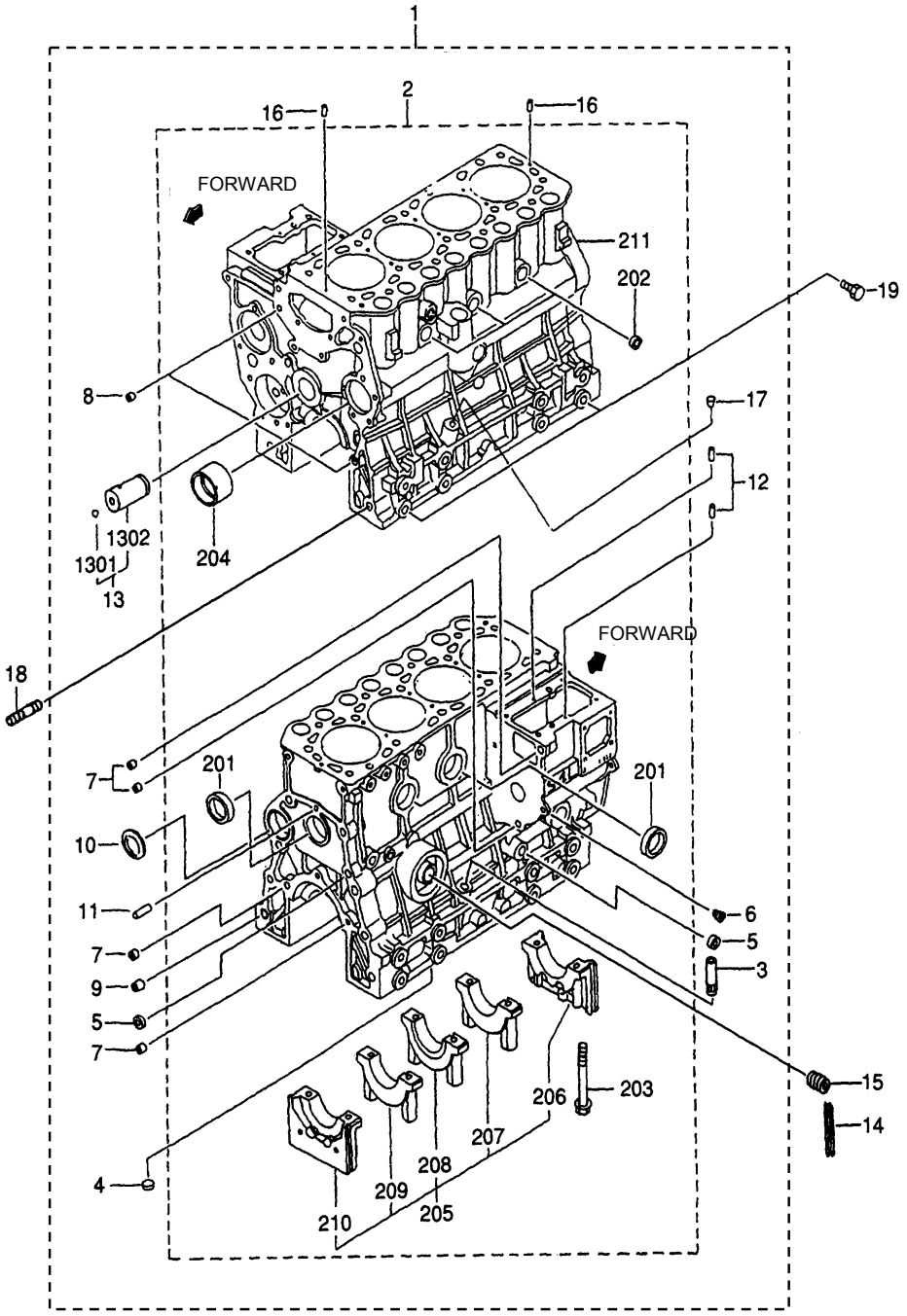

https://truckmanualshub.com/

CRANKCASE ASSY

A-i28 / B-i36

FIG. 07-01

NO.	PART NO.	PART NAME & DESCRIPTION		QTY A	QTY B	QTY C	APP.NO	REM.
1	31A07-42010	BLOCK ASSY, CYLINDER		1	1			
2	*	BLOCK SUB ASSY, CYL		1	1			
01	04826-22000	CAP, SEALING		3	3			
02	04826-23500	CAP, SEALING		3	3			
03	31A07-00800	BOLT, BEARING, CAP		10	10			
04	31A07-03100	BUSH, CAMSHAFT		1	1			
05	*	CAP SET, METAL		1	1			
06	*	CAP, METAL FRONT		1	1			
07	*	CAP, METAL NO.2		1	1			
08	*	CAP, METAL NO.3		1	1			
09	*	CAP, METAL NO.4		1	1			
10	*	CAP, METAL REAR		1	1			
11	*	BLOCK, CYLINDER		1	1			
3	MM430613	GUIDE, OIL LEVEL		1	1			
4	MF665532	CAP, SEALING(12)		1	1			
5	MF665533	CAP, SEALING(14)		3	3			
6	MS661140	PLUG, TAPER		1	1			
7	MS471104	BUSHING, KNOCK		4	4			
8	MS471105	BUSHING, KNOCK		2	2			
9	MS471110	BUSHING, KNOCK		1	1			
10	MF665511	PLUG, EXPANSION		1	1			
11	MF472404	PIN, DOWEL		1	1			
12	MM409645	PIN, DOWEL		2	2			
13	31A23-00051	SHAFT ASSY, IDLER		1	1			
01	F8000-08000	BALL, STEEL		1	1			
02	*	SHAFT, IDLER		1	1			
14	31A07-12200	SEAL, SIDE		4	4			
15	30L07-00700	SHAFT, OIL FILTER		1	1			
16	F2846-05000	PIN, DOWEL		2	2			
17	MD024256	PLUG, TAPER		1	1			
18	31A07-02500	STUD		2	2			
19	F1035-12025	BOLT		4	4			

https://truckmanualshub.com/

CRANKCASE

FIG. 07-02

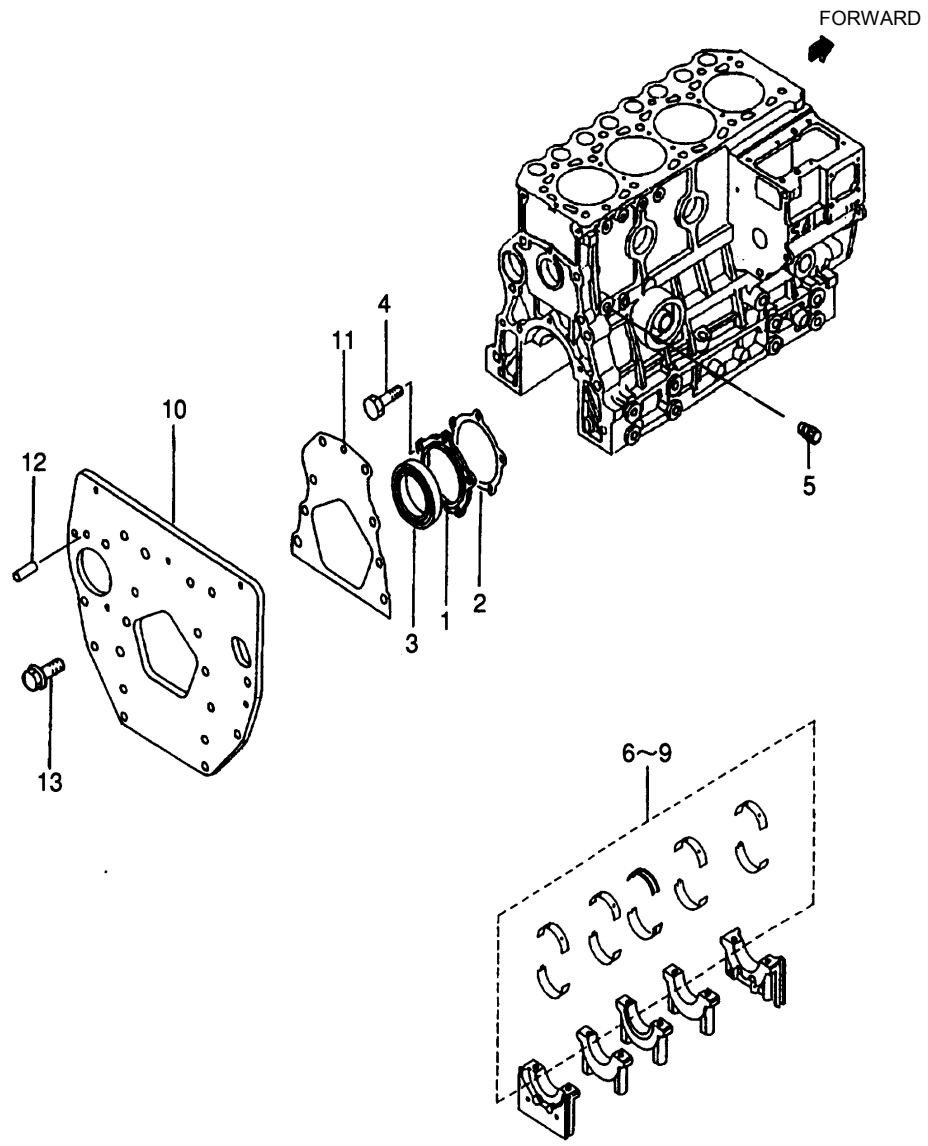

https://truckmanualshub.com/

CRANKCASE

A-i28 / B-i36

FIG. 07-02

NO.	PART NO.	PART NAME & DESCRIPTION		QTY			APP.NO	REM.
				A	B	C		
1	31A07-11601	CASE, OIL SEAL		1	1			
2	31A07-11701	GASKET, OIL SEAL CASE		1	1			
3	31A07-02300	SEAL, OIL		1	1			
4	F1035-08020	BOLT		5	5			
5	MD000269	PLUG, TAPER		1	1			
6	MM437313	METAL SET	STD	1	1			
7	MM437884	METAL SET	U.S 0.25	1	1			
8	MM437885	METAL SET	U.S 0.50	1	1			
9	MM437886	METAL SET	U.S 0.75	1	1			
10	31A07-04500	PLATE, REAR		1	1			
11	31A07-02401	GASKET, REAR		1	1			
12	MM408245	PIN, KNOCK		2	2			
13	31A08-04101	BOLT, FLANGE		10	10			

https://truckmanualshub.com/

TIMING GEAR CASE

FIG. 11

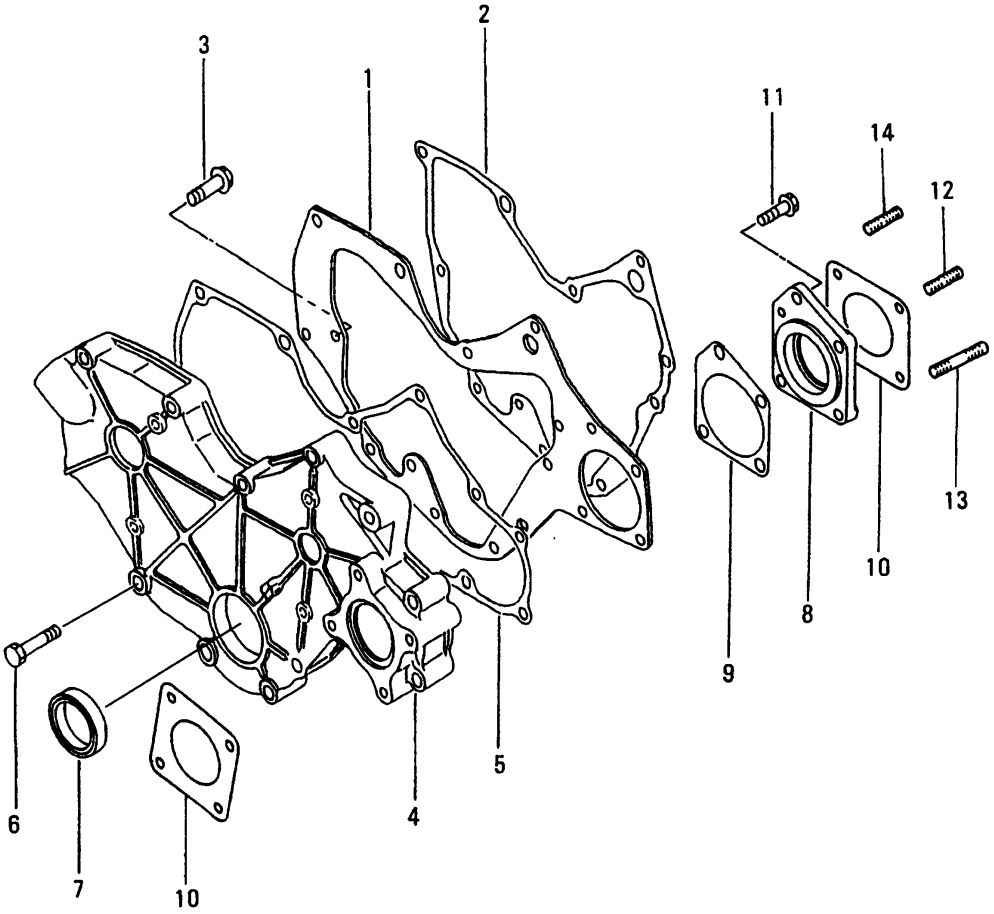

https://truckmanualshub.com/

TIMING GEAR CASE

A-i28 / B-i36

FIG. 11

NO.	PART NO.	PART NAME & DESCRIPTION		QTY A	QTY B	QTY C	APP.NO	REM.
1	31A11-02100	PLATE, FRONT		1	1			
2	31A07-11901	GASKET, FRONT PLATE		1	1			
3	F1805-08016	BOLT, W/WASHER		5	5			
4	31A11-00800	CASE, GEAR PTO		1	1			
5	31A11-11101	GASKET, GEAR		1	1			
6	F1035-08045	BOLT		8	8			
7	MD008762	SEAL, OIL		1	1			
8	31A11-05101	HOUSING, GEAR		1	1			
9	31A11-05201	GASKET, HOUSING		1	1			
10	MM401-20601	GASKET, O/PUMP COVER		2	2			
11	F1805-08030	BOLT, W/WASHER		1	1			
12	MF401936	STUD(8X25)		1	1			
13	MS401335	STUD(8X45)		1	1			
14	MF401935	STUD(8X22)		2	2			

https://truckmanualshub.com/

OIL PAN

FIG. 13

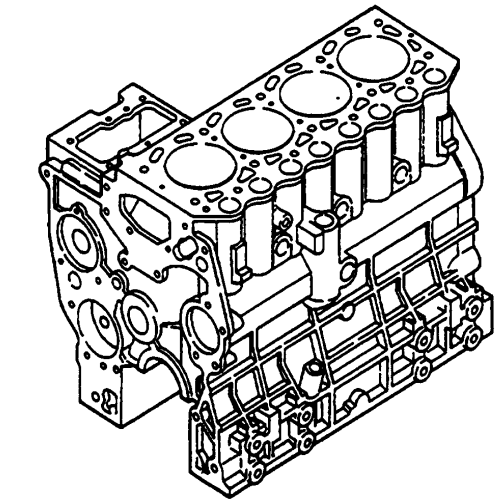

FORWARD

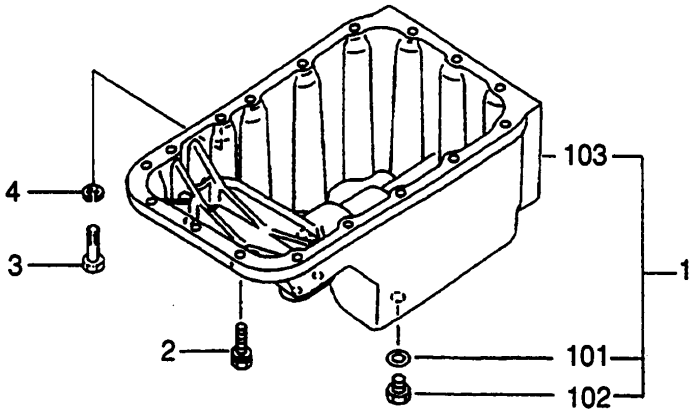

https://truckmanualshub.com/

OIL PAN

A-i28 / B-i36

FIG. 13

NO.	PART NO.	PART NAME & DESCRIPTION		QTY A	QTY B	QTY C	APP.NO	REM.
1	31A13-02020	PAN ASSY, OIL		1	1			
01	MF660065	GASKET, OIL DRAIN		2	2			
02	MF665004	PLUG, DRAIN		2	2			
03	*	PAN, OIL		1	1			
2	31A13-04101	BOLT, W/WASHER		16	16			
3	F1035-08040	BOLT		1	1			
4	F2515-08000	WASHER, SPRING		1	1			

https://truckmanualshub.com/

MAIN MOVING PARTS

FIG. 17

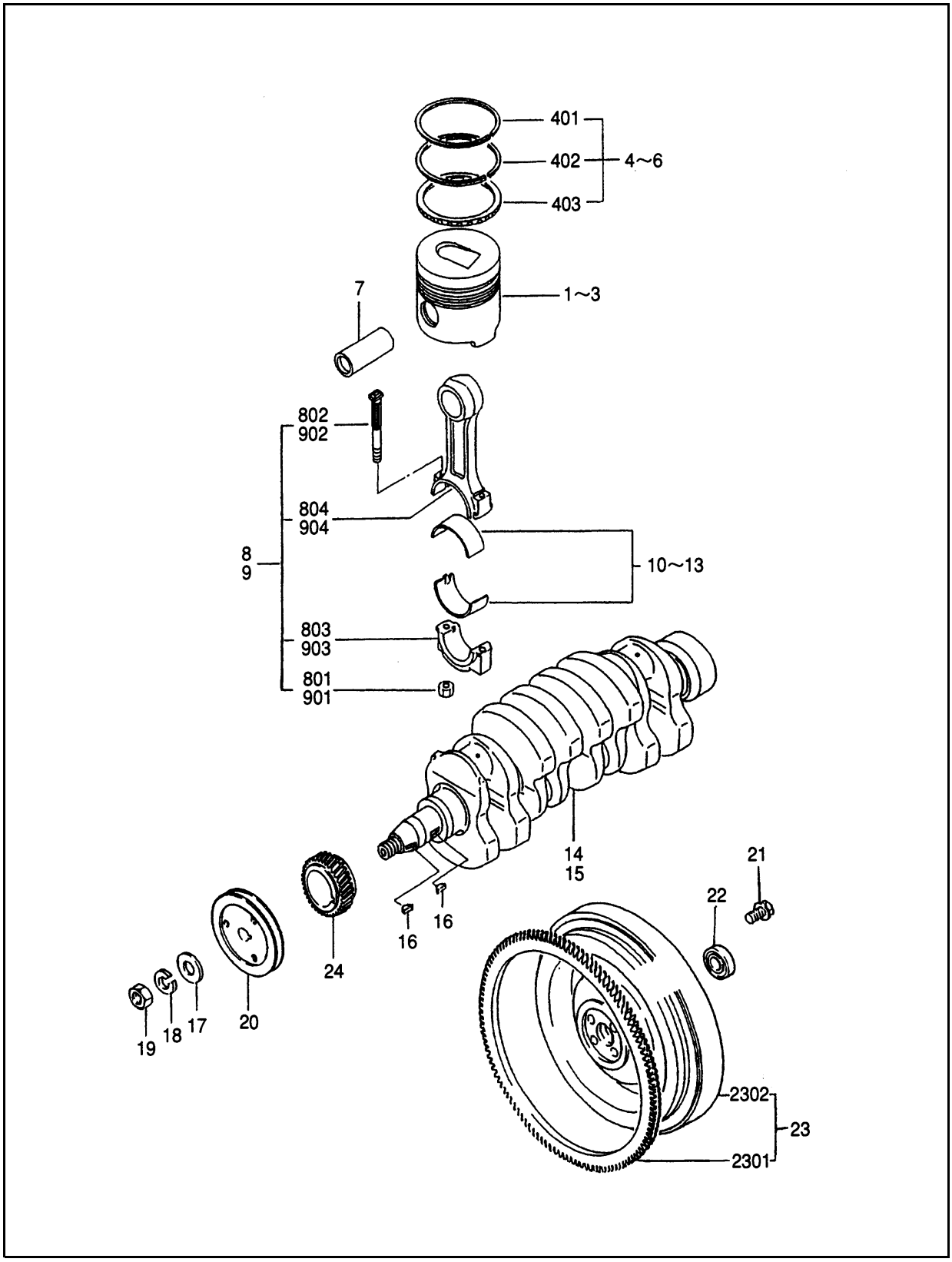

https://truckmanualshub.com/

MAIN MOVING PARTS

A-i28 / B-i36

FIG. 17

NO.	PART NO.	PART NAME & DESCRIPTION		QTY A	QTY B	QTY C	APP.NO	REM.
1	31A17-11100	PISTON	STD	4	4			
2	31A17-11200	PISTON	O.S 0.25	4	4			
3	31A17-11300	PISTON	O.S 0.50	4	4			
4	MM433921	RING SET, PISTON	STD	4	4			
01	*	RING, PISTON NO.1		4	4			
02	*	RING, PISTON NO.2		4	4			
03	*	RING ASSY, OIL		4	4			
5	MM433922	RING SET, PISTON	O.S 0.25	4	4			
6	MM433923	RING SET, PISTON	O.S 0.50	4	4			
7	31A17-10600	PIN, PISTON		4	4			
8	31A19-10021	ROD ASSY, CONNECTING		4	*			
01	MD006704	NUT, CONNECTING ROD		8	*			
02	MD021105	BOLT, CONNECTING ROD		8	*			
03	*	CAP, CONNECTING ROD		4	*			
04	*	ROD, CONNECTING		4	*			
9	31A19-01021	ROD ASSY, CONNECTING		*	4			
01	MD006704	NUT, CONNECTING ROD		*	8			
02	MD021105	BOLT, CONNECTING ROD		*	8			
03	*	CAP, CONNECTING ROD		*	4			
04	*	ROD, CONNECTING		*	4			
10	MM437305	METAL SET, CON-ROD	STD	4	4			
11	30A19-00010	METAL SET, CON-ROD	U.S 0.25	4	4			
12	30A19-00020	METAL SET, CON-ROD	U.S 0.50	4	4			
13	30A19-00030	METAL SET, CON-ROD	U.S 0.75	4	4			
14	31A20-00102	CRANKSHAFT		1	*			
15	31A20-00200	CRANKSHAFT		*	1			
16	MF476215	KEY, WOODRUFF		2	2			
17	MF450010	WASHER, PLAIN		1	1			
18	MF450410	WASHER,SPRING		1	1			
19	MF430126	NUT		1	1			
20	31A20-22100	PULLEY, CRANKSHAFT		1	1			
21	MD952231	BOLT, DRIVE PLATE		4	4			
22	MD002613	BEARING, BALL		1	1			
23	31A21-01070	FLYWHEEL SUB ASSY		1	1			
01	MD024812	GEAR, RING		1	1			
02	*	FLYWHEEL		1	1			
24	31A23-01302	GEAR, CRANKSHAFT		1	1			

https://truckmanualshub.com/

TIMING GEAR

FIG. 23

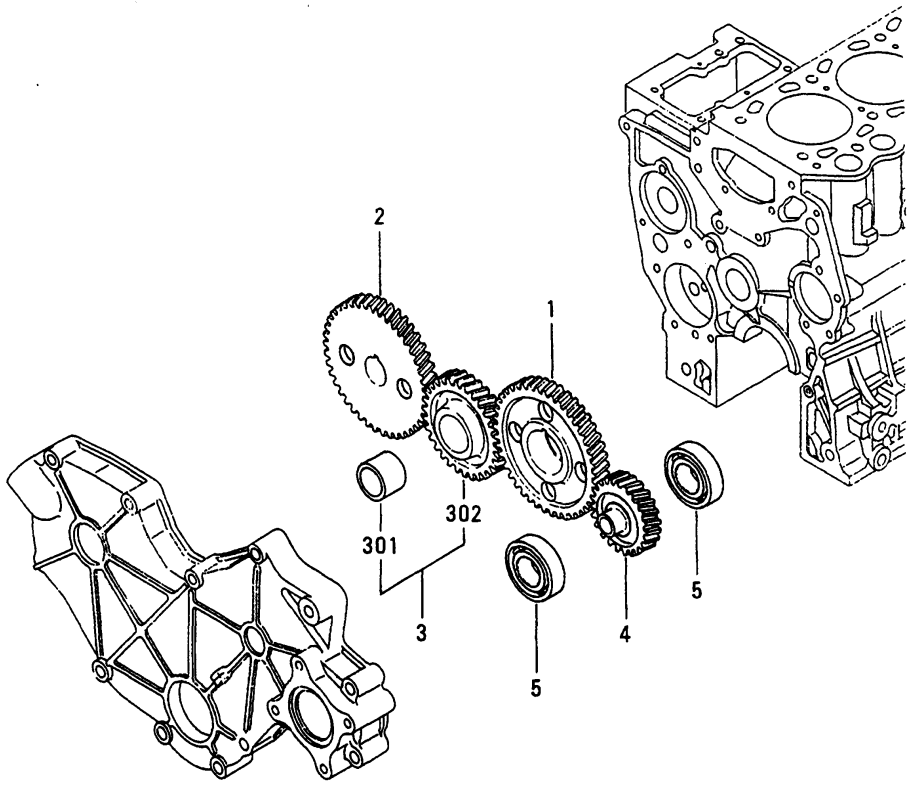

https://truckmanualshub.com/

TIMING GEAR

A-i28 / B-i36

FIG. 23

NO.	PART NO.	PART NAME & DESCRIPTION		QTY			APP.NO	REM.
				A	B	C		
1	31A23-01404	GEAR, CAMSHAFT	STD	1	1			
2	31A23-10101	GER, INJECTION PUMP	O.S 0.25	1	1			
3	31A23-01023	GEAR ASSY, IDLER	O.S 0.50	1	1			
01	*	BUSHING, IDLER GEAR		1	1			
02	*	GEAR, IDLER		1	1			
4	31A23-01502	GEAR, PRESS OIL PUMP		1	1			
5	MD712517	BEARING, REAR		2	2			

https://truckmanualshub.com/

INLET & EXHAUST MANIFOLD

FIG. 30

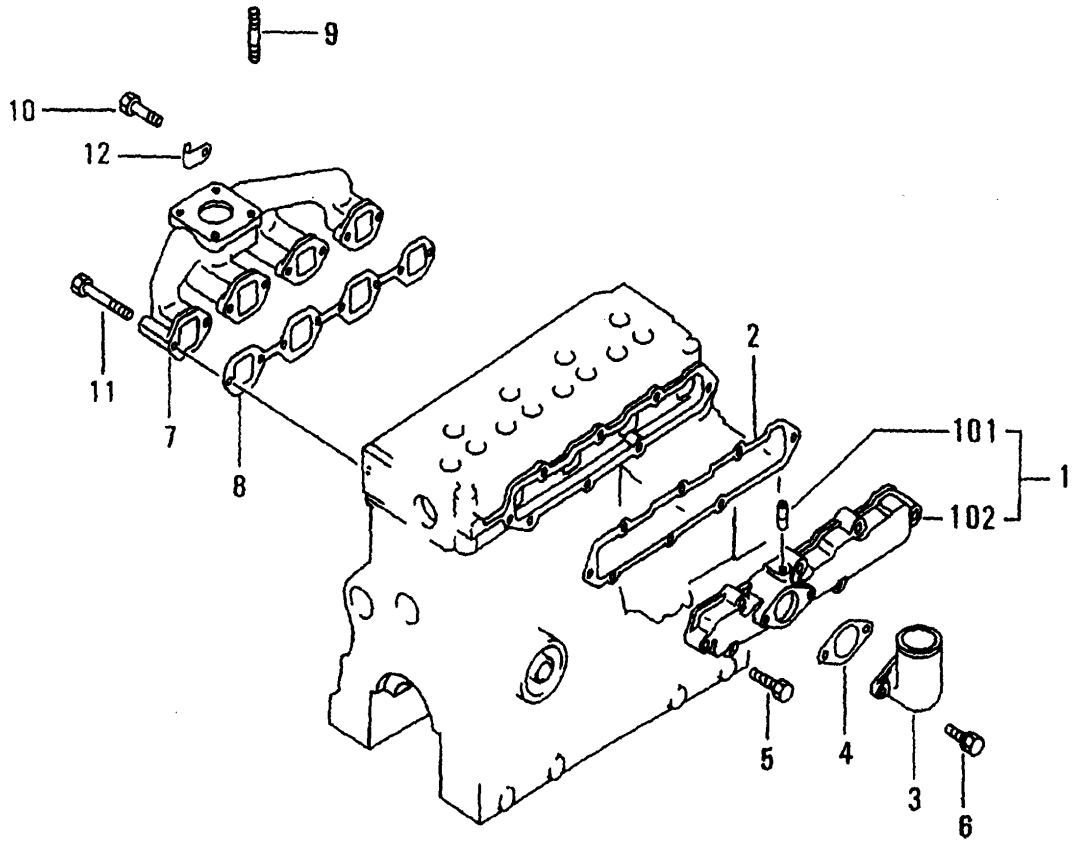

https://truckmanualshub.com/

INLET & EXHAUST MANIFOLD

A-i28 / B-i36

FIG. 30

NO.	PART NO.	PART NAME & DESCRIPTION		QTY A	QTY B	QTY C	APP.NO	REM.
1	31A30-20010	COVER ASSY, INLET		1	1			
01	*	PIPE		1	1			
02	*	COVER, INLET		1	1			
2	31A30-10902	GASKET, INLET COVER		1	1			
3	31A30-00300	PIPE, INLET		1	1			
4	31A30-00801	GASKET, INLET PIPE		1	1			
5	F1805-08035	BOLT, W/WASHER		8	8			
6	F1805-08020	BOLT, W/WASHER		2	2			
7	31A32-00402	MANIFOLD ASSY, EXH		1	1			
8	31A32-01200	GASKET, EXHAUST		1	1			
9	MF401936	STUD(8X25)		4	4			
10	F1035-08020	BOLT		6	6			
11	F1035-08055	BOLT		2	2			
12	31A32-02100	CLAMP		1	1			

https://truckmanualshub.com/

OIL PUMP

FIG. 35

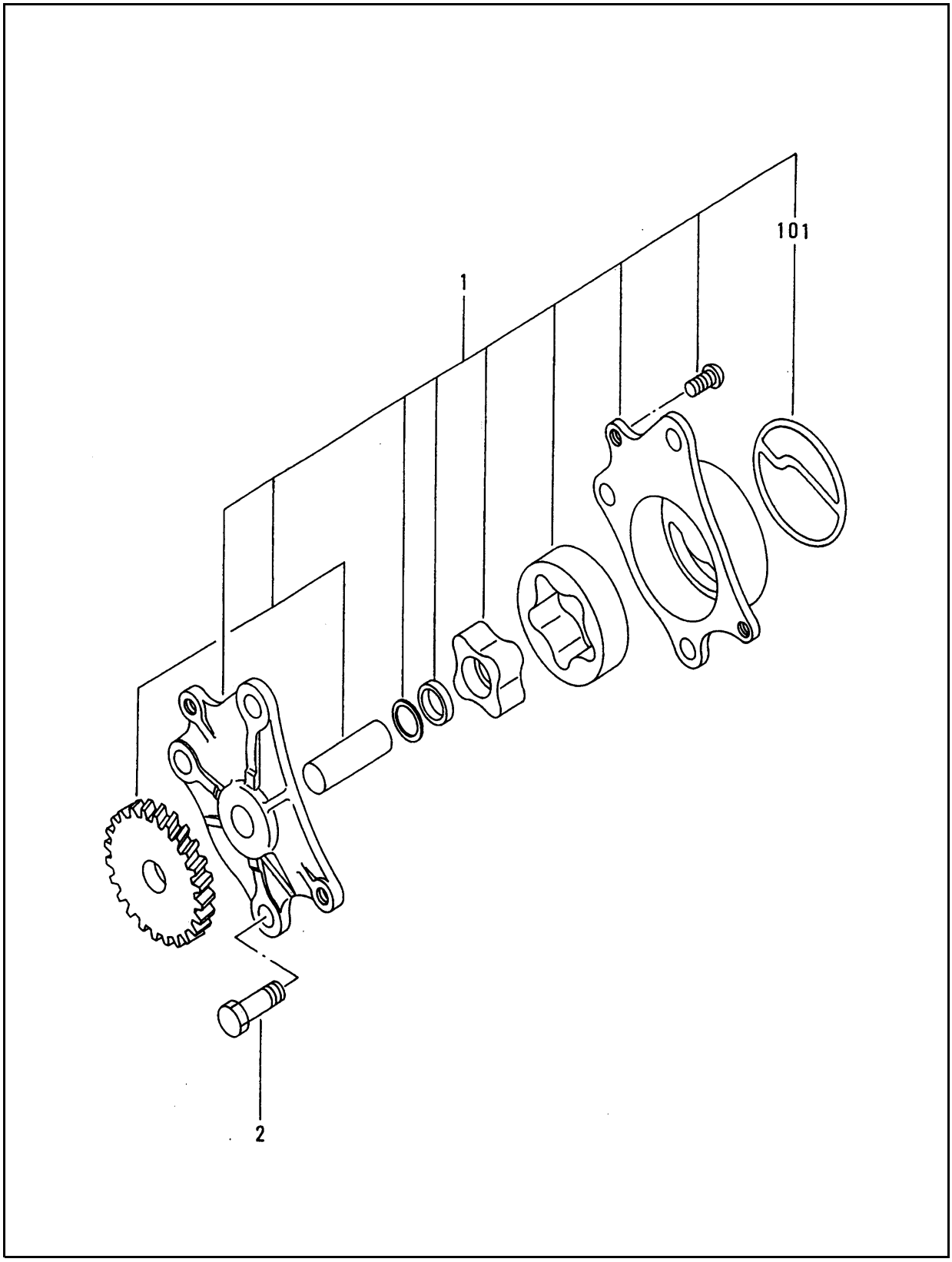

https://truckmanualshub.com/

OIL PUMP

A-i28 / B-i36

FIG. 35

NO.	PART NO.	PART NAME & DESCRIPTION		QTY			APP.NO	REM.
				A	B	C		
1	31A35-30010	PUMP ASSY, OIL		1	1			
01	31A35-02300	PACKING, BODY		1	1			
2	F1035-08022	BOLT		3	3			

https://truckmanualshub.com/

OIL SYSTEM

FIG. 36

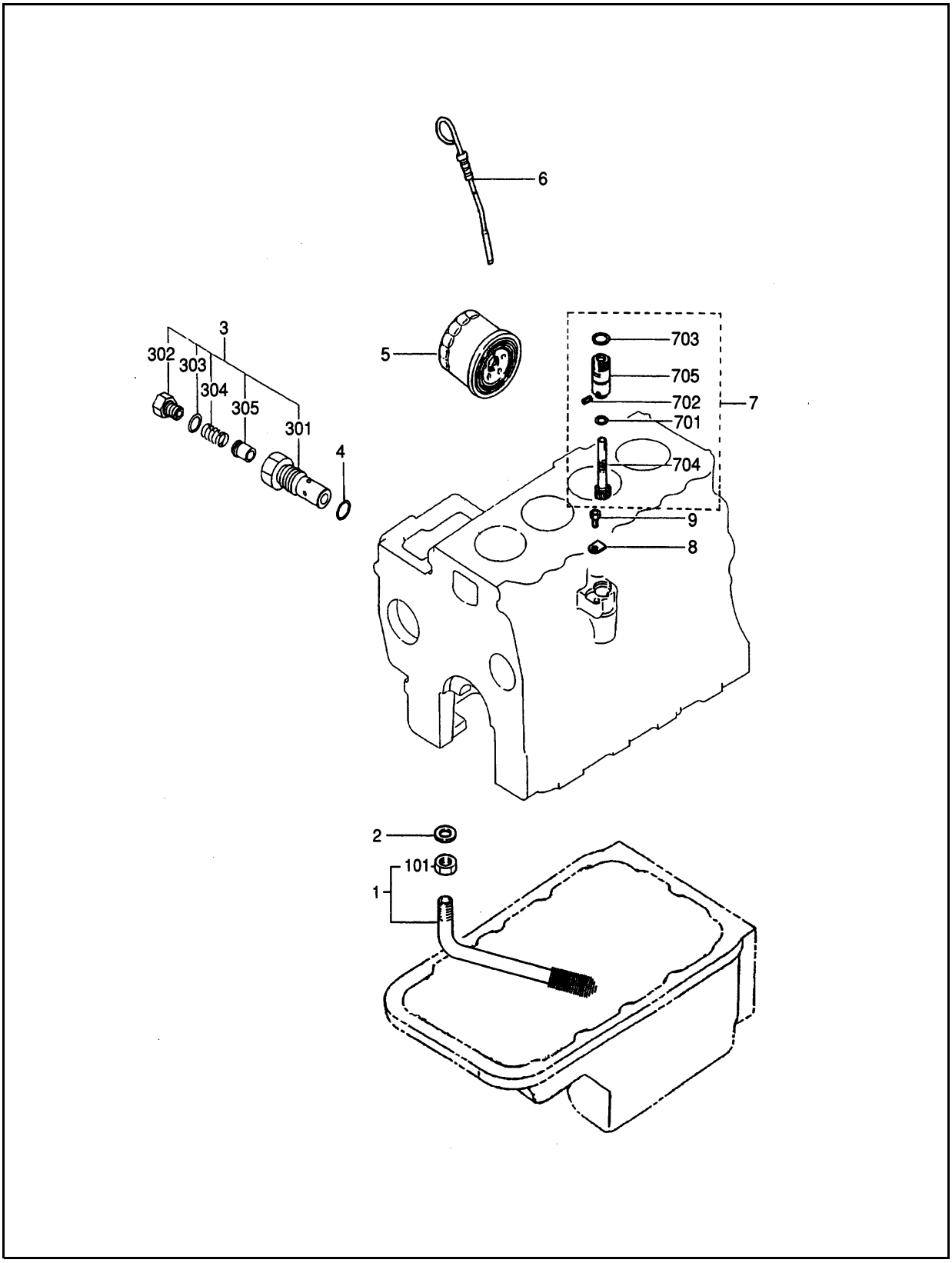

https://truckmanualshub.com/

OIL SYSTEM

A-i28 / B-i36

FIG. 36

NO.	PART NO.	PART NAME & DESCRIPTION		QTY A	QTY B	QTY C	APP.NO	REM.
1	31A35-05050	STRAINER ASSY		1	1			
01	MF430729	NUT, JAM		1	1			
2	MF660036	GASKET		1	1			
3	32A36-05011	VALVE ASSY, RELIEF		1	1			
01	*	HOUSING, VALVE		1	1			
02	*	PLUG		1	1			
03	*	GASKET		1	1			
04	*	SPRING, RELIEF		1	1			
05	*	PLUNGER, RELIEF		1	1			
4	F4202-22000	GASKET		1	1			
5	MD134953	FILTER ASSY, OIL		1	1			
6	31A42-10100	GAGE, OIL LEVEL		1	1			
7	MM430598	DRIVEN UNIT, METER		1	1			
01	MD701788	O-RING		1	1			
02	MF472535	PIN, SPRING		1	1			
03	MF520012	O-RING		1	1			
04	MM407171	GEAR		1	1			
05	MM430419	SLEEVE		1	1			
8	MD701789	PLATE		1	1			
9	F1805-06012	BOLT, W/WASHER		1	1			

https://truckmanualshub.com/

COOLING SYSTEM

FIG. 45

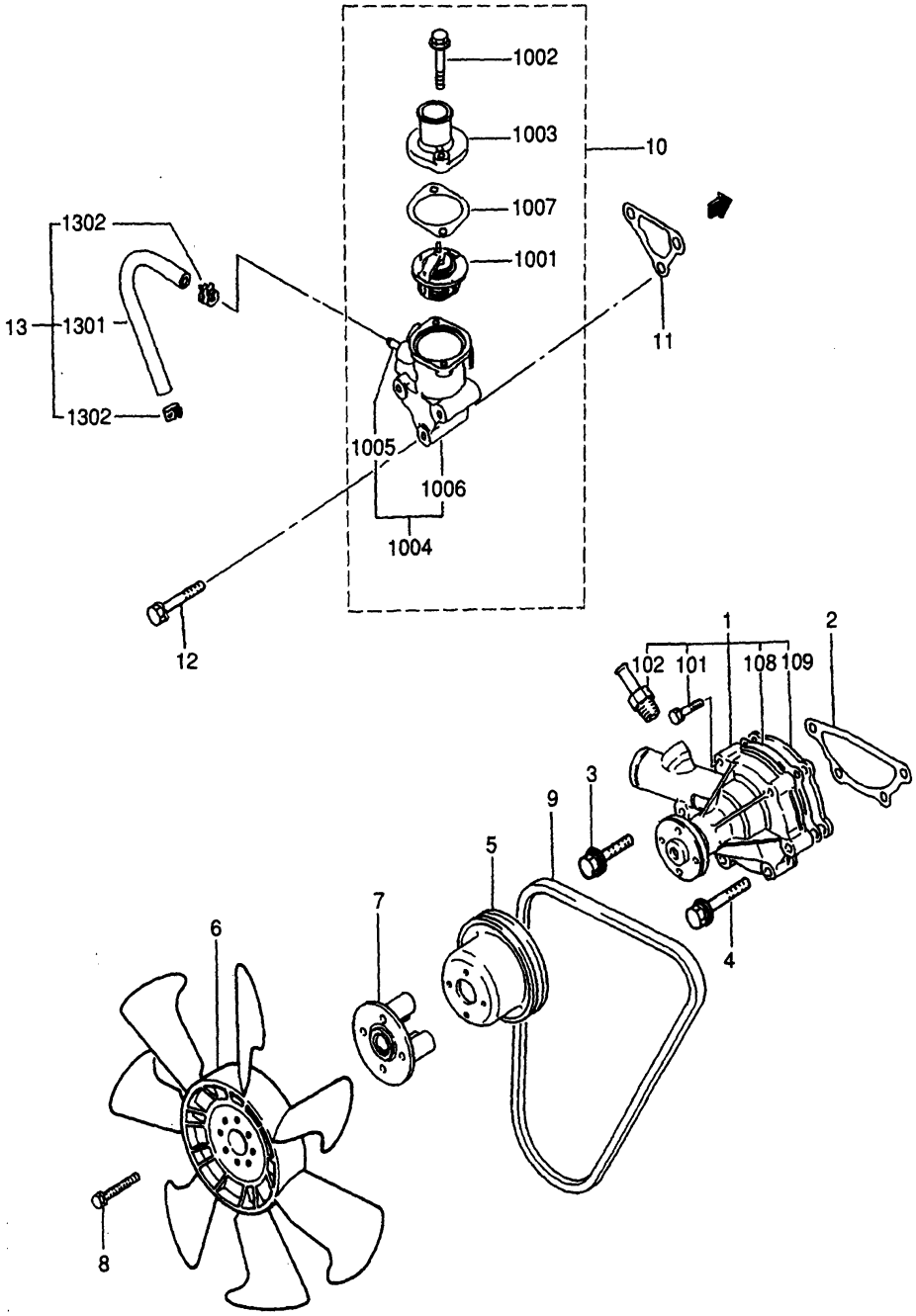

https://truckmanualshub.com/

COOLING SYSTEM

A-i28 / B-i36

FIG. 45

NO.	PART NO.	PART NAME & DESCRIPTION		QTY A	QTY B	QTY C	APP.NO	REM.
1	MM409302	PUMP ASSY, WATER		1	1			
01	F1805-06030	BOLT, W/WASHER		2	2			
02	MM409314	JOINT, WATER PUMP		1	1			
08	MM409326	GASKET, WATER PUMP		1	1			
09	MM409327	PLATE, WATER PUMP		1	1			
2	MM407-42202	GASKET, WATER PUMP		1	1			
3	F1825-08045	BOLT, W/WASHER		3	3			
4	F1825-08060	BOLT, W/WASHER		1	1			
5	31A45-20700	PULLEY, W/PUMP 89		1	1			
6	30H48-00200	FAN, COOLING		1	1			
7	31A48-01100	SPACER, FAN		2	2			
8	MF241242	BOLT, W/WASHER		4	4			
9	MD041704	V-BELT		1	1			
10	31A46-01060	THERMOSTAT ASSY		1	1			
01	MD001370	THERMOSTAT		1	1			
02	MF140227	BOLT, FLANGE		2	2			
03	MM409-31301	COVER, THERMOSTAT		1	1			
04	31A46-00062	CASE ASSY, THERMOSTAT		1	1			
05	*	PIPE, THERMOSTAT		1	1			
06	*	CASE, THERMOSTAT		1	1			
07	31A46-01200	GASKET, THERMOSTAT		1	1			
11	31A46-10101	GASKET, THERMO CASE		1	1			
12	F1805-08065	BOLT, W/WASHER		3	3			
13	MM413196	HOSE ASSY		1	1			
01	MS603014	HOSE		1	1			
02	MS660164	CLIP		2	2			

https://truckmanualshub.com/

FUEL SYSTEM

FIG. 61-01

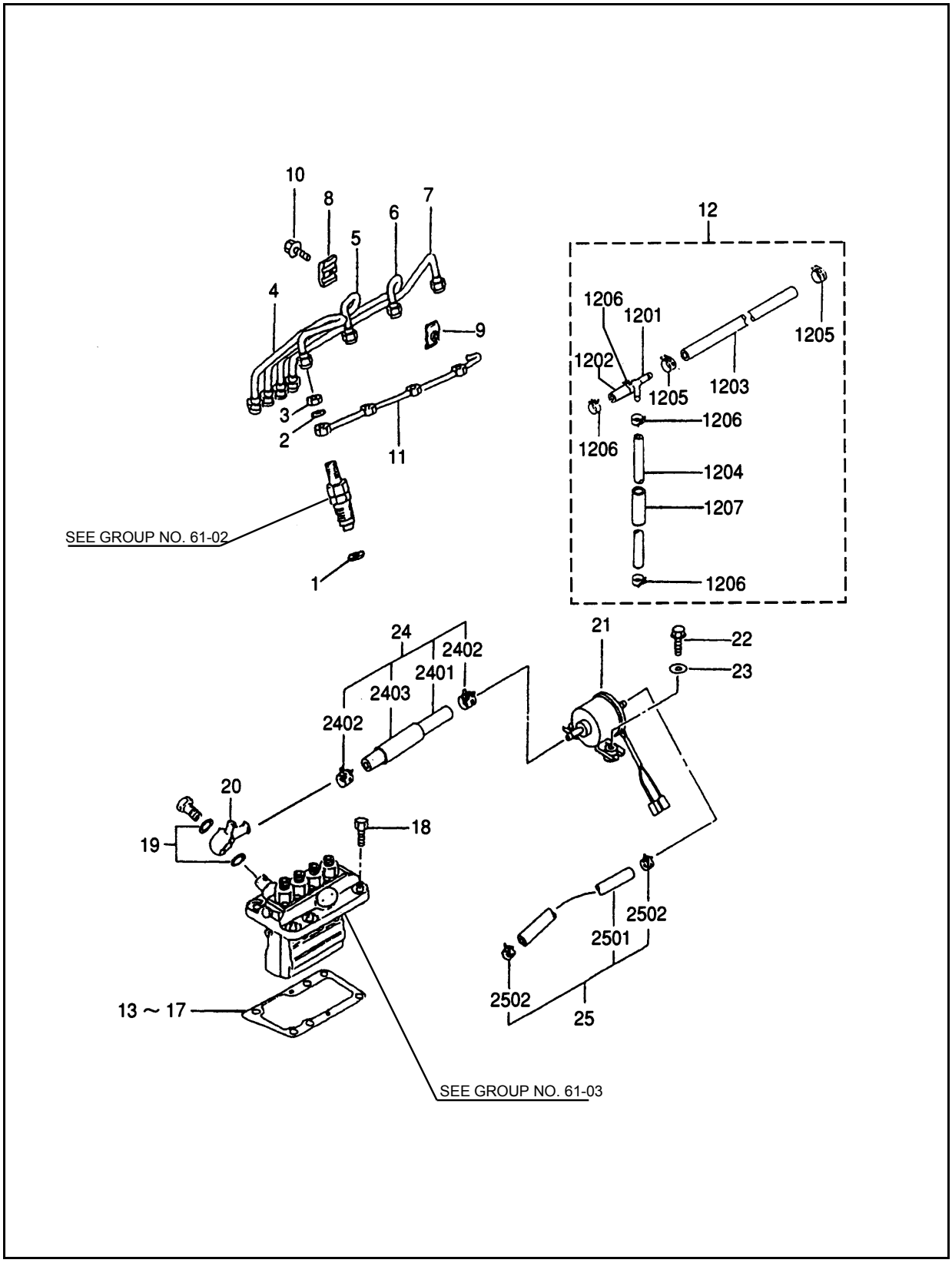

https://truckmanualshub.com/

FUEL SYSTEM

A-i28 / B-i36

FIG. 61-01

NO.	PART NO.	PART NAME & DESCRIPTION		QTY A	QTY B	QTY C	APP.NO	REM.
1	MD070717	GASKET, HOLDER		4	4			
2	MD068355	GASKET, FUEL RETURN		4	4			
3	MD068353	NUT		4	4			
4	31A61-04100	PIPE, INJECTION NO.1		1	1			
5	31A61-04200	PIPE, INJECTION NO.2		1	1			
6	31A61-04300	PIPE, INJECTION NO.3		1	1			
7	31A61-04400	PIPE, INJECTION NO.4		1	1			
8	MM430703	CLAMP (A)		3	3			
9	MM430614	CLAMP (B)		3	3			
10	F1825-06025	BOLT, W/WASHER		3	3			
11	31A61-12600	PIPE, FUEL LEAK OFF		1	1			
12	31A61-03200	HOSE ASSY, AIR VENT		1	1			
01	MM400886	JOINT		1	1			
02	MM430130	HOSE, FUEL		1	1			
03	MS602063	HOSE, FUEL		1	1			
04	MS604043	HOSE, FUEL		1	1			
05	MS660163	CLIP		2	2			
06	MS660169	CLIP		4	4			
07	31A61-01200	HOSE, RUBBER		1	1			
13	MM409036	SHIM	T=0.7	1	1			
14	MM409037	SHIM	T=0.8	1	1			
15	MM409038	SHIM	T=0.9	1	1			
16	MM409039	SHIM	T=1.0	1	1			
17	MM409031	SHIM	T=0.2	1	1			
18	F1035-08020	BOLT		6	6			
19	MK661-14000	WASHER, SEAL		2	2			
20	MM437140	COLOR, UNION		1	1			
21	MM436739	PUMP ASSY, FUEL		1	1			
22	F1805-06025	BOLT, W/WASHER		2	2			
23	MD107589	WASHER		2	2			
24	31A61-05102	HOSE ASSY, FUEL		1	1			
01	MS602035	HOSE, FUEL		1	1			
02	MS660163	CLIP		2	2			
03	31A61-01300	HOSE, RUBBER		1	1			
25	MM413205	HOSE ASSY, FUEL		1	1			
01	MS602063	HOSE, FUEL		1	1			
02	MS660163	CLIP		2	2			

https://truckmanualshub.com/

NOZZLE & NOZZLE HOLDER

FIG. 61-02

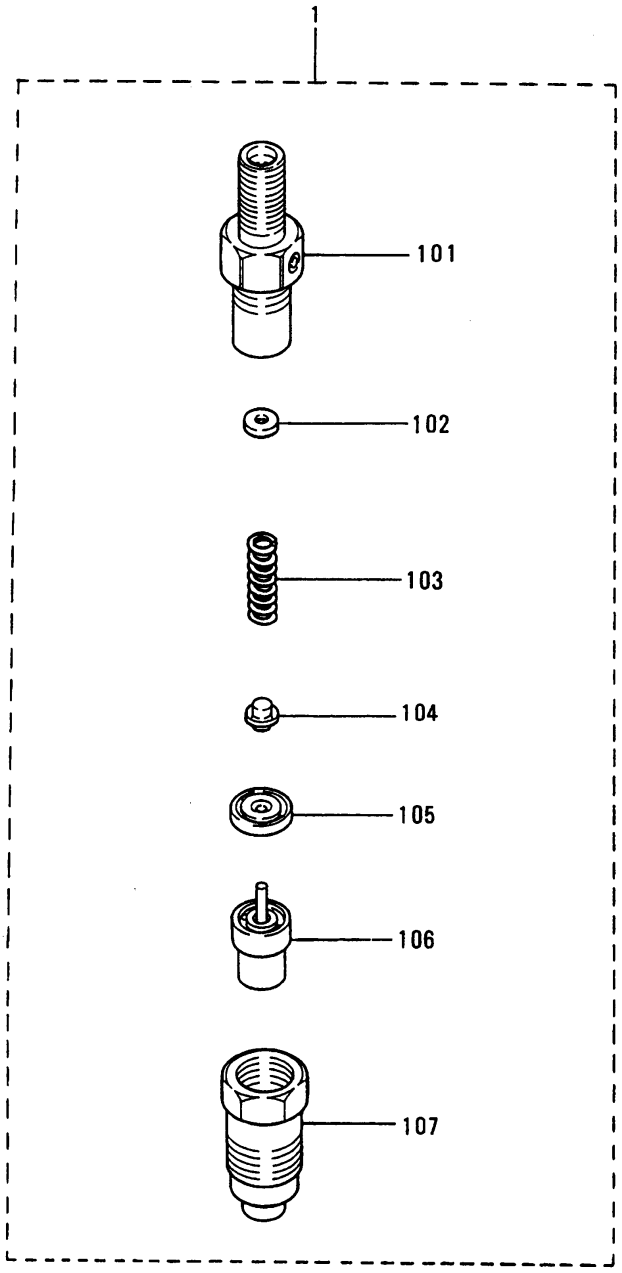

https://truckmanualshub.com/

NOZZLE & NOZZLE HOLDER

A-i28 / B-i36

FIG. 61-02

NO.	PART NO.	PART NAME & DESCRIPTION		QTY A	QTY B	QTY C	APP.NO	REM.
1	MM435-94101	NOZZLE & HOLDER ASSY	093500-3840 DEN	4	4			
01	09311-03840	BODY SUB ASSY	MM514048	4	4			
02	09317-51810	WASHER	MD603490	AR	AR			
	09317-51830	WASHER	MD603491	AR	AR			
	09317-51850	WASHER	MD603492	AR	AR			
	09317-51870	WASHER	MD603493	AR	AR			
	09317-51890	WASHER	MD603494	AR	AR			
	09317-51910	WASHER	MD603495	AR	AR			
	09317-51930	WASHER	MD603496	AR	AR			
	09317-51950	WASHER	MD603497	AR	AR			
	09317-51970	WASHER	MD603498	AR	AR			
	09317-51990	WASHER	MD603499	AR	AR			
03	09312-70310	SPRING, PRESSURE	MM514047	4	4			
04	09312-10380	PIN, PRESSURE	MM501838	4	4			
05	09317-40070	PIECE, DISTANCE	MM501841	4	4			
06	09340-05060	NOZZLE ASSY	MD603660	4	4			
07	09316-41351	NUT, NOZZLE RETAINING	MM514380	4	4			

https://truckmanualshub.com/

INJECTION PUMP

FIG. 61-03-01

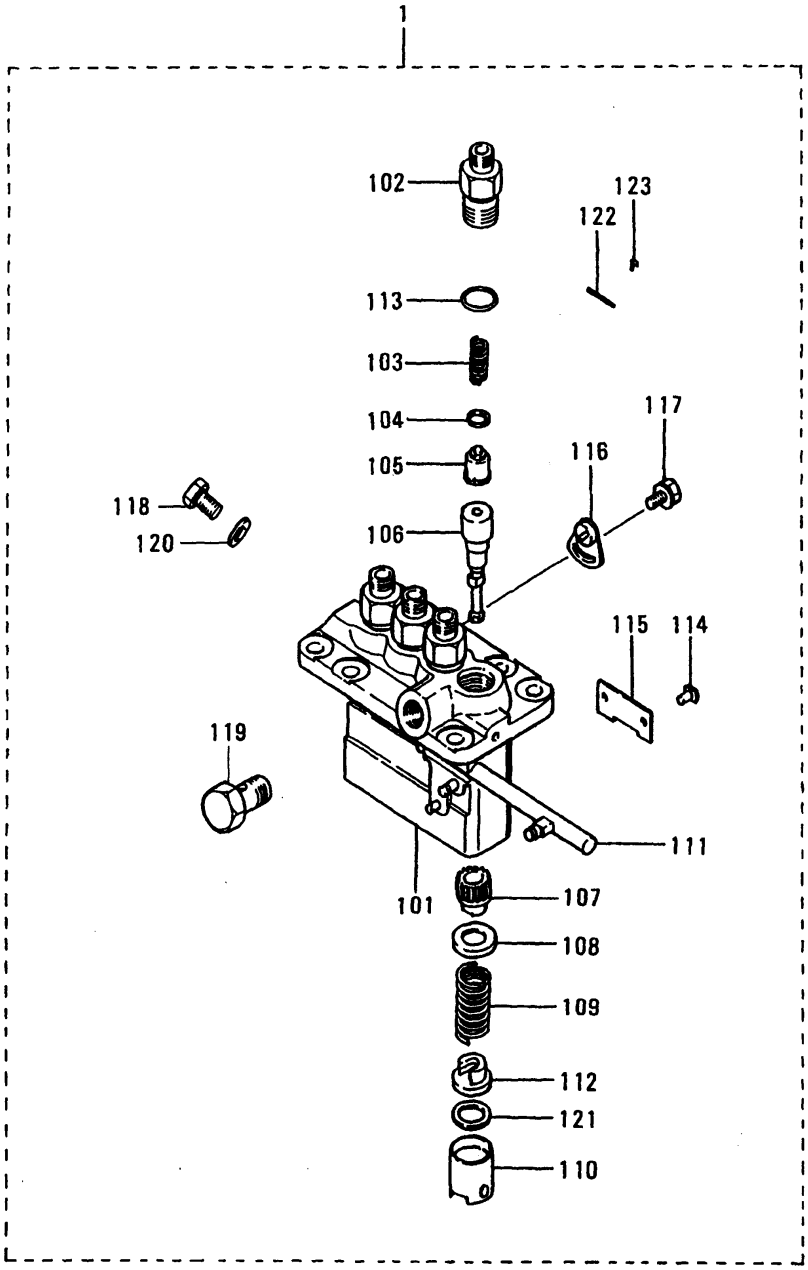

https://truckmanualshub.com/

INJECTION PUMP

A-i28 / B-i36

FIG. 61-03-01

NO.	PART NO.	PART NAME & DESCRIPTION		QTY A	QTY B	QTY C	APP.NO	REM.
1	31A65-20041	PUMP ASSY, FUEL INJ.	094500-6510 DEN	1	*			
	31A65-21040	PUMP ASSY, FUEL INJ.	094500-6444 NDC	*	1			
01	09011-05070	HOUSING SUB ASSY	47X01-04200	1	1			
02	09013-10520	HOLDER, DELIVERY	MM501507	4	4			
03	09013-60640	SPRING, DELIVERY	MM501385	4	4			
04	09013-70130	GASKET, DELIVERY	MM501856	4	4			
05	09014-02500	VALVE SUB ASSY	47X01-04300	4	*			
	09014-02610	VALVE SUB ASSY	47X01-07700	*	4			
06	09015-05450	ELEMENT SUB ASSY	47X01-04400	4	4			
07	09016-10210	SLEEVE, CONTROL	MM500229	4	4			
08	09016-30082	SEAT, SPRING UPPER	MM501098	4	4			
09	09016-40170	SPRING, PLUNGER	MM500360	4	4			
10	09017-00170	TAPPET SUB ASSY	MM500230	4	4			
11	09021-00440	RACK ASSY, CONTROL	MM501255	1	1			
12	09030-10060	SEAT, SPRING LOWER	MM500316	4	4			
13	90802-20150	O-RING	MM500438	4	4			
14	09018-30050	PIN, TAPPET GUIDE	MM500231	4	4			
15	09046-70030	PLATE	MM500232	2	2			
16	09006-80020	PLATE, ADJUSTING	MM514109	3	3			
17	94904-80800	BOLT, WASHER HEAD	MM514195	3	3			
18	09024-40180	SCREW, AIR BLEEDER	MM501152	1	1			
19	94918-00310	SCREW, HOLLOW	MM500100	1	1			
20	94901-81020	WASHER, PLATE	MM500578	1	1			
21	*	PLATE, SHIM		AR	AR			
22	09450-36510	PLATE, NAME	47X01-06300	1	*			
	09450-36444	PLATE, NAME	47X01-05700	*	1			
23	94903-00030	RIVET	MM500429	2	2			

https://truckmanualshub.com/

FUEL FILTER

FIG. 62

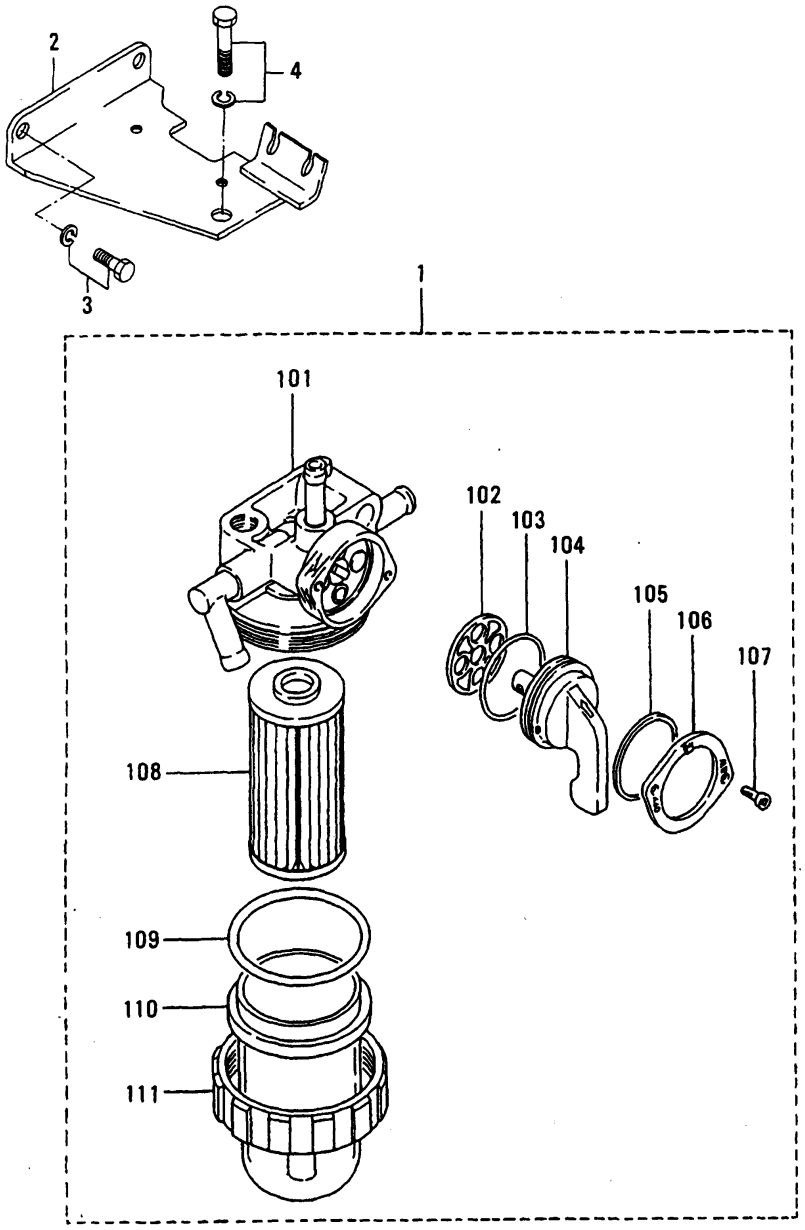

https://truckmanualshub.com/

FUEL FILTER

A-i28 / B-i36

FIG. 62

NO.	PART NO.	PART NAME & DESCRIPTION		QTY			APP.NO	REM.
				A	B	C		
1	MM438739	FILTER ASSY, FUEL	094500-6510 DEN	1	1			
01	MM438743	BODY	094500-6444 NDC	1	1			
02	MM438748	PACKING, VALVE	47X01-04200	1	1			
03	MM409866	O-RING, VALVE	MM501507	1	1			
04	MM438747	LEVER	MM501385	1	1			
05	MM409864	WASHER, WAVE	MM501856	1	1			
06	MM409865	PLATE, LEVER	47X01-04300	1	1			
07	MF200003	SCREW	47X01-07700	2	2			
08	MM320886	ELEMENT	47X01-04400	1	1			
09	MM409869	O-RING, FILTER CUP	MM500229	1	1			
10	MM320881	CUP, FILTER	MM501098	1	1			
11	MM409868	NUT, RING	MM500360	1	1			
2	31A62-21100	BRACKET, FUEL FILTER	MM500230	1	1			
3	F1805-08016	BOLT, W/WASHER	MM501255	2	2			
4	F1805-10020	BOLT, W/WASHER	MM500316	1	1			

https://truckmanualshub.com/

GOVERNOR

FIG. 63-01

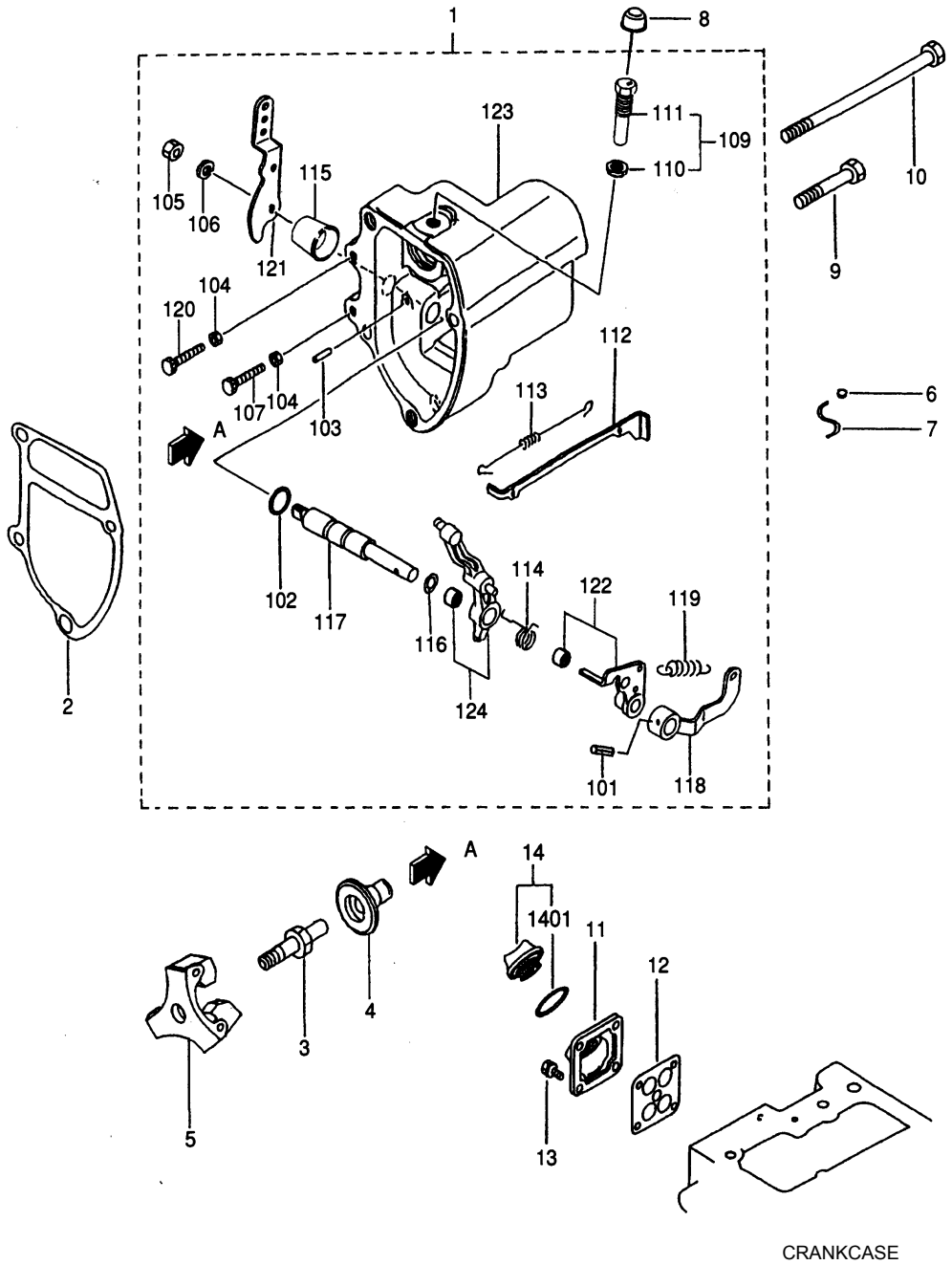

https://truckmanualshub.com/

GOVERNOR

FIG. 63-01

NO.	PART NO.	PART NAME & DESCRIPTION		QTY A	QTY B	QTY C	APP.NO	REM.
1	31A63-55021	CASE ASSY, GOVERNOR		1				
01	F2850-03020	PIN, SPRING		1				
02	F3150-01010	O-RING		1				
03	K8712630	PIN, GROOVED		1				
04	MF430004	NUT		2				
05	MF430725	NUT, JAM		1				
06	MF450405	WASHER, SPRING		1				
07	MM331-31701	BOLT, SPEED SET		1				
09	30L63-00020	SCREW ASSY, RACK SET		1				
10	30L63-00600	NUT, TORQUE SET		1				
11	31A63-05601	SCREW, RACK SET		1				
12	31A63-00400	TIE-ROD		1				
13	31A63-00500	SPRING, TIE-ROD		1				
14	31A63-01400	SPRING, START		1				
15	31A63-01800	COVER, GOVERNOR		1				
16	31A63-02400	SHIM, GOVERNOR SHAFT		1				
17	31A63-02600	SHAFT, GOVERNOR		1				
18	31A63-02700	LEVER, GOV. SPRING		1				
19	31A63-03300	SPRING, GOVERNOR		1				
20	31A63-07900	BOLT, LOW IDLE SET		1				
21	31A63-11301	LEVER, SPEED CONTROL		1				
22	31A63-00071	LEVER ASSY, TENSION		1				
23	31A63-22100	CASE, GOVERNOR		1				
24	31A63-10090	LEVER ASSY, GOVERNOR		1				
2	31A63-12201	GASKET, GOVERNOR CASE		1				
3	31A63-10305	SHAFT, SLIDING SLEEVE		1				
4	31A63-20201	SLEEVE, SLIDING		1				
5	31A63-11061	WEIGHT ASSY, GOVERNOR		1				
6	MK992-00001	METAL		1				
7	MK993-00240	WIRE		1				
8	MM433614	CAP, TORQUE SET		1				
9	F1035-08045	BOLT		3				
10	31A63-02300	BOLT, GOVERNOR CASE		1				
11	MM435288	OIL, INLET		1				
12	MM435249	PROTECTOR, OIL INLET		1				
13	F1805-06018	BOLT, W/WASHER		4				
14	MM300540	CAP ASSY, OIL FILLER		1				
01	MF520402	O-RING		1				

https://truckmanualshub.com/

GOVERNOR

FIG. 63-01

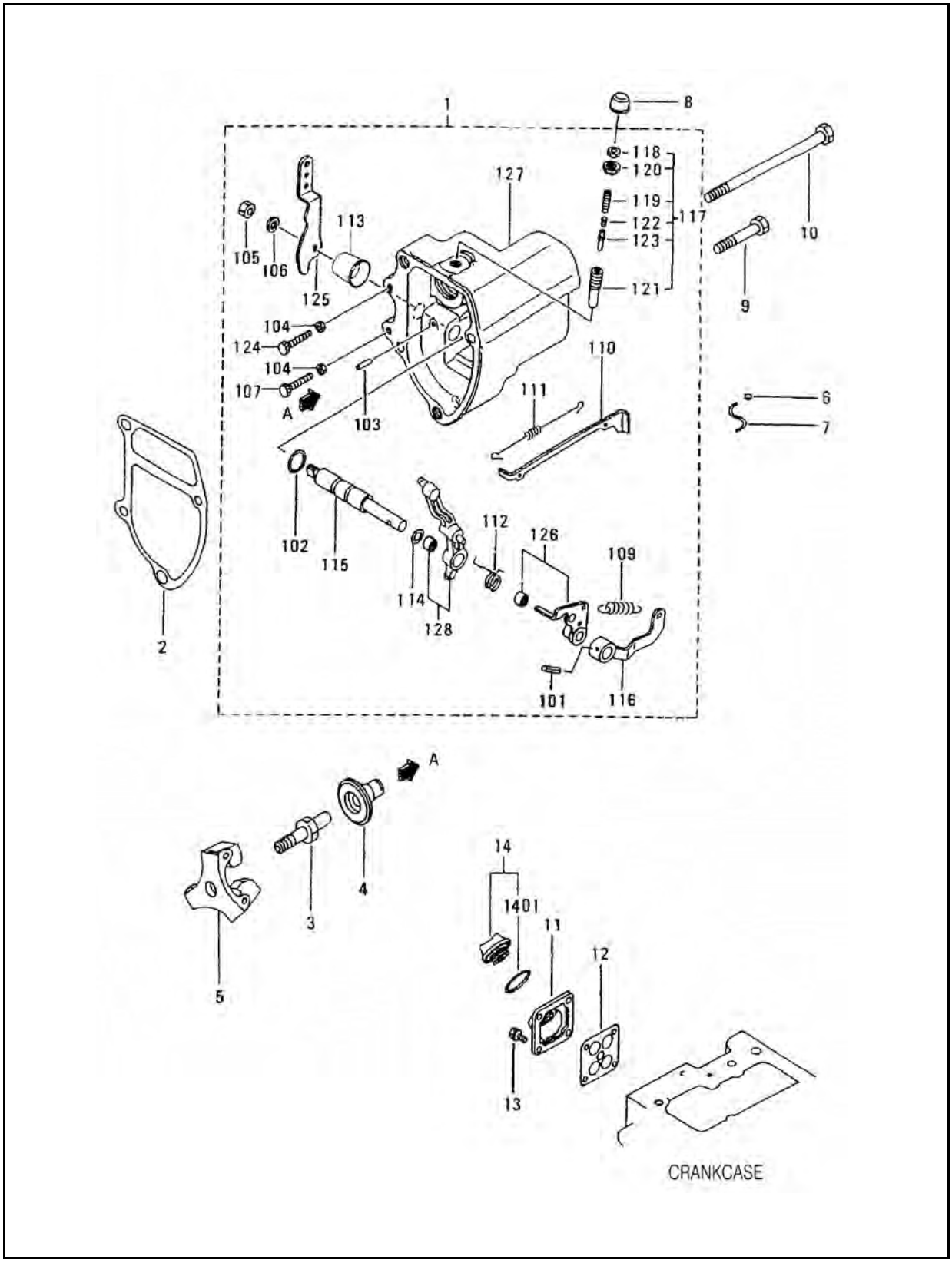

https://truckmanualshub.com/

GOVERNOR

FIG. 63-01

NO.	PART NO.	PART NAME & DESCRIPTION		QTY A	QTY B	QTY C	APP.NO	REM.
1	31A63-09010	CASE ASSY, GOVERNOR		1				
01	F2850-03020	PIN, SPRING		1				
02	F3150-01010	O-RING		1				
03	K8712630	PIN, GROOVED		1				
04	MF430004	NUT		2				
05	MF430725	NUT, JAM		1				
06	MF450405	WASHER, SPRING		1				
07	MM331-31701	BOLT, SPEED SET		1				
09	MM433673	SPRING		1				
10	31A63-00400	TIE-ROD		1				
11	31A63-00500	SPRING, TIE-ROD		1				
12	31A63-01400	SPRING, START		1				
13	31A63-01800	COVER, GOVERNOR		1				
14	31A63-02400	SHIM, GOVERNOR SHAFT		1				
15	31A63-02600	SHAFT, GOVERNOR		1				
16	31A63-02700	LEVER, GOV. SPRING		1				
17	31A63-04040	SPRING SET, TORQUE		1				
18	MD000961	NUT		1				
19	MD019845	SCREW, ADJUSTING		1				
20	MM433233	NUT,SPECIAL		1				
21	MM434542	CASE, TORQUE SPRING		1				
22	MM435203	SPRING, TORQUE		1				
23	31A63-04200	STOPPER, SPRING		1				
24	31A63-07900	BOLT, LOW IDLE SET		1				
25	31A63-11301	LEVER, SPEED CONTROL		1				
26	31A63-00071	LEVER ASSY, TENSION		1				
27	31A63-22100	CASE, GOVERNOR		1				
28	31A63-10090	LEVER ASSY, GOVERNOR		1				
2	31A63-12201	GASKET, GOVERNOR CASE		1				
3	31A63-10305	SHAFT, SLIDING SLEEVE		1				
4	31A63-20201	SLEEVE, SLIDING		1				
5	31A63-11061	WEIGHT ASSY, GOVERNOR		1				
6	MK992-00001	METAL		1				
7	MK993-00240	WIRE		1				
8	MM433614	CAP, TORQUE SET		1				
9	F1035-08045	BOLT		3				
10	31A63-02300	BOLT, GOVERNOR CASE		1				
11	MM435288	OIL, INLET		1				
12	MM435249	PROTECTOR, OIL INLET		1				
13	F1805-06018	BOLT, W/WASHER		4				

https://truckmanualshub.com/

ELECTRIC PARTS

FIG. 66-01

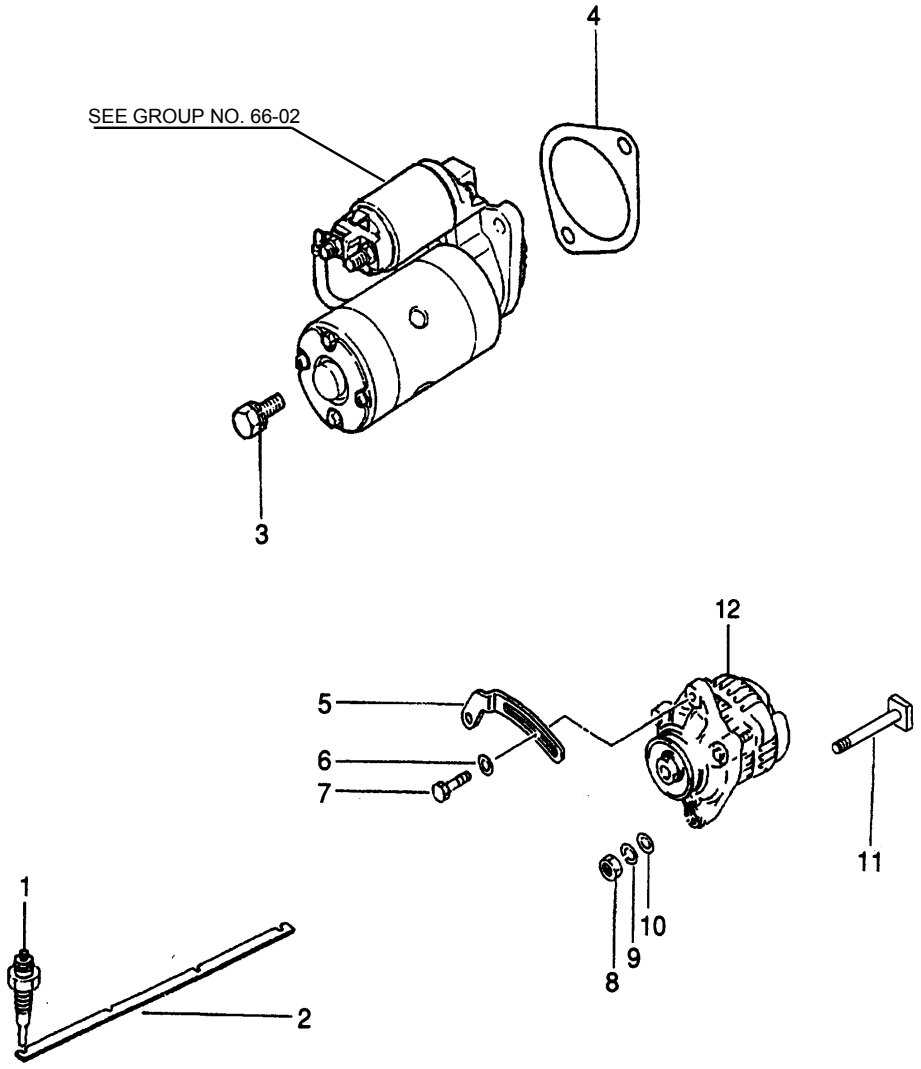

https://truckmanualshub.com/

ELECTRIC PARTS

A-i28 / B-i36

FIG. 66-01

NO.	PART NO.	PART NAME & DESCRIPTION		QTY A	QTY B	QTY C	APP.NO	REM.
1	32A66-03100	PLUG, GLOW		1	1			
2	31A66-04101	PLATE, CONNECTION		1	1			
3	F1805-10025	BOLT, W/WASHER		1	1			
4	MM409-41901	GASKET, STARTER		1	1			
5	31A68-02100	PLATE, ADJUSTING		1	1			
6	MD001521	WASHER		1	1			
7	MF140026	BOLT, FLANGE		1	1			
8	MF430006	NUT		2	2			
9	MF450406	WASHER, SPRING		1	1			
10	MF450006	WASHER, PLAIN		1	1			
11	31A68-20300	BOLT, ALTERNATOR		1	1			
12	31A68-00402	ALTERNATOR ASSY		1	1			

https://truckmanualshub.com/

STARTER (12V-2.0Kw)

FIG. 66-02

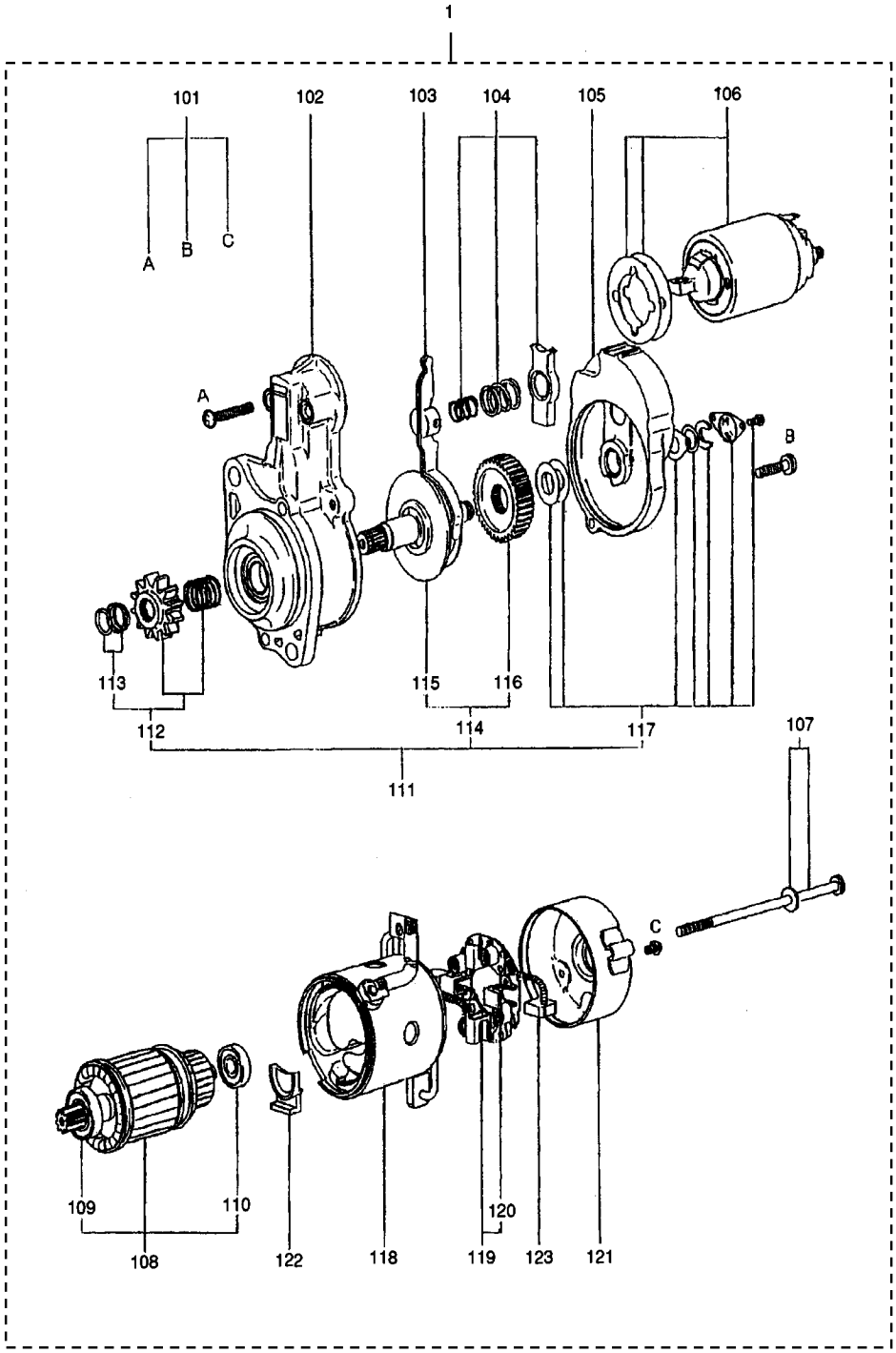

https://truckmanualshub.com/

STARTER (12V-2.0Kw)

A-i28 / B-i36

FIG. 66-02

NO.	PART NO.	PART NAME & DESCRIPTION		QTY A	QTY B	QTY C	APP.NO	REM.
1	MM409413	STARTER ASSY	M002T56272 MEC	1	1			
01	M414X-04871	SCREW SET	30A66-00200	1	1			
02	M641X-65471	BRACKET ASSY, FRONT	MM502452	1	1			
03	M863C-06171	LEVER ASSY	MD607633	1	1			
04	M389X-11472	SPRING SET	MD607446	1	1			
05	M640B-27771	BRACKET ASSY, CENTER	MM502441	1	1			
06	M372X-00471	SWITCH ASSY	MD607634	1	1			
07	M901X-00371	BOLT SET	30A66-00300	1	1			
08	M106X-29871	ARMATURE SET	MD607636	1	1			
09	S930P-16470	BEARING, FRONT	MD607643	1	1			
10	S930P-60470	BEARING, REAR	MD607638	1	1			
11	M357X-85371	SHAFT ASSY, CLUTCH	MM502438	1	1			
12	M605X-30671	PINION SET	MM502439	1	1			
13	M385X-03771	STOPER SET	ME700124	1	1			
14	M231X-01371	GEAR SET	MM502442	1	1			
15	M357T-73171	SHAFT ASSY, PINION	MD607642	1	1			
16	M231C-01301	GEAR	MM502443	1	1			
17	M212X-11771	COVER SET	MM700125	1	1			
18	M800X-44972	YOKE ASSY	MM502453	1	1			
19	M649T-05071	HOLDER ASSY, BRUSH	ME700127	1	1			
20	M391C-02501	SPRING, BRUSH	ME700128	4	4			
21	M644B-21201	BRACKET ASSY, REAR	30A66-00400	1	1			
22	M578D-22801	PACKING	MM502444	1	1			
23	M648C-28271	BRUSH	30A66-00500	1	1			

https://truckmanualshub.com/

CONTROL SYSTEM

FIG. 87

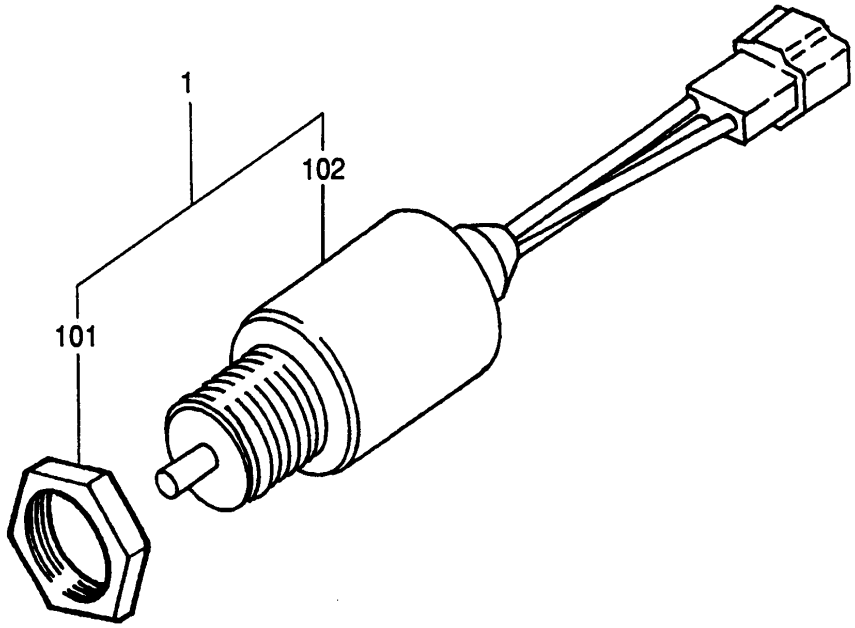

https://truckmanualshub.com/

CONTROL SYSTEM

A-i28 / B-i36

FIG. 87

NO.	PART NO.	PART NAME & DESCRIPTION		QTY A	QTY B	QTY C	APP.NO	REM.
1	30A87-10040	SOLENOID & NUT SET		1	1			
01	MM409671	NUT		1	1			
02	30A87-20400	SOLENOID ASSY		1	1			

https://truckmanualshub.com/

INSTRUMENT

FIG. 90

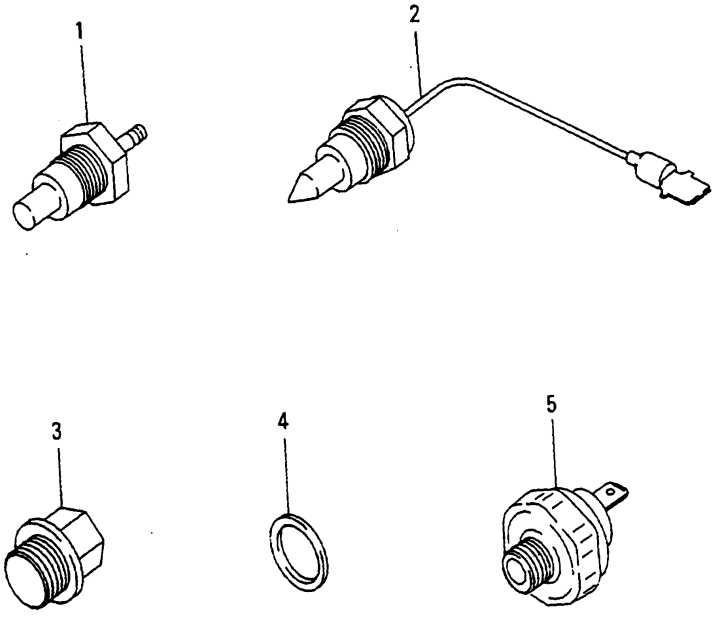

https://truckmanualshub.com/

INSTRUMENT

A-i28 / B-i36

FIG. 90

NO.	PART NO.	PART NAME & DESCRIPTION		QTY A	QTY B	QTY C	APP.NO	REM.
1	MM435-13302	UNIT, WATER TEMP		1	1			
2	30L46-02700	THERMOSWITCH		*	*			
3	MM316248	PLUG, DRAIN		1	1			
4	30636-25901	GASKET		1	1			
5	31A90-00300	SWITCH ASSY, OIL		1	1			

https://truckmanualshub.com/

OVERHAUL GASKET KIT

FIG. 94

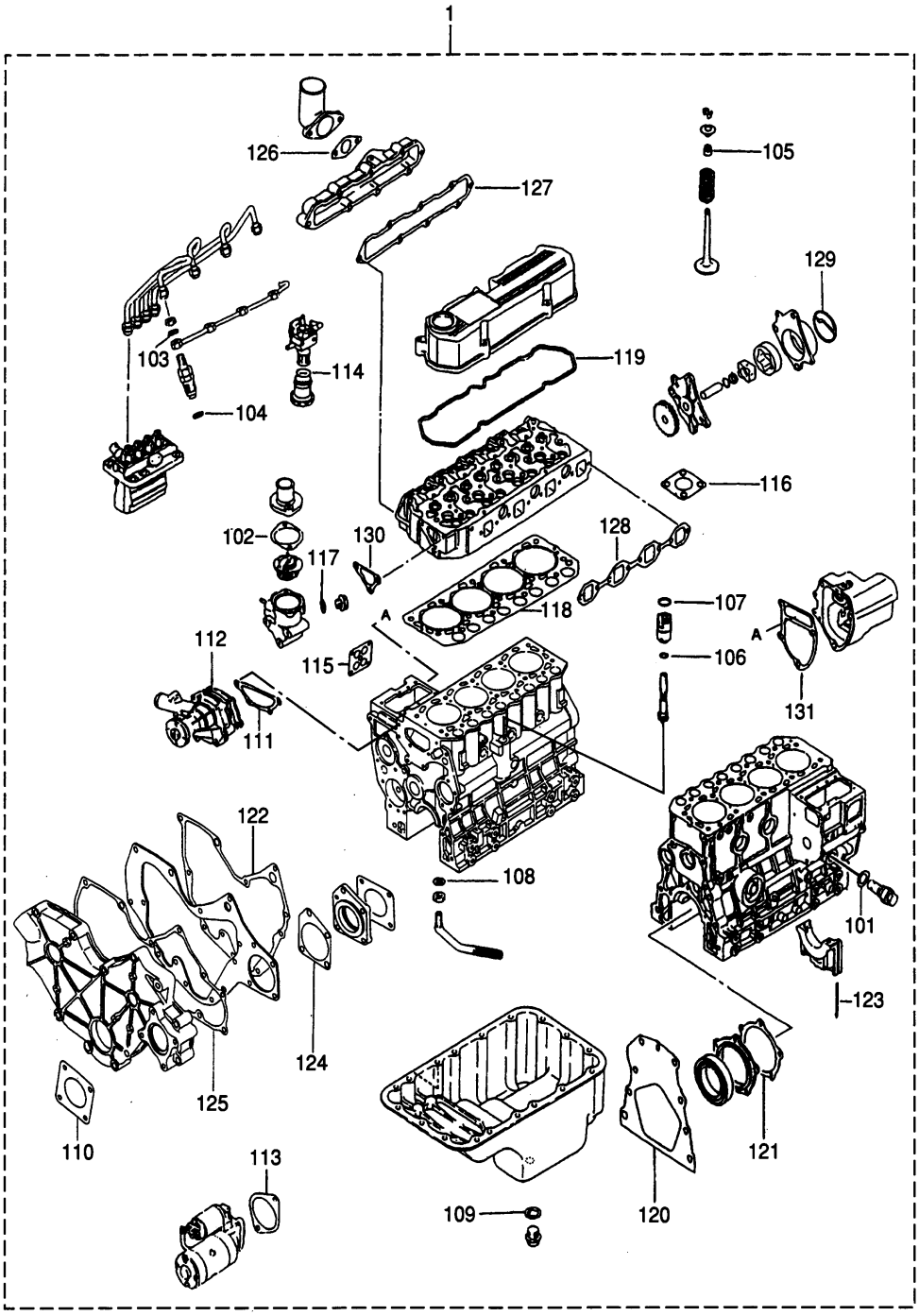

https://truckmanualshub.com/

OVERHAUL GASKET KIT

A-i28 / B-i36

FIG. 94

NO.	PART NO.	PART NAME & DESCRIPTION		QTY A	QTY B	QTY C	APP.NO	REM.
1	31A94-30011	GASKET KIT, (O/H)		1	1			
01	F4202-22000	GASKET		1	1			
02	MD000551	GASKET		1	1			
03	MD068355	GASKET, FUEL RETURN		4	4			
04	MD070717	GASKET, HOLDER		4	4			
05	MD115472	SEAL, VALVE STEM		8	8			
06	MD701788	O-RING		1	1			
07	MF520012	O-RING		1	1			
08	MF660036	GASKET		1	1			
09	MF660065	GASKET, OIL DRAIN		2	2			
10	MM401-20601	GASKET, O/PUMP COVER		2	2			
11	MM407-42202	GASKET, WATER PUMP		1	1			
12	MM409326	GASKET, WATER PUMP		1	1			
13	MM409-41901	GASKET, STARTER		1	1			
14	MM409869	O-RING, FILTER CUP		1	1			
15	MM435249	PROTECTOR, OIL INLET		1	1			
16	30A30-00200	GASKET, MUFFLER		1	1			
17	30636-25901	GASKET		1	1			
18	31A01-33300	GASKET, CYLINDER HEAD		1	1			
19	31A04-33202	GASKET, ROCKER COVER		1	1			
20	31A07-02401	GASKET, REAR		1	1			
21	31A07-11701	GASKET, OIL SEAL		1	1			
22	31A07-11901	GASKET, FRONT PLATE		1	1			
23	31A07-12200	SEAL, SIDE		4	4			
24	31A11-05201	GASKET, HOUSING		1	1			
25	31A11-11101	GASKET, GEAR		1	1			
26	31A30-00801	GASKET, INLET PIPE		1	1			
27	31A30-10902	GASKET, INLET COVER		1	1			
28	31A32-01200	GASKET, EXHAUST		1	1			
29	31A35-02300	PACKING, BODY		1	1			
30	31A46-10101	GASKET, THERMO CASE		1	1			
31	31A63-12201	GASKET, GOVERNOR CASE		1	1			
32	32A91-05100	GASKET, LIQUID		1	1			