https://truckmanualshub.com/

PREFACE

1. This parts catalog is the last edition of Yanmar crawler backhoe Model B22-2A for Japan & Overseas (except Europe).

2. Parts catalog history

	Parts catalog No.	Published	Remarks
1st edition	000Y00K3280	Aug., 1995	Disuse old edition
last edition	000Y00K3281	Jun., 1997	

3. Model name

SECTION	Column	Model name	Remarks
I (Vehicle)	(A)	B22-2A C(R) JP	cabin, for Japan & Overseas (ex. Aus. & Eur.)
	(B)	B22-2A P(R) JP	canopy, for Japan & Overseas (ex. Aus. & Eur.)
	(C)	B22-2A C(R) AS	cabin, for Australia
	(D)	B22-2A P(R) AS	canopy, for Australia
II (Engine)	(A)	3TNE78A-B1	

4.

Manufactured	Dec., 1994 ~ May, 1997
Machine No.	M/# 50501 ~ 51045
Engine No.	E/# 00663 ~ 13428

5. Your understanding is asking that this parts catalog is not a technical data manual setting forth as servicing procedures, This parts catalog is using simplified illustration. Be sure to use Yanmar Genuine Parts in your maintenance servicing of Yanmar products. Be careful not to use the simple parts available in the market ; otherwise their use in repairing causes such as an early breakage, for instance.

https://truckmanualshub.com/

SPECIFICATIONS

Name			YANMAR CRAWLER BACKHOE	
Model			B22-2A-P[R]	B22-2A-C[R]
Engine	Model		Vertical 3-cylinder water-cooled diesel	
	Type		3TNE78A-B1	
Dimensions	Transport length	mm	4120	
	Transport width	mm	1400	1445
	Transport height	mm	2340	2390
Std. bucket capacity		m^3	0.03~0.07(0.06)	
Std. bucket width(Outside)		mm	490(W/Side cutter)	
Max. digging depth		mm	2360(Blade2500)	
Max. cutting height		mm	4185	3745
Max. dump height		mm	2965	2575
Max. reach at ground level		mm	4040	
Min. swing radius		mm	1515(Swing1160)	1700(Swing1345)
Boom swing angle		degree	Left 50 & Right 90	
Max. digging force(Std. bucket)		kgf	1700	
Travel speed		km/h	2.3[2.4]	
Gradability		degree	30	
Average ground pressure		kgf/cm^2	0.29[0.28]	0.31[0.30]
Track shoe width(Std.)		mm	270[280]	
Blade	Width×height	mm	1360×300	
	Capacity	m^3	0.123	
Machine mass		kg	2200[2150]	2350[2300]

[ ] shows to the specification of rubber crowler.

https://truckmanualshub.com/

1 [本機塗装色] [PAINTED COLOR LIST]

【塗装色　：B22−2A（JP）：キャノピ仕様　　：初号機より】
【COLOR：B22−2A（JP）　：CANOPY SPEC.：FROM FIRST】

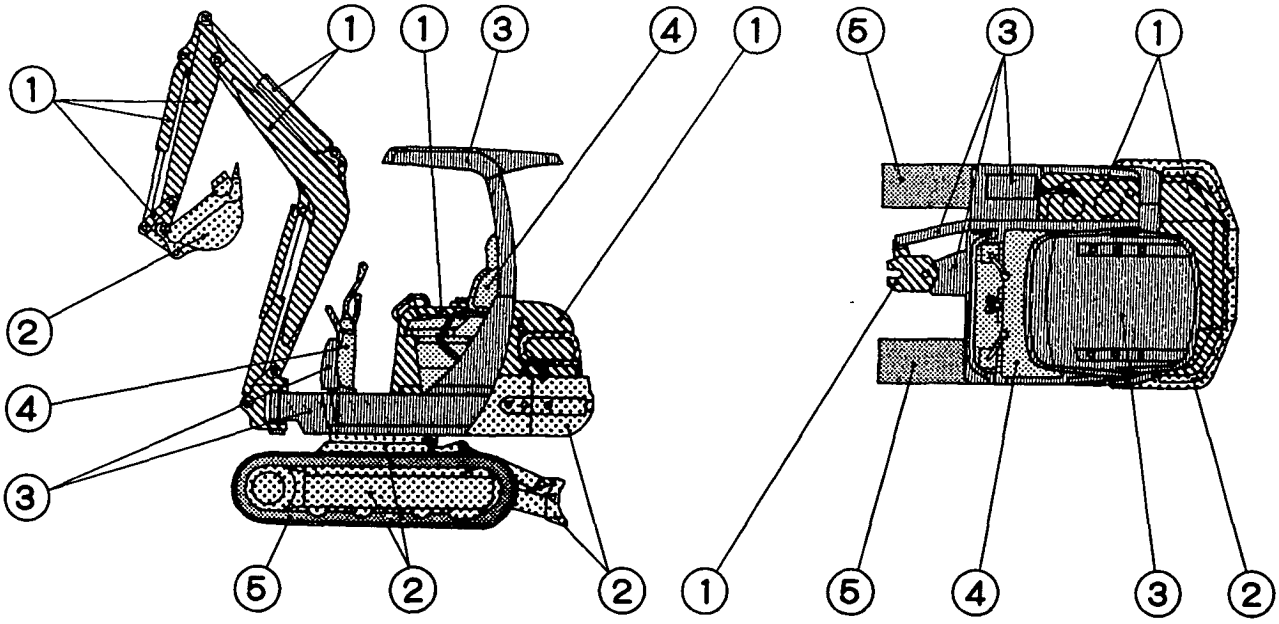

【塗装色　：B22−2A（JP）：キャビン仕様　　：初号機より】
【COLOR：B22−2A（JP）　：CABIN SPEC.：FROM FIRST】

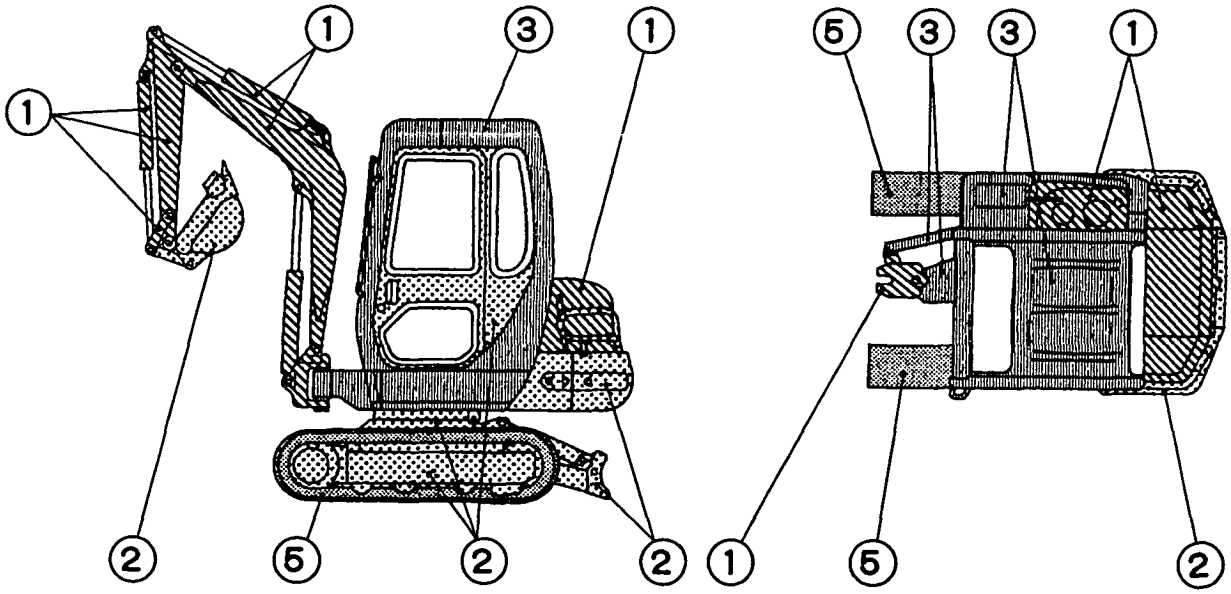

部所 PART	表示 DESCRIPTION	塗装色 マンセル記号	PAINTED COLOR MUNSEL No.	色区分 COLOR CODE	
①		ヤンマー新パーマネントイエロー 5．2Y8．5／11	YANMAR NEW PERMANENT YELLOW 5.2Y8.5/11	87	（注1）
①		ヤンマーミントグリーン 1BG7／8	YANMAR MINT GREEN 1BG7/8	85	（注2）
②		ヤンマー新ディープグリーン 0．6B2．2／4．2	YANMAR NEW DEEP GREEN 0.6B2.2/4.2	88	
③		ヤンマー新グレイッシュグリーン 2．9BG4．8／3．0	YANMAR NEW GRAYISH GREEN 2.9BG4.8/3.0	86	
④		ヤンマーダークオリーブグレー 5．39Y2．92／0．78	YANMAR DARK OLIVE GRAY 5.39Y2.92/0.78	72	
⑤		ヤンマーチャコールグレー N2．0	YANMAR CHARCOAL GRAY N2.0	71	

（注1）オーストラリア仕様専用。　(NOTE1) FOR AUSTRALIA.
（注2）国内、欧州・豪州以外の海外。　(NOTE2) FOR JAPAN, OVERSEAS EXCEPT EUROPE & AUSTRALIA.

https://truckmanualshub.com/

2 [塗料部品番号] [PAINT PART No.]

部所 PART	塗装色 PAINTED COLOR	塗料部品番号 PAINT PART No.		
		16ℓ缶 16ℓCAN	4ℓ缶 4ℓCAN	スプレー SPRAY
①	ヤンマー新パーマネントイエロー YANMAR NEW PERMANENT YELLOW	981101-09519	977620-40870	977620-30871
①	ヤンマーミントグリーン YANMAR MINT GREEN	981101-09700	977620-40850	977620-30851
②	ヤンマー新ディープグリーン YANMAR NEW DEEP GREEN	981101-09588	977620-40880	977620-30881
③	ヤンマー新グレイッシュグリーン YANMAR NEW GRAYISH GREEN	981101-09616	977620-40860	977620-30861
④	ヤンマーダークオリーブグレー YANMAR DARK OLIVE GRAY	----------	977620-40720	TOR-90460003
⑤	ヤンマーチャコールグレー YANMAR CHARCOAL GRAY	981101-09516	977620-40710	977620-30371

3 [塗装色部品の表現] [EXPRESSION OF PAINTED PARTS]

部品番号 PART NO.		部品名 PART NAME	塗装色 PAINTED COLOR
172141-82103	-1	アーム，1080（グリーン）（85） ARM, 1080 (GREEN) (85)	ヤンマーミントグリーン YANMAR MINT GREEN

（注）部品名末尾の（　）内は塗装色を示す。
(NOTE) ( ) at the end of part name shows Paint Color.

4 [主要部品の塗装色] [COLOR OF MAIN PARTS]

部所 PART	塗装色 PAINTED COLOR	主な部品	MAIN PARTS
①	ヤンマー新パーマネントイエロー YANMAR NEW PERMANENT YELLOW ヤンマーミントグリーン YANMAR MINT GREEN	ブーム アーム ブームシリンダ アームシリンダ バケットシリンダ 燃料タンク 作動油タンク ボンネット ワークランプカバー	BOOM ARM BOOM CYLINDER ARM CYLINDER BUCKET CYLINDER FUEL TANK HYD. OIL TANK BONNET WORK LAMP COVER
②	ヤンマー新ディープグリーン YANMAR NEW DEEP GREEN	バケット ブレード ブレードシリンダ スイングシリンダ キャビンドア カウンターウエイト エンジン周り 走行関係	BUCKET BLADE BLADE CYLINDER SWING CYLINDER CABIN DOOR COUNTER WEIGHT ENGINE SURROUNDINGS TRAVEL CONNECTION
③	ヤンマー新グレイッシュグリーン YANMAR NEW GRAYISH GREEN	キャビン キャノピ ステップ 旋回フレーム シリンダカバー	CABIN CANOPY STEP TURNING FRAME CYLINDER COVER
④	ヤンマーダークオリーブグレー YANMAR DARK OLIVE GRAY	操作部	OPTIONAL PART
⑤	ヤンマーチャコールグレー YANMAR CHARCOAL GRAY	鉄クローラ	IRON CRAWLER

https://truckmanualshub.com/

絵目次（1）・・・・・・・・・・・主要部品
PICTURESQUE INDEX(1)・・・MAIN PARTS

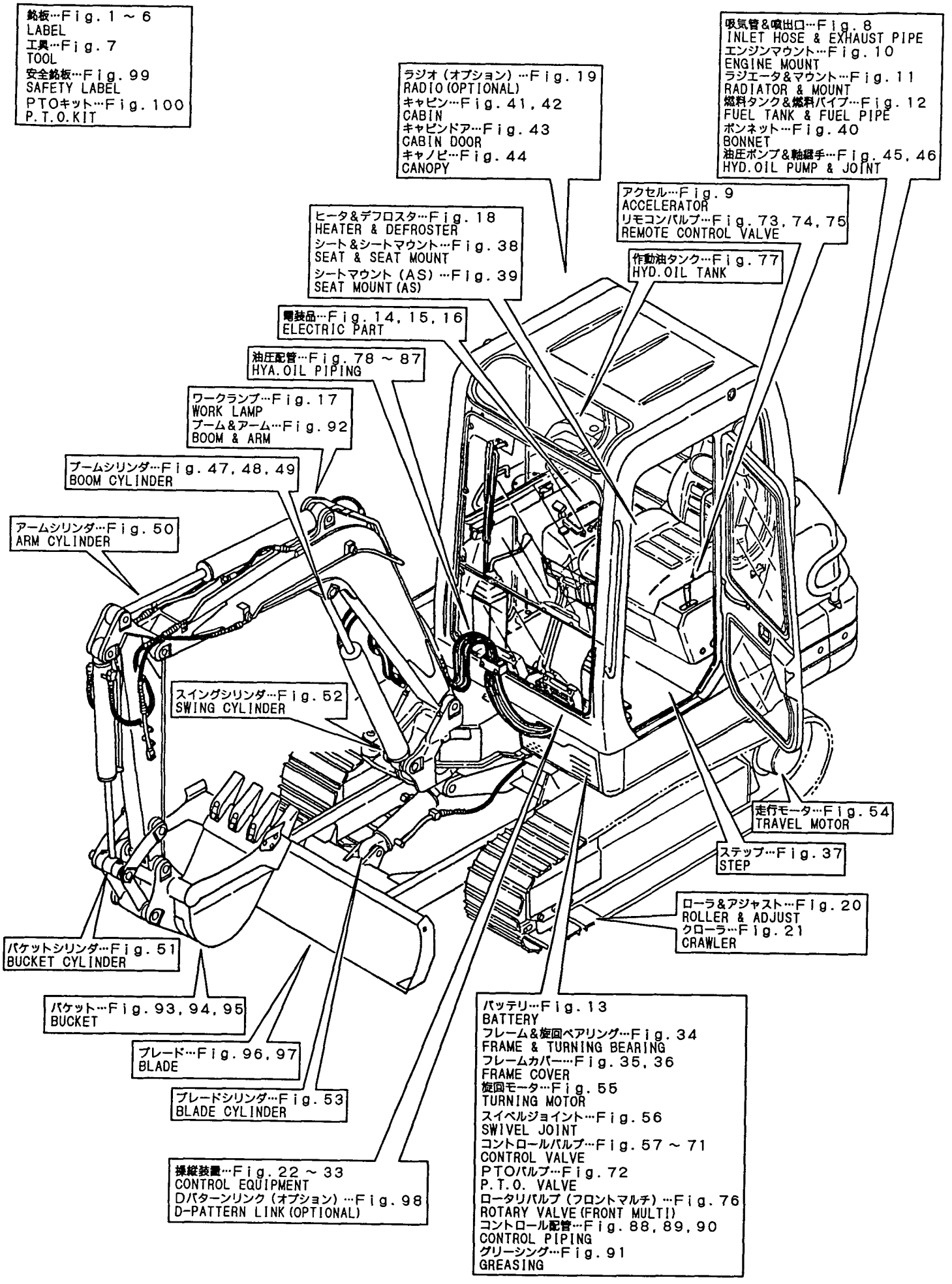

https://truckmanualshub.com/

絵目次（2）・・・・・・・・・・・油圧関係
PICTURESQUE INDEX (2) ・・・HYDRAULIC SECTION

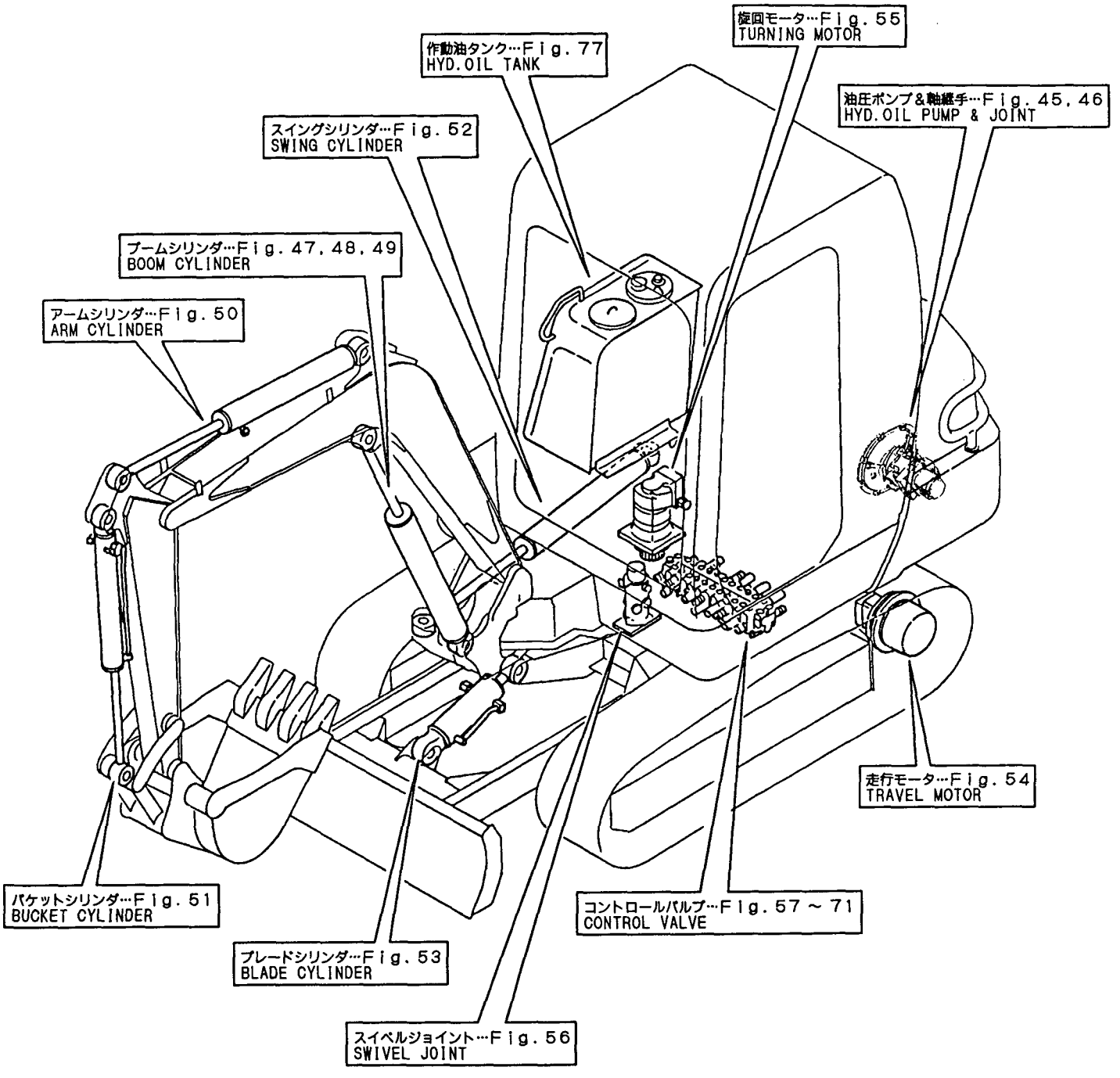

https://truckmanualshub.com/

絵目次(3)・・・・・・・・・・・・・項目別
PICTURESQUE INDEX(3)・・・・・・FIGURE

Fig. 1 銘板(キャビン)(JP) LABEL(CABIN)(JP)

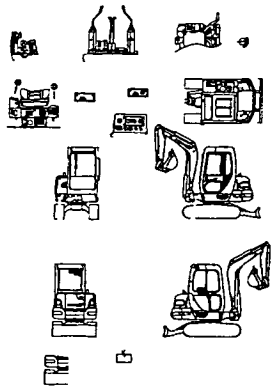

Fig. 2 銘板(キャビン)(EX) LABEL(CABIN)(EX)

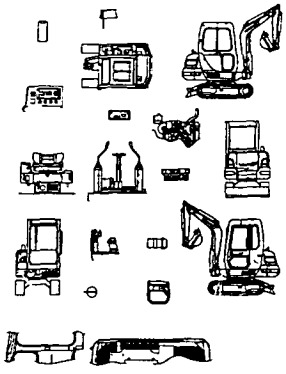

Fig. 3 銘板(キャビン)(AS) LABEL(CABIN)(AS)

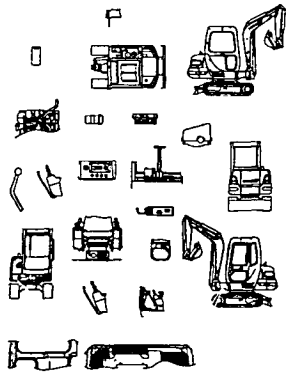

Fig. 4 銘板(キャノピ)(JP) LABEL(CANOPY)(JP)

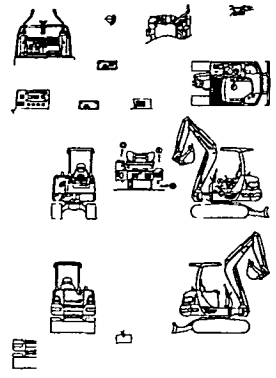

Fig. 5 銘板(キャノピ)(EX) LABEL(CANOPY)(EX)

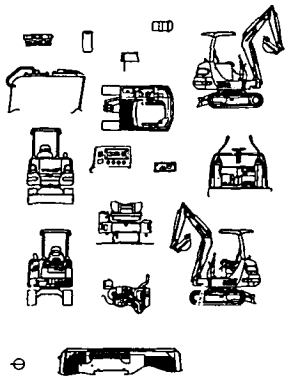

Fig. 6 銘板(キャノピ)(AS) LABEL(CANOPY)(AS)

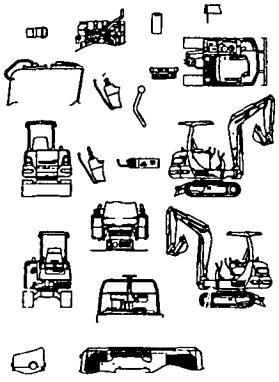

Fig. 7 工具 TOOL

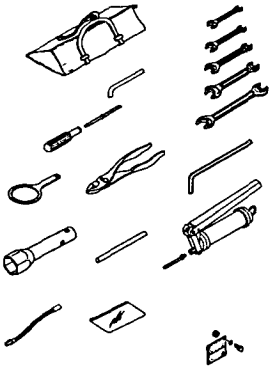

Fig. 8 吸気管&噴出口 INLET HOSE & EXHAUST PIPE

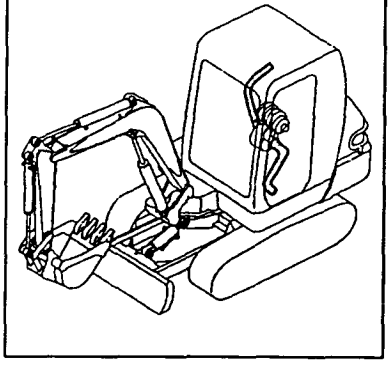

Fig. 9 アクセル ACCELERATOR

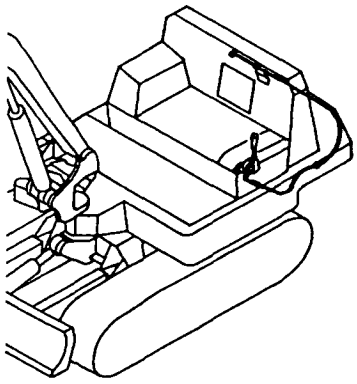

Fig. 10 エンジンマウント ENGINE MOUNT

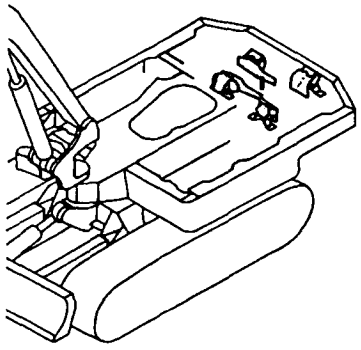

Fig. 11 ラジエータ&マウント RADIATOR & MOUNT

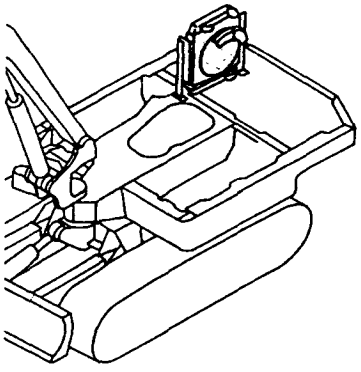

Fig. 12 燃料タンク&燃料パイプ FUEL TANK & FUEL PIPE

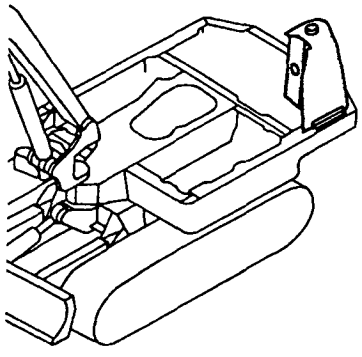

https://truckmanualshub.com/

絵目次（3）・・・・・・・・・・・・・項目別
PICTURESQUE INDEX (3)・・・・・・FIGURE

Fig. 13 バッテリ BATTERY

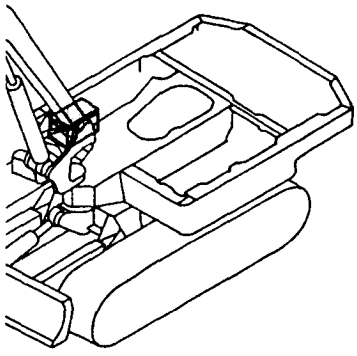

Fig. 14 電装品（キャビン，キャノピ） ELECTRIC PART (CABIN, CANOPY)

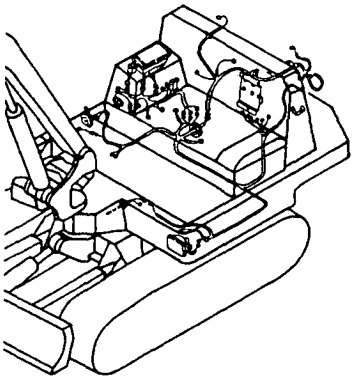

Fig. 15 電装品（キャビン，キャノピ）（AS） ELECTRIC PART (CABIN, CANOPY) (AS)

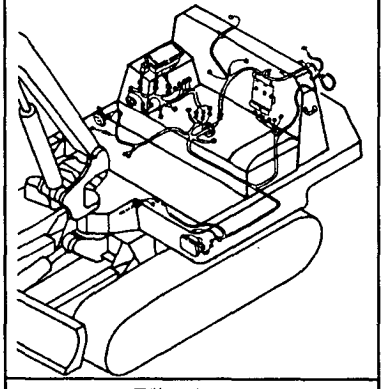

Fig. 16 電装品（キャビン） ELECTRIC PART (CABIN)

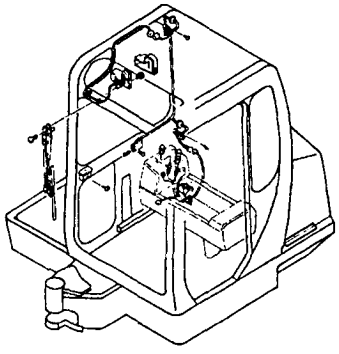

Fig. 17 ワークランプ WORK LAMP

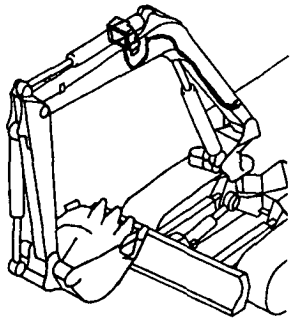

Fig. 18 ヒータ&デフロスタ HEATER & DEFROSTER

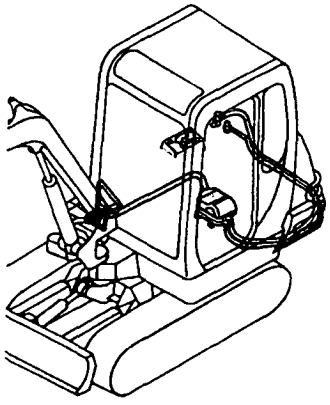

Fig. 19 ラジオ（オプション） RADIO (OPTIONAL)

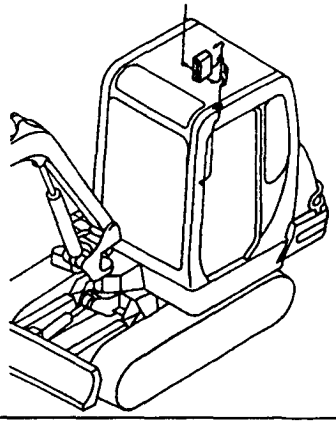

Fig. 20 ローラ&アジャスト ROLLER & ADJUST

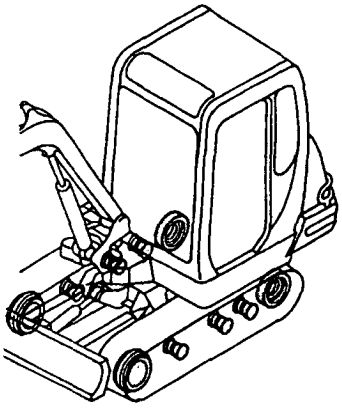

Fig. 21 クローラ CRAWLER

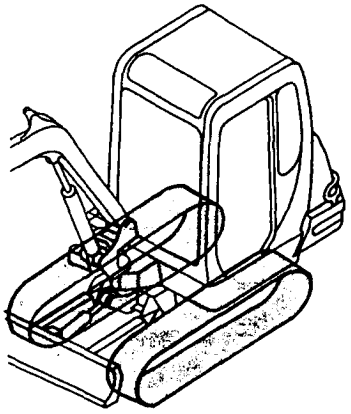

Fig. 22 操縦装置（レバースタンド&ストッパ） CONTROL EQUIPMENT (LEVER STAND & STOPPER)

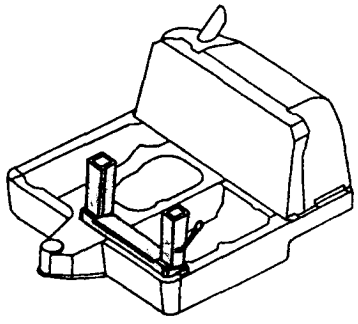

Fig. 23 操縦装置（レバースタンド&レバー）（フロントマルチ） CONTROL EQUIPMENT (LEVER STAND & LEVER) (FRONT MULTI)

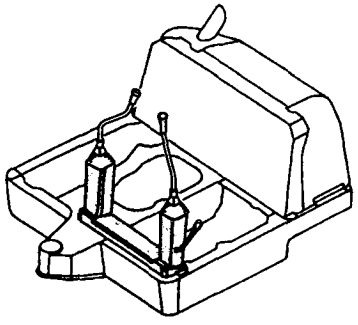

Fig. 24 操縦装置（レバースタンド）（AS） CONTROL EQUIPMENT (LEVER STAND) (AS)

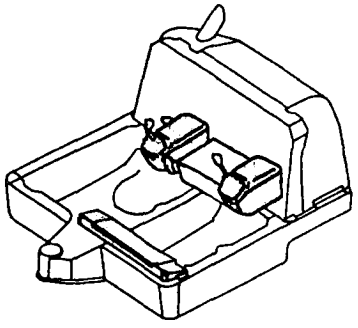

https://truckmanualshub.com/

絵目次（3）・・・・・・・・・・・・・項目別
PICTURESQUE INDEX (3) ・・・・・・FIGURE

Fig.25 操縦装置（ブーム＆バケット）
CONTROL EQUIPMENT
(BOOM & BUCKET)

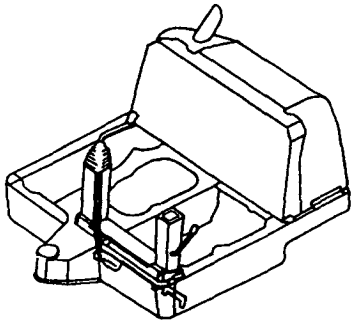

Fig.26 操縦装置（アーム＆旋回）
CONTROL EQUIPMENT
(ARM & TURNING)

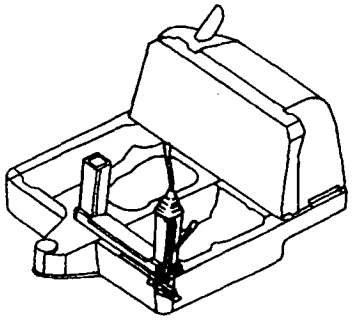

Fig.27 操縦装置（走行）
CONTROL EQUIPMENT
(DRIVE)

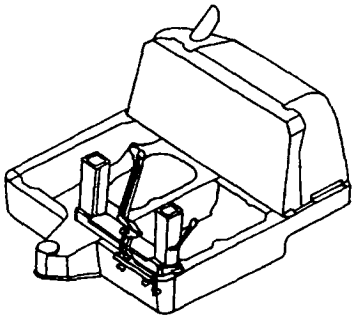

Fig.28 操縦装置（スイング）
CONTROL EQUIPMENT
(SWING)

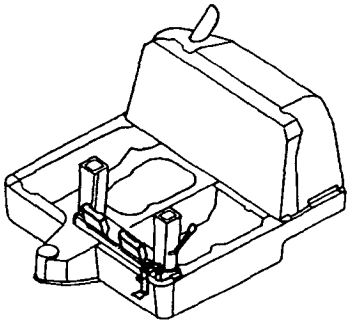

Fig.29 操縦装置（ブレード）
CONTROL EQUIPMENT
(BLADE)

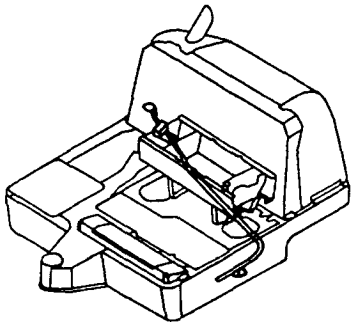

Fig.30 操縦装置（カットオフレバー）（フロントマルチ）
CONTROL EQUIPMENT
(CUT OFF LEVER)
(FRONT MULTI)

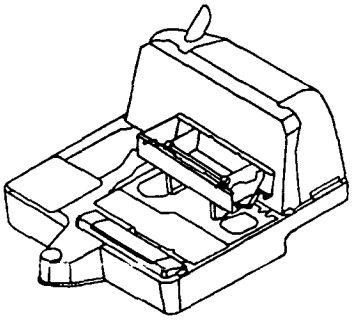

Fig.31 操縦装置（カットオフレバー，サイド）（AS）
CONTROL EQUIPMENT
(CUT OFF LEVER
, SIDE) (AS)

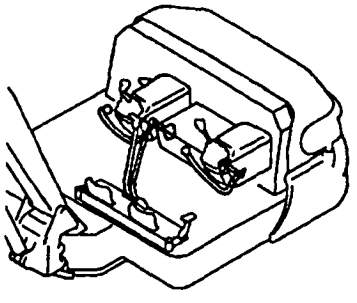

Fig.32 操縦装置（PTOコントロール）
CONTROL EQUIPMENT
(P.T.O.CONTROL)

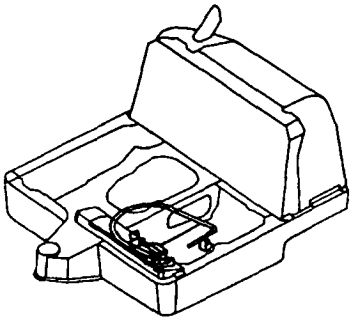

Fig.33 操縦装置（P.T.Oコントロール）（合流）
CONTROL EQUIPMENT
(P.T.O.CONTROL)
(CONFLUENCE)

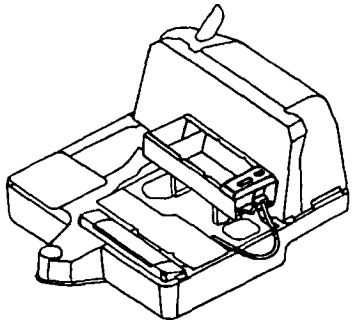

Fig.34 フレーム＆旋回ベアリング
FRAME
& TURNING BEARING

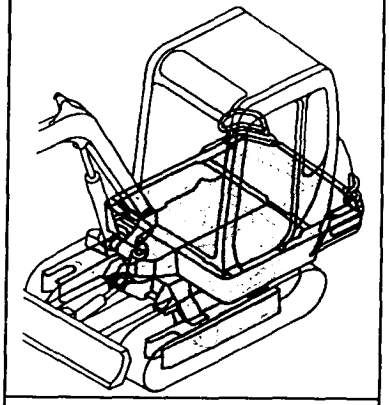

Fig.35 フレームカバー（キャビン）
FRAME COVER (CABIN)

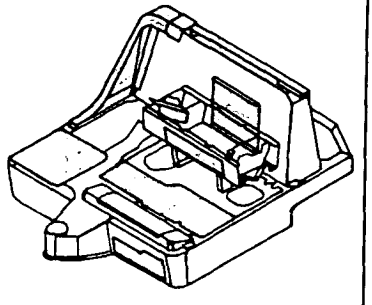

Fig.36 フレームカバー（キャノピ）
FRAME COVER (CANOPY)

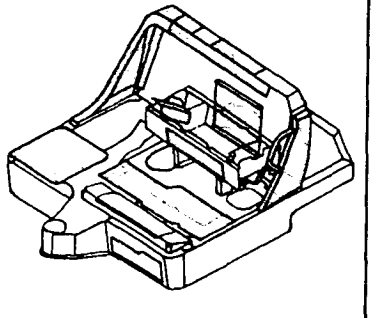

https://truckmanualshub.com/

絵目次（3）・・・・・・・・・・・・・項目別
PICTURESQUE INDEX (3)・・・・・・FIGURE

Fig.37 ステップ STEP

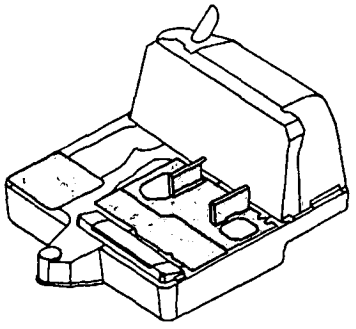

Fig.38 シート＆シートマウント SEAT & SEAT MOUNT

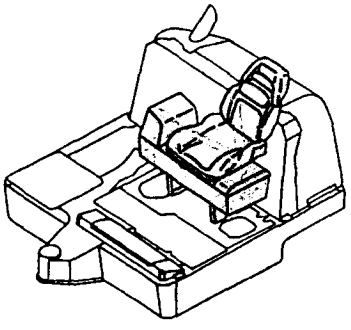

Fig.39 シートマウント（AS） SEAT MOUNT (AS)

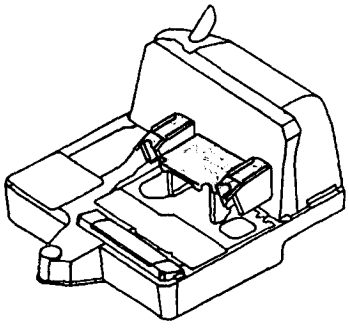

Fig.40 ボンネット BONNET

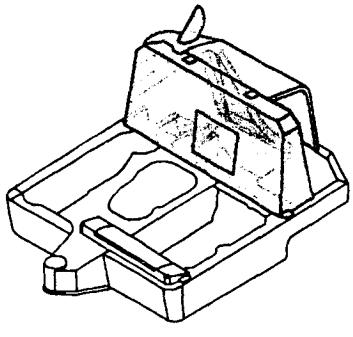

Fig.41 キャビン CABIN

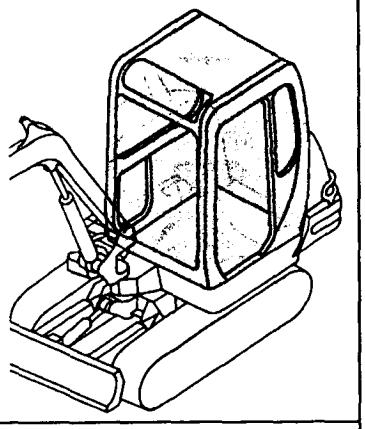

Fig.42 キャビン（AS） CABIN (AS)

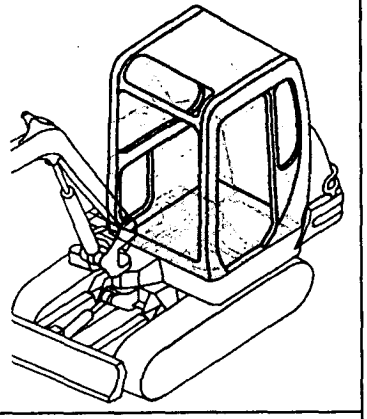

Fig.43 キャビンドア CABIN DOOR

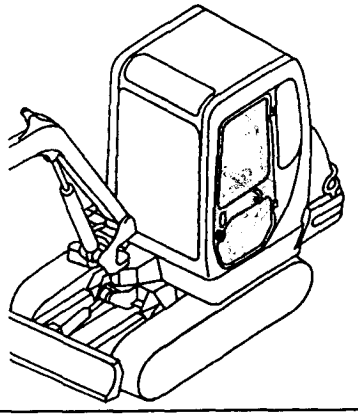

Fig.44 キャノピ CANOPY

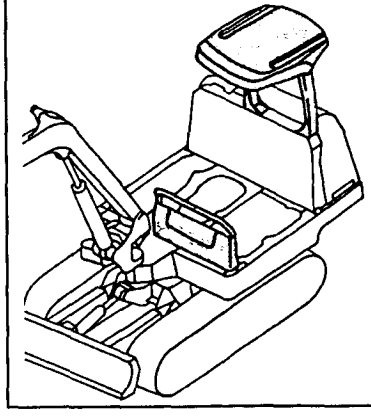

Fig.45 油圧ポンプ＆軸継手 HYD.OIL PUMP & JOINT

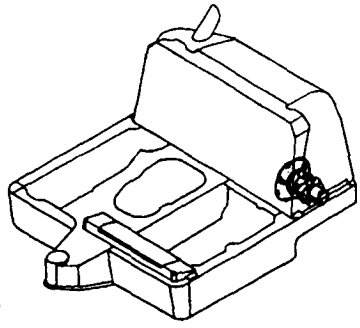

Fig.46 油圧ポンプ＆軸継手（フロントマルチ）（AS） HYD.OIL PUMP & JOINT (FRONT MULTI) (AS)

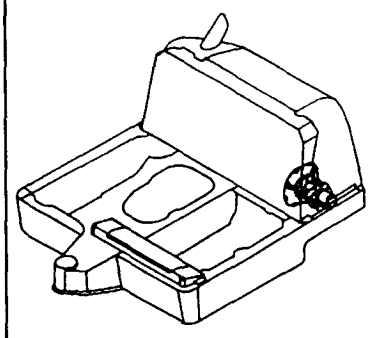

Fig.47 ブームシリンダ（キャビン） BOOM CYLINDER (CABIN)

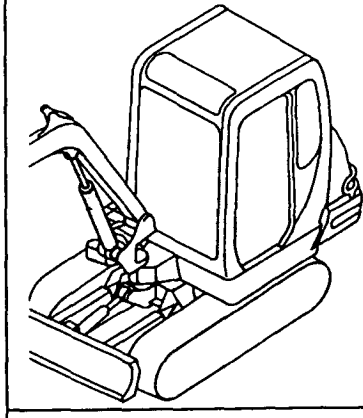

Fig.48 ブームシリンダ（キャノピ） BOOM CYLINDER (CANOPY)

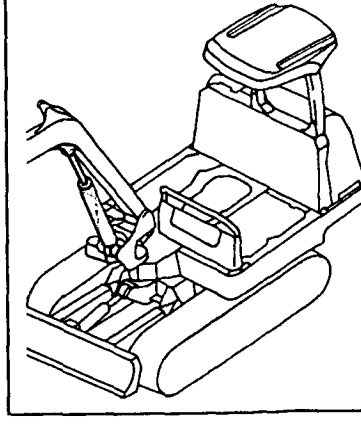

https://truckmanualshub.com/

絵目次 (3) ・・・・・・・・・・・・・項目別
PICTURESQUE INDEX (3) ・・・・・・FIGURE

Fig.49 ブームシリンダ (キャノピ) (AS) BOOM CYLINDER (CANOPY) (AS)

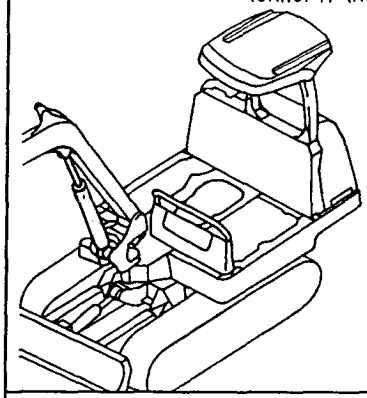

Fig.50 アームシリンダ ARM CYLINDER

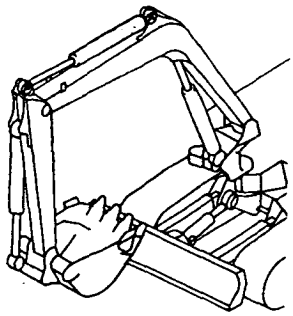

Fig.51 バケットシリンダ BUCKET CYLINDER

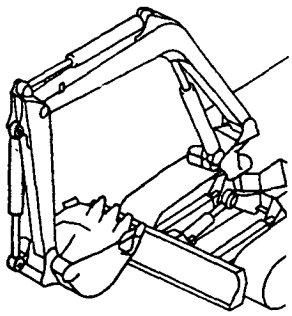

Fig.52 スイングシリンダ SWING CYLINDER

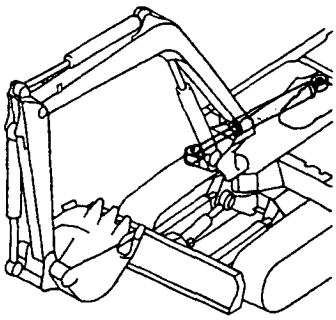

Fig.53 ブレードシリンダ BLADE CYLINDER

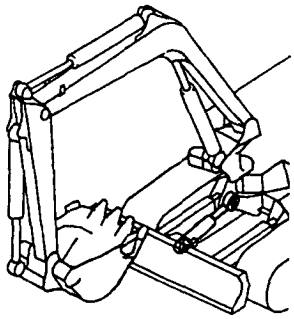

Fig.54 走行モータ TRAVEL MOTOR

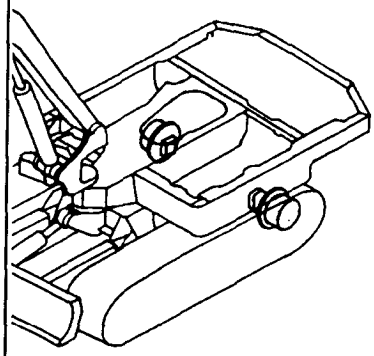

Fig.55 旋回モータ TURNING MOTOR

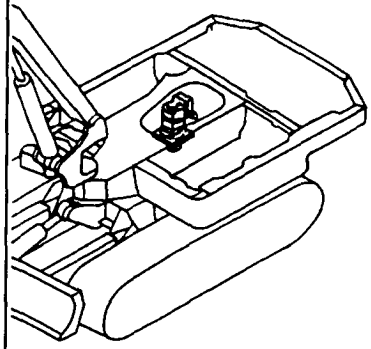

Fig.56 スイベルジョイント SWIVEL JOINT

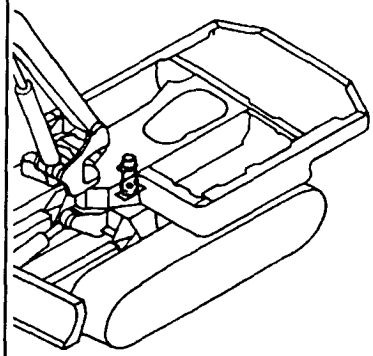

Fig.57 コントロールバルブ (Pポート) CONTROL VALVE (P PORT)

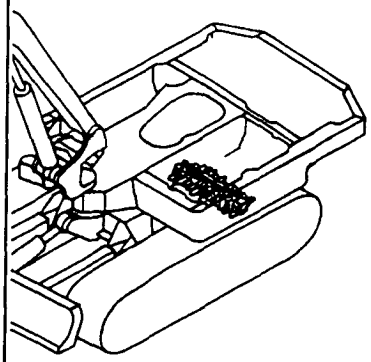

Fig.58 コントロールバルブ (走行) CONTROL VALVE (TRAVEL)

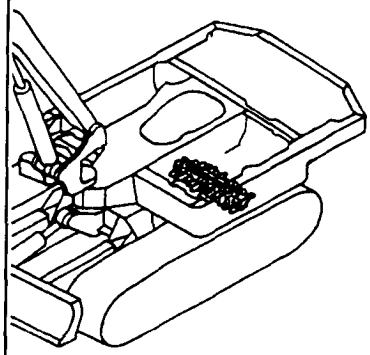

Fig.59 コントロールバルブ (アーム&スイング) CONTROL VALVE (ARM & SWING)

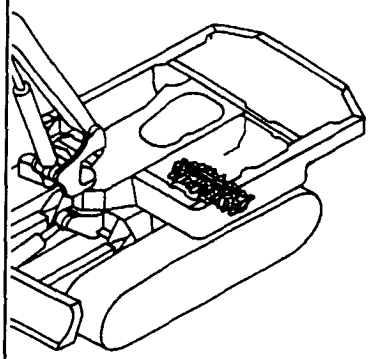

Fig.60 コントロールバルブ (ブーム&バケット) CONTROL VALVE (BOOM & BUCKET)

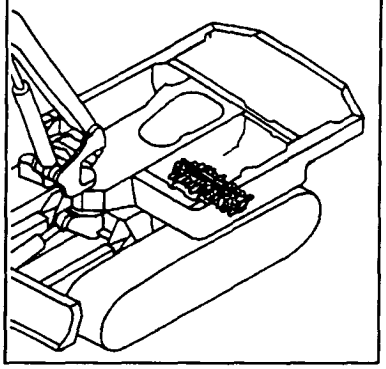

https://truckmanualshub.com/

絵目次 (3) ・・・・・・・・・・・・・項目別
PICTURESQUE INDEX (3) ・・・・・・FIGURE

Fig.61 コントロールバルブ (旋回&ブレード)
CONTROL VALVE (TURNING & BLADE)

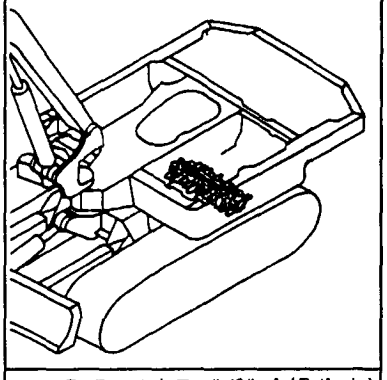

Fig.62 コントロールバルブ (Pポート) (フロントマルチ)
CONTROL VALVE (P PORT) (FRONT MULTI)

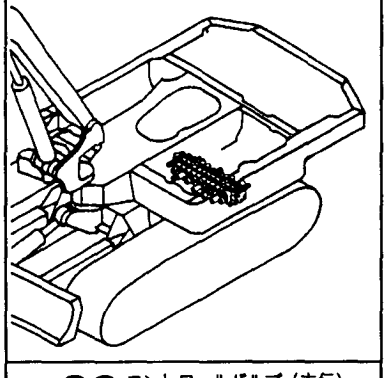

Fig.63 コントロールバルブ (走行) (フロントマルチ)
CONTROL VALVE (TRAVEL) (FRONT MULTI)

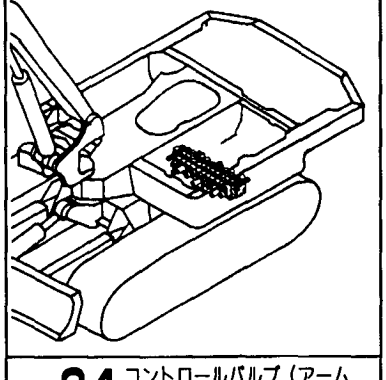

Fig.64 コントロールバルブ (アーム&スイング) (フロントマルチ)
CONTROL VALVE (ARM & SWING) (FRONT MULTI)

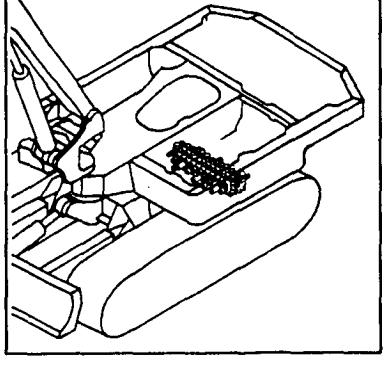

Fig.65 コントロールバルブ (ブーム&バケット) (フロントマルチ)
CONTROL VALVE (BOOM & BUCKET) (FRONT MULTI)

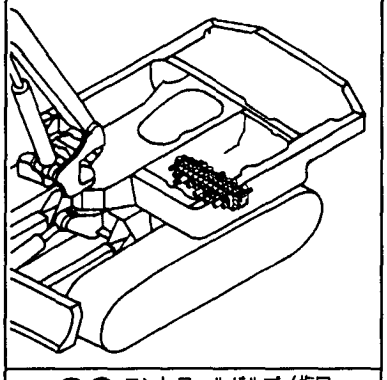

Fig.66 コントロールバルブ (旋回&ブレード) (フロントマルチ)
CONTROL VALVE (TURNING & BLADE) (FRONT MULTI)

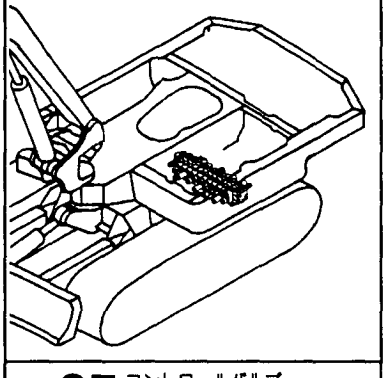

Fig.67 コントロールバルブ (Pポート) (AS)
CONTROL VALVE (P PORT) (AS)

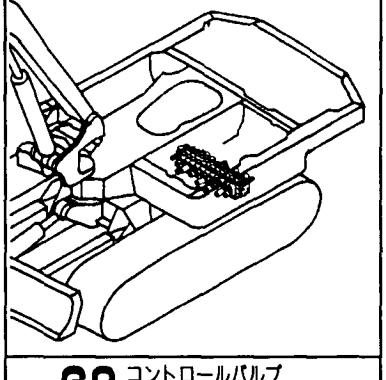

Fig.68 コントロールバルブ (走行) (AS)
CONTROL VALVE (TRAVEL) (AS)

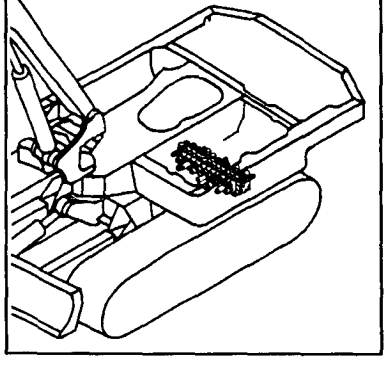

Fig.69 コントロールバルブ (アーム&スイング) (AS)
CONTROL VALVE (ARM & SWING) (AS)

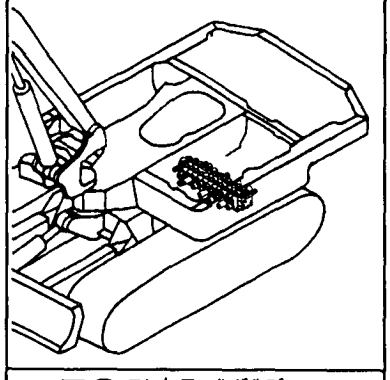

Fig.70 コントロールバルブ (ブーム&バケット) (AS)
CONTROL VALVE (BOOM & BUCKET) (AS)

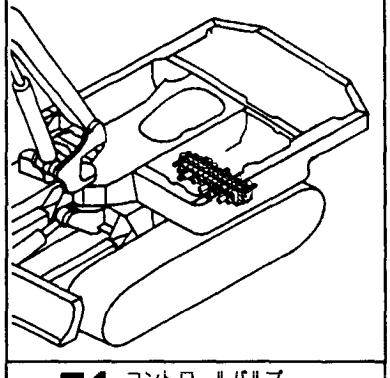

Fig.71 コントロールバルブ (旋回&ブレード) (AS)
CONTROL VALVE (TURNING & BLADE) (AS)

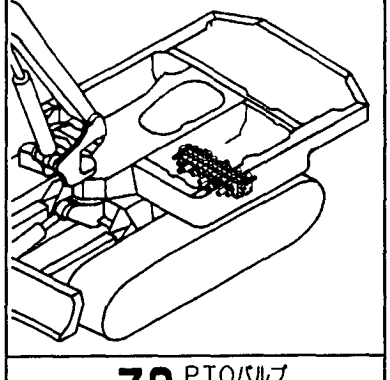

Fig.72 PTOバルブ
P.T.O. VALVE

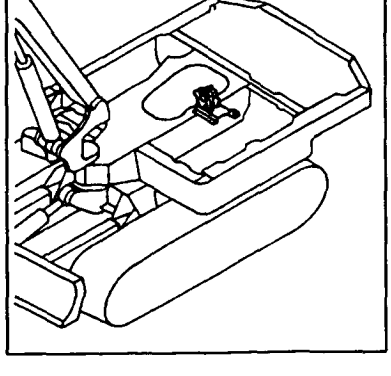

https://truckmanualshub.com/

絵目次（3）・・・・・・・・・・・・・項目別
PICTURESQUE INDEX (3)・・・・・・FIGURE

Fig. 73 リモコンバルブ（フロントマルチ） REMOTE CONTROL VALVE (FRONT MULTI)

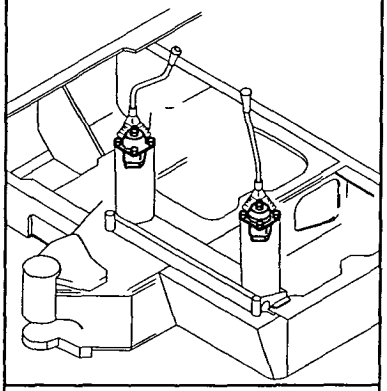

Fig. 74 リモコンバルブ（右）（AS） REMOTE CONTROL VALVE (RIGHT) (AS)

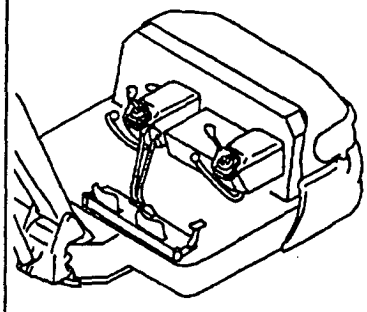

Fig. 75 リモコンバルブ（左）（AS） REMOTE CONTROL VALVE (LEFT) (AS)

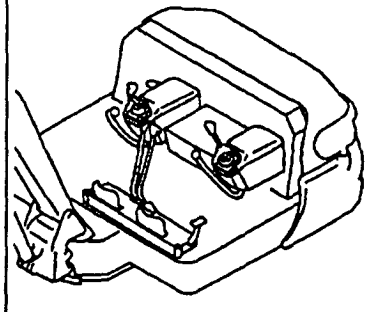

Fig. 76 ロータリバルブ（フロントマルチ） ROTARY VALVE (FRONT MULTI)

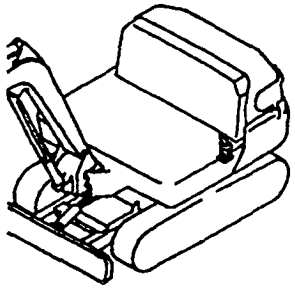

Fig. 77 作動油タンク HYD. OIL TANK

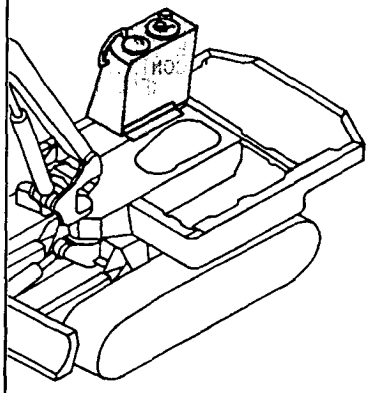

Fig. 78 油圧配管（タンク～ポンプ～バルブ） HYD. OIL PIPING (TANK ~ PUMP ~ VALVE)

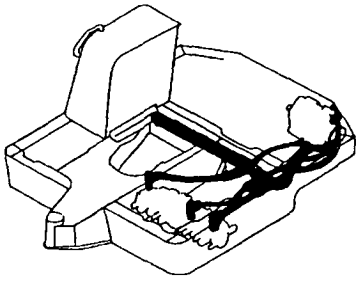

Fig. 79 油圧配管（バルブ～モータ～ブーム） HYD. OIL PIPING (VALVE ~ MOTOR ~ BOOM)

Fig. 80 油圧配管（バルブ～スイベル～スイング） HYD. OIL PIPING (VALVE ~ SWIVEL ~ SWING)

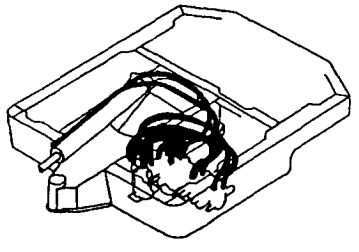

Fig. 81 油圧配管（リターン） HYD. OIL PIPING (RETURN)

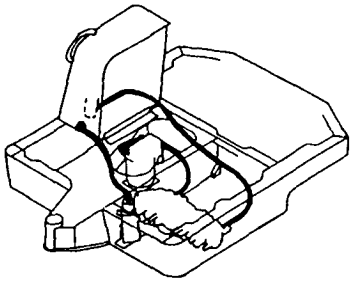

Fig. 82 油圧配管（リターン）（フロントマルチ）（AS） HYD. OIL PIPING (RETURN) (FRONT MULTI) (AS)

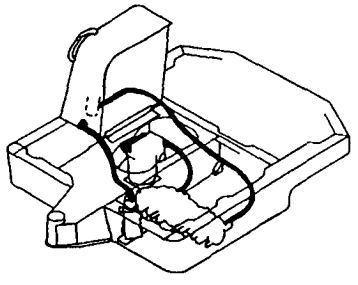

Fig. 83 油圧配管（PTOバルブ～フレーム） HYD. OIL PIPING (P. T. O. VALVE ~ FRAME)

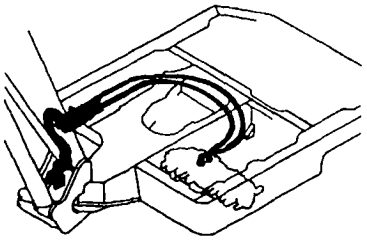

Fig. 84 油圧配管（PTOバルブ）（合流） HYD. OIL PIPING (P. T. O. VALVE) (CONFLUENCE)

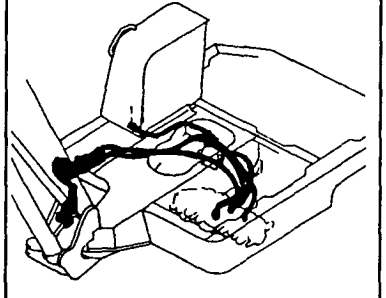

https://truckmanualshub.com/

絵目次（3）・・・・・・・・・・・・・項目別
PICTURESQUE INDEX (3)・・・・・・FIGURE

Fig.85 油圧配管（走行）
HYD. OIL PIPING (TRAVEL)

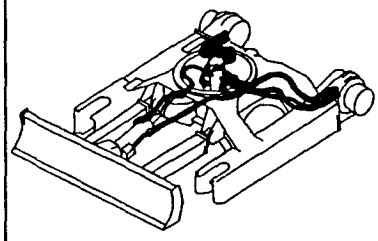

Fig.86 油圧配管（ブーム）
HYD. OIL PIPING (BOOM)

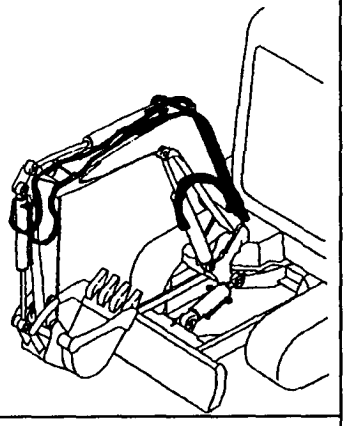

Fig.87 油圧配管（PTOアームエンド）
HYD. OIL PIPING (P. T. O. ARM END)

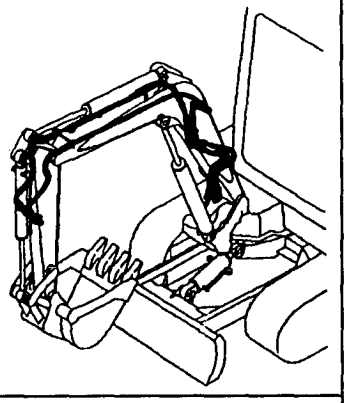

Fig.88 コントロール配管（リモコンバルブ～チェンジバルブ）（フロントマルチ）
CONTROL PIPING (REMO-CON VALVE ~ CHANGE VALVE) (FRONT MULTI)

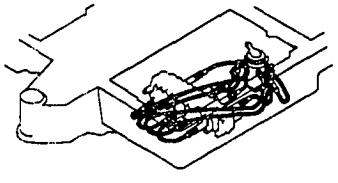

Fig.89 コントロール配管（チェンジバルブ～コントロールバルブ）（フロントマルチ）
CONTROL PIPING (CHANGE VALVE ~ CONTROL VALVE) (FRONT MULTI)

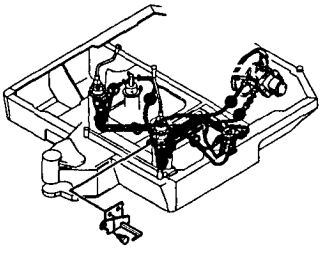

Fig.90 コントロール配管（ダイレクト）（AS）
CONTROL PIPING (DIRECT) (AS)

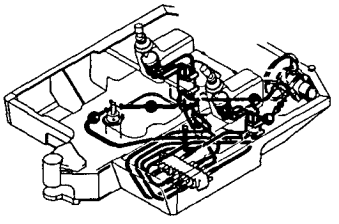

Fig.91 グリーシング
GREASING

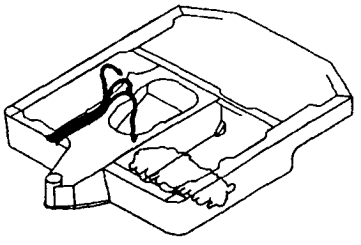

Fig.92 ブーム＆アーム
BOOM & ARM

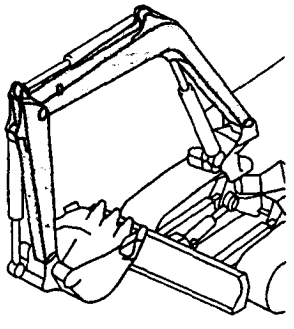

Fig.93 バケット
BUCKET

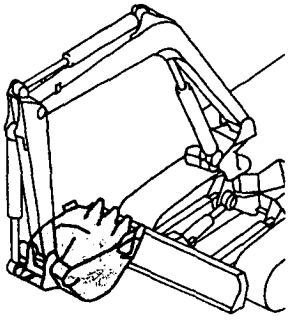

Fig.94 バケット（アタッチメント）
BUCKET (ATTACHMENT)

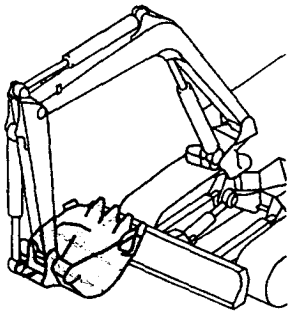

Fig.95 バケットSタイプ（アタッチメント）
BUCKET S-TYPE (ATTACHMENT)

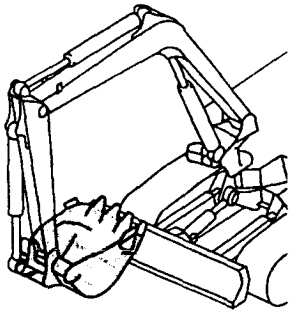

Fig.96 ブレード（850）
BLADE (850)

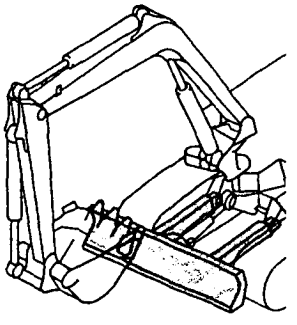

https://truckmanualshub.com/

絵目次（3）・・・・・・・・・・・・・項目別
PICTURESQUE INDEX (3)・・・・・・FIGURE

Fig. 97 ブレード（1150）（アタッチメント）
BLADE (1150) (ATTACHMENT)

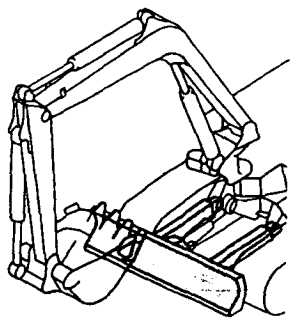

Fig. 98 Dパターンリンク（オプション）
D-PATTERN LINK (OPTIONAL)

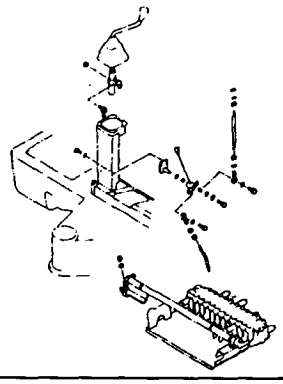

Fig. 99 安全銘板
SAFETY LABEL

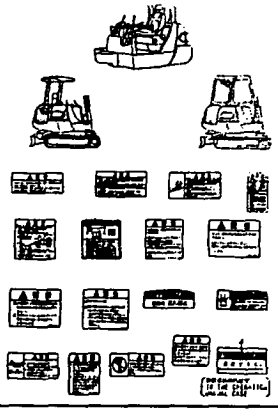

Fig. 100 PTOキット
P.T.O. KIT

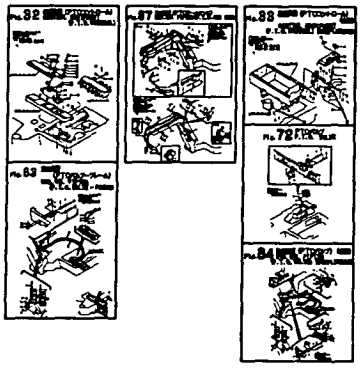

https://truckmanualshub.com/

配線図
WIRING DIAGRAM

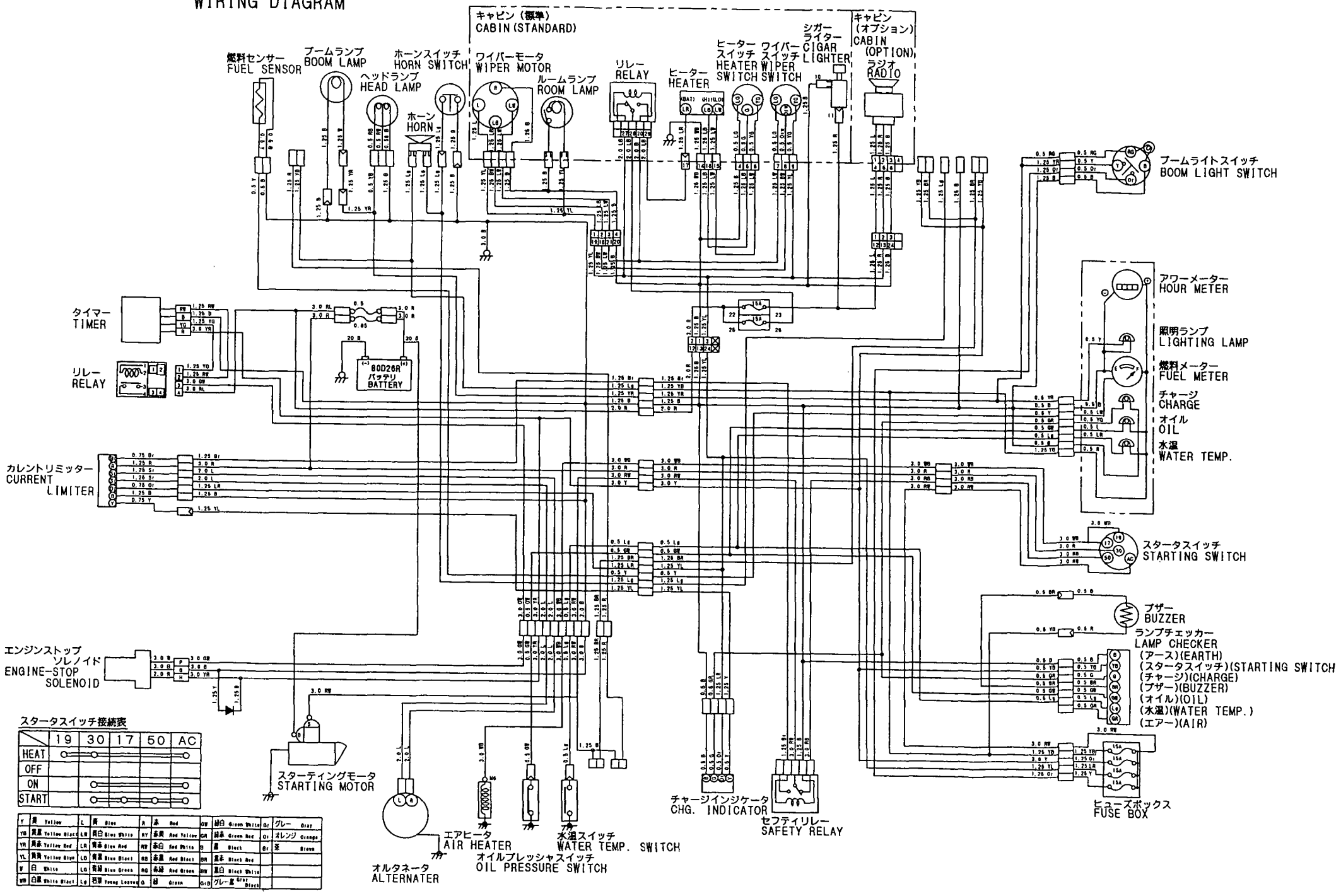

https://truckmanualshub.com/

```
1,1,,772191-03100,,"LABEL ASSY",1,,,,,,,,,,,,,,,,
1-1,1,,772191-03101,,"LABEL ASSY",1,,,,,,N,,,M/#50621,,,,,,,
2,2,,172191-03110,,"LABEL, SPECIFICATION",1,,,,,,,,,,,,,,,,
3,2,,172165-03130,,"LABEL,GREASE FEED",1,,,,,,,,,,,,,,,,
4,2,,172171-03151,,LABEL,1,,,,,,,,,,,,,,,,
5,2,,172519-03150,,"LABEL, ACCEL",1,,,,,,,,,,,,,,,,
6,2,,172171-03161,,LABEL,1,,,,,,,,,,,,,,,,
7,2,,172141-03170,,"LABEL, RESTART",1,,,,,,,,,,,,,,,,
8,2,,172171-03170,,"LABEL, OIL/WATER",1,,,,,,,,,,,,,,,,
9,2,,172162-03180,,"LABEL,HEATER SWITCH",1,,,,,,,,,,,,,,,,
10,2,,172162-03190,,"LABEL,WIPER SWITCH",1,,,,,,,,,,,,,,,,
11,2,,172168-03191,,LABEL,1,,,,,,,,,,,,,,,,
11-1,2,,172168-03211,,LABEL,1,,,,,,N,,,M/#50621,,,,,,,
12,2,,172141-03201,,"LABEL,ENGINE ROOM(C)",1,,,,,,,,,,,,,,,,
12-1,2,,172141-03202,,LABEL,1,,,,,,N,,,M/#50621,,,,,,,
13,2,,172165-03220,,"LABEL, GREASE",1,,,,,,,,,,,,,,,,
14,2,,172165-03240,,LABEL,1,,,,,,,,,,,,,,,,
15,2,,172155-03310,,"LABEL, OILING",1,,,,,,,,,,,,,,,,
16,2,,172171-03261,,"LABEL,BOOM",2,,,,,,,,,,,,,,,,
17,2,,172519-03290,,"LABEL, ENG.COVER",1,,,,,,,,,,,,,,,,
17-1,2,,172519-04180,,LABEL,1,,,,,,N,,,M/#50621,,,,,,,
18,2,,172137-03301,,"LABEL, TURNING LOCK",1,,,,,,,,,,,,,,,,
19,2,,172142-03301,,LABEL,1,,,,,,,,,,,,,,,,
19-1,2,,172142-03302,,LABEL,1,,,,,,N,,,M/#50621,,,,,,,
20,2,,172165-03301,,"LABEL,CAB",1,,,,,,,,,,,,,,,,
21,2,,172165-03311,,LABEL,1,,,,,,,,,,,,,,,,
22,2,,172165-03321,,LABEL,1,,,,,,,,,,,,,,,,
23,2,,172141-03360,,"LABEL, START SWITCH",1,,,,,,,,,,,,,,,,
24,2,,172141-03371,,"LABEL, PROTECTOR",2,,,,,,,,,,,,,,,,
24-1,2,,172141-03372,,LABEL,2,,,,,,N,,,M/#50621,,,,,,,
25,2,,933112-52400,,"LABEL, FUEL",1,,,,,,,,,,,,,,,,
25-1,2,,172183-03250,,LABEL,1,,,,,,N,,,M/#50621,,,,,,,
26,2,,172165-03460,,"LABEL, PATERN A",1,,,,,,,,,,,,,,,,
27,2,,172183-03280,,"LABEL, LOCK",2,,,,,,,,,,,,,,,,
28,2,,172165-03610,,"LABEL A",1,,,,,,,,,,,,,,,,
28-1,2,,172964-03610,,"LABEL A",1,,,,,,N,,,M/#50621,,,,,,,
29,2,,172165-03660,,"LABEL, BATTERY",1,,,,,,,,,,,,,,,,
29-1,2,,172165-03661,,LABEL,1,,,,,,N,,,M/#50621,,,,,,,
30,2,,172168-03201,,LABEL,1,,,,,,,,,,,,,,,,
31,2,,172164-03510,,LABEL,1,,,,,,W,,,M/#50621,,,,,,,
32,2,,172164-03520,,LABEL,1,,,,,,W,,,M/#50621,,,,,,,
33,2,,172164-03540,,LABEL,1,,,,,,W,,,M/#50621,,,,,,,
34,2,,172964-03370,,LABEL,1,,,,,,W,,,M/#50621,,,,,,,
35,2,,172519-04290,,LABEL,1,,,,,,W,,,M/#50621,,,,,,,
36,2,,172519-04300,,LABEL,1,,,,,,W,,,M/#50621,,,,,,,
37,2,,172964-03390,,LABEL,1,,,,,,W,,,M/#50621,,,,,,,
38,2,,172156-03280,,LABEL,1,,,,,,W,,,M/#50621,,,,,,,
39,2,,172964-03480,,LABEL,1,,,,,,W,,,M/#50621,,,,,,,
39-1,2,,172964-03481,,LABEL,1,,,,,,N,,,M/#50621,,,,,,,
40,2,,172164-03530,,LABEL,2,,,,,,W,,,M/#50621,,,,,,,
41,2,,172165-03620,,"LABEL B",1,,,,,,,1,,,,,,,,,
41-1,2,,172164-03500,,LABEL,1,,,,,,N,,,M/#50621,,,,,,,
41A,2,,172173-03250,,LABEL,1,,,,,,W,,,M/#50681,,,,,,,
43,1,,172168-03410,,LABEL,1,,,,,,,1,,,,,,,,,
44,1,,172168-03250,,LABEL,1,,,,,,,1,,,,,,,,,
45,1,,172168-03260,,"LABEL, PATTERN D",1,,,,,,,1,,,,,,,,,
46,1,,172165-03231,,"LABEL, P.T.O.",1,,,,,,,1,,,,,,,,,
47,1,,172168-03301,,"LABEL, SELECT",1,,,,,,,2,,,,,,,,,
```

https://truckmanualshub.com/

Fig. 1 銘板（キャビン）（JP） LABEL (CABIN) (JP)

見出しNo．1は、見出しNo．2から41Aを含みます。
1 inc. 2 ～ 41A

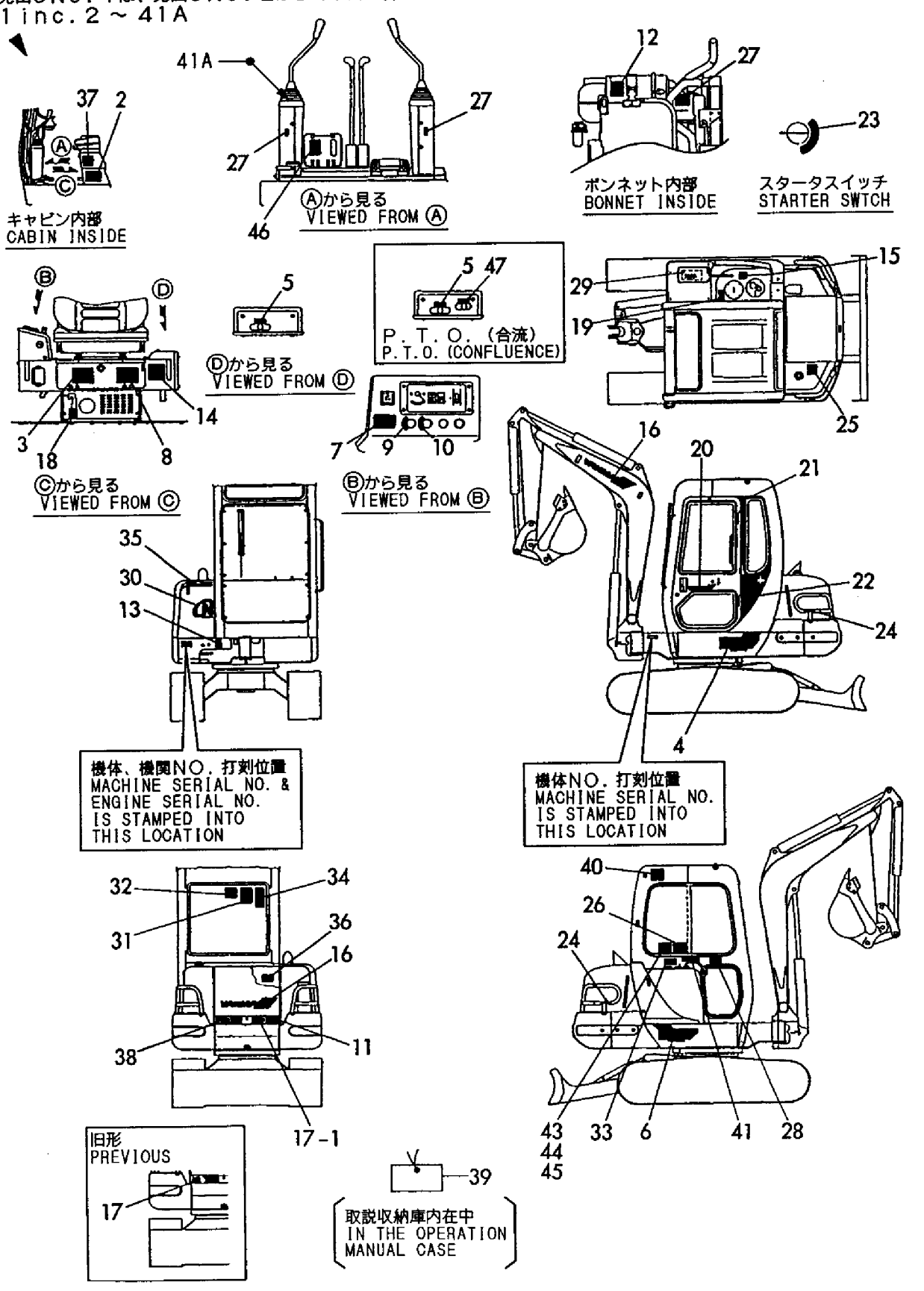

https://truckmanualshub.com/

```
1,1,,772191-03140,,"LABEL ASSY",1,,,,,,,,,,,,,,,
2,2,,933112-52100,,"LABEL, FUEL",1,,,,,,,,,,,,,,,
3,2,,172191-03140,,LABEL,1,,,,,,,,,,,,,,,
4,2,,172171-03151,,LABEL,1,,,,,,,,,,,,,,,
5,2,,172519-03150,,"LABEL, ACCEL",1,,,,,,,,,,,,,,,
6,2,,172171-03161,,LABEL,1,,,,,,,,,,,,,,,
7,2,,172162-03180,,"LABEL,HEATER SWITCH",1,,,,,,,,,,,,,,,
8,2,,172162-03190,,"LABEL,WIPER SWITCH",1,,,,,,,,,,,,,,,
9,2,,172168-03211,,LABEL,1,,,,,,,,,,,,,,,
10,2,,172171-03261,,"LABEL,BOOM",2,,,,,,,,,,,,,,,
11,2,,172171-03261,,"LABEL,BOOM",1,,,,,,,,,,,,,,,
12,2,,172168-03270,,LABEL,1,,,,,,,,,,,,,,,
13,2,,172137-03301,,"LABEL, TURNING LOCK",1,,,,,,,,,,,,,,,
14,2,,172165-03301,,"LABEL,CAB",1,,,,,,,,,,,,,,,
15,2,,172165-03311,,LABEL,1,,,,,,,,,,,,,,,
16,2,,172165-03321,,LABEL,1,,,,,,,,,,,,,,,
17,2,,172141-03360,,"LABEL, START SWITCH",1,,,,,,,,,,,,,,,
18,2,,172171-03400,,PLATE,1,,,,,,,,,,,,,,,
19,2,,172141-03440,,LABEL,1,,,,,,,,,,,,,,,
20,2,,172165-03460,,"LABEL, PATERN A",1,,,,,,,,,,,,,,,
21,2,,172165-03500,,"LABEL,GREASE FEED",1,,,,,,,,,,,,,,,
22,2,,172171-03510,,"LABEL, GREASE",1,,,,,,,,,,,,,,,
23,2,,172171-03520,,"LABEL, OIL/WATER",1,,,,,,,,,,,,,,,
24,2,,172171-03700,,LABEL,1,,,,,,,,,,,,,,,
25,2,,172171-03710,,LABEL,1,,,,,,,,,,,,,,,
26,2,,172171-03720,,LABEL,1,,,,,,,,,,,,,,,
27,2,,172171-03730,,LABEL,2,,,,,,,,,,,,,,,
28,2,,172171-03740,,LABEL,1,,,,,,,,,,,,,,,
29,2,,172171-03750,,LABEL,2,,,,,,,,,,,,,,,
30,2,,172171-03760,,LABEL,1,,,,,,,,,,,,,,,
31,2,,172171-03770,,LABEL,1,,,,,,,,,,,,,,,
32,2,,172171-03780,,LABEL,1,,,,,,,,,,,,,,,
33,2,,172155-03790,,LABEL,1,,,,,,,,,,,,,,,
34,2,,172171-03790,,"LABEL, RADIATOR",1,,,,,,,,,,,,,,,
35,2,,172171-03800,,LABEL,1,,,,,,,,,,,,,,,
36,2,,172171-03810,,LABEL,1,,,,,,,,,,,,,,,
37,2,,172125-03950,,"LABEL, AIR CLEANER",1,,,,,,,,,,,,,,,
38,2,,121120-44800,,"LABEL, RADIATOR",1,,,,,,,,,,,,,,,
39,2,,124764-44810,,"LABEL, SUB-TANK",1,,,,,,,,,,,,,,,
40,2,,124764-44920,,"LABEL, ANTI-FREEZING",1,,,,,,,,,,,,,,,
41,2,,172183-03280,,"LABEL, LOCK",2,,,,,,,,,,,,,,,
42,2,,172165-03231,,"LABEL, P.T.O.",1,,,,,,,,,,,,,,,
43,2,,172168-03301,,"LABEL, SELECT",1,,,,,,,,,,,,,,,
```

https://truckmanualshub.com/

Fig. 2 銘板（キャビン）（EX） LABEL (CABIN) (EX)

見出しNo．1は、見出しNo．2から43を含みます。
1 inc．2 ～ 43

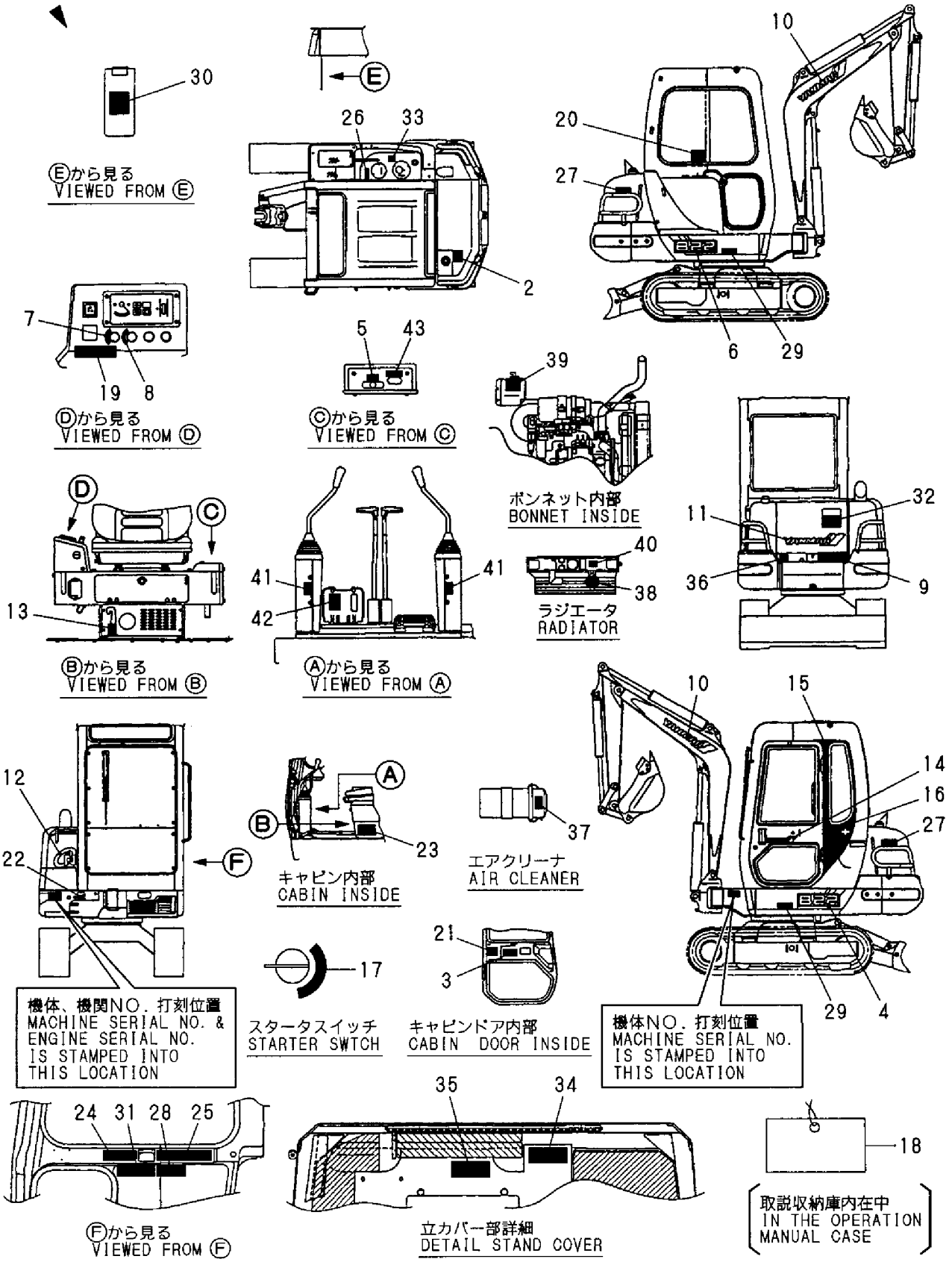

https://truckmanualshub.com/

```
1,1,,772191-03260,,"LABEL ASSY",,,1,,,,,,,,,,,,,
2,2,,933112-52100,,"LABEL, FUEL",,,1,,,,,,,,,,,,,
3,2,,172191-03140,,LABEL,,,1,,,,,,,,,,,,,
4,2,,172171-03151,,LABEL,,,1,,,,,,,,,,,,,
5,2,,172519-03150,,"LABEL, ACCEL",,,1,,,,,,,,,,,,,
6,2,,172171-03161,,LABEL,,,1,,,,,,,,,,,,,
7,2,,172162-03180,,"LABEL,HEATER SWITCH",,,1,,,,,,,,,,,,,
8,2,,172162-03190,,"LABEL,WIPER SWITCH",,,1,,,,,,,,,,,,,
9,2,,172168-03211,,LABEL,,,1,,,,,,,,,,,,,
10,2,,172171-03261,,"LABEL,BOOM",,,2,,,,,,,,,,,,,
11,2,,172171-03261,,"LABEL,BOOM",,,1,,,,,,,,,,,,,
12,2,,172168-03270,,LABEL,,,1,,,,,,,,,,,,,
13,2,,172137-03301,,"LABEL, TURNING LOCK",,,1,,,,,,,,,,,,,
14,2,,172165-03301,,"LABEL,CAB",,,1,,,,,,,,,,,,,
15,2,,172165-03311,,LABEL,,,1,,,,,,,,,,,,,
16,2,,172165-03321,,LABEL,,,1,,,,,,,,,,,,,
17,2,,172141-03360,,"LABEL, START SWITCH",,,1,,,,,,,,,,,,,
18,2,,172171-03400,,PLATE,,,1,,,,,,,,,,,,,
19,2,,172141-03440,,LABEL,,,1,,,,,,,,,,,,,
20,2,,172165-03460,,"LABEL, PATERN A",,,1,,,,,,,,,,,,,
21,2,,172165-03500,,"LABEL,GREASE FEED",,,1,,,,,,,,,,,,,
22,2,,172171-03510,,"LABEL, GREASE",,,1,,,,,,,,,,,,,
23,2,,172171-03520,,"LABEL, OIL/WATER",,,1,,,,,,,,,,,,,
24,2,,172171-03700,,LABEL,,,1,,,,,,,,,,,,,
25,2,,172171-03710,,LABEL,,,1,,,,,,,,,,,,,
26,2,,172171-03720,,LABEL,,,1,,,,,,,,,,,,,
27,2,,172171-03730,,LABEL,,,2,,,,,,,,,,,,,
28,2,,172171-03740,,LABEL,,,1,,,,,,,,,,,,,
29,2,,172171-03750,,LABEL,,,2,,,,,,,,,,,,,
30,2,,172171-03760,,LABEL,,,1,,,,,,,,,,,,,
31,2,,172171-03770,,LABEL,,,1,,,,,,,,,,,,,
32,2,,172171-03780,,LABEL,,,1,,,,,,,,,,,,,
33,2,,172155-03790,,LABEL,,,1,,,,,,,,,,,,,
34,2,,172171-03790,,"LABEL, RADIATOR",,,1,,,,,,,,,,,,,
35,2,,172171-03800,,LABEL,,,1,,,,,,,,,,,,,
36,2,,172171-03810,,LABEL,,,1,,,,,,,,,,,,,
37,2,,172125-03950,,"LABEL, AIR CLEANER",,,1,,,,,,,,,,,,,
38,2,,121120-44800,,"LABEL, RADIATOR",,,1,,,,,,,,,,,,,
39,2,,124764-44810,,"LABEL, SUB-TANK",,,1,,,,,,,,,,,,,
40,2,,124764-44920,,"LABEL, ANTI-FREEZING",,,1,,,,,,,,,,,,,
41,2,,172183-03280,,"LABEL, LOCK",,,1,,,,,,,,,,,,,
42,2,,172165-03231,,"LABEL, P.T.O.",,,1,,,,,,,,,,,,,
43,2,,172168-03301,,"LABEL, SELECT",,,1,,,,,,,,,,,,,
```

https://truckmanualshub.com/

Fig.3 銘板（キャビン）（AS） LABEL (CABIN) (AS)

見出しNo．1は、見出しNo．2から43を含みます。
1 inc．2 ～ 43

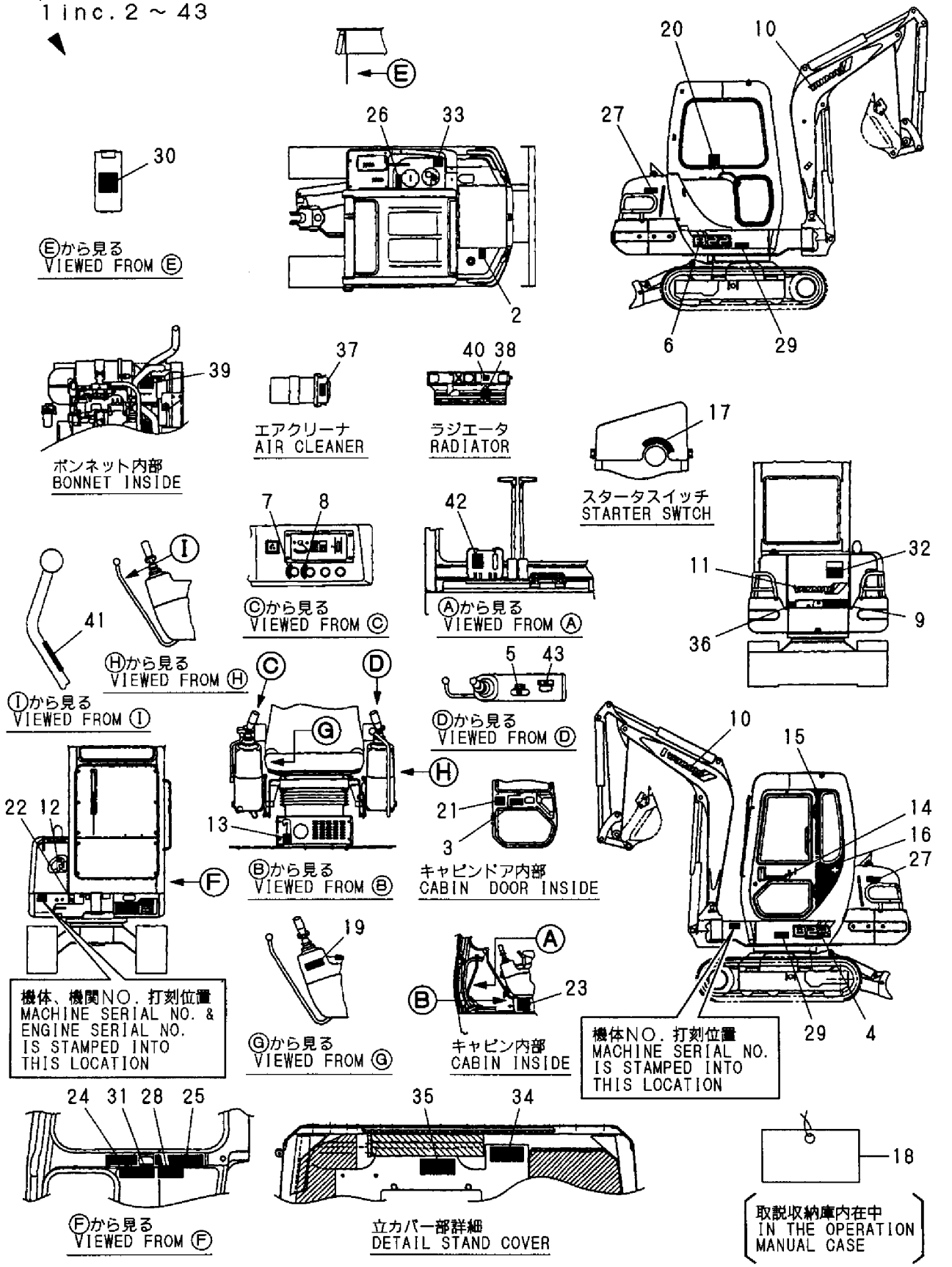

```
1,1,,772191-03110,,"LABEL SET",,1,,,,,,,,,,,,,,,
1-1,1,,772191-03111,,"LABEL SET",,1,,,,,N,,,,,M/#50621,,,,,,
2,2,,172191-03110,,"LABEL, SPECIFICATION",,1,,,,,,,,,,,,,,,
3,2,,172165-03130,,"LABEL,GREASE FEED",,1,,,,,,,,,,,,,,,
4,2,,172165-03141,,"LABEL,FRONT",,1,,,,,,,,,,,,,,,
5,2,,172171-03151,,LABEL,,1,,,,,,,,,,,,,,,
6,2,,172519-03150,,"LABEL, ACCEL",,1,,,,,,,,,,,,,,,
7,2,,172171-03161,,LABEL,,1,,,,,,,,,,,,,,,
8,2,,172141-03170,,"LABEL, RESTART",,1,,,,,,,,,,,,,,,
9,2,,172171-03170,,"LABEL, OIL/WATER",,1,,,,,,,,,,,,,,,
10,2,,172168-03191,,LABEL,,1,,,,,,,,,,,,,,,
10-1,2,,172168-03211,,LABEL,,1,,,,,N,,,,,M/#50621,,,,,,
11,2,,172141-03201,,"LABEL,ENGINE ROOM(C)",,1,,,,,,,,,,,,,,,
11-1,2,,172141-03202,,LABEL,,1,,,,,N,,,,,M/#50621,,,,,,
12,2,,172165-03220,,"LABEL, GREASE",,1,,,,,,,,,,,,,,,
13,2,,172165-03240,,LABEL,,1,,,,,,,,,,,,,,,
14,2,,172155-03310,,"LABEL, OILING",,1,,,,,,,,,,,,,,,
15,2,,172171-03261,,"LABEL,BOOM",,2,,,,,,,,,,,,,,,
16,2,,172519-03290,,"LABEL, ENG.COVER",,1,,,,,,,,,,,,,,,
16-1,2,,172519-04180,,LABEL,,1,,,,,N,,,,,M/#50621,,,,,,
17,2,,172137-03301,,"LABEL, TURNING LOCK",,1,,,,,,,,,,,,,,,
18,2,,172142-03301,,LABEL,,1,,,,,,,,,,,,,,,
18-1,2,,172142-03302,,LABEL,,1,,,,,N,,,,,M/#50621,,,,,,
19,2,,172141-03360,,"LABEL, START SWITCH",,1,,,,,,,,,,,,,,,
20,2,,172141-03371,,"LABEL, PROTECTOR",,2,,,,,,,,,,,,,,,
20-1,2,,172141-03372,,LABEL,,2,,,,,N,,,,,M/#50621,,,,,,
21,2,,933112-52400,,"LABEL, FUEL",,1,,,,,,,,,,,,,,,
21-1,2,,172183-03250,,LABEL,,1,,,,,N,,,,,M/#50621,,,,,,
22,2,,172151-03540,,"LABEL,PATTERN A",,1,,,,,,,,,,,,,,,
23,2,,172183-03280,,"LABEL, LOCK",,2,,,,,,,,,,,,,,,
24,2,,172168-03201,,LABEL,,1,,,,,,,,,,,,,,,
25,2,,172165-03610,,"LABEL A",,1,,,,,,,,,,,,,,,
25-1,2,,172964-03610,,"LABEL A",,1,,,,,N,,,,,M/#50621,,,,,,
26,2,,172165-03660,,"LABEL, BATTERY",,1,,,,,,,,,,,,,,,
26-1,2,,172165-03661,,LABEL,,1,,,,,N,,,,,M/#50621,,,,,,
27,2,,172164-03510,,LABEL,,1,,,,,W,,,,,M/#50621,,,,,,
28,2,,172164-03520,,LABEL,,1,,,,,W,,,,,M/#50621,,,,,,
29,2,,172164-03540,,LABEL,,1,,,,,W,,,,,M/#50621,,,,,,
30,2,,172964-03370,,LABEL,,1,,,,,W,,,,,M/#50621,,,,,,
31,2,,172519-04290,,LABEL,,1,,,,,W,,,,,M/#50621,,,,,,
32,2,,172519-04300,,LABEL,,1,,,,,W,,,,,M/#50621,,,,,,
33,2,,172964-03390,,LABEL,,1,,,,,W,,,,,M/#50621,,,,,,
34,2,,172964-03480,,LABEL,,1,,,,,W,,,,,M/#50621,,,,,,
34-1,2,,172964-03481,,LABEL,,1,,,,,N,,,,,M/#50621,,,,,,
35,2,,172156-03280,,LABEL,,1,,,,,W,,,,,M/#50621,,,,,,
36,2,,172165-03620,,"LABEL B",,1,,,,,,1,,,,,,,,,
36-1,2,,172164-03500,,LABEL,,1,,,,,N,,,,,M/#50621,,,,,,
38,1,,172141-03160,,"LABEL, OPERATION(C)",,1,,,,,,1,,,,,,,,,
39,1,,172141-03390,,LABEL,,1,,,,,,1,,,,,,,,,
40,1,,172165-03231,,"LABEL, P.T.O.",,1,,,,,,1,,,,,,,,,
41,1,,172168-03400,,LABEL,,1,,,,,,1,,,,,,,,,
41-1,1,,172168-03401,,LABEL,,1,,,,,N,1,,,,M/#50621,,,,,,
42,1,,172168-03301,,"LABEL, SELECT",,1,,,,,,2,,,,,,,,,
43,1,,172511-03250,,"LABEL, LEVER LOCK",,2,,,,,,3,,,,,,,,,
44,1,,172151-03550,,"LABEL,PATTERN B",,1,,,,,,3,,,,,,,,,
```

https://truckmanualshub.com/

Fig. 4 銘板（キャノピ）（JP） LABEL (CANOPY) (JP)

見出しNo．1は、見出しNo．2から36を含みます。
1 inc．2 ～ 36

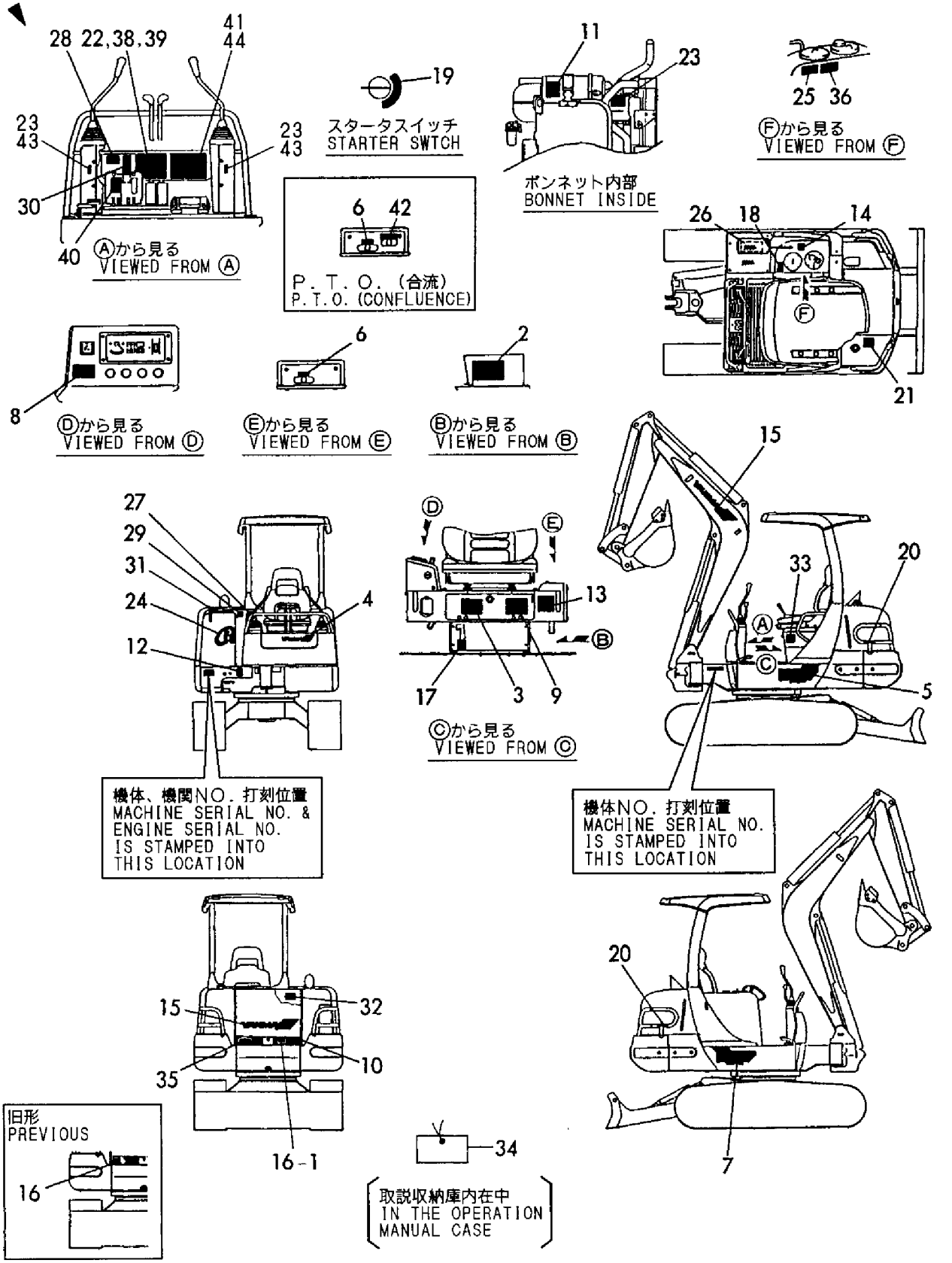

```
1,1,,772191-03150,,"LABEL ASSY",,1,,,,,,,,,,,,,,,
2,2,,172165-03141,,"LABEL,FRONT",,1,,,,,,,,,,,,,,,
3,2,,172191-03140,,LABEL,,1,,,,,,,,,,,,,,,
4,2,,172171-03151,,LABEL,,1,,,,,,,,,,,,,,,
5,2,,172519-03150,,"LABEL, ACCEL",,1,,,,,,,,,,,,,,,
6,2,,172171-03161,,LABEL,,1,,,,,,,,,,,,,,,
7,2,,172168-03211,,LABEL,,1,,,,,,,,,,,,,,,
8,2,,172171-03261,,"LABEL,BOOM",,2,,,,,,,,,,,,,,,
9,2,,172171-03261,,"LABEL,BOOM",,1,,,,,,,,,,,,,,,
10,2,,172168-03270,,LABEL,,1,,,,,,,,,,,,,,,
11,2,,172137-03301,,"LABEL, TURNING LOCK",,1,,,,,,,,,,,,,,,
12,2,,172141-03360,,"LABEL, START SWITCH",,1,,,,,,,,,,,,,,,
13,2,,172171-03400,,PLATE,,1,,,,,,,,,,,,,,,
14,2,,124764-44920,,"LABEL, ANTI-FREEZING",,1,,,,,,,,,,,,,,,
15,2,,933112-52100,,"LABEL, FUEL",,1,,,,,,,,,,,,,,,
16,2,,172141-03440,,LABEL,,1,,,,,,,,,,,,,,,
17,2,,172165-03500,,"LABEL,GREASE FEED",,1,,,,,,,,,,,,,,,
18,2,,172171-03510,,"LABEL, GREASE",,1,,,,,,,,,,,,,,,
19,2,,172171-03520,,"LABEL, OIL/WATER",,1,,,,,,,,,,,,,,,
20,2,,172151-03540,,"LABEL,PATTERN A",,1,,,,,,,,,,,,,,,
21,2,,172171-03700,,LABEL,,1,,,,,,,,,,,,,,,
22,2,,172171-03710,,LABEL,,1,,,,,,,,,,,,,,,
23,2,,172171-03720,,LABEL,,1,,,,,,,,,,,,,,,
24,2,,172171-03730,,LABEL,,2,,,,,,,,,,,,,,,
25,2,,172171-03740,,LABEL,,1,,,,,,,,,,,,,,,
26,2,,172171-03750,,LABEL,,2,,,,,,,,,,,,,,,
27,2,,172171-03760,,LABEL,,1,,,,,,,,,,,,,,,
28,2,,172171-03770,,LABEL,,1,,,,,,,,,,,,,,,
29,2,,172171-03780,,LABEL,,1,,,,,,,,,,,,,,,
30,2,,172155-03790,,LABEL,,1,,,,,,,,,,,,,,,
31,2,,172171-03790,,"LABEL, RADIATOR",,1,,,,,,,,,,,,,,,
32,2,,172171-03800,,LABEL,,1,,,,,,,,,,,,,,,
33,2,,172171-03810,,LABEL,,1,,,,,,,,,,,,,,,
34,2,,172125-03950,,"LABEL, AIR CLEANER",,1,,,,,,,,,,,,,,,
35,2,,121120-44800,,"LABEL, RADIATOR",,1,,,,,,,,,,,,,,,
36,2,,124764-44810,,"LABEL, SUB-TANK",,1,,,,,,,,,,,,,,,
37,2,,172183-03280,,"LABEL, LOCK",,2,,,,,,,,,,,,,,,
38,2,,172165-03231,,"LABEL, P.T.O.",,1,,,,,,,,,,,,,,,
39,2,,172168-03301,,"LABEL, SELECT",,1,,,,,,,,,,,,,,,
```

https://truckmanualshub.com/

Fig. 5 銘板（キャノピ）（EX） LABEL (CANOPY) (EX)

見出しNo．1は、見出しNo．2から39を含みます。
1inc．2 ～ 39

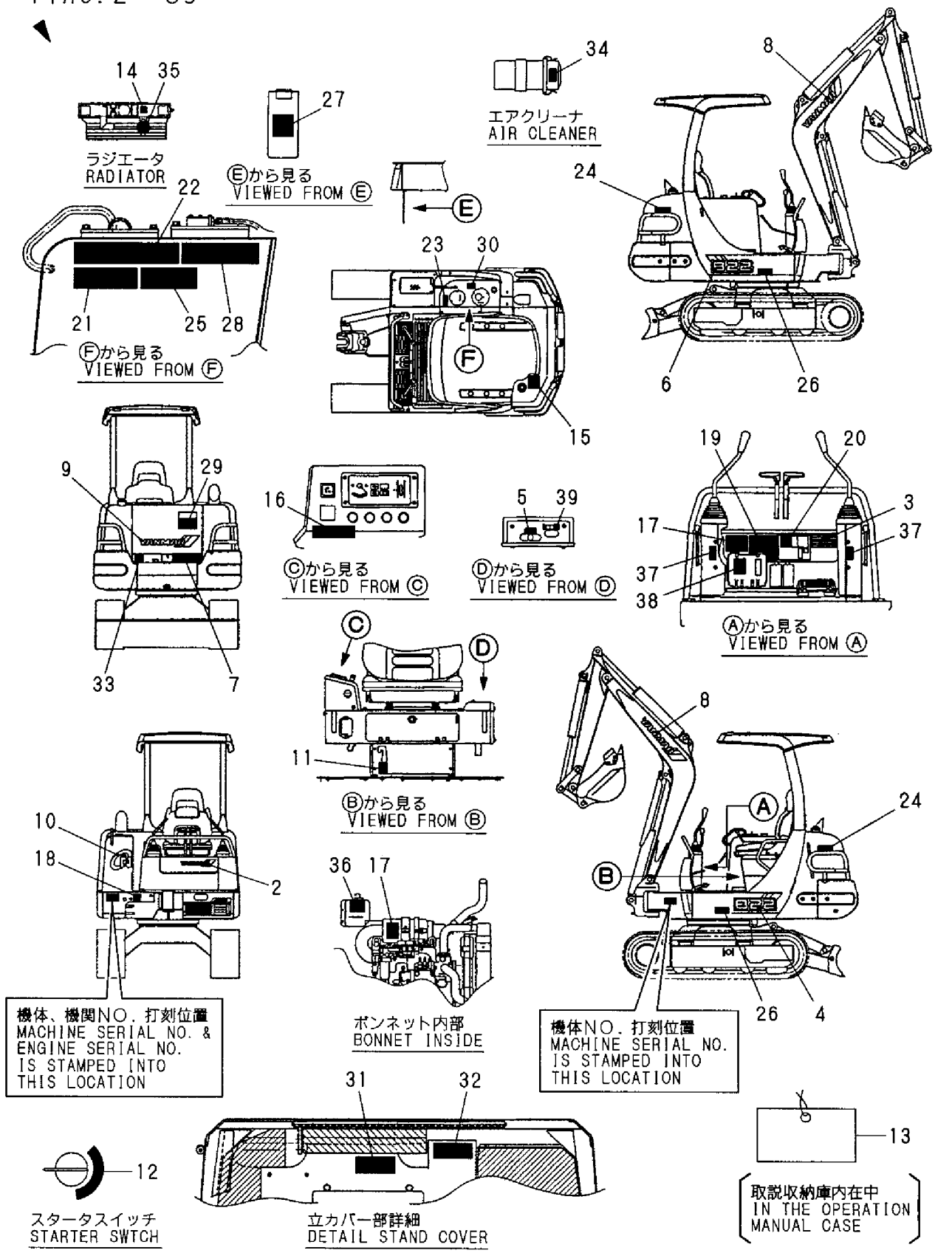

https://truckmanualshub.com/

```
1,1,,772191-03150,,"LABEL ASSY",,,,1,,,,,,,,,,,,,
2,2,,172165-03141,,"LABEL,FRONT",,,,1,,,,,,,,,,,,,
3,2,,172191-03140,,LABEL,,,,1,,,,,,,,,,,,,
4,2,,172171-03151,,LABEL,,,,1,,,,,,,,,,,,,
5,2,,172519-03150,,"LABEL, ACCEL",,,,1,,,,,,,,,,,,,
6,2,,172171-03161,,LABEL,,,,1,,,,,,,,,,,,,
7,2,,172168-03211,,LABEL,,,,1,,,,,,,,,,,,,
8,2,,172171-03261,,"LABEL,BOOM",,,,2,,,,,,,,,,,,,
9,2,,172171-03261,,"LABEL,BOOM",,,,1,,,,,,,,,,,,,
10,2,,172168-03270,,LABEL,,,,1,,,,,,,,,,,,,
11,2,,172137-03301,,"LABEL, TURNING LOCK",,,,1,,,,,,,,,,,,,
12,2,,172141-03360,,"LABEL, START SWITCH",,,,1,,,,,,,,,,,,,
13,2,,172171-03400,,PLATE,,,,1,,,,,,,,,,,,,
14,2,,124764-44920,,"LABEL, ANTI-FREEZING",,,,1,,,,,,,,,,,,,
15,2,,933112-52100,,"LABEL, FUEL",,,,1,,,,,,,,,,,,,
16,2,,172141-03440,,LABEL,,,,1,,,,,,,,,,,,,
17,2,,172165-03500,,"LABEL,GREASE FEED",,,,1,,,,,,,,,,,,,
18,2,,172171-03510,,"LABEL, GREASE",,,,1,,,,,,,,,,,,,
19,2,,172171-03520,,"LABEL, OIL/WATER",,,,1,,,,,,,,,,,,,
20,2,,172151-03540,,"LABEL,PATTERN A",,,,1,,,,,,,,,,,,,
21,2,,172171-03700,,LABEL,,,,1,,,,,,,,,,,,,
22,2,,172171-03710,,LABEL,,,,1,,,,,,,,,,,,,
23,2,,172171-03720,,LABEL,,,,1,,,,,,,,,,,,,
24,2,,172171-03730,,LABEL,,,,2,,,,,,,,,,,,,
25,2,,172171-03740,,LABEL,,,,1,,,,,,,,,,,,,
26,2,,172171-03750,,LABEL,,,,2,,,,,,,,,,,,,
27,2,,172171-03760,,LABEL,,,,1,,,,,,,,,,,,,
28,2,,172171-03770,,LABEL,,,,1,,,,,,,,,,,,,
29,2,,172171-03780,,LABEL,,,,1,,,,,,,,,,,,,
30,2,,172155-03790,,LABEL,,,,1,,,,,,,,,,,,,
31,2,,172171-03790,,"LABEL, RADIATOR",,,,1,,,,,,,,,,,,,
32,2,,172171-03800,,LABEL,,,,1,,,,,,,,,,,,,
33,2,,172171-03810,,LABEL,,,,1,,,,,,,,,,,,,
34,2,,172125-03950,,"LABEL, AIR CLEANER",,,,1,,,,,,,,,,,,,
35,2,,121120-44800,,"LABEL, RADIATOR",,,,1,,,,,,,,,,,,,
36,2,,124764-44810,,"LABEL, SUB-TANK",,,,1,,,,,,,,,,,,,
37,2,,172183-03280,,"LABEL, LOCK",,,,2,,,,,,,,,,,,,
38,2,,172165-03231,,"LABEL, P.T.O.",,,,1,,,,,,,,,,,,,
39,2,,172168-03301,,"LABEL, SELECT",,,,1,,,,,,,,,,,,,
```

https://truckmanualshub.com/

Fig. 6 銘板（キャノピ）（AS） LABEL (CANOPY) (AS)

見出しNo．1は、見出しNo．2から39を含みます。
1 inc. 2 ～ 39

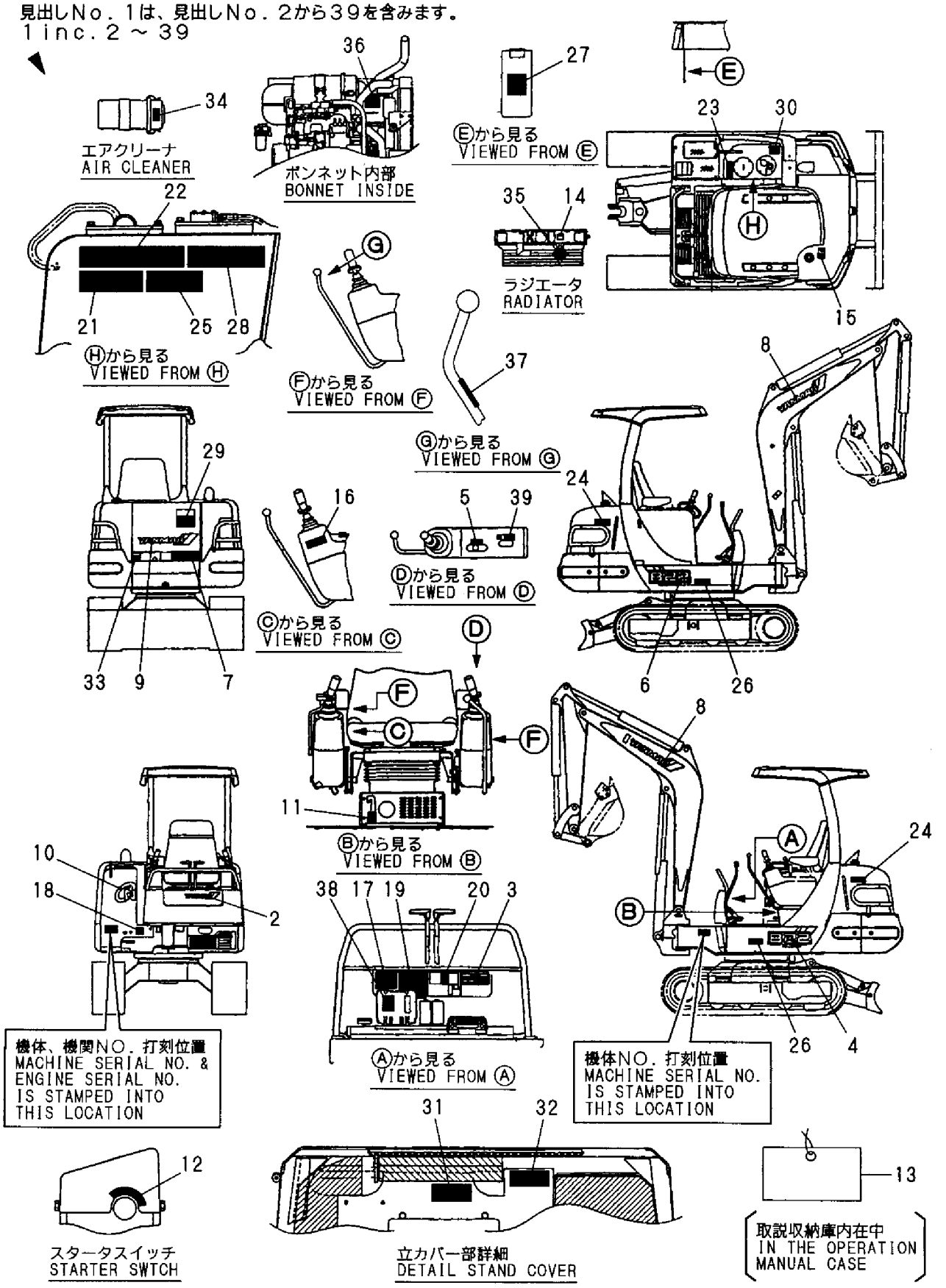

https://truckmanualshub.com/

```
1,1,,772141-05100,,"TOOL SET",1,1,1,1,,,,,,,,,,,,
2,2,,933110-90000,,"BAG, TOOL",1,1,1,1,,,,,,,,,,,,
3,2,,172614-38300,,"PIN 5X45, LOCK",4,4,4,4,,,,,,,,,,,,
4,2,,104200-92350,,"DRIVER, SCREW",1,1,1,1,,,,,,,,,,,,
5,2,,119640-92750,,"WRENCH, FILTER",1,1,1,1,,,,,,,,,,,,
6,2,,933171-00470,,"PLIERS 200",1,1,1,1,,,,,,,,,,,,
7,2,,28110-080100,,"WRENCH  8X10",1,1,1,1,,,,,,,,,,,,
8,2,,28110-120140,,"WRENCH 12X14",2,2,2,2,,,,,,,,,,,,
9,2,,28110-170190,,"WRENCH 17X19",1,1,1,1,,,,,,,,,,,,
10,2,,28110-220240,,"WRENCH 22X24",1,1,1,1,,,,,,,,,,,,
11,2,,28110-270300,,"WRENCH 27X30",1,1,1,1,,,,,,,,,,,,
12,2,,172122-05100,,NOZZLE,1,1,,,,,,,,,,,,,,,
12-1,2,,172122-05101,,NOZZLE,1,1,1,1,,,N,,,M/#50621,,M/#50621,,,,,,
13,2,,28150-080000,,"BAR WRENCH  8",1,1,1,1,,,,,,,,,,,,
14,2,,28227-271400,,"BOX WRENCH 27X140",1,1,1,1,,,,,,,,,,,,
15,2,,28230-120250,,"TURNING HANDLE",1,1,1,1,,,,,,,,,,,,
16,2,,933110-09700,,"HOSE, GREASE",1,1,,,,,,,,,,,,,,,
16-1,2,,933112-09701,,"HOSE, GREASE",1,1,,,,,N,M,,M/#50621,,M/#50621,,,,,,
16-2,2,,933110-09701,,"HOSE, GREASE",1,1,1,1,,,N,,,M/#50621,,M/#50621,,,,,,
17,2,,933110-09800,,"GUN 800, GREASE",1,1,,,,,,,,,,,,,,,
17-1,2,,933112-09801,,"GUN 800, GREASE",1,1,,,,,N,M,,M/#50621,,M/#50621,,,,,,
17-2,2,,933110-09801,,"GUN 800, GREASE",1,1,1,1,,,N,,,M/#50621,,M/#50621,,,,,,
19,1,,172176-07330,,"BAG, MANUAL",1,1,,,,,W,,,M/#50621,,M/#50621,,,,,,
20,1,,172119-68600,,BUCK,,,1,1,,,,1,,,,,,,,,
21,1,,22117-080000,,"WASHER  8",,,2,2,,,,1,,,,,,,,,
22,1,,26116-080202,,"BOLT M 8X 20 PLATED",,,2,2,,,,1,,,,,,,,,
23,1,,26716-080002,,"NUT M 8",,,2,2,,,,1,,,,,,,,,
```

https://truckmanualshub.com/

Fig. 7 工具 TOOL

見出しNo．1は、見出しNo．2から17を含みます。
1 inc．2 ～ 17

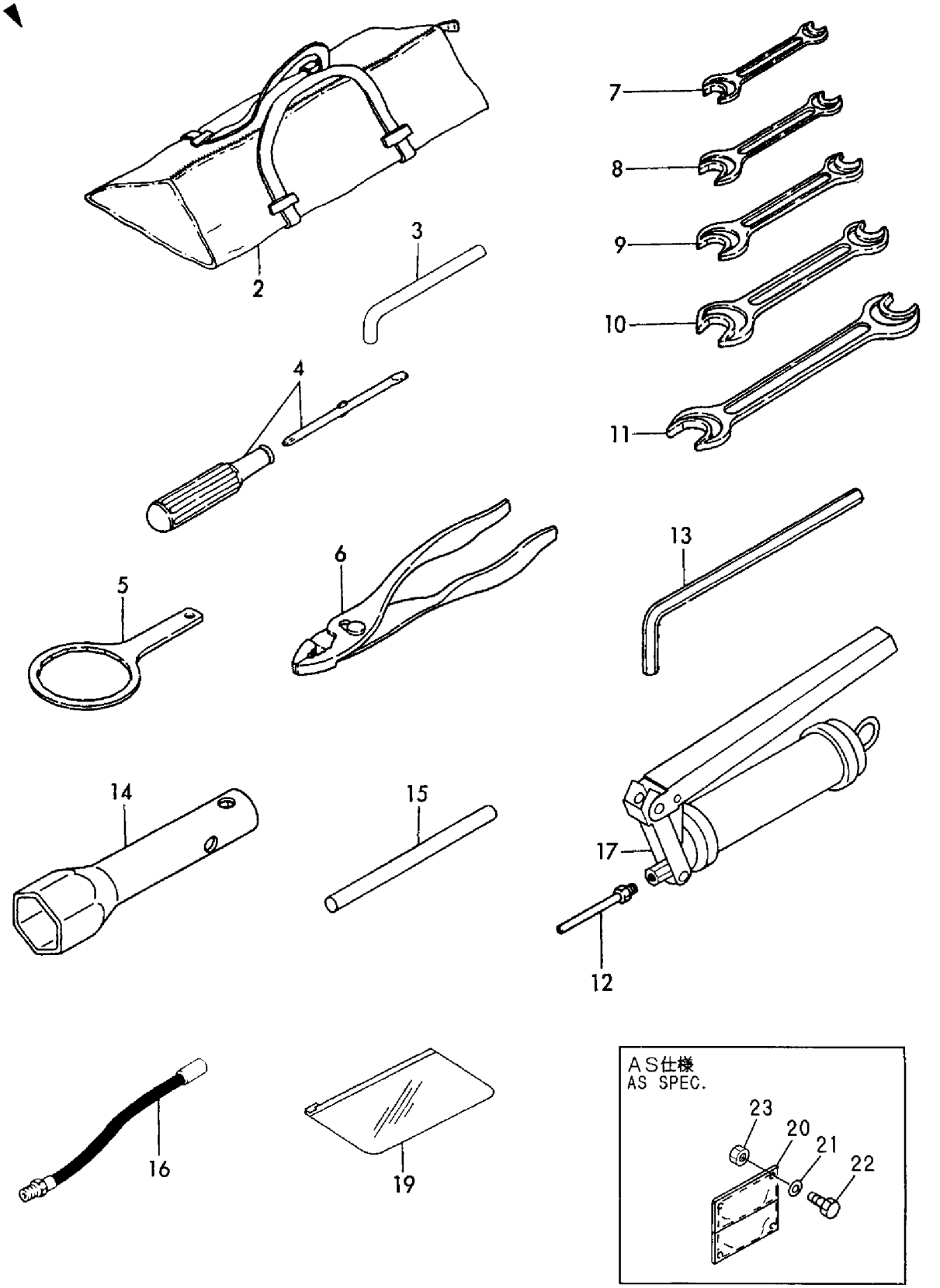

https://truckmanualshub.com/

```
1,1,,172171-11300,,"PIPE TAIL",1,1,1,1,,,,,,,,,,,,,
2,1,,119831-13580,,CLAMP,1,1,1,1,,,,,,,,,,,,,
3,1,,22117-080000,,"WASHER  8",1,1,1,1,,,,,,,,,,,,,
4,1,,22217-080000,,"SPRING WASHER  8",1,1,1,1,,,,,,,,,,,,,
5,1,,26106-080552,,"BOLT M 8X 55 PLATED",1,1,1,1,,,,,,,,,,,,,,
6,1,,26706-080002,,"NUT M 8",1,1,1,1,,,,,,,,,,,,,
7,1,,172171-11500,,"HOSE,AIR CLEANER",1,1,1,1,,,,,,,,,,,,,
8,1,,23000-070000,,"CLAMP 70",1,1,1,1,,,,,,,,,,,,,
9,1,,194250-51660,,"BAND  250",1,1,1,1,,,,,,,,,,,,,
```

https://truckmanualshub.com/

Fig.8 吸気管&噴出口 INLET HOSE & EXHAUST PIPE

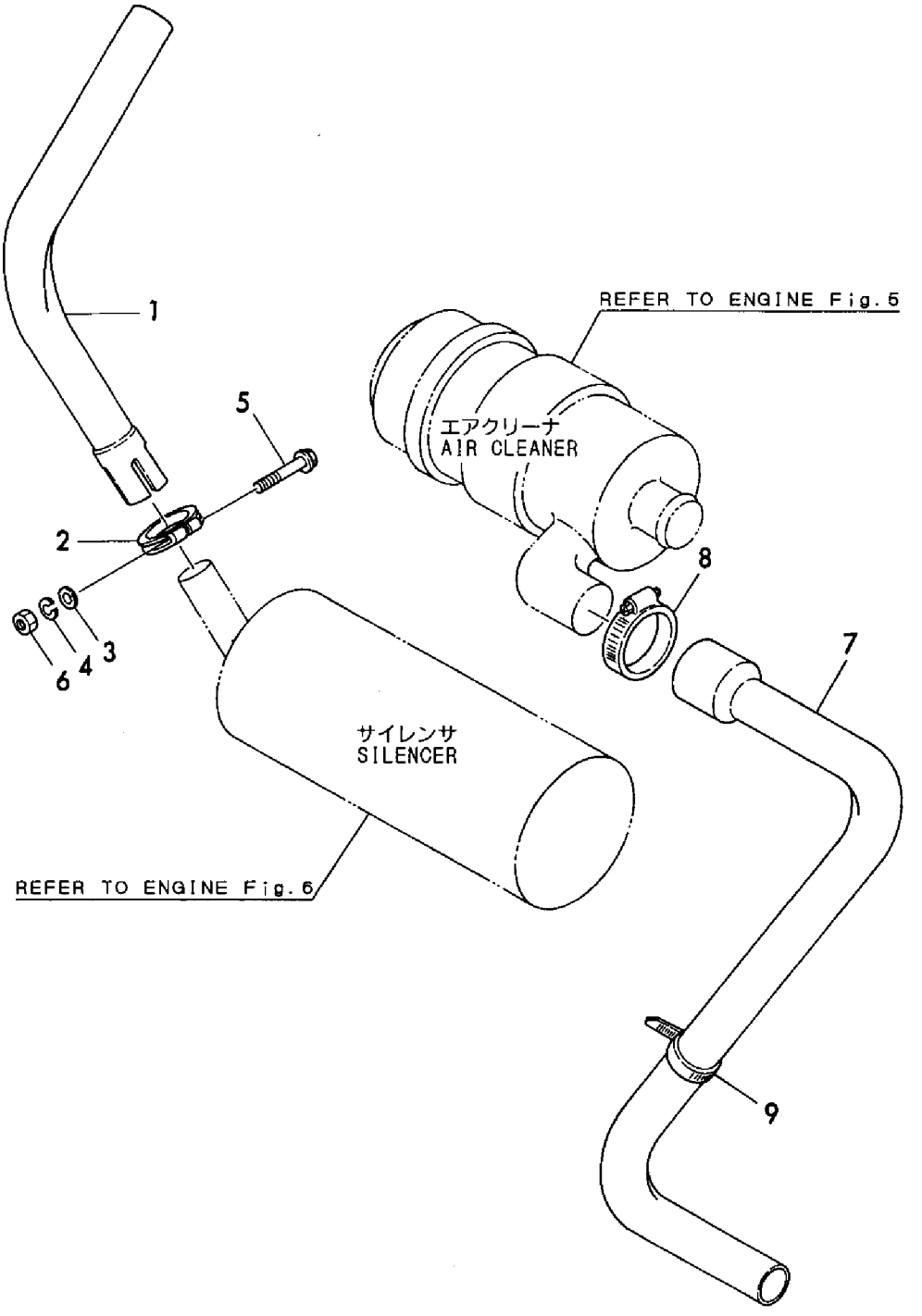

https://truckmanualshub.com/

```
1,1,,172165-12100,,"LEVER ASSY, ACCEL.",1,1,,,,,,,,,,,,,,,,
1A,2,,172165-12140,,GRIP(RED,1,1,,,,,W,,,M/#50802,,M/#50802,,,,,,
2,1,,172168-12100,,"CABLE F,ACCELERATOR",1,1,,,,,,,,,,,,,,,,
3,1,,172137-12270,,"JOINT, CABLE",1,1,1,1,,,,,,,,,,,,,
4,1,,172141-12280,,"CLAMP, ACCEL WIRE",1,1,1,1,,,,,,,,,,,,,
5,1,,172113-12521,,"PIN, CABLE",1,1,1,1,,,,,,,,,,,,,
6,1,,1C6281-52310,,"PIN 6,COME-OFF SNAP",2,2,2,2,,,,,,,,,,,,,,
7,1,,1A1040-56900,,"PIN  6X 17",1,1,1,1,,,,,,,,,,,,,
8,1,,1A1380-58050,,"GROMMET 16X20X4.5",1,1,1,1,,,,,,,,,,,,,
9,1,,22137-060000,,"WASHER 6, POLISHED",2,2,2,2,,,,,,,,,,,,,
10,1,,22217-080000,,"SPRING WASHER  8",2,2,2,2,,,,,,,,,,,,,
11,1,,26013-100302,,"BOLT M10X 30",2,2,2,2,,,,,,,,,,,,,
12,1,,26116-080162,,"BOLT M 8X 16 PLATED",2,2,2,2,,,,,,,,,,,,,,
13,1,,172179-12100,,"LEVER,ACCEL",,,1,1,,,,1,,,,,,,,,
14,2,,172165-12140,,GRIP(RED,,,1,1,,,,1,,,,,,,,,
15,1,,172168-12110,,"CABLE,ACCEL(S)",,,1,1,,,,1,,,,,,,,,
```

https://truckmanualshub.com/

Fig. 9 アクセル ACCELERATOR

JP, EX

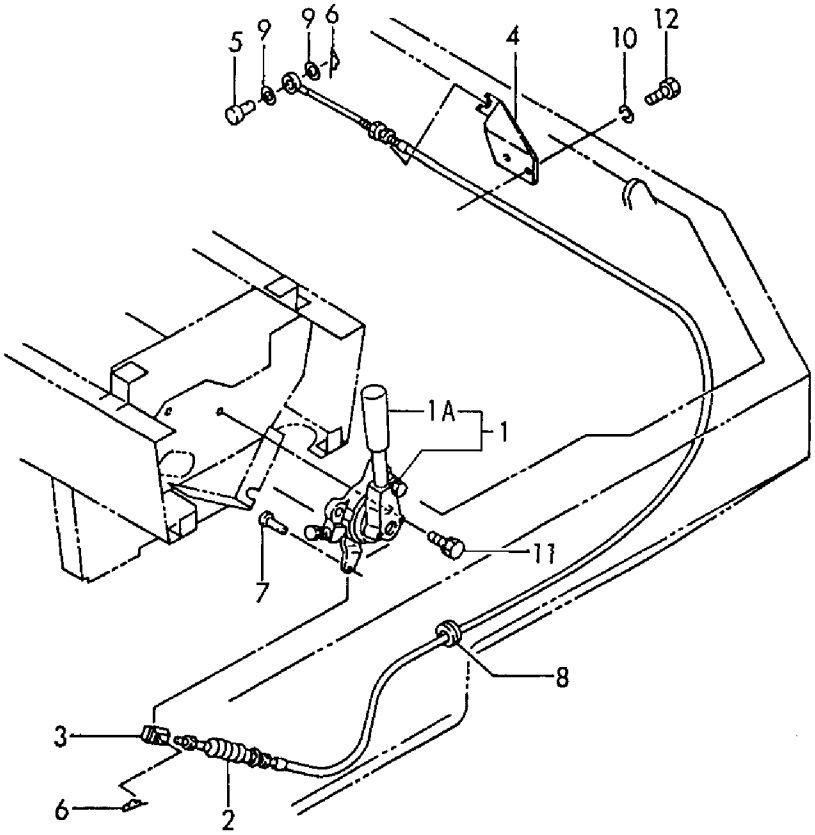

AS

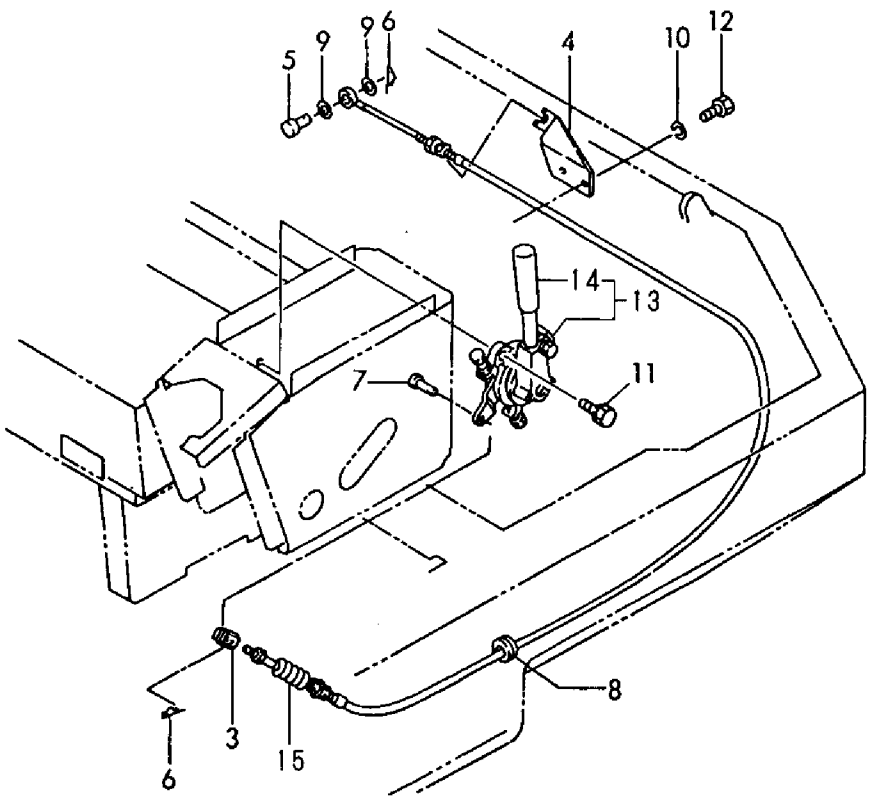

https://truckmanualshub.com/

```
1,1,,196420-02310,,"ABSORBER, SHOCK",2,2,2,2,,,,,,,,,,,,,
2,1,,172146-13101,,BRACKET,1,1,1,1,,,,,,,,,,,,,
3,1,,172168-13101,,"MOUNT(R), ENGINE",1,1,1,1,,,,,,,,,,,,,
4,1,,172146-13111,,BRACKET,1,1,1,1,,,,,,,,,,,,,
5,1,,172168-13120,,"MOUNT(L), ENGINE",1,1,1,1,,,,,,,,,,,,,
6,1,,172168-13150,,BRACHET,2,2,2,2,,,,,,,,,,,,,
7,1,,172168-13181,,"BRACKET COMP.,ENGINE",2,2,2,2,,,,,,,,,,,,,
8,1,,172162-13200,,"BOLT M10X30",8,8,8,8,,,,,,,,,,,,,
9,1,,172124-13230,,"STOPPER, ENGINE",3,3,3,3,,,,,,,,,,,,,
10,1,,172131-37170,,"BOLT M12X 30",6,6,6,6,,,,,,,,,,,,,
11,1,,172137-46040,,"SEAT, SPRING",8,8,8,8,,,,,,,,,,,,,
12,1,,22217-100000,,"SPRING WASHER 10",8,8,8,8,,,,,,,,,,,,,
13,1,,22217-120000,,"SPRING WASHER",6,6,6,6,,,,,,,,,,,,,
14,1,,22217-120000,,"SPRING WASHER",8,8,8,8,,,,,,,,,,,,,
15,1,,26013-100252,,"BOLT W/WASHER M10X25",6,6,6,6,,,,,,,,,,,,,
16,1,,26013-120302,,"BOLT W/WASHER M12X30",8,8,8,8,,,,,,,,,,,,,
17,1,,26716-120002,,"NUT M12",8,8,8,8,,,,,,,,,,,,,
18,1,,172168-13250,,"ABSORBER,SHOCK 180",2,2,2,2,,,,,,,,,,,,,
```

https://truckmanualshub.com/

Fig. 10 エンジンマウント ENGINE MOUNT

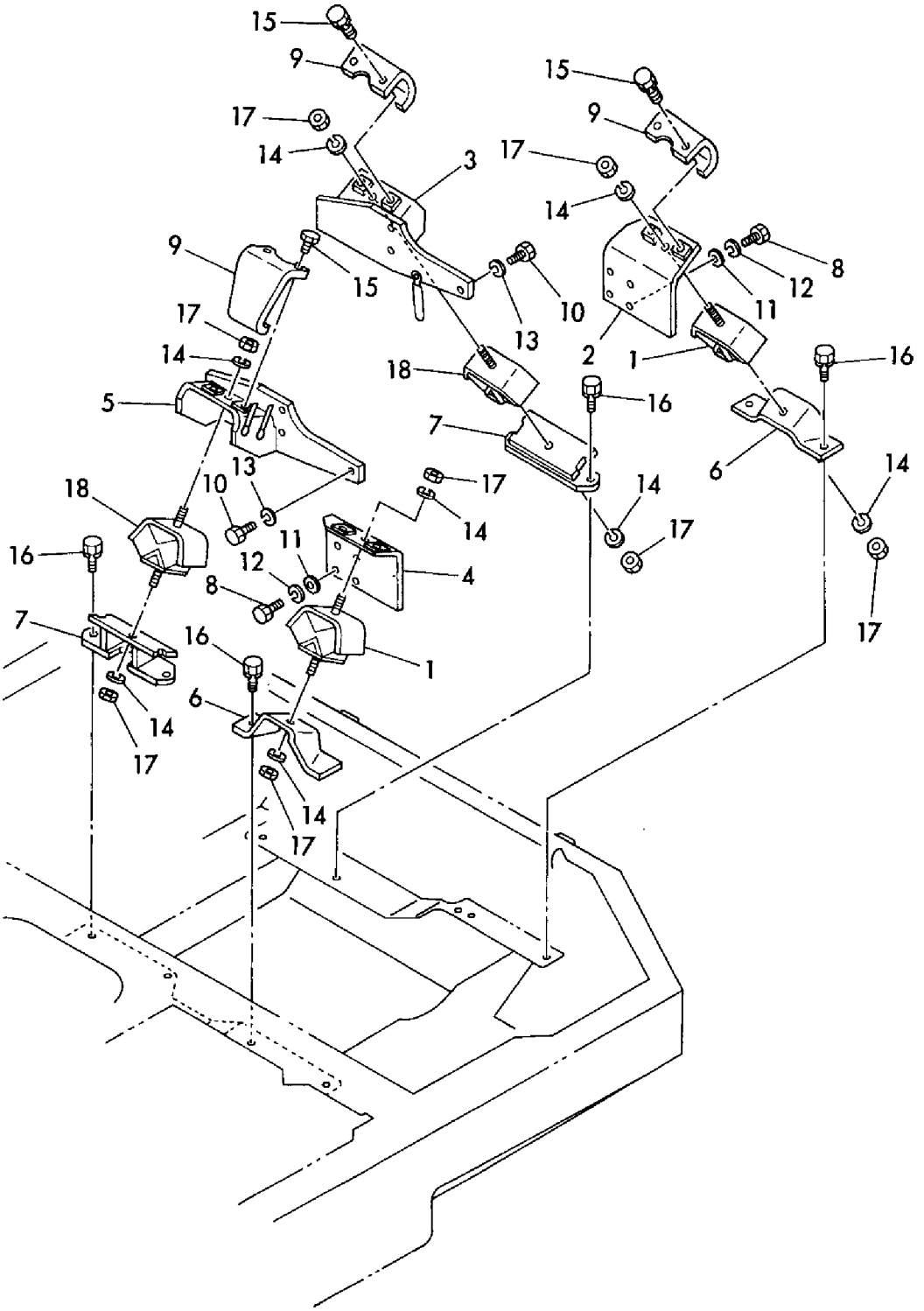

https://truckmanualshub.com/

```
1,1,,172171-13300,,"MOUNT(R), RADIATOR",1,1,1,1,,,,,,,,,,,,,
2,1,,172122-13310,,"MOUNT, RADIATOR",4,4,4,4,,,,,,,,,,,,,
3,1,,172171-13330,,"PLATE, RADIATOR",1,1,1,1,,,,,,,,,,,,,
4,1,,172171-13340,,"MOUNT L CMP,RADIATOR",1,1,1,1,,,,,,,,,,,,,,
5,1,,172171-13410,,BRACKET,1,1,1,1,,,,,,,,,,,,,
6,1,,172124-14650,,"HOSE L=1100, FUEL",1,1,1,1,,,,,,,,,,,,,
7,1,,172171-13461,,"HOSE 7.5X13",1,1,1,1,,,,,,,,,,,,,
8,1,,121468-44510,,"SUB-TANK ASSY",1,1,1,1,,,,,,,,,,,,,
9,2,,121470-44521,,"BODY,SUB-TANK",1,1,1,1,,,,,,,,,,,,,
10,2,,121450-44531,,CAP,1,1,1,1,,,,,,,,,,,,,
11,2,,121468-44540,,"PLUG, SUB-TANK",1,1,1,1,,,,,,,,,,,,,
12,2,,124450-44560,,CLAMP,1,1,1,1,,,,,,,,,,,,,
13,2,,121470-44581,,GASKET,1,1,1,1,,,,,,,,,,,,,
14,2,,23065-070130,,"PIPE  7X 130",1,1,1,1,,,,,,,,,,,,,
15,1,,121470-44540,,"LABEL, SUB-TANK",1,1,1,1,,,,,,,,,,,,,
16,1,,119831-44551,,RADIATOR,1,1,1,1,,,,,,,,,,,,,
17,2,,124450-44590,,"CAP, RADIATOR",1,1,1,1,,,,,,,,,,,,,
18,1,,119831-44570,,"NET, WIRE",1,1,,,,,,,,,,,,,,,,,
18-1,1,,119831-44571,,"NET, WIRE",1,1,1,1,,,N,,,M/#50626,,M/#50626,,,,,,
19,1,,119831-49010,,"PIPE (A), C. WATER",1,1,1,1,,,,,,,,,,,,,
20,1,,119831-49020,,PIPE(B)C.WATER,,1,,1,,,,,,,,,,,,,
21,1,,119831-49040,,PIPE(B)C.WATER,1,,1,,,,,,,,,,,,,,,
22,1,,119831-49050,,PIPE(B)C.WATER,1,,1,,,,,,,,,,,,,,,
23,1,,121450-49110,,"COCK ASSY, 3-WAY",1,1,1,1,,,,,,,,,,,,,
25,2,,121250-49121,,PLUG,1,1,1,1,,,,,,,,,,,,,
26,2,,24311-000160,,"O-RING 1A P-16.0",1,1,1,1,,,,,,,,,,,,,
27,1,,124766-59050,,"CLAMP 12",4,4,4,4,,,,,,,,,,,,,
28,1,,22137-060000,,"WASHER 6, POLISHED",2,2,2,2,,,,,,,,,,,,,
29,1,,22137-080000,,"WASHER 8, POLISHED",2,2,2,2,,,,,,,,,,,,,
30,1,,23010-038000,,"CLAMP 38",4,4,4,4,,,,,,,,,,,,,
31,1,,26013-060202,,"BOLT M 6X 20",2,2,2,2,,,,,,,,,,,,,
32,1,,26013-080162,,"BOLT W/WASHER M8X16",4,4,4,4,,,,,,,,,,,,,
33,1,,26013-080162,,"BOLT W/WASHER M8X16",2,2,2,2,,,,,,,,,,,,,
34,1,,26013-100202,,"BOLT W/WASHER M10X20",4,4,4,4,,,,,,,,,,,,,,
35,1,,26013-080162,,"BOLT W/WASHER M8X16",2,2,2,2,,,,,,,,,,,,,
36,1,,26051-080002,,"NUT M 8",8,8,8,8,,,,,,,,,,,,,
37,1,,933168-55770,,"BAND 146",1,1,1,1,,,,,,,,,,,,,
38,1,,121250-44590,,CLAMP,2,2,2,2,,,,,,,,,,,,,
39,1,,1A1380-58050,,"GROMMET 16X20X4.5",2,2,2,2,,,,,,,,,,,,,
40,1,,933152-09280,,"BAND 170",1,,1,,,,,,,,,,,,,,,
41,1,,933152-09280,,"BAND 170",,1,,1,,,,,,,,,,,,,,,
```

https://truckmanualshub.com/

Fig. 11 ラジエータ＆マウント RADIATOR & MOUNT

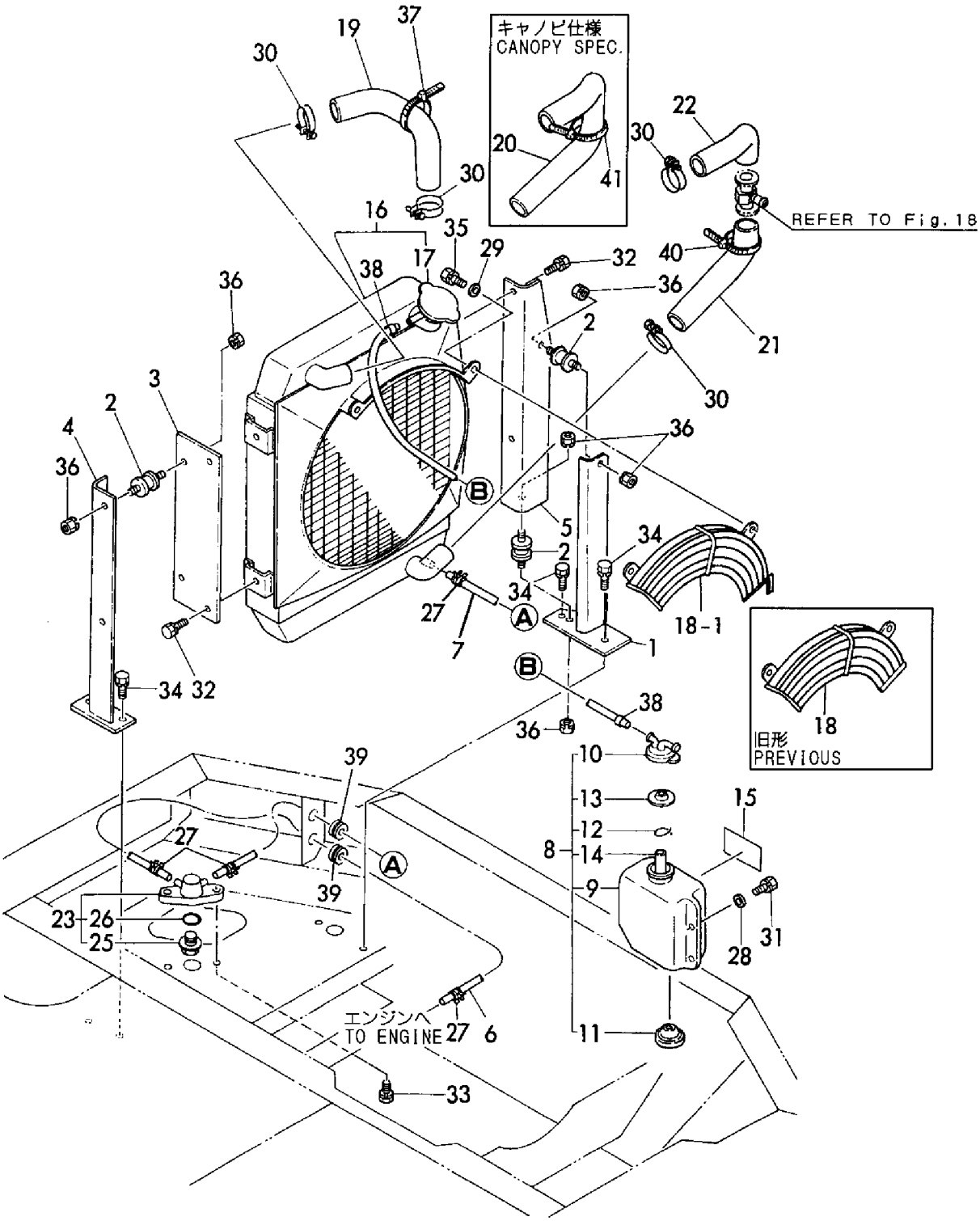

https://truckmanualshub.com/

```
1,1,,772171-14101,,"TANK ASSY",1,1,,,,,,,,,,,,,,,
1A,1,,772171-14101-1,,"TANK ASSY",,,1,1,,,,,,,,,,,,,
2,2,,104200-11920,,COCK,1,1,1,1,,,,,,,,,,,,,
3,2,,172162-14180,,"GAUGE UNIT,FUEL",1,1,1,1,,,,,,,,,,,,,
4,2,,172162-14200,,GASKET,1,1,1,1,,,,,,,,,,,,,
6,3,,172171-14150,,"RUBBER,SEAL",1,1,1,1,,,,,,,,,,,,,
7,3,,172171-14210,,"SEAL A,CR SPONGE",1,1,1,1,,,,,,,,,,,,,
8,3,,172171-14220,,"SEAL B,CR SPONGE",1,1,1,1,,,,,,,,,,,,,
9,3,,172168-14240,,"SEAL B,CR SPONGE",1,1,1,1,,,,,,,,,,,,,
10,2,,172141-14260,,FLOAT,1,1,1,1,,,,,,,,,,,,,
11,2,,172122-14300,,"CAP, FUEL TANK",1,1,,,,,,,,,,,,,,,
11-1,2,,172122-14301,,"CAP, FUEL TANK",1,1,1,1,,,N,,,M/#50833,,M/#50833,,,,,,
12,3,,105430-55070,,GASKET,1,1,,,,,,,,,,,,,,,
12-1,3,,172122-14350,,GASKET,1,1,1,1,,,S,,,M/#50988,,M/#50988,,,,,,
13,2,,26557-050122,,"SCREW M 5X 12",5,5,5,5,,,,,,,,,,,,,
14,2,,172142-14421,,"HOSE, FUEL GAUGE",1,1,1,1,,,,,,,,,,,,,
15,2,,101504-55101,,"STRAINER,FUEL INLET",1,1,,,,,,,,,,,,,,,
15-1,2,,172183-14250,,"FILTER (FUEL",1,1,1,1,,,N,,,M/#50704,,M/#50704,,,,,,
16,2,,22217-050000,,"SPRING WASHER  5",5,5,5,5,,,,,,,,,,,,,
17,2,,23010-014000,,"CLAMP 14",2,2,2,2,,,,,,,,,,,,,
18,1,,172142-14320,,"GAUGE, FUEL",1,1,1,1,,,,,,,,,,,,,
19,1,,194145-04810,,"WASHER 10",6,6,6,6,,,,,,,,,,,,,
20,1,,22217-100000,,"SPRING WASHER 10",6,6,6,6,,,,,,,,,,,,,
21,1,,23080-013000,,"CLAMP 13,HOSE",1,1,1,1,,,,,,,,,,,,,
22,1,,26116-100252,,"BOLT M10X 25 PLATED",6,6,6,6,,,,,,,,,,,,,
23,1,,172171-14600,,"HOSE 800",1,1,1,1,,,,,,,,,,,,,
24,1,,172142-14620,,"HOSE L750, FUEL",1,1,1,1,,,,,,,,,,,,,
25,1,,129335-55700,,"SEPARATOR, WATER",1,1,1,1,,,,,,,,,,,,,
26,2,,104200-55321,,"VALVE, TAPER",1,1,1,1,,,,,,,,,,,,,
27,2,,104200-55330,,"SPRING, TAPER VALVE",1,1,1,1,,,,,,,,,,,,,
28,2,,104200-55341,,"HANDLE, COCK",1,1,1,1,,,,,,,,,,,,,
29,2,,124064-55510,,"BOWL, FUEL STRAINER",1,1,1,1,,,,,,,,,,,,,
30,2,,102103-55520,,O-RING,1,1,1,1,,,,,,,,,,,,,
31,2,,110250-55610,,"RING, RETAINING",1,1,1,1,,,,,,,,,,,,,
32,2,,121257-55720,,"SPRING, SCREEN",1,1,1,1,,,,,,,,,,,,,
33,2,,121257-55731,,FLOAT,1,1,1,1,,,,,,,,,,,,,
35,2,,101720-55750,,"PLUG 6",2,2,2,2,,,,,,,,,,,,,
36,2,,104200-55750,,"SCREW M 4",1,1,1,1,,,,,,,,,,,,,
37,2,,171081-55910,,SCREEN,1,1,1,1,,,,,,,,,,,,,
38,2,,23418-060000,,"GASKET 6, NYLON",2,2,2,2,,,,,,,,,,,,,
39,2,,24311-240100,,"O-RING 1A P-10A",1,1,1,1,,,,,,,,,,,,,
40,1,,124766-59050,,"CLAMP 12",6,6,6,6,,,,,,,,,,,,,
41,1,,22217-080000,,"SPRING WASHER  8",1,1,1,1,,,,,,,,,,,,,
42,1,,26116-080652,,"BOLT M 8X 65 PLATED",1,1,1,1,,,,,,,,,,,,,
43,1,,194440-51620,,"CLAMP, WIRE HARNESS",1,1,1,1,,,,,,,,,,,,,
44,1,,172171-14610,,"HOSE 260,FUEL",1,1,1,1,,,,,,,,,,,,,
45,1,,172171-14300,,W-CLAMP,1,1,1,1,,,,,,,,,,,,,
46,1,,172126-16540,,"CLAMP 10X70",1,1,1,1,,,,,,,,,,,,,
47,1,,172168-14270,,"COVER ASSY",,,1,1,,,,1,,,,,,,,,
48,1,,22217-080000,,"SPRING WASHER  8",,,2,2,,,,1,,,,,,,,,
49,1,,26116-080162,,"BOLT M 8X 16 PLATED",,,2,2,,,,1,,,,,,,,,
```

https://truckmanualshub.com/

Fig. 12 燃料タンク＆燃料パイプ FUEL TANK & FUEL PIPE

見出しNo．1は、見出しNo．（1）から17を含みます。
1inc.（1）～17

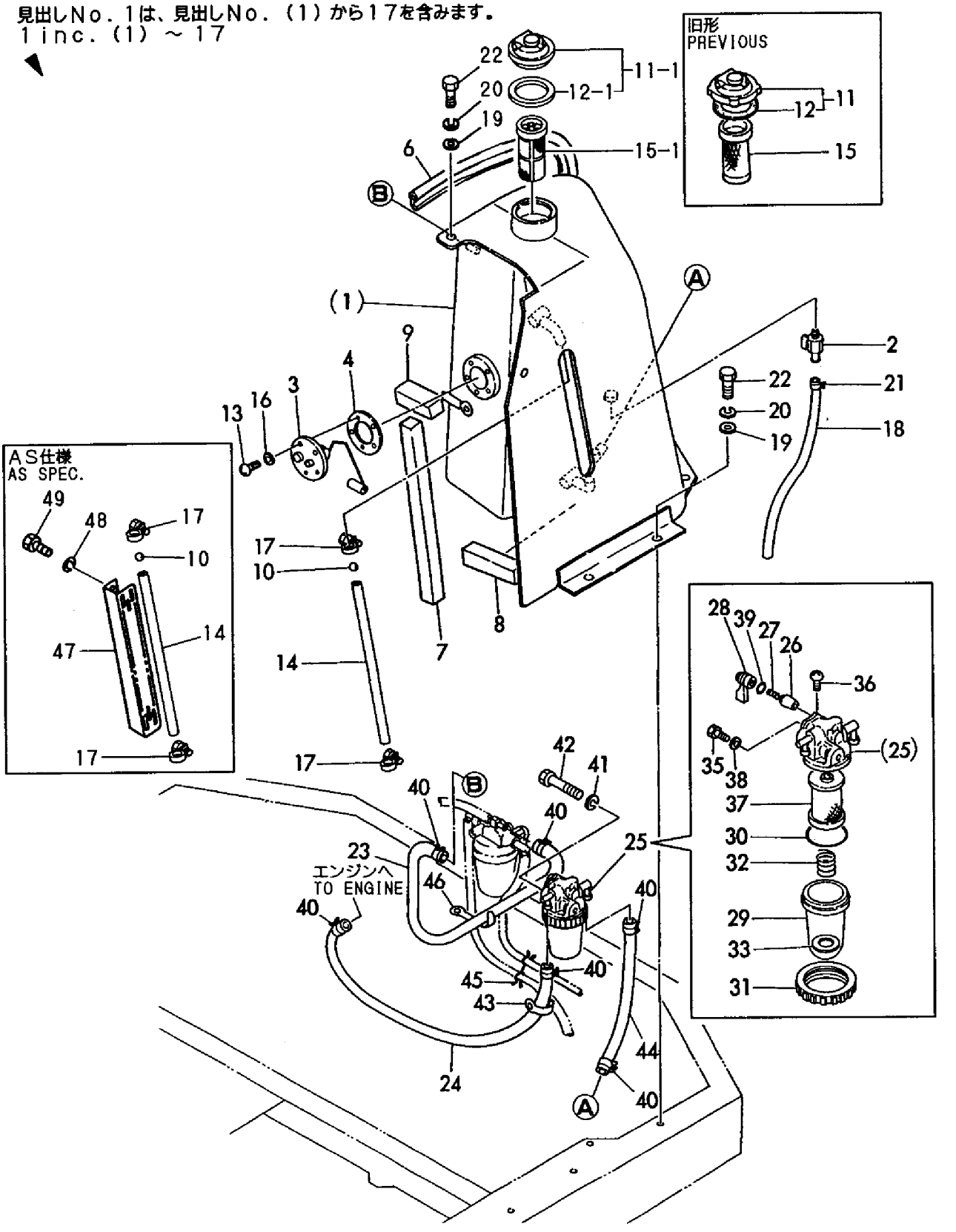

https://truckmanualshub.com/

```
1,1,,172170-16100,,"CORD(+), BATTERY",1,1,1,1,,,,,,,,,,,,,
2,1,,172168-16101,,BATTERY,1,1,1,1,,,,,,,,,,,,,
3,1,,172142-16110,,"CORD(-), BATTERY",1,1,1,1,,,,,,,,,,,,,
4,1,,194432-51550,,"COVER, BATTERY",1,1,1,1,,,,,,,,,,,,,
5,1,,22137-100000,,"WASHER 10,POLISHED",1,1,1,1,,,,,,,,,,,,,,
6,1,,22217-080000,,"SPRING WASHER  8",1,1,1,1,,,,,,,,,,,,,
7,1,,22217-100000,,"SPRING WASHER 10",1,1,1,1,,,,,,,,,,,,,
8,1,,26716-080002,,"NUT M 8",1,1,1,1,,,,,,,,,,,,,
9,1,,26716-100002,,"NUT M10",1,1,1,1,,,,,,,,,,,,,
10,1,,172168-16300,,"CLAMP, BATTERY",1,1,1,1,,,,,,,,,,,,,
11,1,,22157-080000,,"WASHER  8",2,2,2,2,,,,,,,,,,,,,
12,1,,26716-080002,,"NUT M 8",4,4,4,4,,,,,,,,,,,,,
13,1,,933171-15710,,"ROD(B), BATTERY FIX",2,2,2,2,,,,,,,,,,,,,
```

https://truckmanualshub.com/

Fig. 13 バッテリ BATTERY

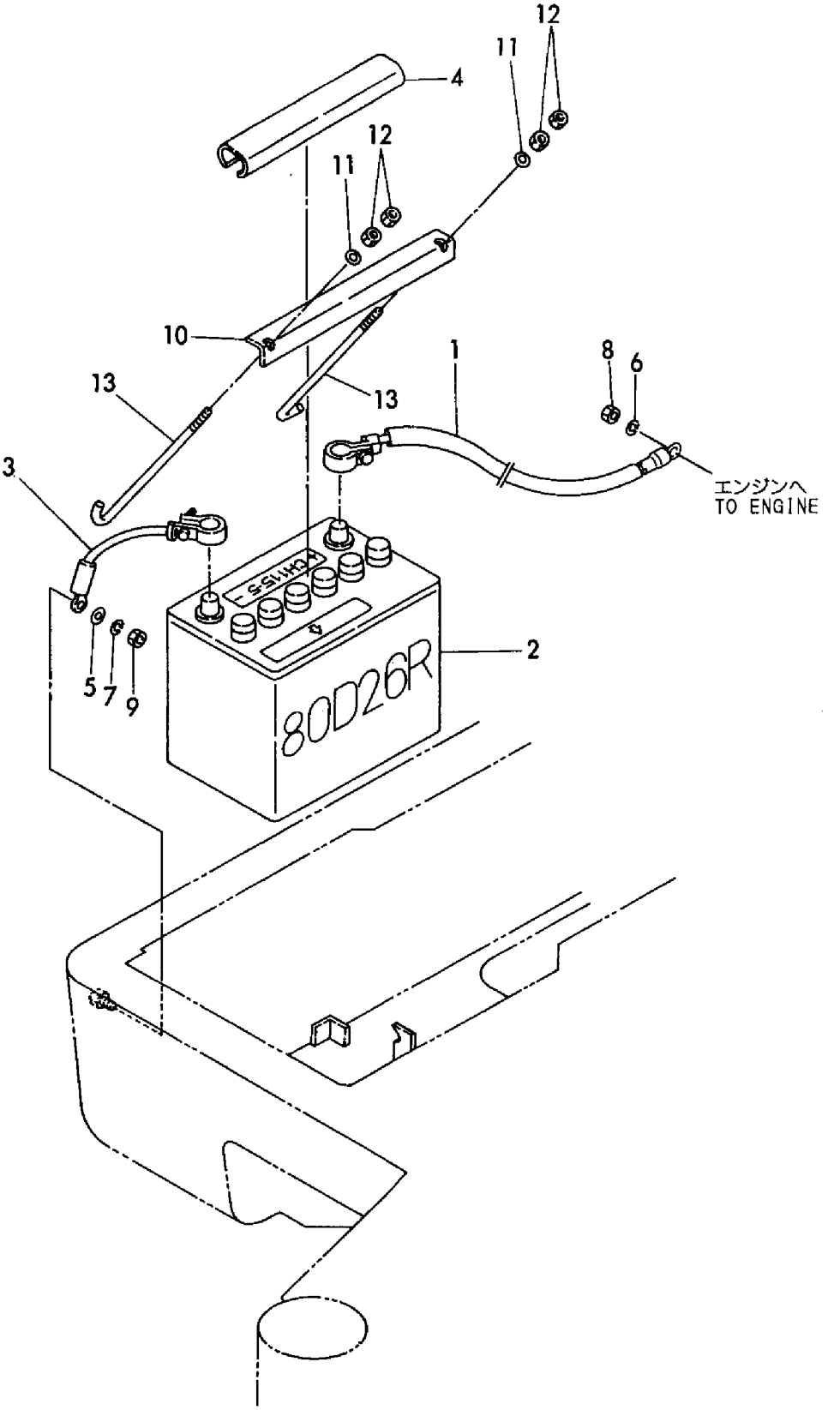

```
1,1,,172168-16501,,"HARNESS A,WIRE",1,1,,,,,,,,,,,,,,,
2,1,,172168-16512,,"HARNESS B,WIRE",1,1,,,,,,,,,,,,,,,
3,1,,172168-16520,,"HARNESS C",1,1,,,,,,,,,,,,,,,
3-1,1,,172168-16521,,"HARNESS (C), WIRE",1,1,,,,,S,,,M/#50626,,M/#50626,,,,,,
4,1,,172165-16530,,"HARNESS D",1,1,,,,,,,,,,,,,,,
5,1,,172126-16540,,"CLAMP 10X70",3,3,,,,,,,,,,,,,,,
6,1,,172183-16540,,"LINK,FUSIBLE",1,1,,,,,,,,,,,,,,,
7,1,,194250-51660,,"BAND  250",1,1,,,,,,,,,,,,,,,
8,1,,1A1380-58050,,"GROMMET 16X20X4.5",1,1,,,,,,,,,,,,,,,
9,1,,22137-100000,,"WASHER 10,POLISHED",1,1,,,,,,,,,,,,,,,
10,1,,22137-120000,,"WASHER 12,POLISHED",2,2,,,,,,,,,,,,,,,
11,1,,22217-100000,,"SPRING WASHER 10",2,2,,,,,,,,,,,,,,,
12,1,,22217-100000,,"SPRING WASHER 10",1,1,,,,,,,,,,,,,,,
13,1,,22217-120000,,"SPRING WASHER",2,2,,,,,,,,,,,,,,,
14,1,,26116-100162,,"BOLT M10X 16 PLATED",1,1,,,,,,,,,,,,,,,
15,1,,26116-100162,,"BOLT M10X 16 PLATED",2,2,,,,,,,,,,,,,,,
16,1,,26116-120162,,"BOLT M12X 16 PLATED",2,2,,,,,,,,,,,,,,,
17,1,,29311-515000,,"GROMMET 51X5",1,1,,,,,,,,,,,,,,,
18,1,,933168-55770,,"BAND 146",3,3,,,,,,,,,,,,,,,
19,1,,933171-15801,,"WIRE, EARTH",1,1,,,,,,,,,,,,,,,
20,1,,172162-17101,,"BOX ASSY, INDICATOR",1,1,,,,,,,,,,,,,,,
20A,2,,172162-17270,,"COVER, FRONT",1,1,,,,W,,,M/#50763,,M/#50763,,,,,,
20B,2,,172162-17240,,"METER ASSY, FUEL",1,1,,,,W,,,M/#50763,,M/#50763,,,,,,
20C,2,,172162-17250,,HARNESS,1,1,,,,W,,,M/#50763,,M/#50763,,,,,,
22,2,,172162-17130,,HOURMETER,1,1,,,,,,,,,,,,,,,
23,2,,172162-17120,,VALVE,4,4,,,,,,,,,,,,,,,
24,1,,172168-17100,,"BRACKET ASSY, ELEC.",1,1,,,,,,,,,,,,,,,
25,1,,172168-17120,,"BRACKET ASSY, TIMER",1,1,,,,,,,,,,,,,,,
26,1,,172141-17141,,"UNIT, CHECKER",1,1,,,,,,,,,,,,,,,
27,1,,172141-17150,,BUZZER,1,1,,,,,,,,,,,,,,,
28,1,,172141-17161,,"BOX, FUSE",1,1,,,,,,,,,,,,,,,
29,2,,29411-150000,,"FUSE (15A),CARTRIDGE",5,5,,,,,,,,,,,,,,,
30,1,,933113-15900,,"COVER, SWITCH TERMI.",1,1,,,,,,,,,,,,,,,
31,1,,172141-17190,,"SWITCH, WORK LAMP",1,1,,,,,,,,,,,,,,,
32,2,,172141-17230,,"BULB 24V- 6W",1,1,,,,,,,,,,,,,,,
33,1,,172162-17410,,"LAMP ASSY, HEADLIGHT",1,1,,,,,,,,,,,,,,,
34,2,,29220-788200,,BULB,1,1,,,,,,,,,,,,,,,
35,1,,119247-77100,,"RELAY, SAFETY",1,1,,,,,,,,,,,,,,,
36,1,,119640-77711,,"LIMITER,CURRENT",1,1,,,,,,,,,,,,,,,
37,1,,121522-77721,,"INDICATOR, CHARGING",1,1,,,,,,,,,,,,,,,
38,1,,119650-77910,,"RELAY, GROW",1,1,,,,,,,,,,,,,,,
41,1,,119632-77921,,"TIMER(1 SEC.",1,1,,,,,,,,,,,,,,,
41-1,1,,119632-77922,,TIMER,1,1,,,,N,,,M/#50666,,M/#50666,,,,,,
42,1,,22137-060000,,"WASHER 6, POLISHED",2,2,,,,,,,,,,,,,,,
43,1,,22137-060000,,"WASHER 6, POLISHED",1,1,,,,,,,,,,,,,,,
44,1,,22137-060000,,"WASHER 6, POLISHED",2,2,,,,,,,,,,,,,,,
45,1,,22137-060000,,"WASHER 6, POLISHED",1,1,,,,,,,,,,,,,,,
46,1,,933168-55770,,"BAND 146",1,1,,,,,,,,,,,,,,,
47,1,,22217-080000,,"SPRING WASHER  8",2,2,,,,,,,,,,,,,,,
48,1,,22217-080000,,"SPRING WASHER  8",2,2,,,,,,,,,,,,,,,
49,1,,22217-100000,,"SPRING WASHER 10",3,3,,,,,,,,,,,,,,,
50,1,,26013-060122,,"BOLT M 6X 12",2,2,,,,,,,,,,,,,,,
51,1,,26022-050162,,"SCREW M 5X 16",2,2,,,,,,,,,,,,,,,
52,1,,26022-060122,,"SCREW M 6X 12",1,1,,,,,,,,,,,,,,,
53,1,,26022-060122,,"SCREW M 6X 12",1,1,,,,,,,,,,,,,,,
54,1,,26022-060122,,"SCREW M 6X 12",2,2,,,,,,,,,,,,,,,
55,1,,26022-060162,,"SCREW M 6X 16",1,1,,,,,,,,,,,,,,,
56,1,,26022-060162,,"SCREW M 6X 16",1,1,,,,,,,,,,,,,,,
57,1,,26022-060162,,"SCREW M 6X 16",1,1,,,,,,,,,,,,,,,
58,1,,26022-060252,,"SCREW M 6X 25",2,2,,,,,,,,,,,,,,,
59,1,,26589-040202,,"SCREW M4,BINDING",4,4,,,,,,,,,,,,,,,
60,1,,26116-080162,,"BOLT M 8X 16 PLATED",2,2,,,,,,,,,,,,,,,
61,1,,26116-080162,,"BOLT M 8X 16 PLATED",2,2,,,,,,,,,,,,,,,
```

https://truckmanualshub.com/

```
62,1,,26716-100002,,"NUT M10",3,3,,,,,,,,,,,,,,,
63,1,,933110-00100,,"SWITCH ASSY, STARTER",1,1,,,,,,,,,,,,,,,
65,2,,933110-00301,,"KEY ASSY",1,1,,,,,,,,,,,,,,,
66,1,,933110-05300,,HORN,1,1,,,,,,,,,,,,,,,
67,1,,172122-79890,,"CLAMP 350",1,1,,,,,W,,,M/#50763,,M/#50763,,,,,,
68,1,,172190-16500,,HARNESS,,1,,,,,,1,,,,,,,,,
69,1,,172164-17140,,SWITCH,,1,,,,,,1,,,,,,,,,
70,1,,194464-52190,,"SWITCH, SAFETY START",,1,,,,,,1,,,,,,,,,
71,1,,26776-160002,,"LOCK NUT M16 PLATED",,1,,,,,,1,,,,,,,,,
72,1,,26776-180002,,"NUT M18,LOCK",,1,,,,,,1,,,,,,,,,
```

https://truckmanualshub.com/

Fig. 14 電装品（キャビン，キャノピ） ELECTRIC PART (CABIN, CANOPY)

COUNTRY	JP	AS	EX
Fig. No.	14	15	14

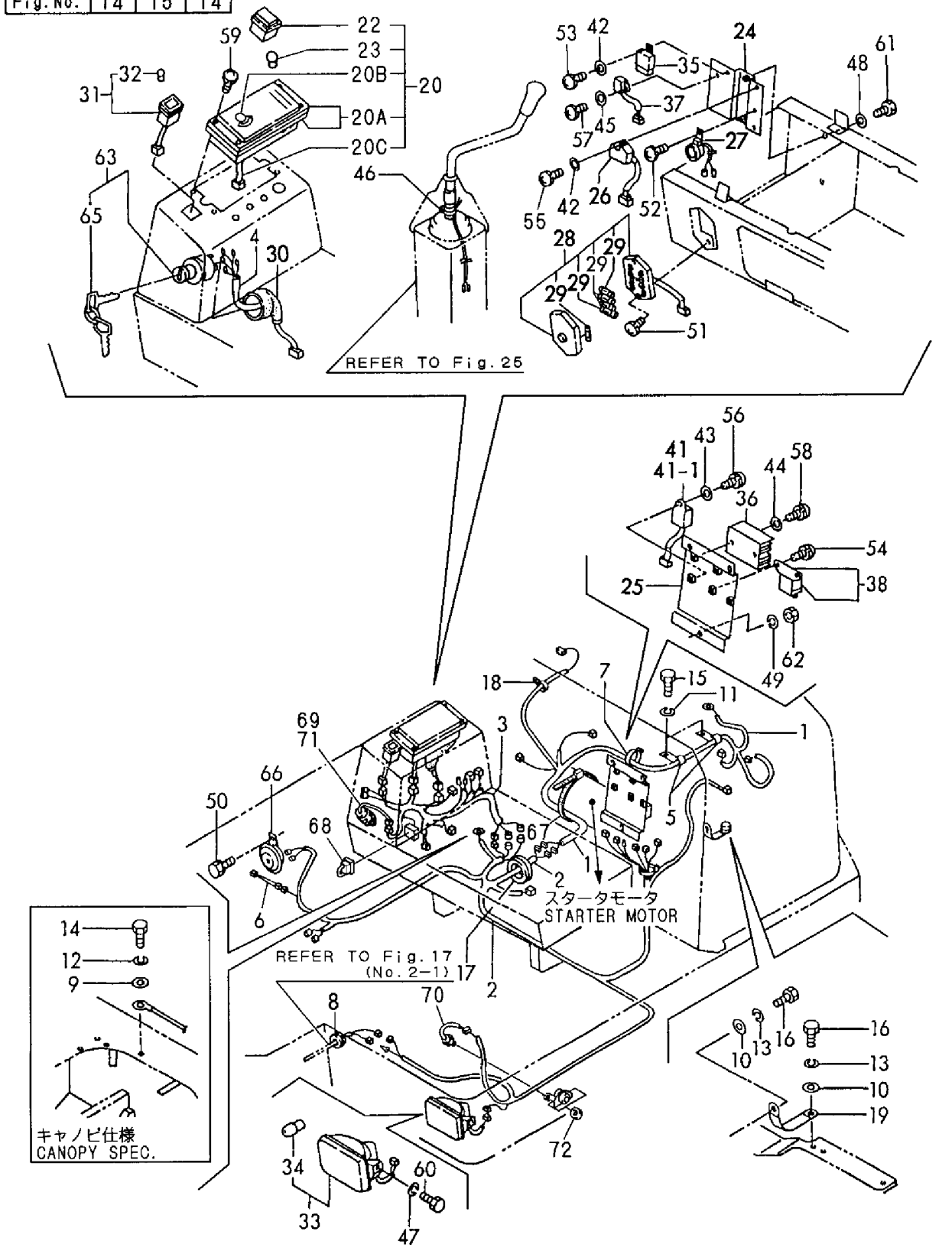

https://truckmanualshub.com/

```
1,1,,172168-16501,,"HARNESS A,WIRE",,,1,1,,,,,,,,,,,,,
2,1,,172168-16512,,"HARNESS B,WIRE",,,1,1,,,,,,,,,,,,,
3,1,,172168-16521,,"HARNESS (C), WIRE",,,1,1,,,,,,,,,,,,,
4,1,,172165-16530,,"HARNESS D",,,1,1,,,,,,,,,,,,,
5,1,,172126-16540,,"CLAMP 10X70",,,3,3,,,,,,,,,,,,,
6,1,,172183-16540,,"LINK,FUSIBLE",,,1,1,,,,,,,,,,,,,
7,1,,194250-51660,,"BAND  250",,,1,1,,,,,,,,,,,,,
8,1,,1A1380-58050,,"GROMMET 16X20X4.5",,,1,1,,,,,,,,,,,,,
9,1,,22137-100000,,"WASHER 10,POLISHED",,,1,1,,,,,,,,,,,,,
10,1,,22137-120000,,"WASHER 12,POLISHED",,,2,2,,,,,,,,,,,,,
11,1,,22217-100000,,"SPRING WASHER 10",,,2,2,,,,,,,,,,,,,
12,1,,22217-100000,,"SPRING WASHER 10",,,1,1,,,,,,,,,,,,,
13,1,,22217-120000,,"SPRING WASHER",,,2,2,,,,,,,,,,,,,
14,1,,26116-100162,,"BOLT M10X 16 PLATED",,,1,1,,,,,,,,,,,,,
15,1,,26116-100162,,"BOLT M10X 16 PLATED",,,2,2,,,,,,,,,,,,,
16,1,,26116-120162,,"BOLT M12X 16 PLATED",,,2,2,,,,,,,,,,,,,
17,1,,29311-515000,,"GROMMET 51X5",,,1,1,,,,,,,,,,,,,
18,1,,933168-55770,,"BAND 146",,,3,3,,,,,,,,,,,,,
19,1,,933171-15801,,"WIRE, EARTH",,,1,1,,,,,,,,,,,,,
20,1,,172162-17101,,"BOX ASSY, INDICATOR",,,1,1,,,,,,,,,,,,,
20A,2,,172162-17240,,"METER ASSY, FUEL",,,1,1,,,,,,,,,,,,,
20B,2,,172162-17250,,HARNESS,,,1,1,,,,,,,,,,,,,
21,2,,172162-17270,,"COVER, FRONT",,,1,1,,,,,,,,,,,,,
22,2,,172162-17130,,HOURMETER,,,1,1,,,,,,,,,,,,,
23,2,,172162-17120,,VALVE,,,4,4,,,,,,,,,,,,,
24,1,,172168-17100,,"BRACKET ASSY, ELEC.",,,1,1,,,,,,,,,,,,,
25,1,,172168-17120,,"BRACKET ASSY, TIMER",,,1,1,,,,,,,,,,,,,
26,1,,172141-17141,,"UNIT, CHECKER",,,1,1,,,,,,,,,,,,,
27,1,,172141-17150,,BUZZER,,,1,1,,,,,,,,,,,,,
28,1,,172141-17161,,"BOX, FUSE",,,1,1,,,,,,,,,,,,,
29,2,,29411-150000,,"FUSE (15A),CARTRIDGE",,,5,5,,,,,,,,,,,,,
30,1,,933113-15900,,"COVER, SWITCH TERMI.",,,1,1,,,,,,,,,,,,,
31,1,,172141-17190,,"SWITCH, WORK LAMP",,,1,1,,,,,,,,,,,,,
32,2,,172141-17230,,"BULB 24V- 6W",,,1,1,,,,,,,,,,,,,
33,1,,172162-17410,,"LAMP ASSY, HEADLIGHT",,,1,1,,,,,,,,,,,,,
34,2,,29220-788200,,BULB,,,1,1,,,,,,,,,,,,,
35,1,,119247-77100,,"RELAY, SAFETY",,,1,1,,,,,,,,,,,,,
36,1,,119640-77711,,"LIMITER,CURRENT",,,1,1,,,,,,,,,,,,,
37,1,,121522-77721,,"INDICATOR, CHARGING",,,1,1,,,,,,,,,,,,,
38,1,,119650-77910,,"RELAY, GROW",,,1,1,,,,,,,,,,,,,
41,1,,119632-77922,,TIMER,,,1,1,,,,,,,,,,,,,
42,1,,22137-060000,,"WASHER 6, POLISHED",,,2,2,,,,,,,,,,,,,
43,1,,22137-060000,,"WASHER 6, POLISHED",,,1,1,,,,,,,,,,,,,
44,1,,22137-060000,,"WASHER 6, POLISHED",,,2,2,,,,,,,,,,,,,
45,1,,22137-060000,,"WASHER 6, POLISHED",,,1,1,,,,,,,,,,,,,
46,1,,933168-55770,,"BAND 146",,,1,1,,,,,,,,,,,,,
47,1,,22217-080000,,"SPRING WASHER  8",,,2,2,,,,,,,,,,,,,
48,1,,22217-080000,,"SPRING WASHER  8",,,2,2,,,,,,,,,,,,,
49,1,,22217-100000,,"SPRING WASHER 10",,,3,3,,,,,,,,,,,,,
50,1,,26013-060122,,"BOLT M 6X 12",,,2,2,,,,,,,,,,,,,
51,1,,26022-050162,,"SCREW M 5X 16",,,2,2,,,,,,,,,,,,,
52,1,,26022-060122,,"SCREW M 6X 12",,,1,1,,,,,,,,,,,,,
53,1,,26022-060122,,"SCREW M 6X 12",,,1,1,,,,,,,,,,,,,
54,1,,26022-060122,,"SCREW M 6X 12",,,2,2,,,,,,,,,,,,,
55,1,,26022-060162,,"SCREW M 6X 16",,,1,1,,,,,,,,,,,,,
56,1,,26022-060162,,"SCREW M 6X 16",,,1,1,,,,,,,,,,,,,
57,1,,26022-060162,,"SCREW M 6X 16",,,1,1,,,,,,,,,,,,,
58,1,,26022-060252,,"SCREW M 6X 25",,,2,2,,,,,,,,,,,,,
59,1,,26589-040202,,"SCREW M4,BINDING",,,4,4,,,,,,,,,,,,,
60,1,,26116-080162,,"BOLT M 8X 16 PLATED",,,2,2,,,,,,,,,,,,,
61,1,,26116-080162,,"BOLT M 8X 16 PLATED",,,2,2,,,,,,,,,,,,,
62,1,,26716-100002,,"NUT M10",,,3,3,,,,,,,,,,,,,
63,1,,933110-00100,,"SWITCH ASSY, STARTER",,,1,1,,,,,,,,,,,,,
```

https://truckmanualshub.com/

```
65,2,,933110-00301,,"KEY ASSY",,,1,1,,,,,,,,,,,,,
66,1,,933110-05300,,HORN,,,1,1,,,,,,,,,,,,,
67,1,,172122-79890,,"CLAMP 350",,,1,1,,,,,,,,,,,,,
68,1,,172165-16560,,"HARNESS (G)",,,1,1,,,,,,,,,,,,,
69,1,,172164-17140,,SWITCH,,,1,2,,,,,,,,,,,,,
70,1,,26776-160002,,"LOCK NUT M16 PLATED",,,1,2,,,,,,,,,,,,,
71,1,,172142-16550,,CLAMP,,,1,1,,,,,,,,,,,,,
72,1,,22217-060000,,"SPRING WASHER  6",,,1,1,,,,,,,,,,,,,
73,1,,26116-060122,,"BOLT M 6X 12",,,1,1,,,,,,,,,,,,,
```

https://truckmanualshub.com/

Fig. 15 電装品（キャビン，キャノピ）（AS） ELECTRIC PART (CABIN, CANOPY) (AS)

COUNTRY	JP	AS	EX
Fig. No.	14	15	14

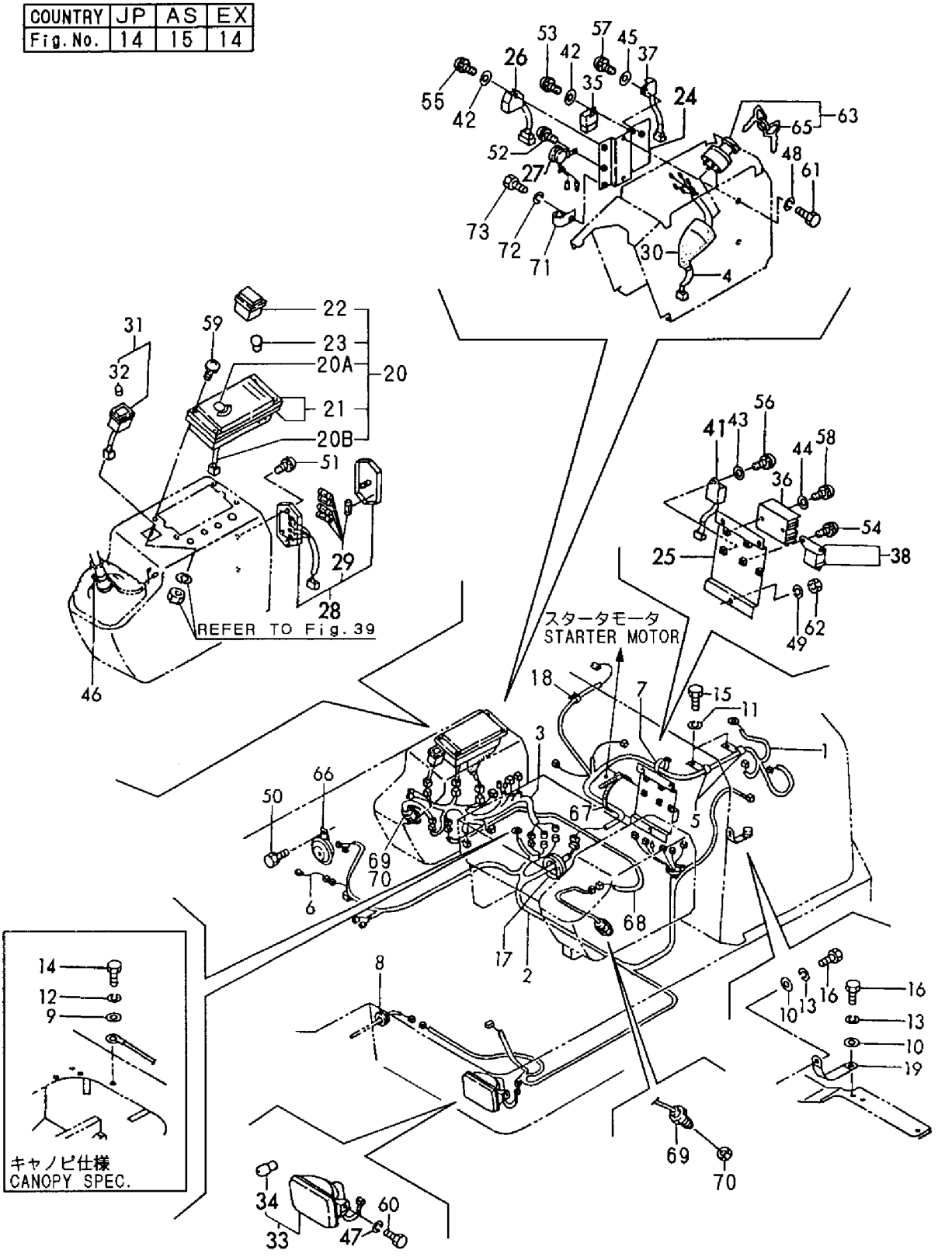

```
1,1,,172137-16000,,WIRE,1,,1,,,,,,,,,,,,,,
2,1,,172165-16540,,"HARNESS E",1,,,,,,,,,,,,,,,,
2-1,1,,172165-16541,,"HARNESS E",1,,1,,,,N,,,M/#50626,,,,,,,,
3,1,,172165-16550,,"HARNESS (F)",1,,1,,,,,,,,,,,,,,
4,1,,172122-16590,,"BAND 200F",2,,2,,,,,,,,,,,,,,
5,1,,172137-62970,,"GROMMET 16",2,,2,,,,,,,,,,,,,,
6,1,,172122-79890,,"CLAMP 350",1,,1,,,,,,,,,,,,,,
7,1,,22857-400120,,"SCREW 4X12",2,,2,,,,,,,,,,,,,,
8,1,,26022-050202,,"SCREW M 5X 20",1,,1,,,,,,,,,,,,,,,
9,1,,933168-55770,,"BAND 146",1,,1,,,,,,,,,,,,,,
10,1,,22857-400100,,"SCREW 4X10",2,,2,,,,,,,,,,,,,,
11,1,,933113-05150,,"LAMP, ROOM",1,,1,,,,,,,,,,,,,,
12,2,,933113-05160,,"BULB (12V5W)",1,,1,,,,,,,,,,,,,,
13,1,,172734-17070,,"BLADE 450, WIPER",1,,1,,,,,,,,,,,,,,,
14,1,,172165-17130,,ARM,1,,1,,,,,,,,,,,,,,
15,1,,172312-17250,,ASHTRAY,1,,1,,,,,,,,,,,,,,
16,1,,172151-17300,,COVER,1,,1,,,,,,,,,,,,,,
17,1,,172162-17330,,"SWITCH,WIPER",1,,1,,,,,,,,,,,,,,
18,1,,933113-15000,,"CIGAR LIGHTER ASSY",1,,1,,,,,,,,,,,,,,,
19,1,,22867-400100,,"SCREW 4X10",3,,3,,,,,,,,,,,,,,
20,1,,26013-060122,,"BOLT M 6X 12",3,,3,,,,,,,,,,,,,,
21,1,,172165-16200,,"MOTOR 520A, WIPER",1,,1,,,,,,,,,,,,,,,
22,1,,119247-77100,,"RELAY, SAFETY",1,,1,,,,W,,,M/#50626,,,,,,,,
23,1,,26022-060122,,"SCREW M 6X 12",1,,1,,,,W,,,M/#50626,,,,,,,,
24,1,,22137-060000,,"WASHER 6, POLISHED",1,,1,,,,W,,,M/#50626,,,,,,,,
```

https://truckmanualshub.com/

Fig. 16 電装品（キャビン） ELECTRIC PART (CABIN)

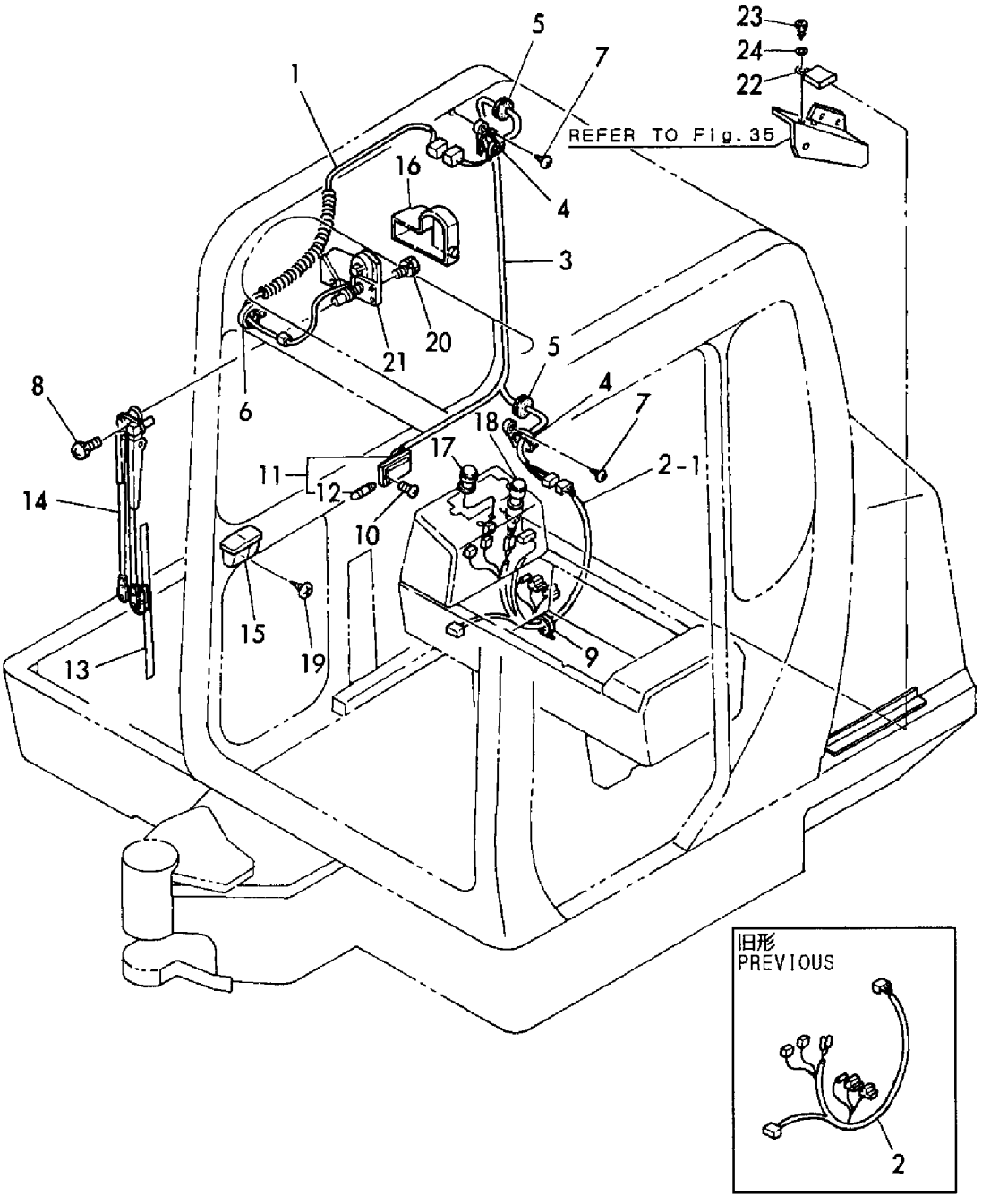

https://truckmanualshub.com/

```
1,1,,172137-16560,,BAND,5,5,5,5,,,,,,,,,,,,,
2,1,,172141-16561,,"WIRE, LAMP",1,1,1,1,,,,,,,,,,,,,
3,1,,172141-17201,,"LAMP, WORK",1,1,1,1,,,,,,,,,,,,,
4,2,,172141-17211,,"BULB 12V55W",1,1,1,1,,,,,,,,,,,,,
5,1,,172137-17401-1,,"COVER, LAMP (GREEN)",1,1,,,,,,,,,,,,,,,,
5A,1,,172137-17401,,COVER,,,1,1,,,,,,,,,,,,,
6,1,,26013-120302,,"BOLT W/WASHER M12X30",1,1,,,,,,,,,,,,,,,,
6-1,1,,26013-120252,,"BOLT M12X 25",1,1,1,1,,,S,,,M/#50666,,M/#50666,,,,,,
7,1,,933152-03700,,"WASHER, SIDE CLUTCH",1,1,1,1,,,,,,,,,,,,,
8,1,,22137-130000,,"WASHER 13",2,2,2,2,,,,,,,,,,,,,
```

https://truckmanualshub.com/

Fig. 17 ワークランプ WORK LAMP

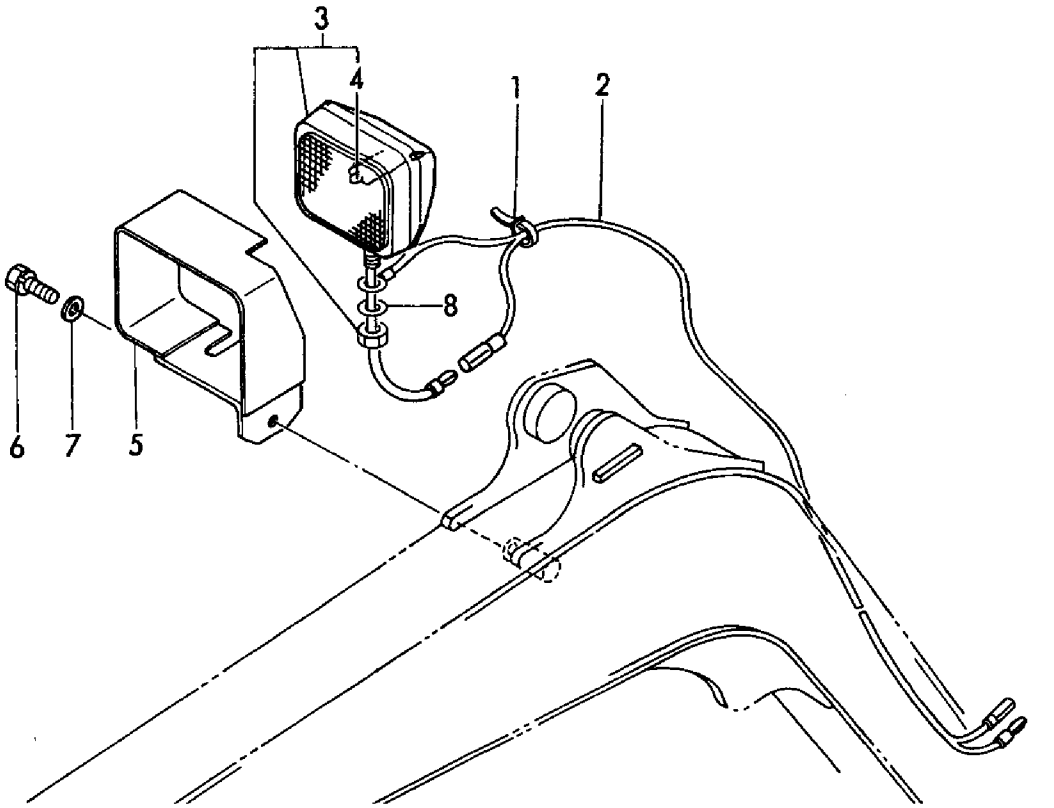

https://truckmanualshub.com/

```
1,1,,772171-17601,,"HEATER ASSY",1,,1,,,,,,,,,,,,,
2,2,,172165-17601,,"HEATER ASSY",1,,1,,,,,,,,,,,,,
3,2,,172168-17600,,"CONNECTOR PT3/8-M16",1,,1,,,,,,,,,,,,,,
4,2,,172171-17600,,"STAY COMP.,CLAMP",1,,1,,,,,,,,,,,,,
5,2,,172162-17610,,"SWITCH,HEATER",1,,1,,,,,,,,,,,,,
6,2,,172168-17640,,"HOSE ASSY, HEATER",1,,1,,,,,,,,,,,,,,
7,3,,172312-17620,,"HOSE, HEATER",1,,1,,,,,,,,,,,,,
8,3,,172168-17650,,"CORRUGAT 22X2000",1,,1,,,,,,,,,,,,,
9,2,,172124-17630,,"VALVE, MINIATURE",1,,1,,,,,,,,,,,,,
10,2,,172137-17630,,"JOINT, HEATER",1,,1,,,,,,,,,,,,,
11,2,,172124-17640,,"JOINT 3/8",2,,2,,,,,,,,,,,,,
12,2,,172171-17620,,"HOSE COMP.,HEATER",1,,1,,,,,,,,,,,,,
13,3,,172171-17630,,"TUBE,CORRUGATED",1,,1,,,,,,,,,,,,,
14,3,,172122-17840,,"HOSE, HEATER",1,,1,,,,,,,,,,,,,
15,2,,124465-44950,,"GASKET 16",2,,2,,,,,,,,,,,,,
16,2,,194250-51660,,"BAND  250",2,,2,,,,,,,,,,,,,
17,2,,22137-100000,,"WASHER 10,POLISHED",4,,4,,,,,,,,,,,,,
18,2,,23000-022000,,"CLAMP 22",4,,4,,,,,,,,,,,,,
19,2,,23010-038000,,"CLAMP 38",2,,2,,,,,,,,,,,,,
20,2,,26013-100202,,"BOLT W/WASHER M10X20",4,,4,,,,,,,,,,,,,
21,2,,26013-100202,,"BOLT W/WASHER M10X20",2,,2,,,,,,,,,,,,,
22,2,,933152-09280,,"BAND 170",5,,5,,,,,,,,,,,,,
23,2,,933171-15680,,"GROMMET 40X13",2,,2,,,,,,,,,,,,,
24,2,,172141-13490,,JOINT,1,,1,,,,,,,,,,,,,
25,1,,772165-17700,,"DEFROSTER ASSY",1,,1,,,,1,,,,,,,,,
26,2,,172122-16590,,"BAND 200F",2,,2,,,,,,,,,,,,,
27,2,,172165-17701,,"BRACKET COMPL.",1,,1,,,,,,,,,,,,,
28,2,,172120-17710,,"NOZZLE, DEFROSTER",1,,1,,,,,,,,,,,,,
29,2,,172122-17730,,"COVER, DEFROSTER",1,,1,,,,,,,,,,,,,
30,2,,172165-17800,,HOSE,1,,1,,,,,,,,,,,,,
31,2,,22857-400120,,"SCREW 4X12",2,,2,,,,,,,,,,,,,
32,2,,26013-080202,,"BOLT W/WASHER M8X20",2,,2,,,,,,,,,,,,,
33,2,,26557-050102,,"SCREW M 5X 10",2,,2,,,,,,,,,,,,,
```

https://truckmanualshub.com/

Fig. 18 ヒータ&デフロスタ HEATER & DEFROSTER

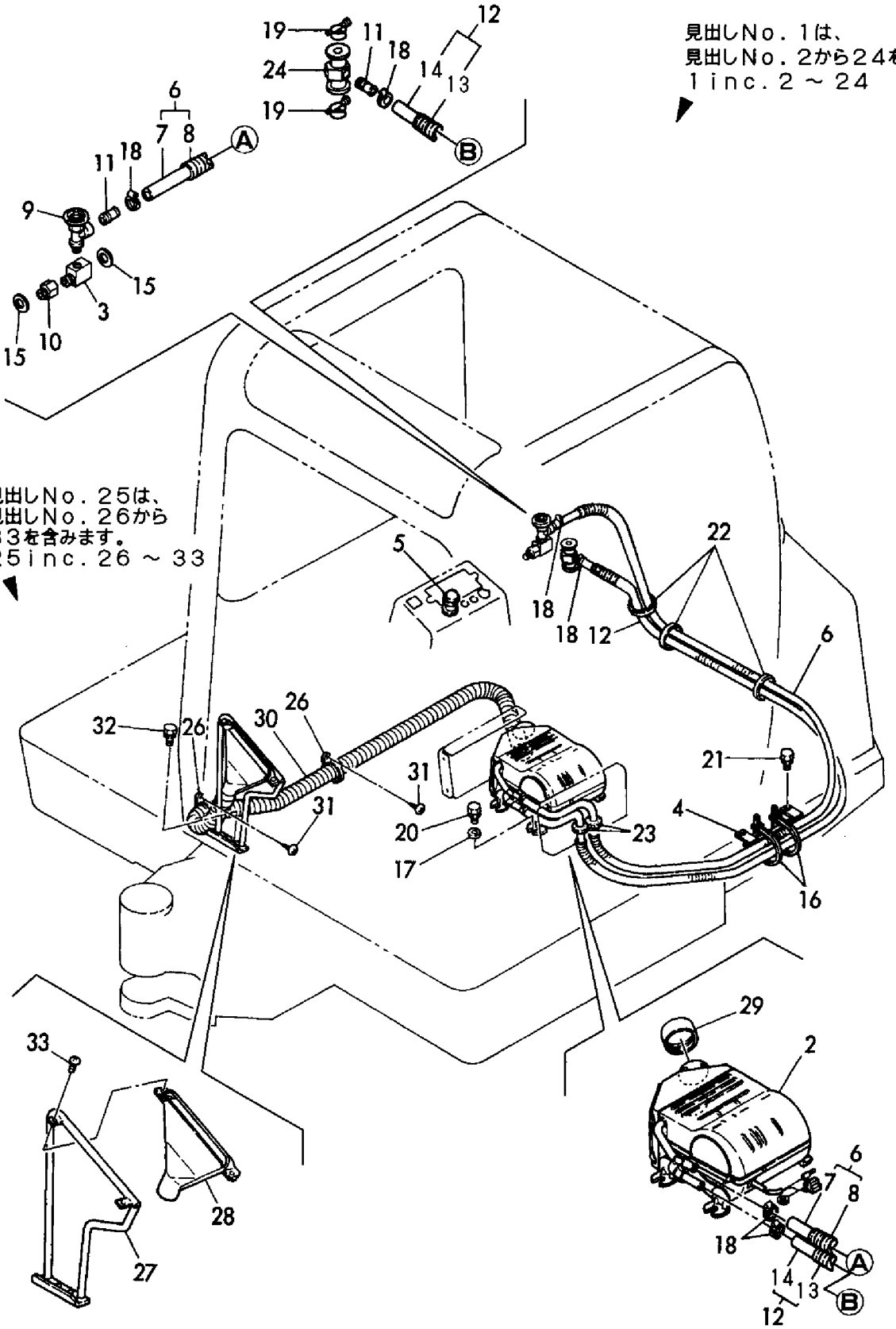

https://truckmanualshub.com/

```
1,1,,772165-17800,,"RADIO ASSY",1,,,,,,,1,,,,,,,,,
2,2,,172122-16590,,"BAND 200F",2,,,,,,,,,,,,,,,
3,2,,172112-17190,,"ANTENNA (NCP-314)",1,,,,,,,,,,,,,,,,,
4,2,,172162-17800,,RADIO,1,,,,,,,,,,,,,,,
5,2,,172165-17820,,"COVER ASSY",1,,,,,,,,,,,,,,,
6,2,,172165-17850,,HARNESS,1,,,,,,,,,,,,,,,
7,2,,172165-17860,,"STAY ASSY, RADIO",1,,,,,,,,,,,,,,,,
8,2,,22857-400120,,"SCREW 4X12",2,,,,,,,,,,,,,,,
9,2,,22857-500120,,"SCREW 5X12",2,,,,,,,,,,,,,,,
10,2,,26023-050122,,"SCREW M 5X 12",10,,,,,,,,,,,,,,,,
11,2,,933168-55770,,"BAND 146",1,,,,,,,,,,,,,,,
12,2,,933168-56000,,"GROMMET 17X19",2,,,,,,,,,,,,,,,
```

https://truckmanualshub.com/

Fig. 19 ラジオ（オプション） RADIO (OPTIONAL)

見出しNo．1は、見出しNo．2から12を含みます。
1 inc．2 ～ 12

COUNTRY	JP	AS	EX
APPLI－CATION	○	—	—

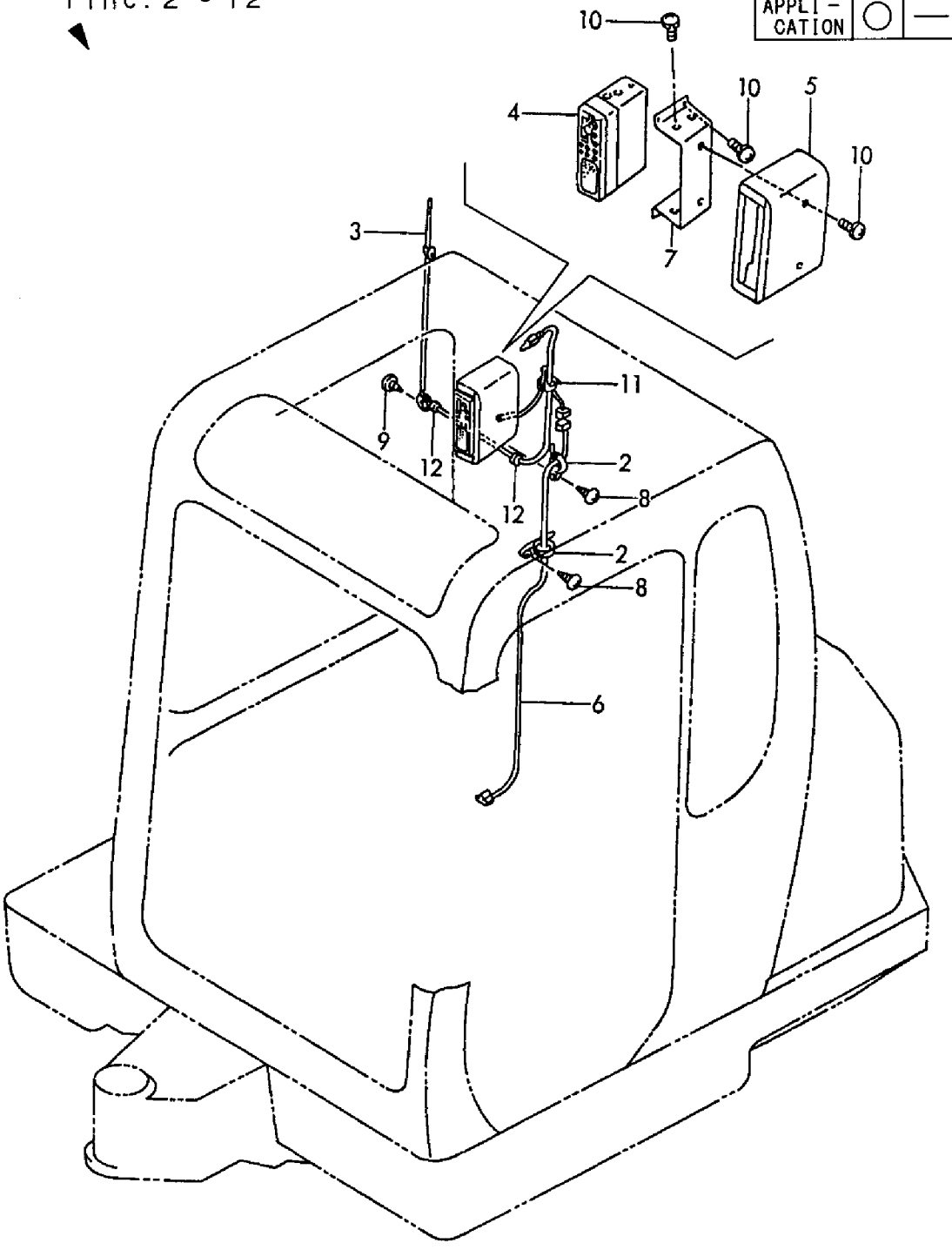

https://truckmanualshub.com/

```
1,1,,772141-37101,,IDLER,2,2,2,2,,,,,,,,,,,,,
2,1,,772146-37101,,IDLER,2,2,2,2,,,,1,,,,,,,,,,
3,2,,172141-99490,,"IDLER KIT, FRONT",2,2,2,2,,,,,,,,,,,,,
4,3,,172141-37130,,"SHAFT, IDLER",2,2,2,2,,,,,,,,,,,,,
5,3,,172141-37140,,"SEAL 357220",4,4,4,4,,,,,,,,,,,,,
6,3,,22242-000300,,"CIRCLIP   30",2,2,2,2,,,,,,,,,,,,,
7,3,,22252-000720,,"CIRCLIP   72",4,4,4,4,,,,,,,,,,,,,
8,3,,24101-062074,,"BALL BEARING",4,4,4,4,,,,,,,,,,,,,
9,2,,172141-37100,,"IDLER 280",2,2,2,2,,,,,,,,,,,,,
10,2,,172146-37100,,"IDLER 280",2,2,2,2,,,,1,,,,,,,,,,
11,2,,172141-37111,,"FORK(L), IDLER",2,2,2,2,,,,,,,,,,,,,
12,2,,172141-37121,,"FORK(R), IDLER",2,2,2,2,,,,,,,,,,,,,
13,1,,933171-13691,,"PLUG PT1/8",2,2,2,2,,,,,,,,,,,,,
14,1,,772142-37300,,"ROLLER ASSY, TRACK",6,6,6,6,,,,,,,,,,,,,
16,2,,172146-37310,,"SHAFT, ROLLER",6,6,6,6,,,,,,,,,,,,,
17,2,,172141-37320,,"SPACER 75X2.6",12,12,12,12,,,,,,,,,,,,,
18,2,,1A1030-48250,,"SEAL QLF30621218,OIL",12,12,12,12,,,,,,,,,,,,,
19,2,,22252-000620,,"CIRCLIP 62(H)",12,12,12,12,,,,,,,,,,,,,
20,2,,22252-000750,,"CIRCLIP   75",12,12,12,12,,,,,,,,,,,,,
21,2,,933111-73800,,BEARING,12,12,12,12,,,,,,,,,,,,,
22,1,,172113-36050,,"BOLT, ROLLER ADJUST",6,6,6,6,,,,,,,,,,,,,
23,1,,22217-160000,,"SPRING WASHER 16",6,6,6,6,,,,,,,,,,,,,
24,1,,26657-160002,,"CAP NUT M16",6,6,6,6,,,,,,,,,,,,,
25,1,,172146-37700,,SPRING,2,2,2,2,,,,,,,,,,,,,
26,1,,172141-37801,,"PISTON, ADJUST",2,2,2,2,,,,,,,,,,,,,
27,1,,172122-37843,,"VALVE ASSY, NIPPLE",2,2,2,2,,,,,,,,,,,,,
28,2,,24315-000140,,"O-RING 1B P-14.0",2,2,2,2,,,,,,,,,,,,,
29,2,,24761-020000,,"NIPPLE PT1/8,GREASE",2,2,2,2,,,,,,,,,,,,,
30,1,,172141-37850,,"RING G35, BACK UP",2,2,2,2,,,,,,,,,,,,,
31,1,,24325-000350,,"O-RING 1B G 35.0",2,2,2,2,,,,,,,,,,,,,
32,1,,26013-100402,,"BOLT M10X 40",8,8,8,8,,,,,,,,,,,,,
33,1,,933126-34300,,"SEAL 3547710",2,2,2,2,,,,,,,,,,,,,
34,1,,172141-29110,,SPROCKET,2,2,2,2,,,,,,,,,,,,,
35,1,,26013-120302,,"BOLT W/WASHER M12X30",18,18,18,18,,,,,,,,,,,,,
```

https://truckmanualshub.com/

Fig. 20 ローラ&アジャスト ROLLER & ADJUST

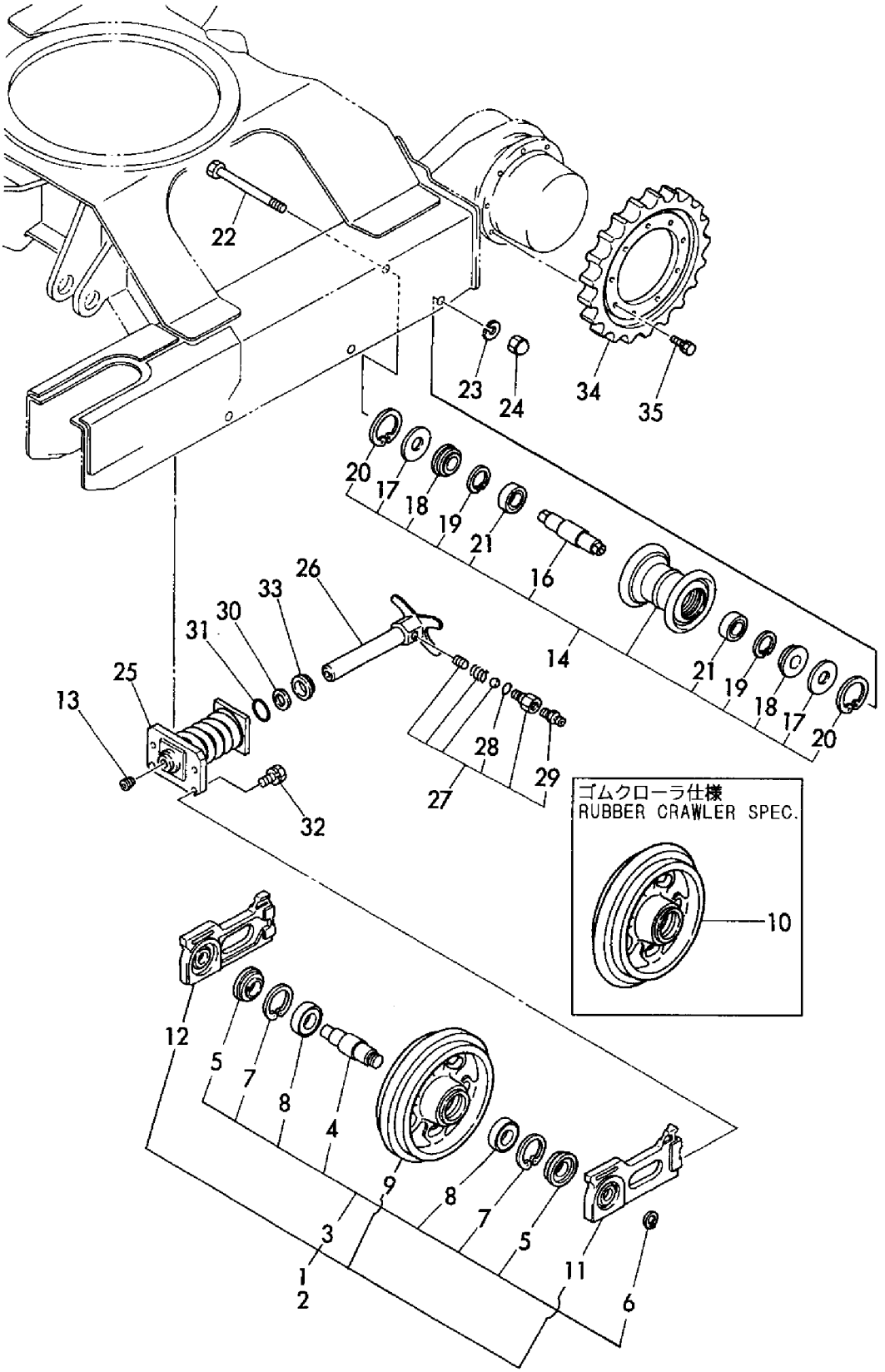

https://truckmanualshub.com/

```
1,1,,172141-38100,,"CRAWLER 270 ASSY",2,2,,,,,,,,,,,,,,,
1-1,1,,172141-38101,,"CRAWLER 270 ASSY",2,2,2,2,,,N,,,M/#50763,,M/#50763,,,,,,
2,2,,172141-38230,,"SHOE 270, CRAWLER",72,72,,,,,,,,,,,,,,,,
2-1,2,,172141-38231,,"SHOE
270,CRAWLER",72,72,72,72,,,N,,,M/#50763,,M/#50763,,,,,,
3,2,,172141-38150,,"LINK ASSY, CRAWLER",2,2,2,2,,,,,,,,,,,,,
4,3,,172141-38200,,BUSH,72,72,72,72,,,,,,,,,,,,,
5,3,,172141-38210,,"PIN, CRAWLER",70,70,70,70,,,,,,,,,,,,,
6,1,,172141-38220,,"PIN, MASTER",2,2,2,2,,,,,,,,,,,,,
7,1,,172614-38300,,"PIN 5X45, LOCK",2,2,2,2,,,,,,,,,,,,,
8,1,,172141-38240,,"TRACK 270, MASTER",2,2,,,,,,2,,,,,,,,,
8-1,1,,172141-38241,,"TRACK 270, MASTER",2,2,,,,,N,2,,M/#50763,,M/#50763,,,,,,
9,1,,172141-38610,,"CRAWLER, RUBBER",2,2,2,2,,,,,,,,,,,,,
10,1,,172141-38110,,"CRAWLER 320 ASSY",2,2,,,,,,1,,,,,,,,,
10-1,1,,172141-38111,,"CRAWLER 320 ASSY",2,2,,,,,N,1,,M/#50763,,M/#50763,,,,,,
11,2,,172141-38150,,"LINK ASSY, CRAWLER",2,2,,,,,,,,,,,,,,,,
12,3,,172141-38200,,BUSH,72,72,,,,,,,,,,,,,,,,
13,3,,172141-38210,,"PIN, CRAWLER",70,70,,,,,,,,,,,,,,,,
14,2,,172072-13790,,"PLATE, SHOE",72,72,,,,,,,,,,,,,,,,
14-1,2,,172072-13791,,"PLATE,SHOE",72,72,,,,,N,,,M/#50763,,M/#50763,,,,,,
15,1,,172141-38250,,"TRACK 320, MASTER",2,2,,,,,,3,,,,,,,,,
15-1,1,,172141-38251,,"TRACK, MASTER ASSY",2,2,,,,,N,3,,M/#50763,,M/#50763,,,,,,
16,1,,172141-38121,,"CRAWLER 350,TRIANGLE",4,4,,,,,,1,,,,,,,,,
17,2,,172141-38130,,"LINK ASSY, CRAWLER",4,4,,,,,,,,,,,,,,,,
18,3,,172141-38200,,BUSH,72,72,,,,,,,,,,,,,,,,
19,3,,172141-38210,,"PIN, CRAWLER",68,68,,,,,,,,,,,,,,,,
20,2,,172614-38550,,"SHOE, TRIANGLE",72,72,,,,,,,,,,,,,,,,
21,1,,172141-38220,,"PIN, MASTER",4,4,,,,,,,,,,,,,,,,
22,1,,172614-38300,,"PIN 5X45, LOCK",4,4,,,,,,,,,,,,,,,,
23,1,,172141-38260,,"TRACK 350, MASTER",4,4,,,,,,3,,,,,,,,,
24,1,,172141-37500,,PLATE,4,4,,,,,,1,,,,,,,,,
25,1,,26013-100302,,"BOLT M10X 30",8,8,,,,,,1,,,,,,,,,
```

https://truckmanualshub.com/

Fig. 21 クローラ CRAWLER

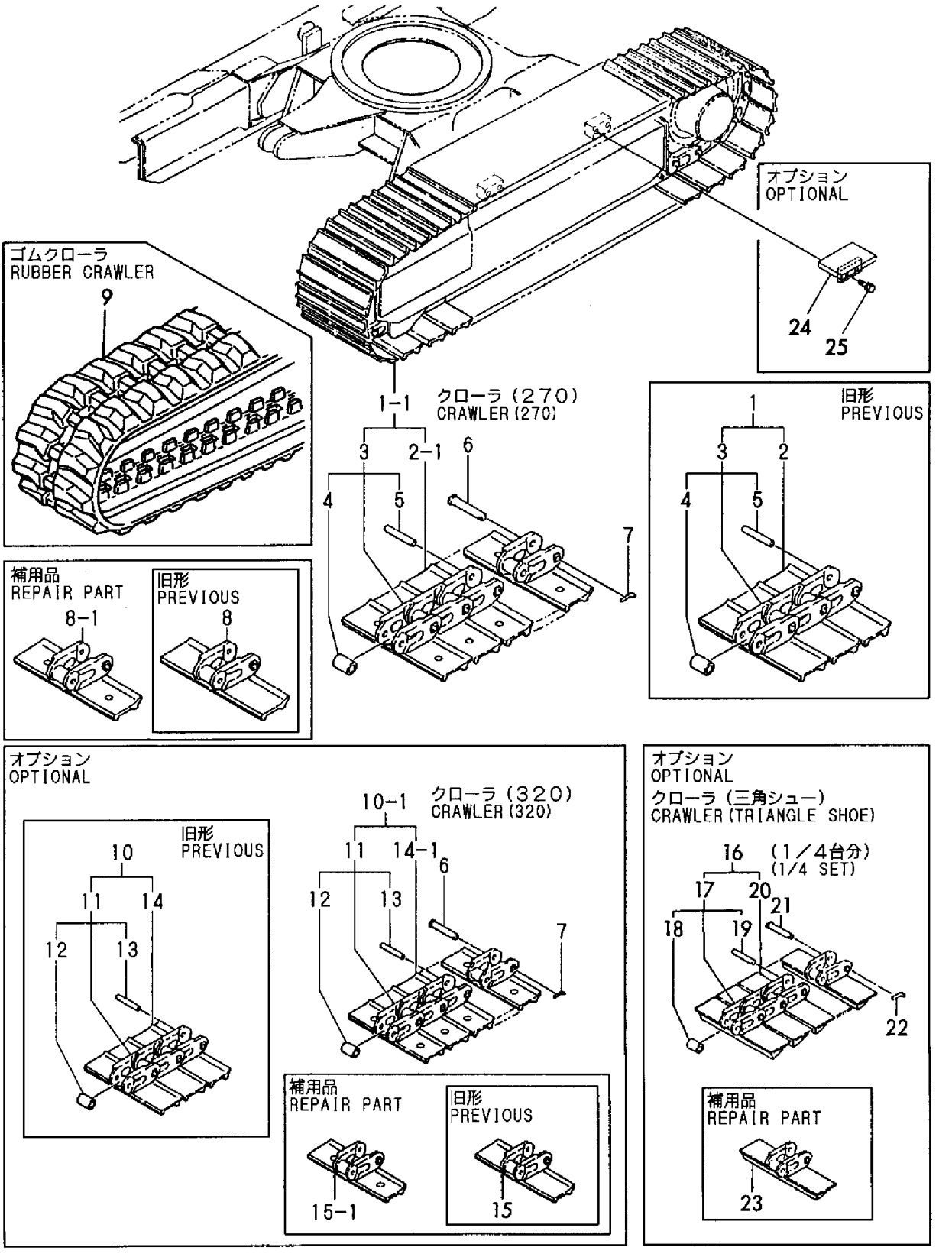

https://truckmanualshub.com/

```
1,1,,194300-21450,,"CAP 20",1,1,,,,,,,,,,,,,,,
2,1,,194145-04810,,"WASHER 10",2,2,,,,,,,,,,,,,,,
3,1,,172165-45420,,COVER,1,1,,,,,,,,,,,,,,,
4,1,,172168-45450,,"SUPPORT L",1,1,,,,,,,,,,,,,,,
5,1,,172168-45550,,"SUPPORT R",1,1,,,,,,,,,,,,,,,
6,1,,172168-45600,,"COVER L",1,1,,,,,,,,,,,,,,,
7,1,,172165-45620,,"COVER, SUPPORT",1,1,,,,,,,,,,,,,,,
8,1,,172168-45620,,"COVER R",1,1,,,,,,,,,,,,,,,
9,1,,172171-45450,,SUPPORT,1,1,,,,,,,,,,,,,,,
10,1,,194630-62360,,GROMMET,4,4,,,,,,,,,,,,,,,
11,1,,172519-63240,,"BOLT  8X 16",8,8,,,,,,,,,,,,,,,
12,1,,172519-63240,,"BOLT  8X 16",5,5,,,,,,,,,,,,,,,
13,1,,172519-63240,,"BOLT  8X 16",2,2,,,,,,,,,,,,,,,
14,1,,22217-100000,,"SPRING WASHER 10",7,7,,,,,,,,,,,,,,,
15,1,,172168-46760,,"BOLT M10X20",8,8,,,,,,,,,,,,,,,
16,1,,26116-100202,,"BOLT M10X 20 PLATED",5,5,,,,,,,,,,,,,,,
17,1,,933170-01490,,"SPRING 12",4,4,,,,,,,,,,,,,,,
18,1,,26116-100902,,"BOLT M10X 90 PLATED",2,2,,,,,,,,,,,,,,,
19,1,,172141-42551,,"ARM, LOCK",2,2,,,,,,,,,,,,,,,
19-1,1,,172171-45800,,"ARM, LOCK",2,2,,,,,N,,,M/#50626,,M/#50626,,,,,,
20,1,,172141-42700,,"LINK, LOCK",4,4,,,,,,,,,,,,,,,
20-1,1,,172141-42701-4,,"LINK,LOCK",4,4,,,,,N,,,M/#50626,,M/#50626,,,,,,
21,1,,172141-42750,,"BOLT, STOPPER",8,8,,,,,,,,,,,,,,,
22,1,,172168-45770,,"PIPE, LOCK",2,2,,,,,,,,,,,,,,,
23,1,,172168-45900,,"LEVER(L), LOCK",1,1,,,,,,,,,,,,,,,
23-1,1,,172171-45900,,"LEVER(L), LOCK",1,1,,,,,N,,,M/#50626,,M/#50626,,,,,,
24,1,,172168-45920,,"LEVER(R), LOCK",1,1,,,,,,,,,,,,,,,
24-1,1,,172171-45920,,"LEVER(R), LOCK",1,1,,,,,N,,,M/#50626,,M/#50626,,,,,,
25,1,,172116-46630,,"KNOB, LOCK LEVER",2,2,,,,,,,,,,,,,,,
26,1,,1C6281-52310,,"PIN 6,COME-OFF SNAP",4,4,,,,,,,,,,,,,,,
27,1,,22137-120000,,"WASHER 12,POLISHED",4,4,,,,,,,,,,,,,,,
28,1,,26756-080002,,"LOCK NUT M 8 PLATED",8,8,,,,,,,,,,,,,,,
29,1,,26756-120002,,"LOCK NUT M12 PLATED",4,4,,,,,,,,,,,,,,,
30,1,,933110-54100,,"PIN 4.75X14",4,4,,,,,,,,,,,,,,,
```

https://truckmanualshub.com/

Fig. 22 操縦装置（レバースタンド＆ストッパ） CONTROL EQUIPMENT (LEVER STAND & STOPPER)

COUNTRY	JP	AS	EX
APPLI-CATION	○	—	○

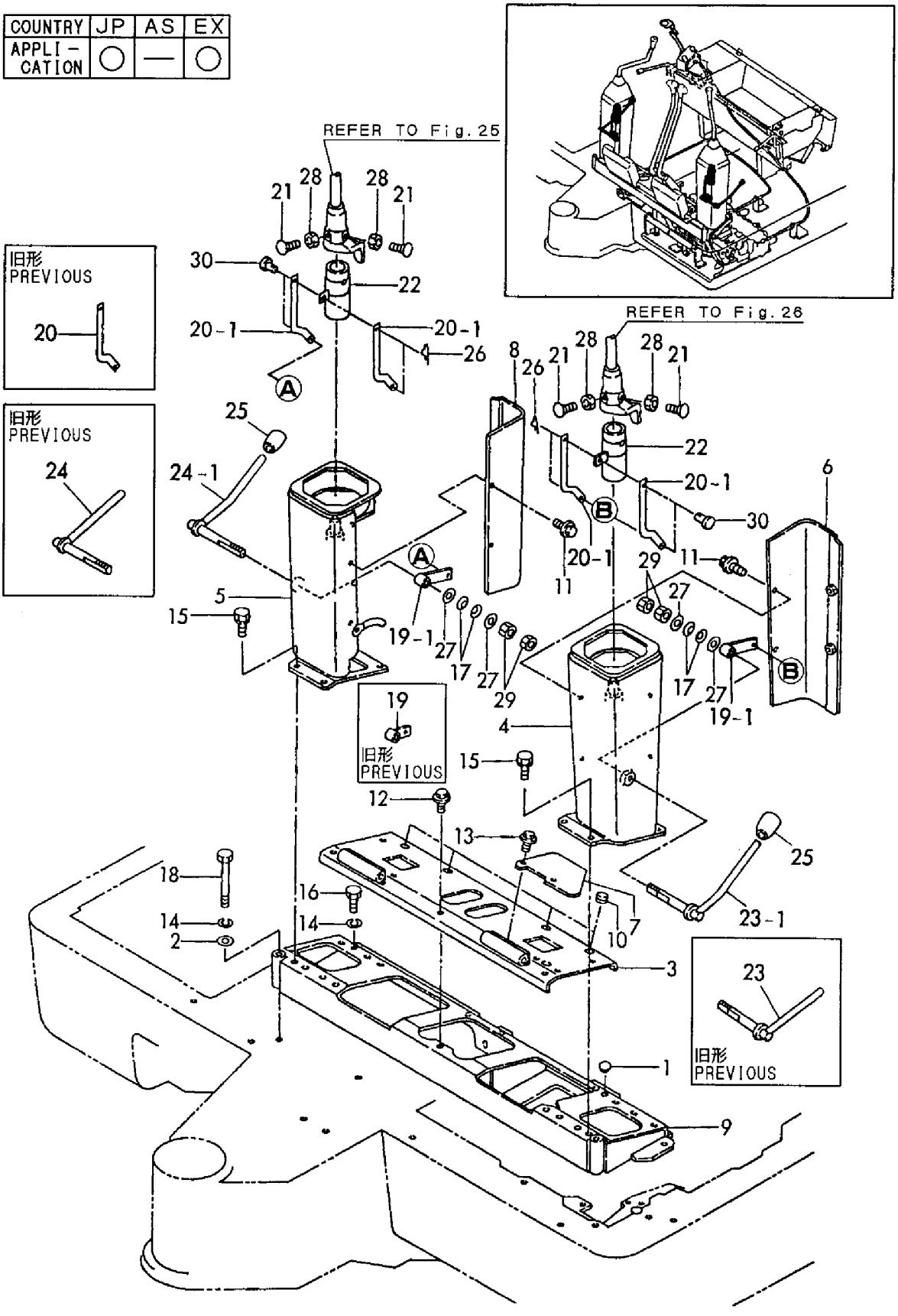

https://truckmanualshub.com/

```
1,1,,194145-04810,,"WASHER 10",,2,,,,,,,,,,,,,,,
2,1,,194300-21450,,"CAP 20",,1,,,,,,,,,,,,,,,
3,1,,172151-45010,,"BOOT P,LEVER",,2,,,,,,,,,,,,,,,
4,1,,172165-45301,,SUPPORT,,1,,,,,,,,,,,,,,,
5,1,,172151-45320,,"PLATE,BOOT",,2,,,,,,,,,,,,,,,
6,1,,172165-45420,,COVER,,1,,,,,,,,,,,,,,,
7,1,,172165-45450,,"COVER(R), SUPPORT",,1,,,,,,,,,,,,,,,
8,1,,172165-45470,,"COVER(L), SUPPORT",,1,,,,,,,,,,,,,,,
9,1,,172165-45620,,"COVER, SUPPORT",,1,,,,,,,,,,,,,,,
10,1,,194630-62360,,GROMMET,,4,,,,,,,,,,,,,,,
11,1,,172519-63240,,"BOLT  8X 16",,2,,,,,,,,,,,,,,,
12,1,,172519-63240,,"BOLT  8X 16",,8,,,,,,,,,,,,,,,
13,1,,172519-63240,,"BOLT  8X 16",,5,,,,,,,,,,,,,,,
14,1,,22217-100000,,"SPRING WASHER 10",,7,,,,,,,,,,,,,,,
15,1,,26013-080162,,"BOLT W/WASHER M8X16",,8,,,,,,,,,,,,,,,
16,1,,26116-100202,,"BOLT M10X 20 PLATED",,4,,,,,,,,,,,,,,,
17,1,,26116-100504,,"BOLT M10X 50 PLATED",,1,,,,,,,,,,,,,,,
18,1,,26116-100902,,"BOLT M10X 90 PLATED",,2,,,,,,,,,,,,,,,
19,1,,26716-100002,,"NUT M10",,1,,,,,,,,,,,,,,,
20,1,,172165-45000,,"LEVER L CMP",,1,,,,,,,,,,,,,,,
21,1,,172165-45030,,LEVER(R),,1,,,,,,,,,,,,,,,
22,1,,172165-45071,,"KNOB (L) ASSY",,1,,,,,,,,,,,,,,,
23,1,,172165-45081,,"KNOB R COMPL.",,1,,,,,,,,,,,,,,,
24,1,,26587-040062,,"SCREW M 4X  6",,2,,,,,,,,,,,,,,,
25,1,,26736-140002,,"NUT M14",,2,,,,,,,,,,,,,,,
26,1,,933168-55770,,"BAND 146",,2,,,,,,,,,,,,,,,
```

https://truckmanualshub.com/

Fig. 23 操縦装置（レバースタンド＆レバー）（フロントマルチ） CONTROL EQUIPMENT (LEVER STAND & LEVER) (FRONT MULTI)

COUNTRY	JP	AS	EX
APPLI-CATION	○	—	—

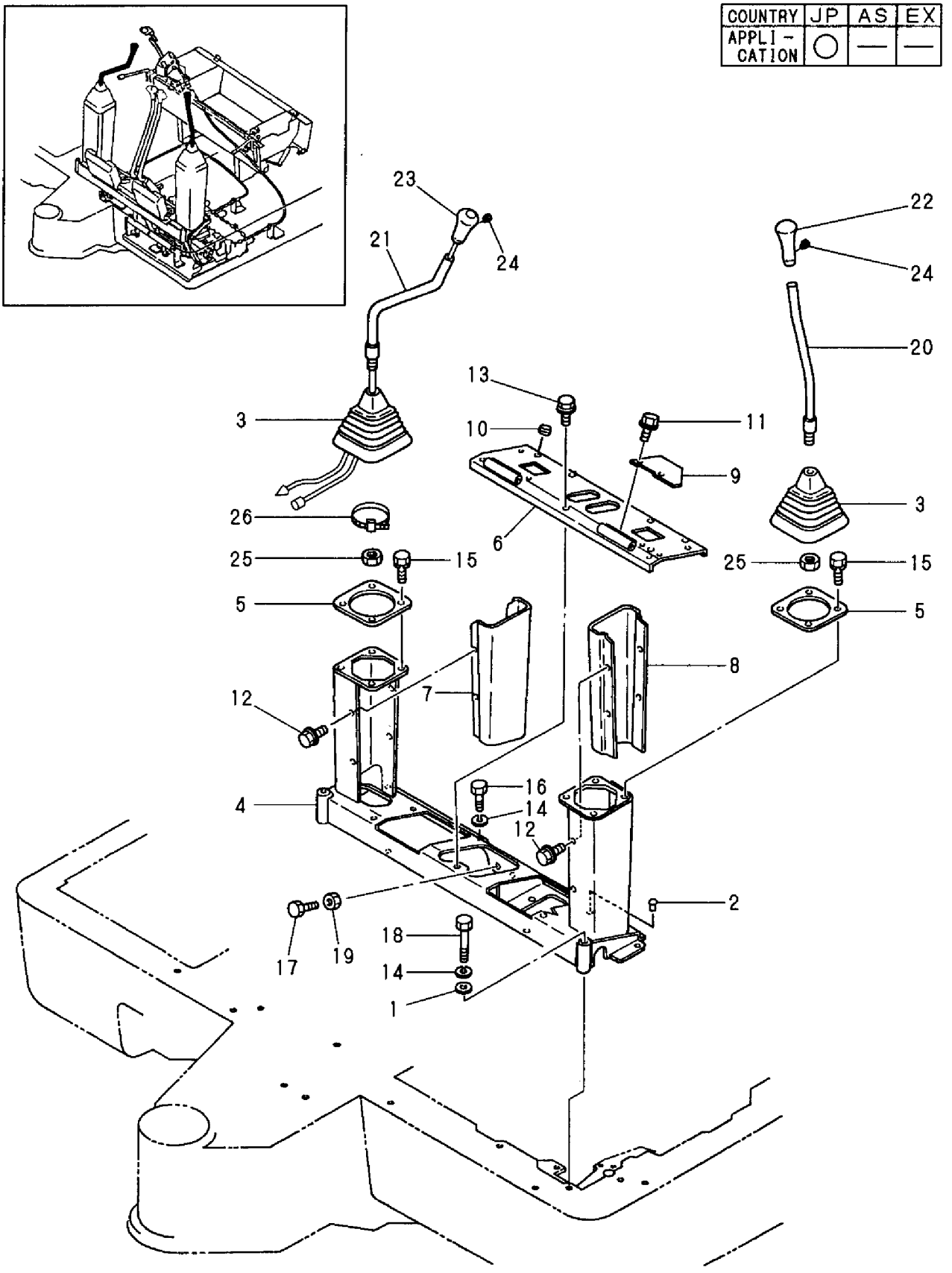

https://truckmanualshub.com/

```
1,1,,172146-41320,,GROMMET,,,1,1,,,,,,,,,,,,,
2,1,,194145-04810,,"WASHER 10",,,2,2,,,,,,,,,,,,,
3,1,,172165-46401,,SUPPORT,,,1,1,,,,,,,,,,,,,
4,1,,172165-46660,,COVER,,,1,1,,,,,,,,,,,,,
5,1,,172165-47100,,"STAND R, LEVER",,,1,1,,,,,,,,,,,,,
6,2,,172141-41370,,"BUSH 2015",,,2,2,,,,,,,,,,,,,
8,2,,24550-025150,,"BUSH 25X15",,,2,2,,,,,,,,,,,,,
9,1,,172165-47300,,"STAND L, LEVER",,,1,1,,,,,,,,,,,,,
10,2,,172141-41370,,"BUSH 2015",,,2,2,,,,,,,,,,,,,
12,2,,24550-025150,,"BUSH 25X15",,,2,2,,,,,,,,,,,,,
13,1,,172165-47730,,"GUIDE, HOSE",,,1,1,,,,,,,,,,,,,
14,1,,172165-47770,,"BRACKET, ACCEL",,,1,1,,,,,,,,,,,,,
15,1,,172165-47900,,"BRACKET R",,,1,1,,,,,,,,,,,,,
16,1,,172165-47930,,"BRACKET L",,,1,1,,,,,,,,,,,,,
17,1,,172165-47960,,"BOLT M 8",,,4,4,,,,,,,,,,,,,
18,1,,26116-100504,,"BOLT M10X 50 PLATED",,,4,4,,,,,,,,,,,,,
19,1,,172165-47980,,"SHIM 42X25.5X0.5",,,4,4,,,,,,,,,,,,,
20,1,,172151-53430,,GROMMET,,,2,2,,,,,,,,,,,,,
21,1,,172165-47990,,WASHER,,,2,2,,,,,,,,,,,,,
22,1,,26716-100002,,"NUT M10",,,4,4,,,,,,,,,,,,,
23,1,,22217-100000,,"SPRING WASHER 10",,,7,7,,,,,,,,,,,,,
24,1,,22242-000250,,"CIRCLIP 25S",,,2,2,,,,,,,,,,,,,
25,1,,24761-020000,,"NIPPLE PT1/8,GREASE",,,4,4,,,,,,,,,,,,,
26,1,,26013-080202,,"BOLT W/WASHER M8X20",,,4,4,,,,,,,,,,,,,
27,1,,26013-080202,,"BOLT W/WASHER M8X20",,,4,4,,,,,,,,,,,,,
28,1,,26013-100202,,"BOLT W/WASHER M10X20",,,2,2,,,,,,,,,,,,,,
29,1,,26116-100202,,"BOLT M10X 20 PLATED",,,4,4,,,,,,,,,,,,,
30,1,,26116-100902,,"BOLT M10X 90 PLATED",,,2,2,,,,,,,,,,,,,
31,1,,194630-62360,,GROMMET,,,4,4,,,,,,,,,,,,,
32,1,,172519-63240,,"BOLT  8X 16",,,8,8,,,,,,,,,,,,,
33,1,,22217-080000,,"SPRING WASHER  8",,,4,4,,,,,,,,,,,,,
34,1,,24311-000340,,"O-RING 1A P-34.0",,,4,4,,,,,,,,,,,,,
35,1,,172165-47720,,"GUIDE COMP.,HOSE",,,1,1,,,,,,,,,,,,,
```

https://truckmanualshub.com/

Fig. 24 操縦装置（レバースタンド）（AS） CONTROL EQUIPMENT (LEVER STAND) (AS)

COUNTRY	JP	AS	EX
APPLI-CATION	—	○	—

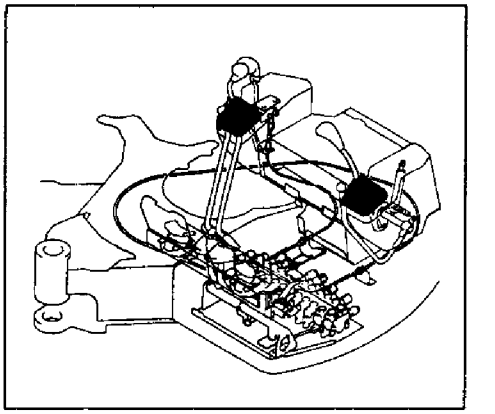

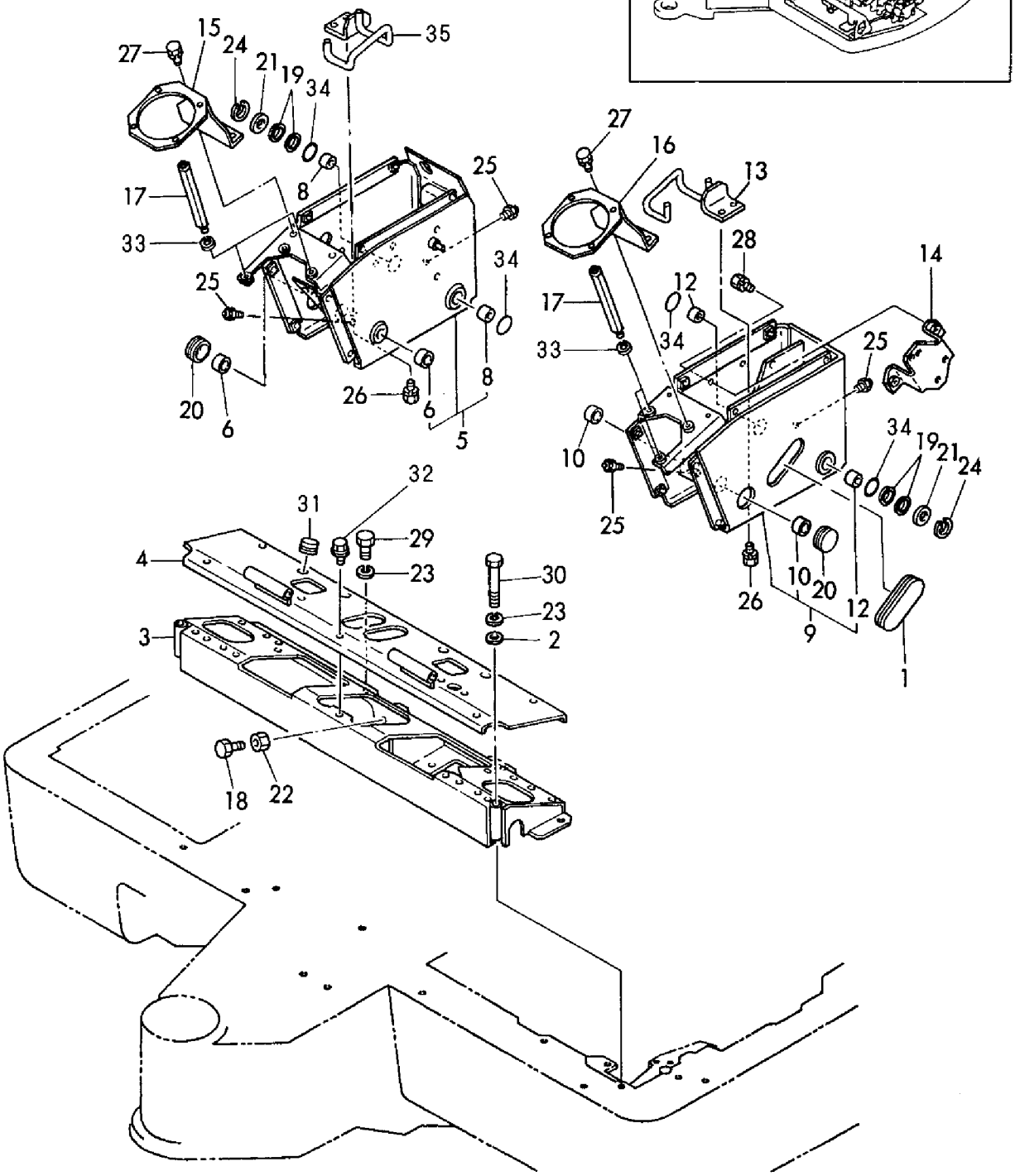

https://truckmanualshub.com/

```
1,1,,172151-45010,,"BOOT P,LEVER",1,1,,,,,,,,,,,,,,,
2,1,,172165-45081,,"KNOB R COMPL.",1,1,,,,,,,,,,,,,,,
3,1,,172168-45740,,LEVER,1,1,,,,,,,,,,,,,,,
4,1,,172168-46750,,JOINT,1,1,,,,,,,,,,,,,,,
5,1,,24761-050000,,"NIPPLE C,GREASE",1,1,,,,,,,,,,,,,,,
6,1,,26587-040062,,"SCREW M 4X  6",1,1,,,,,,,,,,,,,,,
7,1,,194150-24270,,"SCREW CAP 13",2,2,,,,,,,,,,,,,,,
8,1,,172141-41490,,"LINK(B), BUCKET",1,1,,,,,,,,,,,,,,,
9,1,,172168-45270,,SHAFT,1,1,,,,,,,,,,,,,,,
10,1,,172168-45280,,"LINK W/BUSH, BOOM",1,1,,,,,,,,,,,,,,,
11,2,,172141-41370,,"BUSH 2015",1,1,,,,,,,,,,,,,,,
12,1,,172142-45340,,"LINK(A)ASSY, BACKET",1,1,,,,,,,,,,,,,,,
13,1,,172122-45720,,"ROD-END 14",2,2,,,,,,,,,,,,,,,
14,1,,172124-46200,,"O-RING 27X5.7",4,4,,,,,,,,,,,,,,,
15,1,,22137-140000,,"WASHER 14,POLISHED",2,2,,,,,,,,,,,,,,,
16,1,,22157-120000,,"WASHER 12",2,2,,,,,,,,,,,,,,,
17,1,,22217-140000,,"SPRING WASHER 14",2,2,,,,,,,,,,,,,,,
18,1,,22351-050036,,"SPRING PIN 5X36",2,2,,,,,,,,,,,,,,,
19,1,,24761-050000,,"NIPPLE C,GREASE",1,1,,,,,,,,,,,,,,,
20,1,,26716-140002,,"NUT M14",2,2,,,,,,,,,,,,,,,
21,1,,26756-140002,,"LOCK NUT M14 PLATED",1,1,,,,,,,,,,,,,,,
22,1,,172168-45650,,ROD,2,2,,,,,,,,,,,,,,,
23,1,,172146-45691,,"ROD(C), SPOOL",2,2,,,,,,,,,,,,,,,
24,1,,172122-46590,,"ELBALL 8",2,2,,,,,,,,,,,,,,,
25,1,,172122-46590,,"ELBALL 8",2,2,,,,,,,,,,,,,,,
26,1,,172122-46590,,"ELBALL 8",2,2,,,,,,,,,,,,,,,
27,1,,22137-080000,,"WASHER 8, POLISHED",6,6,,,,,,,,,,,,,,,
28,1,,22417-160160,,"COTTER PIN 1.6X16",2,2,,,,,,,,,,,,,,,
29,1,,26051-080002,,"NUT M 8",12,12,,,,,,,,,,,,,,,
30,1,,933110-54100,,"PIN 4.75X14",2,2,,,,,,,,,,,,,,,
```

https://truckmanualshub.com/

Fig. 25 操縦装置（ブーム＆バケット） CONTROL EQUIPMENT (BOOM & BUCKET)

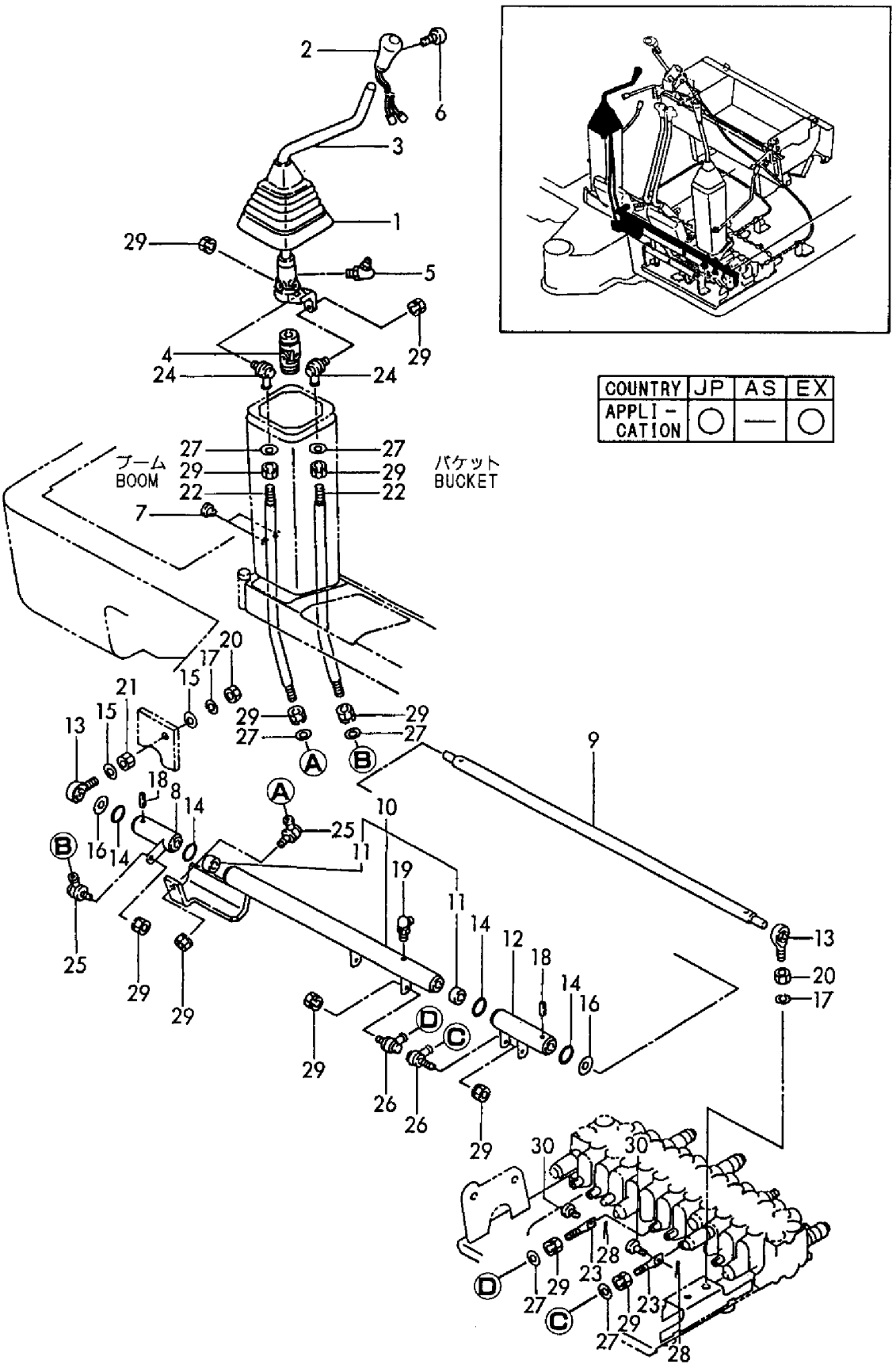

COUNTRY	JP	AS	EX
APPLI-CATION	○	—	○

https://truckmanualshub.com/

```
1,1,,172151-45010,,"BOOT P,LEVER",1,1,,,,,,,,,,,,,,,
2,1,,172165-45071,,"KNOB (L) ASSY",1,1,,,,,,,,,,,,,,,
3,1,,172168-45700,,LEVER,1,1,,,,,,,,,,,,,,,
4,1,,172168-45730,,"LINK L",1,1,,,,,,,,,,,,,,,
5,1,,172168-46750,,JOINT,1,1,,,,,,,,,,,,,,,
6,1,,24311-000160,,"O-RING 1A P-16.0",1,1,,,,,,,,,,,,,,,
7,1,,24761-050000,,"NIPPLE C,GREASE",1,1,,,,,,,,,,,,,,,
8,1,,26587-040062,,"SCREW M 4X  6",1,1,,,,,,,,,,,,,,,
9,1,,26756-080002,,"LOCK NUT M 8 PLATED",1,1,,,,,,,,,,,,,,,
10,1,,26979-080162,,"SCREW M 8X16",1,1,,,,,,,,,,,,,,,
11,1,,172168-45220,,SHAFT,1,1,,,,,,,,,,,,,,,
12,1,,172168-45240,,"LINK ASSY, ARM",1,1,,,,,,,,,,,,,,,
13,2,,172141-41370,,"BUSH 2015",1,1,,,,,,,,,,,,,,,
14,1,,172142-45360,,"LINK ASSY, TURNING",1,1,,,,,,,,,,,,,,,
15,2,,172141-41370,,"BUSH 2015",2,2,,,,,,,,,,,,,,,
16,1,,172124-46200,,"O-RING 27X5.7",3,3,,,,,,,,,,,,,,,
17,1,,24761-050000,,"NIPPLE C,GREASE",2,2,,,,,,,,,,,,,,,
18,1,,26013-100252,,"BOLT W/WASHER M10X25",1,1,,,,,,,,,,,,,,,
19,1,,172146-45600,,"ROD(L), LINK",1,1,,,,,,,,,,,,,,,
20,1,,172146-45740,,"ROD(D), SPOOL",2,2,,,,,,,,,,,,,,,
21,1,,172122-46590,,"ELBALL 8",2,2,,,,,,,,,,,,,,,
22,1,,172122-46590,,"ELBALL 8",2,2,,,,,,,,,,,,,,,
23,1,,172122-47250,,"BALL 8, LINK",2,2,,,,,,,,,,,,,,,
24,1,,22137-080000,,"WASHER 8, POLISHED",1,1,,,,,,,,,,,,,,,
25,1,,22137-080000,,"WASHER 8, POLISHED",4,4,,,,,,,,,,,,,,,
26,1,,22417-160160,,"COTTER PIN 1.6X16",2,2,,,,,,,,,,,,,,,
27,1,,26051-080002,,"NUT M 8",3,3,,,,,,,,,,,,,,,
28,1,,26051-080002,,"NUT M 8",8,8,,,,,,,,,,,,,,,
29,1,,933110-54100,,"PIN 4.75X14",2,2,,,,,,,,,,,,,,,
30,1,,172165-45490,,CUSHION,1,1,,,,,,,,,,,,,,,
31,1,,172168-46910,,ROD,1,1,,,,,,,,,,,,,,,
32,1,,172168-46940,,SPACER,1,1,,,,,,,,,,,,,,,
33,1,,22137-080000,,"WASHER 8, POLISHED",1,1,,,,,,,,,,,,,,,
34,1,,22252-000280,,"CIRCLIP   28",1,1,,,,,,,,,,,,,,,
35,1,,26013-080452,,"BOLT M 8X 45",1,1,,,,,,,,,,,,,,,
36,1,,26979-050052,,"SCREW M 5X 5",1,1,,,,,,,,,,,,,,,
```

https://truckmanualshub.com/

Fig. 26 操縦装置（アーム＆旋回） CONTROL EQUIPMENT (ARM & TURNING)

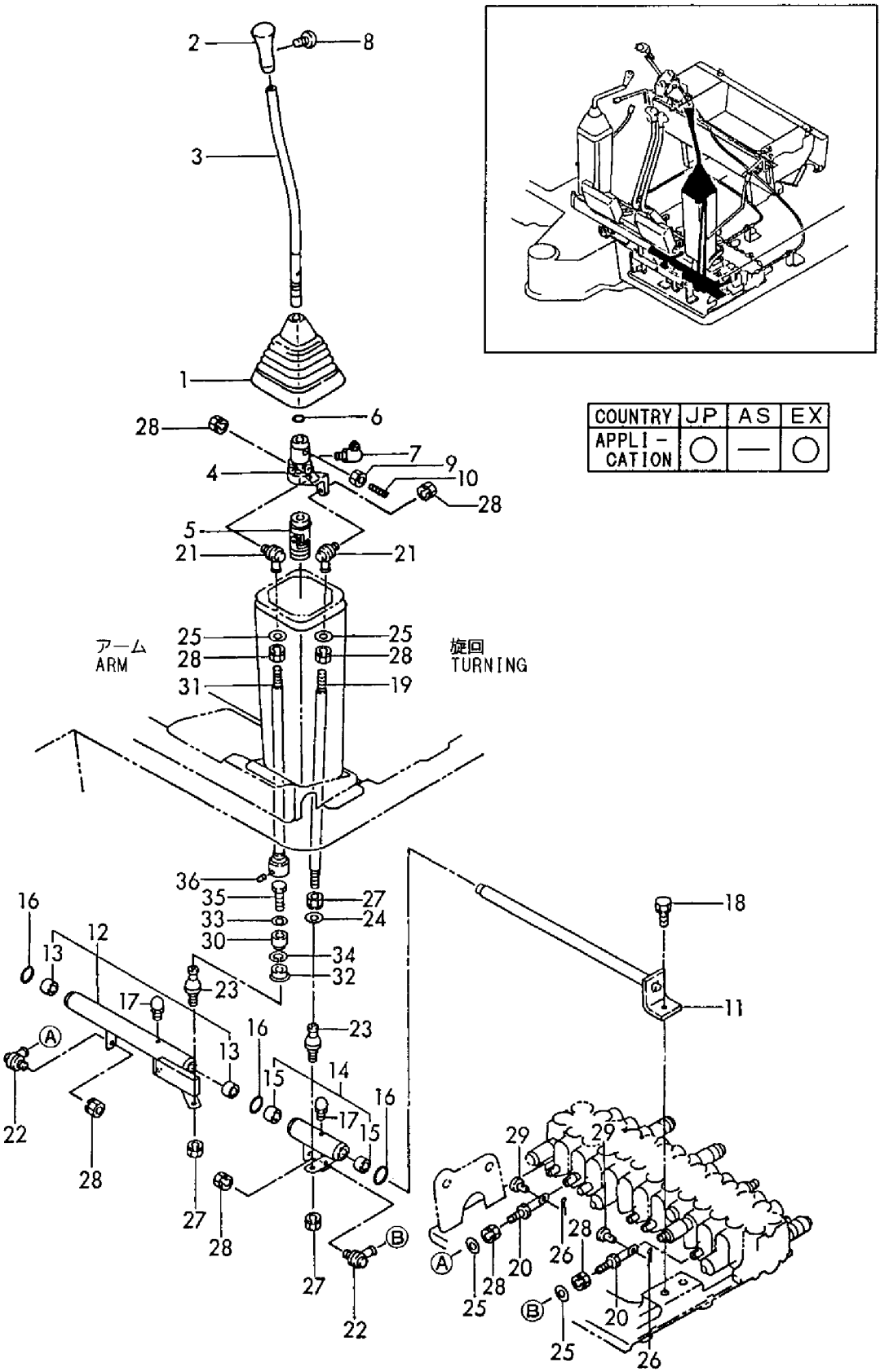

COUNTRY	JP	AS	EX
APPLI-CATION	○	—	○

https://truckmanualshub.com/

```
1,1,,172141-41340,,BOOTS,2,2,2,2,,,,,,,,,,,,,
2,1,,172164-45950,,"GRIP L, DRIV.",1,1,,,,,,,,,,,,,,,,
2-1,1,,172164-45951,,"GRIP L, DRIV.",1,1,1,1,,,N,,,M/#50763,,M/#50763,,,,,,
3,1,,172164-45960,,"GRIP R, DRIV.",1,1,,,,,,,,,,,,,,,,
3-1,1,,172164-45961,,"GRIP R, DRIV.",1,1,1,1,,,N,,,M/#50763,,M/#50763,,,,,,
4,1,,172168-45101,,"LEVER L COMP.,TRACK",1,1,1,1,,,,,,,,,,,,,
5,2,,172141-41370,,"BUSH 2015",2,2,2,2,,,,,,,,,,,,,
6,1,,172168-45121,,"LEVER R COMP.,TRACK",1,1,1,1,,,,,,,,,,,,,
7,2,,172141-41370,,"BUSH 2015",2,2,2,2,,,,,,,,,,,,,
8,1,,172124-46200,,"O-RING 27X5.7",3,3,3,3,,,,,,,,,,,,,
9,1,,24761-020000,,"NIPPLE PT1/8,GREASE",2,2,2,2,,,,,,,,,,,,,
10,1,,26116-100504,,"BOLT M10X 50 PLATED",4,4,4,4,,,,,,,,,,,,,
11,1,,26716-100002,,"NUT M10",4,4,4,4,,,,,,,,,,,,,
12,1,,26756-100002,,"LOCK NUT M10 PLATED",2,2,2,2,,,,,,,,,,,,,
13,1,,172168-45200,,"SHAFT, TRACK",1,1,1,1,,,,,,,,,,,,,
14,1,,26013-100252,,"BOLT W/WASHER M10X25",2,2,2,2,,,,,,,,,,,,,
15,1,,172165-46100,,"PEDAL L ASSY",1,1,1,1,,,,,,,,,,,,,
16,1,,172165-46150,,"PEDAL R COMP",1,1,1,1,,,,,,,,,,,,,
17,1,,26013-060302,,"BOLT M 6X 30",4,4,4,4,,,,,,,,,,,,,
18,1,,172168-45940,,"ROD 200",2,2,2,2,,,,,,,,,,,,,
19,1,,172122-46590,,"ELBALL 8",2,2,2,2,,,,,,,,,,,,,
20,1,,22137-080000,,"WASHER 8, POLISHED",2,2,2,2,,,,,,,,,,,,,
21,1,,22417-160160,,"COTTER PIN 1.6X16",2,2,2,2,,,,,,,,,,,,,
22,1,,26051-080002,,"NUT M 8",4,4,4,4,,,,,,,,,,,,,
23,1,,933110-54100,,"PIN 4.75X14",2,2,2,2,,,,,,,,,,,,,
```

https://truckmanualshub.com/

Fig. 27 操縦装置（走行） CONTROL EQUIPMENT (DRIVE)

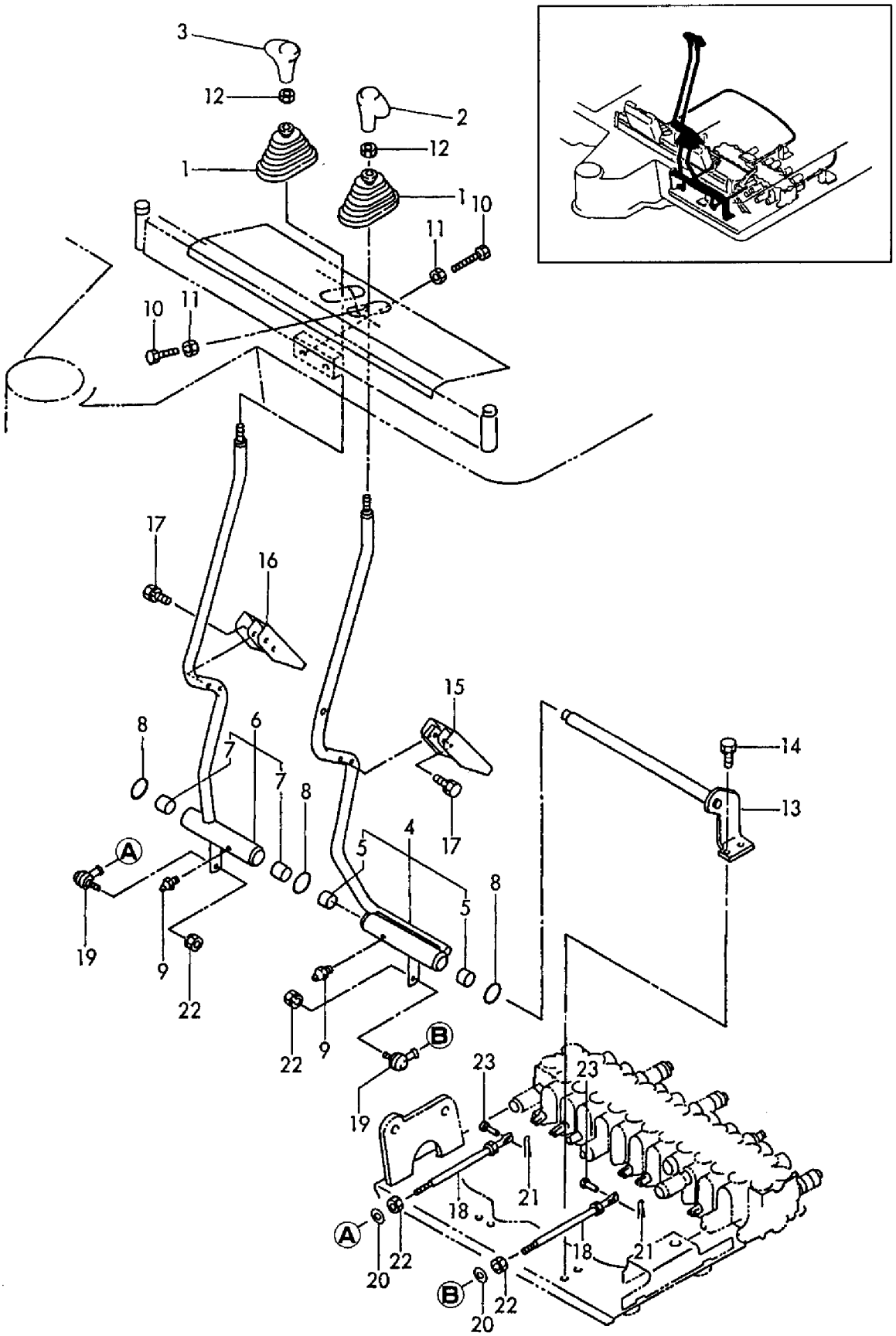

https://truckmanualshub.com/

```
1,1,,1A1040-45890,,"WASHER 10 36 4.5",1,1,1,1,,,,,,,,,,,,,
2,1,,172124-46200,,"O-RING 27X5.7",2,2,2,2,,,,,,,,,,,,,
3,1,,172165-46300,,"LINK W/BUSH",1,1,1,1,,,,,,,,,,,,,
5,2,,172141-41360,,"BUSH 1415",2,2,2,2,,,,,,,,,,,,,
6,1,,172165-46350,,"BRACKET, PEDAL",1,1,1,1,,,,,,,,,,,,,
7,1,,172146-41910,,"PIN 14-100",1,1,1,1,,,,,,,,,,,,,
8,1,,172168-46800,,"LINK W/BUSH, SWING",1,1,1,1,,,,,,,,,,,,,
10,2,,172141-41370,,"BUSH 2015",2,2,2,2,,,,,,,,,,,,,
11,1,,172168-46820,,SHAFT,1,1,1,1,,,,,,,,,,,,,
12,1,,24311-000210,,"O-RING 1A P-21.0",2,2,2,2,,,,,,,,,,,,,
13,1,,24761-020000,,"NIPPLE PT1/8,GREASE",1,1,1,1,,,,,,,,,,,,,
14,1,,24761-050000,,"NIPPLE C,GREASE",1,1,1,1,,,,,,,,,,,,,
15,1,,26051-080002,,"NUT M 8",7,7,7,7,,,,,,,,,,,,,
16,1,,26013-100202,,"BOLT W/WASHER M10X20",2,2,2,2,,,,,,,,,,,,,
17,1,,26013-100252,,"BOLT W/WASHER M10X25",2,2,2,2,,,,,,,,,,,,,
18,1,,26116-100202,,"BOLT M10X 20 PLATED",1,1,1,1,,,,,,,,,,,,,
19,1,,172068-28490,,"SPRING  8",4,4,4,4,,,,,,,,,,,,,
20,1,,172157-45990,,"BOOTS, PEDAL",1,1,1,1,,,,,,,,,,,,,
21,1,,172165-46230,,"SHAFT, SWING",2,2,2,2,,,,,,,,,,,,,
22,1,,172165-46261,,"COVER, PEDAL",2,2,2,2,,,,,,,,,,,,,
23,1,,172165-46281,,"PEDAL ASSY, SWING",1,1,1,1,,,,,,,,,,,,,
24,1,,172165-46340,,BOLT,2,2,2,2,,,,,,,,,,,,,
25,1,,22137-080000,,"WASHER 8, POLISHED",2,2,2,2,,,,,,,,,,,,,
26,1,,22351-040020,,"SPRING PIN 4X20",2,2,2,2,,,,,,,,,,,,,
27,1,,26116-080304,,"BOLT M 8X 30",2,2,2,2,,,,,,,,,,,,,
28,1,,26716-080002,,"NUT M 8",2,2,2,2,,,,,,,,,,,,,
29,1,,26716-080002,,"NUT M 8",4,4,4,4,,,,,,,,,,,,,
30,1,,172122-46590,,"ELBALL 8",3,3,3,3,,,,,,,,,,,,,
31,1,,172168-46840,,"ROD 240",1,1,1,1,,,,,,,,,,,,,
32,1,,172168-46860,,"ROD 100",1,1,1,1,,,,,,,,,,,,,
33,1,,172122-47250,,"BALL 8, LINK",1,1,1,1,,,,,,,,,,,,,
34,1,,22137-080000,,"WASHER 8, POLISHED",4,4,4,4,,,,,,,,,,,,,
35,1,,22217-100000,,"SPRING WASHER 10",1,1,1,1,,,,,,,,,,,,,
36,1,,22351-040032,,"SPRING PIN 4X32",1,1,1,1,,,,,,,,,,,,,
```

https://truckmanualshub.com/

Fig. 28 操縦装置（スイング） CONTROL EQUIPMENT (SWING)

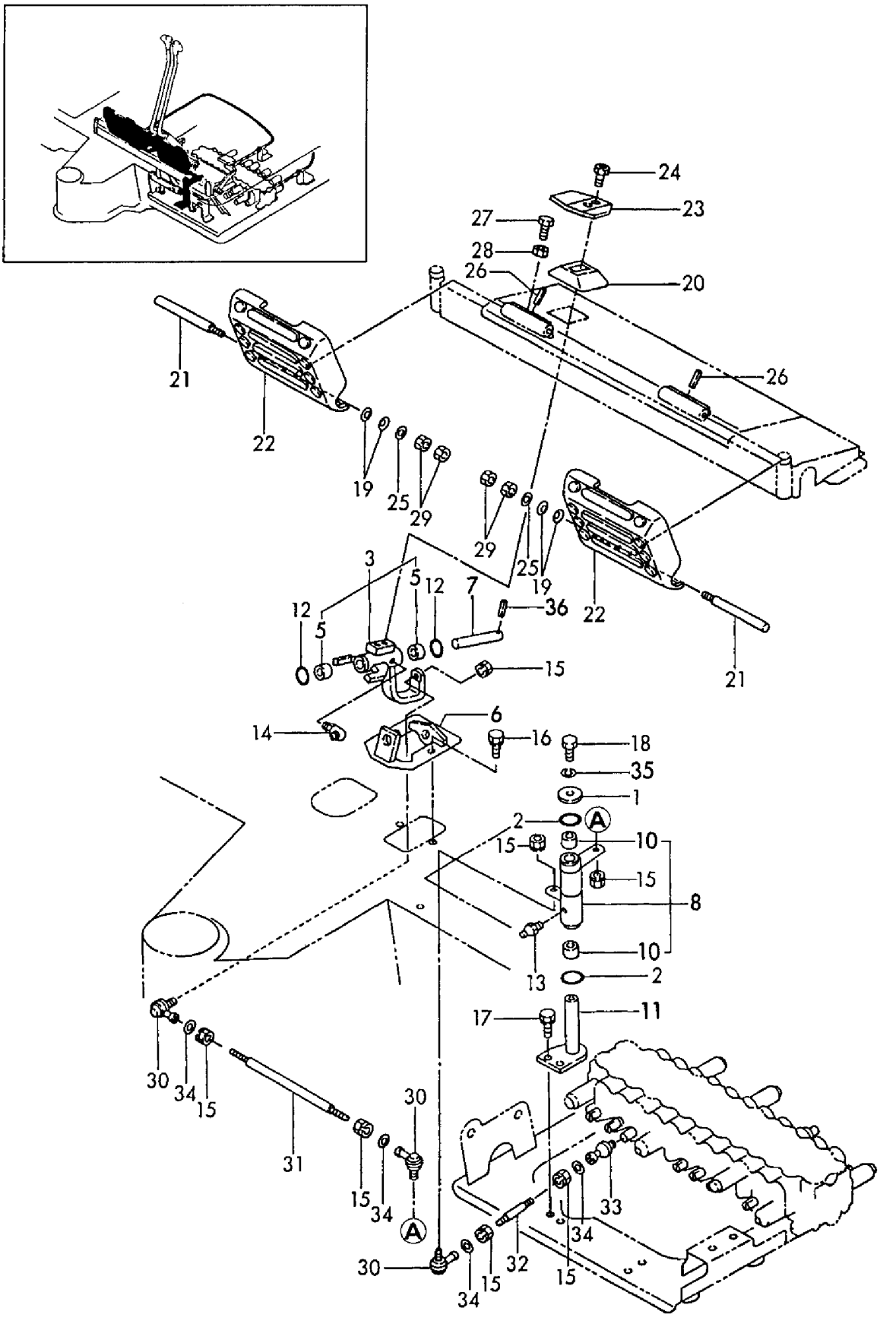

https://truckmanualshub.com/

```
1,1,,172165-45100,,"LEVER ASSY, BLADE",1,1,,,,,,,,,,,,,,,
1A,1,,172165-45270,,"LEVER ASSY, BLADE S",,,1,1,,,,,,,,,,,,,
2,1,,172164-45970,,"GRIP, BLADE",1,1,1,1,,,,,,,,,,,,,
3,1,,22351-050032,,"SPRING PIN 5X32",1,1,1,1,,,,,,,,,,,,,
4,1,,172165-45140,,"LINK, BLADE",1,1,1,1,,,,,,,,,,,,,
5,1,,172165-45180,,"BRACKET ASSY, REAR",1,1,,,,,,,,,,,,,,,,
5-1,1,,172165-45181,,"BRACKET ASY",1,1,1,1,,,N,,,M/#50653,,M/#50653,,,,,,
6,2,,172141-41360,,"BUSH 1415",2,2,2,2,,,,,,,,,,,,,
7,1,,24311-000210,,"O-RING 1A P-21.0",2,2,2,2,,,,,,,,,,,,,
8,1,,26013-100202,,"BOLT W/WASHER M10X20",3,3,3,3,,,,,,,,,,,,,
9,1,,26116-100354,,"BOLT M10X 35 PLATED",2,2,2,2,,,,,,,,,,,,,
10,1,,26716-100002,,"NUT M10",2,2,2,2,,,,,,,,,,,,,
11,1,,172141-42950,,"CABLE, BLADE",1,1,1,1,,,,,,,,,,,,,
12,1,,172141-42960,,"JOINT, CABLE",1,1,1,1,,,,,,,,,,,,,
13,1,,172168-45140,,"SUPPORT,BR CABLE",1,1,1,1,,,,,,,,,,,,,
14,1,,172142-45670,,"ROD, SPOOL",1,1,1,1,,,,,,,,,,,,,
15,1,,172122-46590,,"ELBALL 8",1,1,1,1,,,,,,,,,,,,,
16,1,,22417-160160,,"COTTER PIN 1.6X16",1,1,1,1,,,,,,,,,,,,,
17,1,,26013-100202,,"BOLT W/WASHER M10X20",2,2,2,2,,,,,,,,,,,,,,
18,1,,26051-080002,,"NUT M 8",1,1,1,1,,,,,,,,,,,,,
19,1,,933110-54100,,"PIN 4.75X14",1,1,1,1,,,,,,,,,,,,,
20,1,,933168-28480,,"WASHER 20X9X3.2",1,1,1,1,,,,,,,,,,,,,
21,1,,22351-030032,,"SPRING PIN 3X32",1,1,1,1,,,,,,,,,,,,,
```

https://truckmanualshub.com/

Fig. 29 操縦装置（ブレード） CONTROL EQUIPMENT (BLADE)

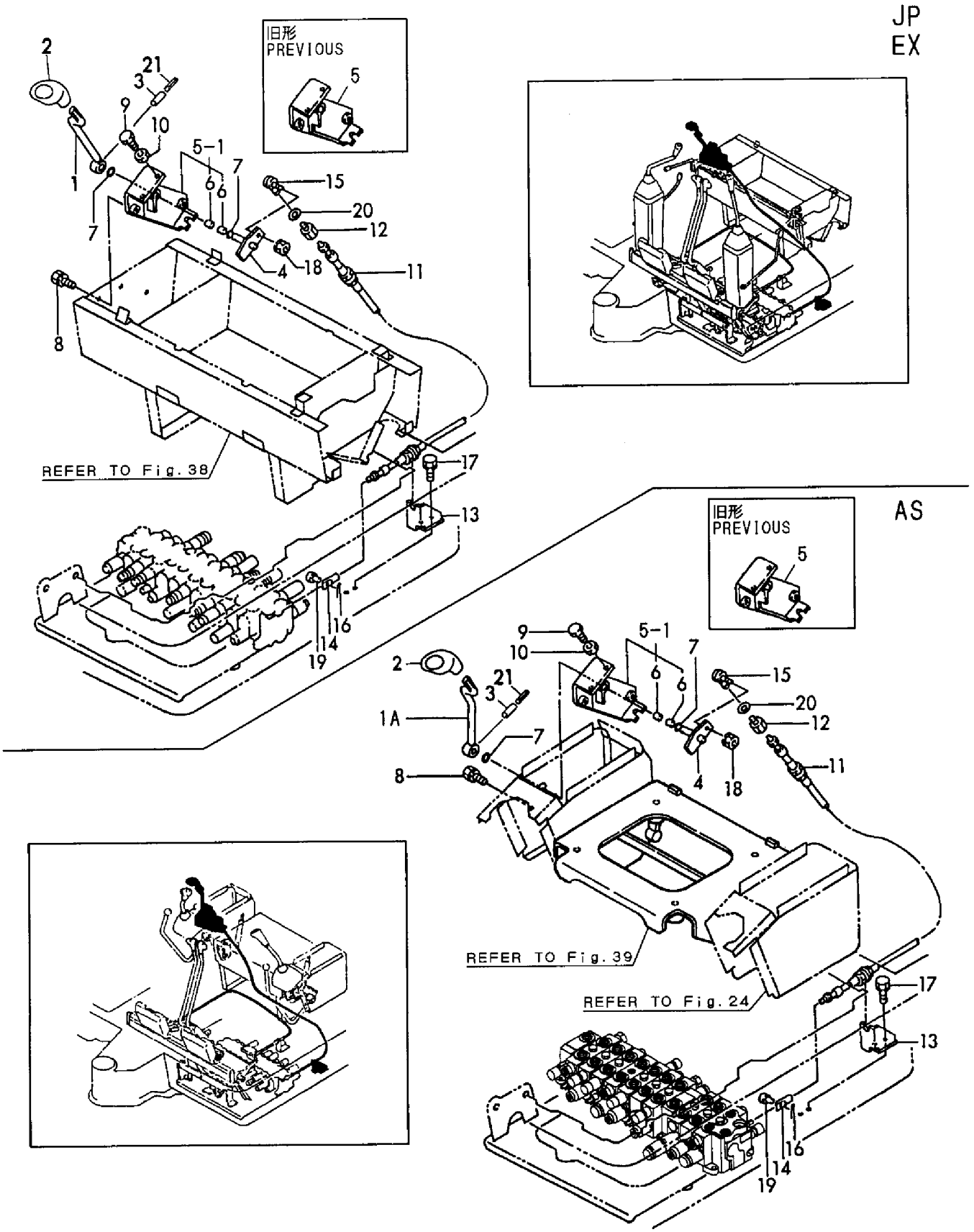

https://truckmanualshub.com/

```
1,1,,172164-17150,,"BRACKET, SWITCH",,1,,,,,,,,,,,,,,,
2,1,,172165-45800,,"LEVER R ASSY,CUT-OFF",,1,,,,,,,,,,,,,,,
3,1,,172165-45841,,"LEVER L ASSY,CUT-OFF",,1,,,,,,,,,,,,,,,
4,1,,172165-45880,,SHAFT,,1,,,,,,,,,,,,,,,
5,1,,172165-45900,,"BRACKET R ASSY",,1,,,,,,,,,,,,,,,
6,2,,172141-41360,,"BUSH 1415",,1,,,,,,,,,,,,,,,
8,1,,172165-45930,,"BRACKET L COMP",,1,,,,,,,,,,,,,,,
9,2,,172141-41360,,"BUSH 1415",,1,,,,,,,,,,,,,,,
11,1,,172165-45970,,SPRING,,1,,,,,,,,,,,,,,,
12,1,,172165-45980,,"BOLT 10X65",,1,,,,,,,,,,,,,,,
13,1,,172116-46630,,"KNOB, LOCK LEVER",,2,,,,,,,,,,,,,,,
14,1,,22137-080000,,"WASHER 8, POLISHED",,2,,,,,,,,,,,,,,,
15,1,,22217-100000,,"SPRING WASHER 10",,1,,,,,,,,,,,,,,,
16,1,,22351-050025,,"SPRING PIN 5X25",,2,,,,,,,,,,,,,,,
17,1,,26013-080202,,"BOLT W/WASHER M8X20",,2,,,,,,,,,,,,,,,
18,1,,26013-100252,,"BOLT W/WASHER M10X25",,2,,,,,,,,,,,,,,,
19,1,,26716-100002,,"NUT M10",,4,,,,,,,,,,,,,,,
```

https://truckmanualshub.com/

Fig. 30 操縦装置（カットオフレバー）（フロントマルチ） CONTROL EQUIPMENT (CUT OFF LEVER) (FRONT MULTI)

COUNTRY	JP	AS	EX
APPLI-CATION	○	—	—

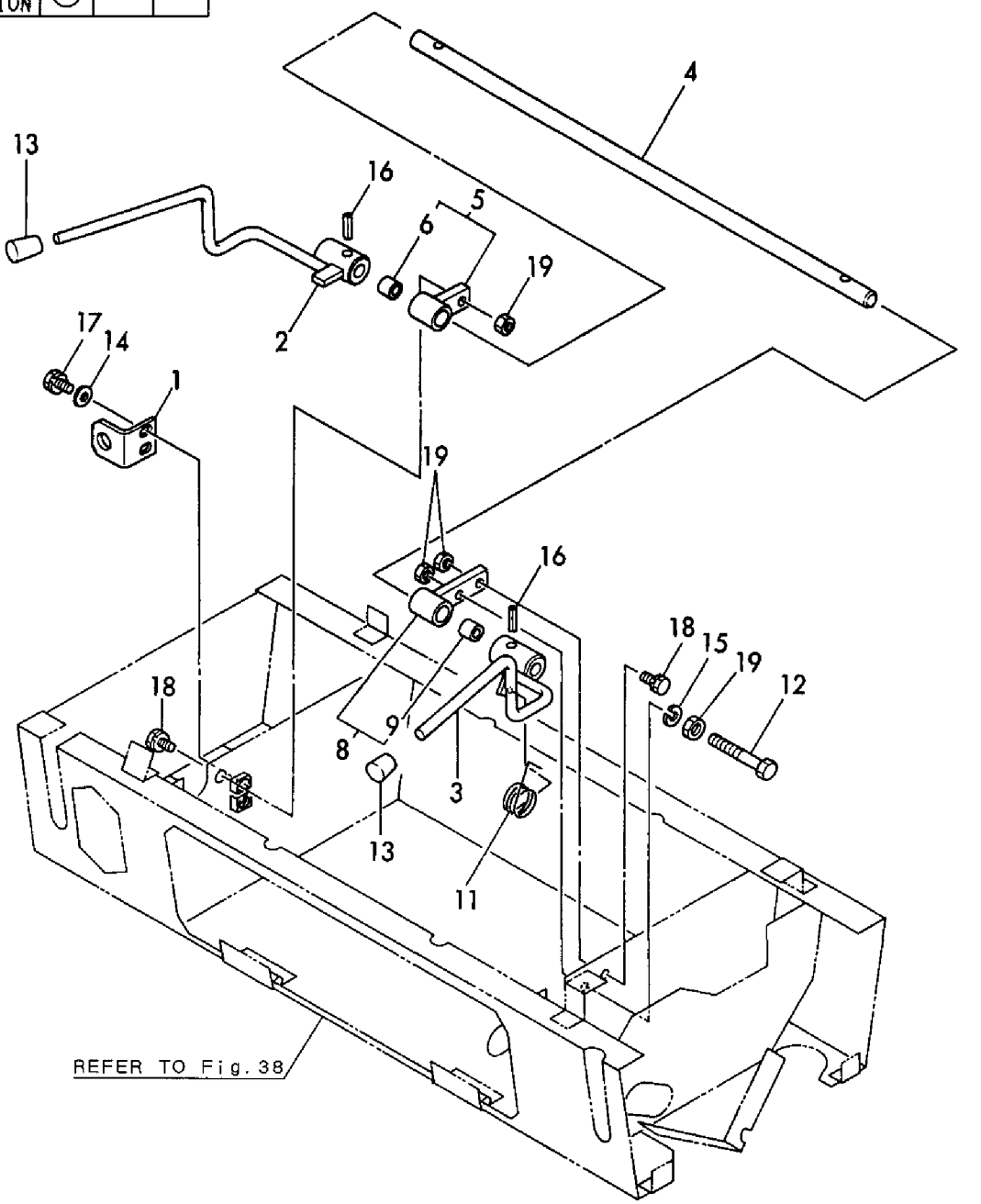

```
1,1,,172164-17150,,"BRACKET, SWITCH",,,1,2,,,,,,,,,,,,,
2,1,,1D4070-23580,,"GRIP,RED ROUND",,,1,2,,,,,,,,,,,,,
3,1,,172124-46200,,"O-RING 27X5.7",,,2,4,,,,,,,,,,,,,
4,1,,172165-47500,,"ARM ASSY, LOCK",,,1,2,,,,,,,,,,,,,
5,1,,172165-47550,,BUSH,,,1,2,,,,,,,,,,,,,
6,1,,172165-47621,,"GUIDE (L) ASSY, LOCK",,,1,1,,,,,,,,,,,,,
7,1,,172165-47680,,"LEVER L",,,1,1,,,,,,,,,,,,,
8,1,,172165-47801,,"SPRING,GAS",,,1,2,,,,,,,,,,,,,
9,1,,1A1380-56661,,"SPRING,ROTARY RETURN",,,1,2,,,,,,,,,,,,,
10,1,,22137-080000,,"WASHER 8, POLISHED",,,2,4,,,,,,,,,,,,,
11,1,,22137-080000,,"WASHER 8, POLISHED",,,2,4,,,,,,,,,,,,,
12,1,,22272-000070,,"CIRCLIP E- 7",,,1,2,,,,,,,,,,,,,
13,1,,22351-035040,,"SPRING PIN 3.5X40",,,1,2,,,,,,,,,,,,,
14,1,,22351-060040,,"SPRING PIN 6X40",,,1,2,,,,,,,,,,,,,
15,1,,22417-200200,,"COTTER PIN 2.0X20",,,2,4,,,,,,,,,,,,,
16,1,,26013-080202,,"BOLT W/WASHER M8X20",,,2,4,,,,,,,,,,,,,
17,1,,26013-100202,,"BOLT W/WASHER M10X20",,,2,4,,,,,,,,,,,,,
18,1,,172165-47601,,"GUIDE R ASSY, LOCK",,,,1,,,,,,,,,,,,,
19,1,,172168-47700,,LEVER,,,,1,,,,,,,,,,,,,
20,1,,172165-47970,,BAR,,,1,,,,,,,,,,,,,,
21,1,,22137-080000,,"WASHER 8, POLISHED",,,2,,,,,,,,,,,,,,
22,1,,22417-200200,,"COTTER PIN 2.0X20",,,2,,,,,,,,,,,,,,
```

https://truckmanualshub.com/

Fig. 31 操縦装置（カットオフレバー，サイド）（AS）
CONTROL EQUIPMENT (CUT OFF LEVER, SIDE) (AS)

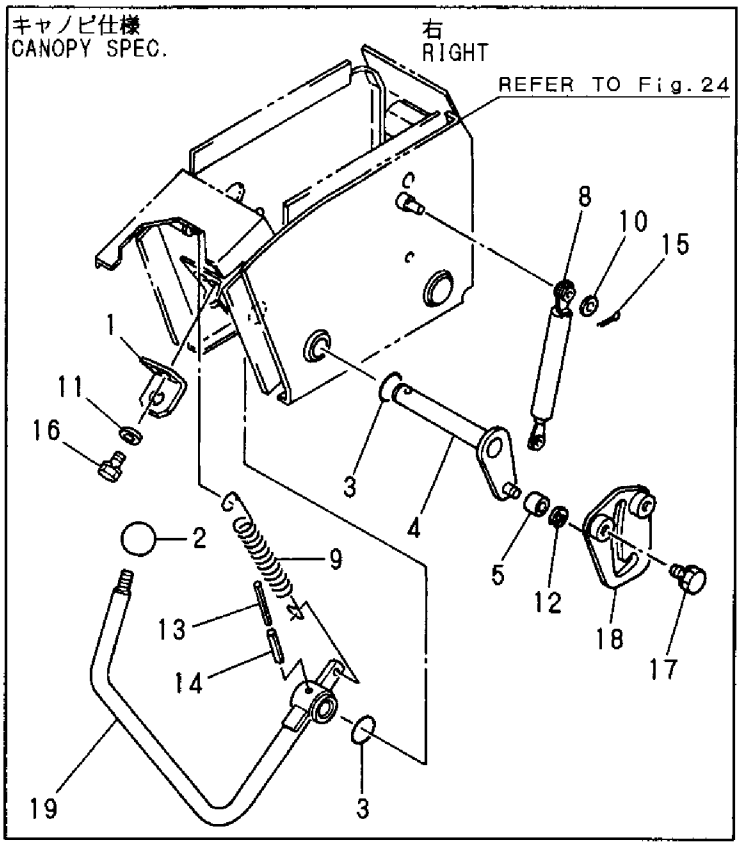

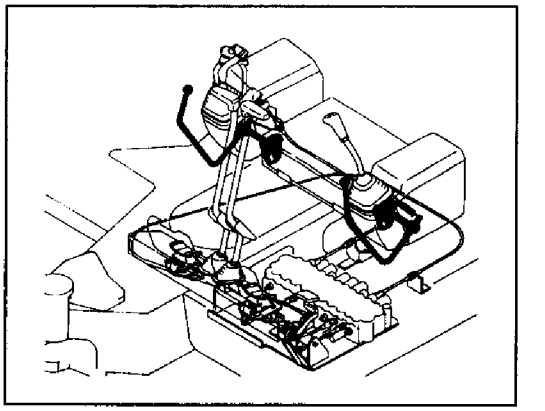

COUNTRY	JP	AS	EX
APPLI-CATION	—	○	—

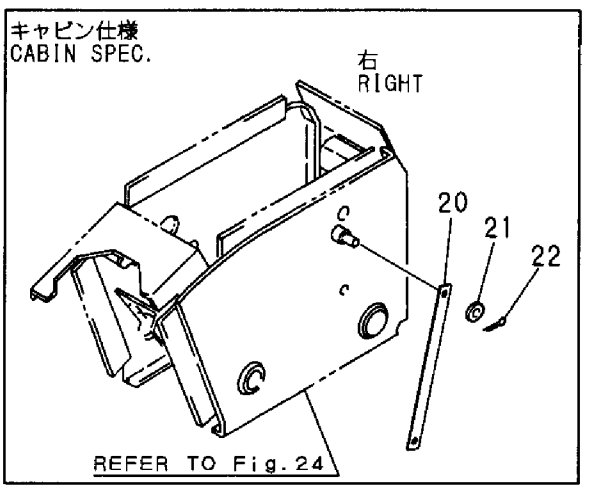

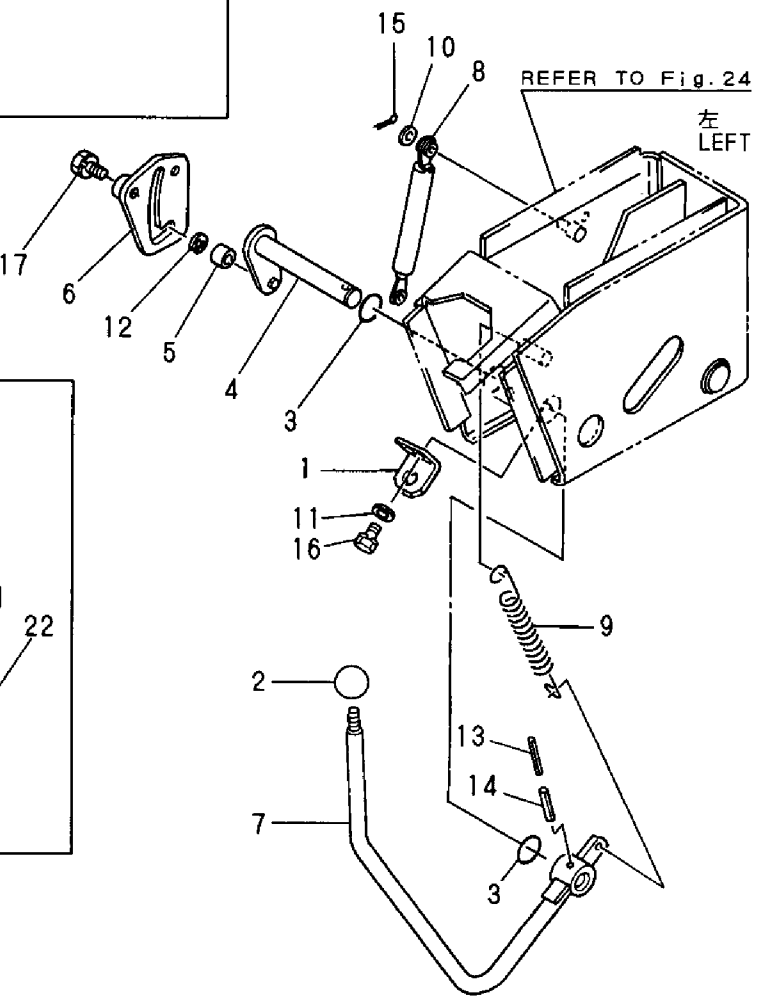

https://truckmanualshub.com/

```
1,1,,172191-74600,,"P.T.O. KIT(FRAME END",1,1,,,,,1,,,,,,,,,
2,2,,172141-42960,,"JOINT, CABLE",1,1,1,1,,,,,,,,,,,,
3,2,,172151-45650,,CABLE,1,1,1,1,,,,,,,,,,,,
4,2,,172142-45670,,"ROD, SPOOL",1,1,1,1,,,,,,,,,,,,
5,2,,172157-45990,,"BOOTS, PEDAL",1,1,1,1,,,,,,,,,,,,
6,2,,172168-46250,,SUPPORT,1,1,1,1,,,,,,,,,,,,
7,2,,172165-46281,,"PEDAL ASSY, SWING",1,1,1,1,,,,,,,,,,,,
8,2,,172165-46340,,BOLT,2,2,2,2,,,,,,,,,,,,
9,2,,172165-46350,,"BRACKET, PEDAL",1,1,1,1,,,,,,,,,,,,
10,2,,172146-41910,,"PIN 14-100",1,1,1,1,,,,,,,,,,,,
11,2,,172165-46450,,"LOCK CMP",1,1,1,1,,,,,,,,,,,,
12,2,,172165-46480,,BOLT,1,1,1,1,,,,,,,,,,,,
13,2,,172165-46490,,SHIM,5,5,5,5,,,,,,,,,,,,
14,2,,172122-46590,,"ELBALL 8",1,1,1,1,,,,,,,,,,,,
15,2,,172165-46600,,"LINK, PEDAL",1,1,1,1,,,,,,,,,,,,
16,3,,172141-41360,,"BUSH 1415",2,2,2,2,,,,,,,,,,,,
17,2,,172168-46870,,BRACKET,1,1,1,1,,,,,,,,,,,,
18,2,,22137-080000,,"WASHER 8, POLISHED",2,2,2,2,,,,,,,,,,,,
19,2,,22351-040032,,"SPRING PIN 4X32",1,1,1,1,,,,,,,,,,,,
20,2,,22417-160160,,"COTTER PIN 1.6X16",1,1,1,1,,,,,,,,,,,,
21,2,,24311-000210,,"O-RING 1A P-21.0",2,2,2,2,,,,,,,,,,,,
22,2,,24761-050000,,"NIPPLE C,GREASE",1,1,1,1,,,,,,,,,,,,
23,2,,26013-100162,,"BOLT M10X 16",2,2,2,2,,,,,,,,,,,,
24,2,,26013-100202,,"BOLT W/WASHER M10X20",2,2,2,2,,,,,,,,,,,,
25,2,,26013-100202,,"BOLT W/WASHER M10X20",2,2,2,2,,,,,,,,,,,,
26,2,,26051-080002,,"NUT M 8",1,1,1,1,,,,,,,,,,,,
27,2,,26116-080304,,"BOLT M 8X 30",2,2,2,2,,,,,,,,,,,,
28,2,,26716-080002,,"NUT M 8",2,2,2,2,,,,,,,,,,,,
29,2,,26716-080002,,"NUT M 8",2,2,2,2,,,,,,,,,,,,
30,2,,933110-54100,,"PIN 4.75X14",1,1,1,1,,,,,,,,,,,,
31,2,,933168-28480,,"WASHER 20X9X3.2",1,1,1,1,,,,,,,,,,,,
32,2,,1C6141-35370,,"SPRING,LOCK",1,1,1,1,,,,,,,,,,,,
```

https://truckmanualshub.com/

Fig.32 操縦装置（PTOコントロール） CONTROL EQUIPMENT (P.T.O. CONTROL)

PTOキット（フレームエンド）
P.T.O.KIT (FRAME END)
(172191-74600)
Fig.32 REF. No.1
inc. Fig.32 REF. No.2～32
Fig.83 REF. No.1～19

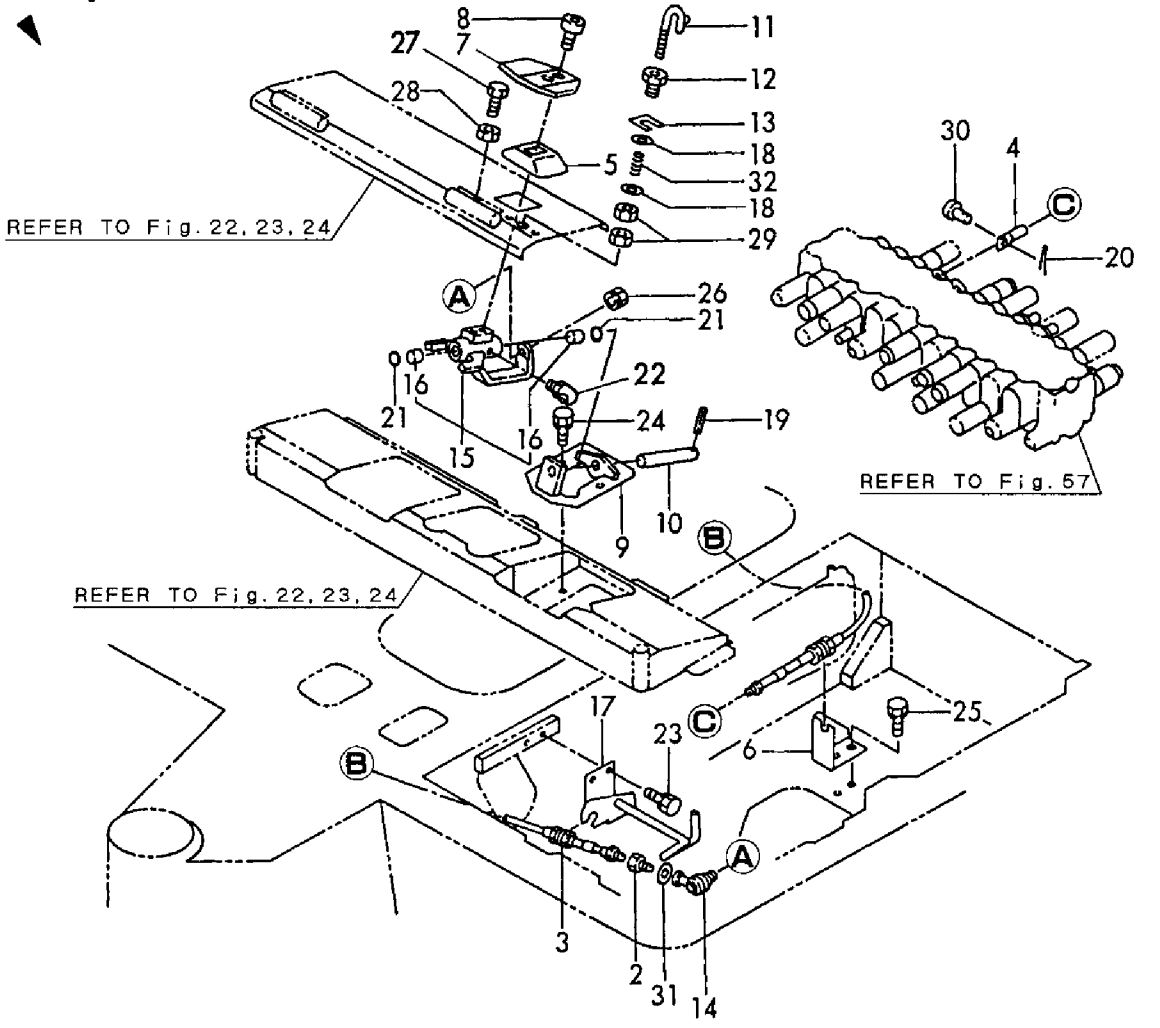

https://truckmanualshub.com/

```
1,1,,172168-74620,,"P.T.O. KIT(FR, UNITE",1,1,,,,,1,,,,,,,,,
2,2,,172141-42960,,"JOINT, CABLE",1,1,1,1,,,,,,,,,,,,
3,2,,172142-45670,,"ROD, SPOOL",1,1,1,1,,,,,,,,,,,,
4,2,,1A1040-45890,,"WASHER 10 36 4.5",1,1,1,1,,,,,,,,,,,,
5,2,,172312-45930,,"SPRING 13X1.2X70",1,1,1,1,,,,,,,,,,,,
6,2,,172116-45940,,"KNOB (C), LEVER",1,1,1,1,,,,,,,,,,,,
7,2,,172168-46100,,BRACKET,1,1,1,1,,,,,,,,,,,,
8,2,,172168-46160,,"LINK W/BUSH",1,1,1,1,,,,,,,,,,,,
9,3,,172141-41370,,"BUSH 2015",2,2,2,2,,,,,,,,,,,,
10,2,,172168-46190,,LEVER,1,1,1,1,,,,,,,,,,,,
11,2,,172124-46200,,"O-RING 27X5.7",2,2,2,2,,,,,,,,,,,,
12,2,,172168-46231,,"CABLE, 3RDV",1,1,1,1,,,,,,,,,,,,
13,2,,172122-46590,,"ELBALL 8",1,1,1,1,,,,,,,,,,,,
14,2,,22217-100000,,"SPRING WASHER 10",4,4,4,4,,,,,,,,,,,,
15,2,,22351-080020,,"SPRING PIN 8X20",1,1,1,1,,,,,,,,,,,,
16,2,,22417-160160,,"COTTER PIN 1.6X16",1,1,1,1,,,,,,,,,,,,
17,2,,24761-050000,,"NIPPLE C,GREASE",1,1,1,1,,,,,,,,,,,,
18,2,,26051-080002,,"NUT M 8",1,1,1,1,,,,,,,,,,,,
19,2,,26116-100202,,"BOLT M10X 20 PLATED",3,3,3,3,,,,,,,,,,,,
20,2,,26116-100602,,"BOLT M10X 60 PLATED",1,1,1,1,,,,,,,,,,,,
21,2,,933110-54100,,"PIN 4.75X14",1,1,1,1,,,,,,,,,,,,
22,2,,933168-28480,,"WASHER 20X9X3.2",1,1,1,1,,,,,,,,,,,,
23,2,,172165-62810,,"GROMMET 10",1,1,1,1,,,,,,,,,,,,
24,2,,172168-63200,,"PANEL(L),INST",1,1,1,1,,,,,,,,,,,,
25,2,,172168-03301,,"LABEL, SELECT",1,1,1,1,,,,,,,,,,,,
```

https://truckmanualshub.com/

Fig.33 操縦装置（P．T．Oコントロール）（合流） CONTROL EQUIPMENT (P.T.O.CONTROL) (CONFLUENCE)

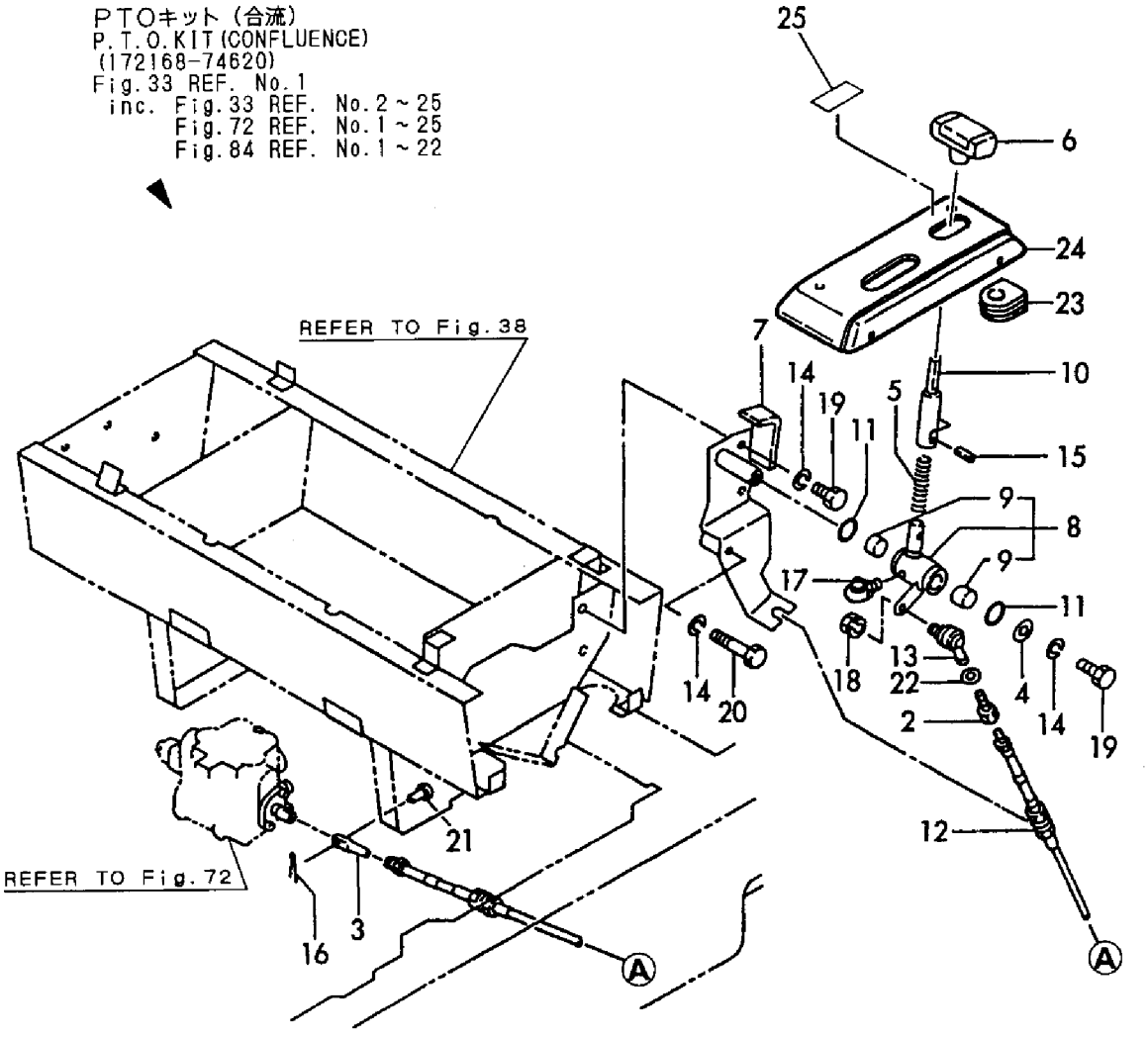

https://truckmanualshub.com/

```
1,1,,172141-37501,,PLATE,4,4,4,4,,,,,,,,,,,,,
2,1,,26013-100302,,"BOLT M10X 30",8,8,8,8,,,,,,,,,,,,,
3,1,,172141-50102,,"FRAME ASSY, LOWER",1,1,,,,,,,,,,,,,,,,
3-1,1,,172141-50103,,"FRAME ASSY, LOWER",1,1,1,1,,,N,,,M/#50621,,M/#50621,,,,,,
4,1,,172141-50750,,"COVER, MOTOR",2,2,2,2,,,,,,,,,,,,,
5,1,,172141-50761,,"COVER, UNDER",1,1,1,1,,,,,,,,,,,,,
6,1,,172141-50890,,GROMMET,2,2,2,2,,,,,,,,,,,,,
7,1,,22217-100000,,"SPRING WASHER 10",6,6,6,6,,,,,,,,,,,,,
8,1,,22217-120000,,"SPRING WASHER",4,4,4,4,,,,,,,,,,,,,
9,1,,26116-100202,,"BOLT M10X 20 PLATED",6,6,6,6,,,,,,,,,,,,,
10,1,,26116-120252,,"BOLT M12X 25 PLATED",4,4,4,4,,,,,,,,,,,,,
11,1,,172730-05250,,"WASHER 12",12,12,12,12,,,,,,,,,,,,,
12,1,,172141-50901,,"GUARD, SHOE",4,4,4,4,,,,,,,,,,,,,
13,1,,26013-120452,,"BOLT M12X 45",12,12,12,12,,,,,,,,,,,,,
14,1,,172730-05250,,"WASHER 12",9,9,9,9,,,,,,,,,,,,,
15,1,,172131-37170,,"BOLT M12X 30",7,7,7,7,,,,,,,,,,,,,
16,1,,172168-53300,,"WEIGHT L",1,1,1,1,,,,,,,,,,,,,
17,1,,172171-53310,,"WEIGHT,CENTER",1,1,1,1,,,,,,,,,,,,,
18,1,,172171-53340,,"WEIGHT,SIDE(L)",1,1,1,1,,,,,,,,,,,,,
19,1,,172141-53350,,"GROMMET 26",6,6,6,6,,,,,,,,,,,,,
20,1,,172168-53350,,"WEIGHT R",1,1,1,1,,,,,,,,,,,,,
21,1,,172171-53350,,"WEIGHT,SIDE(R)",1,1,1,1,,,,,,,,,,,,,
22,1,,172168-53450,,"BOLT 12X70",2,2,2,2,,,,,,,,,,,,,
23,1,,22217-120000,,"SPRING WASHER",11,11,11,11,,,,,,,,,,,,,
24,1,,26116-120552,,"BOLT M12X 55 PLATED",2,2,2,2,,,,,,,,,,,,,
25,1,,172171-54102,,"FRAME W/BUSH,TURNING",1,1,1,1,,,,,,,,,,,,,
26,2,,172171-54750,,"BUSH 50X65",2,2,2,2,,,,,,,,,,,,,
27,2,,172165-81760,,"SEAL 50X60X4, DUST",2,2,2,2,,,,,,,,,,,,,
28,1,,24761-040000,,"NIPPLE B,GREASE",1,1,1,1,,,,,,,,,,,,,
29,1,,194940-24350,,"PIN 10X28,STRAIGHT",4,4,4,4,,,,,,,,,,,,,
30,1,,172141-57601,,"BEARING, SWING",1,1,1,1,,,,,,,,,,,,,
31,2,,172141-57610,,"SEAL KIT",1,1,1,1,,,,,,,,,,,,,
32,3,,172141-57620,,"SEAL, UPPER",1,1,1,1,,,,,,,,,,,,,
33,3,,172141-57630,,"SEAL,LOWER",1,1,1,1,,,,,,,,,,,,,
34,1,,172141-57650,,"BOLT M12X 55 PLATED",38,38,38,38,,,,,,,,,,,,,
```

https://truckmanualshub.com/

Fig. 34 フレーム＆旋回ベアリング FRAME & TURNING BEARING

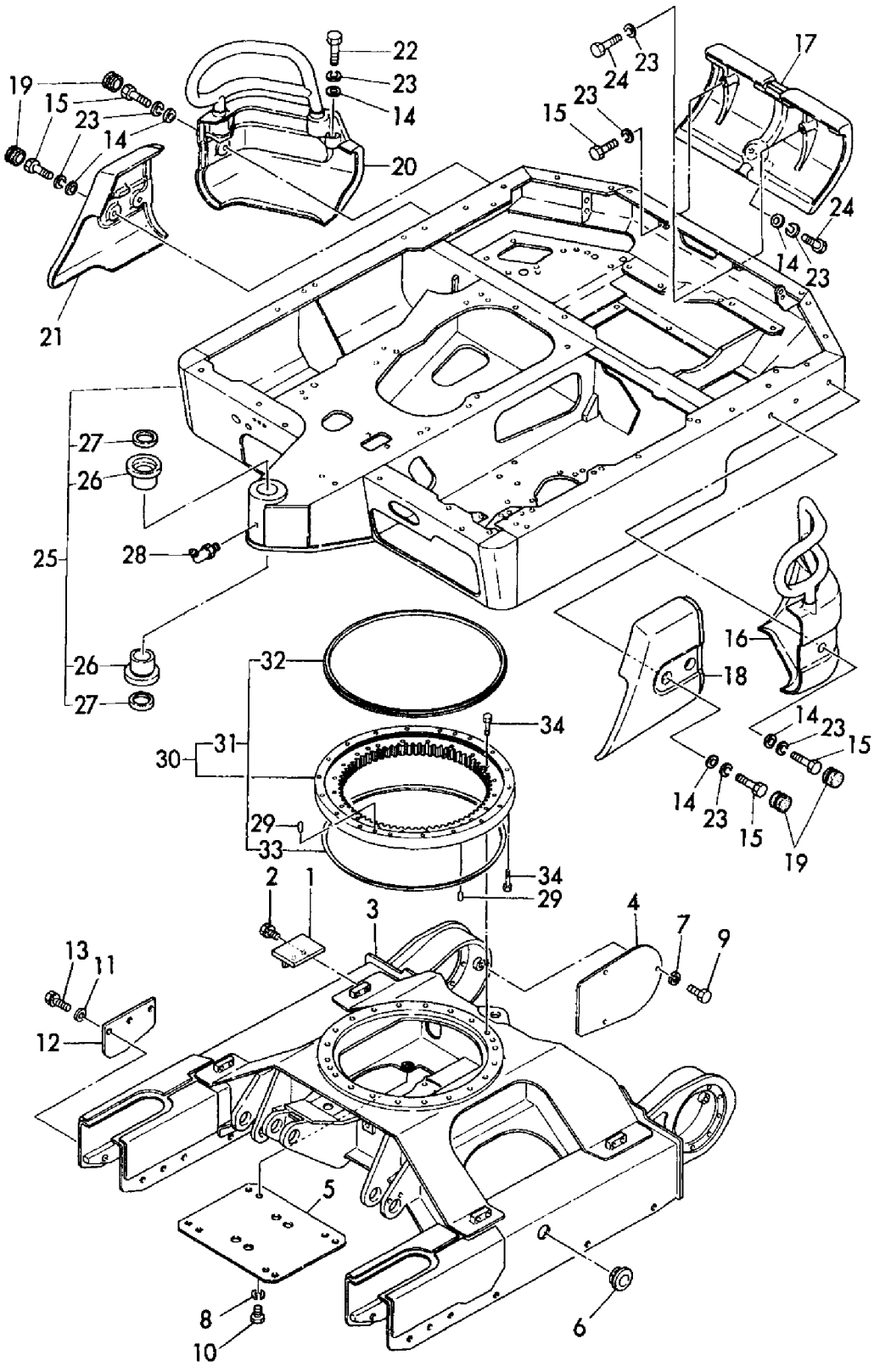

https://truckmanualshub.com/

```
1,1,,172732-11510,,GROMMET,1,,1,,,,,,,,,,,,,,
2,1,,172165-61190-3,,"COVER R",1,,1,,,,,,,,,,,,,,
3,1,,172171-61300,,COVER(A),1,,1,,,,,,,,,,,,,,
4,1,,172168-61350,,COVER,1,,1,,,,,,,,,,,,,,
5,1,,172165-61450-3,,"COVER I, EV",1,,1,,,,,,,,,,,,,,
6,1,,172168-61500,,PLATE;A,1,,1,,,,,,,,,,,,,,
7,1,,172168-61510,,"PLATE (B",1,,1,,,,,,,,,,,,,,
8,1,,172171-61520,,"PLATE,C",1,,1,,,,,,,,,,,,,,
9,1,,172171-61530,,"PLATE D COMPL.",1,,1,,,,,,,,,,,,,,
10,1,,172168-61550,,"PLATE F",1,,1,,,,,,,,,,,,,,
11,1,,172171-61550,,"PLATE E",1,,1,,,,,,,,,,,,,,
12,1,,172168-61560,,"PLATE G",1,,1,,,,,,,,,,,,,,
13,1,,172165-61650,,"COVER, FRONT",1,,1,,,,,,,,,,,,,,
14,1,,172165-61700,,"COVER ASSY, BL LINK",1,,,,,,,,,,,,,,,,,
14-1,1,,172165-61701,,"COVER ASSY, BL LINK",1,,1,,,,N,,,M/#50626,,,,,,,,
15,1,,172165-61720,,RUBBER,1,,1,,,,,,,,,,,,,,
16,1,,172165-61740-3,,"COVER M",1,,1,,,,,,,,,,,,,,
17,1,,172165-61780-3,,BRACKET,1,,1,,,,,,,,,,,,,,
18,1,,172165-61801,,PLUG,5,,5,,,,,,,,,,,,,,
19,1,,172519-63240,,"BOLT  8X 16",4,,4,,,,,,,,,,,,,,
20,1,,172519-63240,,"BOLT  8X 16",4,,4,,,,,,,,,,,,,,
21,1,,172519-63240,,"BOLT  8X 16",1,,1,,,,,,,,,,,,,,
22,1,,22137-100000,,"WASHER 10,POLISHED",5,,5,,,,,,,,,,,,,,
23,1,,22137-100000,,"WASHER 10,POLISHED",9,,9,,,,,,,,,,,,,,
24,1,,22217-100000,,"SPRING WASHER 10",25,,25,,,,,,,,,,,,,,
25,1,,22217-100000,,"SPRING WASHER 10",2,,2,,,,,,,,,,,,,,
26,1,,22217-140000,,"SPRING WASHER 14",2,,2,,,,,,,,,,,,,,
27,1,,26013-080162,,"BOLT W/WASHER M8X16",2,,2,,,,,,,,,,,,,,
28,1,,26013-100352,,"BOLT M10X 35",5,,5,,,,,,,,,,,,,,
29,1,,26116-100162,,"BOLT M10X 16 PLATED",2,,2,,,,,,,,,,,,,,
30,1,,26116-100202,,"BOLT M10X 20 PLATED",25,,25,,,,,,,,,,,,,,
31,1,,26116-140352,,"BOLT M14X 35 PLATED",2,,2,,,,,,,,,,,,,,
32,1,,26367-100002,,"U-NUT M10",4,,4,,,,,,,,,,,,,,
```

https://truckmanualshub.com/

Fig. 35 フレームカバー（キャビン） FRAME COVER (CABIN)

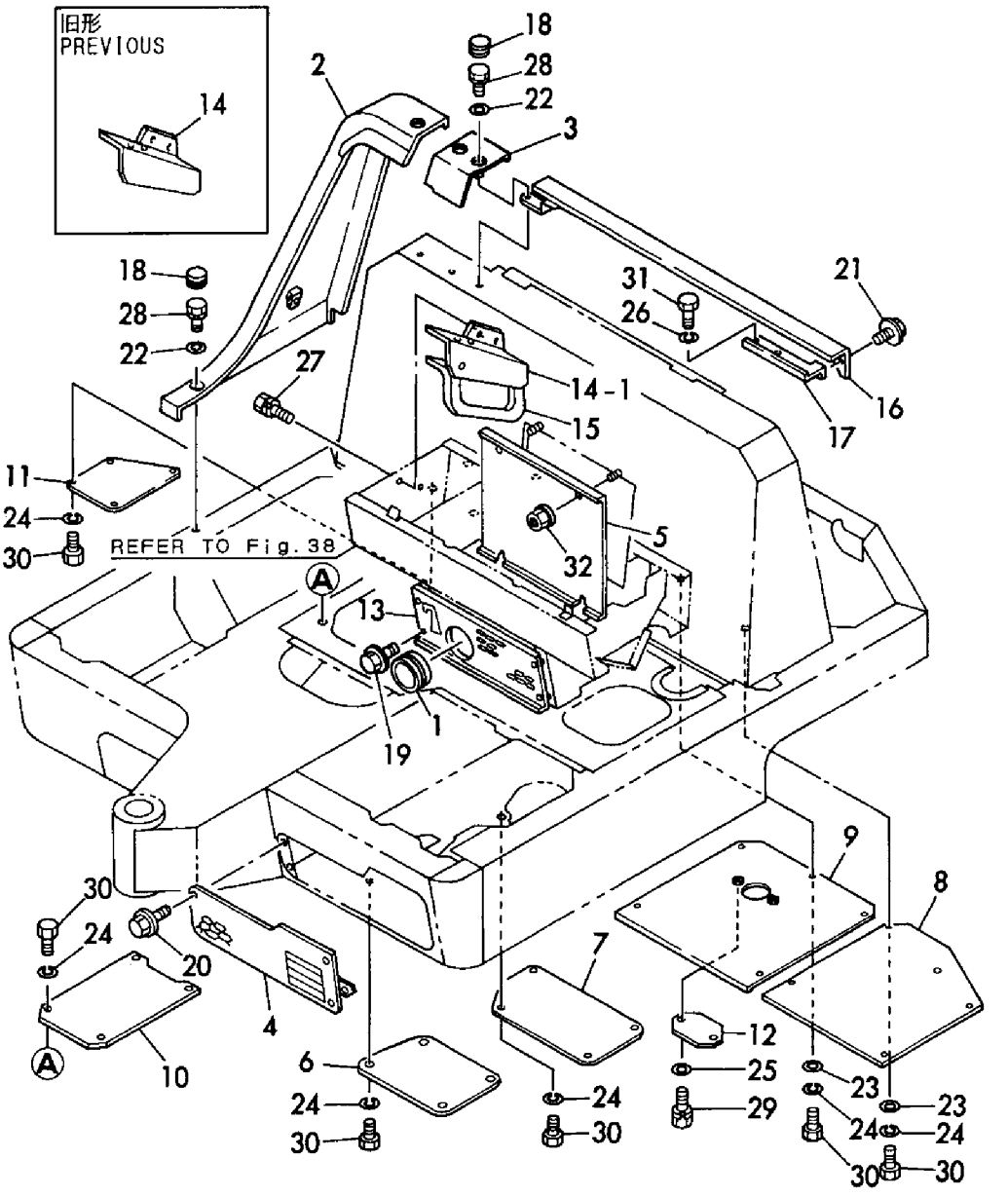

https://truckmanualshub.com/

```
1,1,,194145-04810,,"WASHER 10",,3,,3,,,,,,,,,,,,,
2,1,,172165-61190-3,,"COVER R",,1,,1,,,,,,,,,,,,,
3,1,,172168-61350,,COVER,,1,,1,,,,,,,,,,,,,
4,1,,172171-61400,,COVER(B),,1,,1,,,,,,,,,,,,,
5,1,,172165-61450-3,,"COVER I, EV",,1,,1,,,,,,,,,,,,,
6,1,,172168-61500,,PLATE;A,,1,,1,,,,,,,,,,,,,
7,1,,172168-61510,,"PLATE (B",,1,,1,,,,,,,,,,,,,
8,1,,172171-61520,,"PLATE,C",,1,,1,,,,,,,,,,,,,
9,1,,172171-61530,,"PLATE D COMPL.",,1,,1,,,,,,,,,,,,,
10,1,,172168-61550,,"PLATE F",,1,,1,,,,,,,,,,,,,
11,1,,172171-61550,,"PLATE E",,1,,1,,,,,,,,,,,,,
12,1,,172168-61560,,"PLATE G",,1,,1,,,,,,,,,,,,,
13,1,,172165-61600,,"COVER,FRONT",,1,,,,,,,,,,,,,,,
14,1,,172165-61700,,"COVER ASSY, BL LINK",,1,,,,,,,,,,,,,,,
14-1,1,,172165-61701,,"COVER ASSY, BL LINK",,1,,1,,,N,,,,,M/#50626,,,,,,
15,1,,172165-61720,,RUBBER,,1,,1,,,,,,,,,,,,,
16,1,,172165-61801,,PLUG,,6,,6,,,,,,,,,,,,,
17,1,,172165-61100-3,,"COVER L",,1,,,,,,,,,,,,,,,
18,1,,172519-63240,,"BOLT  8X 16",,4,,4,,,,,,,,,,,,,
19,1,,172519-63240,,"BOLT  8X 16",,4,,4,,,,,,,,,,,,,
20,1,,22137-100000,,"WASHER 10,POLISHED",,9,,9,,,,,,,,,,,,,
21,1,,22137-100000,,"WASHER 10,POLISHED",,9,,9,,,,,,,,,,,,,
22,1,,22217-100000,,"SPRING WASHER 10",,25,,25,,,,,,,,,,,,,
23,1,,22217-100000,,"SPRING WASHER 10",,2,,2,,,,,,,,,,,,,
24,1,,26013-080162,,"BOLT W/WASHER M8X16",,2,,2,,,,,,,,,,,,,
25,1,,26013-100352,,"BOLT M10X 35",,9,,9,,,,,,,,,,,,,
26,1,,26116-100162,,"BOLT M10X 16 PLATED",,2,,2,,,,,,,,,,,,,
27,1,,26116-100202,,"BOLT M10X 20 PLATED",,25,,25,,,,,,,,,,,,,
28,1,,26367-100002,,"U-NUT M10",,4,,4,,,,,,,,,,,,,
29,1,,172732-11510,,GROMMET,,,,1,,,,1,,,,,,,,,
30,1,,172165-61650,,"COVER, FRONT",,,,1,,,,1,,,,,,,,,
31,1,,172165-61820-3,,"COVER L",,,,1,,,,1,,,,,,,,,
```

https://truckmanualshub.com/

Fig. 36 フレームカバー（キャノピ） FRAME COVER (CANOPY)

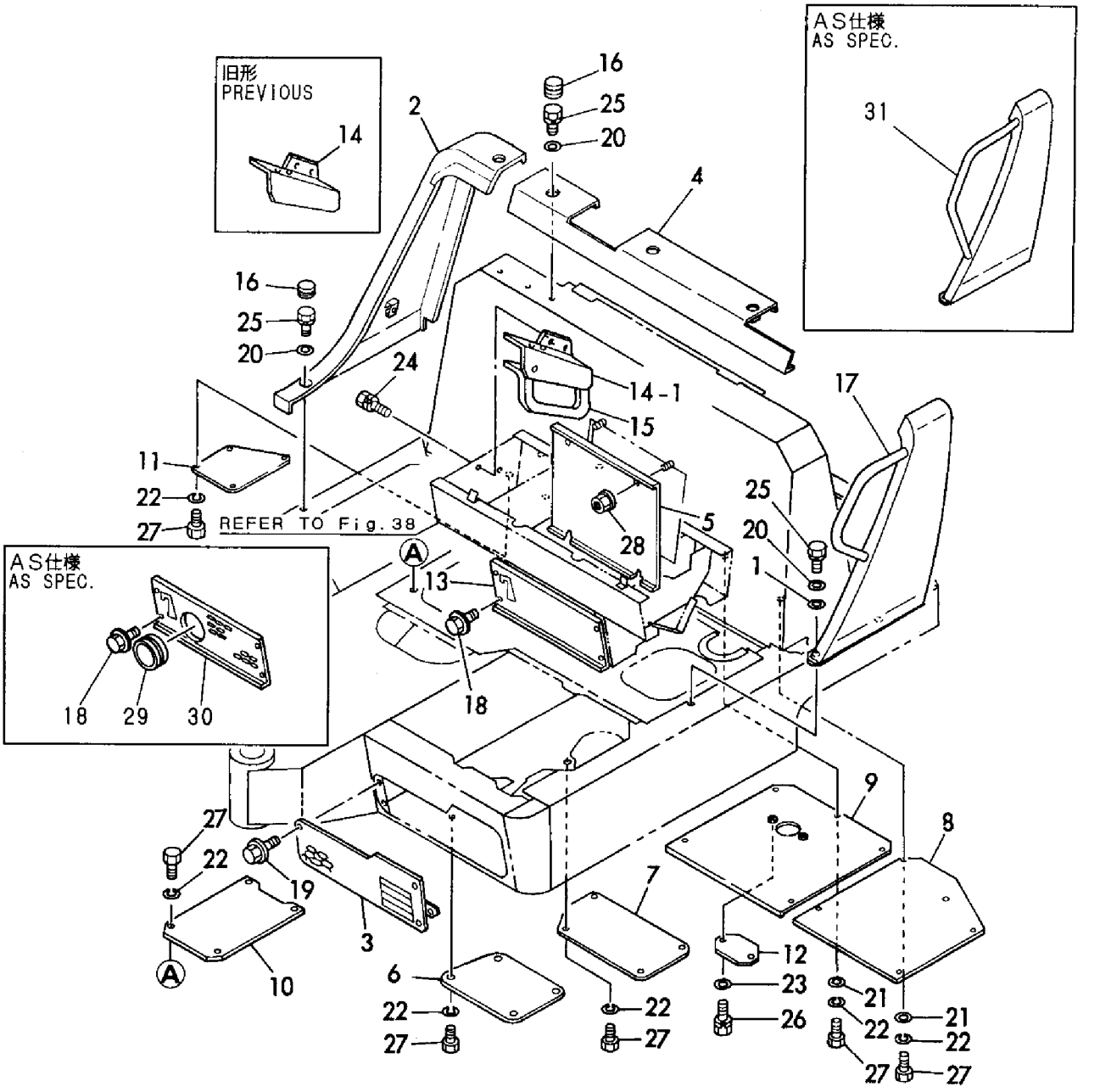

https://truckmanualshub.com/

```
1,1,,172165-62100,,STEP,1,1,1,1,,,,,,,,,,,,,
2,1,,172171-62100,,"STEP A COMPL.",1,1,,,,,,,,,,,,,,,
3,1,,172165-62201,,"STEP (C) ASSY",1,1,,,,,,,,,,,,,,,
4,1,,172168-62200,,"MAT, FLOOR",1,1,1,1,,,,,,,,,,,,,
5,1,,172165-62800,,"GROMMET 26",1,1,1,1,,,,,,,,,,,,,
6,1,,172165-62810,,"GROMMET 10",2,2,,,,,,,,,,,,,,,
7,1,,22217-100000,,"SPRING WASHER 10",9,9,9,9,,,,,,,,,,,,,
8,1,,22217-100000,,"SPRING WASHER 10",4,4,4,4,,,,,,,,,,,,,
9,1,,22217-100000,,"SPRING WASHER 10",7,7,7,7,,,,,,,,,,,,,
10,1,,22417-320200,,"COTTER PIN 3.2X20",1,1,2,2,,,,,,,,,,,,,
11,1,,26116-100202,,"BOLT M10X 20 PLATED",9,9,9,9,,,,,,,,,,,,,
12,1,,26116-100202,,"BOLT M10X 20 PLATED",4,4,4,4,,,,,,,,,,,,,
13,1,,26116-100202,,"BOLT M10X 20 PLATED",7,7,7,7,,,,,,,,,,,,,
14,1,,26647-100152,,"WING BOLT M10X15",1,1,2,2,,,,,,,,,,,,,
15,1,,172122-17190,,CLIP,,5,,5,,,,,,,,,,,,,
16,1,,172122-17190,,CLIP,,4,,4,,,,,,,,,,,,,
17,1,,172157-54850,,"GROMMET 18",,1,,1,,,,,,,,,,,,,
18,1,,172151-62240,,GROMMET,,2,,2,,,,,,,,,,,,,
19,1,,172165-68250,,"PLUG,RUBBER",,1,,1,,,,,,,,,,,,,
20,1,,172165-62300,,"STEP D",1,1,1,1,,,,,,,,,,,,,
21,1,,172165-62830,,GROMMET,1,1,,,,,,,,,,,,,,,
22,1,,26013-100202,,"BOLT W/WASHER M10X20",3,3,3,3,,,,,,,,,,,,,
23,1,,172116-46630,,"KNOB, LOCK LEVER",1,1,1,1,,,,,,,,,,,,,
24,1,,172171-58800,,"PIN, LOCK",1,1,1,1,,,,,,,,,,,,,
25,1,,172171-62150,,"STEP ASSY",,,1,1,,,,1,,,,,,,,,
26,1,,172165-62600,,"STEP C COMP.,SI",,,1,1,,,,1,,,,,,,,,
27,1,,172165-62630,,"RUBBER 90,EDGE",,,1,1,,,,1,,,,,,,,,
```

https://truckmanualshub.com/

Fig.37 ステップ STEP

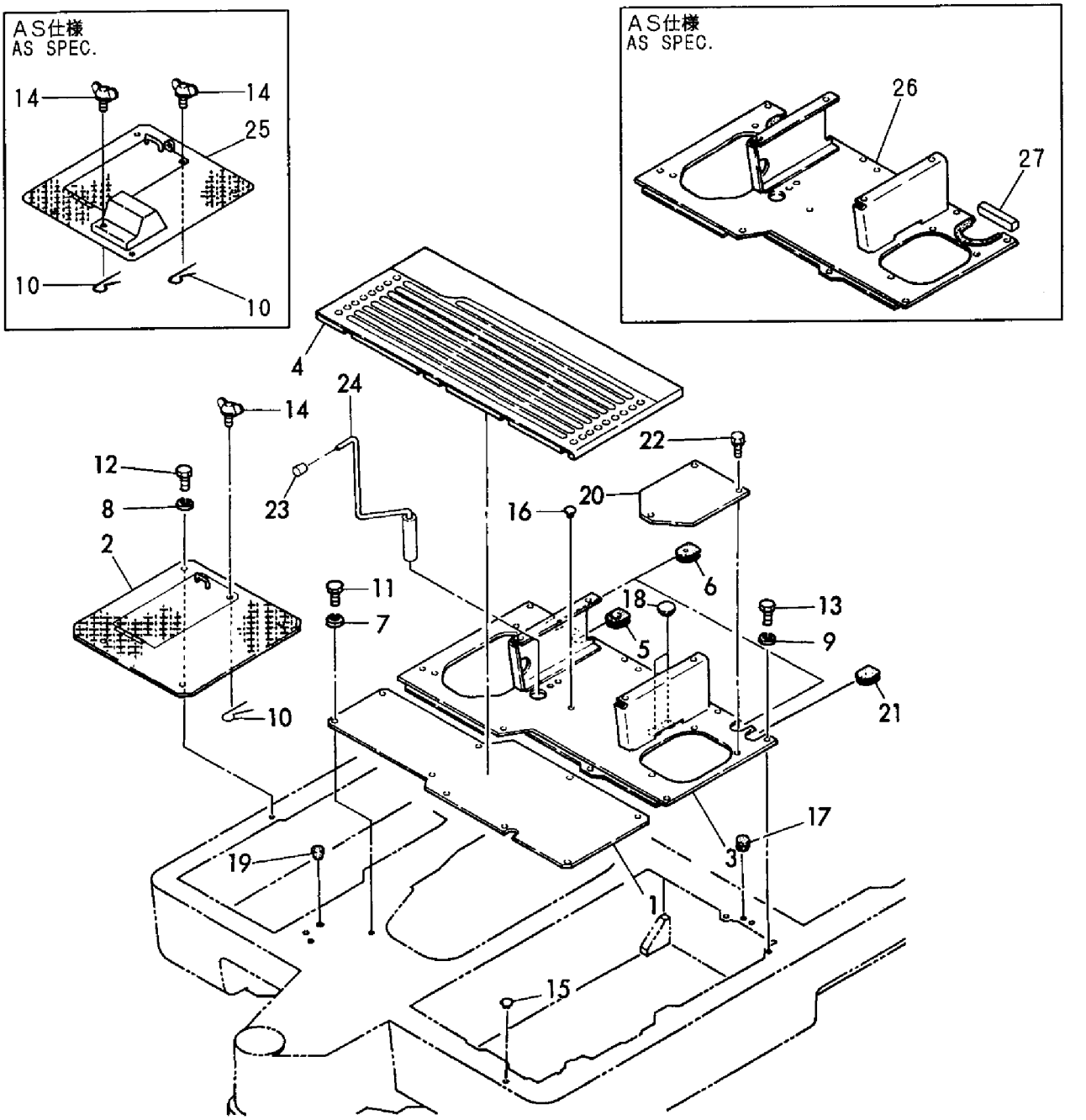

https://truckmanualshub.com/

```
1,1,,172212-61230,,"FASTENER, DIAL",1,1,,,,,,,,,,,,,,,
2,1,,172168-64201,,"MOUNT, SEAT",1,1,,,,,,,,,,,,,,,
3,1,,172165-64601,,"COVER, MOUNT",1,1,,,,,,,,,,,,,,,
4,1,,172165-64691,,"PLATE, SEAT",1,1,,,,,,,,,,,,,,,
5,1,,172165-64770,,NUT,2,2,,,,,,,,,,,,,,,
6,1,,22217-080000,,"SPRING WASHER  8",4,4,,,,,,,,,,,,,,,
7,1,,26013-100202,,"BOLT W/WASHER M10X20",4,4,,,,,,,,,,,,,,,
8,1,,26013-100202,,"BOLT W/WASHER M10X20",4,4,,,,,,,,,,,,,,,
9,1,,26577-050122,,"SCREW M 5X 12",2,2,,,,,,,,,,,,,,,
10,1,,26716-050002,,"NUT M 5",2,2,,,,,,,,,,,,,,,
11,1,,26716-080002,,"NUT M 8",4,4,,,,,,,,,,,,,,,
12,1,,933110-58500,,"GROMMET 50",1,1,,,,,,,,,,,,,,,
13,1,,172162-64200,,"SEAT,OPERATOR",1,1,,,,,,,,,,,,,,,
14,2,,172162-64210,,"CUSHION ASSY",1,1,,,,,,,,,,,,,,,
15,2,,172162-64220,,"BACK ASSY",1,1,,,,,,,,,,,,,,,
16,2,,172162-64230,,"BACK (B) ASSY",1,1,,,,,,,,,,,,,,,
17,2,,172162-64240,,"PANEL,BACK",1,1,,,,,,,,,,,,,,,
18,3,,172162-64320,,"RUBBER A,EDGE",1,1,,,,,,,,,,,,,,,
19,3,,172162-64330,,"RUBBER B,EDGE",1,1,,,,,,,,,,,,,,,
20,2,,172162-64250,,"BRACKET L,SIDE",1,1,,,,,,,,,,,,,,,
21,2,,172162-64260,,"BRACKET R,SIDE",1,1,,,,,,,,,,,,,,,
22,2,,172162-64270,,ADJUSTER,1,1,,,,,,,,,,,,,,,
23,2,,172162-64280,,ADJUSTER,1,1,,,,,,,,,,,,,,,
26,2,,172162-64310,,"SCREW M5X10,TAPPING",3,3,,,,,,,,,,,,,,,
27,2,,26013-080202,,"BOLT W/WASHER M8X20",8,8,,,,,,,,,,,,,,,
28,2,,26022-080162,,"SCREW M 8X 16",4,4,,,,,,,,,,,,,,,
29,1,,22137-080000,,"WASHER 8, POLISHED",6,6,,,,,,,,,,,,,,,
30,1,,22217-080000,,"SPRING WASHER  8",4,4,,,,,,,,,,,,,,,
31,1,,26716-080002,,"NUT M 8",2,2,,,,,,,,,,,,,,,
32,1,,172111-16890,,"GROMMET  9",3,3,,,,,,,,,,,,,,,
33,1,,172312-17260,,"GROMMET 22X2.3",1,1,,,,,,,,,,,,,,,
34,1,,172165-63201,,"PANEL, INST",1,1,,,,,,,,,,,,,,,
35,1,,172519-63240,,"BOLT  8X 16",10,10,,,,,,,,,,,,,,,
36,1,,172165-63250,,"PANEL(L), INSTRUMENT",1,1,,,,,,,,,,,,,,,
37,1,,172165-63280,,COVER,1,1,,,,,,,,,,,,,,,
38,1,,172165-63660,,CAP,1,1,,,,,,,,,,,,,,,
```

https://truckmanualshub.com/

Fig.38 シート＆シートマウント SEAT & SEAT MOUNT

見出しNo．13は、見出しNo．14から28を含みます。
13inc．14 ～ 28

COUNTRY	JP	AS	EX
APPLI-CATION	○	—	○

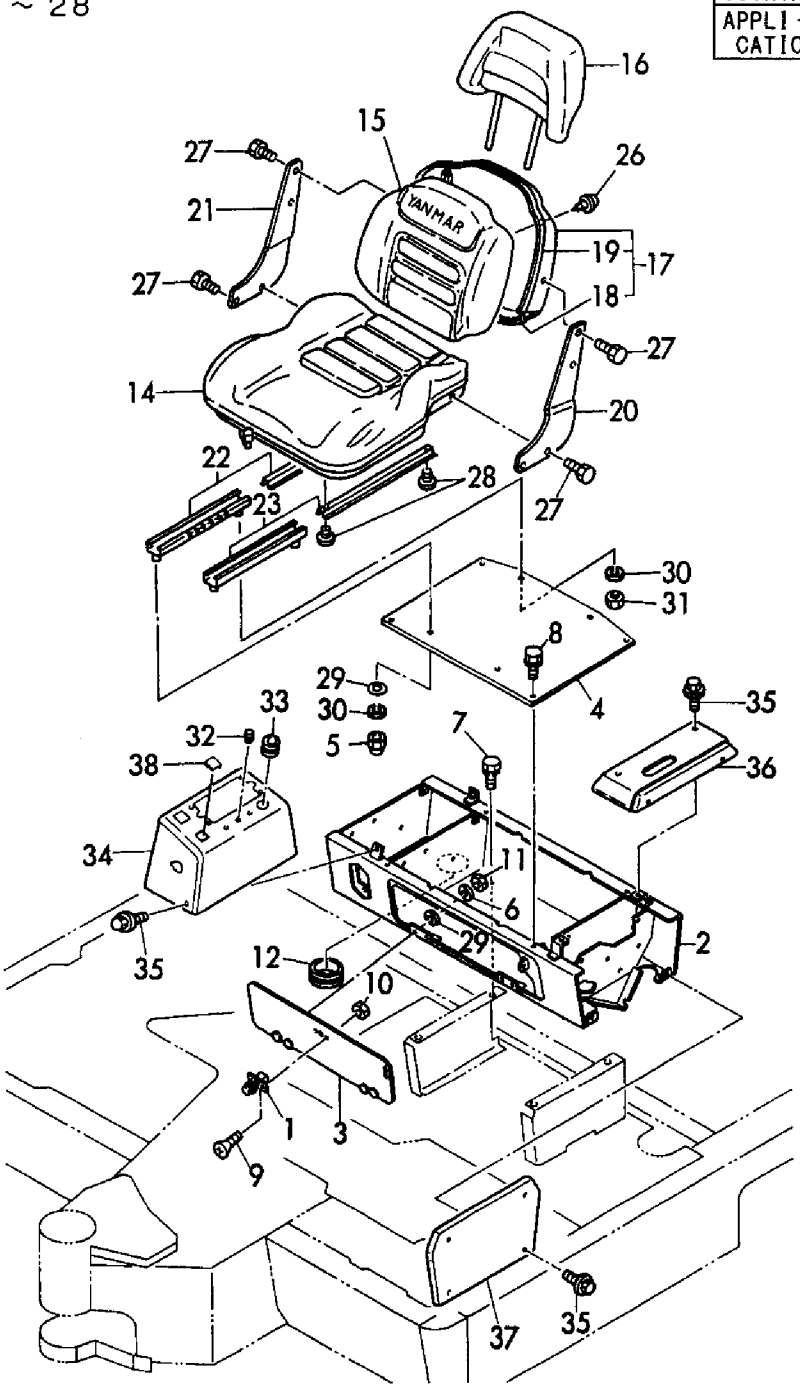

https://truckmanualshub.com/

```
1,1,,194300-21460,,CAP,,,1,1,,,,,,,,,,,,,
2,1,,172168-63100,,"PANEL(L),INST(EP",,,1,1,,,,,,,,,,,,,
3,1,,172519-63240,,"BOLT  8X 16",,,16,16,,,,,,,,,,,,,
4,1,,172165-63600,,"COVER (R)",,,1,1,,,,,,,,,,,,,
5,1,,172165-63620,,"COVER (L)",,,1,1,,,,,,,,,,,,,
6,1,,172165-63650,,"PLUG 10,HOLE",,,3,3,,,,,,,,,,,,,
7,1,,172165-63660,,CAP,,,1,1,,,,,,,,,,,,,
8,1,,172165-63700,,"PANEL(R),INST(EP",,,1,1,,,,,,,,,,,,,
9,1,,22137-040000,,"WASHER 4, POLISHED",,,4,4,,,,,,,,,,,,,
10,1,,26716-040002,,"NUT M 4",,,4,4,,,,,,,,,,,,,
11,1,,172165-64301,,"MOUNT A",,,1,1,,,,,,,,,,,,,
12,1,,172165-64360,,"MOUNT B COMP.,EP",,,1,1,,,,,,,,,,,,,
13,1,,172165-64390,,MOUNT,,,1,1,,,,,,,,,,,,,
14,1,,26013-080202,,"BOLT W/WASHER M8X20",,,4,4,,,,,,,,,,,,,
15,1,,26013-080552,,"BOLT M 8X 55",,,4,4,,,,,,,,,,,,,
16,1,,26013-100202,,"BOLT W/WASHER M10X20",,,4,4,,,,,,,,,,,,,
```

https://truckmanualshub.com/

Fig. 39 シートマウント (AS) SEAT MOUNT (AS)

COUNTRY	JP	AS	EX
APPLI-CATION	—	○	—

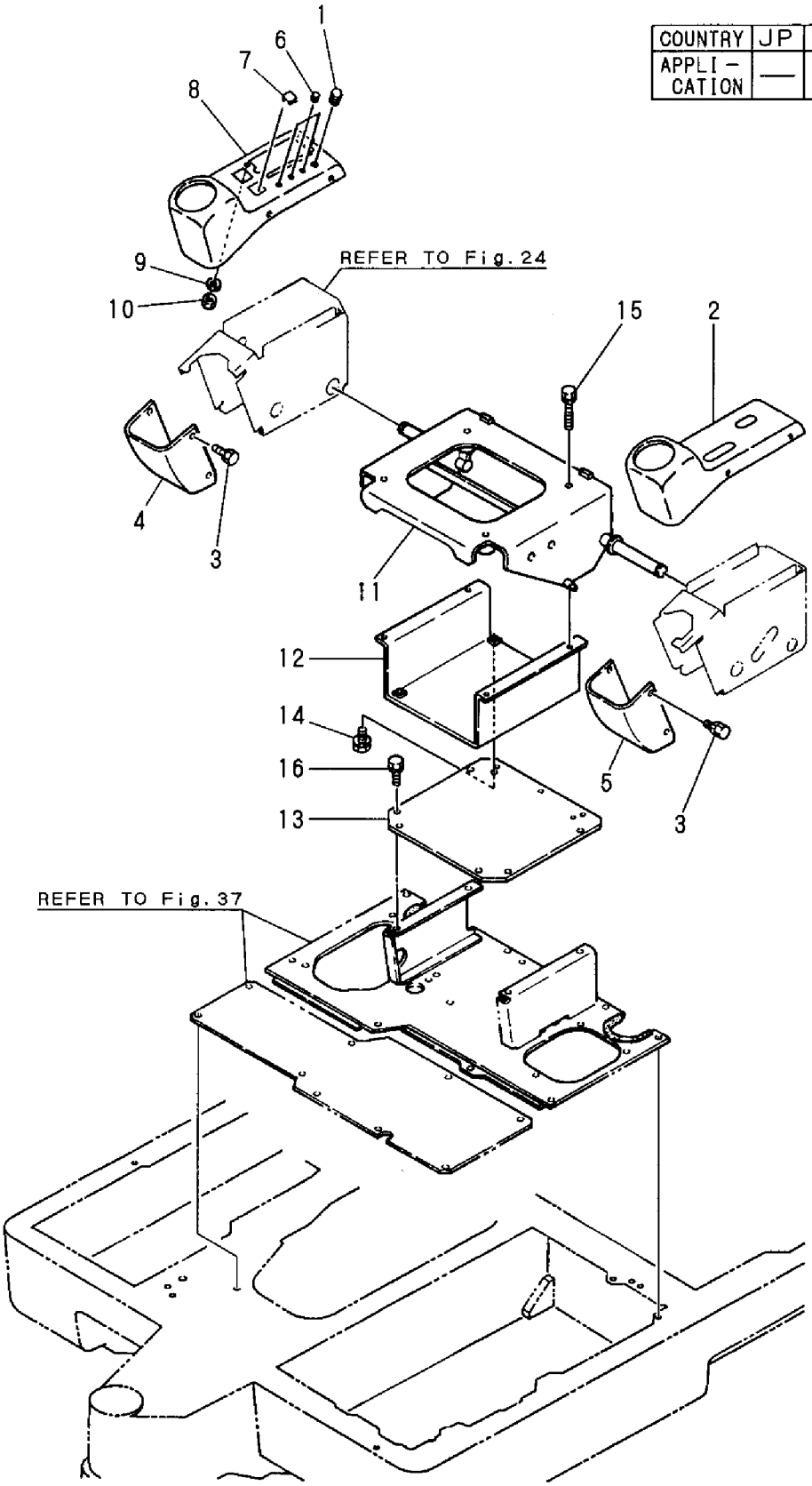

https://truckmanualshub.com/

```
1,1,,194145-04810,,"WASHER 10",4,4,4,4,,,,,,,,,,,,
2,1,,194145-04810,,"WASHER 10",6,6,6,6,,,,,,,,,,,,
3,1,,194145-04810,,"WASHER 10",4,4,4,4,,,,,,,,,,,,
4,1,,172171-65100-1,,"BONNET (GREEN)",1,1,,,,,,,,,,,,,,,
4A,1,,172171-65100-2,,"BONNET (YELLOW)",,,1,1,,,,,,,,,,,,,
6,2,,172171-65780,,"RUBBER,SEAL C",1,1,1,1,,,,,,,,,,,,,
7,2,,172168-65790,,RUBBER,1,1,1,1,,,,,,,,,,,,,
8,2,,172171-65820,,"RUBBER,SEAL D",1,1,1,1,,,,,,,,,,,,,
9,2,,172171-65850,,"RUBBER,SEAL K",1,1,1,1,,,,,,,,,,,,,
10,1,,172168-65200,,"PIPE, EXH.EXTENSION",1,1,1,1,,,,,,,,,,,,,,
11,1,,172168-65260,,"SPRING,GAS",1,1,1,1,,,,,,,,,,,,,
12,1,,172734-65260,,"PIN, BONNET LEVER",1,1,1,1,,,,,,,,,,,,,
13,1,,172734-65270,,"SPRING, CATCH",1,1,1,1,,,,,,,,,,,,,
14,1,,172171-65300-1,,"BONNET (GREEN)",1,1,,,,,,,,,,,,,,,
14A,1,,172171-65300-2,,"BONNET B (YELLOW)",,,1,1,,,,,,,,,,,,,,
16,2,,172168-65760,,RUBBER,1,1,1,1,,,,,,,,,,,,,
17,1,,172124-65450,,"LEVER, LOCK",1,1,1,1,,,,,,,,,,,,,
18,1,,172171-65451,,"BONNET A CMP(EV",1,1,1,1,,,,,,,,,,,,,
20,2,,172168-65750,,RUBBER,1,1,1,1,,,,,,,,,,,,,
21,1,,172126-65460,,HOOK,1,1,1,1,,,,,,,,,,,,,
22,1,,172124-65480,,CATCHER,1,1,1,1,,,,,,,,,,,,,
23,1,,172124-65490,,"PLATE,CATCH",1,1,1,1,,,,,,,,,,,,,
24,1,,172126-65500,,KEY,1,1,1,1,,,,,,,,,,,,,
25,2,,172126-65571,,"WASHER LOCK",1,1,1,1,,,,,,,,,,,,,
26,2,,26347-100002,,"U-NUT M10",1,1,1,1,,,,,,,,,,,,,
27,1,,172171-65601,,"DUCT ASSY",1,1,1,1,,,,,,,,,,,,,
28,1,,172171-65650,,"BRACKET COMPL.",1,1,1,1,,,,,,,,,,,,,
29,1,,172168-65740,,SEAL,1,1,1,1,,,,,,,,,,,,,
30,1,,172171-65830,,"RUBBER,SEAL E",1,1,1,1,,,,,,,,,,,,,
31,1,,22137-080000,,"WASHER 8, POLISHED",2,2,2,2,,,,,,,,,,,,,
32,1,,22137-100000,,"WASHER 10,POLISHED",2,2,2,2,,,,,,,,,,,,,
33,1,,22137-100000,,"WASHER 10,POLISHED",3,3,3,3,,,,,,,,,,,,,
34,1,,22217-080000,,"SPRING WASHER  8",2,2,2,2,,,,,,,,,,,,,
35,1,,22217-080000,,"SPRING WASHER  8",3,3,3,3,,,,,,,,,,,,,
36,1,,22217-100000,,"SPRING WASHER 10",2,2,2,2,,,,,,,,,,,,,
37,1,,22217-100000,,"SPRING WASHER 10",3,3,3,3,,,,,,,,,,,,,
38,1,,22417-200200,,"COTTER PIN 2.0X20",2,2,2,2,,,,,,,,,,,,,
39,1,,22417-200200,,"COTTER PIN 2.0X20",2,2,2,2,,,,,,,,,,,,,
40,1,,26013-100252,,"BOLT W/WASHER M10X25",4,4,4,4,,,,,,,,,,,,,
41,1,,26013-100252,,"BOLT W/WASHER M10X25",6,6,6,6,,,,,,,,,,,,,
42,1,,26013-100252,,"BOLT W/WASHER M10X25",4,4,4,4,,,,,,,,,,,,,
43,1,,26013-120352,,"BOLT M12X 35",5,5,5,5,,,,,,,,,,,,,
44,1,,26116-080162,,"BOLT M 8X 16 PLATED",3,3,3,3,,,,,,,,,,,,,
45,1,,26116-080202,,"BOLT M 8X 20 PLATED",2,2,2,2,,,,,,,,,,,,,
46,1,,26116-100202,,"BOLT M10X 20 PLATED",2,2,2,2,,,,,,,,,,,,,
47,1,,26116-100202,,"BOLT M10X 20 PLATED",3,3,3,3,,,,,,,,,,,,,
48,1,,933152-02900,,WASHER,2,2,2,2,,,,,,,,,,,,,
49,1,,933110-00301,,"KEY ASSY",1,1,1,1,,,,,,,,,,,,,
```

https://truckmanualshub.com/

Fig. 40 ボンネット BONNET

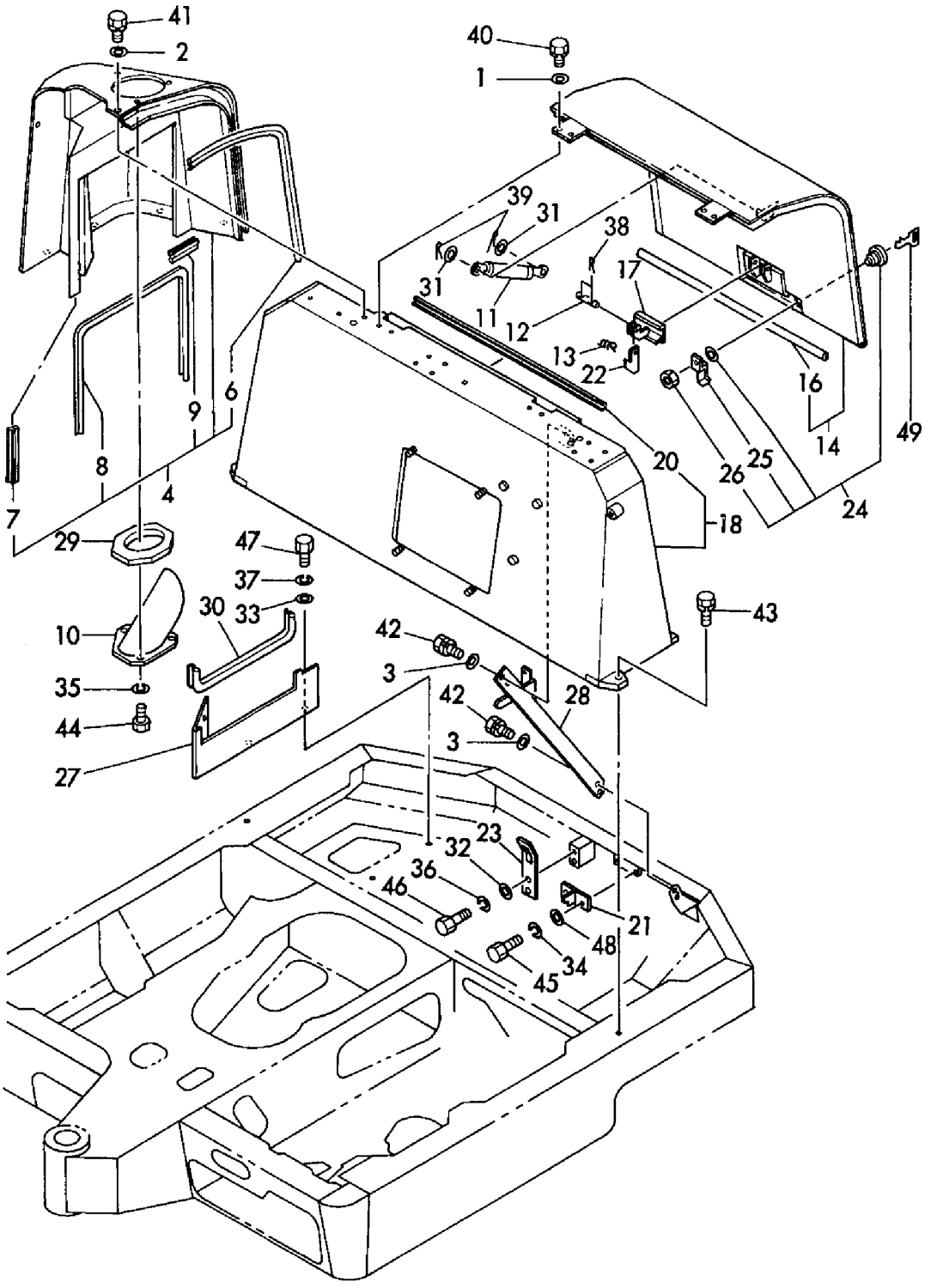

```
1,1,,772165-68401,,"CABIN ASSY",1,,,,,,,,,,,,,,,
2,2,,194080-01121,,"KNOB 8X17X30",4,,,,,,,,,,,,,,,
3,2,,172725-23050,,"SPRING, RETURN",1,,,,,,,,,,,,,,,
4,2,,194150-24270,,"SCREW CAP 13",2,,,,,,,,,,,,,,,
5,2,,194145-04810,,"WASHER 10",3,,,,,,,,,,,,,,,
6,2,,172137-46210,,SCREW,2,,,,,,,,,,,,,,,
7,2,,194273-47910,,KNOB,1,,,,,,,,,,,,,,,
8,2,,172141-53350,,"GROMMET 26",1,,,,,,,,,,,,,,,
9,2,,194310-61610,,"GROMMET  9",1,,,,,,,,,,,,,,,
10,2,,172165-67100,,"FRAME UNL ASSY,GLASS",1,,,,,,,,,,,,,,,,
11,2,,172165-67170,,"FRAME UNR ASSY,GLASS",1,,,,,,,,,,,,,,,,
12,2,,172165-67240,,"SPRING 16",4,,,,,,,,,,,,,,,
13,2,,172165-67250,,"SPRING, DISH",2,,,,,,,,,,,,,,,
14,2,,172165-67350,,SEAL,1,,,,,,,,,,,,,,,
15,2,,22217-080000,,"SPRING WASHER  8",3,,,,,,,,,,,,,,,
16,2,,172165-67370,,"TRIM,REAR",1,,,,,,,,,,,,,,,
17,2,,172137-68120,,PIN,2,,,,,,,,,,,,,,,
18,2,,172165-68400-3,,"CABIN ASSY",1,,,,,,,,,,,,,,,
19,2,,172162-69050,,"LOCK ASSY",1,,,,,,,,,,,,,,,
20,2,,172162-69070,,COATHANGER,1,,,,,,,,,,,,,,,
21,2,,172165-69090,,COVER,1,,,,,,,,,,,,,,,
22,2,,172165-69170,,"TRIM, ROOM",1,,,,,,,,,,,,,,,
23,2,,172165-69180,,"COLLAR 6,GLASS",2,,,,,,,,,,,,,,,,
24,2,,172165-69200,,"STOPPER R-UN",2,,,,,,,,,,,,,,,
25,2,,172141-68270,,"CLIP 8, TREE",4,,,,,,,,,,,,,,,
26,2,,172165-69220,,STOPPER,1,,,,,,,,,,,,,,,
27,2,,172165-69230,,"STOPPER L-UP",1,,,,,,,,,,,,,,,
28,2,,172165-69240,,COVER,1,,,,,,,,,,,,,,,
29,2,,172165-69250,,"COVER L-UP",1,,,,,,,,,,,,,,,
30,2,,172165-69260,,LEVER,1,,,,,,,,,,,,,,,
31,3,,172141-41360,,"BUSH 1415",1,,,,,,,,,,,,,,,
33,2,,172165-69290,,BRACKET,1,,,,,,,,,,,,,,,
34,2,,172165-69320,,"FRAME UPL,GLASS",1,,,,,,,,,,,,,,,,
35,2,,172165-69410,,FRAME,1,,,,,,,,,,,,,,,
36,2,,172165-69500,,"ROLLER 35",4,,,,,,,,,,,,,,,
37,2,,172165-69510,,ROLLER,4,,,,,,,,,,,,,,,
38,2,,172165-67480,,CLIP,1,,,,,,,,,,,,,,,
39,2,,172165-69530,,SPACER,6,,,,,,,,,,,,,,,
40,2,,172165-69540,,FINISHER,1,,,,,,,,,,,,,,,
41,2,,172165-69550,,SHAFT,4,,,,,,,,,,,,,,,
42,2,,172165-69560,,"SHAFT 14,ROLLER",2,,,,,,,,,,,,,,,
43,2,,172165-69570,,SHAFT,2,,,,,,,,,,,,,,,
44,2,,172165-69580,,GLASS(UP,1,,,,,,,,,,,,,,,
44-1,2,,172165-69581,,GLASS,1,,,,,,N,,,M/#50833,,,,,,,
45,2,,172165-69590,,GLASS,1,,,,,,,,,,,,,,,
46,2,,172165-69600,,"ACRYL F",1,,,,,,,,,,,,,,,
47,2,,172165-69610,,GLASS,1,,,,,,,,,,,,,,,
48,2,,172165-69620,,"GLASS L",1,,,,,,,,,,,,,,,
49,2,,172165-69630,,GLASS,1,,,,,,,,,,,,,,,
50,2,,172137-69651,,"COLLAR, GLASS",10,,,,,,,,,,,,,,,
51,2,,172165-69661,,"SEAL,CAB ROOF",1,,,,,,,,,,,,,,,
52,2,,172165-69671,,SEAL,1,,,,,,,,,,,,,,,
53,2,,172165-69681,,SEAL,1,,,,,,,,,,,,,,,
54,2,,172165-69691,,SEAL,1,,,,,,,,,,,,,,,
55,2,,172165-69720,,"SEAL,DOOR",1,,,,,,,,,,,,,,,
56,2,,172165-69731,,"SEAL,FRONT",1,,,,,,,,,,,,,,,
57,2,,172165-69740,,"RUBBER UN-R,STOPPER",1,,,,,,,,,,,,,,,,
58,2,,172162-69750,,HANDLE,1,,,,,,,,,,,,,,,
59,2,,172165-69750,,RUBBER,1,,,,,,,,,,,,,,,
60,2,,172165-69760,,"RUBBER UP-R,STOPPER",1,,,,,,,,,,,,,,,,
61,2,,172165-69770,,RUBBER,1,,,,,,,,,,,,,,,
62,2,,172165-69780,,"RUBBER UP-R,CUSHION",1,,,,,,,,,,,,,,,,
63,2,,172165-69790,,RUBBER,1,,,,,,,,,,,,,,,
```

64,2,,172165-69800,,"RUBBER UN,CUSHION",2,,,,,,,,,,,,,,,,
65,2,,172165-69811,,RUBBER,5,,,,,,,,,,,,,,,,
66,2,,172165-69830,,"SEAL,FRONT",1,,,,,,,,,,,,,,,,
67,2,,172137-69840,,SCREW,10,,,,,,,,,,,,,,,,
68,2,,172165-69840,,PACKING,1,,,,,,,,,,,,,,,,
69,2,,172165-69850,,"PACKING UP-R",1,,,,,,,,,,,,,,,,
70,2,,172165-69860,,"PACKING UN-L",1,,,,,,,,,,,,,,,,
71,2,,172165-69870,,"PACKING UN-R",1,,,,,,,,,,,,,,,,
72,2,,172165-69890,,"LATCH L ASSY",2,,,,,,,,,,,,,,,,
73,2,,172165-69960,,"LATCH R ASSY",2,,,,,,,,,,,,,,,,
74,2,,172165-69980,,GUARD,4,,,,,,,,,,,,,,,,
75,2,,26577-080122,,"SCREW M 8X 12",2,,,,,,,,,,,,,,,,
76,2,,22137-060000,,"WASHER 6, POLISHED",9,,,,,,,,,,,,,,,,
77,2,,22137-080000,,"WASHER 8, POLISHED",4,,,,,,,,,,,,,,,,
78,2,,22137-100000,,"WASHER 10,POLISHED",8,,,,,,,,,,,,,,,,
79,2,,22137-100000,,"WASHER 10,POLISHED",7,,,,,,,,,,,,,,,,
80,2,,22137-100000,,"WASHER 10,POLISHED",8,,,,,,,,,,,,,,,,
81,2,,22137-140000,,"WASHER 14,POLISHED",1,,,,,,,,,,,,,,,,
82,2,,22157-060000,,"WASHER 6",2,,,,,,,,,,,,,,,,
83,2,,22157-080000,,"WASHER 8",10,,,,,,,,,,,,,,,,
84,2,,172165-67380,,SHIM,2,,,,,,,,,,,,,,,,
85,2,,22217-100000,,"SPRING WASHER 10",2,,,,,,,,,,,,,,,,
86,2,,22217-100000,,"SPRING WASHER 10",3,,,,,,,,,,,,,,,,
87,2,,22217-140000,,"SPRING WASHER 14",2,,,,,,,,,,,,,,,,
88,2,,22417-400250,,"COTTER PIN 4.0X25",1,,,,,,,,,,,,,,,,
89,2,,22867-300080,,"SCREW 3X 8",2,,,,,,,,,,,,,,,,
90,2,,26013-080162,,"BOLT W/WASHER M8X16",4,,,,,,,,,,,,,,,,
91,2,,26013-080252,,"BOLT M 8X 25",4,,,,,,,,,,,,,,,,
92,2,,26013-080302,,"BOLT M 8X 30",4,,,,,,,,,,,,,,,,
93,2,,26013-100162,,"BOLT M10X 16",5,,,,,,,,,,,,,,,,
94,2,,26013-100202,,"BOLT W/WASHER M10X20",8,,,,,,,,,,,,,,,,
95,2,,26013-100252,,"BOLT W/WASHER M10X25",7,,,,,,,,,,,,,,,,
96,2,,26116-060122,,"BOLT M 6X 12",8,,,,,,,,,,,,,,,,
97,2,,26116-101002,,"BOLT M10X100",3,,,,,,,,,,,,,,,,
98,2,,26450-080202,,"BOLT M 8X 20",8,,,,,,,,,,,,,,,,
99,2,,26716-100002,,"NUT M10",2,,,,,,,,,,,,,,,,
100,2,,26757-080002,,"LOCK NUT M 8 PLATED",3,,,,,,,,,,,,,,,,
101,2,,26757-140002,,"LOCK NUT M14 PLATED",2,,,,,,,,,,,,,,,,
102,2,,172162-69060,,STRIDER,1,,,,,,,,,,,,,,,,
103,2,,172165-67500,,SEAL,1,,,,,,,,,,,,,,,,
104,2,,172151-62240,,GROMMET,4,,,,,,,,,,,,,,,,
105,2,,172165-69490,,PLATE,1,,,,,,,,,,,,,,,,
106,2,,22137-100000,,"WASHER 10,POLISHED",2,,,,,,,,,,,,,,,,
107,2,,26013-100202,,"BOLT W/WASHER M10X20",2,,,,,,,,,,,,,,,,
108,2,,172165-69990,,SHIM,2,,,,,,,,,,,,,,,,
109,2,,172165-69521,,"SUSH ASSY",1,,,,,,,,,,,,,,,,
110,3,,172165-67811,,"GLASS L440 FR",1,,,,,,,,,,,,,,,,
111,3,,172165-67821,,"GLASS L485 RR",1,,,,,,,,,,,,,,,,
112,3,,172165-67850,,"CHANNEL CTR",1,,,,,,,,,,,,,,,,
113,3,,172165-67860,,"STRIP,WATER",1,,,,,,,,,,,,,,,,
114,3,,172162-69970,,"LOCK ASSY",2,,,,,,,,,,,,,,,,
115,2,,172165-68280,,COLLAR,1,,,,,,,,,,,,,,,,
116,2,,933171-17770,,"SHIM SET",2,,,,,,,,,,,,,,,,

https://truckmanualshub.com/

Fig. 41 キャビン CABIN

見出しNo．1は、見出しNo．2から116を含みます。
1 inc．2 ～ 116

COUNTRY	JP	AS	EX
Fig. No.	41	42	41

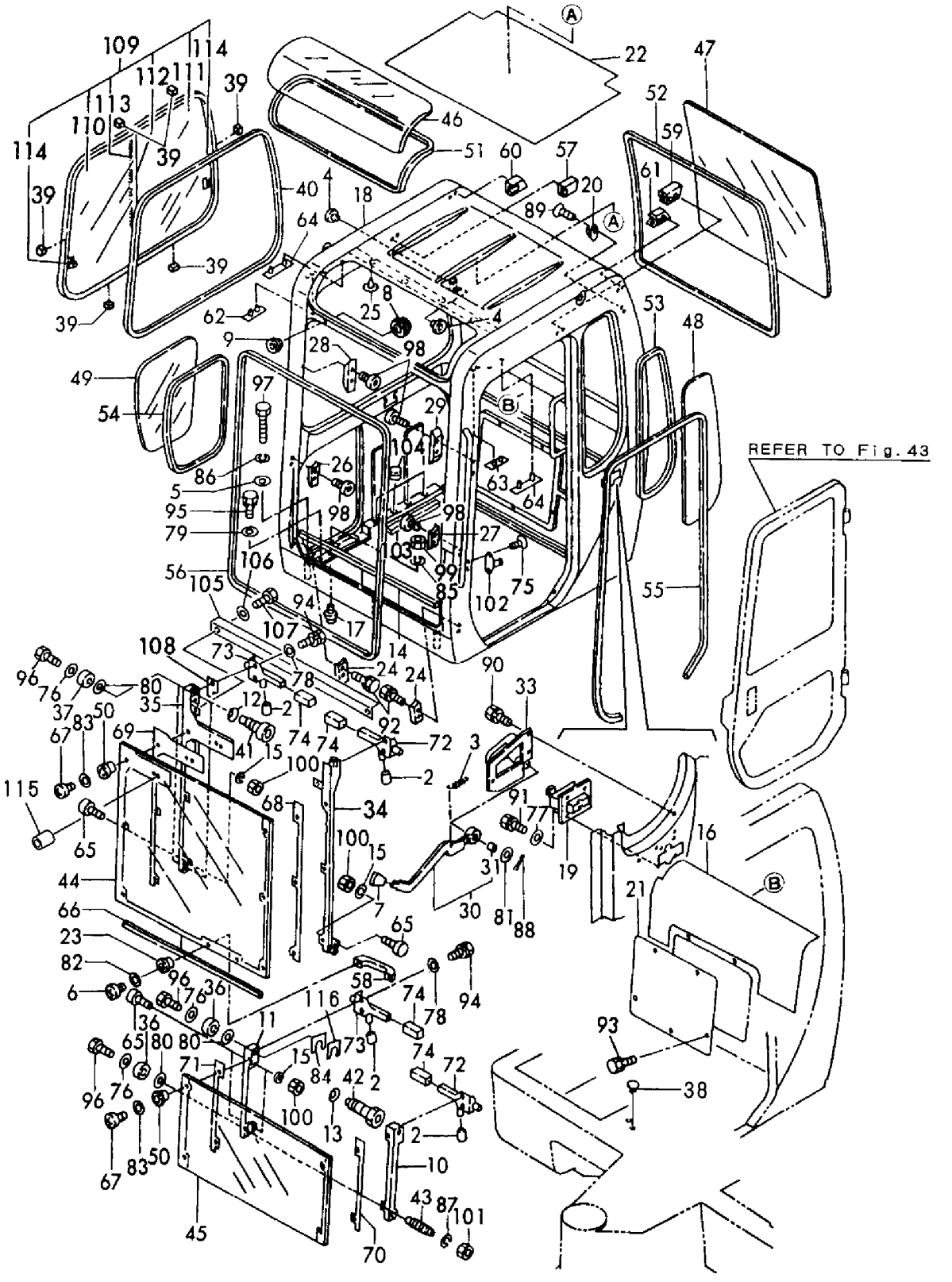

```
1,1,,772165-68411,,"CABIN ASSY",,,1,,,,,,,,,,,,,
2,2,,194080-01121,,"KNOB 8X17X30",,,4,,,,,,,,,,,,,
3,2,,172725-23050,,"SPRING, RETURN",,,1,,,,,,,,,,,,,
4,2,,194150-24270,,"SCREW CAP 13",,,2,,,,,,,,,,,,,
5,2,,194145-04810,,"WASHER 10",,,3,,,,,,,,,,,,,
6,2,,172137-46210,,SCREW,,,2,,,,,,,,,,,,,
7,2,,194273-47910,,KNOB,,,1,,,,,,,,,,,,,
8,2,,172141-53350,,"GROMMET 26",,,1,,,,,,,,,,,,,
9,2,,194310-61610,,"GROMMET  9",,,1,,,,,,,,,,,,,
10,2,,172165-67100,,"FRAME UNL ASSY,GLASS",,,1,,,,,,,,,,,,,
11,2,,172165-67170,,"FRAME UNR ASSY,GLASS",,,1,,,,,,,,,,,,,
12,2,,172165-67240,,"SPRING 16",,,4,,,,,,,,,,,,,
13,2,,172165-67250,,"SPRING, DISH",,,2,,,,,,,,,,,,,
14,2,,172165-67350,,SEAL,,,1,,,,,,,,,,,,,
15,2,,22217-080000,,"SPRING WASHER  8",,,3,,,,,,,,,,,,,
16,2,,172165-67370,,"TRIM,REAR",,,1,,,,,,,,,,,,,
17,2,,172137-68120,,PIN,,,2,,,,,,,,,,,,,
18,2,,172165-67400,,CABIN,,,1,,,,,,,,,,,,,
19,2,,172162-69050,,"LOCK ASSY",,,1,,,,,,,,,,,,,
20,2,,172162-69070,,COATHANGER,,,1,,,,,,,,,,,,,
21,2,,172165-69090,,COVER,,,1,,,,,,,,,,,,,
22,2,,172165-69170,,"TRIM, ROOM",,,1,,,,,,,,,,,,,
23,2,,172165-69180,,"COLLAR 6,GLASS",,,2,,,,,,,,,,,,,
24,2,,172165-69200,,"STOPPER R-UN",,,2,,,,,,,,,,,,,
25,2,,172141-68270,,"CLIP 8, TREE",,,4,,,,,,,,,,,,,
26,2,,172165-69220,,STOPPER,,,1,,,,,,,,,,,,,
27,2,,172165-69230,,"STOPPER L-UP",,,1,,,,,,,,,,,,,
28,2,,172165-69240,,COVER,,,1,,,,,,,,,,,,,
29,2,,172165-69250,,"COVER L-UP",,,1,,,,,,,,,,,,,
30,2,,172165-69260,,LEVER,,,1,,,,,,,,,,,,,
31,3,,172141-41360,,"BUSH 1415",,,1,,,,,,,,,,,,,
33,2,,172165-69290,,BRACKET,,,1,,,,,,,,,,,,,
34,2,,172165-69320,,"FRAME UPL,GLASS",,,1,,,,,,,,,,,,,
35,2,,172165-69410,,FRAME,,,1,,,,,,,,,,,,,
36,2,,172165-69500,,"ROLLER 35",,,4,,,,,,,,,,,,,
37,2,,172165-69510,,ROLLER,,,4,,,,,,,,,,,,,
38,2,,172165-67480,,CLIP,,,1,,,,,,,,,,,,,
39,2,,172165-69530,,SPACER,,,6,,,,,,,,,,,,,
40,2,,172165-69540,,FINISHER,,,1,,,,,,,,,,,,,
41,2,,172165-69550,,SHAFT,,,4,,,,,,,,,,,,,
42,2,,172165-69560,,"SHAFT 14,ROLLER",,,2,,,,,,,,,,,,,
43,2,,172165-69570,,SHAFT,,,2,,,,,,,,,,,,,
44,2,,172165-69581,,GLASS,,,1,,,,,,,,,,,,,
45,2,,172165-69590,,GLASS,,,1,,,,,,,,,,,,,
46,2,,172165-69600,,"ACRYL F",,,1,,,,,,,,,,,,,
47,2,,172165-69610,,GLASS,,,1,,,,,,,,,,,,,
48,2,,172165-69620,,"GLASS L",,,1,,,,,,,,,,,,,
49,2,,172165-69630,,GLASS,,,1,,,,,,,,,,,,,
50,2,,172137-69651,,"COLLAR, GLASS",,,10,,,,,,,,,,,,,
51,2,,172165-69661,,"SEAL,CAB ROOF",,,1,,,,,,,,,,,,,
52,2,,172165-69671,,SEAL,,,1,,,,,,,,,,,,,
53,2,,172165-69681,,SEAL,,,1,,,,,,,,,,,,,
54,2,,172165-69691,,SEAL,,,1,,,,,,,,,,,,,
55,2,,172165-69720,,"SEAL,DOOR",,,1,,,,,,,,,,,,,
56,2,,172165-69731,,"SEAL,FRONT",,,1,,,,,,,,,,,,,
57,2,,172165-69740,,"RUBBER UN-R,STOPPER",,,1,,,,,,,,,,,,,
58,2,,172162-69750,,HANDLE,,,1,,,,,,,,,,,,,
59,2,,172165-69750,,RUBBER,,,1,,,,,,,,,,,,,
60,2,,172165-69760,,"RUBBER UP-R,STOPPER",,,1,,,,,,,,,,,,,
61,2,,172165-69770,,RUBBER,,,1,,,,,,,,,,,,,
62,2,,172165-69780,,"RUBBER UP-R,CUSHION",,,1,,,,,,,,,,,,,
63,2,,172165-69790,,RUBBER,,,1,,,,,,,,,,,,,
64,2,,172165-69800,,"RUBBER UN,CUSHION",,,2,,,,,,,,,,,,,
```

```
65,2,,172165-69811,,RUBBER,,,3,,,,,,,,,,,,,,
66,2,,172165-69830,,"SEAL,FRONT",,,1,,,,,,,,,,,,,,
67,2,,172137-69840,,SCREW,,,10,,,,,,,,,,,,,,
68,2,,172165-69840,,PACKING,,,1,,,,,,,,,,,,,,
69,2,,172165-69850,,"PACKING UP-R",,,1,,,,,,,,,,,,,,
70,2,,172165-69860,,"PACKING UN-L",,,1,,,,,,,,,,,,,,
71,2,,172165-69870,,"PACKING UN-R",,,1,,,,,,,,,,,,,,
72,2,,172165-69890,,"LATCH L ASSY",,,2,,,,,,,,,,,,,,
73,2,,172165-69960,,"LATCH R ASSY",,,2,,,,,,,,,,,,,,
74,2,,172165-69980,,GUARD,,,4,,,,,,,,,,,,,,
75,2,,26577-080122,,"SCREW M 8X 12",,,2,,,,,,,,,,,,,,
76,2,,22137-060000,,"WASHER 6, POLISHED",,,9,,,,,,,,,,,,,,
77,2,,22137-080000,,"WASHER 8, POLISHED",,,4,,,,,,,,,,,,,,
78,2,,22137-100000,,"WASHER 10,POLISHED",,,8,,,,,,,,,,,,,,
79,2,,22137-100000,,"WASHER 10,POLISHED",,,7,,,,,,,,,,,,,,
80,2,,22137-100000,,"WASHER 10,POLISHED",,,8,,,,,,,,,,,,,,
81,2,,22137-140000,,"WASHER 14,POLISHED",,,1,,,,,,,,,,,,,,
82,2,,22157-060000,,"WASHER  6",,,2,,,,,,,,,,,,,,
83,2,,22157-080000,,"WASHER  8",,,10,,,,,,,,,,,,,,
84,2,,172165-67380,,SHIM,,,2,,,,,,,,,,,,,,
85,2,,22217-100000,,"SPRING WASHER 10",,,2,,,,,,,,,,,,,,
86,2,,22217-100000,,"SPRING WASHER 10",,,3,,,,,,,,,,,,,,
87,2,,22217-140000,,"SPRING WASHER 14",,,2,,,,,,,,,,,,,,
88,2,,22417-400250,,"COTTER PIN 4.0X25",,,1,,,,,,,,,,,,,,
89,2,,22867-300080,,"SCREW 3X 8",,,2,,,,,,,,,,,,,,
90,2,,26013-080162,,"BOLT W/WASHER M8X16",,,4,,,,,,,,,,,,,,
91,2,,26013-080252,,"BOLT M 8X 25",,,4,,,,,,,,,,,,,,
92,2,,26013-080302,,"BOLT M 8X 30",,,4,,,,,,,,,,,,,,
93,2,,26013-100162,,"BOLT M10X 16",,,5,,,,,,,,,,,,,,
94,2,,26013-100202,,"BOLT W/WASHER M10X20",,,8,,,,,,,,,,,,,,
95,2,,26013-100252,,"BOLT W/WASHER M10X25",,,7,,,,,,,,,,,,,,
96,2,,26116-060122,,"BOLT M 6X 12",,,8,,,,,,,,,,,,,,
97,2,,26116-101002,,"BOLT M10X100",,,3,,,,,,,,,,,,,,
98,2,,26450-080202,,"BOLT M 8X 20",,,8,,,,,,,,,,,,,,
99,2,,26716-100002,,"NUT M10",,,2,,,,,,,,,,,,,,
100,2,,26757-080002,,"LOCK NUT M 8 PLATED",,,3,,,,,,,,,,,,,,
101,2,,26757-140002,,"LOCK NUT M14 PLATED",,,2,,,,,,,,,,,,,,
102,2,,172162-69060,,STRIDER,,,1,,,,,,,,,,,,,,
103,2,,172165-69490,,PLATE,,,1,,,,,,,,,,,,,,
104,2,,22137-100000,,"WASHER 10,POLISHED",,,2,,,,,,,,,,,,,,
105,2,,26013-100202,,"BOLT W/WASHER M10X20",,,2,,,,,,,,,,,,,,,
106,2,,172165-69521,,"SUSH ASSY",,,1,,,,,,,,,,,,,,
107,3,,172165-67811,,"GLASS L440 FR",,,1,,,,,,,,,,,,,,
108,3,,172165-67821,,"GLASS L485 RR",,,1,,,,,,,,,,,,,,
109,3,,172165-67850,,"CHANNEL CTR",,,1,,,,,,,,,,,,,,
110,3,,172165-67860,,"STRIP,WATER",,,1,,,,,,,,,,,,,,
111,3,,172162-69970,,"LOCK ASSY",,,2,,,,,,,,,,,,,,
112,2,,172151-62240,,GROMMET,,,4,,,,,,,,,,,,,,
113,2,,172165-67500,,SEAL,,,1,,,,,,,,,,,,,,
114,2,,172165-69990,,SHIM,,,2,,,,,,,,,,,,,,
115,2,,172165-68280,,COLLAR,,,1,,,,,,,,,,,,,,
116,2,,933171-17770,,"SHIM SET",,,2,,,,,,,,,,,,,,
```

https://truckmanualshub.com/

Fig. 42 キャビン (AS) CABIN (AS)

見出しNo．1は、見出しNo．2から116を含みます。
1 inc. 2 ～ 116

COUNTRY	JP	AS	EX
Fig. No.	41	42	41

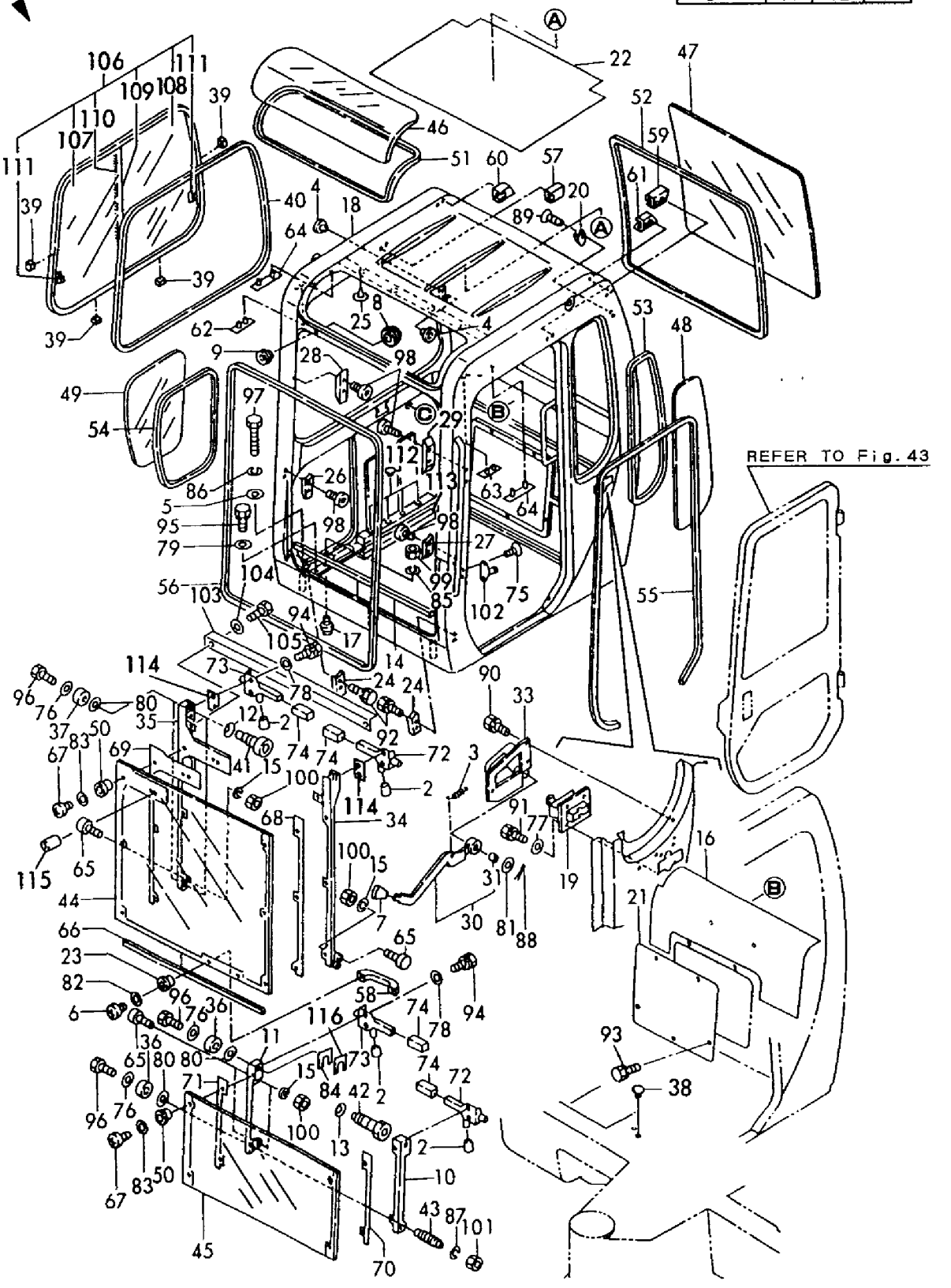

https://truckmanualshub.com/

```
1,1,,772165-69000-2,,"SIDE DOOR ASSY",1,,1,,,,,,,,,,,,,
2,2,,172165-69000-2,,"DOOR ASSY    (GREEN)",1,,1,,,,,,,,,,,,,,
3,3,,172137-69410-2,,"HINGE      (GREEN)",2,,2,,,,,,,,,,,,,,
5,4,,172137-66650-2,,"HINGE (B)    (GREEN)",2,,2,,,,,,,,,,,,,,
6,4,,172122-69390,,HINGE,2,,2,,,,,,,,,,,,,,
7,2,,26757-100002,,"LOCK NUT M10",2,,2,,,,,,,,,,,,,,
8,2,,172165-69141,,"COVER, DOOR",1,,1,,,,,,,,,,,,,,
9,2,,172165-69190,,RUBBER,2,,2,,,,,,,,,,,,,,
10,2,,172162-69460,,"KEY ASSY, CYLINDER",1,,1,,,,,,,,,,,,,,
11,2,,172162-69480,,"LOCK ASSY",1,,1,,,,,,,,,,,,,,
12,2,,172162-69490,,PIN,1,,1,,,,,,,,,,,,,,
13,2,,172162-69500,,SPRING,1,,1,,,,,,,,,,,,,,
14,2,,172162-69510,,"HANDLE ASSY",1,,1,,,,,,,,,,,,,,
15,2,,172162-69520,,COVER,1,,1,,,,,,,,,,,,,,
16,2,,172162-69530,,"ROD ASSY",1,,1,,,,,,,,,,,,,,
17,2,,172162-69540,,"HANDLE,OUTER",1,,,,,,,,,,,,,,,,,
17-1,2,,172162-69541,,"HANDLE,OUTER",1,,1,,,,N,,,M/#50964,,,,,,,,
18,2,,172162-69550,,HOOK,1,,1,,,,,,,,,,,,,,
19,2,,172122-69620,,"KNOB, DOOR",1,,1,,,,,,,,,,,,,,
20,2,,172165-69640,,"GLASS UP,DOOR",1,,1,,,,,,,,,,,,,,
21,2,,172165-69650,,GLASS,1,,1,,,,,,,,,,,,,,
22,2,,172165-69701,,"SEAL UP,DOOR",1,,1,,,,,,,,,,,,,,
23,2,,172165-69711,,SEAL,1,,1,,,,,,,,,,,,,,
24,2,,172165-63650,,"PLUG 10,HOLE",5,,5,,,,,,,,,,,,,,
25,2,,22137-100000,,"WASHER 10,POLISHED",4,,4,,,,,,,,,,,,,,
26,2,,22217-050000,,"SPRING WASHER  5",8,,8,,,,,,,,,,,,,,
27,2,,22217-060000,,"SPRING WASHER  6",8,,8,,,,,,,,,,,,,,
28,2,,26013-100252,,"BOLT W/WASHER M10X25",4,,4,,,,,,,,,,,,,,
29,2,,26557-060102,,"SCREW M 6X 10",2,,2,,,,,,,,,,,,,,
30,2,,26557-060162,,"SCREW M 6X 16",7,,7,,,,,,,,,,,,,,
31,2,,26559-050162,,SCREW,8,,8,,,,,,,,,,,,,,
32,2,,26559-050202,,SCREW,4,,4,,,,,,,,,,,,,,
33,2,,22217-100000,,"SPRING WASHER 10",2,,2,,,,,,,,,,,,,,
34,2,,26716-100002,,"NUT M10",4,,4,,,,,,,,,,,,,,
35,2,,22137-050000,,"WASHER 5, POLISHED",8,,8,,,,,,,,,,,,,,
36,1,,933110-00301,,"KEY ASSY",1,,1,,,,,,,,,,,,,,
```

https://truckmanualshub.com/

Fig. 43 キャビンドア CABIN DOOR

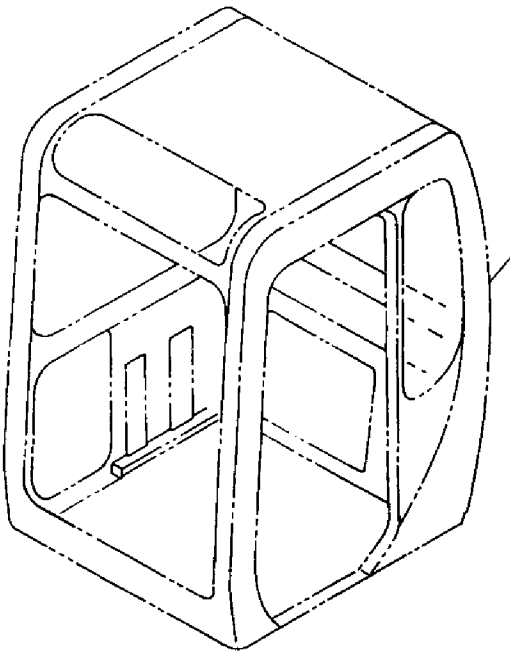

REFER TO Fig. 41, 42

見出しNo．1は、見出しNo．2から35を含みます。
1inc．2 ～ 35

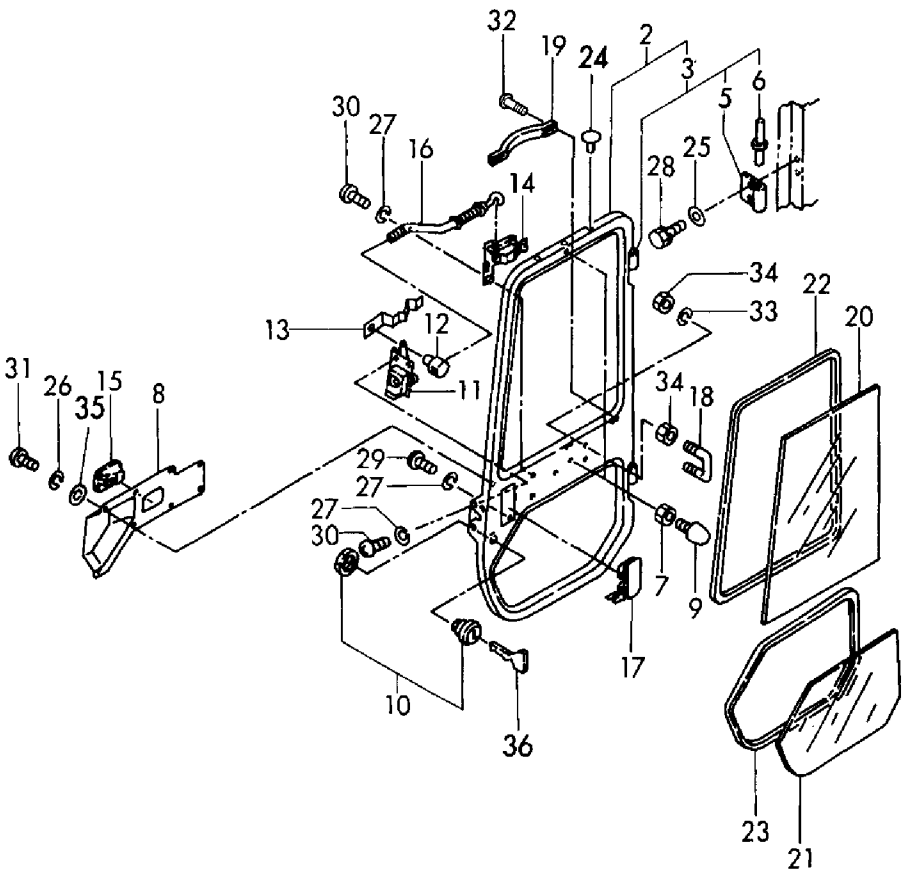

https://truckmanualshub.com/

```
1,1,,772165-68100-3,,"CANOPY ASSY",,1,,1,,,,,,,,,,,,,
2,2,,172165-68100-3,,"POLE, CANOPY R",,1,,1,,,,,,,,,,,,,,
3,2,,172165-68110-3,,"POLE, CANOPY L",,1,,1,,,,,,,,,,,,,,
4,2,,172165-68301,,"ROOF, CANOPY",,1,,1,,,,,,,,,,,,,
5,2,,22217-140000,,"SPRING WASHER 14",,8,,8,,,,,,,,,,,,,,
6,2,,26013-120402,,"BOLT M12X 40",,6,,6,,,,,,,,,,,,,
7,2,,172165-68180,,"BOLT, M14X 35",,8,,8,,,,,,,,,,,,,,
8,1,,172165-68200-3,,"CANORY F",,1,,1,,,,,,,,,,,,,
9,1,,26013-120352,,"BOLT M12X 35",,2,,2,,,,,,,,,,,,,,
```

https://truckmanualshub.com/

Fig.44 キャノピ CANOPY

見出しNo．1は、見出しNo．2から7を含みます。
1inc．2～7

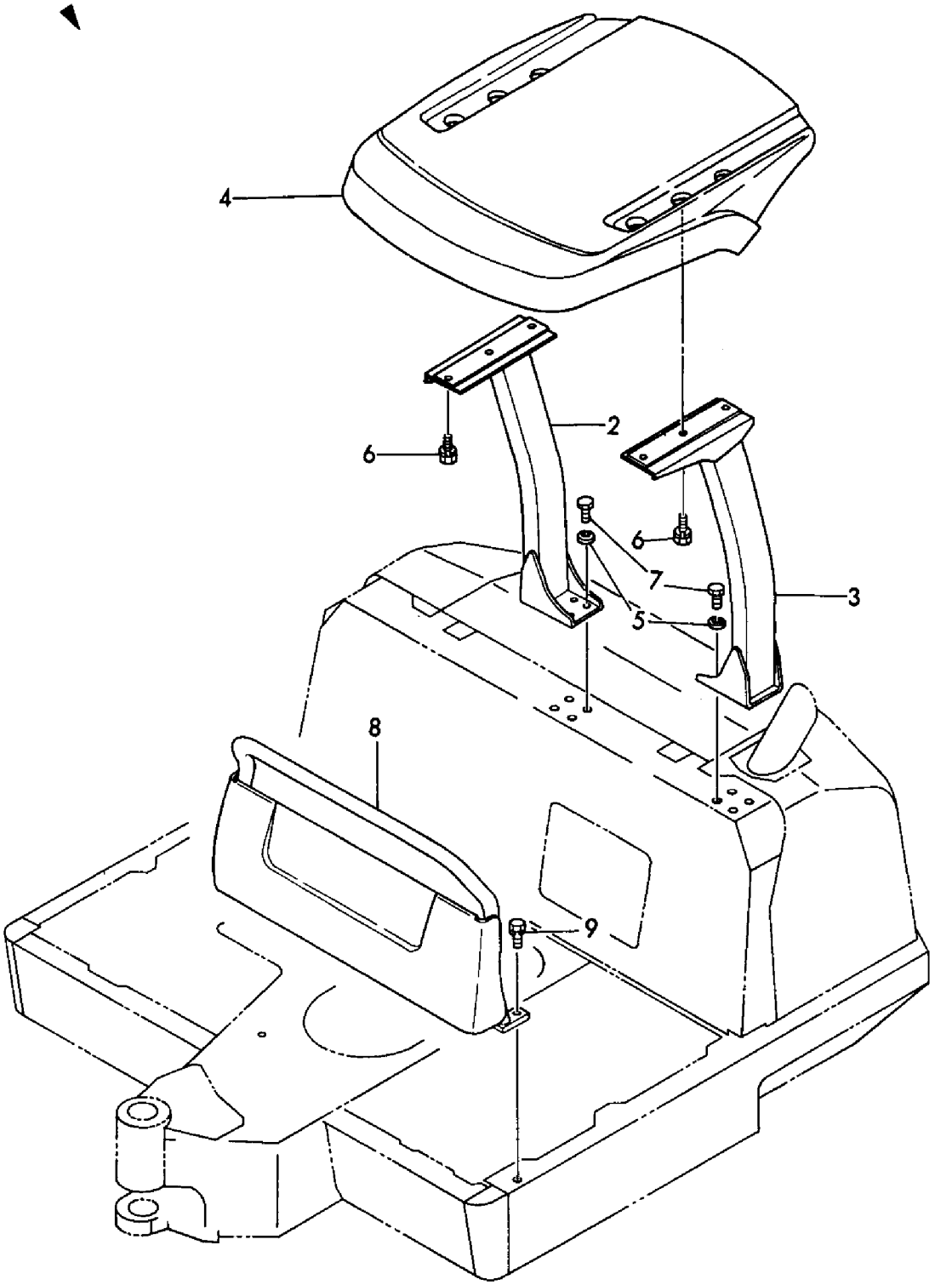

```
1,1,,172168-71101,,"COVER,FLYWHEEL",1,1,,,,,,,,,,,,,,,
2,1,,26013-100302,,"BOLT M10X 30",8,8,,,,,,,,,,,,,,,
3,1,,172165-71200,,COUPLING,1,1,,,,,,,,,,,,,,,
4,1,,26450-120402,,"BOLT M12X 40",3,3,,,,,,,,,,,,,,,
5,1,,26013-120352,,"BOLT M12X 35",2,2,,,,,,,,,,,,,,,
6,1,,172171-73200,,"PUMP ASSY, 3-THROW",1,1,,,,,,,,,,,,,,,
6-1,1,,172171-73201,,"PUMP ASSY, 3-THROW",1,1,,,,,N,,,M/#50802,,M/#50802,,,,,,
7,2,,172168-71200,,"SHAFT ASSY, ROCKER",1,1,,,,,,,,,,,,,,,
8,3,,172168-71310,,SHAFT,1,1,,,,,,,,,,,,,,,
9,3,,172168-71320,,"SEAL CASE",1,1,,,,,,,,,,,,,,,
10,3,,172168-71330,,BEARING,1,1,,,,,,,,,,,,,,,
11,3,,172164-73170,,"SEAL ASSY",1,1,,,,,,,,,,,,,,,
14,3,,22242-000250,,"CIRCLIP 25S",2,2,,,,,,,,,,,,,,,
15,3,,22252-000620,,"CIRCLIP 62(H)",1,1,,,,,,,,,,,,,,,
17,2,,172168-71340,,O-RING,1,1,,,,,,,,,,,,,,,
18,2,,172168-71550,,COVER,1,1,,,,,,,,,,,,,,,
22,2,,26450-060162,,"BOLT M 6X 16",4,4,,,,,,,,,,,,,,,
23,2,,172175-73110,,"ROTARY GROUP",1,1,,,,,,,,,,,,,,,
23-1,2,,172175-73111,,"ROTARY COMP.",1,1,,,,,S,,,M/#50802,,M/#50802,,,,,,
24,2,,172171-73220,,"COVER ASSY,GEAR CASE",1,1,,,,,,,,,,,,,,,
25,3,,172175-73150,,"PLATE, CONTROL",1,1,,,,,,,,,,,,,,,
26,3,,172168-71360,,"GASKET, BONNET",1,1,,,,,,,,,,,,,,,
27,3,,172164-73660,,FILTER,1,1,,,,,,,,,,,,,,,
30,3,,172168-71560,,BEARING,1,1,,,,,,,,,,,,,,,
31,3,,172164-73670,,CIRCLIP,1,1,,,,,,,,,,,,,,,
32,3,,172165-73580,,ORIFICE,3,3,,,,,,,,,,,,,,,
33,3,,172142-74650,,"PLUG 1/8",3,3,,,,,,,,,,,,,,,
34,3,,22312-060140,,"PARALLEL PIN 6X14",2,2,,,,,,,,,,,,,,,
35,3,,24315-000080,,"O-RING 1B P-8.0",4,4,,,,,,,,,,,,,,,
36,3,,26450-100302,,"BOLT M10X 30",3,3,,,,,,,,,,,,,,,
37,3,,26450-100502,,"BOLT 10X 50",1,1,,,,,,,,,,,,,,,
38,3,,26450-100552,,"BOLT M10X 55",1,1,,,,,,,,,,,,,,,
39,2,,172175-73420,,SPRING,1,1,,,,,,,,,,,,,,,
39-1,2,,172168-73220,,SPRING,1,1,,,,,S,,,M/#50802,,M/#50802,,,,,,
40,3,,172168-71380,,RETAINER,1,1,,,,,,,,,,,,,,,
41,3,,172168-71390,,RETAINER,1,1,,,,,,,,,,,,,,,
42,3,,172164-73720,,COVER,1,1,,,,,,,,,,,,,,,
43,3,,172175-73450,,SPRING,1,1,,,,,,,,,,,,,,,
44,3,,172175-73460,,SPRING,1,1,,,,,,,,,,,,,,,
44-1,3,,172168-73230,,SPRING,1,1,,,,,S,,,M/#50802,,M/#50802,,,,,,
45,3,,172168-71430,,O-RING,1,1,,,,,,,,,,,,,,,
46,3,,172168-71440,,SHIM,2,2,,,,,,,,,,,,,,,
47,3,,172168-71450,,SHIM,2,2,,,,,,,,,,,,,,,
48,3,,172168-71460,,SHIM,2,2,,,,,,,,,,,,,,,
49,3,,172165-73640,,"ADJUST SCREW",1,1,,,,,,,,,,,,,,,
50,3,,172165-73670,,"NUT M 6",1,1,,,,,,,,,,,,,,,
51,3,,26450-080302,,"BOLT M 8X 30",2,2,,,,,,,,,,,,,,,
52,2,,172171-73230,,"PISTON ASSY, CONTROL",1,1,,,,,,,,,,,,,,,
53,3,,172168-71470,,CYLINDER,1,1,,,,,,,,,,,,,,,
54,3,,172171-73270,,PISTON,1,1,,,,,,,,,,,,,,,
55,3,,172168-71490,,"PARALLEL PIN",2,2,,,,,,,,,,,,,,,
56,3,,172168-71500,,"PARALLEL PIN",1,1,,,,,,,,,,,,,,,
57,3,,172168-71510,,O-RING,1,1,,,,,,,,,,,,,,,
58,3,,172168-71520,,"CONICAL SPRING",4,4,,,,,,,,,,,,,,,
59,3,,172168-71530,,RETAINER,1,1,,,,,,,,,,,,,,,
60,3,,172165-73790,,O-RING,1,1,,,,,,,,,,,,,,,
61,3,,172143-74220,,O-RING,1,1,,,,,,,,,,,,,,,
62,3,,26450-080252,,"BOLT M 8X 25",2,2,,,,,,,,,,,,,,,
63,2,,172171-73240,,"PUMP, HYD. OIL",1,1,,,,,,,,,,,,,,,
64,3,,172164-73750,,"FRAME, FRONT",1,1,,,,,,,,,,,,,,,
65,3,,172141-73220,,PLATE,2,2,,,,,,,,,,,,,,,
66,3,,172141-73230,,GUIDE,2,2,,,,,,,,,,,,,,,
67,3,,172141-71520,,RING,2,2,,,,,,,,,,,,,,,
```

https://truckmanualshub.com/

```
68,3,,172141-71550,,O-RING,2,2,,,,,,,,,,,,,,,
69,3,,172141-71560,,RING,2,2,,,,,,,,,,,,,,,
70,3,,172141-73240,,"PIN, PARALLEL",2,2,,,,,,,,,,,,,,,
71,3,,26450-100252,,"BOLT M10X 25",2,2,,,,,,,,,,,,,,,
72,3,,172147-73650,,O-RING,2,2,,,,,,,,,,,,,,,
73,3,,172164-73830,,COUPLING,1,1,,,,,,,,,,,,,,,
74,3,,172164-73840,,BUSH,1,1,,,,,,,,,,,,,,,
75,3,,172164-73850,,"HEX.HEAD BOLT",4,4,,,,,,,,,,,,,,,
76,3,,172164-73880,,O-RING,1,1,,,,,,,,,,,,,,,
77,3,,172164-73890,,O-RING,1,1,,,,,,,,,,,,,,,
78,3,,24315-000100,,"O-RING 1B P-10.0",3,3,,,,,,,,,,,,,,,
80,1,,172164-73110,,VALVE,1,1,,,,,,,,,,,,,,,
```

https://truckmanualshub.com/

Fig. 45 油圧ポンプ＆軸継手 HYD. OIL PUMP & JOINT

COUNTRY	JP	AS	EX
APPLI-CATION	○	—	○

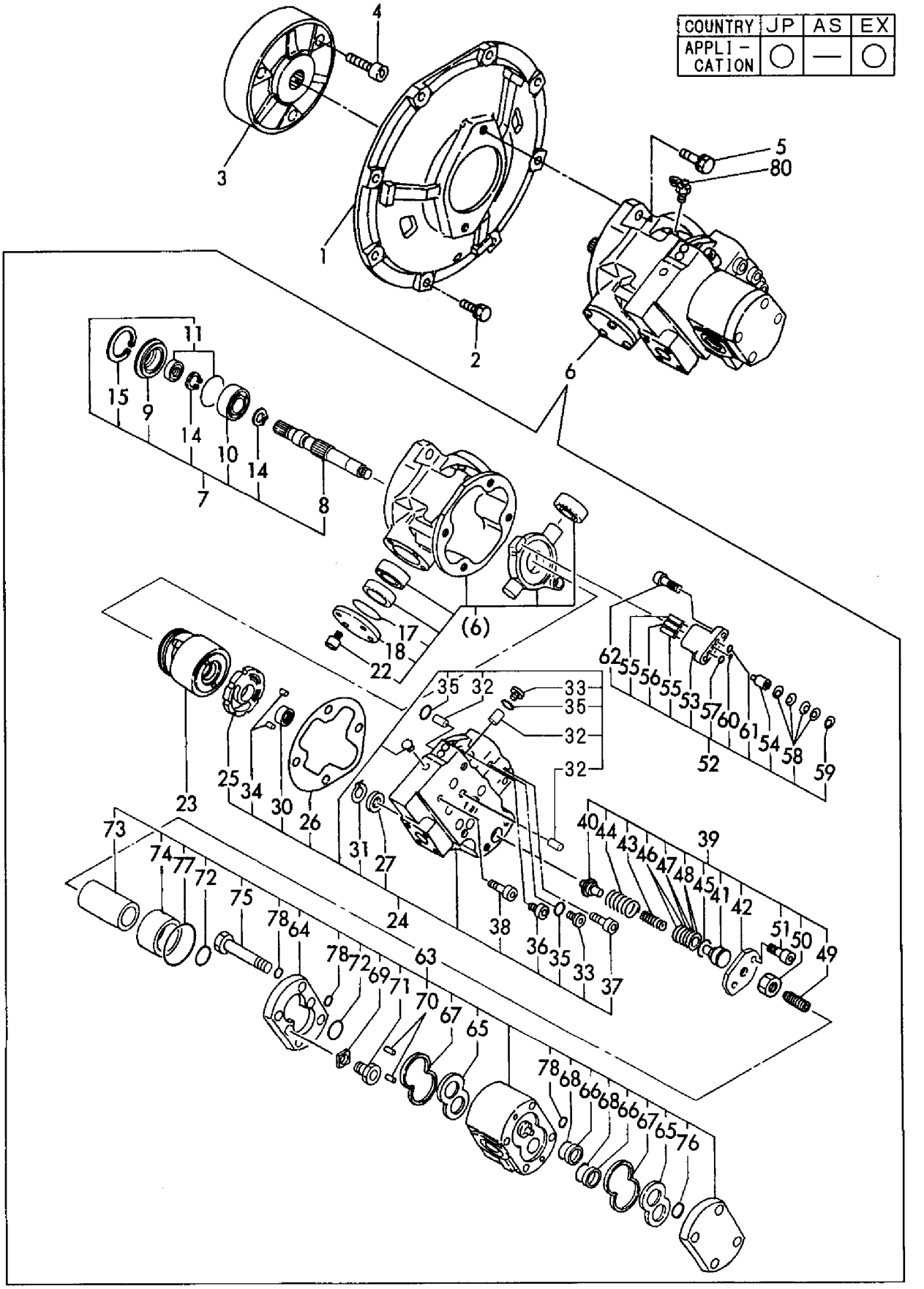

https://truckmanualshub.com/

```
1,1,,172168-71101,,"COVER,FLYWHEEL",,1,1,1,,,,,,,,,,,,,
2,1,,26013-100302,,"BOLT M10X 30",,8,8,8,,,,,,,,,,,,,
3,1,,172165-71200,,COUPLING,,1,1,1,,,,,,,,,,,,,
4,1,,26450-120402,,"BOLT M12X 40",,3,3,3,,,,,,,,,,,,,
5,1,,172164-73110,,VALVE,,1,1,1,,,,,,,,,,,,,
6,1,,26013-120352,,"BOLT M12X 35",,2,2,2,,,,,,,,,,,,,
7,1,,172171-73212,,"PUMP ASSY, 4-THROW",,1,1,1,,,,,,,,,,,,,
8,2,,172168-71200,,"SHAFT ASSY, ROCKER",,1,1,1,,,,,,,,,,,,,
9,3,,172168-71310,,SHAFT,,1,1,1,,,,,,,,,,,,,
10,3,,172168-71320,,"SEAL CASE",,1,1,1,,,,,,,,,,,,,
11,3,,172168-71330,,BEARING,,1,1,1,,,,,,,,,,,,,
12,3,,172164-73170,,"SEAL ASSY",,1,1,1,,,,,,,,,,,,,
15,3,,22242-000250,,"CIRCLIP 25S",,2,2,2,,,,,,,,,,,,,
16,3,,22252-000620,,"CIRCLIP 62(H)",,1,1,1,,,,,,,,,,,,,
21,2,,172168-71340,,O-RING,,1,1,1,,,,,,,,,,,,,
22,2,,172168-71550,,COVER,,1,1,1,,,,,,,,,,,,,
23,2,,26450-060162,,"BOLT M 6X 16",,4,4,4,,,,,,,,,,,,,
24,2,,172175-73111,,"ROTARY COMP.",,1,1,1,,,,,,,,,,,,,
25,2,,172164-73410,,"COVER, AIR CLEANER",,1,1,1,,,,,,,,,,,,,
27,3,,172175-73150,,"PLATE, CONTROL",,1,1,1,,,,,,,,,,,,,
28,3,,22312-060140,,"PARALLEL PIN 6X14",,2,2,2,,,,,,,,,,,,,
29,3,,26450-100302,,"BOLT M10X 30",,3,3,3,,,,,,,,,,,,,
31,3,,172165-73580,,ORIFICE,,3,3,3,,,,,,,,,,,,,
32,3,,172168-71560,,BEARING,,1,1,1,,,,,,,,,,,,,
33,3,,172142-74650,,"PLUG 1/8",,4,4,4,,,,,,,,,,,,,
34,3,,24315-000080,,"O-RING 1B P-8.0",,5,5,5,,,,,,,,,,,,,
35,3,,172168-71360,,"GASKET, BONNET",,1,1,1,,,,,,,,,,,,,
36,3,,172164-73660,,FILTER,,1,1,1,,,,,,,,,,,,,
37,3,,172164-73670,,CIRCLIP,,1,1,1,,,,,,,,,,,,,
38,3,,26450-100502,,"BOLT 10X 50",,1,1,1,,,,,,,,,,,,,
39,3,,26450-100552,,"BOLT M10X 55",,1,1,1,,,,,,,,,,,,,
41,2,,172168-73220,,SPRING,,1,1,1,,,,,,,,,,,,,
42,3,,172168-71380,,RETAINER,,1,1,1,,,,,,,,,,,,,
43,3,,172168-71390,,RETAINER,,1,1,1,,,,,,,,,,,,,
44,3,,172164-73720,,COVER,,1,1,1,,,,,,,,,,,,,
45,3,,172165-73640,,"ADJUST SCREW",,1,1,1,,,,,,,,,,,,,
46,3,,172175-73450,,SPRING,,1,1,1,,,,,,,,,,,,,
47,3,,172168-73230,,SPRING,,1,1,1,,,,,,,,,,,,,
48,3,,172168-71430,,O-RING,,1,1,1,,,,,,,,,,,,,
49,3,,26450-080302,,"BOLT M 8X 30",,2,2,2,,,,,,,,,,,,,
50,3,,172165-73670,,"NUT M 6",,1,1,1,,,,,,,,,,,,,
51,3,,172168-71440,,SHIM,,2,2,2,,,,,,,,,,,,,
52,3,,172168-71450,,SHIM,,2,2,2,,,,,,,,,,,,,
53,3,,172168-71460,,SHIM,,2,2,2,,,,,,,,,,,,,
54,2,,172171-73230,,"PISTON ASSY, CONTROL",,1,1,1,,,,,,,,,,,,,
55,3,,172168-71470,,CYLINDER,,1,1,1,,,,,,,,,,,,,
56,3,,172171-73270,,PISTON,,1,1,1,,,,,,,,,,,,,
57,3,,172168-71490,,"PARALLEL PIN",,2,2,2,,,,,,,,,,,,,
58,3,,172168-71500,,"PARALLEL PIN",,1,1,1,,,,,,,,,,,,,
59,3,,172164-73220,,"O-RING ASSY",,1,1,1,,,,,,,,,,,,,
63,3,,172168-71520,,"CONICAL SPRING",,4,4,4,,,,,,,,,,,,,
64,3,,172168-71530,,RETAINER,,1,1,1,,,,,,,,,,,,,
65,3,,26450-080252,,"BOLT M 8X 25",,2,2,2,,,,,,,,,,,,,
66,2,,172175-73440,,"PUMP ASSY, GEAR",,1,1,1,,,,,,,,,,,,,
73,3,,172141-71550,,O-RING,,2,2,2,,,,,,,,,,,,,
74,3,,172141-71560,,RING,,2,2,2,,,,,,,,,,,,,
76,3,,172141-73210,,CIRCLIP,,1,1,1,,,,,,,,,,,,,
77,3,,172141-73220,,PLATE,,2,2,2,,,,,,,,,,,,,
78,3,,172141-73230,,GUIDE,,2,2,2,,,,,,,,,,,,,
79,3,,172141-73240,,"PIN, PARALLEL",,4,4,4,,,,,,,,,,,,,
80,3,,172147-73650,,O-RING,,2,2,2,,,,,,,,,,,,,
82,3,,172141-73240,,"PIN, PARALLEL",,1,1,1,,,,,,,,,,,,,
83,3,,26450-080402,,"BOLT 8X40",,4,4,4,,,,,,,,,,,,,
```

https://truckmanualshub.com/

```
87,3,,172164-73770,,"FRAME, MIDDLE",,1,1,1,,,,,,,,,,,,,
88,3,,172164-73830,,COUPLING,,1,1,1,,,,,,,,,,,,,
89,3,,172164-73840,,BUSH,,1,1,1,,,,,,,,,,,,,
90,3,,172164-73850,,"HEX.HEAD BOLT",,4,4,4,,,,,,,,,,,,,
91,3,,172164-73870,,COUPLING,,1,1,1,,,,,,,,,,,,,
92,3,,172165-73870,,O-RING,,1,1,1,,,,,,,,,,,,,
93,3,,172164-73880,,O-RING,,1,1,1,,,,,,,,,,,,,
94,3,,172164-73890,,O-RING,,1,1,1,,,,,,,,,,,,,
95,3,,24315-000100,,"O-RING 1B P-10.0",,3,3,3,,,,,,,,,,,,,
96,3,,26450-100252,,"BOLT M10X 25",,2,2,2,,,,,,,,,,,,,
98,2,,172164-73461,,VALVE,,1,1,1,,,,,,,,,,,,,
99,3,,172164-73010,,"SOLENOID (A)",,1,1,1,,,,,,,,,,,,,
100,3,,172164-73020,,"SOLENOID (B)",,1,1,1,,,,,,,,,,,,,
101,3,,172164-73030,,COVER,,1,1,1,,,,,,,,,,,,,
102,3,,172164-73040,,BAND,,2,2,2,,,,,,,,,,,,,
103,3,,172162-74820,,SPRING,,2,2,2,,,,,,,,,,,,,
104,3,,172162-74860,,BOLT,,4,4,4,,,,,,,,,,,,,
105,3,,24311-000160,,"O-RING 1A P-16.0",,4,4,4,,,,,,,,,,,,,
106,3,,26450-080252,,"BOLT M 8X 25",,2,2,2,,,,,,,,,,,,,
107,2,,172164-73470,,"VALVE ASSY, RELIEF",,1,1,1,,,,,,,,,,,,,
110,3,,172164-73380,,"SPRING, RETERN",,1,1,1,,,,,,,,,,,,,
111,3,,172164-73390,,NUT,,1,1,1,,,,,,,,,,,,,
112,3,,172164-73990,,SHIM,,1,1,1,,,,,,,,,,,,,
113,3,,172141-74430,,O-RING,,1,1,1,,,,,,,,,,,,,
116,2,,172164-73490,,CLAMP,,1,1,1,,,,,,,,,,,,,
117,2,,172164-73500,,WASHER,,1,1,1,,,,,,,,,,,,,
118,2,,172162-74860,,BOLT,,1,1,1,,,,,,,,,,,,,
```

https://truckmanualshub.com/

Fig. 46 油圧ポンプ＆軸継手（フロントマルチ）（AS）
HYD. OIL PUMP & JOINT (FRONT MULTI) (AS)

COUNTRY	JP	AS	EX
APPLI-CATION	○	○	—

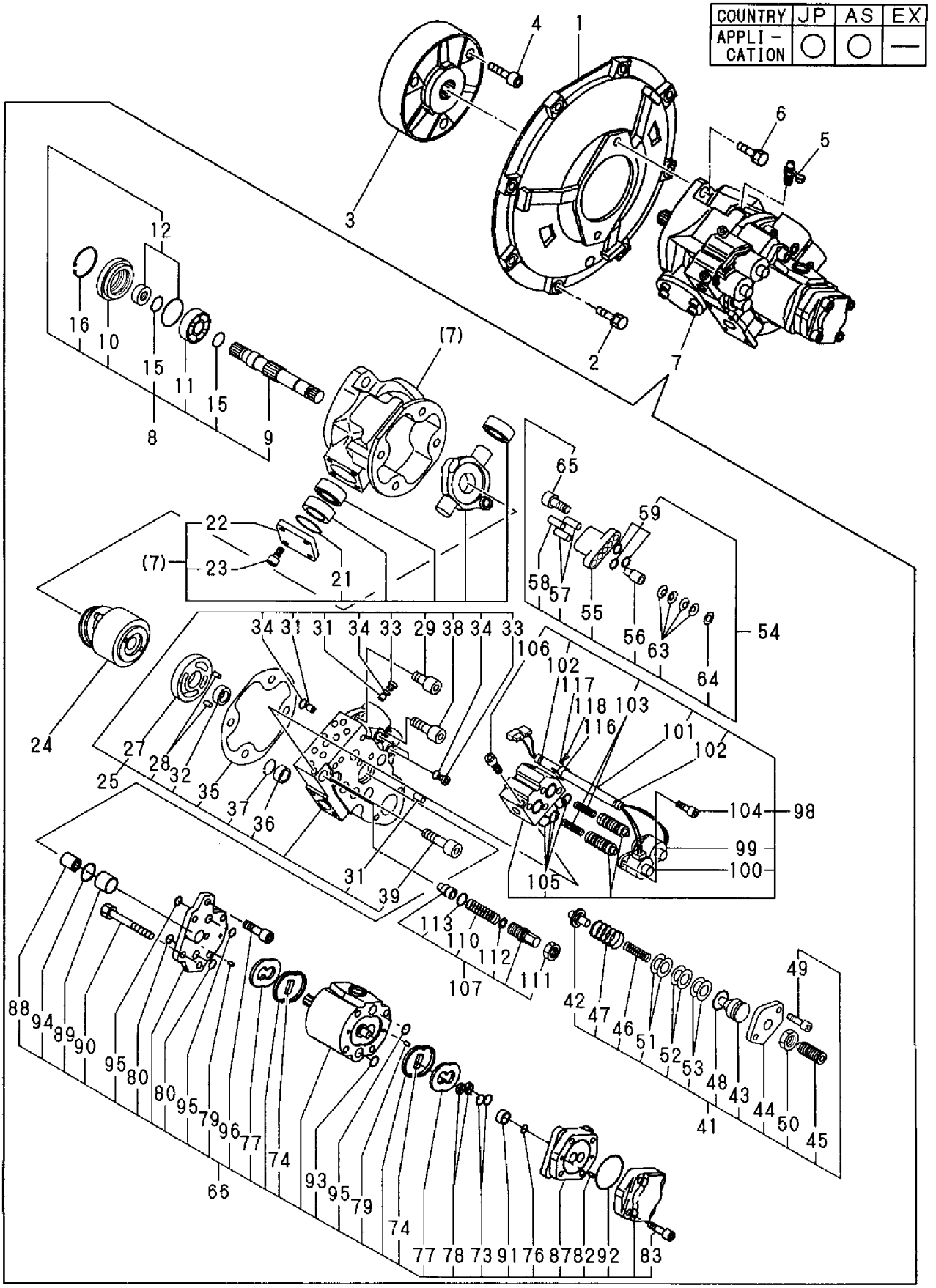

https://truckmanualshub.com/

```
1,1,,172141-71701-1,,"CYLINDER,BOOM(GREEN)",1,,,,,,,,,,,,,,,,,
1A,1,,172141-71701-2,,"CYLINDER,BOOM(YELLOW",,,1,,,,,,,,,,,,,,,,
2,2,,172141-71711-1,,"TUBE W/BUSH  (GREEN)",1,,,,,,,,,,,,,,,,,
2A,2,,172141-71711-2,,"TUBE W/BUSH (YELLOW)",,,1,,,,,,,,,,,,,,,,
3,3,,172143-72331,,"BUSH 38 50",1,,1,,,,,,,,,,,,,,
4,3,,172168-81270,,"SEAL,DUST 38X50X4",2,,2,,,,,,,,,,,,,,,
5,2,,172141-72322,,"ROD COMP",1,,1,,,,,,,,,,,,,,
6,3,,172143-72331,,"BUSH 38 50",1,,1,,,,,,,,,,,,,,
7,3,,172168-81270,,"SEAL,DUST 38X50X4",2,,2,,,,,,,,,,,,,,,
8,2,,172141-72140,,"HEAD 75 40",1,,1,,,,,,,,,,,,,,
9,3,,933135-14600,,"BUSH 40 30, ROD",1,,1,,,,,,,,,,,,,,
11,2,,172141-99350,,"CYLINDER KIT, BOOM",1,,1,,,,,,,,,,,,,,
12,3,,172141-71880,,"SEAL SET, HEAD",1,,1,,,,,,,,,,,,,,
18,3,,172141-72190,,"WASHER 75",1,,1,,,,,,,,,,,,,,
19,3,,172141-71911,,"SEAL SET, PISTON",1,,1,,,,,,,,,,,,,,
23,3,,22252-000561,,"CIRCLIP   56",1,,1,,,,,,,,,,,,,,
24,3,,933111-26600,,"RING 55, SPRING",1,,1,,,,,,,,,,,,,,
25,2,,172141-72220,,"PLUNGER 44C, CUSHION",1,,1,,,,,,,,,,,,,,,
26,2,,172141-72250,,"U-NUT M27",1,,1,,,,,,,,,,,,,,
27,2,,172137-72730,,"RING 44B, CUSHION",1,,1,,,,,,,,,,,,,,,
28,2,,172141-73051,,"PISTON 75 27 A",1,,1,,,,,,,,,,,,,,
29,2,,172141-73061,,"PISTON 75 27 B",1,,1,,,,,,,,,,,,,,
30,2,,24761-020000,,"NIPPLE PT1/8,GREASE",2,,2,,,,,,,,,,,,,,,
31,1,,172141-72592,,"COVER, SLIDE",1,,,,,,,,,,,,,,,,
31A,1,,172141-72592-2,,"COVER SLIDE",,,1,,,,,,,,,,,,,,,
32,1,,172162-61770,,"GUIDE,SLIDE",2,,2,,,,,,,,,,,,,,
33,1,,22217-100000,,"SPRING WASHER 10",1,,1,,,,,,,,,,,,,,
34,1,,26116-100162,,"BOLT M10X 16 PLATED",1,,1,,,,,,,,,,,,,,,
35,1,,933147-03400,,"WASHER, BRAKE ARM",1,,1,,,,,,,,,,,,,,
36,1,,933168-14170,,"SPRING 16",2,,2,,,,,,,,,,,,,,
```

https://truckmanualshub.com/

Fig. 47 ブームシリンダ（キャビン） BOOM CYLINDER (CABIN)

見出しNo．1は、見出しNo．2から30を含みます。
1 inc．2 ～ 30

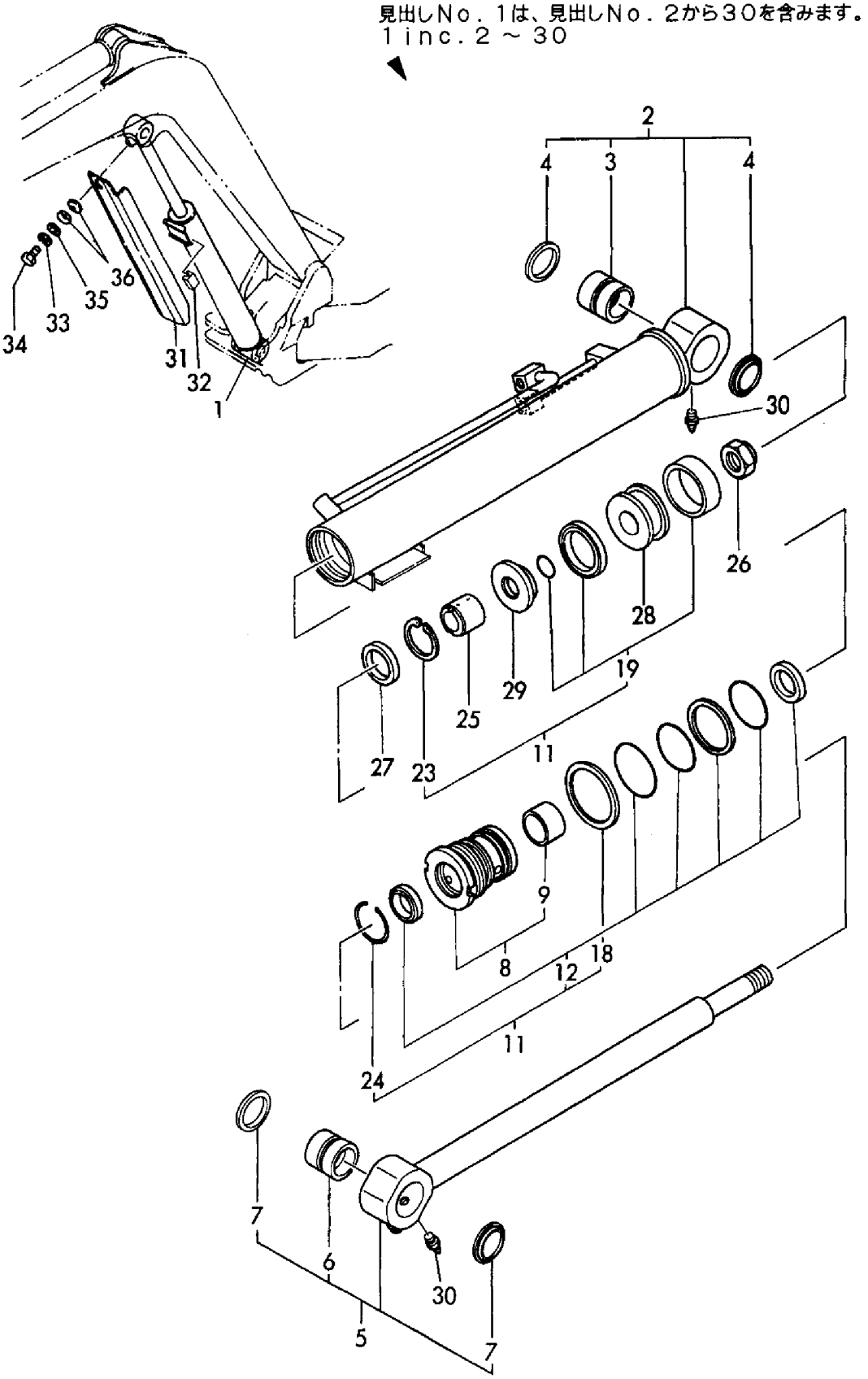

https://truckmanualshub.com/

```
1,1,,172141-72273-1,,"CYLINDER,BOOM(GREEN)",,1,,,,,,,,,,,,,,,
2,2,,172141-72140,,"HEAD 75 40",,1,,,,,,,,,,,,,,,
3,3,,933135-14600,,"BUSH 40 30, ROD",,1,,,,,,,,,,,,,,,
5,2,,172141-99350,,"CYLINDER KIT, BOOM",,1,,,,,,,,,,,,,,,
6,3,,172141-71880,,"SEAL SET, HEAD",,1,,,,,,,,,,,,,,,
12,3,,172141-72190,,"WASHER 75",,1,,,,,,,,,,,,,,,
13,3,,172141-71911,,"SEAL SET, PISTON",,1,,,,,,,,,,,,,,,
17,3,,22252-000561,,"CIRCLIP   56",,1,,,,,,,,,,,,,,,
18,3,,933111-26600,,"RING 55, SPRING",,1,,,,,,,,,,,,,,,
19,2,,172141-72220,,"PLUNGER 44C, CUSHION",,1,,,,,,,,,,,,,,,
20,2,,172141-72250,,"U-NUT M27",,1,,,,,,,,,,,,,,,
21,2,,172141-72282-1,,"TUBE W/BUSH  (GREEN)",,1,,,,,,,,,,,,,,,
22,3,,172143-72331,,"BUSH 38 50",,1,,,,,,,,,,,,,,,
23,3,,172168-81270,,"SEAL,DUST 38X50X4",,2,,,,,,,,,,,,,,,
24,2,,172141-72322,,"ROD COMP",,1,,,,,,,,,,,,,,,
25,3,,172143-72331,,"BUSH 38 50",,1,,,,,,,,,,,,,,,
26,3,,172168-81270,,"SEAL,DUST 38X50X4",,2,,,,,,,,,,,,,,,
27,2,,172137-72730,,"RING 44B, CUSHION",,1,,,,,,,,,,,,,,,
28,2,,172141-73051,,"PISTON 75 27 A",,1,,,,,,,,,,,,,,,
29,2,,172141-73061,,"PISTON 75 27 B",,1,,,,,,,,,,,,,,,
30,2,,24761-020000,,"NIPPLE PT1/8,GREASE",,2,,,,,,,,,,,,,,,
31,1,,172141-72592,,"COVER, SLIDE",,1,,,,,,,,,,,,,,,
32,1,,933147-03400,,"WASHER, BRAKE ARM",,1,,,,,,,,,,,,,,,
33,1,,26013-100162,,"BOLT M10X 16",,1,,,,,,,,,,,,,,,
34,1,,22217-100000,,"SPRING WASHER 10",,1,,,,,,,,,,,,,,,
35,1,,933168-14170,,"SPRING 16",,2,,,,,,,,,,,,,,,
36,1,,172162-61770,,"GUIDE,SLIDE",,2,,,,,,,,,,,,,,,
```

https://truckmanualshub.com/

Fig.48 ブームシリンダ（キャノピ） BOOM CYLINDER (CANOPY)

見出しNo．1は、見出しNo．2から30を含みます。
1 inc. 2 ～ 30

COUNTRY	JP	AS	EX
Fig.No.	48	49	48

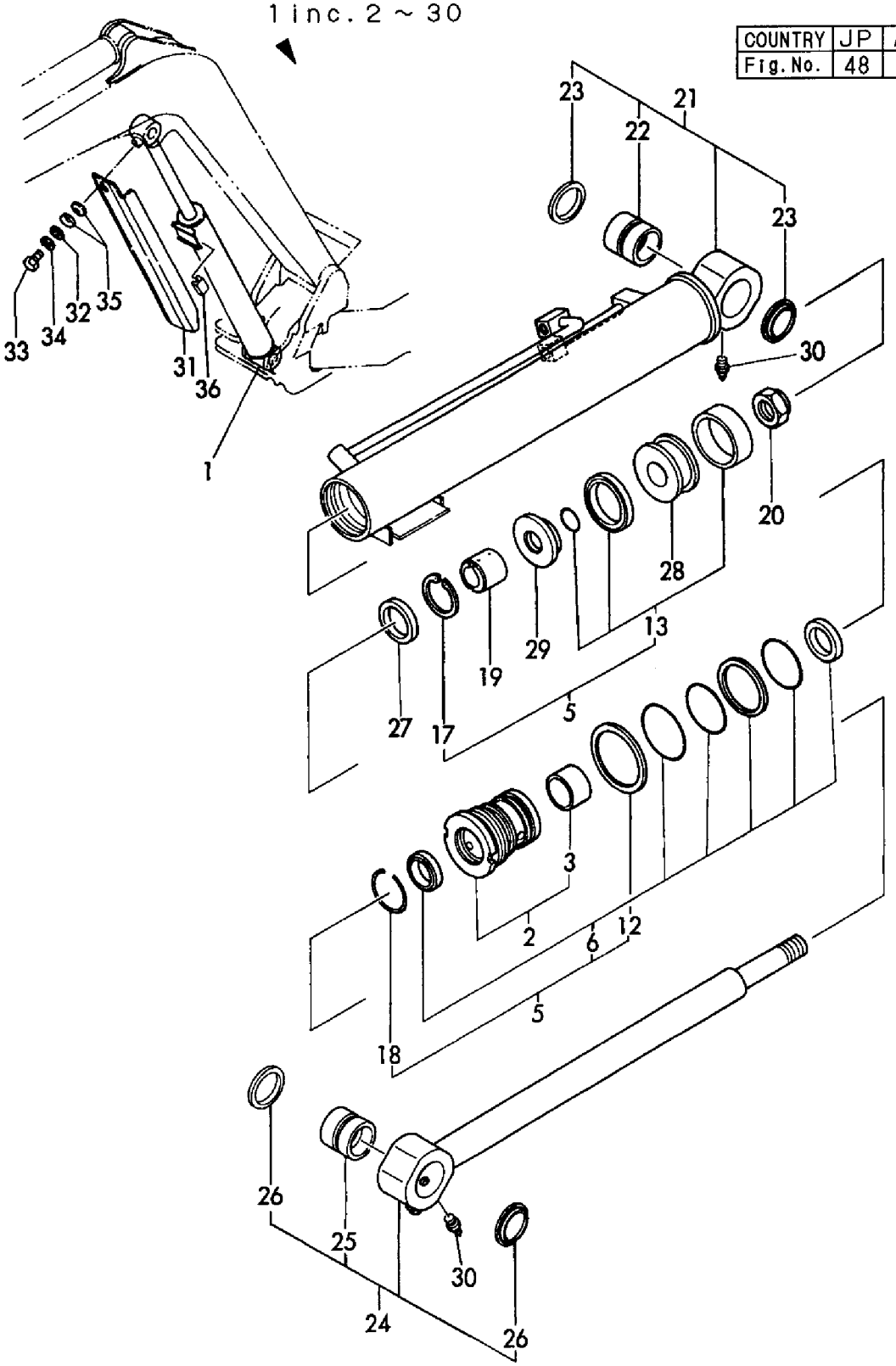

https://truckmanualshub.com/

```
1,1,,172141-71701-2,,"CYLINDER,BOOM(YELLOW",,,,1,,,,,,,,,,,,,
2,2,,172141-71711-2,,"TUBE W/BUSH (YELLOW)",,,,1,,,,,,,,,,,,,
3,3,,172143-72331,,"BUSH 38 50",,,,1,,,,,,,,,,,,,
4,3,,172168-81270,,"SEAL,DUST 38X50X4",,,,2,,,,,,,,,,,,,
5,2,,172141-72322,,"ROD COMP",,,,1,,,,,,,,,,,,,
6,3,,172143-72331,,"BUSH 38 50",,,,1,,,,,,,,,,,,,
7,3,,172168-81270,,"SEAL,DUST 38X50X4",,,,2,,,,,,,,,,,,,
8,2,,172141-72140,,"HEAD 75 40",,,,1,,,,,,,,,,,,,
9,3,,933135-14600,,"BUSH 40 30, ROD",,,,1,,,,,,,,,,,,,
11,2,,172141-99350,,"CYLINDER KIT, BOOM",,,,1,,,,,,,,,,,,,
12,3,,172141-71880,,"SEAL SET, HEAD",,,,1,,,,,,,,,,,,,
18,3,,172141-72190,,"WASHER 75",,,,1,,,,,,,,,,,,,
19,3,,172141-71911,,"SEAL SET, PISTON",,,,1,,,,,,,,,,,,,
23,3,,22252-000561,,"CIRCLIP   56",,,,1,,,,,,,,,,,,,
24,3,,933111-26600,,"RING 55, SPRING",,,,1,,,,,,,,,,,,,
25,2,,172141-72220,,"PLUNGER 44C, CUSHION",,,,1,,,,,,,,,,,,,
26,2,,172141-72250,,"U-NUT M27",,,,1,,,,,,,,,,,,,
27,2,,172137-72730,,"RING 44B, CUSHION",,,,1,,,,,,,,,,,,,
28,2,,172141-73051,,"PISTON 75 27 A",,,,1,,,,,,,,,,,,,
29,2,,172141-73061,,"PISTON 75 27 B",,,,1,,,,,,,,,,,,,
30,2,,24761-020000,,"NIPPLE PT1/8,GREASE",,,,2,,,,,,,,,,,,,
31,1,,172141-72592-2,,"COVER SLIDE",,,,1,,,,,,,,,,,,,
32,1,,172162-61770,,"GUIDE,SLIDE",,,,2,,,,,,,,,,,,,
33,1,,22217-100000,,"SPRING WASHER 10",,,,1,,,,,,,,,,,,,
34,1,,26116-100162,,"BOLT M10X 16 PLATED",,,,1,,,,,,,,,,,,,
35,1,,933147-03400,,"WASHER, BRAKE ARM",,,,1,,,,,,,,,,,,,
36,1,,933168-14170,,"SPRING 16",,,,2,,,,,,,,,,,,,
```

https://truckmanualshub.com/

Fig.49 ブームシリンダ（キャノピ）（AS） BOOM CYLINDER (CANOPY) (AS)

見出しNo．1は、見出しNo．2から30を含みます。
1 inc. 2 ～ 30

COUNTRY	JP	AS	EX
Fig.No.	48	49	48

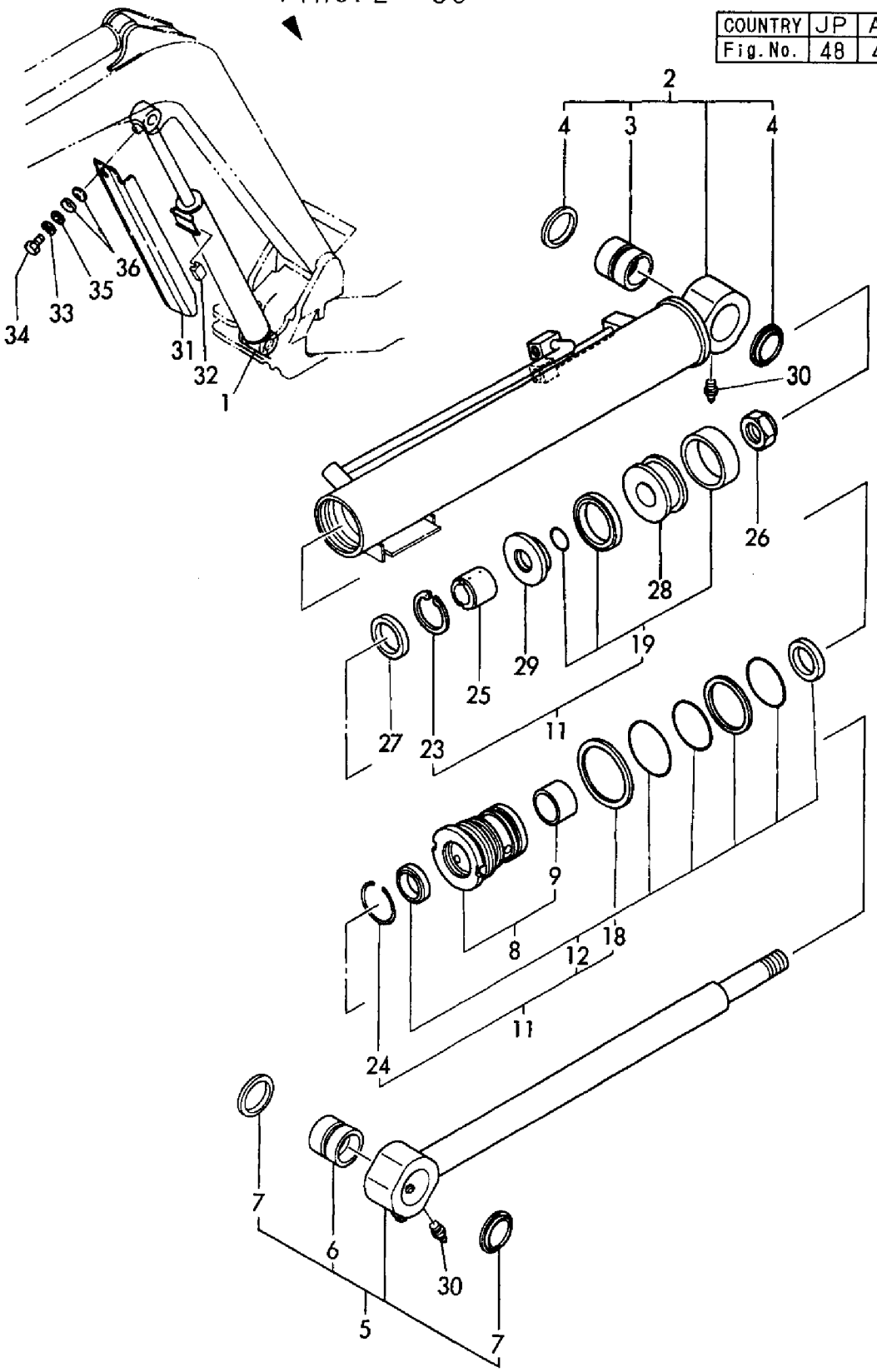

https://truckmanualshub.com/

```
1,1,,172141-72351-1,,"CYLINDER,ARM (GREEN)",1,1,,,,,,,,,,,,,,,
1A,1,,172141-72351-2,,"CYLINDER,ARM(YELLOW)",,,1,1,,,,,,,,,,,,,
2,2,,172141-99380,,"CYLINDER KIT, ARM",1,1,1,1,,,,,,,,,,,,,
3,3,,172141-71890,,"SEAL SET, CYL.HEAD",1,1,1,1,,,,,,,,,,,,,
8,3,,172141-72190,,"WASHER 75",1,1,1,1,,,,,,,,,,,,,
9,3,,933111-26600,,"RING 55, SPRING",1,1,1,1,,,,,,,,,,,,,
10,3,,172148-72930,,"SEAL SET, PISTON",1,1,1,1,,,,,,,,,,,,,
13,2,,172141-72250,,"U-NUT M27",1,1,1,1,,,,,,,,,,,,,
14,2,,172141-72361-1,,"TUBE W/BUSH (GREEN)",1,1,,,,,,,,,,,,,,,
14A,2,,172141-72361-2,,"TUBE W/BUSH (YELLOW)",,,1,1,,,,,,,,,,,,,,
15,3,,172171-72150,,"BUSH 38X50X40",1,1,1,1,,,,,,,,,,,,,
16,3,,172168-81270,,"SEAL,DUST 38X50X4",2,2,2,2,,,,,,,,,,,,,
17,2,,172141-72381,,"ROD W/BUSH, ARM",1,1,1,1,,,,,,,,,,,,,
18,3,,172171-72150,,"BUSH 38X50X40",1,1,1,1,,,,,,,,,,,,,
19,3,,172168-81270,,"SEAL,DUST 38X50X4",2,2,2,2,,,,,,,,,,,,,
20,2,,172141-72690,,"HEAD 75 40 W/BUSH",1,1,1,1,,,,,,,,,,,,,
21,3,,933135-14600,,"BUSH 40 30, ROD",1,1,1,1,,,,,,,,,,,,,
23,2,,24761-040000,,"NIPPLE B,GREASE",2,2,2,2,,,,,,,,,,,,,
24,2,,172175-72470,,"PISTON 75",1,1,1,1,,,,,,,,,,,,,
```

https://truckmanualshub.com/

Fig.50 アームシリンダ ARM CYLINDER

見出しNo．1は、見出しNo．2から24を含みます。
1 inc．2 ～ 24

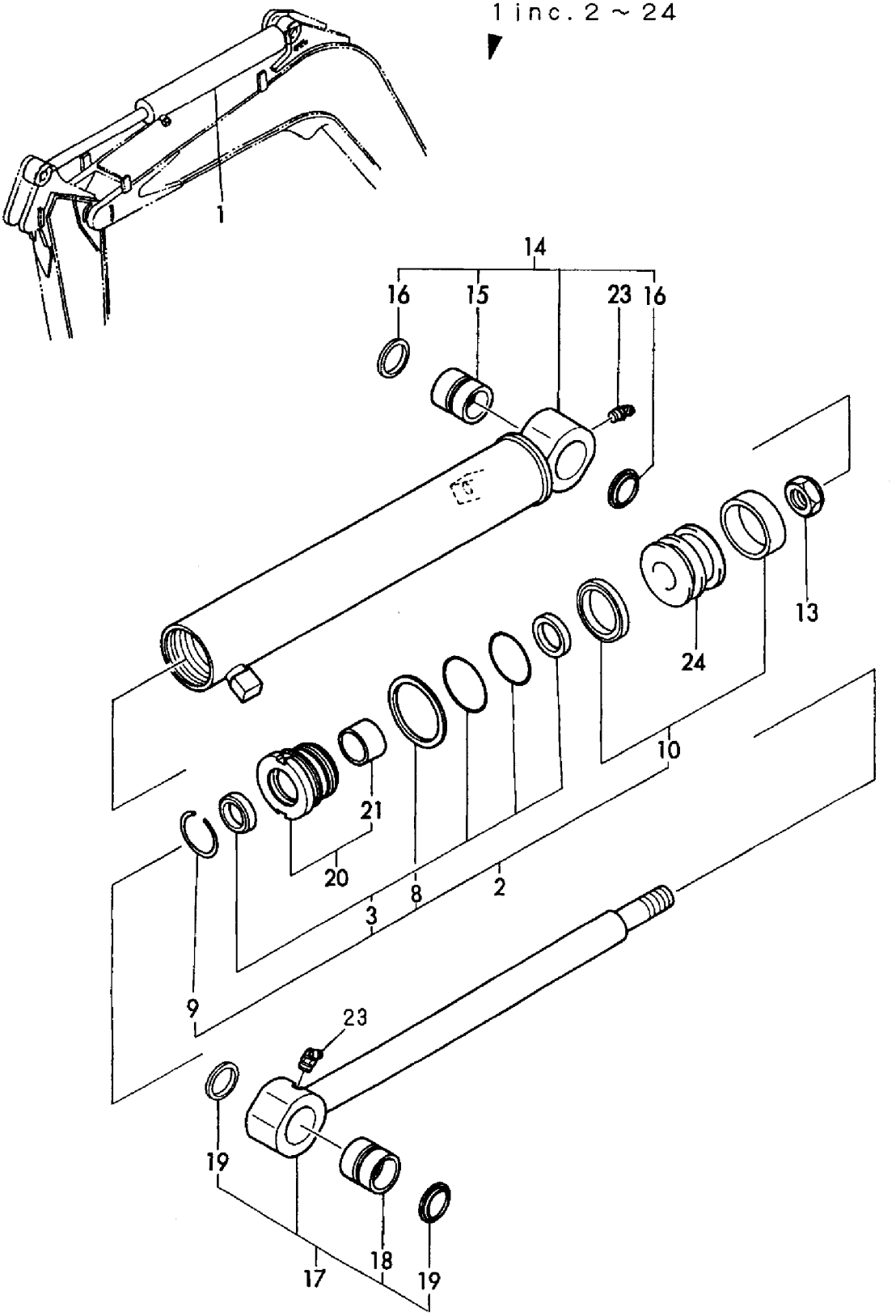

https://truckmanualshub.com/

```
1,1,,172141-72451-1,,"CYLINDER,BUCKET(GREE",1,1,,,,,,,,,,,,,,,
1A,1,,172141-72451-2,,"CYLINDER,BUCKET(YELL",,,1,1,,,,,,,,,,,,,
2,2,,172141-72461-1,,"TUBE W/BUSH (GREEN)",1,1,,,,,,,,,,,,,,,
2A,2,,172141-72461-2,,"TUBE W/BUSH (YELLOW)",,,1,1,,,,,,,,,,,,,
3,3,,172141-72561,,"BUSH 35 40 A, PIN",1,1,1,1,,,,,,,,,,,,,
4,3,,172171-81280,,"SEAL 35X45X4",2,2,2,2,,,,,,,,,,,,,
5,2,,172141-72511,,"ROD, BUCKET",1,1,1,1,,,,,,,,,,,,,
6,3,,172141-72561,,"BUSH 35 40 A, PIN",1,1,1,1,,,,,,,,,,,,,
7,3,,172171-81280,,"SEAL 35X45X4",2,2,2,2,,,,,,,,,,,,,
8,2,,172141-72540,,"HEAD 6035, CYLINDER",1,1,1,1,,,,,,,,,,,,,
9,3,,933111-01600,,"BUSH 35 30, ROD",1,1,1,1,,,,,,,,,,,,,
11,2,,172171-72120,,PISTON,1,1,1,1,,,,,,,,,,,,,
12,2,,172149-99380,,"CYLINDER KIT, BUCKET",1,1,1,1,,,,,,,,,,,,,
13,3,,172141-71900,,"SEAL SET, HEAD",1,1,1,1,,,,,,,,,,,,,
18,3,,933125-59600,,"WASHER 60 B, LOCK",1,1,1,1,,,,,,,,,,,,,
19,3,,172141-73090,,"RING 50, SPRING",1,1,1,1,,,,,,,,,,,,,
20,3,,172137-72452,,"SEAL SET 60A, PISTON",1,1,1,1,,,,,,,,,,,,,
23,2,,24761-040000,,"NIPPLE B,GREASE",1,1,1,1,,,,,,,,,,,,,
24,2,,172171-72130,,"U-NUT M24",1,1,1,1,,,,,,,,,,,,,
```

https://truckmanualshub.com/

Fig.51 バケットシリンダ BUCKET CYLINDER

見出しNo．1は、見出しNo．2から24を含みます。
1 inc．2 ～ 24

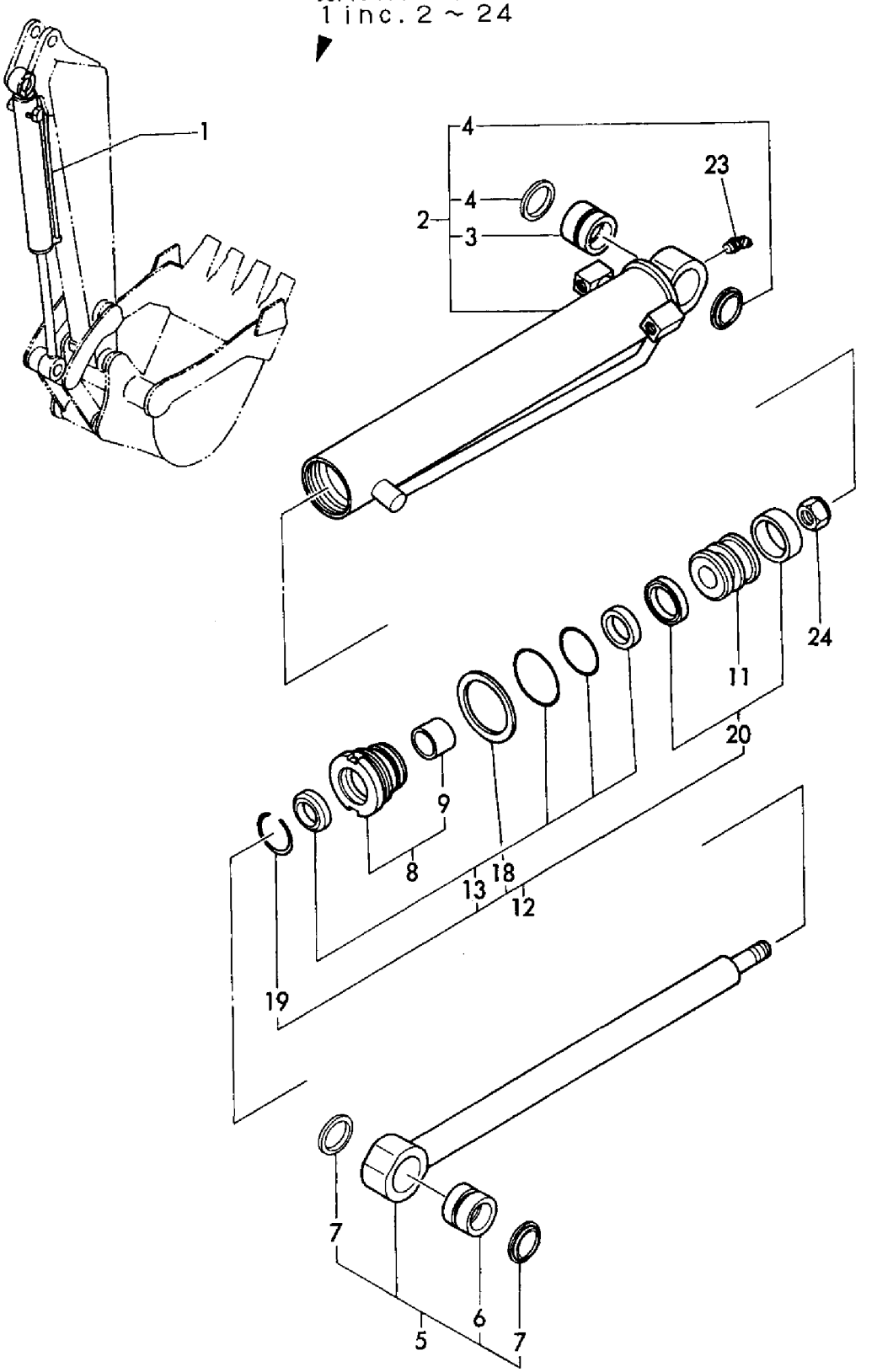

https://truckmanualshub.com/

```
1,1,,172171-72200,,"CYLINDER COMP.,SWING",1,1,1,1,,,,,,,,,,,,,
2,2,,172141-71880,,"SEAL SET, HEAD",1,1,1,1,,,,,,,,,,,,,
8,2,,172141-72250,,"U-NUT M27",1,1,1,1,,,,,,,,,,,,,
9,2,,172141-72190,,"WASHER 75",1,1,1,1,,,,,,,,,,,,,
10,2,,172137-72710,,"COLLAR 40B, CUSHION",1,1,1,1,,,,,,,,,,,,,
11,2,,172137-72720,,"COLLAR 40A, CUSHION",1,1,1,1,,,,,,,,,,,,,
12,2,,172137-72730,,"RING 44B, CUSHION",1,1,1,1,,,,,,,,,,,,,
13,2,,172171-72210,,"TUBE W/BUSH, SWING",1,1,1,1,,,,,,,,,,,,,
14,3,,172168-72240,,"BUSH 38X50X40",1,1,1,1,,,,,,,,,,,,,
15,3,,172168-81270,,"SEAL,DUST 38X50X4",2,2,2,2,,,,,,,,,,,,,
16,2,,172141-71921,,"SEAL SET,PISTON",1,1,1,1,,,,,,,,,,,,,
21,2,,172171-72350,,"ROD ASSY, SWING",1,1,1,1,,,,,,,,,,,,,
22,3,,172168-72240,,"BUSH 38X50X40",1,1,1,1,,,,,,,,,,,,,
23,3,,172168-81270,,"SEAL,DUST 38X50X4",2,2,2,2,,,,,,,,,,,,,
24,2,,172141-72140,,"HEAD 75 40",1,1,1,1,,,,,,,,,,,,,
25,3,,933135-14600,,"BUSH 40 30, ROD",1,1,1,1,,,,,,,,,,,,,
27,2,,933111-26600,,"RING 55, SPRING",1,1,1,1,,,,,,,,,,,,,
28,2,,172137-72700,,"RING 40A, CUSHION",1,1,1,1,,,,,,,,,,,,,
29,2,,172141-72930,,"PLUGER 44, CUSHION",1,1,1,1,,,,,,,,,,,,,
30,2,,172141-73051,,"PISTON 75 27 A",1,1,1,1,,,,,,,,,,,,,
31,2,,172141-73061,,"PISTON 75 27 B",1,1,1,1,,,,,,,,,,,,,
32,2,,172142-72810,,"CIRCLIP 22",1,1,1,1,,,,,,,,,,,,,
33,2,,22252-000561,,"CIRCLIP   56",1,1,1,1,,,,,,,,,,,,,
34,2,,24761-020000,,"NIPPLE PT1/8,GREASE",1,1,1,1,,,,,,,,,,,,,
35,1,,172171-72260-1,,"COVER,SWING (GREEN)",,1,1,1,,,,,,,,,,,,,
36,1,,933147-03400,,"WASHER, BRAKE ARM",,1,1,1,,,,,,,,,,,,,
37,1,,26013-100162,,"BOLT M10X 16",1,1,1,1,,,,,,,,,,,,,
38,1,,22217-100000,,"SPRING WASHER 10",1,1,1,1,,,,,,,,,,,,,
39,1,,933168-14170,,"SPRING 16",,2,2,2,,,,,,,,,,,,,
40,1,,22157-100000,,"WASHER 10",1,,1,,,,,,,,,,,,,,
```

https://truckmanualshub.com/

Fig. 52 スイングシリンダ SWING CYLINDER

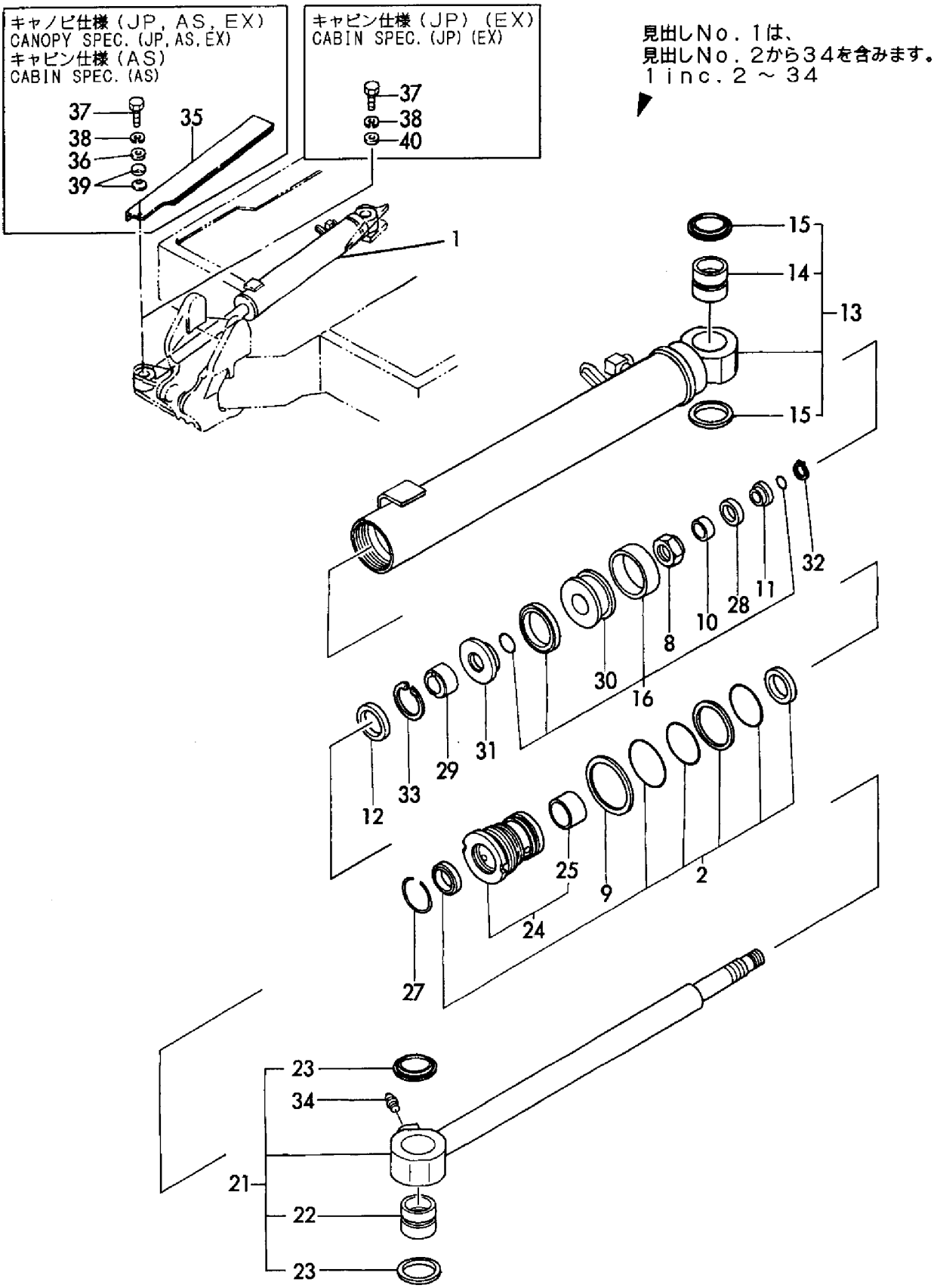

https://truckmanualshub.com/

```
1,1,,172141-72601,,"CYLINDER ASSY, BLADE",1,1,1,1,,,,,,,,,,,,,
2,2,,172141-71890,,"SEAL SET, CYL.HEAD",1,1,1,1,,,,,,,,,,,,,
7,2,,172141-72190,,"WASHER 75",1,1,1,1,,,,,,,,,,,,,
8,2,,172141-72250,,"U-NUT M27",1,1,1,1,,,,,,,,,,,,,
9,2,,172141-72611,,"TUBE ASSY, BLADE",1,1,1,1,,,,,,,,,,,,,
10,3,,172168-72240,,"BUSH 38X50X40",1,1,1,1,,,,,,,,,,,,,
11,3,,172168-81270,,"SEAL,DUST 38X50X4",2,2,2,2,,,,,,,,,,,,,
12,2,,172141-72671,,"ROD, BLADE",1,1,1,1,,,,,,,,,,,,,
13,3,,172168-72240,,"BUSH 38X50X40",1,1,1,1,,,,,,,,,,,,,
14,3,,172168-81270,,"SEAL,DUST 38X50X4",2,2,2,2,,,,,,,,,,,,,
15,2,,172141-72690,,"HEAD 75 40 W/BUSH",1,1,1,1,,,,,,,,,,,,,
16,3,,933135-14600,,"BUSH 40 30, ROD",1,1,1,1,,,,,,,,,,,,,
18,2,,933111-26600,,"RING 55, SPRING",1,1,1,1,,,,,,,,,,,,,
19,2,,172148-72930,,"SEAL SET, PISTON",1,1,1,1,,,,,,,,,,,,,
22,2,,172175-72470,,"PISTON 75",1,1,1,1,,,,,,,,,,,,,
```

https://truckmanualshub.com/

Fig.53 ブレードシリンダ BLADE CYLINDER

見出しNo．1は、見出しNo．2から22を含みます。
1 inc．2 ～ 22

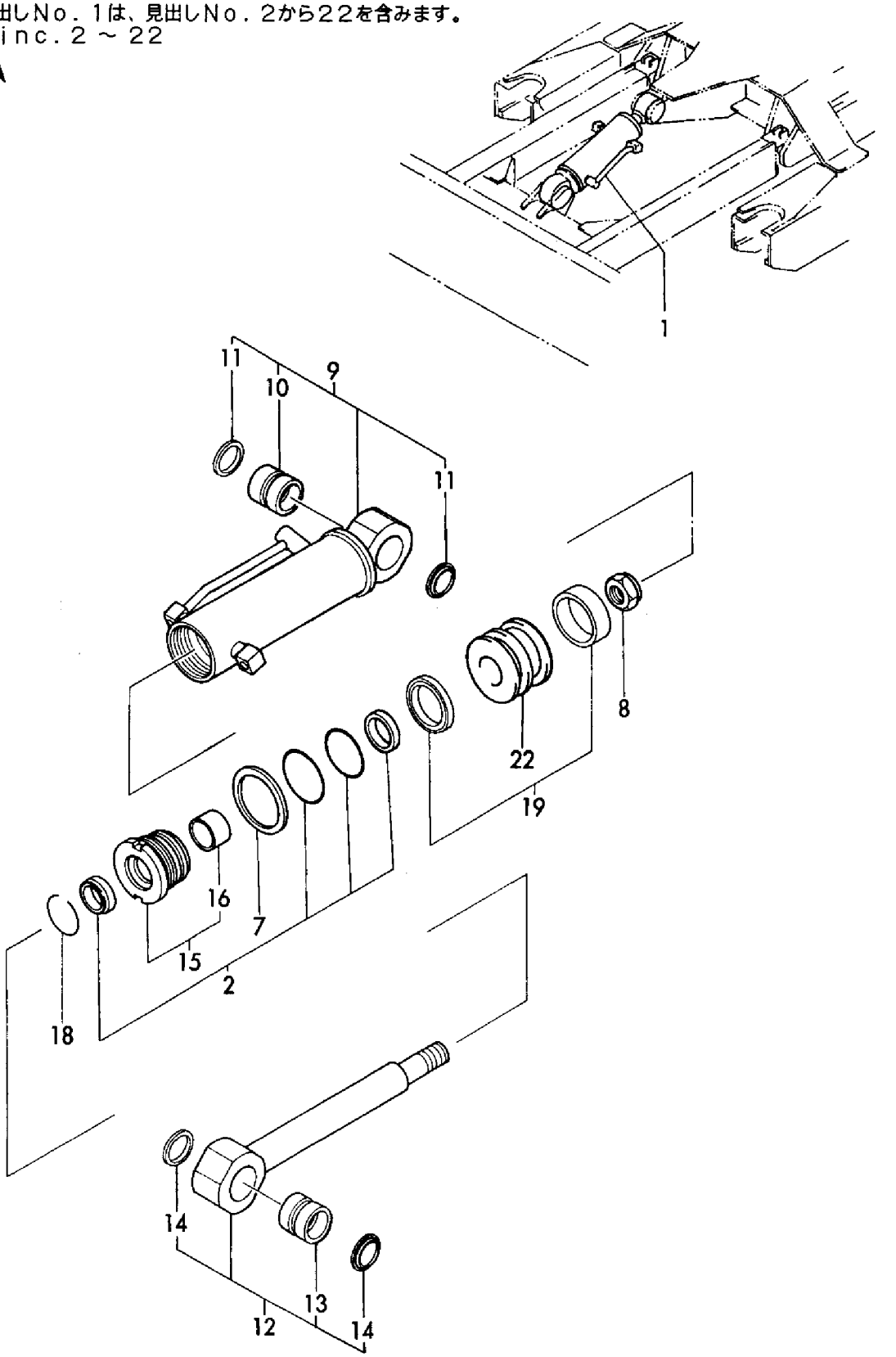

https://truckmanualshub.com/

```
1,1,,172141-73351,,"MOTOR ASSY, DRIVE",2,2,2,2,,,,,,,,,,,,,
4,3,,172141-70030,,"BEARING, ANGULAR",2,2,2,2,,,,,,,,,,,,,
5,3,,172141-70040,,"NUT, RING",2,2,2,2,,,,,,,,,,,,,
6,3,,172141-70060,,"GEAR(B), PLANETARY",8,8,8,8,,,,,,,,,,,,,
7,3,,172141-70070,,"CAGE & ROLLER",8,8,8,8,,,,,,,,,,,,,
8,3,,172141-70080,,COLLAR,8,8,8,8,,,,,,,,,,,,,
9,3,,172141-70090,,"WASHER, THRUST",8,8,8,8,,,,,,,,,,,,,
10,3,,172141-70100,,"PLATE, THRUST",2,2,2,2,,,,,,,,,,,,,
11,3,,172141-70110,,SCREW,8,8,8,8,,,,,,,,,,,,,
12,3,,172141-70120,,"GEAR, SUN",2,2,2,2,,,,,,,,,,,,,
13,3,,172141-70130,,HOLDER,2,2,2,2,,,,,,,,,,,,,
14,3,,172141-70140,,"GEAR(A), PLANETARY",6,6,6,6,,,,,,,,,,,,,
15,3,,172141-70150,,"CAGE & ROLLER",6,6,6,6,,,,,,,,,,,,,
16,3,,172141-70160,,"INNER LACE",6,6,6,6,,,,,,,,,,,,,
17,3,,172141-70170,,"GEAR, DRIVE",2,2,2,2,,,,,,,,,,,,,
18,3,,172141-70180,,"PLATE(T1.8), THRUST",2,2,2,2,,,,1,,,,,,,,,
19,3,,172141-70190,,"PLATE(T2.3), THRUST",2,2,2,2,,,,1,,,,,,,,,
20,3,,172141-70200,,"PLATE(T2.8), THRUST",2,2,2,2,,,,1,,,,,,,,,
21,3,,172141-70210,,COVER,2,2,2,2,,,,,,,,,,,,,
23,3,,172141-70230,,WIRE,2,2,2,2,,,,,,,,,,,,,
24,3,,172122-73430,,PLUG,4,4,4,4,,,,,,,,,,,,,
25,3,,22242-000350,,"CIRCLIP   35",2,2,2,2,,,,,,,,,,,,,
26,3,,22351-050016,,"SPRING PIN 5X16",6,6,6,6,,,,,,,,,,,,,
27,3,,23871-020000,,"PLUG PT1/4,SCREW",4,4,4,4,,,,,,,,,,,,,
28,3,,23871-030000,,"PLUG PT3/8,SCREW",4,4,4,4,,,,,,,,,,,,,
29,3,,24190-050001,,"BALL 5/32",262,262,262,262,,,,,,,,,,,,,
30,2,,172142-73591,,"SHAFT ASSY",2,2,2,2,,,,,,,,,,,,,
31,3,,172171-70360,,SHAFT,2,2,2,2,,,,,,,,,,,,,
32,3,,172171-70370,,"SEAL, OIL",2,2,,,,,,,,,,,,,,,,,
32-1,3,,172638-73540,,"SEAL, OIL",2,2,2,2,,,R,,,M/#50997,,M/#50997,,,,,,
33,2,,172141-70290,,"HOLDER, SPRING",4,4,4,4,,,,,,,,,,,,,
34,2,,172141-70300,,SPRING,2,2,2,2,,,,,,,,,,,,,
35,2,,172141-70310,,"SNAP RING",2,2,2,2,,,,,,,,,,,,,
36,2,,172141-70320,,PIN,6,6,6,6,,,,,,,,,,,,,
37,2,,172141-70330,,"HOLDER, RETAINER",2,2,2,2,,,,,,,,,,,,,
38,2,,172141-70340,,"PLATE, RETAINER",2,2,2,2,,,,,,,,,,,,,
39,2,,172141-70360,,"PLATE, VALVE",2,2,2,2,,,,,,,,,,,,,
42,2,,172171-70320,,PLUNGER,2,2,2,2,,,,,,,,,,,,,
43,2,,172141-70410,,"VALVE, CHECK",4,4,4,4,,,,,,,,,,,,,
44,2,,172171-70330,,SPRING,4,4,4,4,,,,,,,,,,,,,
45,2,,172141-70430,,PLUG,4,4,4,4,,,,,,,,,,,,,
46,2,,172171-70340,,ORIFICE,4,4,4,4,,,,,,,,,,,,,
47,2,,172141-70450,,"SEAT, SPRING",4,4,4,4,,,,,,,,,,,,,
48,2,,172141-70460,,SPRING,4,4,4,4,,,,,,,,,,,,,
49,2,,172141-70470,,CAP,4,4,4,4,,,,,,,,,,,,,
50,2,,172141-70480,,PIN,2,2,2,2,,,,,,,,,,,,,
51,2,,172141-70490,,PIN,4,4,4,4,,,,,,,,,,,,,
52,2,,172141-70540,,"CYLINDER BLOCK S/A",2,2,2,2,,,,,,,,,,,,,
55,2,,23871-020000,,"PLUG PT1/4,SCREW",8,8,8,8,,,,,,,,,,,,,
56,2,,24101-060024,,"BALL BEARING",2,2,2,2,,,,,,,,,,,,,
57,2,,26450-080202,,"BOLT M 8X 20",12,12,12,12,,,,,,,,,,,,,
58,2,,24101-060040,,"BALL BEARING",2,2,2,2,,,,,,,,,,,,,
59,2,,172141-70500,,"SEAL ASSY",2,2,2,2,,,,,,,,,,,,,
60,3,,172141-70510,,"SEAL SET, REDUCTION",2,2,2,2,,,,,,,,,,,,,
63,3,,172141-70520,,"SEAL SET, MOTOR",2,2,2,2,,,,,,,,,,,,,
66,3,,172141-70530,,"SEAL SET, BASE PLATE",2,2,2,2,,,,,,,,,,,,,
69,2,,172141-70260,,PLATE,2,2,2,2,,,,,,,,,,,,,
70,2,,172141-70270,,PIN,2,2,2,2,,,,,,,,,,,,,
71,1,,26013-120302,,"BOLT W/WASHER M12X30",18,18,18,18,,,,,,,,,,,,,
```

https://truckmanualshub.com/

Fig. 54 走行モータ TRAVEL MOTOR

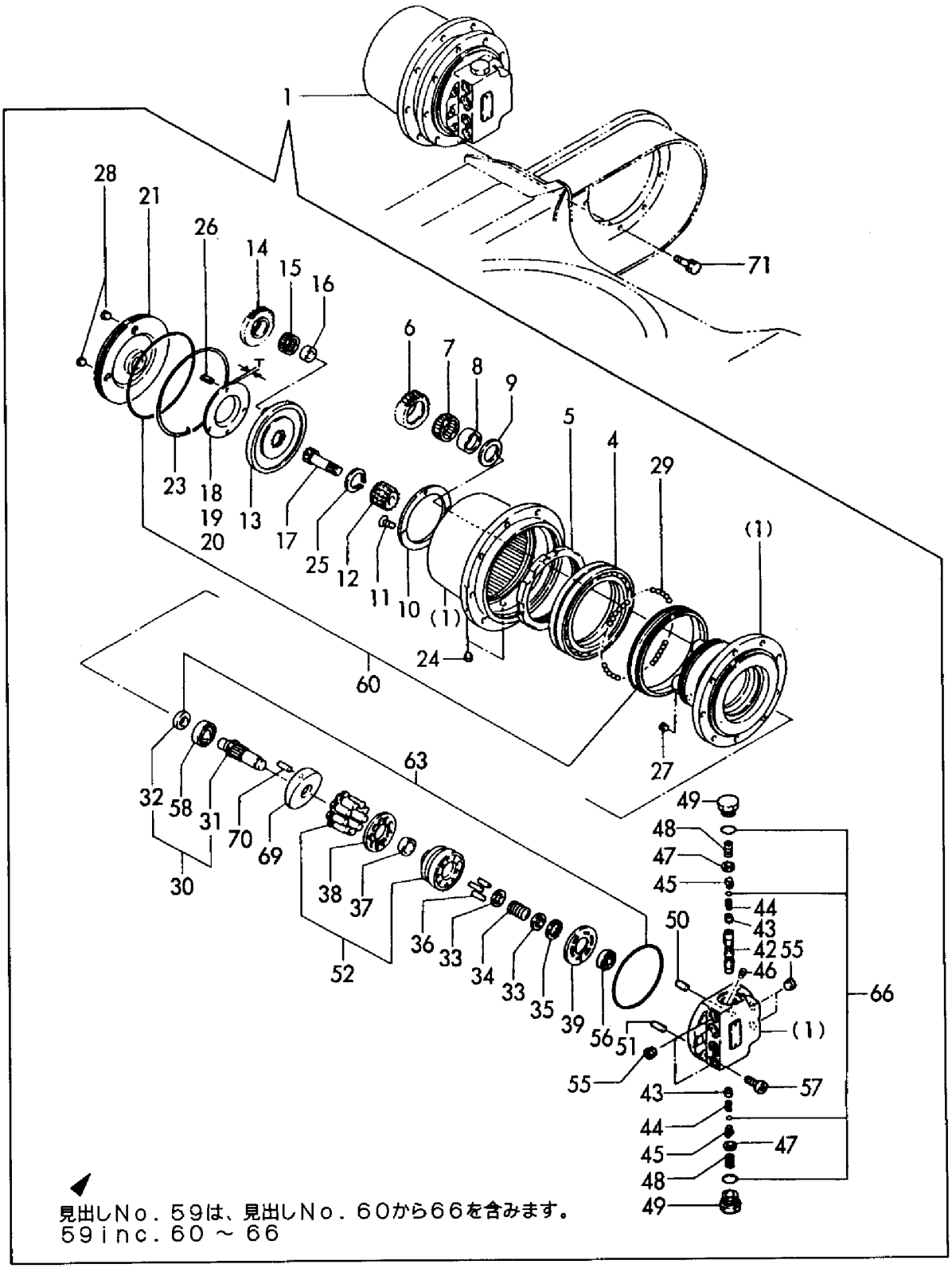

見出しNo．59は、見出しNo．60から66を含みます。
59inc．60 ～ 66

https://truckmanualshub.com/

```
1,1,,172171-73311,,"MOTOR ASSY, SWING",1,1,1,1,,,,,,,,,,,,,
2,2,,172171-73321,,"VALVE CMP.",1,1,1,1,,,,,,,,,,,,,
3,3,,172168-73340,,"VALVE BODY",1,1,1,1,,,,,,,,,,,,,
4,3,,172171-73350,,"CARTRIDGE ASSY",2,2,2,2,,,,,,,,,,,,,
5,3,,172168-73360,,"SEAL KIT",1,1,1,1,,,,,,,,,,,,,
6,3,,172168-73370,,BOLT,6,6,6,6,,,,,,,,,,,,,
7,2,,172171-73401,,"MOTOR ASSY,SWING",1,1,1,1,,,,,,,,,,,,,
8,3,,172137-70490,,PLUG,1,1,1,1,,,,,,,,,,,,,
9,3,,172137-70490,,PLUG,1,1,1,1,,,,,,,,,,,,,
10,3,,172137-70570,,PIN,2,2,2,2,,,,,,,,,,,,,
11,3,,172137-70580,,SPRING,2,2,2,2,,,,,,,,,,,,,
12,3,,172137-70590,,PLATE,1,1,1,1,,,,,,,,,,,,,
13,3,,172137-70600,,VALVE,1,1,1,1,,,,,,,,,,,,,
14,3,,172148-73350,,"PLATE, VALVE",1,1,1,1,,,,,,,,,,,,,
15,3,,172171-73410,,HOUSING,1,1,1,1,,,,,,,,,,,,,
16,3,,172171-73420,,PINION,1,1,1,1,,,,,,,,,,,,,
17,3,,172171-73430,,"BALL BEARING",1,1,1,1,,,,,,,,,,,,,
18,3,,172171-73440,,"BALL BEARING",1,1,1,1,,,,,,,,,,,,,
19,3,,172171-73460,,"RETAINING RING",1,1,1,1,,,,,,,,,,,,,
20,3,,172171-73481,,"PLATE,WEAR",1,1,1,1,,,,,,,,,,,,,
21,3,,172171-73491,,DRAIVE,1,1,1,1,,,,,,,,,,,,,
22,3,,172171-73501,,"HOUSING, VALVE",1,1,1,1,,,,,,,,,,,,,
23,3,,172171-73511,,BOLT,4,4,4,4,,,,,,,,,,,,,
24,3,,172171-73521,,"SEAL KIT",1,1,1,1,,,,,,,,,,,,,
34,3,,172168-73580,,BALL,2,2,2,2,,,,,,,,,,,,,
35,3,,172168-73590,,PLAG,2,2,2,2,,,,,,,,,,,,,
36,3,,172168-73600,,SPRING,2,2,2,2,,,,,,,,,,,,,
37,3,,172141-77250,,ROLLER,1,1,1,1,,,,,,,,,,,,,
38,3,,172141-77260,,"VALVE DRIVE",1,1,1,1,,,,,,,,,,,,,
39,1,,26013-120402,,"BOLT M12X 40",4,4,4,4,,,,,,,,,,,,,
```

https://truckmanualshub.com/

Fig.55 旋回モータ TURNING MOTOR

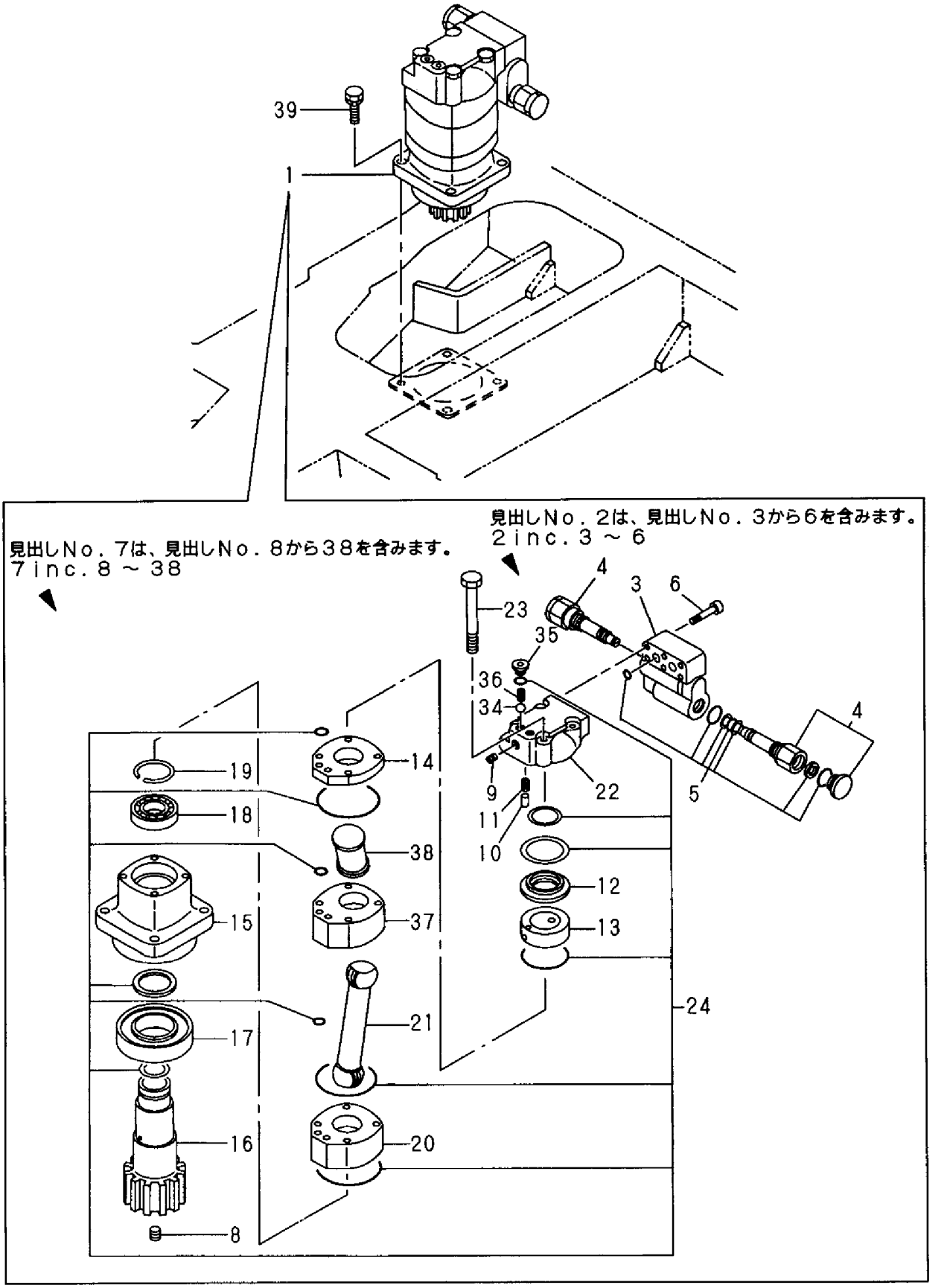

https://truckmanualshub.com/

```
1,1,,172141-73800,,"JOINT, SWIVEL",1,1,1,1,,,,,,,,,,,,,
2,2,,194630-31910,,"LINER 22.5X40X2",1,1,1,1,,,,,,,,,,,,,
3,2,,172141-73810,,"SHAFT, SWIVEL",1,1,1,1,,,,,,,,,,,,,
4,2,,172131-73830,,"FLANGE,SWIVEL",1,1,1,1,,,,,,,,,,,,,
5,2,,172141-73830,,"HUB, SWIVEL",1,1,1,1,,,,,,,,,,,,,
6,2,,172137-73860,,"SPACER, SWIVEL",1,1,1,1,,,,,,,,,,,,,
7,2,,172141-73890,,"SEAL SET, SWIVEL",1,1,1,1,,,,,,,,,,,,,
8,3,,24311-000750,,"O-RING 1A P-75.0",1,1,1,1,,,,,,,,,,,,,
9,3,,172142-73800,,"O-RING 55.76X5.7",8,8,8,8,,,,,,,,,,,,,
10,3,,24321-000700,,"O-RING 1A G-70.0",1,1,1,1,,,,,,,,,,,,,
11,2,,22242-000451,,"CIRCLIP   45",1,1,1,1,,,,,,,,,,,,,
12,2,,23871-020000,,"PLUG PT1/4,SCREW",6,6,6,6,,,,,,,,,,,,,
13,2,,26013-100252,,"BOLT W/WASHER M10X25",3,3,3,3,,,,,,,,,,,,,
14,1,,26013-100302,,"BOLT M10X 30",4,4,4,4,,,,,,,,,,,,,
```

https://truckmanualshub.com/

Fig.56 スイベルジョイント SWIVEL JOINT

見出しNo．1は、見出しNo．2から13を含みます。
1inc．2 ～ 13

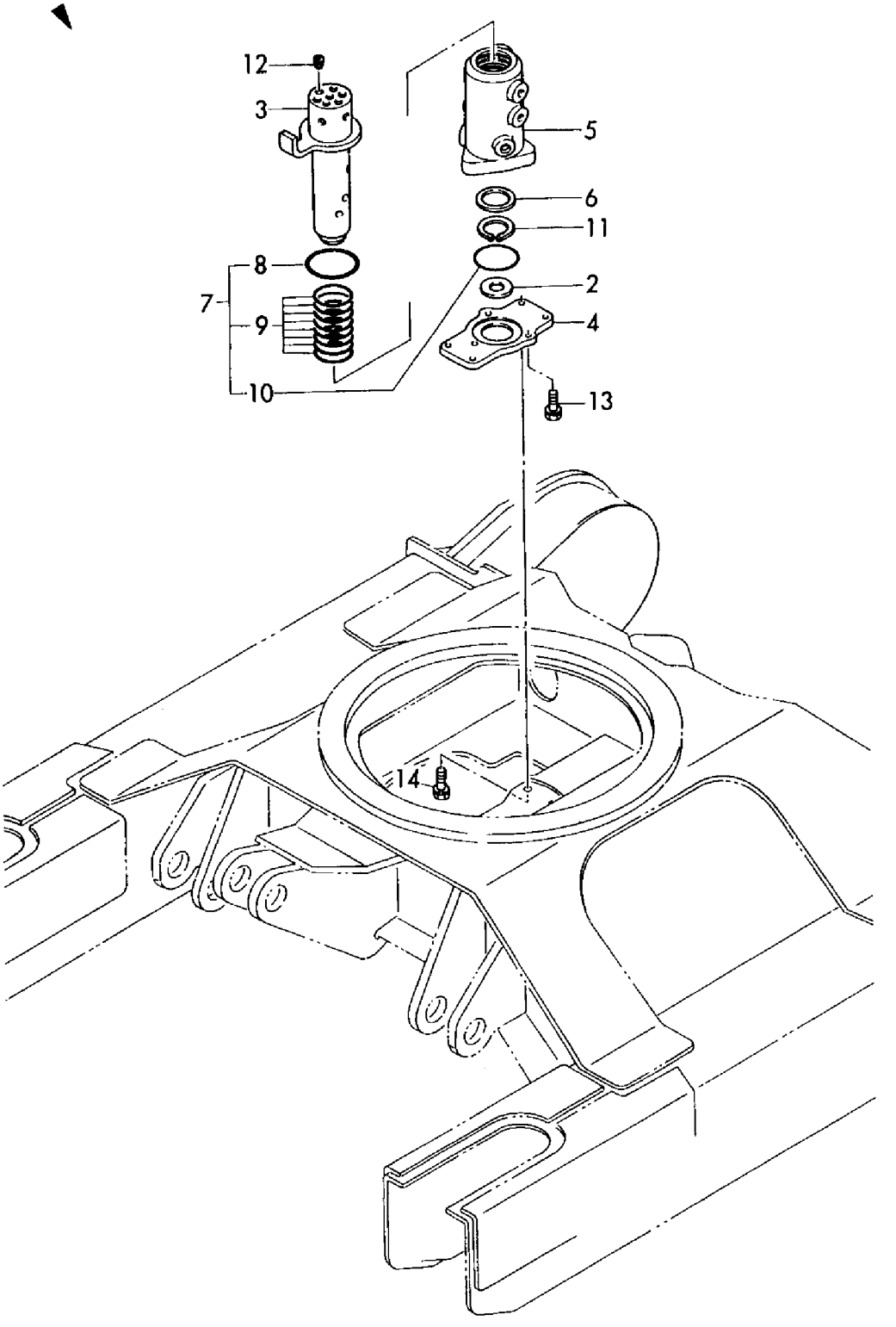

https://truckmanualshub.com/

```
1,1,,172165-45490,,CUSHION,7,7,,,,,,,,,,,,,,,
2,1,,172168-45800,,PLATE,1,1,,,,,,,,,,,,,,,
3,1,,22252-000280,,"CIRCLIP   28",7,7,,,,,,,,,,,,,,,
4,1,,26106-100352,,"BOLT M10X 35 PLATED",7,7,,,,,,,,,,,,,,,
5,1,,26013-100302,,"BOLT M10X 30",3,3,,,,,,,,,,,,,,,
6,1,,26716-100002,,"NUT M10",1,1,,,,,,,,,,,,,,,
7,1,,172171-74110,,"VALVE ASSY,CONTROL",1,1,,,,,,1,,,,,,,,,
8,1,,172171-74130,,"VALVE ASSY, CONTROL",1,1,,,,,,2,,,,,,,,,
9,2,,172112-06490,,O-RING,2,2,,,,,,,,,,,,,,,
10,2,,172171-72500,,"SECTION KIT,INLET",1,1,,,,,,,,,,,,,,,
11,3,,172171-72630,,"VALVE 175/25,RELIEF",1,1,,,,,,,,,,,,,,,
12,4,,172116-74150,,O-RING,1,1,,,,,,,,,,,,,,,
13,3,,172116-74150,,O-RING,1,1,,,,,,,,,,,,,,,
14,3,,172116-74320,,PLUG,1,1,,,,,,,,,,,,,,,
15,3,,172122-74520,,"SECTION, INLET",1,1,,,,,,,,,,,,,,,
16,4,,172122-74590,,"HOUSING, INLET",1,1,,,,,,,,,,,,,,,
16-1,4,,172823-74270,,"INLET HOUSING",1,1,,,,,N,,,M/#50997,,M/#50997,,,,,,
17,4,,933171-80590,,O-RING,1,1,,,,,,,,,,,,,,,
18,2,,172171-72510,,"SECTION KIT,INLET",1,1,,,,,,,,,,,,,,,
19,3,,172171-72640,,"VALVE 160/24,RELIEF",1,1,,,,,,,,,,,,,,,
20,4,,172116-74150,,O-RING,1,1,,,,,,,,,,,,,,,
21,3,,172122-74520,,"SECTION, INLET",1,1,,,,,,,,,,,,,,,
22,4,,172122-74590,,"HOUSING, INLET",1,1,,,,,,,,,,,,,,,
22-1,4,,172823-74270,,"INLET HOUSING",1,1,,,,,N,,,M/#50997,,M/#50997,,,,,,
23,4,,933171-80590,,O-RING,1,1,,,,,,,,,,,,,,,
24,2,,172171-72570,,"SECTION KIT, SPACER",1,1,,,,,,,,,,,,,,,
25,3,,172112-06480,,PLUG,1,1,,,,,,,,,,,,,,,
26,3,,172112-06490,,O-RING,1,1,,,,,,,,,,,,,,,
27,3,,172171-72630,,"VALVE 175/25,RELIEF",1,1,,,,,,,,,,,,,,,
28,4,,172116-74150,,O-RING,1,1,,,,,,,,,,,,,,,
29,3,,172168-72740,,"PLUG ASSY",1,1,,,,,,,,,,,,,,,
30,3,,172146-74680,,"SECTION ASSY, SPACER",1,1,,,,,,,,,,,,,,,
31,4,,172122-73430,,PLUG,1,1,,,,,,,,,,,,,,,
32,4,,172146-74750,,SPACER,1,1,,,,,,,,,,,,,,,
33,4,,23871-030000,,"PLUG PT3/8,SCREW",1,1,,,,,,,,,,,,,,,
34,4,,933171-80590,,O-RING,1,1,,,,,,,,,,,,,,,
35,2,,172168-72620,,"SECTION ASSY.,SPACER",1,1,,,,,,,,,,,,,,,
36,3,,172122-73430,,PLUG,1,1,,,,,,,,,,,,,,,
37,3,,172142-74900,,SPACER,1,1,,,,,,,,,,,,,,,
38,2,,172151-74110,,TIE-ROD,2,2,,,,,,,,,,,,,,,
39,2,,172151-74120,,TIE-ROD,1,1,,,,,,,,,,,,,,,
40,2,,172116-74150,,O-RING,2,2,,,,,,,,,,,,,,,
41,2,,172116-74320,,PLUG,2,2,,,,,,,,,,,,,,,
42,2,,26716-080002,,"NUT M 8",4,4,,,,,,,,,,,,,,,
43,2,,26716-100002,,"NUT M10",2,2,,,,,,,,,,,,,,,
44,2,,172112-06480,,PLUG,2,2,,,,,,,,,,,,,,,
45,2,,172171-72700,,"SECTION KIT,SPACER",1,1,,,,,,3,,,,,,,,,
46,3,,172171-72630,,"VALVE 175/25,RELIEF",1,1,,,,,,3,,,,,,,,,
47,4,,172116-74150,,O-RING,1,1,,,,,,3,,,,,,,,,
48,3,,172146-74680,,"SECTION ASSY, SPACER",1,1,,,,,,3,,,,,,,,,
49,4,,172122-73430,,PLUG,1,1,,,,,,3,,,,,,,,,
50,4,,172146-74750,,SPACER,1,1,,,,,,3,,,,,,,,,
51,4,,23871-030000,,"PLUG PT3/8,SCREW",1,1,,,,,,3,,,,,,,,,
52,4,,933171-80590,,O-RING,1,1,,,,,,3,,,,,,,,,
53,3,,172146-74720,,"VALVE ASSY, SHUT-OFF",1,1,,,,,,3,,,,,,,,,
54,4,,172116-74150,,O-RING,1,1,,,,,,3,,,,,,,,,
55,4,,24311-240100,,"O-RING 1A P-10A",1,1,,,,,,3,,,,,,,,,
```

https://truckmanualshub.com/

Fig. 57 コントロールバルブ（Pポート） CONTROL VALVE (P PORT)

COUNTRY	JP	AS	EX
APPLI-CATION	○	—	○

コントロールバルブASSY
CONTROL VALVE ASSY
(172171-74110)
Fig.57 REF. No.7
inc. Fig.57 REF. No.9～44
Fig.58 REF. No.1～22
Fig.59 REF. No.1～57
Fig.60 REF. No.1～36
Fig.61 REF. No.1～27

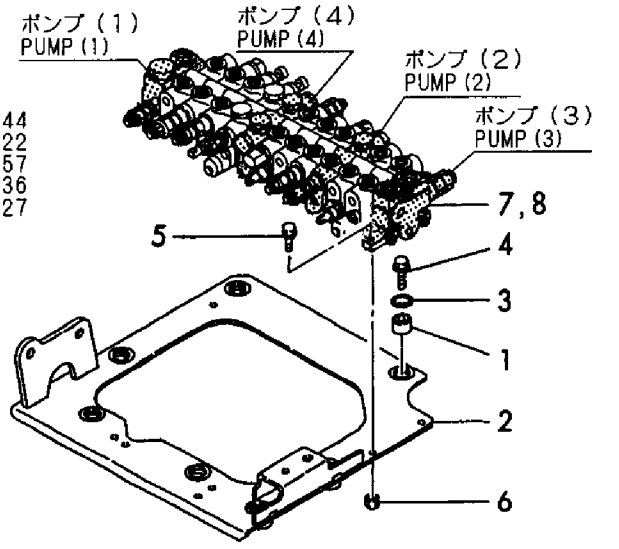

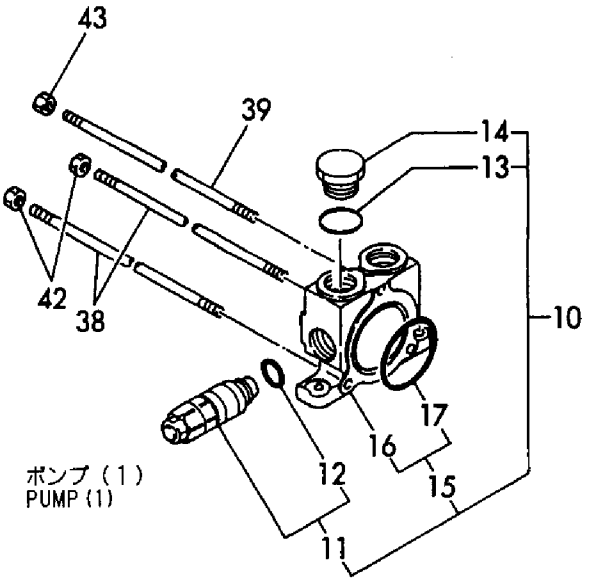

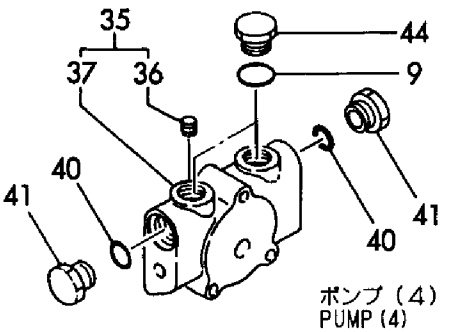

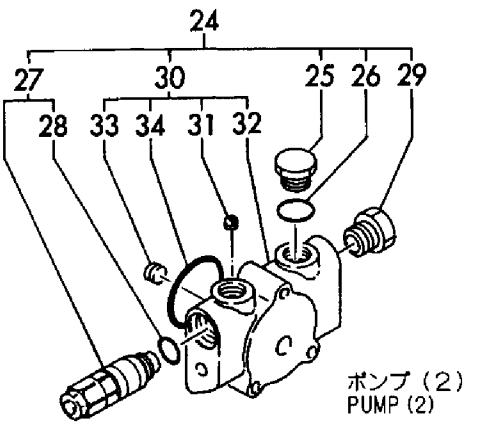

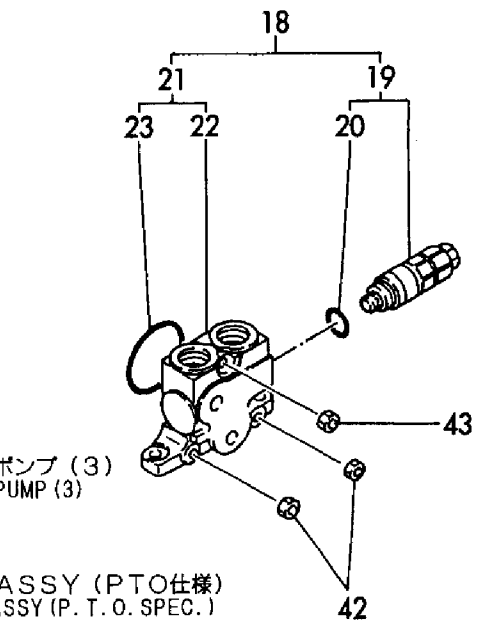

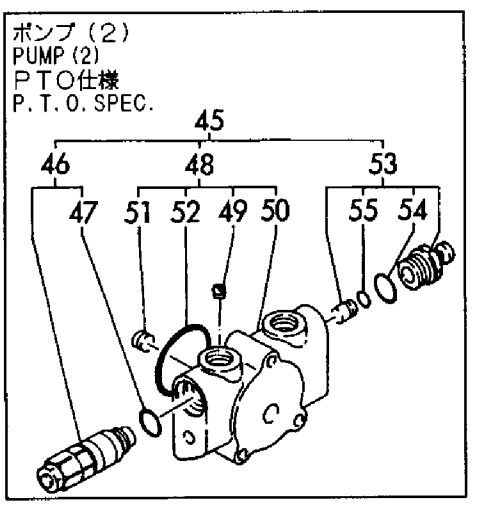

コントロールバルブASSY（PTO仕様）
CONTROL VALVE ASSY (P.T.O. SPEC.)
(172171-74130)
Fig.57 REF. No.8
inc. Fig.57 REF. No.9～23, 35～55
Fig.58 REF. No.1～22
Fig.59 REF. No.1～38, 58～71
Fig.60 REF. No.1～36
Fig.61 REF. No.1～27

https://truckmanualshub.com/

```
1,2,,172171-72580,,"SPOOL SECTION ASSY",1,1,,,,,,,,,,,,,,,
2,3,,172122-74050,,SPRING,1,1,,,,,,,,,,,,,,,
3,3,,172151-74060,,"BOLT, SOCKET HEAD",2,2,,,,,,,,,,,,,,,
4,3,,172116-74190,,"PLATE, SEAL",2,2,,,,,,,,,,,,,,,
5,3,,172116-74220,,SCREW,2,2,,,,,,,,,,,,,,,
6,3,,933166-80520,,WIPER,2,2,,,,,,,,,,,,,,,
7,3,,933166-80530,,CAP,1,1,,,,,,,,,,,,,,,
8,3,,933166-80550,,"SCREW, CAP",1,1,,,,,,,,,,,,,,,
9,3,,933171-80510,,"SEAT, SPRING",2,2,,,,,,,,,,,,,,,
10,3,,933171-80590,,O-RING,1,1,,,,,,,,,,,,,,,
11,3,,933171-80610,,O-RING,2,2,,,,,,,,,,,,,,,
12,2,,172171-72610,,"SECTION ASSY.,SPOOL",1,1,,,,,,,,,,,,,,,
13,3,,172122-74050,,SPRING,1,1,,,,,,,,,,,,,,,
14,3,,172151-74060,,"BOLT, SOCKET HEAD",2,2,,,,,,,,,,,,,,,
15,3,,172116-74190,,"PLATE, SEAL",2,2,,,,,,,,,,,,,,,
16,3,,172116-74220,,SCREW,2,2,,,,,,,,,,,,,,,
17,3,,933166-80520,,WIPER,2,2,,,,,,,,,,,,,,,
18,3,,933166-80530,,CAP,1,1,,,,,,,,,,,,,,,
19,3,,933166-80550,,"SCREW, CAP",1,1,,,,,,,,,,,,,,,
20,3,,933171-80510,,"SEAT, SPRING",2,2,,,,,,,,,,,,,,,
21,3,,933171-80590,,O-RING,1,1,,,,,,,,,,,,,,,
22,3,,933171-80610,,O-RING,2,2,,,,,,,,,,,,,,,
```

https://truckmanualshub.com/

Fig. 58 コントロールバルブ（走行） CONTROL VALVE (TRAVEL)

COUNTRY	JP	AS	EX
APPLI-CATION	○	—	○

コントロールバルブASSY
CONTROL VALVE ASSY
(172171-74110)
Fig.57 REF. No.7
inc. Fig.57 REF. No.9～44
Fig.58 REF. No.1～22
Fig.59 REF. No.1～57
Fig.60 REF. No.1～36
Fig.61 REF. No.1～27

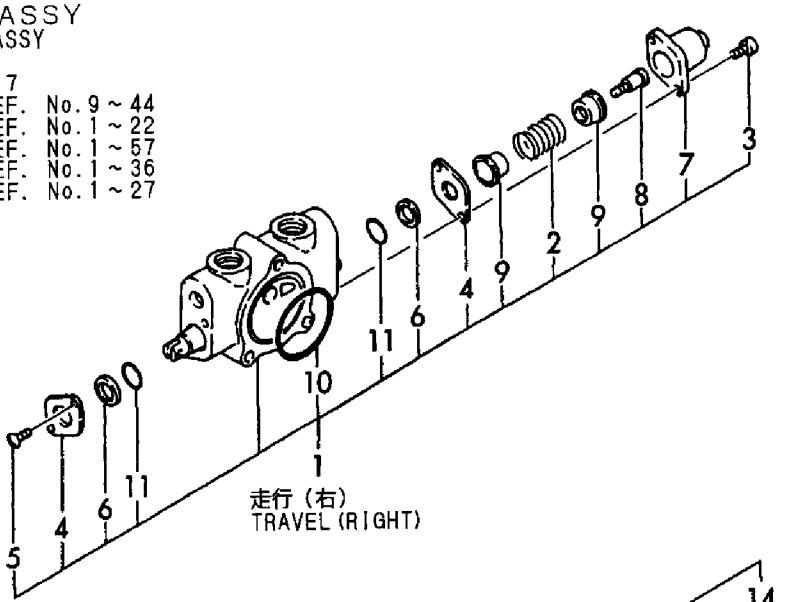

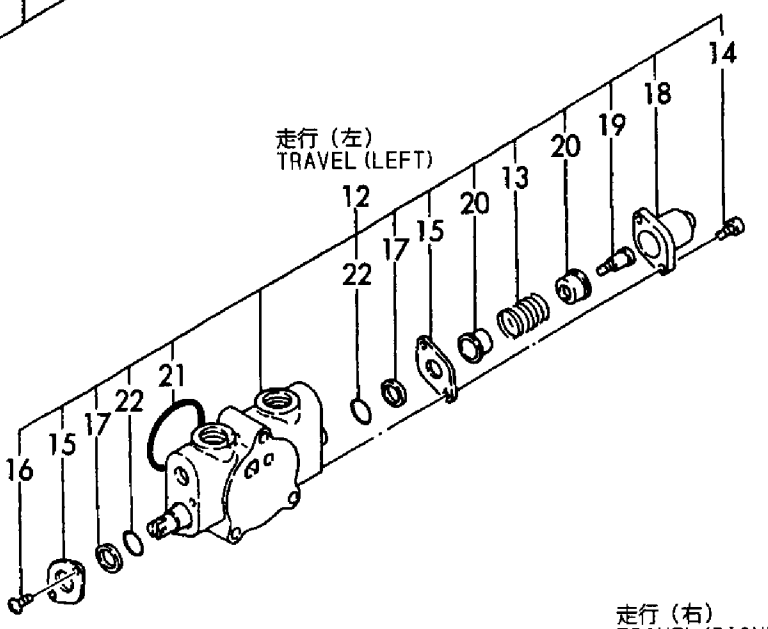

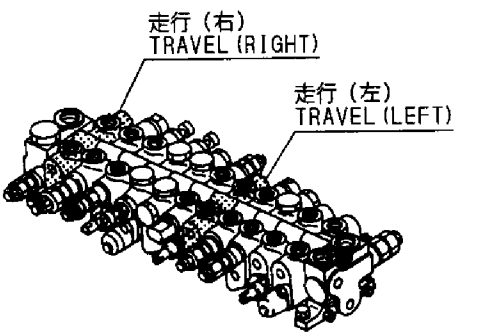

コントロールバルブASSY（PTO仕様）
CONTROL VALVE ASSY (P.T.O. SPEC.)
(172171-74130)
Fig.57 REF. No.8
inc. Fig.57 REF. No.9～23, 35～55
Fig.58 REF. No.1～22
Fig.59 REF. No.1～38, 58～71
Fig.60 REF. No.1～36
Fig.61 REF. No.1～27

https://truckmanualshub.com/

```
1,2,,172171-72520,,"SECTION KIT, SPOOL",1,1,,,,,,,,,,,,,,,
2,3,,172168-72590,,"SECTION ASSY, SPOOL",1,1,,,,,,,,,,,,,,,
3,4,,172168-72750,,"SPRING,CHECK VALVE",1,1,,,,,,,,,,,,,,,
4,4,,172168-72760,,"SPRING, SPOOL",1,1,,,,,,,,,,,,,,,
5,4,,172151-74060,,"BOLT, SOCKET HEAD",2,2,,,,,,,,,,,,,,,
6,4,,172122-74130,,POPPET,1,1,,,,,,,,,,,,,,,
7,4,,172116-74190,,"PLATE, SEAL",2,2,,,,,,,,,,,,,,,
8,4,,172116-74220,,SCREW,2,2,,,,,,,,,,,,,,,
9,4,,933166-80520,,WIPER,2,2,,,,,,,,,,,,,,,
10,4,,933166-80530,,CAP,1,1,,,,,,,,,,,,,,,
11,4,,933166-80550,,"SCREW, CAP",1,1,,,,,,,,,,,,,,,
12,4,,933171-80510,,"SEAT, SPRING",2,2,,,,,,,,,,,,,,,
13,4,,933171-80590,,O-RING,1,1,,,,,,,,,,,,,,,
14,4,,933171-80610,,O-RING,2,2,,,,,,,,,,,,,,,
15,3,,172171-72660,,"VALVE 210/25,RELIEF",1,1,,,,,,,,,,,,,,,
16,4,,172116-74150,,O-RING,1,1,,,,,,,,,,,,,,,
17,3,,172310-79180,,VALVE,1,1,,,,,,,,,,,,,,,
18,4,,172116-74150,,O-RING,1,1,,,,,,,,,,,,,,,
19,2,,172171-72530,,"SECTION KIT, SPOOL",1,1,,,,,,,,,,,,,,,
20,3,,172171-72590,,"SECTION ASSY.,SPOOL",1,1,,,,,,,,,,,,,,,
21,4,,172168-72750,,"SPRING,CHECK VALVE",1,1,,,,,,,,,,,,,,,
22,4,,172122-74050,,SPRING,1,1,,,,,,,,,,,,,,,
23,4,,172151-74060,,"BOLT, SOCKET HEAD",1,1,,,,,,,,,,,,,,,
24,4,,172122-74130,,POPPET,1,1,,,,,,,,,,,,,,,
25,4,,172116-74190,,"PLATE, SEAL",2,2,,,,,,,,,,,,,,,
26,4,,172116-74220,,SCREW,2,2,,,,,,,,,,,,,,,
27,4,,172146-74740,,WASHER,1,1,,,,,,,,,,,,,,,
28,4,,933166-80520,,WIPER,2,2,,,,,,,,,,,,,,,
29,4,,933166-80530,,CAP,1,1,,,,,,,,,,,,,,,
30,4,,933166-80550,,"SCREW, CAP",1,1,,,,,,,,,,,,,,,
31,4,,933171-80510,,"SEAT, SPRING",2,2,,,,,,,,,,,,,,,
32,4,,933171-80590,,O-RING,1,1,,,,,,,,,,,,,,,
33,4,,933171-80610,,O-RING,2,2,,,,,,,,,,,,,,,
34,3,,172146-74720,,"VALVE ASSY, SHUT-OFF",1,1,,,,,,,,,,,,,,,
35,4,,172116-74150,,O-RING,1,1,,,,,,,,,,,,,,,
36,4,,24311-240100,,"O-RING 1A P-10A",1,1,,,,,,,,,,,,,,,
37,3,,172146-74730,,"VALVE ASSY",1,1,,,,,,,,,,,,,,,
38,4,,172116-74150,,O-RING,1,1,,,,,,,,,,,,,,,
39,2,,172168-72540,,"SECTION KIT, SPOOL",1,1,,,,,,,,,,,,,,,
40,3,,172112-06480,,PLUG,2,2,,,,,,,,,,,,,,,
41,3,,172112-06490,,O-RING,2,2,,,,,,,,,,,,,,,
42,3,,172168-72610,,"SECTION ASSY, SPOOL",1,1,,,,,,,,,,,,,,,
43,4,,172168-72750,,"SPRING,CHECK VALVE",1,1,,,,,,,,,,,,,,,
44,4,,172168-72760,,"SPRING, SPOOL",1,1,,,,,,,,,,,,,,,
45,4,,172151-74060,,"BOLT, SOCKET HEAD",2,2,,,,,,,,,,,,,,,
46,4,,172122-74130,,POPPET,1,1,,,,,,,,,,,,,,,
47,4,,172116-74190,,"PLATE, SEAL",2,2,,,,,,,,,,,,,,,
48,4,,172116-74220,,SCREW,2,2,,,,,,,,,,,,,,,
49,4,,933166-80520,,WIPER,2,2,,,,,,,,,,,,,,,
50,4,,933166-80530,,CAP,1,1,,,,,,,,,,,,,,,
51,4,,933166-80550,,"SCREW, CAP",1,1,,,,,,,,,,,,,,,
52,4,,933171-80510,,"SEAT, SPRING",2,2,,,,,,,,,,,,,,,
53,4,,933171-80590,,O-RING,1,1,,,,,,,,,,,,,,,
54,4,,933171-80610,,O-RING,2,2,,,,,,,,,,,,,,,
55,3,,172146-74720,,"VALVE ASSY, SHUT-OFF",2,2,,,,,,,,,,,,,,,
56,4,,172116-74150,,O-RING,2,2,,,,,,,,,,,,,,,
57,4,,24311-240100,,"O-RING 1A P-10A",2,2,,,,,,,,,,,,,,,
58,2,,172171-72610,,"SECTION ASSY.,SPOOL",1,1,,,,,M,,,,,,,,,
58-1,2,,172168-72610,,"SECTION ASSY, SPOOL",1,1,,,,,1,,,,,,,,,
59,3,,172122-74050,,SPRING,1,1,,,,,M,,,,,,,,,
59-1,3,,172168-72760,,"SPRING, SPOOL",1,1,,,,,1,,,,,,,,,
60,3,,172151-74060,,"BOLT, SOCKET HEAD",2,2,,,,,1,,,,,,,,,
61,3,,172116-74190,,"PLATE, SEAL",2,2,,,,,1,,,,,,,,,
```

https://truckmanualshub.com/

```
62,3,,172116-74220,,SCREW,2,2,,,,,1,,,,,,,,,
63,3,,933166-80520,,WIPER,2,2,,,,,1,,,,,,,,,
64,3,,933166-80530,,CAP,1,1,,,,,1,,,,,,,,,
65,3,,933166-80550,,"SCREW, CAP",1,1,,,,,1,,,,,,,,,
66,3,,933171-80510,,"SEAT, SPRING",2,2,,,,,1,,,,,,,,,
67,3,,933171-80590,,O-RING,1,1,,,,,1,,,,,,,,,
68,3,,933171-80610,,O-RING,2,2,,,,,1,,,,,,,,,
68A,3,,172168-72750,,"SPRING,CHECK VALVE",1,1,,,,,W,,,"FROM 1ST",,"FROM
1ST",,,,,,
68B,3,,172122-74130,,POPPET,1,1,,,,,W,,,"FROM 1ST",,"FROM 1ST",,,,,,
69,2,,172146-74720,,"VALVE ASSY, SHUT-OFF",2,2,,,,,1,,,,,,,,,
70,3,,172116-74150,,O-RING,2,2,,,,,1,,,,,,,,,
71,3,,24311-240100,,"O-RING 1A P-10A",2,2,,,,,1,,,,,,,,,
```

https://truckmanualshub.com/

Fig. 59 コントロールバルブ（アーム＆スイング） CONTROL VALVE (ARM & SWING)

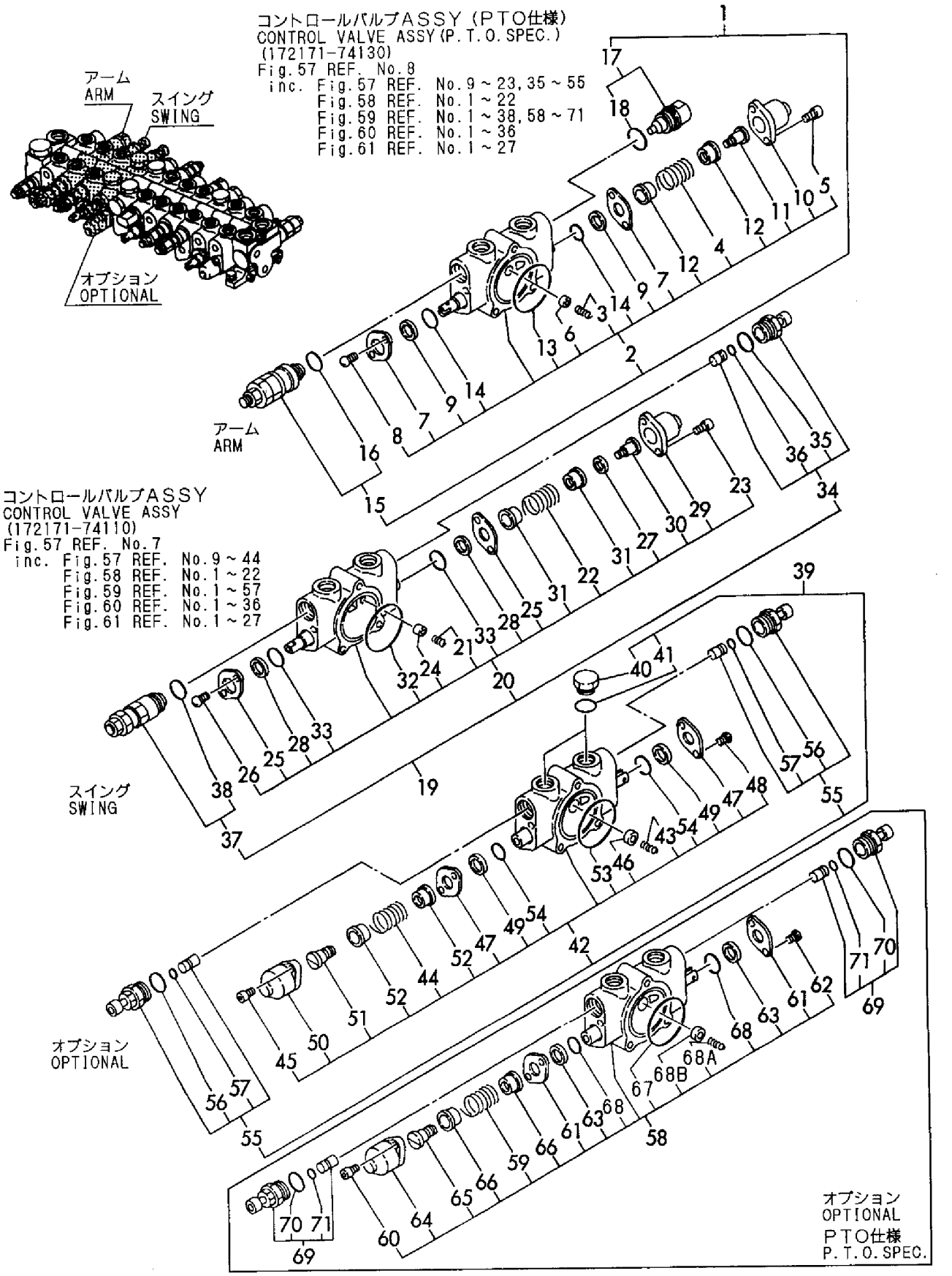

```
1,2,,172171-72550,,"SECTION KIT, SPOOL",1,1,,,,,,,,,,,,,,,
2,3,,172171-72600,,"SECTION ASSY, SPOOL",1,1,,,,,,,,,,,,,,,
3,4,,172168-72750,,"SPRING,CHECK VALVE",1,1,,,,,,,,,,,,,,,
4,4,,172168-72760,,"SPRING, SPOOL",1,1,,,,,,,,,,,,,,,
5,4,,172151-74060,,"BOLT, SOCKET HEAD",2,2,,,,,,,,,,,,,,,
6,4,,172122-74130,,POPPET,1,1,,,,,,,,,,,,,,,
7,4,,172116-74190,,"PLATE, SEAL",2,2,,,,,,,,,,,,,,,
8,4,,172116-74220,,SCREW,2,2,,,,,,,,,,,,,,,
9,4,,933166-80520,,WIPER,2,2,,,,,,,,,,,,,,,
10,4,,933166-80530,,CAP,1,1,,,,,,,,,,,,,,,
11,4,,933166-80550,,"SCREW, CAP",1,1,,,,,,,,,,,,,,,
12,4,,933171-80510,,"SEAT, SPRING",2,2,,,,,,,,,,,,,,,
13,4,,933171-80590,,O-RING,1,1,,,,,,,,,,,,,,,
14,4,,933171-80610,,O-RING,2,2,,,,,,,,,,,,,,,
15,3,,172171-72650,,"VALVE 210/25,RELIEF",1,1,,,,,,,,,,,,,,,
16,4,,172116-74150,,O-RING,1,1,,,,,,,,,,,,,,,
17,3,,172310-79180,,VALVE,1,1,,,,,,,,,,,,,,,
18,4,,172116-74150,,O-RING,1,1,,,,,,,,,,,,,,,
19,2,,172168-72560,,"SECTION KIT, SPOOL",1,1,,,,,,,,,,,,,,,
20,3,,172168-72650,,"SECTION ASSY, SPOOL",1,1,,,,,,,,,,,,,,,
21,4,,172168-72750,,"SPRING,CHECK VALVE",1,1,,,,,,,,,,,,,,,
22,4,,172168-72760,,"SPRING, SPOOL",1,1,,,,,,,,,,,,,,,
23,4,,172151-74060,,"BOLT, SOCKET HEAD",2,2,,,,,,,,,,,,,,,
24,4,,172122-74130,,POPPET,1,1,,,,,,,,,,,,,,,
25,4,,172116-74190,,"PLATE, SEAL",2,2,,,,,,,,,,,,,,,
26,4,,172116-74220,,SCREW,2,2,,,,,,,,,,,,,,,
27,4,,933166-80520,,WIPER,2,2,,,,,,,,,,,,,,,
28,4,,933166-80530,,CAP,1,1,,,,,,,,,,,,,,,
29,4,,933166-80550,,"SCREW, CAP",1,1,,,,,,,,,,,,,,,
30,4,,933171-80510,,"SEAT, SPRING",2,2,,,,,,,,,,,,,,,
31,4,,933171-80590,,O-RING,1,1,,,,,,,,,,,,,,,
32,4,,933171-80610,,O-RING,2,2,,,,,,,,,,,,,,,
33,3,,172168-72730,,"VALVE 260/33,RELIEF",1,1,,,,,,,,,,,,,,,
34,4,,172116-74150,,O-RING,1,1,,,,,,,,,,,,,,,
35,3,,172310-79180,,VALVE,1,1,,,,,,,,,,,,,,,
36,4,,172116-74150,,O-RING,1,1,,,,,,,,,,,,,,,
```

https://truckmanualshub.com/

Fig. 60 コントロールバルブ（ブーム＆バケット） CONTROL VALVE (BOOM & BUCKET)

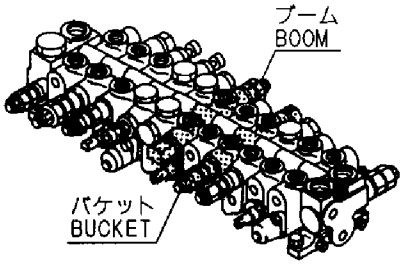

コントロールバルブASSY
CONTROL VALVE ASSY
(172171-74110)
Fig.57 REF. No.7
inc. Fig.57 REF. No.9～44
Fig.58 REF. No.1～22
Fig.59 REF. No.1～57
Fig.60 REF. No.1～36
Fig.61 REF. No.1～27

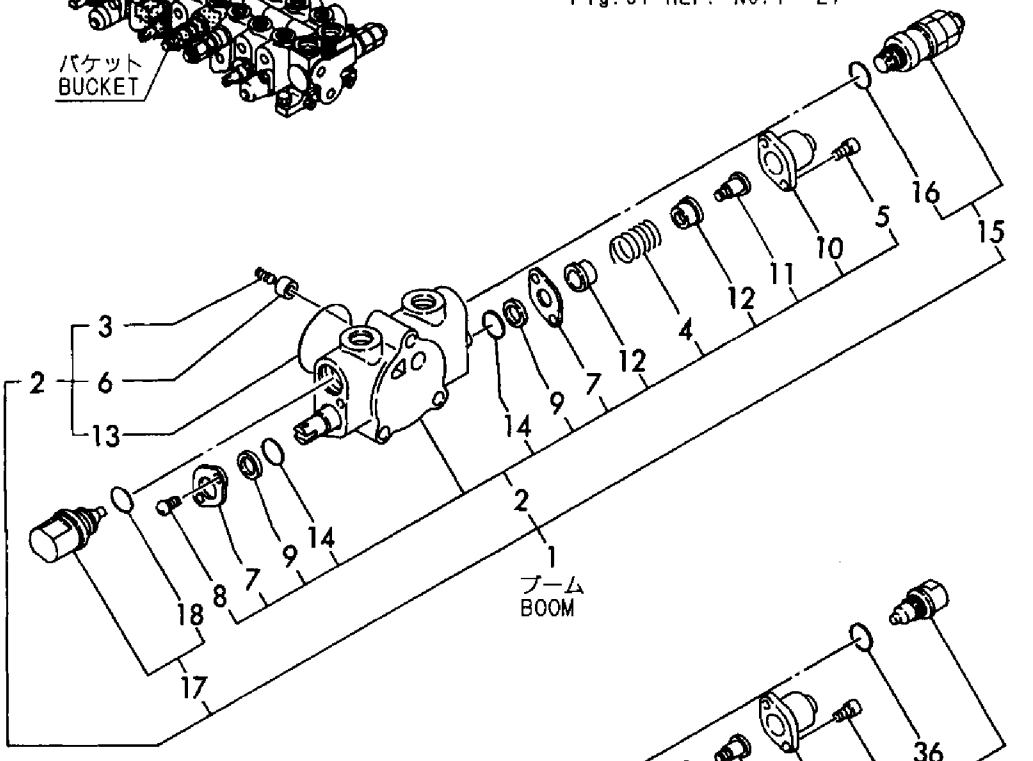

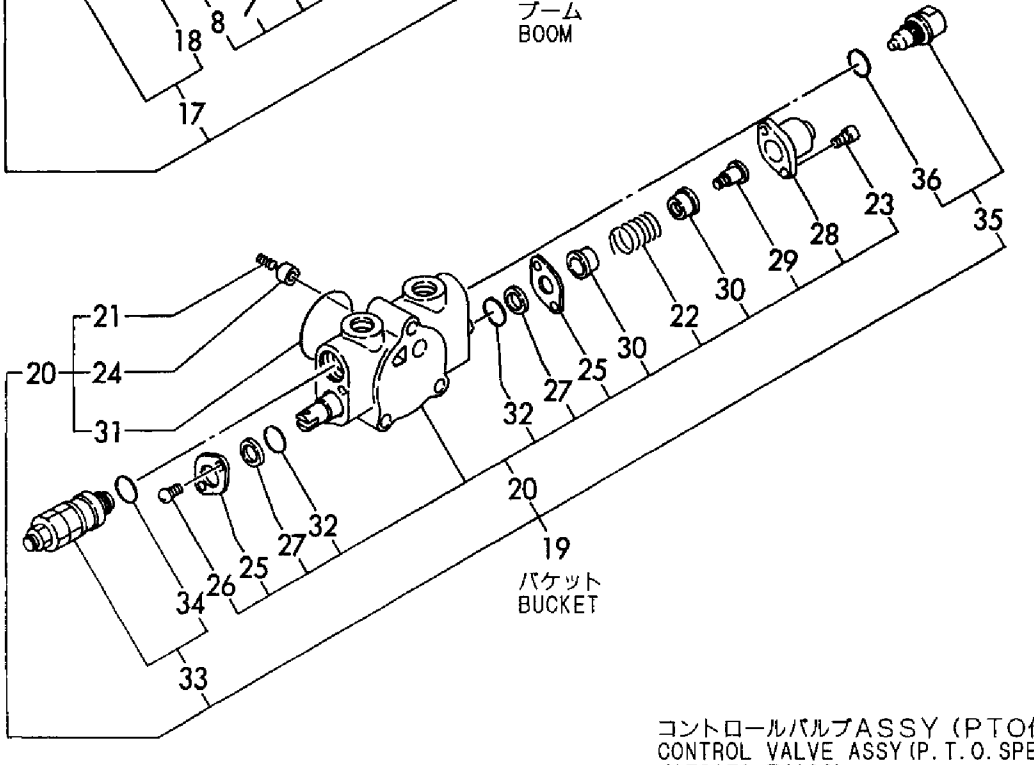

コントロールバルブASSY（PTO仕様）
CONTROL VALVE ASSY(P.T.O.SPEC.)
(172171-74130)
Fig.57 REF. No.8
inc. Fig.57 REF. No.9～23,35～55
Fig.58 REF. No.1～22
Fig.59 REF. No.1～38,58～71
Fig.60 REF. No.1～36
Fig.61 REF. No.1～27

```
1,2,,172171-72620,,"SECTION ASSY.,SPOOL",1,1,,,,,,,,,,,,,,,
2,3,,172168-72750,,"SPRING,CHECK VALVE",1,1,,,,,,,,,,,,,,,
3,3,,172122-74050,,SPRING,1,1,,,,,,,,,,,,,,,
4,3,,172151-74060,,"BOLT, SOCKET HEAD",2,2,,,,,,,,,,,,,,,
5,3,,172122-74130,,POPPET,1,1,,,,,,,,,,,,,,,
6,3,,172116-74190,,"PLATE, SEAL",2,2,,,,,,,,,,,,,,,
7,3,,172116-74220,,SCREW,2,2,,,,,,,,,,,,,,,
8,3,,933166-80520,,WIPER,2,2,,,,,,,,,,,,,,,
9,3,,933166-80530,,CAP,1,1,,,,,,,,,,,,,,,
10,3,,933166-80550,,"SCREW, CAP",1,1,,,,,,,,,,,,,,,
11,3,,933171-80510,,"SEAT, SPRING",2,2,,,,,,,,,,,,,,,
12,3,,933171-80590,,O-RING,1,1,,,,,,,,,,,,,,,
13,3,,933171-80610,,O-RING,2,2,,,,,,,,,,,,,,,
14,2,,172168-72660,,"SECTION ASSY, SPOOL",1,1,,,,,,,,,,,,,,,
15,3,,172168-72750,,"SPRING,CHECK VALVE",1,1,,,,,,,,,,,,,,,
16,3,,172122-74050,,SPRING,1,1,,,,,,,,,,,,,,,
17,3,,172151-74060,,"BOLT, SOCKET HEAD",1,1,,,,,,,,,,,,,,,
18,3,,172122-74130,,POPPET,1,1,,,,,,,,,,,,,,,
19,3,,172116-74190,,"PLATE, SEAL",2,2,,,,,,,,,,,,,,,
20,3,,172116-74220,,SCREW,1,1,,,,,,,,,,,,,,,
21,3,,172146-74740,,WASHER,1,1,,,,,,,,,,,,,,,
22,3,,933166-80520,,WIPER,2,2,,,,,,,,,,,,,,,
23,3,,933166-80530,,CAP,2,2,,,,,,,,,,,,,,,
24,3,,933166-80550,,"SCREW, CAP",1,1,,,,,,,,,,,,,,,
25,3,,933171-80510,,"SEAT, SPRING",1,1,,,,,,,,,,,,,,,
26,3,,933171-80590,,O-RING,1,1,,,,,,,,,,,,,,,
27,3,,933171-80610,,O-RING,2,2,,,,,,,,,,,,,,,
```

https://truckmanualshub.com/

Fig. 61 コントロールバルブ（旋回&ブレード） CONTROL VALVE (TURNING & BLADE)

COUNTRY	JP	AS	EX
APPLI-CATION	○	—	○

コントロールバルブASSY
CONTROL VALVE ASSY
(172171-74110)
Fig.57 REF. No.7
inc. Fig.57 REF. No.9～44
Fig.58 REF. No.1～22
Fig.59 REF. No.1～57
Fig.60 REF. No.1～36
Fig.61 REF. No.1～27

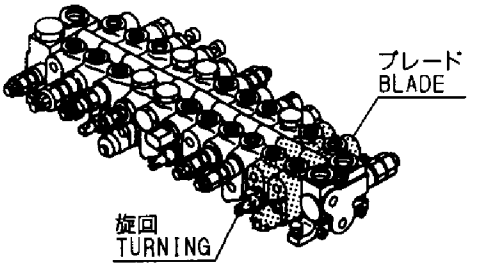

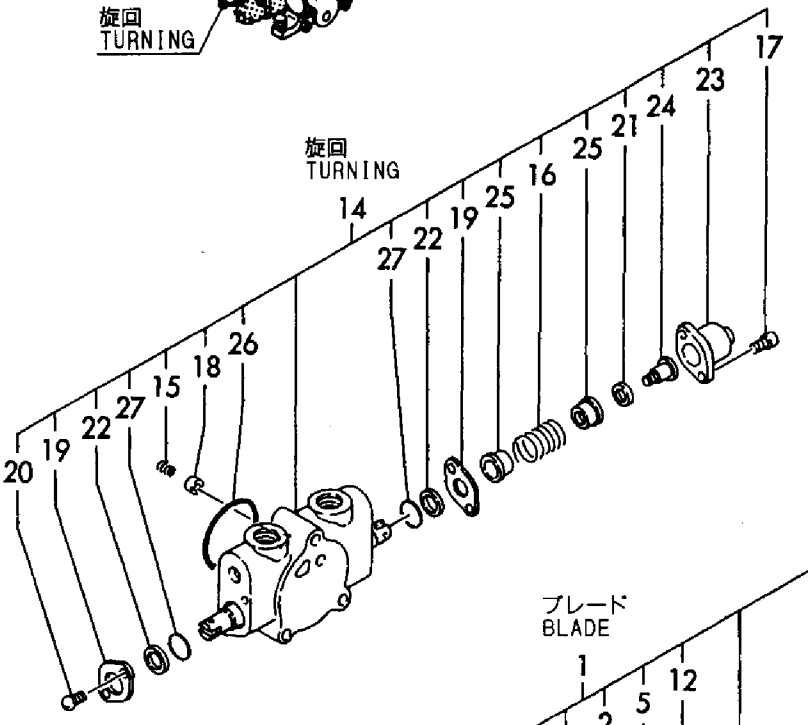

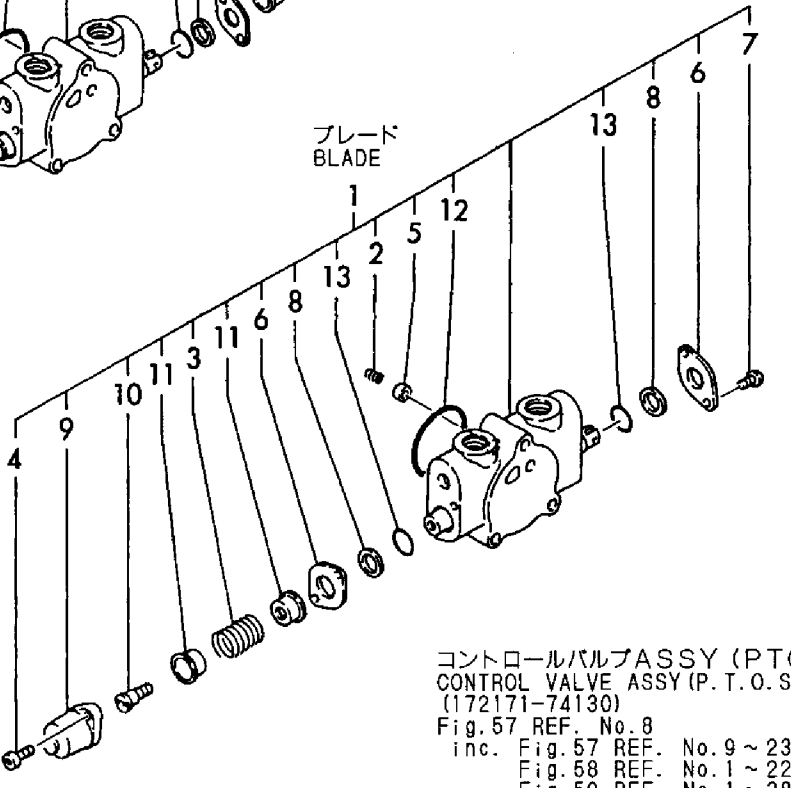

コントロールバルブASSY（PTO仕様）
CONTROL VALVE ASSY (P.T.O. SPEC.)
(172171-74130)
Fig.57 REF. No.8
inc. Fig.57 REF. No.9～23, 35～55
Fig.58 REF. No.1～22
Fig.59 REF. No.1～38, 58～71
Fig.60 REF. No.1～36
Fig.61 REF. No.1～27

https://truckmanualshub.com/

```
1,1,,172168-45400,,"PLATE ASSY, LINK",,1,,,,,,,,,,,,,,,
2,1,,172165-45490,,CUSHION,,5,,,,,,,,,,,,,,,
3,1,,22252-000280,,"CIRCLIP   28",,5,,,,,,,,,,,,,,,
4,1,,26106-100352,,"BOLT M10X 35 PLATED",,5,,,,,,,,,,,,,,,
5,1,,26013-100302,,"BOLT M10X 30",,3,,,,,,,,,,,,,,,
6,1,,26716-100002,,"NUT M10",,1,,,,,,,,,,,,,,,
7,1,,172171-74101,,"VALVE,CONTROL",,1,,,,,,1,,,,,,,,,
8,2,,172168-72620,,"SECTION ASSY.,SPACER",,1,,,,,,,,,,,,,,,
9,3,,172122-73430,,PLUG,,1,,,,,,,,,,,,,,,
10,3,,172142-74900,,SPACER,,1,,,,,,,,,,,,,,,
11,2,,172171-72630,,"VALVE 175/25,RELIEF",,2,,,,,,,,,,,,,,,
12,3,,172116-74150,,O-RING,,2,,,,,,,,,,,,,,,
13,2,,172171-72640,,"VALVE 160/24,RELIEF",,1,,,,,,,,,,,,,,,
14,3,,172116-74150,,O-RING,,1,,,,,,,,,,,,,,,
15,2,,172168-72740,,"PLUG ASSY",,1,,,,,,,,,,,,,,,
16,2,,172151-74110,,TIE-ROD,,2,,,,,,,,,,,,,,,
17,2,,172151-74120,,TIE-ROD,,1,,,,,,,,,,,,,,,
18,2,,172175-74270,,"PLUG ASSY",,3,,,,,,,,,,,,,,,
19,3,,172112-06480,,PLUG,,3,,,,,,,,,,,,,,,
20,3,,172112-06490,,O-RING,,3,,,,,,,,,,,,,,,
21,2,,172175-74350,,"PLUG ASSY",,3,,,,,,,,,,,,,,,
22,3,,172116-74150,,O-RING,,3,,,,,,,,,,,,,,,
23,3,,172116-74320,,PLUG,,3,,,,,,,,,,,,,,,
24,2,,172122-74520,,"SECTION, INLET",,2,,,,,,,,,,,,,,,
25,3,,172823-74270,,"INLET HOUSING",,2,,,,,,,,,,,,,,,
26,3,,933171-80590,,O-RING,,2,,,,,,,,,,,,,,,
27,2,,172146-74680,,"SECTION ASSY, SPACER",,1,,,,,,,,,,,,,,,
28,3,,172122-73430,,PLUG,,1,,,,,,,,,,,,,,,
29,3,,172146-74750,,SPACER,,1,,,,,,,,,,,,,,,
30,3,,23871-030000,,"PLUG PT3/8,SCREW",,1,,,,,,,,,,,,,,,
31,3,,933171-80590,,O-RING,,1,,,,,,,,,,,,,,,
32,2,,26716-080002,,"NUT M 8",,4,,,,,,,,,,,,,,,
33,2,,26716-100002,,"NUT M10",,2,,,,,,,,,,,,,,,
```

https://truckmanualshub.com/

Fig. 62 コントロールバルブ（Pポート）（フロントマルチ） CONTROL VALVE (P PORT) (FRONT MULTI)

COUNTRY	JP	AS	EX
APPLI-CATION	○	—	—

コントロールバルブASSY（フロントマルチ）
CONTROL VALVE ASSY (FRONT MULTI)
(172171-74101)
Fig.62 REF. No.7
inc. Fig.62 REF. No.8～33
Fig.63 REF. No.1～22
Fig.64 REF. No.1～39
Fig.65 REF. No.1～22
Fig.66 REF. No.1～15

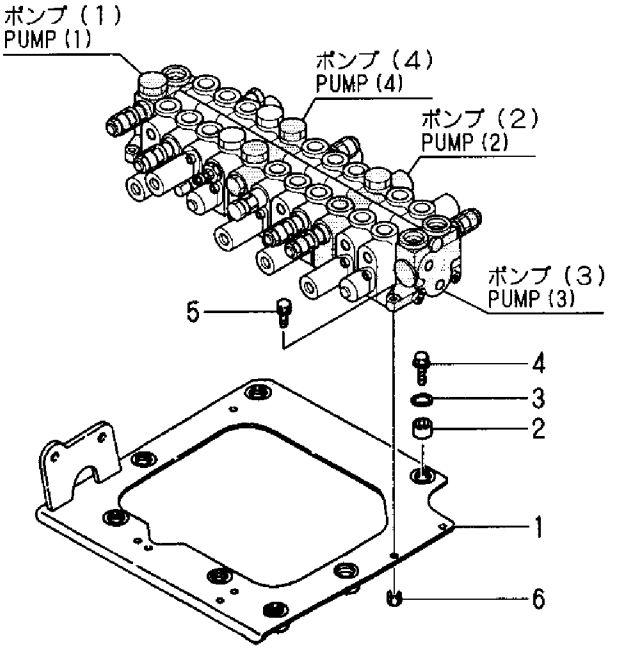

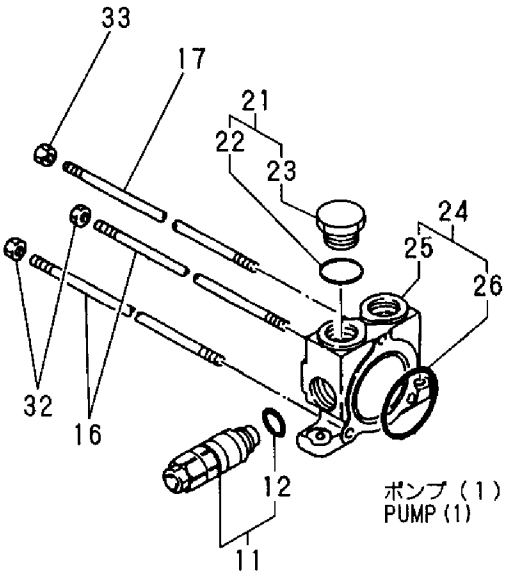

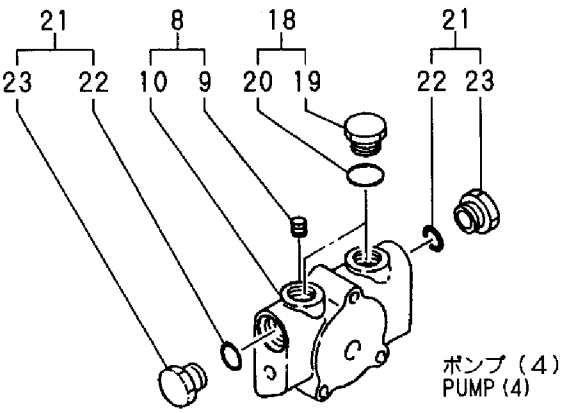

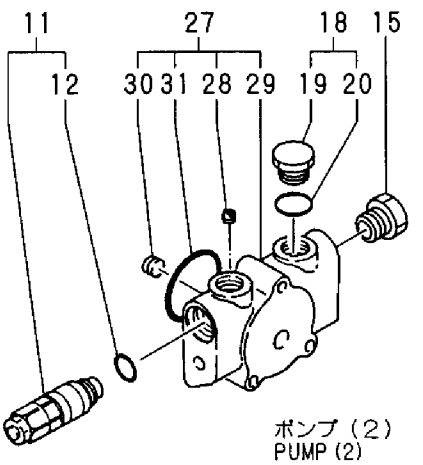

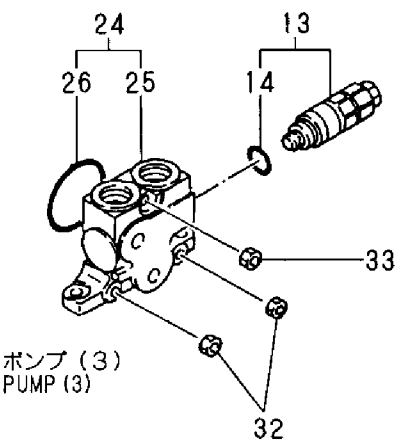

```
1,2,,172168-72580,,"SECTION ASSY, SPOOL",,1,,,,,,,,,,,,,,,
2,3,,172122-74050,,SPRING,,1,,,,,,,,,,,,,,,
3,3,,172151-74060,,"BOLT, SOCKET HEAD",,2,,,,,,,,,,,,,,,
4,3,,172116-74190,,"PLATE, SEAL",,2,,,,,,,,,,,,,,,
5,3,,172116-74220,,SCREW,,2,,,,,,,,,,,,,,,
6,3,,933166-80520,,WIPER,,2,,,,,,,,,,,,,,,
7,3,,933166-80530,,CAP,,1,,,,,,,,,,,,,,,
8,3,,933166-80550,,"SCREW, CAP",,1,,,,,,,,,,,,,,,
9,3,,933171-80510,,"SEAT, SPRING",,2,,,,,,,,,,,,,,,
10,3,,933171-80590,,O-RING,,1,,,,,,,,,,,,,,,
11,3,,933171-80610,,O-RING,,2,,,,,,,,,,,,,,,
12,2,,172171-72610,,"SECTION ASSY.,SPOOL",,1,,,,,,,,,,,,,,,
13,3,,172122-74050,,SPRING,,1,,,,,,,,,,,,,,,
14,3,,172151-74060,,"BOLT, SOCKET HEAD",,2,,,,,,,,,,,,,,,
15,3,,172116-74190,,"PLATE, SEAL",,2,,,,,,,,,,,,,,,
16,3,,172116-74220,,SCREW,,2,,,,,,,,,,,,,,,
17,3,,933166-80520,,WIPER,,2,,,,,,,,,,,,,,,
18,3,,933166-80530,,CAP,,1,,,,,,,,,,,,,,,
19,3,,933166-80550,,"SCREW, CAP",,1,,,,,,,,,,,,,,,
20,3,,933171-80510,,"SEAT, SPRING",,2,,,,,,,,,,,,,,,
21,3,,933171-80590,,O-RING,,1,,,,,,,,,,,,,,,
22,3,,933171-80610,,O-RING,,2,,,,,,,,,,,,,,,
```

https://truckmanualshub.com/

Fig. 63 コントロールバルブ（走行）（フロントマルチ） CONTROL VALVE (TRAVEL) (FRONT MULTI)

COUNTRY	JP	AS	EX
APPLI-CATION	○	—	—

コントロールバルブASSY（フロントマルチ）
CONTROL VALVE ASSY (FRONT MULTI)
(172171-74101)
Fig. 62 REF. No. 7
inc. Fig. 62 REF. No. 8 ~ 33
Fig. 63 REF. No. 1 ~ 22
Fig. 64 REF. No. 1 ~ 39
Fig. 65 REF. No. 1 ~ 22
Fig. 66 REF. No. 1 ~ 15

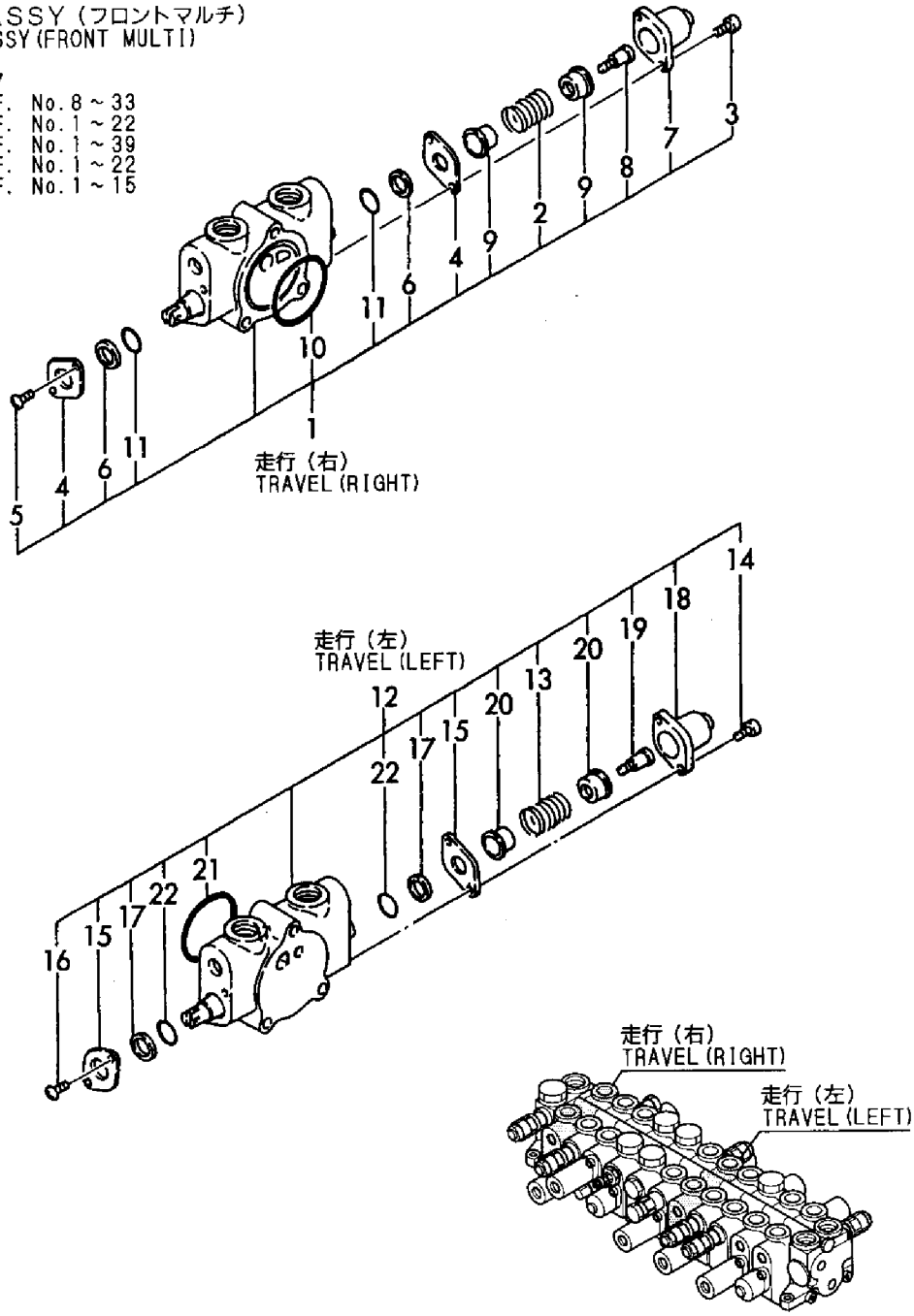

```
1,2,,172171-72590,,"SECTION ASSY.,SPOOL",,1,,,,,,,,,,,,,,,
2,3,,172168-72750,,"SPRING,CHECK VALVE",,1,,,,,,,,,,,,,,,
3,3,,172122-74050,,SPRING,,1,,,,,,,,,,,,,,,
4,3,,172151-74060,,"BOLT, SOCKET HEAD",,1,,,,,,,,,,,,,,,
5,3,,172122-74130,,POPPET,,1,,,,,,,,,,,,,,,
6,3,,172116-74190,,"PLATE, SEAL",,2,,,,,,,,,,,,,,,
7,3,,172116-74220,,SCREW,,1,,,,,,,,,,,,,,,
8,3,,172146-74740,,WASHER,,1,,,,,,,,,,,,,,,
9,3,,933166-80520,,WIPER,,2,,,,,,,,,,,,,,,
10,3,,933166-80530,,CAP,,2,,,,,,,,,,,,,,,
11,3,,933166-80550,,"SCREW, CAP",,1,,,,,,,,,,,,,,,
12,3,,933171-80510,,"SEAT, SPRING",,2,,,,,,,,,,,,,,,
13,3,,933171-80590,,O-RING,,1,,,,,,,,,,,,,,,
14,3,,933171-80610,,O-RING,,2,,,,,,,,,,,,,,,
15,2,,172168-72610,,"SECTION ASSY, SPOOL",,1,,,,,,,,,,,,,,,
16,3,,172168-72750,,"SPRING,CHECK VALVE",,1,,,,,,,,,,,,,,,
17,3,,172168-72760,,"SPRING, SPOOL",,1,,,,,,,,,,,,,,,
18,3,,172151-74060,,"BOLT, SOCKET HEAD",,2,,,,,,,,,,,,,,,
19,3,,172122-74130,,POPPET,,1,,,,,,,,,,,,,,,
20,3,,172116-74190,,"PLATE, SEAL",,2,,,,,,,,,,,,,,,
21,3,,172116-74220,,SCREW,,2,,,,,,,,,,,,,,,
22,3,,933166-80520,,WIPER,,2,,,,,,,,,,,,,,,
23,3,,933166-80530,,CAP,,1,,,,,,,,,,,,,,,
24,3,,933166-80550,,"SCREW, CAP",,1,,,,,,,,,,,,,,,
25,3,,933171-80510,,"SEAT, SPRING",,2,,,,,,,,,,,,,,,
26,3,,933171-80590,,O-RING,,1,,,,,,,,,,,,,,,
27,3,,933171-80610,,O-RING,,2,,,,,,,,,,,,,,,
28,2,,172171-72660,,"VALVE 210/25,RELIEF",,1,,,,,,,,,,,,,,,
29,3,,172116-74150,,O-RING,,1,,,,,,,,,,,,,,,
30,2,,172171-72740,,PLUG,,2,,,,,,,,,,,,,,,
31,2,,172175-74270,,"PLUG ASSY",,2,,,,,,,,,,,,,,,
32,3,,172112-06480,,PLUG,,2,,,,,,,,,,,,,,,
33,3,,172112-06490,,O-RING,,2,,,,,,,,,,,,,,,
34,2,,172146-74720,,"VALVE ASSY, SHUT-OFF",,3,,,,,,,,,,,,,,,
35,3,,172116-74150,,O-RING,,3,,,,,,,,,,,,,,,
36,3,,24311-240100,,"O-RING 1A P-10A",,3,,,,,,,,,,,,,,,
37,2,,172146-74730,,"VALVE ASSY",,2,,,,,,,,,,,,,,,
38,3,,172116-74150,,O-RING,,2,,,,,,,,,,,,,,,
39,2,,172171-72730,,"SECTION ASSY.,SPOOL",,1,,,,,,,,,,,,,,,
```

https://truckmanualshub.com/

Fig. 64 コントロールバルブ（アーム＆スイング）（フロントマルチ） CONTROL VALVE (ARM & SWING) (FRONT MULTI)

COUNTRY	JP	AS	EX
APPLI-CATION	○	—	—

コントロールバルブASSY（フロントマルチ）
CONTROL VALVE ASSY (FRONT MULTI)
(172171-74101)
Fig.62 REF. No.7
inc. Fig.62 REF. No.8～33
Fig.63 REF. No.1～22
Fig.64 REF. No.1～39
Fig.65 REF. No.1～22
Fig.66 REF. No.1～15

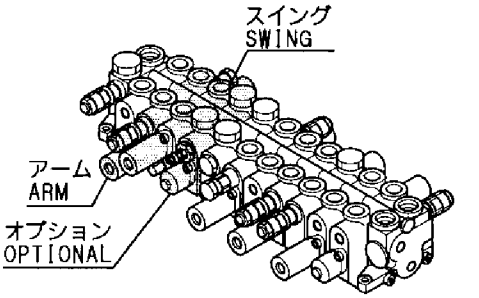

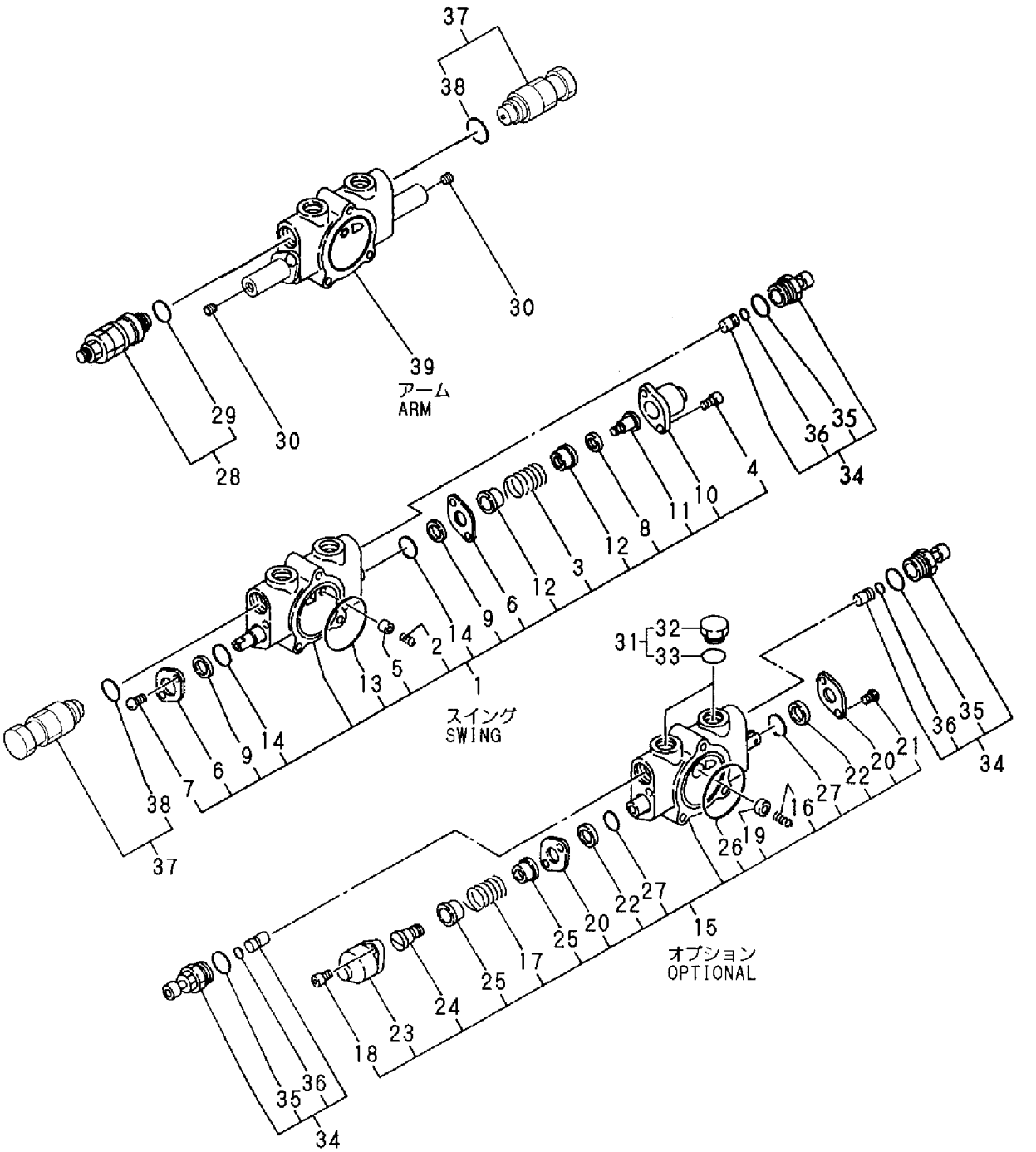

https://truckmanualshub.com/

```
1,2,,172171-72650,,"VALVE 210/25,RELIEF",,1,,,,,,,,,,,,,,,
2,3,,172116-74150,,O-RING,,1,,,,,,,,,,,,,,,
3,2,,172168-72730,,"VALVE 260/33,RELIEF",,1,,,,,,,,,,,,,,,
4,3,,172116-74150,,O-RING,,1,,,,,,,,,,,,,,,
5,2,,172171-72740,,PLUG,,4,,,,,,,,,,,,,,,
6,2,,172175-74210,,"SPOOL SECTION ASSY",,1,,,,,,,,,,,,,,,
7,3,,172168-72750,,"SPRING,CHECK VALVE",,1,,,,,,,,,,,,,,,
8,3,,172168-72850,,"END, SPOOL",,1,,,,,,,,,,,,,,,
9,3,,172168-72860,,"SEAT,SPRING",,1,,,,,,,,,,,,,,,
10,3,,172168-72880,,SPRING,,1,,,,,,,,,,,,,,,
11,3,,172168-72890,,CAP,,1,,,,,,,,,,,,,,,
12,3,,172168-72900,,CAP,,1,,,,,,,,,,,,,,,
13,3,,172151-74060,,"BOLT, SOCKET HEAD",,4,,,,,,,,,,,,,,,
14,3,,172122-74130,,POPPET,,1,,,,,,,,,,,,,,,
15,3,,172175-74220,,"SEAT, SPRING",,1,,,,,,,,,,,,,,,
16,3,,172151-74320,,O-RING,,2,,,,,,,,,,,,,,,
17,3,,933171-80590,,O-RING,,1,,,,,,,,,,,,,,,
18,2,,172146-74730,,"VALVE ASSY",,1,,,,,,,,,,,,,,,
19,3,,172116-74150,,O-RING,,1,,,,,,,,,,,,,,,
20,2,,172310-79180,,VALVE,,1,,,,,,,,,,,,,,,
21,3,,172116-74150,,O-RING,,1,,,,,,,,,,,,,,,
22,2,,172171-72720,,"SECTION ASSY.,SPOOL",,1,,,,,,,,,,,,,,,
```

https://truckmanualshub.com/

Fig. 65 コントロールバルブ（ブーム＆バケット）（フロントマルチ） CONTROL VALVE (BOOM & BUCKET) (FRONT MULTI)

COUNTRY	JP	AS	EX
APPLI-CATION	○	—	—

コントロールバルブASSY（フロントマルチ）
CONTROL VALVE ASSY (FRONT MULTI)
(172171-74101)
Fig. 62 REF. No. 7
inc. Fig. 62 REF. No. 8 ~ 33
Fig. 63 REF. No. 1 ~ 22
Fig. 64 REF. No. 1 ~ 39
Fig. 65 REF. No. 1 ~ 22
Fig. 66 REF. No. 1 ~ 15

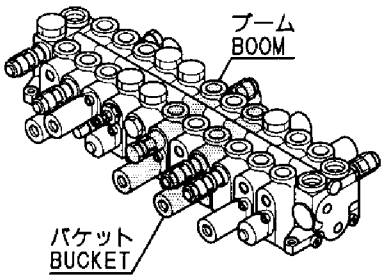

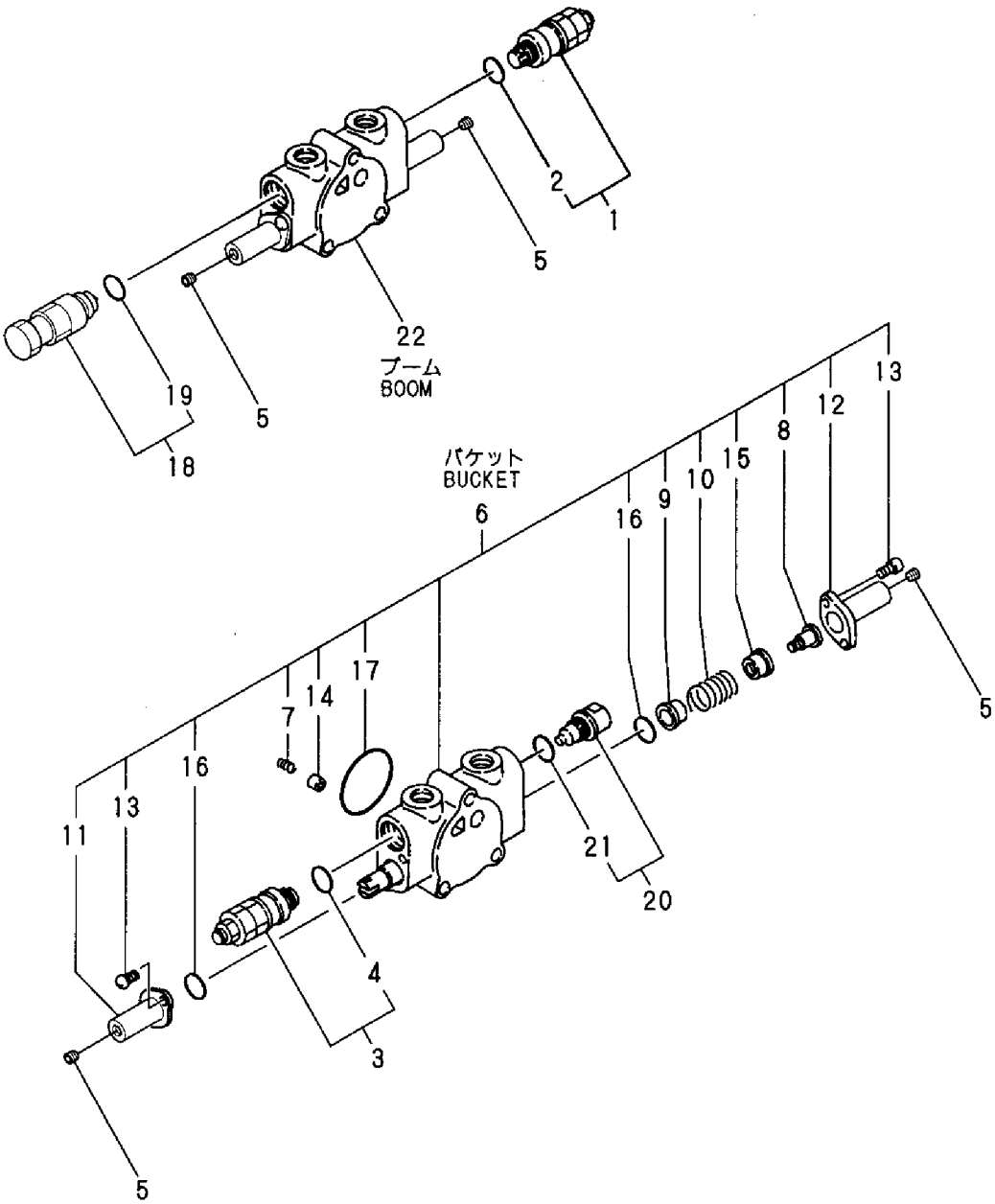

https://truckmanualshub.com/

```
1,2,,172171-72620,,"SECTION ASSY.,SPOOL",,1,,,,,,,,,,,,,,,
2,3,,172168-72750,,"SPRING,CHECK VALVE",,1,,,,,,,,,,,,,,,
3,3,,172122-74050,,SPRING,,1,,,,,,,,,,,,,,,
4,3,,172151-74060,,"BOLT, SOCKET HEAD",,2,,,,,,,,,,,,,,,
5,3,,172122-74130,,POPPET,,1,,,,,,,,,,,,,,,
6,3,,172116-74190,,"PLATE, SEAL",,2,,,,,,,,,,,,,,,
7,3,,172116-74220,,SCREW,,2,,,,,,,,,,,,,,,
8,3,,933166-80520,,WIPER,,2,,,,,,,,,,,,,,,
9,3,,933166-80530,,CAP,,1,,,,,,,,,,,,,,,
10,3,,933166-80550,,"SCREW, CAP",,1,,,,,,,,,,,,,,,
11,3,,933171-80510,,"SEAT, SPRING",,2,,,,,,,,,,,,,,,
12,3,,933171-80590,,O-RING,,1,,,,,,,,,,,,,,,
13,3,,933171-80610,,O-RING,,2,,,,,,,,,,,,,,,
14,2,,172171-72740,,PLUG,,2,,,,,,,,,,,,,,,
15,2,,172171-72710,,"SECTION ASSY.,SPOOL",,1,,,,,,,,,,,,,,,
```

https://truckmanualshub.com/

Fig. 66 コントロールバルブ（旋回&ブレード）（フロントマルチ） CONTROL VALVE (TURNING & BLADE) (FRONT MULTI)

COUNTRY	JP	AS	EX
APPLI-CATION	○	—	—

コントロールバルブASSY（フロントマルチ）
CONTROL VALVE ASSY (FRONT MULTI)
(172171-74101)
Fig.62 REF. No.7
inc. Fig.62 REF. No.8～33
Fig.63 REF. No.1～22
Fig.64 REF. No.1～39
Fig.65 REF. No.1～22
Fig.66 REF. No.1～15

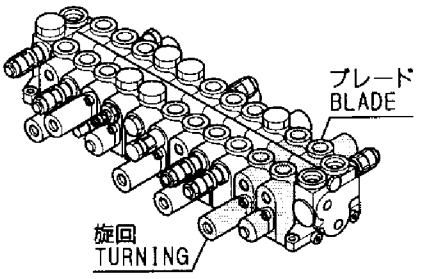

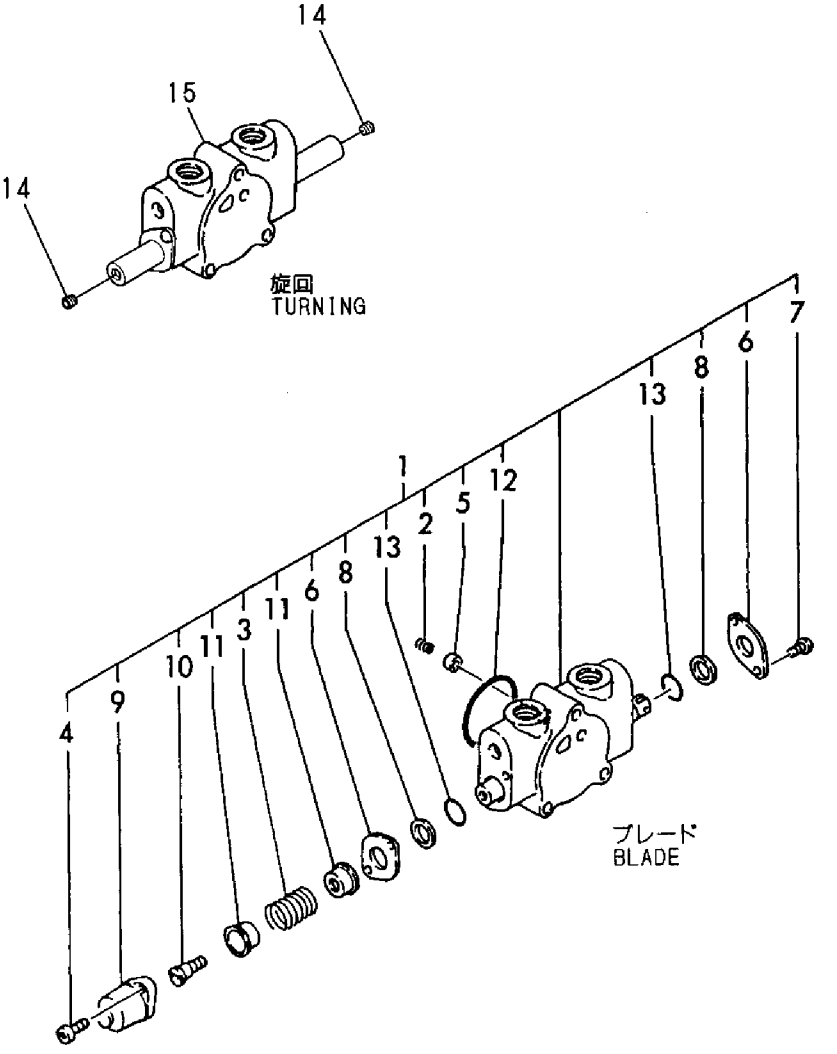

```
1,1,,172168-45400,,"PLATE ASSY, LINK",,,1,1,,,,,,,,,,,,,
2,1,,172165-45490,,CUSHION,,,5,5,,,,,,,,,,,,,
3,1,,22252-000280,,"CIRCLIP   28",,,5,5,,,,,,,,,,,,,
4,1,,26106-100352,,"BOLT M10X 35 PLATED",,,5,5,,,,,,,,,,,,,
5,1,,26013-100302,,"BOLT M10X 30",,,3,3,,,,,,,,,,,,,
6,1,,26716-100002,,"NUT M10",,,1,1,,,,,,,,,,,,,
7,1,,172171-74121,,"VALVE ASSY, CONTROL",,,1,1,,,,,,,,,,,,,
8,2,,172168-72620,,"SECTION ASSY.,SPACER",,,1,1,,,,,,,,,,,,,
9,3,,172122-73430,,PLUG,,,1,1,,,,,,,,,,,,,
10,3,,172142-74900,,SPACER,,,1,1,,,,,,,,,,,,,
11,2,,172171-72630,,"VALVE 175/25,RELIEF",,,2,2,,,,,,,,,,,,,
12,3,,172116-74150,,O-RING,,,2,2,,,,,,,,,,,,,
13,2,,172171-72640,,"VALVE 160/24,RELIEF",,,1,1,,,,,,,,,,,,,
14,3,,172116-74150,,O-RING,,,1,1,,,,,,,,,,,,,
15,2,,172146-74720,,"VALVE ASSY, SHUT-OFF",,,1,1,,,,,,,,,,,,,
16,3,,172116-74150,,O-RING,,,1,1,,,,,,,,,,,,,
17,3,,24311-240100,,"O-RING 1A P-10A",,,1,1,,,,,,,,,,,,,
18,2,,172175-74270,,"PLUG ASSY",,,2,2,,,,,,,,,,,,,
19,3,,172112-06480,,PLUG,,,3,3,,,,,,,,,,,,,
20,3,,172112-06490,,O-RING,,,3,3,,,,,,,,,,,,,
21,2,,172175-74350,,"PLUG ASSY",,,3,3,,,,,,,,,,,,,
22,3,,172116-74150,,O-RING,,,3,3,,,,,,,,,,,,,
23,3,,172116-74320,,PLUG,,,3,3,,,,,,,,,,,,,
24,2,,172122-74520,,"SECTION, INLET",,,2,2,,,,,,,,,,,,,
25,3,,172823-74270,,"INLET HOUSING",,,2,2,,,,,,,,,,,,,
26,3,,933171-80590,,O-RING,,,2,2,,,,,,,,,,,,,
27,2,,172146-74680,,"SECTION ASSY, SPACER",,,1,1,,,,,,,,,,,,,
28,3,,172122-73430,,PLUG,,,1,1,,,,,,,,,,,,,
29,3,,172146-74750,,SPACER,,,1,1,,,,,,,,,,,,,
30,3,,23871-030000,,"PLUG PT3/8,SCREW",,,1,1,,,,,,,,,,,,,
31,3,,933171-80590,,O-RING,,,1,1,,,,,,,,,,,,,
32,2,,26716-080002,,"NUT M 8",,,4,4,,,,,,,,,,,,,
33,2,,26716-100002,,"NUT M10",,,2,2,,,,,,,,,,,,,
34,2,,172151-74110,,TIE-ROD,,,2,2,,,,,,,,,,,,,
35,2,,172151-74120,,TIE-ROD,,,1,1,,,,,,,,,,,,,
```

https://truckmanualshub.com/

Fig. 67 コントロールバルブ（Pポート）（AS） CONTROL VALVE (P PORT) (AS)

COUNTRY	JP	AS	EX
APPLI－CATION	—	○	—

コントロールバルブASSY（AS）
CONTROL VALVE ASSY (AS)
(172171-74121)
Fig.67 REF. No.7
inc. Fig.67 REF. No.8～35
Fig.68 REF. No.1～22
Fig.69 REF. No.1～36
Fig.70 REF. No.1～22
Fig.71 REF. No.1～15

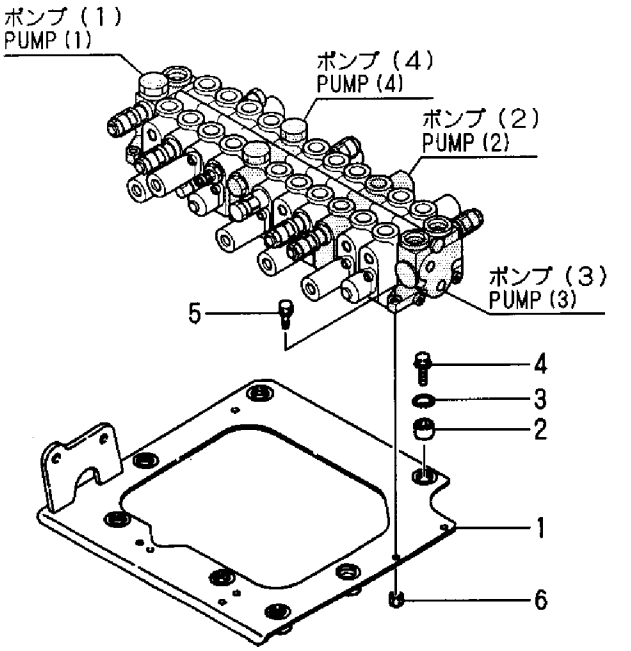

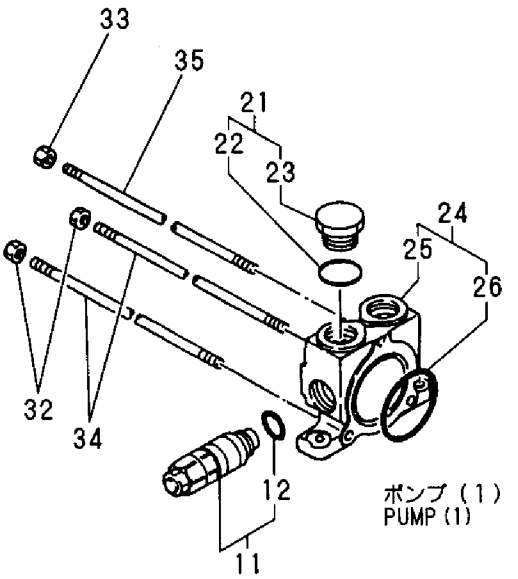

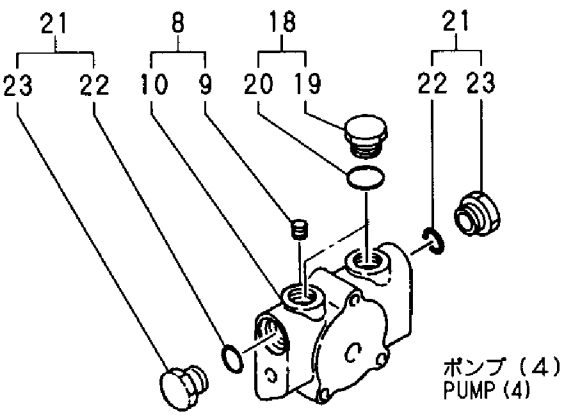

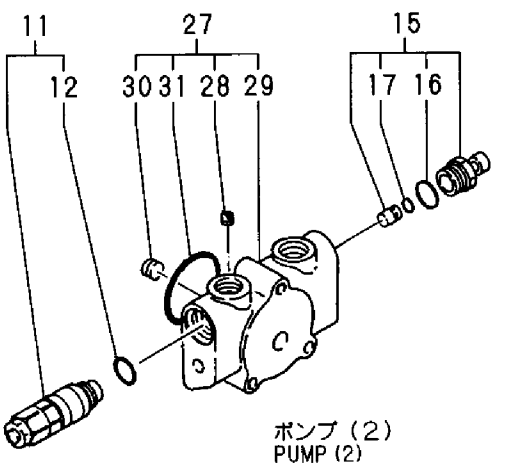

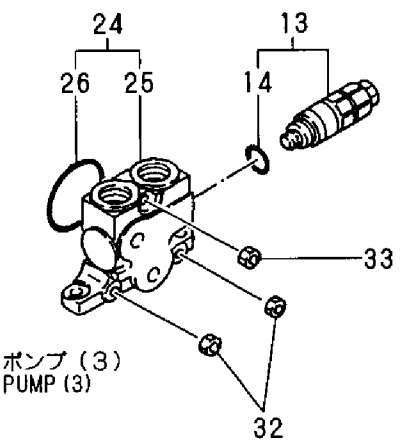

https://truckmanualshub.com/

```
1,2,,172171-72580,,"SPOOL SECTION ASSY",,,1,1,,,,,,,,,,,,,
2,3,,172122-74050,,SPRING,,,1,1,,,,,,,,,,,,,
3,3,,172151-74060,,"BOLT, SOCKET HEAD",,,2,2,,,,,,,,,,,,,
4,3,,172116-74190,,"PLATE, SEAL",,,2,2,,,,,,,,,,,,,
5,3,,172116-74220,,SCREW,,,2,2,,,,,,,,,,,,,
6,3,,933166-80520,,WIPER,,,2,2,,,,,,,,,,,,,
7,3,,933166-80530,,CAP,,,1,1,,,,,,,,,,,,,
8,3,,933166-80550,,"SCREW, CAP",,,1,1,,,,,,,,,,,,,
9,3,,933171-80510,,"SEAT, SPRING",,,2,2,,,,,,,,,,,,,
10,3,,933171-80590,,O-RING,,,1,1,,,,,,,,,,,,,
11,3,,933171-80610,,O-RING,,,2,2,,,,,,,,,,,,,
12,2,,172171-72610,,"SECTION ASSY.,SPOOL",,,1,1,,,,,,,,,,,,,
13,3,,172122-74050,,SPRING,,,1,1,,,,,,,,,,,,,
14,3,,172151-74060,,"BOLT, SOCKET HEAD",,,2,2,,,,,,,,,,,,,
15,3,,172116-74190,,"PLATE, SEAL",,,2,2,,,,,,,,,,,,,
16,3,,172116-74220,,SCREW,,,2,2,,,,,,,,,,,,,
17,3,,933166-80520,,WIPER,,,2,2,,,,,,,,,,,,,
18,3,,933166-80530,,CAP,,,1,1,,,,,,,,,,,,,
19,3,,933166-80550,,"SCREW, CAP",,,1,1,,,,,,,,,,,,,
20,3,,933171-80510,,"SEAT, SPRING",,,2,2,,,,,,,,,,,,,
21,3,,933171-80590,,O-RING,,,1,1,,,,,,,,,,,,,
22,3,,933171-80610,,O-RING,,,2,2,,,,,,,,,,,,,
```

https://truckmanualshub.com/

Fig. 68 コントロールバルブ（走行）（AS） CONTROL VALVE (TRAVEL) (AS)

COUNTRY	JP	AS	EX
APPLI-CATION	—	○	—

コントロールバルブASSY（AS）
CONTROL VALVE ASSY (AS)
(172171-74121)
Fig.67 REF. No.7
inc. Fig.67 REF. No.8～35
Fig.68 REF. No.1～22
Fig.69 REF. No.1～36
Fig.70 REF. No.1～22
Fig.71 REF. No.1～15

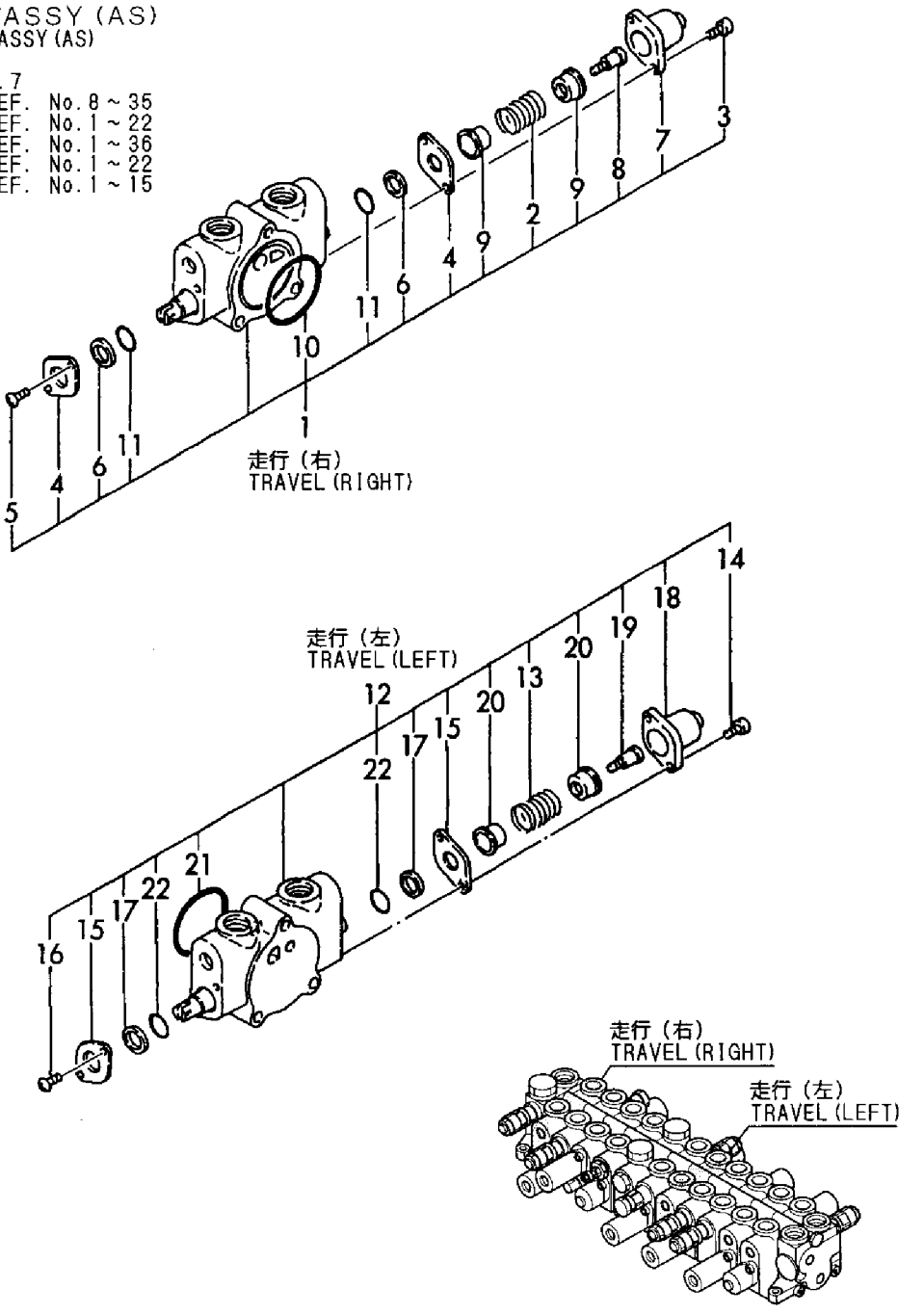

https://truckmanualshub.com/

```
1,2,,172171-72590,,"SECTION ASSY.,SPOOL",,,1,1,,,,,,,,,,,,,
2,3,,172168-72750,,"SPRING,CHECK VALVE",,,1,1,,,,,,,,,,,,,
3,3,,172122-74050,,SPRING,,,1,1,,,,,,,,,,,,,
4,3,,172151-74060,,"BOLT, SOCKET HEAD",,,1,1,,,,,,,,,,,,,
5,3,,172122-74130,,POPPET,,,1,1,,,,,,,,,,,,,
6,3,,172116-74190,,"PLATE, SEAL",,,2,2,,,,,,,,,,,,,
7,3,,172116-74220,,SCREW,,,1,1,,,,,,,,,,,,,
8,3,,172146-74740,,WASHER,,,1,1,,,,,,,,,,,,,
9,3,,933166-80520,,WIPER,,,2,2,,,,,,,,,,,,,
10,3,,933166-80530,,CAP,,,2,2,,,,,,,,,,,,,
11,3,,933166-80550,,"SCREW, CAP",,,1,1,,,,,,,,,,,,,
12,3,,933171-80510,,"SEAT, SPRING",,,2,2,,,,,,,,,,,,,
13,3,,933171-80590,,O-RING,,,1,1,,,,,,,,,,,,,
14,3,,933171-80610,,O-RING,,,2,2,,,,,,,,,,,,,
15,2,,172168-72610,,"SECTION ASSY, SPOOL",,,1,1,,,,,,,,,,,,,
16,3,,172168-72750,,"SPRING,CHECK VALVE",,,1,1,,,,,,,,,,,,,
17,3,,172168-72760,,"SPRING, SPOOL",,,1,1,,,,,,,,,,,,,
18,3,,172151-74060,,"BOLT, SOCKET HEAD",,,2,2,,,,,,,,,,,,,
19,3,,172122-74130,,POPPET,,,1,1,,,,,,,,,,,,,
20,3,,172116-74190,,"PLATE, SEAL",,,2,2,,,,,,,,,,,,,
21,3,,172116-74220,,SCREW,,,2,2,,,,,,,,,,,,,
22,3,,933166-80520,,WIPER,,,2,2,,,,,,,,,,,,,
23,3,,933166-80530,,CAP,,,1,1,,,,,,,,,,,,,
24,3,,933166-80550,,"SCREW, CAP",,,1,1,,,,,,,,,,,,,
25,3,,933171-80510,,"SEAT, SPRING",,,2,2,,,,,,,,,,,,,
26,3,,933171-80590,,O-RING,,,1,1,,,,,,,,,,,,,
27,3,,933171-80610,,O-RING,,,2,2,,,,,,,,,,,,,
28,2,,172171-72660,,"VALVE 210/25,RELIEF",,,1,1,,,,,,,,,,,,,
29,3,,172116-74150,,O-RING,,,1,1,,,,,,,,,,,,,
30,2,,172171-72740,,PLUG,,,2,2,,,,,,,,,,,,,
31,2,,172146-74720,,"VALVE ASSY, SHUT-OFF",,,3,3,,,,,,,,,,,,,
32,3,,172116-74150,,O-RING,,,3,3,,,,,,,,,,,,,
33,3,,24311-240100,,"O-RING 1A P-10A",,,3,3,,,,,,,,,,,,,
34,2,,172146-74730,,"VALVE ASSY",,,2,2,,,,,,,,,,,,,
35,3,,172116-74150,,O-RING,,,2,2,,,,,,,,,,,,,
36,2,,172171-72730,,"SECTION ASSY.,SPOOL",,,1,1,,,,,,,,,,,,,
```

https://truckmanualshub.com/

Fig. 69 コントロールバルブ（アーム＆スイング）（AS） CONTROL VALVE (ARM & SWING) (AS)

COUNTRY	JP	AS	EX
APPLI-CATION	—	○	—

コントロールバルブASSY（AS）
CONTROL VALVE ASSY (AS)
(172171-74121)
Fig. 67 REF. No. 7
inc. Fig. 67 REF. No. 8 ~ 35
Fig. 68 REF. No. 1 ~ 22
Fig. 69 REF. No. 1 ~ 36
Fig. 70 REF. No. 1 ~ 22
Fig. 71 REF. No. 1 ~ 15

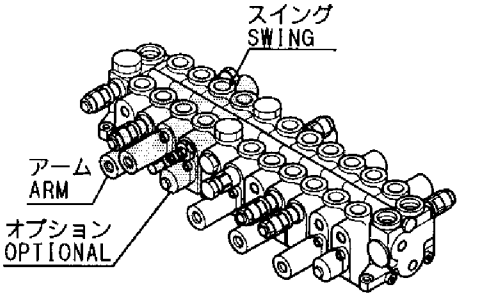

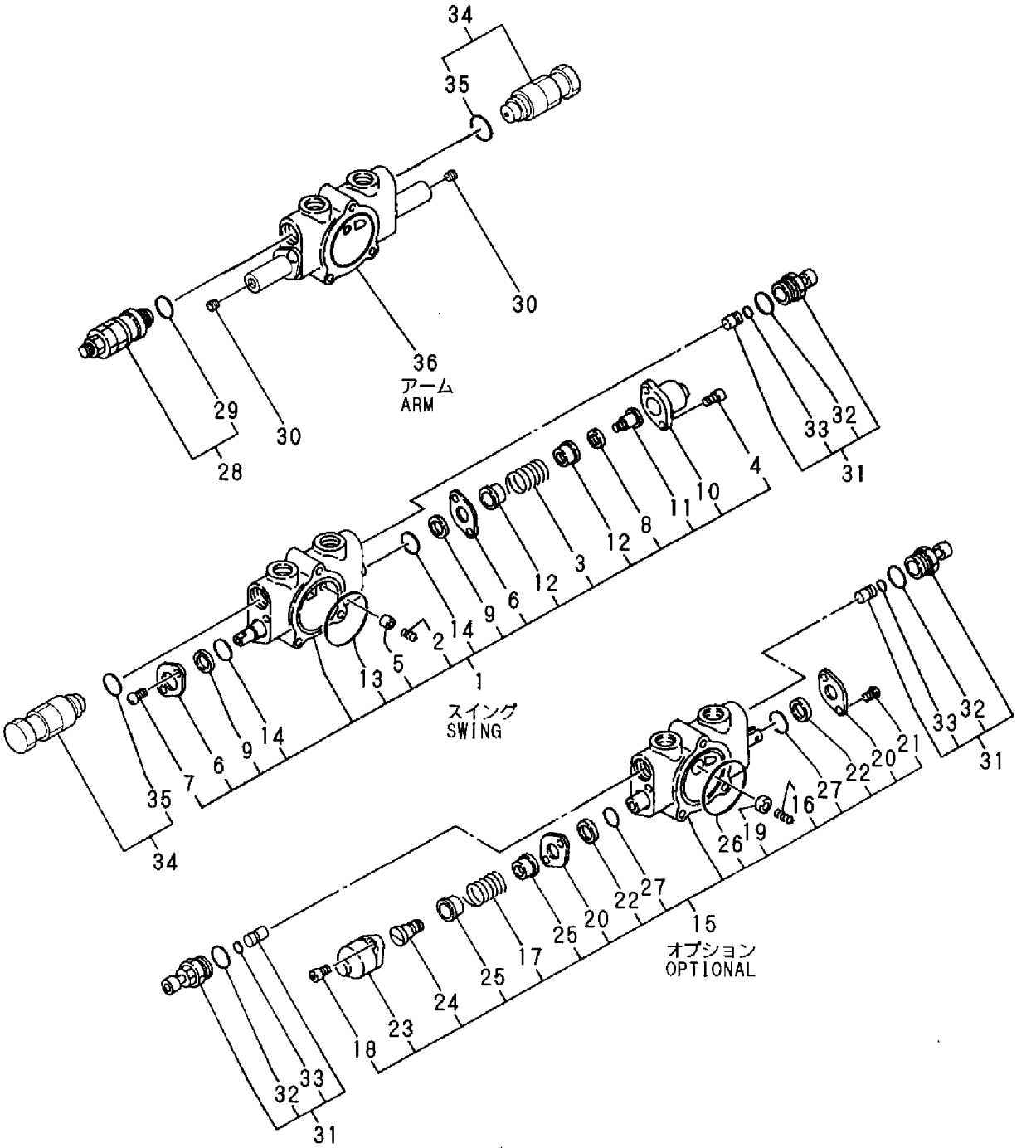

https://truckmanualshub.com/

```
1,2,,172171-72650,,"VALVE 210/25,RELIEF",,,1,1,,,,,,,,,,,,,
2,3,,172116-74150,,O-RING,,,1,1,,,,,,,,,,,,,
3,2,,172168-72730,,"VALVE 260/33,RELIEF",,,1,1,,,,,,,,,,,,,
4,3,,172116-74150,,O-RING,,,1,1,,,,,,,,,,,,,
5,2,,172171-72740,,PLUG,,,4,4,,,,,,,,,,,,,
6,2,,172175-74210,,"SPOOL SECTION ASSY",,,1,1,,,,,,,,,,,,,
7,3,,172168-72750,,"SPRING,CHECK VALVE",,,1,1,,,,,,,,,,,,,
8,3,,172168-72850,,"END, SPOOL",,,1,1,,,,,,,,,,,,,
9,3,,172168-72860,,"SEAT,SPRING",,,1,1,,,,,,,,,,,,,
10,3,,172168-72880,,SPRING,,,1,1,,,,,,,,,,,,,
11,3,,172168-72890,,CAP,,,1,1,,,,,,,,,,,,,
12,3,,172168-72900,,CAP,,,1,1,,,,,,,,,,,,,
13,3,,172151-74060,,"BOLT, SOCKET HEAD",,,4,4,,,,,,,,,,,,,
14,3,,172122-74130,,POPPET,,,1,1,,,,,,,,,,,,,
15,3,,172175-74220,,"SEAT, SPRING",,,1,1,,,,,,,,,,,,,
16,3,,172151-74320,,O-RING,,,2,2,,,,,,,,,,,,,
17,3,,933171-80590,,O-RING,,,1,1,,,,,,,,,,,,,
18,2,,172146-74730,,"VALVE ASSY",,,1,1,,,,,,,,,,,,,
19,3,,172116-74150,,O-RING,,,1,1,,,,,,,,,,,,,
20,2,,172310-79180,,VALVE,,,1,1,,,,,,,,,,,,,
21,3,,172116-74150,,O-RING,,,1,1,,,,,,,,,,,,,
22,2,,172171-72720,,"SECTION ASSY.,SPOOL",,,1,1,,,,,,,,,,,,,
```

https://truckmanualshub.com/

Fig. 70 コントロールバルブ（ブーム&バケット）（AS） CONTROL VALVE (BOOM & BUCKET) (AS)

COUNTRY	JP	AS	EX
APPLI-CATION	—	○	—

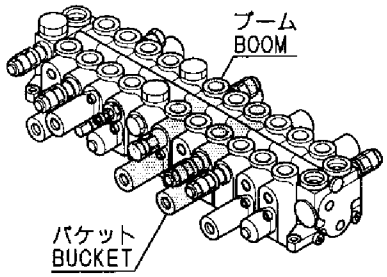

コントロールバルブASSY（AS）
CONTROL VALVE ASSY (AS)
(172171-74121)
Fig.67 REF. No.7
inc. Fig.67 REF. No.8～35
Fig.68 REF. No.1～22
Fig.69 REF. No.1～36
Fig.70 REF. No.1～22
Fig.71 REF. No.1～15

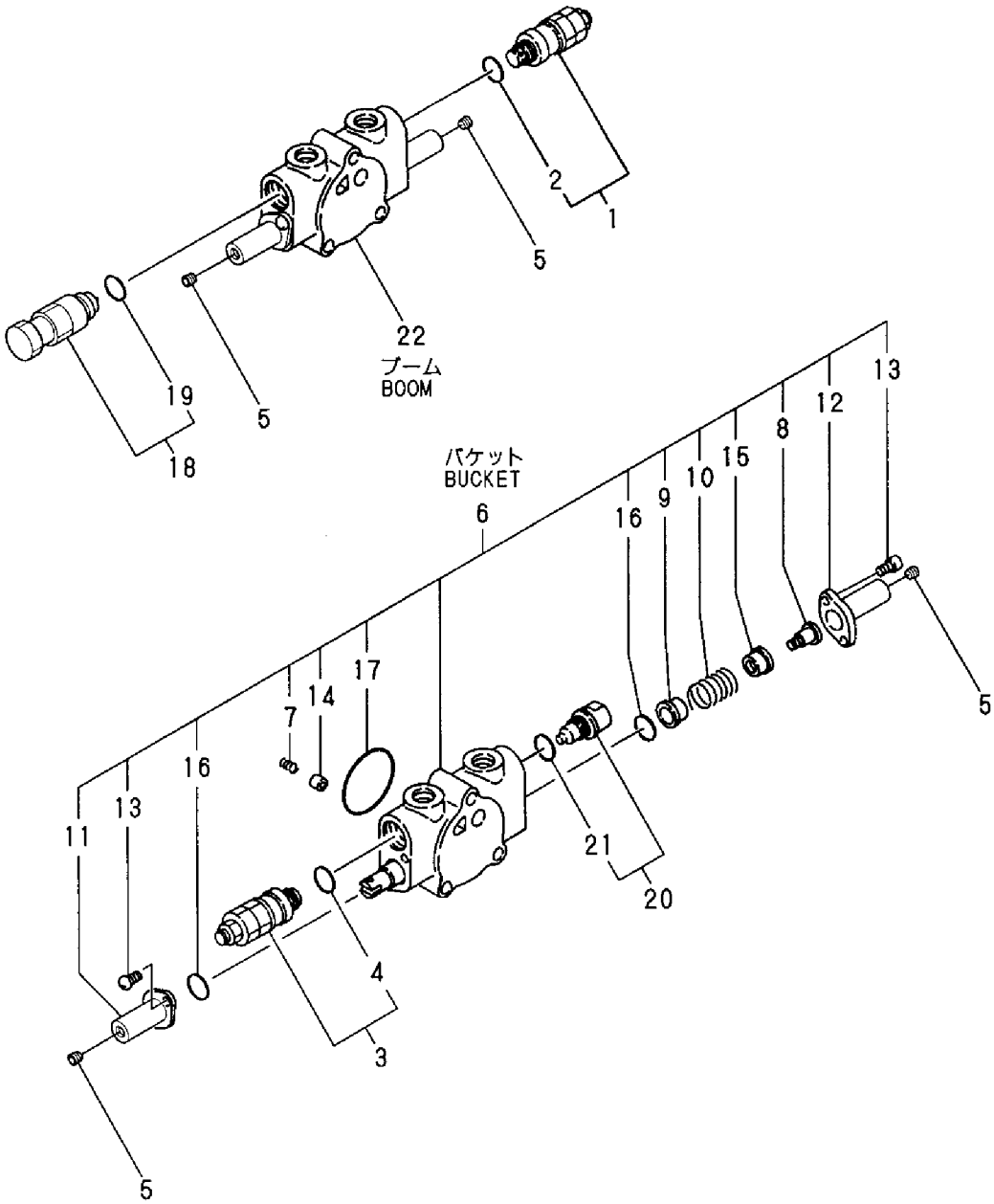

https://truckmanualshub.com/

```
1,2,,172171-72620,,"SECTION ASSY.,SPOOL",,,1,1,,,,,,,,,,,,,
2,3,,172168-72750,,"SPRING,CHECK VALVE",,,1,1,,,,,,,,,,,,,
3,3,,172122-74050,,SPRING,,,1,1,,,,,,,,,,,,,
4,3,,172151-74060,,"BOLT, SOCKET HEAD",,,2,2,,,,,,,,,,,,,
5,3,,172122-74130,,POPPET,,,1,1,,,,,,,,,,,,,
6,3,,172116-74190,,"PLATE, SEAL",,,2,2,,,,,,,,,,,,,
7,3,,172116-74220,,SCREW,,,2,2,,,,,,,,,,,,,
8,3,,933166-80520,,WIPER,,,2,2,,,,,,,,,,,,,
9,3,,933166-80530,,CAP,,,1,1,,,,,,,,,,,,,
10,3,,933166-80550,,"SCREW, CAP",,,1,1,,,,,,,,,,,,,
11,3,,933171-80510,,"SEAT, SPRING",,,2,2,,,,,,,,,,,,,
12,3,,933171-80590,,O-RING,,,1,1,,,,,,,,,,,,,
13,3,,933171-80610,,O-RING,,,2,2,,,,,,,,,,,,,
14,2,,172171-72740,,PLUG,,,2,2,,,,,,,,,,,,,
15,2,,172171-72710,,"SECTION ASSY.,SPOOL",,,1,1,,,,,,,,,,,,,
```

https://truckmanualshub.com/

Fig. 71 コントロールバルブ（旋回&ブレード）（AS） CONTROL VALVE (TURNING & BLADE) (AS)

COUNTRY	JP	AS	EX
APPLI-CATION	—	○	—

コントロールバルブASSY（AS）
CONTROL VALVE ASSY (AS)
(172171-74121)
Fig.67 REF. No.7
inc. Fig.67 REF. No.8～35
Fig.68 REF. No.1～22
Fig.69 REF. No.1～36
Fig.70 REF. No.1～22
Fig.71 REF. No.1～15

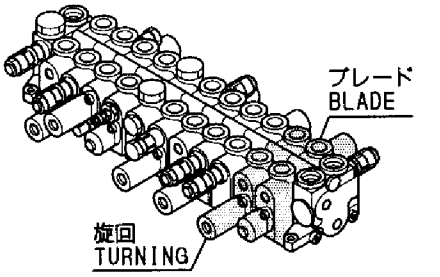

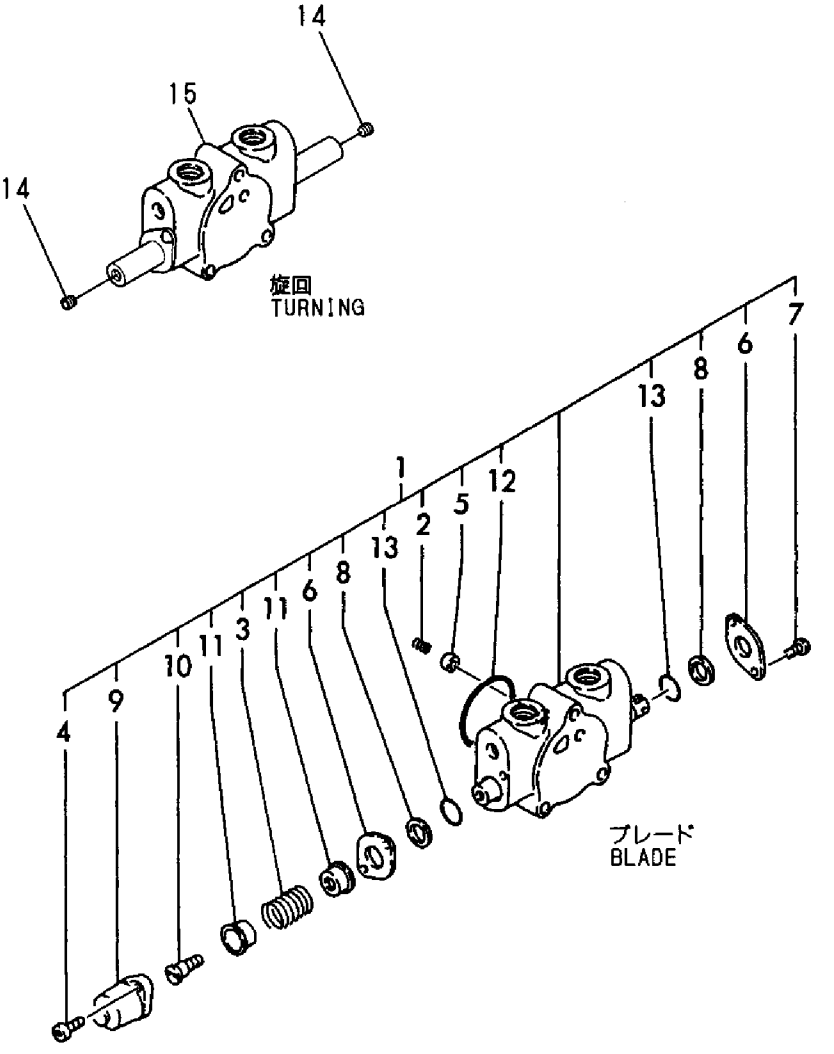

https://truckmanualshub.com/

```
1,2,,172168-74710,,"VALVE ASSY,PTO",1,1,1,1,,,,,,,,,,,,,
2,3,,172614-74410,,TIE-ROD,2,2,2,2,,,,,,,,,,,,,
3,3,,172168-74800,,"SECTION SET, SPOOL",1,1,1,1,,,,,,,,,,,,,
4,4,,172116-74190,,"PLATE, SEAL",2,2,2,2,,,,,,,,,,,,,
5,4,,172312-74220,,SPACER,2,2,2,2,,,,,,,,,,,,,
6,4,,172312-74230,,O-RING,2,2,2,2,,,,,,,,,,,,,
7,4,,172151-74290,,"BOLT, SOCKET HEAD",2,2,2,2,,,,,,,,,,,,,
8,4,,172168-74830,,SPACER,1,1,1,1,,,,,,,,,,,,,
9,4,,172168-74840,,PIN,1,1,1,1,,,,,,,,,,,,,
10,4,,172168-74850,,SLEEVE,1,1,1,1,,,,,,,,,,,,,
11,4,,172168-74860,,"BOLT, SOCKET HEAD",2,2,2,2,,,,,,,,,,,,,
12,4,,172168-74870,,"BALL,STAINLESS STEEL",2,2,2,2,,,,,,,,,,,,,,
13,4,,172168-74880,,SPRING,1,1,1,1,,,,,,,,,,,,,
14,4,,933166-80520,,WIPER,2,2,2,2,,,,,,,,,,,,,
15,4,,933166-80530,,CAP,1,1,1,1,,,,,,,,,,,,,
16,4,,933171-80590,,O-RING,1,1,1,1,,,,,,,,,,,,,
17,4,,933171-80610,,O-RING,2,2,2,2,,,,,,,,,,,,,
18,3,,172168-74810,,"SECTION ASSY.,INLET",1,1,1,1,,,,,,,,,,,,,
19,3,,172168-74820,,"ROD, TIE",1,1,1,1,,,,,,,,,,,,,
20,3,,26716-080002,,"NUT M 8",4,4,4,4,,,,,,,,,,,,,
21,3,,26716-100002,,"NUT M10",2,2,2,2,,,,,,,,,,,,,
22,3,,933171-80420,,"SECTION, OUTLET",1,1,1,1,,,,,,,,,,,,,
23,2,,172168-74750,,"BRACKET COMPL.",1,1,1,1,,,,,,,,,,,,,
24,2,,26013-100162,,"BOLT M10X 16",3,3,3,3,,,,,,,,,,,,,
25,2,,26013-100302,,"BOLT M10X 30",3,3,3,3,,,,,,,,,,,,,
```

https://truckmanualshub.com/

Fig. 72 PTOバルブ P.T.O. VALVE

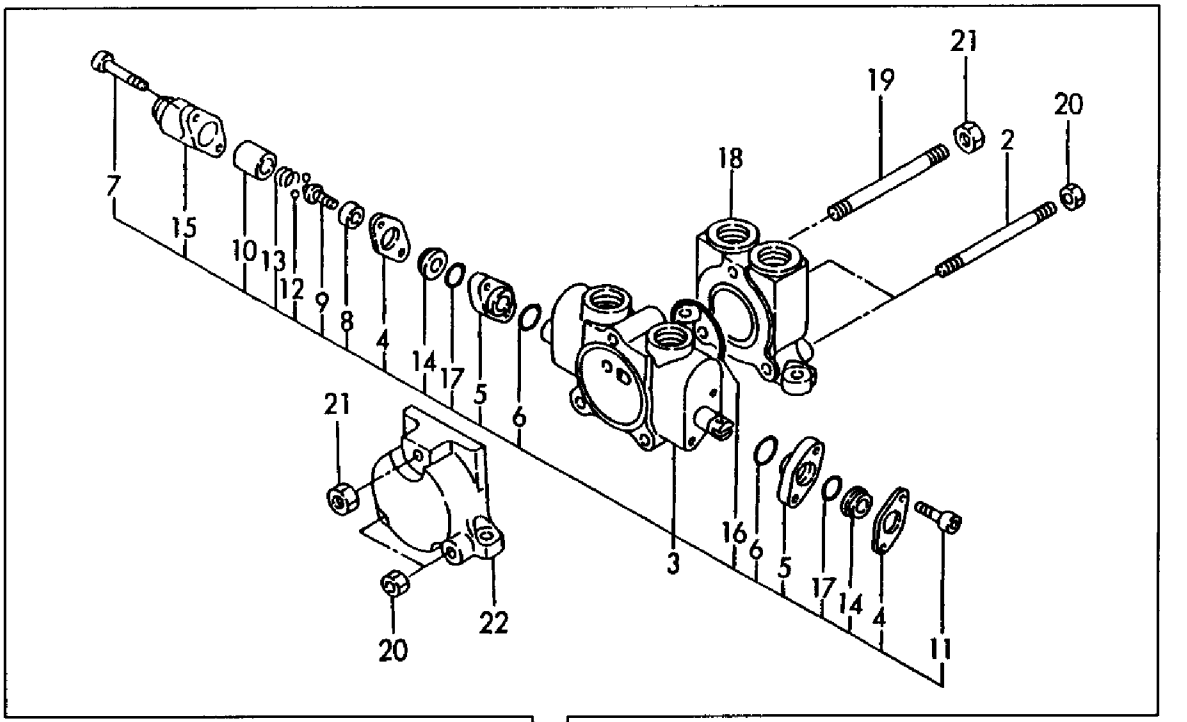

PTOキット（合流）
P.T.O.KIT(CONFLUENCE)
(172168-74620)
Fig.33 REF. No.1
inc. Fig.33 REF. No.2～25
Fig.72 REF. No.1～25
Fig.84 REF. No.1～22

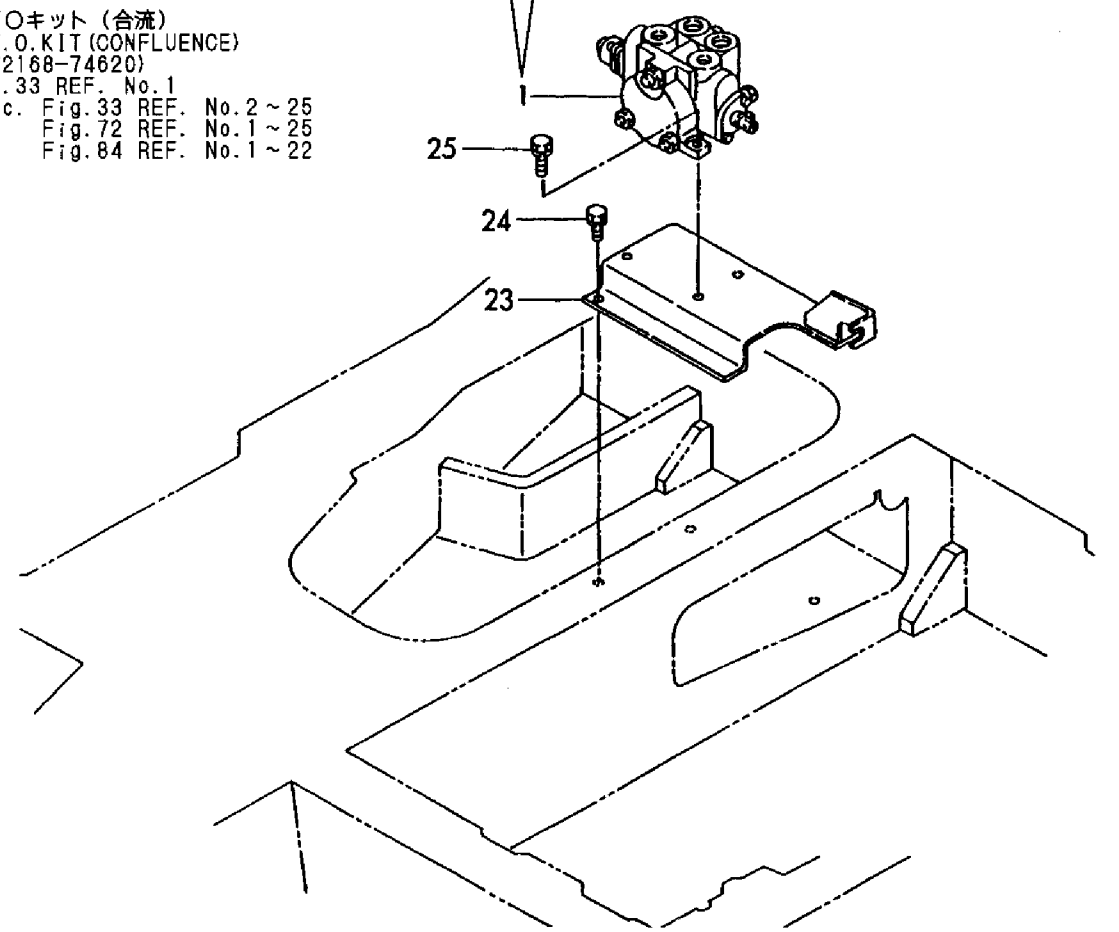

https://truckmanualshub.com/

```
1,1,,172151-74611,,"VALVE ASSY,RMT.CONT.",,2,,,,,,,,,,,,,,,
3,2,,172164-74560,,PLUG,,4,,,,,,,,,,,,,,,
5,2,,172164-74610,,COLLAR,,8,,,,,,,,,,,,,,,
6,2,,172164-74620,,DISC,,2,,,,,,,,,,,,,,,
7,2,,172164-74630,,NUT,,2,,,,,,,,,,,,,,,
8,2,,172164-74650,,PLUG,,4,,,,,,,,,,,,,,,
9,2,,172151-74860,,"SHIM(COUNT. SET",,8,,,,,,,,,,,,,,,
10,2,,172151-74870,,SPRING,,8,,,,,,,,,,,,,,,
11,2,,172151-74880,,RETAINER,,8,,,,,,,,,,,,,,,
12,2,,172151-74890,,"SP (SYN.",,8,,,,,,,,,,,,,,,
13,2,,172151-74900,,PISTON,,8,,,,,,,,,,,,,,,
14,2,,172151-74910,,SEAL,,8,,,,,,,,,,,,,,,
15,2,,172151-74930,,BOOT,,2,,,,,,,,,,,,,,,
16,2,,172151-74940,,PLATE,,2,,,,,,,,,,,,,,,
17,2,,172151-74950,,UNION,,2,,,,,,,,,,,,,,,
18,2,,172151-74980,,PLATE,,2,,,,,,,,,,,,,,,
19,2,,24311-000200,,"O-RING 1A P-20.0",,8,,,,,,,,,,,,,,,
20,2,,24321-000700,,"O-RING 1A G-70.0",,2,,,,,,,,,,,,,,,
21,2,,26116-060202,,"BOLT M 6X 20",,8,,,,,,,,,,,,,,,
```

https://truckmanualshub.com/

Fig. 73 リモコンバルブ（フロントマルチ） REMOTE CONTROL VALVE (FRONT MULTI)

COUNTRY	JP	AS	EX
APPLI-CATION	○	—	—

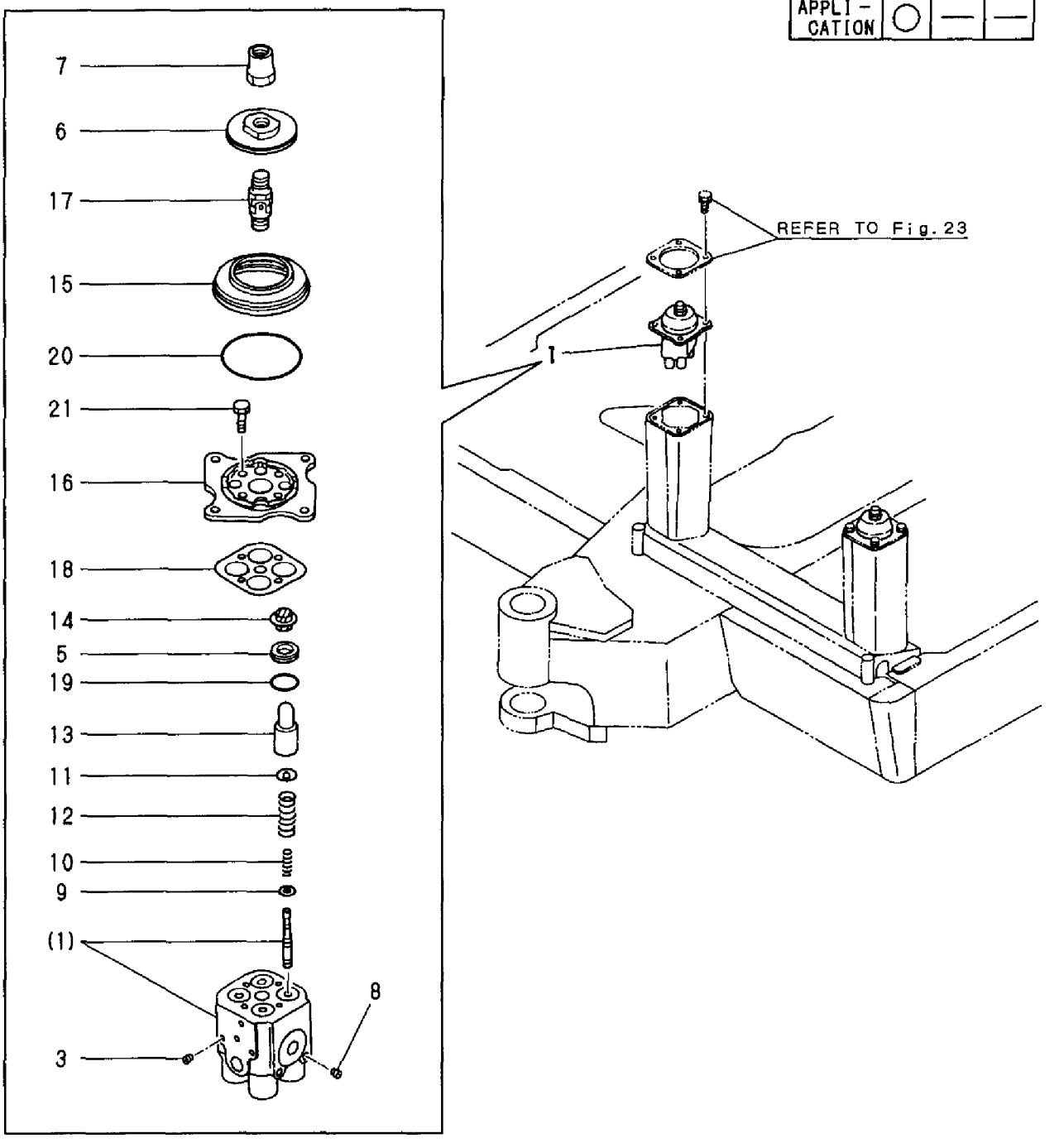

https://truckmanualshub.com/

```
1,1,,172165-74310,,"JOY-STICK R.H.",,,1,1,,,,,,,,,,,,,
3,2,,172151-73350,,"PLATE, PORT",,,1,1,,,,,,,,,,,,,
4,2,,172151-73370,,BUSH,,,1,1,,,,,,,,,,,,,
5,2,,172151-73380,,PLATE,,,1,1,,,,,,,,,,,,,
7,2,,172151-73400,,PLUG,,,4,4,,,,,,,,,,,,,
8,2,,26450-080302,,"BOLT M 8X 30",,,2,2,,,,,,,,,,,,,
9,2,,172151-73430,,WASHER,,,8,8,,,,,,,,,,,,,
10,2,,172151-73440,,RETAINER,,,4,4,,,,,,,,,,,,,
11,2,,172151-73450,,WASHER,,,4,4,,,,,,,,,,,,,
12,2,,172151-73460,,SPRING,,,4,4,,,,,,,,,,,,,
13,2,,172151-73480,,JOINT,,,1,1,,,,,,,,,,,,,
14,2,,172151-73490,,PLATE,,,1,1,,,,,,,,,,,,,
15,2,,172151-73500,,"NUT, ADJUST",,,1,1,,,,,,,,,,,,,
16,2,,172151-73590,,BUSH,,,1,1,,,,,,,,,,,,,
17,2,,172151-73610,,TERMINAL,,,2,2,,,,,,,,,,,,,
18,2,,172151-73620,,BELLOWS,,,1,1,,,,,,,,,,,,,
19,2,,172151-73630,,"SEAL KIT, SUB",,,1,1,,,,,,,,,,,,,
20,3,,172151-73360,,"SEAL WASHER",,,2,2,,,,,,,,,,,,,
21,3,,172151-73420,,SEAL,,,4,4,,,,,,,,,,,,,
22,3,,24315-000200,,"O-RING 1B P-20.0",,,4,4,,,,,,,,,,,,,
23,3,,24341-000900,,"O-RING 1A S-90.0",,,1,1,,,,,,,,,,,,,
24,2,,172165-74320,,ROD,,,4,4,,,,,,,,,,,,,
25,2,,172165-74330,,SPRING,,,4,4,,,,,,,,,,,,,
26,2,,172165-74350,,"HANDLE, SUB",,,1,1,,,,,,,,,,,,,
29,3,,172151-73530,,"HANDLE, CAP",,,1,1,,,,,,,,,,,,,
35,3,,172151-73660,,"SCREW 4X30",,,1,1,,,,,,,,,,,,,
36,3,,22137-040000,,"WASHER 4, POLISHED",,,2,2,,,,,,,,,,,,,
37,3,,26553-040102,,"SCREW 4X10",,,2,2,,,,,,,,,,,,,
38,3,,26553-050082,,"SCREW 5X8",,,2,2,,,,,,,,,,,,,
39,3,,26716-040002,,"NUT M 4",,,2,2,,,,,,,,,,,,,
40,3,,26716-040002,,"NUT M 4",,,1,1,,,,,,,,,,,,,
41,2,,22351-050010,,"SPRING PIN 5X10",,,1,1,,,,,,,,,,,,,
42,2,,26756-140002,,"LOCK NUT M14 PLATED",,,1,1,,,,,,,,,,,,,
43,1,,26013-060252,,"BOLT M 6X 25",,,4,4,,,,,,,,,,,,,
```

https://truckmanualshub.com/

Fig. 74 リモコンバルブ（右）（AS） REMOTE CONTROL VALVE (RIGHT) (AS)

見出しNo．1は、見出しNo．（1）から42を含みます。
1 inc．（1）～42

COUNTRY	JP	AS	EX
APPLI－CATION	—	○	—

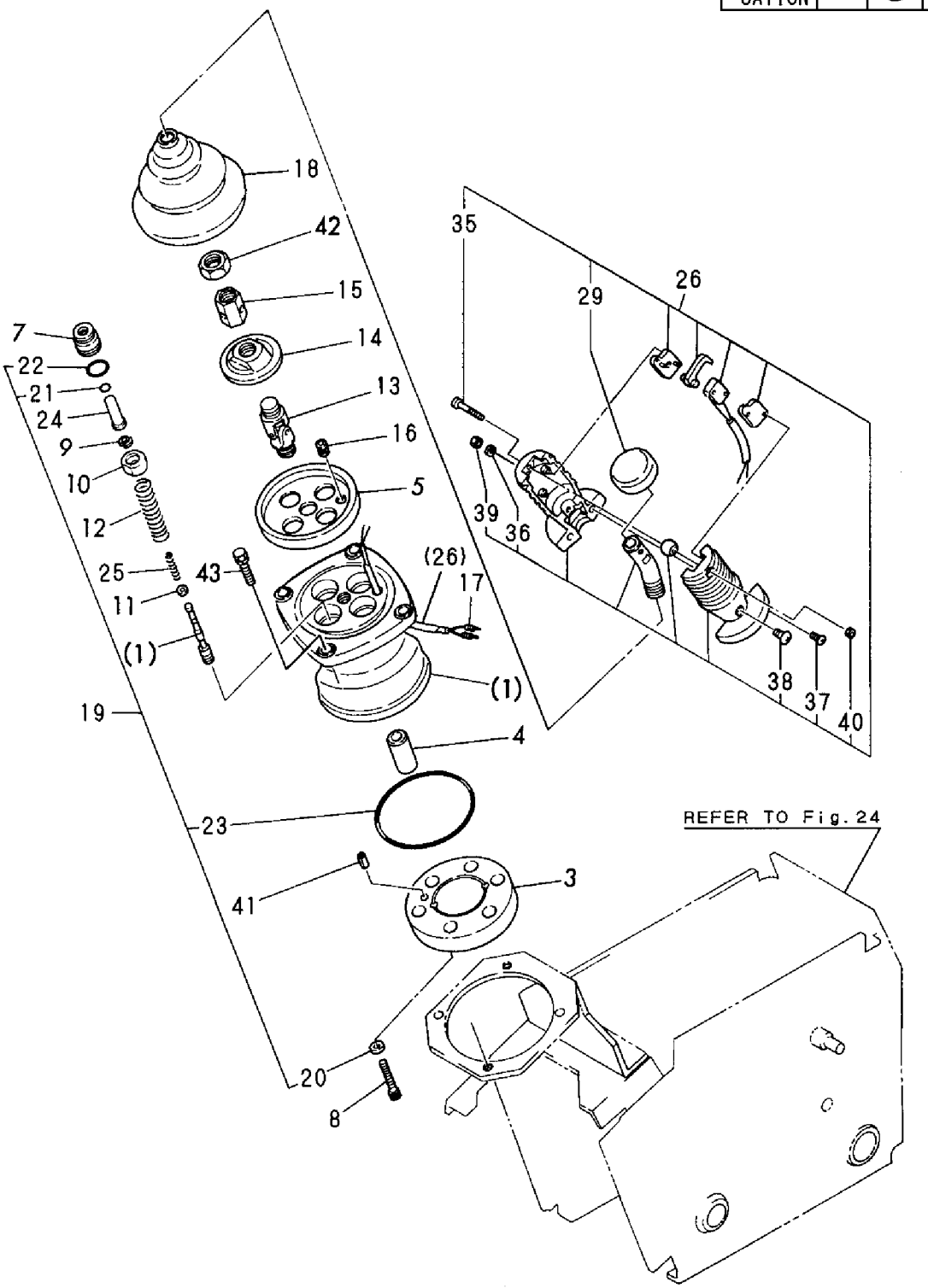

https://truckmanualshub.com/

```
1,1,,172165-74300,,"JOY-STICK L.H.",,,1,1,,,,,,,,,,,,,
3,2,,172151-73350,,"PLATE, PORT",,,1,1,,,,,,,,,,,,,
4,2,,172151-73370,,BUSH,,,1,1,,,,,,,,,,,,,
5,2,,172151-73380,,PLATE,,,1,1,,,,,,,,,,,,,
7,2,,172151-73400,,PLUG,,,4,4,,,,,,,,,,,,,
8,2,,172151-73430,,WASHER,,,8,8,,,,,,,,,,,,,
9,2,,172151-73440,,RETAINER,,,4,4,,,,,,,,,,,,,
10,2,,172151-73450,,WASHER,,,4,4,,,,,,,,,,,,,
11,2,,172151-73460,,SPRING,,,4,4,,,,,,,,,,,,,
12,2,,172151-73480,,JOINT,,,1,1,,,,,,,,,,,,,
13,2,,172151-73490,,PLATE,,,1,1,,,,,,,,,,,,,
14,2,,172151-73620,,BELLOWS,,,1,1,,,,,,,,,,,,,
15,2,,172151-73630,,"SEAL KIT, SUB",,,1,1,,,,,,,,,,,,,
16,3,,172151-73360,,"SEAL WASHER",,,2,2,,,,,,,,,,,,,
17,3,,172151-73420,,SEAL,,,4,4,,,,,,,,,,,,,
18,3,,24315-000200,,"O-RING 1B P-20.0",,,4,4,,,,,,,,,,,,,
19,3,,24341-000900,,"O-RING 1A S-90.0",,,1,1,,,,,,,,,,,,,
20,2,,172151-73650,,"NUT, ADJUST",,,1,1,,,,,,,,,,,,,
21,2,,172165-74320,,ROD,,,4,4,,,,,,,,,,,,,
22,2,,172165-74330,,SPRING,,,4,4,,,,,,,,,,,,,
23,2,,172165-74340,,"HANDLE, SUB",,,1,1,,,,,,,,,,,,,
26,3,,172151-73530,,"HANDLE, CAP",,,1,1,,,,,,,,,,,,,
27,3,,172151-73640,,CAP,,,1,1,,,,,,,,,,,,,
28,3,,172151-73660,,"SCREW 4X30",,,1,1,,,,,,,,,,,,,
29,3,,22137-040000,,"WASHER 4, POLISHED",,,2,2,,,,,,,,,,,,,
30,3,,26553-040102,,"SCREW 4X10",,,2,2,,,,,,,,,,,,,
31,3,,26553-050082,,"SCREW 5X8",,,2,2,,,,,,,,,,,,,
32,3,,26716-040002,,"NUT M 4",,,2,2,,,,,,,,,,,,,
33,3,,26716-040002,,"NUT M 4",,,1,1,,,,,,,,,,,,,
34,2,,22351-050010,,"SPRING PIN 5X10",,,1,1,,,,,,,,,,,,,
35,2,,26450-080302,,"BOLT M 8X 30",,,2,2,,,,,,,,,,,,,
36,2,,26756-140002,,"LOCK NUT M14 PLATED",,,1,1,,,,,,,,,,,,,
37,1,,26013-060252,,"BOLT M 6X 25",,,4,4,,,,,,,,,,,,,
```

https://truckmanualshub.com/

Fig. 75 リモコンバルブ（左）（AS） REMOTE CONTROL VALVE (LEFT) (AS)

見出しNo．1は、見出しNo．（1）から36を含みます。
1 inc.（1）～36

COUNTRY	JP	AS	EX
APPLI-CATION	—	○	—

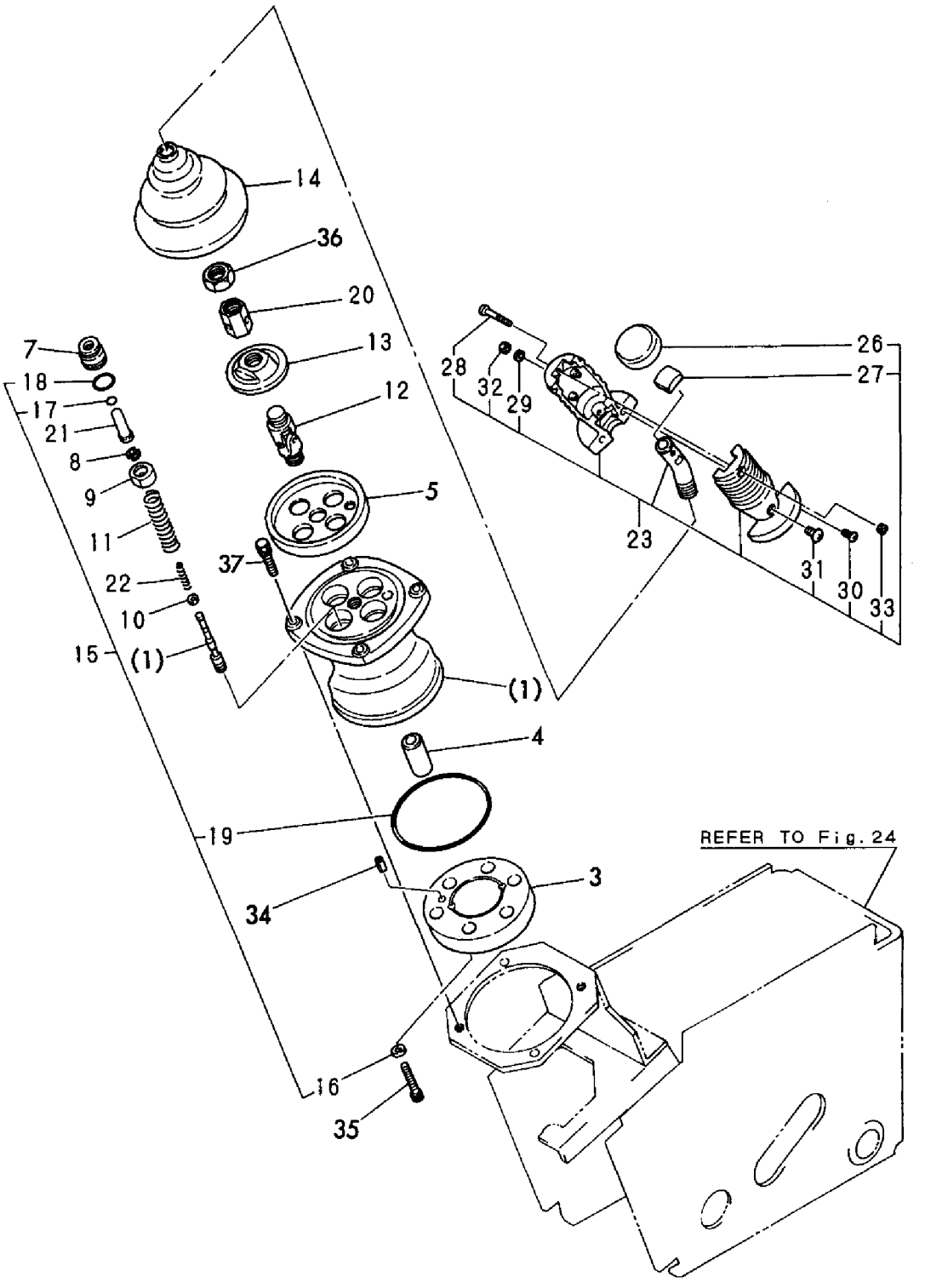

https://truckmanualshub.com/

```
1,1,,172165-74201,,"BRACKET COMPL.",,1,,,,,,,,,,,,,,
2,1,,172151-74600,,"VALVE CMP,MULTICHNG.",,1,,,,,,,,,,,,,,,
3,2,,172151-74700,,LEVER,,1,,,,,,,,,,,,,,
4,2,,172151-74710,,COVER,,1,,,,,,,,,,,,,,
5,2,,172151-74720,,COVER,,1,,,,,,,,,,,,,,
6,2,,172151-74730,,SPRING,,1,,,,,,,,,,,,,,
7,2,,172151-74740,,"PLATE, MARK",,1,,,,,,,,,,,,,,
8,2,,172151-74750,,"PLATE, MARK",,1,,,,,,,,,,,,,,
9,2,,172151-74760,,WASHER,,2,,,,,,,,,,,,,,
10,2,,172151-74760,,WASHER,,1,,,,,,,,,,,,,,
11,2,,172151-74770,,"GASKET, CYL. HEAD",,1,,,,,,,,,,,,,,
12,2,,23871-010000,,"PLUG PT1/8,SCREW",,1,,,,,,,,,,,,,,
13,2,,24190-100001,,"BALL 5/16, STEEL",,1,,,,,,,,,,,,,,
14,2,,24311-000280,,"O-RING 1A P-28.0",,1,,,,,,,,,,,,,,
15,2,,24321-000600,,"O-RING 1A G-60.0",,2,,,,,,,,,,,,,,
16,2,,26450-060162,,"BOLT M 6X 16",,2,,,,,,,,,,,,,,
17,2,,26450-060162,,"BOLT M 6X 16",,8,,,,,,,,,,,,,,
18,2,,26450-060162,,"BOLT M 6X 16",,8,,,,,,,,,,,,,,
19,2,,26647-060202,,"WING BOLT M 6X20",,1,,,,,,,,,,,,,,
20,1,,26013-100252,,"BOLT W/WASHER M10X25",,3,,,,,,,,,,,,,,,
21,1,,26013-100302,,"BOLT M10X 30",,4,,,,,,,,,,,,,,
```

https://truckmanualshub.com/

Fig. 76 ロータリバルブ（フロントマルチ） ROTARY VALVE (FRONT MULTI)

COUNTRY	JP	AS	EX
APPLI-CATION	○	—	—

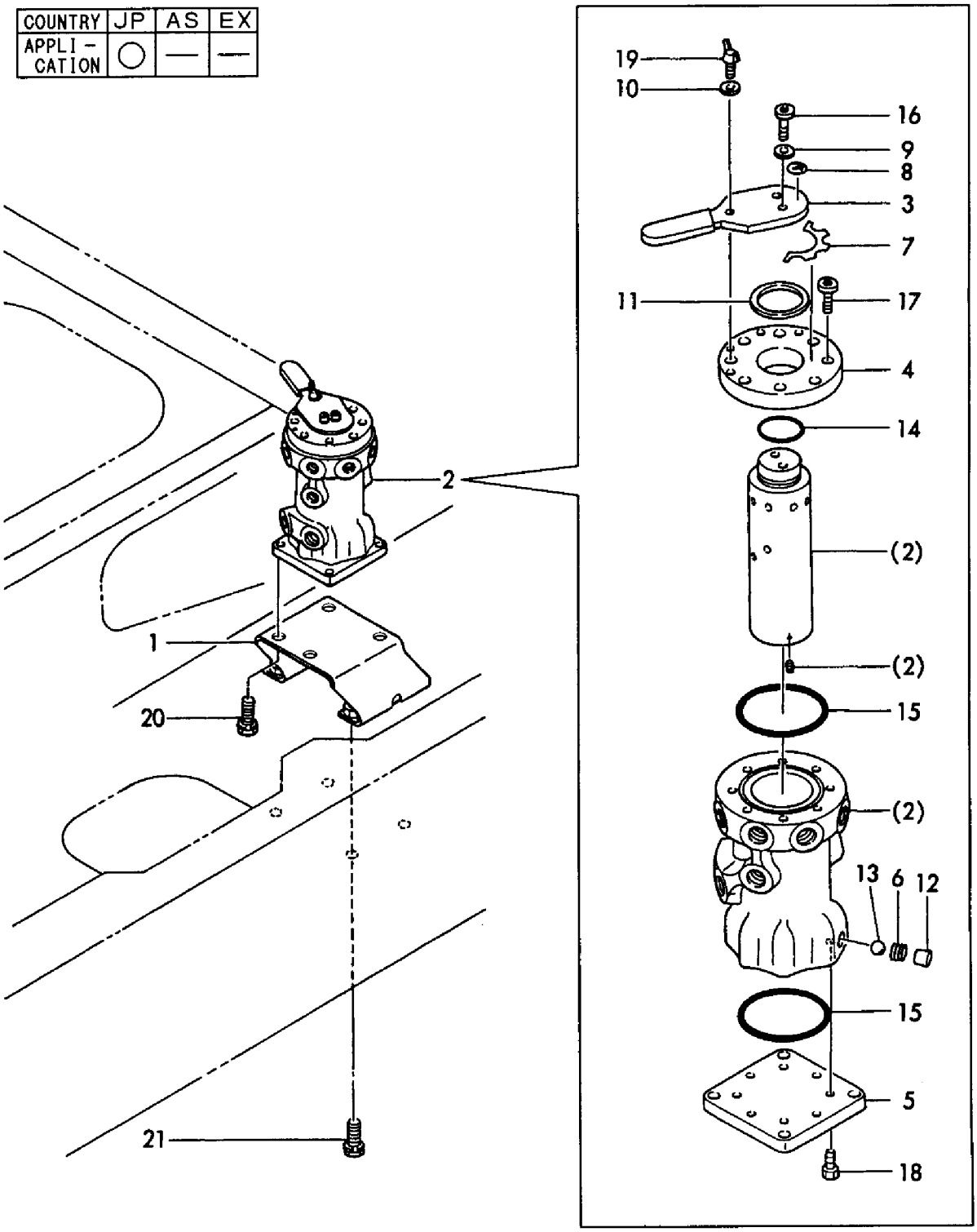

https://truckmanualshub.com/

```
1,1,,772171-75100-1,,"RESERVOIR   (GREEN)",1,1,,,,,,,,,,,,,,,
1A,1,,772171-75100-2,,"RESERVOR (YELLOW)",,,1,1,,,,,,,,,,,,,
2,2,,172137-73700,,"FILTER, SUCTION",1,1,1,1,,,,,,,,,,,,,
3,2,,172124-73700,,"BAR,FILTER SUPPORT",1,1,1,1,,,,,,,,,,,,,
4,2,,172141-73750,,"FILTER ASSY, RETURN",1,1,1,1,,,,,,,,,,,,,
5,3,,172141-73760,,ELEMENT,1,1,1,1,,,,,,,,,,,,,
6,3,,172141-73770,,"VALVE ASSY, BYPASS",1,1,1,1,,,,,,,,,,,,,
7,2,,172112-75780,,"SPRING, STRAINER",1,1,1,1,,,,,,,,,,,,,
8,2,,26716-100002,,"NUT M10",1,1,1,1,,,,,,,,,,,,,
9,2,,933152-02710,,"SPRING, SIDE CLUTCH",1,1,1,1,,,,,,,,,,,,,
11,2,,172171-75210,,"COVER CMP.,RESERVOIR",1,1,,,,,,,,,,,,,,,
11A,2,,172171-75210-2,,"COVER,RESERVOIR",,,1,1,,,,,,,,,,,,,
12,2,,172141-75430-1,,"COVER,INTAKE (GREEN)",1,1,,,,,,,,,,,,,,,
12A,2,,172141-75430-2,,"COVER,INTAKE (YELLOW",,,1,1,,,,,,,,,,,,,
13,2,,172122-75600,,"GAUGE, OIL LEVEL",1,1,1,1,,,,,,,,,,,,,
14,3,,172122-75620,,BOLT,2,2,2,2,,,,,,,,,,,,,
15,3,,172122-75630,,GASKET,4,4,4,4,,,,,,,,,,,,,
16,2,,172116-75850-1,,"PLUG, OIL (GREEN)",1,1,,,,,,,,,,,,,,,
16A,2,,172116-75850,,"PLUG, OIL FEED",,,1,1,,,,,,,,,,,,,
17,2,,22417-200160,,"COTTER PIN 2.0X16",1,1,1,1,,,,,,,,,,,,,
18,2,,24311-000380,,"O-RING 1A P-38.0",1,1,1,1,,,,,,,,,,,,,
19,2,,24321-001050,,"O-RING 1A G-105.0",1,1,1,1,,,,,,,,,,,,,
20,2,,26013-080202,,"BOLT W/WASHER M8X20",6,6,6,6,,,,,,,,,,,,,
21,2,,933171-23042,,MAGNET,1,1,1,1,,,,,,,,,,,,,
22,2,,172183-75750,,"PLUG 24, DRAIN",1,1,1,1,,,,,,,,,,,,,
23,2,,172165-75450-1,,"PLATE (GREEN)",1,1,,,,,,,,,,,,,,,
23A,2,,172165-75450,,PLATE,,,1,1,,,,,,,,,,,,,
24,2,,172165-75460,,GASKET,1,1,1,1,,,,,,,,,,,,,
25,2,,172165-75481,,ELEMENT,1,1,1,1,,,,,,,,,,,,,
26,2,,22137-080000,,"WASHER 8, POLISHED",6,6,6,6,,,,,,,,,,,,,
27,2,,24321-001150,,"O-RING 1A G-115.0",1,1,1,1,,,,,,,,,,,,,
28,2,,26022-050102,,"SCREW M 5X 10",3,3,3,3,,,,,,,,,,,,,
29,2,,24341-000300,,"O-RING 1A S-30.0",1,1,1,1,,,,,,,,,,,,,
30,1,,172126-16540,,"CLAMP 10X70",1,1,1,1,,,,,,,,,,,,,
31,1,,23080-010000,,"CLAMP 10",1,1,,,,,,,,,,,,,,,
31-1,1,,124766-59050,,"CLAMP 12",1,1,1,1,,,N,,,M/#50842,,M/#50842,,,,,
32,1,,172165-75490,,HOSE,1,1,1,1,,,,,,,,,,,,,
33,1,,22137-140000,,"WASHER 14,POLISHED",4,4,4,4,,,,,,,,,,,,,
34,1,,22217-140000,,"SPRING WASHER 14",4,4,4,4,,,,,,,,,,,,,
35,1,,26116-140302,,"BOLT M14X 30 PLATED",2,2,2,2,,,,,,,,,,,,,
36,1,,26116-140452,,"BOLT M14X 45 PLATED",2,2,2,2,,,,,,,,,,,,,
```

https://truckmanualshub.com/

Fig. 77 作動油タンク HYD.OIL TANK

見出しNo．1は、見出しNo．（1）から29を含みます。
1inc.（1）～29

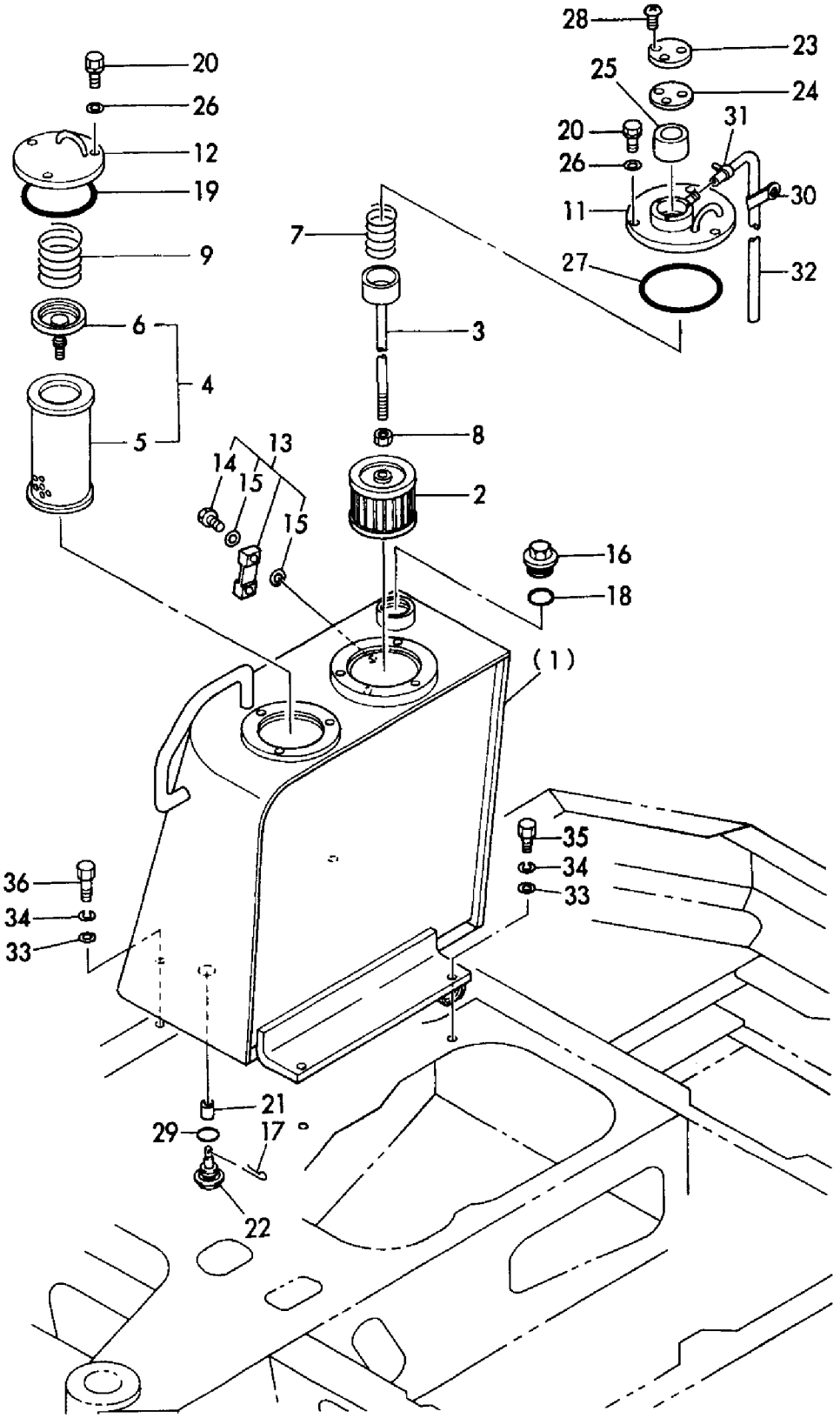

https://truckmanualshub.com/

```
1,1,,172165-76860,,FLANGE,1,1,1,1,,,,,,,,,,,,,
2,1,,172142-76130,,"JOINT 7/8UN-1/4",1,1,1,1,,,,,,,,,,,,,
3,1,,172141-76900,,"CONNECTOR 1/2L",3,3,3,3,,,,,,,,,,,,,
4,2,,24315-000180,,"O-RING 1B P-18.0",3,3,3,3,,,,,,,,,,,,,
5,1,,22117-120000,,"WASHER 12",4,4,4,4,,,,,,,,,,,,,
6,1,,172168-76240,,"CONNECTOR UN7/8PF1/2",1,1,1,1,,,,,,,,,,,,,
7,1,,24321-000450,,"O-RING 1A G-45.0",1,1,1,1,,,,,,,,,,,,,
8,1,,26013-120302,,"BOLT W/WASHER M12X30",4,4,4,4,,,,,,,,,,,,,
9,1,,933152-07400,,"O-RING (A)",1,1,1,1,,,,,,,,,,,,,
10,1,,933152-07400,,"O-RING (A)",1,1,1,1,,,,,,,,,,,,,
11,1,,933152-24120,,"O-RING (B)",1,1,1,1,,,,,,,,,,,,,
12,1,,933166-24140,,CONNECTOR,1,1,1,1,,,,,,,,,,,,,
13,1,,172171-78101,,HOSE,1,1,1,1,,,,,,,,,,,,,
14,1,,172173-78180,,"COVER, HOSE",1,1,1,1,,,,,,,,,,,,,
15,1,,172171-78250,,"HOSE P208EV092S",1,1,1,1,,,,,,,,,,,,,
16,1,,172165-78810,,"HOSE G208CV115S",2,2,2,2,,,,,,,,,,,,,
17,1,,172122-79890,,"CLAMP 350",2,2,2,2,,,,,,,,,,,,,
18,1,,23000-060000,,"CLAMP 60",4,4,4,4,,,,,,,,,,,,,
```

https://truckmanualshub.com/

Fig. 78 油圧配管（タンク～ポンプ～バルブ） HYD. OIL PIPING (TANK ~ PUMP ~ VALVE)

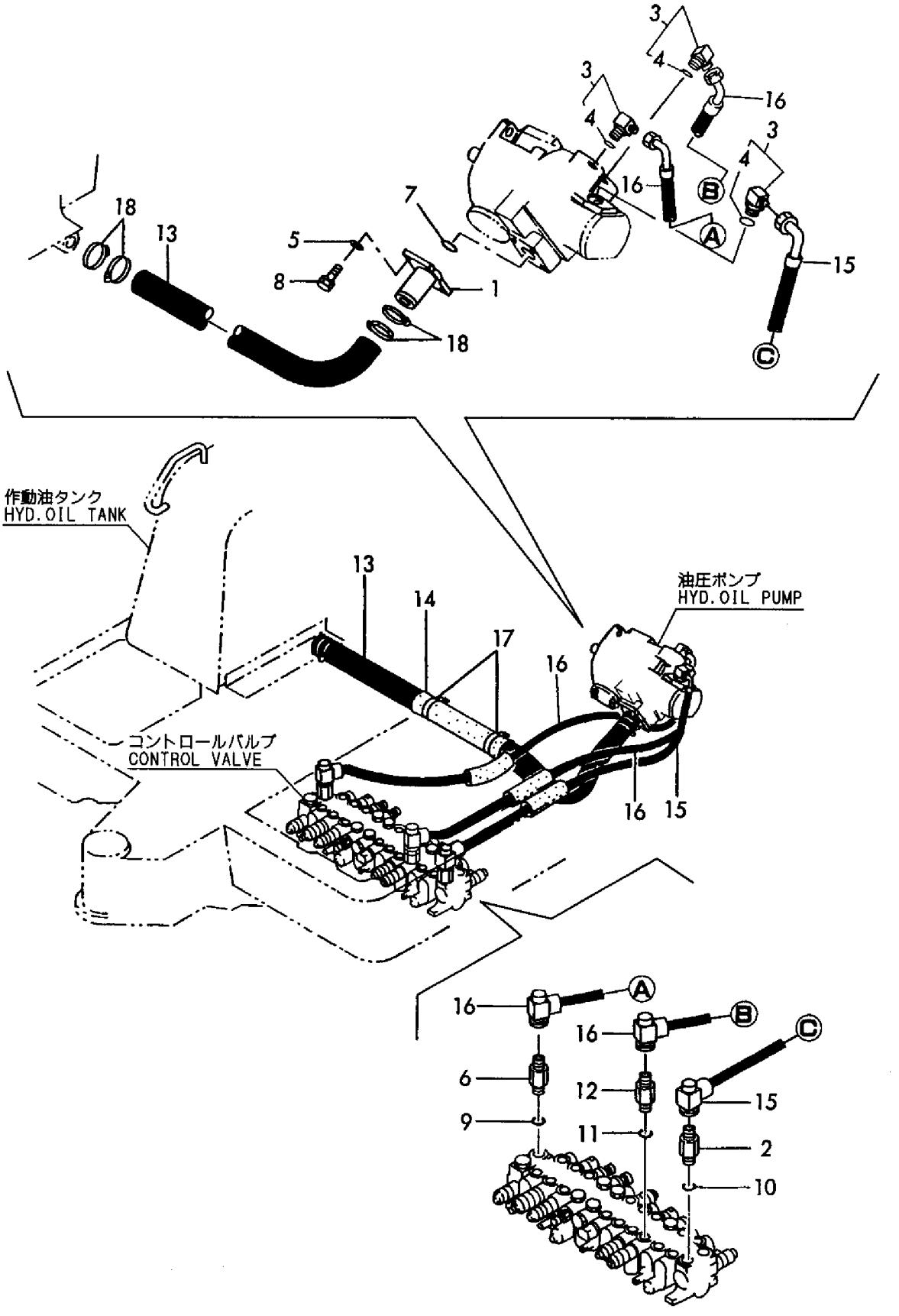

https://truckmanualshub.com/

```
1,1,,172730-75140,,ADAPTOR,2,2,2,2,,,,,,,,,,,,,
2,1,,172168-76130,,"CONNECTOR UN3/4PF3/8",1,1,1,1,,,,,,,,,,,,,
3,2,,933152-24120,,"O-RING (B)",1,1,1,1,,,,,,,,,,,,,
4,1,,24315-000140,,"O-RING 1B P-14.0",2,2,2,2,,,,,,,,,,,,,
5,1,,933152-24120,,"O-RING (B)",4,4,4,4,,,,,,,,,,,,,
6,1,,933152-24120,,"O-RING (B)",3,3,3,3,,,,,,,,,,,,,
7,1,,933155-08481,,"CONNECTOR (A)",4,4,4,4,,,,,,,,,,,,,
8,1,,172171-78500,,HOSE,1,1,1,1,,,,,,,,,,,,,
9,1,,172171-78510,,HOSE,1,1,1,1,,,,,,,,,,,,,
10,1,,172171-78520,,HOSE,1,1,1,1,,,,,,,,,,,,,
11,1,,172171-78530,,HOSE,1,1,1,1,,,,,,,,,,,,,
12,1,,172171-78540,,HOSE,1,1,1,1,,,,,,,,,,,,,
13,1,,172171-78550,,HOSE,1,1,1,1,,,,,,,,,,,,,
14,1,,172168-78700,,"SUPPORT ASSY, HOSE",1,1,1,1,,,,,,,,,,,,,
15,1,,172168-78740,,"COVER ASSY",1,1,1,1,,,,,,,,,,,,,
16,2,,172168-78760,,RUBBER,1,1,1,1,,,,,,,,,,,,,
17,1,,172168-78920,,"HOSE P208CC080S",1,1,1,1,,,,,,,,,,,,,
18,1,,172168-78960,,"HOSE P206BC080S",1,1,1,1,,,,,,,,,,,,,
19,1,,22217-100000,,"SPRING WASHER 10",2,2,2,2,,,,,,,,,,,,,
20,1,,26013-100202,,"BOLT W/WASHER M10X20",2,2,2,2,,,,,,,,,,,,,,
21,1,,26116-100652,,"BOLT M10X 65 PLATED",2,2,2,2,,,,,,,,,,,,,
22,1,,172142-76160,,"JOINT 3/4UN-3/8",3,3,3,3,,,,,,,,,,,,,
23,1,,172165-78150,,GROMMET,1,1,1,1,,,,,,,,,,,,,
24,1,,172168-78590,,CLAMP,1,1,1,1,,,,,,,,,,,,,
25,1,,172171-78900,,COVER,,,6,6,,,,1,,,,,,,,,
26,1,,172122-79920,,CLAMP,,,6,6,,,,1,,,,,,,,,
27,1,,23000-025000,,"CLAMP 25",,,6,6,,,,1,,,,,,,,,
```

https://truckmanualshub.com/

Fig. 79 油圧配管（バルブ～モータ～ブーム） HYD. OIL PIPING (VALVE ~ MOTOR ~ BOOM)

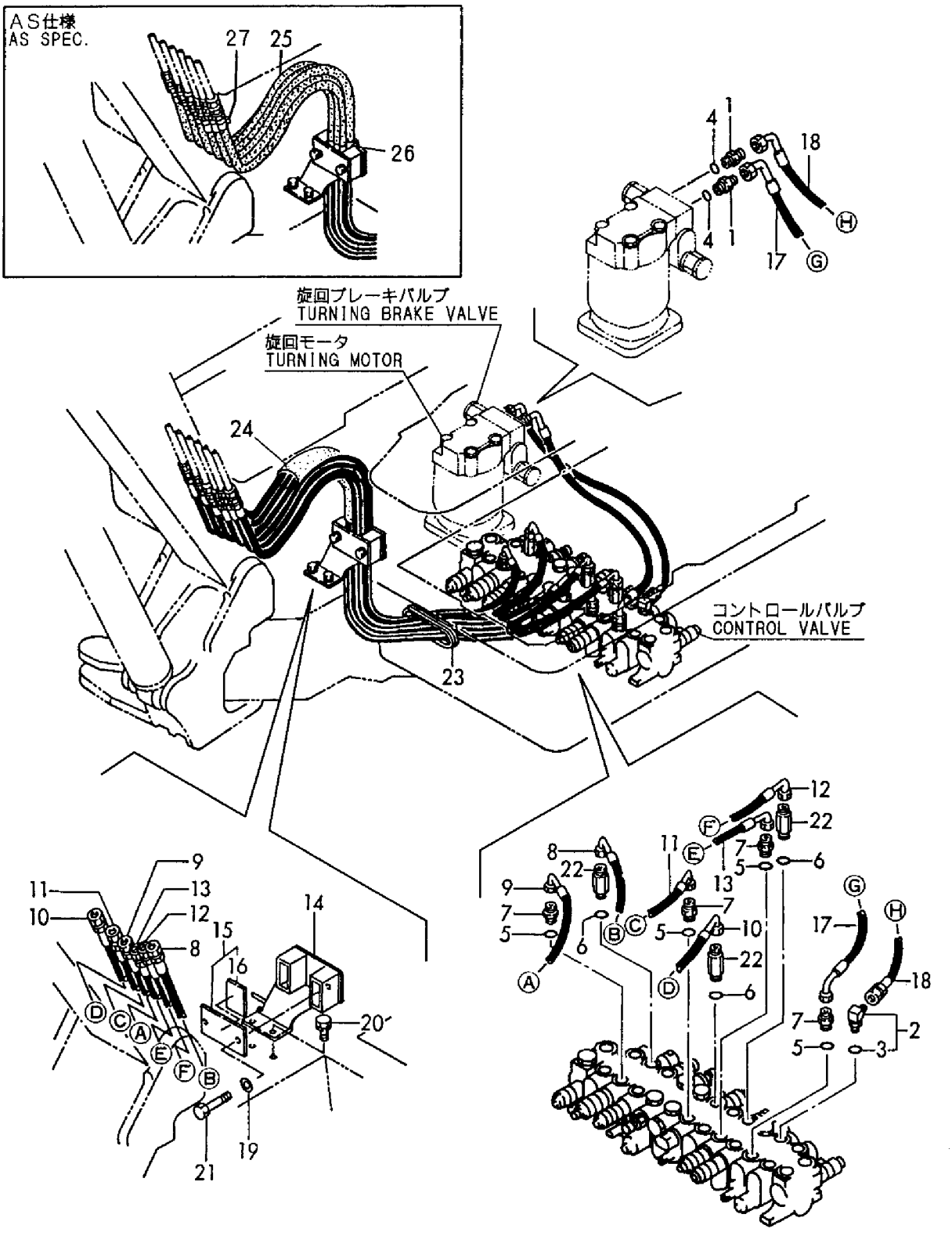

https://truckmanualshub.com/

```
1,1,,172168-76130,,"CONNECTOR UN3/4PF3/8",2,2,2,2,,,,,,,,,,,,,
2,2,,933152-24120,,"O-RING (B)",2,2,2,2,,,,,,,,,,,,,
3,1,,172312-76220,,"CONNECTOR 1/4-3/4UN",3,3,3,3,,,,,,,,,,,,,
4,1,,23391-020000,,"JOINT RGI1/4",2,2,2,2,,,,,,,,,,,,,
5,1,,23393-020000,,"JOINT 90RGI1/4",2,2,2,2,,,,,,,,,,,,,
6,1,,23393-030000,,"JOINT 90RGI 3/8",4,4,4,4,,,,,,,,,,,,,
7,1,,933152-24120,,"O-RING (B)",2,2,2,2,,,,,,,,,,,,,
8,1,,933152-24120,,"O-RING (B)",3,3,3,3,,,,,,,,,,,,,
9,1,,933155-08481,,"CONNECTOR (A)",2,2,2,2,,,,,,,,,,,,,
10,1,,172171-78181,,"HOSE P204BE127S",1,1,1,1,,,,,,,,,,,,,
11,1,,172168-78191,,"HOSE P204BC195S",1,1,1,1,,,,,,,,,,,,,
12,1,,172141-78240,,HOSE,1,1,1,1,,,,,,,,,,,,,
13,1,,172168-78980,,"HOSE P204BC100S",2,2,2,2,,,,,,,,,,,,,
14,1,,172131-78600,,HOSE,1,1,1,1,,,,,,,,,,,,,
15,1,,172168-78900,,"HOSE P206BC070S",1,1,1,1,,,,,,,,,,,,,
16,1,,172168-78940,,"HOSE P206BC089S",1,1,1,1,,,,,,,,,,,,,
17,1,,172168-76140,,"CONNECTOR UN3/4PF1/4",1,1,1,1,,,,,,,,,,,,,
18,2,,933152-24120,,"O-RING (B)",1,1,1,1,,,,,,,,,,,,,
```

https://truckmanualshub.com/

Fig. 80 油圧配管（バルブ～スイベル～スイング） HYD. OIL PIPING (VALVE ~ SWIVEL ~ SWING)

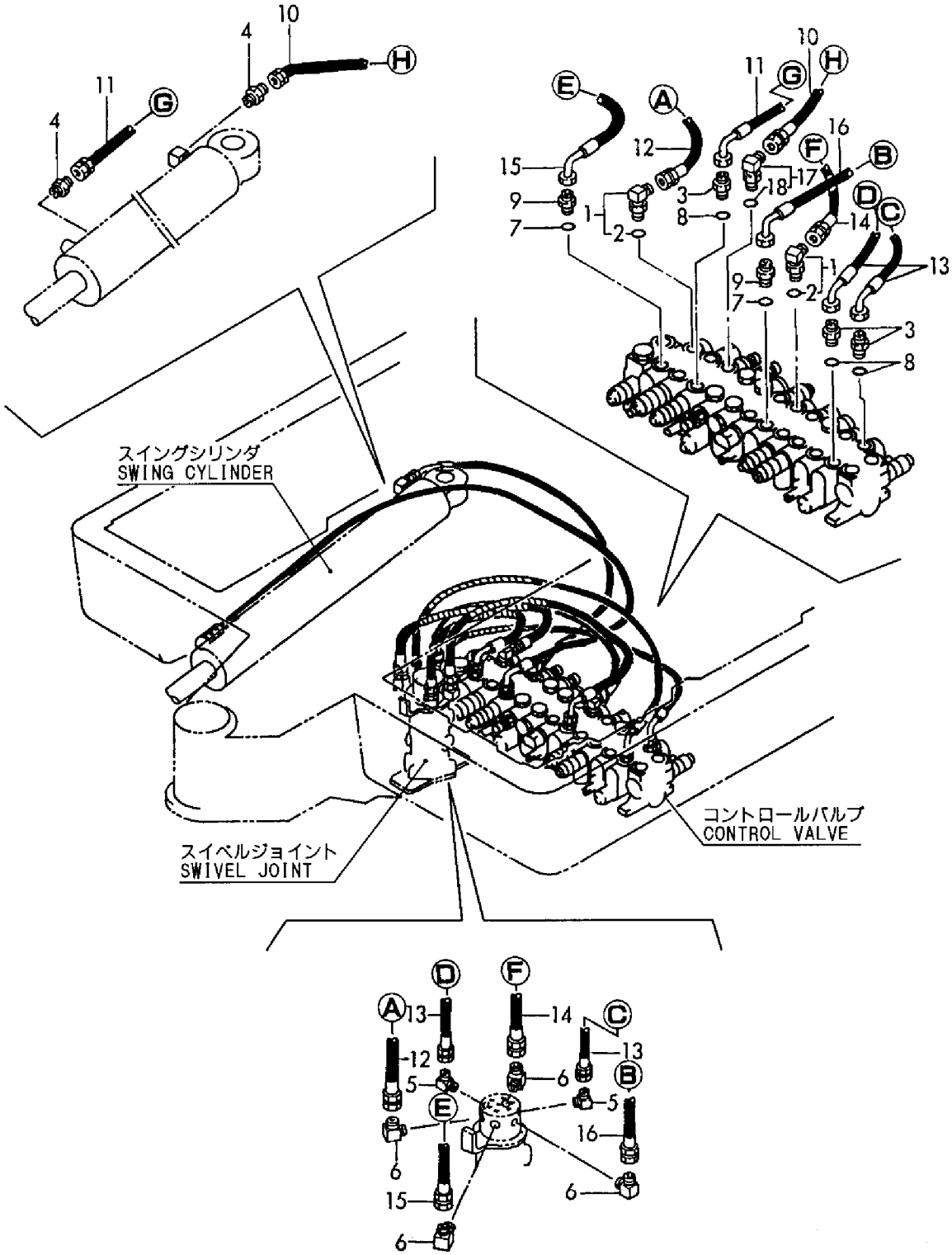

https://truckmanualshub.com/

```
1,1,,172168-76150,,"CONNECTOR UN7/8PF1/2",1,1,,,,,,,,,,,,,,,
2,2,,933152-07400,,"O-RING (A)",1,1,,,,,,,,,,,,,,,
3,1,,172141-76220,,NIPPLE,1,1,,,,,,,,,,,,,,,
4,1,,23871-040000,,"PLUG PT1/2,SCREW",2,2,,,,,,,,,,,,,,,
5,1,,172164-76110,,ELBOW,1,1,,,,,,,,,,,,,,,
6,1,,172170-78240,,HOSE,1,1,,,,,,,,,,,,,,,
7,1,,172168-78251,,"HOSE G608BC078S",1,1,,,,,,,,,,,,,,,
8,1,,23000-035000,,"CLAMP 35",2,2,,,,,,,,,,,,,,,
9,1,,172168-76160,,"CONNECTOR PF1/2-3/8",1,1,,,,,,,,,,,,,,,
10,2,,24315-000140,,"O-RING 1B P-14.0",1,1,,,,,,,,,,,,,,,
11,1,,172165-76220,,NIPPLE,1,1,,,,,,,,,,,,,,,
12,1,,172312-17260,,"GROMMET 22X2.3",1,1,,,,,1,,,,,,,,,
13,1,,172142-76290,,"GROMMET 28X2.3",1,1,,,,,1,,,,,,,,,
14,1,,172312-76290,,"ELBOW 3/8-1/4",1,1,,,,,2,,,,,,,,,
15,1,,172168-78320,,"HOSE G802BY060",1,1,,,,,2,,,,,,,,,
16,1,,23010-014000,,"CLAMP 14",2,2,,,,,2,,,,,,,,,
```

https://truckmanualshub.com/

Fig. 81 油圧配管（リターン） HYD. OIL PIPING (RETURN)

COUNTRY	JP	AS	EX
APPLI-CATION	○	—	○

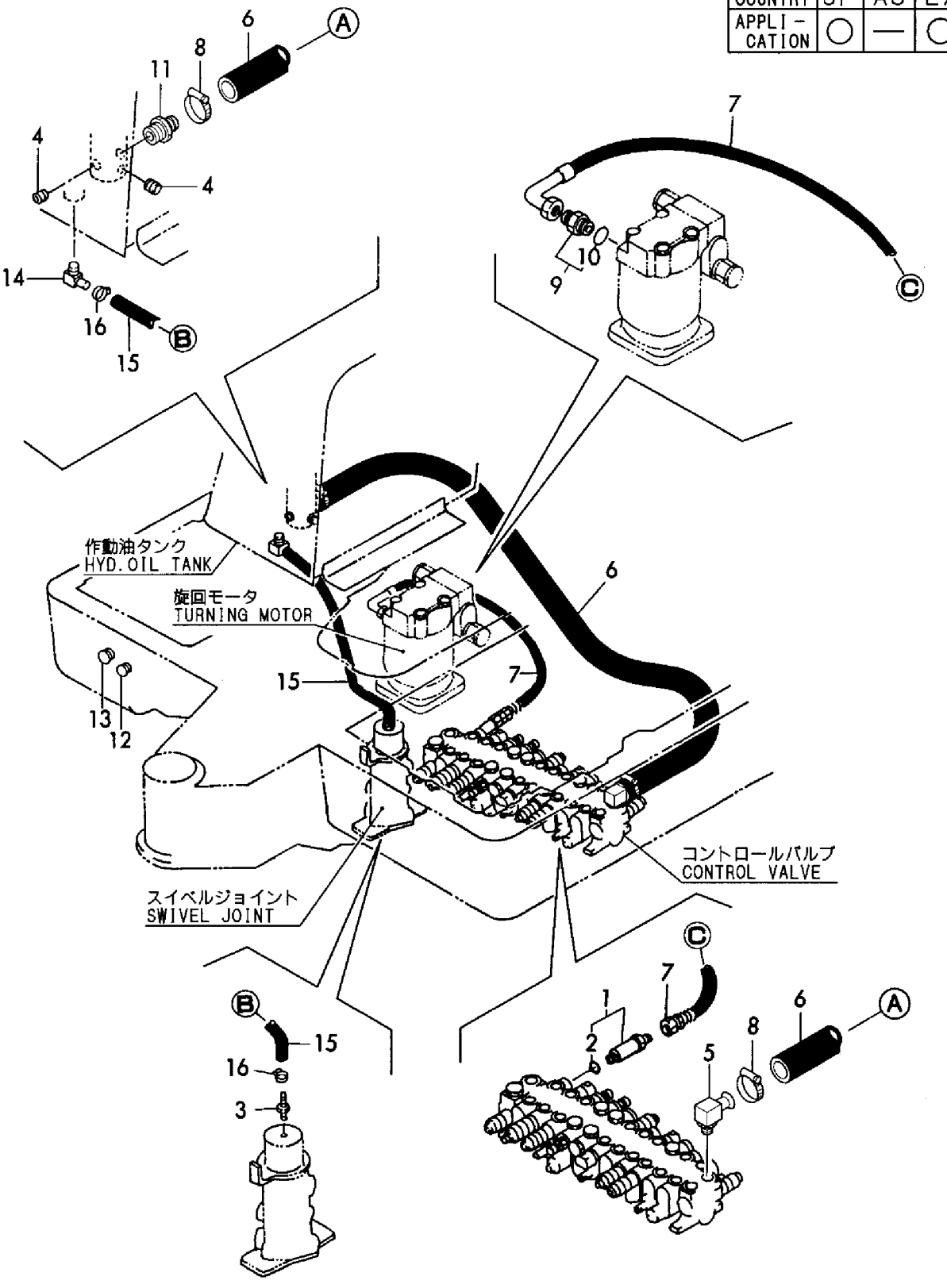

https://truckmanualshub.com/

```
1,1,,172164-76110,,ELBOW,,1,1,1,,,,,,,,,,,,,
2,1,,172168-76150,,"CONNECTOR UN7/8PF1/2",,1,1,1,,,,,,,,,,,,,
3,2,,933152-07400,,"O-RING (A)",,1,1,1,,,,,,,,,,,,,
4,1,,172168-76160,,"CONNECTOR PF1/2-3/8",,1,1,1,,,,,,,,,,,,,
5,2,,24315-000140,,"O-RING 1B P-14.0",,1,1,1,,,,,,,,,,,,,
6,1,,172165-76220,,NIPPLE,,1,1,1,,,,,,,,,,,,,
7,1,,172168-76380,,JOINT,,1,1,1,,,,,,,,,,,,,
8,1,,172168-76370,,ELBOW,,1,1,1,,,,,,,,,,,,,
9,1,,23871-040000,,"PLUG PT1/2,SCREW",,2,2,2,,,,,,,,,,,,,
10,1,,172170-78240,,HOSE,,1,1,1,,,,,,,,,,,,,
11,1,,172168-78251,,"HOSE G608BC078S",,1,1,1,,,,,,,,,,,,,
12,1,,172170-78400,,HOSE,,1,1,1,,,,,,,,,,,,,
13,1,,23000-016000,,"CLAMP 16",,2,2,2,,,,,,,,,,,,,
14,1,,23000-035000,,"CLAMP 35",,2,2,2,,,,,,,,,,,,,
```

https://truckmanualshub.com/

Fig. 82 油圧配管（リターン）（フロントマルチ）（AS）
HYD. OIL PIPING (RETURN) (FRONT MULTI) (AS)

COUNTRY	JP	AS	EX
APPLI-CATION	○	○	—

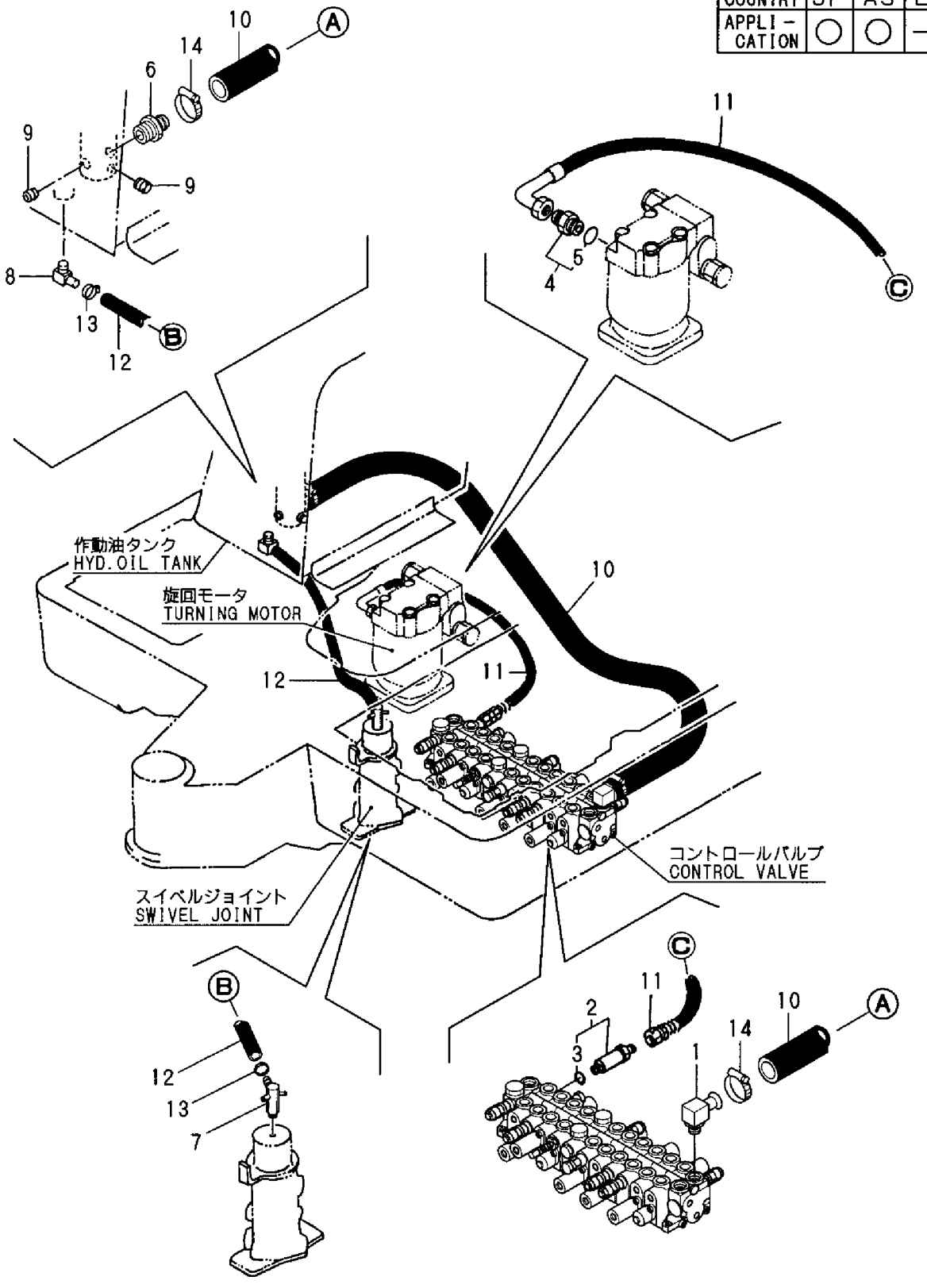

https://truckmanualshub.com/

```
1,2,,172168-76300,,"JOINT, 3RD",1,1,1,1,,,,,,,,,,,,,
2,2,,172112-77420,,"CONNECTOR PF1/2PT3/4",1,1,1,1,,,,,,,,,,,,,
3,2,,23871-030000,,"PLUG PT3/8,SCREW",1,1,1,1,,,,,,,,,,,,,
4,2,,23871-040000,,"PLUG PT1/2,SCREW",1,1,1,1,,,,,,,,,,,,,
5,2,,26013-100202,,"BOLT W/WASHER M10X20",2,2,2,2,,,,,,,,,,,,,
6,2,,933152-24120,,"O-RING (B)",2,2,2,2,,,,,,,,,,,,,
7,2,,933166-24120,,"CONNECTOR PF1/2-10",2,2,2,2,,,,,,,,,,,,,
8,2,,172168-78460,,"HOSE G208BC145",1,1,1,1,,,,,,,,,,,,,
9,2,,172168-78370,,"HOSE G208BC127",1,1,1,1,,,,,,,,,,,,,
10,2,,22137-100000,,"WASHER 10,POLISHED",2,2,2,2,,,,,,,,,,,,,
11,2,,172142-76270,,"JOINT 1/2, SWIVEL",1,1,1,1,,,,,,,,,,,,,
11A,3,,172142-77040,,"SEAL SET",1,1,1,1,,,W,,,M/#50763,,M/#50763,,,,,,
12,2,,172142-76280,,"JOINT 3/4, SWIVEL",1,1,1,1,,,,,,,,,,,,,
12A,3,,172142-77050,,"SEAL SET",1,1,1,1,,,W,,,M/#50763,,M/#50763,,,,,,
13,2,,172171-76900,,"TUBE P.T.O.",1,1,,,,,,,,,,,,,,,,,
13A,2,,172171-76900-2,,"TUBE P.T.O.",,,1,1,,,,,,,,,,,,,
14,2,,26013-100252,,"BOLT W/WASHER M10X25",2,2,2,2,,,,,,,,,,,,,
15,2,,172175-78360,,HOSE,1,1,1,1,,,,,,,,,,,,,
16,2,,172164-78760,,HOSE,1,1,1,1,,,,,,,,,,,,,
17,2,,172137-75570,,"ADAPTER PF1/2",1,1,1,1,,,,,,,,,,,,,
18,2,,172151-76600,,"ADAPTER PF3/4,BLIND",1,1,1,1,,,,,,,,,,,,,
19,2,,172165-03231,,"LABEL, P.T.O.",1,1,1,1,,,,,,,,,,,,,
```

https://truckmanualshub.com/

Fig.83 油圧配管（PTOバルブ～フレーム） HYD.OIL PIPING(P.T.O.VALVE ~ FRAME)

PTOキット（フレームエンド）
P.T.O.KIT(FRAME END)
(172191-74600)
Fig.32 REF.No.1
Inc.Fig.32 REF.No.2~32
Fig.83 REF.No.1~19

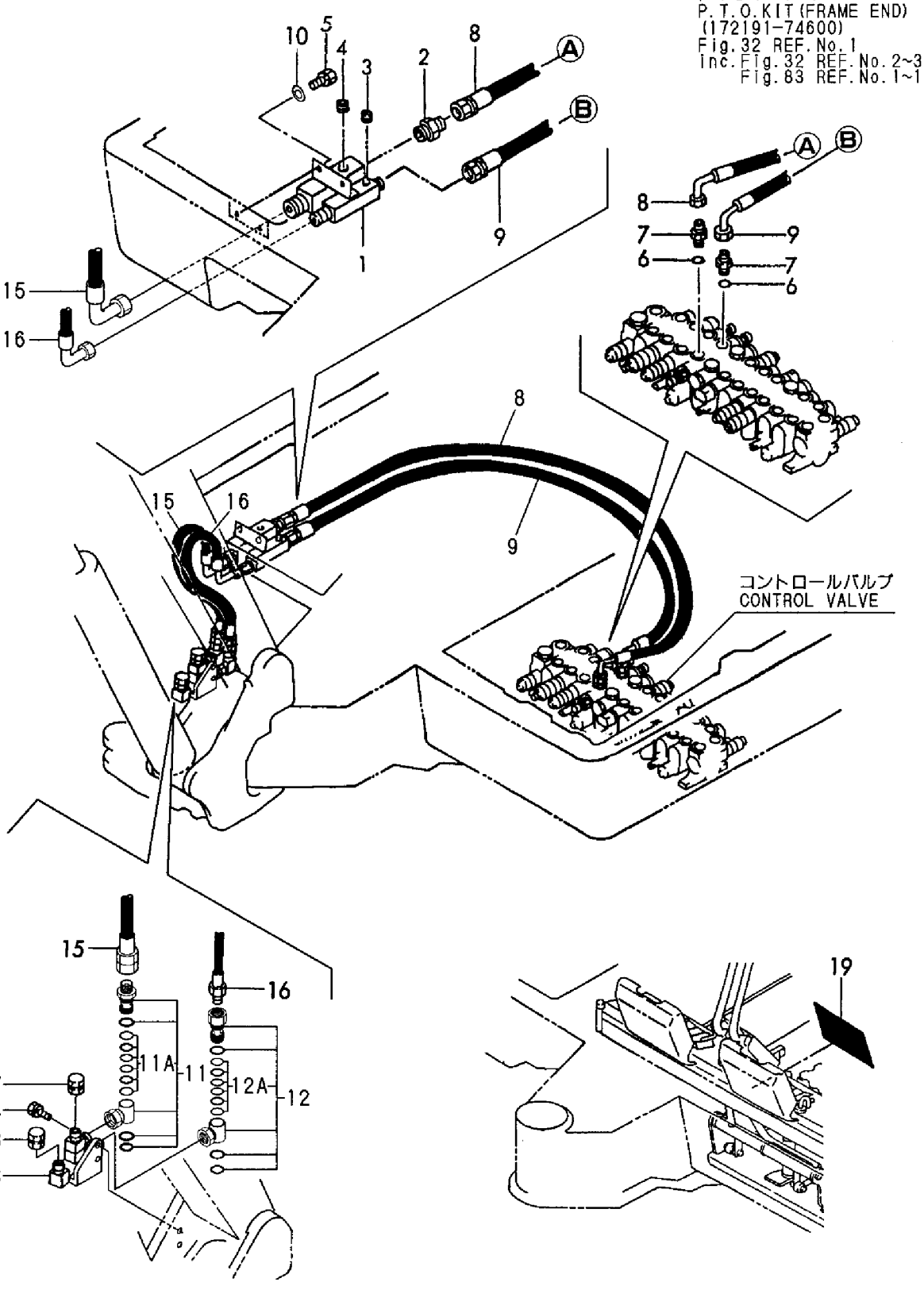

https://truckmanualshub.com/

```
1,2,,172142-76130,,"JOINT 7/8UN-1/4",1,1,1,1,,,,,,,,,,,,
2,2,,172168-76130,,"CONNECTOR UN3/4PF3/8",2,2,2,2,,,,,,,,,,,,,
3,3,,933152-24120,,"O-RING (B)",2,2,2,2,,,,,,,,,,,,,
4,2,,172633-76160,,"ADAPTER 1/2-3/4",1,1,1,1,,,,,,,,,,,,,
5,2,,172168-76180,,"CONNECTOR UN3/4PT1/2",1,1,1,1,,,,,,,,,,,,,
6,3,,933152-24120,,"O-RING (B)",1,1,1,1,,,,,,,,,,,,,
7,2,,172124-76350,,"CONNECTOR 1/2",1,1,1,1,,,,,,,,,,,,,
8,3,,933152-07400,,"O-RING (A)",1,1,1,1,,,,,,,,,,,,,
9,2,,23391-040000,,"JOINT RGI 1/2",1,1,1,1,,,,,,,,,,,,,
10,2,,23391-060000,,"JOINT RGI 3/4",1,1,1,1,,,,,,,,,,,,,
11,2,,933152-07400,,"O-RING (A)",1,1,1,1,,,,,,,,,,,,,
12,2,,172130-78220,,HOSE,1,1,1,1,,,,,,,,,,,,,
13,2,,172168-78230,,"HOSE P206BB070",2,2,2,2,,,,,,,,,,,,,
14,2,,172168-78330,,"HOSE G608BC058",1,1,,,,,,,,,,,,,,,
14-1,2,,172168-78331,,"HOSE G608BC058",1,1,1,1,,,N,,,M/#50842,,M/#50842,,,,,,
15,2,,172168-78340,,"HOSE G212BC068",1,1,1,1,,,,,,,,,,,,,
16,2,,172168-76130,,"CONNECTOR UN3/4PF3/8",1,1,1,1,,,,,,,,,,,,,
17,3,,933152-24120,,"O-RING (B)",1,1,1,1,,,,,,,,,,,,,
18,2,,172312-76180,,"NIPPLE 1/2X3/8",1,1,1,1,,,,,,,,,,,,,
19,2,,172146-74720,,"VALVE ASSY, SHUT-OFF",1,1,1,1,,,,,,,,,,,,,
20,3,,172116-74150,,O-RING,1,1,1,1,,,,,,,,,,,,,
21,3,,24311-240100,,"O-RING 1A P-10A",1,1,1,1,,,,,,,,,,,,,
22,2,,23393-040000,,"JOINT 90RGI 1/2",1,1,1,1,,,,,,,,,,,,,
23,1,,172175-78360,,HOSE,1,1,1,1,,,,,,,,,,,,,
24,1,,172164-78760,,HOSE,1,1,1,1,,,,,,,,,,,,,
25,1,,172168-76300,,"JOINT, 3RD",1,1,1,1,,,,,,,,,,,,,
26,1,,23871-030000,,"PLUG PT3/8,SCREW",1,1,1,1,,,,,,,,,,,,,
27,1,,23871-040000,,"PLUG PT1/2,SCREW",1,1,1,1,,,,,,,,,,,,,
28,1,,26013-100202,,"BOLT W/WASHER M10X20",2,2,2,2,,,,,,,,,,,,,
29,1,,933152-24120,,"O-RING (B)",2,2,2,2,,,,,,,,,,,,,
30,1,,933166-24120,,"CONNECTOR PF1/2-10",2,2,2,2,,,,,,,,,,,,,
31,1,,172168-78370,,"HOSE G208BC127",1,1,1,1,,,,,,,,,,,,,
32,1,,22137-100000,,"WASHER 10,POLISHED",2,2,2,2,,,,,,,,,,,,,
33,1,,172142-76270,,"JOINT 1/2, SWIVEL",1,1,1,1,,,,,,,,,,,,,
33A,2,,172142-77040,,"SEAL SET",1,1,1,1,,,W,,,M/#50763,,M/#50763,,,,,,
34,1,,172142-76280,,"JOINT 3/4, SWIVEL",1,1,1,1,,,,,,,,,,,,,
34A,2,,172142-77050,,"SEAL SET",1,1,1,1,,,W,,,M/#50763,,M/#50763,,,,,,
35,1,,172171-76900,,"TUBE P.T.O.",1,1,,,,,,,,,,,,,,,
35A,1,,172171-76900-2,,"TUBE P.T.O.",,,1,1,,,,,,,,,,,,,
36,1,,26013-100252,,"BOLT W/WASHER M10X25",2,2,2,2,,,,,,,,,,,,,
```

https://truckmanualshub.com/

Fig.84 油圧配管（PTOバルブ）（合流） HYD.OIL PIPING(P.T.O.VALVE) (CONFLUENCE)

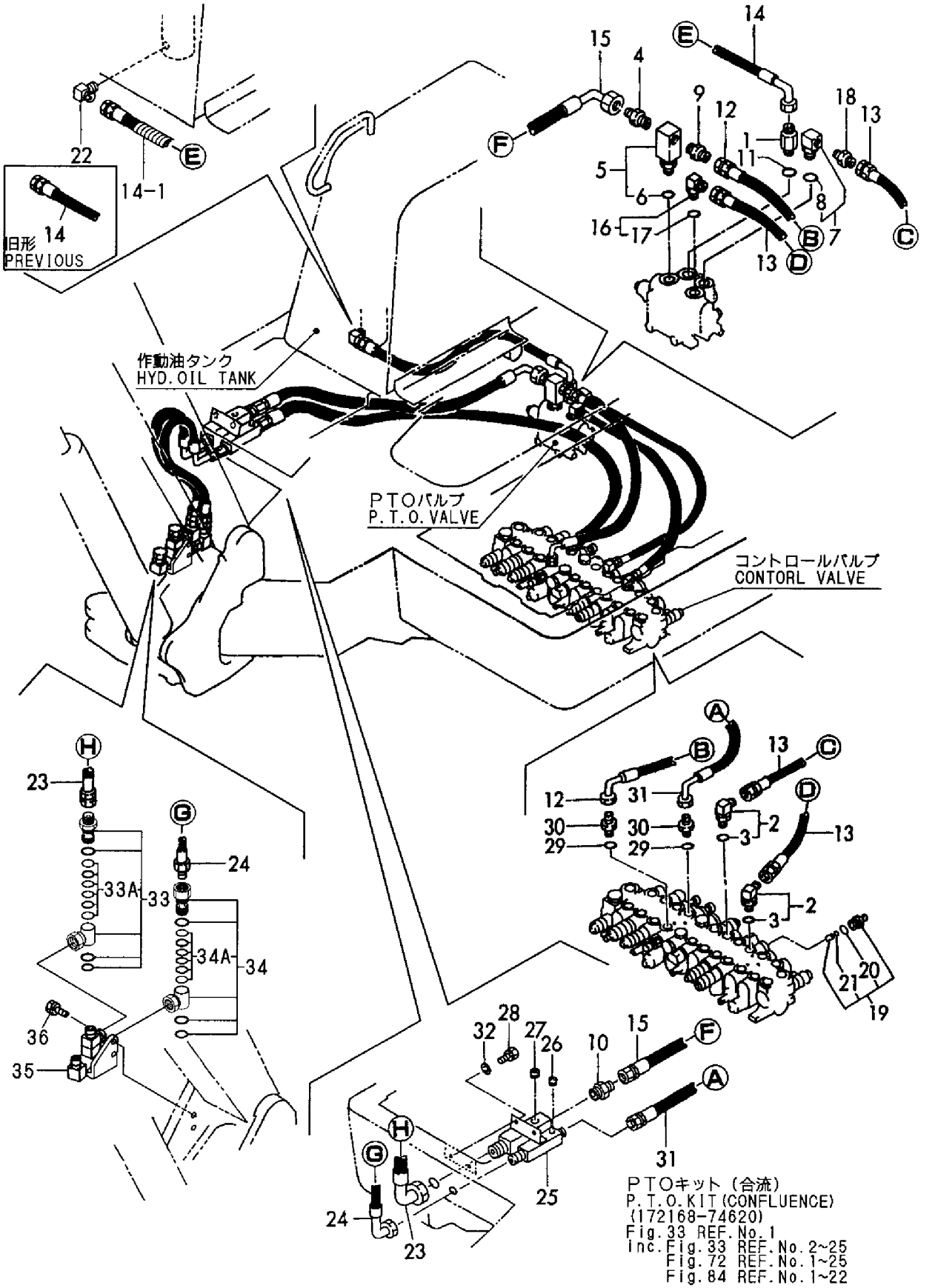

https://truckmanualshub.com/

```
1,1,,172730-75140,,ADAPTOR,4,4,4,4,,,,,,,,,,,,,
2,1,,23391-030000,,"JOINT RGI 3/8",2,2,2,2,,,,,,,,,,,,,
3,1,,23391-020000,,"JOINT RGI1/4",4,4,4,4,,,,,,,,,,,,,
4,1,,23391-020000,,"JOINT RGI1/4",2,2,2,2,,,,,,,,,,,,,
5,1,,24315-000140,,"O-RING 1B P-14.0",4,4,4,4,,,,,,,,,,,,,,
6,1,,23394-030000,,"JOINT 45RGI 3/8",2,2,2,2,,,,,,,,,,,,,
7,1,,172168-78200,,"HOSE P204AB043",2,2,2,2,,,,,,,,,,,,,
8,1,,172141-78460,,HOSE,2,2,2,2,,,,,,,,,,,,,
9,1,,172141-78470,,HOSE,2,2,2,2,,,,,,,,,,,,,
10,1,,172141-78480,,HOSE,2,2,2,2,,,,,,,,,,,,,
11,1,,172141-78490,,HOSE,2,2,2,2,,,,,,,,,,,,,
```

https://truckmanualshub.com/

Fig. 85 油圧配管（走行） HYD. OIL PIPING (TRAVEL)

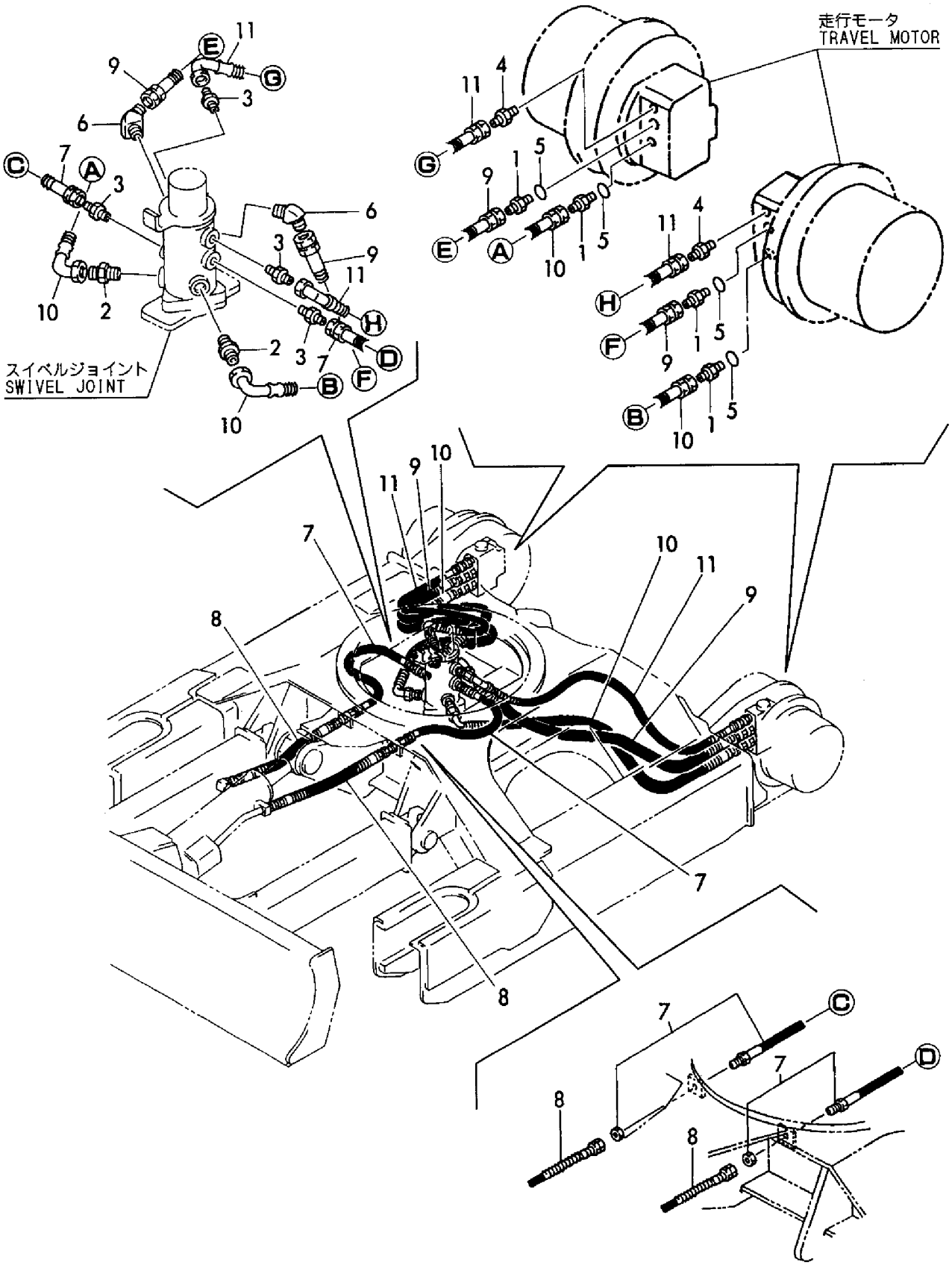

https://truckmanualshub.com/

```
1,1,,172171-78770,,"HOSE G206AB078W",1,1,1,1,,,,,,,,,,,,,
2,1,,172142-76500-1,,"TUBE A W/BUSH, BOOM",1,1,,,,,,,,,,,,,,,
2A,1,,172142-76500,,"PIPE(A), BOOM",,,1,1,,,,,,,,,,,,,
3,1,,172142-76520-1,,"TUBE B W/BUSH, BOOM",1,1,,,,,,,,,,,,,,,
3A,1,,172142-76520,,"PIPE(B), BOOM",,,1,1,,,,,,,,,,,,,
4,1,,172171-76541,,"TUBE W/BUSH, ARM",1,1,,,,,,,,,,,,,,,
4A,1,,172171-76541-1,,"TUBE,ARM",,,1,1,,,,,,,,,,,,,
5,1,,172171-76560-1,,"TUBE W/BUSH, ARM",1,1,,,,,,,,,,,,,,,
5A,1,,172171-76560-2,,"TUBE W/BUSH,ARM",,,1,1,,,,,,,,,,,,,
6,1,,172171-76581,,"TUBE L W/BUCKET",1,1,,,,,,,,,,,,,,,
6A,1,,172171-76581-1,,"TUBE,BUCKET",,,1,1,,,,,,,,,,,,,
7,1,,172171-76600-1,,"TUBE R W/BUCKET",1,1,,,,,,,,,,,,,,,
7A,1,,172171-76600-2,,"TUBE R W/BUCKET",,,1,1,,,,,,,,,,,,,
8,1,,172141-76670-1,,"CLAMP, TUBE  (GREEN)",1,1,,,,,,,,,,,,,,,
8A,1,,172141-76670,,"CLAMP, PIPE(A)",,,1,1,,,,,,,,,,,,,
9,1,,172141-76680-1,,"CLAMP, TUBE (GREEN)",2,2,,,,,,,,,,,,,,,
9-1,1,,172183-76230-1,,"CLAMP 13.8",2,2,,,,S,,,M/#50666,,M/#50666,,,,,,
9A,1,,172183-76230-5,,"CLAMP 13.8",,,2,2,,,,,,,,,,,,,
10,1,,22217-080000,,"SPRING WASHER  8",4,4,,,,,Z,,,M/#50666,,M/#50666,,,,,,
11,1,,26013-100352,,"BOLT M10X 35",8,8,8,8,,,,,,,,,,,,,
12,1,,26717-080002,,"NUT 8",4,4,,,,,Z,,,M/#50666,,M/#50666,,,,,,
13,1,,172312-78270,,HOSE,2,2,2,2,,,,,,,,,,,,,
14,1,,172141-78440,,HOSE,1,1,1,1,,,,,,,,,,,,,
15,1,,172141-78400,,HOSE,1,1,1,1,,,,,,,,,,,,,
16,1,,172141-78410,,HOSE,1,1,1,1,,,,,,,,,,,,,
17,1,,172122-17190,,CLIP,2,2,,,,,,,,,,,,,,,
17-1,1,,172183-81160,,"TREE CLIP",2,2,2,2,,,S,,,M/#50666,,M/#50666,,,,,,
18,1,,172175-76401-1,,"CLAMP, TUBE",1,1,,,,,,,,,,,,,,,
18A,1,,172175-76401-5,,"CLAMP, TUBE",,,1,1,,,,,,,,,,,,,
19,1,,172175-76411,,"RUBBER, TUBE",2,2,2,2,,,,,,,,,,,,,
20,1,,172175-76420,,"COLLAR, TUBE",7,7,7,7,,,,,,,,,,,,,
21,1,,172175-76431-1,,"CLAMP, TUBE",4,4,,,,,,,,,,,,,,,
21A,1,,172175-76431-5,,"CLAMP, TUBE",,,4,4,,,,,,,,,,,,,
22,1,,172175-76440,,"RUBBER, TUBE",8,8,8,8,,,,,,,,,,,,,
23,1,,172175-76450-1,,"W.P BACH PLATE",1,1,,,,,,,,,,,,,,,
23A,1,,172175-76450-5,,"W.P BACH PLATE",,,1,1,,,,,,,,,,,,,
24,1,,26013-120352,,"BOLT M12X 35",2,2,2,2,,,W,,,M/#50666,,M/#50666,,,,,,
25,1,,172171-78910,,COVER,,,2,2,,,,1,,,,,,,,,
26,1,,172143-79800,,"COVER, HOSE",,,1,1,,,,1,,,,,,,,,
27,1,,172137-79970,,COVER,,,1,1,,,,1,,,,,,,,,
28,1,,23000-025000,,"CLAMP 25",,,8,8,,,,1,,,,,,,,,
```

https://truckmanualshub.com/

Fig. 86 油圧配管（ブーム） HYD. OIL PIPING (BOOM)

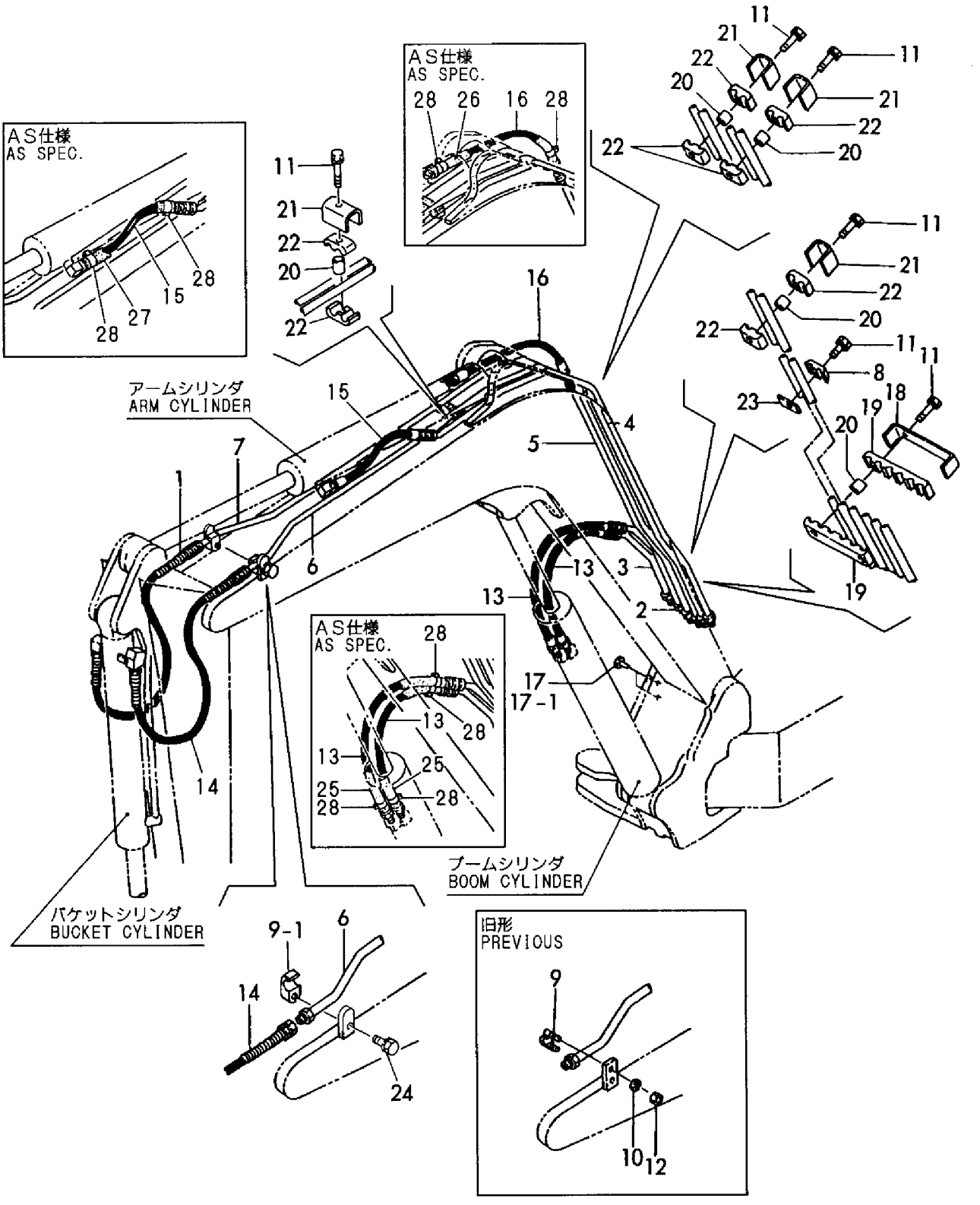

https://truckmanualshub.com/

```
1,1,,172191-74500,,"P.T.O.KIT,ARM END",1,1,,,,,,,,,,,,,,,,
1-1,1,,172191-74501,,"P.T.O. KIT(ARM END)",1,1,,,,,S,,,M/#50666,,M/#50666,,,,,,
2,2,,172112-76300,,"RETAINER A,BOOM PIPE",1,1,2,2,,,,,,,,,,,,,,
3,2,,172183-76510,,"FITTING 1/2 COMPL.",2,2,,,,,Z,,,M/#50666,,M/#50666,,,,,,
4,2,,172171-76860,,TUBE,1,1,,,,,,,,,,,,,,,,
4-1,2,,172171-76861,,TUBE,1,1,,,,,S,,,M/#50666,,M/#50666,,,,,,
4A,2,,172171-76861-1,,TUBE,,,1,1,,,,,,,,,,,,,,
5,2,,172171-76880,,TUBE,1,1,,,,,,,,,,,,,,,,
5-1,2,,172171-76881,,TUBE,1,1,,,,,S,,,M/#50666,,M/#50666,,,,,,
5A,2,,172171-76881-1,,TUBE,,,1,1,,,,,,,,,,,,,,
6,2,,172142-76950-1,,CLAMP,4,4,,,,,,,,,,,,,,,,
6A,2,,172142-76950,,"CLAMP 1/2",,,4,4,,,,,,,,,,,,,,
7,2,,172142-77101-1,,"VALVE, STOP",2,2,,,,,,,,,,,,,,,,
7-1,2,,172183-74820-1,,"STOP VALVE 08",2,2,,,,,S,,,M/#50666,,M/#50666,,,,,,
8,3,,172142-77150,,"SEAL SET",2,2,,,,,,,,,,,,,,,,
13,3,,22242-000300,,"CIRCLIP   30",2,2,,,,,,,,,,,,,,,,
14,2,,172171-78350,,HOSE,1,1,1,1,,,,,,,,,,,,,,
15,2,,172171-78360,,HOSE,1,1,1,1,,,,,,,,,,,,,,
16,2,,172175-78370,,HOSE,2,2,,,,,,,,,,,,,,,,
16-1,2,,172176-78270,,"HOSE G208AB087W",2,2,,,,,S,,,M/#50666,,M/#50666,,,,,,
17,2,,172175-81320,,"BASE, SCREW M12",2,2,,,,,Z,1,,M/#50666,,M/#50666,,,,,,
18,2,,172183-81410,,PLATE,1,1,,,,,Z,1,,M/#50666,,M/#50666,,,,,,
19,2,,172183-81420,,"PLATE,SCREW SEAT M12",1,1,,,,,Z,1,,M/#50666,,M/#50666,,,,,,
20,2,,172183-81430,,"PLATE,SCREW SEAT M10",2,2,,,,,Z,1,,M/#50666,,M/#50666,,,,,,
21,2,,23391-040000,,"JOINT RGI 1/2",2,2,,,,,Z,,,M/#50666,,M/#50666,,,,,,
22,2,,23871-040000,,"PLUG PT1/2,SCREW",2,2,,,,,,,,,,,,,,,,
23,2,,26013-100252,,"BOLT W/WASHER M10X25",4,4,,,,,,,,,,,,,,,,
24,2,,26013-100452,,"BOLT M10X 45",1,1,,,,,,,,,,,,,,,,
24-1,2,,26116-100552,,"BOLT M10X 55
PLATED",1,1,1,1,,,S,,,M/#50666,,M/#50666,,,,,,
25,2,,26013-120402,,"BOLT M12X 40",4,4,,,,,,,,,,,,,,,,
25-1,2,,26013-120402,,"BOLT M12X 40",1,1,1,1,,,K,,,M/#50666,,M/#50666,,,,,,
26,2,,172171-81320,,PLATE,1,1,,,,,Z,1,,M/#50666,,M/#50666,,,,,,
27,2,,22217-100000,,"SPRING WASHER 10",1,1,1,1,,,W,,,M/#50666,,M/#50666,,,,,,
28,2,,26013-120502,,"BOLT M12X 50",1,1,1,1,,,W,,,M/#50666,,M/#50666,,,,,,
29,2,,26116-120602,,"BOLT M12X 60 PLATED",2,2,2,2,,,W,,,M/#50666,,M/#50666,,,,,,
30,2,,22217-120000,,"SPRING WASHER",2,2,2,2,,,W,,,M/#50666,,M/#50666,,,,,,
31,2,,172183-76260,,SPACER,1,1,1,1,,,W,,,M/#50666,,M/#50666,,,,,,
32,2,,172183-76250,,PLATE,1,1,1,1,,,W,,,M/#50666,,M/#50666,,,,,,
33,1,,172137-75570,,"ADAPTER PF1/2",,,1,1,,,,2,,,,,,,,,
34,1,,172142-78790,,"COVER 20-600, HOSE",,,1,1,,,,2,,,,,,,,,
35,1,,172150-79030,,"COVER,HOSE",,,1,1,,,,2,,,,,,,,,
36,1,,23000-035000,,"CLAMP 35",,,2,2,,,,2,,,,,,,,,
37,1,,23000-041000,,"CLAMP 41",,,2,2,,,,2,,,,,,,,,
```

https://truckmanualshub.com/

Fig.87 油圧配管（PTOアームエンド） HYD.OIL PIPING(P.T.O.ARM END)

旧形
PREVIOUS

PTOキット（アームエンド）
P.T.O.KIT(ARM END)
(172191-74500)

見出しNo．1は、
見出しNo．2から
26を含みます。
1inc．2 ～ 26

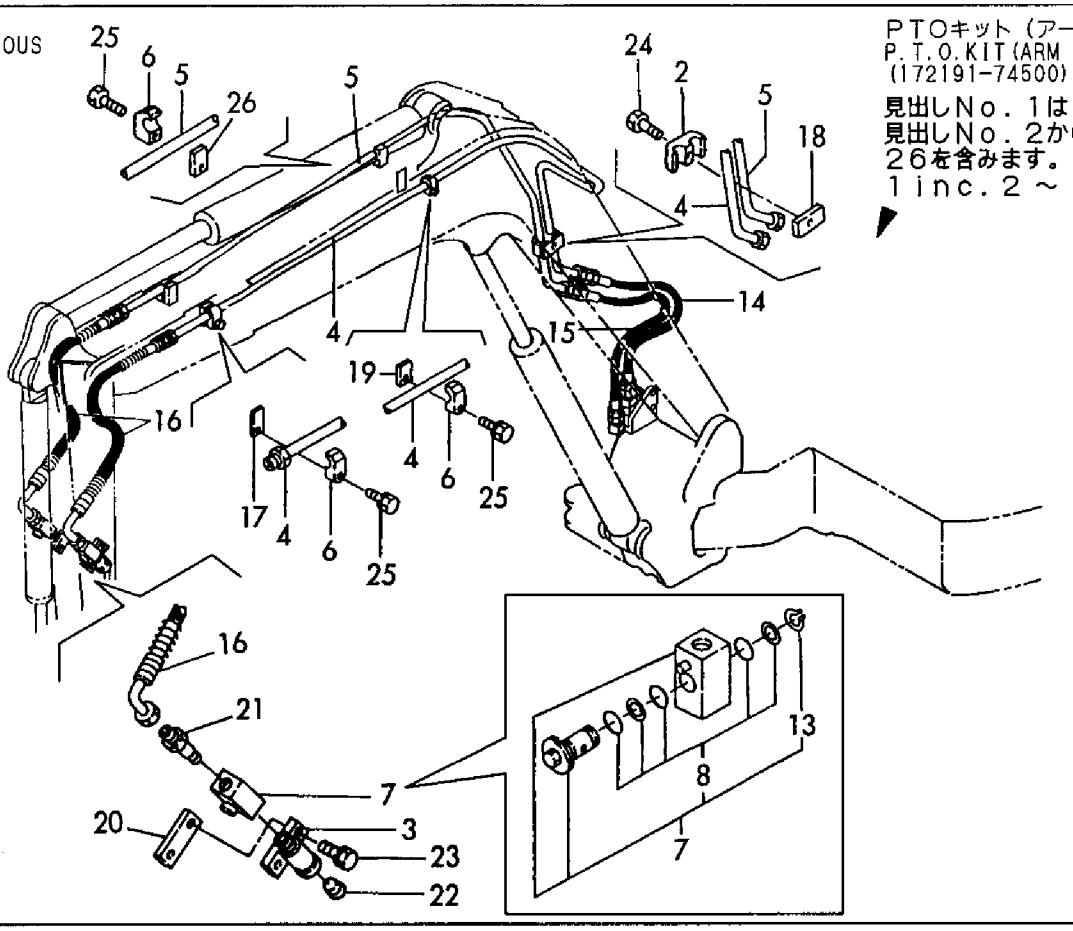

PTOキット（アームエンド）
P.T.O.KIT(ARM END)
(172191-74501)

見出しNo．1－1は、
見出しNo．2から
32を含みます。
1－1inc．2 ～ 32

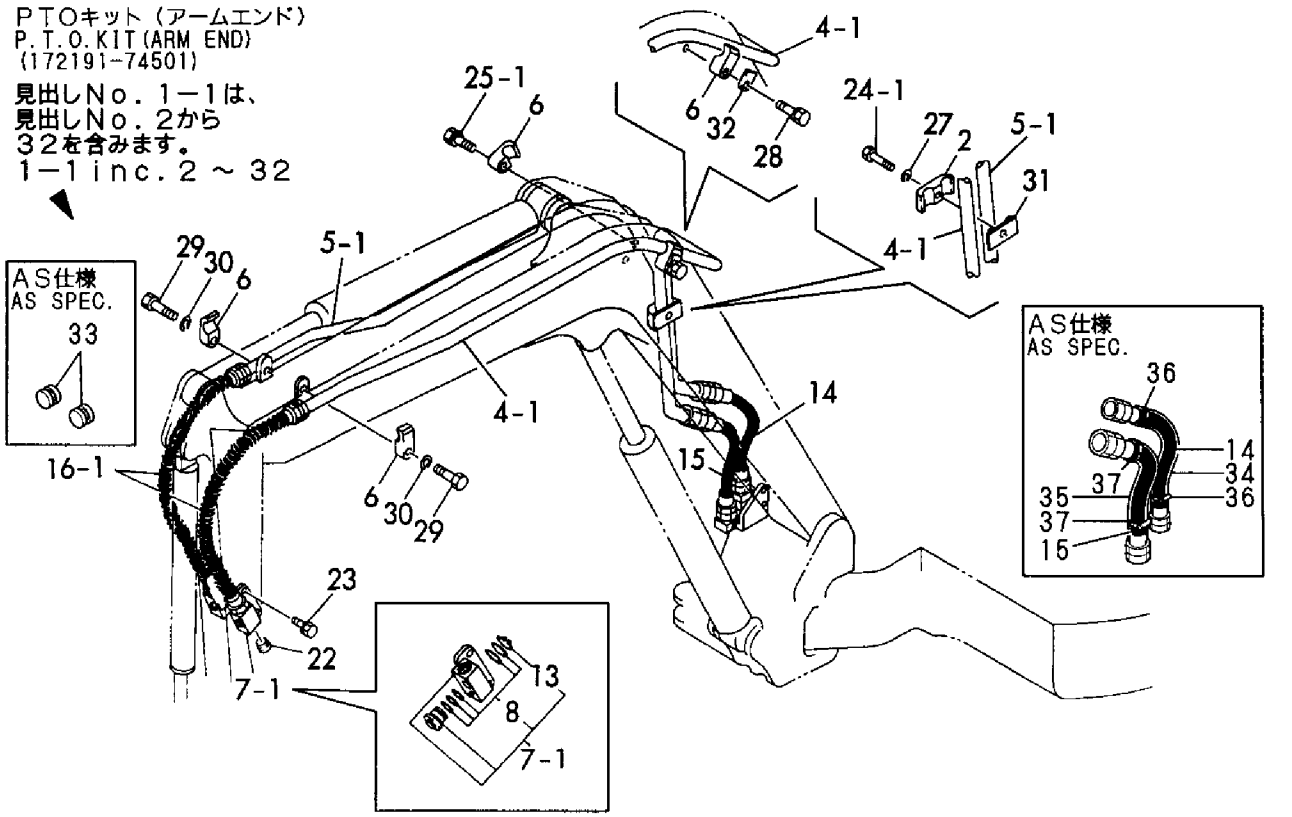

https://truckmanualshub.com/

```
1,1,,172123-76120,,"CONNECTOR PF1/4",,5,,,,,,,,,,,,,,,
2,1,,172168-76550,,"JOINT PF1/4-0.9",,1,,,,,,,,,,,,,,,
3,1,,172162-76770,,"JOINT PF1/4",,2,,,,,,,,,,,,,,,
4,1,,24315-000110,,"O-RING 1B P-11.0",,7,,,,,,,,,,,,,,,
5,1,,24315-000110,,"O-RING 1B P-11.0",,1,,,,,,,,,,,,,,,
6,1,,172123-76120,,"CONNECTOR PF1/4",,8,,,,,,,,,,,,,,,
7,1,,24315-000110,,"O-RING 1B P-11.0",,8,,,,,,,,,,,,,,,
8,1,,172168-79100,,"HOSE G604BC030 A",,1,,,,,,,,,,,,,,,
9,1,,172168-79110,,"HOSE G604BC070S B",,1,,,,,,,,,,,,,,,
10,1,,172168-79120,,"HOSE G604BC070S C",,1,,,,,,,,,,,,,,,
11,1,,172168-79130,,"HOSE G604BC030 D",,1,,,,,,,,,,,,,,,
12,1,,172168-79140,,"HOSE G604BC070 E",,1,,,,,,,,,,,,,,,
13,1,,172168-79150,,"HOSE G604BC095S F",,1,,,,,,,,,,,,,,,
14,1,,172168-79160,,"HOSE G604BC095S G",,1,,,,,,,,,,,,,,,
15,1,,172168-79170,,"HOSE G604BC030 H",,1,,,,,,,,,,,,,,,
```

https://truckmanualshub.com/

Fig. 88 コントロール配管（リモコンバルブ～チェンジバルブ）（フロントマルチ）
CONTROL PIPING (REMO-CON VALVE ~ CHANGE VALVE) (FRONT MULTI)

COUNTRY	JP	AS	EX
APPLI-CATION	○	—	—

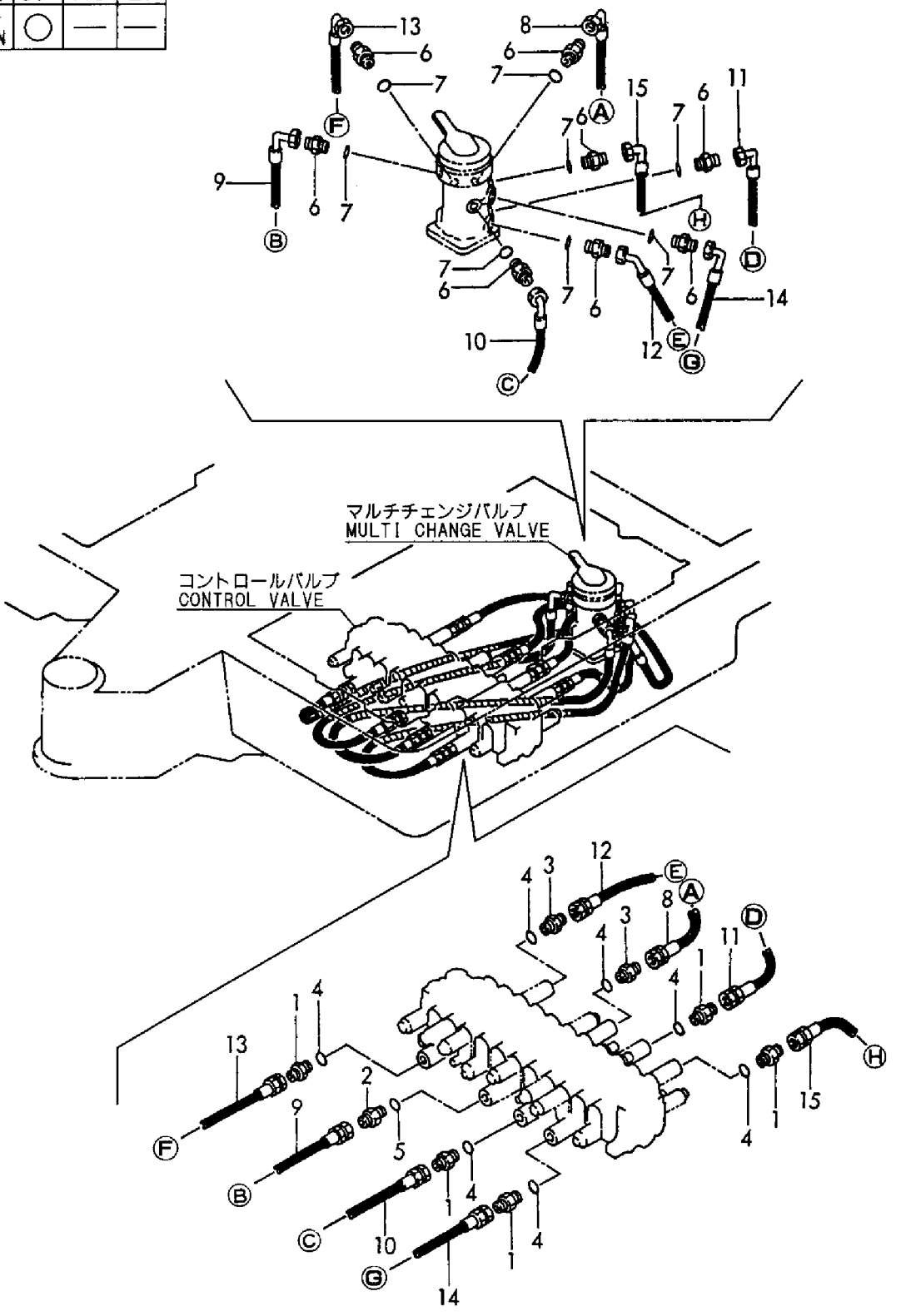

https://truckmanualshub.com/

```
1,1,,172151-76030,,"BOLT, PIPE JOINT",,2,,,,,,,,,,,,,,,
2,1,,172151-76040,,"BOLT, PIPE JOINT",,2,,,,,,,,,,,,,,,
3,1,,172123-76120,,"CONNECTOR PF1/4",,8,,,,,,,,,,,,,,,
4,1,,172123-76120,,"CONNECTOR PF1/4",,1,,,,,,,,,,,,,,,
5,1,,172141-76180,,CONNECTOR,,1,,,,,,,,,,,,,,,
7,2,,24315-000110,,"O-RING 1B P-11.0",,1,,,,,,,,,,,,,,,
8,1,,24315-000110,,"O-RING 1B P-11.0",,8,,,,,,,,,,,,,,,
9,1,,24315-000110,,"O-RING 1B P-11.0",,1,,,,,,,,,,,,,,,
10,1,,24315-000180,,"O-RING 1B P-18.0",,4,,,,,,,,,,,,,,,
11,1,,24315-000180,,"O-RING 1B P-18.0",,4,,,,,,,,,,,,,,,
12,1,,172123-76120,,"CONNECTOR PF1/4",,2,,,,,,,,,,,,,,,
13,1,,172141-76180,,CONNECTOR,,6,,,,,,,,,,,,,,,
15,2,,24315-000110,,"O-RING 1B P-11.0",,6,,,,,,,,,,,,,,,
16,1,,24315-000110,,"O-RING 1B P-11.0",,2,,,,,,,,,,,,,,,
17,1,,172126-11510,,"BAND 300",,10,,,,,,,,,,,,,,,
18,1,,172168-46870,,BRACKET,,1,,,,,,,,,,,,,,,
19,1,,172164-78520,,"HOSE G604BY115S T",,1,,,,,,,,,,,,,,,
20,1,,172165-78570,,HOSE,,2,,,,,,,,,,,,,,,
21,1,,172165-78900,,HOSE,,1,,,,,,,,,,,,,,,
22,1,,172165-78910,,HOSE,,1,,,,,,,,,,,,,,,
23,1,,172165-78920,,HOSE,,1,,,,,,,,,,,,,,,
24,1,,172165-78930,,HOSE,,1,,,,,,,,,,,,,,,
25,1,,172165-78940,,HOSE,,1,,,,,,,,,,,,,,,
26,1,,172165-78950,,HOSE,,1,,,,,,,,,,,,,,,
27,1,,172165-78960,,HOSE,,1,,,,,,,,,,,,,,,
28,1,,172165-78970,,HOSE,,1,,,,,,,,,,,,,,,
29,1,,172165-79870,,HOSE,,1,,,,,,,,,,,,,,,
30,1,,26013-100162,,"BOLT M10X 16",,2,,,,,,,,,,,,,,,
31,1,,23010-014000,,"CLAMP 14",,2,,,,,,,,,,,,,,,
```

https://truckmanualshub.com/

Fig.89 コントロール配管 (チェンジバルブ～コントロールバルブ) (フロントマルチ)
CONTROL PIPING (CHANGE VALVE ~ CONTROL VALVE) (FRONT MULTI)

COUNTRY	JP	AS	EX
APPLI-CATION	○	—	—

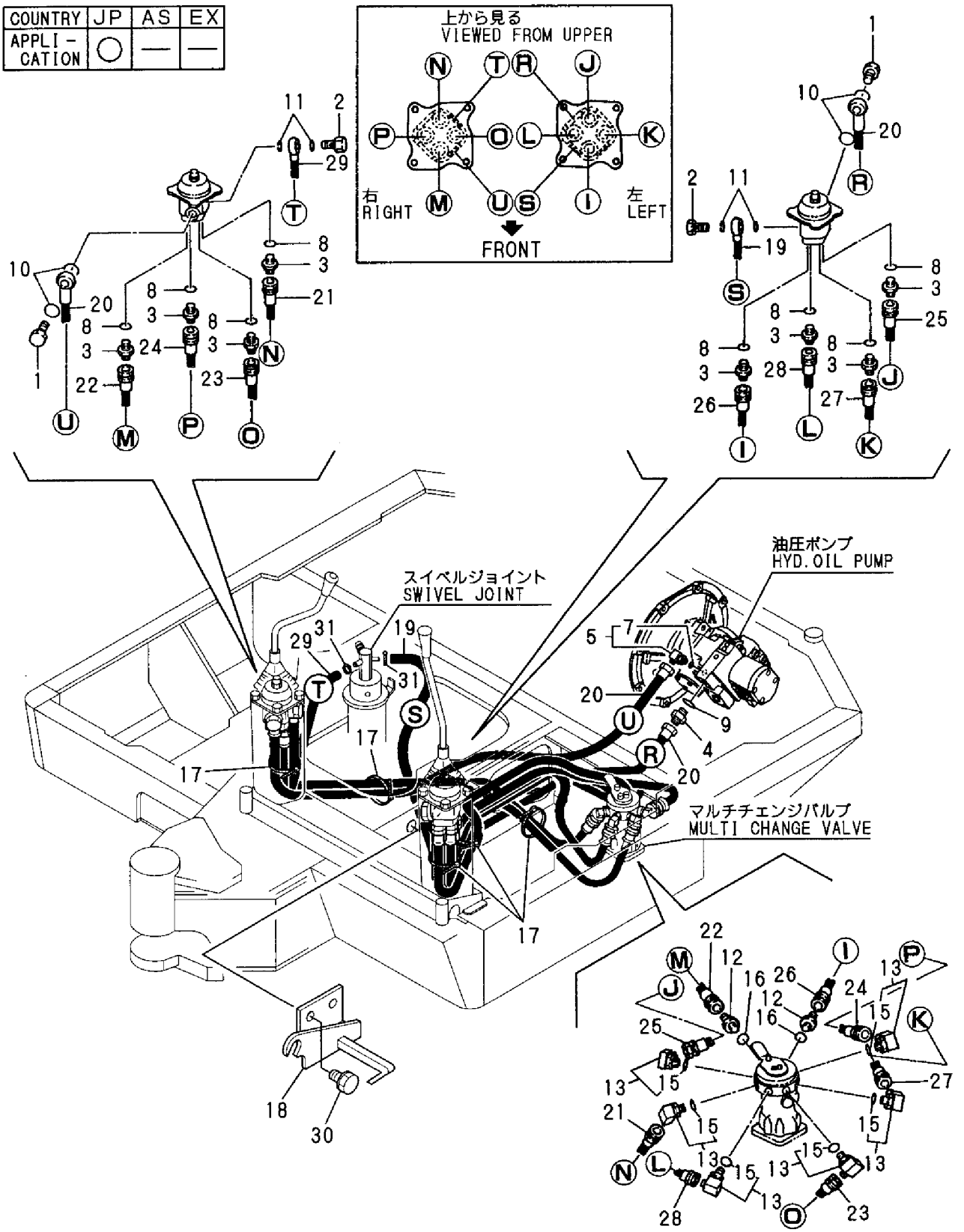

https://truckmanualshub.com/

```
1,1,,172123-76120,,"CONNECTOR PF1/4",,,12,12,,,,,,,,,,,,,
2,1,,172123-76120,,"CONNECTOR PF1/4",,,5,5,,,,,,,,,,,,,
3,1,,172123-76120,,"CONNECTOR PF1/4",,,1,1,,,,,,,,,,,,,
4,1,,172141-76180,,CONNECTOR,,,1,1,,,,,,,,,,,,,
6,2,,24315-000110,,"O-RING 1B P-11.0",,,1,1,,,,,,,,,,,,,
7,1,,172168-76550,,"JOINT PF1/4-0.9",,,1,1,,,,,,,,,,,,,
8,1,,172162-76770,,"JOINT PF1/4",,,2,2,,,,,,,,,,,,,
9,1,,24315-000110,,"O-RING 1B P-11.0",,,12,12,,,,,,,,,,,,,,
10,1,,24315-000110,,"O-RING 1B P-11.0",,,7,7,,,,,,,,,,,,,
11,1,,24315-000110,,"O-RING 1B P-11.0",,,1,1,,,,,,,,,,,,,
12,1,,24315-000110,,"O-RING 1B P-11.0",,,1,1,,,,,,,,,,,,,
13,1,,194202-56460,,BAND,,,6,6,,,,,,,,,,,,,
14,1,,172170-78210,,HOSE,,,1,1,,,,,,,,,,,,,
15,1,,172170-78220,,HOSE,,,1,1,,,,,,,,,,,,,
16,1,,172170-78230,,HOSE,,,1,1,,,,,,,,,,,,,
17,1,,172165-79220,,HOSE,,,1,1,,,,,,,,,,,,,
18,1,,172165-79290,,HOSE,,,1,1,,,,,,,,,,,,,
19,1,,172165-79300,,HOSE,,,1,1,,,,,,,,,,,,,
20,1,,172165-79310,,HOSE,,,1,1,,,,,,,,,,,,,
21,1,,172165-79340,,HOSE,,,1,1,,,,,,,,,,,,,
22,1,,172165-79350,,HOSE,,,1,1,,,,,,,,,,,,,
23,1,,172165-79360,,HOSE,,,1,1,,,,,,,,,,,,,
24,1,,172165-79370,,HOSE,,,1,1,,,,,,,,,,,,,
25,1,,172165-79641,,"HOSE G604BY185T",,,1,1,,,,,,,,,,,,,
26,1,,172165-79810,,SPONGE,,,2,2,,,,,,,,,,,,,
27,1,,172165-79820,,COVER,,,2,2,,,,,,,,,,,,,
28,1,,172122-79930,,CLAMP,,,4,4,,,,,,,,,,,,,
29,1,,23010-014000,,"CLAMP 14",,,2,2,,,,,,,,,,,,,
```

https://truckmanualshub.com/

Fig. 90 コントロール配管（ダイレクト）（AS）
CONTROL PIPING (DIRECT) (AS)

COUNTRY	JP	AS	EX
APPLI-CATION	—	○	—

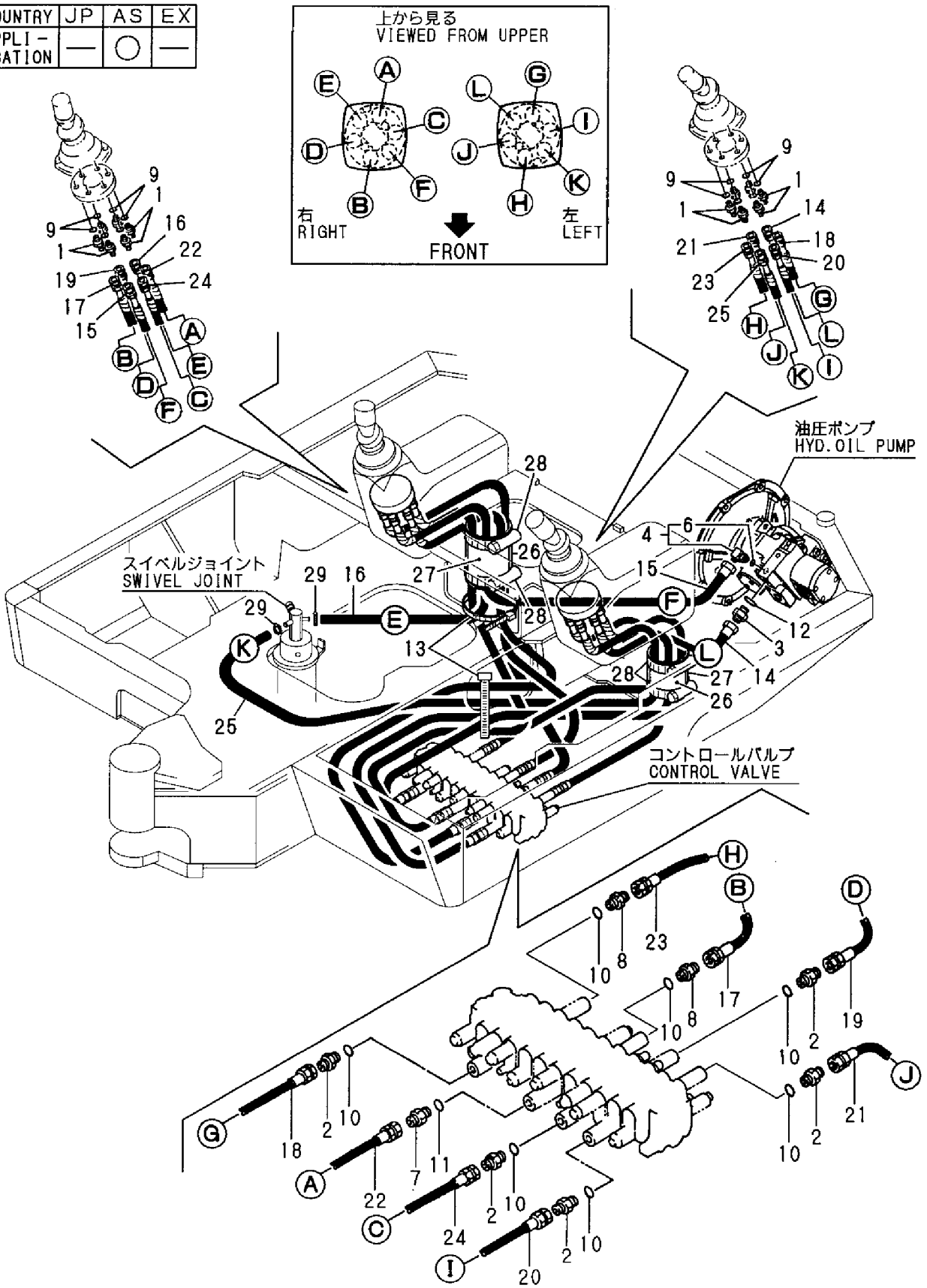

https://truckmanualshub.com/

```
1,1,,172112-77580,,"JOINT 1/8",1,1,1,1,,,,,,,,,,,,,
2,1,,172141-77800,,"JOINT, GREASE",4,4,4,4,,,,,,,,,,,,,
3,1,,172142-77811,,HOSE,2,2,2,2,,,,,,,,,,,,,
4,1,,172312-77820,,"FITTING, GREASE",1,1,1,1,,,,,,,,,,,,,
5,1,,172149-78500,,HOSE,1,1,1,1,,,,,,,,,,,,,
6,1,,24761-020000,,"NIPPLE PT1/8,GREASE",3,3,3,3,,,,,,,,,,,,,
```

https://truckmanualshub.com/

Fig. 91 グリーシング GREASING

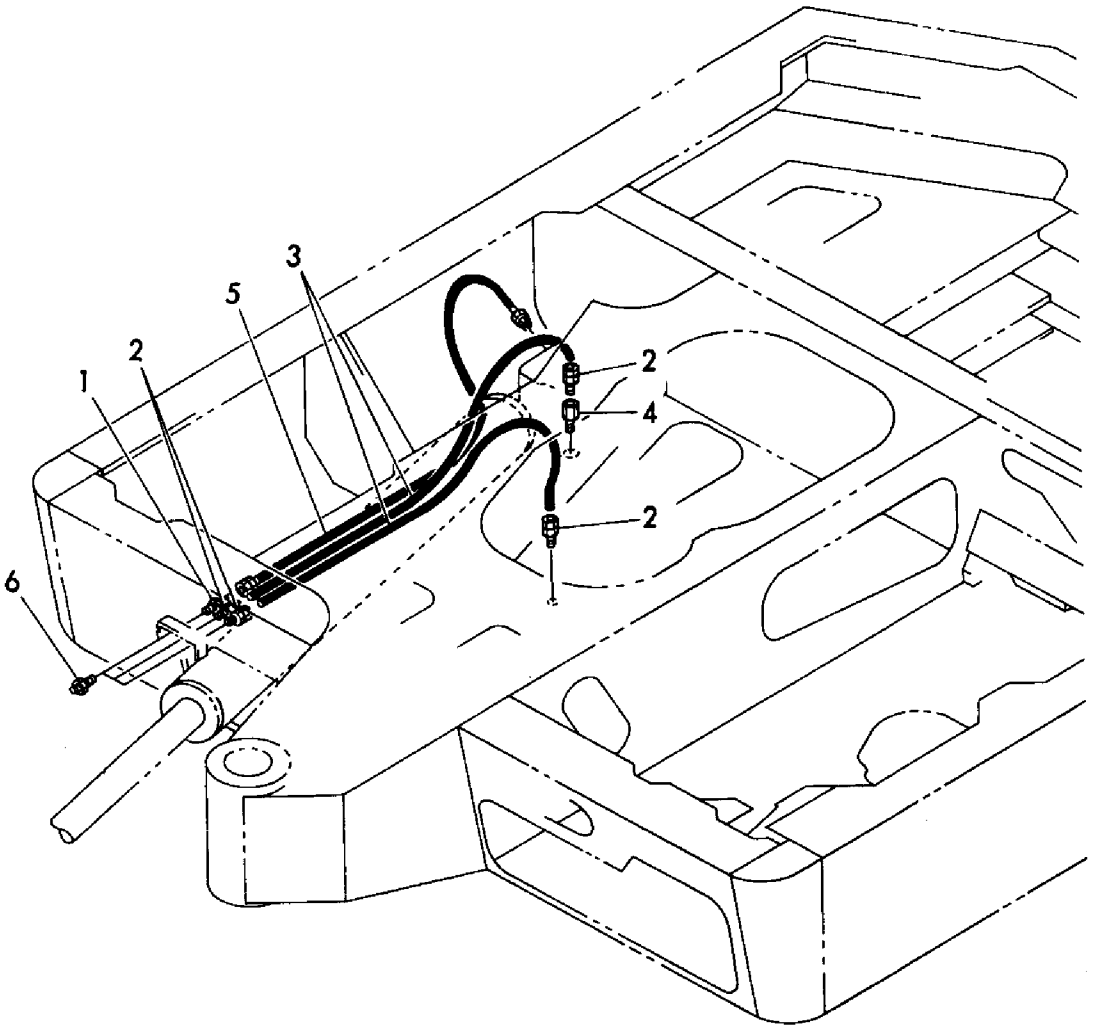

https://truckmanualshub.com/

```
1,1,,172171-81102,,"BOOM ASSY",1,1,,,,,,,,,,,,,,,
1-1,1,,172171-81103,,"BOOM COMPL.",1,1,,,,,S,,,M/#50666,,M/#50666,,,,,,
1A,1,,172171-81103-1,,"BOOM ASSY",,,1,1,,,,,,,,,,,,,
2,2,,172116-82400,,"PIN BUSH 38X55",2,2,2,2,,,,,,,,,,,,,
3,2,,172168-81400,,"SEAL,DUST 38X48X4",2,2,2,2,,,,,,,,,,,,,,
4,1,,172141-81401-1,,"PIN 38-164",1,1,,,,,,,,,,,,,,,
4A,1,,172141-81401-2,,"PIN 38-164",,,1,1,,,,,,,,,,,,,
5,1,,172141-81421-1,,"PIN 38-120",2,2,,,,,,,,,,,,,,,
5A,1,,172141-81421-2,,"PIN 38-120",,,2,2,,,,,,,,,,,,,
6,1,,24761-050000,,"NIPPLE C,GREASE",1,1,1,1,,,,,,,,,,,,,
7,1,,933171-29750,,"SHIM SET, PIN 38",4,4,4,4,,,,,,,,,,,,,
8,1,,172141-82103-1,,"ARM 1080 W/BUSH",1,1,,,,,,,,,,,,,,,
8-1,1,,172141-82104,,"ARM 1080",1,1,,,,,S,,,M/#50666,,M/#50666,,,,,,
8A,1,,172141-82104-1,,"ARM 1080",,,1,1,,,,,,,,,,,,,
9,2,,172171-81261,,"BUSH 35X50",2,2,2,2,,,,,,,,,,,,,
10,2,,172171-81280,,"SEAL 35X45X4",4,4,4,4,,,,,,,,,,,,,
11,2,,172141-82270,,"BUSH 35 45",2,2,2,2,,,,,,,,,,,,,
12,2,,172141-82280,,"BUSH 38 45, PIN",2,2,2,2,,,,,,,,,,,,,
13,2,,172168-81400,,"SEAL,DUST 38X48X4",2,2,2,2,,,,,,,,,,,,,,
14,1,,172141-82301-1,,"PIN 35-92",1,1,,,,,,,,,,,,,,,
14A,1,,172141-82301-2,,"PIN 35-92",,,1,1,,,,,,,,,,,,,
15,1,,172122-82302-1,,"PIN ASSY,ARM",1,1,,,,,,,,,,,,,,,
15A,1,,172122-82302-2,,"PIN ASSY,ARM",,,1,1,,,,,,,,,,,,,
16,1,,172141-84600,,"SHIM 35",2,2,2,2,,,,,,,,,,,,,
17,1,,24761-040000,,"NIPPLE B,GREASE",1,1,1,1,,,,,,,,,,,,,
18,1,,933171-29750,,"SHIM SET, PIN 38",1,1,1,1,,,,,,,,,,,,,
19,1,,172171-82510,,"SHIM 39X75 COMP",2,2,2,2,,,,,,,,,,,,,
20,1,,172171-81270,,O-RING,2,2,2,2,,,,,,,,,,,,,
21,1,,172141-84401-1,,"LINK,BUCKET (GREEN)",1,1,,,,,,,,,,,,,,,
21A,1,,172141-84401-2,,"LINK,BUCKET (YELLOW)",,,1,1,,,,,,,,,,,,,
22,2,,172141-82270,,"BUSH 35 45",2,2,2,2,,,,,,,,,,,,,
23,2,,172141-72561,,"BUSH 35 40 A, PIN",2,2,2,2,,,,,,,,,,,,,
24,2,,172171-81280,,"SEAL 35X45X4",6,6,6,6,,,,,,,,,,,,,
25,1,,172141-84500-1,,"ARM L,BUCKET (GREEN)",1,1,,,,,,,,,,,,,,,
25A,1,,172141-84500-2,,"ARM L,BUCKET (YELLOW",,,1,1,,,,,,,,,,,,,
26,1,,172141-84510-1,,"ARM R,BUCKET (GREEN)",1,1,,,,,,,,,,,,,,,
26A,1,,172141-84510-2,,"ARM R,BUCKET (YELLOW",,,1,1,,,,,,,,,,,,,
27,1,,172141-99470,,"KIT, ARM PIN",2,2,2,2,,,,,,,,,,,,,
28,2,,172141-84550,,"PIN 35-152",2,2,2,2,,,,,,,,,,,,,
29,2,,24761-020000,,"NIPPLE PT1/8,GREASE",2,2,2,2,,,,,,,,,,,,,
30,2,,933110-86600,,"NUT M24, NYLON",2,2,2,2,,,,,,,,,,,,,
31,2,,933171-29760,,WASHER,2,2,2,2,,,,,,,,,,,,,
32,2,,172141-84601,,"SHIM 35",2,2,2,2,,,,,,,,,,,,,
33,1,,172171-81303,,"BOOM W/BUSH, 3RD",1,1,,,,,Z,1,,M/#50666,,M/#50666,,,,,,
35,2,,172168-81400,,"SEAL,DUST 38X48X4",2,2,,,,,Z,,,M/#50666,,M/#50666,,,,,,
36,2,,172116-82400,,"PIN BUSH 38X55",2,2,,,,,Z,,,M/#50666,,M/#50666,,,,,,
37,1,,172171-81310,,"ARM ASSY, 3RD",1,1,,,,,Z,1,,M/#50666,,M/#50666,,,,,,
39,2,,172171-81261,,"BUSH 35X50",2,2,,,,,Z,,,M/#50666,,M/#50666,,,,,,
40,2,,172171-81280,,"SEAL 35X45X4",4,4,,,,,Z,,,M/#50666,,M/#50666,,,,,,
41,2,,172141-82270,,"BUSH 35 45",2,2,,,,,Z,,,M/#50666,,M/#50666,,,,,,
42,2,,172141-82280,,"BUSH 38 45, PIN",2,2,,,,,Z,,,M/#50666,,M/#50666,,,,,,
43,2,,172168-81400,,"SEAL,DUST 38X48X4",2,2,,,,,Z,,,M/#50666,,M/#50666,,,,,,
44,1,,172164-81670,,SPACER,3,3,3,3,,,,,,,,,,,,,
45,1,,22157-120000,,"WASHER 12",3,3,3,3,,,,,,,,,,,,,
46,1,,26013-120302,,"BOLT W/WASHER M12X30",3,3,3,3,,,,,,,,,,,,,
47,1,,172010-01640,,SPACER,1,1,1,1,,,,,,,,,,,,,
48,1,,172146-82910,,SPACER,1,1,1,1,,,,,,,,,,,,,
49,1,,172164-81670,,SPACER,1,1,1,1,,,,,,,,,,,,,
50,1,,172164-81670,,SPACER,2,2,2,2,,,,,,,,,,,,,
51,1,,22157-100000,,"WASHER 10",1,1,1,1,,,,,,,,,,,,,
52,1,,22157-120000,,"WASHER 12",1,1,1,1,,,,,,,,,,,,,
53,1,,22157-120000,,"WASHER 12",2,2,2,2,,,,,,,,,,,,,
54,1,,26013-100252,,"BOLT W/WASHER M10X25",1,1,1,1,,,,,,,,,,,,,
```

```
55,1,,26013-120252,,"BOLT M12X 25",1,1,1,1,,,,,,,,,,,,,
56,1,,26013-120302,,"BOLT W/WASHER M12X30",2,2,2,2,,,,,,,,,,,,,
57,1,,172141-81401-1,,"PIN 38-164",1,1,,,,,,,,,,,,,,,
57A,1,,172141-81401-2,,"PIN 38-164",,,1,1,,,,,,,,,,,,,
58,1,,172141-83291-1,,"BRACKET,BOOM (GREEN)",1,1,,,,,,,,,,,,,,,
58A,1,,172141-83291-2,,"BRACKET,BOOM(YELLOW)",,,1,1,,,,,,,,,,,,,,
60,2,,172141-83330,,"BUSH 50X45",2,2,2,2,,,,,,,,,,,,,
61,1,,172171-82310,,"PIN 50X292",1,1,1,1,,,,,,,,,,,,,
62,1,,172141-83341-1,,"PIN 38-226",1,1,,,,,,,,,,,,,,,
62A,1,,172141-83341-2,,"PIN 38-226",,,1,1,,,,,,,,,,,,,
63,1,,172141-83372-1,,"PIN 38-94",1,1,,,,,,,,,,,,,,,
63A,1,,172141-83372-2,,"PIN 38-94",,,1,1,,,,,,,,,,,,,
64,1,,172141-83390,,"PLATE, PIN LOCK",1,1,1,1,,,,,,,,,,,,,
65,1,,172141-94260,,"PIN 38-130",1,1,1,1,,,,,,,,,,,,,
66,1,,22242-000500,,"CIRCLIP   50",1,1,1,1,,,,,,,,,,,,,
67,1,,26013-100252,,"BOLT W/WASHER M10X25",2,2,2,2,,,,,,,,,,,,,
68,1,,26116-160402,,"BOLT M16X 40 PLATED",2,2,2,2,,,,,,,,,,,,,
69,1,,933171-29750,,"SHIM SET, PIN 38",2,2,2,2,,,,,,,,,,,,,
70,1,,172141-83400,,PLATE,1,1,1,1,,,,,,,,,,,,,
71,1,,22217-160000,,"SPRING WASHER 16",2,2,2,2,,,,,,,,,,,,,
72,1,,26013-120302,,"BOLT W/WASHER M12X30",1,1,1,1,,,,,,,,,,,,,
73,1,,24761-020000,,"NIPPLE PT1/8,GREASE",2,2,2,2,,,,,,,,,,,,,
74,1,,172183-81160,,"TREE CLIP",1,1,1,1,,,W,,,M/#50666,,M/#50666,,,,,,
75,1,,172183-81170,,"TREE CLIP",2,2,2,2,,,W,,,M/#50666,,M/#50666,,,,,,
76,1,,172183-81160,,"TREE CLIP",4,4,4,4,,,W,,,M/#50666,,M/#50666,,,,,,
77,1,,172173-81700,,SHIM,1,1,1,1,,,W,,,M/#50666,,M/#50666,,,,,,
78,1,,172173-81710,,SHIM,1,1,1,1,,,W,,,M/#50666,,M/#50666,,,,,,
```

https://truckmanualshub.com/

Fig. 92 ブーム&アーム BOOM & ARM

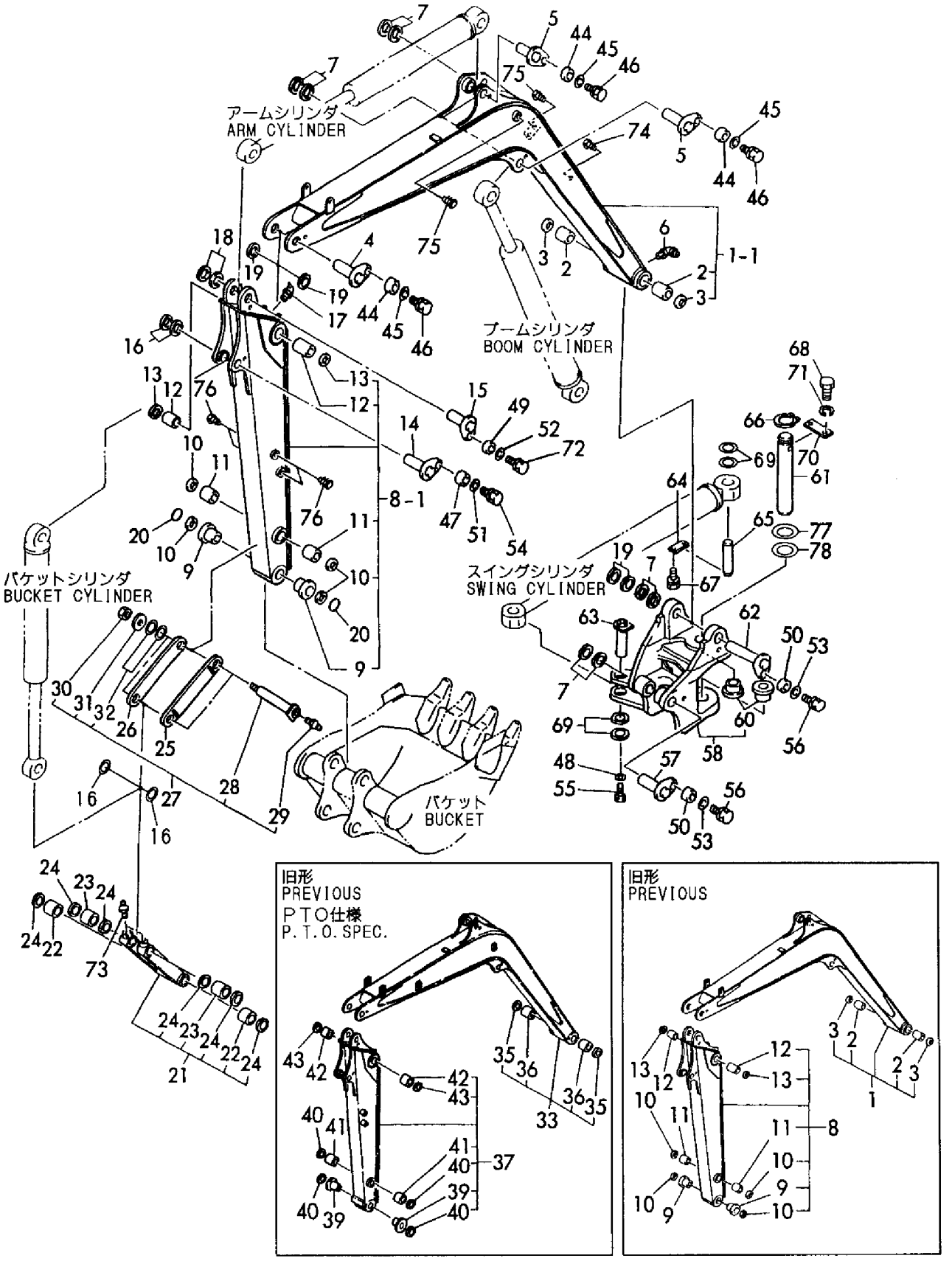

https://truckmanualshub.com/

```
1,1,,772141-81402-1,,"BUCKET 490",1,1,,,,,,,,,,,,,,,
3,2,,172142-86150,,"CUTTER (L), SIDE",1,1,,,,,,,,,,,,,,,
4,2,,172142-86160,,"CUTTER (R), SIDE",1,1,,,,,,,,,,,,,,,
5,2,,772141-86231,,"TEETH ASSY",4,4,,,,,,,,,,,,,,,
6,3,,172141-86231,,TEETH,4,4,,,,,,,,,,,,,,,
7,3,,172137-86710,,"TEETH SHIM 17 SET",4,4,,,,,,,,,,,,,,,
11,3,,172137-86770,,BOLT,8,8,,,,,,,,,,,,,,,
12,3,,172137-86780,,NUT,8,8,,,,,,,,,,,,,,,
13,2,,172142-86280,,"BOLT M14X 40",6,6,,,,,,,,,,,,,,,
14,2,,172142-86290,,"NUT 14",6,6,,,,,,,,,,,,,,,
15,2,,22217-140000,,"SPRING WASHER 14",6,6,,,,,,,,,,,,,,,
16,1,,172173-99460-1,,"KIT,BUCKET PIN",2,2,2,2,,,,,,,,,,,,,
17,2,,172141-84601,,"SHIM 35",2,2,2,2,,,,,,,,,,,,,
20,2,,172141-86252,,"PIN 35-195",2,2,2,2,,,,,,,,,,,,,
21,2,,26116-100652,,"BOLT M10X 65 PLATED",2,2,2,2,,,,,,,,,,,,,
22,2,,24761-020000,,"NIPPLE PT1/8,GREASE",2,2,2,2,,,,,,,,,,,,,
23,2,,26716-100002,,"NUT M10",4,4,4,4,,,,,,,,,,,,,
24,2,,172171-81500,,COLLAR,2,2,2,2,,,,,,,,,,,,,
25,1,,772142-81600,,"CUTTER(S), SIDE",1,1,,,,,1,,,,,,,,,
26,2,,172142-86510,,"CUTTER (L) ASSY,SIDE",1,1,,,,,1,,,,,,,,,
27,2,,172142-86520,,"CUTTER (R) ASSY,SIDE",1,1,,,,,1,,,,,,,,,
28,2,,172142-86540,,"BOLT M14X 30",6,6,,,,,1,,,,,,,,,
29,2,,22217-140000,,"SPRING WASHER 14",6,6,,,,,1,,,,,,,,,
```

https://truckmanualshub.com/

Fig. 93 バケット BUCKET

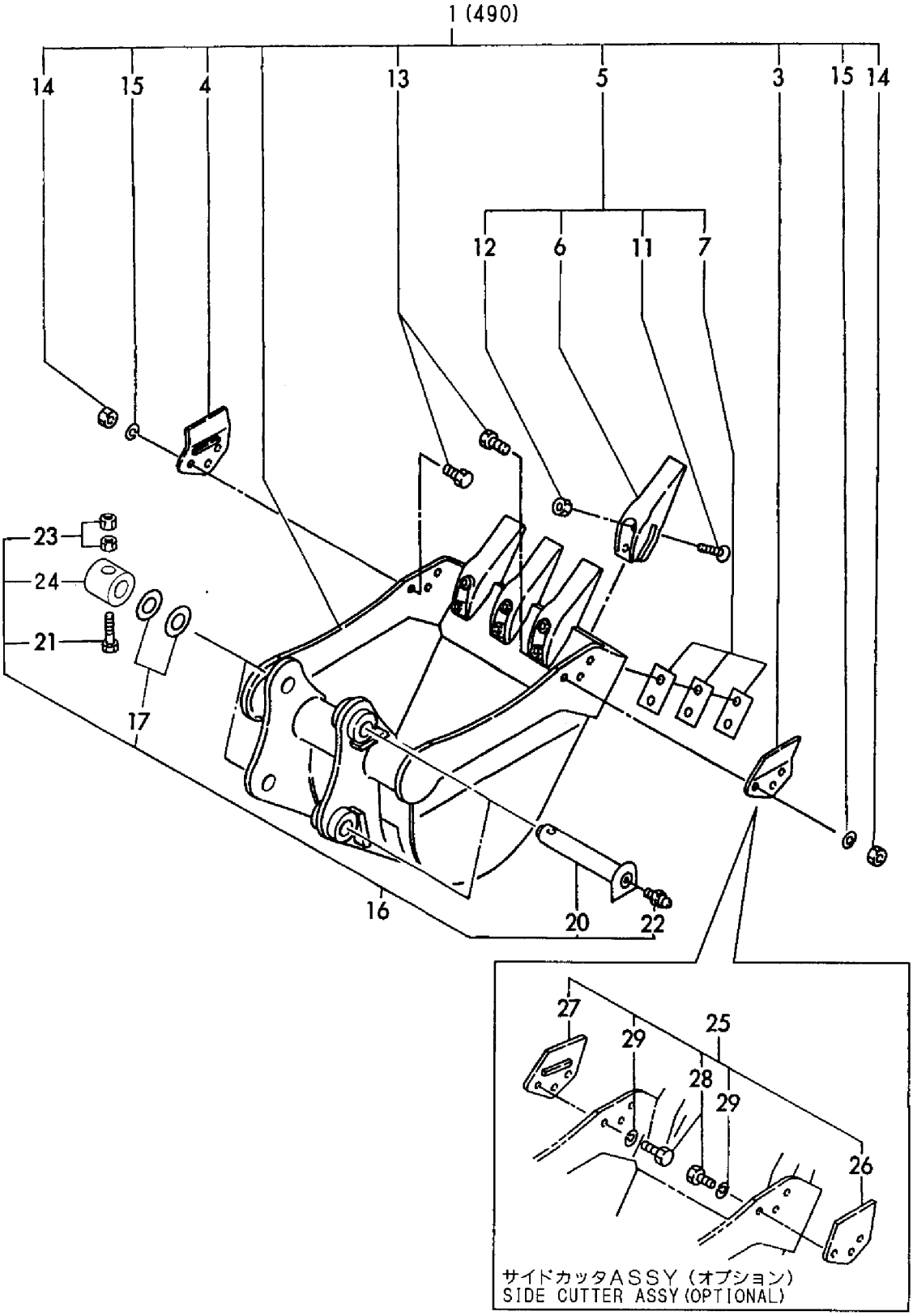

https://truckmanualshub.com/

```
1,1,,772141-82412-1,,"BUCKET ASSY(290)",1,1,,,,,,,,,,,,,,,
3,2,,172142-86150,,"CUTTER (L), SIDE",1,1,,,,,,,,,,,,,,,
4,2,,172142-86160,,"CUTTER (R), SIDE",1,1,,,,,,,,,,,,,,,
5,2,,172142-86280,,"BOLT M14X 40",6,6,,,,,,,,,,,,,,,
6,2,,172142-86290,,"NUT 14",6,6,,,,,,,,,,,,,,,
7,2,,22217-140000,,"SPRING WASHER 14",6,6,,,,,,,,,,,,,,,
8,2,,772141-86231,,"TEETH ASSY",2,2,,,,,,,,,,,,,,,
9,3,,172137-86770,,BOLT,4,4,,,,,,,,,,,,,,,
10,3,,172137-86780,,NUT,4,4,,,,,,,,,,,,,,,
11,3,,172141-86231,,TEETH,2,2,,,,,,,,,,,,,,,
12,3,,172137-86710,,"TEETH SHIM 17 SET",2,2,,,,,,,,,,,,,,,
16,1,,172173-99460-1,,"KIT,BUCKET PIN",2,2,,,,,,,,,,,,,,,
17,2,,26116-100652,,"BOLT M10X 65 PLATED",2,2,,,,,,,,,,,,,,,
18,2,,24761-020000,,"NIPPLE PT1/8,GREASE",2,2,,,,,,,,,,,,,,,
19,2,,172141-84601,,"SHIM 35",2,2,,,,,,,,,,,,,,,
22,2,,172141-86252,,"PIN 35-195",2,2,,,,,,,,,,,,,,,
23,2,,26716-100002,,"NUT M10",4,4,,,,,,,,,,,,,,,
24,2,,172171-81500,,COLLAR,2,2,,,,,,,,,,,,,,,
25,1,,772141-81442,,"BUCKET ASSY(340)",1,1,,,,,,,,,,,,,,,
27,2,,172142-86150,,"CUTTER (L), SIDE",1,1,,,,,,,,,,,,,,,
28,2,,172142-86160,,"CUTTER (R), SIDE",1,1,,,,,,,,,,,,,,,
29,2,,172142-86280,,"BOLT M14X 40",6,6,,,,,,,,,,,,,,,
30,2,,172142-86290,,"NUT 14",6,6,,,,,,,,,,,,,,,
31,2,,22217-140000,,"SPRING WASHER 14",6,6,,,,,,,,,,,,,,,
32,2,,772141-86231,,"TEETH ASSY",2,2,,,,,,,,,,,,,,,
33,3,,172137-86770,,BOLT,4,4,,,,,,,,,,,,,,,
34,3,,172137-86780,,NUT,4,4,,,,,,,,,,,,,,,
35,3,,172141-86231,,TEETH,2,2,,,,,,,,,,,,,,,
36,3,,172137-86710,,"TEETH SHIM 17 SET",2,2,,,,,,,,,,,,,,,
40,1,,772141-81422-1,,"BUCKET ASSY(390)",1,1,,,,,,,,,,,,,,,
42,2,,172142-86150,,"CUTTER (L), SIDE",1,1,,,,,,,,,,,,,,,
43,2,,172142-86160,,"CUTTER (R), SIDE",1,1,,,,,,,,,,,,,,,
44,2,,172142-86280,,"BOLT M14X 40",6,6,,,,,,,,,,,,,,,
45,2,,172142-86290,,"NUT 14",6,6,,,,,,,,,,,,,,,
46,2,,22217-140000,,"SPRING WASHER 14",6,6,,,,,,,,,,,,,,,
47,2,,772141-86231,,"TEETH ASSY",3,3,,,,,,,,,,,,,,,
48,3,,172137-86770,,BOLT,6,6,,,,,,,,,,,,,,,
49,3,,172137-86780,,NUT,6,6,,,,,,,,,,,,,,,
50,3,,172141-86231,,TEETH,3,3,,,,,,,,,,,,,,,
51,3,,172137-86710,,"TEETH SHIM 17 SET",3,3,,,,,,,,,,,,,,,
55,1,,772141-81432-1,,"BUCKET ASSY (540)",1,1,,,,,,,,,,,,,,,
57,2,,172142-86150,,"CUTTER (L), SIDE",1,1,,,,,,,,,,,,,,,
58,2,,172142-86160,,"CUTTER (R), SIDE",1,1,,,,,,,,,,,,,,,
59,2,,172142-86280,,"BOLT M14X 40",6,6,,,,,,,,,,,,,,,
60,2,,172142-86290,,"NUT 14",6,6,,,,,,,,,,,,,,,
61,2,,22217-140000,,"SPRING WASHER 14",6,6,,,,,,,,,,,,,,,
62,2,,772141-86231,,"TEETH ASSY",4,4,,,,,,,,,,,,,,,
63,3,,172137-86770,,BOLT,8,8,,,,,,,,,,,,,,,
64,3,,172137-86780,,NUT,8,8,,,,,,,,,,,,,,,
65,3,,172141-86231,,TEETH,4,4,,,,,,,,,,,,,,,
66,3,,172137-86710,,"TEETH SHIM 17 SET",4,4,,,,,,,,,,,,,,,
70,1,,772142-81600,,"CUTTER(S), SIDE",1,1,,,,,1,,,,,,,,,
71,2,,172142-86510,,"CUTTER (L) ASSY,SIDE",1,1,,,,,1,,,,,,,,,
72,2,,172142-86520,,"CUTTER (R) ASSY,SIDE",1,1,,,,,1,,,,,,,,,
73,2,,172142-86540,,"BOLT M14X 30",6,6,,,,,1,,,,,,,,,
74,2,,22217-140000,,"SPRING WASHER 14",6,6,,,,,1,,,,,,,,,
```

https://truckmanualshub.com/

Fig. 94 バケット（アタッチメント） BUCKET (ATTACHMENT)

COUNTRY	JP	AS	EX
APPLI-CATION	○	—	—

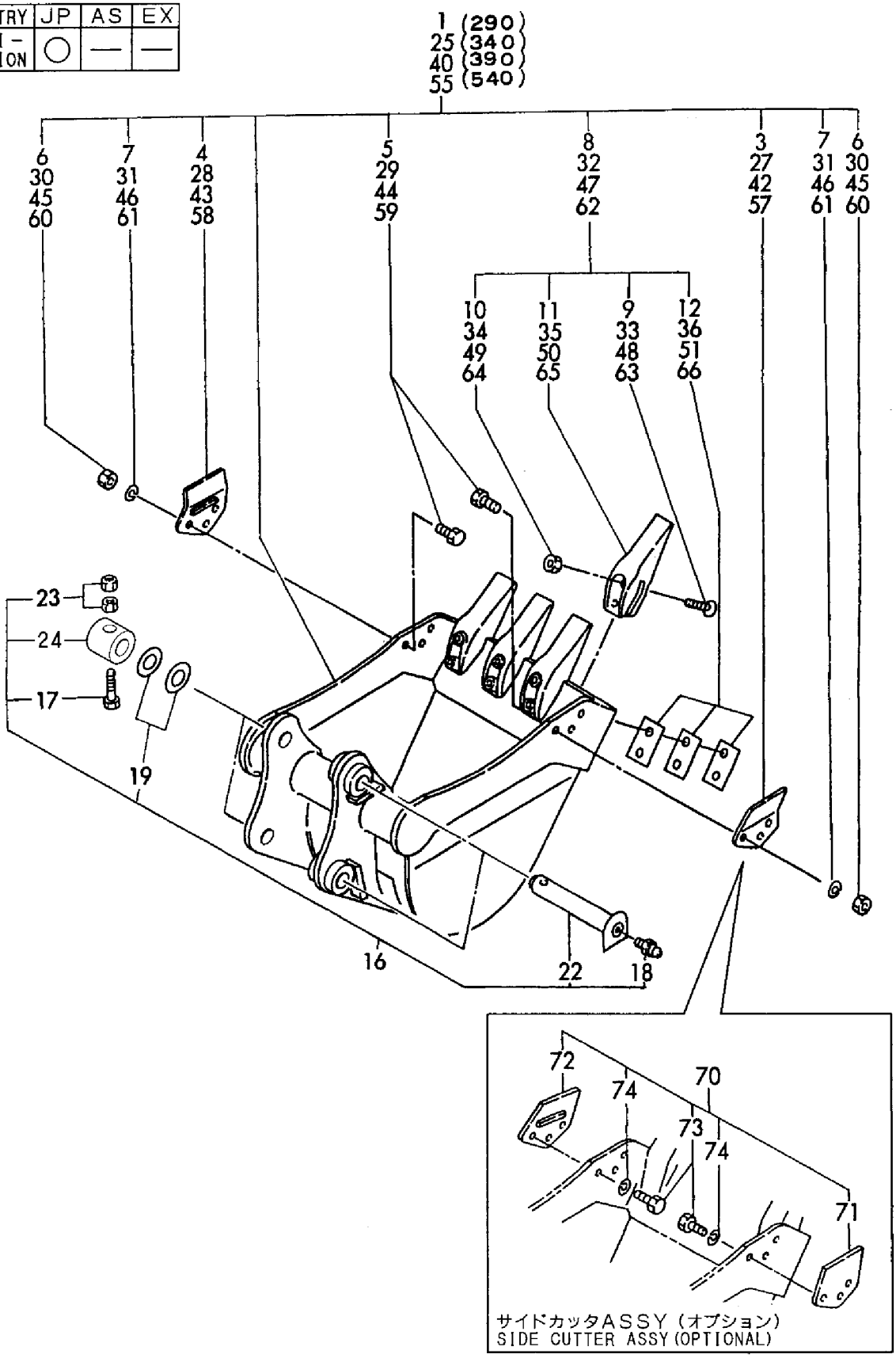

https://truckmanualshub.com/

```
1,1,,172173-99460-1,,"KIT,BUCKET PIN",2,2,,,,,,,,,,,,,,,
2,2,,172141-86252,,"PIN 35-195",2,2,,,,,,,,,,,,,,,
3,2,,26116-100652,,"BOLT M10X 65 PLATED",2,2,,,,,,,,,,,,,,,,,
4,2,,24761-020000,,"NIPPLE PT1/8,GREASE",2,2,,,,,,,,,,,,,,,,,
5,2,,172141-84601,,"SHIM 35",2,2,,,,,,,,,,,,,,,
8,2,,26716-100002,,"NUT M10",4,4,,,,,,,,,,,,,,,
9,2,,172171-81500,,COLLAR,2,2,,,,,,,,,,,,,,,
10,1,,172141-87200,,"BUCKET ASSY(290S)",1,1,,,,,,,,,,,,,,,
11,2,,172141-87210,,"BUCKET ASSY(290S)",1,1,,,,,,,,,,,,,,,
12,2,,172142-86150,,"CUTTER (L), SIDE",1,1,,,,,,,,,,,,,,,
13,2,,172142-86160,,"CUTTER (R), SIDE",1,1,,,,,,,,,,,,,,,
14,2,,172142-86280,,"BOLT M14X 40",6,6,,,,,,,,,,,,,,,
15,2,,172142-86290,,"NUT 14",6,6,,,,,,,,,,,,,,,
16,2,,22217-140000,,"SPRING WASHER 14",6,6,,,,,,,,,,,,,,,
17,2,,772173-86140-1,,"TEETH ASSY",2,2,,,,,,,,,,,,,,,
18,3,,172173-86220-1,,POINT,2,2,,,,,,,,,,,,,,,
19,3,,172173-86230,,"PIN ASSY, LOCK",2,2,,,,,,,,,,,,,,,
20,4,,172173-86240,,PIN,2,2,,,,,,,,,,,,,,,
21,4,,172173-86250,,PIN,2,2,,,,,,,,,,,,,,,
22,3,,172173-86140,,"ADAPTER 16",2,2,,,,,,,,,,,,,,,
23,1,,172141-87300,,"BUCKET ASSY(340S)",1,1,,,,,,,,,,,,,,,
24,2,,172141-87310,,"BUCKET ASSY(340S)",1,1,,,,,,,,,,,,,,,
25,2,,172142-86150,,"CUTTER (L), SIDE",1,1,,,,,,,,,,,,,,,
26,2,,172142-86160,,"CUTTER (R), SIDE",1,1,,,,,,,,,,,,,,,
27,2,,172142-86280,,"BOLT M14X 40",6,6,,,,,,,,,,,,,,,
28,2,,172142-86290,,"NUT 14",6,6,,,,,,,,,,,,,,,
29,2,,22217-140000,,"SPRING WASHER 14",6,6,,,,,,,,,,,,,,,
30,2,,772173-86140-1,,"TEETH ASSY",3,3,,,,,,,,,,,,,,,
31,3,,172173-86220-1,,POINT,3,3,,,,,,,,,,,,,,,
32,3,,172173-86230,,"PIN ASSY, LOCK",3,3,,,,,,,,,,,,,,,
33,4,,172173-86240,,PIN,3,3,,,,,,,,,,,,,,,
34,4,,172173-86250,,PIN,3,3,,,,,,,,,,,,,,,
35,3,,172173-86210,,"ADAPTER 16",3,3,,,,,,,,,,,,,,,
36,1,,172141-87400,,"BUCKET ASSY(390S)",1,1,,,,,,,,,,,,,,,
37,2,,172141-87410,,"BUCKET ASSY(390S)",1,1,,,,,,,,,,,,,,,
38,2,,172142-86150,,"CUTTER (L), SIDE",1,1,,,,,,,,,,,,,,,
39,2,,172142-86160,,"CUTTER (R), SIDE",1,1,,,,,,,,,,,,,,,
40,2,,172142-86280,,"BOLT M14X 40",6,6,,,,,,,,,,,,,,,
41,2,,172142-86290,,"NUT 14",6,6,,,,,,,,,,,,,,,
42,2,,22217-140000,,"SPRING WASHER 14",6,6,,,,,,,,,,,,,,,
43,2,,772173-86140-1,,"TEETH ASSY",3,3,,,,,,,,,,,,,,,
44,3,,172173-86220-1,,POINT,3,3,,,,,,,,,,,,,,,
45,3,,172173-86230,,"PIN ASSY, LOCK",3,3,,,,,,,,,,,,,,,
46,4,,172173-86240,,PIN,3,3,,,,,,,,,,,,,,,
47,4,,172173-86250,,PIN,3,3,,,,,,,,,,,,,,,
48,3,,172173-86210,,"ADAPTER 16",3,3,,,,,,,,,,,,,,,
49,1,,172141-87101,,"BUCKET ASSY 490S",1,1,,,,,,,,,,,,,,,
50,2,,172141-87111,,"BUCKET ASSY 490S",1,1,,,,,,,,,,,,,,,
51,2,,172142-86150,,"CUTTER (L), SIDE",1,1,,,,,,,,,,,,,,,
52,2,,172142-86160,,"CUTTER (R), SIDE",1,1,,,,,,,,,,,,,,,
53,2,,172142-86280,,"BOLT M14X 40",6,6,,,,,,,,,,,,,,,
54,2,,172142-86290,,"NUT 14",6,6,,,,,,,,,,,,,,,
55,2,,22217-140000,,"SPRING WASHER 14",6,6,,,,,,,,,,,,,,,
56,2,,772173-86140-1,,"TEETH ASSY",3,3,,,,,,,,,,,,,,,
57,3,,172173-86220-1,,POINT,3,3,,,,,,,,,,,,,,,
58,3,,172173-86230,,"PIN ASSY, LOCK",3,3,,,,,,,,,,,,,,,
59,4,,172173-86240,,PIN,3,3,,,,,,,,,,,,,,,
60,4,,172173-86250,,PIN,3,3,,,,,,,,,,,,,,,
61,3,,172173-86210,,"ADAPTER 16",3,3,,,,,,,,,,,,,,,
62,1,,172141-87500,,"BUCKET ASSY(540S)",1,1,,,,,,,,,,,,,,,
63,2,,172141-87510,,"BUCKET ASSY(640S)",1,1,,,,,,,,,,,,,,,
64,2,,172142-86150,,"CUTTER (L), SIDE",1,1,,,,,,,,,,,,,,,
65,2,,172142-86160,,"CUTTER (R), SIDE",1,1,,,,,,,,,,,,,,,
```

https://truckmanualshub.com/

```
66,2,,172142-86280,,"BOLT M14X 40",6,6,,,,,,,,,,,,,,,
67,2,,172142-86290,,"NUT 14",6,6,,,,,,,,,,,,,,,
68,2,,22217-140000,,"SPRING WASHER 14",6,6,,,,,,,,,,,,,,,,
69,2,,772173-86140-1,,"TEETH ASSY",4,4,,,,,,,,,,,,,,,,
70,3,,172173-86220-1,,POINT,4,4,,,,,,,,,,,,,,,
71,3,,172173-86230,,"PIN ASSY, LOCK",4,4,,,,,,,,,,,,,,,,
72,4,,172173-86240,,PIN,4,4,,,,,,,,,,,,,,,
73,4,,172173-86250,,PIN,4,4,,,,,,,,,,,,,,,
74,3,,172173-86210,,"ADAPTER 16",4,4,,,,,,,,,,,,,,,
75,1,,772142-81600,,"CUTTER(S), SIDE",1,1,,,,,,1,,,,,,,,,
76,2,,172142-86510,,"CUTTER (L) ASSY,SIDE",1,1,,,,,,1,,,,,,,,,
77,2,,172142-86520,,"CUTTER (R) ASSY,SIDE",1,1,,,,,,1,,,,,,,,,
78,2,,172142-86540,,"BOLT M14X 30",6,6,,,,,,1,,,,,,,,,
79,2,,22217-140000,,"SPRING WASHER 14",6,6,,,,,,1,,,,,,,,,
80,1,,172173-86200-1,,"TEETH KIT,POINT",1,1,,,,,,2,,,,,,,,,
81,2,,172173-86220-1,,POINT,1,1,,,,,,2,,,,,,,,,
82,2,,172173-86230,,"PIN ASSY, LOCK",1,1,,,,,,2,,,,,,,,,
```

https://truckmanualshub.com/

Fig. 95 バケットSタイプ（アタッチメント） BUCKET S－TYPE (ATTACHMENT)

COUNTRY	JP	AS	EX
APPLI－CATION	○	—	—

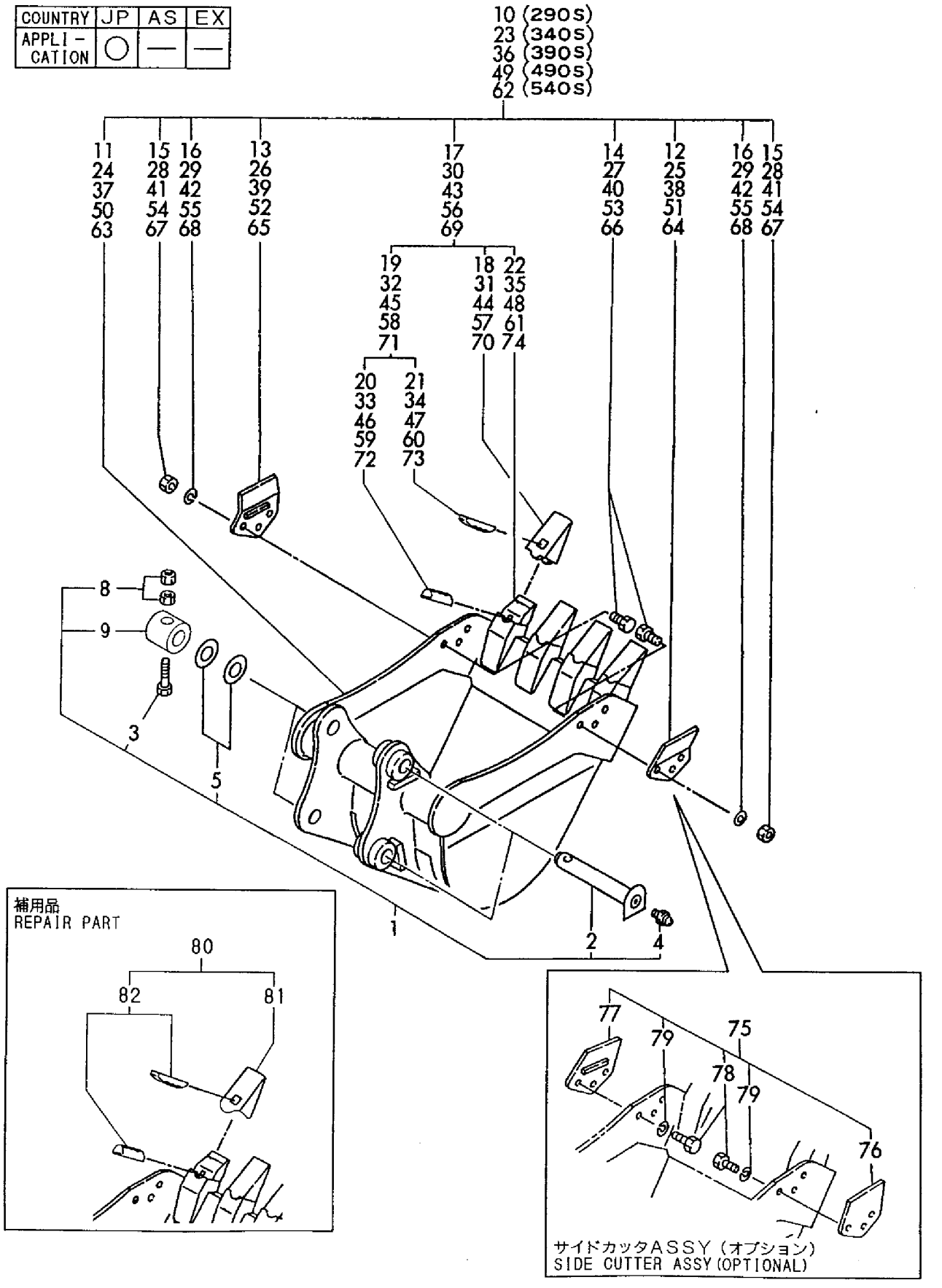

https://truckmanualshub.com/

```
1,1,,172141-94103,,"BLADE 850",1,1,1,1,,,,,,,,,,,,,
2,2,,172168-81270,,"SEAL,DUST 38X50X4",4,4,4,4,,,,,,,,,,,,,
3,1,,172141-94260,,"PIN 38-130",2,2,2,2,,,,,,,,,,,,,
4,1,,172141-94271,,"PIN 38-94",2,2,2,2,,,,,,,,,,,,,
5,1,,172124-94310,,"PLATE, LOCK",2,2,2,2,,,,,,,,,,,,,
6,1,,24761-020000,,"NIPPLE PT1/8,GREASE",2,2,2,2,,,,,,,,,,,,,,
7,1,,24761-040000,,"NIPPLE B,GREASE",2,2,2,2,,,,,,,,,,,,,
8,1,,26013-100252,,"BOLT W/WASHER M10X25",4,4,4,4,,,,,,,,,,,,,,
9,1,,933171-29750,,"SHIM SET, PIN 38",2,2,2,2,,,,,,,,,,,,,
10,1,,172164-81670,,SPACER,2,2,2,2,,,,,,,,,,,,,
11,1,,22157-120000,,"WASHER 12",2,2,2,2,,,,,,,,,,,,,
12,1,,26013-120302,,"BOLT W/WASHER M12X30",2,2,2,2,,,,,,,,,,,,,,
```

https://truckmanualshub.com/

Fig. 96 ブレード (850) BLADE (850)

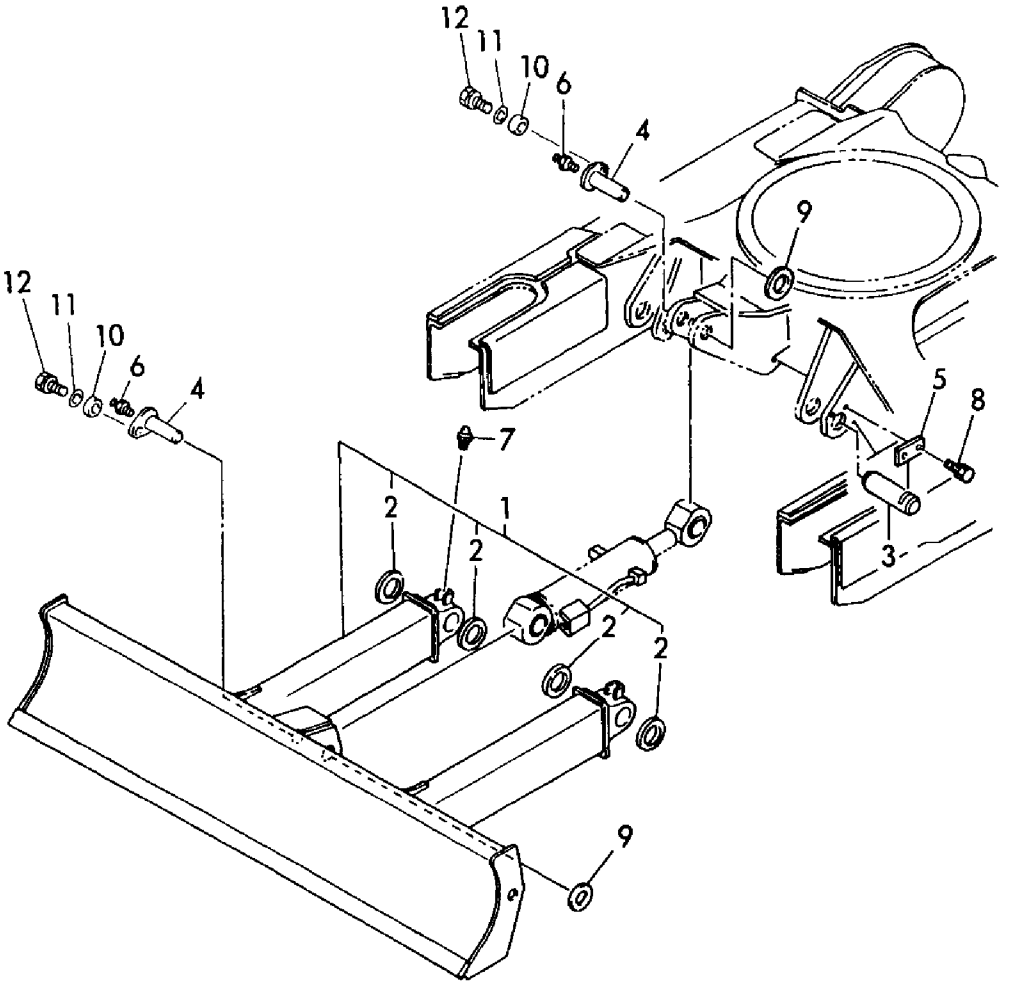

https://truckmanualshub.com/

```
1,1,,772141-94112,,"BLADE 1150",1,1,,,,,,,,,,,,,,,
2,2,,172141-94342,,"BLADE 1150",1,1,,,,,,,,,,,,,,,
3,3,,172168-81270,,"SEAL,DUST 38X50X4",4,4,,,,,,,,,,,,,,,
4,2,,172141-94260,,"PIN 38-130",2,2,,,,,,,,,,,,,,,
5,2,,172141-94271,,"PIN 38-94",2,2,,,,,,,,,,,,,,,
6,2,,172124-94310,,"PLATE, LOCK",2,2,,,,,,,,,,,,,,,
7,2,,24761-020000,,"NIPPLE PT1/8,GREASE",2,2,,,,,,,,,,,,,,,
8,2,,24761-040000,,"NIPPLE B,GREASE",2,2,,,,,,,,,,,,,,,
9,2,,26013-100252,,"BOLT W/WASHER M10X25",4,4,,,,,,,,,,,,,,,
10,2,,933171-29750,,"SHIM SET, PIN 38",2,2,,,,,,,,,,,,,,,
11,2,,172164-81670,,SPACER,2,2,,,,,,,,,,,,,,,
12,2,,22157-120000,,"WASHER 12",2,2,,,,,,,,,,,,,,,
13,2,,26013-120302,,"BOLT W/WASHER M12X30",2,2,,,,,,,,,,,,,,,
```

https://truckmanualshub.com/

Fig. 97 ブレード（1150）（アタッチメント） BLADE (1150) (ATTACHMENT)

見出しNo．1は、見出しNo．2から13を含みます。
1 inc．2 ～ 13

COUNTRY	JP	AS	EX
APPLI - CATION	○	—	—

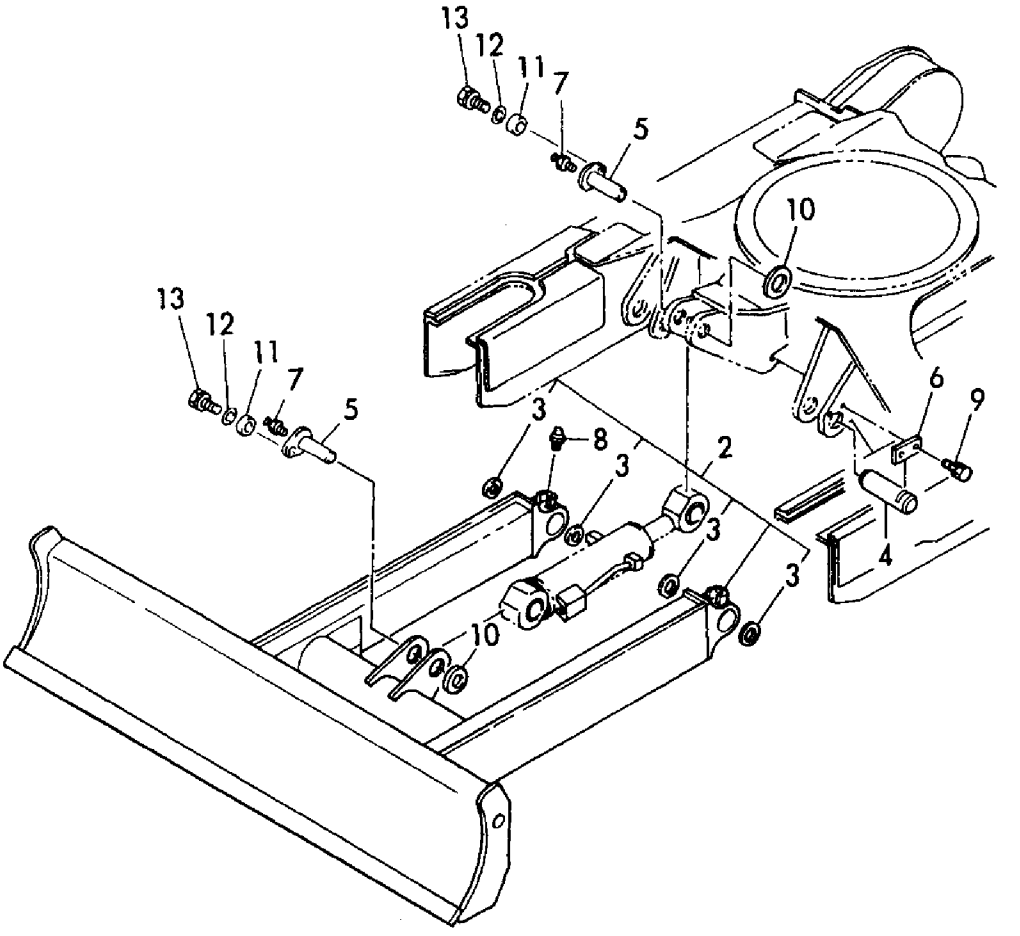

https://truckmanualshub.com/

```
1,1,,772168-45220,,"D-PATTERN LINK ASSY",1,1,,,,,,,,,,,,,,,
2,2,,172168-03260,,"LABEL, PATTERN D",1,1,,,,,,,,,,,,,,,
3,2,,172141-03390,,LABEL,1,1,,,,,,,,,,,,,,,
4,2,,194200-37780,,"LS-NUT 8",1,1,,,,,,,,,,,,,,,
5,2,,172734-41300,,"BALL, LINK",1,1,,,,,,,,,,,,,,,
6,2,,172141-43310,,ROD(D2),1,1,,,,,,,,,,,,,,,
7,2,,1A1040-43900,,"SPRING WASHER",1,1,,,,,,,,,,,,,,,
8,2,,172168-45810,,"SHAFT, D-PATTERN",1,1,,,,,,,,,,,,,,,
9,2,,172168-45840,,"LINK W/BUSH",1,1,,,,,,,,,,,,,,,
10,3,,172141-41360,,"BUSH 1415",2,2,,,,,,,,,,,,,,,
11,2,,172168-45880,,"ROD 230",1,1,,,,,,,,,,,,,,,
12,2,,172122-46571,,"ROD-END  8",2,2,,,,,,,,,,,,,,,
13,2,,22137-080000,,"WASHER 8, POLISHED",2,2,,,,,,,,,,,,,,,
14,2,,22137-080000,,"WASHER 8, POLISHED",1,1,,,,,,,,,,,,,,,
15,2,,22137-080000,,"WASHER 8, POLISHED",2,2,,,,,,,,,,,,,,,
16,2,,22217-080000,,"SPRING WASHER  8",1,1,,,,,,,,,,,,,,,
17,2,,22217-100000,,"SPRING WASHER 10",2,2,,,,,,,,,,,,,,,
18,2,,24311-000210,,"O-RING 1A P-21.0",2,2,,,,,,,,,,,,,,,
19,2,,24761-040000,,"NIPPLE B,GREASE",1,1,,,,,,,,,,,,,,,
20,2,,26013-080202,,"BOLT W/WASHER M8X20",1,1,,,,,,,,,,,,,,,
21,2,,26013-080302,,"BOLT M 8X 30",1,1,,,,,,,,,,,,,,,
22,2,,26013-080402,,"BOLT M 8X 40",1,1,,,,,,,,,,,,,,,
23,2,,26051-080002,,"NUT M 8",2,2,,,,,,,,,,,,,,,
24,2,,26116-100202,,"BOLT M10X 20 PLATED",2,2,,,,,,,,,,,,,,,
```

https://truckmanualshub.com/

Fig. 98 Dパターンリンク（オプション） D－PATTERN LINK (OPTIONAL)

COUNTRY	JP	AS	EX
APPLI－CATION	○	—	—

見出しNo．1は、
見出しNo．2から24を含みます。
1inc．2～24

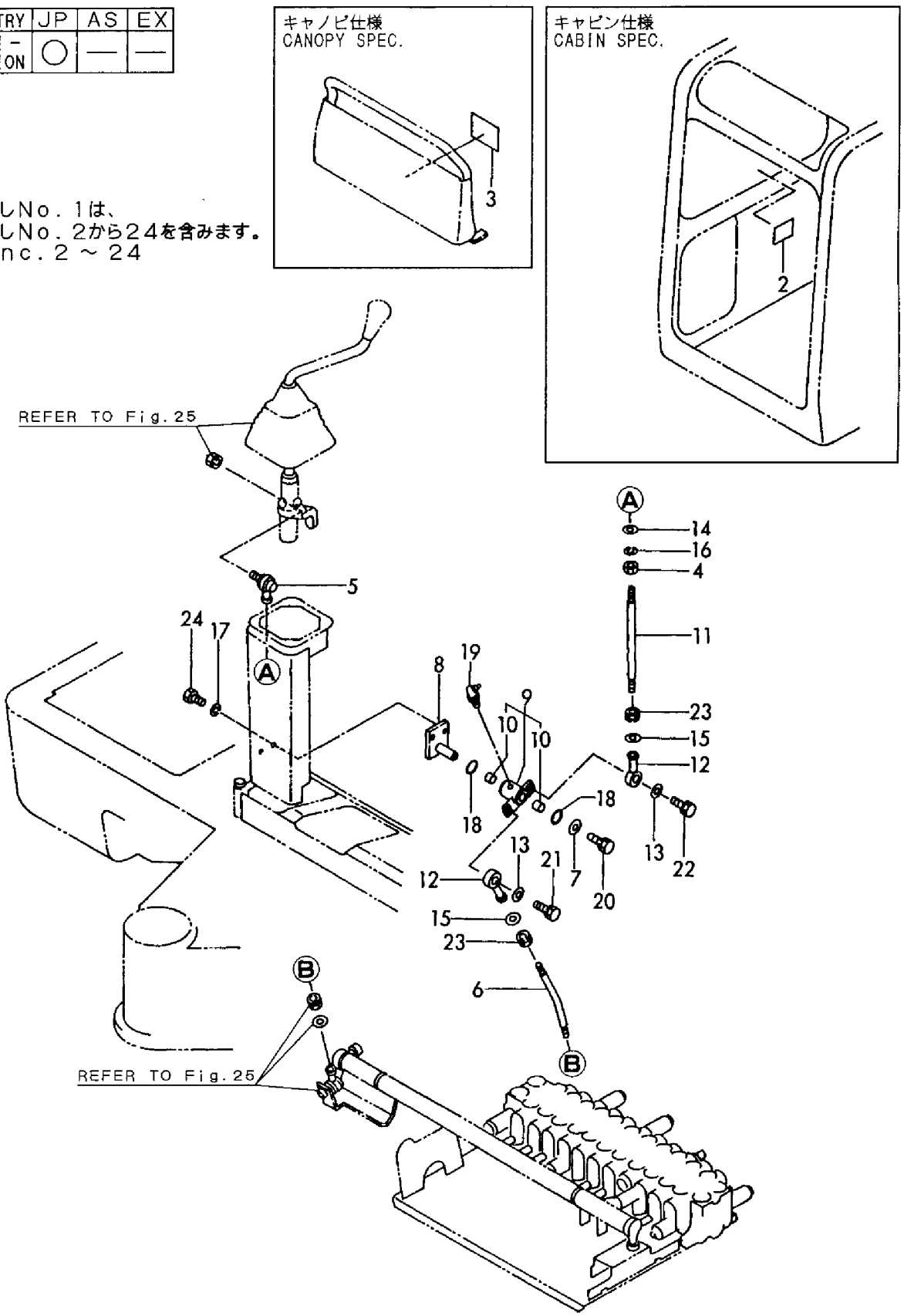

https://truckmanualshub.com/

```
1,1,,172964-03610,,"LABEL A",1,1,,,,,,,,,,,,,,,
2,1,,172164-03500,,LABEL,1,1,,,,,,,,,,,,,,,
3,1,,172164-03540,,LABEL,1,1,,,,,,,,,,,,,,,
4,1,,172964-03370,,LABEL,1,1,,,,,,,,,,,,,,,
5,1,,172164-03510,,LABEL,1,1,,,,,,,,,,,,,,,
6,1,,172164-03520,,LABEL,1,1,,,,,,,,,,,,,,,
7,1,,172964-03390,,LABEL,1,1,,,,,,,,,,,,,,,
8,1,,172519-04180,,LABEL,1,1,,,,,,,,,,,,,,,
9,1,,172519-04290,,LABEL,1,1,,,,,,,,,,,,,,,
10,1,,172519-04300,,LABEL,1,1,,,,,,,,,,,,,,,
11,1,,172156-03280,,LABEL,1,1,,,,,,,,,,,,,,,
12,1,,172165-03661,,LABEL,1,1,,,,,,,,,,,,,,,
13,1,,172142-03302,,LABEL,1,1,,,,,,,,,,,,,,,
14,1,,172141-03202,,LABEL,1,1,,,,,,,,,,,,,,,
15,1,,172141-03372,,LABEL,2,2,,,,,,,,,,,,,,,
16,1,,172164-03530,,LABEL,2,,,,,,,,,,,,,,,
17,1,,172964-03480,,LABEL,1,1,,,,,,,,,,,,,,,
17-1,1,,172964-03481,,LABEL,1,1,,,,,N,,,M/#50621,,M/#50621,,,,,,
```

https://truckmanualshub.com/

Fig. 99 安全銘板 SAFETY LABEL

COUNTRY	JP	AS	EX
APPLI-CATION	○	—	—

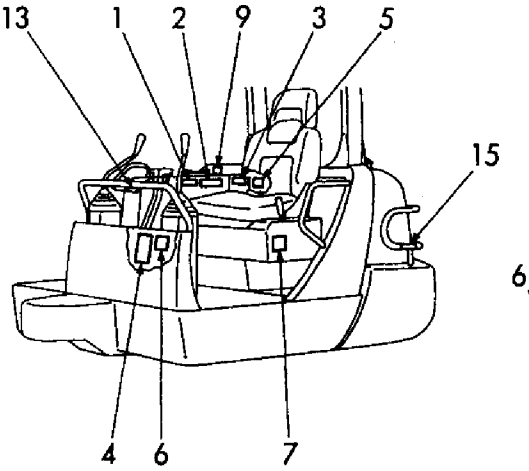

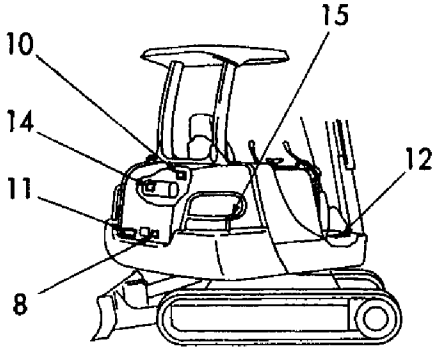

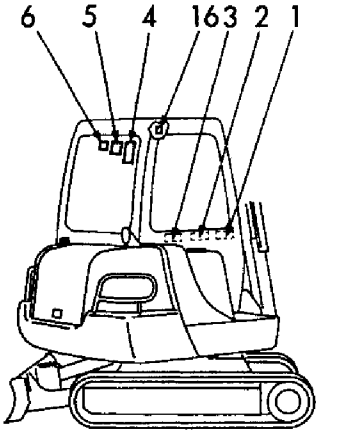

1

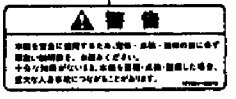

2

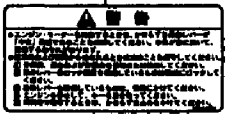

3

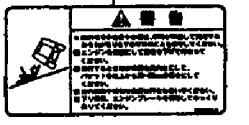

4

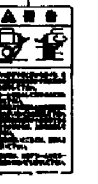

5

6

7

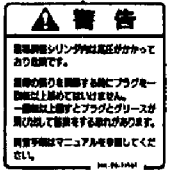

8

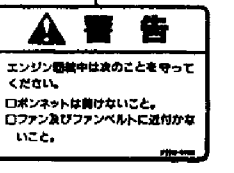

9

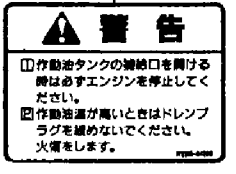

10

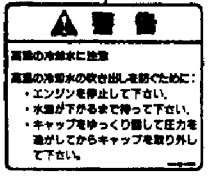

11

12

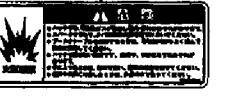

13

14

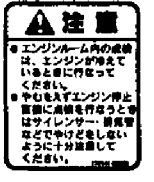

15

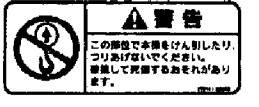

16

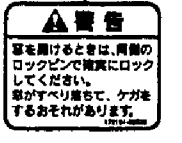

17

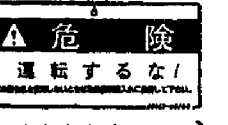

取説収納庫内在中
IN THE OPERATION MANUAL CASE

https://truckmanualshub.com/

```
1,1,,172191-08500,,"P.T.O. KIT",1,1,,,,,1,,,,,,,,,,
1-1,1,,172191-08501,,"P.T.O. KIT",1,1,,,,,S,1,,M/#50670,,M/#50670,,,,,,
2,2,,172191-74600,,"P.T.O. KIT(FRAME END",1,1,,,,,,2,,,,,,,,,,
3,2,,172191-74500,,"P.T.O.KIT,ARM END",1,1,,,,,,3,,,,,,,,,,
3-1,2,,172191-74501,,"P.T.O. KIT(ARM END)",1,1,,,,,S,3,,M/#50670,,M/#50670,,,,,,
4,2,,172168-74620,,"P.T.O. KIT(FR, UNITE",1,1,,,,,,4,,,,,,,,,,
```

https://truckmanualshub.com/

Fig. 100 PTOキット P.T.O.KIT

COUNTRY	JP	AS	EX
APPLI-CATION	○	—	—

PTOキット
P.T.O.KIT
1 (172191-08500)
Inc.Fig.32 REF.No.1
Fig.87 REF.No.1
Fig.33 REF.No.1
1-1 (172191-08501)
Inc.Fig.32 REF.No.1
Fig.87 REF.No.1-1
Fig.33 REF.No.1

PTOキット（フレームエンド）
P.T.O.KIT (FRAME END)
2 (172191-74600)
Inc.Fig.32 REF.No.2～32
Fig.83 REF.No.1～19

PTOキット（アームエンド）
P.T.O.KIT (ARM END)
3 (172191-74500)
Inc.Fig.87 REF.No.2～26
3-1 (172191-74501)
Inc.Fig.87 REF.No.2～32

PTOキット（合流）
P.T.O.KIT (CONFLUENCE)
4 (172168-74620)
Inc.Fig.33 REF.No.2～25
Fig.72 REF.No.1～25
Fig.84 REF.No.1～22

Fig. 32 操縦装置（PTOコントロール） CONTROL EQUIPMENT (P.T.O.CONTROL)

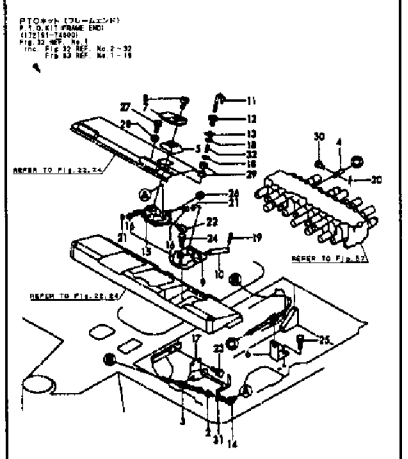

Fig. 83 油圧配管（PTOバルブ～フレーム） HYD.OIL PIPING (P.T.O.VALVE～FRAME)

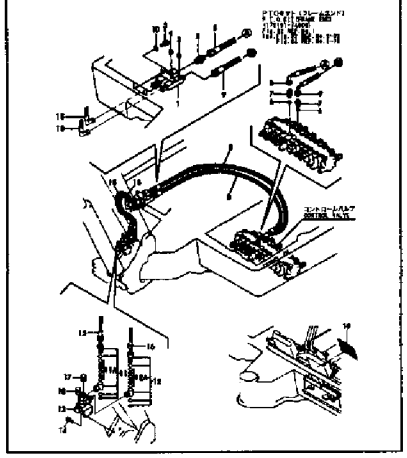

Fig. 87 油圧配管（PTOアームエンド） HYD.OIL PIPING (P.T.O.ARM END)

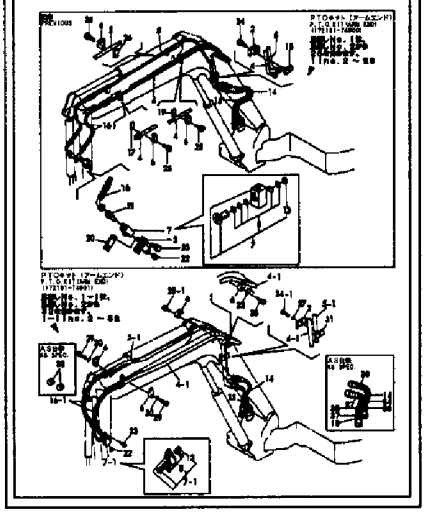

Fig. 33 操縦装置（PTOコントロール）（合流） CONTROL EQUIPMENT (P.T.O.CONTROL) (CONFLUENCE)

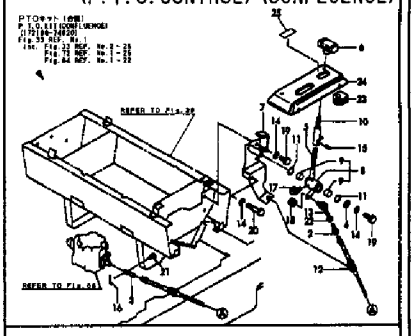

Fig. 72 PTOバルブ P.T.O. VALVE

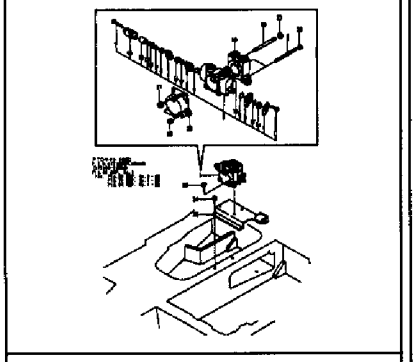

Fig. 84 油圧配管（PTOバルブ）（合流） HYD.OIL PIPING (P.T.O.VALVE) (CONFLUENCE)

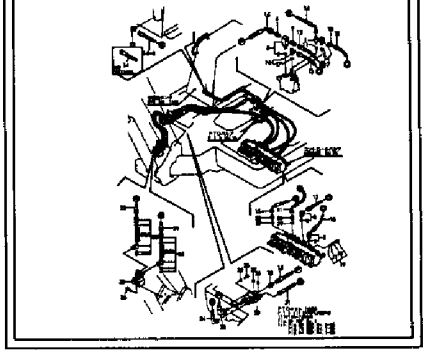

https://truckmanualshub.com/

```
[Info]
PcNo=Y00K3281
PcName=B22-2A(JP,AS,EX)
JpnUse=1
JpnSec1=Œš‹@
JpnSec2=ƒoƒbƒNƒz[
JpnSec3=B
JpnPreface=1
EngUse=1
EngSec1=CONSTRUCTION
EngSec2=EXCAVATOR (B)
EngSec3=B
EngPreface=1
```

https://truckmanualshub.com/

```
0,Y00K3281
1,001,,"VEHICLE B22-2A"
2,1,,LABEL(CABIN)(JP),B22-2AC(R)JP,B22-2AP(R)JP,B22-2AC(R)AS,B22-2AP(R)AS
2,2,,LABEL(CABIN)(EX),B22-2AC(R)JP,B22-2AP(R)JP,B22-2AC(R)AS,B22-2AP(R)AS
2,3,,LABEL(CABIN)(AS),B22-2AC(R)JP,B22-2AP(R)JP,B22-2AC(R)AS,B22-2AP(R)AS
2,4,,LABEL(CANOPY)(JP),B22-2AC(R)JP,B22-2AP(R)JP,B22-2AC(R)AS,B22-2AP(R)AS
2,5,,LABEL(CANOPY)(EX),B22-2AC(R)JP,B22-2AP(R)JP,B22-2AC(R)AS,B22-2AP(R)AS
2,6,,LABEL(CANOPY)(AS),B22-2AC(R)JP,B22-2AP(R)JP,B22-2AC(R)AS,B22-2AP(R)AS
2,7,,TOOL,B22-2AC(R)JP,B22-2AP(R)JP,B22-2AC(R)AS,B22-2AP(R)AS
2,8,,"INLET HOSE & EXHAUST PIPE",B22-2AC(R)JP,B22-2AP(R)JP,B22-2AC(R)AS,B22-
2AP(R)AS
2,9,,ACCELERATOR,B22-2AC(R)JP,B22-2AP(R)JP,B22-2AC(R)AS,B22-2AP(R)AS
2,10,,"ENGINE MOUNT",B22-2AC(R)JP,B22-2AP(R)JP,B22-2AC(R)AS,B22-2AP(R)AS
2,11,,"RADIATOR & MOUNT",B22-2AC(R)JP,B22-2AP(R)JP,B22-2AC(R)AS,B22-2AP(R)AS
2,12,,"FUEL TANK & FUEL PIPE",B22-2AC(R)JP,B22-2AP(R)JP,B22-2AC(R)AS,B22-
2AP(R)AS
2,13,,BATTERY,B22-2AC(R)JP,B22-2AP(R)JP,B22-2AC(R)AS,B22-2AP(R)AS
2,14,,"ELECTRIC PART(CABIN,CANOPY)",B22-2AC(R)JP,B22-2AP(R)JP,B22-2AC(R)AS,B22-
2AP(R)AS
2,15,,"ELECTRIC PART(CABIN,CANOPY)(AS",B22-2AC(R)JP,B22-2AP(R)JP,B22-
2AC(R)AS,B22-2AP(R)AS
2,16,,"ELECTRIC PART(CABIN)",B22-2AC(R)JP,B22-2AP(R)JP,B22-2AC(R)AS,B22-2AP(R)AS
2,17,,"WORK LAMP",B22-2AC(R)JP,B22-2AP(R)JP,B22-2AC(R)AS,B22-2AP(R)AS
2,18,,"HEATER & DEFROSTER",B22-2AC(R)JP,B22-2AP(R)JP,B22-2AC(R)AS,B22-2AP(R)AS
2,19,,RADIO(OPTIONAL),B22-2AC(R)JP,B22-2AP(R)JP,B22-2AC(R)AS,B22-2AP(R)AS
2,20,,"ROLLER & ADJUST",B22-2AC(R)JP,B22-2AP(R)JP,B22-2AC(R)AS,B22-2AP(R)AS
2,21,,CRAWLER,B22-2AC(R)JP,B22-2AP(R)JP,B22-2AC(R)AS,B22-2AP(R)AS
2,22,,"CONTROL EQUIPMENT(LEVER STAND",B22-2AC(R)JP,B22-2AP(R)JP,B22-
2AC(R)AS,B22-2AP(R)AS
2,23,,"CONTROL EQUIPMENT(LEVER STAND",B22-2AC(R)JP,B22-2AP(R)JP,B22-
2AC(R)AS,B22-2AP(R)AS
2,24,,"CONTROL EQUIPMENT(LEVER STAND)",B22-2AC(R)JP,B22-2AP(R)JP,B22-
2AC(R)AS,B22-2AP(R)AS
2,25,,"CONTROL EQUIPMENT(BOOM & BUCKE",B22-2AC(R)JP,B22-2AP(R)JP,B22-
2AC(R)AS,B22-2AP(R)AS
2,26,,"CONTROL EQUIPMENT(ARM & TURNIN",B22-2AC(R)JP,B22-2AP(R)JP,B22-
2AC(R)AS,B22-2AP(R)AS
2,27,,"CONTROL EQUIPMENT(DRIVE)",B22-2AC(R)JP,B22-2AP(R)JP,B22-2AC(R)AS,B22-
2AP(R)AS
2,28,,"CONTROL EQUIPMENT(SWING)",B22-2AC(R)JP,B22-2AP(R)JP,B22-2AC(R)AS,B22-
2AP(R)AS
2,29,,"CONTROL EQUIPMENT(BLADE)",B22-2AC(R)JP,B22-2AP(R)JP,B22-2AC(R)AS,B22-
2AP(R)AS
2,30,,"CONTROL EQUIPMENT(CUT OFF LEVE",B22-2AC(R)JP,B22-2AP(R)JP,B22-
2AC(R)AS,B22-2AP(R)AS
2,31,,"CONTROL EQUIPMENT(CUT OFF LEVE",B22-2AC(R)JP,B22-2AP(R)JP,B22-
2AC(R)AS,B22-2AP(R)AS
2,32,,"CONTROL EQUIPMENT(P.T.O.CONTRO",B22-2AC(R)JP,B22-2AP(R)JP,B22-
2AC(R)AS,B22-2AP(R)AS
2,33,,"CONTROL EQUIPMENT(P.T.O.CONTRO",B22-2AC(R)JP,B22-2AP(R)JP,B22-
2AC(R)AS,B22-2AP(R)AS
2,34,,"FRAME & TURNING BEARING",B22-2AC(R)JP,B22-2AP(R)JP,B22-2AC(R)AS,B22-
2AP(R)AS
2,35,,"FRAME COVER(CABIN)",B22-2AC(R)JP,B22-2AP(R)JP,B22-2AC(R)AS,B22-2AP(R)AS
2,36,,"FRAME COVER(CANOPY)",B22-2AC(R)JP,B22-2AP(R)JP,B22-2AC(R)AS,B22-2AP(R)AS
2,37,,STEP,B22-2AC(R)JP,B22-2AP(R)JP,B22-2AC(R)AS,B22-2AP(R)AS
2,38,,"SEAT & SEAT MOUNT",B22-2AC(R)JP,B22-2AP(R)JP,B22-2AC(R)AS,B22-2AP(R)AS
2,39,,"SEAT MOUNT(AS)",B22-2AC(R)JP,B22-2AP(R)JP,B22-2AC(R)AS,B22-2AP(R)AS
2,40,,BONNET,B22-2AC(R)JP,B22-2AP(R)JP,B22-2AC(R)AS,B22-2AP(R)AS
2,41,,CABIN,B22-2AC(R)JP,B22-2AP(R)JP,B22-2AC(R)AS,B22-2AP(R)AS
2,42,,CABIN(AS),B22-2AC(R)JP,B22-2AP(R)JP,B22-2AC(R)AS,B22-2AP(R)AS
2,43,,"CABIN DOOR",B22-2AC(R)JP,B22-2AP(R)JP,B22-2AC(R)AS,B22-2AP(R)AS
2,44,,CANOPY,B22-2AC(R)JP,B22-2AP(R)JP,B22-2AC(R)AS,B22-2AP(R)AS
```

2,45,,"HYD.OIL PUMP & JOINT",B22-2AC(R)JP,B22-2AP(R)JP,B22-2AC(R)AS,B22-2AP(R)AS
2,46,,"HYD.OIL PUMP & JOINT(FRONT MUL",B22-2AC(R)JP,B22-2AP(R)JP,B22-2AC(R)AS,B22-2AP(R)AS
2,47,,"BOOM CYLINDER(CABIN)",B22-2AC(R)JP,B22-2AP(R)JP,B22-2AC(R)AS,B22-2AP(R)AS
2,48,,"BOOM CYLINDER(CANOPY)",B22-2AC(R)JP,B22-2AP(R)JP,B22-2AC(R)AS,B22-2AP(R)AS
2,49,,"BOOM CYLINDER(CANOPY)(AS)",B22-2AC(R)JP,B22-2AP(R)JP,B22-2AC(R)AS,B22-2AP(R)AS
2,50,,"ARM CYLINDER",B22-2AC(R)JP,B22-2AP(R)JP,B22-2AC(R)AS,B22-2AP(R)AS
2,51,,"BUCKET CYLINDER",B22-2AC(R)JP,B22-2AP(R)JP,B22-2AC(R)AS,B22-2AP(R)AS
2,52,,"SWING CYLINDER",B22-2AC(R)JP,B22-2AP(R)JP,B22-2AC(R)AS,B22-2AP(R)AS
2,53,,"BLADE CYLINDER",B22-2AC(R)JP,B22-2AP(R)JP,B22-2AC(R)AS,B22-2AP(R)AS
2,54,,"TRAVEL MOTOR",B22-2AC(R)JP,B22-2AP(R)JP,B22-2AC(R)AS,B22-2AP(R)AS
2,55,,"TURNING MOTOR",B22-2AC(R)JP,B22-2AP(R)JP,B22-2AC(R)AS,B22-2AP(R)AS
2,56,,"SWIVEL JOINT",B22-2AC(R)JP,B22-2AP(R)JP,B22-2AC(R)AS,B22-2AP(R)AS
2,57,,"CONTROL VALVE(P PORT)",B22-2AC(R)JP,B22-2AP(R)JP,B22-2AC(R)AS,B22-2AP(R)AS
2,58,,"CONTROL VALVE(TRAVEL)",B22-2AC(R)JP,B22-2AP(R)JP,B22-2AC(R)AS,B22-2AP(R)AS
2,59,,"CONTROL VALVE(ARM & SWING)",B22-2AC(R)JP,B22-2AP(R)JP,B22-2AC(R)AS,B22-2AP(R)AS
2,60,,"CONTROL VALVE(BOOM & BUCKET)",B22-2AC(R)JP,B22-2AP(R)JP,B22-2AC(R)AS,B22-2AP(R)AS
2,61,,"CONTROL VALVE(TURNING & BLADE)",B22-2AC(R)JP,B22-2AP(R)JP,B22-2AC(R)AS,B22-2AP(R)AS
2,62,,"CONTROL VALVE(P PORT)(FRONT MU",B22-2AC(R)JP,B22-2AP(R)JP,B22-2AC(R)AS,B22-2AP(R)AS
2,63,,"CONTROL VALVE(TRAVEL)(FRONT MU",B22-2AC(R)JP,B22-2AP(R)JP,B22-2AC(R)AS,B22-2AP(R)AS
2,64,,"CONTROL VALVE(ARM & SWING)(FRO",B22-2AC(R)JP,B22-2AP(R)JP,B22-2AC(R)AS,B22-2AP(R)AS
2,65,,"CONTROL VALVE(BOOM & BUCKET MU",B22-2AC(R)JP,B22-2AP(R)JP,B22-2AC(R)AS,B22-2AP(R)AS
2,66,,"CONTROL VALVE(TURNING & BLADE)",B22-2AC(R)JP,B22-2AP(R)JP,B22-2AC(R)AS,B22-2AP(R)AS
2,67,,"CONTROL VALVE(P PORT)(AS)",B22-2AC(R)JP,B22-2AP(R)JP,B22-2AC(R)AS,B22-2AP(R)AS
2,68,,"CONTROL VALVE(TRAVEL)",B22-2AC(R)JP,B22-2AP(R)JP,B22-2AC(R)AS,B22-2AP(R)AS
2,69,,"CONTROL VALVE(ARM & SWING)(AS)",B22-2AC(R)JP,B22-2AP(R)JP,B22-2AC(R)AS,B22-2AP(R)AS
2,70,,"CONTROL VALVE(BOOM&BACKET)(AS)",B22-2AC(R)JP,B22-2AP(R)JP,B22-2AC(R)AS,B22-2AP(R)AS
2,71,,"CONTROL VALVEL(TURNING&BLADE",B22-2AC(R)JP,B22-2AP(R)JP,B22-2AC(R)AS,B22-2AP(R)AS
2,72,,P.T.O.VALVE,B22-2AC(R)JP,B22-2AP(R)JP,B22-2AC(R)AS,B22-2AP(R)AS
2,73,,"REMOTE CONTROL VALVE(FRONT MUL",B22-2AC(R)JP,B22-2AP(R)JP,B22-2AC(R)AS,B22-2AP(R)AS
2,74,,"REMOTE CONTROL VALVE(RIGHT)(AS",B22-2AC(R)JP,B22-2AP(R)JP,B22-2AC(R)AS,B22-2AP(R)AS
2,75,,"REMOTE CONTROL VALVE(LEFT)(AS)",B22-2AC(R)JP,B22-2AP(R)JP,B22-2AC(R)AS,B22-2AP(R)AS
2,76,,"ROTARY VALVE(FRONT MULTI)",B22-2AC(R)JP,B22-2AP(R)JP,B22-2AC(R)AS,B22-2AP(R)AS
2,77,,"HYD.OIL TANK",B22-2AC(R)JP,B22-2AP(R)JP,B22-2AC(R)AS,B22-2AP(R)AS
2,78,,"HYD.OIL PIPING(TANK-PUMP-VALVE",B22-2AC(R)JP,B22-2AP(R)JP,B22-2AC(R)AS,B22-2AP(R)AS
2,79,,"HYD.OIL PIPING(VALVE-MOTOR-BOO",B22-2AC(R)JP,B22-2AP(R)JP,B22-2AC(R)AS,B22-2AP(R)AS
2,80,,"HYD.OIL PIPING(VALVE-SWIVEL-SW",B22-2AC(R)JP,B22-2AP(R)JP,B22-2AC(R)AS,B22-2AP(R)AS
2,81,,"HYD.OIL PIPING(RETURN)",B22-2AC(R)JP,B22-2AP(R)JP,B22-2AC(R)AS,B22-2AP(R)AS

https://truckmanualshub.com/

2,82,,"HYD.OIL PIPING(RETURN)(FRONT M",B22-2AC(R)JP,B22-2AP(R)JP,B22-2AC(R)AS,B22-2AP(R)AS
2,83,,"HYD.OIL PIPING(P.T.O.VALVE-FRA",B22-2AC(R)JP,B22-2AP(R)JP,B22-2AC(R)AS,B22-2AP(R)AS
2,84,,"HYD.OIL PIPING(P.T.O.VALVE)COF",B22-2AC(R)JP,B22-2AP(R)JP,B22-2AC(R)AS,B22-2AP(R)AS
2,85,,"HYD.OIL PIPING(TRAVEL)",B22-2AC(R)JP,B22-2AP(R)JP,B22-2AC(R)AS,B22-2AP(R)AS
2,86,,"HYD.OIL PIPING(BOOM)",B22-2AC(R)JP,B22-2AP(R)JP,B22-2AC(R)AS,B22-2AP(R)AS
2,87,,"HYD.OIL PIPING(P.T.O.ARM END)",B22-2AC(R)JP,B22-2AP(R)JP,B22-2AC(R)AS,B22-2AP(R)AS
2,88,,"CONTROL PIPING(REMO-CON VALVE-",B22-2AC(R)JP,B22-2AP(R)JP,B22-2AC(R)AS,B22-2AP(R)AS
2,89,,"CONTROL PIPING(CANGE VALVE-CON",B22-2AC(R)JP,B22-2AP(R)JP,B22-2AC(R)AS,B22-2AP(R)AS
2,90,,"CONTROL PIPING(DIRECT)(AS)",B22-2AC(R)JP,B22-2AP(R)JP,B22-2AC(R)AS,B22-2AP(R)AS
2,91,,GREASING,B22-2AC(R)JP,B22-2AP(R)JP,B22-2AC(R)AS,B22-2AP(R)AS
2,92,,"BOOM & ARM",B22-2AC(R)JP,B22-2AP(R)JP,B22-2AC(R)AS,B22-2AP(R)AS
2,93,,BUCKET,B22-2AC(R)JP,B22-2AP(R)JP,B22-2AC(R)AS,B22-2AP(R)AS
2,94,,BUCKET(ATTACHMENT),B22-2AC(R)JP,B22-2AP(R)JP,B22-2AC(R)AS,B22-2AP(R)AS
2,95,,"BUCKET S-TYPE(ATTACHMENT)",B22-2AC(R)JP,B22-2AP(R)JP,B22-2AC(R)AS,B22-2AP(R)AS
2,96,,BLADE(850),B22-2AC(R)JP,B22-2AP(R)JP,B22-2AC(R)AS,B22-2AP(R)AS
2,97,,BLADE(1150)(ATTACHMENT),B22-2AC(R)JP,B22-2AP(R)JP,B22-2AC(R)AS,B22-2AP(R)AS
2,98,,"D-PATTERN LINK(OPTIONAL)",B22-2AC(R)JP,B22-2AP(R)JP,B22-2AC(R)AS,B22-2AP(R)AS
2,99,,"SAFETY LABEL",B22-2AC(R)JP,B22-2AP(R)JP,B22-2AC(R)AS,B22-2AP(R)AS
2,100,,"P.T.O. KIT",B22-2AC(R)JP,B22-2AP(R)JP,B22-2AC(R)AS,B22-2AP(R)AS