https://truckmanualshub.com/

102BE-OM2009-00

Operation Manual

MC285CB-3

Mini-Crawler Crane

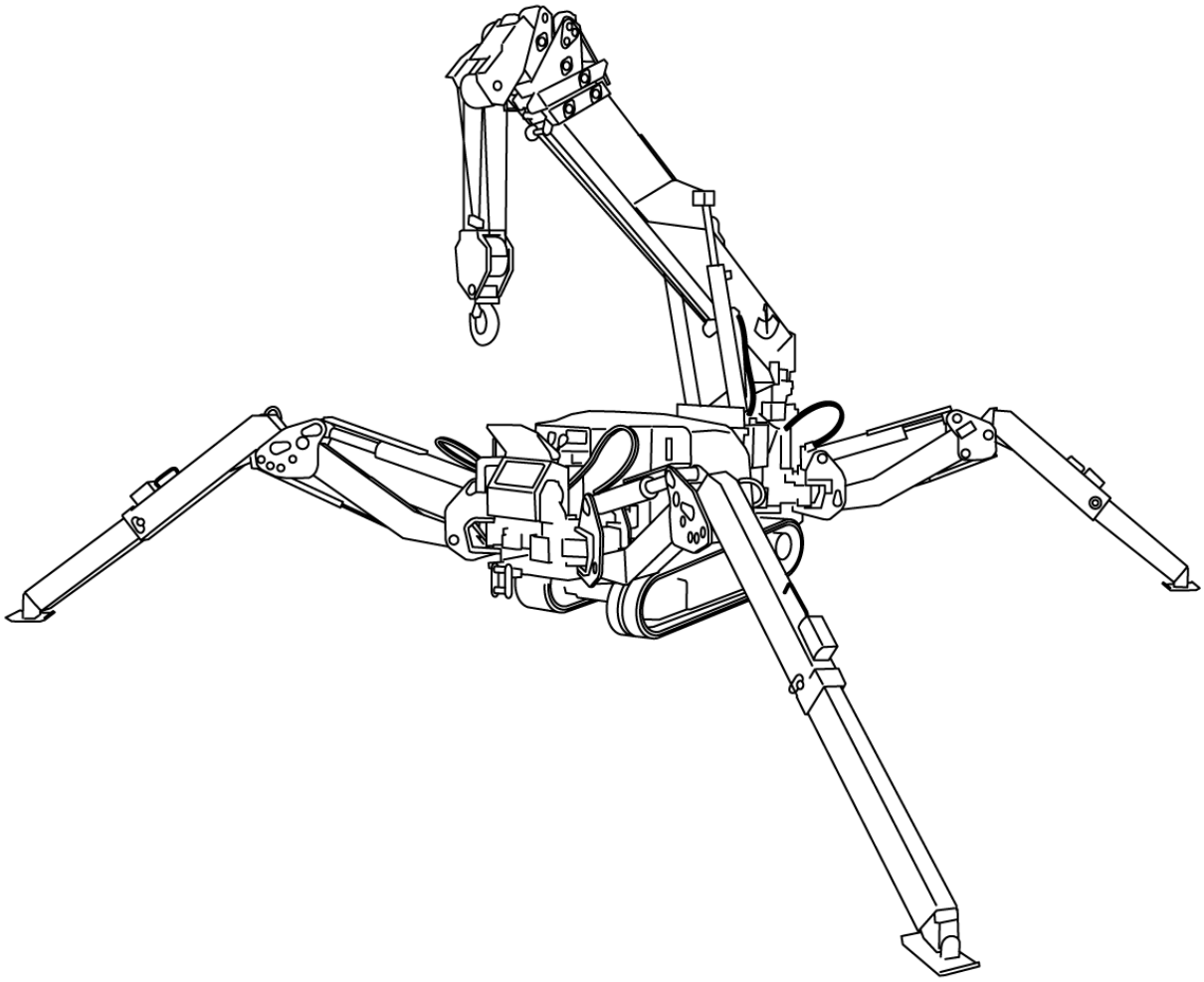

https://truckmanualshub.com/

⚠ WARNING

Improper use of this machine can lead to serious injury.
The operators and maintenance personnel must carefully read this manual and sufficiently understand its contents before operation / inspecting / maintaining the machine.
Keep this manual at hand to read it over anytime.

https://truckmanualshub.com/

Table of Contents

Section 1 INTRODUCTION

INTRODUCTION 1-2

Section 2 SAFETY

SAFETY DEFINITIONS 2-2

SAFETY PRECAUTIONS 2-2

SAFETY LABEL LOCATIONS 2-9

- Machine Body 2-9
- Searcher Hook (Option) 2-21

Section 3 SPECIFICATIONS, TERMINOLOGY AND CAPACITY CHARTS

MACHINE FEATURES 3-2

- Main Features 3-2
  - Travelling Dolly 3-2
  - Crane 3-2
  - Safety Devices 3-2

CRANE TERMINOLOGY 3-3

- Terms and Definitions 3-3

PRINCIPLE SPECIFICATIONS LIST 3-4

- Machine Specifications 3-4
- Radio Remote Control System Specifications 3-6
- Searcher Hook Specifications 3-7

DIMENSIONAL DRAWINGS 3-8

- Machine Dimensional Drawing 3-8
- Searcher Hook Dimensional Drawing 3-8
- Outrigger Width Dimensional Drawing 3-9

RATED TOTAL LOAD CHARTS 3-10

- Programmable Moment Limiter 3-10
  - Reading the Angle Indicator 3-10
- Boom Length 3-11
- Rated Total Load Chart for Standard Specification 3-13
- Rated Total Load Chart–4 Falls 3-13
- Rated Total Load Chart–2 Falls 3-14
- Rated Total Load Chart–Single Fall 3-14
- Rated Total Load Chart for Searcher Hook 3-15
- Rated Total Load Chart for Searcher Hook-SH1 3-16

https://truckmanualshub.com/

Rated Total Load Chart for Searcher Hook-SH2 3-17
Rated Total Load Chart for Searcher Hook-SH3 3-18
WORKING RADIUS/LIFTING HEIGHT 3-19
Standard 3-19
Working Radius/Lifting Height for Searcher Hook 3-21

Section 4 OPERATION

MACHINE COMPONENTS 4-2
BATTERY COMPONENTS 4-4
TRAVEL CONTROLS 4-6
Control Location 4-6
Switches 4-7
Motor Speed Adjuster Dial 4-7
L. H. Travel Lever/Locking lever 4-7
R. H. Travel Lever/Locking lever 4-7
Starter Switch 4-7
Emergency Stop Switch (EMO) 4-8
Horn Switch 4-8
Working Light Switch 4-8
CRANE AND BOOM CONTROLS 4-9
Control Location 4-9
Controls 4-10
Slewing Lever 4-10
Boom Telescoping Lever 4-10
Winch Lever 4-10
Boom Lift Lever 4-10
Emergency Stop Switch (EMO) 4-10
Horn Switch 4-10
MONITOR 4-11
Starting Screen 4-11
Home Screen 4-12
User Mode 4-17
Warning Display 4-22
COLD WEATHER OPERATION 4-25
STARTING 4-26
Starting the Machine 4-26
WARM-UP 4-27
STOPPING 4-28
Normal Stopping 4-28
Emergency Stopping 4-28
TRAVELLING POSITION 4-29
TRAVELLING CONTROLS AND OPERATION 4-29
Directional Controls 4-31

https://truckmanualshub.com/

PARKING 4-33
OUTRIGGER SAFETY DEVICES 4-35
Safety Device Activation Warnings 4-35
OUTRIGGER COMPONENTS 4-37
OUTRIGGER INDICATORS 4-38
Outrigger Mode 4-41
OUTRIGGER SETTING 4-43
Support Plates 4-43
Setting Outriggers (Normal Outrigger State) 4-44
Setting Outriggers (Multi Outrigger State) 4-47
OUTRIGGER SETTING MODES 4-48
"MAX" Outrigger Position 4-48
"Other than MAX" Outrigger Position 4-49
Crane Operation Prohibited Zones Due to Outrigger Rotary Angle 4-50
Working Areas Based On Outrigger Posture 4-51
OUTRIGGER STOWING 4-53
Procedures after Starting the Machine 4-53
Procedures When Stopping the Machine 4-54
Operation in Emergencies 4-55
CRANE SAFETY DEVICES 4-56
Interlock Characteristics 4-57
Crane Operations 4-58
Crane Stowing Operations 4-58
CRANE OPERATION 4-59
Before Crane Operation 4-61
Crane Operation Position 4-62
Motor Speed Operation 4-62
Travelling operation unit (only when travelling) 4-62
Monitor (Only During Crane/Outrigger Operation) 4-63
Radio Remote Control (Only When Operating under Radio Remote Control) 4-63
Hook Raising / Lowering Operation 4-63
Hook Raising / Lowering Procedure 4-64
Boom Lifting Operation 4-65
Safety Precautions 4-65
Boom Lifting / Lowering Procedure 4-65
Boom Telescoping Operation 4-65
Safety Precautions 4-65
Boom Telescoping Procedure 4-66
Slewing Operation 4-66
Safety Precautions 4-66
Slewing Procedure 4-67
Crane Stowing Operation 4-67
Safety Precautions 4-67
Stowing Procedure 4-68

https://truckmanualshub.com/

MOMENT LIMITER (OVERLOAD DETECTOR) 4-69
Moment Limiter Features 4-69
Programmable Moment Limiter 4-70
Moment Limiter Operation 4-71
Prohibited Actions after Auto-Stop 4-74
Recovery Operation after Auto-Stop 4-74
Moment Limiter Display 4-76
Over Winding Detector 4-80
Moment Limiter Working Envelope Setting 4-81
Setting or Cancelling the Upper Limit Value of Lifting Height 4-81
Setting or Cancelling the Boom Angle Upper Limit Value/Lower Limit Value 4-82
Setting or Cancelling the Upper Limit Value of the Working Radius 4-82
Setting/Resetting Slewing Angle Limits 4-83
Moment Limiter Override Switch 4-83
BATTERY HANDLING 4-84
Action When the Battery Is Drained 4-86
Battery Charging 4-87
Monitor Display When Charging 4-87
User Mode Switch 4-87
Rotary Lamp ON/OFF Selection 4-87
Charging Method 4-88
RADIO REMOTE CONTROL SYSTEM INTRODUCTION 4-89
General 4-89
Operation Precautions 4-92
RADIO REMOTE CONTROL SYSTEM FEATURES 4-94
Transmitter 4-94
Receiver 4-94
Transmitter Accessories 4-94
Functions of Radio Remote Control System 4-94
RADIO REMOTE CONTROL SYSTEM COMPONENTS 4-95
Transmitter Components 4-95
Transmitter Display Components 4-98
Status Indications of Display 4-101
Receiver Components 4-102
RADIO REMOTE CONTROL SYSTEM VERIFICATIONS 4-104
Before Turning On Transmitter 4-104
After Turning On Transmitter 4-104
After Starting Machine 4-104
RADIO REMOTE CONTROL SYSTEM OPERATION 4-107
Powering ON 4-108
Starting/Stopping the Machine 4-108
Starting the Machine 4-108
Stopping the Machine 4-108
Operation after Machine Is Started 4-108
Operation before Work 4-108
Switching Operation Mode 4-108

https://truckmanualshub.com/

Outrigger Operation 4-109
Outrigger Setting 4-110
Outrigger Stowage 4-111
Crane Operation 4-112
Hook Raising/Lowering Operation 4-112
Boom Lifting/Lowering Operation 4-113
Boom Telescoping Operation 4-113
Slewing Operation 4-114
Micro Speed Mode Switch Operation 4-114
Emergency Stop Switch (EMO) Operation 4-114
Horn Switch Operation 4-115
Boom Lift Bypass Switch Operations 4-115
LED Light Operations 4-116
AFTER CRANE OPERATION 4-116
Crane Stowing Operation 4-116
Stopping Operation by Radio Remote Control System 4-116
Inspection after Ending Remote Control System Operation 4-117
HANDLING TRANSMITTER BATTERY 4-117
Replacement Timing of Battery 4-117
Replacement Method of Battery 4-117
Charging Method of Battery 4-118
SEARCHER HOOK SAFETY PRECAUTIONS 4-120
Moment Limiter Settings 4-120
Searcher hook position settings 4-120
SEARCHER HOOK COMPONENTS (OPTION) 4-121
SEARCHER HOOK MONITOR 4-122
Home Screen 4-122
User Mode 4-123
SEARCHER HOOK OPERATION 4-124
TRAILERING 4-127
Ramp Planks 4-128
Loading / Unloading Procedure 4-128
HOISTING 4-129
Recommended Hoisting Attachments 4-129
Hoisting Procedure 4-129

Section 5 MAINTENANCE AND INSPECTION

GENERAL MAINTENANCE INFORMATION AND PRECAUTIONS 5-2
MACHINE BREAK-IN 5-5
LEGAL INSPECTION 5-6
CONSUMABLES 5-6
LUBRICATING OIL 5-7

https://truckmanualshub.com/

SPECIAL TOOLS AND STANDARD TIGHTENING TORQUE 5-8
Accessory Tools 5-8
Standard Tightening Torque List 5-8
Bolt and Nut Tightening Torque 5-8
Hose Connector Tightening Torque 5-10
MACHINERY COVER 5-11
Removing Machinery Cover 5-11
Installing Machinery Cover 5-11
FUSES 5-12
INSPECTION 5-13
Pre-Start and Post-Start Inspection Items 5-13
Pre-Start Visible Checks 5-14
Pre-Start Inspection 5-16
Post-Start Inspection 5-18
PERIODIC MAINTENANCE 5-24
Periodic Maintenance Schedule 5-24
Periodic Maintenance Procedures 5-25
GENERAL MACHINE MAINTENANCE 5-35
Rubber Tracks 5-35
Wire Rope 5-41
Wire Rope - Boom Telescope Extension 5-46
Air Breather Inspection 5-49
Drain Water and Sediment Inside Hydraulic Oil Tank 5-51
STORAGE 5-52
Temporary Storage 5-52
Long-Term Storage 5-52
Before Storage 5-52
During Storage 5-52
After Storage 5-52
COLD TEMPERATURE PREPARATION 5-53
Oil 5-53
Battery 5-53
After Daily Operation 5-53
SEARCHER HOOK INSPECTION AND MAINTENANCE 5-54
Legal Inspection 5-54
Consumables 5-54
Inspection and Maintenance List 5-55
Pre-Start and Post-Start Inspection Items 5-55
Pre-Start – Before Starting Machine 5-56
E-Boom, Frame and Hook 5-56
Greasing 5-56
Searcher Hook Fix Bolts 5-56
Position Pin and Lynch Pin 5-56
Pre-Start – After Starting Machine 5-57
Moment Limiter for Operation (Searcher Hook Mode) 5-57

https://truckmanualshub.com/

TROUBLESHOOTING..... 5-58
Machine Body 5-58
Electrical Components 5-59
Battery 5-59
Electric Motor 5-60
Radio Remote Control System 5-61
Error Codes 5-62
Slewing Position Calibration 5-63

https://truckmanualshub.com/

This Page Intentionally Left Blank

https://truckmanualshub.com/

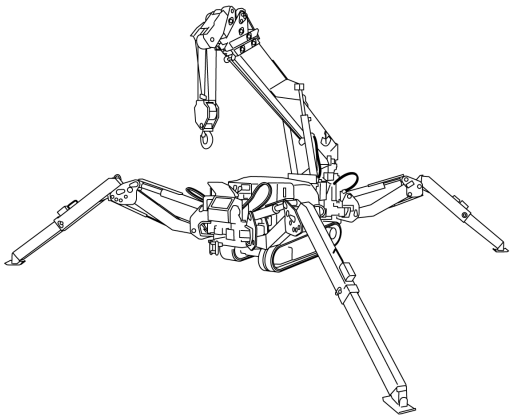

Section 1

INTRODUCTION

https://truckmanualshub.com/

INTRODUCTION

Thank you for purchasing the Maeda Mini Crawler Crane model MC285CB-3.
This manual is intended as a guide for the safe and effective use of this machine. This manual describes the procedures for proper operation and maintenance of the machine.
This manual is available in other languages. If a different language manual is necessary, contact your local Maeda distributor for availability.
Save this manual in a designated safe place for future reference. Should this manual be lost or damaged, contact Maeda or a Maeda sales service agency immediately to order a new manual. This manual should remain with this machine upon transfer of the machine to a new owner.
This manual contains information that was available at the time of print.
The contents of this manual, including maintenance specifications, tightening torques, pressure, measuring methods, adjustment values and illustrations, are subject to change upon refinement of the machine, without notice.
Machine maintenance procedures may be updated by Maeda at any time. Always obtain the latest information from Maeda or a Maeda sales service agency before performing maintenance on this machine.
Installation and operation of this machine must comply with all laws and regulations where operated.
Only personnel who have obtained a licence stipulated by the laws and regulations from the place of use are qualified to operate this machine, establish the power connection of the power supply equipment, and inspect and repair the electric system.

Disclaimers:
All information, illustrations and specifications in this manual are based on the latest information available at the time of publishing. The illustrations used in this manual are intended as representative reference views only. Moreover, because of our continuous product improvement policy, we may modify information, illustrations and/or specifications to explain and/or exemplify a product, service or maintenance improvement. We reserve the right to make any change at any time without notice.
Maeda is a registered trademark of Maeda Seisakusho Co., Ltd. in Japan, the United States and/or other countries.

All Rights Reserved:
No part of this publication may be reproduced or used in any form by any means - graphic, electronic or mechanical, including photocopying, recording, taping, or information storage and retrieval systems - without the written permission of Maeda Seisakusho Co., Ltd.
© 2020 Maeda Seisakusho Co., Ltd.
9/2020

https://truckmanualshub.com/

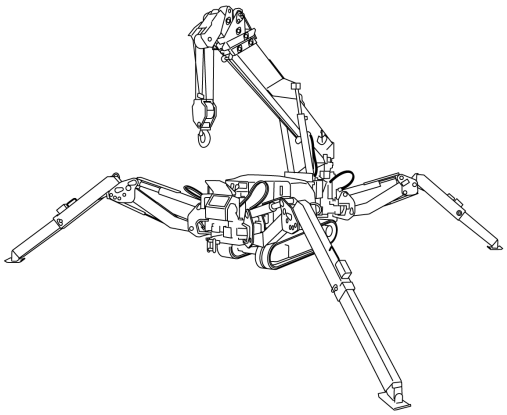

Section 2

SAFETY

https://truckmanualshub.com/

SAFETY DEFINITIONS

Maeda is concerned for your safety and the condition of your mini-crawler crane. Safety statements are one of the primary ways to call your attention to the potential hazards associated with Maeda mini-crawler cranes. Follow the precautions listed throughout the manual before operation, during operation and during periodic maintenance procedures for your safety, the safety of others and to protect the performance of your mini-crawler crane. Keep the labels from becoming dirty or torn and replace them if they are lost or damaged. Also, if a part needs to be replaced that has a label attached to it, make sure to order the new part and label at the same time.

This safety alert symbol appears with most safety statements. It means attention, become alert, your safety is involved! Please read and abide by the message that follows the safety alert symbol.

DANGER

Indicates a hazardous situation which, if not avoided, will result in death or serious injury.

WARNING

Indicates a hazardous situation which, if not avoided, could result in death or serious injury.

CAUTION

Indicates a hazardous situation which, if not avoided, could result in minor or moderate injury.

NOTICE

Indicates a situation which can cause damage to the mini-crawler crane, personal property and/or the environment, or cause the equipment to operate improperly.

SAFETY PRECAUTIONS

There is no substitute for common sense and careful practices. Improper practices or carelessness can cause burns, cuts, mutilation, asphyxiation, other bodily injury or death. This information contains general safety precautions and guidelines that must be followed to reduce risk to personal safety. Special safety precautions are listed in specific procedures. Read and understand all of the safety precautions before operating or performing repairs or maintenance. This safety section cannot cover every situation that may occur that is incidental to the use of the machine. Use common sense if you encounter a situation that is not covered to help avoid a hazardous situation.

CAUTION

The safety messages that follow have CAUTION level hazards.

Pre-Operation Hazard

- Never permit anyone to install or operate the machine without proper training.

- Read and understand this *Operation Manual* before operating or servicing the crane to ensure that safe operating practices and maintenance procedures are followed.
- Safety signs and labels are additional reminders for safe operating and maintenance techniques.
- Contact us or our sales service agency for additional training.
- Make sure you are aware of licences, laws and regulations that may be required or in effect where the machine is operated.

https://truckmanualshub.com/

⚠ DANGER

The safety messages that follow have DANGER level hazards.

Electrocution Hazard

Contact with, or proximity to, an electrically charged power line will result in death or serious injury:

- This unit will not provide protection from contact with, or proximity to, an electrically charged power line when the components at the boom tip are in contact with, or in proximity to, another power line, ground or pole.
- All metal and fiberglass components at the boom tip may become energised.
- Operators must follow safe electrical work practices in accordance with their employers' work rules and applicable government regulations including:
  - Maintain minimum approach distances from electrical power lines.
  - Allow for boom, electric line and load sway.
- If any part of the unit is elevated within the minimum approach distance of an energised conductor, all unauthorised personnel must KEEP CLEAR.
- There is a risk of electric shock if the battery unit is handled incorrectly.

⚠ WARNING

The safety messages that follow have WARNING level hazards.

Tip / Boom Failure Hazard

Overloading the crane may cause it to tip over or the boom to fail:

- Before you try to hoist a load, it is essential that you know:
  - Boom angle (use boom angle indicator)
  - Working radius (use operating range chart)
  - Boom length (use rated total load chart)
  - Rated total load (use rated total load chart)
- Never try to hoist a load that exceeds the rated total load. Rated total load is the mass of the load plus weight of the winch lines and the weight of the hook block.
- Always calculate the total load using the rated total load chart before you attempt to hoist the load. Never rely on the moment limiter as the primary means to determine whether a load is safe to lift.
- All the values provided on the rated total load chart assume that the machine is located on a level and firm surface. Always use outrigger pads when you deploy the outriggers on soft or unpaved surfaces.
- The values shown in the operating range chart do not account for boom deflection when the load is raised. Boom deflection will widen the working radius. Use the next largest radius on the operating range chart to account for this.
- Always extend outriggers before lifting load. If the terrain is not completely level and you must adjust the outrigger position to compensate, you must derate the rated total load by the amount indicated for outriggers other than maximum in "RATED TOTAL LOAD CHARTS" on page 3-13. All outrigger monitor lights, other than the Boom Stowing Light, must be on.
- Always look at the level gauge when setting the outriggers. Look at the level gauge when making adjustments during operation. Always keep the machine body level when operating.
- Sudden or jerky movement of the travel, crane or outrigger controls can cause the machine to tip over. Always operate these controls smoothly.

https://truckmanualshub.com/

⚠ WARNING

The safety messages that follow have WARNING level hazards.

Crush Hazard

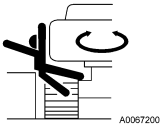

- Keep bystanders away from work area before and during operation.

- Keep all body parts clear of machine components during operation, especially between the boom/post and the boom cylinder, the winch drum and the winch line, the sheaves and the winch line, and between the tracks and the ground.
- Never commence work unless you have clear view of the jobsite or you have a helper to guide you.
- Always lower the load fully to the ground before you leave the operator's position.

Rigging Hazard

- Pay attention to the distance between the hook block and the boom when you raise the hook block or when you extend the boom (as the boom extends, the hook block automatically raises). If the hook block strikes the boom, it could cause the load to fall.
- Never overload the winch line.
- When you are lowering the hook block, make sure there are more than three turns of winch line left on the winch drum when the hook block reaches the final working height.
- Before you hoist the load, make sure the hook block is securely attached to the winch line.
- Make sure the winch line is perpendicular to the ground as you hoist a load to avoid tipping the machine over.
- When you are hoisting a load off the ground, stop hoisting the load momentarily as the load clears the ground to make sure the load is stable.
- Never hoist more than one load at a time.
- When you hoist a long load, such as pipes, clamp the load vertically or secure it at both ends.

Slewing Hazard

- Never slew a load over anyone.
- Always slew the load as smoothly and slowly as possible. Any sudden movement could cause the load to sway and the machine to tip over.
- Keep away from other cranes working in the area to avoid accidental contact.
- Never slew the load over the operator.

Wind Speed Hazard

- If the maximum instantaneous wind speed is 19 to 24 mph (8.5 to 10.7 m/s) or greater, abort the job you are performing and immediately lower the load and secure the boom. This wind speed is called a "fresh wind" on the Beaufort Scale. At that speed, small trees in leaf sway slightly and wavelets form on ponds and lakes.
- Even if the maximum instantaneous wind speed is below 19 to 24 mph (8.5 to 10.7 m/s), be aware that loads with more mass, loads that are hoisted high off the ground and booms that are extended all magnify the effect of the wind on the machine. Stay aware of changing weather conditions.
- If a load is hoisted that has a large surface area, such as a metal plate, the wind can cause the load to sway and subsequently cause the machine to tip over.

High Hydraulic Oil temperature

If the hydraulic oil temperature exceeds 90°C, the electric motor will stop.
If hydraulic oil temperature exceeds 90°C hydraulic hoses and seals can be damaged and leak. The leaking hydraulic oil can cause burns.
Continuous hook raising and lowering at high speeds and high lifting heights can cause the hydraulic oil to heat up faster.
If hydraulic oil temperature exceeds 90°C stop crane operation and allow the hydraulic oil to cool.

https://truckmanualshub.com/

⚠ WARNING

The safety messages that follow have WARNING level hazards.

Communications Hazard

- Always work with a partner that is on the ground. The partner must keep aware of any hazards in the work area and communicate them to the machine operator.
- Both the machine operator and the partner must decide before work begins on the hand signals that they will use during the job.
- If hand signals are not used, proper radio communications must be set up and tested before the job begins.

Fall Hazard

- Never carry riders on the machine.
- Always use the hand grabs and slip-resistant surfaces when entering or exiting the machine.
- Always maintain three-point contact when entering or exiting the machine.
- Never jump off the machine.

Modification Hazard

Never modify the machine without written consent of the manufacturer. Any modification can affect the safe operation of the machine.

Exposure Hazard

Always wear personal protective equipment, including appropriate clothing, gloves, work shoes, and eye and hearing protection, as required by the task at hand.

Explosion Hazard

- While the battery is charging, hydrogen gas is being produced and can be easily ignited. Keep the area around the battery well-ventilated and keep sparks, open flame and any other form of ignition out of the area.
- Always disconnect the negative (-) battery cable before servicing the equipment.

Fire Hazard

- Have appropriate safety equipment available. Have all fire extinguishers checked periodically for proper operation and/or readiness.
- Always read and follow safety-related precautions found on containers of hazardous substances like parts cleaners, primers, sealants and sealant removers.
- Undersized wiring systems can cause an electrical fire.

https://truckmanualshub.com/

⚠ WARNING

The safety messages that follow have WARNING level hazards.

Asbestos Dust Hazard

- Inhalation of air containing asbestos dust may result in lung cancer.
- Make sure you use the appropriate personal protection equipment if you suspect that the worksite may contain asbestos.
- Properly prepare the worksite to prevent asbestos dust from being released into the surrounding environment.

Entanglement / Sever Hazard

- Verify there are no people, obstacles or other equipment near the machine before starting the machine. Sound the horn as a warning before starting the machine.

- Always stop the machine before beginning service.
- If the machine must be serviced while it is operating, remove all jewelry, tie back long hair and keep hands, other body parts and clothing away from moving/rotating parts.
- Verify that all machine guards and covers are attached properly to the machine before starting the machine. Do not start the machine if any guards or covers are not properly installed on the machine.
- Always turn the Starter Switch to the OFF position after operation is complete and remove the key from the switch. Keep the key in your possession when the machine is not operating.
- Attach a “Do Not Operate” tag near the Key Switch while performing maintenance on the equipment.
- Never operate the machine while wearing a headset to listen to music or radio because it will be difficult to hear the warning signals.

Alcohol and Drug Hazard

Never operate the machine while under the influence of alcohol or drugs, or when ill.

Piercing Hazard

- Avoid skin contact with high-pressure hydraulic fluid caused by a hydraulic leak such as a broken hydraulic hose line. High-pressure hydraulic fluid can penetrate your skin and result in serious injury. If you are exposed to high-pressure hydraulic fluid obtain prompt medical treatment.
- Never check for a hydraulic fluid or fuel leak with your hands. Always use a piece of wood or cardboard. Have your authorised Maeda dealer or distributor repair the damage.

Flying Object Hazard

Always wear eye protection when cleaning the machine with compressed air. Dust, flying debris, compressed air, pressurised water or steam may injure your eyes.

https://truckmanualshub.com/

⚠ WARNING

The safety messages that follow have WARNING level hazards.

Burn Hazard

- Items such as the motor, motor controller, and oil will be hot immediately after shutting down the machine.
  There is a risk of burn injuries if maintenance is carried out in this state.

- Keep hands and other body parts away.
- Handle hot components with heat-resistant gloves.

Working Under Machine Hazard

- Park the machine on a flat, firm and level surface.
- Fully retract and lower the boom.
- Extend all outriggers to the maximum position so the tracks clear the ground.

- Place jack stands of sufficient strength in strategic locations under the machine to help support it during maintenance.

Working Above Machine Hazard

- Always maintain three-point contact as you climb on or off an elevated work surface.
- Do not jump from the elevated work surface.

- Do not climb on the boom, outrigger or other machine surface.
- Where necessary, wear protective equipment and a safety harness.

⚠ CAUTION

The safety messages that follow have CAUTION level hazards.

Poor Lighting Hazard

Ensure that the work area is adequately illuminated. Always install wire cages on portable safety lights.

Tool Hazard

Always use tools appropriate for the task at hand and use the correct size tool for loosening or tightening machine parts.

Slip Hazard

- Immediately clean up any spilled liquid on the shop floor.
- Clean up accumulated dirt and debris on the shop floor at the end of each shift.

Communications Hazard

- Follow the policies and instructions established by your employer and authorities having jurisdiction. The policies have been developed to protect you and your co-workers from needless personal injury.
- Post signs to alert people that are not authorised to be in the shop that they must stay out of the work area.
- If you must run the machine during maintenance procedures, make sure you have a helper to keep bystanders clear of the machine and make observations of moving parts as requested by the operator.

https://truckmanualshub.com/

NOTICE

The safety messages that follow have NOTICE level hazards.

Any part which is found defective as a result of inspection or any part whose measured value does not satisfy the standard or limit must be replaced.

Always tighten components to the specified torque. Loose parts can cause equipment damage or cause it to operate improperly.

Only use replacement parts specified. Other replacement parts may affect warranty coverage.

Follow the guidelines of the governmental agencies for the proper disposal of hazardous materials such as oil. Consult the local authorities or reclamation facility.

Clean all accumulated dirt and debris away from the body of the machine and its components before you inspect the machine or perform preventive maintenance procedures or repairs. Operating a machine with accumulated dirt and debris will cause premature wear of machine components. Accumulated dirt and debris also hinders effective machine inspection.

Retrieve any tools or parts that may have dropped inside of the machine to avoid improper machine operation.

Never dispose of hazardous materials by dumping them into a sewer, on the ground, or into groundwater or waterways.

If any alert indicator illuminates during machine operation, stop the machine immediately. Determine the cause and repair the problem before continuing to operate the machine. Check the following specifications and items before using this machine:

- Maintenance inspection records for completion of periodic inspections and service
- Crane capacity
- Crane maintenance condition
- Problems or failures unique to the crane
- Operating condition of the brakes, clutch and other operating controls
- Condition and operation of lighting, including rotating lights
- Condition and operation of hook, winches, boom, outriggers and related components

https://truckmanualshub.com/

SAFETY LABEL LOCATIONS

Machine Body

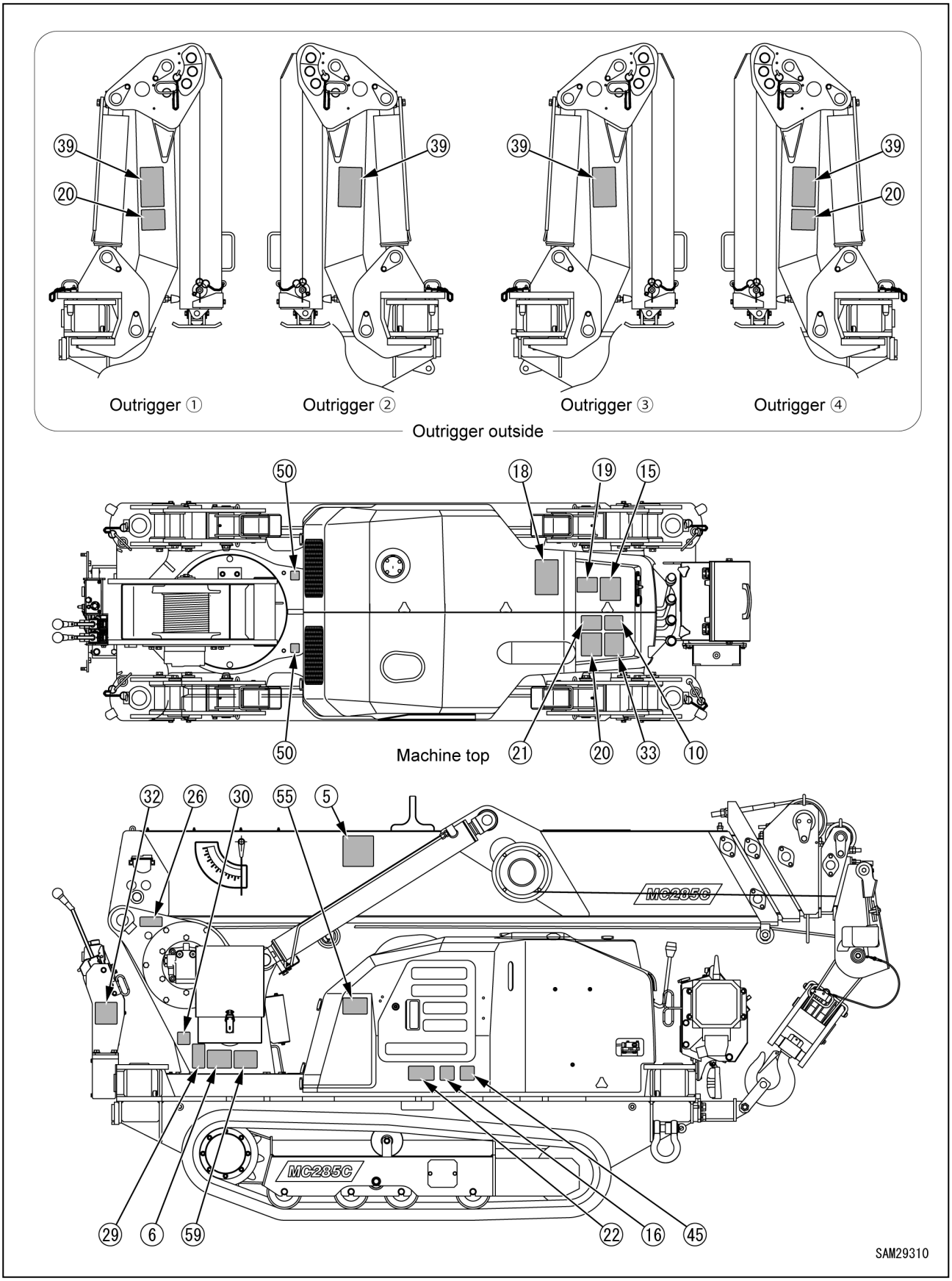

Fig. 2-1

https://truckmanualshub.com/

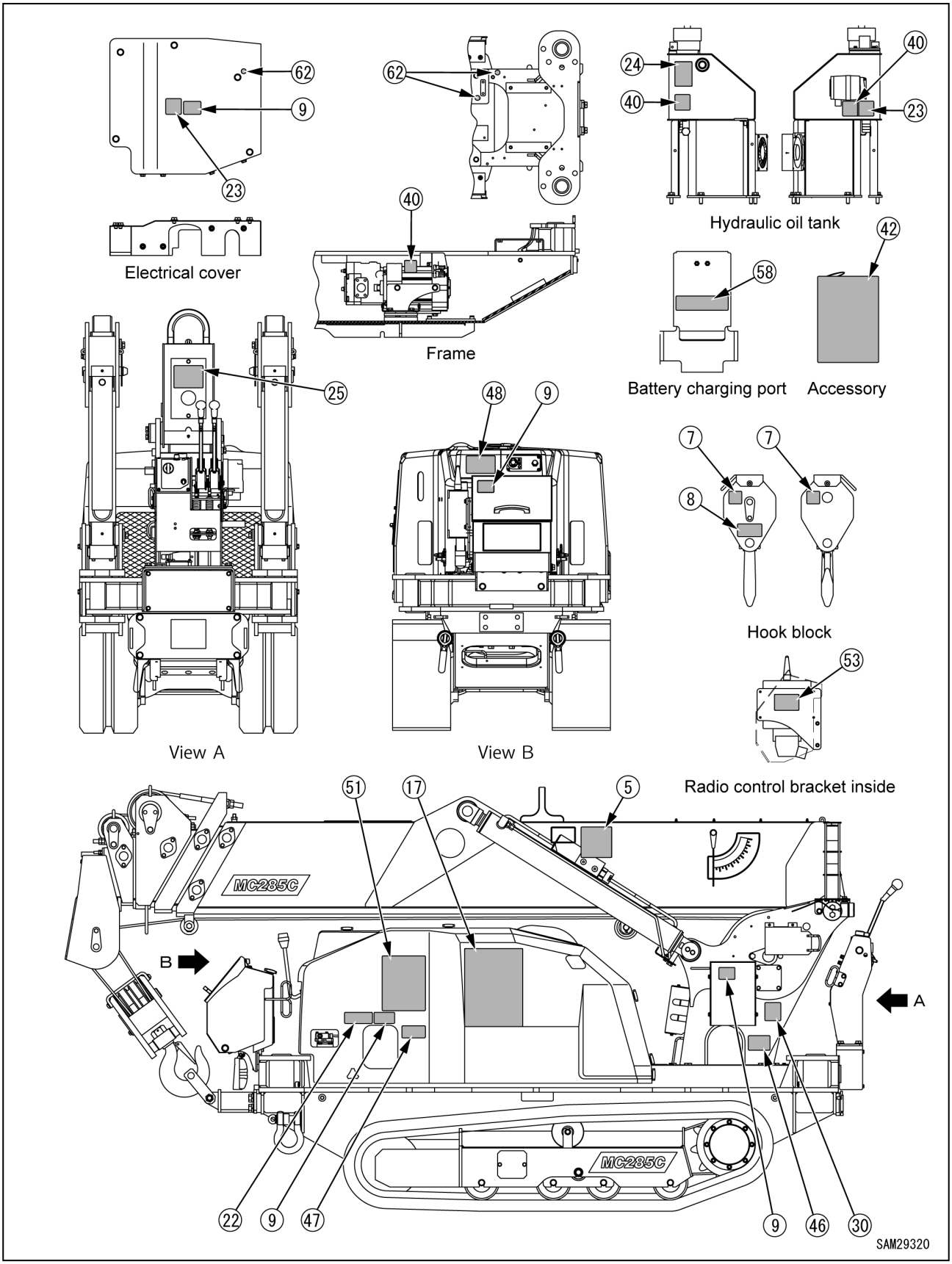

Fig. 2-2

https://truckmanualshub.com/

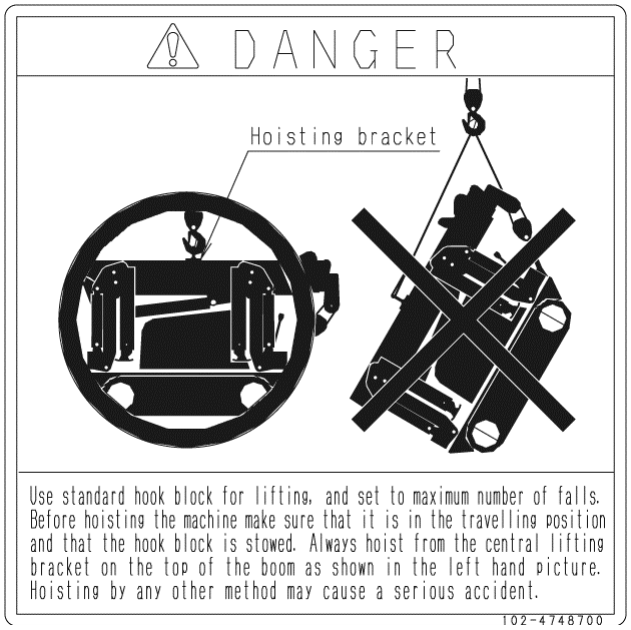

[5] 102-4748700 (2 places)

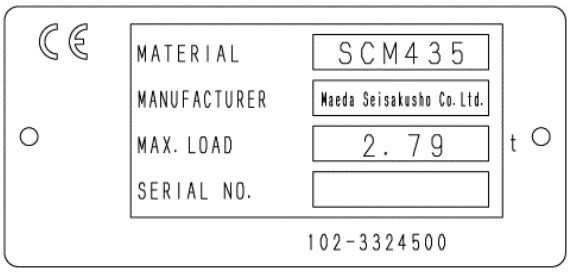

[8] 102-3324500

[9] 350-4539700 (4 places)

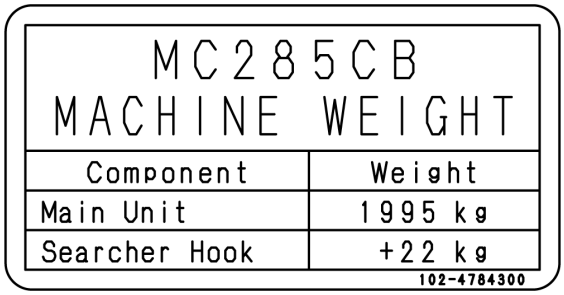

MC285CB
MACHINE WEIGHT

Component	Weight
Main Unit	1995 kg
Searcher Hook	+22 kg

102-4784300

[6] 102-4784300

[7] 553-4267400 (2 places)

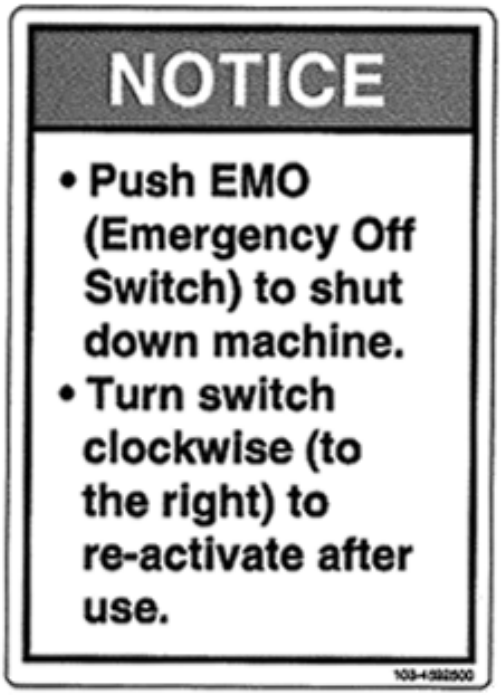

[10] 103-4592500

https://truckmanualshub.com/

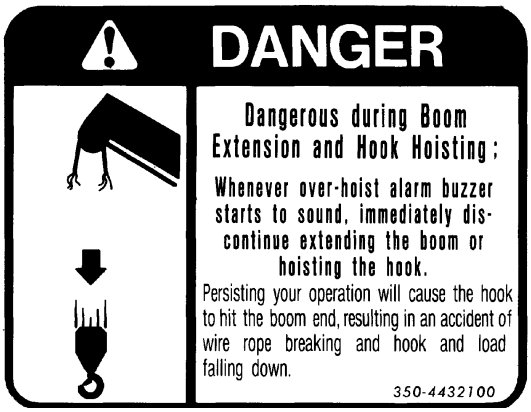

[15] 350-4432100

[16] 553-4268000

MC285CB Working Range Chart

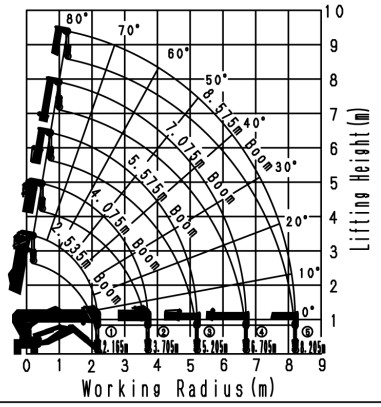

1. This chart does not reflect any bending of boom.
2. Curve③represents the case where one-half of ▙ mark is exposed from 2st stage boom.
3. Curve④represents the case where second of ▙ mark is exposed from 2st stage boom.

WARNING

1. Use a leveling instrument to position your machine horizontally on level and hard ground.
2. Use outriggers extended to the maximum, in principle.
3. For setting insert retainer pins for positioning pins.
4. For traveling, be sure to stow outriggers.

CAUTION

1. For crane work, extend four outriggers so that load is unformly applied and tracks are lifted off the ground by about 80mm.
2. Do not perform crane work with tracks grounded, because it may cause damage to undercarriage. Do not lift your machine excessively for increasing the lifting height over the ground level, which will cause the stability to be reduced. Work within the specified values.

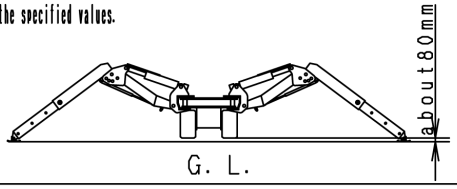

MC285CB Rated Total Load Chart

Rated Total Load Chart with outrigger extended to maximum								Rated Total Load Chart with outrigger extended to other than maximum							
2.535m/4.075mBoom		5.575mBoom		7.075mBoom		8.575mBoom		2.535m/4.075mBoom		5.575mBoom		7.075mBoom		8.575mBoom	
Working Radius (m)	Rate Total Load (t)	Working Radius (m)	Rate Total Load (t)	Working Radius (m)	Rate Total Load (t)	Working Radius (m)	Rate Total Load (t)	Working Radius (m)	Rate Total Load (t)	Working Radius (m)	Rate Total Load (t)	Working Radius (m)	Rate Total Load (t)	Working Radius (m)	Rate Total Load (t)
1.4orless	2.82	3.0orless	1.22	3.6orless	0.82	4.0orless	0.55	1.5orless	1.72	3.0orless	0.51	3.6orless	0.40	4.0orless	0.33
1.5	2.52	3.5	0.97	4.0	0.74	4.5	0.40	2.0	1.07	3.5	0.41	4.0	0.33	4.5	0.28
2.0	1.92	4.0	0.78	4.5	0.58	5.0	0.34	2.5	0.63	4.0	0.33	4.5	0.28	5.0	0.23
2.5	1.57	4.5	0.63	5.0	0.48	5.5	0.30	3.0	0.52	4.5	0.28	5.0	0.23	5.5	0.18
3.0	1.22	5.0	0.53	5.5	0.43	6.0	0.27	3.5	0.39	5.0	0.20	5.5	0.18	6.0	0.16
3.5	0.97	5.205	0.53	6.0	0.38	6.5	0.23	3.705	0.35	5.205	0.20	6.0	0.16	6.5	0.13
3.705	0.92			6.5	0.35	7.0	0.20					6.5	0.13	7.0	0.10
				6.705	0.33	7.5	0.18					6.705	0.12	7.5	0.08
						8.0	0.15							8.0	0.07
						8.205	0.15							8.205	0.06

1. The Rated Total Load Chart is based on actual working radius with the bending of boom attributable to load reflected and is shown with the mass of hook (30kg) included when.
2. If third stage boom is extended to any extent, work should be performed within the capacity for "Boom 5.575m".
3. If one half or more of the mark ▙ is exposed from second boom , work should be performed within the capacity for "Boom 7.075m".
4. If one half or more of the second mark ▙ is exposed from second stage boom, work should be performed within the capacity for "Boom 8.575m".
5. Rough operation of crane is extemely dangerous , Stick to safe operation.

OUTRIGGERS EXTENDED TO MAXIMUM

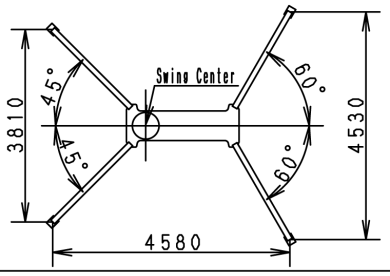

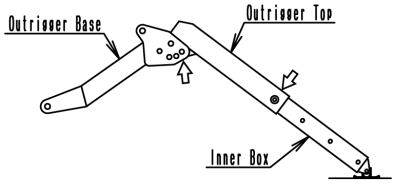

With the inner box pulled out to the position of Maximum Extension, positioning pin for outrigger base is set Maximum Position.

1. If the position of inner box or outrigger base positioning pin is retracted by even one step, your work should be performed in accordance with the value for other than maximum extension.
2. When swinging with a load suspended, stability may very between the front and rear or right and left side of the machine. Perform your work with the working radius reduced to as short as possible and paying attention to a possibility of tipping over.
3. For any crane work, use outriggers to maintain the machine body horizontally.

EU ⊙ 102-2223200

[17] 102-2223200

https://truckmanualshub.com/

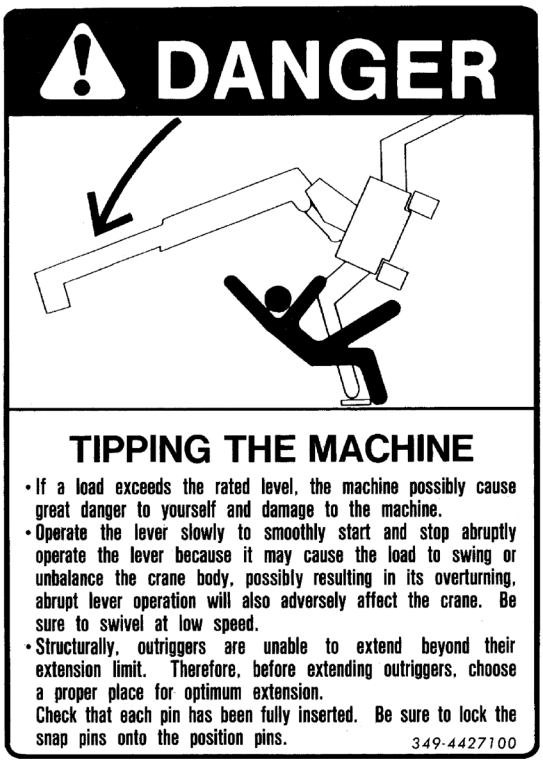

[18] 349-4427100

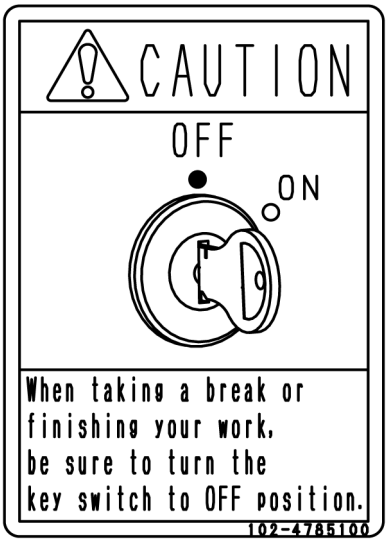

[19] 102-4785100

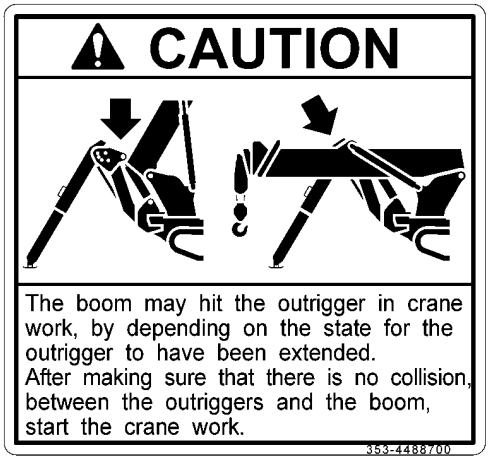

[20] 353-4488700 (3 places)

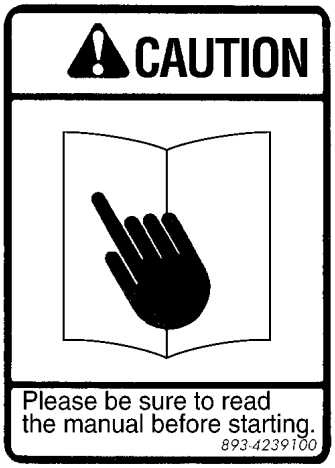

[21] 893-4239100

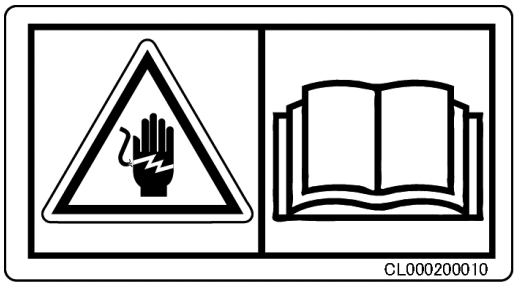

[22] CL000200010 (2 places)

https://truckmanualshub.com/

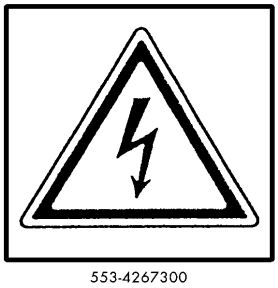

[23] 553-4267300 (2 places)

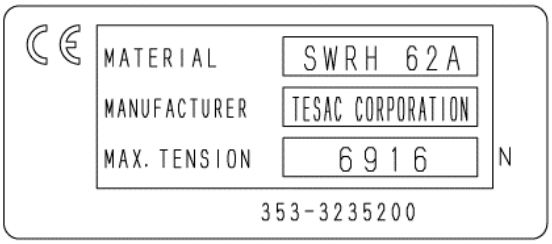

[26] 353-3235200

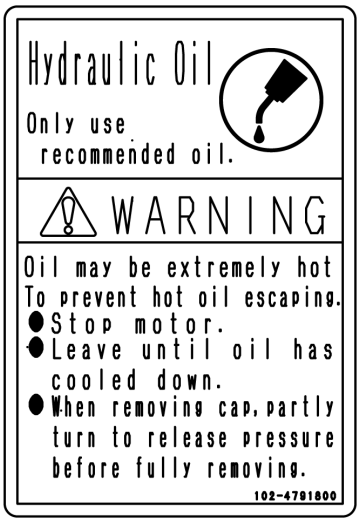

[24] 102-4791800

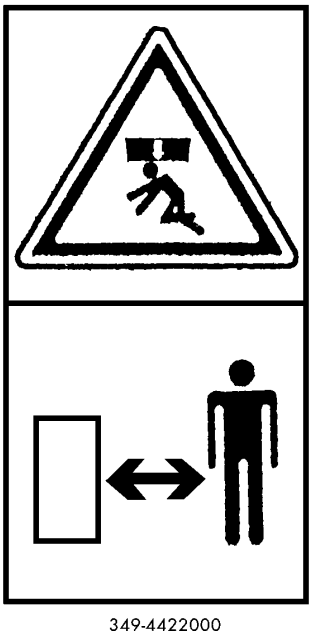

[29] 349-4422000

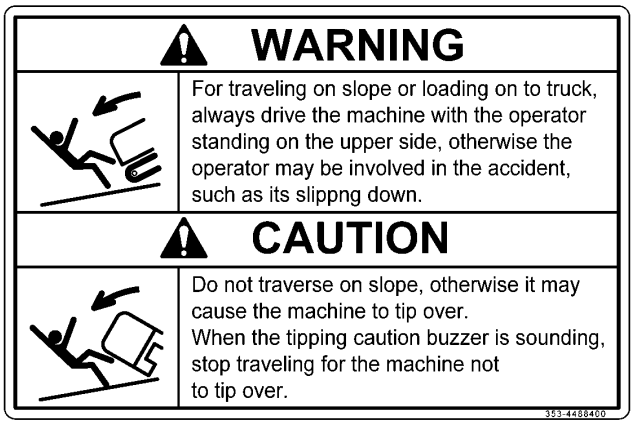

[25] 353-4488400

[30] 553-4267500 (2 places)

https://truckmanualshub.com/

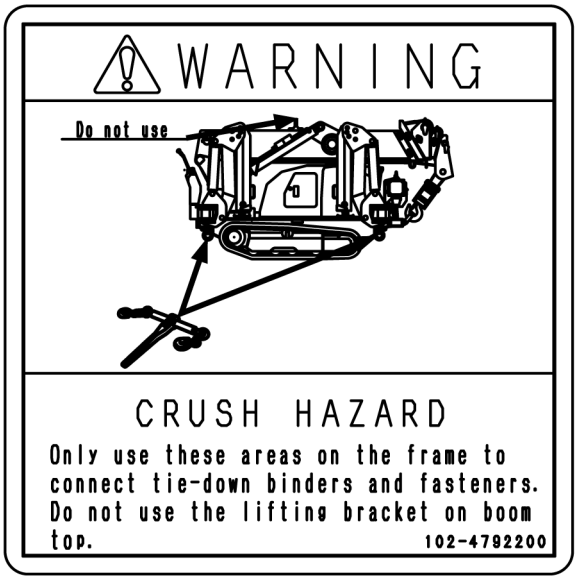

[32] 102-4792200

[39] 101-4593300 (4 places)

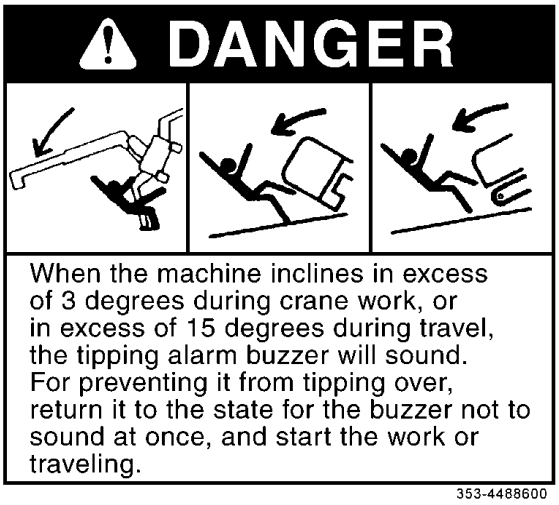

[33] 353-4488600

[40] 553-4267700 (3 places)

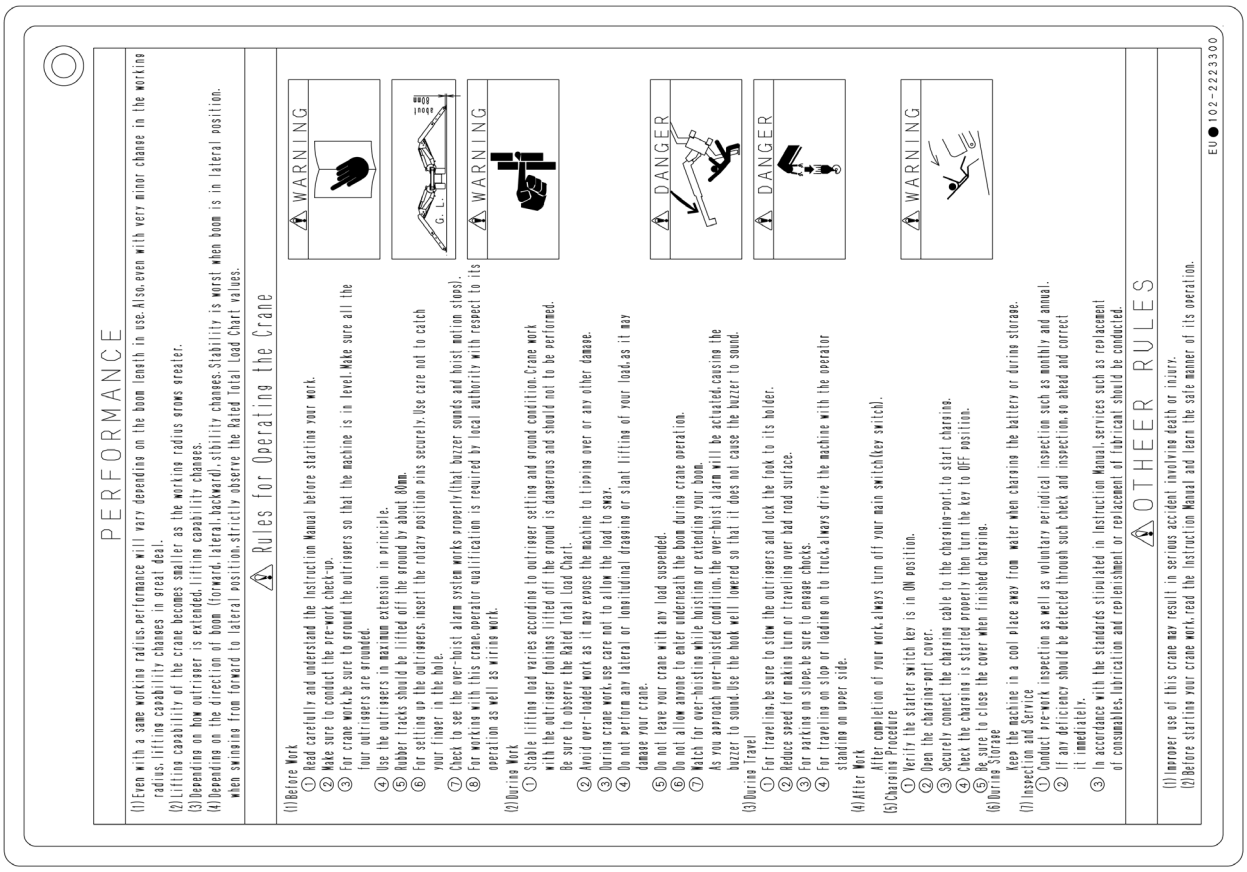

PERFORMANCE

(1) Even with a same working radius, performance will vary depending on the boom length in use. Also, even with very minor change in the working radius, lifting capability changes in great deal.
(2) Lifting capability of the crane becomes smaller as the working radius grows greater.
(3) Depending on how outrigger is extended, lifting capability changes.
(4) Depending on the direction of boom (forward, lateral, backward), stability changes. Stability is worst when boom is in lateral position. when swinging from forward to lateral position, strictly observe the Rated Total Load Chart values.

Rules for Operating the Crane

(1) Before Work
① Read carefully and understand the Instruction Manual before starting your work.
② Make sure to conduct the pre-work check-up.
③ For crane work, be sure to ground the outriggers so that the machine is in level. Make sure all the four outriggers are grounded.
④ Use the outriggers in maximum extension in principle.
⑤ Rubber tracks should be lifted off the ground by about 30mm.
⑥ For setting up the outriggers, insert the rotary position pins securely. Use care not to catch your finger in the hole.
⑦ Check to see the over-hoist alarm system works properly (hat buzzer sounds and hoist motion stops).
⑧ For working with this crane, operator qualification is required by local authority with respect to its operation as well as wiring work.

(2) During Work
① Stable lifting load varies according to outrigger setting and ground condition. Crane work with the outrigger footings lifted off the ground is dangerous and should not be performed. Be sure to observe the Rated Total Load Chart.
② Avoid over-loaded work as it may expose the machine to tipping over or any other damage.
③ During crane work, use care not to allow the load to sway.
④ Do not perform any lateral or longitudinal dragging or slant lifting of your load, as it may damage your crane.
⑤ Do not leave your crane with any load suspended.
⑥ Do not allow anyone to enter underneath the boom during crane operation.
⑦ Watch for over-hoisting while hoisting or extending your boom.
As you approach over-hoisted condition, the over-hoist alarm will be actuated, causing the buzzer to sound. Use the hook well lowered so that it does not cause the buzzer to sound.

(3) During Travel
① For traveling, be sure to slow the outriggers and lock the fork to its holder.
② Reduce speed for making turn or traveling over bad road surface.
③ For parking on slope, be sure to engage chocks.
④ For traveling on slop or loading on to truck, always drive the machine with the operator standing on upper side.

(4) After Work
After completion of your work, always turn off your main switch (key switch).

(5) Charging Procedure
① Verify the starter switch key is in ON position.
② Open the charging-port cover.
③ Securely connect the charging cable to the charging-port, to start charging.
④ Check the charging is started properly then turn the key to OFF position.
⑤ Be sure to close the cover when finished charging.

(6) During Storage
Keep the machine in a cool place away from water when charging the battery or during storage.

(7) Inspection and Service
① Conduct pre-work inspection as well as voluntary periodical inspection such as monthly and annual.
② If any deficiency should be detected through such check and inspection, go ahead and correct it immediately.
③ In accordance with the standards stipulated in Instruction Manual, services such as replacement of consumables, lubrication and replenishment or replacement of lubricant should be conducted.

OTHER RULES

(1) Improper use of this crane may result in serious accident involving death or injury.
(2) Before starting your crane work, read the Instruction Manual and learn the safe manner of its operation.

EU ● 102-2223300

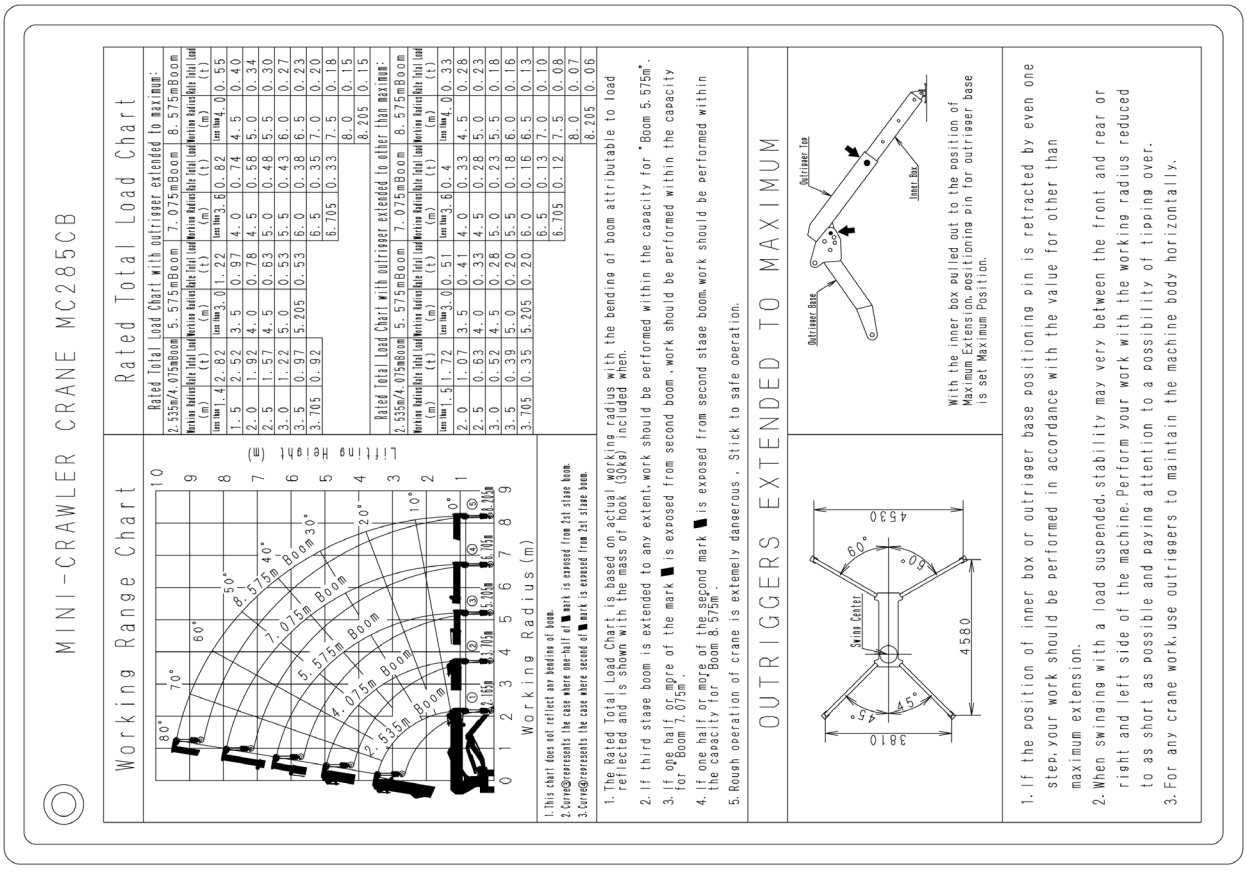

MINI-CRAWLER CRANE MC285CB

Working Range Chart

Lifting Height (m)
Working Radius (m)
2.535m Boom, 4.075m Boom, 5.575m Boom, 7.075m Boom, 8.575m Boom

Rated Total Load Chart

Rated Total Load Chart with outrigger extended to maximum:

2.535m/4.075mBoom		5.575mBoom		7.075mBoom		8.575mBoom	
Working Radius (m)	Rated Total Load (t)	Working Radius (m)	Rated Total Load (t)	Working Radius (m)	Rated Total Load (t)	Working Radius (m)	Rated Total Load (t)
Less than 1.4	2.82	Less than 2.0	1.22	Less than 2.6	0.82	Less than 4.0	0.55
1.5	2.52	3.5	0.97	4.0	0.74	4.5	0.40
2.0	1.92	4.0	0.78	4.5	0.58	5.0	0.34
2.5	1.57	4.5	0.63	5.0	0.48	5.5	0.30
3.0	1.22	5.0	0.53	5.5	0.43	6.0	0.27
3.5	0.97	5.205	0.53	6.0	0.38	6.5	0.23
3.705	0.92			6.5	0.35	7.0	0.20
				6.705	0.33	7.5	0.18
						8.0	0.15
						8.205	0.15

Rated Total Load Chart with outrigger extended to other than maximum:

2.535m/4.075mBoom		5.575mBoom		7.075mBoom		8.575mBoom	
Working Radius (m)	Rated Total Load (t)	Working Radius (m)	Rated Total Load (t)	Working Radius (m)	Rated Total Load (t)	Working Radius (m)	Rated Total Load (t)
Less than 1.5	1.72	Less than 3.0	0.51	Less than 3.6	0.4	Less than 4.0	0.33
2.0	1.07	3.5	0.41	4.0	0.33	4.5	0.28
2.5	0.63	4.0	0.33	4.5	0.28	5.0	0.23
3.0	0.52	4.5	0.28	5.0	0.23	5.5	0.18
3.5	0.39	5.0	0.20	5.5	0.18	6.0	0.16
3.705	0.35	5.205	0.20	6.0	0.16	6.5	0.13
				6.5	0.13	7.0	0.10
				6.705	0.12	7.5	0.08
						8.0	0.07
						8.205	0.06

1. This chart does not reflect any bending of boom.
2. Curve ⓪ represents the case where one-half of ■ mark is exposed from 2st stage boom.
3. Curve ⓪ represents the case where second of ■ mark is exposed from 2st stage boom.

1. The Rated Total Load Chart is based on actual working radius with the bending of boom attributable to load reflected and is shown with the mass of hook (30kg) included when.
2. If third stage boom is extended to any extent, work should be performed within the capacity for "Boom 5.575m".
3. If one half or more of the mark ■ is exposed from second boom, work should be performed within for "Boom 7.075m".
4. If one half or more of the second mark ■ is exposed from second stage boom, work should be performed within the capacity for "Boom 8.575m".
5. Rough operation of crane is extemely dangerous. Stick to safe operation.

OUTRIGGERS EXTENDED TO MAXIMUM

Swing Center
4530
4580
3810
60°
45°

Outrigger Base
Outrigger Top
Inner Box

With the inner box pulled out to the position of Maximum Extension, positioning pin for outrigger base is set Maximum Position.

1. If the position of inner box or outrigger base positioning pin is retracted by even one step, your work should be performed in accordance with the value for other than maximum extension.
2. When swinging with a load suspended, stability may vary between the front and rear or right and left side of the machine. Perform your work with the working radius reduced to as short as possible and paying attention to a possibility of tipping over.
3. For any crane work, use outriggers to maintain the machine body horizontally.

[42] 102-2223300

https://truckmanualshub.com/

[45] 553-4267600

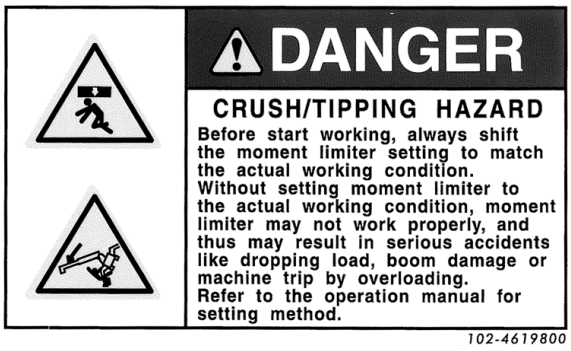

[48] 102-4619800

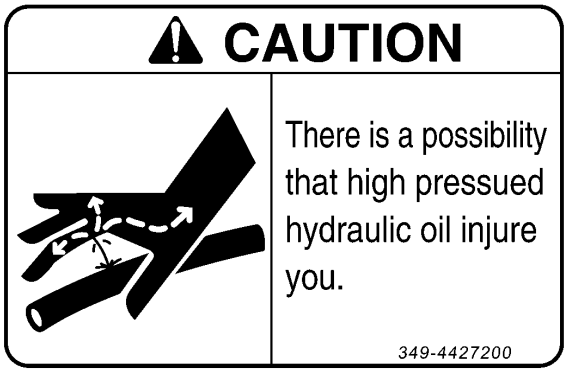

[46] 349-4427200

[50] 584-4581700 (2 places)

[47] 103-4604800

https://truckmanualshub.com/

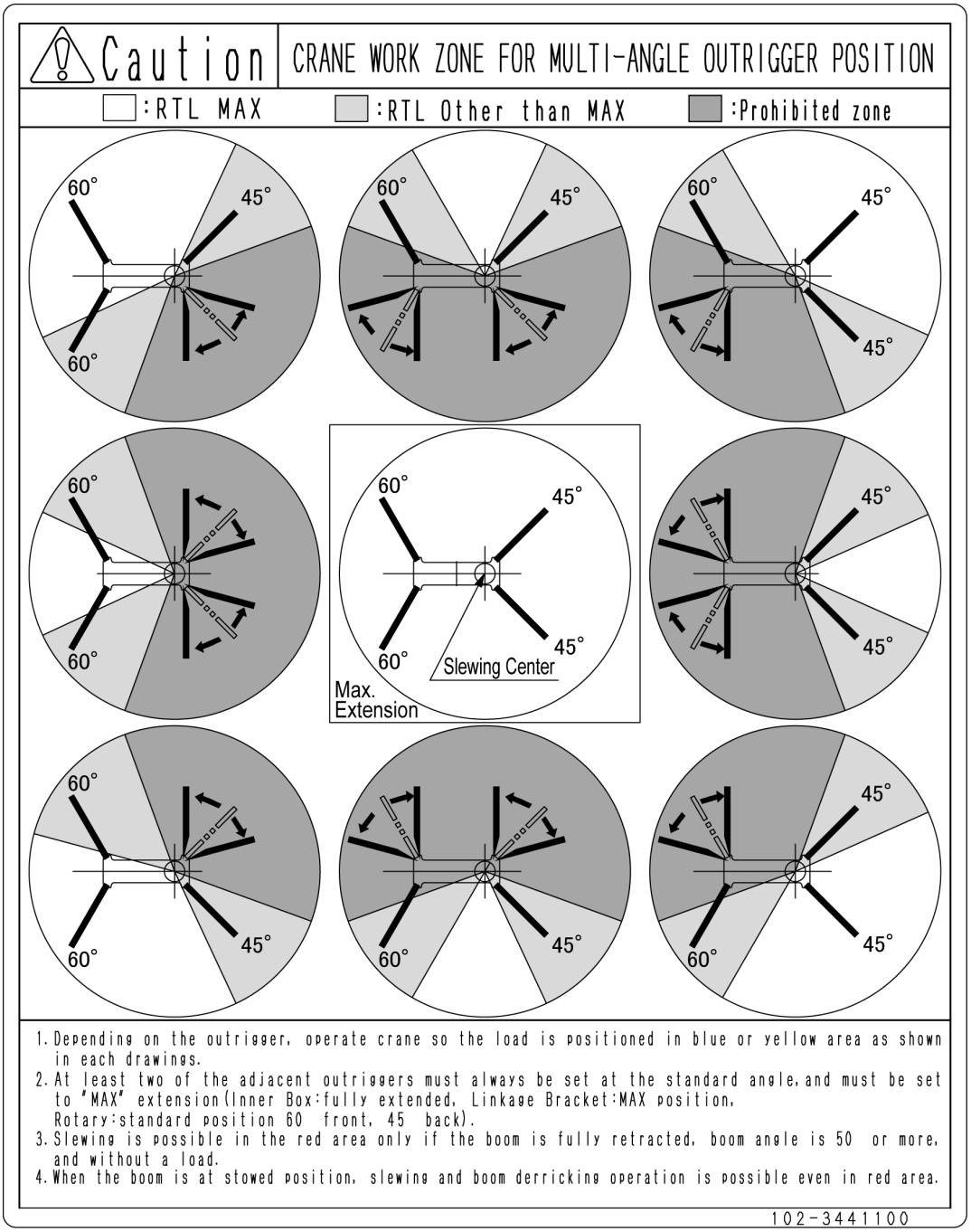

[51] 102-3441100

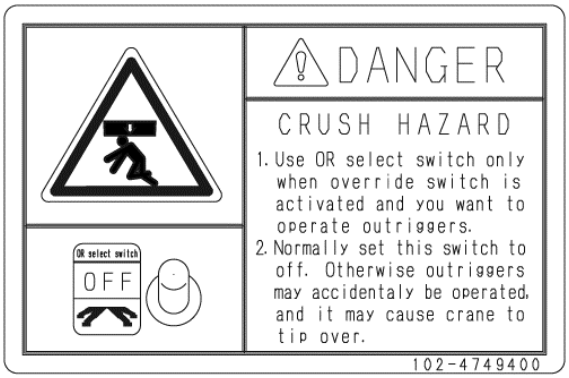

[53] 102-4749400

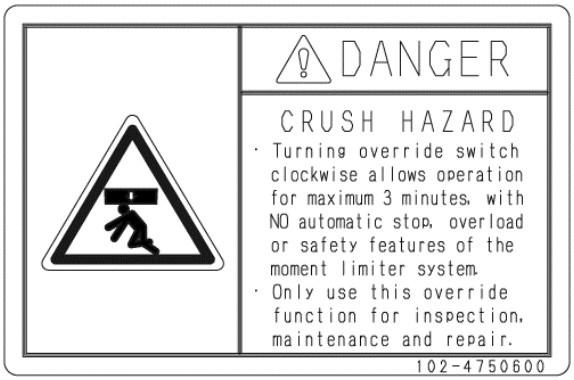

[55] 102-4750600

https://truckmanualshub.com/

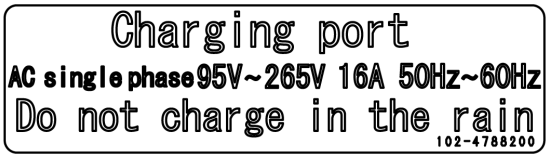

[58] 102-4788200

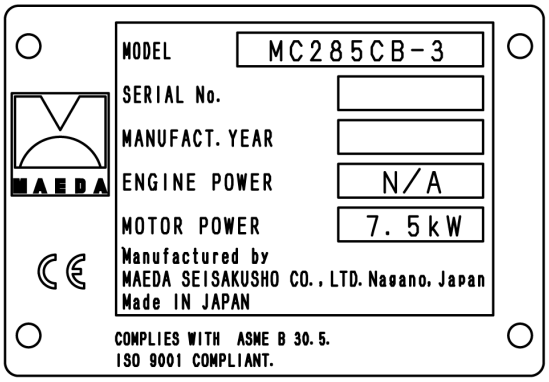

[59] 102-4788400

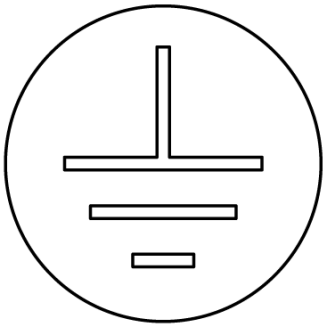

[62] 102-4792300 (3 places)

https://truckmanualshub.com/

Searcher Hook (Option)

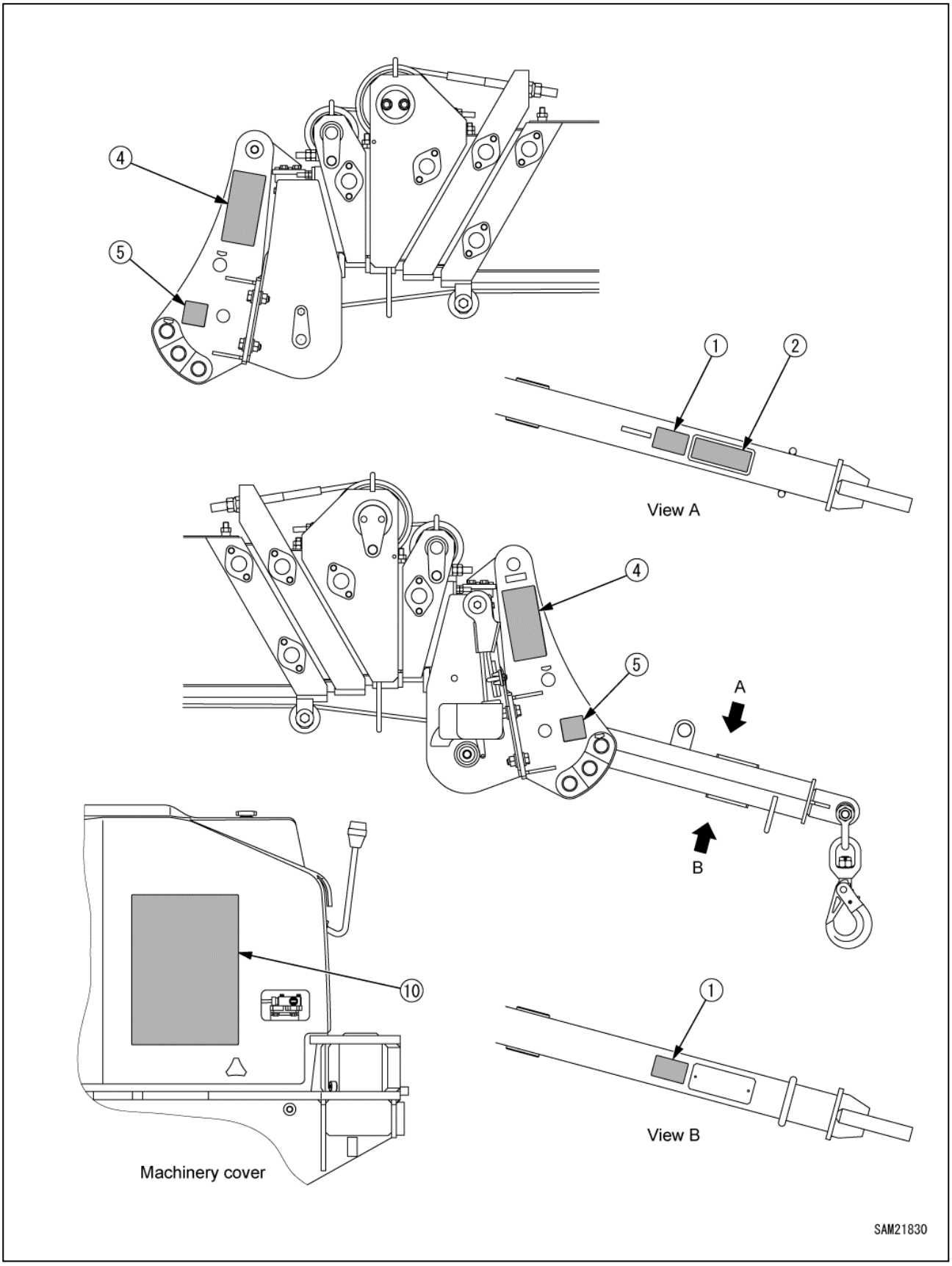

Fig. 2-3

https://truckmanualshub.com/

[1] 102-4621200 (2 places)

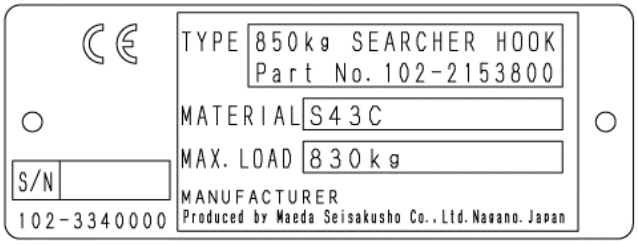

[2] 102-3340000

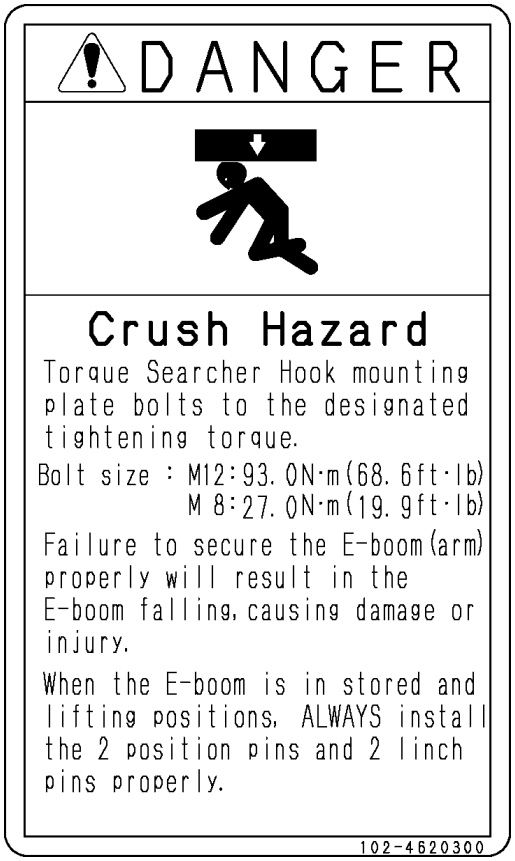

[4] 102-4620300 (2 places)

[5] 102-4608500 (2 places)

https://truckmanualshub.com/

MC285CB OPERATING RANGE for 850kg SEARCHER HOOK

OFFSET POSITION

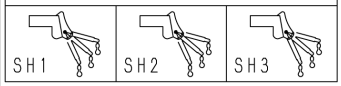

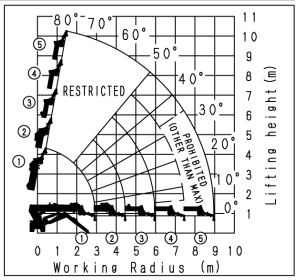

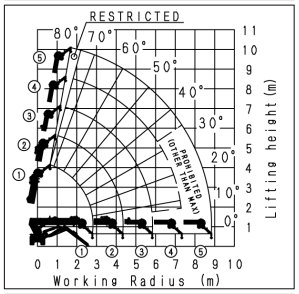

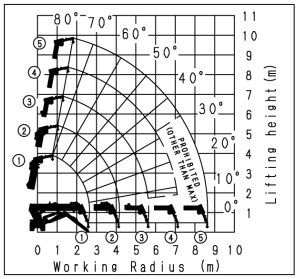

RATED TOTAL LOAD CHART for 850kg SEARCHER HOOK The unit of loads:kg

Working Radius (m)	① 2.535m BOOM — BOOM FULLY RETRACTED			② 4.075m BOOM — WHEN BOOM 2 IS EXTENDED TO ANY EXTENT, USE RATINGS FOR 2.535m-4.075mBOOM			③ 5.575m BOOM — WHEN BOOM 3 IS EXTENDED TO ANY EXTENT, USE RATINGS FOR 4.075m-5.575mBOOM			④ 7.075m BOOM — WHEN THE FIRST MARK \\ ON BOOM 3 IS EXPOSED, USE RATINGS FOR 5.575m-7.075mBOOM			⑤ 8.575m BOOM — WHEN THE SECOND MARK \\ ON BOOM 3 IS EXPOSED, USE RATINGS FOR 7.075m-8.575mBOOM			Working Radius (m)
	LOADED BOOM ANGLE (deg)	OUTRIGGER POSITION MAX	OUTRIGGER POSITION OTHER THAN MAX	LOADED BOOM ANGLE (deg)	OUTRIGGER POSITION MAX	OUTRIGGER POSITION OTHER THAN MAX	LOADED BOOM ANGLE (deg)	OUTRIGGER POSITION MAX	OUTRIGGER POSITION OTHER THAN MAX	LOADED BOOM ANGLE (deg)	OUTRIGGER POSITION MAX	OUTRIGGER POSITION OTHER THAN MAX	LOADED BOOM ANGLE (deg)	OUTRIGGER POSITION MAX	OUTRIGGER POSITION OTHER THAN MAX	
OFFSET POSITION SH1																
2.0	50.0 OR MORE	RESTRICTED		50.0 OR MORE	RESTRICTED		50.0 OR MORE	RESTRICTED		50.0 OR MORE	RESTRICTED		50.0 OR MORE	RESTRICTED		2.0
2.5	46.0	850	820													2.5
2.9	31.0	850	740													2.9
3.0	10.0	850	610	48.5	850	580										3.0
3.5				46.5	850	540										3.5
3.6				37.0	850	400										3.6
4.0				35.5	830	380										4.0
4.4				25.0	830	290	46.5	850	300							4.4
5.0				5.0	730	210	41.0	730	240							5.0
5.5							31.5	540	180	47.5	500	180				5.5
5.9							21.0	440	150	42.0	420	160				5.9
6.0							7.0	380	110	37.0	370	140	48.5	280	130	6.0
6.5										36.0	360	140	47.5	270	130	6.5
7.0										29.0	320	110	43.0	230	110	7.0
7.4										19.5	290	100	38.0	200	100	7.4
7.5										5.0	250	PROHIBITED	34.0	180		7.5
8.0													32.5	170		8.0
8.5													26.5	150	PROHIBITED	8.5
8.95													17.5	130		8.95
													3.0	110		
OFFSET POSITION SH2																
1.5	75.0 OR MORE	RESTRICTED		75.0 OR MORE	RESTRICTED		75.0 OR MORE	RESTRICTED		75.0 OR MORE	RESTRICTED		75.0 OR MORE	RESTRICTED		1.5
2.0	59.5	850	850	70.5	850	850										2.0
2.5	47.5	850	820	63.5	850	820										2.5
2.8	31.0	850	740	56.5	850	740										2.8
3.0	12.0	850	630	50.0	850	580	58.0	850	400							3.0
3.5				48.0	850	540	52.5	850	350							3.5
3.6				38.0	850	400	51.0	850	340	61.5	690	310				3.6
4.0				36.0	830	380	46.0	850	300	58.0	690	270	64.0	460	260	4.0
4.3				24.5	830	290	41.0	730	240	54.5	640	240	61.0	430	230	4.3
5.0				5.0	760	240	31.5	540	180	48.0	500	180	56.5	350	190	5.0
5.5							21.0	440	150	42.5	420	160	52.5	310	150	5.5
5.9							5.0	380	110	37.6	370	140	49.0	280	130	5.9
6.0										36.5	360	140	48.0	270	130	6.0
6.5										29.0	320	110	43.5	230	110	6.5
7.0										18.5	290	100	38.5	200	100	7.0
7.3										7.0	260	PROHIBITED	34.0	180		7.3
7.5													33.0	170		7.5
8.0													26.0	150	PROHIBITED	8.0
8.5													16.0	130		8.5
8.84													3.0	110		8.84
OFFSET POSITION SH3																
1.5	60.0	850	850	71.5	850	850										1.5
2.0	46.5	850	820	64.5	850	820										2.0
2.5	25.0	850	740	56.5	850	740										2.5
2.6	2.0	850	700	49.5	850	580										2.6
3.0				47.5	850	540	60.0	850	400							3.0
3.5				36.0	850	400	54.0	850	350							3.5
3.6				34.0	830	380	53.0	850	340	62.0	690	310				3.6
4.0				17.5	830	290	47.5	850	300	58.0	690	270	64.0	460	260	4.0
4.1				11.0	820	270	41.5	730	240	54.0	640	240	61.0	430	230	4.1
5.0							30.0	540	180	48.0	500	180	56.5	350	190	5.0
5.5							11.5	440	150	42.0	420	160	52.5	310	150	5.5
5.6							8.0	420	140	41.0	400	140	51.5	300	140	5.6
6.0										35.5	360	140	48.0	270	130	6.0
6.5										27.0	320	110	43.0	230	110	6.5
7.0										13.0	290	100	38.0	200	100	7.0
7.1										7.0	280	PROHIBITED	33.0	180		7.1
7.5													32.0	170		7.5
8.0													24.0	150	PROHIBITED	8.0
8.5													10.0	130		8.5
8.64													3.0	120		8.64

⚠DANGER

TIPPING HAZARD

- When using searcher hook, Moment limiter "number of fall" must be set to SH1, SH2, or SH3 mode, and select searcher hook offset position.
- Before start working, always make sure moment limiter is correctly set to the actual working condition.
- Do not use searcher hook and main hoist hook block/ball simultaneously to hoist load.

Notes:

1. This Rated Total Load Chart shows maximum allowable capacities. These rated total loads are based on the machine standing level on a firm ground supporting surface, under ideal job conditions and a freely suspended load.
2. Sufficient design tolerance must be used to ensure adequate ground support surface design. The rated total loads are for static conditions only, and do not include dynamic effects of slewing, extending, retracing, lowering, raising, wind or adverse conditions. Crane users must reduce rated total loads ratings to take all conditions into account.
3. The working radius shown in the Rated Total Load Chart is based on practical working radius including boom deflection due to loading. The crane user must calculate and compensate for boom deflection as the load is lifted.
4. Deductions from Searcher Hook Rated Total Load must be made for the weight of the searcher hook, block/ball and all rigging.
5. All capacities above the bold line are based on structural strength and other limitations. All other rated total loads are based on stability, not exceeding 75% of tipping loads.
6. Crane users must consult the Operators Manual for complete details about assembly, operation, maintenance, configuration, and its limitations. Modifications to the crane, other than what is specified or supplied by the original equipment manufacture, can result in a reduction of rated total load ratings.
7. This operating range chart does not include boom deflections.
8. At certain working conditions, moment limiter may display bigger load value than actual load.
9. RESTRICTED AREA : At high boom angles, E-Boom (arm) and the hook will interfere with each other.
   To avoid this interference : In SH1 position, do not operate above 50 degree boom angle.
   In SH2 position, do not operate above 75 degree boom angle.

MAEDA SEISAKUSHO CO., LTD. EU● 102-2224000

[10] 102-2224000

https://truckmanualshub.com/

This Page Intentionally Left Blank

https://truckmanualshub.com/

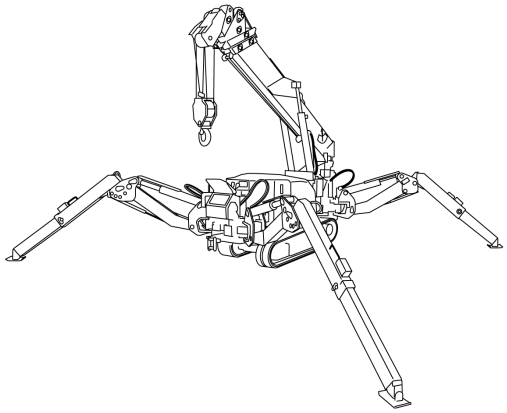

Section 3

SPECIFICATIONS, TERMINOLOGY AND CAPACITY CHARTS

https://truckmanualshub.com/

MACHINE FEATURES

This machine is only to be used for crane operation.
This machine is a mobile crane with a rubber track travelling dolly (carrier) mounted with a boom crane.
This self-propelled crane is capable of moving (travelling) on a worksite and craning an object weighing within the rated total load capacity. This crane can be operated with a radio remote control system.

Main Features

Viewed from the travel lever, the front, back, left and right of the machine are illustrated in this manual from the front of the machine. Boom slewing motion is determined with the machine viewed from directly above; slew clockwise (right) denotes right-handed motion and slew counterclockwise (left) denotes left-handed motion.
The main components of this machine are the travelling dolly and crane.

Travelling Dolly

The travelling dolly is composed of a travelling gear, battery unit, travelling operation unit and crane operation unit.
This machine is compact in design in order to keep the overall width between the crane and outrigger minimised while housed (in travelling position). This compact design is ideal for work in confined areas.
Two-travel lever operation enables direction changes forward, backward and right/left, and also pivot and spin turns.
A battery is provided to allow operation without exhaust gas emissions.

Crane

The crane is composed of a telescoping system, boom system, hook block, winch system and outrigger system.
Through the combined use of telescoping, boom slewing and winch operation, the crane is capable of raising or lowering the hook block and moving an object weighing within the rated total load capacity to a designated position within the confines of the working area.
A radio remote control system allows remote crane operation.

Safety Devices

The following safety devices are used on this machine:

- Over winding detector
- Rope over unwinding detector
- Automatic stop device
- Angle indicator
- Hydraulic safety valve
- Hydraulic automatic locking device
- Latch
- Alarm buzzer
- Level gauge
- Crane tip-over alarm (an alarm issued in the event of crane operation at 3-degree inclination and travelling at 15-degree inclination)
- Outrigger safety device (outrigger interlock and crane interlock)
- Working envelope limited
- Working Status Lamp

https://truckmanualshub.com/

CRANE TERMINOLOGY

Terms and Definitions

Rated Total Load

The maximum load that can be applied according to the boom length and angle. The load includes the mass (weight) of hoisting accessories (hooks) and slinging ropes. For additional information, see "RATED TOTAL LOAD CHARTS" on page 3-10.

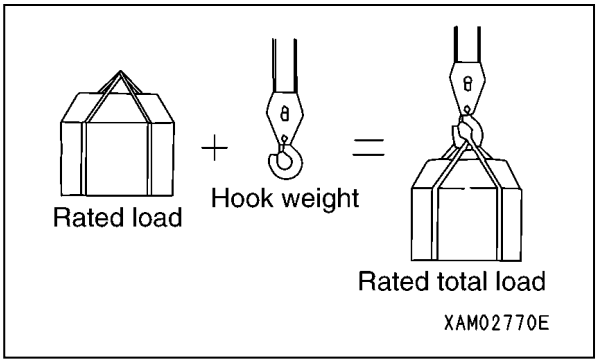

Fig 3-1

Rated Load

A load derived by subtracting the mass (weight) of hoisting accessories (hooks) and slinging ropes from the rated total load.

Working Radius

A horizontal distance between the axis of slewing and the hook centre.

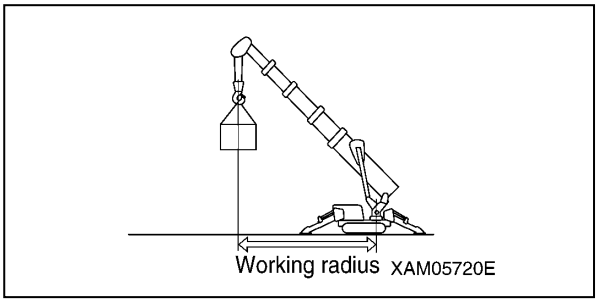

Fig 3-2

Boom Length

A distance between the boom primary pin and the sheave pin of the end boom.

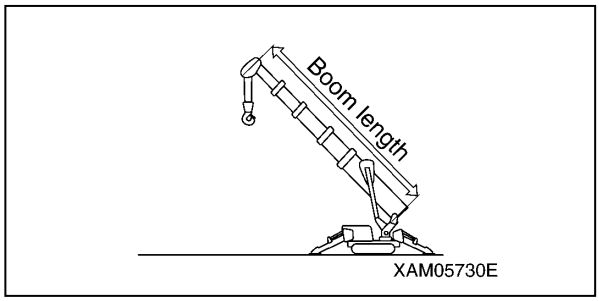

Fig 3-3

Boom Angle

An angle which the boom forms with the horizon.

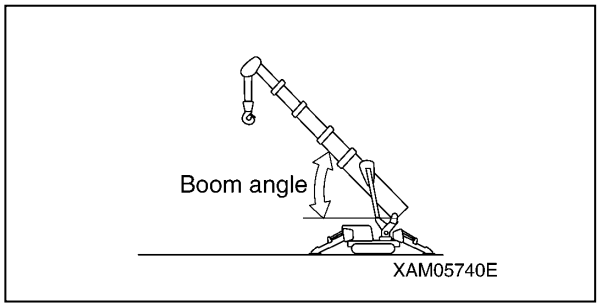

Fig 3-4

Lifting Height above Ground

A vertical distance between the hook bottom and the ground with the hook raised to the upper limit.

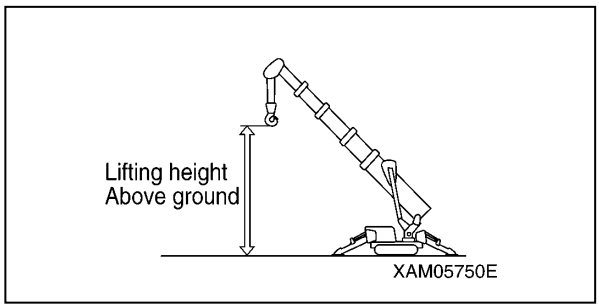

Fig 3-5

https://truckmanualshub.com/

PRINCIPLE SPECIFICATIONS LIST

Machine Specifications

System / Item		MC285CB-3
Mass and Dimensions	Machine mass	1995 kg
	Stowed length □ width □ height	2800 x 750 x 1470 mm
	Distance between idler and sprocket	975 mm
	Track gauge	550 mm
	Track width	200 mm
Capacity	Max. rated total load □□working radius	2.82 t x 1.4 m
	Max. working radius	8.2 m x 0.15 t
	Max. lifting height (above ground)	8.70 m
	Max. lifting height (underground)	-10.1 m (4 falls)
Winch System	Type	Hydraulic motor driven with brake, differential planetary gear type, with counter balance valve
	Winding speed	9.3 m/min (4 layers, 4 falls)
	Hoisting rope	IWRC 6 x Fi (29) 7 mm x 48 m
Boom Telescoping System	Type	Two sequential hydraulic cylinders with two wire rope telescoping systems
	Boom type	Fully automatic 5-section pentagonal telescopic
	Boom length	2.535 m – 8.575 m
	Boom telescoping stroke/time	6.04 m/22 sec
Boom System	Type	Two hydraulic double acting, direct acting cylinders
	Boom angle/time	0 to 80 degrees/14.0sec
Slewing System	Type	Slew bearing supported with hydraulic motor driven worm and spur gears with a self-locking worm brake
	Slewing angle/speed	360 degrees (continuous)/68 sec (0.9 RPM)
Outrigger System	Type	First stage with flexible gas charged stay damper, second stage manual pullout, direct acting hydraulic cylinder
	Overall width of extended outriggers	(Lateral) 4782 mm x (Front) 4718 mm x (Rear) 3990 mm
Travelling System	Type	Hydraulic motor driven, stepless speed changer, variable speed
	Travel speed	Forward/backward: 0 – 2.0 km/h
	Gradeability	20 degrees
	Ground pressure	51.0 kPa

https://truckmanualshub.com/

System / Item		MC285CB-3
Hydraulic System	Hydraulic pump	Double-throw variable piston pump (6 cc/rev x 2)
	Rated pressure	20.6 MPa
	Hydraulic oil tank capacity	20 L
Battery	Type	Lithium ion
	Capacity	DC 55 V – 135 Ah
	Input voltage/current	Single-phase 100 V/15 A, 200 V/16 A
	Charging time	100 V AC: 5 hrs 18 mins to 80%, 7 hrs to 100% 200 V AC: 2 hrs 20 mins to 80%, 3 hrs 30 mins to 100%
	Operating time (with full charge)	Continuous high-speed travel: 2 hrs 12 mins
	Weight	92.4 kg (15.4 kg × 6)
	Operating elevation	Up to 2,000 m
Electric motor	Output	7.5 kW AC 30 V/2500 min^{-1}
Safety Device	Over winding detector, over-unwinding stop device, angle indicator, hydraulic safety valve, wire rope latch, level, machine body inclination alarm, EMO Switch, crane outrigger interlock device, moment limiter, outrigger setting light, working status lamp	
Options	Black rubber tracks, Single fall hook, Searcher hook	
Classification	Mobile crane ISO4301/2 Group A1	

For optimum operation and storage of this machine follow the requirements listed below:

- Operating temperature: -20°C to 40°C (no frost)
- Storage temperature: -20°C to 55°C
- Operating humidity: Max. 85% RH (no condensation)
- Atmosphere: Outdoor environment free from explosive, flammable and corrosive gases, moisture and excessive dust particles

For details on storage, see “STORAGE” on page 5-52.

https://truckmanualshub.com/

Radio Remote Control System Specifications

System / Item		Radio remote control
Radio frequency		2402-2480 MHz band
Transmission output		100 mW
Channel spacing		1 MHz
Reachable range of radio waves		100 m or longer (under a good condition where there is no radio interference)
Unique address		Extracted and set from 1 million or more addresses at the time of shipment from factory
Waterproof		IP65
Transmitter antenna		Built-in type
Operating status display	Status LED	Battery status display
		No reception display
	Monitor LED	Receiver power status display
		Transmitter power status display
		Feedback
		Telegram display
Safety device		Emergency stop switch (EMO)
		Misoperation avoidance function during interruption of radio remote control
		Automatic power OFF device (Auto power off device)
		Transmitter stop function when battery capacity decreases
		Alarm switch
Transmitter voltage		Battery BA405000 (6 VDC at 1500 mAh)
Receiver voltage		Power of crane main body (12 VDC)
Continuous operating hours of Transmitter		Approximately 20 hours (Changes depending on usage environment)
Ambient operating temperature		-20°C to +70°C
Transmitter mass		Approx. 1.8 kg (including battery)
Operation items of Transmitter	Operation lever	Outrigger 4 GROUND/STOWAGE / Boom LOWER
		Outrigger 3 GROUND/STOWAGE / Hook RAISE/LOWER
		Outrigger 2 GROUND/STOWAGE / Boom EXTEND/RETRACT
		Outrigger 1 GROUND/STOWAGE / Slew
	Operation switch	Transmitter power switch
		Micro speed switch
		Boom raising cancel switch
		Horn switch
		Emergency stop (EMO)/Transmitter power OFF switch
	Rotary switch	Operation mode selector switch
	Dial switch	Display operation switch

https://truckmanualshub.com/

Searcher Hook Specifications

System / Item		MC285CB-3
Mass and dimensions	Machine mass	2017 kg
	Stowed length × width × height	3000 × 750 × 1470 mm
Performance	Crane capacity	850 kg
	Maximum working radius	9.7 m
	Maximum lifting height above ground	8.9 m

Only the searcher hook dedicated values are given here.

https://truckmanualshub.com/

DIMENSIONAL DRAWINGS

Machine Dimensional Drawing

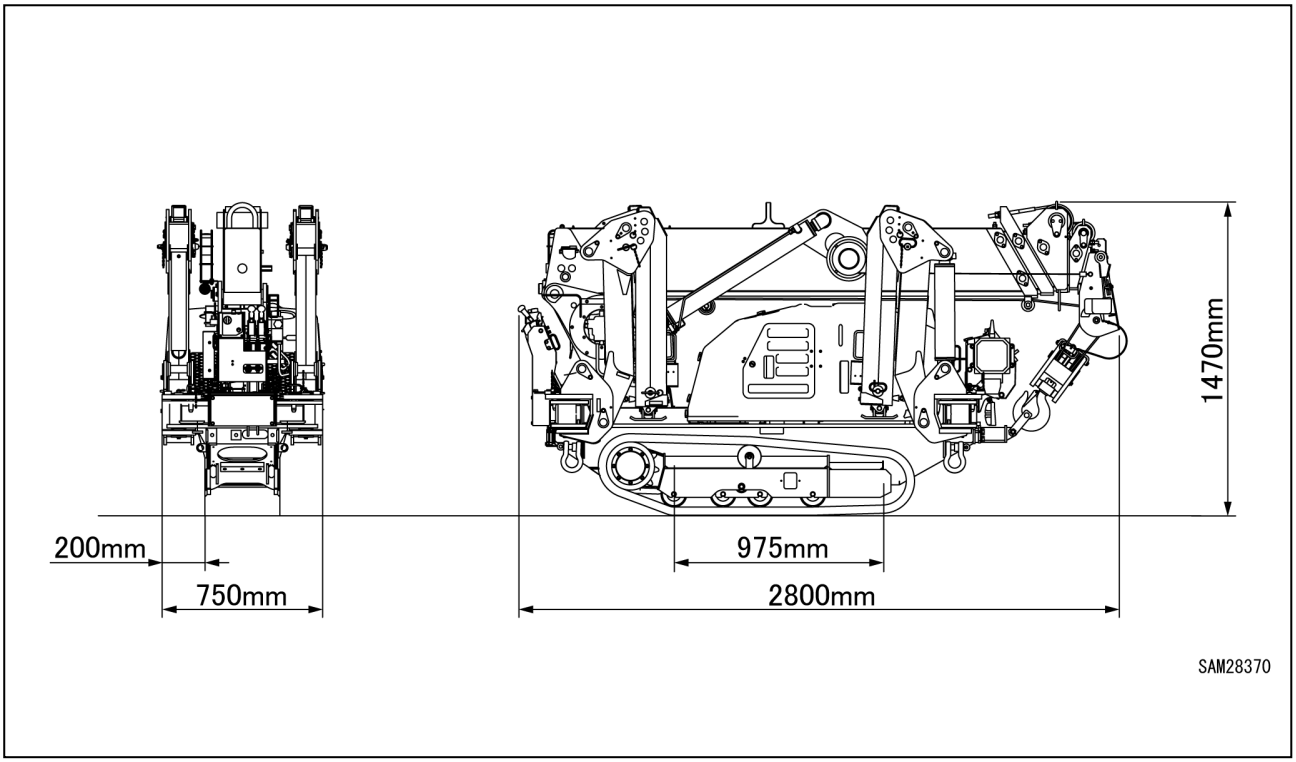

Fig 3-6

Searcher Hook Dimensional Drawing

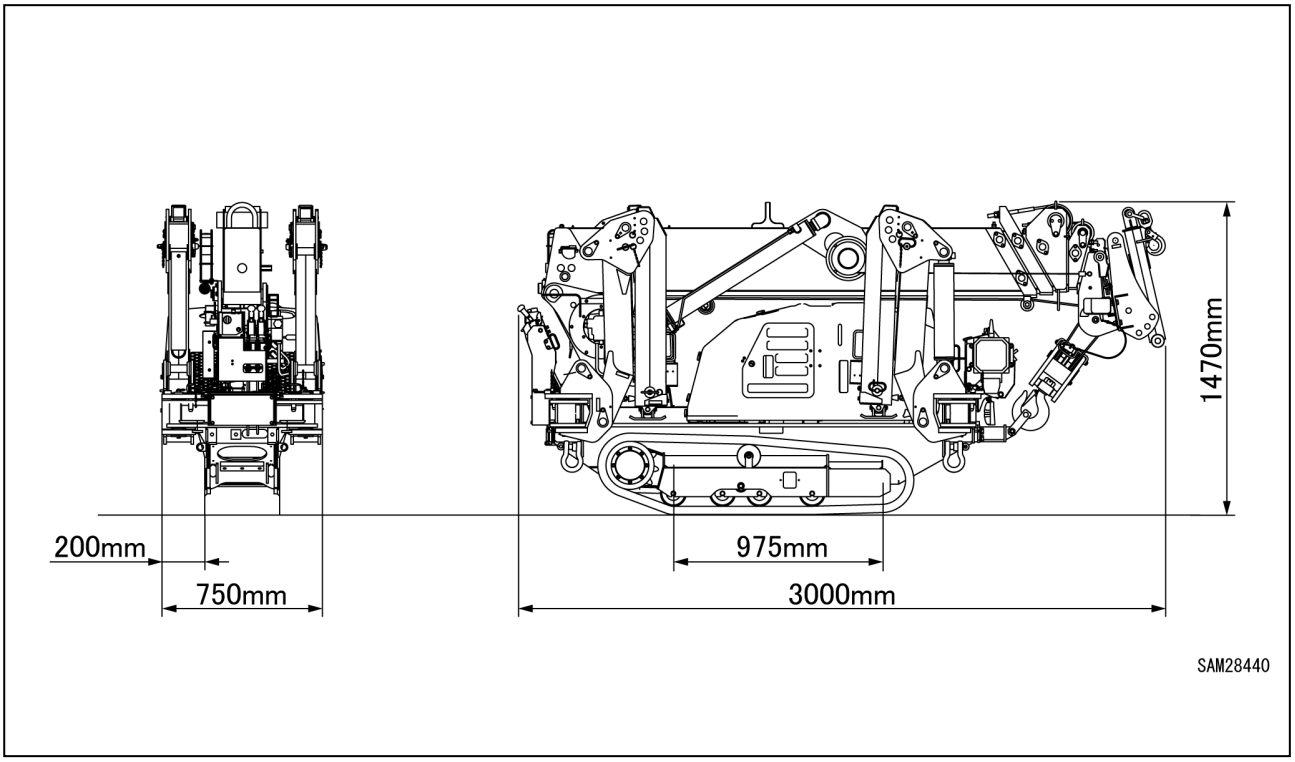

Fig 3-7

https://truckmanualshub.com/

Outrigger Width Dimensional Drawing

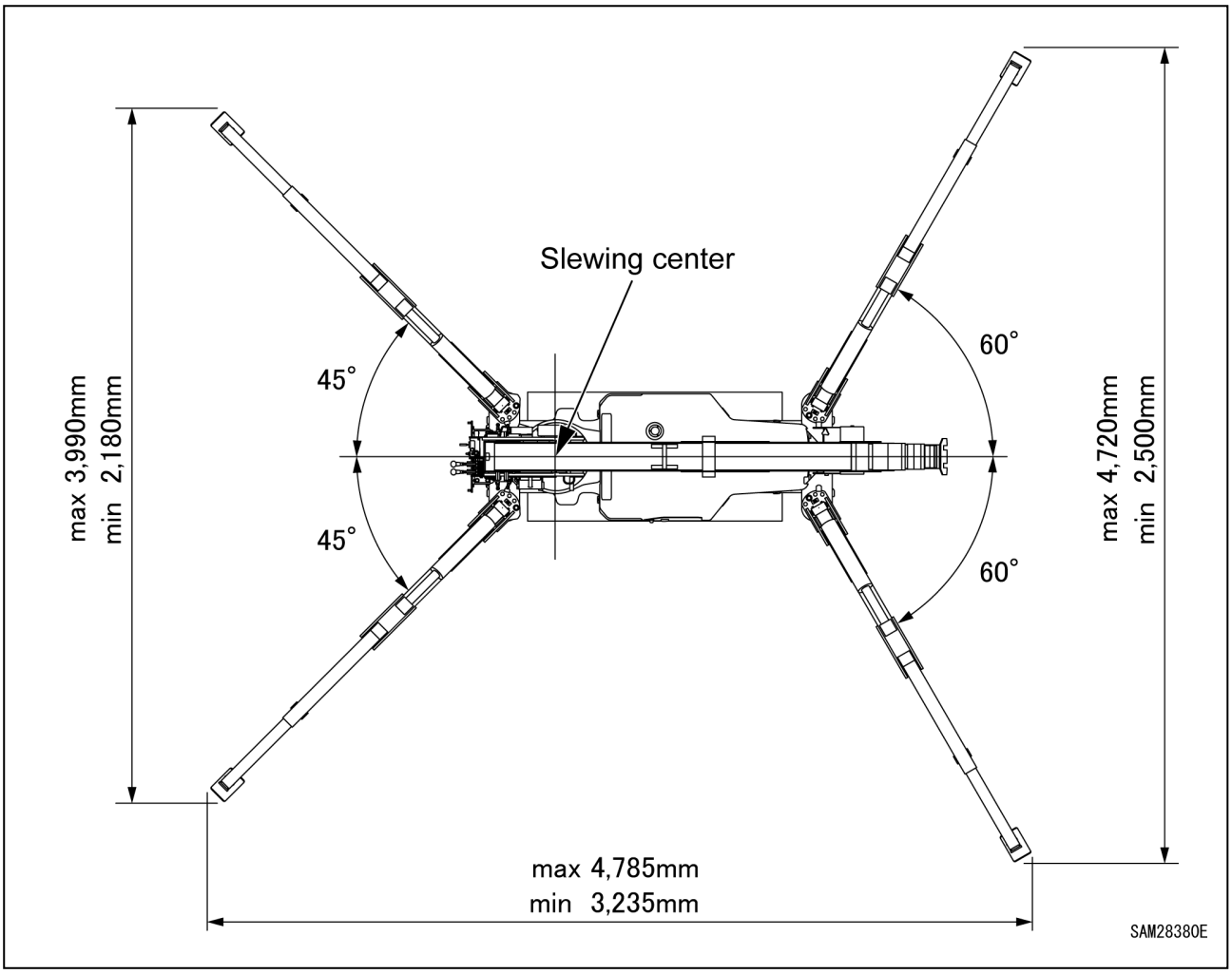

Fig 3-8

https://truckmanualshub.com/

RATED TOTAL LOAD CHARTS

WARNING! Tip Hazard. Never exceed the maximum load limit per working radius stated in the Rated Total Load Charts. Always operate the crane and boom within these limits.

The Rated Total Load Charts indicate the maximum loads the crane is capable of hoisting in parallel with the length of the boom. The loads are specified by working radius.

All the values provided in the Rated Total Load Charts are based on the assumption that the machine is placed on a level, solid surface.

The values in the Rated Total Load Charts are determined based on the working radius, allowing for deflection that is developed when load is applied to the boom.

The Rated Total Load Charts are the same in all directions regardless of the slewing stop position.

When extending boom no. 3 even slightly, crane operation should proceed to the extent of performance of boom configuration range 4.080-5.575 m.

When half of the first "◣ mark" passes boom no. 3, crane operation should proceed to the extent of performance of boom configuration range 5.580-7.075 m.

When half of the second "◣ mark" passes boom no. 3, crane operation should proceed to the extent of performance of boom configuration range 7.080-8.575 m.

If the working radius exceeds that stated in the table even slightly, crane operation should proceed with respect to the rated total load corresponding to the working radius.

The rated total load includes the mass of the hoisting accessory (rigging and hook block).

When the crane is used with the outriggers extended other than at maximum extension, crane operation should proceed with respect to the values specified in the Rated Total Load Chart corresponding to "When the crane is used with the outriggers extended at the other than maximum."

Programmable Moment Limiter

WARNING! Tip Hazard. The following precautions should always be observed when reading the "rated total load" provided by the programmable moment limiter.

- **The outriggers should be placed on a level and firm surface.**
- **The outriggers should be at maximum extension as much as possible.**
- **The weight of an object, including that of a hoisting accessory and slinging rope, must remain below the rated total load for hoisting objects. With the boom length (number of stages) and angle specified, make a comparison between the rated total load provided by the programmable moment limiter and the weight of the object.**

The programmable moment limiter provides readouts on the rated total load under the following conditions:

- The outriggers are placed on a level and firm surface.
- No deflection is developed in the boom.

Reading the Angle Indicator

The intersection point of the pointer that is attached to the, and the label on the boom, is the current boom angle. The boom angle shown in the figure below is 35°.

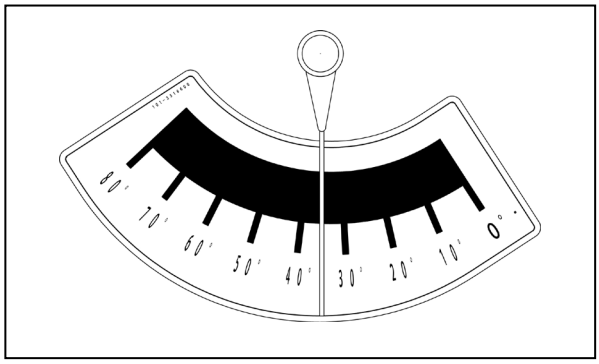

Fig. 3-9

https://truckmanualshub.com/

Boom Length

The following figures illustrate the condition of the booms in "RATED TOTAL LOAD CHARTS" on page 3-10: 2.535 m Boom, 2.540-4.075 m Boom, 4.080-5.575 m Boom, 5.580-7.075 m Boom, 7.080-8.575 m Boom

1) 2.535 m Boom: All the booms are retracted.

Fig. 3-10

2) 2.540-4.075 m Boom: When boom ② begins to extend until boom ② is fully extended with booms ③ + ④ + ⑤ fully retracted.

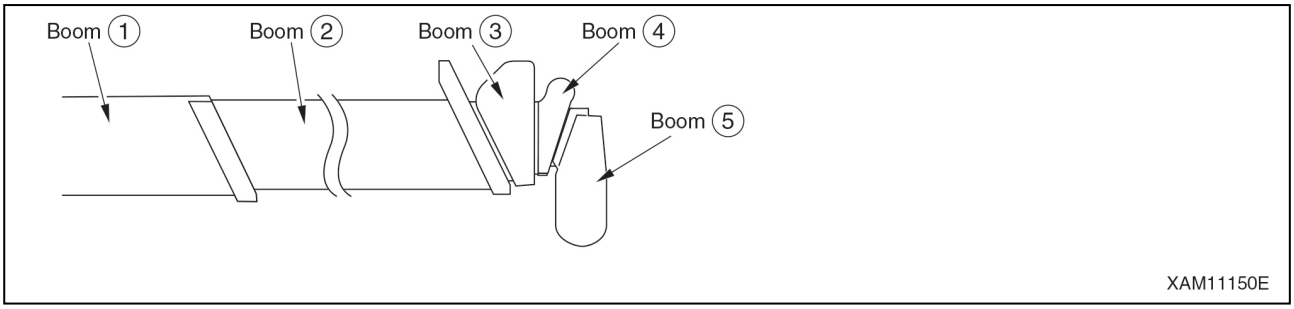

Fig. 3-11

3) 4.080-5.575 m Boom: With boom ② fully extended, and when boom ③ begins to extend, until boom ③ is extended until the first mark ◣ on boom ③ is visible at the end of boom ②.

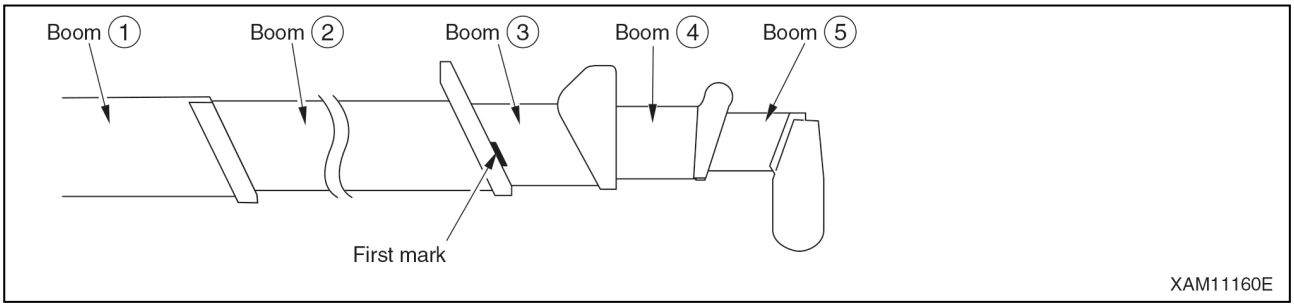

Fig. 3-12

https://truckmanualshub.com/

4) 5.580-7.075 m Boom: When boom ③ begins to extend past the first mark ◣ until the boom extends until the second mark ◣ is visible at the end of boom ②.

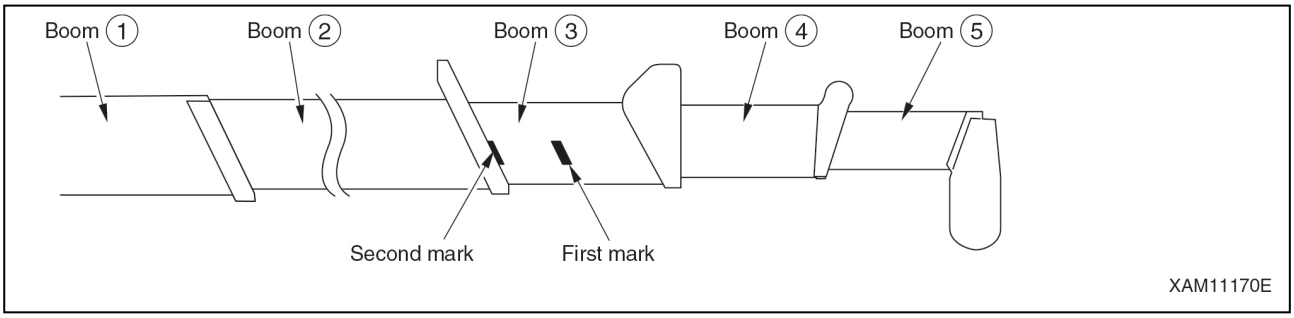

Fig. 3-13

5) 7.080-8.575 m Boom: When boom ③ begins to extend past the second mark ◣ until booms ①+ ② + ③ + ④ + ⑤ are fully extended.

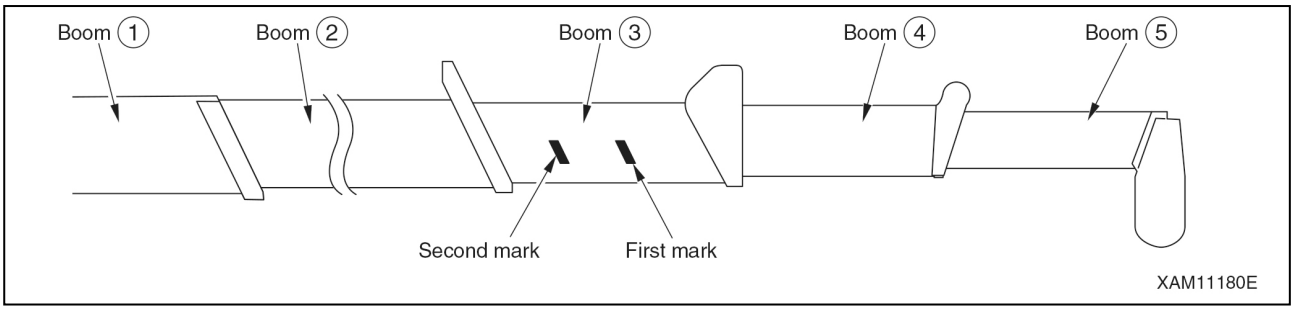

Fig. 3-14

https://truckmanualshub.com/

Rated Total Load Chart for Standard Specification

1. All rated total loads are indicated in kilograms.
2. This load radius shown in this chart is based on practical working including boom deflection due to loading. The crane user must calculate and compensate for boom deflection as the load is lifted.
3. Deductions from rated total loads must be made for the weight of hook block, ball/hook, slings, rigging or other suspended gear.
4. The slewing range will be restricted if the outrigger angle is not at the standard extension.
5. The Rated Total Load Chart capacities are based on using the factory supplied Standard Wire Rope. If you replace the wire rope, use the correct specification, that meets or exceeds the standard wire rope strength and specification.
6. Standard wire rope specification: 6xFi (29) IWRC, 10 mm diameter, 48 m
   Specified breaking load: 41.2 kN

Rated Total Load Chart–4 Falls

	Rated Total load Chart - 4 falls															The unit of loads: kg
	2.535 m Boom			2.536 – 4.075 m Boom			4.076 – 5.575 m Boom			5.576 – 7.075 m Boom			7.076 – 8.575 m Boom			
Load radius (m)	Loaded Boom angle (deg)	Outrigger position		Loaded Boom angle (deg)	Outrigger position		Loaded Boom angle (deg)	Outrigger position		Loaded Boom angle (deg)	Outrigger position		Loaded Boom angle (deg)	Outrigger position		Load radius (m)
		MAX	Other than MAX		MAX	Other than MAX		MAX	Other than MAX		MAX	Other than MAX		MAX	Other than MAX	
1.4	48.0	2820	1720	65.5	2820	1720										1.4
1.5	45.0	2520	1070	64.0	2520	1070										1.5
2.0	23.0	1920	630	56.0	1920	630										2.0
2.5				46.5	1570	520										2.5
3.0				35.5	1220	390	53.5	1220	510							3.0
3.5				19.0	970	350	47.0	970	410							3.5
3.6							46.0	930	370	57.0	820	400				3.6
4.0							39.0	780	330	52.5	740	330	60.0	550	330	4.0
4.5							29.5	630	280	47.5	580	280	56.0	400	280	4.5
5.0							15.5	530	200	41.5	480	230	52.0	340	230	5.0
5.5										34.5	430	180	47.5	300	180	5.5
6.0										26.5	380	160	43.0	270	160	6.0
6.5										14.0	350	130	37.5	230	130	6.5
7.0													31.5	200	100	7.0
7.5													24.0	180	80	7.5
8.0													13.0	150	70	8.0

Hook block mass weight 30 kg standard supplied Maeda hook block or ball.

https://truckmanualshub.com/

Rated Total Load Chart–2 Falls

	Rated Total load Chart - 2 falls															The unit of loads: kg
	2.535 m Boom			2.536 – 4.075 m Boom			4.076 – 5.575 m Boom			5.576 – 7.075 m Boom			7.076 – 8.575 m Boom			
Load radius (m)	Loaded Boom angle (deg)	Outrigger position		Loaded Boom angle (deg)	Outrigger position		Loaded Boom angle (deg)	Outrigger position		Loaded Boom angle (deg)	Outrigger position		Loaded Boom angle (deg)	Outrigger position		Load radius (m)
		MAX	Other than MAX		MAX	Other than MAX		MAX	Other than MAX		MAX	Other than MAX		MAX	Other than MAX	
1.4	48.0	1410	1410	65.5	1410	1410										1.4
1.5	45.0	1410	1070	64.0	1410	1070										1.5
2.0	23.0	1410	630	56.0	1410	630										2.0
2.5				46.5	1410	520										2.5
3.0				35.5	1220	390	53.5	1220	510							3.0
3.5				19.0	970	350	47.0	970	410							3.5
3.6							46.0	930	370	57.0	820	400				3.6
4.0							39.0	780	330	52.5	740	330	60.0	550	330	4.0
4.5							29.5	630	280	47.5	580	280	56.0	400	280	4.5
5.0							15.5	530	200	41.5	480	230	52.0	340	230	5.0
5.5										34.5	430	180	47.5	300	180	5.5
6.0										26.5	380	160	43.0	270	160	6.0
6.5										14.0	350	130	37.5	230	130	6.5
7.0													31.5	200	100	7.0
7.5													24.0	180	80	7.5
8.0													13.0	150	70	8.0

Hook block mass weight 30 kg standard supplied Maeda hook block or ball.

Rated Total Load Chart–Single Fall

	Rated Total load Chart - 1 Parts of Line															The unit of loads: kg
	2.535 m Boom			2.536 – 4.075 m Boom			4.076 – 5.575 m Boom			5.576 – 7.075 m Boom			7.076 – 8.575 m Boom			
Load radius (m)	Loaded Boom angle (deg)	Outrigger position		Loaded Boom angle (deg)	Outrigger position		Loaded Boom angle (deg)	Outrigger position		Loaded Boom angle (deg)	Outrigger position		Loaded Boom angle (deg)	Outrigger position		Load radius (m)
		MAX	Other than MAX		MAX	Other than MAX		MAX	Other than MAX		MAX	Other than MAX		MAX	Other than MAX	
1.4	48.0	710	710	65.5	710	710										1.4
1.5	45.0	710	710	64.0	710	710										1.5
2.0	23.0	710	630	56.0	710	710										2.0
2.5				46.5	710	520										2.5
3.0				35.5	710	520	53.5	710	510							3.0
3.5				19.0	710	390	47.0	710	410							3.5
3.6							46.0	710	370	57.0	710	400				3.6
4.0							39.0	710	330	52.5	710	330	60.0	550	330	4.0
4.5							29.5	630	280	47.5	580	280	56.0	400	280	4.5
5.0							15.5	530	200	41.5	480	230	52.0	340	230	5.0
5.5										34.5	430	180	47.5	300	180	5.5
6.0										26.5	380	160	43.0	270	160	6.0
6.5										14.0	350	130	37.5	230	130	6.5
7.0													31.5	200	100	7.0
7.5													24.0	180	80	7.5
8.0													13.0	150	70	8.0

Hook block mass weight 20 kg standard supplied Maeda hook block or ball.

https://truckmanualshub.com/

Rated Total Load Chart for Searcher Hook

1. This Rated Total Load Chart shows the maximum allowable capacities. These rated total loads are based on the machine standing level on a firm ground supporting surface, under ideal job conditions and a freely lifted load.
2. Sufficient design tolerance must be used to ensure adequate ground support surface design. The rated total loads are for static conditions only, and do not include dynamic effects of slewing, extending, retracting, lowering, raising, wind or adverse conditions. Crane users must reduce rated total loads ratings to take all conditions into account.
3. The Working radius shown in the Rated Total Load Chart is based on practical working radius including boom deflection due to loading. The crane user must calculate and compensate for boom deflection as the load is lifted.
4. Deductions from Searcher Hook Rated Total Load must be made for the weight of the searcher hook (22 kg), as well as block/ball and all rigging.
5. All capacities above the bold line are based on structural strength and other limitations. All other rated total loads are based on stability not exceeding 75% of tipping loads.
6. Crane users must consult the Operators Manual for complete details about assembly, operation, maintenance, configuration, and its limitations. Modifications to the crane, other than what is specified or supplied by the original equipment manufacturer, can result in a reduction of rated total load ratings.
7. This operating range chart does not include boom deflections.
8. At certain working conditions, moment limiter may display bigger load value the actual load.
9. RESTRICTED AREA: At high boom angles, E-Boom (arm) and the hook will interfere with each other.

   To avoid this interference:

   In SH1 position, do not operate above 50 degree boom angle.

   In SH2 position, do not operate above 75 degree boom angle.

https://truckmanualshub.com/

Rated Total Load Chart for Searcher Hook-SH1

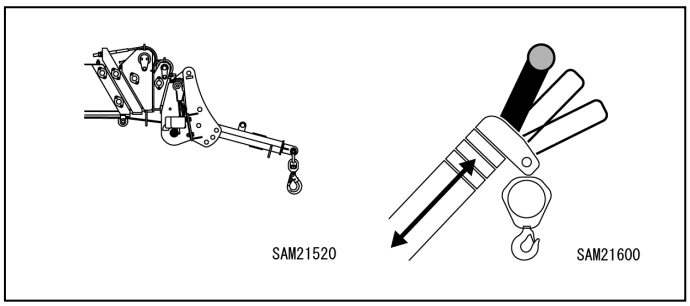

Fig 3-15

Rated Total load Chart - Searcher Hook - Position : SH1 — The unit of loads: kg

Load radius (m)	2.535 m Boom			2.536 – 4.075 m Boom			4.076 – 5.575 m Boom			5.576 – 7.075 m Boom			7.076 – 8.575 m Boom			Load radius (m)
	Loaded Boom angle (deg)	Outrigger position		Loaded Boom angle (deg)	Outrigger position		Loaded Boom angle (deg)	Outrigger position		Loaded Boom angle (deg)	Outrigger position		Loaded Boom angle (deg)	Outrigger position		
		MAX	Other than MAX		MAX	Other than MAX		MAX	Other than MAX		MAX	Other than MAX		MAX	Other than MAX	
	50.0 or more	Prohibited		50.0 or more	Prohibited		50.0 or more	Prohibited		50.0 or more	Prohibited		50.0 or more	Prohibited		
2.0	46.0	850	820													2.0
2.5	31.0	850	740													2.5
2.9	10.0	850	610	48.5	850	580										2.9
3.0				46.5	850	540										3.0
3.5				37.0	850	400										3.5
3.6				35.5	830	380										3.6
4.0				25.0	830	290	46.5	850	300							4.0
4.4				7.0	730	210	41.0	730	240							4.4
5.0							31.5	540	180	47.5	500	180				5.0
5.5							21.0	440	150	42.0	420	160				5.5
5.9							7.0	380	110	37.0	370	140	48.5	280	130	5.9
6.0										36.0	360	140	47.5	270	130	6.0
6.5										29.0	320	110	43.0	230	110	6.5
7.0										19.5	290	100	38.0	200	100	7.0
7.4										5.0	250	Prohibited	34.0	180	Prohibited	7.4
7.5													32.5	170		7.5
8.0													26.5	150		8.0
8.5													17.5	130		8.5
8.95													3.0	240		8.95

https://truckmanualshub.com/

Rated Total Load Chart for Searcher Hook-SH2

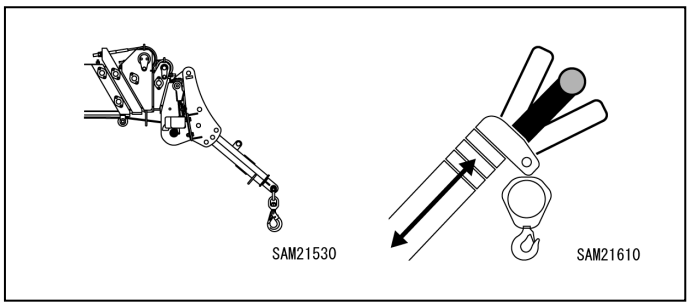

Fig 3-16

Rated Total load Chart - Searcher Hook - Position : SH2 — The unit of loads: kg

Load radius (m)	2.535 m Boom			2.536 – 4.075 m Boom			4.076 – 5.575 m Boom			5.576 – 7.075 m Boom			7.076 – 8.575 m Boom			Load radius (m)
	Loaded Boom angle (deg)	Outrigger position		Loaded Boom angle (deg)	Outrigger position		Loaded Boom angle (deg)	Outrigger position		Loaded Boom angle (deg)	Outrigger position		Loaded Boom angle (deg)	Outrigger position		
		MAX	Other than MAX		MAX	Other than MAX		MAX	Other than MAX		MAX	Other than MAX		MAX	Other than MAX	
	50.0 or more	Prohibited		75.0 or more	Prohibited		50.0 or more	Prohibited		50.0 or more	Prohibited		50.0 or more	Prohibited		
1.5	59.5	850	850	70.5	850	850										1.5
2.0	47.5	850	820	63.5	850	820										2.0
2.5	31.0	850	740	56.5	850	740										2.5
2.8	12.0	850	630	50.0	850	580										2.8
3.0				48.0	850	540	58.0	850	400							3.0
3.5				38.0	850	400	52.5	850	350							3.5
3.6				36.0	830	380	51.0	850	340	61.5	690	310				3.6
4.0				24.5	830	290	46.0	850	300	58.0	690	270	64.0	460	260	4.0
4.3				5.0	760	240	41.0	730	240	54.5	640	240	61.0	430	230	4.3
5.0							31.5	540	180	48.0	500	180	56.5	350	190	5.0
5.5							21.0	440	150	42.5	420	160	52.5	310	150	5.5
5.9							5.0	380	110	37.5	370	140	49.0	280	130	5.9
6.0										36.5	360	140	48.0	270	130	6.0
6.5										29.0	320	110	43.5	230	110	6.5
7.0										18.5	290	100	38.5	200	100	7.0
7.3										7.0	260	Prohibited	34.0	180	Prohibited	7.3
7.5													33.0	170		7.5
8.0													26.0	150		8.0
8.5													16.0	130		8.5
8.82													3.0	110		8.82

https://truckmanualshub.com/

Rated Total Load Chart for Searcher Hook-SH3

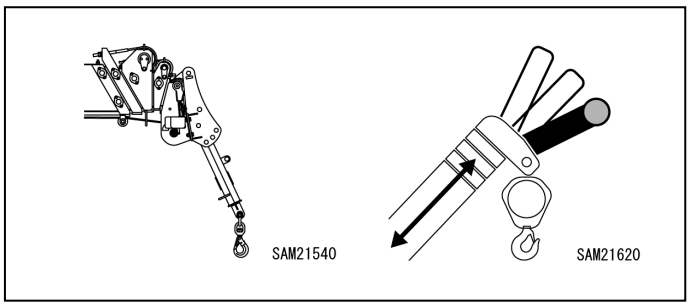

Fig 3-17

	Rated Total load Chart - Searcher Hook - Position : SH3															The unit of loads: kg
	2.535 m Boom			2.536 – 4.075 m Boom			4.076 – 5.575 m Boom			5.576 – 7.075 m Boom			7.076 – 8.575 m Boom			
Load radius (m)	Loaded Boom angle (deg)	Outrigger position		Loaded Boom angle (deg)	Outrigger position		Loaded Boom angle (deg)	Outrigger position		Loaded Boom angle (deg)	Outrigger position		Loaded Boom angle (deg)	Outrigger position		Load radius (m)
		MAX	Other than MAX		MAX	Other than MAX		MAX	Other than MAX		MAX	Other than MAX		MAX	Other than MAX	
1.5	60.0	850	850	71.5	850	850										1.5
2.0	46.5	850	820	64.5	850	820										2.0
2.5	25.0	850	740	56.5	850	740										2.5
2.6	2.0	850	700	49.5	850	580										2.6
3.0				47.5	850	540	60.0	850	400							3.0
3.5				36.0	850	400	54.0	850	350							3.5
3.6				34.0	830	380	53.0	850	340	62.0	690	310				3.6
4.0				17.5	830	290	47.5	850	300	58.0	690	270	64.0	460	260	4.0
4.1				11.0	820	270	41.5	730	240	54.0	640	240	61.0	430	230	4.1
5.0							30.0	540	180	48.0	500	180	56.5	350	190	5.0
5.5							11.5	440	150	42.0	420	160	52.5	310	150	5.5
5.6							8.0	420	140	41.0	400	140	51.5	300	140	5.6
6.0										35.5	360	140	48.0	270	130	6.0
6.5										27.0	320	110	43.0	230	110	6.5
7.0										13.0	290	100	38.0	200	100	7.0
7.1										7.0	280	Prohibited	33.0	180	Prohibited	7.1
7.5													32.0	170		7.5
8.0													24.0	150		8.0
8.5													10.0	130		8.5
8.61													0.0	120		8.61

https://truckmanualshub.com/

WORKING RADIUS/LIFTING HEIGHT

Standard

This diagram shows the relationship among the working radius of this machine, boom angle and lifting height above the ground with no object hoisted.
The diagram indicates that there is no deflection in the boom.
The diagram is based on the assumptions that the operation is performed without load and that the outriggers are set correctly and on a firm and level surface.
The boom (4) represents a condition where half of the "▙ mark" passes boom (3). For more information, see "RATED TOTAL LOAD CHARTS" on page 3-10.

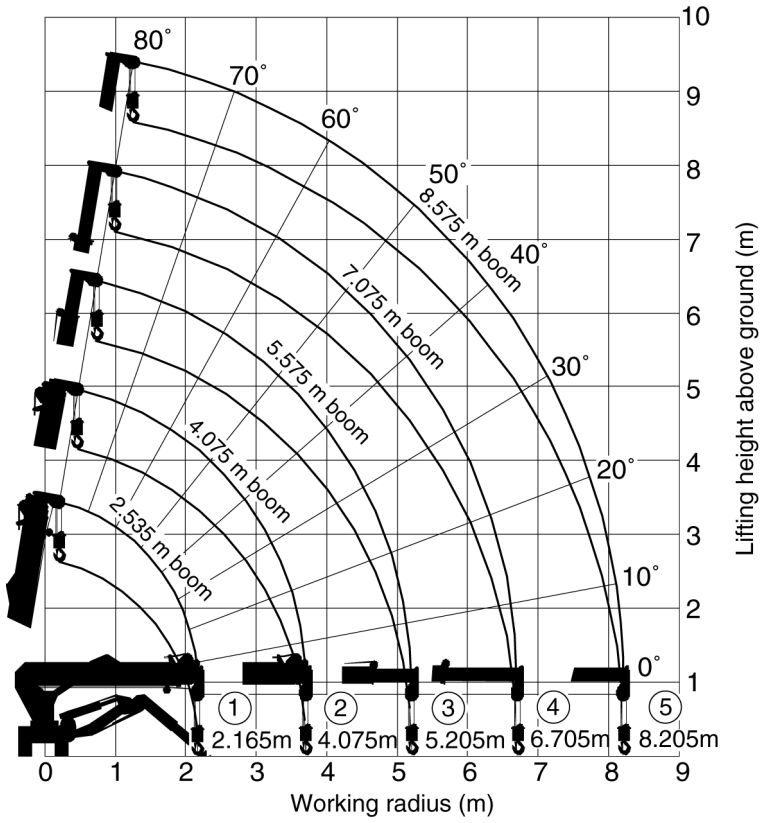

Fig 3-18

https://truckmanualshub.com/

Point A denotes a boom angle and point B denotes a lifting height above ground. The same working radius is applied to points A and B.

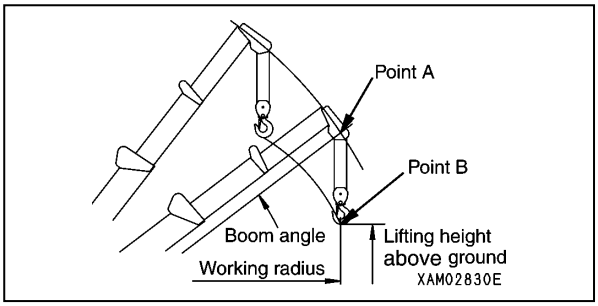

Fig 3-19

"WORKING RADIUS/LIFTING HEIGHT" on page 3-19 shows the relationships between the working radius, boom angle and lifting height at no load, with no deflection in the boom. A deflection occurs in the boom when an object is hoisted, which causes the working radius to widen slightly. This is load radius. The rated total load decreases with increase in the working radius. Actual crane operation requires planning of work, allowing for sufficient clearance more than that provided in the diagram.

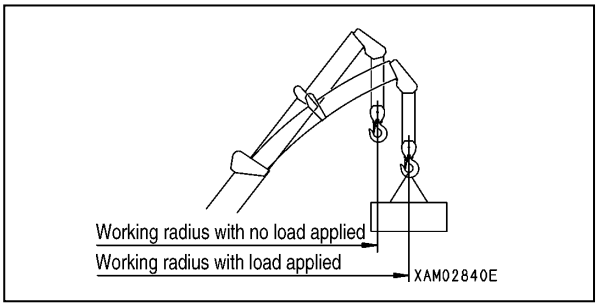

Fig 3-20

https://truckmanualshub.com/

Working Radius/Lifting Height for Searcher Hook

DANGER!

- **When using the searcher hook, be sure to set searcher hook mode for moment limiter.**
- **When using the searcher hook, the searcher hook position must always be switched to suit the actual conditions.**
- **Never use the searcher hook and the crane hook simultaneously.**

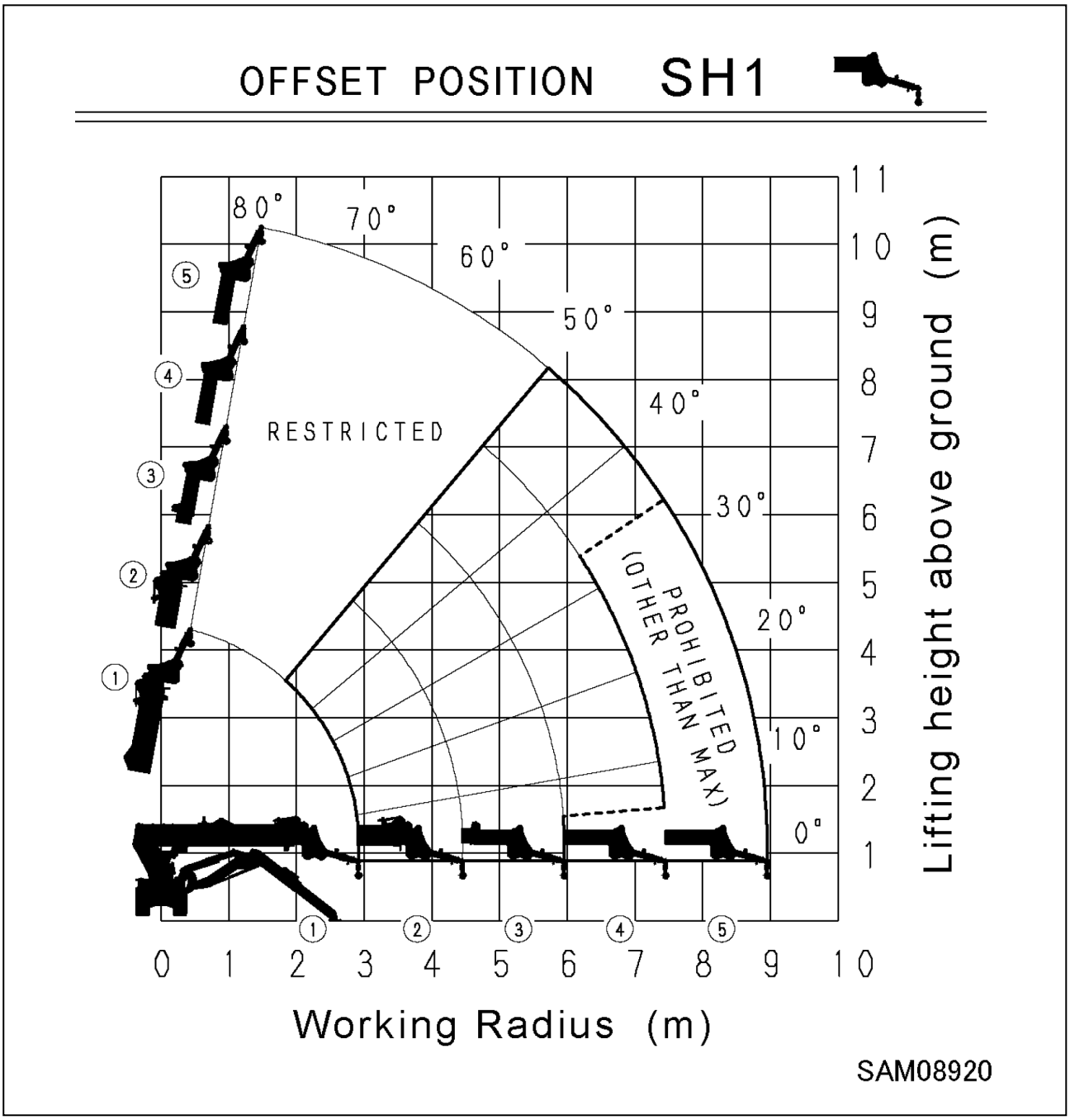

Fig 3-21-1

https://truckmanualshub.com/

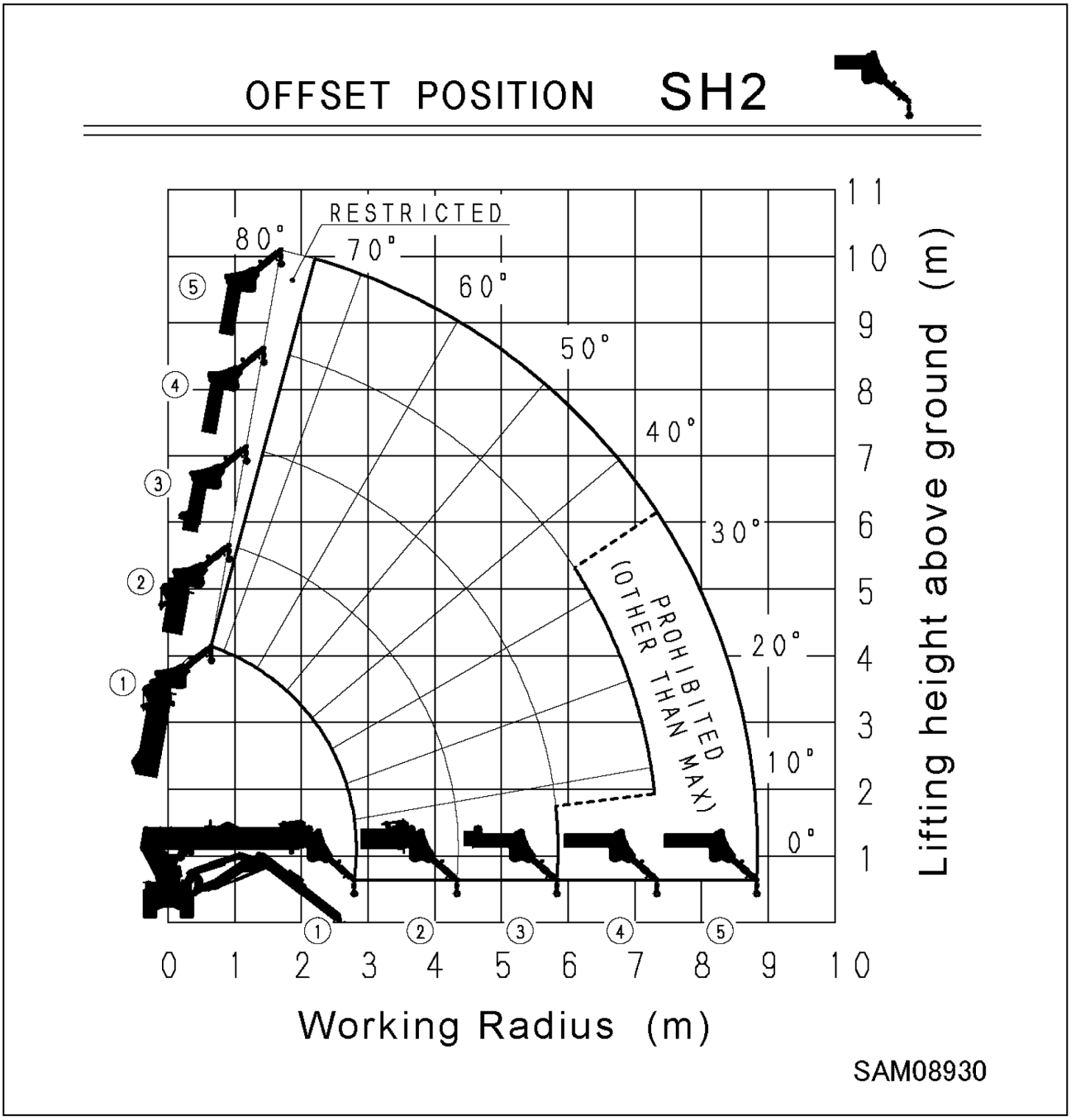

Fig 3-21-2

https://truckmanualshub.com/

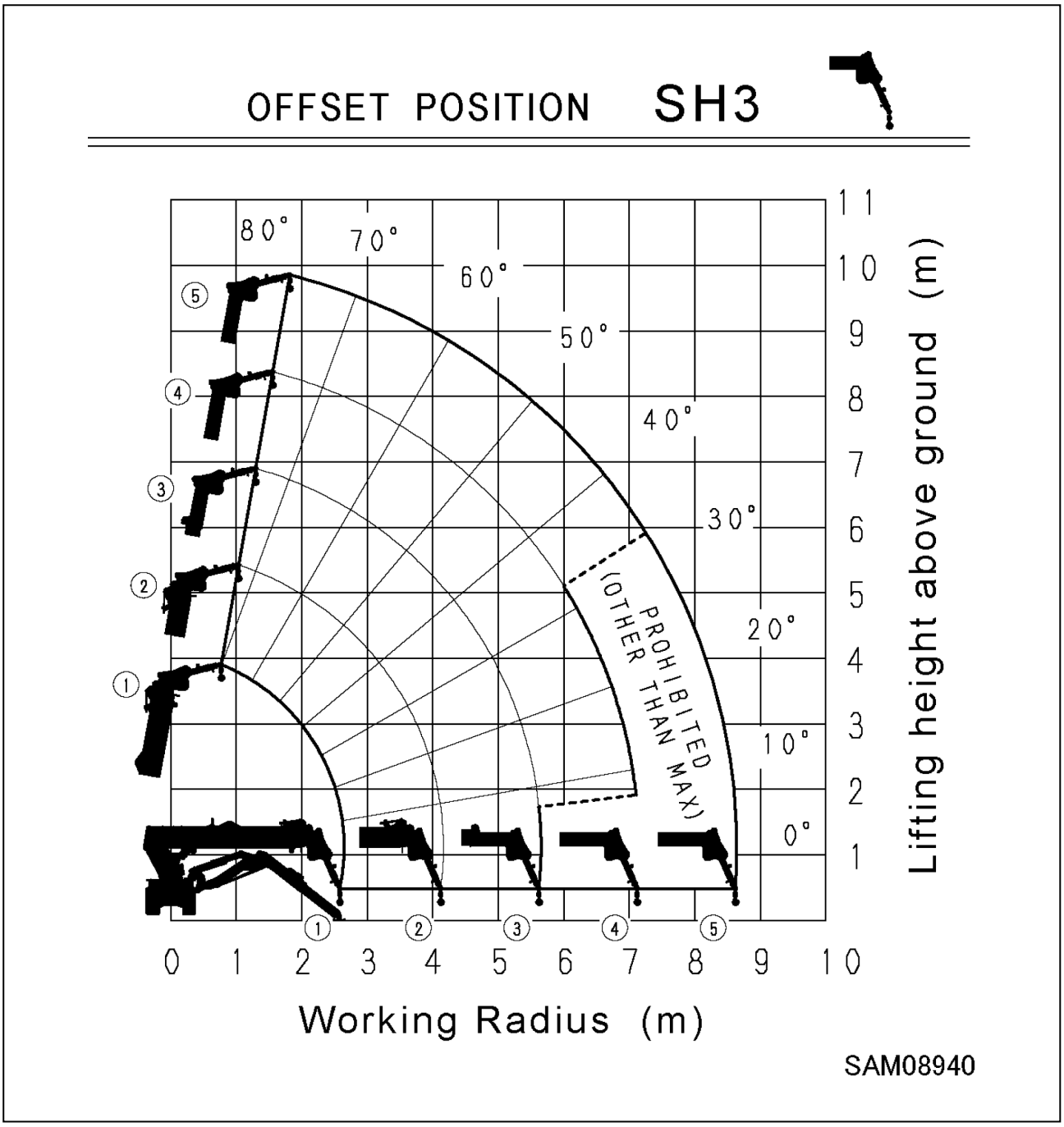

Fig.3-21-3

https://truckmanualshub.com/

This Page Intentionally Left Blank

https://truckmanualshub.com/

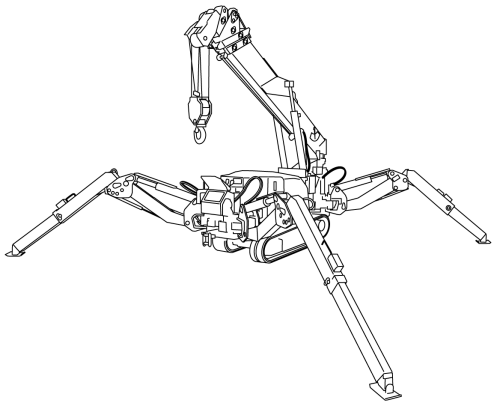

Section 4

OPERATION

https://truckmanualshub.com/

MACHINE COMPONENTS

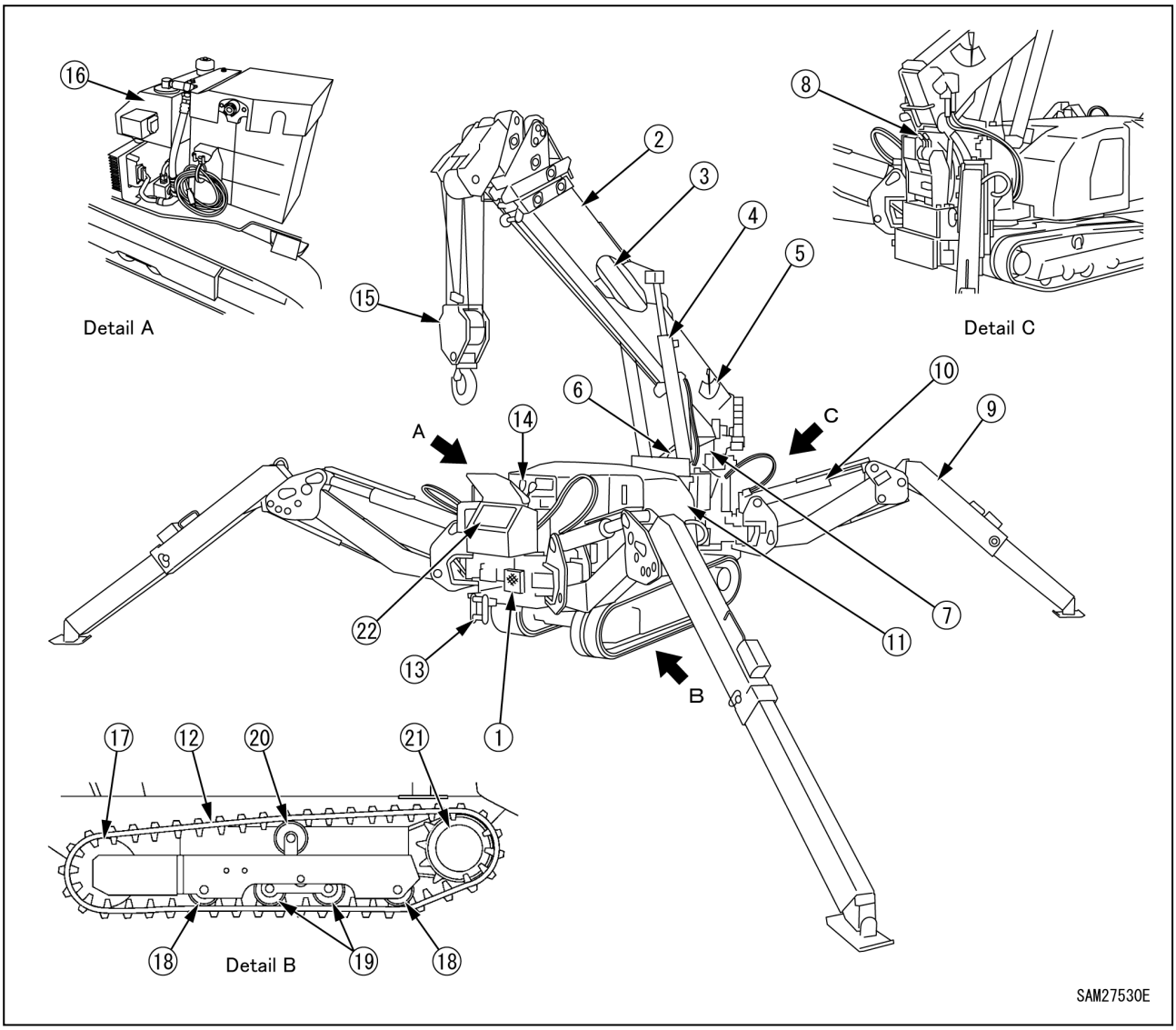

Fig. 4-1

1 - Working Light
2 - Boom
3 - Boom Telescope Cylinder (inside the boom)
4 - Boom Derrick Cylinder
5 - Angle Indicator
6 - Winch
7 - Post
8 - Travel Control
9 - Outrigger
10 - Outrigger Cylinder
11 - Machinery Cover
12 - Rubber Track
13 - Hook Hanger
14 - Crane Control
15 - Hook Block
16 - Hydraulic Oil Tank
17 - Front Idler
18 - Track Roller
19 - Tandem Track Roller
20 - Carrier Roller
21 - Travelling Motor and Sprocket
22 - Monitor

https://truckmanualshub.com/

Working Light
A working light to illuminate the front.

Boom
A boom with a 5-stage telescoping mechanism.

Boom Telescoping Cylinder
A telescoping cylinder built into the boom.

Boom Derrick Cylinder
A cylinder for lifting the main boom.

Angle Indicator
An angle meter for reading the boom angle by eye, located on either side of the boom.
See “Reading the Angle Indicator” on page 3-13 on how to read the angle indicator.

Winch
A device for winding and unwinding winch wire, composed of a motor and drum.
For operational methods for the winch, see “Hook Raising/Lowering Operation” on page 4-63.

Post
A frame of the slewing part on which the working machine is mounted.

Travel Control
A part for travel control of the machine.
For operation method of travelling, see “TRAVELLING CONTROLS AND OPERATION” on page 4-29.

Outrigger
A device for stabilizing the vehicle body horizontally, composed of 4 units.
For outrigger setup, see “OUTRIGGER SETTING” on page 4-43; for stowage see “OUTRIGGER STOWING” on page 4-53.

Outrigger Cylinder
A cylinder for extending the outrigger.

Machinery Cover
A left-right splitting machinery cover.

Rubber Tracks
Rubber tracks for travelling.
For adjusting rubber track tension, see “Adjusting Rubber Track Tension” on page 5-39.

Hook Hanger
Device on which the hook block is stowed.

Crane Control
A part for controlling the crane.

Hook Block
A hook block to hoist the load.

Hydraulic Oil Tank
A tank for putting hydraulic oil in to operate the hydraulic oil equipment.

Front Idler
Track Roller
Tandem Track Roller
Carrier Roller
Travel Motor and Sprocket
Travel device for travelling.
For operation method of travelling, see “TRAVELLING CONTROLS AND OPERATION” on page 4-29.

Monitor
A display device to display the status of the vehicle.

https://truckmanualshub.com/

BATTERY COMPONENTS

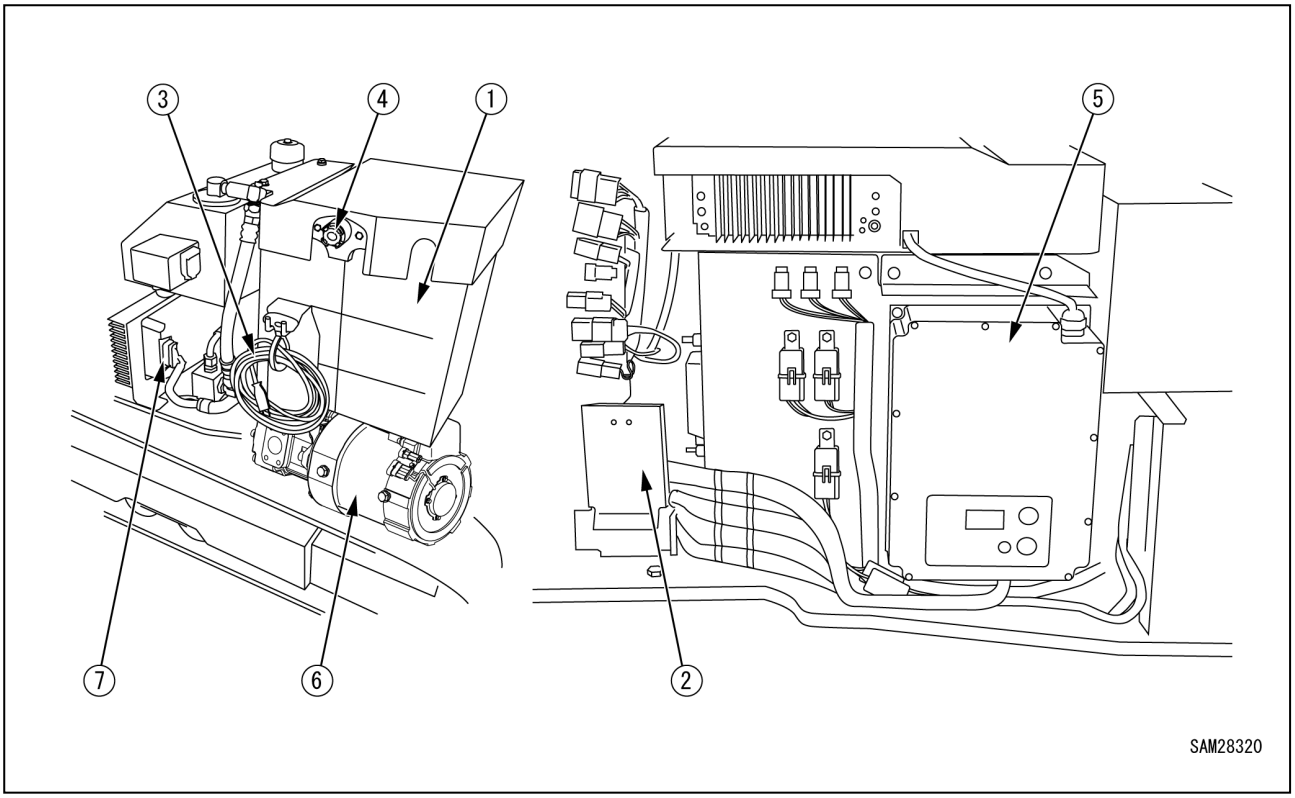

Fig. 4-2

1 - Battery
2 - Battery Charging Port
3 - Power Supply Cable
4 - Disconnect Switch
5 - Charger
6 - Electric Motor
7 - Motor Controller

https://truckmanualshub.com/

Battery
A power supply unit for powering the machine.

Battery Charging Port
A port for connecting the power supply cable to charge the battery.

Power Supply Cable
A cable used to connect the battery charging port and power supply outlet for charging the battery. This differs for 100 V and 200 V.

Disconnect Switch
A switch for shutting off the power from the battery.

- LOCK: Provides power from the battery
- UNLOCK: Isolates the battery

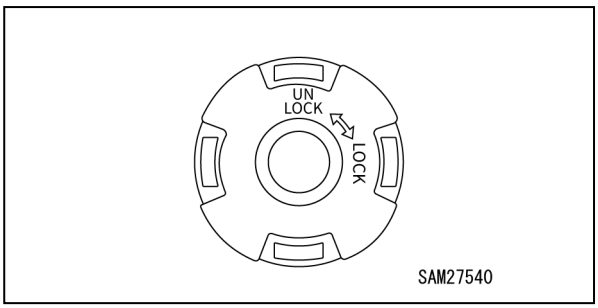

Fig. 4-3

Charger
A device that provides charging power from an input power source and controls the battery charging.

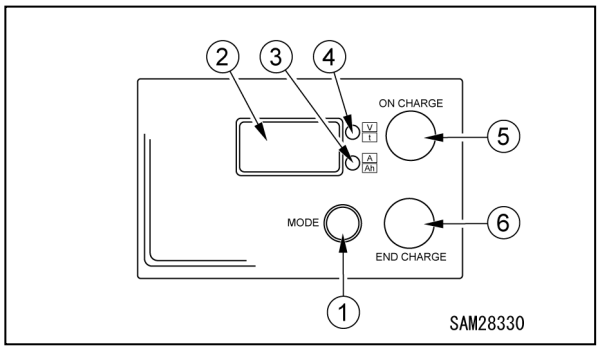

Fig. 4-4

The battery includes a display and features the following functions:

- Mode switch (1)
  Press to display information on the display.
- Display (2)
  Displays various information.
- Current/Time display selector switch (3)
  Press to toggle the display between current and time.
- Voltage/Capacity display selector switch (4)
  Press to toggle the display between voltage and capacity.
- On Charge lamp (5)
  Lights up when charging is in progress.
- End Charge lamp (6)
  Lights up when charging is complete.

Electric Motor
A motor that converts electrical energy into mechanical energy.

Motor Controller
A controller for controlling the electric motor.

https://truckmanualshub.com/

TRAVEL CONTROLS

Control Location

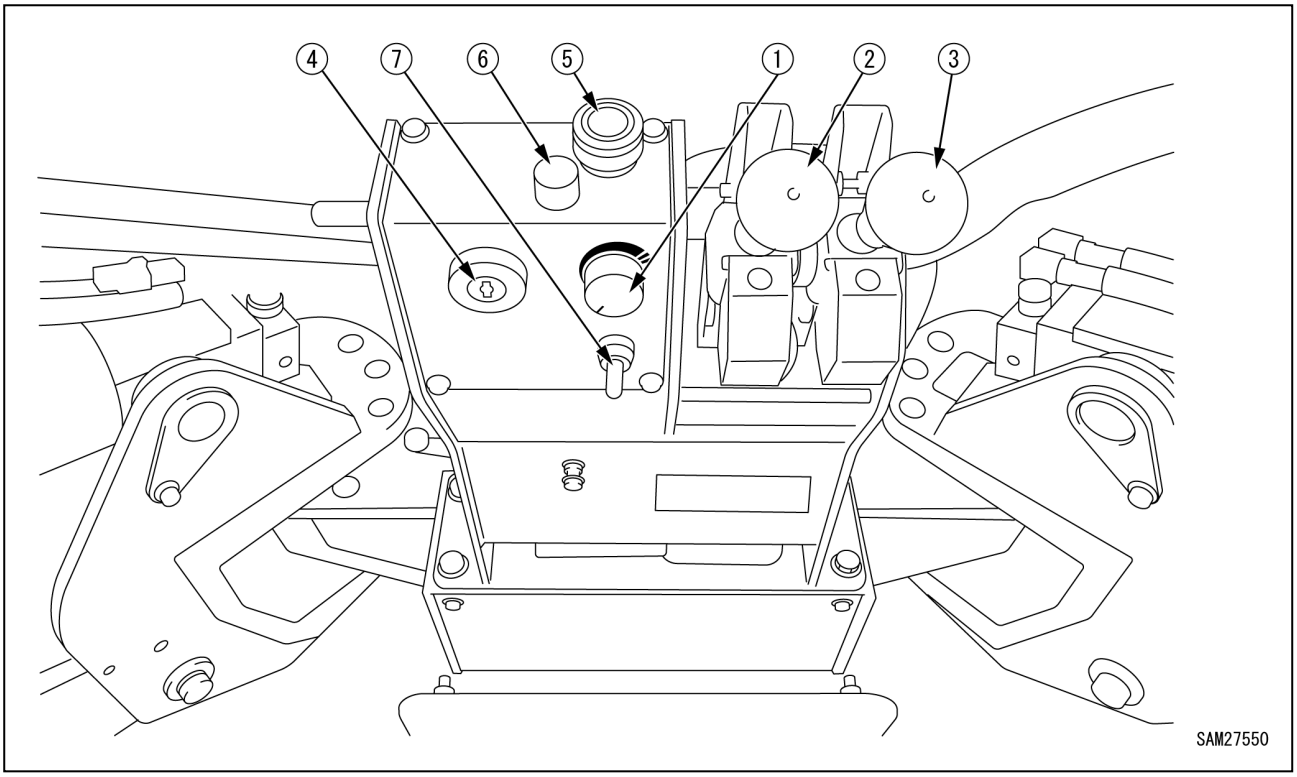

Fig. 4-5

1 - Motor Speed Adjuster Dial
2 - L. H. Travel Lever/Locking lever
3 - R. H. Travel Lever/Locking lever
4 - Starter Switch
5 - Emergency Stop Switch (EMO)
6 - Horn Switch
7 - Working Light Switch

https://truckmanualshub.com/

Switches

Motor Speed Adjuster Dial

Used to adjust the motor speed when travelling.

- MIN: Turning the dial counterclockwise (to the left) reduces the motor speed.
- MAX: Turning the dial clockwise (to the right) increases the motor speed.

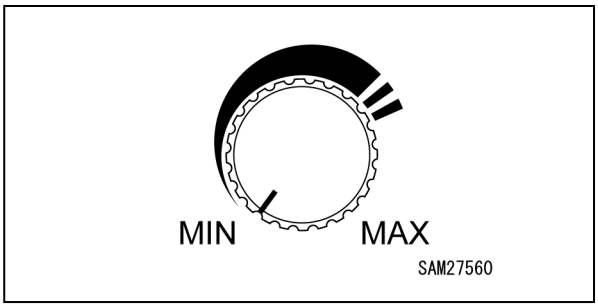

Fig. 4-6

NOTICE:

- *Release your hand from the dial once the motor speed has increased to that required for the task. The dial will remain in that position.*
- *The motor speed adjusted using the dial applies only when in travel mode.*

L. H. Travel Lever/Locking lever
R. H. Travel Lever/Locking lever

Use these levers to move the machine forward/backward, stop, turn, and to adjust the travelling speed.

For more information, see “Directional Controls” on page 4-31.

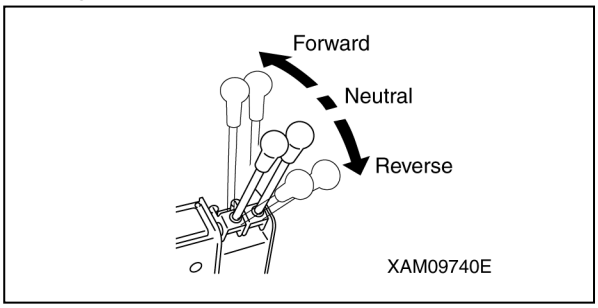

Fig. 4-7

The travel lever functions as a locking lever and is used to switch between machine travel operations and crane/outrigger operations.

- Travel: Pull up the lever while releasing the lock to allow travel operations.
- Crane/Outrigger: Push in and stow the lever while releasing the lock to allow crane/outrigger operations.

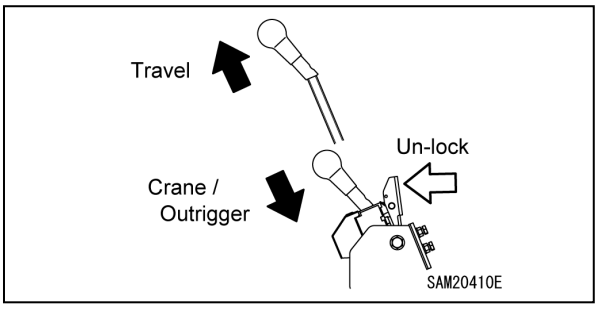

Fig. 4-8

NOTICE: The following table shows how the lever position corresponds to the devices that can be operated.

Lever position	Crane (✓: Operates -: Does not operate)					
	Travel operation	Outrigger operation	Crane operation	Radio Remote control system		Moment limiter
				Crane	Outrigger	
Travel	✓	-	-	-	-	-
Crane/ Outrigger	✓ (*)	✓	✓	✓	✓	✓

Operations marked (*) in the table are available but should be avoided for safety reasons (other than for inspections or maintenance).

NOTICE: Depending on the machine status, safety devices other than the lever positions may activate, thus preventing operation.

Starter Switch

The Starter Switch is used to start and stop the machine.

- OFF: You can insert/remove the key at this position. All the switches in the electrical system are turned off and the machine stops.
- ON: Electricity runs into all the circuits.

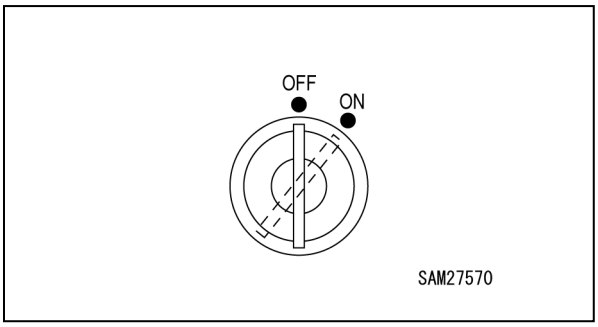

Fig. 4-9

https://truckmanualshub.com/

Emergency Stop Switch (EMO)

The Emergency Stop Switch (EMO) is used to stop the machine in the event of an accident or emergency.

The Emergency Stop Switch (EMO) must be in the OFF position to start the machine.

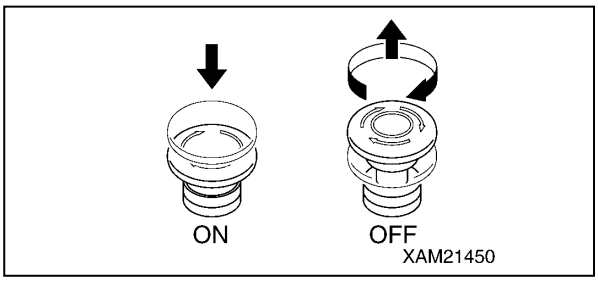

Fig. 4-10

- ON: Press switch down to stop machine.
- OFF: Turn switch clockwise (right) to allow the switch to return to the ON position.

  The switch returns to its original position, and the emergency stop state is reset.

When restarting after an emergency stop, return all of the levers to their neutral positions, then return the emergency stop switch to the “OFF” position.

Horn Switch

The Horn Switch is used to sound the horn.

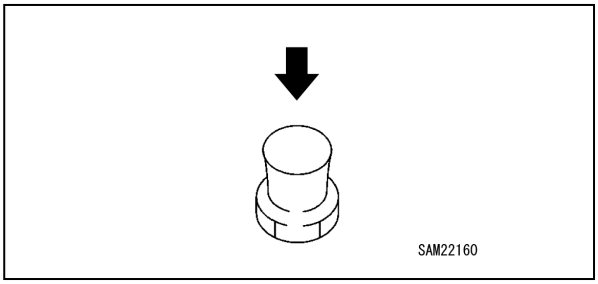

Fig. 4-11

NOTICE:

- *The horn sounds only for as long as the switch is pressed down. Release the switch to silence the horn.*
- *The horn switch is provided on the crane operation side as well.*

Working Light Switch

The Working Light Switch is used to turn on the working light on the front of the machine.

- ON: Push the switch upward to turn the Working Light on.
- OFF: Push the switch downward to turn the Working Light off.

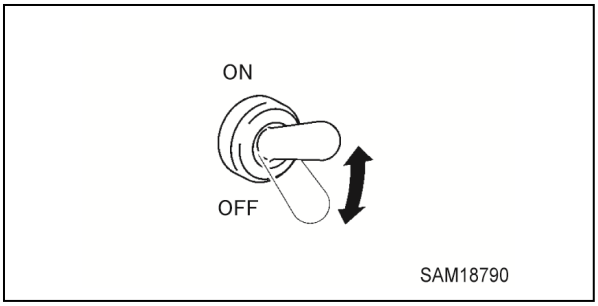

Fig. 4-12

The working light does not operate when the Starter Switch is in the OFF position.

https://truckmanualshub.com/

CRANE AND BOOM CONTROLS

Control Location

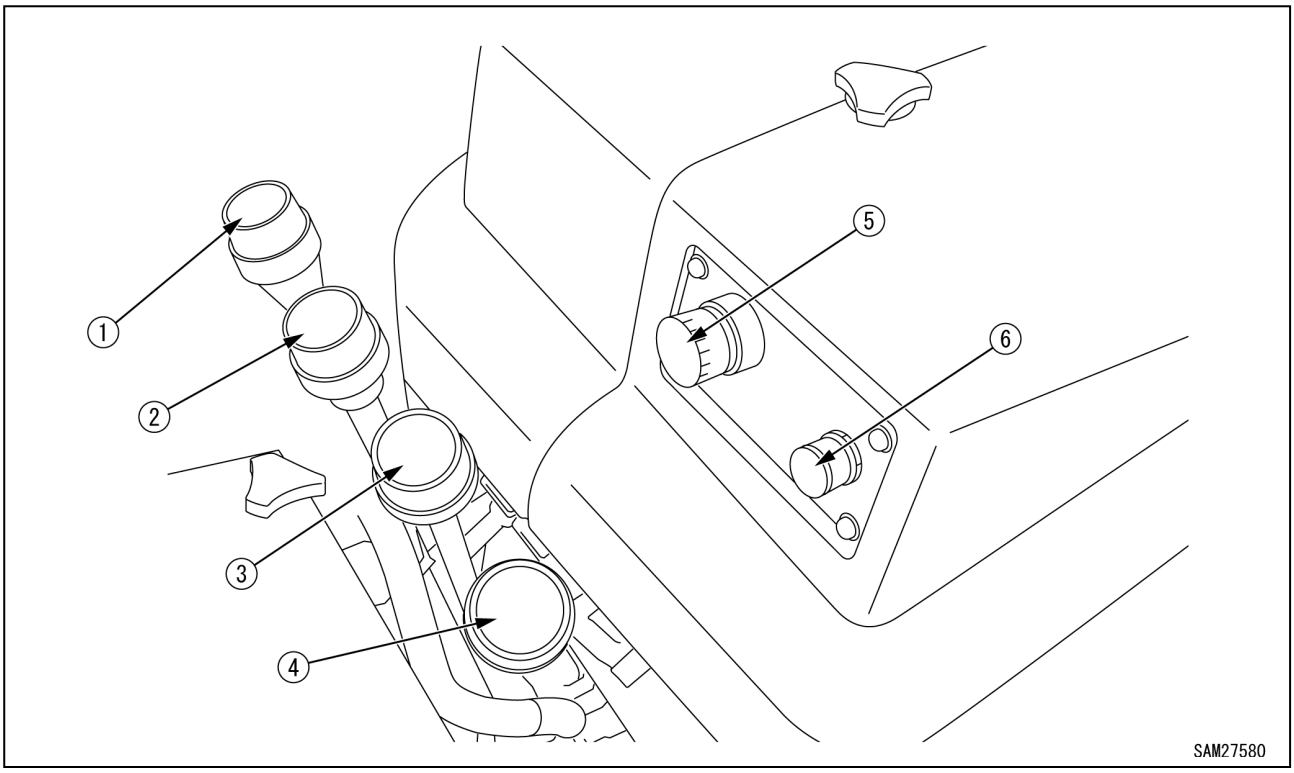

Fig. 4-13

1 - Slewing Lever
2 - Boom Telescoping Lever
3 - Winch Lever
4 - Boom Lift Lever
5 - Emergency Stop Switch (EMO)
6 - Horn Switch

https://truckmanualshub.com/

Controls

Slewing Lever

The slewing lever is used to slew the crane boom and post.

Boom Telescoping Lever

The boom telescoping lever is used to telescope the crane boom.

Winch Lever

The winch lever is used to raise and lower the hook block of the crane.

Boom Lift Lever

The boom lift lever is used to raise and lower the boom of the crane.

Emergency Stop Switch (EMO)

The Emergency Stop Switch (EMO) is used to stop the machine in the event of an accident or emergency.

The Emergency Stop Switch (EMO) must be in the OFF position to start the machine.

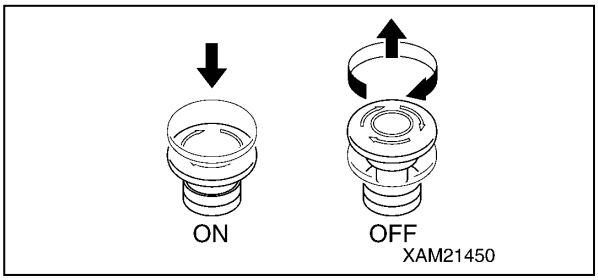

Fig. 4-14

- ON: Press switch down to stop machine.
- OFF: Turn switch clockwise (right) to allow the switch to return to the ON position.

  The switch returns to its original position, and the emergency stop state is reset.

When restarting after an emergency stop, return all of the levers to their neutral positions, then return the emergency stop switch to the “OFF” position.

Horn Switch

The Horn Switch is used to sound the horn.

NOTICE:

- *The horn sounds only for as long as the switch is pressed down. Release the switch to silence the horn.*
- *The horn switch is provided on the crane operation side as well.*

https://truckmanualshub.com/

MONITOR

Starting Screen

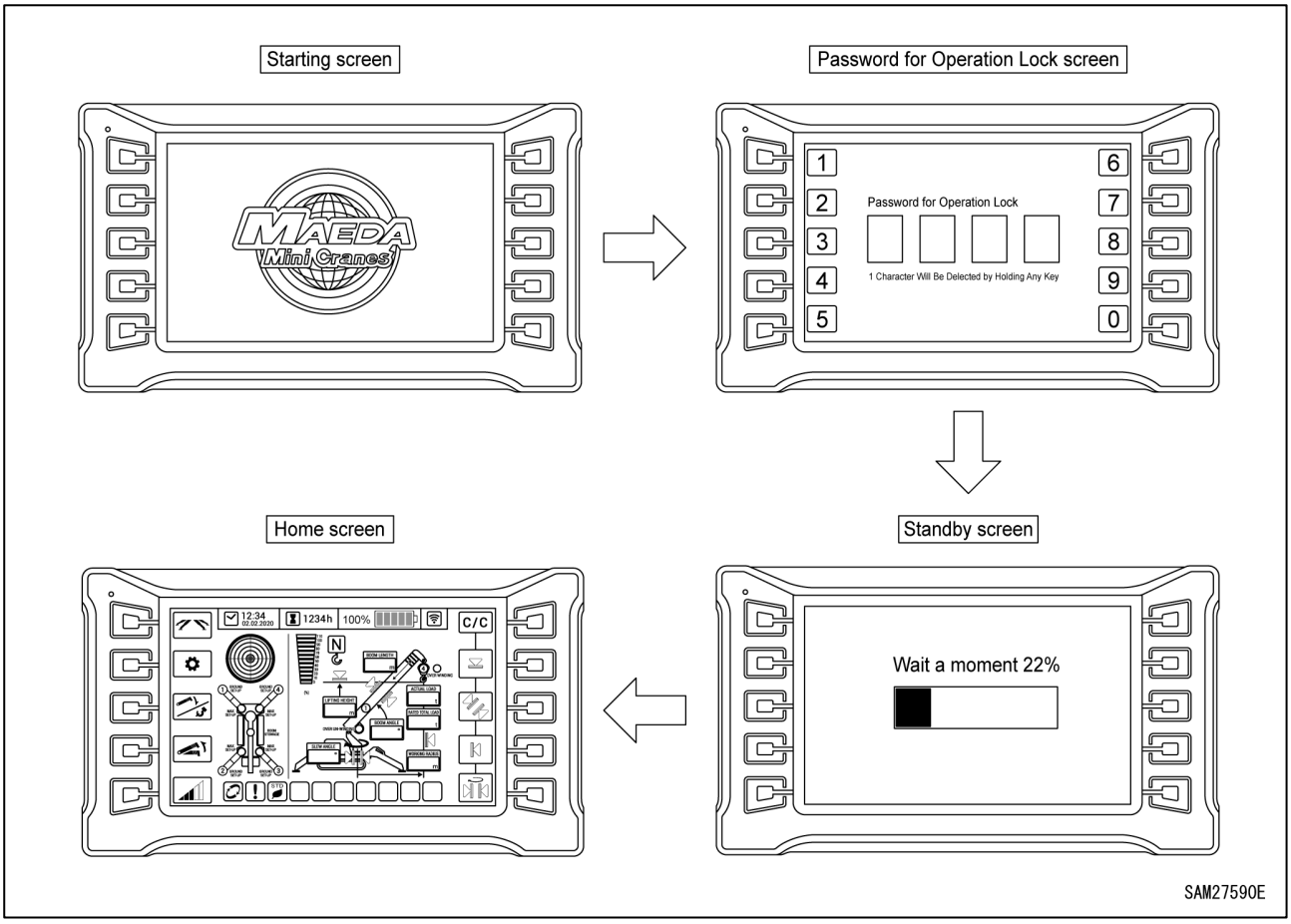

Fig. 4-15

When the Starter Switch is turned “ON”, the starting screen is displayed.

If operation lock password entry is activated then after the startup screen is displayed, the operation lock password screen will display.

Next, a standby screen appears before switching to the home screen.

When the travel lever is pulled up, the home screen switches to the travel screen. Only travel operations are possible on this screen. The crane and outriggers cannot be operated.

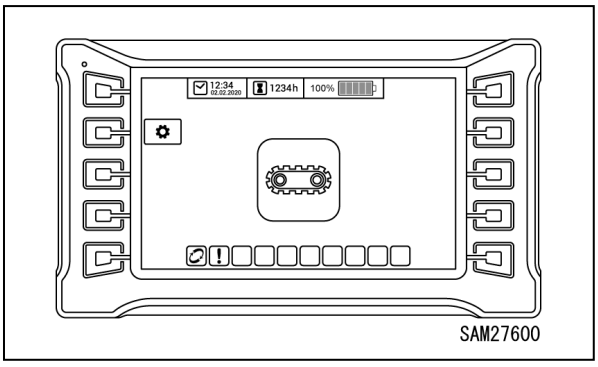

Fig. 4-16

https://truckmanualshub.com/

Home Screen

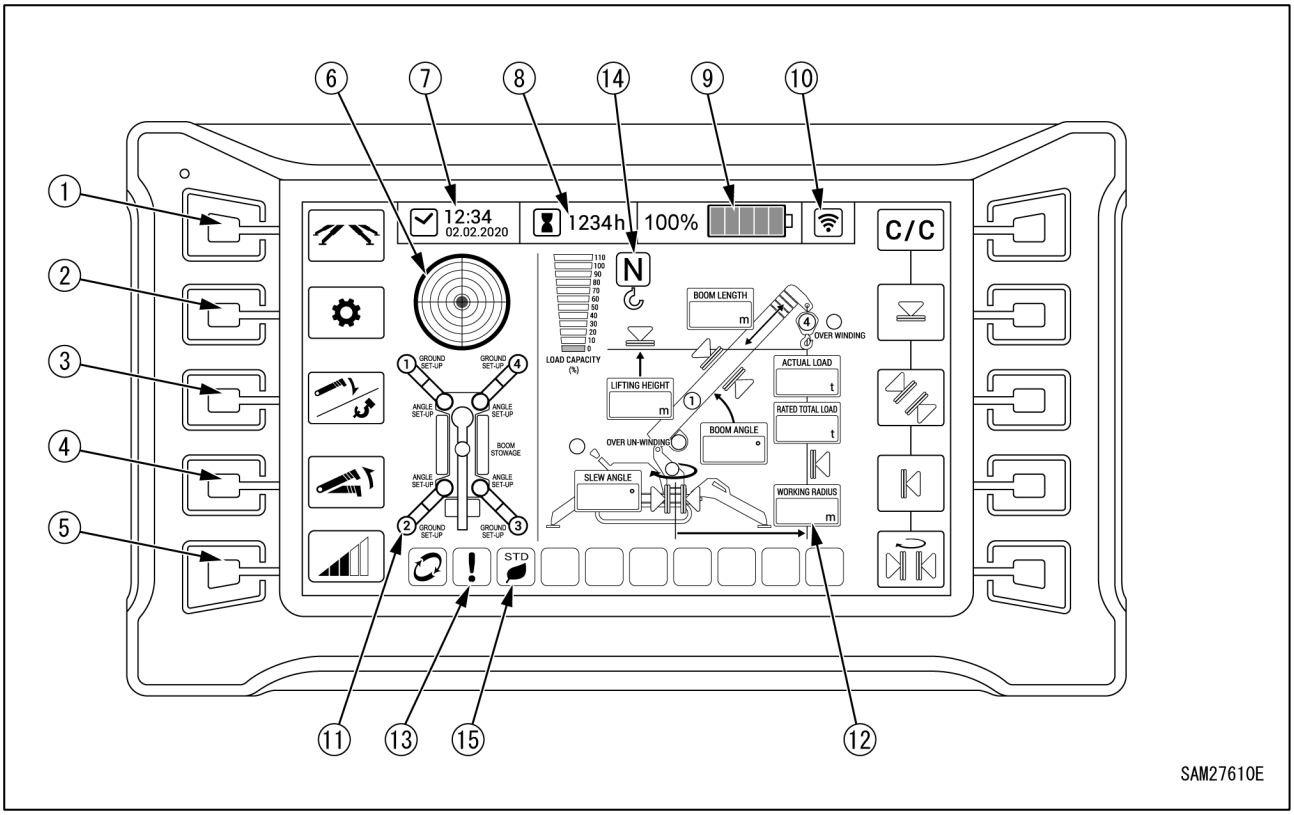

Fig. 4-17

1 - Outrigger Mode Switch
2 - User Mode Switch
3 - Hook Stowage/Boom Stowage Switch
4 - Boom Lift Bypass Switch
5 - Motor Speed Adjuster Switch
6 - Level Gauge
7 - Time Display
8 - Hour Meter Display
9 - Battery Level Indicator
10 - Radio Remote Control System Connection Indication
11 - Outrigger Status Display
12 - Moment Limiter Status Display
13 - Warning Display
14 - Normal/Multi Mode Display
15 - Eco Mode Display

https://truckmanualshub.com/

Outrigger Mode Switch

Used when operating the outriggers

Press the switch to switch to outrigger mode.

For more information on outrigger mode, see “Outrigger Mode” on page 4-41.

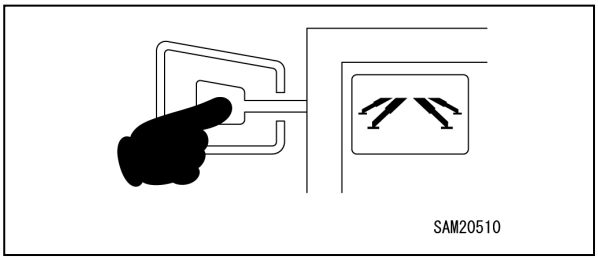

Fig. 4-18

User Mode Switch

Used for user settings.

Press the switch to switch to user mode.

For more information on user mode, see “User Mode” on page 4-17.

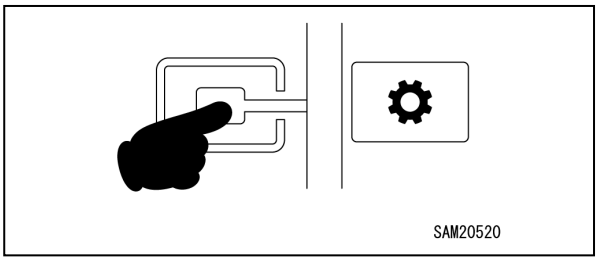

Fig. 4-19

Hook Stowage/Boom Stowage Switch

Used when stowing the hook or the boom

Press the switch to display the selection for hook stowage and boom stowage.

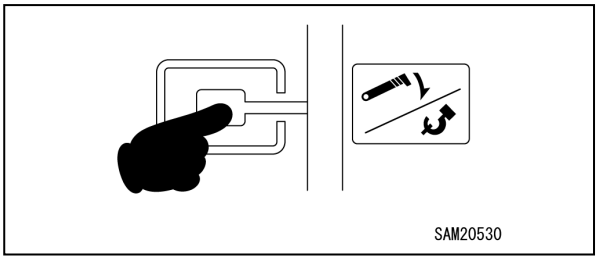

Fig. 4-20

The hook or boom can be stowed by pressing each switch.

- Boom stowage: Switch (3-1)
- Hook stowage: Switch (3-2)

For more information on stowage procedures, see “Crane Stowing Operation” on page 4-67.

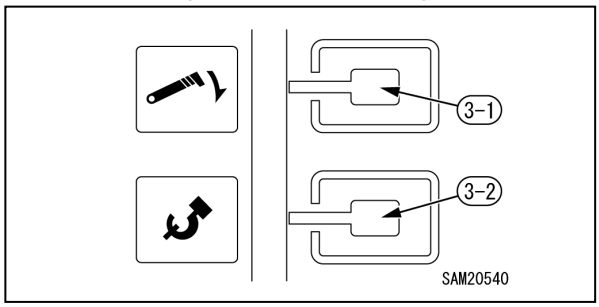

Fig. 4-21

Boom Lift Bypass Switch

Used to lift the boom in overload state

Lifting is possible only while the switch is pressed down. For more information on the operation of Boom Lift Bypass Switch, see "Recovery Operation after Auto-Stop" on page 4-74.

NOTICE: For more information on how to use the switch, see “Home Screen” on page 4-12.

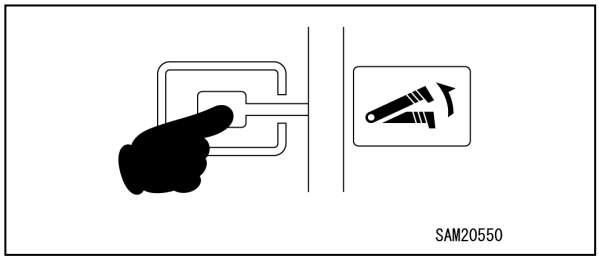

Fig. 4-22

https://truckmanualshub.com/

Motor Speed Adjuster Switch

Used to adjust the motor speed when operating the crane.

Pressing the switch increments the motor speed in five steps.

NOTICE:

The switch is not displayed when radio remote control communication is being used.

The motor speed adjusted applies only when in crane mode and outrigger mode.
If the motor speed is limited by an eco mode setting, the eco mode setting takes precedence.

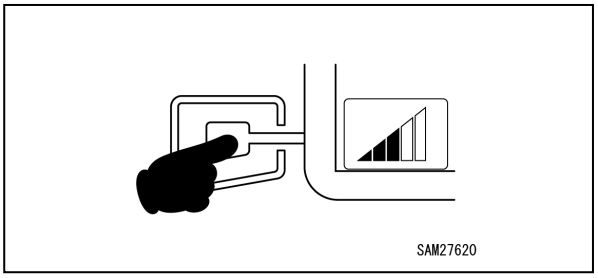

Fig. 4-23

Motor speed	Icon
900 rpm	
1300 rpm	
1700 rpm	
2100 rpm	
2500 rpm	

Level Gauge

Displays the tilt status of the machine.

The position of the yellow bubble indicates the direction in which the machine is tilting.

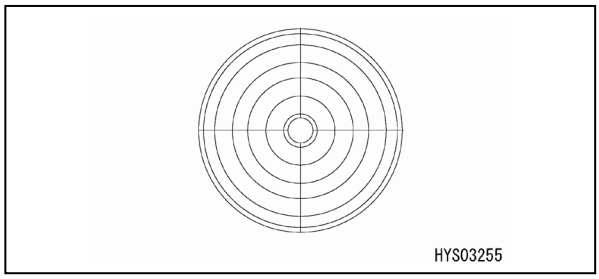

Fig. 4-24

Time Display

Displays the time set.

Hour Meter Display

Displays cumulative hours of operation.

https://truckmanualshub.com/

Battery Level Indicator

Displays the battery level.

NOTICE: The flash sign at the centre of the indicator appears only when the battery is being charged.

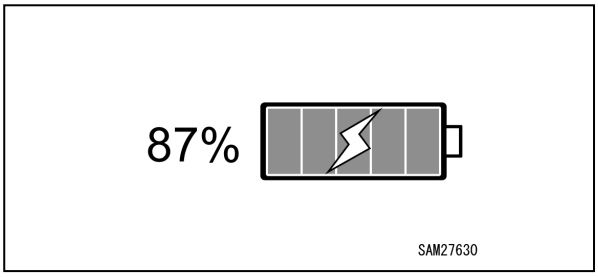

Fig. 4-25

Charge	Icon
0%	
1 to 20%	
21 to 40%	
41 to 60%	
61 to 80%	
81 to 100%	

- The icon blinks when the charge is between 1% and 10%.
- The alarm buzzer emits two short beeps intermittently by an interval of 30 seconds when the charge is 20% or less.
- The alarm buzzer emits a short beep intermittently by an interval of 30 seconds when the charge is 10% or less.

Radio Remote Control System Connection Display

Displays the current radio remote control system connection status.

- On: The radio remote control system is connected.
- Off: The radio remote control system is not connected.

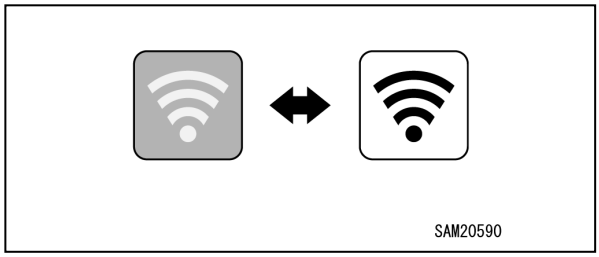

Fig. 4-26

Outrigger Status Display

Displays the current outrigger status.

For more information on display content, see “OUTRIGGER INDICATORS” on page 4-38.

Moment Limiter Status Display

Displays the current moment limiter status.

For more information on display content, see “Moment Limiter Display” on 4-76.

Warning Display

Displays illuminated warnings.

For more information on the display content, see “Warning Display” on page 4-22.

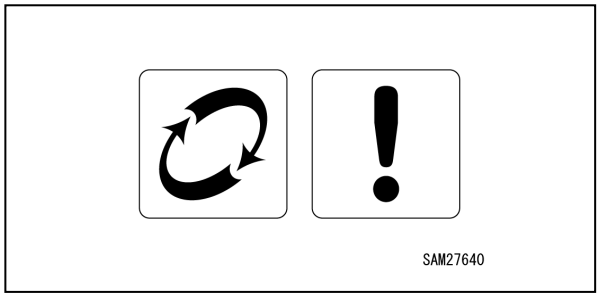

Fig. 4-27

https://truckmanualshub.com/

Normal/Multi Outrigger State Display

The display changes automatically to indicate the current outrigger extension status.

- N lit: Normal Outrigger State
- M lit: Multi Outrigger State
- M blinking: Multi Mode failed

The crane cannot be used in this state. See “Setting Outriggers (Multi Outrigger State)” on page 4-47 and redeploy the outriggers.

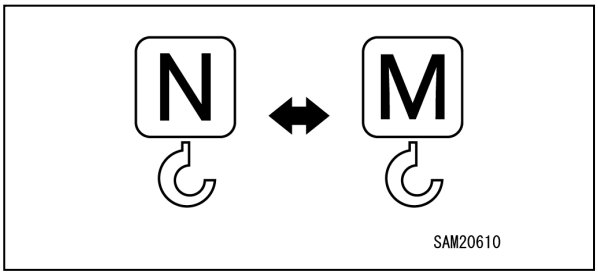

Fig. 4-28

Eco Mode Display

Displays the eco mode status currently set.

- STD: Standard mode
- ECO1: Eco mode 1
- ECO2: Eco mode 2

For information on the eco mode settings, see "User Mode" on page 4-17.

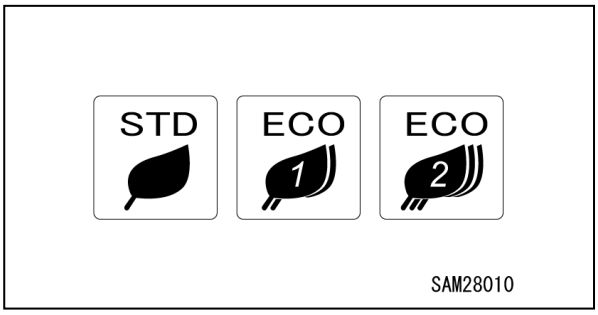

Fig. 4-29

https://truckmanualshub.com/

User Mode

When the User Mode Switch is pressed on the Home Screen, the User Mode is displayed.

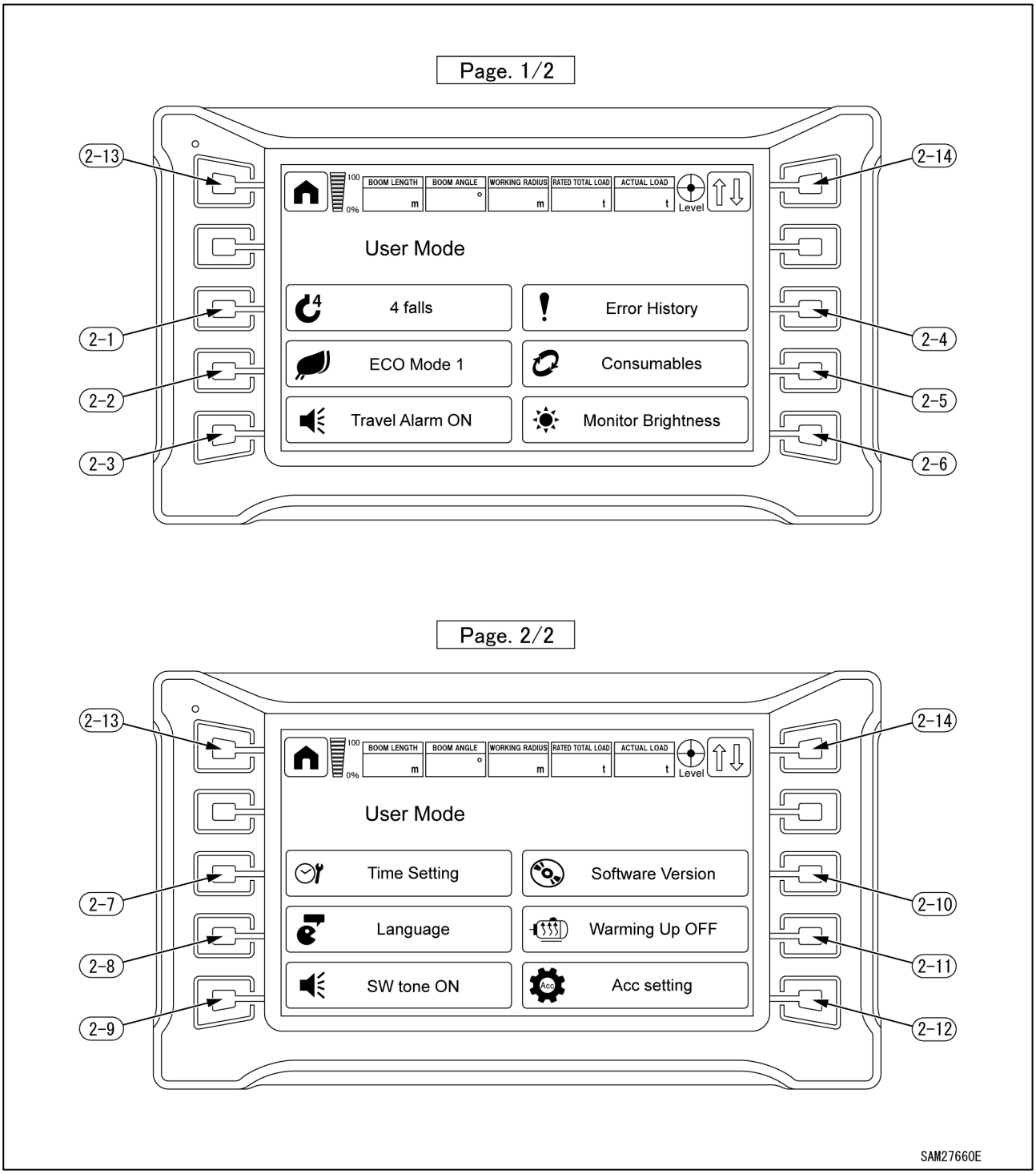

Fig. 4-30

(2-1) Number of Falls Change
(2-2) Eco Mode Setting Selection
(2-3) Travel Alarm ON/OFF Selection
(2-4) Error History Display
(2-5) Consumables Display
(2-6) Monitor Brightness Adjustment
(2-7) Time Setting
(2-8) Language Change
(2-9) Switch Tone ON/OFF Change
(2-10) Software Version Check
(2-11) Warming Up ON/OFF Selection
(2-12) Radio Remote Control System Accelerator Switch
(2-13) Home Switch
(2-14) Display Page Change

https://truckmanualshub.com/

Number of Falls Change

Number of falls can be changed.

- 4 falls
- 2 falls
- Single fall

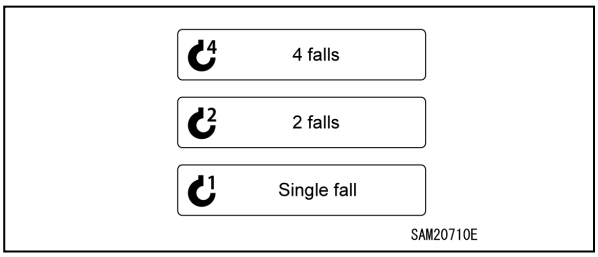

Fig. 4-31

When the number of falls is changed, the number on the hook fall of the moment limiter changes and rated total load changes.

Be sure to match the displayed number with the actual number of falls.

Eco Mode Setting Selection

Allows the motor speed limiting mode to be selected.

- Standard Mode: The motor speed is not limited. This allows the machine performance to be used to the maximum.
- Eco Mode 1: This limits the maximum motor speed for individual operations. It balances operability with battery consumption by limiting the motor speed without having to alter the operating speed for individual tasks.
- Eco Mode 2: This limits the maximum motor speed for all operations. The maximum motor speed is limited for all operations, so operating speed may be reduced. On the other hand, battery consumption is minimized.

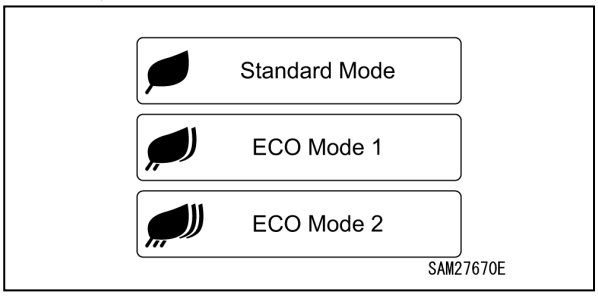

Fig. 4-32

Travel Alarm ON/OFF Selection

Allows the travel alarm to be switched on or off.

- ON: The alarm sounds when the machine is travelling.
- OFF: The alarm does not sound when the machine is travelling.

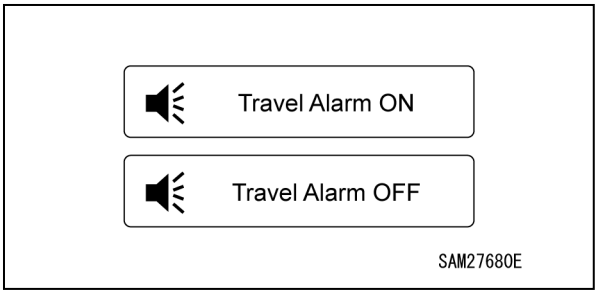

Fig. 4-33

Error History Display

Allows review of current or past errors.

- Red text: Current errors
- White text: Past errors

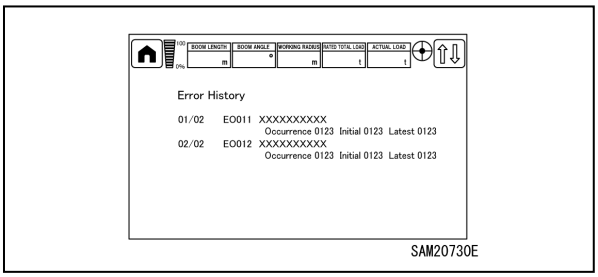

Fig. 4-34

For more information on error codes, see “Error Codes” on page 5-62.

https://truckmanualshub.com/

Consumables Display

Lists consumables and indicates the time until the next scheduled replacement.

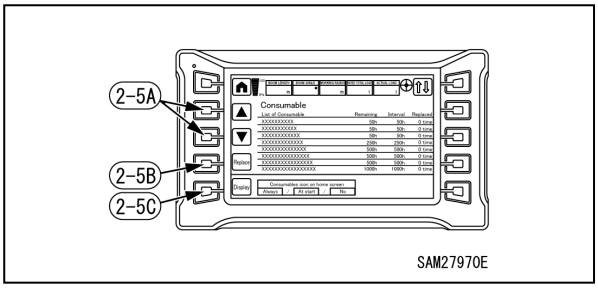

Fig. 4-35

For more information on consumables list, see “CONSUMABLES” on 5-6.

If a consumable has been replaced, use the ▲ or ▼ adjuster switches (2-5A) to select the consumable replaced. Once a consumable has been selected, hold down the replacement switch (2-5B) to update the replacement time. Updating increments the number of replacements by 1 and resets the time remaining.

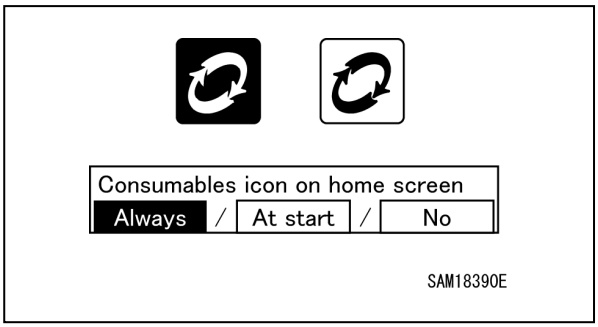

Fig. 4-36

If “Always” or “At start” is selected for the consumable icon display selection (2-5C), yellow text and a white icon will appear on the Home screen if the remaining time is 30 h or 3 days, while red text and a red icon will appear on the Home screen when the remaining time is 0 h or 0 days.

Replace consumable promptly. Continued use past the recommended replacement date may be dangerous and harm the machine.

NOTICE: We recommend setting the consumable icon display selection (2-5C) to “Always.”

Always: Consumable icons are constantly displayed on the Home screen if the replacement time is approaching or has been exceeded.

At start: Consumable icons are displayed only for 30 seconds after displaying the Home screen if the replacement time is approaching or has been exceeded.

No: Consumable icons are not displayed on the Home screen, even if the replacement time is approaching or has been exceeded.

Monitor Brightness Adjustment

The monitor brightness can be adjusted.

Make adjustments with ◄ or ► of adjustment switch(2-6A).

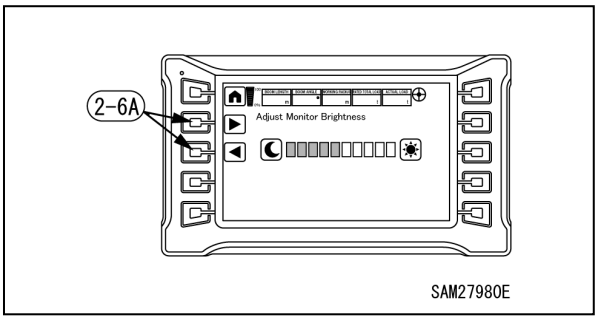

Fig. 4-37

https://truckmanualshub.com/

Time Setting

The time setting, 24/12 hour display and summer time ON/OFF can be changed.

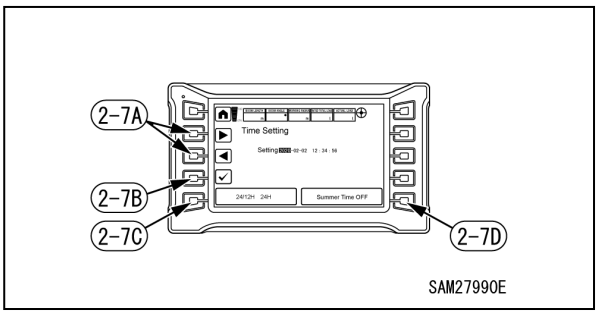

Fig. 4-38

Setting the time

Select the date and time desired to be changed with ◄ or ► of the adjustment switch (2-7A) and press the check mark (2-7B).

(The part whose background is white is selected.)

When the word colour turns red, editing becomes possible.

Make adjustments with ◄ or ► of the adjustment switch in this condition.

When the check mark is finally pressed, editing is completed.

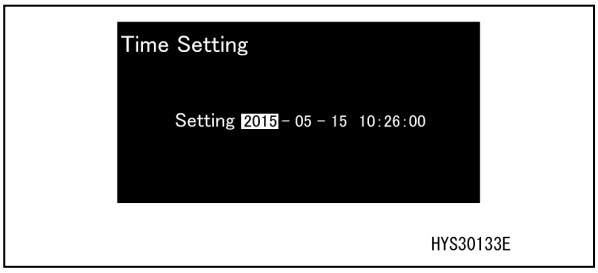

Fig. 4-39

24/12 Hour Display Change

When the switch (2-7C) is pressed, time display can be changed to either 24 hour display or 12 hour display.

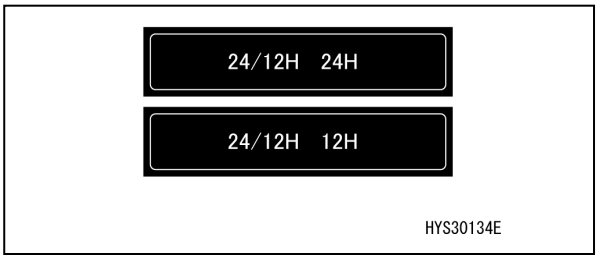

Fig. 4-40

Summer Time ON/OFF

When the switch (2-7D) is pressed, ON or OFF of summer time can be selected.

- Summer Time OFF: Originally set time is displayed.
- Summer Time ON: Time display is moved up by one hour.

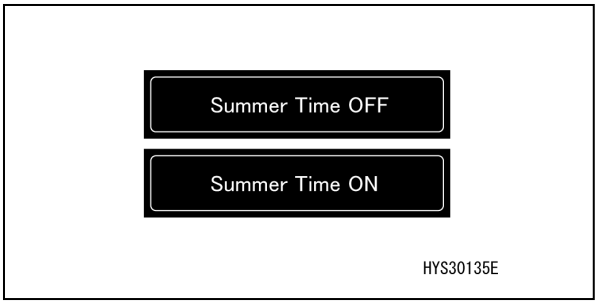

Fig. 4-41

Language Change

The display language can be changed and reset.

- English: Switches the display language to English.
- Japanese: Switches the display language to Japanese.
- Reset: Switches to the default language setting.

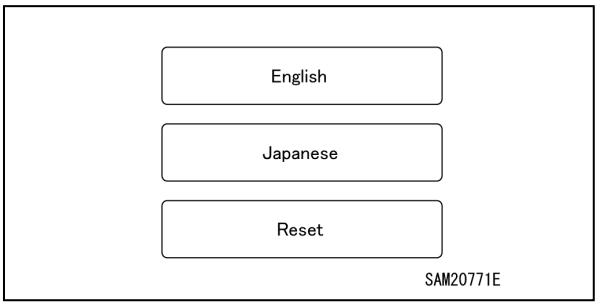

Fig. 4-42

https://truckmanualshub.com/

Switch Tone ON/OFF Change

When the switch is pressed, switch tone can be turned OFF and ON.

- OFF: No tone is heard when switches are operated.
- ON: Tone is heard when switches are operated.

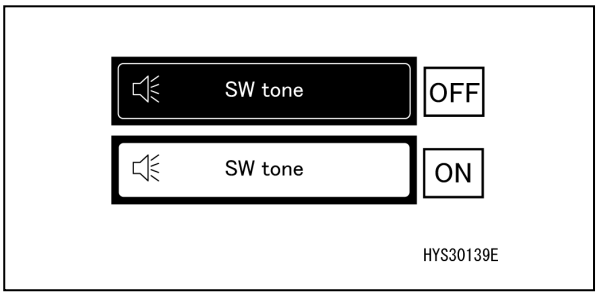

Fig. 4-43

Software Version Check

The version of the controller software and monitor can be checked.

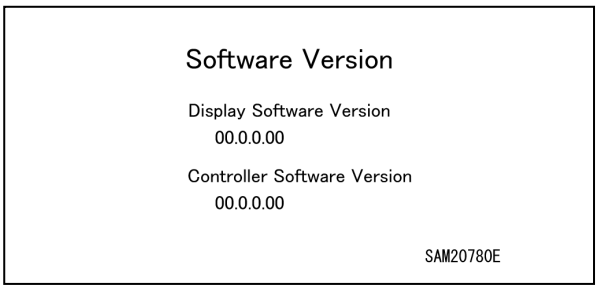

Fig. 4-44

Warming Up ON/OFF Selection

Allows warming-up to be switched on or off.

- ON: The motor rotates even under no load when the starter switch is turned on.
- OFF: The motor does not rotate under no load when the starter switch is turned on. The motor rotates when the levers are operated.

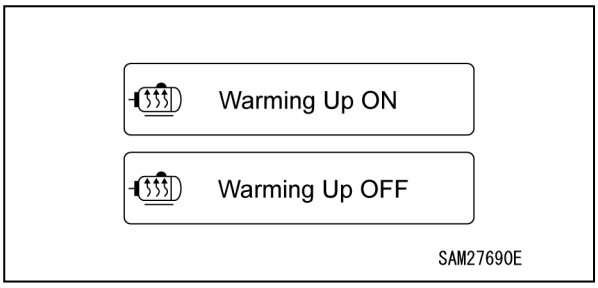

Fig. 4-45

NOTICE: It is recommended that warming-up be turned on in cold conditions, as the machine and the hydraulic oil may take time to warm up.

Radio Remote Control System Accelerator Switch

The acceleration value can be adjusted for use of the radio remote control system operation lever.

Set the desired value using ◄ or ► on the adjustment switch (2-12A).

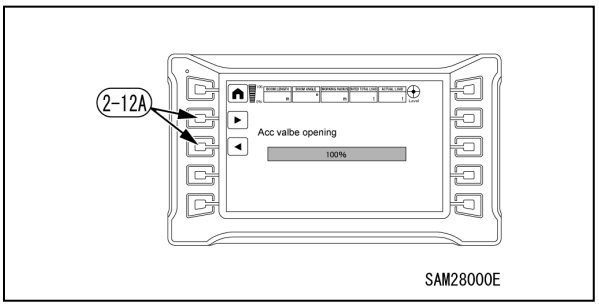

Fig. 4-46

NOTICE: For example, if set to 60%, the acceleration value will be 60% and not 100% when the radio remote control system operation lever is pushed all the way.

Home Switch

- Short press: Returns one page.
- Long press: Returns to home page.

NOTICE: The function of the Home switch is the same for confirmation and setting screens.

Display Page Change

Each time the switch is pressed, the page changes: “page 1/2 to page 2/2 to page 1/2”.

NOTICE: The function of the Display Page Change switch is the same for confirmation and setting screens if they cover more than one page.

https://truckmanualshub.com/

Warning Display

CAUTION: If the warning monitor illuminates in red, immediately stop work and stop the machine, or set it to low idle. Then, immediately inspect the applicable part and take action for it.

If a fault occurs in the machine, the warning display on the monitor illuminates in red, and an alarm buzzer sounds at the same time.

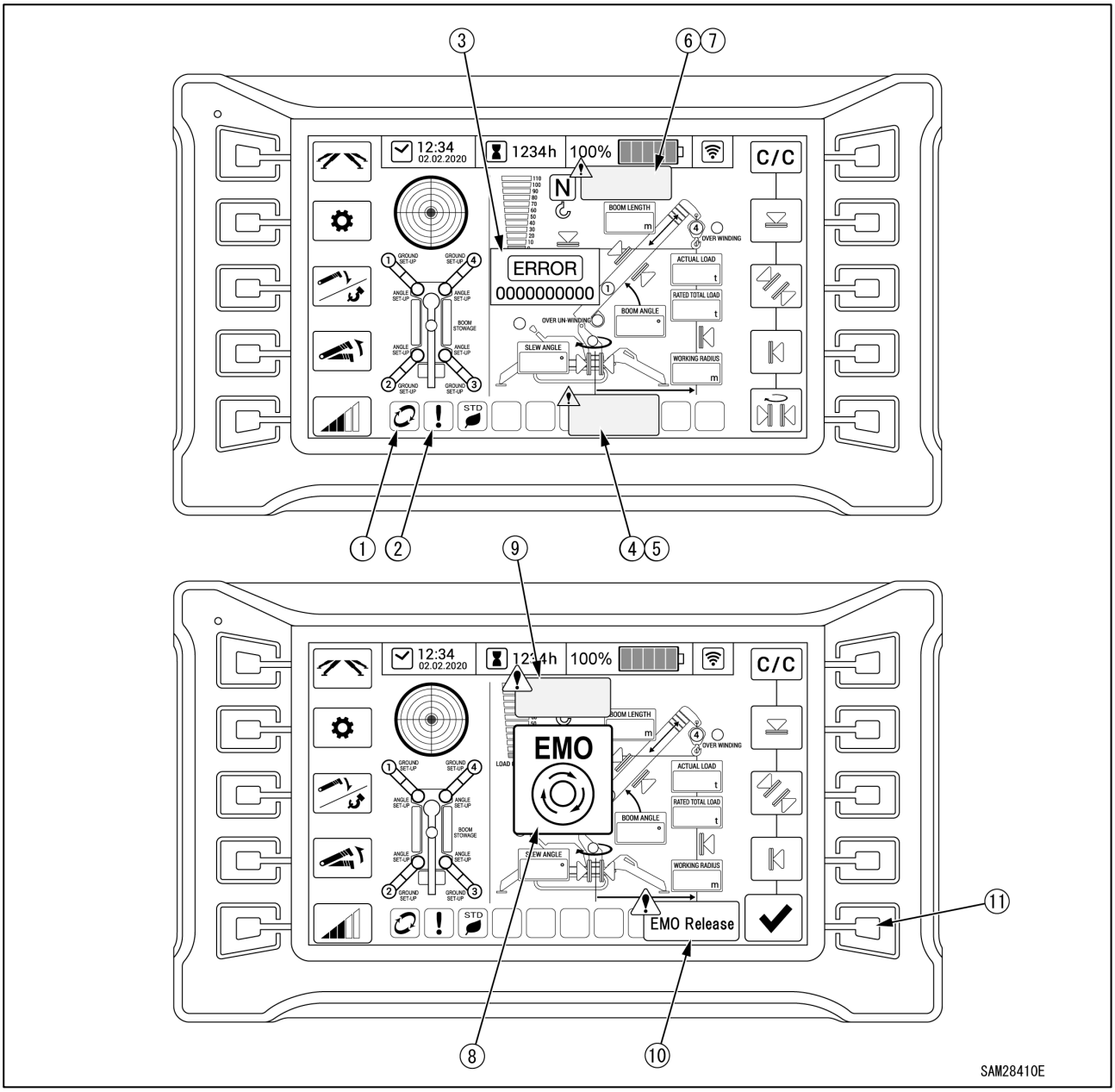

Fig. 4-47

1 - Consumables Display
2 - Abnormality Display (abnormality detected)
3 - Error Code Display
4 - Slew Position Abnormality
5 - Slew Detection Abnormality
6 - Battery Terminal Check Display
7 - Warming Up Display
8 - Emergency Stop Display
9 - Lever Neutral Warning Display
10 - Emergency Stop Reset Guide Display
11 - Emergency Stop Reset Switch

If warning and/or error code is displayed, check the warning content and error content.

If an error code is displayed, see “Error Codes” on page 5-62 and correct the problem.

https://truckmanualshub.com/

Consumables Display

A warning is displayed if the replacement time for consumables is approaching or has been exceeded.

If a warning is displayed, replace the relevant consumable and take the appropriate action. See “CONSUMABLES” on 5-6.

Abnormality Display

A warning is displayed if an abnormality occurs continuously in the machine.

Error Code Display

Displays an error code for the current error.

If multiple errors occur simultaneously, check the error history display in user mode.

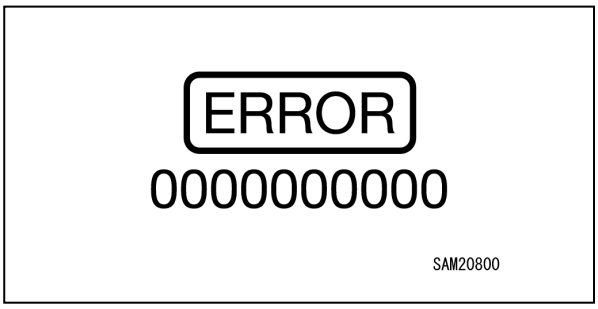

Fig. 4-48

NOTICE: Error codes are also displayed if faults other than consumable related indications are displayed. For more information on error codes, see “Error Codes” on page 5-62, and take corrective action.

Slew Position Abnormality

A warning is displayed if the slewing angle is offset.

If a warning appears, see “Slewing Position Calibration” on page 5-63 and calibrate the slewing angle.

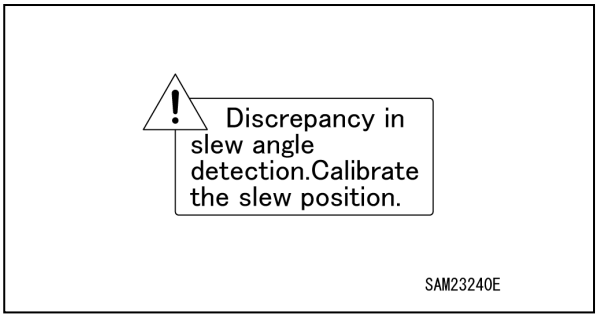

Fig. 4-49

Slew Detection Abnormality

A warning is displayed if an abnormality occurs when using slewing operation lever limit switch detection.

If a warning is displayed, see “Electrical Components” on page 5-59 and take the appropriate corrective action.

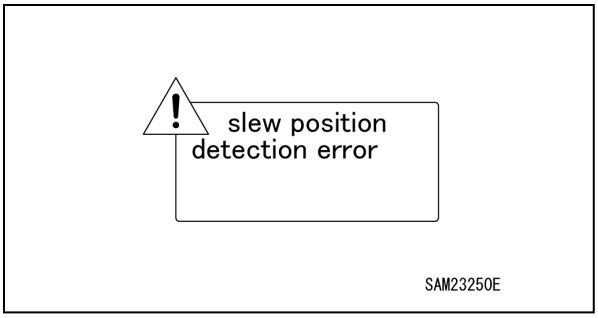

Fig. 4-50

Battery Terminal Check Display

Displayed when a voltage difference between batteries caused by an abnormality in the battery terminals is detected and stops the motor. Check the battery terminals.

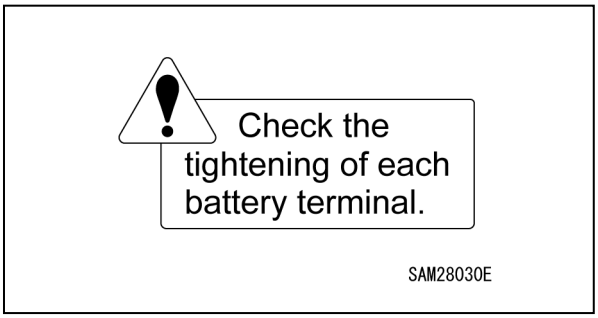

Fig. 4-51

Warming Up Display

Displayed when the machine is warming up.

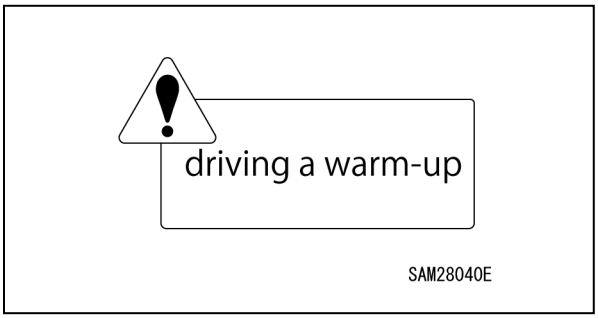

Fig. 4-52

https://truckmanualshub.com/

Emergency Stop Display

Displayed when the emergency stop switch has been pressed. It disappears when the emergency stop is reset.

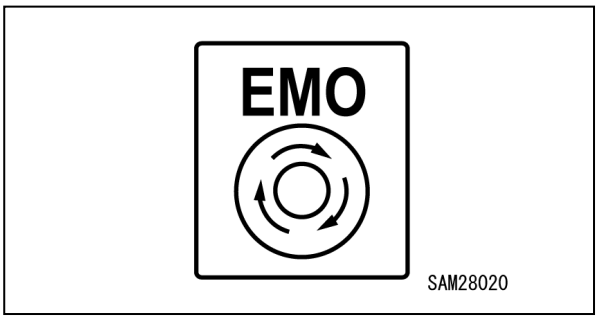

Fig. 4-53

Emergency Stop Reset Guide Display/ Emergency Stop Reset Switch

Displayed when the emergency stop switch has been pressed on the radio remote control unit. It disappears once communication is established with the radio remote control unit.

To operate the levers on the machine while the guide is displayed, press the emergency stop reset switch at the bottom right of the monitor.

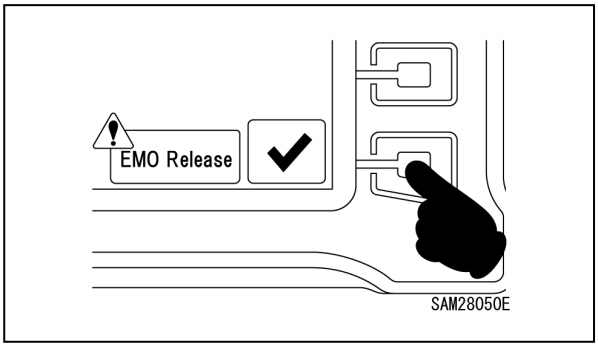

Fig. 4-54

Lever Neutral Warning Display

Displayed when a lever input was made after resetting the emergency stop.

Let go of the control levers on the machine or the radio remote control unit.

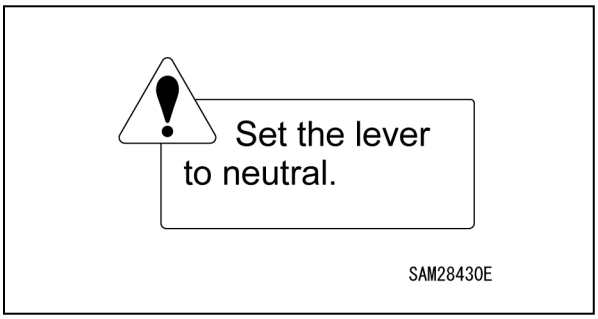

Fig. 4-55

https://truckmanualshub.com/

COLD WEATHER OPERATION

WARNING! Tip Hazard. Do not travel over snow or frozen ground at unsafe speeds. Decrease speed to a safe setting and avoid sudden starts and stops.

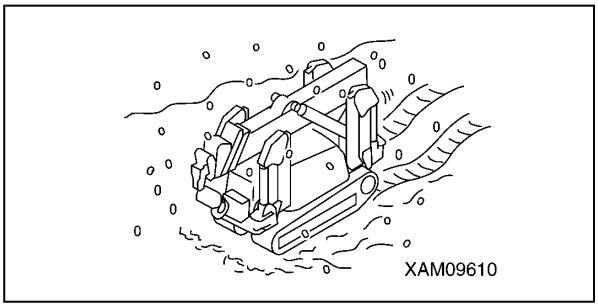

Fig. 4-56

WARNING! Exposure Hazard. Do not touch metal surfaces with bare skin in cold weather. Always wear gloves when working in cold weather.

Use extreme caution when operating in cold weather. Frozen ground surfaces become soft when air temperature rises. The load that is to be hoisted could be stuck to the ground.

NOTICE: When cold, always perform the warm-up operation. Sufficient warm-up operation is necessary when starting in cold temperatures. Insufficient warm-up operation will slow down the movement response of the travelling system or crane system to the operation levers, resulting in machine damage or personal injury.

NOTICE: Hydraulic oil operating temperature is 50° to 80°C. When operating at low temperatures, increase the temperature of the hydraulic oil to a minimum of 20°C. Increase the hydraulic oil temperature by relieving the oil pressure. Allow the oil to flow to the hydraulic oil tank by using the operation lever. This will improve the machine hydraulic actions and prevent abnormal operation.

NOTICE: After daily operation in cold weather, wipe and clean all condensation, snow, ice and mud from the wire harness, connector (1), switches and sensors.

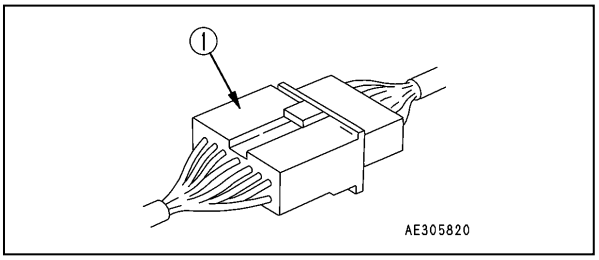

Fig. 4-57

https://truckmanualshub.com/

STARTING

Before starting the machine, see “Pre-Start Inspection” on page 5-16.

WARNING! The following safety messages address a potential Entanglement Hazard while starting the machine:

- Verify there are no people or obstacles near the machine before starting the machine. Sound the horn as a warning before starting the machine. Be sure the area is clear of people and obstacles before starting the machine.
- Verify that all machine guards and covers are attached properly to the machine before starting the machine. Do not start the machine if any guards or covers are not properly installed on the machine.
- Do not operate or carelessly contact the travelling levers while starting or operating the machine. Only operate the correct controls per the operation.
- Always turn the Starter Switch to the OFF position after operation is complete and remove the key from the switch. Keep the key in your possession when the machine is not operating.

CAUTION: Only use the starting procedure as described in this manual to start the machine.

Starting the Machine

Before starting the machine, make sure no personnel or impediments are close to the machine and honk the horn.

CAUTION: Verify that the radio remote control system is “OFF”.

NOTICE: If the machine does not operate, check the battery charge level and the state of the disconnect switch.

Insert the key into the starter switch and turn the key to the "ON" position.

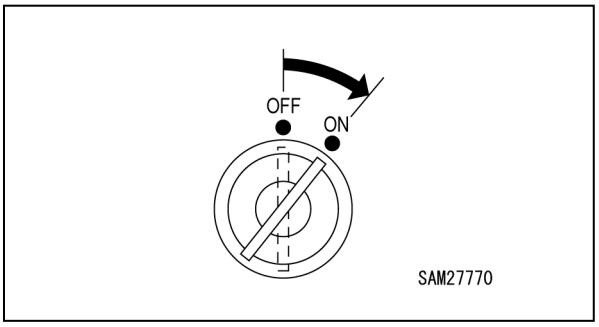

Fig. 4-58

https://truckmanualshub.com/

WARM-UP

WARNING! Unsafe Operation Hazard. In the event of a problem while performing the warm-up procedure, immediately turn the Starter Switch to the OFF position to stop power to the electrical system. Remove the key from the Starter Switch. Be sure to correct the problem before operating the machine.

NOTICE: Once the machine starts, check the monitor to ensure no errors are displayed.

Perform the following warm-up operation after the machine has started. If any problems are found during warm-up operation procedures, repair as necessary before continuing operation.

1. Push in the travel lever while unlocking the l ever to enable operation of the outriggers and the crane.

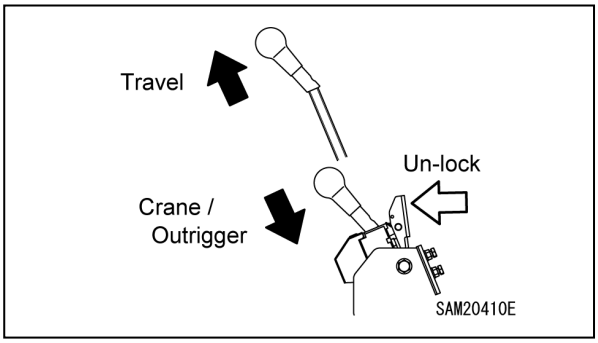

Fig. 4-59

2. Set the outriggers. See “OUTRIGGER SETTING” on page 4-43.
3. Loosen the wire rope which has been locking the hook block before disengaging the hook block from its hanger. See “Before Crane Operation” on page 4-61.
4. Use the motor speed adjuster switch on the monitor to increment the display to the halfway position, and run the motor at medium speed.

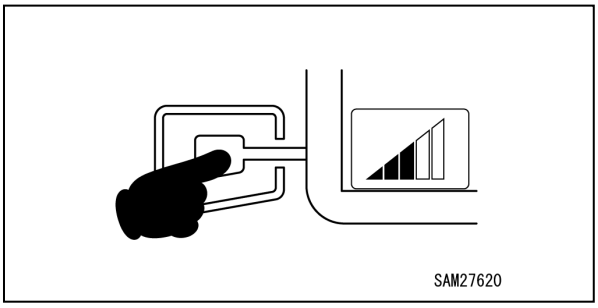

Fig. 4-60

5. Slowly operate the boom derrick lever back and forth so that the derrick cylinder extends and retracts to its stroke end to check that its function is normal. If not, correct it as necessary.

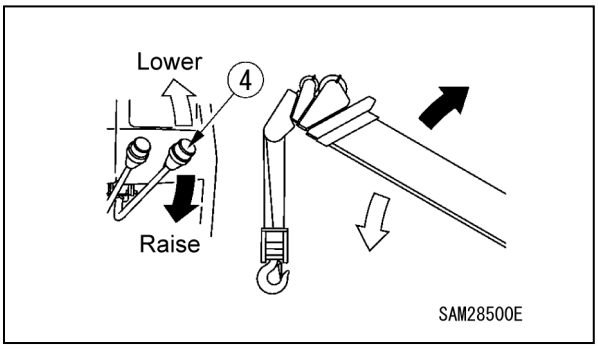

Fig. 4-61

6. Slowly operate the boom telescope cylinder back and forth so that the boom extends or retracts to its stroke end to check that its function is normal. If not, correct it as necessary.

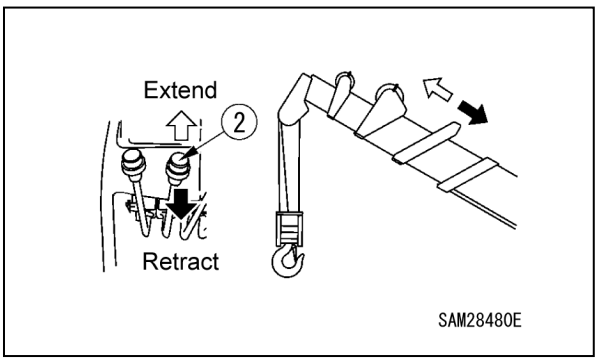

Fig. 4-62

https://truckmanualshub.com/

7. Slowly operate the winch lever back and forth to check that the hook block is hoisted and lowered smoothly, that it stops immediately when the winch lever is returned to NEUTRAL position and that the winch does not take up the rope in a disorderly manner. Correct any abnormality as necessary.

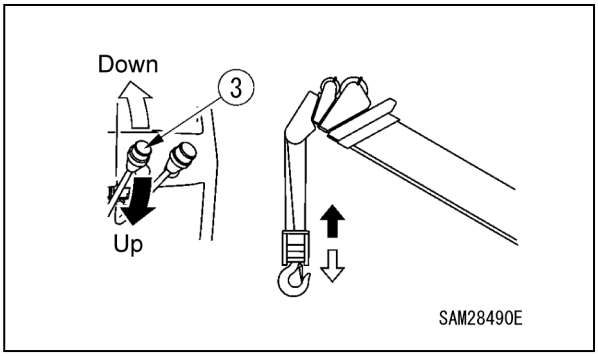

Fig. 4-63

8. Slowly operate the slewing lever back and forth to check that the crane slews clockwise (right) and counterclockwise (left) smoothly more than 360 degrees respectively and that it stops immediately when the slewing lever is returned to NEUTRAL. Correct any abnormality as necessary.

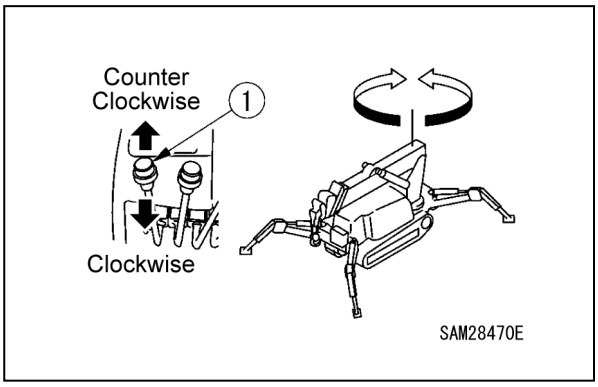

Fig. 4-64

STOPPING

Normal Stopping

NOTICE:

- *Check that the radio remote control is turned off.*
- *Check that the machine has not been stopped by the emergency stop switch. Leaving the machine in this state will drain the battery.*

1. Turn the Starter Switch key to OFF to stop the machine.

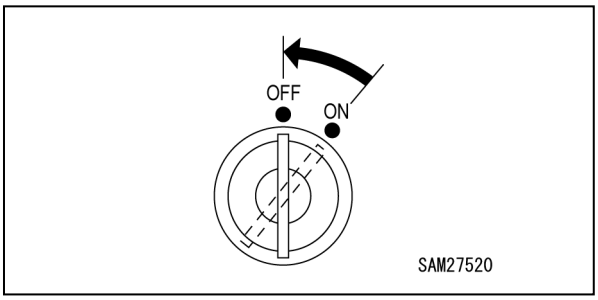

Fig. 4-65

2. Remove the Starter Switch key.

Emergency Stopping

The Emergency Stop Switch (EMO) is used to stop the machine in the event of an accident or emergency.

The Emergency Stop Switch (EMO) must be in the OFF position to start the machine.

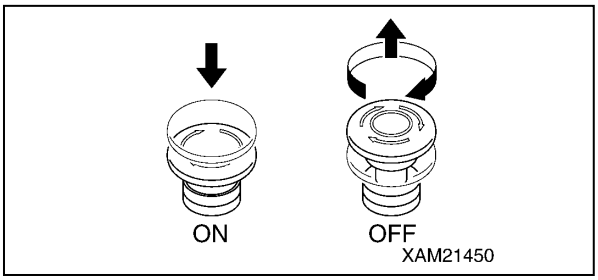

Fig. 4-66

- ON: Press switch down to stop machine.
- OFF: Turn switch clockwise (right) to allow the switch to return to the ON position. The switch returns to its original position, and the emergency stop state is reset.

When restarting after an emergency stop, return all of the levers to their neutral positions, then return the emergency stop switch to the “OFF” position.

https://truckmanualshub.com/

TRAVELLING POSITION

Before setting the machine in travelling position review “TRAVELLING CONTROLS AND OPERATION” on page 4-29.

Set the machine in travelling position before moving (travelling) the machine.

Set the machine in travelling position by stowing the boom, hook block and outriggers.

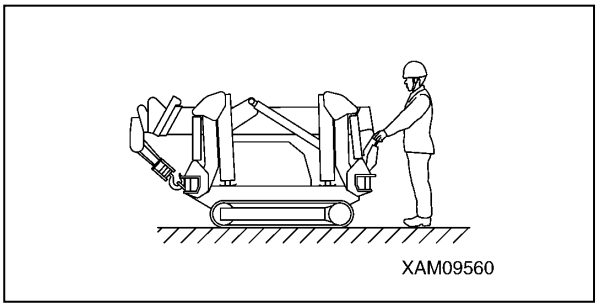

Fig. 4-67

1. Stow the hook block in the specified position. See “Hook Raising / Lowering Operation” on page 4-63.
2. Stow the outriggers. See “OUTRIGGER STOWING” on page 4-53.

TRAVELLING CONTROLS AND OPERATION

WARNING! The following safety messages address a potential Entanglement Hazard while the machine is travelling:

- **Verify there are no people within the travelling path of the machine or around the working site area before travelling. Sound the horn as a warning before moving the machine. Be sure people do not enter the travelling path or the working area while the machine is travelling.**

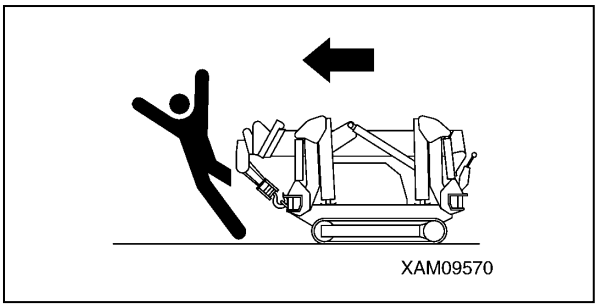

Fig. 4-68

- **When reversing the machine, pay attention to your footing. Decrease machine to a slow speed and operate the machine carefully so that you will not lose your footing due to obstacles or uneven surface.**
- **Avoid making sudden change of direction. It may cause loss of balance or damage the machine or nearby structure.**

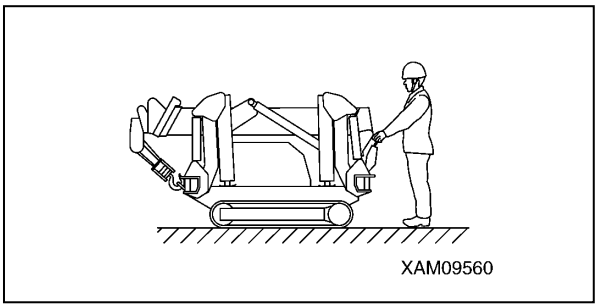

Fig. 4-69

WARNING! The following safety messages address a potential Tip Hazard while the machine is travelling:

- **Never travel when a person or load is on the travelling dolly or boom. Do not allow a person to sit or stand on the travelling dolly or boom while moving the machine. Do not travel with a load placed on the travelling dolly or boom.**

https://truckmanualshub.com/

- **Never make sudden directional changes while the machine is travelling. Reduce speed slowly and allow the machine to stop before changing direction.**
- **When travelling over uneven ground, use a slow travel speed and avoid changing direction.**

WARNING! The following safety messages address a potential Tip Hazard while the machine is travelling on slopes (hills):

- **The tilt alarm buzzer sounds if the machine tilts by 15° or more from front to back or sideways when travelling. Avoid travelling over steeper slopes if the alarm buzzer sounds.**
- **When travelling on a slope, the operator should always stand on the upper side of the machine.**

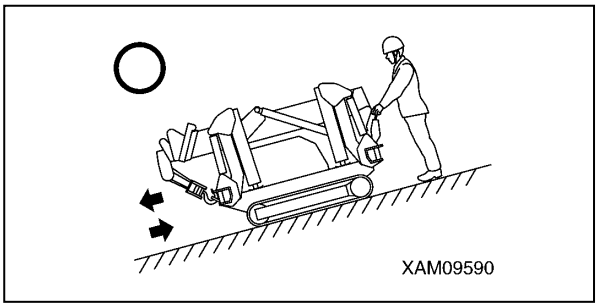

Fig. 4-70

- **Always travel slowly and use caution when using the travel levers on a slope. Do not drive the machine too fast for the conditions of the slope.**
- **Avoid travelling across slopes and changing travel direction of the machine while on slopes. When slopes must be crossed, and it is judged safe to do so, proceed with extreme caution and at a low speed. Never exceed 10° when travelling across a slope.**

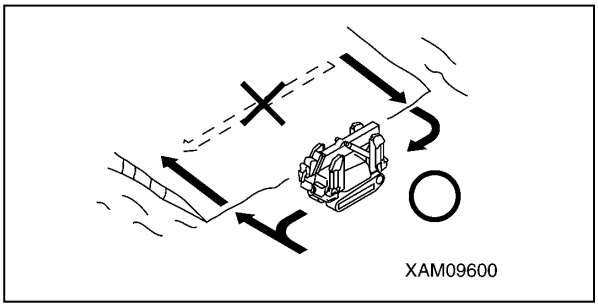

Fig. 4-71

- **Do not start the machine if the travel levers are not in the NEUTRAL position when the machine is on a slope. Always position the travel levers in NEUTRAL when starting the machine on a slope.**

WARNING! The following safety messages address a potential Tip Hazard while the machine is travelling over obstacles:

- **Avoid driving over obstacles, and uneven, unstable or rough terrain. When these obstructions must be crossed and it is judged safe to do so, proceed with extreme caution and at a low speed. Never exceed 10° when travelling over these obstructions.**
- **Avoid driving over obstacles, projections and deep grooves. If possible, remove obstacles from the path of the machine. If necessary, drive over the centre of the obstacle, keeping it spaced between the tracks.**

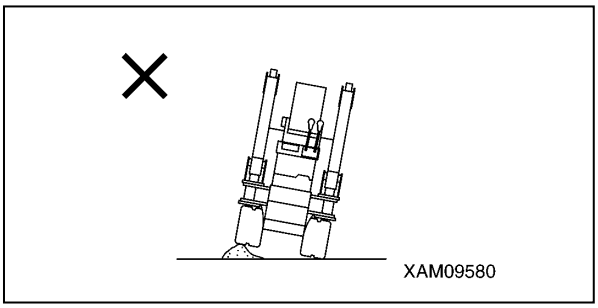

Fig. 4-72

- **Do not change the direction of the machine while travelling over obstacles. Only change the direction of the machine on solid ground away from obstacles.**

WARNING! The following safety message addresses a potential Tip Hazard while the machine is travelling over unstable ground: Be sure to know the condition of the ground that the machine must travel over. Do not travel on the following ground conditions:

- **Soft or lose ground**
- **Ground near cliffs**
- **Roadsides**
- **Deep gullies**
- **Wet ground**
- **Ground disturbed by dynamite or earthquake**
- **Filled holes**
- **Uneven ground**

https://truckmanualshub.com/

WARNING! The following safety message addresses a potential Tip Hazard while the machine is travelling through water: Check the depth and water velocity before travelling through water. Do not travel through water without knowing the depth and water velocity.

- **When travelling through water, adhere to the permissible water depth, and drive slowly to prevent electrical equipment inside the frame from becoming wet. Permissible water depth: Not exceeding the centre of the track rollers**

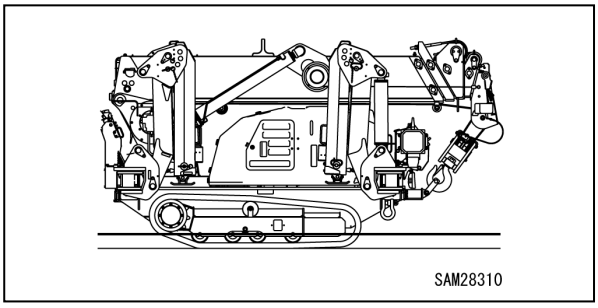

Fig. 4-73

- **There is a risk of electric shock and damage if electrical equipment is allowed to get wet.**

NOTICE: Always follow all local laws and regulations when travelling on public roads.

Directional Controls

Before travelling the machine, perform the following:

- Retract and fully lower the boom.
- Secure the hook block to the STOW position.
- Stow and secure the outriggers, making sure each position pin is locked.

To travel the machine:

Move the travel lever to the TRAVEL position.

The left and right travelling levers are used to move the machine forward/backward, stop, turn and adjust the travelling speed. Adjust the motor speed to low and move the left and right travelling levers slowly at the same time to check the travelling speed of the machine.

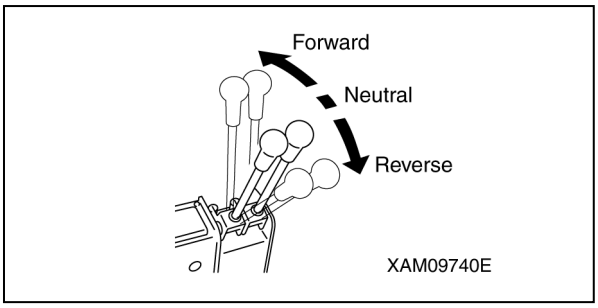

Fig. 4-74

Travelling Forward

Push the left and right travelling levers slowly at the same time to move forward.

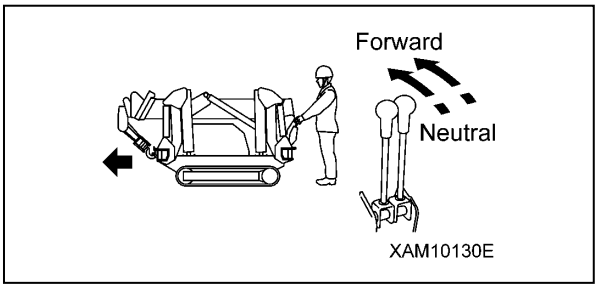

Fig. 4-75

Travelling in Reverse

Pull the left and right travelling levers slowly at the same time to move in reverse.

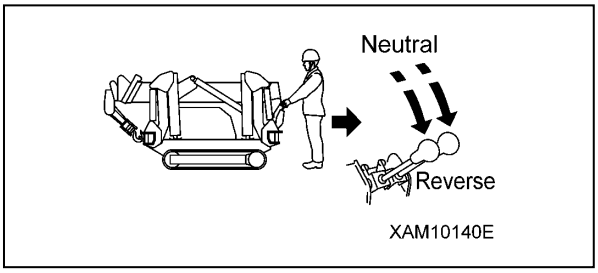

Fig. 4-76

https://truckmanualshub.com/

Neutral Stop

Release the left and right levers at the same time. The levers return to the NEUTRAL position and the machine automatically brakes and stops at that position.

Left Turn

Push the right travelling lever forward to turn left in the forward direction.

Pull the right travelling lever toward you to turn left in reverse direction.

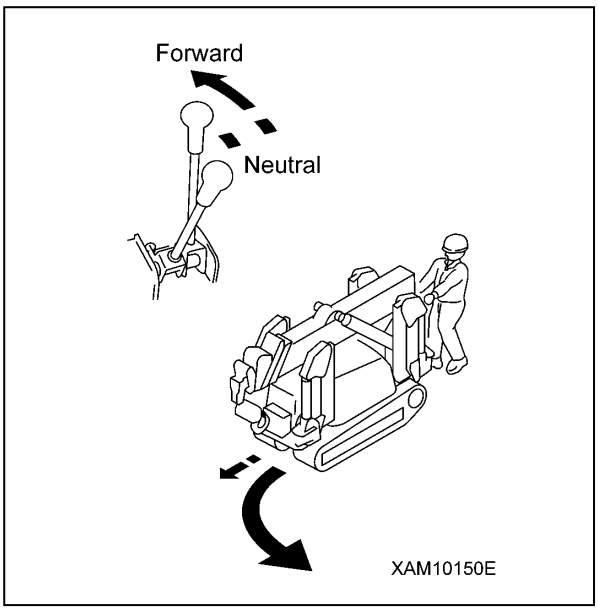

Fig. 4-77

Right Turn

- Push the left travelling lever forward to turn right in forward direction.
- Pull the left travelling lever toward you to turn right in reverse direction.

Spin Turns

WARNING! Collision Hazard. Sudden steering or unnecessary spin turns at high speed can damage the rubber tracks and hydraulic devices, resulting in a collision with other equipment or people. Only make spin turns at a safe, controlled speed.

NOTICE: Stop the machine, then adjust the motor speed to low before performing spin turns.

Operate the left and right levers in the opposite directions.

Left Spin Turn

Push the right travelling lever forward while pulling the left travelling lever toward you to rotate the left and right rubber tracks in the opposite direction for a left spin turn.

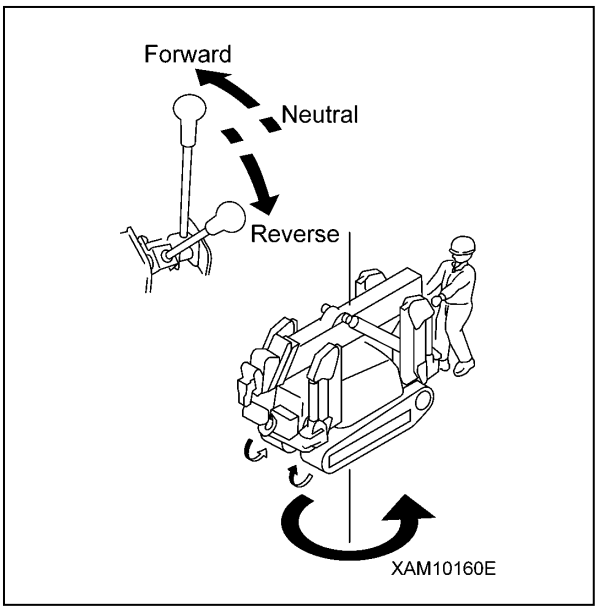

Fig. 4-78

Right Spin Turn

Push the left travelling lever forward while pulling the right travelling lever toward you to rotate the left and right rubber tracks in the opposite direction for a right spin turn.

https://truckmanualshub.com/

Left Turn Forward

With the right travel lever pushed forward, return only the left travel lever to NEUTRAL.

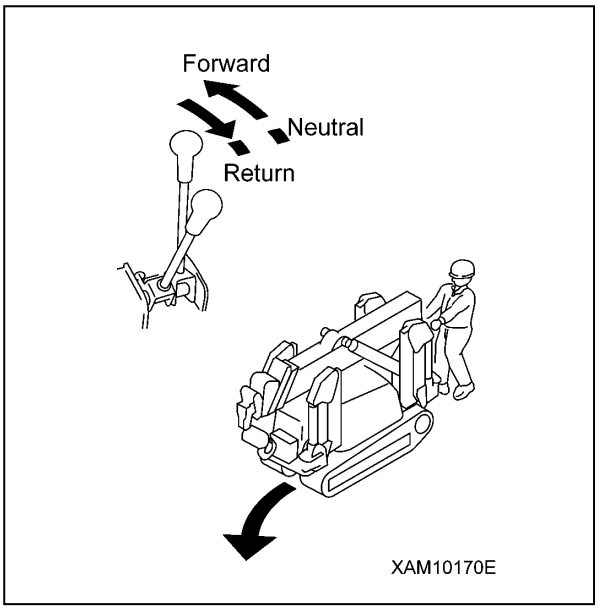

Fig. 4-79

Left Turn in Reverse

With the right travel lever pulled back, return only the left travel lever to NEUTRAL.

PARKING

WARNING! Entanglement Hazard. Always turn the Starter Switch to the OFF position after operation is complete and remove the key from the switch. Keep the key in your possession when the machine is not operating.

WARNING! Sudden Movement Hazard. Avoid sudden stops. Always provide adequate stopping distance when possible.

WARNING! Collision Hazard. Do not park on a street without providing adequate safety precautions. Always provide safety precautions, such as clearly placed flags, protection barriers, lighting and caution notices, that do not interfere with traffic.
Avoid parking the machine on unstable ground. Always park the machine on level, solid ground. If parking on a slope, block the machine to avoid movement.

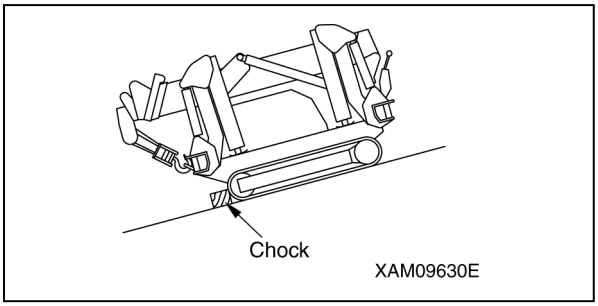

Fig. 4-80

NOTICE: Always set the travelling lever to the NEUTRAL position when parking the machine.

1. Move the left and right travelling levers to the NEUTRAL position at the same time. This automatically brakes and stops the machine.

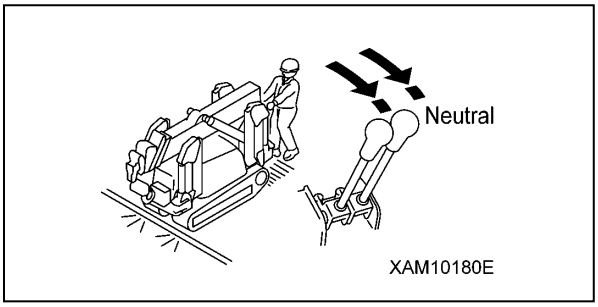

Fig. 4-81

https://truckmanualshub.com/

2. Always park on solid, level ground. If you must park on a slope, place a chock in front of the tracks.

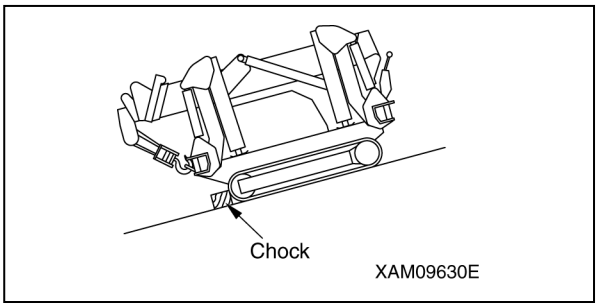

Fig. 4-82

https://truckmanualshub.com/

OUTRIGGER SAFETY DEVICES

Safety Device Activation Warnings

Review, understand and follow these operation sequences, warning alarms and stopping procedures when operating the machine.

The following table shows the display and warning issued and the resulting action of the safety devices when the machine is used under normal conditions.

Example:

Standard Operation Sequence, Machine Status	Display and Warning	Activation of Safety Devices
This field shows the standard operation sequence and the operation position of operation levers and switches, and machine status.	This field shows the display and warning issued as a result of the operation.	This field shows the name of the safety device that prevents the resulted error and its action.

Before Setting Outriggers

Standard Operation Sequence, Machine Status	Display and Warning	Activation of Safety Devices
• Start the machine. • Travel lever in Crane/Outrigger position	-	-
Check if the machine is in the BOOM STOWING position. • Fully retract the boom • Boom horizontal stowing position • Boom slewing stowing position	• Boom Stowing Light on the monitor [green] on (Working Status Lamp [red] flashes) • Angle Setting Lights and Ground Set-Up Lights on the monitor [red] flash	Outrigger interlock device • All the outrigger operations stop if the Boom Stowing Light does not turn on.

Outrigger Setting

Standard Operation Sequence, Machine Status	Display and Warning	Activation of Safety Devices
Set the outriggers. 1. Extend the outriggers. • Rotate the outrigger pivot and secure at the specified position with the position pin. • Extend the outrigger and insert pin.	• Angle Setting Lights on the monitor [green] on (Working Status Lamp [red] flashes) • Ground Set-Up Lights on the monitor [red] flash	Outrigger interlock device • All the outrigger operations stop if one of the Angle Setting Lights flashes red.
2. Set the outriggers. • Check the level with the level gauge.	• Ground Set-Up Lights on the monitor [green] on (Working Status Lamp [red] flashes)	
When the machine tilts 3 degrees or more during outrigger setting operation	• Warning alarm buzzer sounds continuously	Crane inclination alarm device is activated.

https://truckmanualshub.com/

Before Stowing Outriggers

Standard Operation Sequence, Machine Status	Display and Warning	Activation of Safety Devices
Check if the machine is in the BOOM STOWING position. • Fully retract the boom. • Boom horizontal stowing position • Boom slewing stowing position	• Boom Stowing Light [green] on the monitor on (Working Status Lamp [red] flashes)	Outrigger interlock device • All the outrigger operations stop if the Boom Stowing Light does not turn on.

Outrigger Stowing

Standard Operation Sequence, Machine Status	Display and Warning	Activation of Safety Devices
Stow the outriggers. 1. Set and stow the outriggers.	• Ground Set-Up Lights [red] on the monitor flash (Working Status Lamp [red] flashes)	Crane interlock device • If any of the Angle Setting Lights and Ground Set-Up Lights (total of eight) flash red, all the crane operations stop.
2. Retract and stow the outriggers. • Retract outrigger and secure with pin. • Rotate (Stow) the outrigger and secure with position pin. • Stop the machine.	Angle Setting Lights [red] on the monitor flash (Working Status Lamp [red] flashes)	
When the machine tilts 3 degrees or more during outrigger stowing operation	Warning alarm buzzer sounds continuously	Crane inclination alarm device is activated.

https://truckmanualshub.com/

OUTRIGGER COMPONENTS

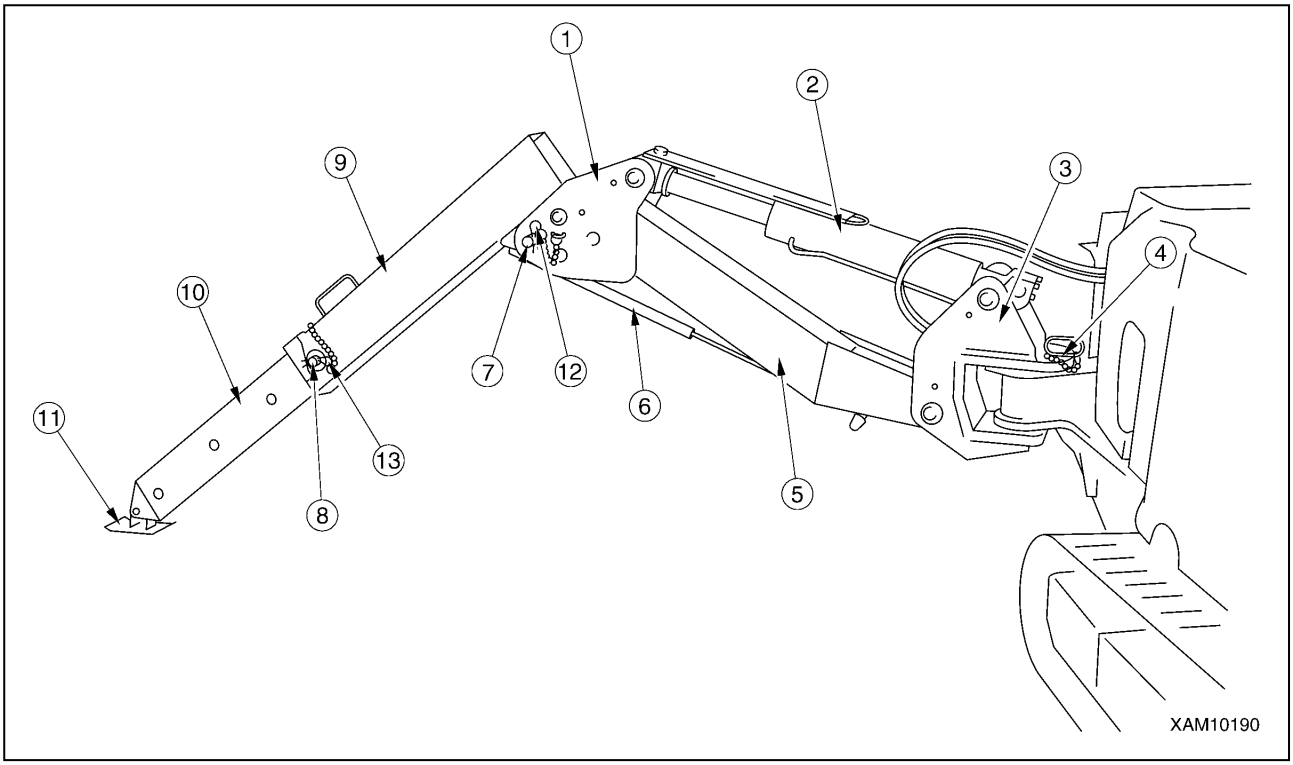

Fig. 4-83

1 - Linkage Bracket
2 - Outrigger Cylinder
3 - Rotary
4 - Rotary Positioning Pin
5 - Outrigger Base Box
6 - Stay (of damper type)
7 - Outrigger Top Positioning Pin
8 - Inner Box Positioning Pin
9 - Outrigger Top Box
10 - Inner Box
11 - Pad
12 - Snap Pin
13 - Snap Pin

https://truckmanualshub.com/

OUTRIGGER INDICATORS

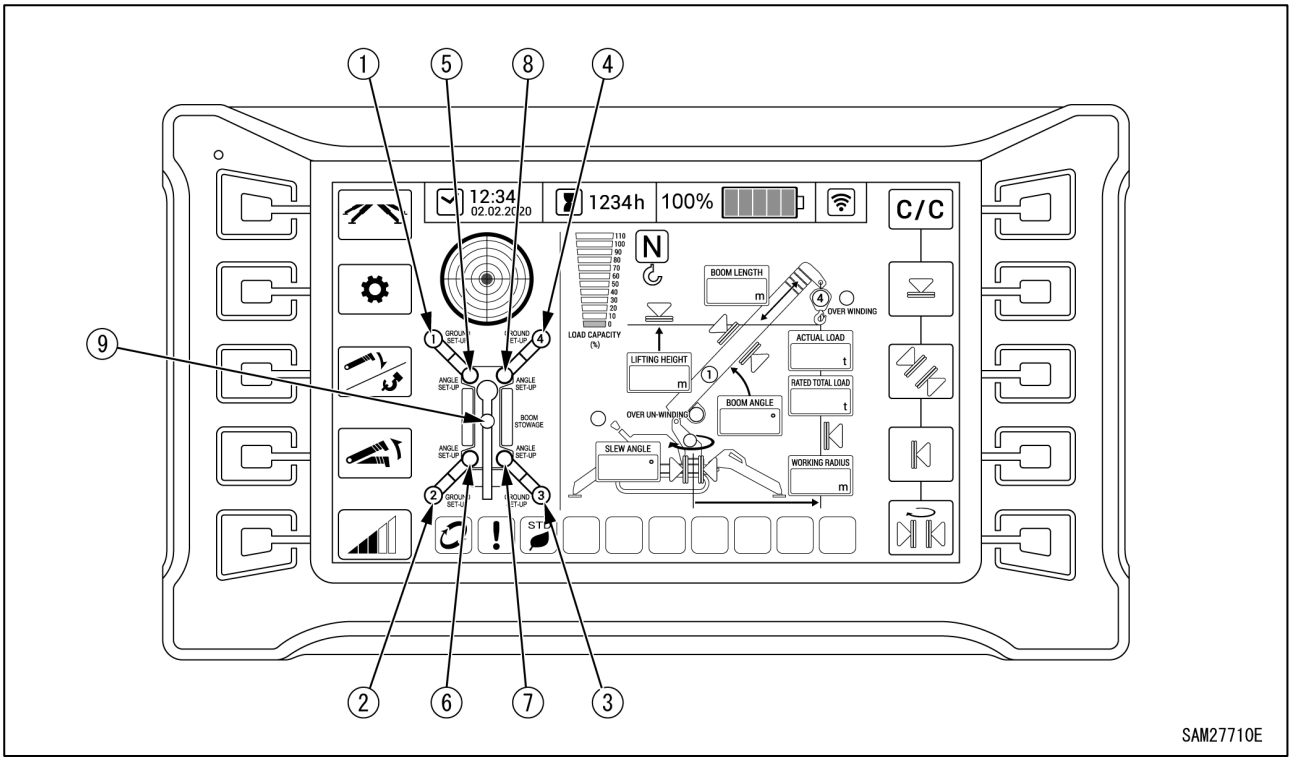

Fig. 4-84

1 - Outrigger Ground Set-Up Light 1
2 - Outrigger Ground Set-Up Light 2
3 - Outrigger Ground Set-Up Light 3
4 - Outrigger Ground Set-Up Light 4
5 - Outrigger Angle Setting Light 1
6 - Outrigger Angle Setting Light 2
7 - Outrigger Angle Setting Light 3
8 - Outrigger Angle Setting Light 4
9 - Boom Stowing Light

https://truckmanualshub.com/

Outrigger Ground Set-Up Lights 1 to 4

The Outrigger Ground Set-Up Lights turn on to indicate the outrigger is set and there is pressure on the outrigger pad.

The green light turns on when the outrigger pad is in contact with the ground. The red light flashes when the pad is raised (stowed).

The outrigger contact status is detected by a detection switch at the base of the outrigger cylinder.

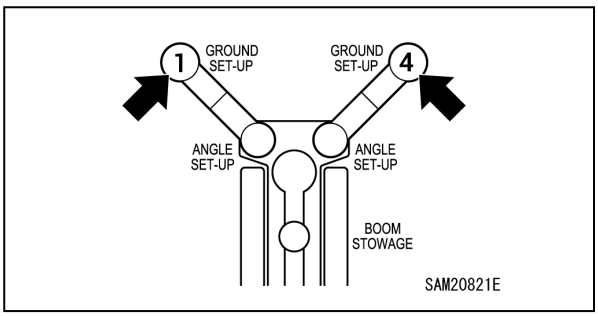

Fig. 4-85

The Outrigger Ground Set-Up Lights turn on to indicate the outrigger is set and there is pressure on the outrigger pad.

The Outrigger Ground Set-Up Lights turn off when the pad is lifted off of the ground.

The conditions of the outrigger pad are detected by the detection switch (1) at the bottom of the outrigger cylinder. There is a detection switch at the bottom of all four outrigger cylinders.

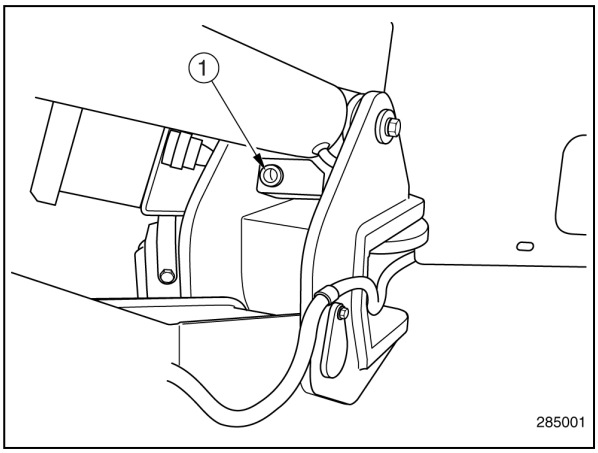

Fig. 4-86

Outrigger Angle Setting Lights 1 to 4

These turn on or off to indicate the outrigger status.

The lights turn off when the outriggers are stowed, illuminate in green when the outriggers are fully extended, illuminate in yellow when the outriggers are not fully extended, and illuminate in red when in multi-angle state.

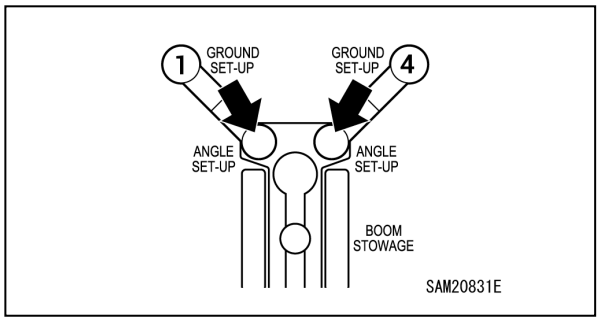

Fig. 4-87

The Outrigger Angle Setting Lights turn on to indicate the outrigger is rotated outward.

The Outrigger Angle Setting Lights turn on when the position pin (1) is inserted in the hole when the outrigger is rotated all the way out.

When the outrigger is in the fully outer position it is detected by the Detection Switch (2) of the outrigger pivot.

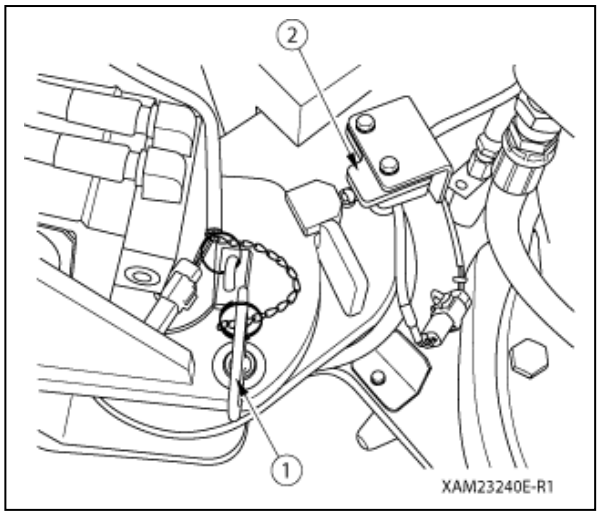

Fig. 4-88

https://truckmanualshub.com/

Boom Stowing Light

The Boom Stowing Light turns on to indicate the boom is stowed.

The Boom Stowing Light changes between a steady green, steady yellow, and flashing red, depending on which of the following two storage positions are detected:

The light flashes red when neither of the two stowage positions are detected.

The light is steady yellow if only the slewing stowage position is detected.

The outrigger is determined to be stowed once both detection positions are simultaneously detected and the Boom Stowing Light illuminates in green.

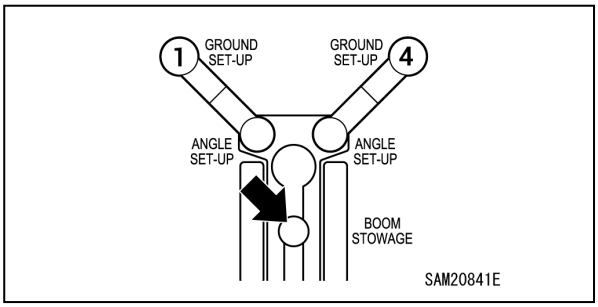

Fig. 4-89

Boom Slewing Stowage Position

Determined as stowed once the boom stops at the slewing stowage position.

Boom movement is detected by interactions between the depression (2) on the post (slewing side) and the detector switch (1) on the travel undercarriage (fixed side).

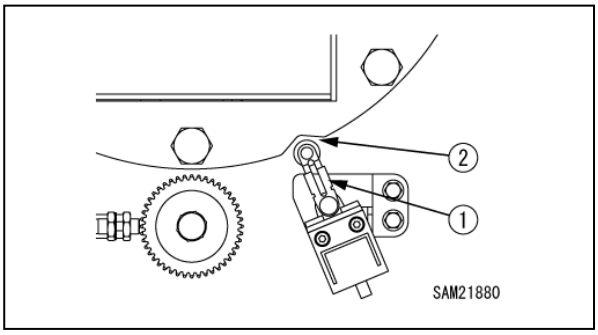

Fig. 4-90

Boom Fully Lowered Stowage Position

The boom is determined to be stowed once it has stopped at the fully lowered stowage position. Boom movement is detected based on the boom angle.

Outrigger Un-set Warning (Working Status Lamp: red)

If any of the four outriggers is not properly set, the Working Status Lamp (red) flashes.

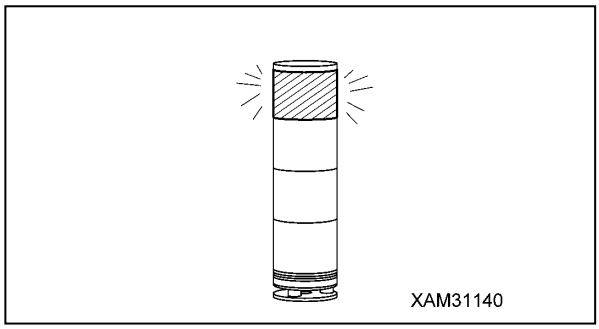

Fig. 4-91

https://truckmanualshub.com/

Outrigger Mode

When the Outrigger Mode Switch is pressed on the Home Screen, the Outrigger Mode is displayed.

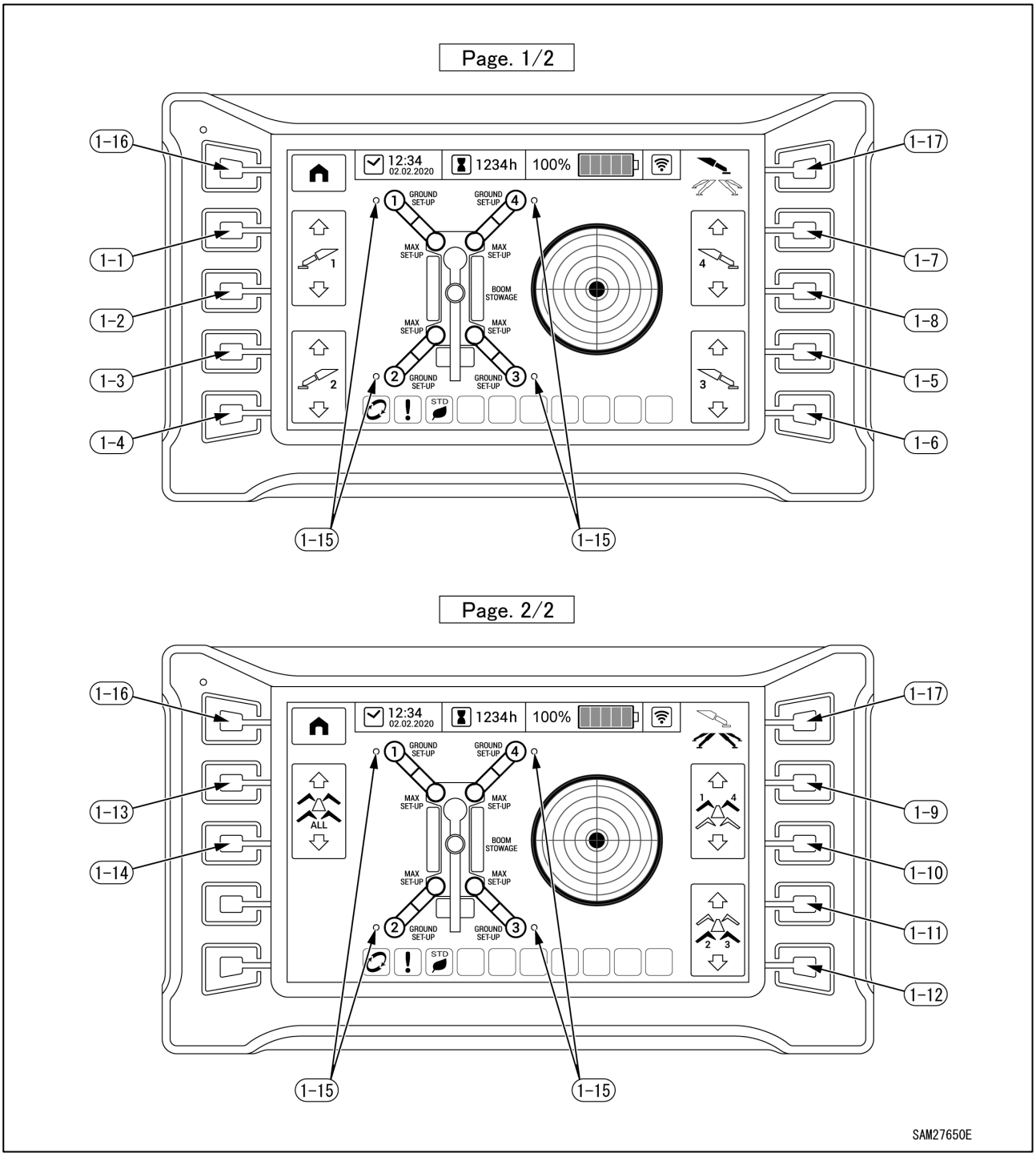

Fig. 4-92

(1-1) Outrigger 1 Stowage Switch
(1-2) Outrigger 1 Ground Set-Up Switch
(1-3) Outrigger 2 Stowage Switch
(1-4) Outrigger 2 Ground Set-Up Switch
(1-5) Outrigger 3 Stowage Switch
(1-6) Outrigger 3 Ground Set-Up Switch
(1-7) Outrigger 4 Stowage Switch
(1-8) Outrigger 4 Ground Set-Up Switch
(1-9) Outrigger 1 and 4 Stowage Switch
(1-10) Outrigger 1 and 4 Ground Set-Up Switch
(1-11) Outrigger 2 and 3 Stowage Switch
(1-12) Outrigger 2 and 3 Ground Set-Up Switch
(1-13) Outrigger Combined Stowage Switch
(1-14) Outrigger Combined Ground Set-Up Switch
(1-15) Outrigger Operation Lamp
(1-16) Home Switch
(1-17) Display Page Change

https://truckmanualshub.com/

NOTICE:

- *The switch displays will change from green to yellow as the outriggers are operated.*
- *Select individual or simultaneous operation to suit the requirements for operating the outriggers.*
- *For more information on the outrigger indicator lamps, see “OUTRIGGER INDICATORS” on page 4-38.*

Outrigger 1 to 4 Stowage Switches

Allow individual outriggers to be stowed independently.

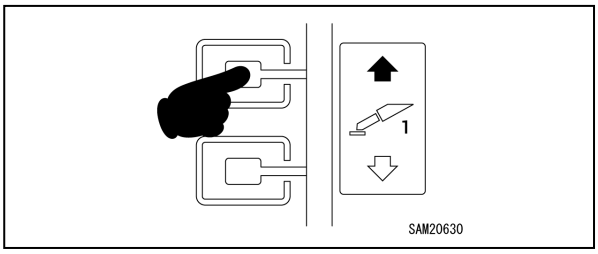

Fig. 4-93

Outrigger 1 to 4 Ground Set-Up Switches

Allows individual outriggers to be brought into contact with the ground.

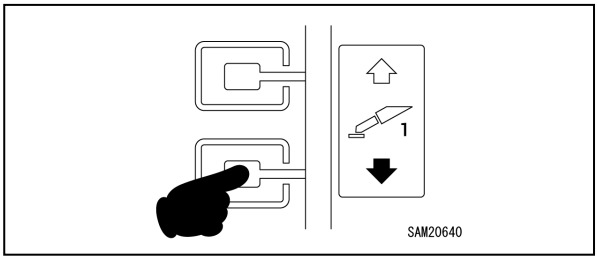

Fig. 4-94

Outrigger 1 and 4 / 2 and 3 Stowage Switches

Allow front and rear outriggers to be stowed.

- Front outrigger 1 and 4 simultaneous operation
- Rear outrigger 2 and 3 simultaneous operation

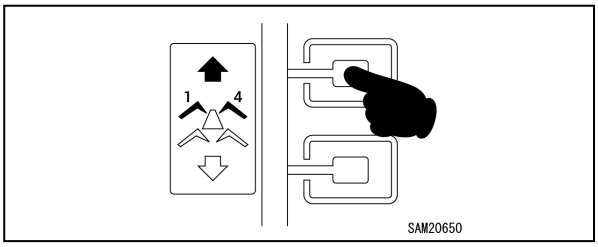

Fig. 4-95

Outrigger 1 and 4 / 2 and 3 Ground Set-Up Switches

Allows front and rear outriggers to be brought into contact with the ground.

- Front outrigger 1 and 4 simultaneous operation
- Rear outrigger 2 and 3 simultaneous operation

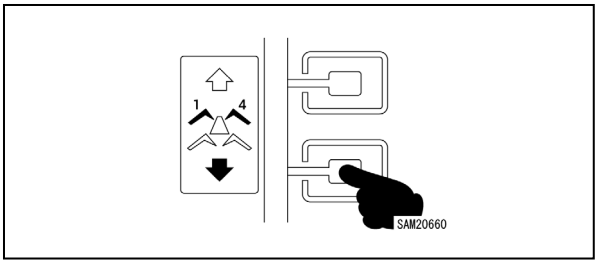

Fig. 4-96

Outrigger Combined Stowage Switch

Allows all four outriggers to be stowed simultaneously.

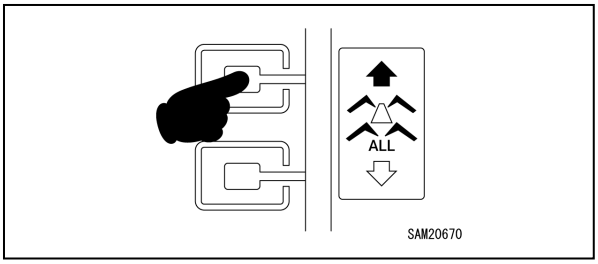

Fig. 4-97

Outrigger Combined Ground Set-Up Switch

Allows all four outriggers to be brought into contact with the ground simultaneously.

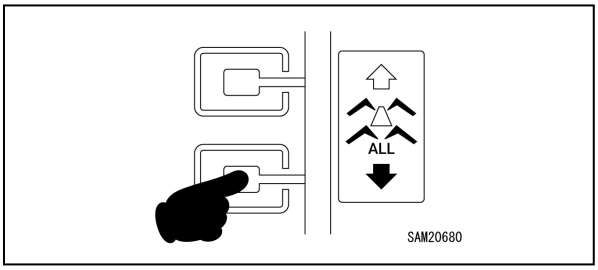

Fig. 4-98

https://truckmanualshub.com/

Outrigger Operation Lamp

The operation lamp next to the outrigger number illuminates in yellow when the outrigger is operated.

- Illuminated yellow: Outrigger operating
- Off: Outrigger not operating

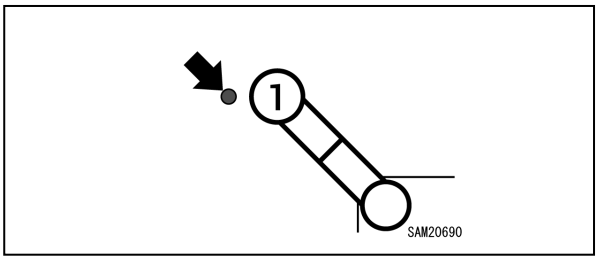

Fig. 4-99

Home Switch

Press to return to the Home screen.

Display Page Change

Pressing toggles between outrigger individual operation and combined operation.

OUTRIGGER SETTING

Support Plates

When used on soft ground, place a single plate of sufficient size with sufficient strength under the pad of each outrigger to add support and protect the ground.

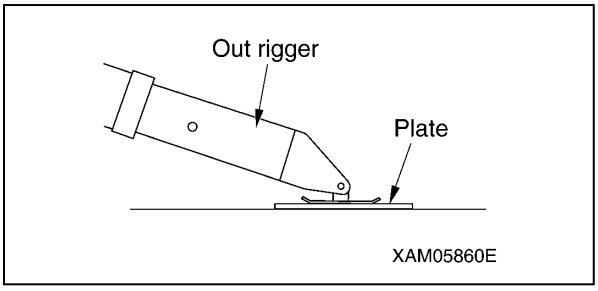

Fig. 4-100

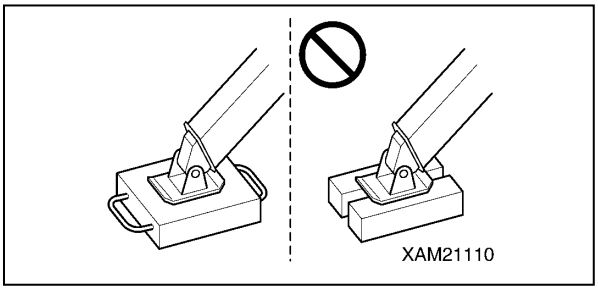

Fig. 4-101

To prevent an unstable condition, never set the outriggers near a road shoulder.

If the ground is not stable or the outriggers sink during operation, stop crane operations immediately.

WARNING! Tip Hazard. Do not operate the machine if the outriggers are not set on stable ground. Set the outriggers on stable ground before operating the machine.

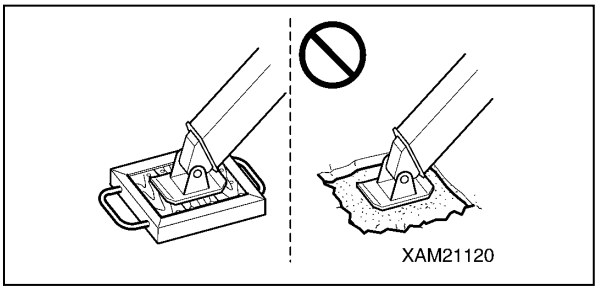

Fig. 4-102

https://truckmanualshub.com/

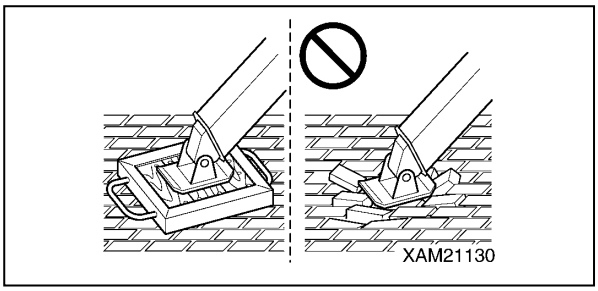

Fig. 4-103

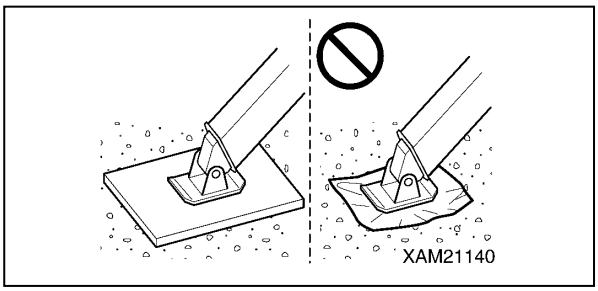

Fig. 4-104

- **Verify in advance the strength of the surface that will support the outriggers. Structural surfaces such as construction sites or concrete floors must have sufficient strength to support the machine during operation.**
- **Verify the condition of the terrain before placing the outriggers. Outriggers can be placed at various heights according to the terrain; however, the outriggers cannot be placed in the maximum extended position. See “RATED TOTAL LOAD CHARTS” on page 3-10 and “"MAX" Outrigger Position” on page 4-48 for additional information.**

WARNING! Crush Hazard. Always keep people away from the machine when placing the outriggers. Do not allow people around the working area until the outriggers are placed.

Setting Outriggers (Normal Outrigger State)

This machine has four outriggers. The method for setting up outrigger #3 is described below (3). The same applies to the other three outriggers as well.

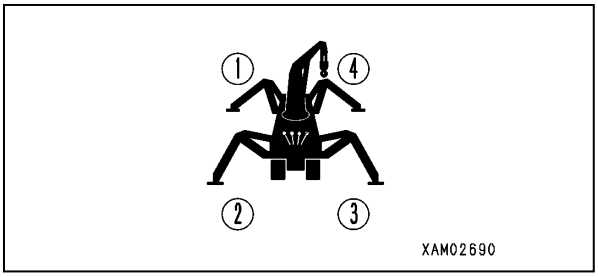

Fig. 4-105

Procedures When Stopping the Machine

WARNING! When placing the outriggers to maximum, the holes of the rotary where you insert the position pins are different for outriggers 1 and 2 than that of 3 and 4. Read this section carefully to place the outriggers properly. In this section, steps to place the outriggers to the maximum are presented.

1. Pull out position pin (4) of rotary (3) and rotate the rotary outward.

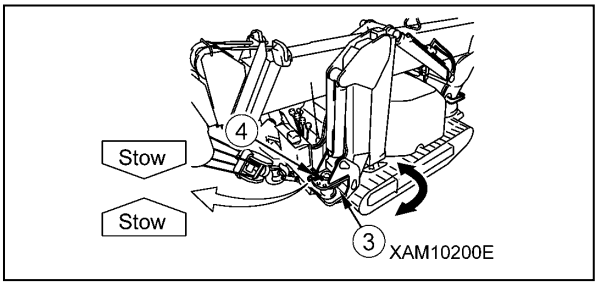

Fig. 4-106

2. Turn the rotary (3) so that the seal “Standard” affixed to its side and the seal “Standard” affixed to the side of frame are aligned.

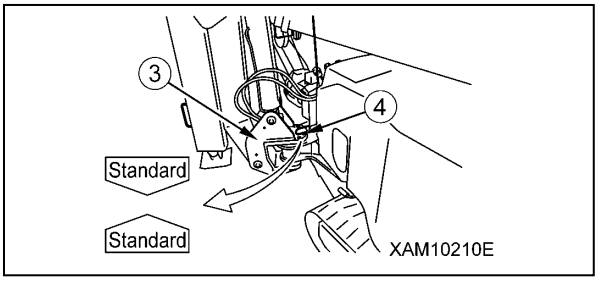

Fig. 4-107

https://truckmanualshub.com/

3. Insert the position pin (4) into the hole where the seals “Standard” are aligned.

NOTICE: Position pin has a ball chain for prevention of loss. Make sure that the ball chain is not caught by or crossing the top of the frame. If it is, the position pin will not go all the way into the pin hole of the rotary and may come off.

4. Remove the snap pin (12) at the end of the position pin (7) of the linkage bracket (1) and pull out the pin.

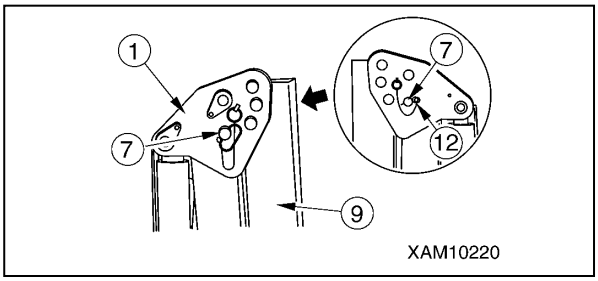

Fig. 4-108

5. Lift up the top box (9) and align the hole of the top box with the position of the outermost hole on the linkage bracket (1).

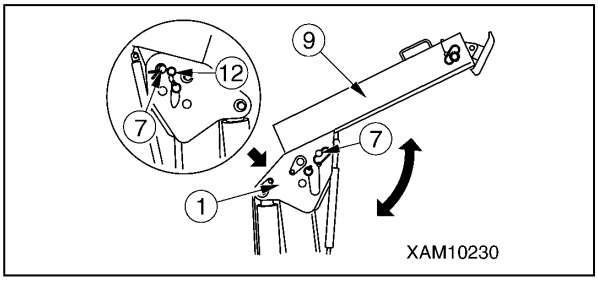

Fig. 4-109

NOTICE: The position of the outermost hole on the linkage bracket means the one that has the seal “MAX” affixed to it.

6. Insert the position pin (7) into the outermost hole on the linkage bracket (1) and retain it with the snap pin (12) at its end.

NOTICE: If you use the outriggers by inserting the pin into any hole other than the one with a sticker “Extended to maximum” at the pin of the coupled bracket, operate the machine in accordance with the rated total load for the "Other than MAX" outrigger position in “RATED TOTAL LOAD CHARTS” on page 3-13.

7. Remove the snap pin (13) at the end of the position pin (8) of the top box (9) and pull out the position pin.

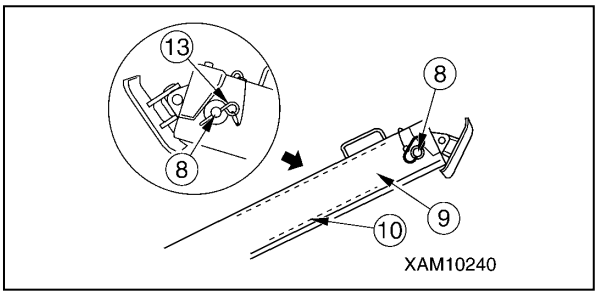

Fig. 4-110

8. Pull out the inner box (10) from the top box (9) and align the hole on the top box with the position of the innermost hole on the inner box.

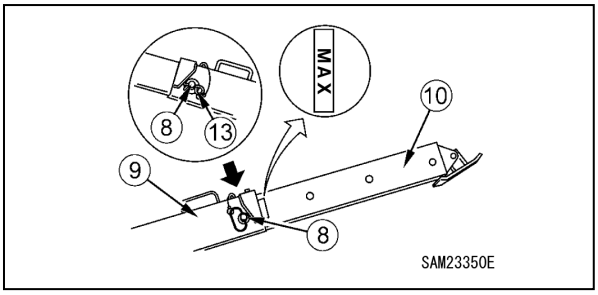

Fig. 4-111

NOTICE: The position of innermost hole on inner box, means the one that meets the top box hole when the seal “MAX” affixed to the side of inner box is totally exposed.

9. Insert the position pin (8) into the hole of the top box (9) and retain it with the snap pin (13) at its end.

NOTICE: When the outrigger is set with the pin inserted to any hole other than that of "MAX" extension, work should be performed in accordance with the rated total load for the "Other than MAX" outrigger position in “RATED TOTAL LOAD CHARTS” on page 3-13.

10. Prepare the other three outriggers in the same manner.

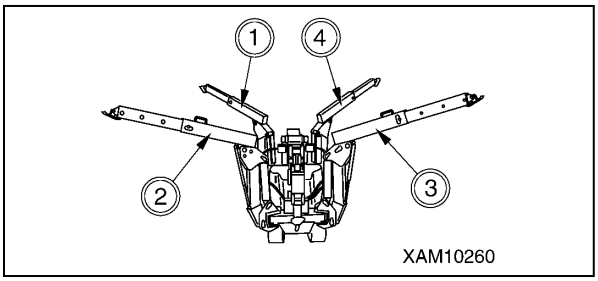

Fig. 4-112

https://truckmanualshub.com/

11. After completion of this preparation work, make sure that the position pins are securely inserted into each hole with retainers engaged.

Procedures after Starting the Machine

WARNING! Tilting of the machine more than three degrees causes the tipping over alarm buzzer to sound. Adjust the machine so that it is placed in flat condition and the alarm buzzer stops.

1. Start the machine. For more information, see “Starting the Machine” on page 4-26. After starting, set the accelerator lever to low speed.
2. Push in the travel lever while unlocking the lever to enable operation of the outriggers.

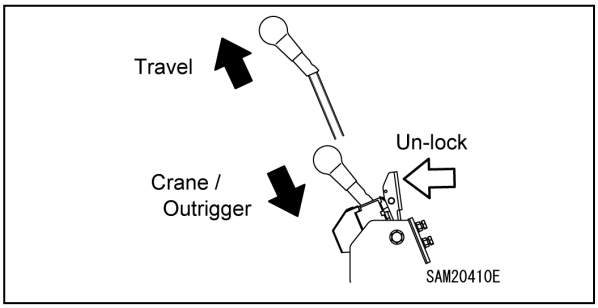

Fig. 4-113

3. Select outrigger mode on the Home screen.

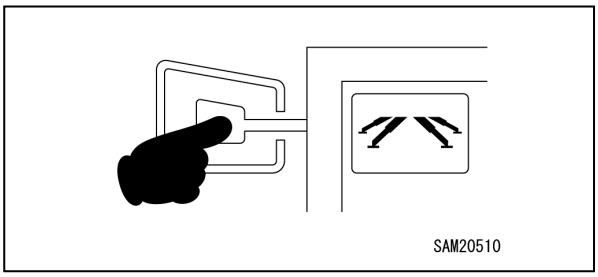

Fig. 4-114

4. Check the outrigger number on the monitor against the actual outrigger number to determine the outrigger used.

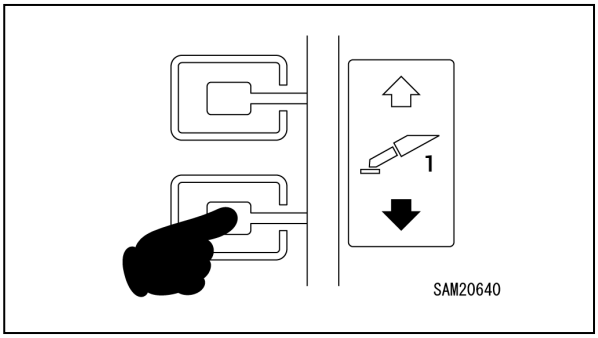

Fig. 4-115

5. Press one or two Outrigger Ground Set-Up Switches.
   The outrigger cylinders will extend. Release the switch(es) once the outrigger pads make contact with the ground.
   Operate the other switches in the same way until all four outrigger pads are in contact with the ground.
6. Once all outrigger pads are in contact with the ground, press the Outrigger Ground Set-Up Switches once again.
   The outrigger cylinders will extend. Release the switch(es) once the machine has lifted off the ground slightly.
   Operate the other switches in the same way until all four outrigger pads are raised to the same height. Repeat this operation to gradually lift the machine off the ground until the rubber track is at 80 mm high.

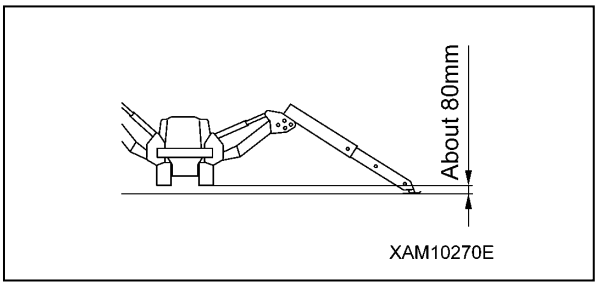

Fig. 4-116

WARNING! Do not operate the machine if the rubber tracks are not properly positioned.

7. Use the level gauge to adjust the machine until it is level. An alarm buzzer will sound if the machine tilts by more than 3 degrees.
8. Once the outriggers are in place, return to the Home screen on the monitor.

https://truckmanualshub.com/

Setting Outriggers (Multi Outrigger State)

WARNING! The situation in which at least one of the four outriggers is extended differently is referred to as multi outrigger state.

Multi outrigger state offers advantages in locations where space is limited. Make sure you understand the particular characteristics before using this function. The function affects crane stability. Additionally, restrictions apply to the range of motion, and the rated total load will also change.

For more information the multi outrigger state characteristics, see “Crane Operation Prohibited Zones Due to Outrigger Rotary Angle” on page 4-50.
For multi outrigger state, rotate the outrigger rotary (3) and insert the position pin (4) at a position where the “Standard” label on the side of the rotary does not align with the “Standard” label on the side of the frame, giving an extension angle other than the standard angle outrigger state.
Even when all four outriggers are extended at the standard angles, the situation in which the Outrigger Angle Setting Lights are not all lit in green or yellow is referred to as Multi outrigger state.

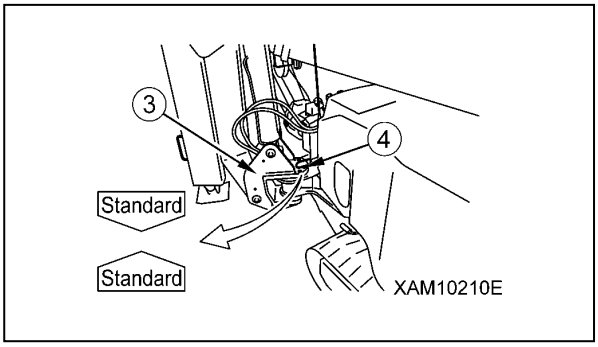

Fig. 4-117

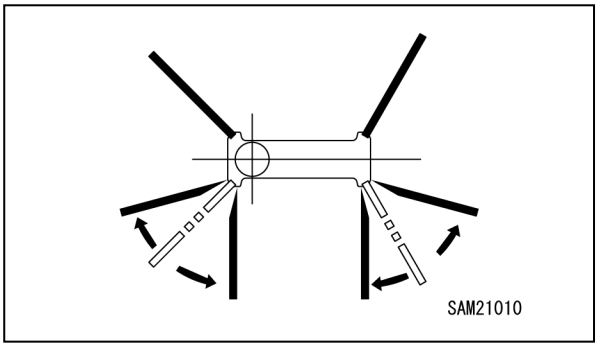

Fig. 4-118

NOTICE: For more information on operations other than the outrigger rotary positions, see “Setting Outriggers (Normal Outrigger State)” on page 4-44. The crane will not operate if two or more adjacent “Outrigger Angle Setting Lights” are lit in green.

- At least two of the adjacent outriggers must always be set at the standard angle, and must be set to "MAX" extension.
  Slewing restrictions always apply when crane is in Multi-Angle outrigger state, which means one or two adjacent outriggers are set at Multi angle position.
- Slewing by 360 degrees is allowed when all four outriggers are set at the standard angle.

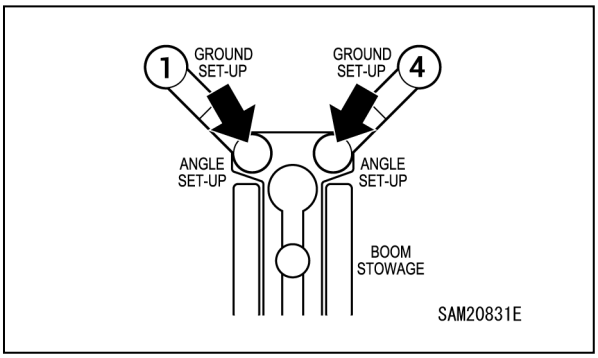

Fig. 4-119

If the Outrigger Angle Setting Lights are not all illuminated green or yellow, the system automatically switches to “M: Multi Outrigger State”

If “M: Multi Outrigger State” is flashing, the above outrigger angle state are not satisfied and the outriggers must be redeployed.

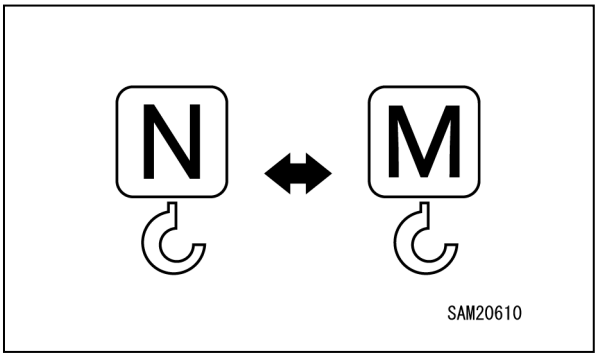

Fig. 4-120

https://truckmanualshub.com/

OUTRIGGER SETTING MODES

Make sure all outriggers are placed properly before performing crane operation. This machine features a safety-interlock system that prevents crane operation unless all lights, other than the Boom Stowing Light on the outrigger monitor, are on.

Always place the machine in a horizontal position using the level when extending the outriggers. An inclination alarm sounds when the machine is tilted 3 degrees or more and stops when the machine is placed in a horizontal position.

WARNING! Tip Hazard. Do not operate the machine if the inclination alarm sounds and the machine is tilted greater than 3 degrees. The tilt of the machine must be less than 3 degrees for proper operation.

Before using the crane with the outriggers not fully extended, know the limitation of the machine. Determine safe operation by referring to the rated total load for the "Other than MAX" outrigger position in “RATED TOTAL LOAD CHARTS” on page 3-13.

WARNING! Tip Hazard. Only operate the crane within the guidelines indicated for the "Other than MAX" outrigger position in “RATED TOTAL LOAD CHARTS” on page 3-14 when the outriggers are not fully extended. For proper operation of the machine, do not exceed these guidelines.

WARNING! Tip Hazard. Always rotate a hoisted load slowly, in the 360-degree slewing position, using a short working radius and with the motor at low speed, regardless of the load size. The machine could become unsteady if a short working radius is not used and the motor is operating at a high speed.

"MAX" Outrigger Position

When the outriggers are set at the fully extended position on uneven ground, the width of the extended outriggers deceases, even when there is 80 mm of clearance between the bottom of the rubber tracks and the ground. See “RATED TOTAL LOAD CHARTS” on page 3-10 and “"Other than MAX" Outrigger Position” on page 4-49.

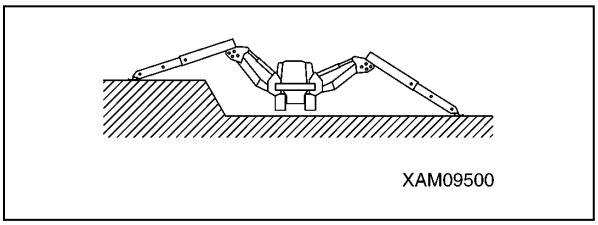

Fig. 4-121

The "MAX" outrigger position is shown in the figure below. See “RATED TOTAL LOAD CHARTS” on page 3-10 and the rated total load indicated for outriggers extended to maximum for additional information.

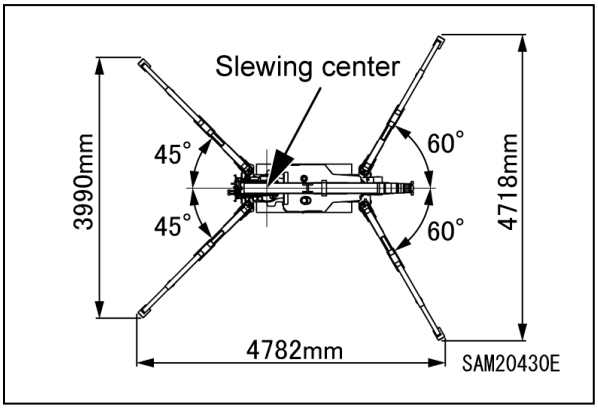

Fig. 4-122

If the inner box is retracted even slightly, crane operation should proceed referring to the rated total load for the "Other than MAX" outrigger position in “RATED TOTAL LOAD CHARTS” on page 3-10.

See “OUTRIGGER SETTING” on page 4-43 for proper setting of the outriggers.

https://truckmanualshub.com/

The "MAX" outrigger position occurs when:

1. The outrigger is set with the position pin position (60 degrees front, 45 degrees back).
2. The inner box of each outrigger is fully extended.
3. All outriggers are placed on a level surface.
4. Approximately 80 mm is assured for clearance (between the outrigger bottom and crawler bottom).

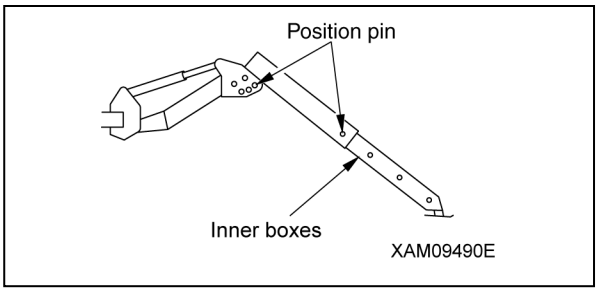

Fig. 4-123

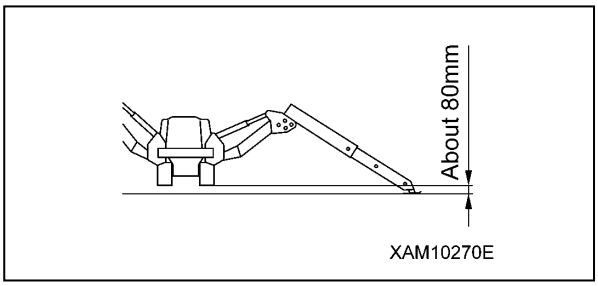

Fig. 4-124

"Other than MAX" Outrigger Position

When the outriggers are set at the "Other than MAX" outrigger position on uneven ground, do not use the machine.

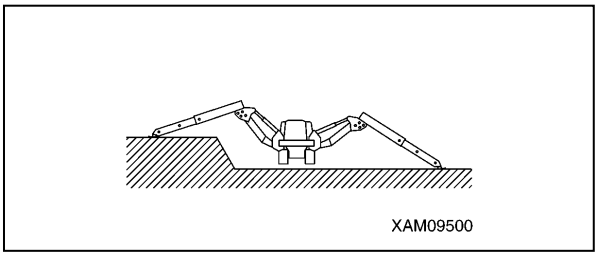

Fig. 4-125

The "Other than MAX" outrigger position occurs when:

1. The outrigger is set with the position pin position (60 degrees front, 45 degrees back).
2. The inner box of each outrigger is extended other than maximum.
3. All outriggers are placed on a level surface.
4. Approximately 80 mm is assured for clearance (between the outrigger bottom and crawler bottom).

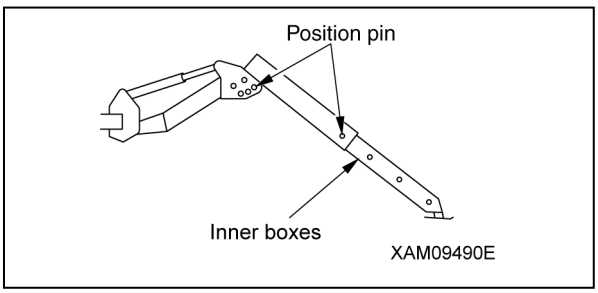

Fig. 4-126

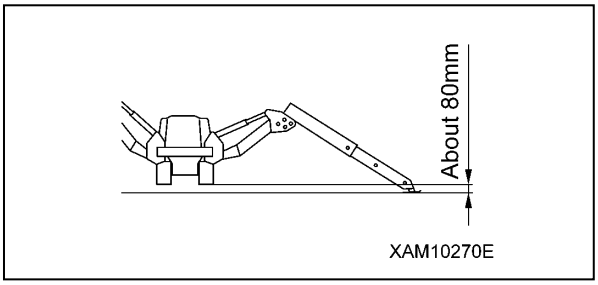

Fig. 4-127

If one or more outriggers are retracted to other than maximum point, see the rated total load for the "Other than MAX" outrigger position in “RATED TOTAL LOAD CHARTS” on page 3-10 for correct capacities.

https://truckmanualshub.com/

Crane Operation Prohibited Zones Due to Outrigger Rotary Angle

WARNING!

- **The illustration below shows crane operation prohibited zones (diagonally shaded zones in the illustration below) due to the outrigger set up condition. Crane operation in the crane operation prohibited zones (diagonally shaded zones in the illustration below) causes the machine to tip over, leading to serious personal injury. Never perform crane operation in the shaded zones below.**

  At least two of the adjacent outriggers must always be set at the standard angle, and must be set to "MAX" extension.
- **Slewing restrictions always apply when crane is in Multi-Angle outrigger state, which means one or two adjacent outriggers are set at Multi angle position.**
- **Slewing by 360 degrees is allowed when all four outriggers are set at the standard angle.**

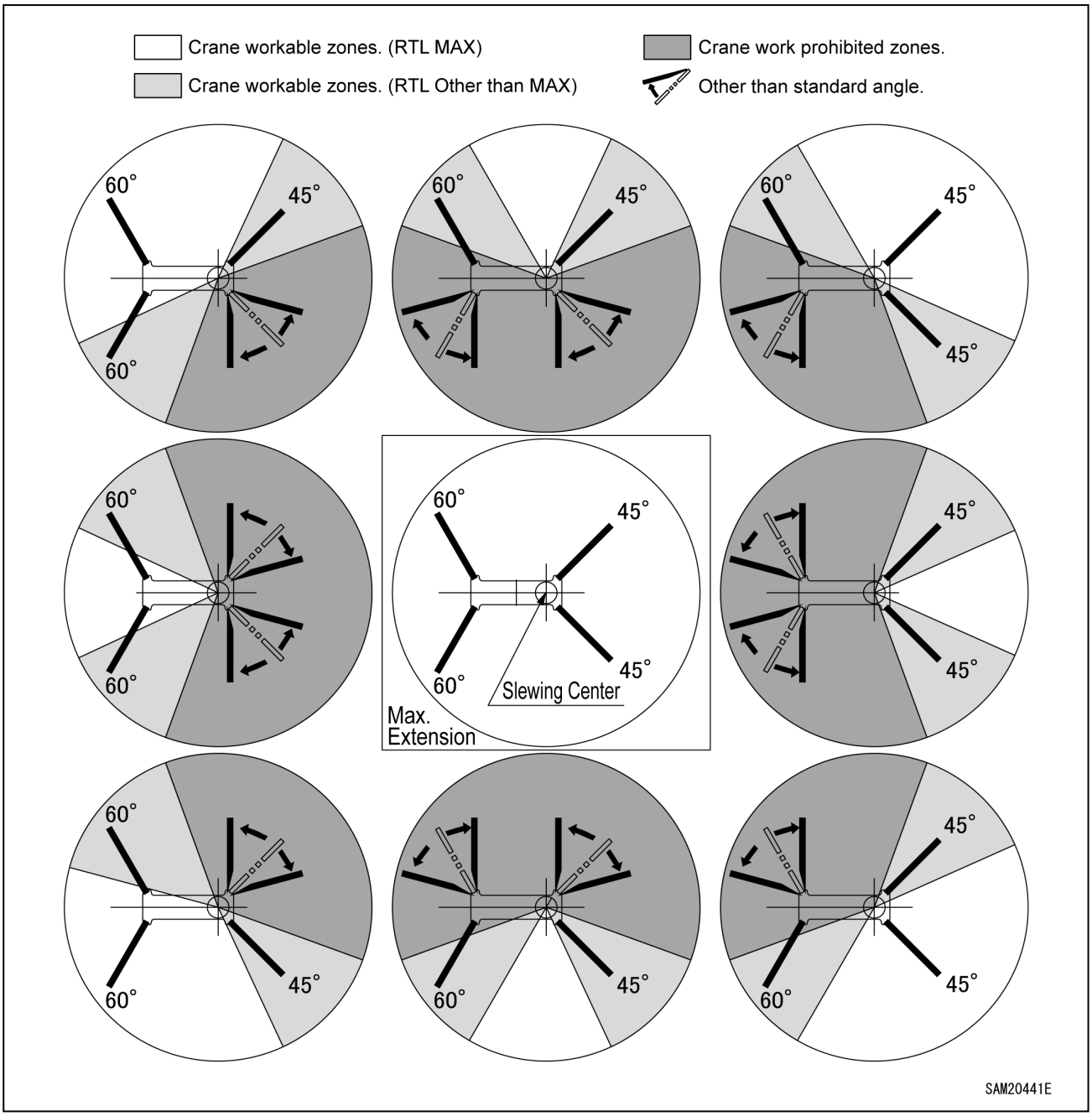

Fig. 4-128

https://truckmanualshub.com/

Working Areas Based On Outrigger Posture

The following three outrigger posture defined:

MAX:
Rotary base at STANDARD ANGLE position, both the outer box and upper box are pinned at MAX extension position.

OTHER THAN MAX:
Rotary base at STANDARD ANGLE position, the upper box and or the inner box are not at MAX extension position.

MULTI ANGLE:
Rotary base NOT at STANDARD ANGLE, regardless of position of inner box and upper box pinning position.

Outrigger Posture Setting Rules:

1. All 4 outriggers must be deployed/set. Leaving any outrigger in stowed position is not allowed.
2. At least 2 neighboring outriggers rotary base must always be at STANDARD ANGLE. 1 STANDARD ANGLE outrigger is not allowed.
3. When MULTI ANGLE is used, at least 2 neighboring STANDARD ANGLE outriggers must be set at MAX extension.
4. When MULTI ANGLE is used. Slewing radius restrictions always apply for crane lifting operation. There is not unlimited 360° slewing.
5. Within the allowed slewing radius, Rated Total Load Capacities (RTL) are either “MAX” or “OTHER THAN MAX” based on the corresponding outriggers posture, extension position.

2 Outrigger States:

STANDARD STATE: 2 POSSIBLE OUTRIGGER COMBINATIONS

1. ALL 4 OUTRIGGERS at “max” posture, identical.
2. ALL 4 OUTRIGGERS at “other than max” posture, identical.

MULTI STATE: 26 POSSIBLE OUTRIGGER COMBINATIONS

1. 10 COMBINATIONS have no outriggers in multi-angle posture. includes multiple combinations of outriggers set at “max” or “other than max” posture. 360° slewing radius allowed.
2. 16 COMBINATIONS have 1 or 2 outriggers in multi-angle posture. includes multiple combinations of outriggers set at “max” or “other than max” posture. slewing radius restrictions apply, no 360° slewing.

Boom Deploy & Stowage In The Restricted Slewing Area:

The boom stowed position, maybe in the portion of the restricted slewing area, when Multi Angle posture is used.
The boom will slewing, raise/lower in the restricted area when:

1. Boom length is fully retracted.
2. Boom angle of least 50°.
3. There is NO lifted load other than block/ball/searcher hook.
4. The boom will lower below 50° boom angle within the 340°-20° portion of the slewing radius.

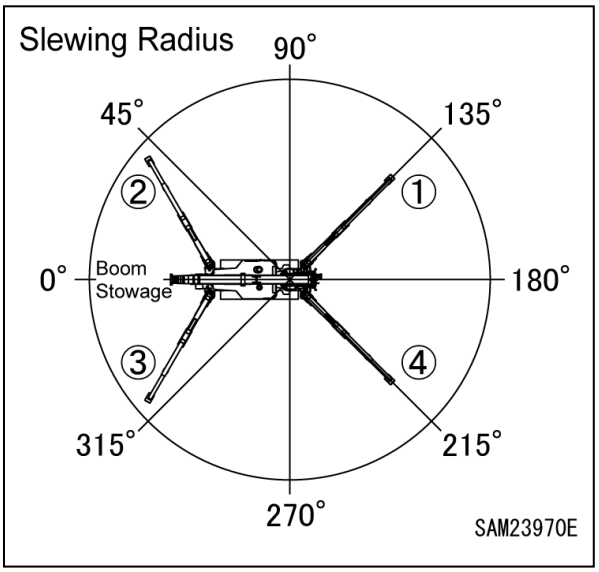

Fig. 4-129

https://truckmanualshub.com/

		Outrigger Combinations						
		Outrigger Posture				Slewing & Capacity Radius (deg.)		
		Outrigger ①	Outrigger ②	Outrigger ③	Outrigger ④	Lifting Operation	RTL Max	RTL Other than Max
Standard State	360° Slewing	Max	Max	Max	Max	360°	360°	None
		Other than Max	Other than Max	Other than Max	Other than Max	360°	None	360°
Multi State	360° Slewing	Other than Max	Max	Other than Max	Max	360°	None	360°
		Max	Other than Max	Max	Other than Max	360°	None	360°
		Other than Max	Max	Max	Other than Max	360°	335 to 25°	25 to 335°
		Other than Max	Max	Max	Max	360°	245 to 25°	25 to 245°
		Other than Max	Other than Max	Max	Max	360°	245 to 300°	300 to 245°
		Max	Other than Max	Max	Max	360°	156 to 300°	300 to 156°
		Max	Other than Max	Other than Max	Max	360°	156 to 204°	204 to 156°
		Max	Max	Other than Max	Max	360°	60 to 204°	204 to 60°
		Max	Max	Other than Max	Other than Max	360°	60 to 115°	115 to 60°
		Max	Max	Max	Other than Max	360°	335 to 115°	115 to 335°
	Restricted Slewing Radius	Max	Max	Other than Max	Multi Angle	20 to 160°	60 to 115°	20 to 60° 115 to 160°
		Max	Max	Multi Angle	Other than Max	20 to 160°	60 to 115°	20 to 60° 115 to 160°
		Max	Max	Multi Angle	Multi Angle	20 to 160°	60 to 115°	20 to 60° 115 to 160°
		Max	Max	Max	Multi Angle	290 to 160°	335 to 115°	115 to 160° 290 to 335°
		Multi Angle	Max	Max	Other than Max	215 to 70°	335 to 25°	25 to 70° 215 to 335°
		Other than Max	Max	Max	Multi Angle	290 to 145°	335 to 25°	25 to 145° 290 to 335°
		Multi Angle	Max	Max	Multi Angle	290 to 70°	335 to 25°	25 to 70° 290 to 335°
		Multi Angle	Max	Max	Max	200 to 70°	245 to 25°	25 to 70° 200 to 245°
		Other than Max	Multi Angle	Max	Max	200 to 340°	245 to 300°	200 to 245° 300 to 340°
		Multi Angle	Other than Max	Max	Max	200 to 340°	245 to 300°	200 to 245° 300 to 340°
		Multi Angle	Multi Angle	Max	Max	200 to 340°	245 to 300°	200 to 245° 300 to 340°
		Max	Multi Angle	Max	Max	110 to 340°	156 to 300°	110 to 156° 300 to 340°
		Max	Other than Max	Multi Angle	Max	20 to 250°	156 to 204°	20 to 156° 204 to 250°
		Max	Multi Angle	Other than Max	Max	110 to 340°	156 to 204°	110 to 156° 204 to 340°
		Max	Multi Angle	Multi Angle	Max	110 to 250°	156 to 204°	110 to 156° 204 to 250°
		Max	Max	Multi Angle	Max	20 to 250°	60 to 204°	20 to 60° 204 to 250°

https://truckmanualshub.com/

OUTRIGGER STOWING

WARNING! Tip Hazard. Verify that there is nothing under the rubber tracks before stowing the outriggers. Remove any objects under the rubber tracks, then carefully move the outriggers to the STOW position.

WARNING! Entanglement Hazard. Do not allow people near the machine when stowing the outriggers. People must remain at a safe distance from the machine when stowing the outriggers.

WARNING! Crush Hazard. Do not place your hands, fingers or feet around gaps of movable machine components when stowing the outriggers. Be aware of movable machine components and keep your hands, fingers and feet away from the components.

This example describes the stowing procedure for one outrigger. Set the others in the same manner.

Procedures after Starting the Machine

The outriggers cannot be operated if the boom is not stowed completely.

1. Start the machine.

   Operate the motor at low speed after starting.

2. Push in the travel lever while unlocking the lever to enable operation of the outriggers.

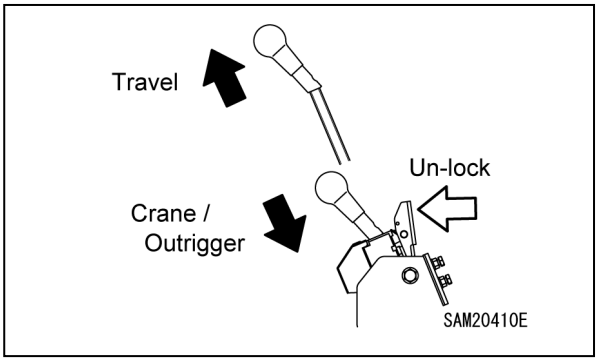

Fig. 4-130

3. Select outrigger mode on the Home screen.

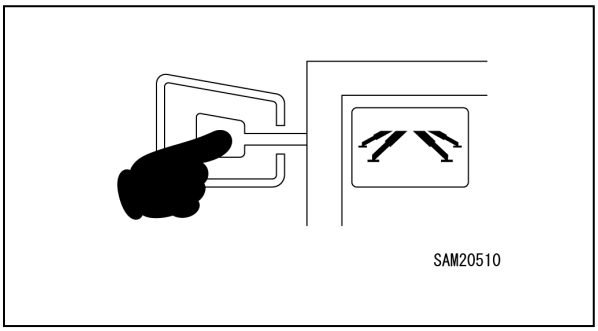

Fig. 4-131

4. Check the outrigger number on the monitor against the actual outrigger number to determine the outrigger used.

5. Push the Outrigger Stowage Switch, one at a time or two simultaneously.
   When, with the outrigger retracting, the machine starts to lower, take your hand off the Outrigger Stowage Switch for the time being.
   Operate the remaining switches in the same manner so that four outriggers are lowered to equal height. Repeat this operation to lower the machine gradually, until the rubber tracks are totally grounded.

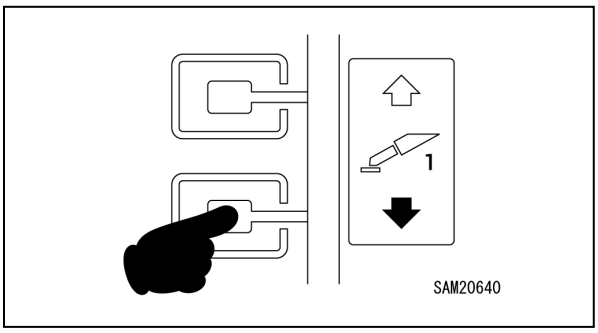

Fig. 4-132

6. After both tracks are completely grounded, continue to push the Outrigger Stowage Switch. When the outrigger cylinder has retracted completely and the outrigger has reached its upper limit, take your hand off the Outrigger Stowage Switch.

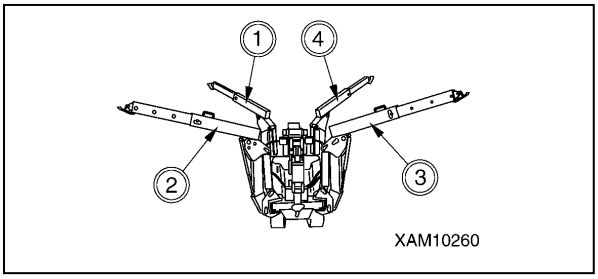

Fig. 4-133

7. Turn off the machine.

https://truckmanualshub.com/

Procedures When Stopping the Machine

WARNING! Crush Hazard. Always hold the outrigger with one hand when removing the position pin. The outrigger can suddenly rotate.

Although the method for stowing outrigger is described with regard to the outrigger 3 only, follow the procedure for the other three outriggers as well:

1. After removing the snap pin (13) at the end of the position pin (8) on the top box (9), remove the position pin.

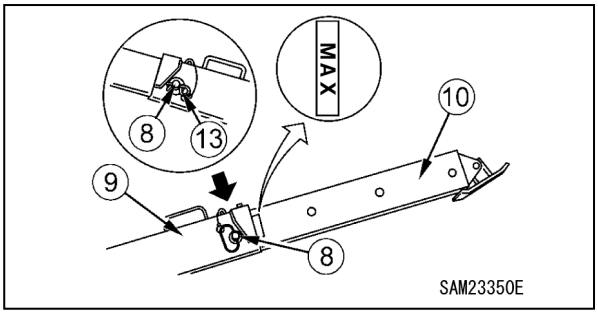

Fig. 4-134

2. Push the inner box into the top box and align the hole of the top box with the outermost hole position on the inner box.
3. Insert the position pin (8) into the hole of the top box (9) and retain it with the snap pin (13) at its end.

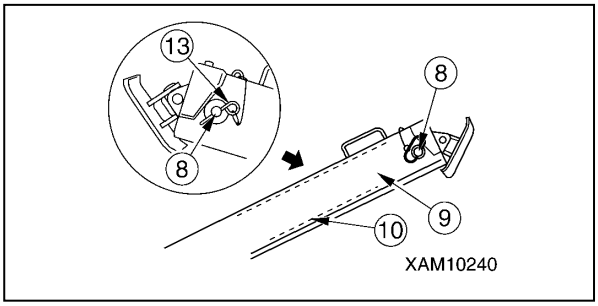

Fig. 4-135

4. After removing the snap pin (12) at the end of the position pin (7) of the linkage bracket (1), pull out the position pin.

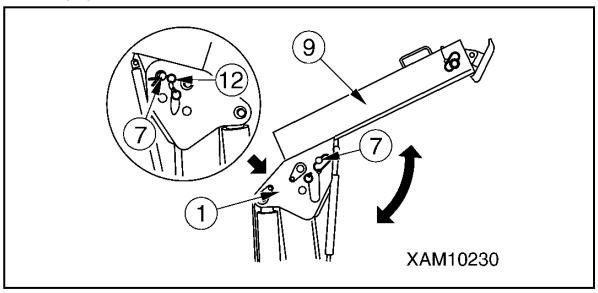

Fig. 4-136

5. Lower the top box (9) and align the hole of the top box with the innermost hole position of the linkage bracket.
6. Insert the position pin (7) into the innermost hole of the linkage bracket (1) and retain it with the snap pin (12) at its end.

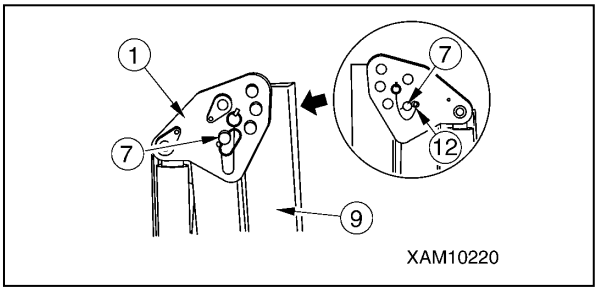

Fig. 4-137

7. Pull out the position pin (4) of the rotary (3) and turn the rotary to inside.

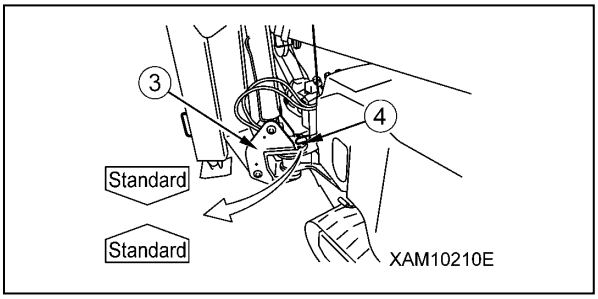

Fig. 4-138

8. Turn the rotary (3) and align the seal “Stow” which is affixed to the side of the rotary with the seal “Stow” affixed to the side of the frame.

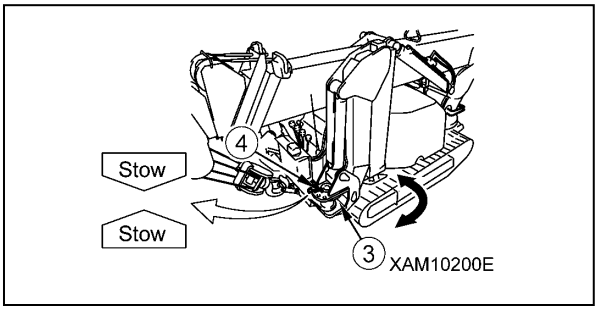

Fig. 4-139

9. Insert the position pin (4) into the hole where the “Stow” seals are aligned.
10. Stow the other three outriggers in the same manner.
11. After stowing the outriggers, make sure that each position pin has been securely inserted and retained.

https://truckmanualshub.com/

Operation in Emergencies

DANGER! The operations indicated here are performed after cancelling the safety device. Operate with great care. Incorrect operation may result in severe hazards, such as machine toppling or damage.

Never use these operations other than in emergency situations.

Outrigger operation when monitor is faulty

If outrigger operation is not possible due to monitor failure or damage, use the “Emergency Outrigger Operation Selection Switch” to enable operation of the outriggers using the crane operation levers.

1. Remove the two knobs at the top of the monitor case and open the cover toward you.

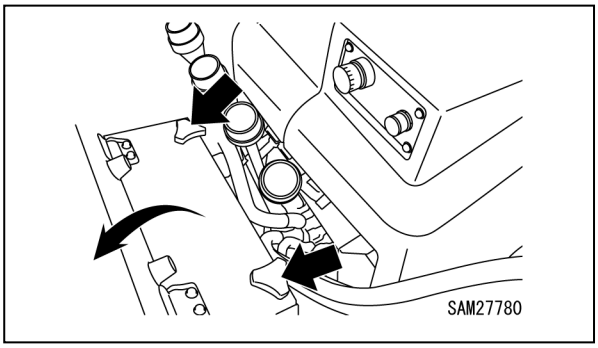

Fig. 4-140

2. Switch the Moment Limiter Override Switch to “ON.”

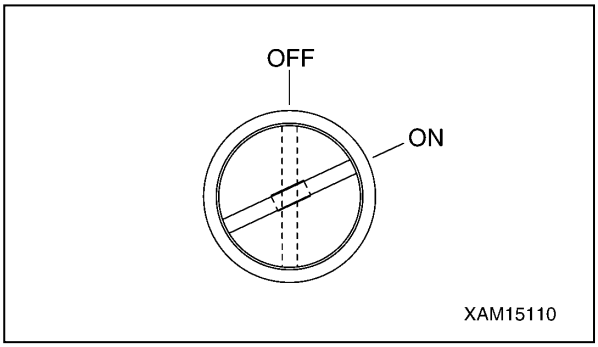

Fig. 4-141

3. Turn on the Emergency Outrigger Operation Selection switch inside the monitor case.

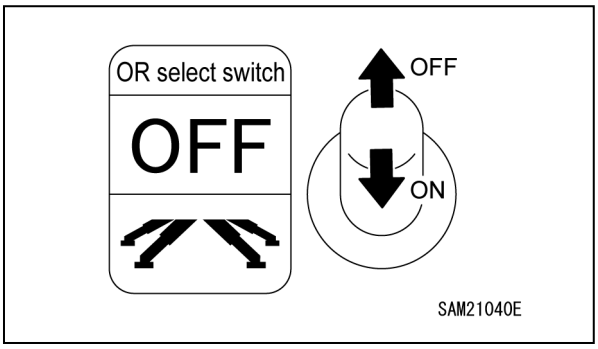

Fig. 4-142

NOTICE: The switch returns to the "OFF" position when released. Hold the switch at the “ON” position when the outriggers are being operated.

4. Operate the crane operation levers with the Emergency Outrigger Operation Selection switch maintained at “ON.”

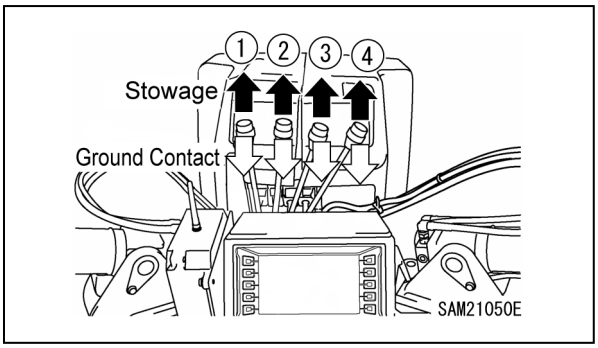

Fig. 4-143

The crane operation lever operations change to the following only while the switch is set to “ON.”

Slew	Outrigger 1
Boom telescoping	Outrigger 2
Winch	Outrigger 3
Boom raise/lower	Outrigger 4

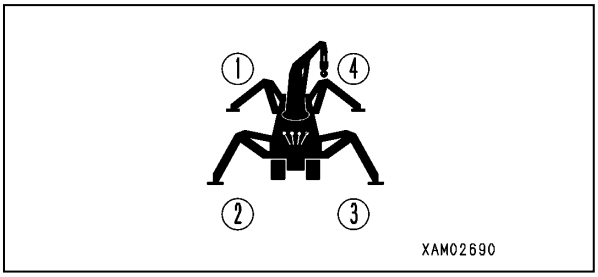

Fig. 4-144

WARNING! Be sure to check the operation lever corresponding to the number of the outrigger to be operated before operating the levers.

https://truckmanualshub.com/

CRANE SAFETY DEVICES

WARNING! Unsafe Operation Hazard. Do not remove or disassemble Detection Switches. Do not move the Detection Switches from their original position. If a Detection Switch is damaged or any abnormality with the switch is found, verify the operation of the auto-stop feature. Immediately repair any problems with the auto-stop feature before operating the crane.

Review, understand and follow the following operation sequences, warning alarms and stopping procedures when operating the machine.

The following table shows the display and warning issued and the resulting action of the safety devices when the machine is used under normal conditions.

Standard operation sequence:

- Check before setting outriggers ⇒
- Outrigger setting operation ⇒
- Crane operation ⇒
- Crane stowing operation ⇒
- Outrigger stowing operation ⇒
- Machine travelling operation

https://truckmanualshub.com/

Interlock Characteristics

Interlock Functions	Description of Interlock Function and Action
Outrigger Interlock	The outriggers will not operate unless the outrigger rotaries are rotated in the extended direction (outward) while the boom is stowed (boom fully lowered and in slewing stowage position). • The boom in a fully lowered state is detected by the angular sensor on the boom. If an abnormality occurs during operation, check the angular sensor on the boom. • The boom slewing stowage position is detected by the detection switch on the slewing unit detecting whether the boom stops at the slewing stowage position. If an abnormality occurs during operation, check the detection or switch on the slewing unit.
Crane Interlock 1	The crane cannot be operated (telescoping, hoisting up and down, raising/lowering, and slewing) unless all four outriggers have made ground contact (extended and in contact with ground). The outrigger installation status is detected as follows: • Each outrigger rotary is fitted with a detection switch, which detects whether the rotary is expanded to the extended position. If an abnormality occurs during operation, check the detection switch on the rotary unit. • A detection switch is mounted at the base of each outrigger cylinder, which detects whether the outrigger is in contact with the ground based on the load on the cylinder. If an abnormality occurs during operation, check the detection switch on the cylinder base.
Crane Interlock 2	• If “2 or more adjacent outriggers are lifted” is detected while operating the crane, crane operations will be partially restricted (preventing operations other than retraction and lowering). In this case, the Working Status Lamp flashes in red, and the alarm buzzer sounds. • If the “2 or more adjacent outriggers are lifted” status clears when the lever is returned to the NEUTRAL position, normal crane operations are enabled. • If the lifted outrigger status is not cleared even when the lever is returned to the NEUTRAL position, the boom must be retracted first and the outriggers reset.

DANGER! If the “2 or more adjacent outriggers are lifted” status occurs, use the Override switch to clear this status. Comply with all precautions described in “Override Switch” when using the Override switch.

WARNING! If the Detection Switches are damaged, verify the ON/OFF operation of the lights on the outrigger display, and the operation of the crane interlock and outrigger interlock functions. If any problems are found, contact us or our sales service agency.

If boom operation is not enabled after the outrigger has been extended and set, the outrigger safety device may have failed or need adjustment.
Contact us or our sales service agency to request inspection and repair service.

https://truckmanualshub.com/

Crane Operations

The columns of the table are described below.

Standard Operation Sequence, Machine Status This field shows the standard operation sequence and the operation position of operation levers and switches, and machine status.	**Display and Warning** This field shows the display and warning issued as a result of the operation.	**Activation of Safety Devices** This field shows the name of the safety device that prevents the resulted error and its action.

Perform crane operations.
• Travel lever in Crane/Outrigger
• Crane operation with levers
	• Boom Stowing Light on the monitor off (besides BOOM STOWING position)
	• Actual work and the rated total load are compared, and the Working Status Lamp flashes according to the load factor.
	• Load factor for flashing Working Status Lamp
	  • Load factor less than 90%: Working Status Lamp (green) flashes.
	  • Load factor 90% to less than 100%: Working Status Lamp (yellow) flashes, alarm sounds intermittently.
	  • Load factor 100% or more: Working Status Lamp (red) flashes, alarm sounds continuously.
		Moment limiter:
		When the load factor reaches 100% or more (overloaded), hook raising, boom extending, boom raising and boom lowering operations stop.

When one of the outriggers goes up in the air during crane operation	Ground Set-Up Lights (red) on the monitor flash	—
When two or more adjacent outriggers lift up during crane operation	Ground Set-Up Lights (red) on the monitor flash	Boom extending, hook raising, boom raising, boom lowering, and slewing operations stop.
When the hook is raised excessively	Alarm buzzer sounds continuously	Over winding detection function is activated. Hook raising operation stops.
When the hook is lowered excessively	Alarm buzzer sounds continuously	Rope warning is activated.
When the machine tilts 3 degrees or more during crane operation	Alarm buzzer sounds continuously	Hook lowering operation stops.

Crane Stowing Operations

Standard Operation Sequence, Machine Status This field shows the standard operation sequence and the operation position of operation levers and switches, and machine status.	**Display and Warning** This field shows the display and warning issued as a result of the operation.	**Activation of Safety Devices** This field shows the name of the safety device that prevents the resulted error and its action.
Operate the machine to take the boom stowing posture. • Fully retract the boom • Boom horizontal stowing position • Boom slew and stow position	Boom Stowing Light (green) on the monitor on	Outrigger interlock device: If the Boom Stowing Light (green) does not turn on, all the outrigger operations stop.

https://truckmanualshub.com/

CRANE OPERATION

The following list of potential hazards must be observed while operating the crane or boom.

Before operating the crane, be sure to verify that the Moment Limiter Override Switch is at the “OFF” position. Do not attempt to operate the crane with the Moment Limiter Override Switch set to “ON.”

The Moment Limiter Override Switch should be set to “ON” only when the moment limiter is faulty or for crane inspection and maintenance work.

WARNING! Unsafe Operation Hazard. Do not operate the crane and boom if an abnormal condition occurs. Stop the operation immediately and correct the problem. Contact us or our sales service agency to request inspection and repair service.

WARNING! The following safety messages address a potential Crush Hazard while operating the crane and boom. Prevent any body part from entering the following areas:

- **Between the boom and the travelling dolly**
- **Between the outrigger support and the ground contact surface**
- **Between the boom/post and the boom cylinder**
- **Between the winch drum and the wire ropes**
- **Between sheaves and wire rope**
- **Between the crawlers and the ground**

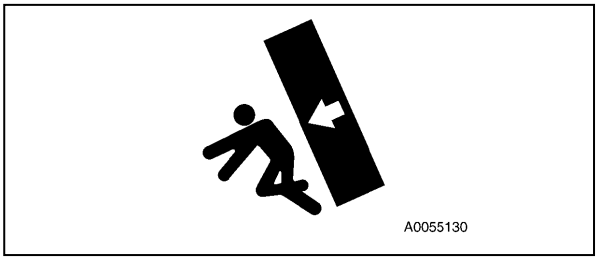

Fig. 4-145

WARNING! The following safety messages address a potential Crush Hazard while operating the crane and boom:

- **Verify there are no people within the working radius of the crane and boom before operating the crane and boom. Blow the horn to signal operations are to begin. Be sure people do not enter the area inside working radius while the crane and boom are operating. Take into consideration that the working radius increases when a load is hoisted and the boom deflects.**

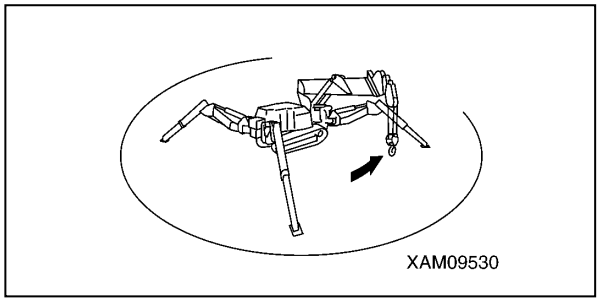

Fig. 4-146

- **Never move people with the crane and boom. People must stay off of the crane and boom while the machine is operating.**

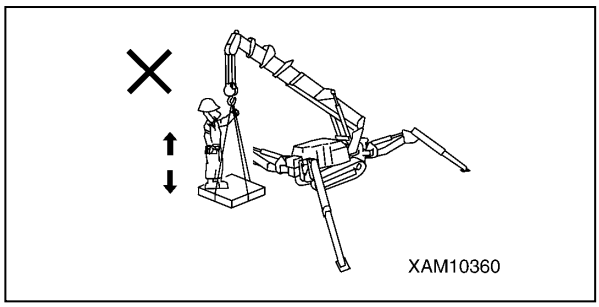

Fig. 4-147

- **Use caution when operating the boom with a low boom angle. Do not allow the boom to hit the operator or the machine when the boom angle is low.**

WARNING! The following safety messages address a potential Tip Hazard while operating the crane or boom:

- **Do not work beyond the capacity of the machine. Always observe the "RATED TOTAL LOAD CHARTS" on page 3-13.**
- **Do not raise or lower the boom quickly.**
- **Always set the outriggers on solid, level ground when performing crane operations.**

WARNING! The following safety messages address a potential Unsafe Operation Hazard while using more than one crane to hoist a load:

- **Avoid using more than one crane to hoist a load.**
- **When using more than one crane, establish a work process with responsible operators.**
- **Communicate the process fully and assure that the process is understood by all involved.**

https://truckmanualshub.com/

- **Always use a supervisor on the ground to assist with directions.**
- **Always observe the following:**
  - **Use cranes of the same model.**
  - **Choose the machine model that can handle sufficiently larger load than the load to be hoisted.**
  - **Make sure only one person gives direction.**
  - **Limit the crane operations to a single operation and do not attempt any slewing operations.**
  - **Appoint only one experienced slinger to assist.**

WARNING! The following safety messages address a potential Sudden Movement Hazard while operating the crane or boom:

- **Do not move the slewing, boom lowering or hook lowering levers suddenly. Always move the slewing, boom lowering and hook lowering levers slowly.**
- **Do not move the slewing, boom lowering and hook lowering levers with the motor set at any speed other than low. Always move the slewing, boom lowering and hook lowering levers with the motor at low speed.**

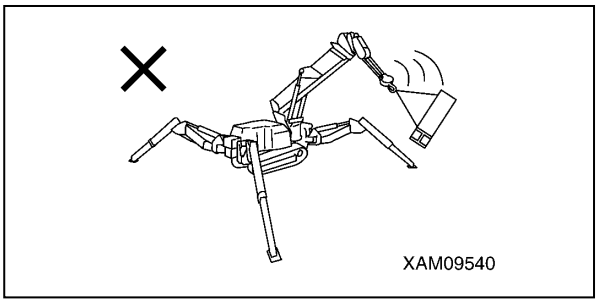

Fig. 4-148

- **Do not leave the driving operation position when a load is hoisted. Lower the load before leaving the machine.**
- **Keep the hook block wound up when not in use. Otherwise, the person near the load may collide with the hook block.**

WARNING! The following safety messages address a potential Visual Impairment Hazard while operating the crane or boom:

- **Do not work if visually impaired due to worksite location or weather.**
- **Always use adequate lighting when working in dark areas.**

WARNING! The following safety messages address a potential Tip Hazard while operating the crane or boom:

- **Always rotate a hoisted load slowly, in the 360-degree slewing position, using a short working radius and with the motor at low speed regardless of the load size. The machine could become unsteady if a short working radius is not used and the motor is operating at a high speed.**
- **Be sure to operate the crane and boom levers slowly when a load is hoisted. Sudden lever movement may cause the load to move suddenly, resulting in loss of control of the machine.**
- **Do not use the slewing position other than when slewing the load. Using the slewing position to bring forth a load or reposition a load to stand up is prohibited.**

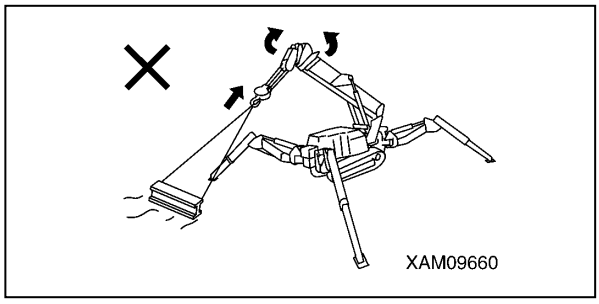

Fig. 4-149

- **Never allow a hoisted load to contact an outrigger while slewing the load. Certain outrigger placement may be unavoidable when setting the machine. Use caution while slewing the load to avoid contact with an outrigger.**

WARNING! Entanglement Hazard. Do not allow a hoisted load to contact any obstacles while hoisting a load or slewing a load. Be aware of the surroundings. Do not allow the load to contact obstacles such as trees, construction material or other objects. If caught by an obstacle, do not forcibly wind the hoisted load. Untangle the caught item before winding the load.

https://truckmanualshub.com/

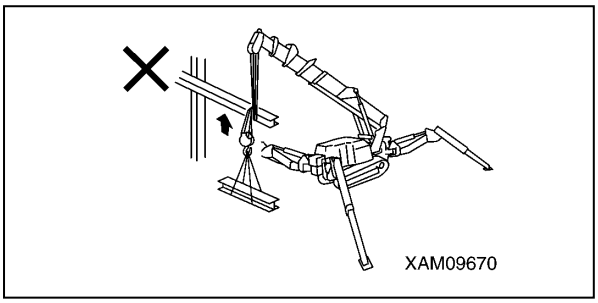

Fig. 4-150

Before Crane Operation

NOTICE:

Stow the travel lever before operating the crane operation levers or outrigger switches.

If the travel lever is not pushed in, the interlock will engage, preventing the crane operation levers and outrigger switches from operating.

When unhooking the hook block from the hook hanger, make sure the wire rope does not have excessive slack and that the hook block does not rest on the ground. This will help avoid tangling on the winch drum.

Perform the following operations before operating the crane:

1. Verify that the Moment Limiter Override Switch is at the “OFF” position.
   The safety device operation will not stop if at the “ON” position.

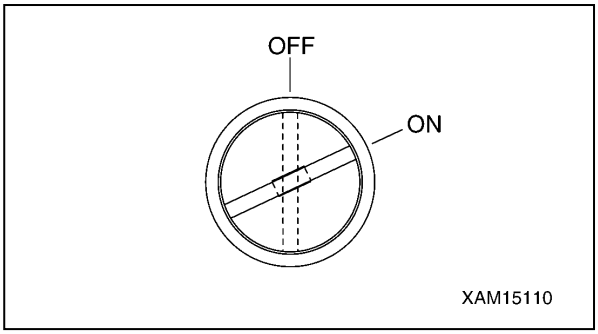

Fig. 4-151

NOTICE:

If the Moment Limiter Override Switch is “ON” (Override), the Working Status Lamp will flash in red, and an alarm buzzer will sound intermittently.

2. Switch on the Home screen on the monitor.

NOTICE: The crane cannot be operated while in Outrigger mode.

NOTICE: The crane cannot be operated unless the outriggers are correctly positioned.

3. Push in the travel lever while unlocking the lever to enable crane operations.

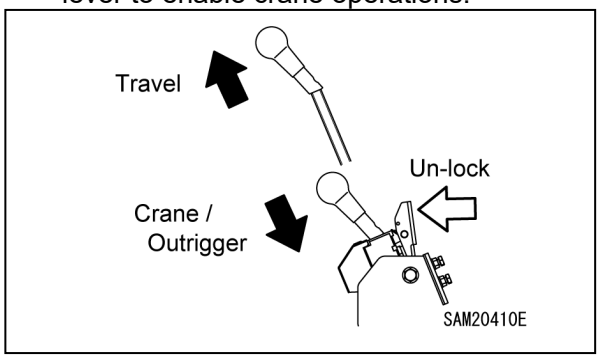

Fig. 4-152

4. Move the winch lever (3) to DOWN to loosen the wire rope securing the hook block in place.

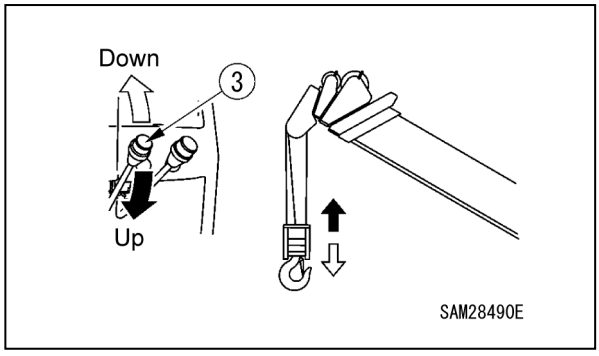

Fig. 4-153

5. Detach the hook block (4) from the hook hanger (3).

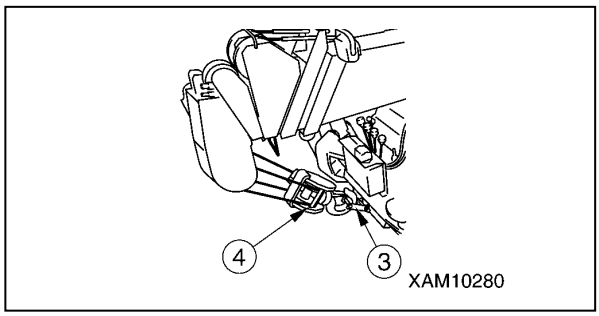

Fig. 4-154

https://truckmanualshub.com/

Crane Operation Position

Use the crane operation position procedure when switching operations after performing the procedure in “Before Crane Operation” on page 4-61.

1. Move the winch lever (3) to the DOWN (push forward) position and lower the hook until anti-two block is not detected, but do not let the hook block touch the ground.

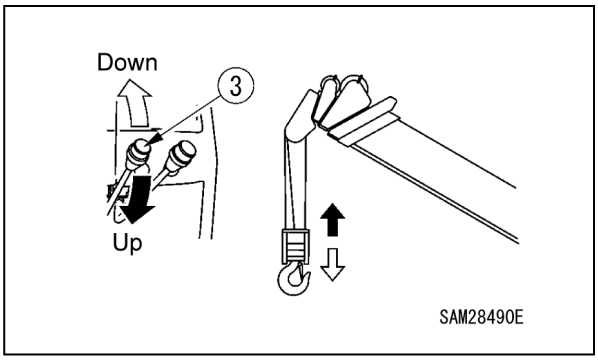

Fig. 4-155

2. Move the boom lift lever (4) to the RAISE (pull toward you) position and raise the boom to an angle where the hook block is not over-wound and not touching the ground.

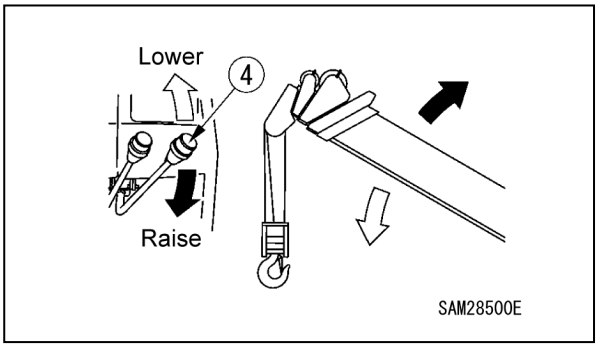

Fig. 4-156

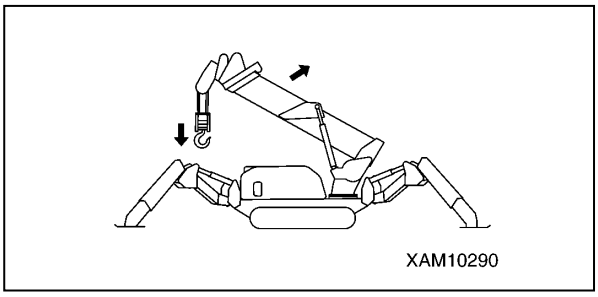

Fig. 4-157

Motor Speed Operation

WARNING! Tip Hazard. Do not operate the crane at high speeds. Decrease the speed at the beginning or near the end of an operation. Change the speed to low or high according to the load.

NOTICE: The motor speed can be adjusted by using the travelling operation unit when travelling, by using the monitor during crane and outrigger operation, and by using the radio remote control transmitter when operating under radio remote control.

Travelling operation unit (only when travelling)

Operate the motor speed adjuster dial as follows:

- MIN: Turning the dial counterclockwise (to the left) reduces the motor speed.
- MAX: Turning the dial clockwise (to the right) increases the motor speed.

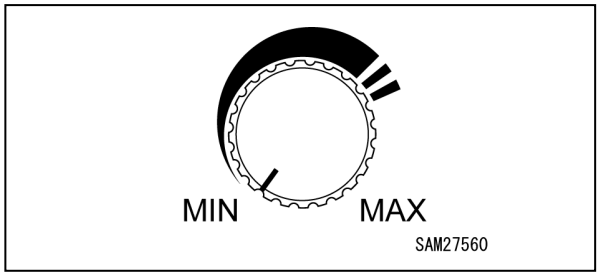

Fig. 4-158

NOTICE: Release your hand from the dial once the motor speed has increased to that required for the task. The dial will remain at that position.

https://truckmanualshub.com/

Monitor (Only During Crane/Outrigger Operation)

Pressing the motor speed adjuster switch increments the motor speed in five steps.

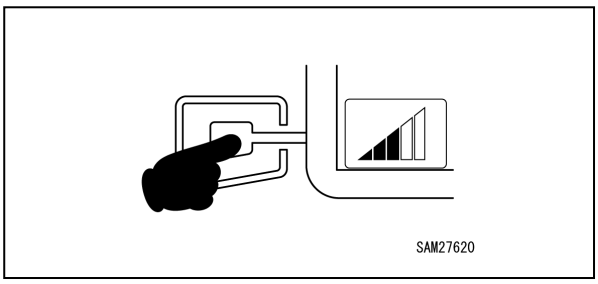

Fig. 4-159

Radio Remote Control (Only When Operating under Radio Remote Control)

There is no motor speed adjuster switch. Vary the speed using the control levers.

Hook Raising / Lowering Operation

WARNING! The following safety messages address a potential Crush Hazard while operating the crane or boom:

- **Verify that all personnel are a safe distance away from the hoisted load once the load starts to be hoisted. The boom can deflect once a load starts to be hoisted. This will cause the load to shift slightly forward.**

WARNING! The following safety messages address a potential Sudden Movement Hazard while hoisting or lowering a load:

- **Always remain seated in the operating position when a load is hoisted. Lower the load before leaving the machine.**
- **Always position the hook above the centre of gravity of the load before hoisting. When the load leaves the ground, stop hoisting and check whether the load is stable. If unstable, lower the load to the ground and readjust the position of the hook to stabilise the load while hoisting. Be sure the load is stable before continuing to hoist the load.**
- **Do not hoist more than one load at a time. Even if the load is within the rated total load limit, multiple loads may be unstable once they are hoisted. Only hoist one load at a time and be sure it does not exceed the rated total load limit.**
- **Always hoist a load in the shortest length possible. Hoisting a load over a lengthy distance may cause the load to become unbalanced. Use extreme caution if a load must be hoisted over a lengthy distance. Hoist the load in as vertical a manner as possible. Use additional methods, such as applying a rope to both ends of the load, to maintain balance.**
- **Verify that a load connected to a sling or other retainer device (other than the hook block) is secure before hoisting the load. Before hoisting the slung load, check whether the load is taught with the hook block. Hoisting a slung load that is not taught with the hook block may cause the slung load to detach from the hook block and fall once the slung load is hoisted.**

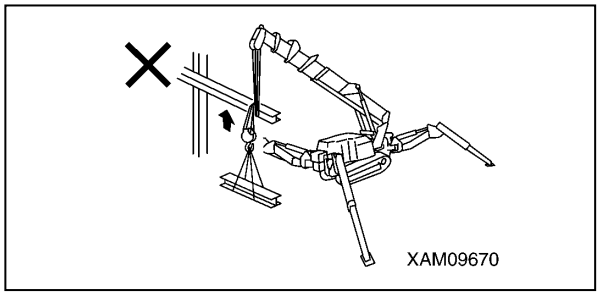

Fig. 4-160

- **Do not hoist a load by pulling it sideways, drawing it in, or hoisting it diagonally or laterally using the boom. These conditions may cause unreasonable force on the machine and uncontrollable movement of the load. Only hoist the load when the hook block and wire rope cable are perpendicular to the ground.**

https://truckmanualshub.com/

WARNING! The following safety messages address a potential Unsafe Operation Hazard while hoisting or lowering a load:

- **Do not continue to hoist a load if the overwind alarm detector sounds. Stop the operation immediately and return all operation levers to the NEUTRAL position.**
- **Do not hoist a load if the wire rope cable is twisted. Eliminate the twist in the wire rope cable before hoisting a load.**
- **Do not allow the hook block to contact the boom while hoisting a load. Damage to the boom, hook block and/or wire rope cables may result. Always maintain clearance between the hook block and boom when hoisting a load.**
- **Do not allow the hook block to contact the boom when extending the boom. When extending the boom, the hook block will start to move toward the boom. Do not allow the hook block to contact the boom. Damage to the boom, hook block and/or wire rope cables may result. Always maintain clearance between the hook block and boom when extending the boom.**
- **Never use damaged wire rope cable to hoist or lower a load. The wire rope cable must be in operation-ready condition to hoist or lower a load.**
- **Do not allow the wire rope cable to become twisted or wind irregularly onto the winch drum. The wire rope cable must wind uniformly onto the winch drum to prevent damage to the wire rope cable.**

WARNING! Entanglement Hazard. Always keep the hook block away from people when it is not in use. Keep the hook block wound up and away from people if it is not in use.

WARNING! Tip Hazard. Never allow a hoisted load to contact an outrigger. Always use caution to prevent the hoisted load from contacting an outrigger.

Hook Raising / Lowering Procedure

The volume of the hydraulic oil in each of the cylinders changes depending on the temperature. When left in idle with a hoisted load, the oil temperature and hydraulic oil volume will incrementally drop, and may cause the loaded boom angle and boom length to decrease. If this happens, perform boom lift and boom extension operations as appropriate to correct.

Move the winch lever (3) as follows:

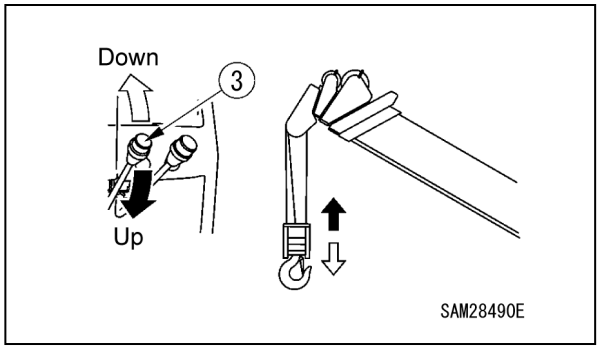

Fig. 4-161

- Lower: Push the lever forward to DOWN.
- Neutral: Release the lever. The lever will return to the NEUTRAL position and stop the raising and lowering of the hook block.
- Raise: Pull the lever toward you to UP.

Adjust the winch raising and lowering speed with the winch lever and travel of the accelerator levers.

While lowering the hook block, do not allow the hook block to hit the ground.

The machine is equipped with a stop alarm/automatic stop safety device. When only a few windings of the wire rope cable remain on the winch drum the alarm sounds and the Over-Unwinding Stop Display flashes in red.

https://truckmanualshub.com/

Boom Lifting Operation

Safety Precautions

WARNING! Tip Hazard. Always move the boom lift lever slowly while hoisting a load. Sudden movement of the lever may cause the load to sway.

Boom Lifting / Lowering Procedure

To operate the boom lift lever (4):

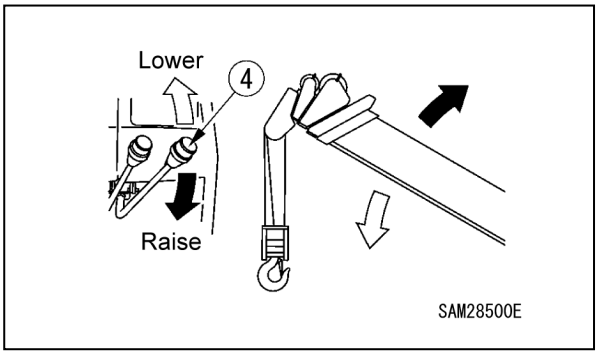

Fig. 4-162

- Lower: Push the lever forward to LOWER.
- Neutral: Release the lever. The lever returns to the NEUTRAL position and the boom stops.
- Raise: Pull the lever toward you to RAISE.

Adjust the boom lifting speed with the boom lift lever and the travel of the accelerator levers.

Boom Telescoping Operation

Safety Precautions

WARNING! Tip Hazard. Always move the boom telescoping lever slowly while hoisting a load. Sudden movement of the lever may cause the load to sway.

WARNING! Sudden Movement Hazard. Verify the weight of the load before extending the boom. As the boom extends, the working radius increases and the rated total load decreases. Do not pull a load sideways or draw it in while telescoping the boom. These conditions may cause unreasonable force on the machine and uncontrollable movement of the load.

WARNING! Unsafe Operation Hazard. Do not allow the hook block to contact the boom when telescoping the boom. When telescoping the boom, the hook block will start to move toward the boom. Do not allow the hook block to contact the boom. Damage to the boom, hook block and/or wire rope cables may result. Always maintain clearance between the hook block and boom when telescoping the boom.

WARNING! Unsafe Operation Hazard. Do not continue to hoist a load if the overwind alarm detector sounds. Stop the operation immediately and return all operation levers to the NEUTRAL position.

https://truckmanualshub.com/

Boom Telescoping Procedure

When the boom is extended for a long period of time, the boom retracts slightly due to the temperature change in the hydraulic oil; extend the boom as needed to adjust.

Move the boom telescoping lever (2) as follows:

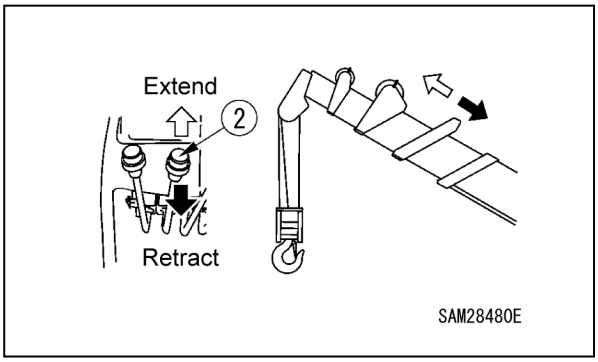

Fig. 4-163

- Extend: Push the lever forward to EXTEND.
- Neutral: Release the lever. The lever returns to the NEUTRAL position and boom telescoping stops.
- Retract: Pull the lever toward you to RETRACT.

Adjust the boom telescoping speed with the boom telescoping lever and the stroke of the accelerator levers.

Slewing Operation

Safety Precautions

WARNING! Tip Hazard. Do not slew the crane when overloaded. The machine will not stop automatically if the crane is overloaded during crane slewing operation.

WARNING! The following safety messages address a potential Sudden Movement Hazard while performing slewing operations:

- **Do not pull a load sideways or draw it in during crane slewing operation. These conditions may cause unreasonable force on the machine and uncontrollable movement of the load.**

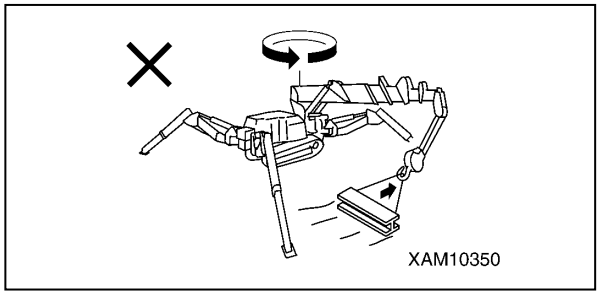

Fig. 4-164

- **Always start a slewing operation slowly and stop gently. Move the slewing lever slowly and consistently throughout the operation. Blow the horn to signal operations are to begin.**
- **Always use caution when performing a slewing operation. Even if the outriggers are set properly, some directions have lower stability when performing 360-degree slewing.**

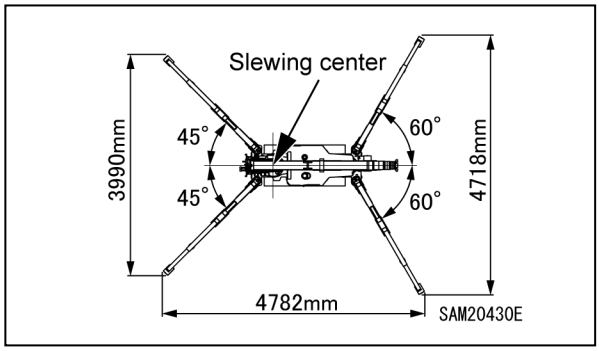

Fig. 4-165

WARNING! Tip Hazard. Never allow a load to contact an outrigger during a slewing operation. Always use caution to prevent the hoisted load from contacting an outrigger.

https://truckmanualshub.com/

Slewing Procedure

Move the slewing lever (1) as follows:

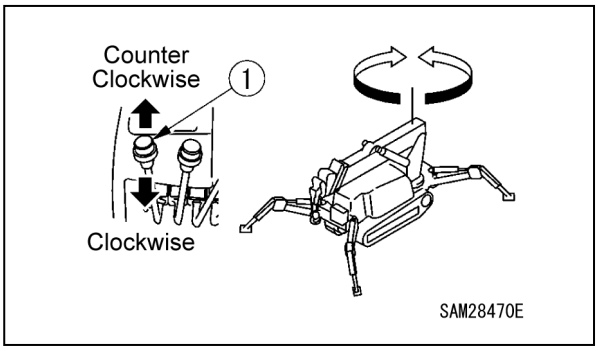

Fig. 4-166

- Slew counterclockwise (left): Push the lever forward to counterclockwise (left).
- Neutral: Release the lever. The lever returns to the NEUTRAL position and the slewing stops.
- Slew clockwise (right): Pull the lever toward you to clockwise (right).

Adjust the crane slewing speed with the slewing lever and the travel of the accelerator levers.

Crane Stowing Operation

Safety Precautions

WARNING! The following safety messages address a potential Unsafe Operation Hazard while stowing the crane:

- **Do not drag the hook block sideways on the ground when loosening or stowing the hook block. This could allow the wire rope cable to become twisted or wind irregularly onto the winch drum. The wire rope cable must wind uniformly onto the winch drum to prevent damage to the wire rope cable.**
- **Do not allow the hook block to slew and interfere with peripheral devices while stowing the crane. Keep the hook block from slewing while stowing the crane.**
- **Do not allow the hook block to contact the boom while stowing the crane. While retracting the boom or lowering the boom, the hook block could contact the boom. Move the winch lever slowly to prevent the hook block from contacting the crane while performing these operations. Damage to the boom, hook block and/or wire rope cables may result.**

The boom retracting operation will lower the hook block. The hook block also lowers with the boom lowering operation. Raise the hook at the same time so the hook block will not touch the ground or interfere with the machine.

Stow the boom securely into the STOW position. After stowing the boom, verify the Boom Stowing Light on the outrigger display turns green. If the Boom Stowing Light does not turn on, the outriggers cannot be stowed. If the Boom Stowing Light does not turn on, lower the boom to the maximum or slew the boom to verify the Boom Stowing Light turns on.

The Hook Stowage Switch cancels the auto-stop function of the over winding detector.

https://truckmanualshub.com/

Stowing Procedure

1. Fully retract the boom.
2. Set the slewing angle to “0 degrees.”
3. Lower the boom until it stops automatically.
4. Press the Hook Stowage/Boom Stowage Switch on the Home screen on the monitor.

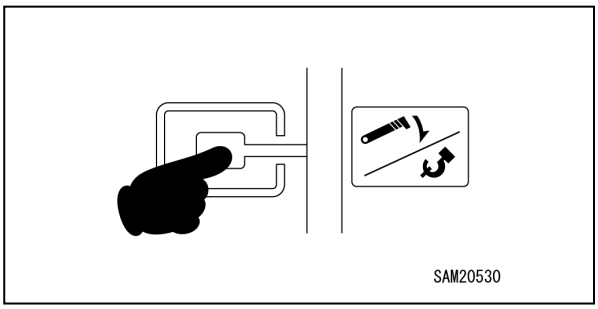

Fig. 4-167

5. Press the Boom Stowage Switch (3-1) to fully lower the boom.

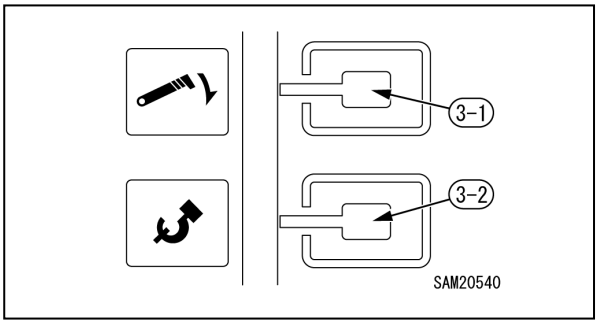

Fig. 4-168

NOTICE:

- *Pressing the switch will not stow the boom unless the boom has been lowered and automatically stopped.*
- *Continue pressing the switch until the boom is fully stowed.*

6. Check to confirm that the Boom Stowing Light is lit in green.
   If the light is lit in yellow or flashing red, the boom has not been fully stowed. Check by adjusting the slewing angle position and boom angle.

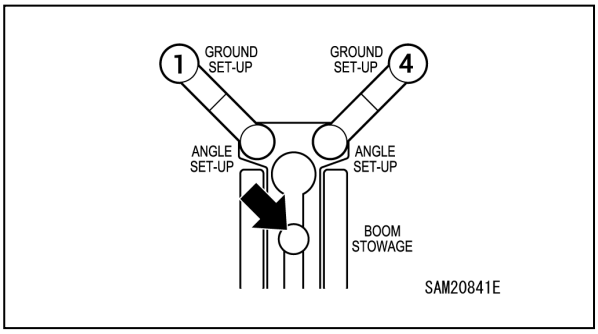

Fig. 4-169

Steady green: Boom stowed
Steady yellow: Only stowed at slewing position
Flashing red: Not yet stowed in slewing position or boom fully lowered position

7. Adjust the hook position by raising or lowering it. Engage the hook portion of the hook block (4) on the hook hanger (3).
   Once the hook block (4) engages the hook hanger (3), wind up until it is stopped by the over winding detector.

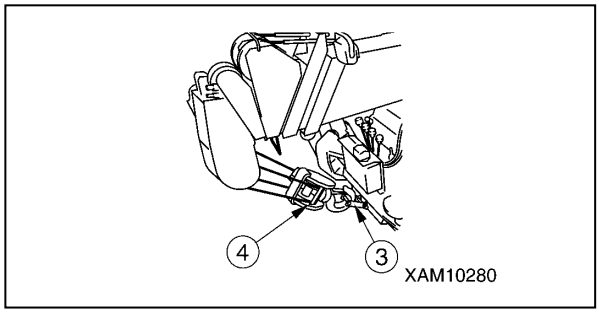

Fig. 4-170

8. Press the Hook Stowage/Boom Stowage Switch again on the Home screen on the monitor.
9. Press the Hook Stowage Switch (3-2) on the monitor and stow the hook.
   Hook Stowage is complete when the hook block is engaged to the hook hanger and the slack in the wire rope has been taken up.

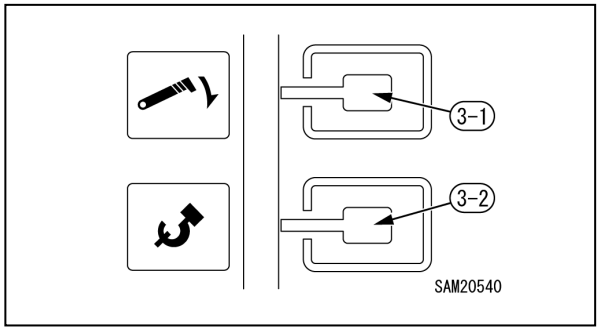

Fig. 4-171

NOTICE:

- *Pressing the switch will not stow the hook unless the hook block is overwound.*
- *Continue pressing the switch until the hook is fully stowed.*

https://truckmanualshub.com/

MOMENT LIMITER (OVERLOAD DETECTOR)

Moment Limiter Features

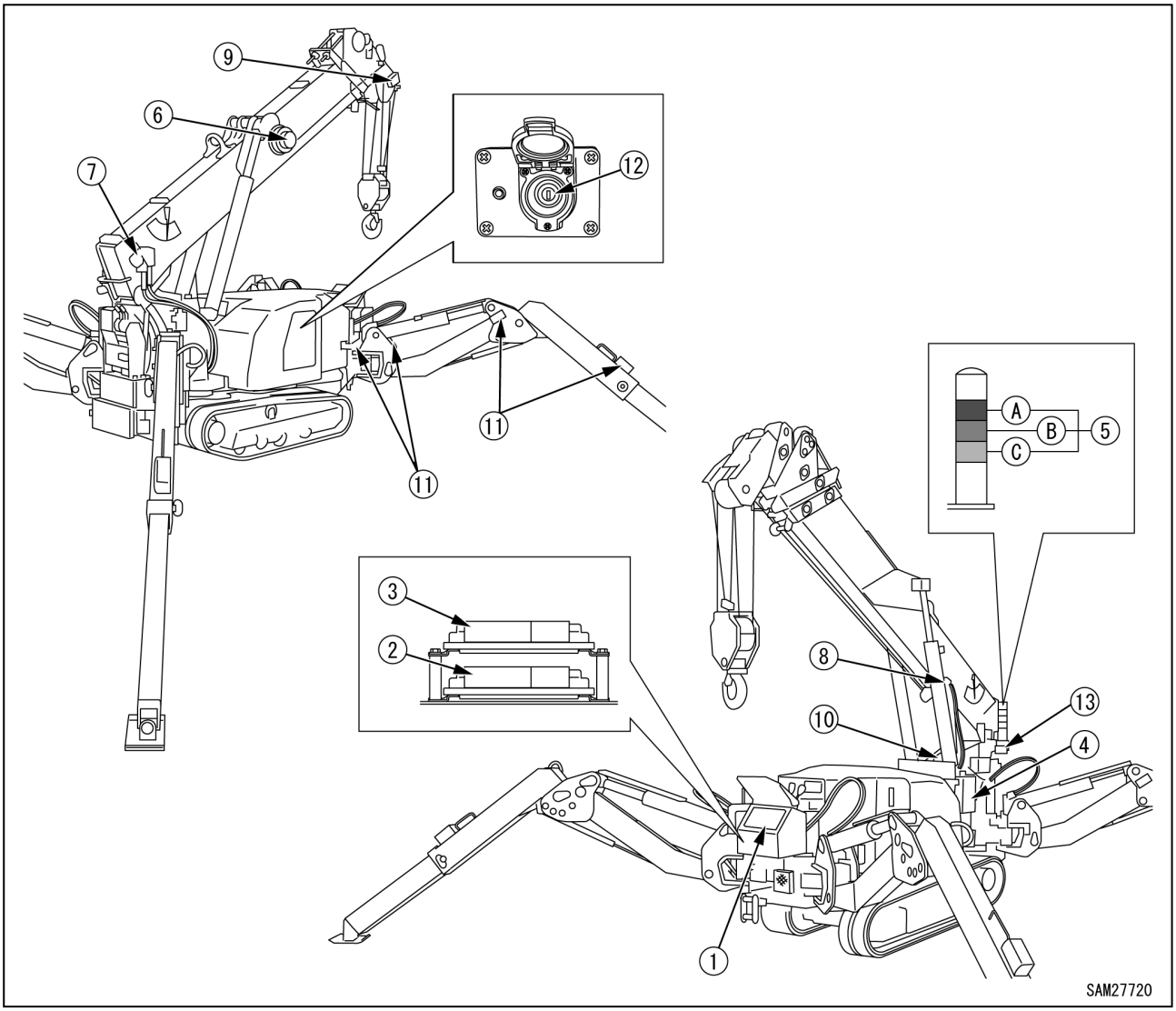

Fig. 4-172

1 - Monitor
2 - Main Controller
3 - Lower Controller (I/O Unit)
4 - Upper Controller (I/O Unit)
5 - Working Status Lamp
- (A) Working Status Lamp (red) (Warning Light for load factor of 100% or more)
- (B) Working Status Lamp (yellow) (Pre-warning Light for load factor of 90 to 100%)
- (C) Working Status Lamp (green) (Working Light for load factor of less than 90%)

6 - Boom Length Sensor (left side)
7 - Boom Angle Sensor (left side of boom rear edge)
8 - Pressure Sensor (boom cylinder) (two)
9 - Over Winding Detector
10 - Over-Unwinding Stop Device
11 - Outrigger Position Detection Device
12 - Moment Limiter Override Switch
13 – Alarm Buzzer

https://truckmanualshub.com/

Programmable Moment Limiter

WARNING! Tip Hazard. The following precautions should always be observed when reading the "rated total load" provided by the programmable moment limiter.

- **The outriggers should be placed on a level and firm surface.**
- **The outriggers should be at maximum extension as much as possible.**
- **The weight of an object, including that of a hoisting accessory and slinging rope, must remain below the rated total load for hoisting objects. With the boom length (number of stages) and angle specified, make a comparison between the rated total load provided by the programmable moment limiter and the weight of the object.**

The programmable moment limiter provides readouts on the rated total load under the following conditions:

- The outriggers are placed on a level and firm surface.
- No deflection is developed in the boom.

CAUTION: The following safety messages address a potential Equipment Damage Hazard concerning the moment limiter:

- **Avoid direct sunlight. Do not allow the temperature of the moment limiter body to exceed the specified range.**
- **Avoid locations with strong acids or alkaline.**
- **Avoid impact to the moment limiter body.**

During Setup

NOTICE:

- *The moment limiter calculates the moments assuming the machine is level. If you work with the crane when the machine is not level, warnings and alarms are not issued even when the rated total load is near maximum.*
- *Always set the outrigger horizontally to the ground while looking at the level gauge.*
- *Before using the moment limiter, check that the boom angle display, boom length display and actual load display are displayed correctly following the crane movements.*
- *Always make sure the number of falls setting of the moment limiter matches with the number of falls of the crane. If they do not match, always match them by changing the number of falls setting of the moment limiter or by changing the number of falls of the crane.*
- *Do not carelessly change the setting when measuring with the moment limiter.*

https://truckmanualshub.com/

Moment Limiter Operation

The moment limiter is a device that is installed to prevent dropping of the suspended load or breakage or tipping of the machine, which may occur due to overload.

Before starting crane operations, be sure to inspect operation of the moment limiter to make sure that there is no abnormality.

The moment limiter calculates current rated total load by sensing current boom posture on the boom angle gauge and the boom length gauge, by sensing the outrigger extension condition of the Outrigger Position Detection Device and by sensing the number of falls (entered by the operator).

When hoisting a load, the “actual load” (hoisted load) is sent from the pressure sensor of the boom cylinder to the moment limiter.

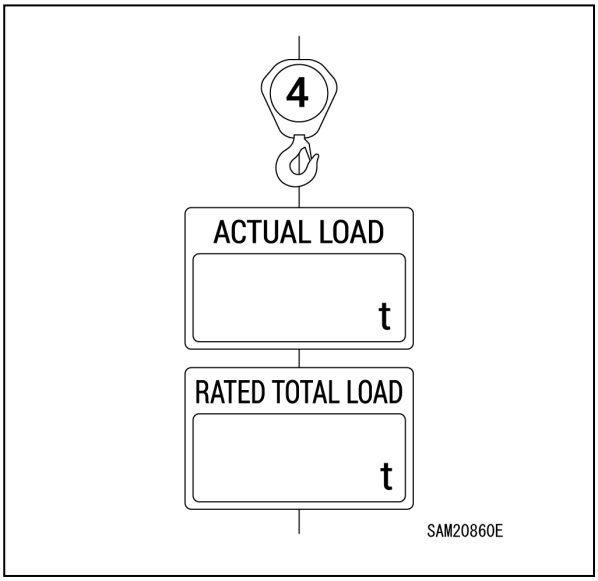

Fig. 4-173

The moment limiter makes comparison and calculation on “Rated total load” and “Actual load” (hoisted load) that were calculated in the current figure. Then, it issues an alarm if the result is as follows:

“Actual load/Rated total load = 90 to 100%”.

If the calculation result is “Actual load/Rated total load = 100% or more”, the moment limiter issues an alarm and at the same time automatically stops the boom operation.

Overload Alarm

A. Safety area (“Actual Load” is less than 90% of “Rated Total Load”)
- The green colour of the Working Status Lamp flashes.
- The load factor indicator (green) turns on.

B. Prediction alarm (“Actual Load” is 90 - less than 100% of “Rated Total Load”)
- The yellow colour of the Working Status Lamp flashes.
- The load factor indicator (yellow) turns on.
- The alarm generates intermittent sound “peep”.

C. Limit alarm (“Actual Load” is greater than or equal to 100% of “Rated Total Load”)
- The red colour of the Working Status Lamp flashes.
- The load factor indicator (red) turns on.
- The alarm generates continuous sound “peep”.
- Operation of the crane's danger side stops automatically.

D. Cancelling of limit alarm automatic stop

When an automatic stop occurs, immediately perform recovery operation.

For more information, see “Recovery Operation after Auto-Stop” on page 4-74.

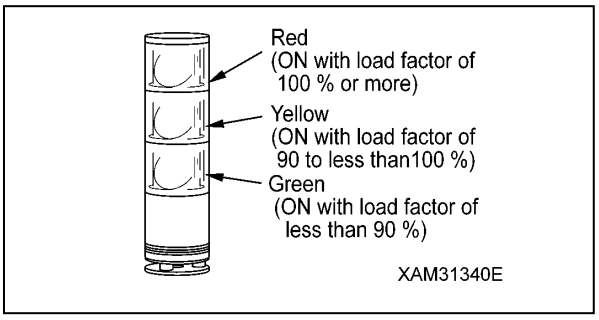

Fig. 4-174

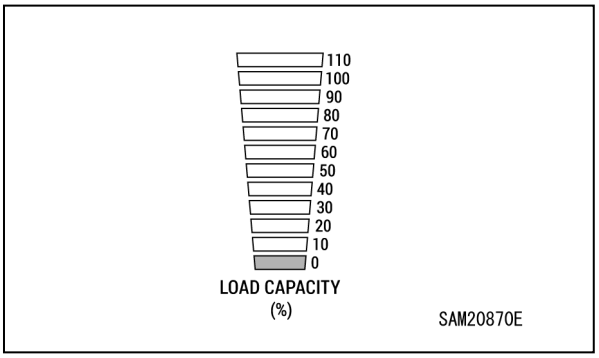

Fig. 4-175

https://truckmanualshub.com/

Working Range Limits Device

When the set value of the working range limits is neared, an alarm is issued to notify the operator and persons in the surrounding area.

For the set value of the working range limits, the last state is memorised when the starter switch is turned to the “OFF” position.

NOTICE: For more information on setting working range limits, see “Moment Limiter Working Envelope Setting” on 4-81.

When the working range is set:

A. Safety area
- The applicable working range limits display illuminates in orange.

B. Prediction alarm

The following occurs when the control levers are moved toward their limits:
- The applicable working range limits display flashes in orange.
- The alarm buzzer generates intermittent sound “peep”.

C. Limit alarm

The following occurs when the control levers are moved toward their limits:
- The applicable working range limits display flashes in orange.
- The alarm generates continuous sound “peep”.
- The yellow colour of the Working Status Lamp flashes.
- Operation of the applicable crane motion stops automatically.

NOTICE: The alarm buzzer and working status lamp indications may differ depending on the usage conditions.

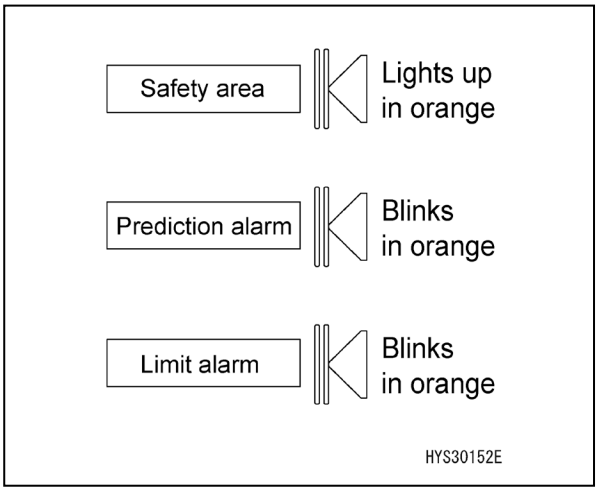

Fig. 4-176

Over Winding Detector

CAUTION: When hoisting the hook, be careful of clearance between the hook and boom. When the boom is extended, the hook is also hoisted. Perform boom extension operation while always checking the hook height.

If the hook is over wound when the hook is hoisted or the boom is extended:
- The OVER WINDING indication on the monitor turns on (red).
- The alarm issues intermittent beeps.
- Hook hoisting and boom extension actions stop automatically.

When an automatic stop occurs, immediately recover from the stop.

For recovery operation, perform hook lowering operation and boom retraction operation.

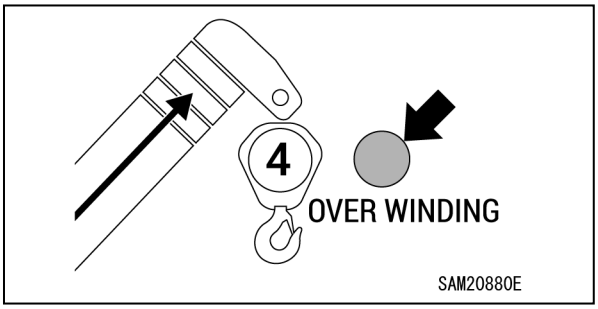

Fig. 4-177

Over-Unwinding Stop Device

When the hook is lowered and length of wire rope in the winch drum becomes short:
- The Over-Unwinding Stop indication on the monitor turns on (red).
- When hook lowering operation is performed, the alarm issues an intermittent sound “peep”.
- The hook lowering action is automatically stopped.

When hook lowering action is automatically stopped, immediately recover from the stop. Raise the hook to correct the problem.

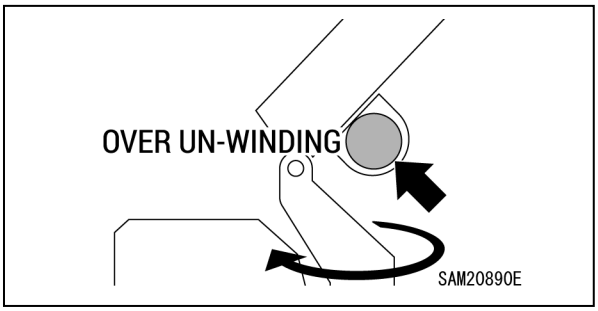

Fig. 4-178

https://truckmanualshub.com/

Number of Falls Change

DANGER!

- **Stop crane operations before changing the number of falls using the monitor. Changing the number of falls during crane operations may cause an unexpected accident.**
- **Be sure to match the number of falls display of the moment limiter with the actual number of falls before performing crane operations. Otherwise, a serious accident may be caused.**

For wire rope, safe load per rope part is determined.
Determine the number of falls according to the maximum hoisting load.
Be sure to match the actual number of falls of the hook with the values of number of falls displayed on the moment limiter.
This machine is equipped with a hook that serves for both 4 and 2 wire ropes as standard specifications.
For the set value of the number of falls, the last state is memorised when the starter switch is turned to the “OFF” position.
See “Number of Falls Change” on page 4-18 for the change of the number of falls.

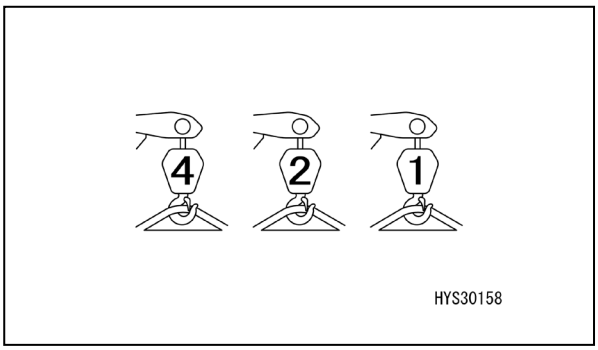

Fig. 4-179

Outrigger Extension Detection

The extension of the outriggers is detected by limit switches mounted on each of the four outriggers. The rated total load changes based on outrigger extension.

Moment Limiter Error Display

When an error is sensed by the boom angle sensor, boom length sensor, pressure sensor or when a circuit is opened, the moment limiter displays an error code on the monitor to notify the operator of the error.
Stop using the crane immediately if an error code is displayed. See “Error Codes” on page 5-62 to resolve the problem.

Working status lamp states

Colour	Status	States
All colours	Flashing	·For three seconds after starting
Red	Flashing	·The load factor is 100% or greater. ·Boom is within the slewing prohibited range while in multimode. ·The hook is being stowed. ·The boom is being stowed. ·The moment limiter override switch is enabled. ·The battery is being charged (charge level 0% to 79%) while the starter switch is turned off.
Yellow	Flashing	·The load factor is 90% or more but less than 100% (Note that if the load factor exceeds 100%, the lamp will continue to flash in red even when it drops below 100%, unless the load factor is first reduced to below 90%.) ·The crane is stopped due to operating range restrictions. ·The battery is being charged (charge level 80% to 95%) while the starter switch is turned off.
Green	Flashing	·The load factor is less than 90%. ·The battery is being charged (charge level 96% to 100%) while the starter switch is turned off. ·In travel mode (with travel lever pulled up)
-	Off	·The battery is not being charged while the starter switch is turned off.

If the working status lamp is subject to multiple states, illumination takes priority, as follows:
Flashing red > Flashing yellow > Flashing green

https://truckmanualshub.com/

Prohibited Actions after Auto-Stop

The moment limiter is a device that is provided for measures available for an emergency case. In actuality, any operations relying on the device will incur danger.

Operate the crane carefully so that it does not stop automatically.

WARNING! Tip Hazard. Do not overload the crane during operation. If the crane is overloaded, the auto-stop feature will activate, stopping the operation of the crane automatically. The following operations are prohibited after the crane has stopped automatically:

- **Boom lowering operation**
- **Boom raising operation**
- **Boom extending operation**
- **Hook raising operation**

Recovery Operation after Auto-Stop

If an automatic stop occurs, you will not be able to clear the stop until you have reduced the load factor to the safety area with a load factor of less than 90% (Working Status Lamp: green).

Switch the motor speed to low speed and operate the crane with caution if the moment limiter load factor is 90% or higher.

WARNING! Tip Hazard. Always operate the motor at low speed when the moment limiter load factor is 90% or higher. Do not operate the motor at any speed other than low. Operating at any motor speed other than low may cause an unstable operating condition.

1. With load factor of less than 90%:

The Working Status Lamp flashes in green, indicating normal operation status.

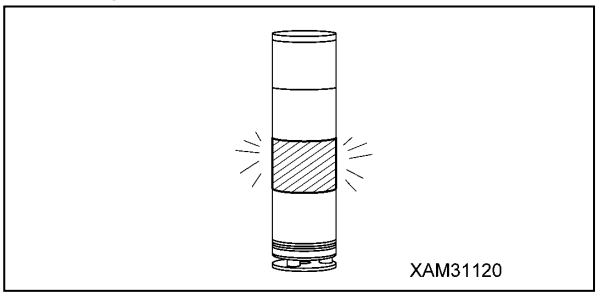

Fig. 4-180

2. With load factor of 90% to less than 100% (pre-warning):

The Working Status Lamp changes from green to yellow and the alarm buzzer sounds intermittently, notifying the operator and those around that the actual load is close to the rated total load.

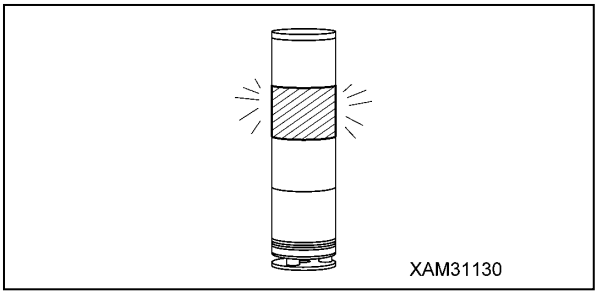

Fig. 4-181

3. With load factor of 100% or higher:

The Working Status Lamp changes from yellow to red and the alarm buzzer now sounds continuously. The following crane operations will stop automatically:

- Boom lowering operation
- Boom raising operation
- Boom extending operation
- Hook raising operation

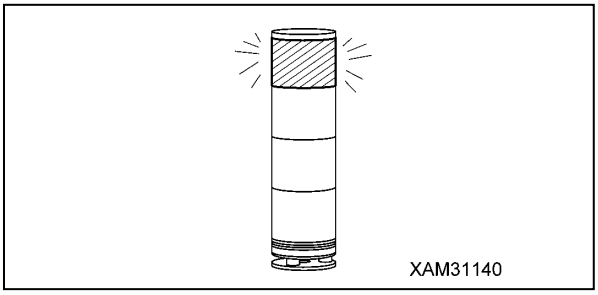

Fig. 4-182

https://truckmanualshub.com/

4. Recovery operation from auto-stop:

The recovery operation from an overloading condition should be the reverse operation of the crane operation that caused the auto-stop.

Perform one of the following:

a. Lower the hook and hoisted load on the ground.

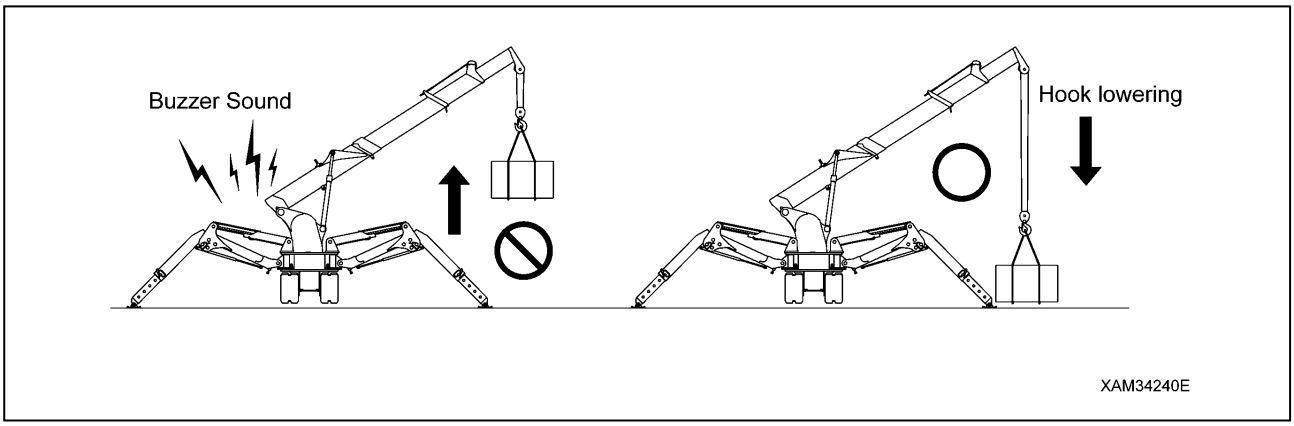

Fig. 4-183

b. Retract the boom.

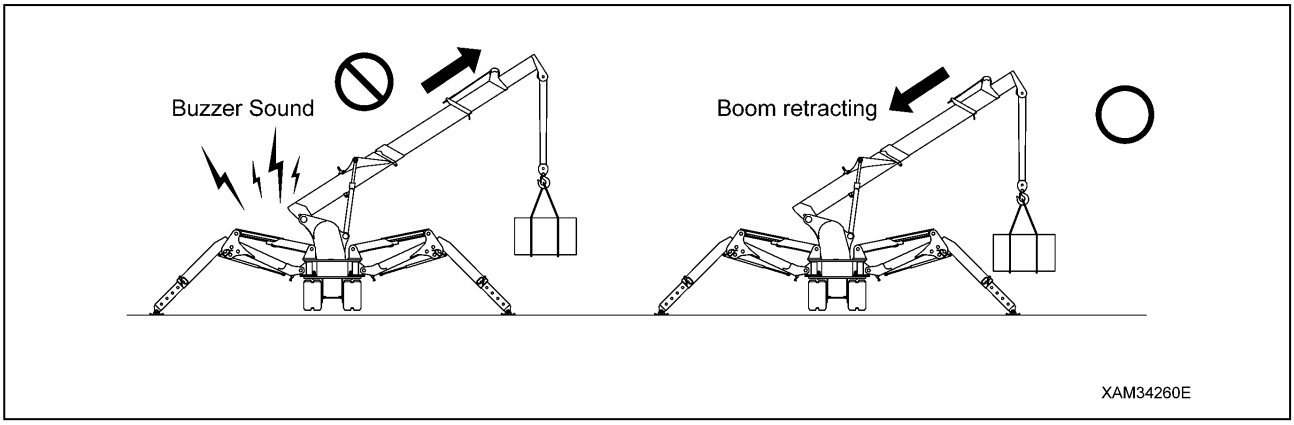

Fig. 4-184

5. Recovery operation using boom raising:

If the boom was stopped automatically, note that you can raise it only while depressing the Boom Lift Bypass Switch.

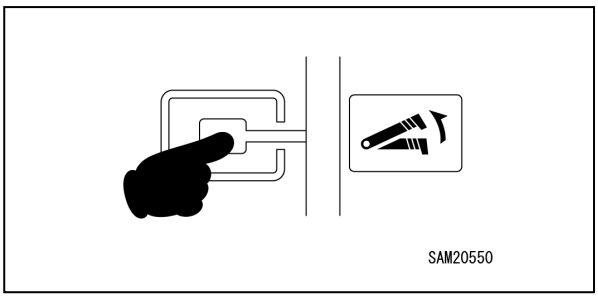

Fig. 4-185

DANGER! Use this switch only when the boom has stopped automatically after entering the overload area during boom lowering or telescoping.

Do not use this switch to lift loads off the ground under normal conditions. Using this switch to lift loads off the ground may damage the machine or cause toppling or other serious accidents.

https://truckmanualshub.com/

Moment Limiter Display

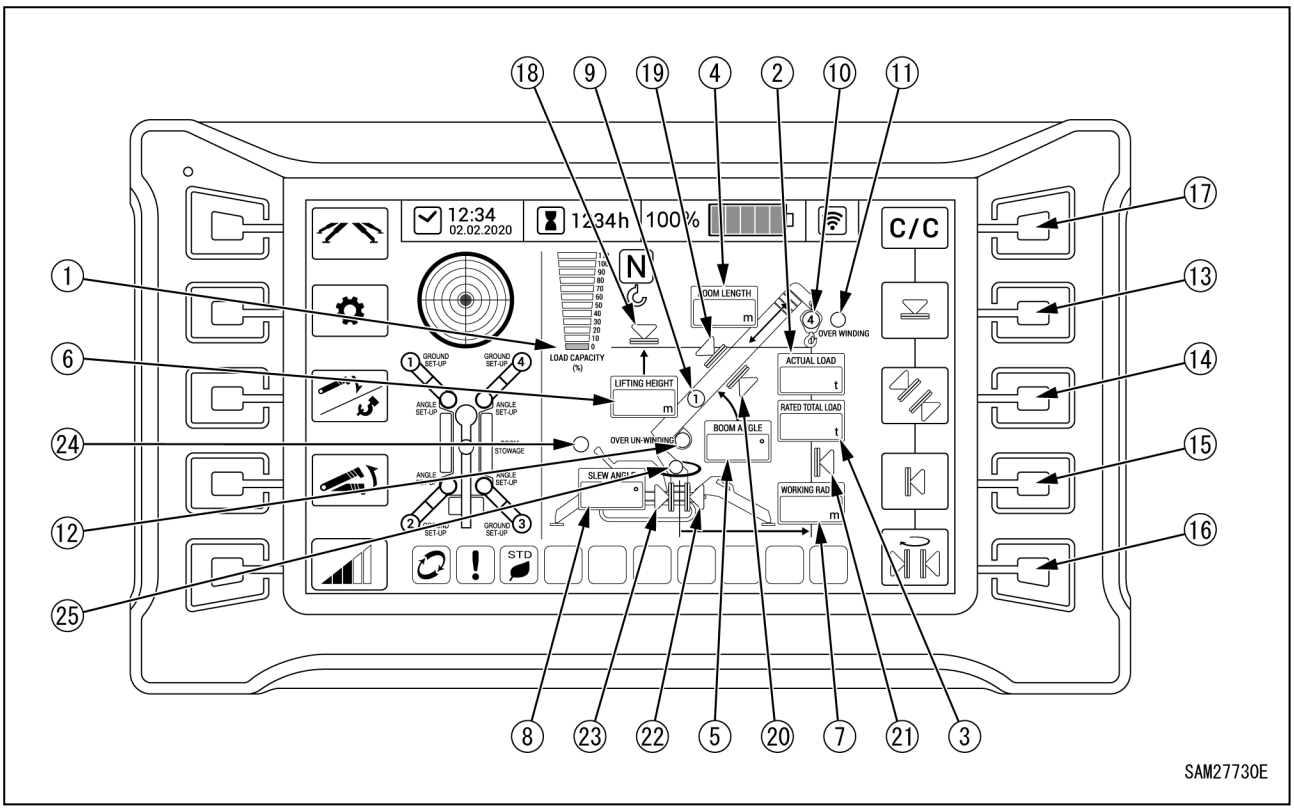

Fig. 4-186

1 - Load Factor Display
2 - Actual Load Display
3 - Rated Total Load Display
4 - Boom Length Display
5 - Boom Angle Display
6 - Maximum Lifting Height above Ground Display
7 - Working Radius Display
8 - Slewing Angle Display
9 - Boom Section Display
10 - Number of Falls Display
11 - Over Winding Display
12 - Over-Unwinding Stop Display
13 - Lifting Height Upper Limit Switch
14 - Boom Angle Upper Limit/Lower Limit Switch
15 - Working Radius Upper Limit Switch
16 - Slewing Angle Limit Switch
17 - Setting Check/Cancelling Switch
18 - Lifting Height Upper Limit Display
19 - Boom Angle Upper Limit Display
20 - Boom Angle Lower Limit Display
21 - Working Radius Upper Limit Display
22 - Clockwise (Right) Slewing Angle Limit Switch
23 - Counterclockwise (Left) Slewing Angle Limit Switch
24 - Lever detection display
25 - Slew origin detection display

https://truckmanualshub.com/

Load Factor Display

The load factor state of the moment limiter load is illuminated on the bar according to the load factor change.

- Load factor display 100 - 110 (Load factor 100% or more): red
- Load factor display 90 (Load factor 90 - less than 100%): yellow
- Load factor display 0 - 80 (Load factor less than 90%): green

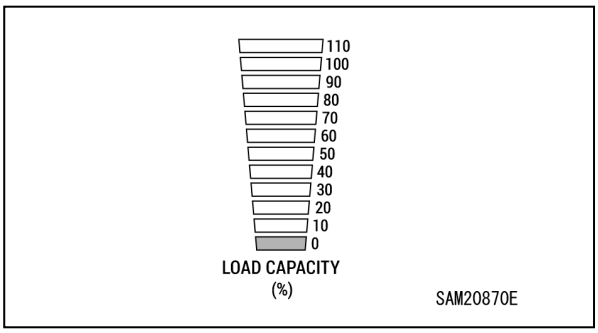

Fig. 4-187

Actual Load Display

Continually displays the actual load of the hoisted load during crane operations.

The actual load equals the total weight of the hook, hoisting attachment, and hoisted load. When no load is hoisted, it is normal that “0.0” to “0.1” is displayed. Contact us or our sales service agency if outside this range.

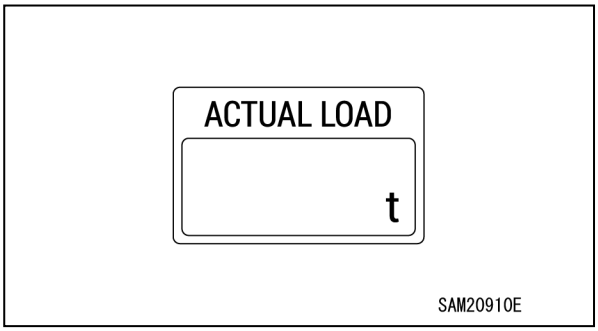

Fig. 4-188

NOTICE:

- *Due to the structure of load detection, a numerical value of actual load display changes when the boom is raised and lowered. Although the numerical value of the actual load changes on a higher side when boom raising operation is performed, this is not a fault.*
- *When the crane stops, the numerical value of actual load display changes if there is slewing of load.*

Rated Total Load Display

The rated total load (i.e. total weight of hook, hoisting attachment, and hoisted load) which the crane can currently hoist is displayed. It is calculated according to the conditions including the number of falls of the hook and the working radius.

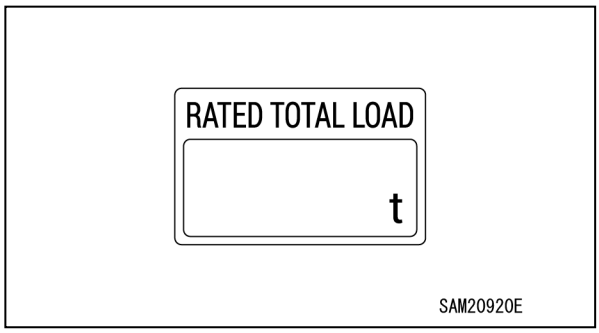

Fig. 4-189

Boom Length Display

The current boom length is continually displayed during crane operations.

The boom length refers to the distance from the base pin of the boom to the sheave pin of the tip boom.

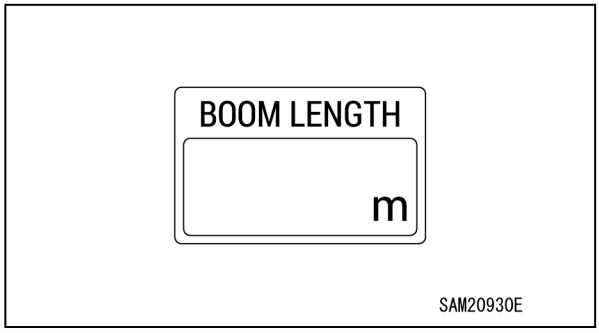

Fig. 4-190

Boom Angle Display

The current boom angle is continually displayed during crane operations.

The boom angle refers to the angle between the boom and horizontal line.

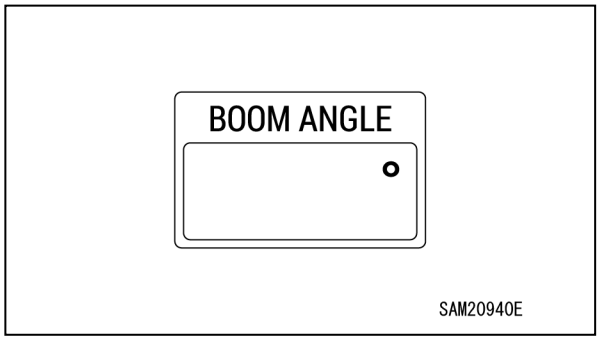

Fig. 4-191

https://truckmanualshub.com/

Maximum Lifting Height above Ground Display

Continually displays the maximum lifting height above ground for the current boom status during crane operations.

Lifting height above ground refers to the vertical distance from the ground to the bottom of the hook.

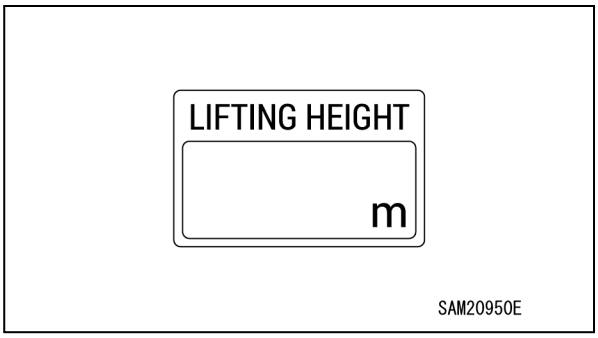

Fig. 4-192

NOTICE: The height lifted above ground does not indicate the current hook position.
Indicates the height lifted above ground when the hook has been raised to the over winding position detection.

Working Radius Display

The current working radius is continually displayed during crane operations.

The working radius refers to the horizontal distance from the centre of slewing of the crane to the centre of the hook.

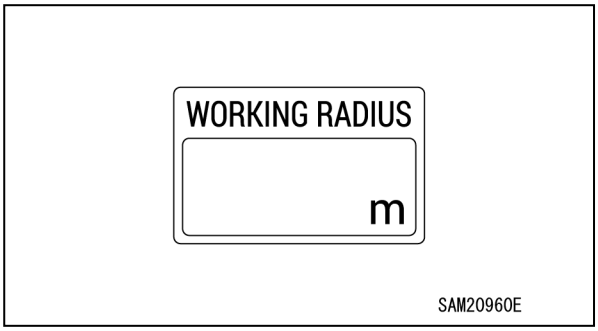

Fig. 4-193

Slewing Angle Display

Displays the current slew angle when the crane is being operated.

The slew angle refers to the angle through which the boom slews from the stowage position (0°).

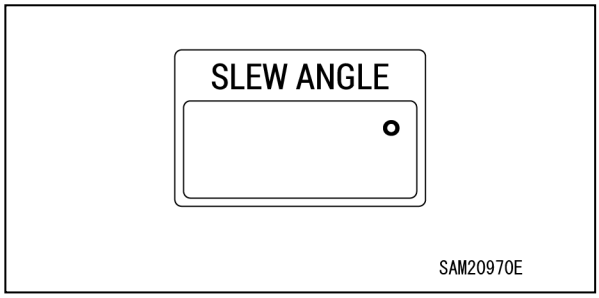

Fig. 4-194

Boom Section Display

Displays the current number of boom sections when the crane is being operated.

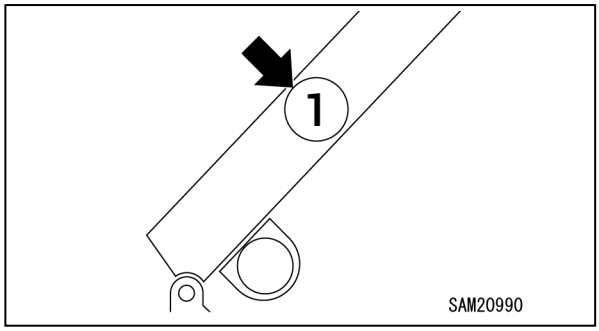

Fig. 4-195

Number of Falls Display

Displays the current number of falls when the crane is being operated.

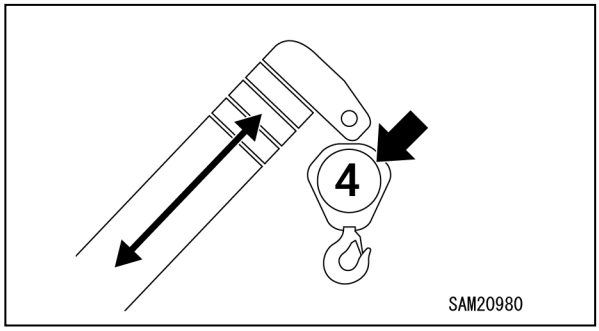

Fig. 4-196

https://truckmanualshub.com/

Over Winding Display

The red light flashes if the hook is in over winding condition during crane operations.

The green light illuminates only if the over winding detector is disabled while using the searcher hook.

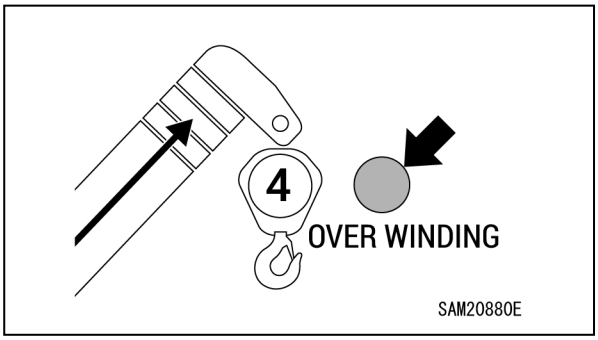

Fig. 4-197

Over-Unwinding Stop Display

If the length of wire unwound from the winch drum exceeds the maximum value while lowering the hook during crane operations, unwinding will stop automatically, and the red light will flash.

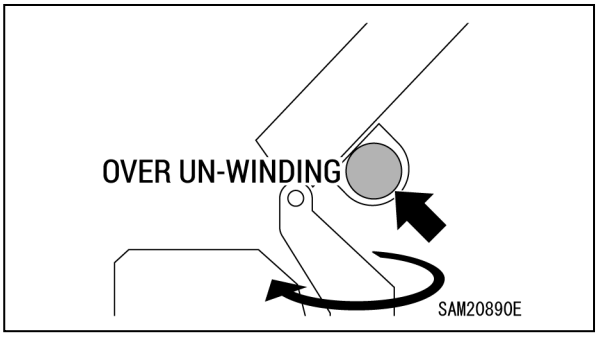

Fig. 4-198

Lifting Height Upper Limit Switch, Lifting Height Upper Limit Display, Boom Angle Upper Limit/Lower Limit Switch, Boom Angle Upper Limit/Lower Limit Switch, Working Radius Upper Limit Display, Working Radius Upper Limit Switch, Slewing Angle Limit Switch, Clockwise (Right) Slewing Angle Limit Display, Counterclockwise (Left) Slewing Angle Limit Display

Operating limits can be set in cases in which the operating range is restricted by moving the boom to the actual operating range limit to be set and holding down the corresponding switch.

The display changes from blue to orange when set.

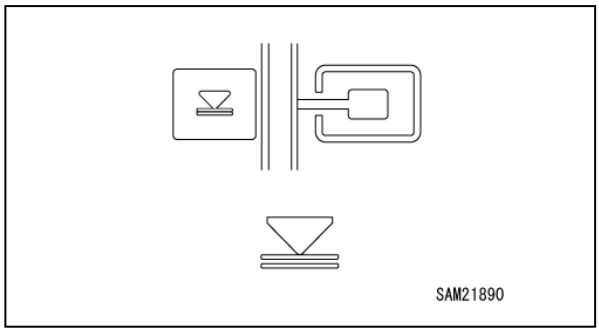

Fig. 4-199

Setting Check/Cancelling Switch

- You can check the operating range limit currently set. Pressing the switch displays the setting for approximately 5 seconds.
- You can clear all operating range limit settings. Hold down the switch to clear all settings.

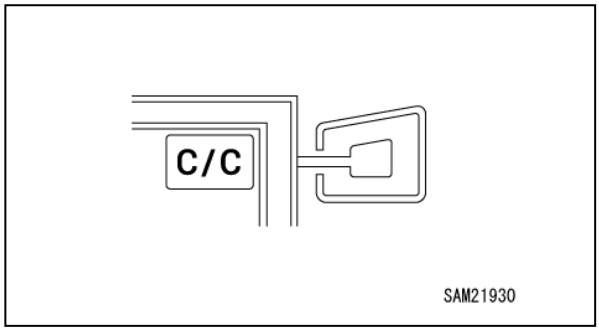

Fig. 4-200

https://truckmanualshub.com/

Lever detection display

When crane lever operation is detected, lever detection indication on the monitor lights up in green.

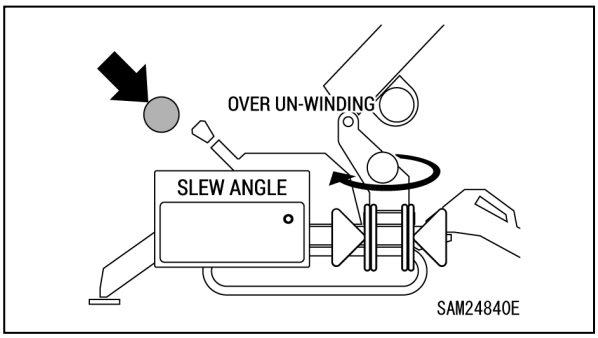

Fig. 4-201

Slew origin detection display

When slew position is close to 0 degree and 180 degree, slew origin detection on the monitor lights up in green.

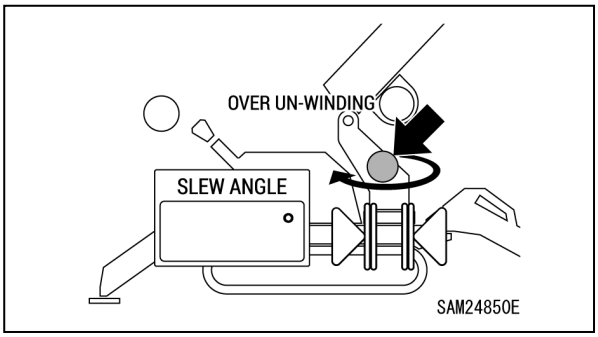

Fig. 4-202

Over Winding Detector

CAUTION: Sudden Movement Hazard. Always pay attention to the distance between the hook block and boom when raising the hook. Extending the boom also raises the hook block. Always check the hook block height when extending the boom.

When the hook is overwound, raised or the boom is extended:

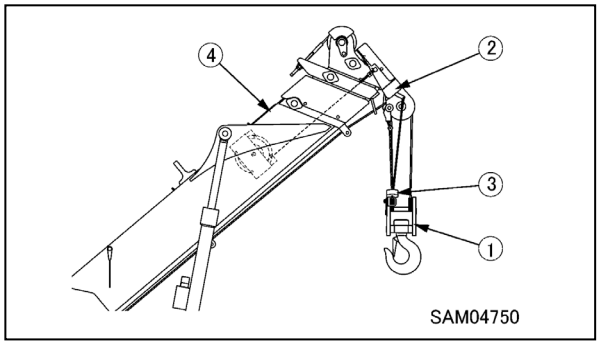

Fig. 4-203

1 - Hook Block
2 - Over Winding Detector
3 - Weight
4 - Boom

If the hook block (1) is raised or the boom (4) extended, the over winding detector (2) intermittently activates the alarm buzzer to warn the operator of overwinding if the hook block approaches the end of the boom and pushes up the weight (3).

At the same time, the raising of the hook block and the extension and raising of the boom stop automatically.

When an alarm buzzer sounds, move the winch lever immediately to LOWER or move the boom telescoping level to RETRACT to lower the hook block.

For more information on control during stoppage caused by over winding, see “Over Winding Detector” on page 4-72.

https://truckmanualshub.com/

Moment Limiter Working Envelope Setting

WARNING! The following safety messages address a potential Tip Hazard when using the moment limiter working envelope:

- **Always set the working envelope a safe distance from obstacles. Verify the boom will stop at the set position of the working envelope before operating the crane.**
- **Always operate the crane at a low motor speed. Do not operate the motor at any speed other than low. Operating at any motor speed other than low may cause the boom to travel beyond the set position of the working envelope.**

If the boom working envelope is limited due to a restricted working space, the boom working envelope can be set to a desired value.

NOTICE: The display colours corresponding to the various limit states are as follows:

- *Blue: No limit setting*
- *Yellow: Limit setting conditions currently selected*
  (Reverts to blue or orange if no operation is performed within five seconds.)
- *Orange: Limit set*

Setting or Cancelling the Upper Limit Value of Lifting Height

While the lifting height limit is imposed by detecting the boom tip height, the monitor displays the maximum height when the hook is hoisted up to the over winding detected position.

When the boom is in the prediction zone or upper limit stop position in a condition in which the hook height is set, the monitor display flashes in orange.

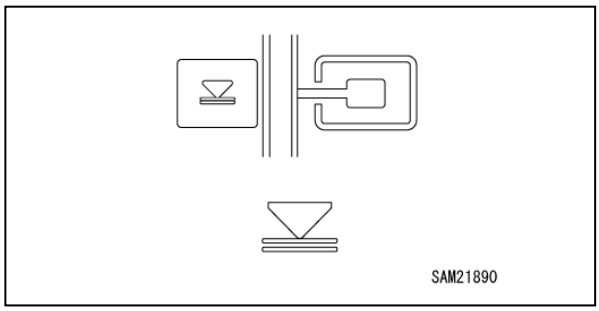

Fig. 4-204

Setup

Set the boom to the desired maximum height in a condition in which no upper limit value is set, and press and hold the switch.

The monitor display changes to the orange colour and the maximum height is set as the upper limit value.

NOTICE:

- *Be sure to check, before actual work, that the boom automatically stops at the set hook height. If the boom does not automatically stop, reset the hook height in the above steps.*
- *An alarm sounds intermittently if the boom is raised or extended in the prediction alarm zone. An alarm sounds continuously if the boom is raised or extended in the upper limit stop position.*
- *The set value is memorised when the starter switch is turned to the “OFF” position.*

Cancel

Press and hold the switch in a condition in which the upper limit value is set. The monitor display changes to the blue colour and the upper limit value setting is cancelled.

https://truckmanualshub.com/

Setting or Cancelling the Boom Angle Upper Limit Value/Lower Limit Value

When the boom is in the prediction zone or upper limit stop position in a condition in which the boom angle upper limit or lower limit is set, the monitor display flashes in orange.

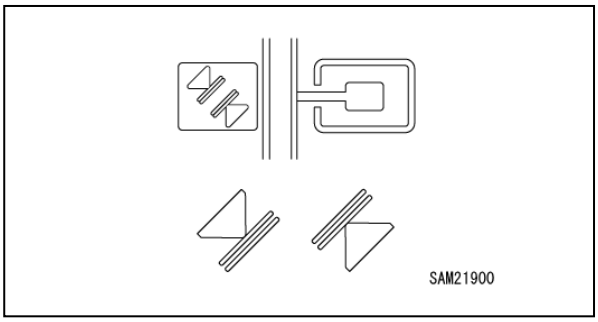

Fig. 4-205

Setup

Set the boom to the desired angle in a condition in which no upper limit value and lower limit value are set, and press the switch. The yellow display appears and the upper limit and lower limit can be selected. Each time the switch is pressed, the upper limit and lower limit change. Select the yellow indicator for the direction to be cleared and hold the switch.

The upper limit value on the monitor display changes to the orange colour and the boom angle is set as the upper limit value or lower limit value.

NOTICE:

- *Be sure to check, before actual work, that the boom automatically stops at the set angle. If the boom does not automatically stop, reset the boom angle in the above steps.*
- *An alarm sounds intermittently if the boom is raised in the prediction alarm zone when the boom is at the upper limit. An alarm sounds continuously if the boom is raised in the upper limit stop position.*
- *An alarm sounds intermittently if the boom is lowered in the prediction alarm zone when the boom is at the lower limit. An alarm sounds continuously if the boom is lowered in the lower limit stop position.*
- *The set value is memorised when the starter switch is turned to the “OFF” position.*

Cancel

Press the switch in a condition in which the upper limit value or lower limit value is set. The orange display section can be selected in yellow. Each time the switch is pressed, the selection changes. Select the yellow indicator for the direction to be cleared and hold the switch. The monitor display changes to the blue colour and the upper limit value or lower limit value setting is cancelled.

Setting or Cancelling the Upper Limit Value of the Working Radius

When the boom is in the prediction zone or upper limit stop position in a condition in which the working radius upper limit is set, the monitor display flashes in orange.

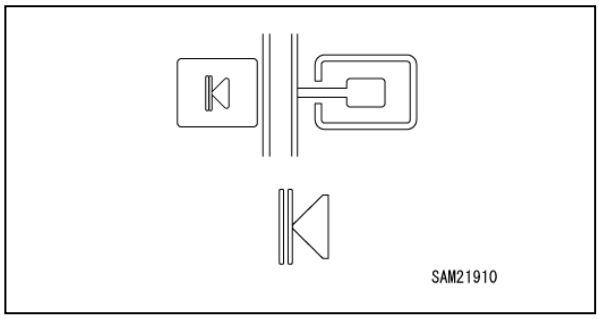

Fig. 4-206

Setup

Set the boom to the desired working radius in a condition in which no upper limit value is set, and press and hold the switch.

The upper limit value on the monitor display changes to the orange colour and the working radius is set as the upper limit value.

NOTICE:

- *Be sure to check, before actual work, that the boom automatically stops at the set working radius. If the boom does not automatically stop, reset the working radius in the above steps.*
- *An alarm sounds intermittently if the boom is lowered or extended in the prediction alarm zone. An alarm sounds continuously if the boom is lowered or extended in the upper limit stop position.*
- *The set value is memorised when the starter switch is turned to the “OFF” position.*

Cancel

Press and hold the switch in a condition in which the upper limit value is set. The monitor display changes to the blue colour and the upper limit value or lower limit value setting is cancelled.

https://truckmanualshub.com/

Setting/Resetting Slewing Angle Limits

When the slewing angle is in the advance warning area or at the stop position in a condition in which the slewing angle limit is set, the monitor display flashes in orange.

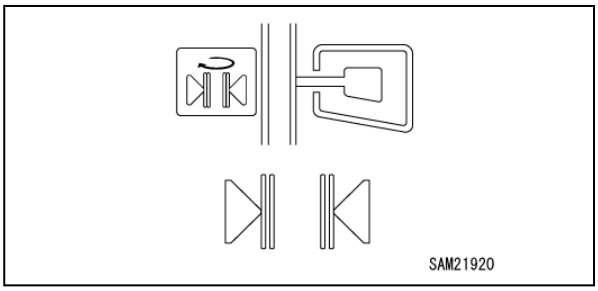

Fig. 4-207

Setup
Slew the boom to the desired angle in a condition in which no slewing angle limit is set, and press the switch. Once the switch is pressed, the yellow display appears and clockwise (right) or counterclockwise (left) slewing can be selected. Each time the switch is pressed, the slewing direction changes. Select the yellow indicator for the direction to be set, and hold the switch.
The angle limit value on the monitor display changes to the orange colour and the slewing angle is set as the limit value.

NOTICE:

- *Be sure to check, before actual work, that the boom automatically stops at the set working radius. If the boom does not automatically stop, reset the working radius in the above steps.*
- *An alarm sounds intermittently if the boom is slewed to the right in the prediction alarm zone when the clockwise slewing angle limit has been set. An alarm sounds continuously if the boom is slewed to the right in the slewing stop position.*
- *An alarm sounds intermittently if the boom is slewed to the left in the prediction alarm zone when the counterclockwise slewing angle limit has been set. An alarm sounds continuously if the boom is slewed to the left in the slewing stop position.*
- *The set value is memorised when the starter switch is turned to the "OFF" position.*

Cancel
Press the switch in a condition in which the slewing angle is set. The orange display section can be selected in yellow. Each time the switch is pressed, the selection changes. Select the yellow indicator for the direction to be cleared, and hold down the switch. The monitor display changes to blue, indicating that the slewing angle limit setting has been cleared.

Moment Limiter Override Switch

DANGER!:
The moment limiter override switch disables ALL safety features, ALL limits and ALL automatic stops of the Moment Limiter Digital Load Safety System.

When this switch is turned to the "ON" position (OVERRIDE), all the Moment Limiter's interlocked automatic safety/ stop /limit features become INACTIVE & DISABLED. All crane operations in this situation are unprotected by the Moment Limiter system.

The risk of a crane accident increases greatly without the use of the Moment Limiter system. The Moment Limiter system is a safety aid to the operator, not a tool or excuse for poor and dangerous crane operation.

With or without the protection of the Moment limiter system, crane operation outside of the parameters of the Rated Total Load Chart(s), unsafe operations beyond accepted safe crane practices and proper crane operation technics may result in dropping of a hoisted load, breakage of crane components or the machine tipping over. A serious accident resulting in death or serious injury may occur.

Use this switch only in the case of an emergency due to failure of the Moment Limiter system, and or machine maintenance / service when any crane travel, lifting operations are not being performed.

Do not store the override key permanently in the moment limiter override switch box.

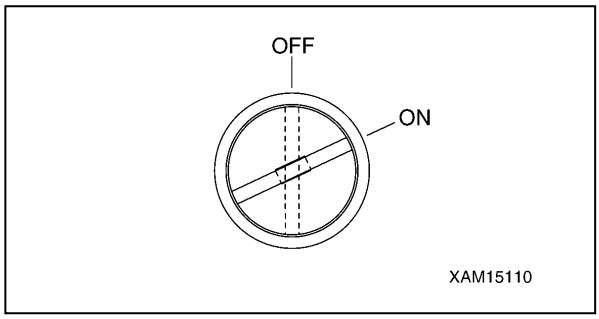

Fig. 4-208

https://truckmanualshub.com/

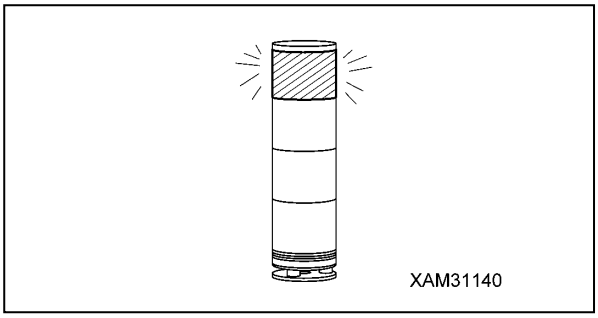

Fig. 4-209

To Override the Moment Limiter System:

- The moment limiter override switch box is located inside the machine cover. Furthermore, it is installed in a place away from where the machine is operated.
- KEY TO "ON" POSITION = OVERRIDE Insert the OVERRIDE KEY into the moment limiter override switch box. Turn the key clockwise (right) to "ON" position. (The spring-loaded switch automatically returns to the "OFF" position when you release the key). Now the system is in OVERRIDE. ALL safety features, ALL limits and ALL automatic stops of the Moment Limiter system are INACTIVE & DISABLED for a total of 3 minutes.
- The moment limiter override switch box LED light will illuminate solid for 2-1/2 minutes, then it will flash for the last 30 seconds of OVERRIDE.
- The Working status light will flash RED during
- OVERRIDE.
- The Moment Limiter warning buzzer /alarm will sound intermittently for 3 minutes.
- The Moment’s Limiter’s Crane Operation Top Screen will display the warning "Overriding/Turn starter key off to reset" for 3 minutes.
- Crane functions boom extend, and boom lowering will be limited in speed to 20% of normal speed during OVERRIDE.
- To discontinue OVERRIDE, at any time under 3 minutes, turn the starter key to OFF shutting down the machine. Restart the machine as normal, and the Moment Limiter system will commence with normal start up sequence.

BATTERY HANDLING

DANGER! The following points must be strictly observed to prevent fire:

- **Keep the battery away from open flames.**
- **Do not heat or throw the battery onto a fire.**
- **Do not leave the battery in a hot location for extended periods.**
- **Do not charge the battery except using the specified voltage. There is a risk of fire if charged at an excessive voltage.**
- **Do not allow static electricity to be generated in the vicinity. There is a risk of ignition or explosion due to static electricity.**
- **Do not solder the terminals.**

The following points must be strictly observed to prevent electric shock:

- **Do not unplug the power plug by pulling on the cable.**
- **Do not open the charging port cover except when charging.**
- **Unplug the charging cable except when charging.**
- **Do not touch with wet hands.**
- **Do not touch parts inside the machine when the power plug is plugged in.**
- **Do not charge in rainy weather.**

The following points must be strictly observed when handling the battery terminals:

- **Do not touch the positive or negative terminals with bare hands. Wear insulating gloves when handling the terminals.**
- **Do not allow a short circuit between the positive and negative terminals. Otherwise there is a risk of damage to electronic components or of burn injuries from overheated components.**
- **Do not connect the positive and negative terminals in reverse. Otherwise there is a risk of damage due to fluid leakage, overheating, rupture, or fire.**

https://truckmanualshub.com/

Do not disassemble or modify the battery. Otherwise there is a risk of accidents or malfunction due to fluid leakage, overheating, smoke generation, fire, rupture, or electric shock.

The following points must be strictly observed when carrying out maintenance work:

- **Do not wear electrically conductive items such as rings, necklaces, or wristwatches when carrying out work, as these items carry a risk of short-circuiting or electric shock.**
- **Maintenance work must be carried out by skilled personnel who have received the specified training.**
- **Insulated tools and protective equipment must be used when carrying out work. Inspect the tools and protective equipment before use to make sure they are not damaged.**
- **Stop charging and isolate the charging circuit before carrying out maintenance work.**
- **If any worker receives an electric shock, helpers must wear insulated protective equipment to prevent further accidents due to electric shock.**
- **If smoke is emitted or fire occurs due to malfunctioning or incorrect usage, extinguish any fire and cool down the battery immediately.**
- **Do not mix different battery types together during use. Otherwise there is a risk of accidents or equipment malfunctions and failure.**
- **Do not open the battery output terminal covers except when carrying out work.**
- **Be sure to protect the output terminals with insulators when the battery is removed.**

Avoid using or storing the battery under the following conditions. Otherwise there is a risk of accidents, malfunction, or failure due to fluid leakage, overheating, smoke generation, fire, or electric shock.

- **Cold or hot locations at temperatures outside the operating temperature range of -20°C to 40°C**
- **Locations where the humidity exceeds 85%RH**
- **Locations where condensation may occur due to sudden temperature fluctuations**
- **Locations where the battery may be splashed with water or left standing in water**
- **Locations subject to strong vibration or impact**
- **Dusty locations**
- **Locations where corrosive gases, combustible gases, or salt, iron, or oil mists are present**
- **Locations in direct sunlight or close to equipment generating heat**
- **Locations close to equipment that generates strong radio waves or magnetic fields**

Take care to avoid electrolyte leakage.

If electrolyte leakage is suspected (e.g., if the exterior is cracked or damaged, bulging or deformed, discoloured or corroded, or if there is an acrid smell), move the battery away from any open flames and stop using it.

If electrolyte leakage occurs, take the following actions:

- **Move the battery away from any open flames and stop using it. Otherwise there is a risk of fire.**
- **Wipe up the leakage immediately wearing protective clothing, rubber gloves, and protective glasses. Never touch the leakage with bare hands.**
- **If you inhale electrolyte fumes, move immediately to a location with fresh air, remain at rest, and seek medical attention.**
- **If electrolytes splash onto clothing, change out of the contaminated clothing immediately.**
- **If electrolytes come into contact with your skin, rinse immediately using copious amounts of soap and water, then seek medical attention.**
- **If electrolytes come into contact with your eyes, do not rub, but rinse immediately under running water for at least 15 minutes. Then seek medical attention.**
- **If you ingest electrolytes, rinse out your mouth with water immediately, then seek medical attention.**

https://truckmanualshub.com/

If smoke is emitted or fire occurs, extinguish any fire and cool down the battery immediately. Carbon dioxide gas fire extinguishers, powder fire extinguishers, or dry sand should be used to extinguish fire.

Do not use different battery types mixed together. Always use the specified battery type.

CAUTION: Note the following precautions when using the battery:

- **Do not drop the battery or subject it to strong impact. Otherwise there is a risk of accidents or failure if the exterior or interior becomes damaged.**
  Never use a battery after it has been subjected to impact. Even if it appears normal, it may be damaged internally.
- **Use in locations where it will not be splashed with water or other fluids, or use in suitably waterproofed conditions.**
- **Never use high-pressure water jet cleaning when cleaning the machine.**
- **Leaving the machine in an emergency-stopped state will drain the battery. Be sure to turn the starter switch to "OFF" when the machine is stopped for extended periods.**
- **Take care when using the battery at elevations above 1,000 m, as its cooling performance will be reduced.**

Action When the Battery Is Drained

DANGER! If the machine has just come to a stop due to low battery level, it can be operated for a short time by turning the override switch to "ON". Note, however, that this disables its safety mechanisms, so this procedure must be used only during emergencies, such as for stowing operations.

If the machine has stopped due to low battery level, one of the following measures should be taken to prevent over-discharging or reducing the battery performance:

- **Recharge the battery promptly, preferably within an hour.**
- **If recharging is not practical, use the disconnect switch to prevent battery consumption.**
  The battery should be charged within a week, as it will become defective if it is drained to an over-discharge state.

https://truckmanualshub.com/

Battery Charging

Monitor Display When Charging

The monitor will appear as follows if you attempt to charge the battery with the starter switch in the “OFF” position:

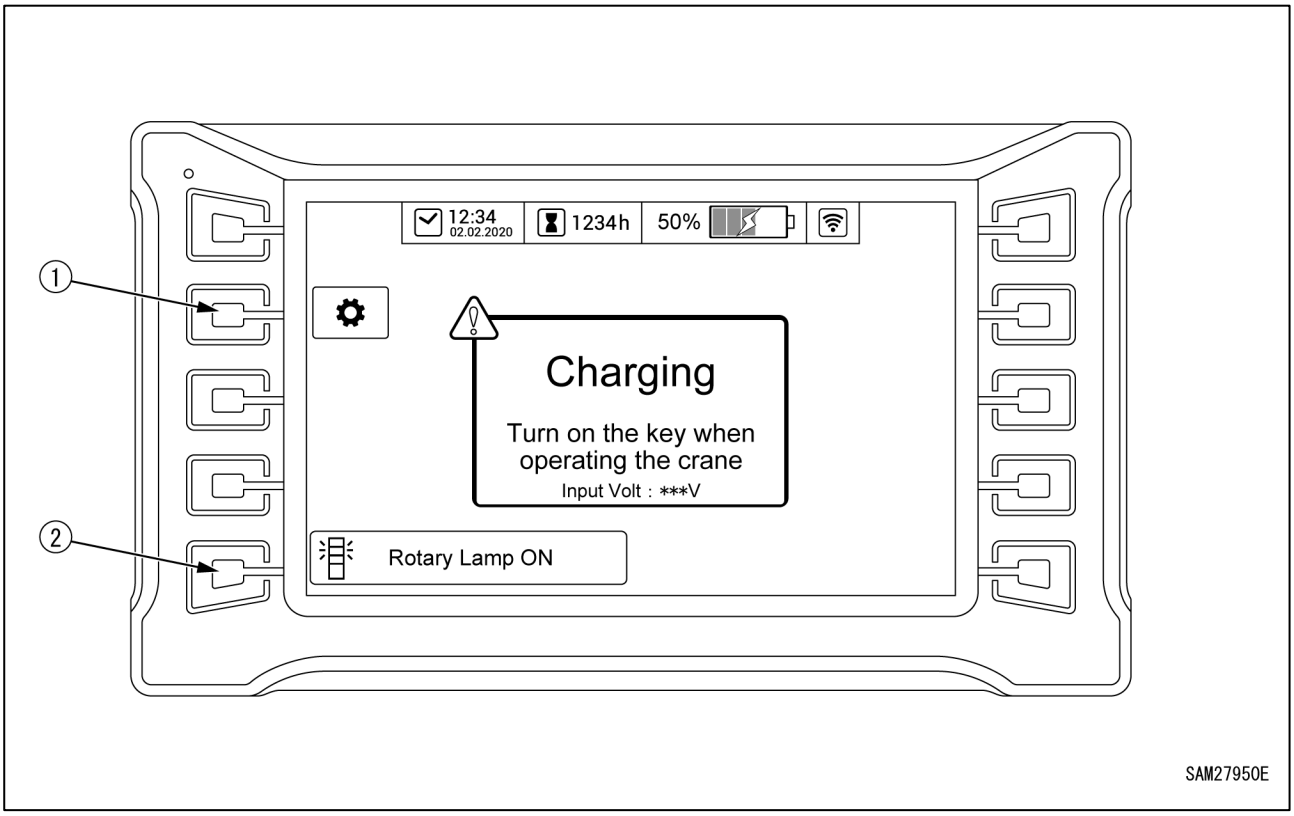

Fig. 4-210

1 - User Mode Switch

2 - Rotary Lamp ON/OFF Selection

User Mode Switch

Used for user settings.

Press the switch to switch to user mode.

For more information on user mode, see “User Mode” on page 4-17.

Rotary Lamp ON/OFF Selection

Allows the flashing working status lamp to be switched on or off while the battery is being charged.

ON: The working status lamp flashes.
OFF: The working status lamp stays off.

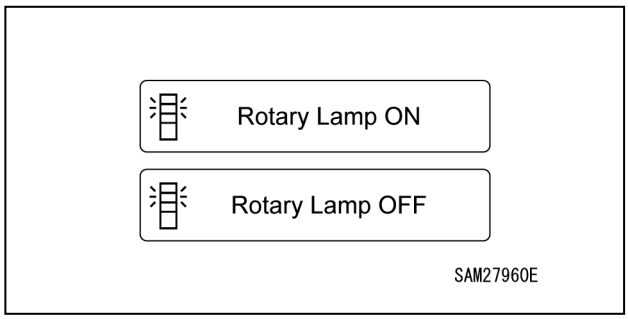

Fig. 4-211

https://truckmanualshub.com/

Charging Method

Recharge the battery when the battery charge is low.

If the battery is to be used for extended periods, it should be fully charged beforehand.

If the battery becomes drained, follow the procedures described in “Action When the Battery Is Drained” on page 4-86.

Charge the battery using only the specified charging method.

Check that the charging port, power cable, and plug are free of water and dirt.

1. Check that the disconnect switch is in the “LOCK” position. If not, turn the switch to “LOCK”."

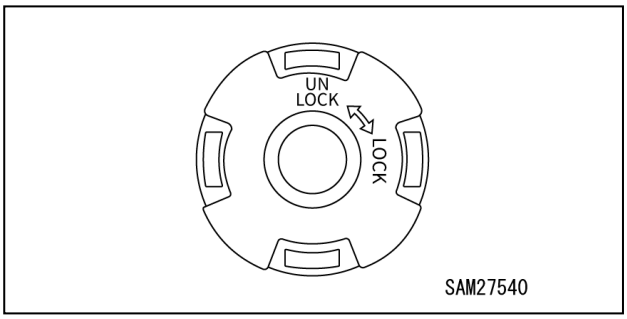

Fig. 4-212

2. Take out the power supply cable.

NOTICE: The power supply cable is stored inside the inspection door.

3. Connect the power supply cable to the charging port.

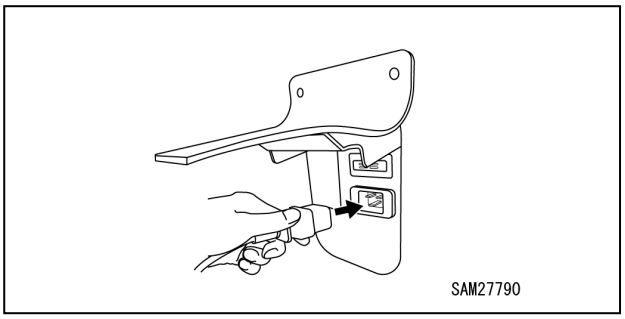

Fig. 4-213

4. Plug the power supply cable into the power supply outlet.

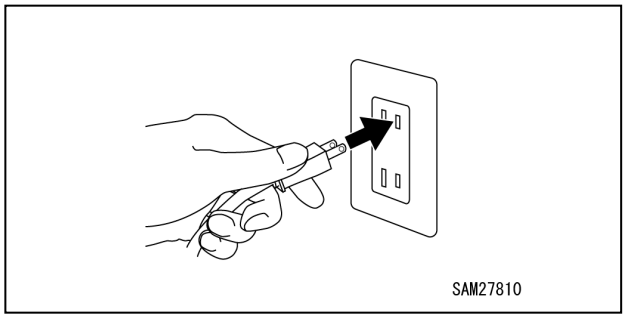

Fig. 4-214

5. Turn the starter switch to “ON”. Charging starts.

Once the battery is confirmed as charged on the monitor, turn the starter switch to “OFF”.

Turning the starter switch to “OFF” automatically turns off the power once charging is complete.

The charge level can also be checked during charging using the working status lamp.

- Flashing green: 96% to 100% charge
- Flashing yellow: 80% to 95% charge
- Flashing red: 0% to 79% charge

The working status lamp flashing can be turned on or off via the monitor.

If work is to be carried out while charging, leave the starter switch in the “ON” position. The power will not be turned off automatically when charging is complete in this state. Charging will also resume if the battery level falls below 50%.

6. Once charging is complete, unplug the charging cable from the power supply outlet.

WARNING! Do not remove the power supply cable from the charging port, as there is a risk of electric shock. When unplugging, always unplug by holding the plug and not by pulling the cable.

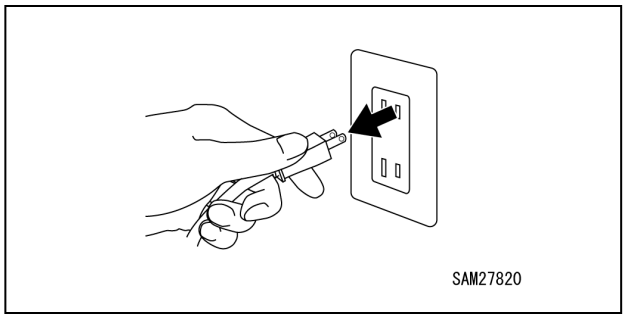

Fig. 4-215

7. Unplug the power supply cable from the charging port, then close the cover on the charging port.

https://truckmanualshub.com/

8. Stow the power supply cable.

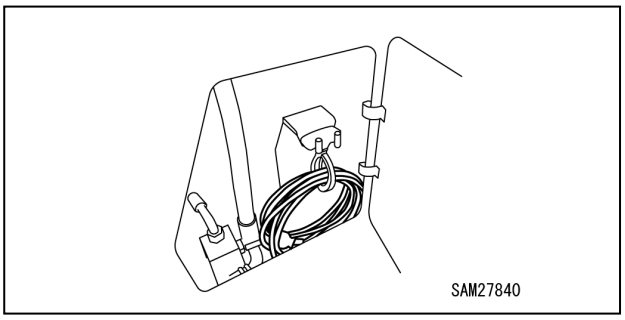

Fig. 4-216

NOTICE: The power supply cable can be stored inside the inspection door.

RADIO REMOTE CONTROL SYSTEM INTRODUCTION

This section describes the radio remote control system operating procedures. Before you perform any radio remote control system operating procedures, see “Section 2 SAFETY.”

Upon using the radio remote control system, also see HBC Operation Manual.

General

Modification

WARNING! Electrical Shock Hazard. Do not dissemble or modify the transmitter, receiver or accessories. Damage to the components may result in electrical failure.

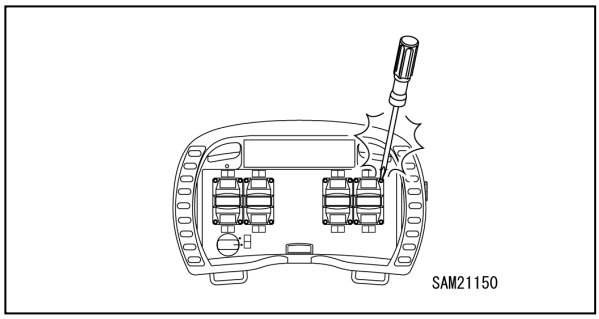

Fig. 4-217

Holding

Wear the waist belt, and operate the control levers and buttons with your thumb. Firmly grasp the grip with other fingers and hold the transmitter.

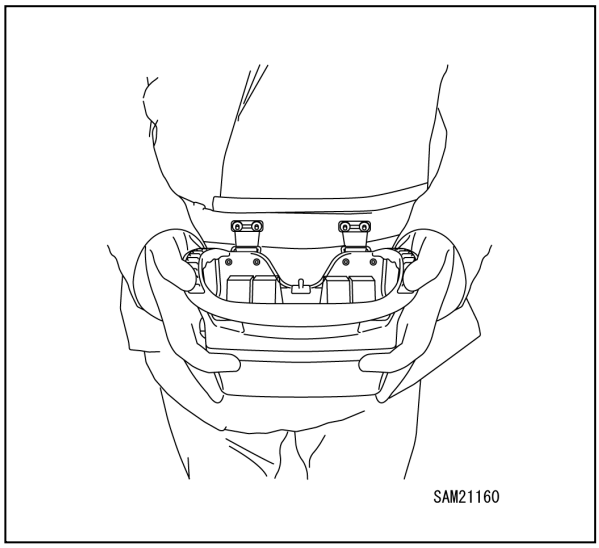

Fig. 4-218

Always manipulate levers and switches with your fingers.

https://truckmanualshub.com/

WARNING! Electrical Shock Hazard. Do not use sharp objects or tools to operate the transmitter. A sharp object or tool may damage the transmitter, allowing water to enter it and resulting in internal component damage and/or electrical failure.

Washing

WARNING! Sudden Movement Hazard. Always keep the transmitter clean and free of oil and mud. A slippery or dirty transmitter may cause an operator error.

Fig. 4-219

Wash the transmitter and receiver using a damp cloth with water or mild detergent to remove dirt. Avoid alkaline, alcoholic or spray cleaners that deteriorate plastics.

WARNING! Electrical Shock Hazard. Do not allow water to enter the transmitter. Only use a damp cloth with detergent to clean the transmitter. Damage to the transmitter may result if water is allowed to enter it, resulting in internal component damage and/or electrical failure.

Foreign Objects

Do not put metals, flammables or water in the battery storage section of the transmitter or the inside of the opening of the battery charger.

Do not connect the battery storage section of the transmitter or the terminal section of the inside of the opening of the battery charger with a piece of metal or do not insert a piece of metal into these parts.

Doing so may cause an electric shock or fire.

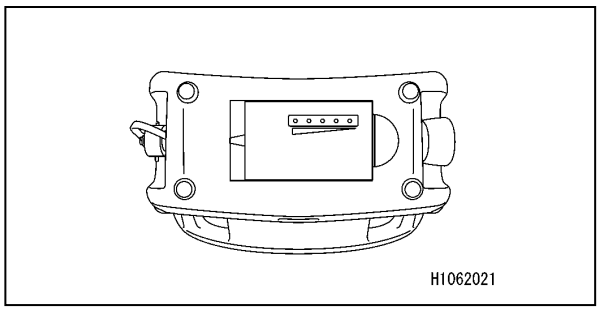

Fig. 4-220

Avoid Impact

Always use a waist belt (1) to avoid dropping the transmitter.

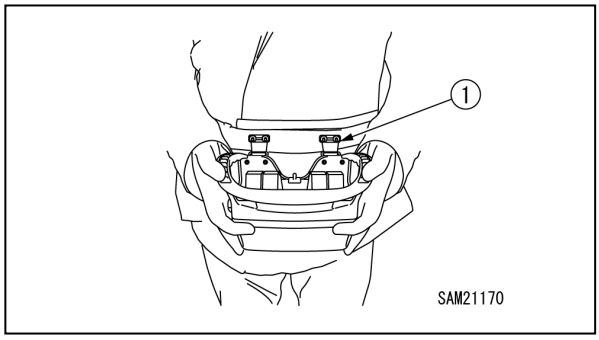

Fig. 4-221

WARNING! Electrical Shock Hazard. Do not use the transmitter if its case is damaged. Do not drop the transmitter or allow the case to become damaged. A damaged case may cause internal component damage and/or electrical failure.

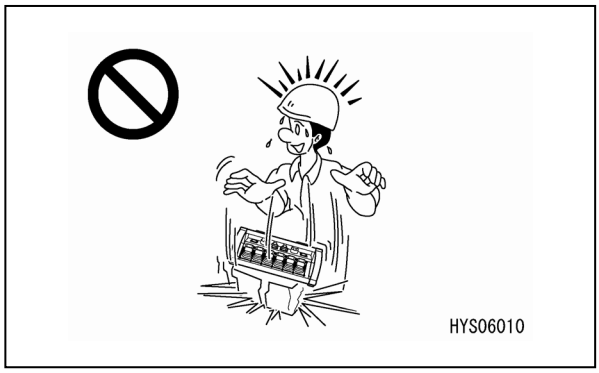

Fig. 4-222

https://truckmanualshub.com/

In the event of damage, remove the battery from the transmitter and return the transmitter to us or our sales service agency for service.

WARNING! Sudden Movement Hazard. Do not use the transmitter if its case is damaged. A damaged transmitter case may cause operator error.

Cold Weather

Avoid using the transmitter in ambient temperatures that change suddenly or that are -20°C or below. Sudden changes in temperature may cause condensation to form inside the transmitter, causing failure or malfunction and leading to a serious hazard.

Fig. 4-223

During cold weather operation, allow sufficient idling prior to starting crane operations. During low temperatures, hydraulic fluid has a higher viscosity, which may result in a delay of functions in crane operations.

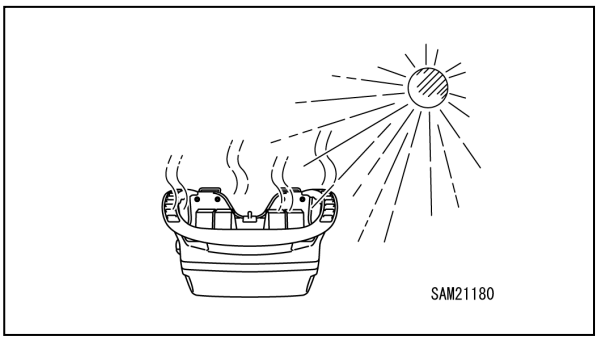

Fig. 4-224

Avoid storing the transmitter in the following conditions, as this may cause the transmitter enclosure to deform, discolor or damage internal components, resulting in damage or malfunction:

- Extremely low temperature (-20°C or below) or direct cold air
- Direct sunlight
- Near warm air outlets of vehicles
- Near heating system
- High humidity

Operation Environment

Avoid using the transmitter in a place where there is danger of explosion.

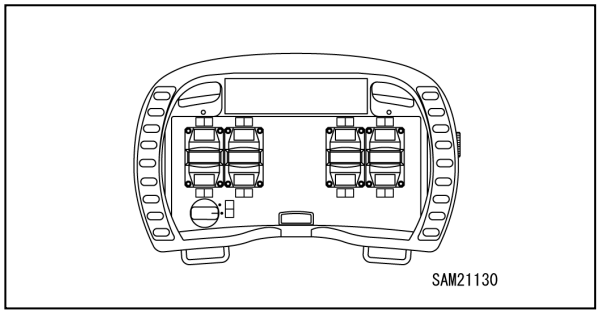

Fig. 4-225

Battery

Use a specified battery for the radio remote control system. The use of battery other than specified may cause electrolyte leakage, heat generation and rupture of the battery.

When setting a battery in the transmitter of the radio remote control system, be careful not to turn the battery upside down. Doing so may cause a failure of the inside devices of the transmitter, and electrolyte leakage, heat generation and rupture of the battery.

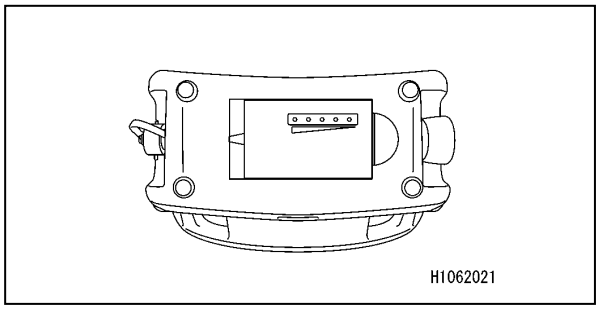

Fig. 4-226

Do not heat the battery or put it in fire. Doing so may cause electrolyte leakage and rupture of the battery.

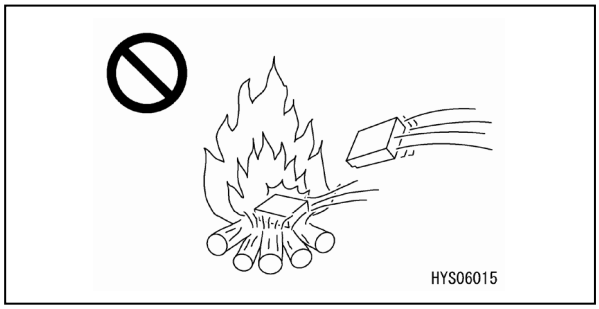

Fig. 4-227

Do not disassemble or modify the battery. Doing so may cause electrolyte leakage, heat generation and rupture of the battery.

https://truckmanualshub.com/

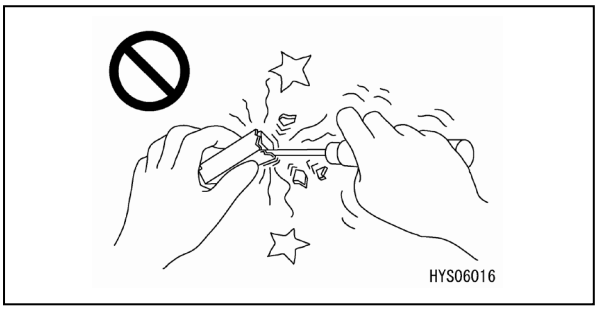

Fig. 4-228

Do not solder directly to the battery. Doing so may cause electrolyte leakage, heat generation and rupture of the battery.

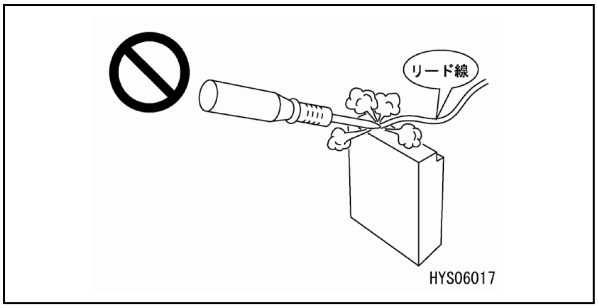

Fig. 4-229

If leaked electrolyte contacts your eyes, immediately wash it away with plenty of water and promptly see a doctor.

Periodically charge and discharge the battery within six months.

Temporary Storage when Abnormality is Found

In case the radio remote control system is found with an abnormality and is therefore stored temporarily waiting for service, apply following measures to notify all persons in the office that “the use is prohibited due to failure.”

1. Put up a sign showing “Use Prohibited”. Write clearly the information such as abnormality contents, name and contact of the storage manager, and the term of storage.
2. Take out the battery.
3. Never perform operation using a failed radio remote control system.

Cautions during Welding Repair

When performing welding repairs to the crane, weld in a location with good facility, and, only authorised personnel are permitted to weld.

- Disconnect the electric wiring connection section with the receiver. Otherwise, the electric system of the receiver will be destroyed.

Operation Precautions

Pre-Start Inspection

Before operation, perform the pre-start inspection as specified for this machine. Serious injury or death can occur if these inspections are neglected. Any failure detected during inspection must be corrected immediately.

Machine Starting

Ensure the area is clear of people and obstacles before starting the machine.

Before Turning On Transmitter

Check for dirt, cracks in the enclosure and damaged display, control levers or operation switches. WARNING! Unsafe Operation Hazard. Do not use the transmitter if the enclosure is cracked or the display, control levers or operation buttons are damaged. The transmitter must be clean and in good operating condition while operating the machine.

Ensure that the transmitter’s control levers and operation switches move smoothly and properly.

After Turning On Transmitter

Ensure the display of the transmitter displays the correct indications.

Switch to each operation mode (CRANE and OUTRIGGER), then check the display for the proper indications when each lever and button is manipulated. In addition, verify each applicable load value on the transmitter is identical to that on the moment limiter display.

https://truckmanualshub.com/

After Starting Machine

Function Check OUTRIGGER Mode Using Transmitter

- Switch the transmitter mode selector switch to “OUTRIGGER.” Confirm that the display also switches to the outrigger display.
- Operate the levers and check the outrigger extend and stow operations.
- Operate the levers gradually. Abrupt movement of the levers may cause the crane to overturn.

Ensure the position pins of the outriggers and retainers are securely fixed.

Function Check CRANE Mode Using Transmitter

Before switching operation mode to CRANE, extend all the outriggers and ensure they are securely positioned on the ground.

- Switch the transmitter mode selector switch to “CRANE.” Confirm that the display also switches to the crane display.
- Check to confirm that the Emergency Stop Switch (EMO) functions before starting. The Emergency Stop Switch (EMO) shuts down the main unit and shuts off power to the transmitter unit.
  If you press the switch and the machine does not stop, stop use immediately. Contact us or our sales service agency.

Activate levers for crane operation and ensure crane functions correctly.

See “RATED TOTAL LOAD CHARTS” on page 3-10 for proper loading of crane.

- Always operate the levers on the transmitter slowly when hoisting a load.
- Do not perform multiple operations simultaneously using the radio control, as only one side may operate, which is extremely dangerous.
- Never let go of the transmitter when the power is turned on. Always power off the transmitter before moving, carrying operations not using the radio control, taking breaks, and when work is complete.
- In emergencies or if even a minor problem arises within the machine operating area, press the Emergency Stop Switch (EMO) immediately to shut down the transmitter.

Terminating Operation

The monitor must be used when stowing the crane, so turn off the transmitter and operate from the machine itself.

When stowing the outriggers, switch the transmitter mode selector switch to “OUTRIGGER.” Confirm that the display also switches to the outrigger display.

After crane operation, always turn off power to the transmitter.

Do not turn transmitter on unless crane is in operation.

WARNING! Sudden Movement Hazard. Never turn on the transmitter until the crane is properly positioned and ready for operation. Unexpected contact with the operation levers or buttons may cause unexpected movement of the crane.

https://truckmanualshub.com/

RADIO REMOTE CONTROL SYSTEM FEATURES

The radio remote control system includes both transmitter and receiver which facilitate remote control system of the crane.

This is a wireless radio remote control system; the Crane can be operated at the most convenient place away from it within the radio wave range.

Transmitter

The transmitter includes operation levers, a display, and an Emergency Stop Switch (EMO).

It allows the crane to be operated remotely from the machine by transmitting wireless crane operation signals to the receiver mounted on the machine main unit.

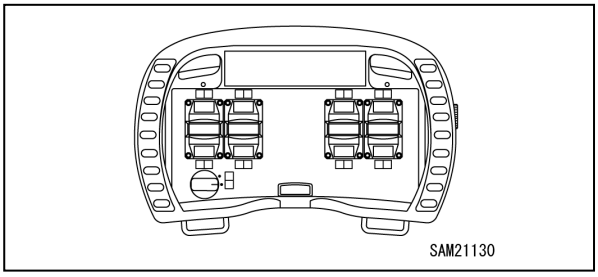

Fig. 4-230

The transmitter sends signals to operate the crane to the receiver. The transmitter transmits the load data from the moment limiter of the crane through the cable, to be displayed on the monitor display as rated total load, actual load and load factor (bar chart).

Receiver

The receiver which is installed on the crane is equipped with control box (1), monitor LED (2), connector (3), antenna (4), etc.

The receiver receives operation signals from the transmitter and controls the crane.

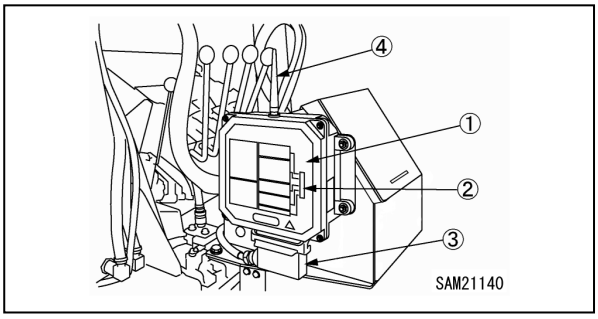

Fig. 4-231

Transmitter Accessories

- Waist belt

Waist belt to be worn when using transmitter to prevent accidental dropping of the unit during operation.

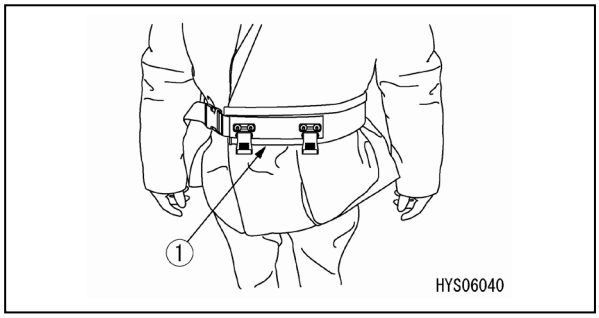

Fig. 4-232

- Battery charger

This is a charger to charge the battery for the transmitter.

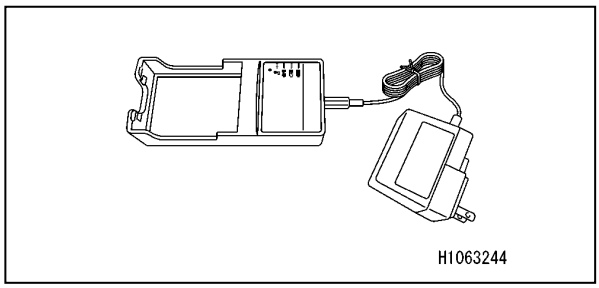

Fig. 4-233

Functions of Radio Remote Control System

- The acceleration dial and operation levers control the crane operation speed continuously from stand-by, up to maximum speed.
- In addition to handling the crane by transmitter, manual operation can be performed on the machine side, depending on the type of operation required. When the power of the radio remote control system is turned on, manual operation cannot be performed.
- ID data necessary for the operation of the transmitter is built in this radio remote control system.
  If communications are not established when the power is turned ON or if they are interrupted (poor reception or beyond reaching distance) during operation, the “forced zero position” function is activated to return to the state in which no operation lever is pressed, to avoid miss-operation or erroneous activation.
- This radio remote control system detects an unused frequency automatically.

https://truckmanualshub.com/

RADIO REMOTE CONTROL SYSTEM COMPONENTS

Transmitter Components

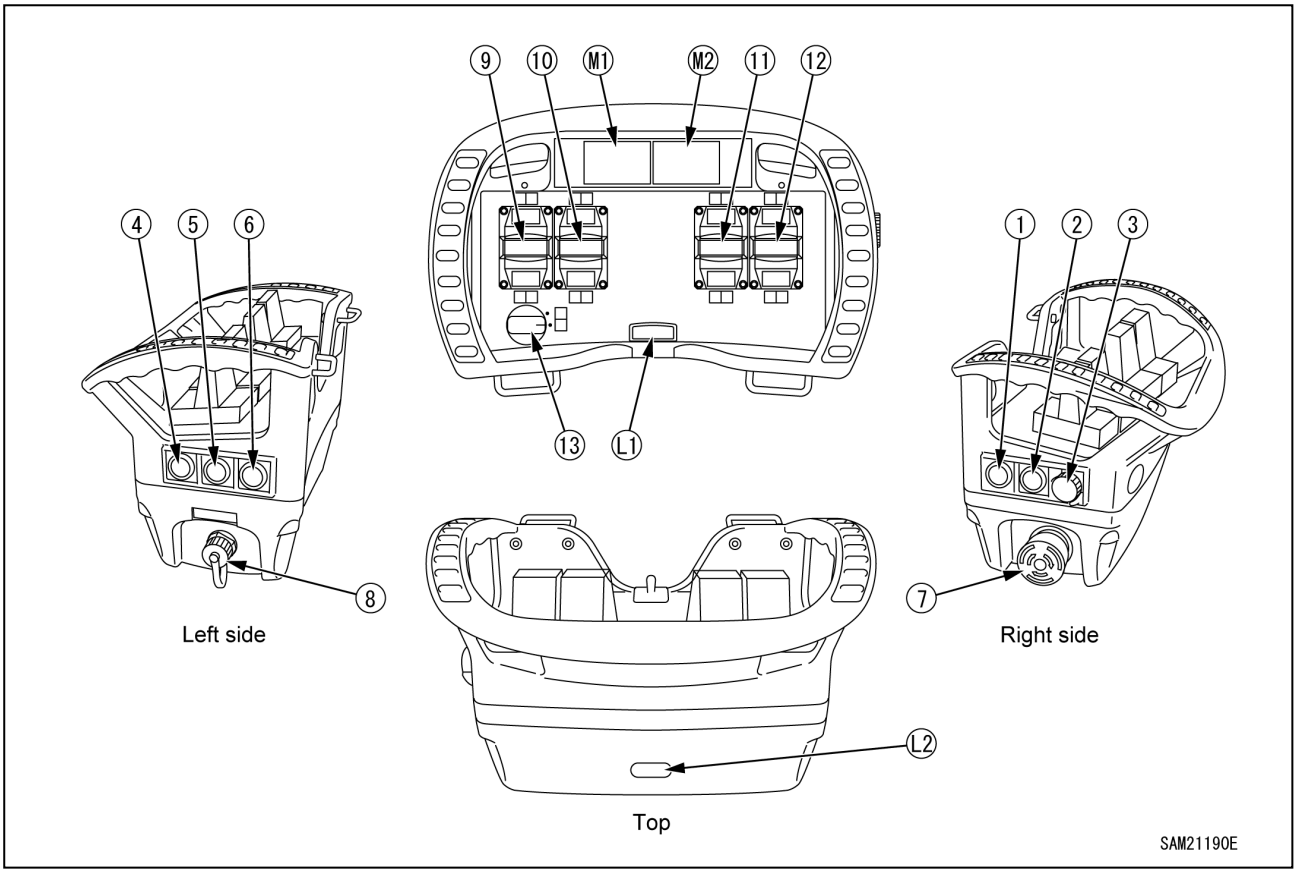

Fig. 4-234

1 - Transmitter Power Switch
2 - (Not in use)
3 - Display Operation Switch
4 - Horn Switch
5 - Boom Lift Bypass Switch
6 - Micro Speed Switch
7 - Emergency Stop (EMO)/Transmitter Power OFF Switch
8 - Cable Connection Port (Not used)
9 - No. 1 Outrigger/Slewing Operation Lever
10 - No. 2 Outrigger/Telescoping Operation Lever
11 - No. 3 Outrigger/Winch Operation Lever
12 - No. 4 Outrigger/Lifting and Lowering Operation Lever
13 - Operation Mode Selector Switch
L1 - LED Light (Front)
L2 - LED Light (Control Panel)
M1 - Left Display
M2 - Right Display

https://truckmanualshub.com/

Transmitter Power Switch

Use this switch to turn on transmitter power.

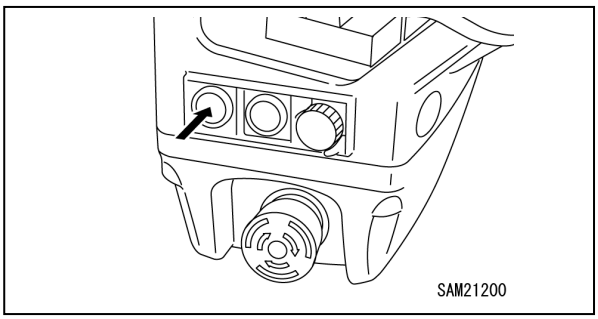

Fig. 4-235

- Standby: Press the switch once to select Standby mode. Power will shut off automatically after a few seconds in standby mode.
- Power ON: Press the switch three times while in Standby mode to turn on transmitter power.

Display Operation Switch

Use this switch to operate the display.

- Select: Rotate the switch to select from the menu.
- Enter: Press the switch to enter a selection.

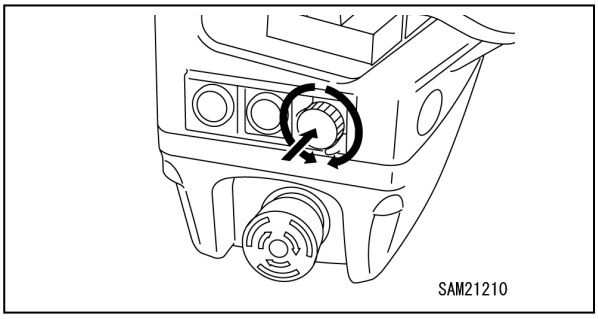

Fig. 4-236

Horn Switch

The horn keeps blowing while this switch is pressed.

Boom Lift Bypass Switch

The boom can be lifted while this switch is pressed following an overload stop.

Micro Speed Switch

Used to operate the crane at slow speed when operating the crane.

Emergency Stop (EMO)/Transmitter Power OFF Switch

Use this switch to bring the machine to an emergency stop. In addition, this switch can be used to turn off the radio remote control system.

- ON: Turns off transmitter power and shuts down the machine.
- OFF: Allows transmitter power to be turned on. Power cannot be turned on while this switch is ON.

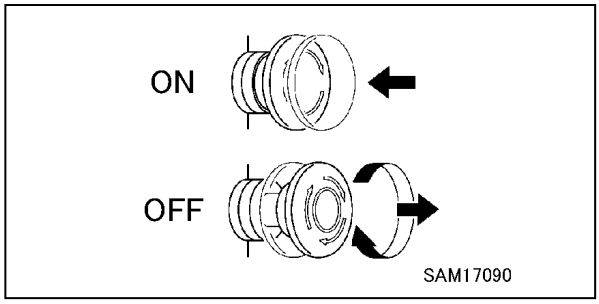

Fig. 4-237

Displayed when the emergency stop switch has been pressed on the radio remote control unit.

It disappears once communication is established with the radio remote control unit.

To operate the levers on the machine while the guide is displayed, press the emergency stop reset switch at the bottom right of the monitor.

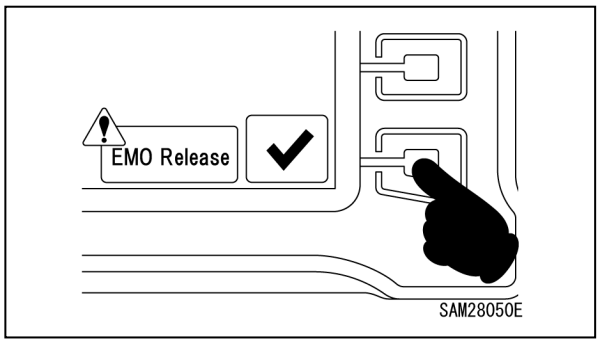

Fig. 4-238

https://truckmanualshub.com/

Cable Connection Port

Not used with this machine.

No. 1 Outrigger/Slewing Operation Lever
No. 2 Outrigger/Telescoping Operation Lever
No. 3 Outrigger/Winch Operation Lever
No. 4 Outrigger/Lifting and Lowering Operation Lever

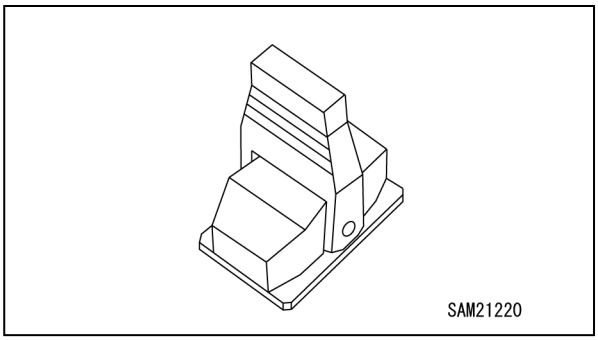

Fig. 4-239

Used for individual outrigger and crane operations

For more information on outrigger operations, see “Outrigger Operation” on page 4-109.

For more information on crane operations, see “Crane Operation” on page 4-112.

Operation Mode Selector Switch

Used to switch between Outrigger mode and Crane mode.

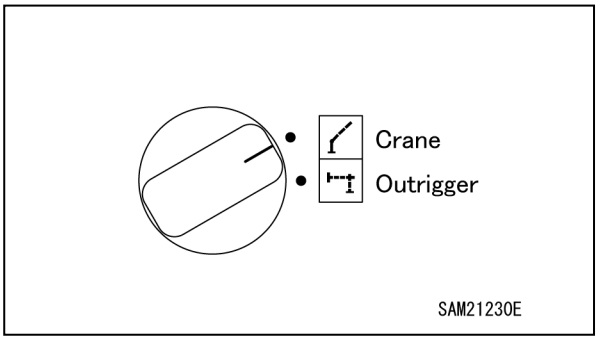

Fig. 4-240

- Outrigger: Allows outriggers to be operated using levers.
- Crane: Allows the crane to be operated using levers.

LED Light (Front)
LED Light (Control Panel)

Turns on the LED lights to illuminate the surrounding area.

For more information on turning on the lights, see “Transmitter Display Components” on page 4-98.

Left Display
Right Display

Use this display to view various kinds of information.

For more information on display, see “Transmitter Display Components” on page 4-98.

https://truckmanualshub.com/

Transmitter Display Components

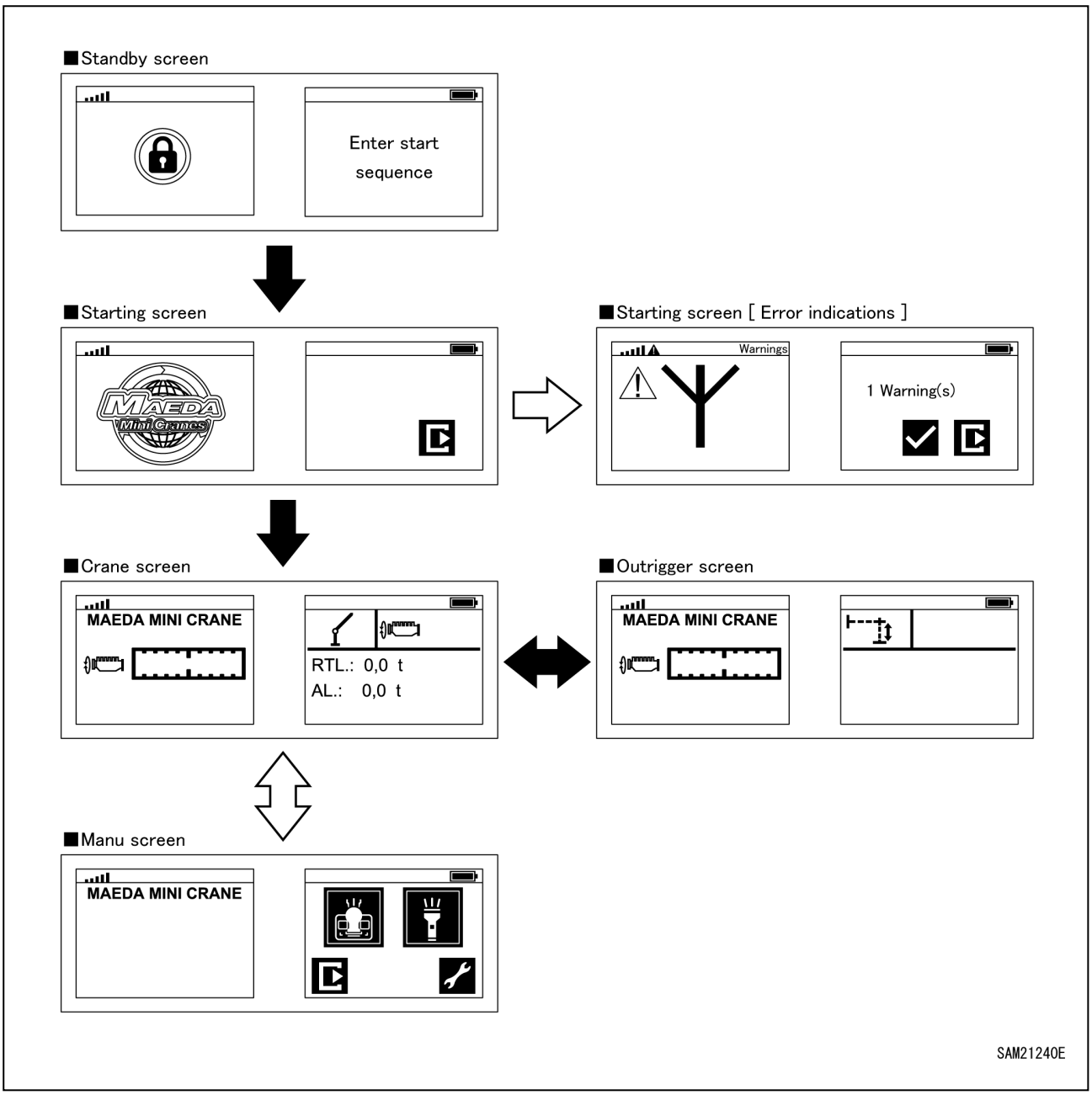

Fig. 4-241

https://truckmanualshub.com/

Standby Screen

Press the Power Switch on the transmitter to display the Standby screen.

The radio remote control system is still locked at this point.

Startup Screen

Hold down the Power Switch on the transmitter while the Standby screen is displayed to turn on power and switch to the Startup screen.

Crane/Outrigger Screen

The operation mode selector switch also changes the screen displayed.

In the either case, the left screen displays the accelerator gauge. The gauge indication varies depending on how far the lever is moved.

The right display varies as follows for each of the screens:

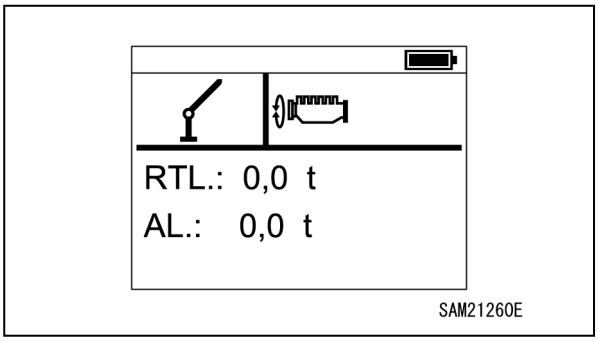

Fig. 4-242

[Crane Screen]

The crane symbol is displayed. The rated total load and actual load are also displayed.

- RTL: Indicates the rated total load.
- AL: Indicates the actual load.

[Outrigger Screen]

The outrigger symbol is displayed. No particular status indications are displayed here.

Menu Screen

Press the Display Operation Switch while the Crane Screen or Outrigger Screen is displayed to switch to the Menu Screen.

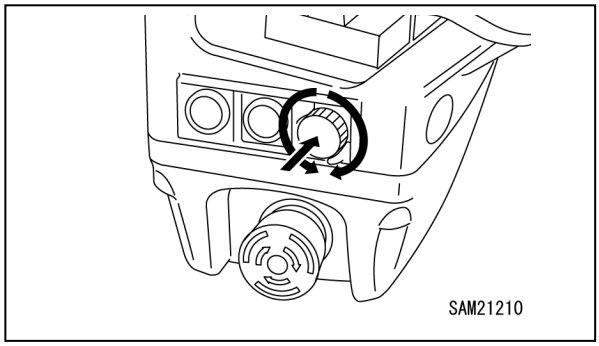

Fig. 4-243

Turning the display operation switch allows you to select a desired menu.

Select a menu on the display, and press the display operation switch to determine the menu.

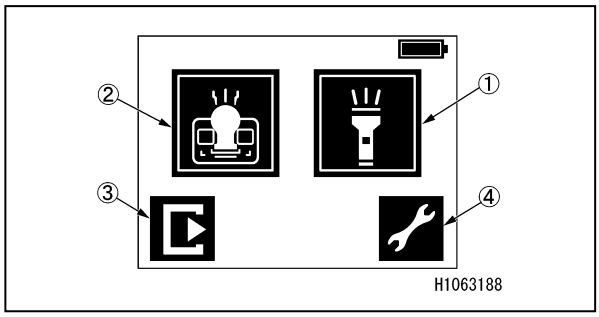

Fig. 4-244

(1) LED light (front) ON/OFF

(2) LED light (operation panel) ON/OFF

(3) Move to the crane/outrigger screen

(4) Move to radio remote control menu

https://truckmanualshub.com/

[Radio Remote control menu list]

Symbol	Name	Description
	HBC Menu	This menu can configure system settings, connection settings, and security settings and can display various information.
	Warnings	This submenu can be used to display warnings.
	Information	This submenu can be used to display the system information.
	Service address	This menu item can be used to display the hotline phone number and email address of our service office.
	Working hours	This menu item can be used to display the current working hours.
	Software/config	This menu item can be used to display the currently installed software version and the current display configuration.
	Information text	This menu item can be used to display the currently entered information text.
	Back	This soft key allows you to navigate through menu items to return to the previous item.
	Power info	This submenu can be used to display information about the remaining battery power.
	Battery level	This menu item can be used to display the current battery level.
	Back	This soft key allows you to navigate through menu items to return to the previous item.
	Personalize	This submenu allows you to personalize the system settings.
	Language	This menu item allows you to choose the display language.
	Backlight	This menu item can be used to adjust the backlight brightness of the display.
	Back	This soft key allows you to navigate through menu items to return to the previous item.
	Connections	This submenu allows you to configure connection settings.
	Display configuration	This menu item allows you to configure the connection to PC.
	RF connection	This menu item allows you to establish the HF interface.
	Back	This soft key allows you to navigate through menu items to return to the previous item.
	Settings	This submenu allows you to configure device settings.
	Set information text	This menu item allows you to enter information texts.
	Master level	This menu item allows you to enable/disable the access to the master level.
	Back	This soft key allows you to navigate through menu items to return to the previous item.
	Safety functions	This submenu allows you to configure security settings.
	Safety features	This menu item allows you to adjust the sensitivity for radiomatic® zero-g and radiomatic® shock-off, which are provided to enhance security features.
	inclination switch	This menu item allows you to configure the settings for radiomatic® inclination switch, which is provided to enhance security features.
	APO/AMO	This menu item allows you to configure APO/AMO for the security features.
	Manage PIN	This menu item allows you to change the PIN from the current PIN to a new PIN.
	Reset PIN	This menu item allows you to reset the current PIN.
	Back	This soft key allows you to navigate through menu items to return to the previous item.
	Home	This soft key allows you to return to the main page of the customer menu.

Fig. 4-245

https://truckmanualshub.com/

Status Indications of Display

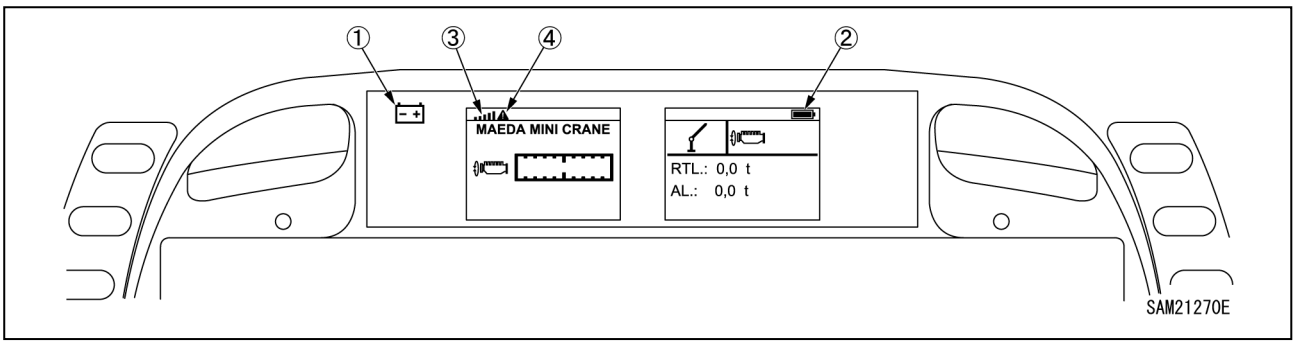

Fig. 4-246

1 - Battery Icon
2 - Battery Status Icon
3 - Radio Wave Status Bar
4 - Error Icon

Battery Icon

Blinks in green when the power supply is in normal condition.

Battery Status Icon

Indicates the remaining battery levels as follows:

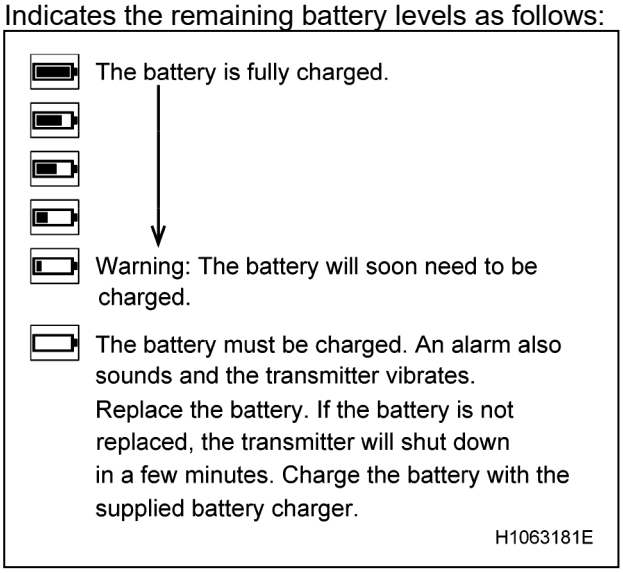

Fig. 4-247

Radio Wave Status Bar

The intensity of radio waves are as follows:

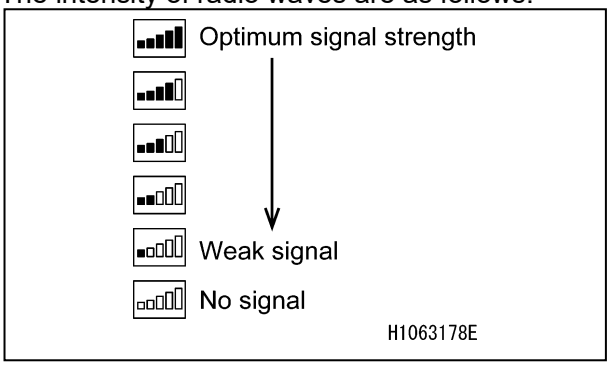

Fig. 4-248

Error Icon

An icon appears when an error is detected. Detailed information about the error icons can be checked from the radio remote control menu in the configuration menu.

https://truckmanualshub.com/

Receiver Components

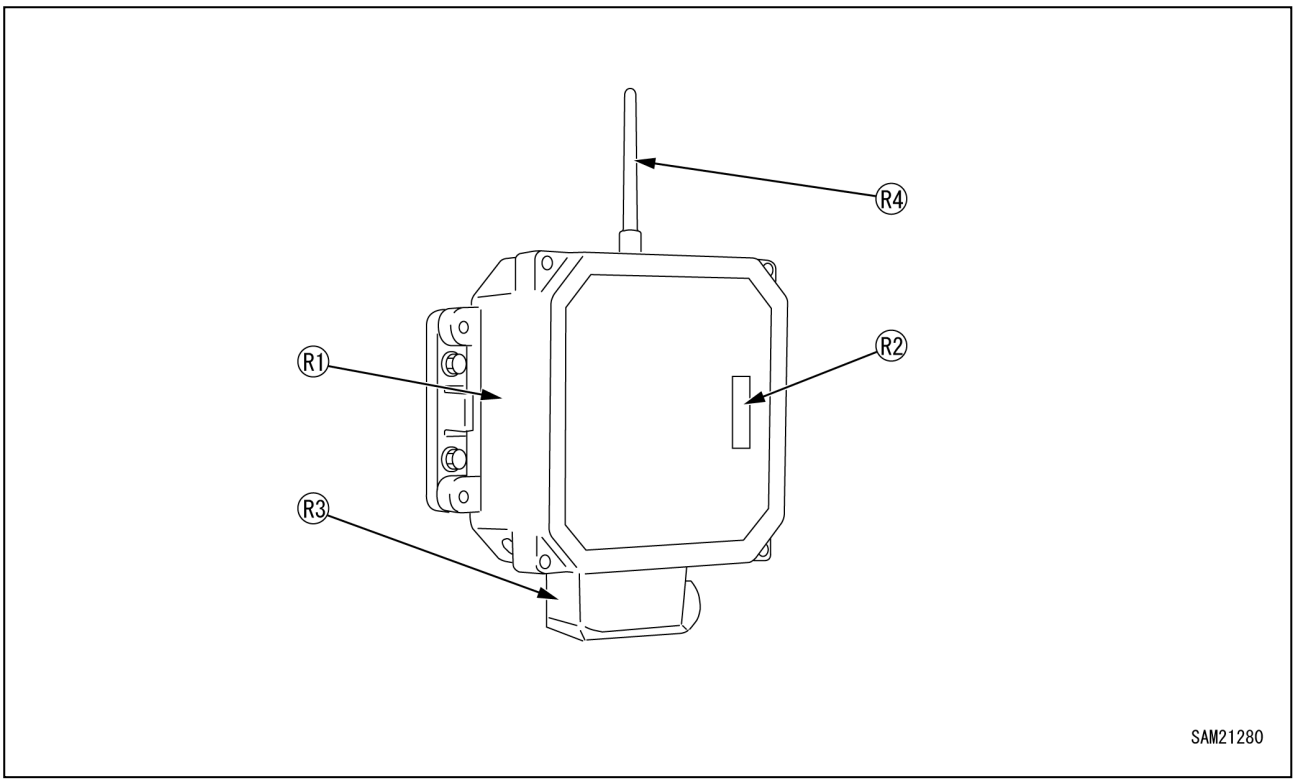

Fig. 4-249

R1 - Control Box
R2 - Monitor LED
R3 - Connector Connection Port
R4 - Antenna

Control Box

The control box contains the receiver and control devices. Do not dismantle the control box.

https://truckmanualshub.com/

Monitor LED

The control box is equipped with monitor LEDs that show the operation status of the radio remote control system.

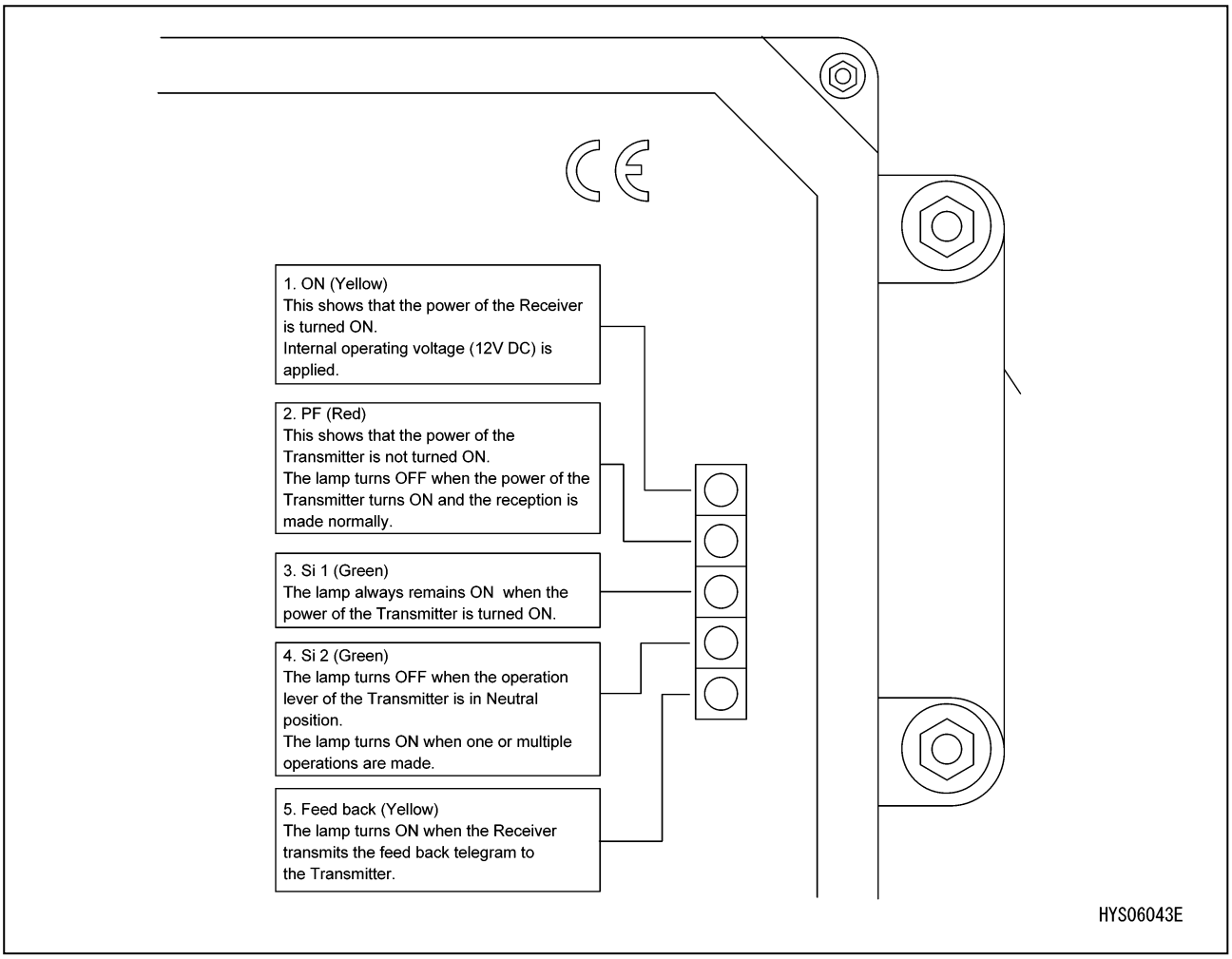

Fig. 4-250

Connector connection port

Wiring connector to allow communication with the controller on the machine.
The wire must be kept connected.

WARNING! Before performing electric welding due to repair work for the machine body or other reasons, be sure to disconnect the wire. Failure to do so may result in a machine failure caused by burn damage to the control box due to high voltage applied to it.

Antenna

Antenna that allows communication with the transmitter of the radio remote control system.

https://truckmanualshub.com/

RADIO REMOTE CONTROL SYSTEM VERIFICATIONS

The following radio remote control system verifications and inspections must be performed before starting the machine.
WARNING! Sudden Movement Hazard. Do not start the machine until the following radio remote control functions have been verified for proper operation. The radio remote control functions must operate properly before starting the machine.
If a failure is noticed during inspection, repair it or contact us or our sales service agency for service.

Before Turning On Transmitter

The following checks must be performed before the transmitter is turned on. Be sure the Starter Switch is in the OFF position.

WARNING! Sudden Movement Hazard. Verify that the Starter Switch is in the OFF position before performing the following inspections. The Starter Switch must be in the OFF position to prevent accidental starting of the machine.

Perform the following inspections while the transmitter power is off:

- Inspect the operation levers, operation switches, and exterior to check that they are not covered in oil or other dirt. Clean with a clean cloth.
- Check for foreign material, such as particles of small stones or sand, caught in small openings near the operation levers and/or switches.

WARNING! Sudden Movement Hazard. Do not operate the machine if foreign material prohibits movement of operation levers and the accelerator lever. The operation levers and the accelerator lever must be free to operate for proper operation of the machine.

- Check for any damage to the transmitter case or rubber covers of the operation levers and operation switches.

WARNING! Electrical Shock Hazard. Do not operate the transmitter if its case, the rubber covers, operation levers, or operation switches are damaged. Damage to these items may cause internal component damage and/or electrical failure.

- Check the movement of each operation lever and operation switch for smooth operation and free movement and return to the NEUTRAL position when released. Repair any lever or switch immediately before returning to operation.

WARNING! Sudden Movement Hazard. Do not operate the machine using the transmitter if the levers do not return to the NEUTRAL position freely. Levers must return to the NEUTRAL position freely for proper operation of the transmitter.

- Open the battery cover and check that the battery is installed in the correct direction.
  If the battery is not installed correctly, install it again. If it is not installed correctly, internal devices of the transmitter may malfunction, causing the crane to perform unexpected operation and resulting in a serious accident.
- Check if there is any foreign matter such as a metal or paper in the electrode of the battery.
  If found, remove such particles completely. Otherwise, an electric shock or fire may be caused.

After Turning On Transmitter

After the transmitter is powered on, perform the following checks:
Check that the power is turned on and the display is functioning properly. There is a risk of incorrect operation or serious accidents occurring if the display is not displayed.

After Starting Machine

The following radio remote control system verifications and inspections must be performed after the machine starts.

WARNING! Sudden Movement Hazard. Do not operate the machine until the following radio remote control functions have been verified for proper operation. The radio remote control functions must operate properly for proper operation of the machine.

If a failure is noticed during inspection, repair it or contact us or our sales service agency for service.

https://truckmanualshub.com/

Checking Machine Start Operation

Verify that the boom and outriggers are completely in the stowed position.

WARNING! Tip Hazard. Do not start the machine if the boom and outriggers are not in the stowed position. The boom and outriggers must be in the stowed position before operating the transmitter for proper operation of the machine.

WARNING! Sudden Movement Hazard. Do not operate the crane if a warning display appears on the transmitter.

Always perform the “Pre-Start Inspection” before starting the machine or inspecting after starting.

Perform the following inspections while the transmitter power is “ON”:

1. Turn the Starter Switch ON.
2. Push the Horn Switch and confirm that the horn sounds.

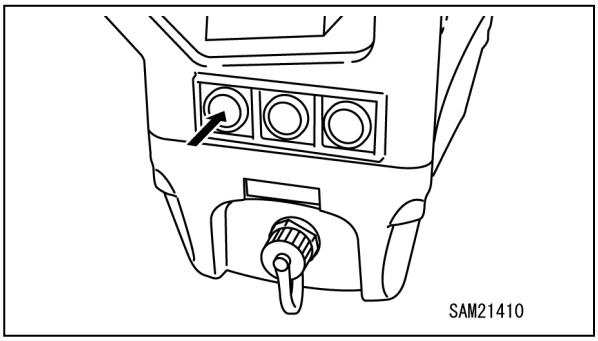

Fig. 4-251

3. Operate the control levers to check that the motor operates according to the lever movements.

Checking Machine Stop Operation

1. Press the Emergency Stop (EMO)/Transmitter Power OFF Switch while the machine runs and confirm that the machine stops.

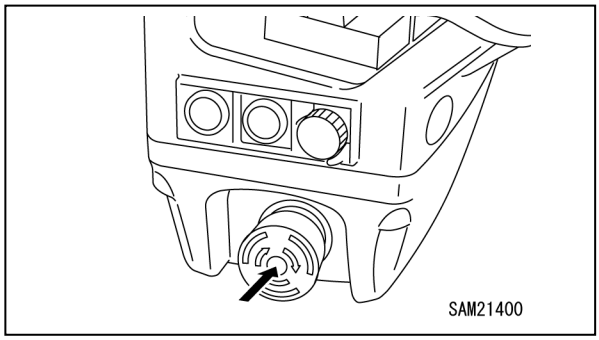

Fig. 4-252

Checking Outrigger Operation

Verify that the boom and outriggers are completely in the stowed position.

Perform the following inspections with the machine running and the transmitter power turned on.

1. Switch the operation mode selector switch on the transmitter to “Outrigger.”

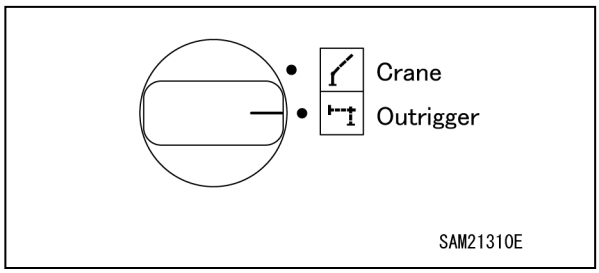

Fig. 4-253

2. Operate the various operation levers and verify that the outriggers operate accordingly for the respective lever operations.

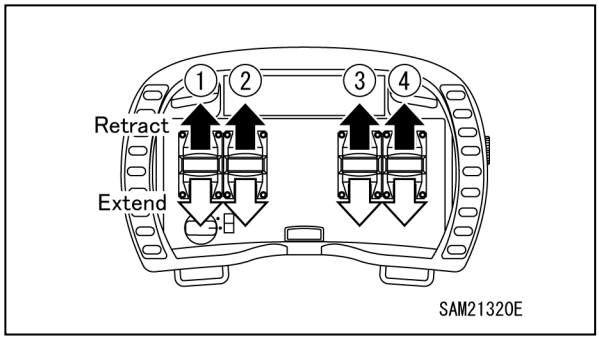

Fig. 4-254

- Ground Set-Up: The outriggers are lowered to the ground.
- Stowage: The outriggers are lifted from the ground.

https://truckmanualshub.com/

NOTICE: Also verify that the outriggers move at the appropriate operating speeds corresponding to how far the levers are moved.

Checking Crane Operation

WARNING! Tip Hazard. Verify that all outriggers are positioned correctly before operating the crane. All outriggers must be properly positioned before starting any crane operation.

Perform the following inspections with the machine running and transmitter power turned on.

1. Switch the operation mode selector switch on the transmitter to “Crane.”

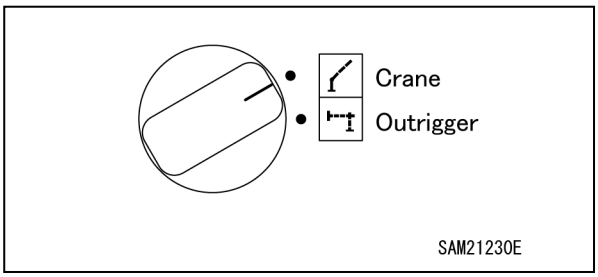

Fig. 4-255

2. Move the operation lever (9) to the “clockwise (right)” and “counterclockwise (left)” side, and verify that the result corresponds to the lever direction.
   Slew continuously through at least 360° and verify that operations are normal.

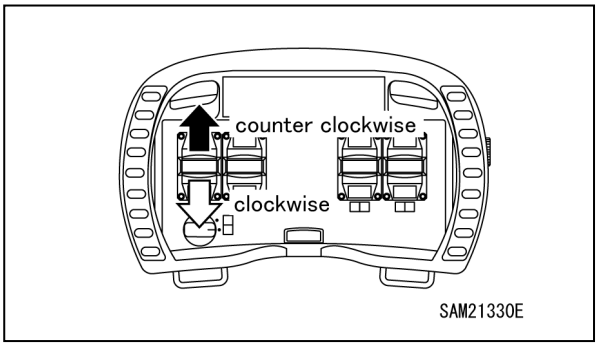

Fig. 4-256

3. Move the operation lever (10) to the “Extend” and “Retract” side and check that the boom follows the lever operation.

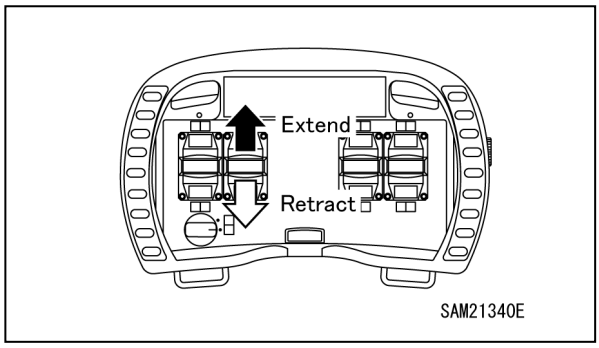

Fig. 4-257

4. Move the operation lever (11) to the “Down” and “Up” side, and check that the hook block follows the lever operation.

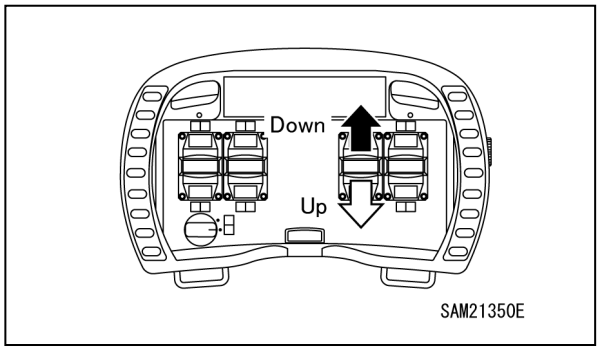

Fig. 4-258

5. Move the operation lever (11) to “Up” side and check that the hook block stops by the over winding detector.
6. Move the operation lever (12) to “Raise” and “Lower” side and check that the boom follows the lever operation.

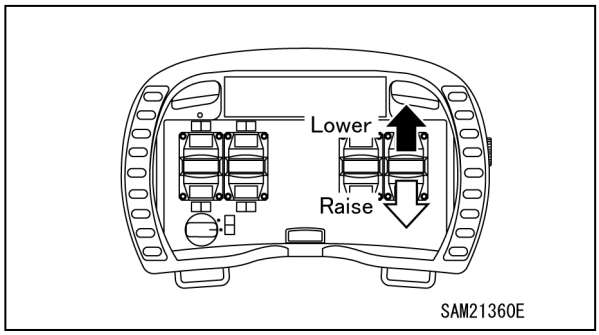

Fig. 4-259

https://truckmanualshub.com/

RADIO REMOTE CONTROL SYSTEM OPERATION

WARNING! Electrical Shock Hazard. Do not disassemble or modify the transmitter or receiver. Damage to the components may result in electrical failure.

WARNING! Electrical Shock Hazard. Do not use sharp objects or tools to operate the transmitter. A sharp object or tool may damage the transmitter, allowing water to enter it and resulting in internal component damage and/or electrical failure.

WARNING! Sudden Movement Hazard. Always keep the transmitter clean and free of oil and mud. A slippery or dirty transmitter may cause an operator error.

WARNING! Electrical Shock Hazard. Do not allow water to enter the transmitter. Only use a damp cloth with detergent to clean the transmitter. Damage to the transmitter may result if water is allowed to enter it, resulting in internal component damage and/or electrical failure.

WARNING! Electrical Shock Hazard. Do not use the transmitter if its case is damaged. Do not drop the transmitter or allow the case to become damaged. A damaged case may cause internal component damage and/or electrical failure.

WARNING! Sudden Movement Hazard. Do not use the transmitter if its case is damaged. A damaged transmitter case may cause operator error.

WARNING! Sudden Movement Hazard. Do not use both the remote control and manual controls to operate the crane at the same time. Only one method of control must be used at a time to operate the crane.

Before operating the radio remote control system, verify proper operation of the transmitter and receiver. See “RADIO REMOTE CONTROL SYSTEM VERIFICATIONS” on page 4-104.

1. To avoid dropping the transmitter, wear the waist belt (1) around your waist and attach the transmitter to the waist belt (1).

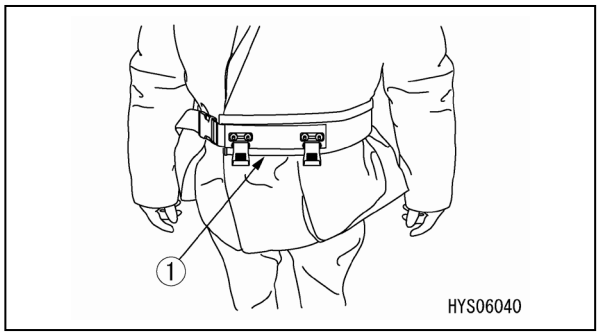

Fig. 4-260

2. After powering on the transmitter, before operating the crane, be sure to give an alarm sound (horn) to alert people at the work site.

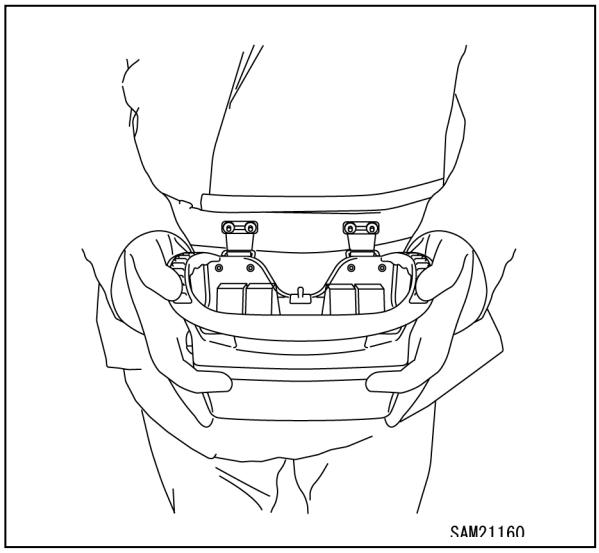

Fig. 4-261

NOTICE:

- *If the battery for the transmitter runs low, recharge the battery or replace the battery with a charged battery.*
- *In the case of the radio remote control system, radio waves may not be received even at close range due to jamming or depending on reflection conditions in the vicinity.*
- *Operate as close to the Receiver antenna as possible.*
- *In crane operation, when the transmitter has not been operated for a certain period of time after the last operation, it will be automatically turned “OFF”. When using the transmitter again, first turn on the transmitter power.*

https://truckmanualshub.com/

Powering ON

1. Press the Power Switch on the transmitter and verify that the battery symbol at the top left of the left-hand display flashes in green. The radio remote control system is in standby mode once “Enter start sequence” appears on the right-hand display.

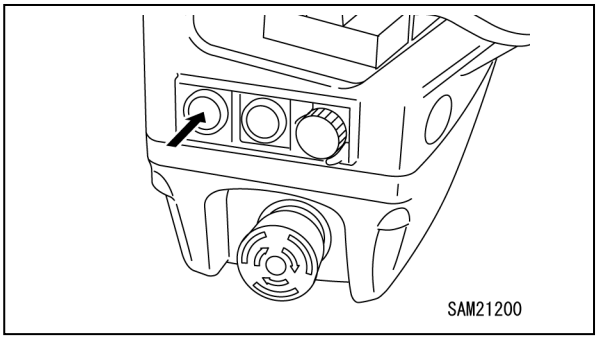

Fig. 4-262

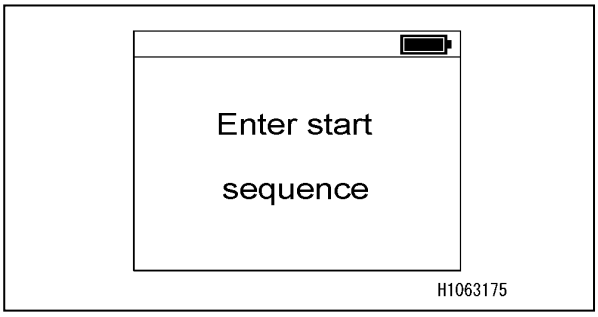

Fig. 4-263

CAUTION: If the radio remote control system does not power on, check the radio remote control system for the following:
- **Is the battery charged fully?**
- **Is the Emergency Stop (EMO)/ Transmitter Power OFF Switch pressed?**

NOTICE: When either of the following occurs in standby mode, power will shut off:
- *Any switch other than the Transmitter Power Switch is pressed*
- *No action is performed for a certain period*

2. Press the Transmitter Power Switch in standby mode. The radio remote control system power will turn on once the display changes.
3. To enable crane operations, press the Transmitter Power Switch once again with power to the radio remote control system turned on.

CAUTION: You must press the Transmitter Power Switch a total of three times to enable crane operations using the radio remote control system.

Starting/Stopping the Machine

Starting the Machine

1. Turn the Starter Switch ON.

NOTICE: Power will not be turned on for the receiver, and the radio remote control cannot be used unless the starter switch is turned on.

Stopping the Machine

Pressing the Emergency Stop (EMO)/ Transmitter Power OFF Switch when the machine is running will allow the machine to stop.

NOTICE: The machine stops, but the power is still turned on. Be sure to turn the starter switch to “OFF” when work is complete.

Operation after Machine Is Started

Operation before Work

Push in the travel lever on the machine main unit while unlocking the lever to enable operation of the outriggers and crane.

NOTICE: If the travel lever is not pushed in, the interlock will engage and prevent outrigger and crane operations.

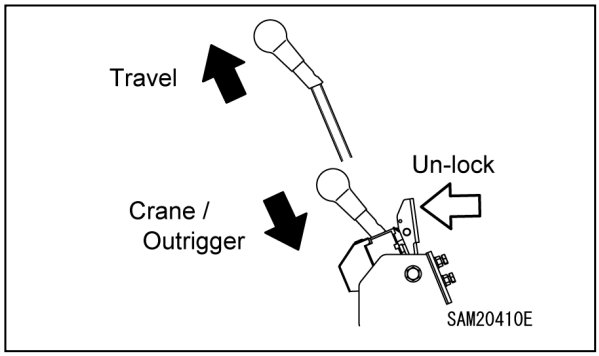

Fig. 4-264

Switching Operation Mode

Use the operation mode selector switch to switch between outrigger and crane operations.

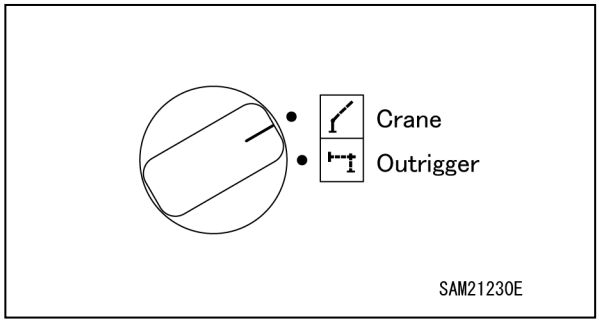

Fig. 4-265

https://truckmanualshub.com/

Each press of the operation switch also changes the screen accordingly. For more information on display content, see “Transmitter Display Components” on page 4-98.

Outrigger Operation

Check if the transmitter operation lever operates smoothly and returns to the Neutral position when your finger is released from it.

Each operation lever on the transmitter is limited by a stop when at FULL position.

CAUTION: Do not force any of the transmitter operation levers against its stop. Forcing a transmitter lever against its stop could result in damage to the transmitter.

Before operating the outriggers, switch the operation mode selector switch to “Outrigger.” Leaving the switch in Crane mode is extremely dangerous, as the crane may operate unexpectedly.

When lifting or lowering the outriggers, operate slowly with the motor running at low speed.

WARNING! Tip Hazard. Do not operate the outriggers if the motor speed is too high. Only operate the outriggers when the motor speed is set to low. The motor must be set to low speed to properly operate the outriggers.

During outrigger operations, position the crane to the STOW position.

WARNING! Tip Hazard. Do not operate the outriggers if the crane is not in the STOW position. Only operate the outrigger when the crane is in the STOW position.

During outrigger operations, ensure the position pin of each outrigger is properly installed.

WARNING! Tip Hazard. Do not operate the machine if the position pins are not properly installed. The position pins must be properly installed for proper operation of the machine.

Lift each outrigger equally and gradually, until the crane is properly elevated. During stowing of outriggers, lower each outrigger equally and gradually, until the crane is grounded.

WARNING! Tip Hazard. Do not operate the machine if the outriggers are not properly positioned. The outriggers must be properly positioned for proper operation of the machine.

1. Switch the operation mode selector switch to “Outrigger.”

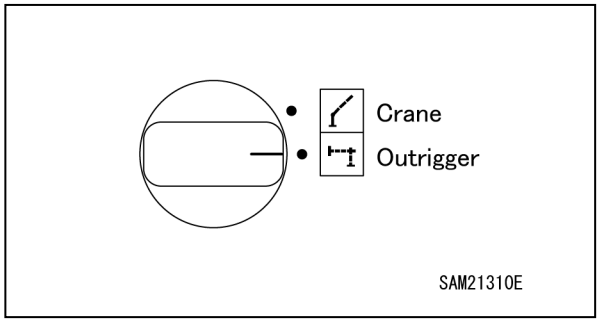

Fig. 4-266

NOTICE: This crane is equipped with four sets of outriggers, and number labels (1) to (4) are affixed on each. These labels correspond to the number displayed in the monitor.

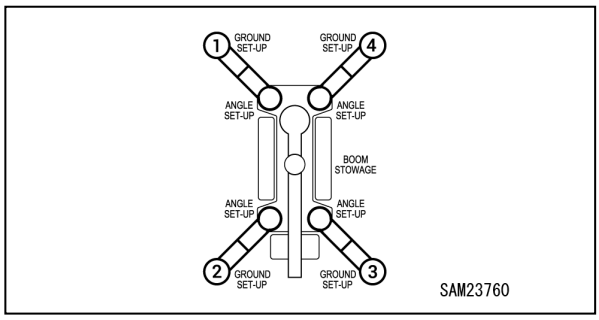

Fig. 4-267

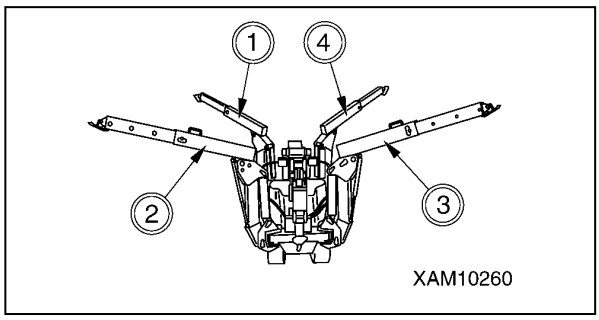

Fig. 4-268

https://truckmanualshub.com/

Outrigger Setting

WARNING! Before setting outriggers, read "OUTRIGGER SETTING" on page 4-43 and also the precautions described there.

Operations performed with machine shut down

1. Set the outriggers as described in "Procedures When Stopping the Machine" on page 4-44.

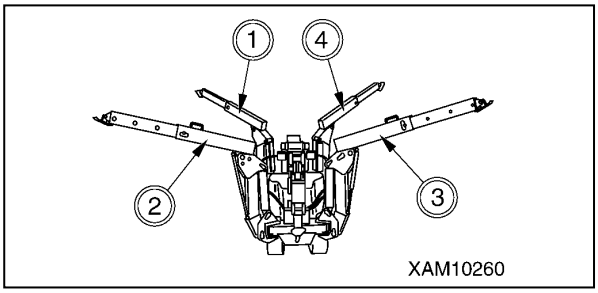

Fig. 4-269

Operations after Starting Machine

WARNING! If the machine tilts at an angle of "3 degrees" or more while the outriggers are set, the overturn warning buzzer sounds. Use the levers to adjust the level of the machine so that the warning buzzer does not sound.

1. Push in the travel lever on the machine main unit while unlocking the lever to enable operation of outriggers.

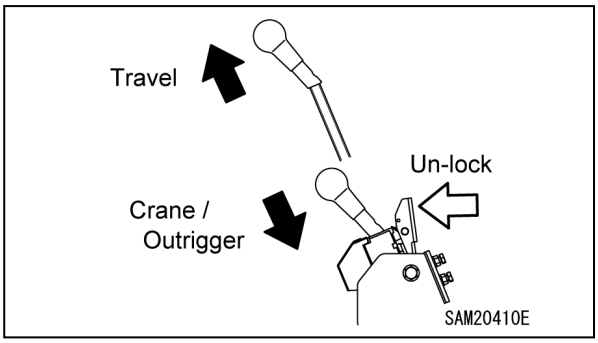

Fig. 4-270

NOTICE: If the travel lever is not pushed in, the interlock will engage and prevent outrigger operations.

2. Switch the operation mode selector switch to "Outrigger."

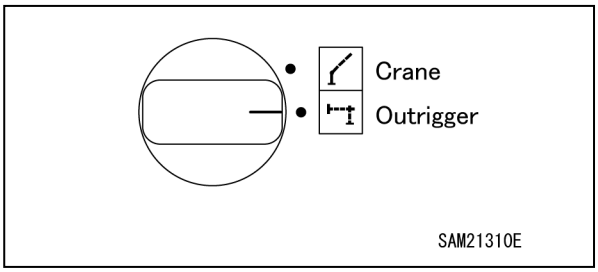

Fig. 4-271

3. Use the levers to extend all four outriggers until they are in contact with the ground. Stop operating each outrigger once it makes contact with the ground.

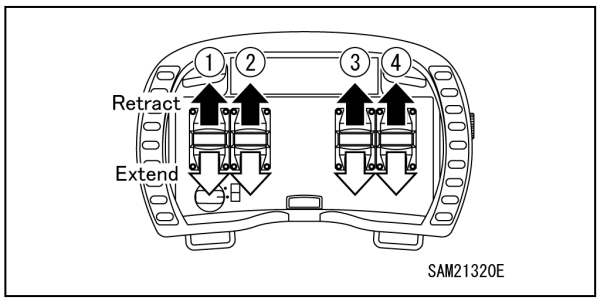

Fig. 4-272

- Ground Set-Up: The outriggers are lowered to the ground.
- Stowage: The outriggers are lifted from the ground.

NOTICE: When using the radio remote control system, there are no levers to operate all four outriggers simultaneously or to operate the front or rear outriggers simultaneously. To operate multiple outriggers, operate the corresponding operation levers simultaneously.

4. Once all outriggers are in contact with the ground, operate the levers once again in the ground contact direction.
   Operating the both front or rear operation levers at a time or operating all four levers together will make it easier to adjust the height. Repeat this ground contact procedure to gradually lift the machine off the ground until the rubber tracks are approximately 80 mm above the ground.

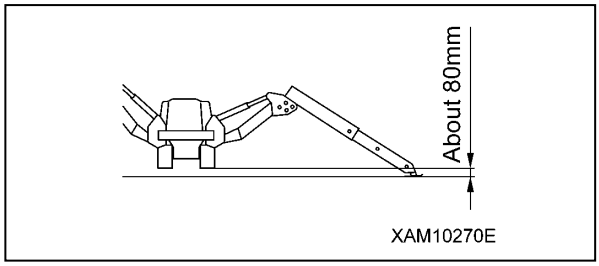

Fig. 4-273

5. Once the machine has been lifted approximately 80 mm above the ground, check the position of the bubble in the monitor level gauge to level the machine body.

https://truckmanualshub.com/

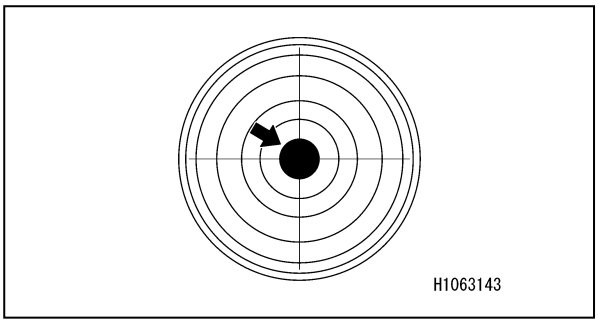

Fig. 4-274

6. Verify that all four outrigger Ground Set-Up Lights on the monitor are illuminated in green.

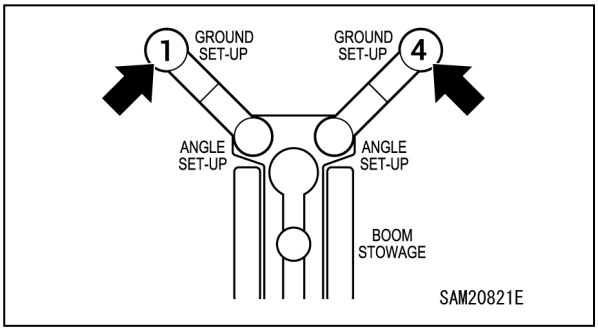

Fig. 4-275

NOTICE: The crane will not operate if even one of the outrigger Ground Set-Up Lights on the monitor is flashing red. Either set up the outriggers once again or inspect the machine main unit.

Outrigger Stowage

WARNING! Before stowing the outriggers, always check the precautions in "Outrigger Stowage Operation."

Always stow the boom before stowing the outriggers. For more information, see "Crane Stowing Operation" on page 4-67.

Operations after Starting Machine

1. Push in the travel lever on the machine main unit while unlocking the lever to enable operation of outriggers.

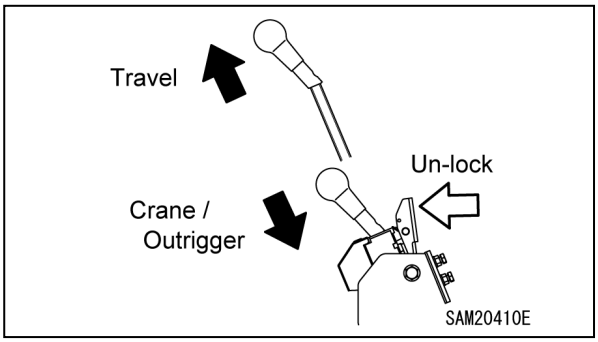

Fig. 4-276

NOTICE: If the travel lever is not pushed in, the interlock engages, preventing outrigger operation.

2. Switch the operation mode selector switch to "Outrigger."

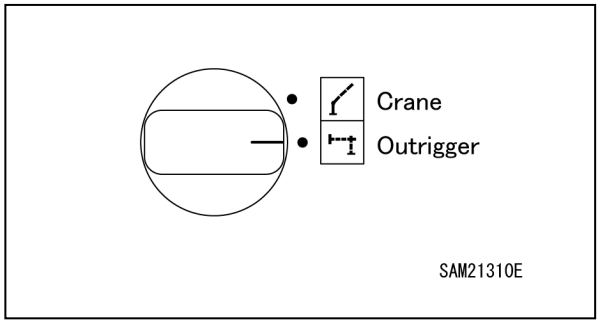

Fig. 4-277

3. Operate the levers slowly to stow the four outriggers.
   Operate both the front or rear operation levers at a time or operate all four levers together.

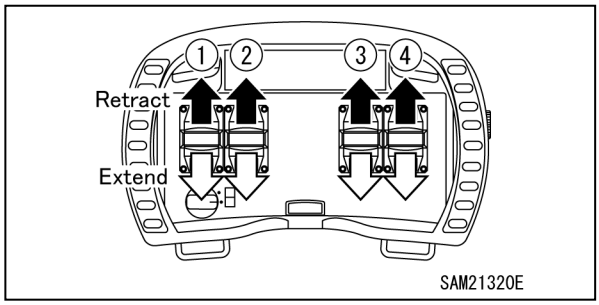

Fig. 4-278

- Ground Set-Up: The outriggers are lowered to the ground.
- Stowage: The outriggers are lifted from the ground.

NOTICE: When using the radio remote control system, there are no levers to operate all four outriggers simultaneously or to operate the front or rear outriggers simultaneously. To operate multiple outriggers, operate the corresponding operation levers simultaneously.

4. Repeat the outrigger stowage operation.
   Once the machine main unit is fully lowered to the ground, lift all four outriggers to the outrigger lifting limits.

Operations Performed with Machine Shut Down

1. Stow the outriggers referring to "Procedures When Stopping the Machine" on page 4-54.

https://truckmanualshub.com/

Crane Operation

WARNING! The following safety messages address a potential Tip Hazard while operating the crane:

- Verify that all outriggers are positioned correctly before operating the crane. All outriggers must be properly positioned before starting any crane operation.
- Do not overload the hoist when performing a crane operation. Always keep the load limit within the specified limit as stated in “RATED TOTAL LOAD CHARTS” on page 3-14.
- Do not perform multiple operations at the same time. Only perform one operation at a time while hoisting or lowering a load. Performing multiple operations while hoisting or lowering a load may cause an abrupt change of the load conditions.

WARNING! Sudden Movement Hazard. Always activate the operation lever with caution. It must be properly controlled to keep the appropriate crane operation speed and avoid any abrupt motion. Abrupt acceleration or deceleration, especially while loaded, may cause impact to the crane.

WARNING! Especially avoid sudden lever operations when the load is hoisted, which may cause the load to waggle and a give large impact to the crane, and thus may damage the crane or trip the machine.

CAUTION: Do not force any of the transmitter operation levers against its stop. Forcing a transmitter lever against its stop could result in damage to the transmitter.

Check for smooth and free movement of each operation lever on the transmitter. Levers must return to the NEUTRAL position when released.

WARNING! Sudden Movement Hazard. Do not operate the machine using the transmitter if the levers do not return to the NEUTRAL position freely. Levers must return to the NEUTRAL position freely for proper operation of the transmitter.

CAUTION: Before operating the crane, switch the operation mode selector switch to “Crane.” Leaving the switch in Outrigger mode is extremely dangerous, as the outriggers may operate unexpectedly.

1. Position the outriggers. See “Outrigger Operation” on page 4-109.
2. Switch the operation mode selector switch to “Crane.”

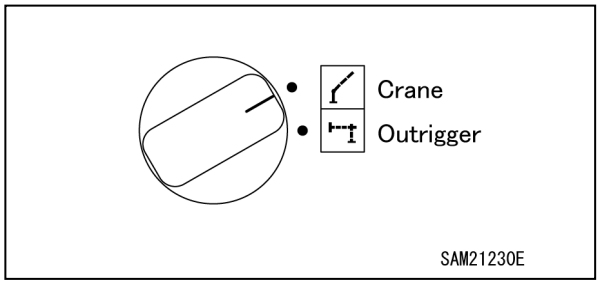

Fig. 4-279

Hook Raising/Lowering Operation

WARNING! Overload Hazard. Do not continue to raise the hook if the over winding detector alarm is activated. Continued operation could cause the wire-rope cable to break.

WARNING! Sudden Movement Hazard. Always raise or lower the hook steadily and slowly when using the winch or telescoping the boom. Do not allow the hook to raise or lower too quickly for the conditions.

With the boom deflection, the hoisted load slightly shifts forward. Notify workers in the area such as slinging operators.

If the hook block is hoisted excessively, two block is detected, and an alarm buzzer sounds. In such a case, immediately shift the right operation lever into the “Neutral” position to stop winding the wire rope.

If the hook block is unwound excessively, such as during underground work, over-lowering is detected, and an alarm buzzer sounds. In such a case, immediately shift the right operation lever into the “Neutral” position to stop unwinding the wire rope.

CAUTION: Do not let the hook block touch the ground. The wire rope may become tangled on the winch drum, damaging the wire rope.

Move the operation lever (11) as follows:

- Lowering: Push the lever forward.
- Neutral: Release your hand from the lever. The lever will return to the “Neutral” position and the hoisting/lowering of the hook block stops.
- Hoisting: Pull the lever toward you.

NOTICE: Adjust the raising and lowering speed of the winch by moving the lever forward or backward.

https://truckmanualshub.com/

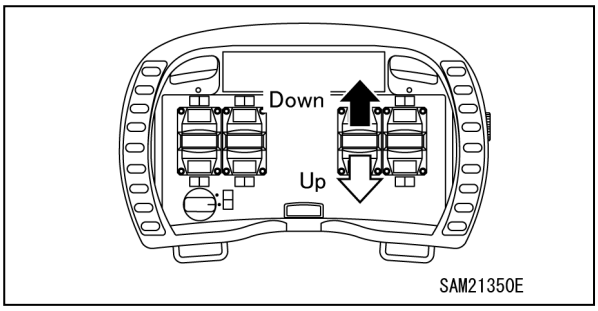

Fig. 4-280

Boom Lifting/Lowering Operation

WARNING! Operate the lever as slowly as possible.
WARNING! When the boom is lowered, the working radius increases, and the rated total load that can be hoisted decreases. When operating the machine by lifting the boom, exercise caution so that the mass (weight) of the hoisted load is not overloaded when the boom reaches the lowest position.

Move the operation lever (12) as follows:

- Lowering: Push the lever forward.
- Neutral: Release your hand from the lever. The lever returns to the “Neutral” position and the boom lifting stops.
- Raising: Pull the lever toward you.

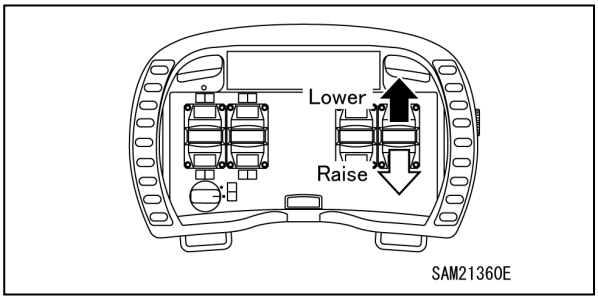

Fig. 4-281

NOTICE: Adjust the raising and lowering speed of the boom by moving the lever forward or backward.

Boom Telescoping Operation

WARNING! Operate the lever as slowly as possible.

WARNING! Do not pull the load horizontally or pull in the load by telescoping the boom.

WARNING! When the boom is extended, the working radius increases, and the rated total load that can be hoisted decreases. When working while extending/retracting the boom, pay extra attention so that the mass (weight) of the load at the time the boom is most lowered does not cause overloading.

WARNING! When the boom is extended, the hook block is hoisted.

If the over winding detector generates an alarm buzzer while the boom is extended, immediately shift the left operation lever into the “Neutral” position to stop the boom operation.

CAUTION:

- **The hook block is hoisted or lowered while the boom is extended/retracted. Perform the winch operation at the same time to adjust the hook block height.**
- **When the boom is extended for a long time, the boom slightly retracts due to the temperature change in the hydraulic oil. In this case, extend the boom as needed.**

Move the operation lever (10) as follows:

- Extending: Push the lever forward.
- Neutral: Release your hand from the lever.
- The lever returns to the “Neutral” position and the boom telescoping stops.
- Retracting: Pull the lever toward you.

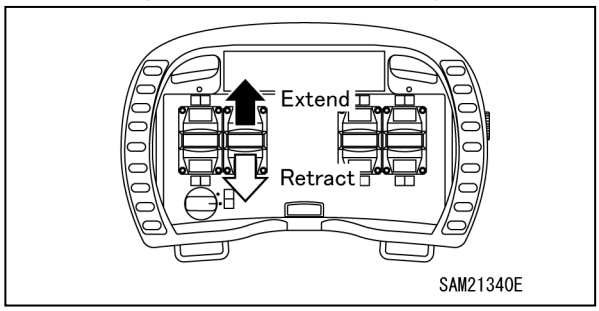

Fig. 4-282

NOTICE: Adjust the boom extension and retraction speed by moving the lever forward or backward.

https://truckmanualshub.com/

Slewing Operation

WARNING! Sudden Movement Hazard. Always move the accelerator lever slowly and operate the motor at low speed when slewing a load. Do not allow abrupt slewing of the load.

WARNING! Check for safety in the vicinity and honk the horn before slewing.

WARNING! Operate the lever as slowly as possible. Make sure to start smoothly, slew at low speed, and stop quietly. Especially avoid sudden lever operations when the load is hoisted, which may cause the load to waggle and cause the machine to lose balance, and thus may damage the crane or tip the machine.

WARNING! Even if the outriggers are set correctly, the hoisted load is slightly unstable in a specific direction. Exercise caution when slewing the boom with a suspended load.

WARNING! In some cases, depending on the configuration of the outriggers, the hoisted load may hit the outriggers, resulting in damage to the crane or overturning of the machine. Exercise caution to prevent the hoisted load from hitting outriggers.

Move the operation lever (9) as follows:

- Clockwise (right): Push the lever forward.
- Neutral: Release your hand from the lever.
- The lever returns to the “Neutral” position and the slewing stops.
- Counterclockwise (left): Pull the lever toward you.

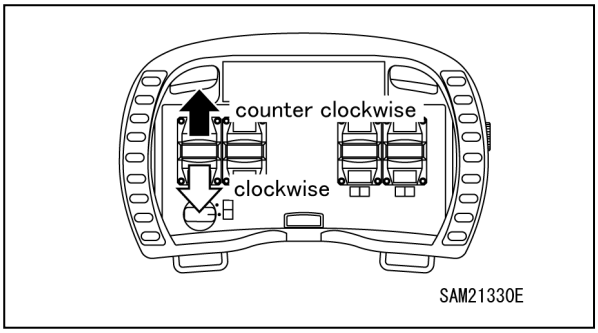

Fig. 4-283

NOTICE: Adjust the crane slew speed by moving the lever forward or backward.

Micro Speed Mode Switch Operation

Press the Micro Speed Switch to set or cancel Micro speed mode.

Setting Micro speed mode limits the maximum movement speed even when the levers are moved by a large amount, allowing stable operation at low speeds.

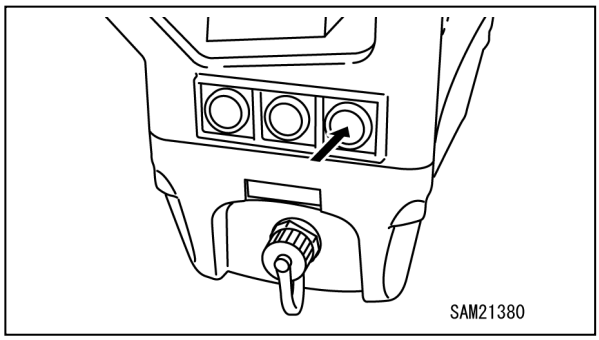

Fig. 4-284

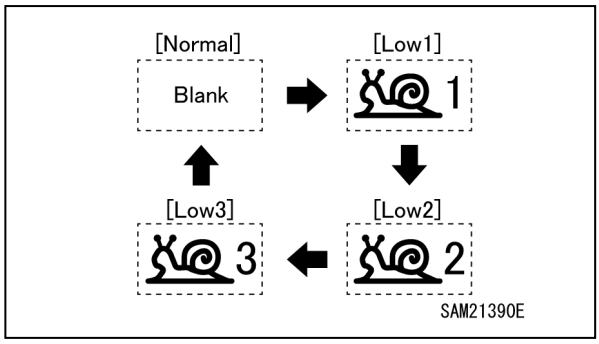

Fig. 4-285

Emergency Stop Switch (EMO) Operation

NOTICE:

- *If any emergency or abnormality in crane operation is experienced, immediately press the Emergency Stop (EMO)/Transmitter Power OFF Switch to stop the machine. The abnormality mentioned above includes: continuation of crane operations even after the release of operation levers, or unexpected crane movements before the operation levers are used.*
- *In the event of an emergency stop of the machine, investigate the cause for the abnormality and repair the fault location.*
- *The Emergency Stop Switch (EMO) can also be used for turning OFF the power to the transmitter.*

https://truckmanualshub.com/

Press the Emergency Stop (EMO)/ Transmitter Power OFF Switch when turning off the power to the transmitter, or in case of an abnormality in crane operations.

The power of the transmitter turns OFF and the machine stops.

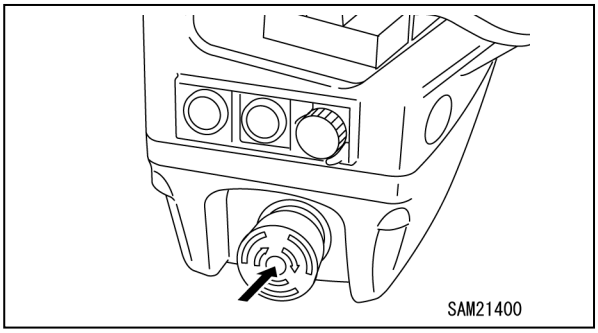

Fig. 4-286

To cancel the emergency stop, turn the Emergency Stop (EMO)/Transmitter Power OFF Switch to the right.

The switch returns to the original position.

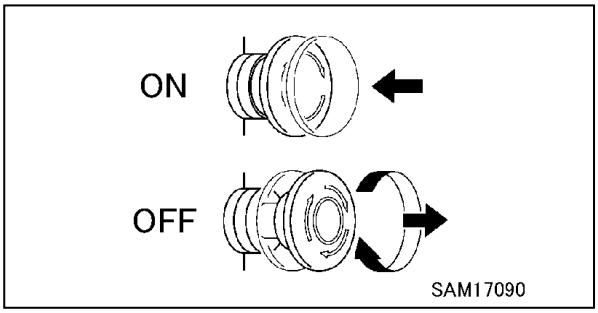

Fig. 4-287

Horn Switch Operation

The horn keeps blowing while this switch is pressed and held.

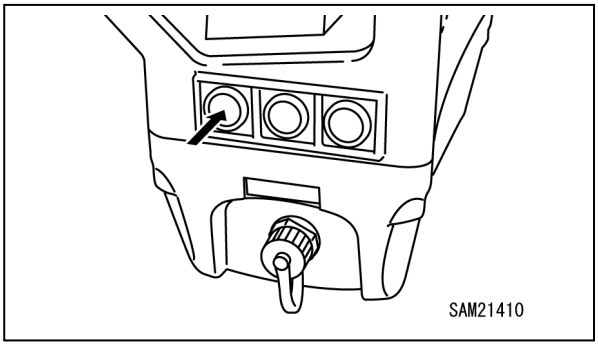

Fig. 4-288

Boom Lift Bypass Switch Operations

If you cannot avoid lifting the boom while stopped automatically, you can lift the boom by pressing the Boom Lift Bypass Switch.

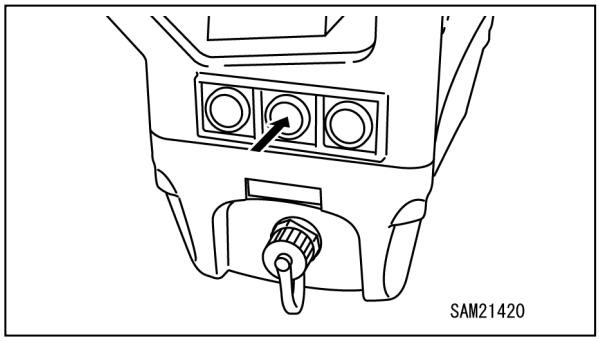

Fig. 4-289

WARNING! Operate this switch only if the boom has stopped automatically after entering the overload area while being operated. Never use this switch in normal situations to lift loads off the ground.

Serious accidents such as machine damage or toppling may occur if you use this switch to lift loads off the ground.

https://truckmanualshub.com/

LED Light Operations

Select the LED light on the menu screen to turn the LED light on.

For more information on turning on the lights, see “Transmitter Display Components” on page 4-98.

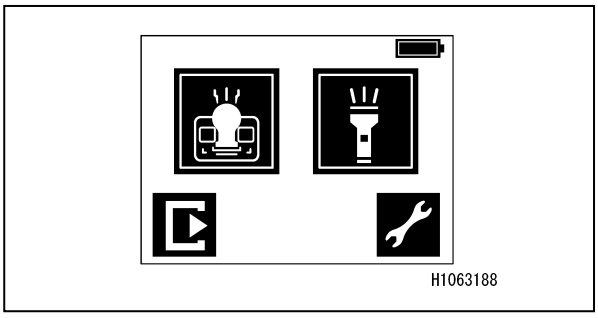

Fig. 4-290

1. LED light (front) ON/OFF

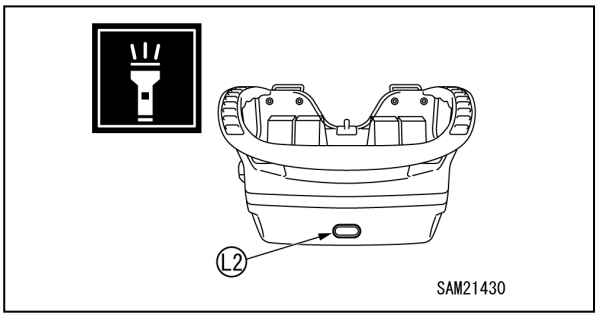

Fig. 4-291

2. LED light (operation panel) ON/OFF

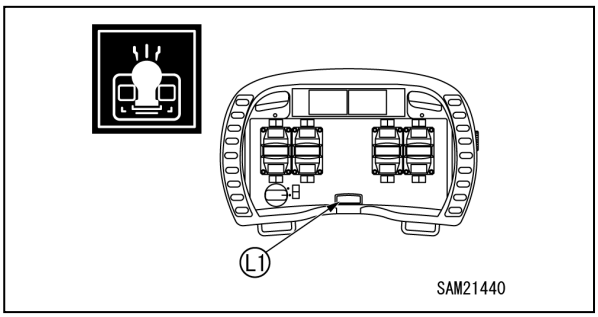

Fig. 4-292

AFTER CRANE OPERATION

Crane Stowing Operation

CAUTION:

- **We recommend using the levers on the machine main unit to stow the crane. Part of the crane stowage process can be handled using the radio remote control system, but the radio remote control system cannot be used for boom stowage or hook stowage.**
- **For more information on crane stowage operations, see “Crane Stowing Operation” on page 4-67.**

Stopping Operation by Radio Remote Control System

WARNING! When the operation is finished, be sure to press the Emergency Stop (EMO)/Transmitter Power OFF Switch on the transmitter to turn OFF the power.

WARNING! On no occasion except for crane operations, must the power of the transmitter be turned ON. This could cause unexpected movement of the crane resulting in a serious hazard, such that the crane hitting someone or an object, or the crane could tip.

WARNING! When it is required to turn ON the transmitter for the purpose of inspection or such, ensure that the machine is not running.

1. Press the Emergency Stop (EMO)/ Transmitter Power OFF Switch to turn off power.

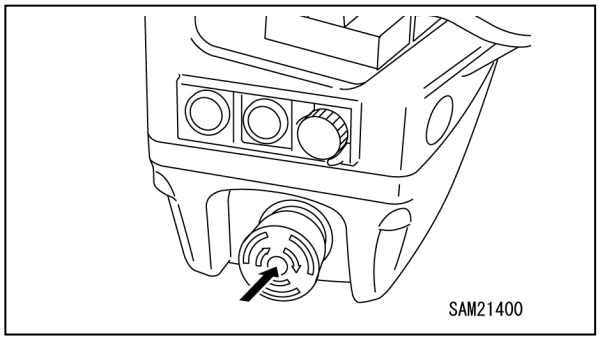

Fig. 4-293

2. Turn the Starter Switch on the machine main unit to “OFF” to turn off power.

https://truckmanualshub.com/

Inspection after Ending Remote Control System Operation

1. Inspect the transmitter and receiver after ending remote control system operations.
   a. Check operation levers and switches of the transmitter for any faults.
   b. Wipe off oil or dirt with a clean cloth.
   c. Repair all cracks or damages without fail.
2. To store the transmitter, avoid places subject to wind, rain, direct sunlight, high temperatures and high humidity.

HANDLING TRANSMITTER BATTERY

NOTICE: The battery used for the transmitter is an exclusive battery.

Replacement Timing of Battery

If the battery runs low, recharge the battery or replace the battery with a charged battery.

If the battery is not replaced, the transmitter will stop in a few minutes.

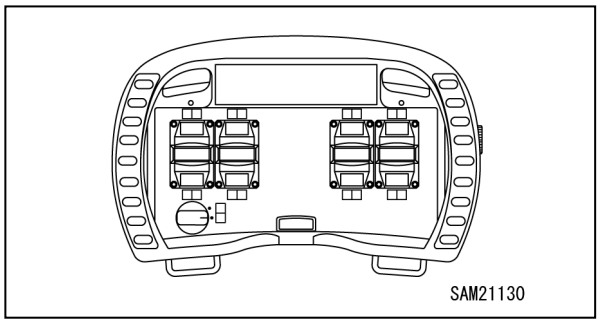

Fig. 4-294

Replacement Method of Battery

Replace the battery of the transmitter in the procedure described below.

1. Turn OFF the power of the transmitter. Pressing the Emergency Stop (EMO)/ Transmitter Power OFF Switch will turn OFF the power.

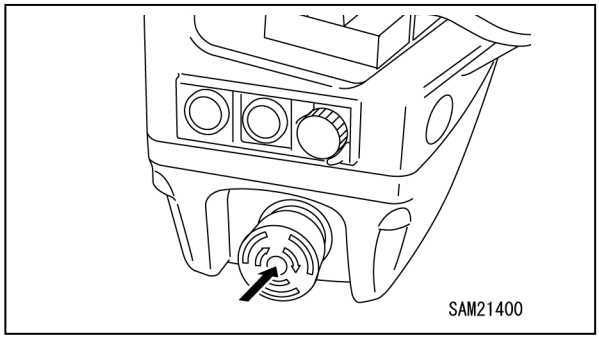

Fig. 4-295

2. Lift the battery upward while pushing it. The battery comes off.

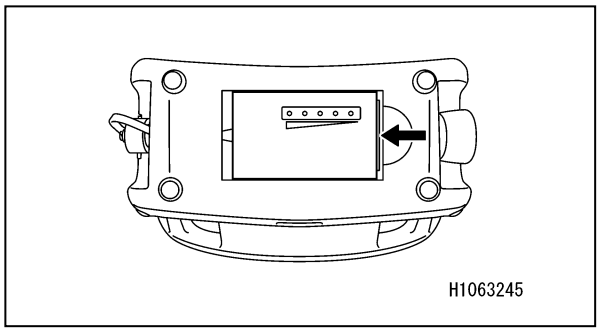

Fig. 4-296

https://truckmanualshub.com/

3. Insert a charged battery into the transmitter while pushing it.

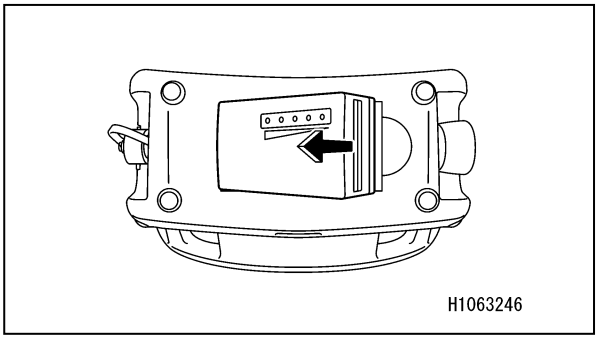

Fig. 4-297

4. Press the Transmitter Power Switch and verify that power goes on.

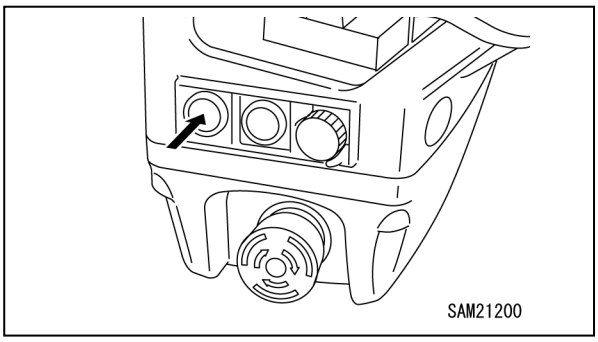

Fig. 4-298

NOTICE: Note that the power will not go on if you pressed the Emergency Stop (EMO)/ Transmitter Power OFF Switch.

Charging Method of Battery

To charge the battery, use only the genuine battery charger.

WARNING!

- **Use the battery charger only for charging of the battery described on the model label.**
- **Do not charge the battery in an explosion hazardous area under any circumstances.**
- **Use the battery charger with correct voltage: 100 to 240 VAC, 10 to 30 VDC.**
- **Do not use the battery charger outside the described temperature range.**
- **Protect the battery charger from overheat, dust, humidity, etc.**
- **Do not cover the battery charger with an object during charging.**
- **Pull the battery charger out of the power supply when not in use.**
- **If any damage is found on the battery charger body or its cord, stop using it at once.**
- **Do not modify or change the battery charger or cord.**

CAUTION:

- **The battery capacity depends on the number of years used and ambient temperature. The capacity decreases when the battery becomes old.**
- **The battery capacity decreases significantly in extreme temperatures, below 0°C or over 40°C.**
- **Before first use, or when at least six months have elapsed since the last use, be sure to charge the battery.**
- **Charge the battery at ambient temperatures between 0 to 40°C.**
- **If the battery status symbol on the transmitter indicates low battery levels or the battery symbol flashes in red, recharge the battery or replace the battery with a charged battery.**
- **It is ideal to store the battery in a 30 to 50% charged condition if it is going to be stored for a long period of time.**
- **Keep the battery at room temperature.**
- **Use the supplied protective cap to store the battery. Never short out the battery.**

https://truckmanualshub.com/

- **When the battery is correctly used, it can be charged at least 500 times.**
- **The battery can actually be charged more than 500 times, the maximum capacity, though, will be degraded.**
- **When charging a fully discharged battery, it takes about 5 hours to fully charge the battery.**

Charge the battery of the transmitter in the procedure described below.

1. While pushing the battery (B2), put it into place in the charger case (B5).

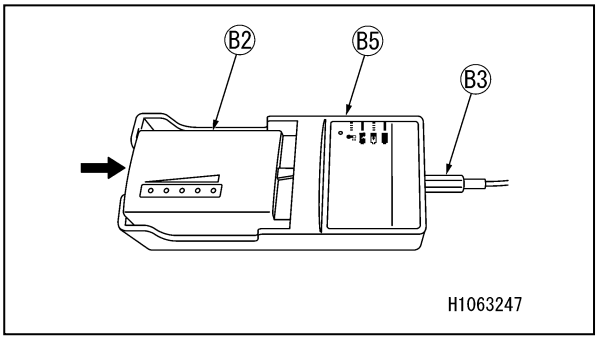

Fig. 4-299

2. Connect the battery charger (B1) to the cord (B3), and insert the cord plug into the power outlet.
3. The battery status LED indicator (B4) on the charger starts blinking to indicate the charging has started.

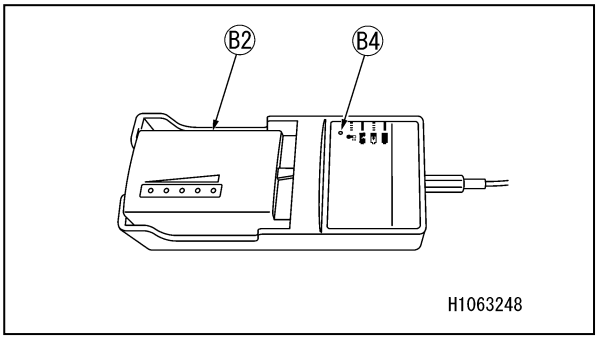

Fig. 4-300

4. When the battery becomes fully charged, the LED indicator (B4) is lit in green.
5. After charging is completed, disconnect the cord plug from the power supply.

NOTICE: The battery status indicator while charging is as follows:

- *Lights in green: Charged*
- *Blinks in green: Charging*
- *Lights in red: Battery failure*
- *Blinks in red: Cannot be charged due to a battery temperature: below 0°C or above 45°C.*

https://truckmanualshub.com/

SEARCHER HOOK SAFETY PRECAUTIONS

Moment Limiter Settings

DANGER!

- **When using the searcher hook, be sure to correctly set the “searcher hook position for the actual machine” and the “selector switch on the monitor”. If work is performed without making the correct settings, the numerical value of the moment limiter will not be displayed correctly, and there is a risk of serious injury through the machine becoming damaged or overturning.**
- **There may be no display for the searcher hook selector switch due to retrofit etc. of the searcher hook. In this case, as work will be necessary to set up the moment limiter to display the searcher hook selector switch on the monitor, please contact us or our sales service agency. If used with no display for the position selection, there is a risk of serious injury through the machine becoming damaged or overturning.**

Searcher hook position settings

	Actual machine position	Selector switch	Position display
Stowing	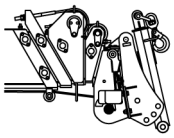 SAM21510	4 falls SAM21550E	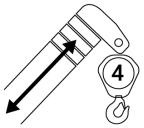 SAM21590
SH1	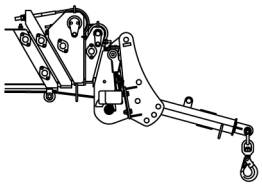 SAM21520	SH1 SAM21560	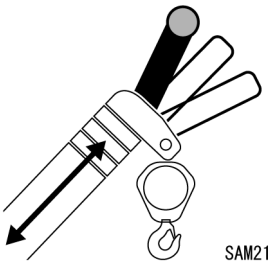 SAM21600
SH2	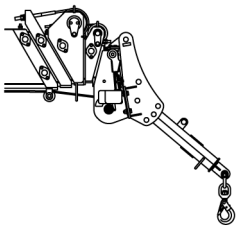 SAM21530	SH2 SAM21570	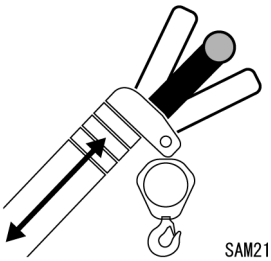 SAM21610
SH3	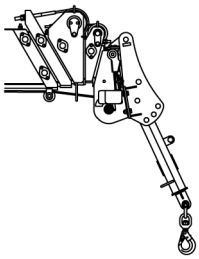 SAM21540	SH3 SAM21580	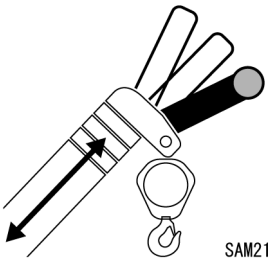 SAM21620

https://truckmanualshub.com/

SEARCHER HOOK COMPONENTS (OPTION)

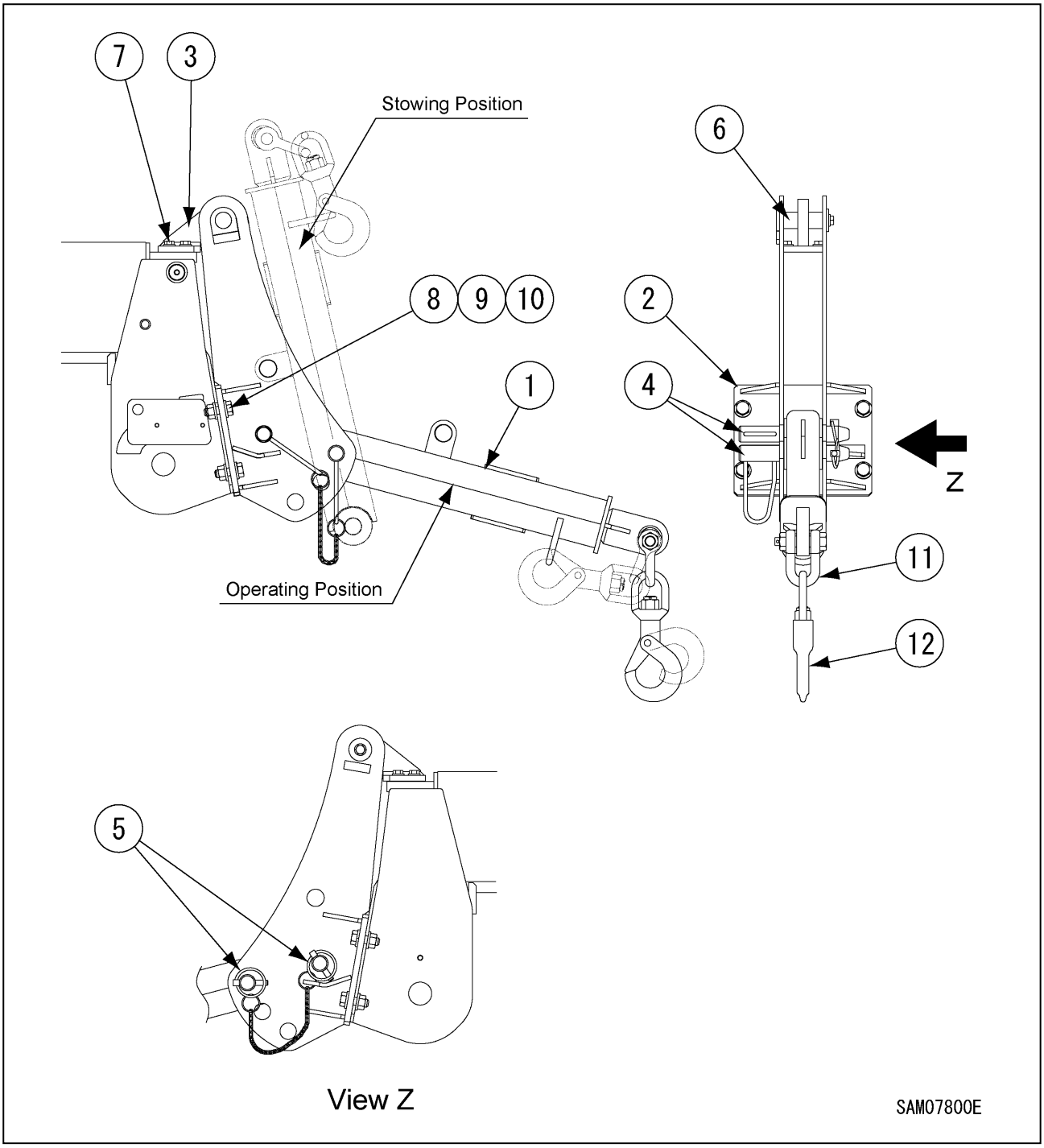

Fig.4-301

1 - E-Boom
2 - Bracket1
3 - Bracket 2
4 - Position pin
5 - Lynch pin
6 - pin
7 - Hexagonal bolt with washer
8 - Hexagonal bolt with washer (M12×35L strength 10.9)
9 - Nut (M12× grade 1, strength 10)
10 - High tension washer (M12×26×3.2t)
11 - Shackle
12 - Hook

https://truckmanualshub.com/

SEARCHER HOOK MONITOR

Home Screen

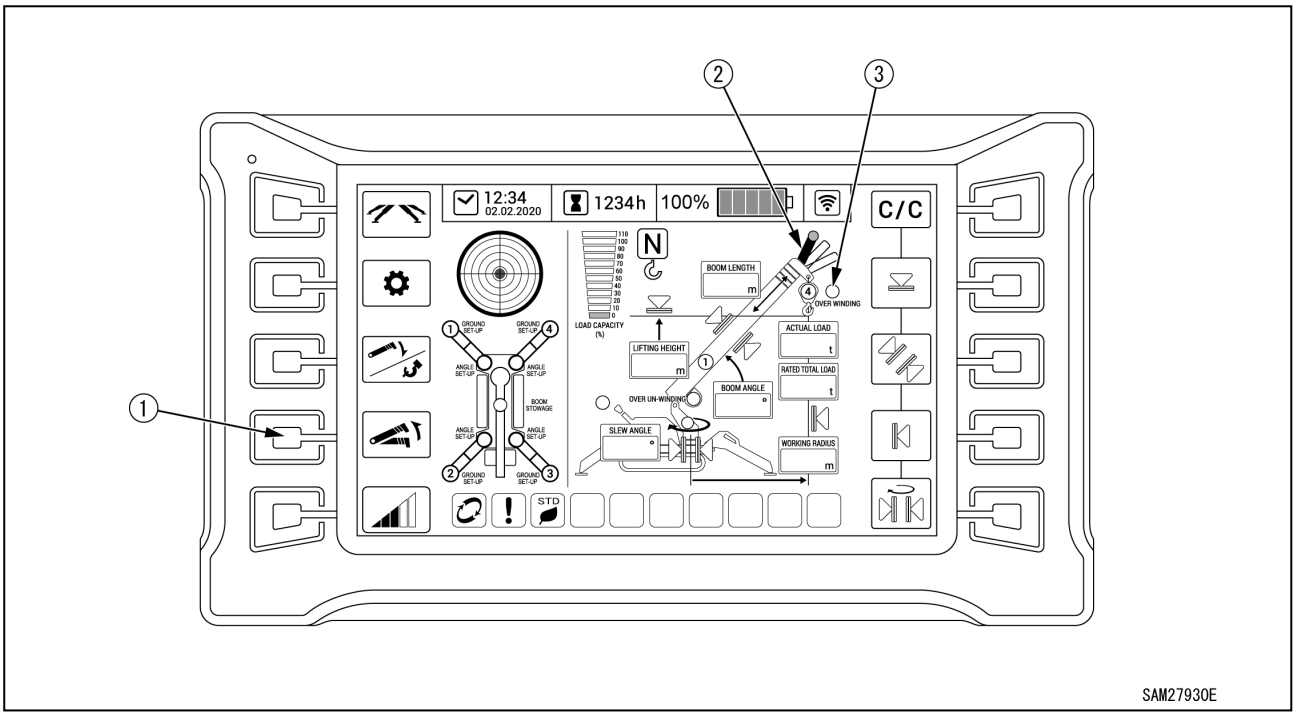

Fig.4-302

1 - Boom Lift Bypass Switch
2 - Searcher Hook Position Display
3 - Over Winding Display

NOTICE: This section describes only those indications and operations that differ from normal use when using a searcher hook. For more information on indications and switch operations not described in this section, see "Home Screen" on page 4-12.

Boom Lift Bypass Switch

If it becomes necessary to raise the boom while automatically stopped, the boom can be raised only while the Boom Lift Bypass Switch is depressed.

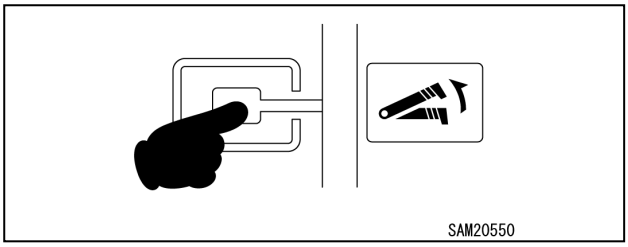

Fig.4-303

Searcher Hook Position Display

The display will change depending on the searcher hook position setting.
For more information on the position and display details, see "Moment Limiter Settings" on page 4-120.

Over Winding Display

The red light illuminates if the hook is overwound during operation.

The green light illuminates only if the over winding detector is disabled while using the searcher hook.

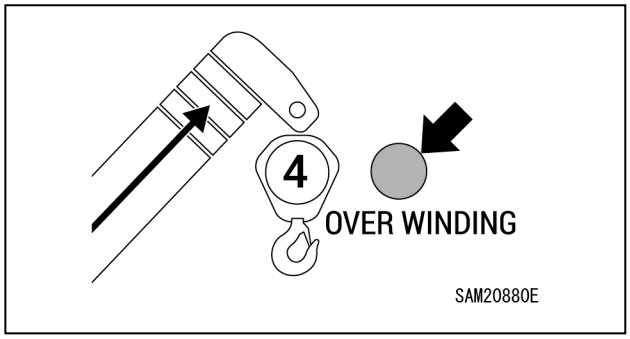

Fig.4-304

https://truckmanualshub.com/

User Mode

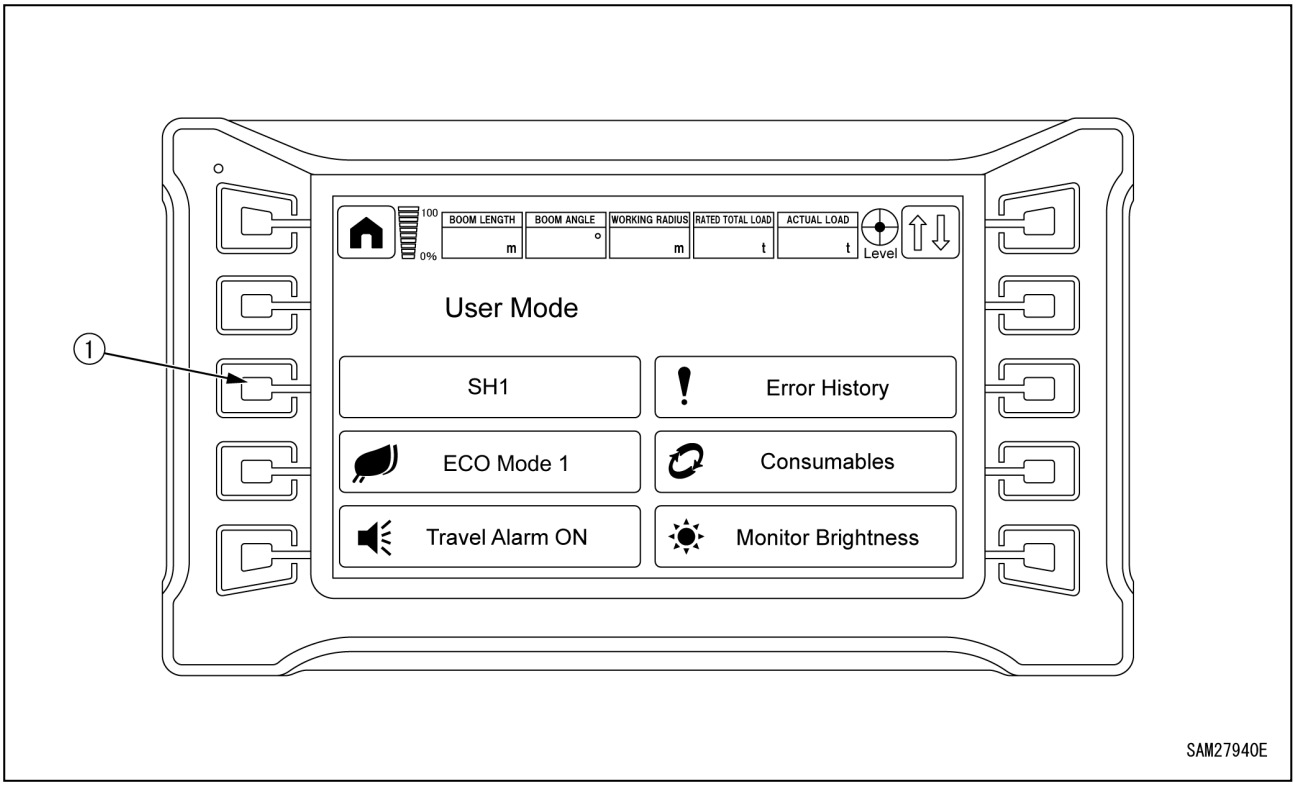

Fig.4-305

1 - Hook Hanging Number Selection/Searcher Hook Position Selection

NOTICE: This section describes only those indications and operations that differ from normal use when using a searcher hook. For more information on indications and switch operations not described in this section, see “User Mode” on page 4-17.

Hook Hanging Number Selection/Searcher Hook Position Selection

Used when switching the searcher hook position setting For more information on the actual position and position switching, see “Moment Limiter Settings” on page 4-120.

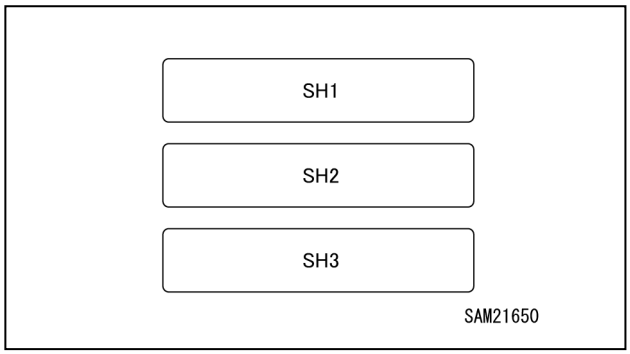

Fig.4-306

https://truckmanualshub.com/

SEARCHER HOOK OPERATION

WARNING! The over winding detector must be turned off if the searcher hook is used with the hook block detached. To change the setting, contact us or our sales service agency.

However, if the over winding detector is turned off when using the searcher hook with the hook block attached, the over winding detector will not operate. In such case, the hook block is in danger of falling off.

1. See “OUTRIGGER SETTING” on page 4-43 and set the outrigger.

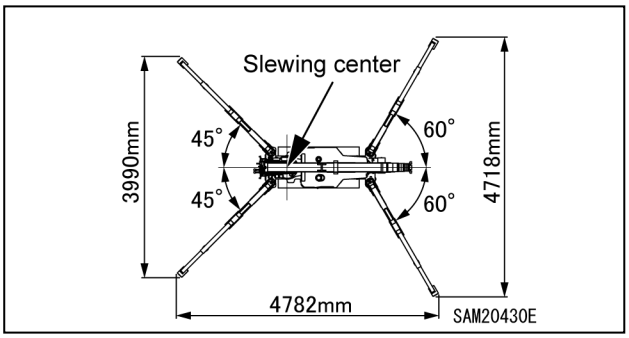

Fig.4-307

2. Install bracket (1) using M12 bolts with washers (strength 10.9), nuts, and washers to main boom, and install bracket (2) using M8 bolts with washers (strength 10.9) to main boom.
   Using torque wrench, tighten M12 bolts at 93 N･m (±14 N･m) and M8 bolts at 27 N･m (±8 N･m).

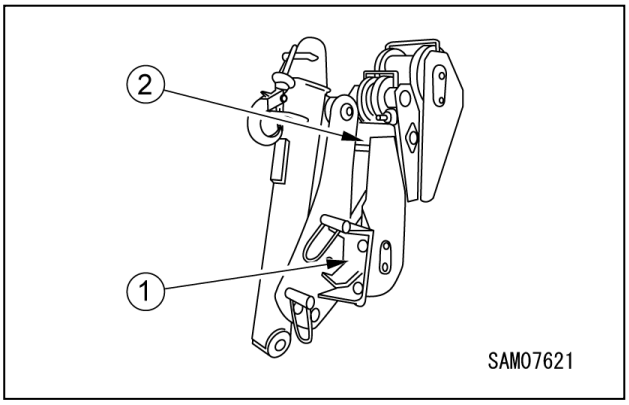

Fig.4-308

DANGER! Crash Hazard. Make sure to torque searcher hook mounting plate bolts to the designated tightening torque.

To install searcher hook, always use new genuine Maeda bolts, nuts, and washers.

3. Remove the lynch pin (4) from the end of position pin (3), and remove the position pin.

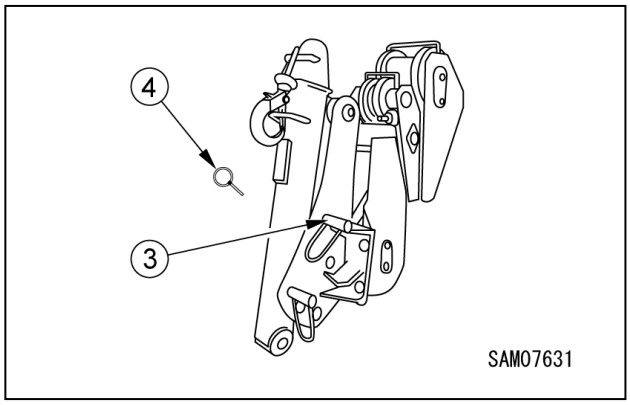

Fig.4-309

4. Line up the hole (6) in E-boom (5) tip and hole (7) in bracket.

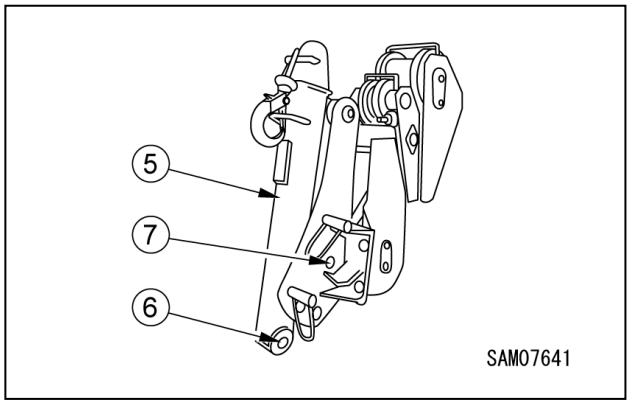

Fig.4-310

5. Insert the removed position pin (3) (in procedure 3.) through the hole of bracket, and secure with lynch pin (4) to the tip of position pin (3).

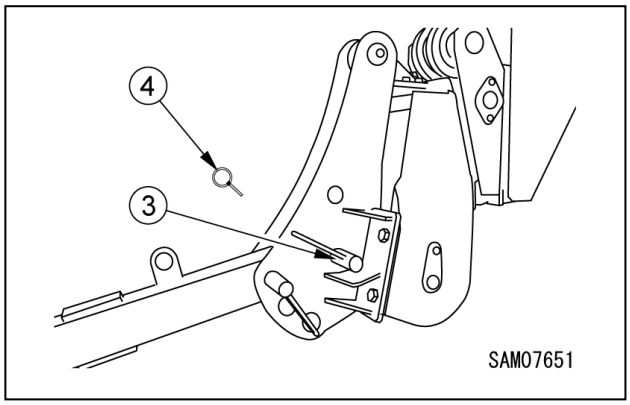

Fig.4-311

DANGER! Always secure the position pin with the lynch pin. If the position pin falls out during operations, serious injury or damage to the machine may result.

https://truckmanualshub.com/

6. Remove lynch pin (9) from the tip of position pin (8), and remove the position pin.

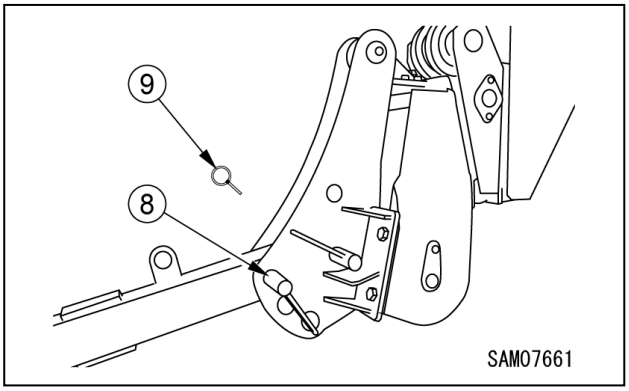

Fig.4-312

7. Move the E-boom (5) to an angle appropriate for the work and align the holes of the E-boom and the bracket (1).

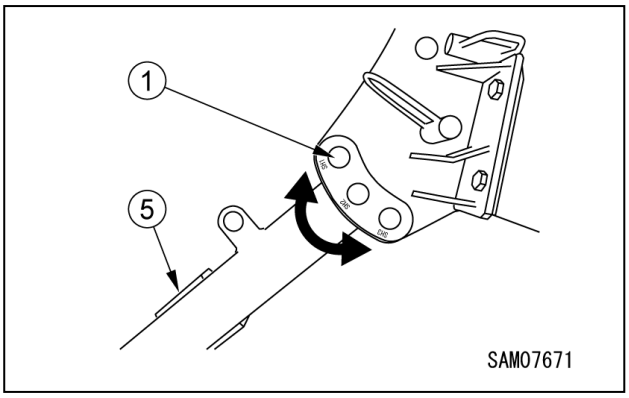

Fig.4-313

DANGER! Depending on the boom angle, the E-boom and hook may interfere with each other, potentially leading to serious accidents. Be sure to adjust to an angle appropriate for the work.
Do not exceed a boom angle of 50° when the E boom position is SH1 or a boom angle of 75° when the E boom position is SH2.

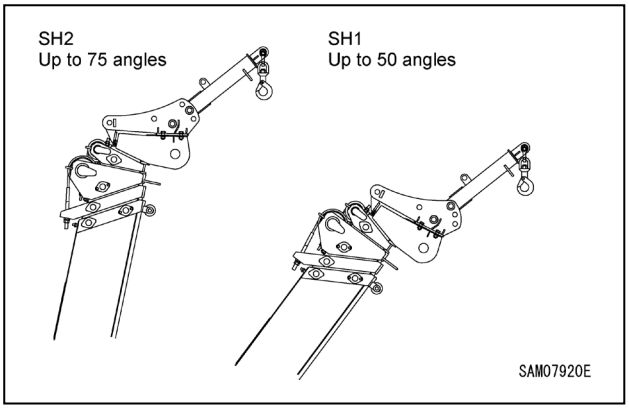

Fig.4-314

8. Insert the position pin (8) through the hole of bracket, and secure with lynch pin (9) to the tip of position pin.

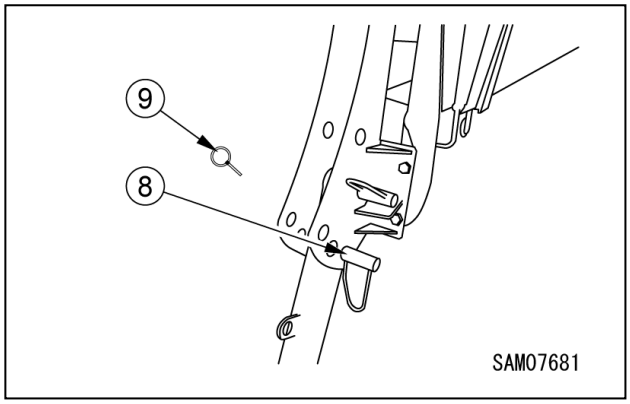

Fig.4-315

DANGER! Always secure the position pin with the lynch pin. If the position pin falls out during operations, serious injury or damage to the machine may result.

9. Adjust the position setting on the monitor to match the actual searcher hook position.

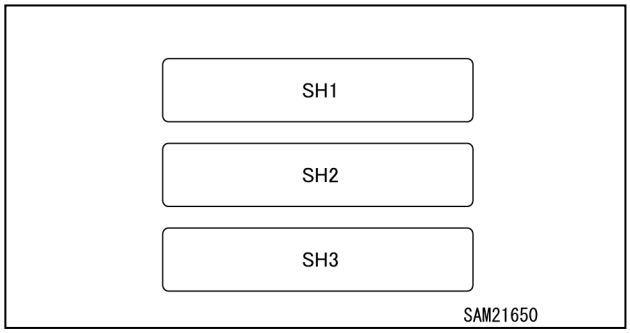

Fig.4-316

DANGER! Do not use the searcher hook if the actual position does not match the position setting on the monitor. Serious accidents such as machine damage may result because the moment limiter will not operate correctly.

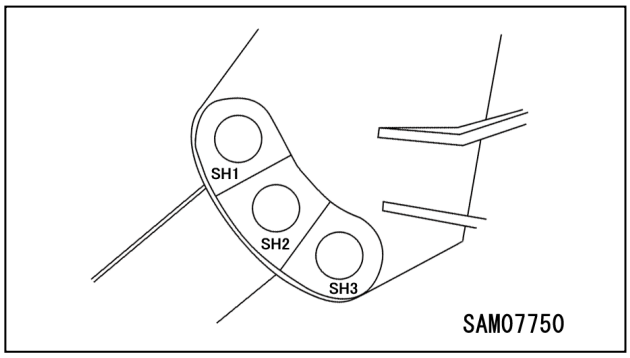

Fig.4-317

https://truckmanualshub.com/

10. Attach the load securely to the hook (10) and start operations.

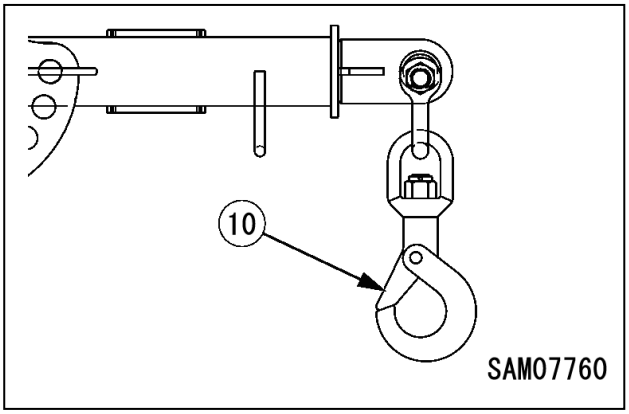

Fig.4-318

DANGER! When hoisting a load with a searcher hook, raise boom to hoist the load off the ground, and stop for a while to check if the load is safe to hoist.

NOTICE: Characteristic of moment limiter display

- *At certain working conditions, moment limiter may display bigger load value than actual load.*
- *Sudden lever operation increases error in reading load. When operating boom lift lever, move the lever slowly.*

11. If the boom stops automatically on entering the overload area while being lowered or extended, retract the boom and move to a safe area before lowering the boom to lower the load. If it becomes necessary to raise the boom while automatically stopped, the boom can be raised only while the Boom Lift Bypass Switch is depressed.

DANGER! Use the Boom Lift Bypass Switch only when the boom has stopped automatically after entering the overload area while being lowered. When the boom has stopped automatically after entering the overload area while being extended, retract the boom. Never use this switch in normal situations to lift loads off the ground. Serious accidents such as machine damage or toppling may occur if you use this switch to lift loads off the ground.

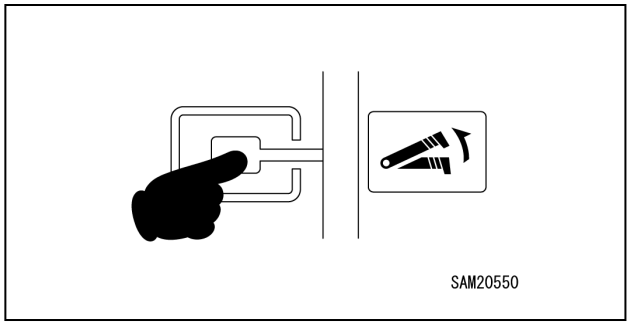

Fig.4-319

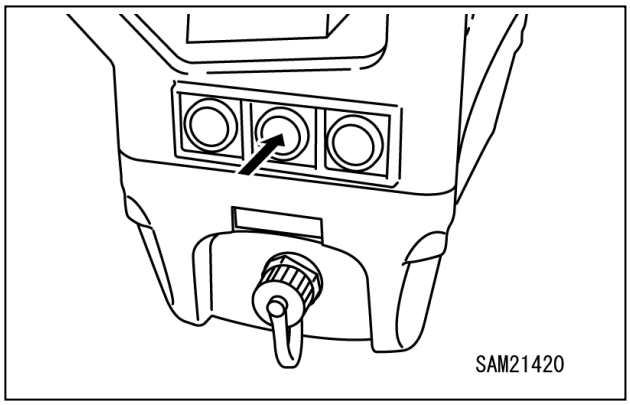

Fig.4-320

https://truckmanualshub.com/

TRAILERING

WARNING! The following safety messages address a potential Tip Hazard while trailering the machine:

- **Never trailer the machine with the boom extended or with a hoisted load. Always trailer the machine without a hoisted load and with the boom in the retracted position.**
- **Never make sudden directional changes while trailering the machine. Reduce speed slowly and allow the machine to stop before changing direction.**

WARNING! The following safety messages address a potential Entanglement Hazard while trailering the machine:

- **Verify there are no people within the travelling path of the machine. Sound the horn as a warning before moving the machine. Be sure people do not enter the travelling path while the machine is being trailered.**

Contact us or our sales service agency for additional information on transporting the machine.

NOTICE: Always follow all local laws and regulations when trailering the machine on public roads.

NOTICE: Always position the machine in travelling position when loading/unloading the machine. See "TRAVELLING POSITION" on page 4-28. During travelling position setup, securely insert the four position pins to the outrigger pivot base before loading or unloading the machine.

- *Take road width, height and weight into consideration when determining a transportation route.*
- *Take the machine dimensions and mass into consideration when determining a transportation route or transporting. See "Machine Dimensional Drawing" on page 3-8.*
- *Select flat, solid ground for loading/unloading the machine.*
- *Keep sufficient distance from road shoulder.*
- *Remove dirt from around undercarriage to prevent slipping of the machine on the ramp planks.*
- *When loading or unloading, set the motor speed to low idle and operate slowly at low speed.*
- *Operate slowly when changing direction on the truck platform when the footing is unstable.*

https://truckmanualshub.com/

Ramp Planks

NOTICE: Ramp planks must be of adequate length (wider than the rubber tracks) and not exceed 15 degrees, when loading the machine.

- *Ramp planks must be of adequate thickness and strength to withstand the weight and mass of the machine.*
- *Place ramp planks perpendicular to the truck box.*
- *Match the centre of each rubber track with the centre of the corresponding ramp plank. Misaligned ramp planks may cause the machine to slip off the ramp planks and cause machine damage.*
- *Reinforce with blocks or other support if the ramp planks deflect.*
- *Remove mud and other substances from the footing to prevent the machine from skidding over the ramp planks. Remove substances stuck to the ramp planks such as grease, oil or ice, and keep clean. Be especially careful during rain to avoid slipping.*
- *Never change direction on the ramp planks. Move completely off the ramp planks before changing direction.*

Loading / Unloading Procedure

WARNING! Overturn Hazard. Always load the machine moving backward onto the trailer. Moving forward onto the trailer could result in an unstable condition.

1. Place wheel blocks under the wheels of the trailer to secure the trailer.

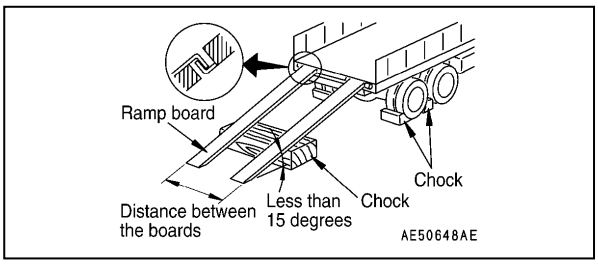

Fig. 4-321

2. Secure the ramp planks to the trailer and align the machine with the ramp planks and trailer.
3. Verify the two ramp planks are at the same height.
4. Operate the motor at low speed.

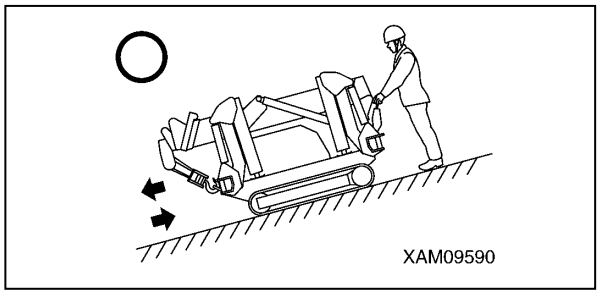

Fig. 4-322

5. Travel slowly toward the ramp planks, and load/unload the machine while keeping the boom from hitting the trailer. WARNING! Sudden Movement Hazard. Only move the travelling levers while loading or unloading the machine. Moving other levers could result in unaccepted sudden movement of the machine.
6. Load the machine to the desired position on the trailer.
7. Stop the machine and remove the key from the Starter Switch.
8. Install a square timber block in front and back of the rubber tracks to prevent the machine from moving during transportation. Secure the machine, using the four tie-down points, with chain or wire rope to prevent movement or slipping.

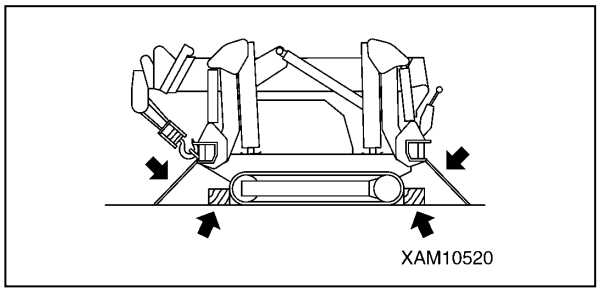

Fig. 4-323

https://truckmanualshub.com/

HOISTING

NOTICE: Operators must comply with all local laws and regulations and must be qualified to perform crane operations.

- Hoisting methods vary depending on the attachments and options mounted. Contact us or our sales service agency for additional information on hoisting methods.
- The machine must be in travelling position when hoisting. The centre of gravity of the machine is optimum while in the travelling position. See “TRAVELLING POSITION” on page 4-28.

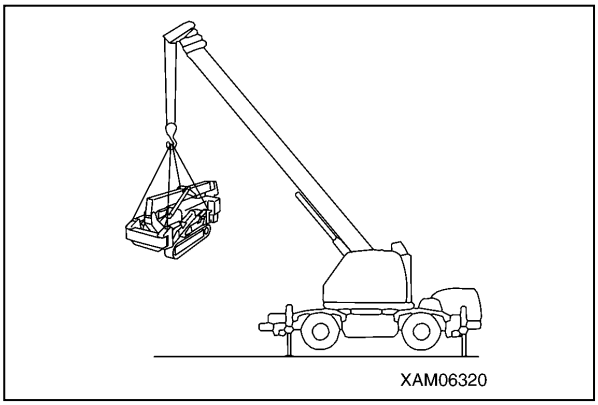

Fig. 4-324

- *Hoisting attachments, such as wire rope and shackles, used in hoisting must be rated for the total weight of this machine.*
- *Do not use the loops on the top of the boom to hoist or support the machine.*

When hoisting, take into account variations in weight such as when optional equipment is installed.
See the nameplate attached to the machine for weight specifications. The total machine weight is for a standard machine configuration, 1995 kg.

Recommended Hoisting Attachments

- Equipment with an operating capacity sufficient for the total weight of the machine

Hoisting Procedure

NOTICE: Ensure the machine is on solid, flat ground before hoisting.

Lift the machine on hard and level ground and in the following procedure:

1. Let the machine assume Travel Position as shown below.
2. Either engage hook (2) to (A) on the boom or use the special hanger (1) to engage the hook to it.

NOTICE: Position A on the boom represents the centre of gravity.

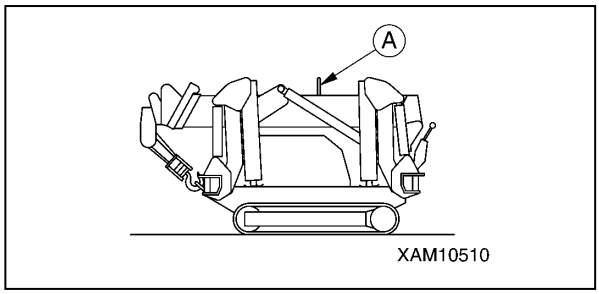

Fig. 4-325

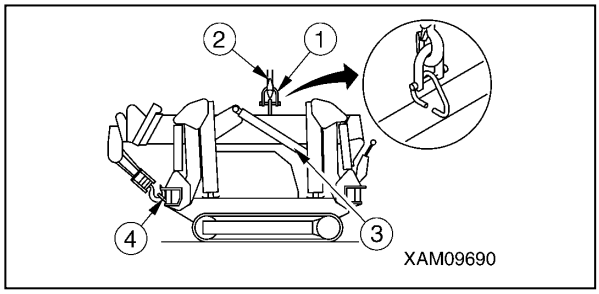

Fig. 4-326

3. Immediately after the machine is lifted off ground, wait for the machine to be stable before continuing to lift slowly.
4. When lifted, make sure that there is no change in machine position due to leakage in hydraulic circuit on the head end of derrick cylinder (3), or there is no play at the hook hanger (4).

https://truckmanualshub.com/

This Page Intentionally Left Blank

https://truckmanualshub.com/

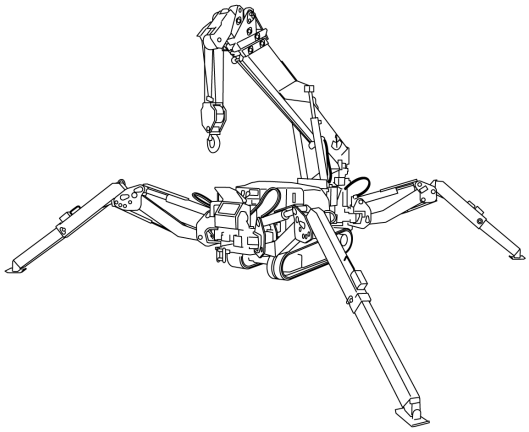

Section 5

MAINTENANCE AND INSPECTION

https://truckmanualshub.com/

GENERAL MAINTENANCE INFORMATION AND PRECAUTIONS

Thorough understanding of the inspection and maintenance items is required to perform efficient inspection and maintenance that contribute to the safe use of this machine.

In the event that a judgment on the severity of a failure or malfunction is unable to be made, contact us or our sales service agency to request inspection and repair service.

In the event that a failure or malfunction is encountered in machine operation or found in inspection, report it to your employer or supervisor immediately. Contact us or our sales service agency to request inspection and repair service.

NOTICE: Inspection and maintenance should be performed with the machine placed on solid, level ground.
NOTICE: Do not perform any inspection or maintenance procedure that is not described in this manual.
NOTICE: Check hour meters daily for maintenance items that have reached the obligatory maintenance period.

Parts

Always use Maeda genuine parts as specified in the parts catalogue.

Cleaning Parts

Clean parts with a noncombustible cleaning agent.

Be sure to clean mating surfaces after removing a part to which an O-ring or gasket is attached.

When you replace the part always use a new O-ring or gasket.

Cleaning the Machine

Keep the machine clean to facilitate the detection of a malfunction.

Keep grease fittings, breather and oil level gauge (oil access door) clean to prevent impurities from entering the machine.

Do not clean the machine using high-pressure water sprays.

NOTICE: Do not direct steam into electrical parts or connectors.

NOTICE: When operating in dusty or sandy conditions, perform the following more frequently than the recommended periodic maintenance intervals:

- Clean or replace the oil filter.
- Clean electrical parts such as the battery.

Environment

Thoroughly clean any spilled fluids from the equipment and/or ground after service is completed. Dispose of used fluids and filters as required by law.

https://truckmanualshub.com/

Protective Clothing and Gear

WARNING! The following safety messages address a potential Exposure Hazard:

- **Wear the proper protective clothing or gear when maintaining equipment. Wear hard hats, safety glasses, gloves and safety shoes.**
- **Always wear appropriate eye protection to prevent the risk of eye injury. Wear safety glasses to prevent eye contact with debris and fluids.**
- **Always wear ear plugs when working around loud noises to prevent hearing loss.**
- **Always wear the appropriate gloves to protect your hands, especially when handling extremely hot or cold equipment and fluids.**
- **DO NOT wear watches, rings or jewelry while working with electrical and mechanical equipment.**

Tools

WARNING! Tool Hazard. Always use the appropriate tool for the service being performed.

Welding

WARNING! Burn Hazard. Always wear welding gloves to protect your hands and a welding face mask to protect your eyes and face when welding.

NOTICE: When welding:

- *Never weld using 200V or greater.*
- *Do not place welding ground near the boom pin or hydraulic cylinder.*

Turn off the Starter Switch to power off the machine.

Ground the machine within 1 m of the welding point.

Disconnect the monitor and controller connectors.

Disconnect the battery.

Make sure O-rings, seals or bearings are not present between the welding point and the grounding point.

Handling and Service of Electrical Parts

NOTICE: Never remove and disassemble electrical equipment from the machine.
NOTICE: Keep water/rain away from electrical parts.

NOTICE: Keep electrical parts free of seawater and seashore impurities to prevent corrosion.

Electrical parts are susceptible to water damage and insulation leaks. Current leakage can develop if electrical parts become wet or insulation is damaged. Exercise caution when handling electrical parts.

Only Maeda-approved optional electrical parts may be installed.

Handling and Service of Gearcase Oil

WARNING! The following safety messages address a potential Fire Hazard:

- **Keep heat, flames and cigarettes away from gearcase oil.**
- **Clean gearcase oil spills immediately.**
- **Stop the machine before replacing gearcase oil.**
- **Wait until the gearcase is cool to the touch to replace the oil.**

WARNING! Exposure Hazard. Avoid skin contact with the oil.

NOTICE: Always keep gearcase oil at the FULL level.

For oil type and usage specifications, see “LUBRICATING OIL” on page 5-7.

Secure gearcase fill, drain and inspection plugs after inspection and oil replacement. Use seal tape on the threads to prevent leaks.

https://truckmanualshub.com/

Handling and Service of Hydraulic Oil and Filters

WARNING! The following safety messages address a potential Fire Hazard:

- **Keep heat, flames and cigarettes away from hydraulic oil.**
- **Clean hydraulic oil spills immediately.**
- **Stop the machine before replacing the hydraulic oil.**
- **Allow the hydraulic oil to cool to a temperature allowing the hydraulic oil tank surface to be touched before replacing the oil and filters.**

WARNING! Exposure Hazard. Avoid skin contact with the hydraulic oil. If your skin is penetrated by high-pressure hydraulic oil, seek medical attention immediately. Any fluid injected under the skin must be removed surgically or gangrene may result.

WARNING! The following safety messages address a potential Burn Hazard:

- **Relieve internal pressure by slowly rotating the hydraulic tank air breather cap during removal.**
- **Make sure the hydraulic tank air breather cap is closed properly after replenishment of the oil.**
- **When filling the hydraulic oil tank, do not fill above the upper limit on the level gauge. Overfilling may cause oil to gush from the tank during machine operation.**

For oil type and usage specifications, see “LUBRICATING OIL” on page 5-7.

Secure the hydraulic oil fill and drain plugs after oil replacement. Use seal tape on the threads to prevent leaks.

Place the machine on a flat, level surface in the TRAVEL position when replacing or checking the oil.

Do not start the machine until the hydraulic system is completely filled with oil.

Prevent contaminants from entering the oil or oil system.

Inspect O-rings for damage when removing high-pressure hoses. Replace as necessary.

Bleed the residual air from the hydraulic system after performing any of the following:

- Replacement or cleaning of hydraulic oil filters or strainers
- Repair or replacement of hydraulic components including hoses and piping

Hydraulic oil filters:

NOTICE: Never reuse a cartridge-type hydraulic oil filter under any circumstance.

- Replace the hydraulic filters after draining the hydraulic oil tank or replacing a hydraulic system component.
- After replacing a hydraulic oil filter, check the used filter for debris and metal shavings. If metal shavings are present, contact us or our sales service agency.
- Unpack a replacement hydraulic oil filter immediately before use.
- Always use Maeda genuine hydraulic oil filters.

https://truckmanualshub.com/

Blocking Machine for Maintenance

WARNING! Crush Hazard. Perform and check the following before getting under the machine:

- **Extend the outriggers to maximum. Set the outriggers and raise the machine 80 mm off the ground.**
- **Place square blocks between both rubber tracks and the ground to support and stabilise the machine.**
- **Visually check the level gauge to ensure the machine is in level state.**
- **Place multiple jack stands of sufficient strength under the frame of the machine.**

1. For some maintenance procedures it may be necessary to raise the crane using the outriggers.
2. Park the machine on a flat, level and solid surface.
3. Set the outriggers. See “OUTRIGGER SETTING” on page 4-43.
4. Raise the rubber tracks a minimum of 80 mm off the ground.
5. Place square blocks underneath the tracks at both the front and back of machine.
6. Use the outriggers and slowly lower the tracks until they rest firmly on the blocks.

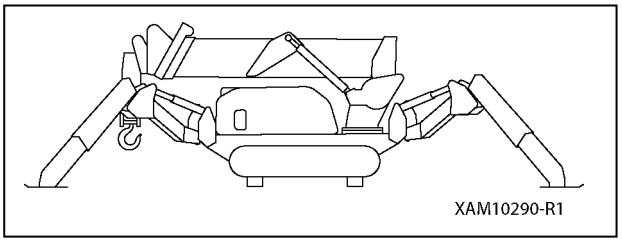

Fig. 5-1

MACHINE BREAK-IN

Perform the break-in procedures for the first 250 hours of operation.

NOTICE: The life of the machine can be shortened if break-in procedures are not performed or are performed out of sequence.

Observe and perform the following during the break-in period:

- Perform the warm-up operation (see “WARM-UP” on page 4-27) and avoid fast idling after the machine has started.
- Perform the post-start inspection (see “Post-Start Inspection” on page 5-18) after starting the machine.
- Avoid overloading or tasks with high-speed operation.
- Avoid sudden starting, acceleration and unnecessary sudden stops or steering.
- Some maintenance items apply also during the break-in period. See “PERIODIC MAINTENANCE” on page 5-24 and perform the appropriate maintenance.

https://truckmanualshub.com/

LEGAL INSPECTION

1. Verify all safety devices are operating properly.
2. Check the hoist accessories, including the hook block, for problems or damage.
3. Check the winch wire rope end and wire clip for damage.
4. Replace the wire rope immediately if damaged.
5. Check the hydraulic hoses for oil leaks and damage on the outer surfaces. Replace if any surface damage is detected.
6. Check the structural parts of the machine, including the frame and boom, for cracks, deformation and damage.
7. Check for loose or missing mounting bolts and joints.
8. Verify the boom operates properly by stopping, extending, retracting, raising, lowering and slewing the boom.

Contact us or our sales service agency to request inspection and repair service as needed.

CONSUMABLES

Consumables such as filter elements and wire ropes are to be replaced at designated periodic maintenance intervals or prior to reaching their wear limit. Proper replacement of consumables ensures increased machine performance and efficiency.

Always use Maeda genuine parts for part replacement. See the Maeda genuine parts book for part numbers when ordering parts.

List of Consumables	
Item	**Replacement Cycle**
Hydraulic oil return filter	After initial 50 hrs and then every 500 hrs
Hydraulic oil	After initial 50 hrs and then every 1,000 hrs
Slewing gear oil	After initial 250 hrs and then every 1,000 hrs
Winch gear oil	
Travel gear oil	
Boom slide plate	As required or every 3 years
Winch wire rope	
Boom extending wire rope	
Boom retracting wire rope	
Cylinder packings	

The remaining time until replacement of consumables displayed on the monitor is based on operating time. Replace items when they are depleted or worn, even if the indicated replacement time is not reached.

https://truckmanualshub.com/

LUBRICATING OIL

Lubricating oil usage varies with ambient temperature changes.

The machine is shipped with ISO VG32 hydraulic oil. When replenishing with oil of a different grade, be sure to replace all of the oil.

Lubricating place	Type of oil	Use by temperature (℃) -30 -20 -10 0 10 20 30 40 50	Specified capacity (liter)	Voleme to replace (liter)
Hydraulic oil tank	Hydraulic oil	ISO VG22 ISO VG32 ISO VG46	20	20
Swing reducer	Gear oil		0.6	0.6
Winch reducer	Gear oil	ISO VG320	0.5	0.5
Travel motor reducer	Gear oil		0.33	0.33

Fig. 5-2

https://truckmanualshub.com/

SPECIAL TOOLS AND STANDARD TIGHTENING TORQUE

Accessory Tools

Contact us or our sales service agency to request special tools for inspection and maintenance, when necessary.

Standard Tightening Torque List

Bolt and Nut Tightening Torque

Torque metric bolts and nuts with no specific indication to the values shown in this table.

Adequate tightening torque is determined with respect to the width across the flat (b) of the bolt or nut.

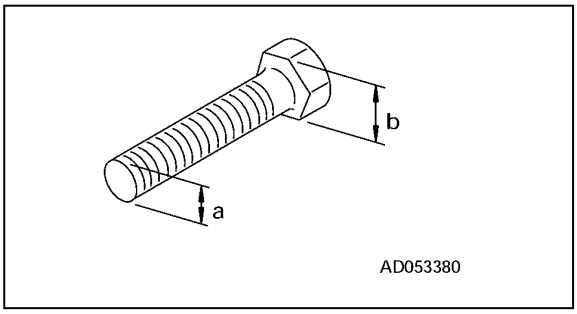

Fig. 5-3

Bolts Marked with 8.8 (Strength Classification) on Head

Nominal Size (Mark “a”)	Width Across Flat (Mark “b”)	Target Value		Tolerance	
mm	mm	N·m	kgf·m	N·m	kgf·m
6	10	7.8	0.80	6.8-9.0	0.70-0.92
8	13	19.0	1.95	16.5-21.9	1.70-2.24
10	17	37.5	3.85	32.6-43.1	3.35-4.43
12	19	65.5	6.70	57.0-75.3	5.85-7.70
14	22	104	10.6	90.4-120	9.2-12.2
16	24	163	16.6	142-187	14.4-19.1
18	27	224	22.8	195-258	19.8-26.2
20	30	318	32.4	277-366	28.2-37.3
22	32	432	44.0	376-497	38.3-50.6
24	36	549	56.0	477-631	48.7-64.4
27	41	804	81.9	699-925	71.2-94.2
30	46	1090	111	948-1250	96.5-128
33	50	1485	151	1290-1710	131-174
36	55	1910	194	1660-2200	167-223

https://truckmanualshub.com/

Bolts Marked with 10.9 (Strength Classification) on Head

Nominal Size (Mark "a")	Width Across Flat (Mark "b")	Target Value		Tolerance	
mm	mm	N·m	kgf·m	N·m	kgf·m
6	10	11.0	1.1	9.4-12.7	0.93-1.26
8	13	27.0	2.7	23.0-31.1	2.3-3.10
10	17	53.0	5.4	45.0-61.0	4.6-6.21
12	19	93.0	9.5	79.0-107	8.10-10.9
14	22	148	15.1	126-170	12.8-17.4
16	24	231	23.5	196-266	20.0-27.0
18	27	317	32.3	269-365	27.5-37.1
20	30	450	45.9	383-518	39.0-52.8
22	32	612	62.4	520-704	53.0-71.8
24	36	778	79.3	661-895	67.4-91.2
27	41	1130	116	961-1300	98.6-133
30	46	1540	158	1310-1770	134-182
33	50	2100	214	1790-2410	182-246
36	55	2700	275	2300-3100	234-316

Bolts Marked with 12.9 (Strength Classification) on Head

Nominal Size (Mark "a")	Width Across Flat (Mark "b")	Target Value		Tolerance	
mm	mm	N·m	kgf·m	N·m	kgf·m
6	10	13.0	1.30	11.1-15.0	1.11-1.50
8	13	31.5	3.20	26.8-36.2	2.72-3.70
10	17	62.5	6.40	53.1-71.9	5.44-7.35
12	19	109	11.1	92.7-125	9.44-12.8
14	22	174	17.7	148-200	15.0-20.4
16	24	271	27.7	230-312	23.5-31.9
18	27	373	38.1	317-429	32.4-43.8
20	30	529	54.0	450-608	45.9-62.1
22	32	720	73.4	612-828	62.4-84.4
24	36	915	93.3	778-1050	79.3-107
27	41	1340	136	1140-1540	116-156
30	46	1820	185	1550-2090	157-213
33	50	2470	252	2100-2840	214-290
36	55	3180	324	2700-3660	275-373

https://truckmanualshub.com/

Other Bolts

Nominal Size (Mark "a")	Width Across Flat (Mark "b")	Target value		Tolerance	
mm	mm	N·m	kgf·m	N·m	kgf·m
6	10	3.0	0.30	2.6-3.5	0.26-0.35
8	13	7.5	0.75	6.5-8.6	0.65-0.85
10	17	14.5	1.45	12.6-16.7	1.25-1.65
12	19	25.0	2.55	21.7-28.8	2.20-2.95
14	22	40.0	4.10	34.8-46.0	3.55-4.70
16	24	62.5	6.40	54.3-71.9	5.55-7.35
18	27	86.0	8.75	74.8-98.9	7.60-10.0
20	30	122	12.4	106-140	10.8-14.3
22	32	166	16.9	144-191	14.7-19.4
24	36	211	21.5	183-243	18.7-24.7
27	41	309	31.4	269-355	27.3-36.1
30	46	419	42.6	364-482	37.0-49.0
33	50	570	58.0	495-656	50.4-66.7
36	55	732	74.5	636-842	64.8-85.7

Hose Connector Tightening Torque

Unless otherwise indicated, tighten hose connectors using the torque values shown in the following table:

Determine the appropriate tightening torque based on the hose connector width across flats (a).

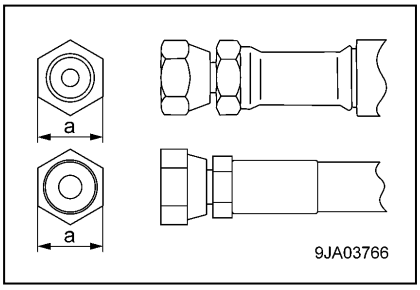

Fig. 5-4

Hose No.	Width Across Flat (Mark "a")	Target value		Tolerance	
-	mm	N▪m	kgf▪m	N▪m	kgf▪m
02	19	44	4.5	35-54	3.5-5.5
03	22	74	7.5	54-93	5.5-9.5
	24	78	8.0	59-98	6.0-10.0
04	27	103	10.5	84-132	8.5-13.5
05	32	157	16.0	128-186	13.0-19.0
06	36	216	22.0	177-245	18.0-25.0

https://truckmanualshub.com/

MACHINERY COVER

WARNING!

- **Be sure to stop the machine and remove the starter switch key before removing the machinery cover.**
- **Do not remove the machinery cover immediately after the operation while the machine is still hot.**

Removing Machinery Cover

Remove the machinery cover with the following procedure when performing inspection/ maintenance inside the machinery cover.

1. Remove 7 mounting bolts (2) from the left side machinery cover (1).

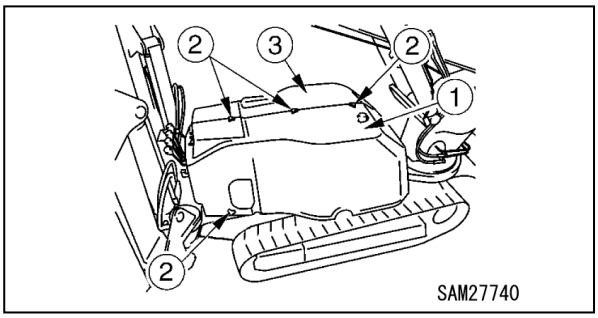

Fig. 5-5

NOTICE: The mounting bolts (2) are positioned with 3 at the top, 3 at the rear and 1 at the front left lower side.

2. Remove 2 mounting bolts (4) from the right side machinery cover (3).

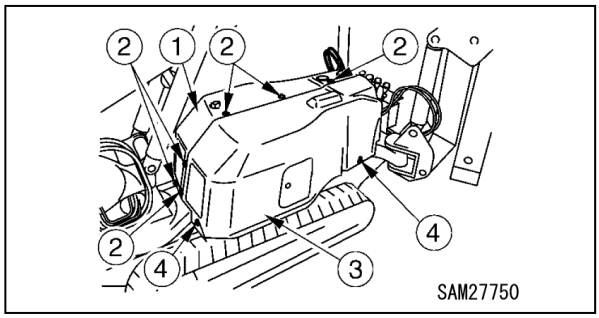

Fig. 5-6

NOTICE: The mounting bolts (4) are positioned with 1 at the rear lower side and 1 at the right lower side.

3. Remove the left side machinery cover (1).
4. Remove the right side machinery cover (3).

Installing Machinery Cover

When you have finished inspection/maintenance of the machinery cover, reinstate the machinery cover using by reversing the procedure in “Removing Machinery Cover” on page 5-11. Upon completion, always check each part for interference.

https://truckmanualshub.com/

FUSES

NOTICE: Always turn the Starter Switch to the OFF position when checking or replacing a fuse.

Fuses protect electrical components and wires from electrical overload.

- If a fuse is corroded, replace the fuse.
- If a fuse blows, inspect and repair the cause before replacing the fuse.
- Always use a fuse of the same type and capacity when replacing.

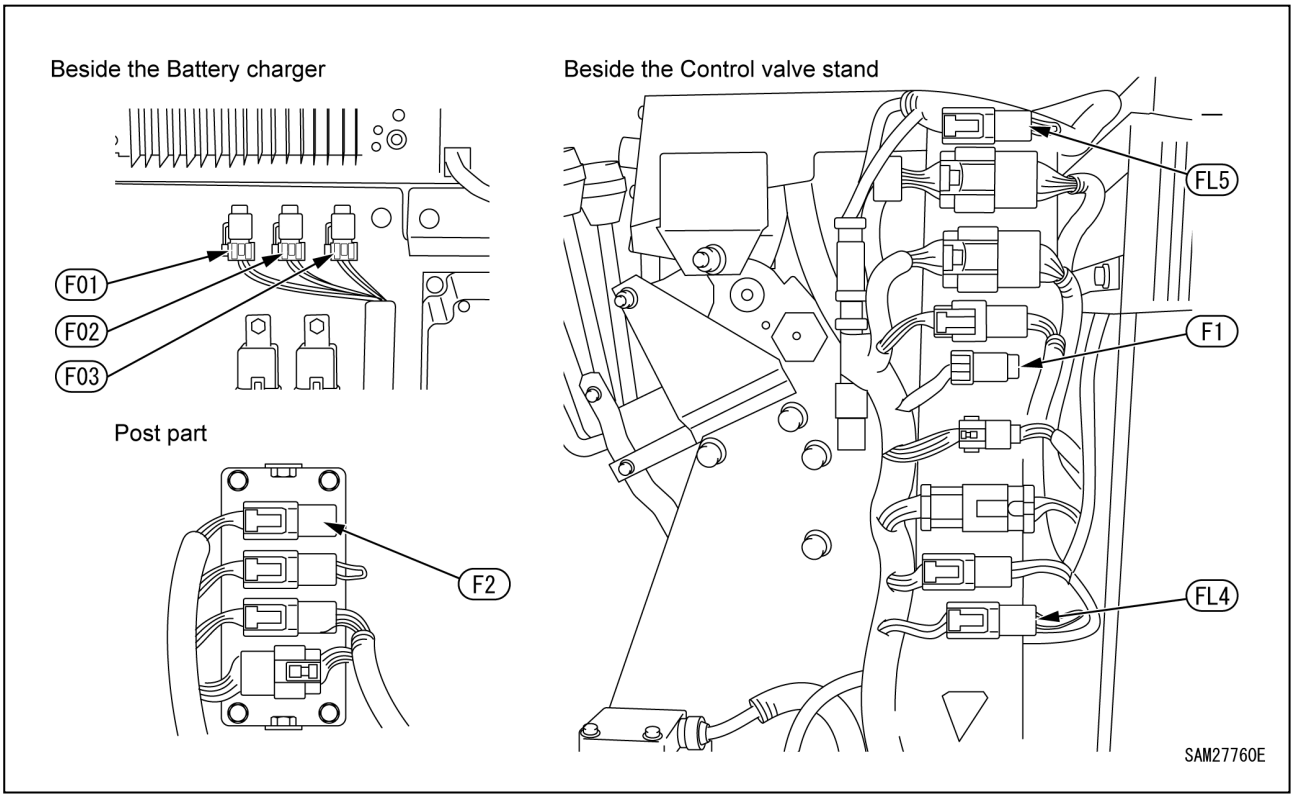

Fig. 5-7

No.	Capacity	Circuit name
F1	2 A	Override
	2 A	Spare
F2	2 A	Working Status Lamp
FL4	0.3 sq	Radio Remote control system / Lower power supply
FL5	0.3 sq	Upper controller power supply
F01	15 A	Starter switch
	15 A	Spare
F02	15 A	Monitor / Main controller / Sub controller / Motor controller / BMU power supply
	15 A	Spare
F03	10 A	Motor controller / BMU power supply
	10 A	Spare

https://truckmanualshub.com/

INSPECTION

Pre-Start and Post-Start Inspection Items

Inspection Item	Reference
Pre-Start - Before Starting Machine	
Check Battery	See “Battery” on page 5-15.
Check Hydraulic System of Undercarriage	See “Hydraulic System of Undercarriage” on page 5-15.
Check Undercarriage	See “Undercarriage” on page 5-15.
Check Outriggers	See “Outriggers” on page 5-15.
Check Outrigger Cylinder	See “Outrigger Cylinder” on page 5-15.
Check Post	See “Post” on page 5-15.
Check Derrick Cylinder	See “Derrick Cylinder” on page 5-15.
Check Boom	See “Boom” on page 5-15.
Check Telescope Cylinder	See “Telescope Cylinder” on page 5-15.
Check Wire Rope	See “Wire Rope” on page 5-15.
Check Over Winding Detector	See “Over Winding Detector” on page 5-15.
Check Winch Motor	See “Winch Motor” on page 5-15.
Check Winch Drum	See “Winch Drum” on page 5-15.
Check Hook Block	See “Hook Block” on page 5-15.
Check Operation Levers	See “Operation Levers” on page 5-15.
Check Fuses	See “Check Fuses” on page 5-16.
Check Cracks, Deformation or Damage of Boom and Frame	See “Check Cracks, Deformation or Damage of Boom and Frame” on page 5-16.
Check Deformation, Damage or Wear of Wire Rope	See “Check Deformation, Damage or Wear of Wire Rope” on page 5-16.
Check Electric Wiring	See “Check Electric Wiring” on page 5-16.
Check Add Hydraulic Oil	See “Check / Add Hydraulic Oil” on page 5-16.
Check Add Slewing Motor Reduction Gearcase Oil	See “Check / Add Slewing Motor Reduction Gearcase Oil” on page 5-17.
Post-Start - After Starting Machine	
Check Horn Operation	See “Check Horn” on page 5-18.
Check Working Light Operation	See “Check Working Light Operation” on page 5-18.
Check / Adjust Rubber Track Tension	See “Check / Adjust Rubber Track Tension” on page 5-18.
Check Rubber Tracks for Damage	See “Check Rubber Tracks for Damage and Wear” on page 5-18.
Check Outrigger Safety Device Operation	See “Check Outrigger Safety Device Operation” on page 5-19.
Check Outrigger Interlock Operation	See “Check Outrigger Interlock Operation” on page 5-19.
Check Outrigger Operation	See “Check Outrigger Operation” on page 5-20.
Check Crane Operation	See “Check Crane Operation” on page 5-21.
Check Over Winding Detector Operation	See “Check Over Winding Detector Operation” on page 5-22.
Check Moment Limiter Operation	See “Check Moment Limiter Operation” on page 5-22.
Check Emergency Stop Switch (EMO)	See “Check Emergency Stop Switch (EMO)” on page 5-23.
Check Lever Detection Display	See “Check Lever Detection Display” on page 5-30.
Check Slew Origin Detection Display	See “Check Slew Origin Detection Display” on page 5-30.
As Required	
Replace Rubber Tracks	See “Removal of Rubber Tracks” on page 5-37.
Replace Winch Wire Rope	See “Winch Wire Rope - Removal” on page 5-43.
Check Wire Rope - Boom Telescope Extension	See “Wire Rope - Boom Telescope Extension” on page 5-46.
Check Air Breather	See “Air Breather Inspection” on page 5-49.
Drain Water and Sediment Inside Hydraulic Oil Tank	See “Drain Water and Sediment Inside Hydraulic Oil Tank” on page 5-51.

https://truckmanualshub.com/

Pre-Start Visible Checks

Visually check the systems and components listed in the figure below and perform maintenance or repairs as needed before daily operation.

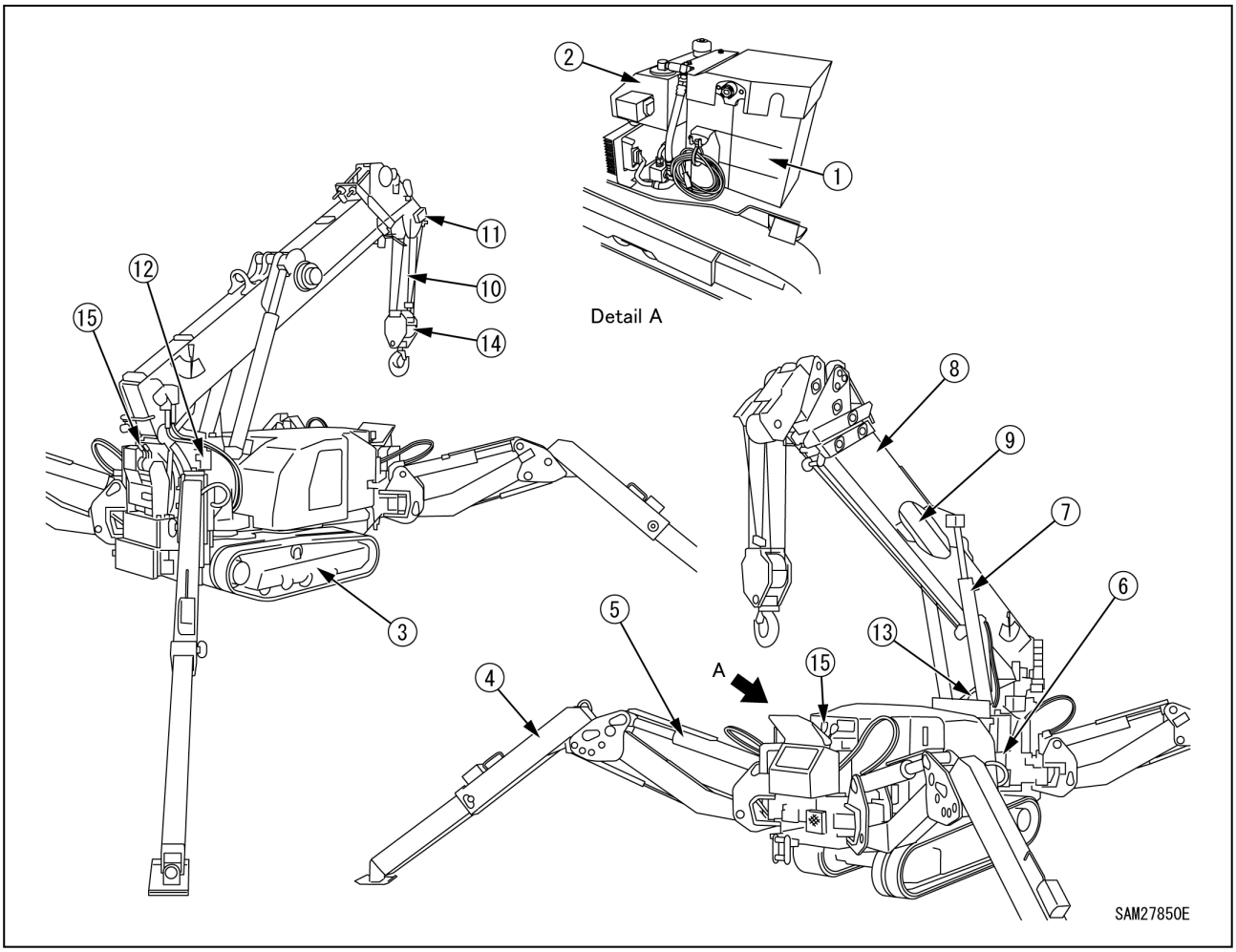

Fig. 5-8

(1) Battery - See “Battery” on page 5-15.
(2) Hydraulic System of Undercarriage - See “Hydraulic System of Undercarriage” on page 5-15.
(3) Undercarriage - See “Undercarriage” on page 5-15.
(4) Outriggers - See “Outriggers” on page 5-15.
(5) Outrigger Cylinder - See “Outrigger Cylinder” on page 5-15.
(6) Post - See “Post” on page 5-15.
(7) Derrick Cylinder - See “Derrick Cylinder” on page 5-15.
(8) Boom - See “Boom” on page 5-15.
(9) Telescope Cylinder - See “Telescope Cylinder” on page 5-15.
(10) Wire Rope - See “Wire Rope” on page 5-15.
(11) Over Winding Detector - See “Over Winding Detector” on page 5-15.
(12) Winch Motor - See “Winch Motor” on page 5-15.
(13) Winch Drum - See “Winch Drum” on page 5-15.
(14) Hook Block - See “Hook Block” on page 5-15.
(15) Operation Levers - See “Operation Levers” on page 5-15.

https://truckmanualshub.com/

Battery

Check for any accumulation or deposits of inflammable items including leaves, wastepaper, dust, oil, or grease around the battery. Remove any accumulations or deposits.

Check the electric motor and electric wiring for slackness and connections for looseness, and also check if there are any traces of burning. Repair if any abnormality is found.

Hydraulic System of Undercarriage (Travel motor, control valve, hydraulic oil tank, and hose joint)

Check for loose pipe connections or oil leakage and repair any abnormality.

Undercarriage (rubber track, track roller, sprocket and idler)

Check for damage, wear and loose track rollers. Repair any abnormality. Check for loose or missing bolts and retighten as necessary. For more information, see “Inspection of Rubber Tracks” on page 5-37.

Outriggers

Check for cracks and bent or damaged parts. Check wear of support pins etc., and repair as necessary.

Outrigger Cylinder

Check for loose pipe connections, oil leakage, wear or damage of support pins etc., and repair as necessary.

Post

Check for cracks, and bent or damaged parts. Also check for loose post and slew ring mounting bolts, loose swing system speed reducer mounting bolts, loose pipe connections or oil leakage. Repair any abnormality detected.

Derrick Cylinder

Check for loose pipe connections, oil leakage, wear or damage of support pins etc., and repair as necessary.

Boom

Check for cracks, bent or damage sections in all areas, and check wear of support pins etc., and repair as necessary.

Check for loose mounting bolts of the support pin lock plate portion and tighten it as necessary.

Telescope Cylinder

Check for loose pipe connections or oil leakage and repair as necessary.

Wire Rope

Check for damage, deformation, wear, twists, kinks and corrosion and replace where necessary. For more information, see “Wire Rope” on page 5-41.

Over Winding Detector

Check the wire rope of over- winding weight for damage etc. and replace it as necessary.

Winch Motor

Check for loose pipe connections, oil leakage or loose mounting bolts, and repair as necessary.

Winch Drum

Check the drum for cracks, bending or damage and repair it as necessary. Check hoisting wire rope for disorderly winding and repair it as necessary

Hook Block

Check hook and sheaves for cracks, bending or damage and repair where necessary. Check hook and sheaves for proper rotation and repair as necessary.

Operation Levers

Operate each of the operation levers to confirm that they move smoothly, that they return to their neutral positions, and that there are no discrepancies in operational feel. Perform appropriate repairs to address any abnormalities.

https://truckmanualshub.com/

Check Fuses

NOTICE: If fuses blow frequently, inspect and repair the cause of failure immediately before continuing operation.

See “FUSES” on page 5-12 for more information on fuse locations.

If a fuse has blown or an open/short circuit is found in the electrical wiring, contact us or our sales service agency to request inspection and repair service.

Check Cracks, Deformation or Damage of Boom and Frame

Check the boom and frame for cracks, deformation or any other damage, and correct them if anything abnormal is found.

Check Deformation, Damage or Wear of Wire Rope

Check the rope end fixing, rope take up condition and contact between the ropes. For the check and inspection of wire rope while winch and boom telescoping, see “Wire Rope” on page 5-41.

Check Electric Wiring

Check the electric wiring and inspect to ensure that wiring has not been disconnected, damaged, or burnt out, and that connectors are not disconnected.

Pre-Start Inspection

Check / Add Hydraulic Oil

Before checking or adding hydraulic oil, read the maintenance precautions in “Handling and Service of Hydraulic Oil and Filters” on page 5-4.

WARNING! The following safety messages address a potential Burn Hazard:

- **Parts will still be hot immediately after stopping machine operation. Do not carry out work immediately. Wait until the oil has cooled. (45°C or less)**
- **Relieve internal pressure by slowly rotating the hydraulic tank air breather cap during removal.**
- **Make sure the hydraulic tank air breather cap is closed properly after adding oil.**
- **When filling the hydraulic oil tank, do not fill above the upper limit on the level gauge. Overfilling may cause oil to gush from the tank during machine operation.**

If the tank interior is still pressurized when the air breather cap is removed, the element may be clogged. Inspect the air breather.

For information on the air breather inspection, see “Air Breather Inspection” on page 5-49.

1. Stop the machine on a level surface in the travelling posture.
2. Check the oil level gauge (G) in the left side of the machinery cover and ensure that oil is sufficient to reach the level point (red point).

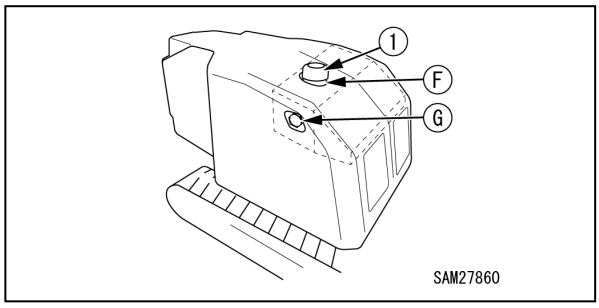

Fig. 5-9

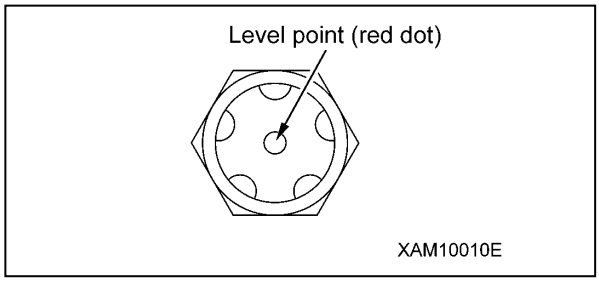

Fig. 5-10

https://truckmanualshub.com/

3. If the oil level is low, add hydraulic oil using the following procedure.

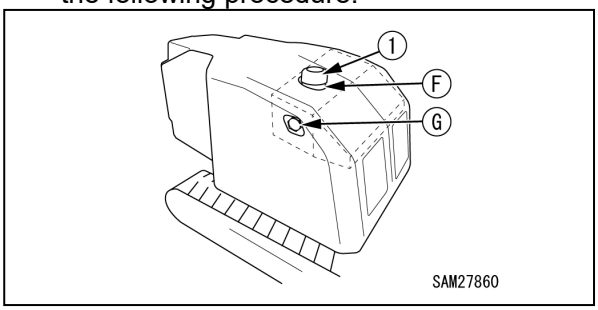

Fig. 5-11

   a. Remove the air breather cap (1) from the oil inlet (F) on the top of the hydraulic oil tank.
   b. Replenish the hydraulic oil via the oil inlet (F) while watching the oil level gauge (G).
   c. After replenishing the oil, securely reattach the air breather cap (1) on the oil inlet (F).

   For information on how to remove the air breather cap, see “Air Breather Inspection” on page 5-49.

Check / Add Slewing Motor Reduction Gearcase Oil

Before checking or adding slewing motor reduction gearcase oil, read the maintenance precautions in “Handling and Service of Gearcase Oil” on page 5-3.

1. Stop the machine on a level location.
2. See “Removing Machinery Cover” on page 5-11 and remove the machinery cover.
3. Remove the filler port plug (F) from the slewing reduction gearcase. Fill with gear oil from the plug hole up to the middle of the gearcase.

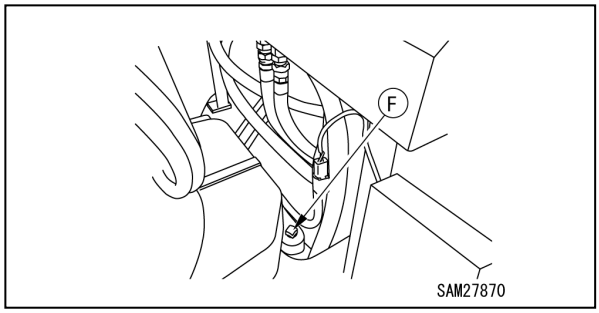

Fig. 5-12

NOTICE: The height at middle of gearcase is 50 mm from the top of the filler plug. 50 mm (±5 mm) is the appropriate oil level.
Do not allow ingress of dust or dirt when measuring or filling oil.

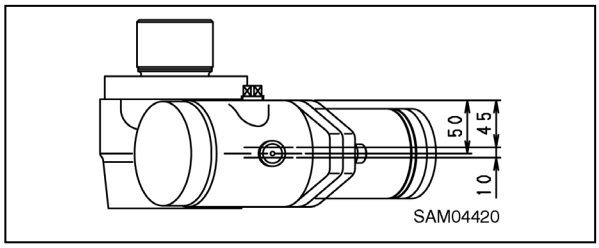

Fig. 5-13

4. If the oil level is low, refill with the gear oil from the plug hole of the filler plug.
5. After adding oil, install the filler plug and securely tighten.
6. See “Installing Machinery Cover” on page 5-11 and install the machinery cover.

https://truckmanualshub.com/

Post-Start Inspection

Precautions

Perform the following inspections daily after starting the machine. Review all procedures and safety precautions in the following sections before performing the following inspections:

- “Section 2 SAFETY”
- “STARTING” on page 4-26
- “STOPPING” on page 4-28
- “TRAVELLING CONTROLS AND OPERATION” on page 4-29
- “CRANE OPERATION” on page 4-59
- “OUTRIGGER SETTING” on page 4-43

Perform the warm-up operation before performing inspections that require the machine to be running. See “WARM-UP” on page 4-27.

WARNING! Equipment Hazard. Failure to perform these inspections may result in machine damage and/or personal injury.

WARNING! Sudden Movement Hazard. Make sure no person or object is within the boom slewing radius area before starting the machine.

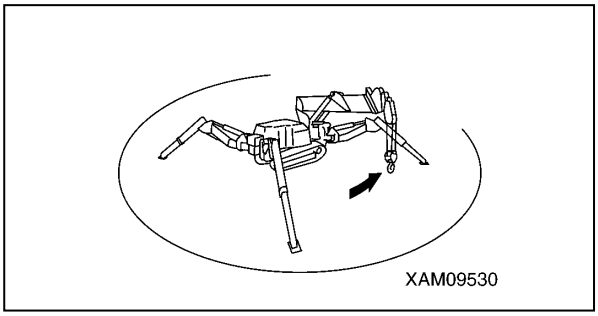

Fig. 5-14

WARNING! Sudden Movement Hazard. Sound the horn before starting the machine.

WARNING! Equipment Hazard. Always repair parts or systems before operating the machine as needed.

Check Horn

1. Turn the Starter Switch to the ON position.
2. Press the Horn Switch to verify the horn sounds. If the horn does not sound, the horn may be faulty or the circuit may be open. Repair or replace the horn.

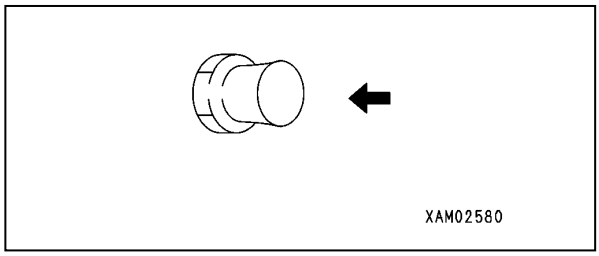

Fig. 5-15

There are two horn switches: one next to the travel levers and one next to the control levers.

Check Working Light Operation

1. Turn the Starter Switch to the ON position.
2. Turn on the Working Light Switch and verify the working lights under the monitor turn on. If the lights do not turn on, the working lights may be faulty or the circuit may be open. Repair or replace the working lights.

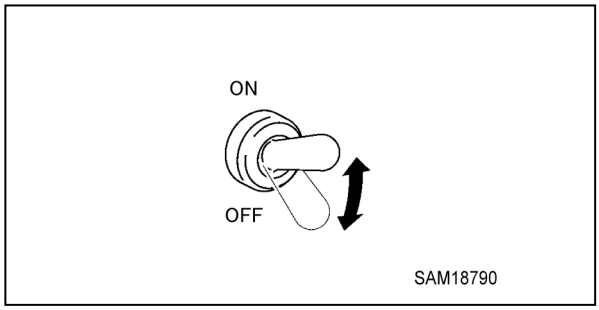

Fig. 5-16

The working lights do not operate when the Starter Switch is in the OFF position.

Check / Adjust Rubber Track Tension

See “Checking Rubber Track Tension” on page 5-39.

Check Rubber Tracks for Damage and Wear

See “Inspection of Rubber Tracks” on page 5-37.

https://truckmanualshub.com/

Check Outrigger Safety Device Operation

Review all procedures and safety precautions in “OUTRIGGER SAFETY DEVICES” on page 4-35 before checking outrigger safety devices.

1. Turn the Starter Switch to the ON position.
2. Push in the travel lever while unlocking the lever to enable the operation of outriggers and the crane
3. Verify that only the Boom Stowing Light remains green on the monitor.

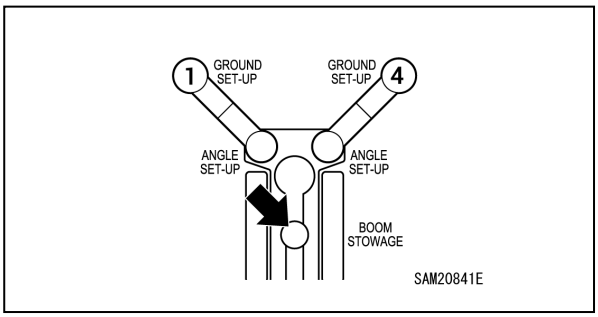

Fig. 5-17

4. Rotate the outriggers to the standard angle positions and insert the position pins.
5. Confirm that the Outrigger Angle Setting Light is lit in green on the monitor.

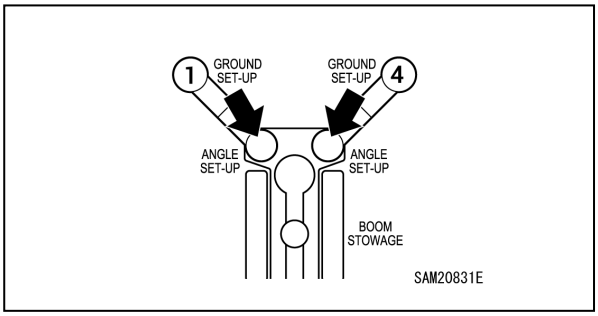

Fig. 5-18

6. Set the outriggers to maximum extension. Start the machine to extend the outriggers.
7. Verify that only the Boom Stowing Light remains green on the monitor.

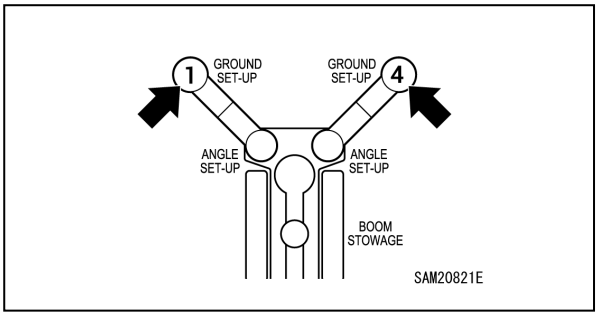

Fig. 5-19

8. Confirm steps 4 to 7 for all four outriggers.
9. Check the outrigger base sensors if the Outrigger Ground Set-Up Light flashes in red even with the outriggers extended.

Check Outrigger Interlock Operation

Review all procedures and safety precautions in “OUTRIGGER SAFETY DEVICES” on page 4-35 before checking outrigger interlock operation.

1. Set all four outriggers. See “OUTRIGGER SETTING” on page 4-43.
2. Raise the boom until the Boom Stowing Light on the monitor turns off.

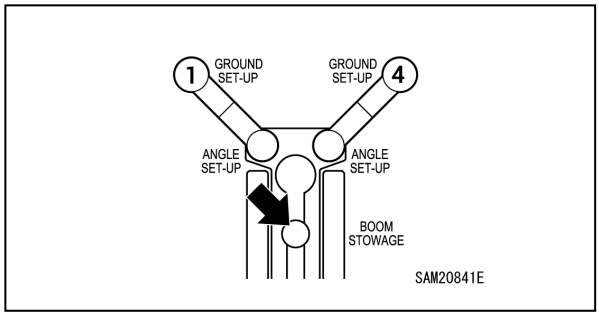

Fig. 5-20

3. Confirm that none of the outriggers moves even when operated in outrigger mode.

https://truckmanualshub.com/

Check Outrigger Operation

Review all procedures and safety precautions in "OUTRIGGER SETTING" on page 4-38 before checking outrigger operation.

1. Rotate the outrigger rotary of all the outriggers outward, and pull out the inner boxes.

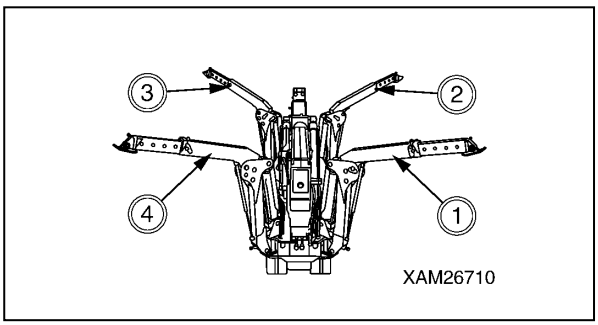

Fig. 5-21

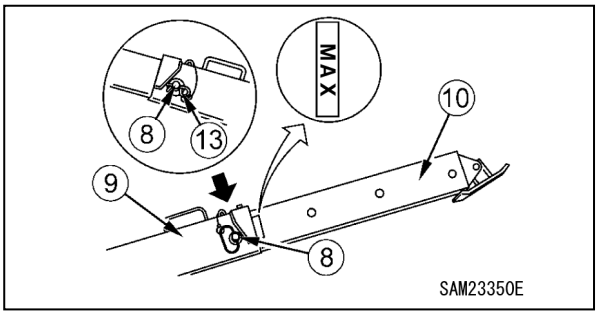

Fig. 5-22

2. See "Starting the Machine" on page 4-26 and start the machine.
3. Verify that the outrigger descends smoothly when the Outrigger Extend Switch is pressed. Also verify that the outrigger rises smoothly when the Outrigger Retract Switch is pressed.

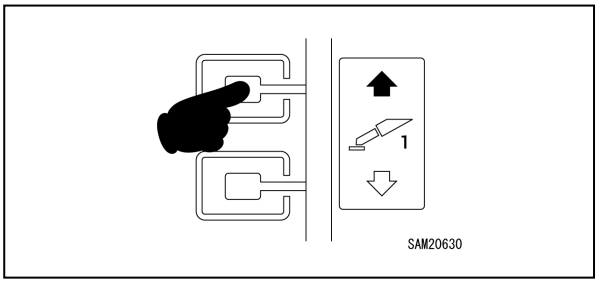

Fig. 5-23

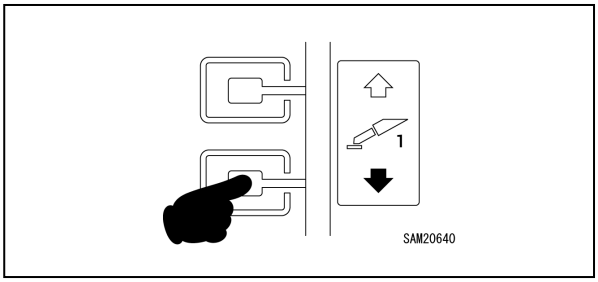

Fig. 5-24

When doing the above, check for any abnormal noise generated by part of the outrigger.

Check for abnormal noise from the outrigger during each operation. Repair as necessary before continuing operation.

https://truckmanualshub.com/

Check Crane Operation

Review all procedures and safety precautions in "CRANE OPERATION" on page 4-59 before checking crane operation.

If any operation abnormality or faulty adjustment is discovered, contact us or our sales service agency and do not use the machine without resolving the issue.

1. Set the outriggers to their maximum extension. See "OUTRIGGER SETTING" on page 4-43 before checking crane operation.
2. Move the winch lever (3) to DOWN to drop the hook block from the stow position.

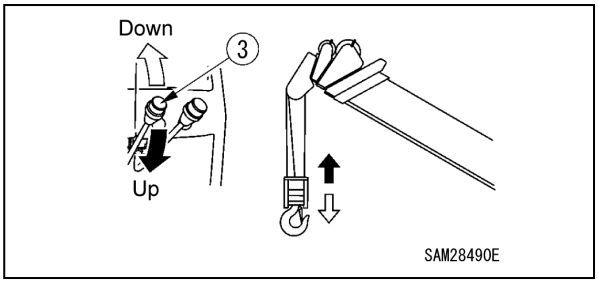

Fig. 5-25

3. Verify the boom rises smoothly when the boom lift lever (4) is moved to Hoist (pull toward you).

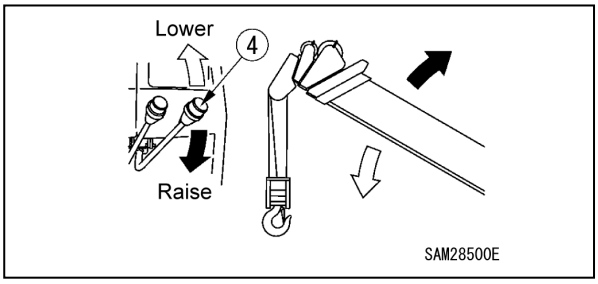

Fig. 5-26

4. Verify the boom lowers smoothly when the boom lift lever is moved to Lower (push forward).
5. Check for any abnormal sounds emitted by the boom or from the boom cylinder. Repair as necessary before continuing operation.
6. Verify the boom extends smoothly when the boom telescoping lever (2) is moved to EXTEND (push forward).

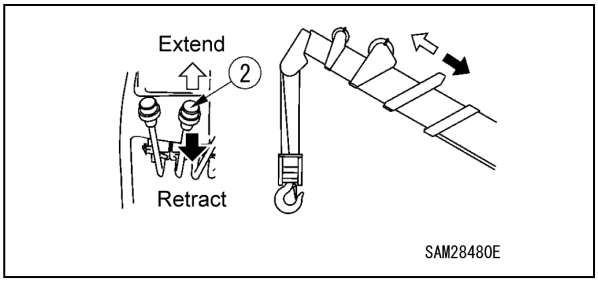

Fig. 5-27

7. Verify the boom retracts smoothly when the boom telescoping lever is moved to RETRACT (pull toward you).
8. Check for any abnormal sounds emitted by the boom or from the boom telescoping cylinder. Repair as necessary before continuing operation.
9. Verify the hook winds down smoothly when the winch lever (3) is moved to DOWN (push forward).

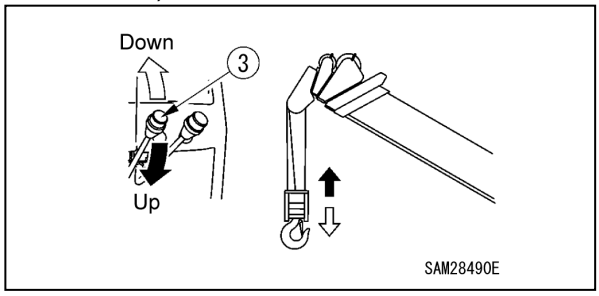

Fig. 5-28

10. Verify the hook is wound up smoothly when the winch lever is moved to UP (pull toward you).
11. Check for any abnormal sounds emitted by the boom or winch motor. Repair as necessary before continuing operation.
12. Verify the crane slews smoothly counterclockwise (left) when the slewing lever (1) is moved to Counterclockwise (left) (push forward).

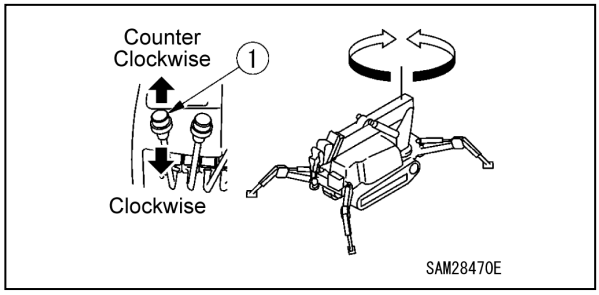

Fig. 5-29

13. Verify the crane slews smoothly clockwise (right) when the slewing lever is moved to Clockwise (right) (pull toward you).
14. Check for any abnormal sounds emitted from the post. Repair as necessary before continuing operation.

https://truckmanualshub.com/

Check Over Winding Detector Operation

Review all procedures and safety precautions in “CRANE SAFETY DEVICES” on page 4-56 before checking the over winding detector operation.

WARNING! Lifting Hazard. If the over winding detector does not operate correctly, contact us or our sales service agency to request inspection and repair service immediately. Do not operate the machine until the problem has been corrected.

To activate the over winding detector alarm (3), raise the hook with the winch and extend the boom to verify the alarm buzzer sounds and the hook raising and boom extending operations stop.

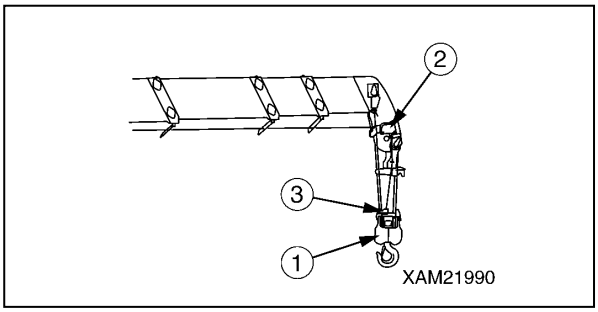

Fig. 5-30

If any of the above fail to occur, the over winding detector may be faulty.

If the alarm does not stop, the over winding detector may be faulty or the circuit may be open.

Contact us or our sales service agency to request inspection and repair service.

Check Moment Limiter Operation

Review all procedures and safety precautions in “MOMENT LIMITER (OVERLOAD DETECTOR)” on page 4-69 before checking moment limiter operation.

WARNING! Lifting Hazard. If the moment limiter does not operate correctly, contact us or our sales service agency immediately. Do not operate the machine until the problem has been corrected.

1. Turn the Starter Switch to ON.
2. Verify the Working Status Lamp flashes in red for 2 seconds and then green and yellow. The subsequent lamp status will vary depending on the crane status. For more information on what the various lamp states mean, see “Working status lamp states” on page 4-73.
3. Check the moment limiter display on the monitor. Verify no error codes are displayed.
4. Start the machine and operate the crane as follows to verify that the moment limiter properly displays the value.

Crane Operation and Displayed Parameter	Value Displayed on Moment Limiter
Displayed boom length with the boom length at minimum	2.5 m
Displayed boom length with the boom length at maximum	8.6 m
Displayed working radius with the boom length of 4.4 m and boom angle of 29.2 degrees	3.5 ± 0.1 m
Displayed ACTUAL LOAD when the weight of the known weight is hoisted:	Actual load
Displayed slew angle at boom storage position	0° or 360°
Displayed slew angle when opposite boom storage position (travel stand side)	180°

5. Operate the crane until the moment limiter display indicates the boom length is 4.4 m for booms no. 2 and no. 3 and boom angle is 29.2°, then measure the boom angle and working radius.

If the measured value(s) do not match the moment limiter display value, contact us or our sales service agency to request inspection and repair service.

https://truckmanualshub.com/

Check Emergency Stop Switch (EMO)

Push the Emergency Stop Switch (EMO) and ensure that the machine stops.

If the machine does not stop, there may be an error with the switch or a wire disconnected. Contact us or our sales service agency.

NOTICE: When restarting the machine, return all of the levers to their neutral positions, then set the emergency stop switch to the "OFF" position. The machine does not start when it is "ON".

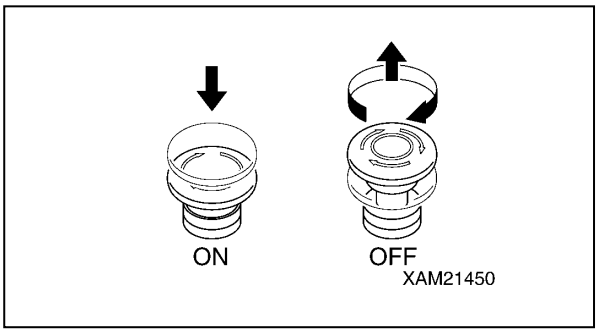

Fig. 5-31

Check Lever Detection Display

Operate crane lever very slightly, and check if the load detection display on the monitor lights up in green before the crane starts to move. Test all operation of crane except for boom retracting.

If it does not light up in green even though the crane is moving, it is possible that the detection limit switch has failed or is improperly adjusted. In this case, please contact us or our sales service agency.

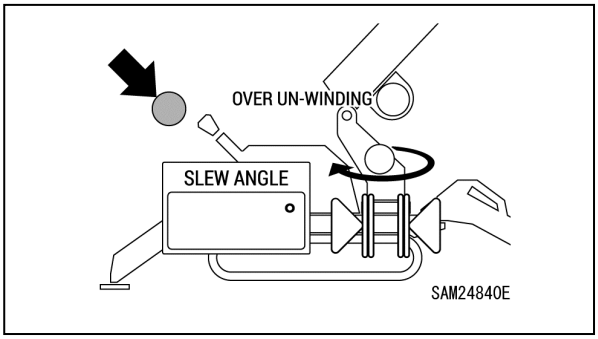

Fig. 5-32

Check Slew Origin Detection Display

Operate slewing of the crane, and check if the slew origin detection display on the monitor lights up in green at two points near 0 degree and 180 degree.

If it does not light up in green at the two points, it is possible that the detection limit switch has failed or is improperly adjusted. In this case, please contact us or our sales service agency.

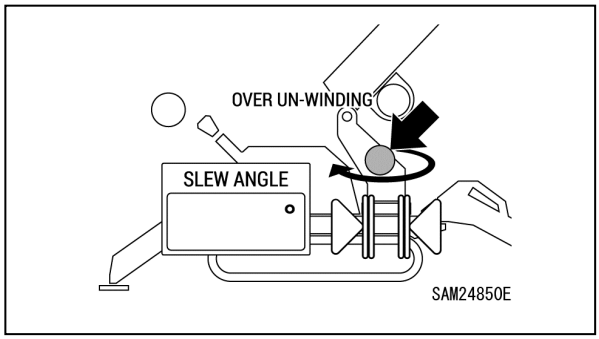

Fig. 5-33

https://truckmanualshub.com/

PERIODIC MAINTENANCE

Periodic Maintenance Schedule

System	Operation	Initial			Periodic				
		10	50	250	50	100	250	500	1000
Machine	Grease machine units	X			X				
Hydraulic	Replace hydraulic oil return filter		X					X	
	Replace oil in hydraulic oil tank		X						X
Slewing Gearcase	Replace oil in slewing reduction gearcase			X					X
Winch Gearcase	Replace oil in winch reduction gearcase			X					X
	Check oil level and refill oil in winch reduction gearcase					X			
Travel Gearcase	Replace oil in travelling motor reduction gearcase			X					X
	Check/Refill oil in travelling motor reduction gearcase						X		

https://truckmanualshub.com/

Periodic Maintenance Procedures

Before performing any of the maintenance or inspection procedures, read “GENERAL MAINTENANCE INFORMATION AND PRECAUTIONS” on page 5-2.

After Initial 10 Hours of Operation

The following maintenance should be performed after the first 10 hours of operation.

- **Grease Machine Units** - See “Grease Machine Units” on page 5-26.

After Initial 50 Hours of Operation

The following maintenance should be performed after the first 50 hours of operation.

- **Replace Oil in Hydraulic Oil Tank** - See “Replace Oil in Hydraulic Oil Tank” on page 5-30.
- **Replace Hydraulic Oil Return Filter** - See “Replace Hydraulic Oil Return Filter” on page 5-29.

After Initial 250 Hours of Operation

The following maintenance should be performed after the first 250 hours of operation.

- **Replace Oil in Slewing Reduction Gearcase** - See “Replace Oil in Slewing Reduction Gearcase” on page 5-32.
- **Replace Oil in Winch Reduction Gearcase** - See “Replace Oil in Winch Reduction Gearcase” on page 5-32.
- **Replace Oil in Travelling Motor Reduction Gearcase** - See “Replace Oil in Travelling Motor Reduction Gearcase” on page 5-34.

https://truckmanualshub.com/

Maintenance Every 50 Hours

Grease Machine Units

Caution: Grease type varies with greasing points. Failure to grease properly may cause the machine to shorten its useful life.

Caution: Greasing a new machine is required once every 10 hours until the machine attains the first 100 hours of operation that initial fit emerges.

- Use proper grease specified below according to the greasing points.

No.	Greasing point		Grease type
1	Greasing of the boom mounting pin	1 place	Lithium grease
2	Greasing of the derrick cylinder bottom mounting pin	1 place	
3	Greasing of the derrick cylinder rod side mounting pin	1 place	
4	Greasing of the outrigger rotary shaft	4 places	
5	Greasing of the outrigger cylinder bottom mounting pin	4 places	
6	Greasing of the outrigger cylinder rod mounting pin	4 places	
7	Greasing of the slewing gear	2 places	
8	Greasing of the boom slide plate	8 places	Molybdenum grease
9	Greasing of both sides and underside of the boom	Each boom	
10	Greasing of the boom extending and retracting wire ropes	4 places	Rope oil
11	Greasing of the winch wire rope	1 piece	
12	Greasing of the outrigger top box pin	4 places	Lithium grease

1. With the use of the grease gun, inject grease through corresponding grease plugs indicated in the arrow (see the following page) of the above table “No.1 to 8, 12”.
2. Wipe off old grease squeezed out after greasing.
3. Place the outriggers when greasing the outrigger cylinders.
4. Place the boom derricking lever in the “Raise” position (pull it toward you) to raise the boom slightly for greasing the derricking cylinder mounting pin and slide plate that is located on top of the boom.
5. Place the boom telescoping lever in the “Extend” position (push it toward the front) to extend the boom for greasing both sides and underside of the boom and wire rope.
6. Apply red rope grease to prevent wire rope abrasion and rust formation.
   With the rope surface cleaned, grease the rope with a brush.

https://truckmanualshub.com/

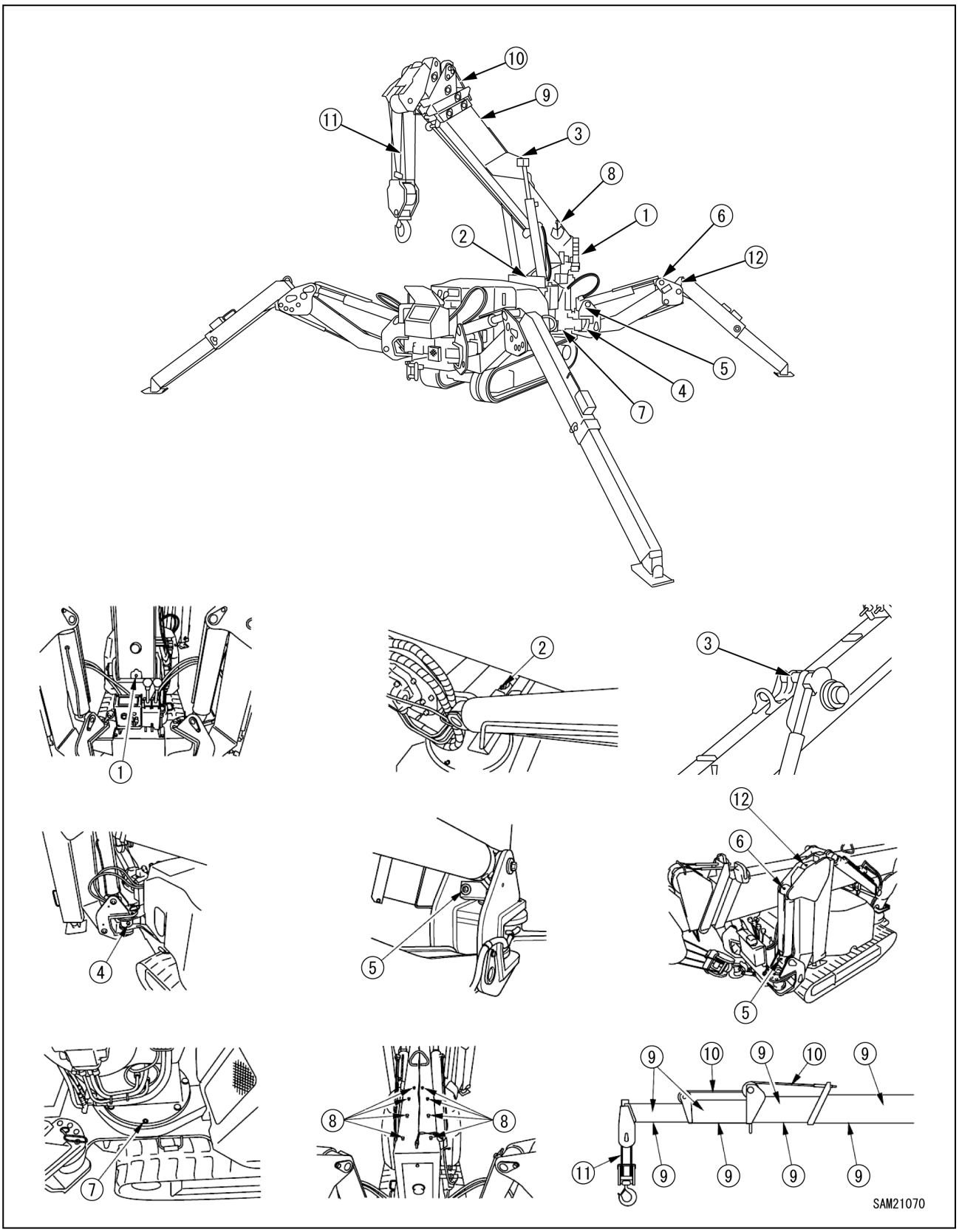

Fig. 5-34

https://truckmanualshub.com/

Maintenance Every 100 Hours

Check Oil Level and Refill Oil in Winch Reduction Gearcase

WARNING! Oil is at elevated temperatures immediately after machine operation. Do not remove the plug of the inspection port immediately. Wait until the oil cools down.

WARNING! Be sure to stop the machine while checking oil level or refilling oil.

CAUTION: When rotating the winch, unstow the hook.

CAUTION: See "LUBRICATING OIL" on page 5-7 for the oil to be used.

CAUTION: Use seal tape, etc. at the thread of the oil inspection plug to stop the oil leak and securely tighten the plug after checking/refilling the oil.

- Allen key to remove a plug: 5 mm

1. Place the machine on a level surface.
2. Rotate the rotary of the No.4 outrigger outward so that the inspection part of the winch reduction gearcase of the post side can be seen.
3. Slowly turn the winch and stop it at a position where the oil inspection plug (G) is visible through the inspection hole (A) on the post side.

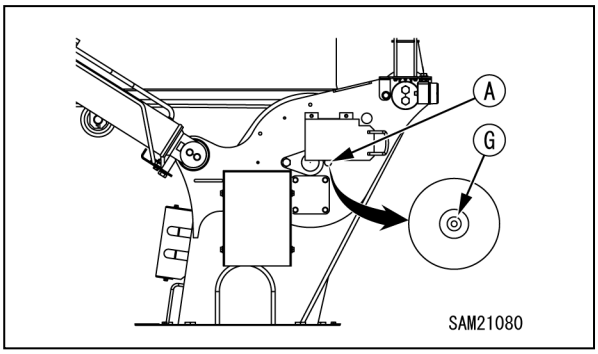

Fig. 5-35

4. Using the Allen key (C), turn and loosen the oil inspection plug to check if gear oil exudes out.

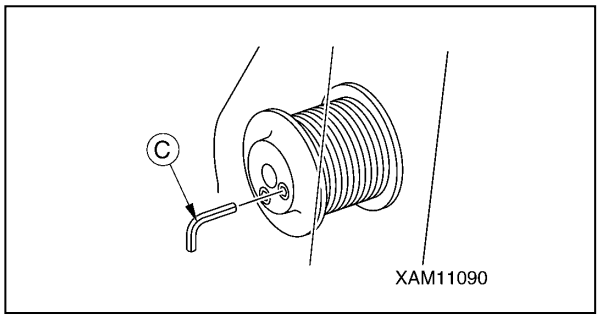

Fig. 5-36

5. If gear oil does not exude out from the oil inspection plug, slowly turn and take it off, and refill the gear oil using oil pump (D).
6. Securely tighten the oil inspection plug after refilling the oil.

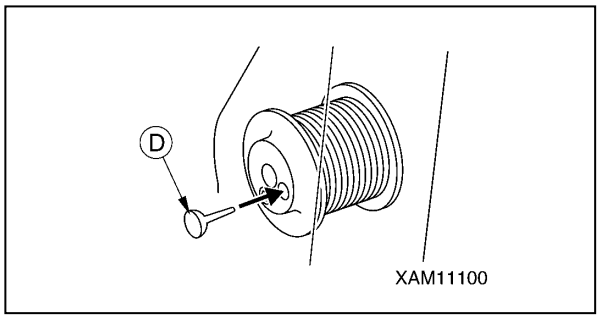

Fig. 5-37

https://truckmanualshub.com/

Maintenance Every 250 Hours

Check / Refill Oil in Travelling Motor Reduction Gearcase

CAUTION: See "LUBRICATING OIL" on page 5-7 for the oil to be used.

CAUTION: Use seal tape, etc. at the thread of the oil inspection plug to stop the oil leak and securely tighten the plug after checking/refilling the oil.

1. Move the machine forward and backward so that drain plug (P) of the travelling motor reduction gearcase will come to the bottom.

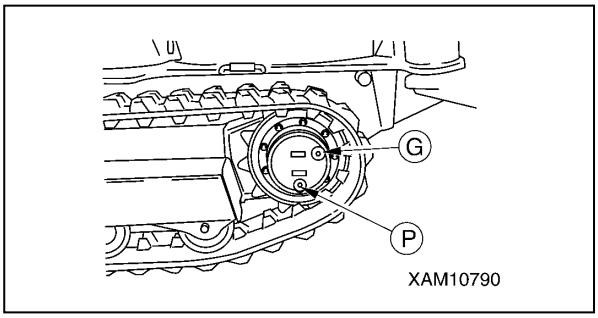

Fig. 5-38

2. Remove the oil inspection plug (G) of the travelling motor reduction gearcase to check if the oil comes out of the plug hole.
3. If the oil level is low, refill the gear oil from the plug hole of the oil inspection plug.

NOTE: Pour in the gear oil until the oil comes out of the oil inspection plug hole.

4. Securely tighten the oil inspection plug after checking/refilling the oil.

Maintenance Every 500 Hours

Replace Hydraulic Oil Return Filter

WARNING! Various parts are at elevated temperatures immediately after machine operation. Do not replace the filter immediately. Wait until the oil is cooled. (Oil temperature 45°C or lower)

WARNING! Oil may spray out when removing the air breather cap on the hydraulic oil tank. Unscrew the cap slightly to relieve the internal pressure before removing it.

WARNING! Tighten the cap securely after replenishing the oil. If not fully tightened, the cap may come loose and fall off during operation, potentially causing burn injuries if hot oil spurts out.

CAUTION: See "LUBRICATING OIL" on page 5-7 for the oil to be used.

CAUTION: Be sure to put the machine in the travelling posture when checking the oil level. If you check the oil level in the working posture, you judge the oil level to be low and feed the oil excessively.

CAUTION: After replacing the filter of hydraulic oil, do not start the machine for a while until piping and hydraulic equipment are filled with the oil.

CAUTION: Avoid the oil exceeding the level point (red point) of the level gauge.
When the oil goes beyond the correct level, it may spout out from the air breather during travelling or crane operation.

Be careful not to let any foreign substance go CAUTION: into the filler opening when refilling the oil.

1. Place the machine on a level surface.
2. See "TRAVELLING POSITION" on page 4-29 and put the machine in the "Travelling posture".
3. See "Removing Machinery Cover" on page 5-11 and remove the machinery cover.

https://truckmanualshub.com/

4. Remove the hose (1) and elbow joint from the return filter (3).

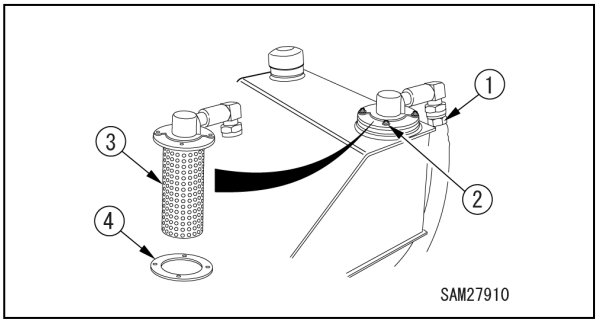

Fig. 5-39

5. Remove the mounting bolts (2) (4 bolts) and lift the return filter to pull it out.
6. Apply liquid packing to the rubber plate (4), mount a new hydraulic oil return filter and securely tighten the mounting bolts (4 bolts).
7. Reinstall the hose and elbow joint removed in step 4.
8. See “Check / Add Hydraulic Oil” on page 5-16 and replenish the hydraulic oil.
9. See “Installing Machinery Cover” on page 5-11 and install the machinery cover.
10. Bleed the air according to the following sequence.
    a. Wait until the pipes and hydraulic equipment are filled with oil before starting the machine.
    b. While keeping the motor speed low, slightly operate each crane control lever to operate each cylinder and winch motor slowly.
    Do not operate the boom hoisting cylinder and telescopic boom cylinder to the stroke end, but stop them at a position approximately 100 mm before the stroke end.
    Repeat this 4 to 5 times.
    c. Extend the outriggers and make the outrigger cylinders telescope in the condition that the machine does not float.
    When making the outrigger cylinder telescope, do not operate it to the stroke end, but stop it at a position approximately 100 mm before the stroke end.
    Repeat this 4 to 5 times.

Maintenance Every 1000 Hours

Replace Oil in Hydraulic Oil Tank

WARNING! Various parts are at elevated temperatures immediately after machine operation. Do not change the oil immediately. Wait until the oil is cooled. (Oil temperature 45°C or lower)

WARNING! Oil may spray out when removing the air breather cap on the hydraulic oil tank. Unscrew the cap slightly to relieve the internal pressure before removing it.

WARNING! Tighten the cap securely after replenishing the oil. If not fully tightened, the cap may come loose and fall off during operation, potentially causing burn injuries if hot oil spurts out.

CAUTION: See “LUBRICATING OIL” on page 5-7 for the oil to be used.

CAUTION: Be sure to put the machine in the travelling posture when checking the oil level. If you check the oil level in the working posture, you judge the oil level to be low and feed the oil excessively.

CAUTION: After replacing the hydraulic oil, do not start the machine for a while until piping and hydraulic equipment are filled with the oil.

CAUTION: Avoid the oil exceeding the level point (red point) of the level gauge.
When the oil goes beyond the correct level, it may spout out from the air breather during travelling or crane operation.
Be careful not to let any foreign substance go into the filler opening when refilling the oil.

- Oil drain pan: Prepare a container of at least 25 L.
- Quantity of oil in hydraulic oil tank for replacement: 20 L

1. Place the machine on a level surface.
2. See “TRAVELLING POSITION” on page 4-29 and put the machine in the “Travelling posture”.
3. See “Removing Machinery Cover” on page 5-11 and remove the machinery cover.

https://truckmanualshub.com/

4. See “Air Breather Inspection” on page 5-49 and remove the air breather cap (1) from the oil inlet (F) on the top of the hydraulic oil tank.

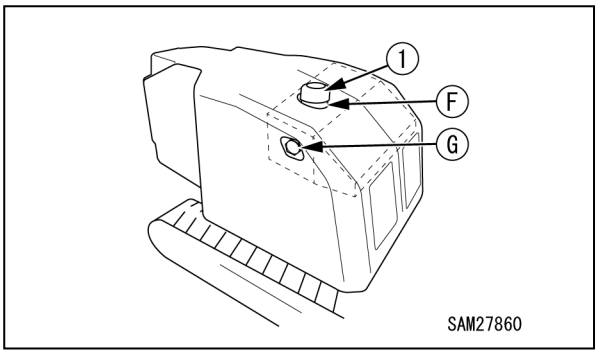

Fig. 5-40

5. Place a drain pan directly underneath the drain port cap (P) to receive drained oil.

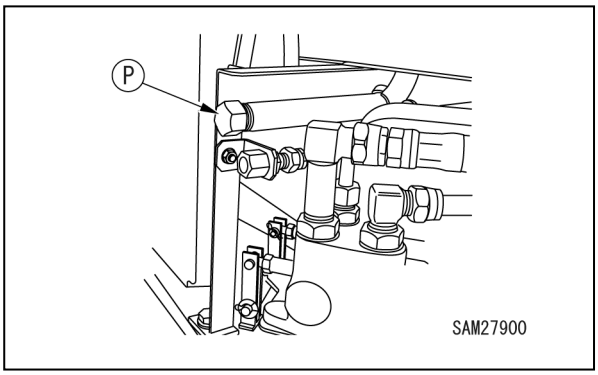

Fig. 5-41

6. Remove the drain port cap slowly to drain the oil, keeping from contact with draining oil.
7. Check the drained oil and if it contains an unacceptable amount of metal particles or foreign matter, contact our sales service agency.
8. Install the drain port cap.
9. Feed hydraulic oil through the filler port to the level point (red dot) while looking at the oil level gauge.

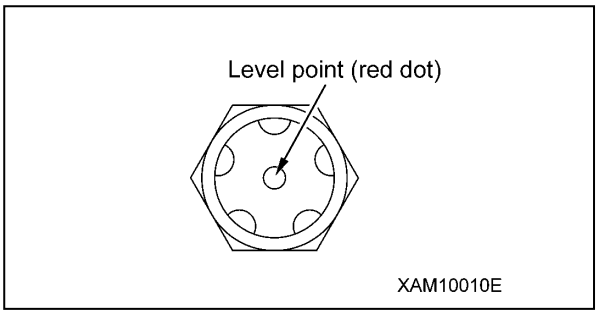

Fig. 5-42

10. After replenishing the oil, see “Air Breather Inspection” on page 5-49 and securely reattach the air breather cap (1) on the oil inlet (F).
11. See “Installing Machinery Cover” on page 5-11 and install the machinery cover.
12. Bleed the air according to the following sequence.
    a. Wait until the pipes and hydraulic equipment are filled with oil before starting the machine.
    b. While keeping the motor speed low, slightly operate each crane control lever to operate each cylinder and winch motor slowly.
    Do not operate the boom hoisting cylinder and telescopic boom cylinder to the stroke end, but stop them at a position approximately 100 mm before the stroke end.
    Repeat this 4 to 5 times.
    c. Extend the outriggers and make the outrigger cylinders telescope in the condition that the machine does not float. When making the outrigger cylinder telescope, do not operate it to the stroke end, but stop it at a position approximately 4 in. (100 mm) before the stroke end.
    Repeat this 4 to 5 times.

https://truckmanualshub.com/

Replace Oil in Slewing Reduction Gearcase

WARNING! The drain plug of the slewing reduction gearcase is located directly underneath the machine.
To drain oil, use outriggers to raise the rubber track about 80 mm, allowing access under the machine. If the machine becomes unstable and wobbles, insert supports under the front and back of the machine to gain stability.

CAUTION: See “LUBRICATING OIL” on page 5-7 for the oil to be used.

CAUTION: Use seal tape, etc. at the thread of the drain plug and filler plug to stop the oil leak and securely tighten the plugs after changing the oil.

- Oil drain pan: Prepare a container of at least 1 L.
- Oil replacement quantity in slewing reduction gearcase: 0.6 L

1. Place the machine on a level surface.
2. See “OUTRIGGER SETTING” on page 4-43 to set outriggers and raise the machine about 80 mm above the ground.
3. Place a drain pan directly underneath the drain plug (P) of the slewing reduction gearcase to receive drained oil.

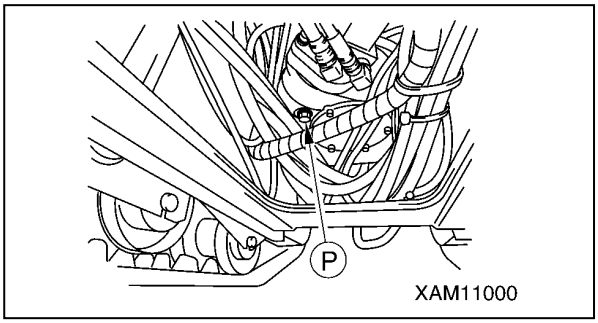

Fig. 5-43

4. Turn the drain plug slowly to avoid splashing oil on yourself, and drain oil.
5. Check the drained oil and if it contains an unacceptable amount of metal particles or foreign matter, contact our sales service agency.
6. Install a drain plug.
7. See "OUTRIGGER STOWING" on page 4-53 to stow the outriggers.
8. See “Removing Machinery Cover” on page 5-11 and remove the machinery cover.
9. Remove the filler plug (F) at slewing reduction gearcase. Fill with gear oil from the plug hole up to the middle of the gearcase.

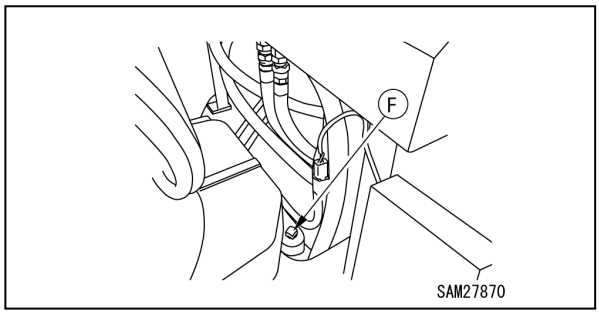

Fig. 5-44

NOTE: The height at centre of gearcase is 50 mm from the top of the filler plug.
50 mm ± (5 mm) is the appropriate oil level.

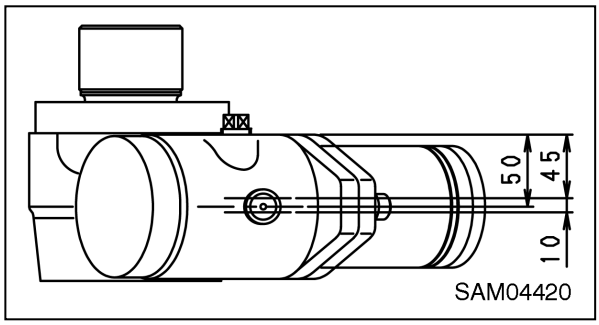

Fig. 5-45

Do not allow ingress of dust or dirt when measuring or filling oil.

10. Securely tighten the filler plug after changing the oil.
11. See “Installing Machinery Cover” on page 5-11 and install the machinery cover.

https://truckmanualshub.com/

Replace Oil in Winch Reduction Gearcase

WARNING! Oil is at elevated temperatures immediately after machine operation.
Do not remove the plug of the inspection port or drain port immediately. Wait until the oil cools down.

CAUTION: See "LUBRICATING OIL" on page 5-7 for the oil to be used.

CAUTION: When rotating the winch, unstow the hook.

CAUTION: After oil replacement, use seal tape for the threaded portion of the oil level inspection plug and drain plug to stop the leakage and securely tighten the plugs.

- Oil drain pan: Prepare a container of at least 1 L.
- Allen key to remove a plug: 5 mm
- Oil replacement quantity in slewing reduction gearcase: 0.5 L

1. Place the machine on a level surface.
2. Rotate the rotary of the No.4 outrigger outward so that the inspection part of the winch reduction gearcase of the post side can be seen.
3. Remove the inspection cover (1) by unscrewing the mounting bolts (2) (4 bolts).

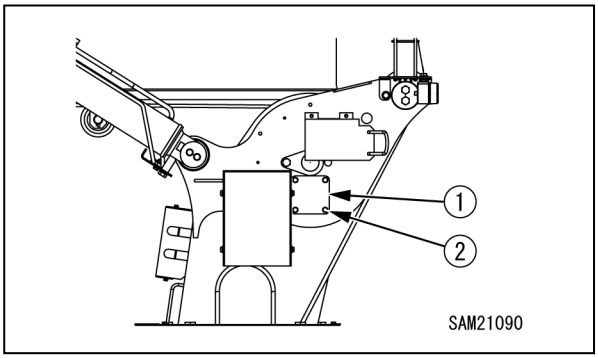

Fig. 5-46

4. Turn the winch slowly to a position where both the oil inspection plug (G) and drain plug (P) can be seen.

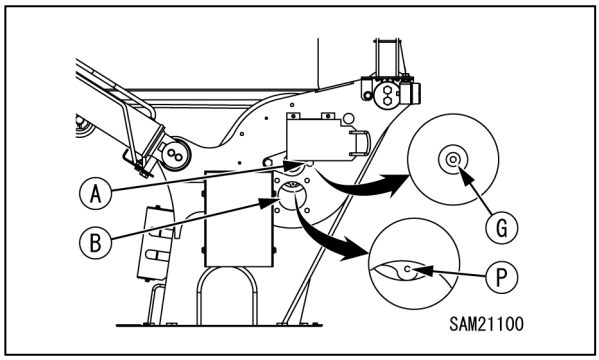

Fig. 5-47

   a. Stop it at a position where the oil inspection plug is visible through the inspection hole (A) on the post side.
   b. Stop it at a position where the drain plug of the reduction gearcase is visible at the upper part of the inspection hole (B).
5. With the Allen key (C), turn and remove the drain plug (P).

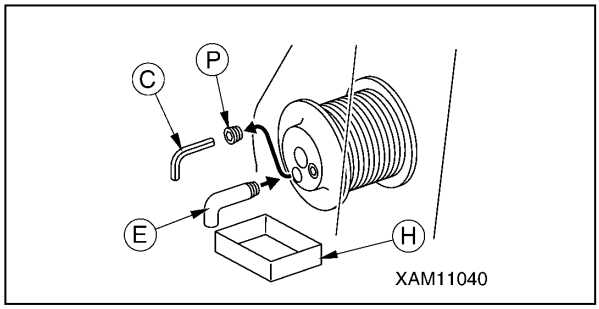

Fig. 5-48

6. Mount the elbow (E) for draining oil to the screw hole of the drain plug.
7. Place a container (H) to collect the drained oil just below the elbow.
8. With the Allen key (C), turn and remove the oil inspection plug (G). Gear oil in the reduction gearcase is drained.

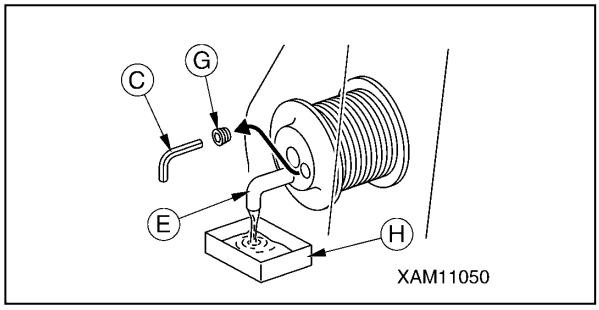

Fig. 5-49

9. After gear oil in the reduction gearcase is completely drained, detach the elbow, and reinstall the drain plug and securely tighten it.

https://truckmanualshub.com/

10. Install the inspection cover (1) and tighten the mounting bolts (2) (4 bolts).

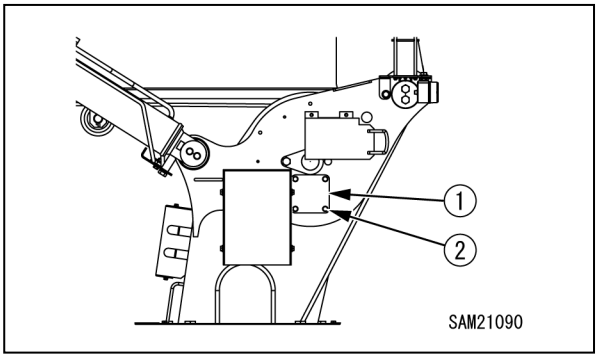

Fig. 5-50

11. Feed the gear oil through the oil inspection plug hole using an oil pump (D).

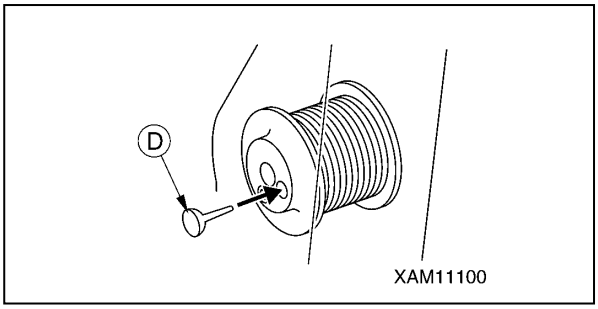

Fig. 5-51

NOTE: Pour in the gear oil until it comes out of the oil inspection plug hole.

12. After the replenishment of oil, securely tighten the oil inspection plug.

NOTE: After changing the oil, operate the winch for 5 minutes to lubricate all parts, without hoisting load.

Replace Oil in Travelling Motor Reduction Gearcase

CAUTION: See “LUBRICATING OIL” on page 5-7 for the oil to be used.

CAUTION: Use seal tape, etc. at the thread of the drain plug and oil inspection plug to stop the oil leak and securely tighten the plugs after checking/refilling the oil.

- Oil drain pan: Prepare a container of at least 0.3 gal (1 L).
- Oil replacement quantity in travelling motor reduction gearcase: 0.1 gal (0.33 L)

1. Place the machine on a level surface.
2. Move the machine forward and backward so that drain plug (P) of the travelling motor reduction gearcase will come to the bottom.

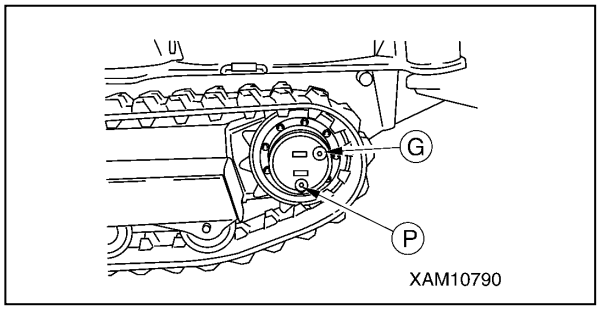

Fig. 5-52

3. Place a drain pan directly underneath the drain plug to receive drained oil.
4. Remove the oil inspection plug (G).
5. Turn the drain plug slowly to avoid splashing oil on yourself, and drain oil.
6. Check the drained oil and if it contains an unacceptable amount of metal particles or foreign matter, contact us or our sales service agency.
7. Securely tighten the drain plug.
8. Feed the gear oil through the plug hole of the oil inspection plug.

NOTE: Pour in the gear oil until the oil comes out of the oil inspection plug hole.

9. Securely tighten the oil inspection plug after refilling the oil.

https://truckmanualshub.com/

GENERAL MACHINE MAINTENANCE

Rubber Tracks

General Information and Precautions

Operating on sharp-edged rocks or steel will damage the rubber tracks.

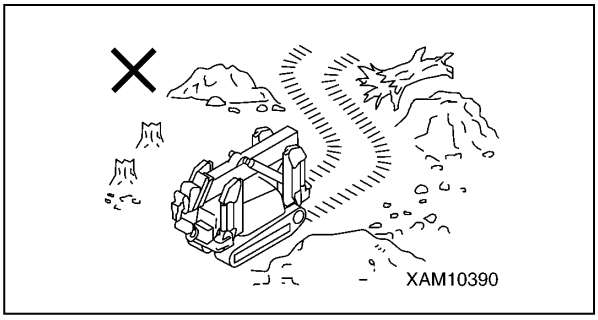

Fig. 5-53

Operating in river beds with stones can cause track damage.

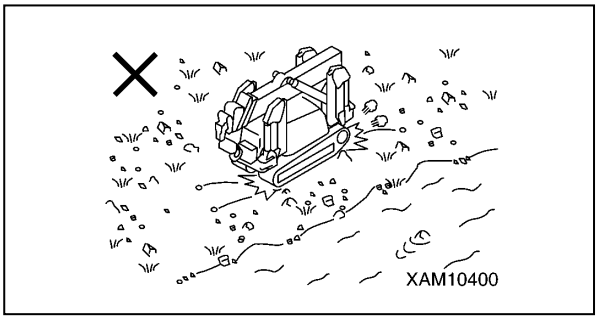

Fig. 5-54

Keep oil and chemical solvents away from the rubber tracks. Remove and clean any oil and chemical solvents immediately. Do not travel over road surfaces covered in oil.

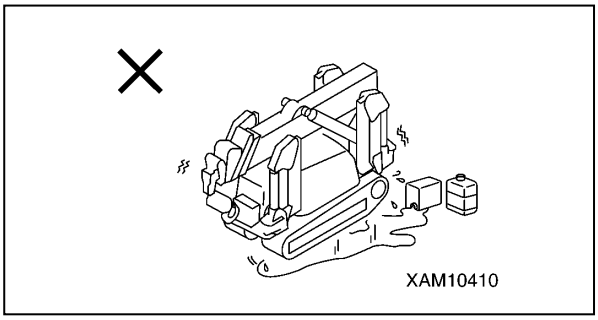

Fig. 5-55

Do not operate on a fire or on hot surfaces such as steel plates left in the sun or newly poured asphalt.

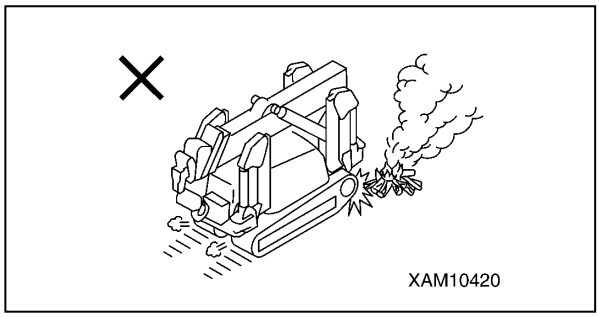

Fig. 5-56

Keep the rubber tracks indoors, out of direct sunlight and rain when storing for up to 3 months or more.

Avoid making spin turns on concrete surfaces. Sudden direction changes may damage the rubber tracks.

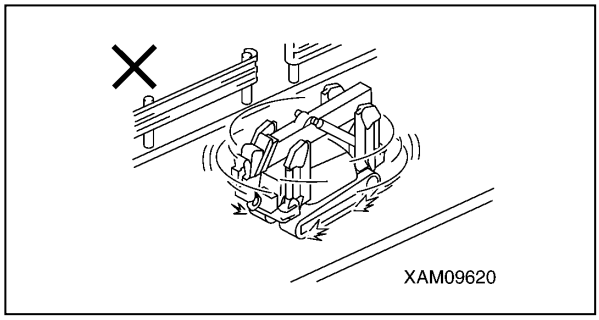

Fig. 5-57

Avoid operating with the edge of the rubber tracks against concrete or walls.

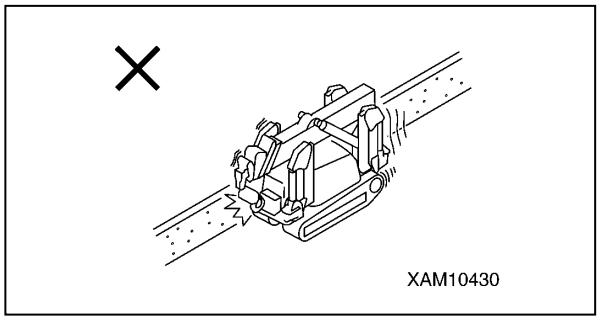

Fig. 5-58

https://truckmanualshub.com/

Avoid steering while travelling over steps. Travel the machine perpendicular to the steps. Travelling diagonally may result in the rubber tracks falling off.

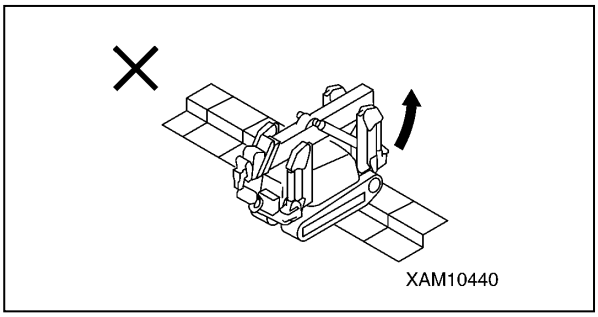

Fig. 5-59

Rubber tracks can slip on wet steel plates, snow and frozen surfaces. Operation in very cold climates can shorten the life of the rubber tracks.

Operate with caution when travelling on slopes to avoid track slippage.

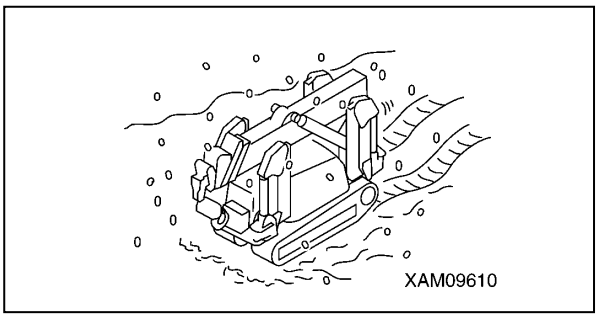

Fig. 5-60

As much as possible, avoid operating the rubber tracks on the following materials. Always wash the tracks immediately and thoroughly with water after use on the following materials.

- Material crushed and yielding oil, such as soy beans, corns and rapeseed.
- Ammonium sulfate, potassium chloride or concentrated super phosphate. These are corrosive and will corrode the bonding of the cored bar section.

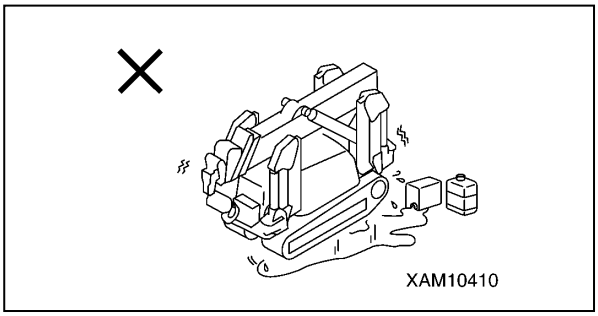

Fig. 5-61

- Salt water and shore areas. Salt corrodes the bonding of the cored bar section.

Only use the rubber tracks within the temperature range of -25 to + 55°C.

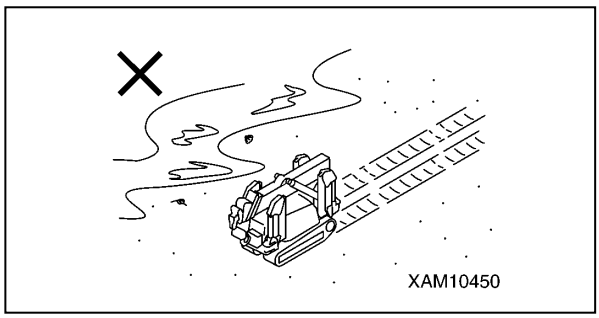

Fig. 5-62

When travelling over foods such as salt, sugar, wheat and soybeans, pieces of wire or rubber may become mixed in the food if the tracks are damaged. Avoid travelling over foods or inspect and repair as necessary before travelling over foods.

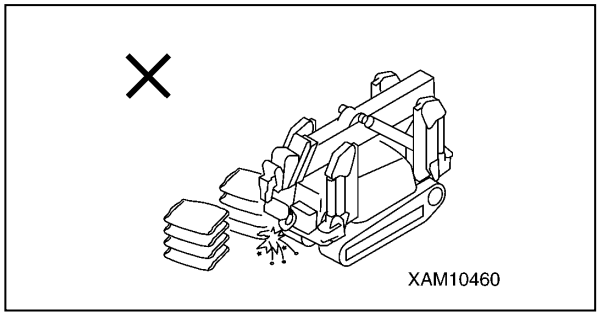

Fig. 5-63

Loose track tension will allow the rubber tracks to fall off. Keep the track at the specified tension at all times.

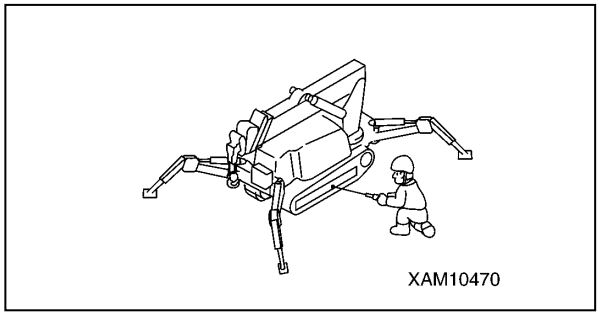

Fig. 5-64

https://truckmanualshub.com/

Inspection of Rubber Tracks

Contact us or our sales service agency to request inspection and repair service of the rubber tracks.

The presence of any of the following conditions indicates repair or replacement of the rubber track is required.

Lug Height

Worn lug height can cause a reduction in traction force when:

- Lug height (a) is less than 5 mm.

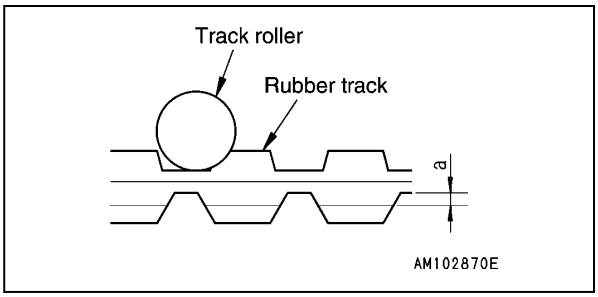

Fig. 5-65

- Lugs are worn and the steel cord inside the rubber track is exposing more than two links.

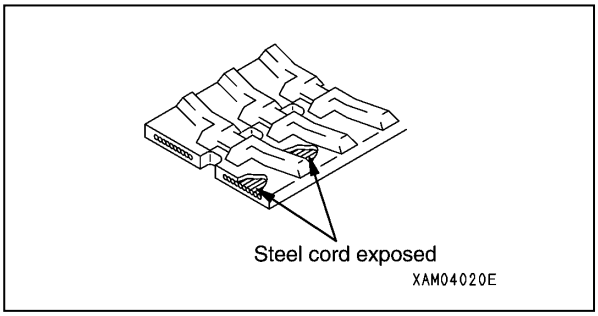

Fig. 5-66

Broken Steel Cords

- More than half of the steel cord layer is broken on one side.

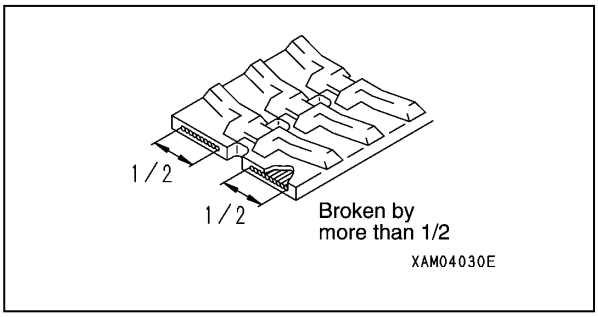

Fig. 5-67

Fallen Core Metal

Core metal of the rubber track has fallen out of more than one location.

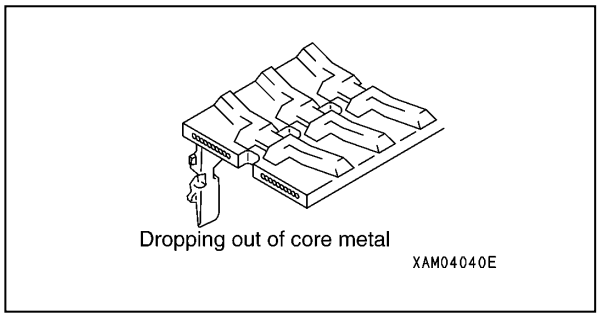

Fig. 5-68

Cracks

Cracks occur between the rubber track lugs.

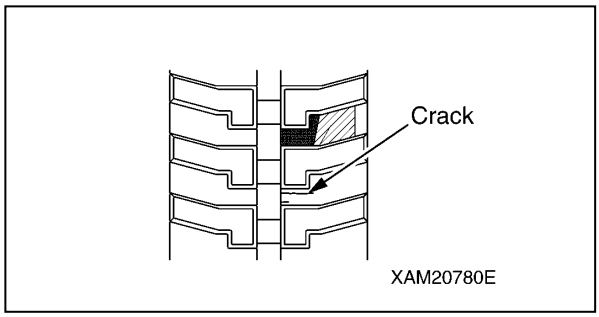

Fig. 5-69

Removal of Rubber Tracks

WARNING! Exposure Hazard. The rubber track tension adjuster contains grease under high pressure.

Use the following guidelines when removing the tracks.

- Do not turn the grease valve more than one full turn out.
- Stand to the side of the adjuster when adjusting tension or removing the track.
- Ensure all grease is removed from the inside of the rubber track before rotating the sprocket to remove the rubber track.

https://truckmanualshub.com/

A steel pipe is required for the following procedure.

1. Set the outriggers and raise the tracks approximately 50 mm from the ground. See “OUTRIGGER SETTING” on page 4-43.
2. Remove the two screws (2) and cover plate (1).

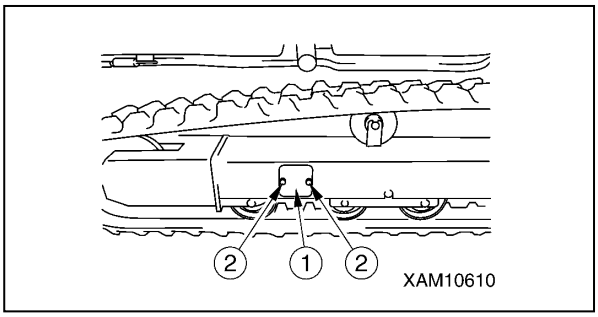

Fig. 5-70

3. Loosen the grease valve (3) slowly and remove grease. Do not turn the grease valve more than one full turn out.

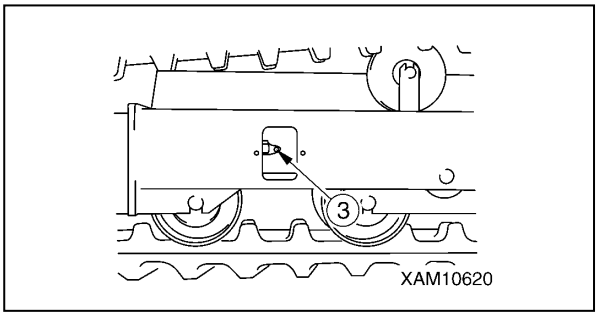

Fig. 5-71

4. Insert the steel pipe between the idler and rubber track, as shown below, and rotate the sprocket backward.

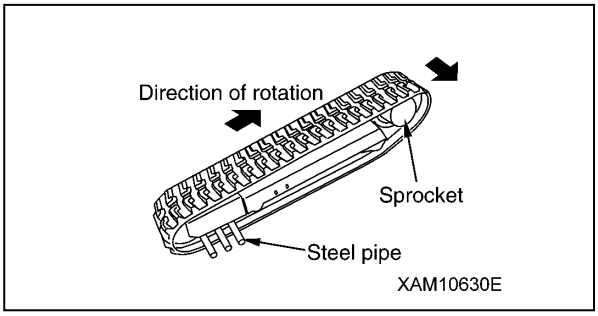

Fig. 5-72

5. After the rubber track is free from the idler, slide the crawler in a lateral direction to remove it.

Installation of Rubber Tracks

A grease gun and steel pipe are required for the following procedure.

1. Set the outriggers and raise the tracks approximately 50 mm from the ground. See “OUTRIGGER SETTING” on page 4-43.
2. With the rubber track engaged with the sprocket, install the crawler on the idler.
3. With the sprocket rotating backward, push the rubber track in to stop rotation.

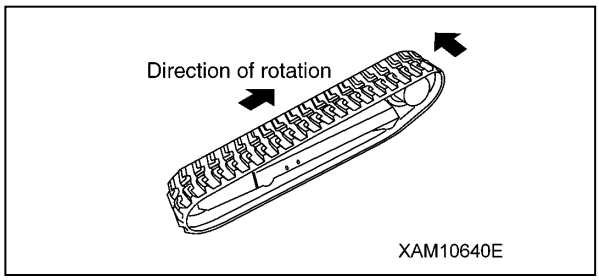

Fig. 5-73

4. Insert the steel pipe between the idler and rubber track again, and rotate the sprocket to install the crawler on the idler.

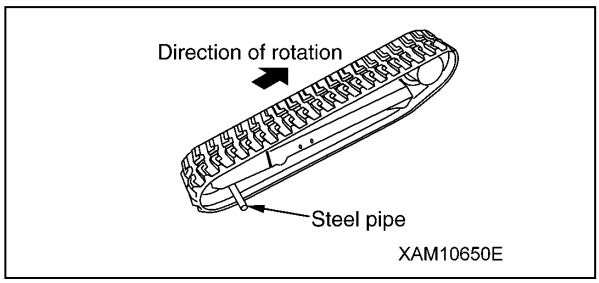

Fig. 5-74

5. Stop rotation and ensure that the rubber track is on the sprocket and idler properly.

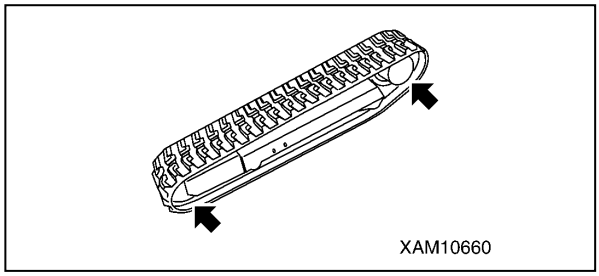

Fig. 5-75

6. Adjust the rubber track tension.
   See “Checking Rubber Track Tension” on page 5-39 and “Adjusting Rubber Track Tension” on page 5-39.
7. Stow the outriggers and lower the machine to the ground. See "OUTRIGGER STOWING" on page 4-53.

https://truckmanualshub.com/

Checking Rubber Track Tension

Rubber tracks wear differently depending on working conditions and soil quality. Periodically check for wear and measure tension of the rubber tracks.

On a new machine or when new parts are installed, initial slack occurs between 5 and 30 hours of operation. Inspect and adjust the tension frequently during the initial slack period to prevent the rubber track from falling off due to insufficient tension.

1. Move the left and right crawlers so the connection of the rubber track (M) comes to the top centre between the axles.

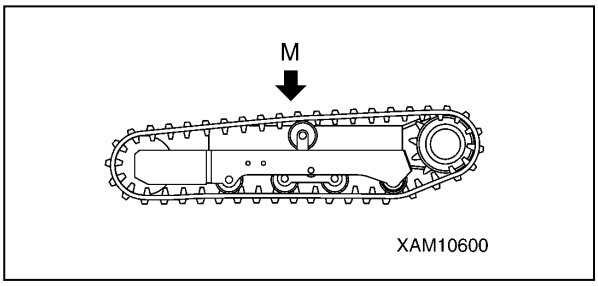

Fig. 5-76

2. Set the outriggers and raise the tracks approximately 80 mm from the ground. See “OUTRIGGER SETTING” on page 4-43.

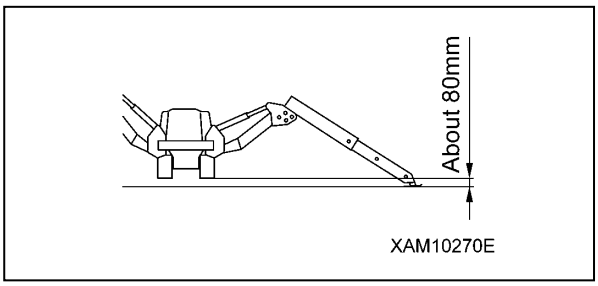

Fig. 5-77

3. Measure the clearance between the centre of the track roller wheel tread and the shoulder of the rubber track.
4. Standard tension of the rubber track is 5 to 10 mm clearance between the wheel tread of the centre of the track roller and the shoulder of the rubber track.

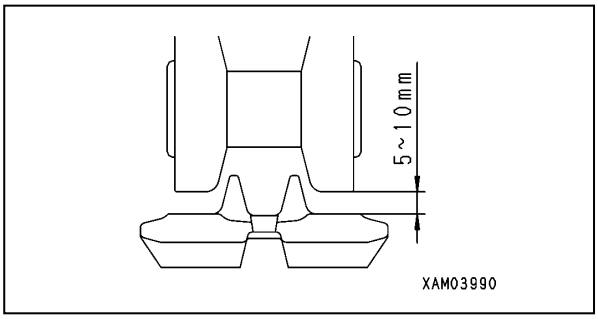

Fig. 5-78

5. If the tension is not within specification, see “Adjusting Rubber Track Tension” on page 5-39.

Adjusting Rubber Track Tension

WARNING! Exposure Hazard. The rubber track tension adjuster contains grease under high pressure.

Use the following guidelines when adjusting track tension.

- Do not turn the grease valve more than one full turn out.
- Stand to the side of the adjuster when adjusting tension.
- Check the tension of the rubber track before adjusting. See “Checking Rubber Track Tension” on page 5-39.

In case the tension is too low (to increase tension)

If the rubber track tension is too low (15 mm or more), the track could fall off during operation and cause premature wear of the metal core. Perform the following adjustments.

6. With two mounting bolts (2) removed, take off the inspection cover (1).

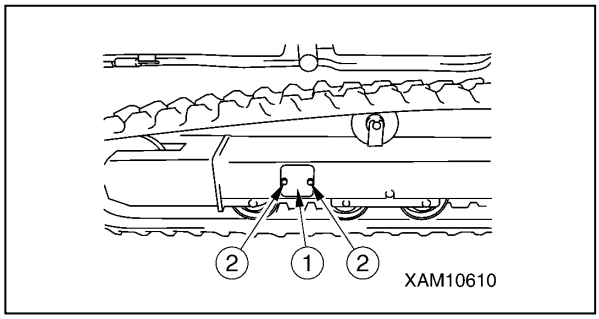

Fig. 5-79

7. Pack the grease through grease valve (3) by means of grease gun.

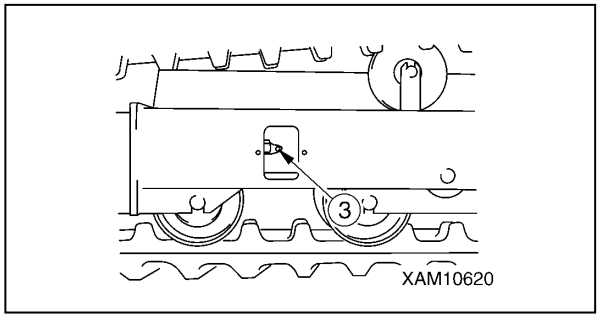

Fig. 5-80

https://truckmanualshub.com/

8. To confirm that the tension is proper, proceed with following:
   - With the outrigger stowed, ground the machine. See "OUTRIGGER STOWING" on page 4-53.
   - Let the machine travel back and forth.
   - Set up the outrigger and lift the machine about 80 mm off the ground. See “OUTRIGGER SETTING” on page 4-43.
9. Again, conduct the rubber track tension check. If it is not proper yet, repeat the procedure again.
10. Using the two mounting bolts, reinstall the inspection cover.
11. Stow the outrigger and lower the machine to the ground. See "OUTRIGGER STOWING" on page 4-53.

In case the tension is strong (to reduce tension)

1. With two mounting bolts (2) removed, remove the inspection cover (1).

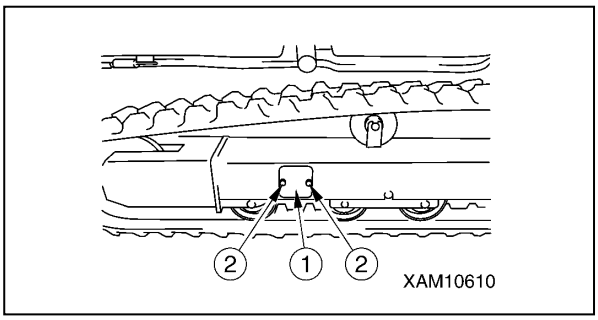

Fig. 5-81

2. Loosen grease valve (3) slowly to let the grease come out.

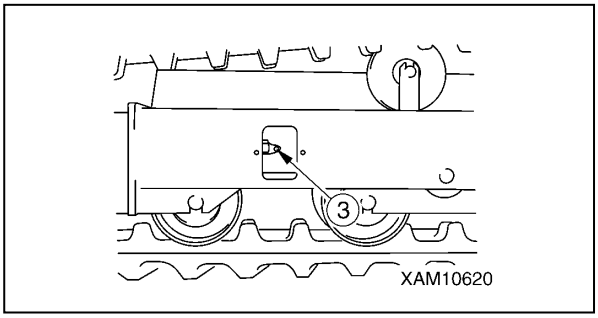

Fig. 5-82

3. Use care not to loosen the grease valve by more than one turn.
4. If the grease does not come out smoothly, take following measures:
   a. Stow the outrigger and lower the machine to the ground. See "OUTRIGGER STOWING" on page 4-53.
   b. Move the machine back and forth.
   c. Set up outrigger and lift the undercarriage off the ground about 80 mm. See “OUTRIGGER SETTING” on page 4-43.
5. Tighten the grease valve).
6. Conduct the rubber crawler tension check. If the tension is still improper, repeat the adjustment again.
7. Using the two mounting bolts, reinstall the inspection cover.
8. Stow the outrigger and lower the machine to the ground.

https://truckmanualshub.com/

Wire Rope

General Information and Precautions

Contact us or our sales service agency for additional information on replacing and repairing wire rope.

WARNING! Exposure Hazard. Always wear leather gloves when handling wire rope.

NOTICE: Do not use old wire ropes, even if they have not been used.

Always use the Maeda genuine wire rope as specified for the application by Maeda.

Inspecting Wire Rope

Inspect all wire ropes daily before work and inspect the sheave at the tip of the boom and the sheave of the hook block. Damaged sheaves accelerate the damage of the wire ropes. Replace components immediately if at or beyond the replacement standard.

The benchmark for replacing wire ropes is common to all wire ropes for winching, telescoping the boom and slinging.

Wire rope fatigues with normal use. Change wire ropes when they show the following signs:

- Broken wire
- In running rope, six randomly distributed broken wires in one lay or three broken wires in one strand in one lay

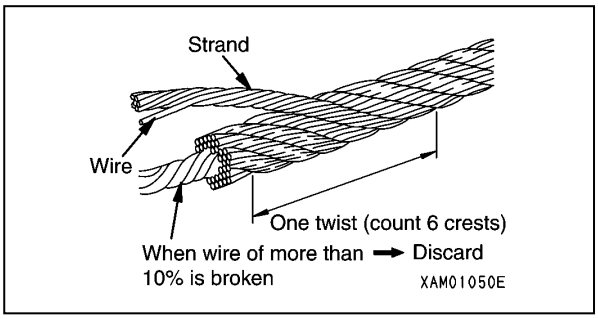

Fig. 5-83

- Kinking, crushing, birdcaging or any other damage resulting in distortion of the rope structure
- Evidence of any heat damage

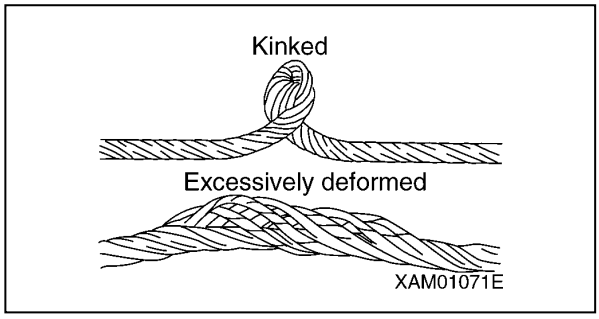

Fig. 5-84

- Wire rope with a diameter of 9 mm should be replaced when it becomes 8.4 mm.
- Wire rope with a diameter of 8 mm should be replaced when it becomes 7.5 mm.
- Wire rope with a diameter of 7 mm should be replaced when it becomes 6.6 mm.
- Wire rope with a diameter of 6 mm should be replaced when it becomes 5.6 mm.
- Wire rope with a diameter of 5 mm should be replaced when it becomes 4.7 mm.

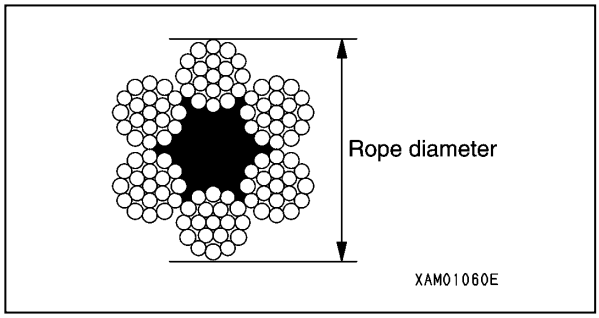

Fig. 5-85

https://truckmanualshub.com/

Measuring Wire Rope

Measure the wire rope diameter nominal dimension at the section where the rope repeatedly passes through the sheave. Measure from three directions and average the value.

- Wire rope for winch:
- IWRC 6 x Fi (29) 0/0 7 x 46 m
- Wire rope for extending no. 4 boom:
- IWRC 6 x Fi (29) 0/0 9 x 4.92 m
- Wire rope for retracting no. 4 boom:
- IWRC 6 x Fi (29) 0/0 8 x 8.28 m
- Wire rope for extending no. 5 boom:
- IWRC 6 x Fi (29) 0/0 6 x 4.655 m
- Wire rope for retracting no. 5 boom:
- FC 6 × 37 0/0 5 × 7.85 m

Winch Wire Rope - Correcting Twisted Rope

NOTICE: Change the hook direction of the wire rope (inverse the hook block side and winch drum side) periodically to extend the life of the wire rope.

NOTICE: Do not winch up or down while the hook block is on the ground. Otherwise, the wire rope may become tangled on the winch drum.

Straighten twisted winch wire rope using the following procedure:

1. With the hook in normal position, note the twisting direction and number of twists.

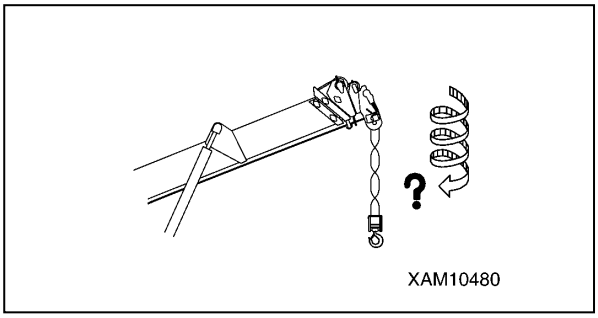

Fig. 5-86

2. Move the winch lever to LOWER (push forward) to lower the hook block until just before it makes contact with the ground. Lower the hook block by either moving the boom lifting lever to LOWER (push forward) to lower the boom or by moving the boom telescoping lever to RETRACT (pull toward you) to retract the boom.
3. Turn the Starter Switch to OFF to stop the machine.
4. Remove the wedge socket pin fixing bolt (3) to remove the wedge socket (2).

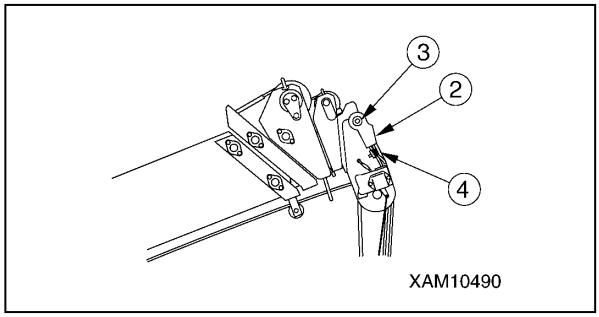

Fig. 5-87

5. Twist the end of the wire the number of times the hook is twisted, in the opposite direction the hook block is twisted.
6. Once the wire rope is untwisted, install the wire rope.
7. Start the machine and move the boom lift lever to RAISE (pull toward you) to increase the boom angle to its maximum.
8. Move the boom telescoping lever to EXTEND (push forward) to extend the boom to its maximum.
9. Move the winch lever to repeat raising and lowering the hook block several times.
10. Carefully and neatly spool up the wire rope onto the winch drum with some tension applied to the rope.

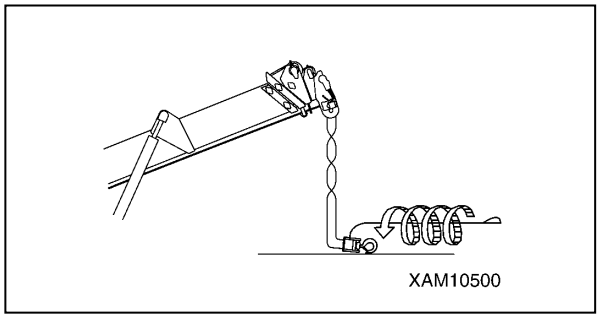

Fig. 5-88

11. Repeat the above procedure until the hook untwists. If the wire rope is still twisted after repeating the procedure above, replace the wire rope.

https://truckmanualshub.com/

Winch Wire Rope - Removal

1. Place the machine on level, hard ground.
2. Push the boom telescoping lever forward to EXTEND and extend the boom slightly.
3. Push the winch lever forward to DOWN to ground the hook block.
4. After removing the wedge socket pin fixing bolt (2), remove the wedge socket (3).

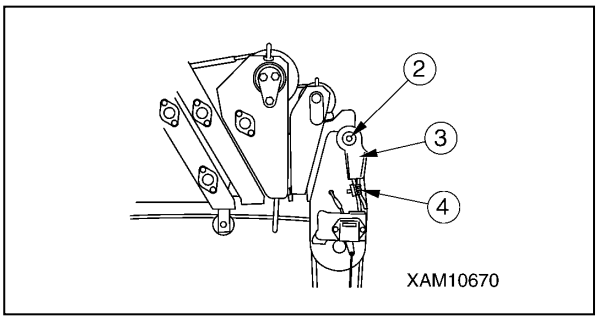

Fig. 5-89

5. Remove the wire clip (4).
6. Remove wire rope (5) from the wedge socket (3) using the following procedure:
   - Have a piece of round bar (6) with a diameter of 4 to 6 mm ready and apply it to rope wedge (7).
   - Lightly tap round bar with hammer in the direction of the arrow (a) to remove the rope wedge.

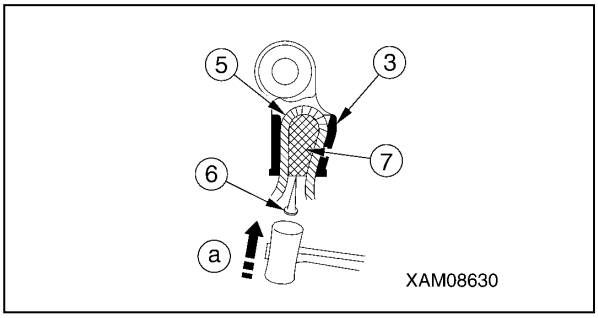

Fig. 5-90

7. Push the winch lever forward to DOWN and remove the wire rope from winch drum.
8. When you have removed the wire rope, remove the end of the wire rope that was attached to the winch drum (8) using the following procedure:
   - Have a piece of round bar (6) with a diameter of 4 to 6 mm ready and apply it to rope wedge (9).
   - Lightly tap round bar with hammer in the direction indicated by the arrow (b) to remove the rope wedge.

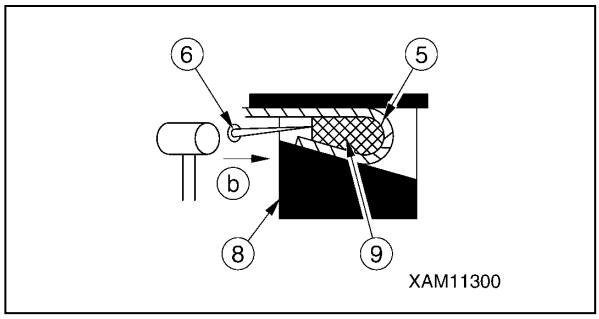

Fig. 5-91

9. Remove the remaining wire rope (5) completely.

Winch Wire Rope - Installation

WARNING! The following safety messages address a potential Lift Hazard:

- **Always attach the rope wedge securely to the wire rope.**
- **Avoid irregular winding of the wire rope in the winch drum.**
- **Always hoist an object 2.9 to 4.9 kN [300 to 500 kg] with the boom extended and raised fully immediately after attaching a new rope. Repeat raising and lowering the hook several times until the new rope conforms.**
- **Do not kink the rope when winding up. Always unwind by the rope by pulling it off the winch drum.**

https://truckmanualshub.com/

Use the following procedure to attach the wire rope.

1. With the end of the wire rope held taught, draw the wire rope (5) through the weight of the over winding detector, the load sheaves (1) at the boom end wire guide (2) of no. 2, 3 and 4 boom snap sheave (3), and idler sheave (4).

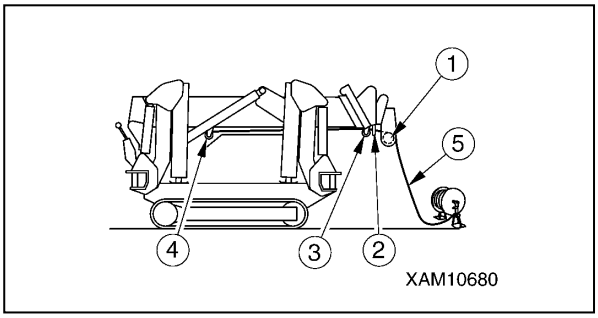

Fig. 5-92

2. Draw the wire rope (5) through the attachment hole of the winch drum (8).

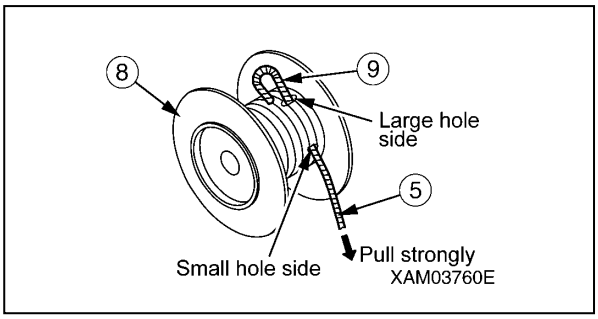

Fig. 5-93

Secure the wire rope to the winch drum using the following procedure.

a. Draw the wire rope through the winch drum with the rope loose.
b. The rope wedge (9) should be in position (a). Pass the wire rope around the rope wedge and pull the rope in the direction indicated by the arrow. Adjust the length of the wire rope to keep the end of the wire rope from protruding from the narrow hole in the winch drum.

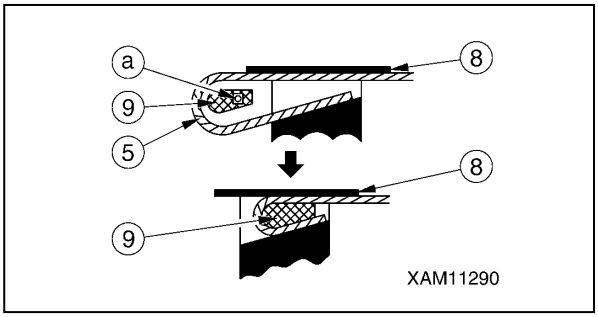

Fig. 5-94

3. Slowly move the winch lever to the UP position (pull it toward you) to wind up the wire rope (5) in the winch drum (8). Wind the wire rope around the winch drum. The wire rope needs to be out the boom end approximately 10 m.
4. In relation to the number of falls, draw the wire rope through the load sheave at the boom end, hook block sheave, guide sheave and retraction cam.

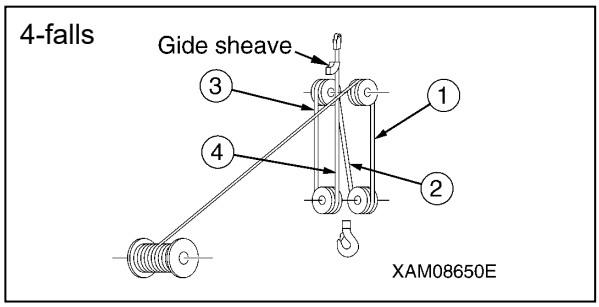

Fig. 5-95

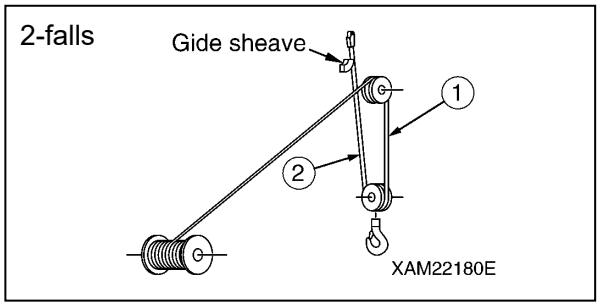

Fig. 5-96

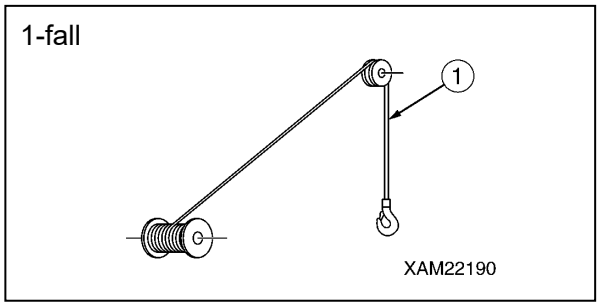

Fig. 5-97

https://truckmanualshub.com/

As shown in the figure, thread the wire rope (5) through the fixed sheaves (10) and (11) at the end of boom No. 5.

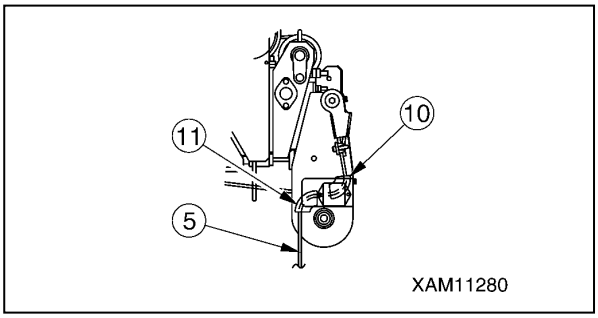

Fig. 5-98

5. Secure the end of the wire rope (5) to the wedge socket (3) using the following steps.

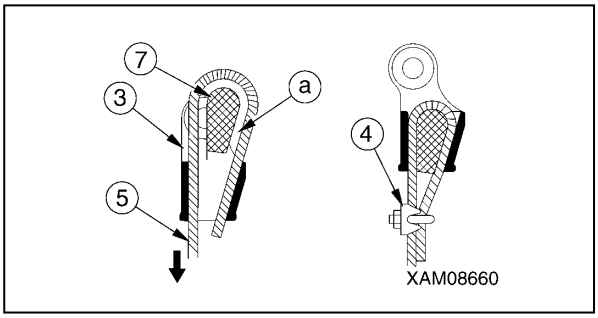

Fig. 5-99

6. Draw the wire rope through the wedge socket.
7. With the rope wedge (7) in position, pull the wire rope.
8. Fasten the rope (10) together with the rope clip (4) to the dead end of the wire rope.

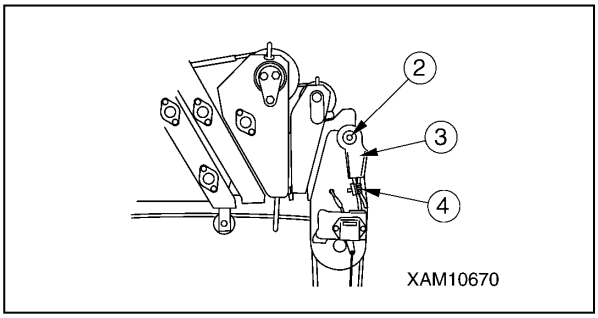

Fig. 5-100

9. Secure the wedge socket (3) to the boom with the wedge socket pin (1) and tighten the wedge socket pin fixing bolt (2).
10. Place the boom lift lever in the RAISE position (pull it toward you) or place the boom telescoping lever in the EXTEND position (pull it toward you) to raise the hook block. Winch operation is allowed only after the hook block is raised.
11. With the boom extended and raised fully, place the winch lever in the DOWN position (push it toward the front) to adjust the wire rope until three to four turns of wire are left in the winch drum.
12. With the wire rope held under tension, place the winch lever in the UP position (pull it toward you) to wind up the wire rope in the winch drum.

https://truckmanualshub.com/

Wire Rope - Boom Telescope Extension

Inspection

Check Wire Rope

1. Position the boom horizontally and while retracting the boom, check to see that the boom pull-out wire rope is slackened at its midway. If it is slacked down, see “Boom Telescope Wire Rope Adjustment” on page 5-47 and make the adjustment.

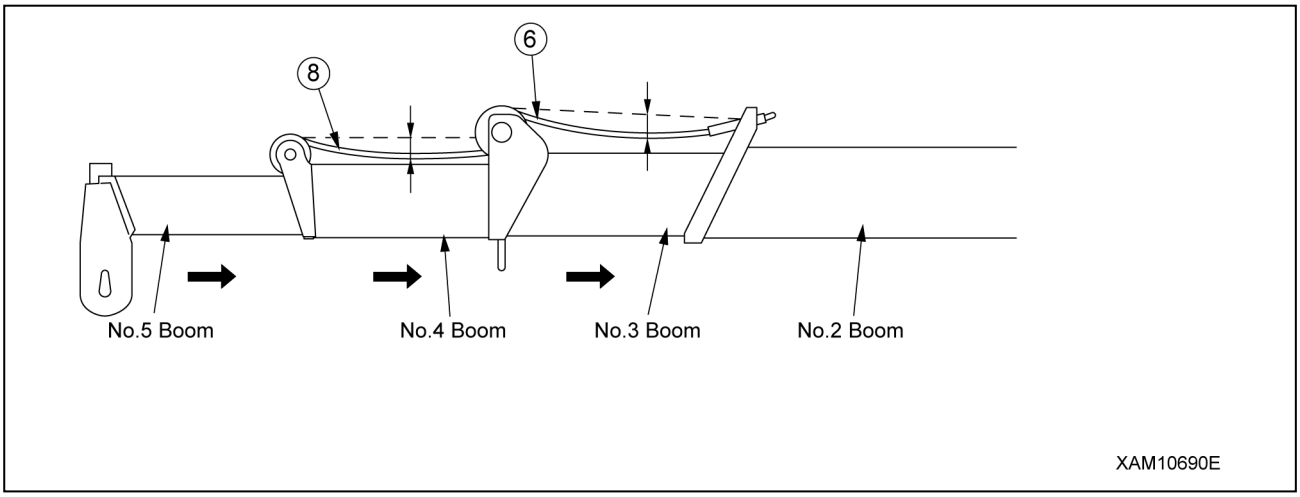

Fig. 5-101

2. With the boom positioned horizontally and all the booms retracted, check to see if a clearance of 6 mm or greater remains between the booms no. 3 and no. 4 (a) and between no. 4 and no. 5 (b). If the clearance of 6 mm or greater remains, make the adjustment using “Boom Telescope Wire Rope Adjustment” on page 5-47.

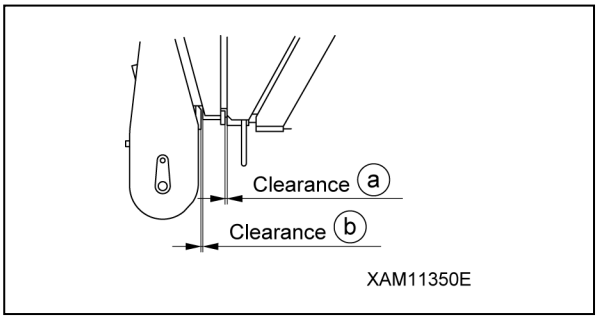

Fig. 5-102

https://truckmanualshub.com/

Boom Telescope Wire Rope Adjustment

NOTICE: The wire ropes must be adjusted to the correct tightness. Adjustment of these wire ropes must conform to the following procedure for wire rope adjustment.

WARNING! Sever Hazard. When making adjustment of each wire rope, be careful not to create any excessive tension.

Four boom pull-out and pull-in wire ropes are in use. There is a sequence such as follows for making adjustment of these wire ropes, which should always be observed:

1. With the boom totally retracted and positioned horizontally, extend the boom which telescopes approximately 2 m.

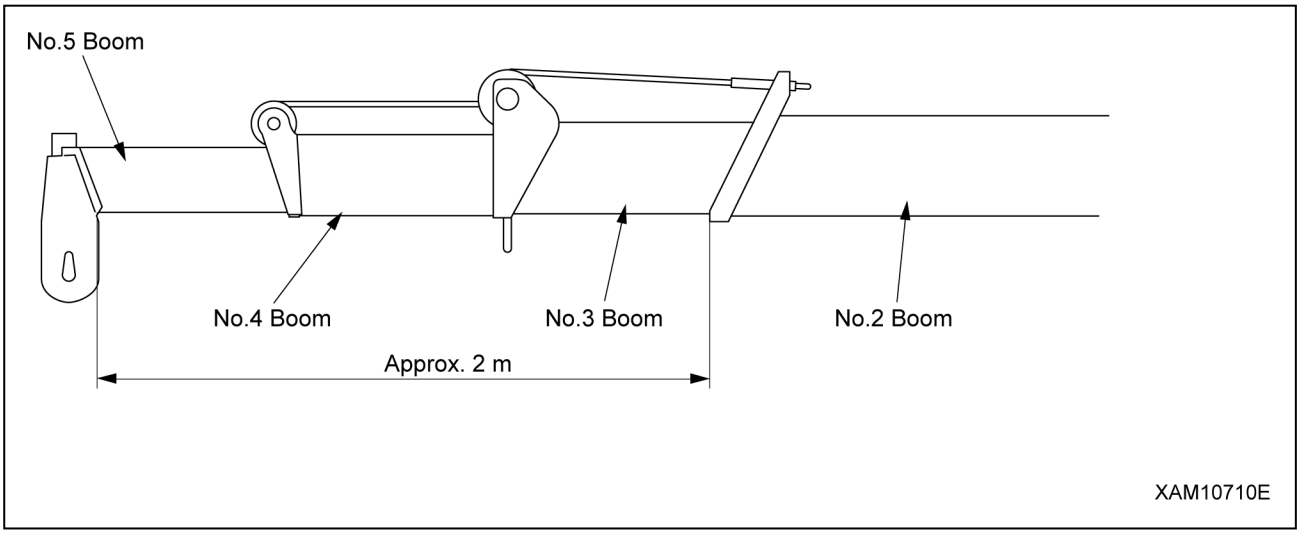

Fig. 5-103

2. Retract boom slowly to stowed position. In this position, measure the clearance ((a) and (b)) and make following adjustment:

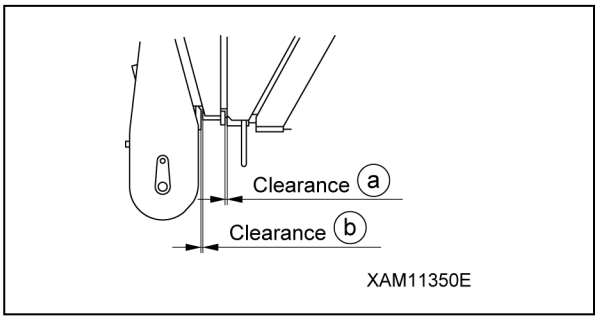

Fig. 5-104

- If the clearance (a) is 5 mm or greater, adjust the no. 4 boom pull-in wire rope (5).
- If the clearance (a) is zero, make the adjustment in accordance with Step 4.

3. Adjust no. 4 boom pull-in wire rope (5):

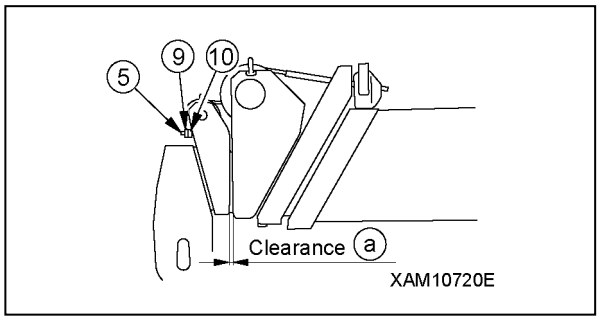

Fig. 5-105

a. Loosen the lock nut (9), then tighten the right and left side adjustment nuts (10) evenly in the direction of tightening the no. 4 boom pull-in wire rope until the clearance (a) becomes zero.
b. After completion of Steps 1 and 2, and as the result of measurement thereof, if the clearance (a) of 5 mm or greater remains, repeat the adjustment procedure.

https://truckmanualshub.com/

4. Adjust no. 4 boom pull-out wire rope (6):

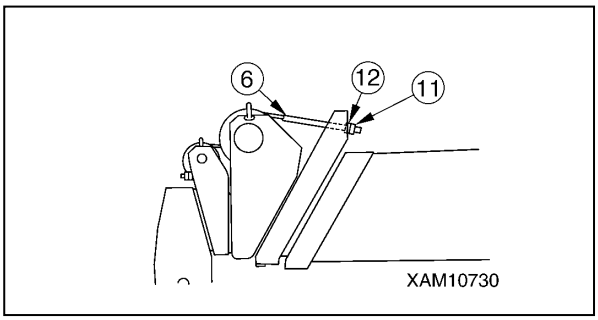

Fig. 5-106

a. Loosen the lock nuts (11), then tighten the right and left side adjustment nuts (12) evenly in the direction wherein the no. 4 boom pull-out wire rope (6) is tightened, to the point immediately before the no. 4 boom starts to be extended.
b. Retighten both right and left adjustment nuts (10) for the no. 4 boom pull-in wire rope (5) further by one more turn.
c. Lock the adjustment nuts (10) and (12) for no. 4 boom pull-in and pull-out wire ropes (5) and (6), with respective lock nuts (9) and (11).
d. After completion of Steps a and b, and as the result of measurement thereof, if the clearance (b) of 5 mm or greater remains, make the adjustment in accordance with Step 5. If the clearance (b) is zero, make the adjustment in accordance with Step 6.

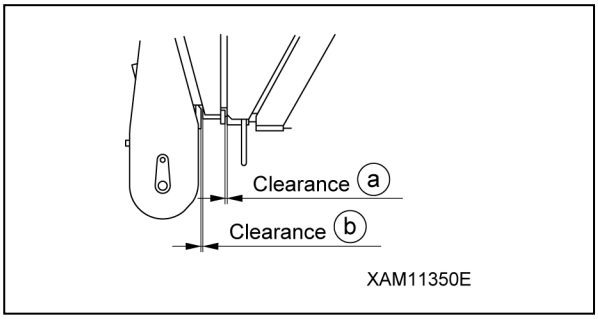

Fig. 5-107

5. Adjust no. 5 boom pull-in wire rope (7):

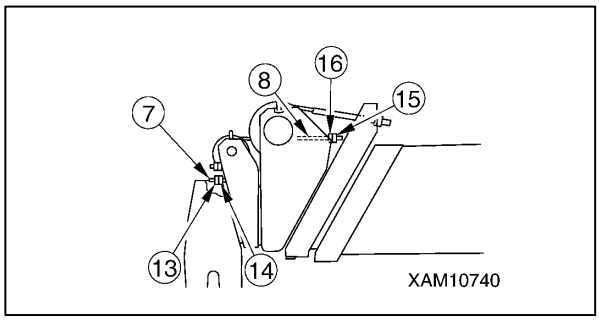

Fig. 5-108

a. Loosen the lock nut (13), then tighten the right and left side adjustment nuts (14) evenly in the direction of tightening the no. 5 boom pull-in wire rope (7) until the clearance (b) becomes zero.
b. After completion of Steps a and b, and as the result of measurement thereof, if the clearance (b) of 5 mm or greater remains, repeat the adjustment procedure.

6. Adjust no. 5 boom pull-out wire rope (8):

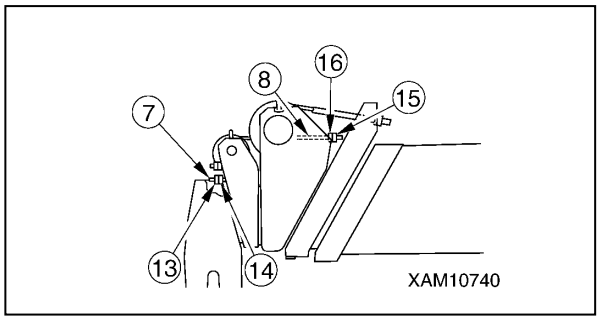

Fig. 5-109

a. Loosen the lock nut (15), then tighten the right and left side adjustment nuts (16) evenly in the direction wherein the no. 5 boom pull-out wire rope (8) is tightened, to the point immediately before the no. 5 boom starts to be extended.
b. Retighten both right and left adjustment nuts (14) for the no. 5 boom pull-in wire rope (7) further by one more turn.
c. Lock the adjustment nuts (14) and (16), for no. 5 boom pull-in and pull-out wire ropes (7) and (8) with respective lock nuts (13) and (15).

https://truckmanualshub.com/

Air Breather Inspection

WARNING! Oil may spray out when removing the air breather cap on the hydraulic oil tank. Unscrew the cap slightly to relieve the internal pressure before removing it.
Tighten the cap securely after replenishing the oil. If not fully tightened, the cap may come loose and fall off during operation, potentially causing burn injuries if hot oil spurts out.

CAUTION: Make sure the machine is level before removing the air breather cap.
Be careful to avoid allowing any foreign matter into the oil inlet opening when cleaning the strainer.

Air Breather Filter Element Inspection and Replacement

1. Stop the machine on a level surface.
2. See “Removing Machinery Cover” on page 5-11 and remove the machinery cover.
3. Insert a hexagonal wrench into the hole (b) in the case (7).

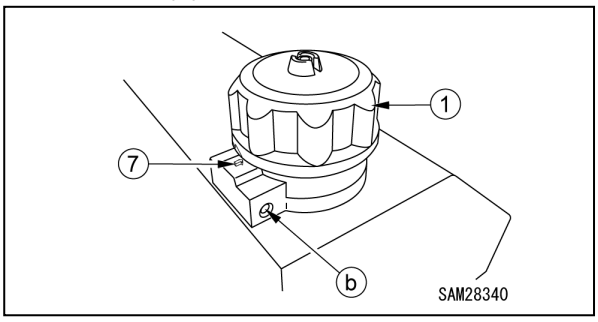

Fig. 5-110

4. Twist the hexagonal wrench outward and rotate the air breather cap (1) counterclockwise.

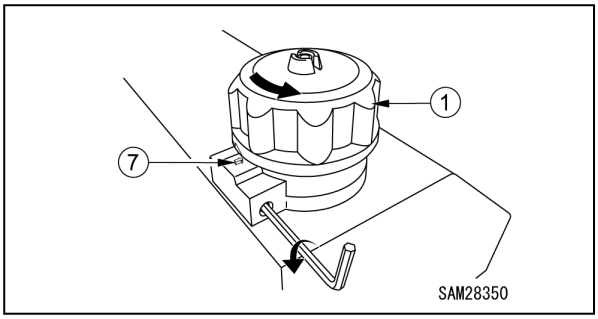

Fig. 5-111

5. Remove the air breather cap (1).
6. Remove bolt (3) on the top of the detached cap and disassemble.

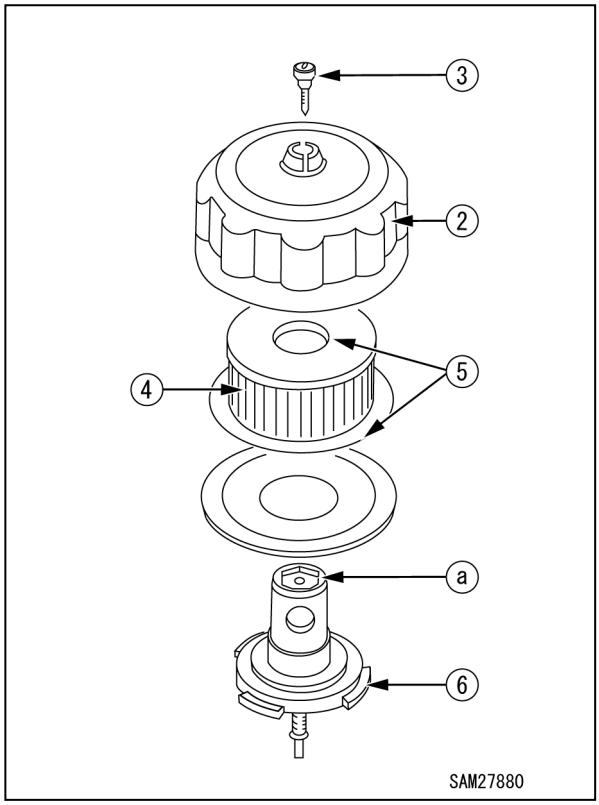

Fig. 5-112

7. Inspect the filter element (4) inside the cap. If it appears clogged with dust or dirt, replace with a new one.
8. Reinsert the filter element inside the cover (2). If the filter element was replaced with a new one here, lightly apply oil with your finger to the O-rings (5) above and below the filter element.
9. Align the lug (a) on the bayonet (6) with the cover (2), and secure with the bolt (3).
   Tightening torque: 6.9 to 8.8 N·m (0.7 to 0.9 kgf·m)

https://truckmanualshub.com/

10. Reattach the air breather cap (1) to the hydraulic oil tank.
    Align the air breather cap (1) with the mark on the case (7), and secure by turning clockwise while pushing down.

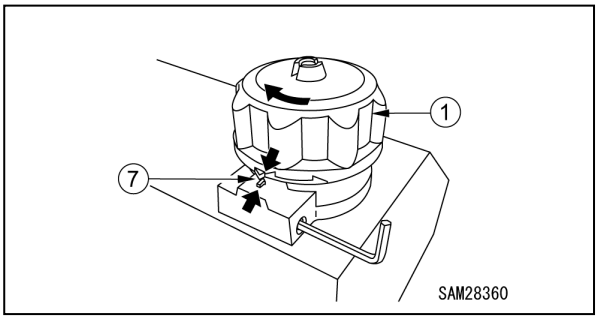

Fig. 5-113

NOTICE: The air breather cap locks in place automatically when attached. Once fitted, rotate the cap to check that it is locked in place.

11. See “Installing Machinery Cover” on page 5-11 and install the machinery cover.

Strainer Inspection and Cleaning

1. See “Air Breather Inspection” on page 5-49 and remove the air breather cap (1) from the oil inlet (F) on the top of the hydraulic oil tank.

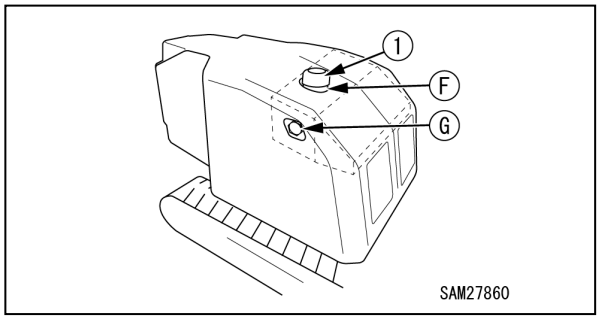

Fig. 5-114

2. Remove the three bolts (8), then remove the case (7).

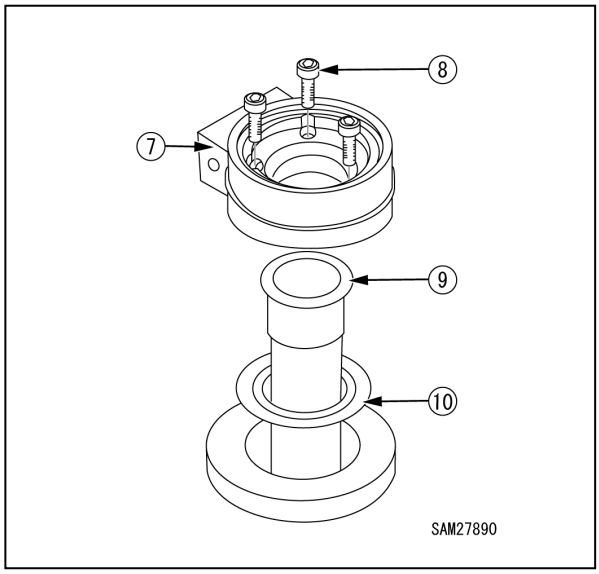

Fig. 5-115

3. Remove the strainer (9) and inspect it.
4. Clean the strainer (9) if there is any debris accumulated inside.
   The strainer should be cleaned using light oil or similar. Do not use solvents.
5. Reinstall the strainer (9) in its original position. Do not forget to fit the gasket (10) here.
6. Secure the case (7) using the three bolts (8). Check that the strainer (9) is retained by the case (7).
7. See “Air Breather Inspection” on page 5-49 and securely reattach the air breather cap (1) on the oil inlet (F).

https://truckmanualshub.com/

Drain Water and Sediment Inside Hydraulic Oil Tank

WARNING! Parts will still be hot immediately after the machine has been operating. Do not change the oil immediately, but wait until the oil has cooled.
Oil may spray out when removing the air breather cap on the hydraulic oil tank. Unscrew the cap slightly to relieve the internal pressure before removing it.
Tighten the cap securely after replenishing the oil. If not fully tightened, the cap may come loose and fall off during operation, potentially causing burn injuries if hot oil spurts out.

CAUTION: See "LUBRICATING OIL" on page 5-7 for the oil to be used.
Be sure to arrange the machine in its travelling posture when checking the oil level. Checking the oil level while in the working posture will result in overfilling, as the oil level will be underestimated.
After replacing the hydraulic oil, do not start the machine for a while until the pipes and hydraulic equipment are filled with oil.
Do not fill with oil above the level point (red dot) on the level gauge (G).
Be careful to avoid allowing any foreign matter into the oil inlet opening when replenishing the oil.

Container to catch contaminating water: Prepare a container with a capacity of at least 5 L.

1. Stop the machine on a level surface.
2. See "TRAVELLING POSITION" on page 4-29 and put the machine in the "Travelling posture".
3. See "Removing Machinery Cover" on page 5-11 and remove the machinery cover.
4. See "Air Breather Inspection" on page 5-49 and remove the air breather cap (1) from the oil inlet (F) on the top of the hydraulic oil tank.

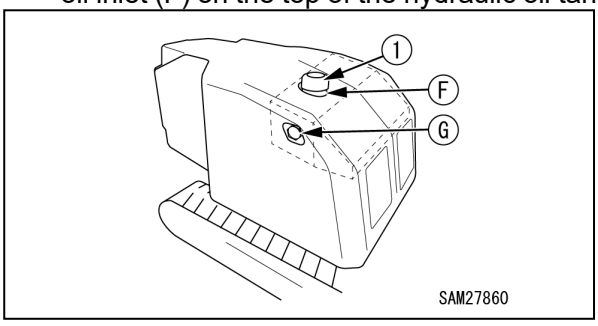

Fig. 5-116

5. Place the container to catch the contaminating water immediately below the drain outlet cap (P).

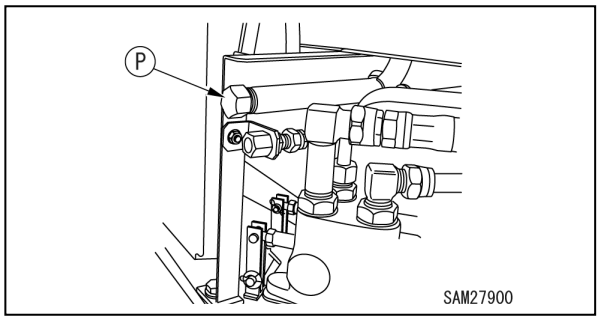

Fig. 5-117

6. Slowly rotate the drain outlet cap (P) to avoid splashing oil or water on yourself, and drain the contaminating water.
7. If the drained contaminating water is found to contain large amounts of metal particles or other foreign matter when inspected, contact us or our sales service agency.
8. Reattach the drain outlet cap (P).
9. Replenish the hydraulic oil via the oil inlet (F) up to the level point (red dot) while watching the oil level gauge (G).

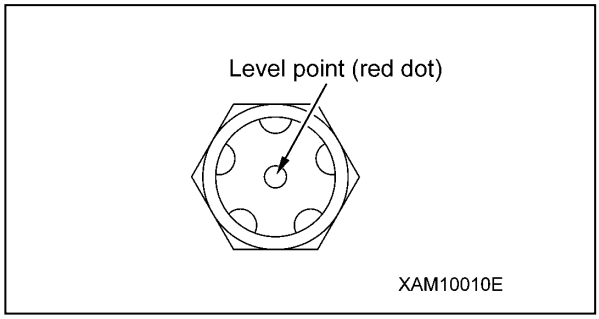

10. After replenishing the oil, see "Air Breather Inspection" on page 5-49 and securely reattach the air breather cap (1) on the oil inlet (F).
11. See "Installing Machinery Cover" on page 5-11 and install the machinery cover.

https://truckmanualshub.com/

STORAGE

Temporary Storage

If the machine is in need of repair and is temporarily waiting for service, use the following guidelines to notify all applicable personnel the machine is not to be used.

Place DO NOT OPERATE warning tags on the crane operation levers and visible areas of the machine.

Record information such as failure description, name and contact information of the storage manager, and the estimated storage time.

Remove the starter key and keep in a safe place.

Place blocks at the rubber tracks to keep the machine from moving.

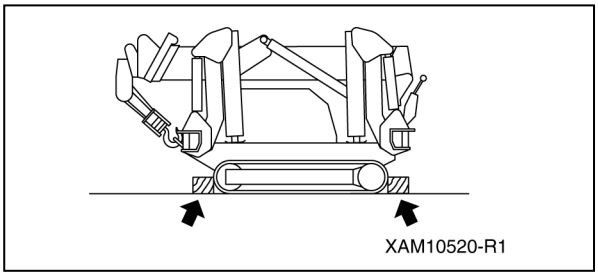

Fig. 5-118

Long-Term Storage

This section describes only the long-term storage methods that are not defined in standard specifications.

Use the following procedure for storing the machine for 6 months or longer (3 months or longer if stored in hot or humid environment).

Before Storage

Place the machine in the travelling position during long-term storage to protect the cylinder rods. (Cylinder rod corrosion prevention) See “TRAVELLING POSITION” on page 4-29.

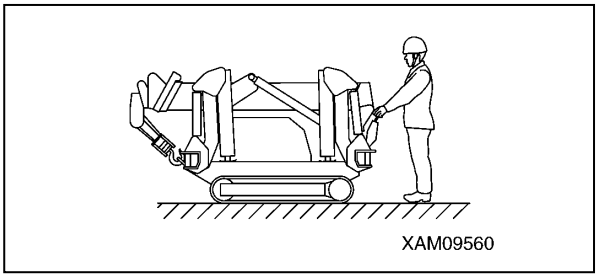

Fig. 5-119

When storing the machine for long periods, follow these procedures:

- Wash and clean each section of the machine and store inside. If the machine is to be stored outside, select a flat location where the machine will not be exposed to water, flooding or other elements.
- Grease the machine and replace the oil.

The recommended storage conditions are as follows in order to extend the battery life:

- Avoid storing with the battery charged above 95% or below 10%.
- Store at an ambient temperature not exceeding 35°C.
- Store away from direct sunlight.
- Store where condensation will not occur.
- Disconnect the battery.

During Storage

Operate the machine once a month during storage to maintain an oil film on lubricated parts and to prevent corrosion.

Charge to a battery level of approximately 50% once every three months to avoid completely discharging the battery.

After Storage

NOTICE: If you did not operate the machine to prevent corrosion once a month or did not charge the battery once every three months during long-term storage, contact us or our sales service agency before using the machine.

Perform the following procedures before using the machine after long periods of storage.

- Grease the machine and replace the oil.
- Remove the drain plug on the hydraulic oil tank, then drain the contaminating water.
- Charge the battery.
- Perform all specified pre-start checks before starting and operating.

https://truckmanualshub.com/

COLD TEMPERATURE PREPARATION

To avoid difficulty when starting during low temperatures, perform the following procedures.

Oil

Change the lubricating oil to one with a lower viscosity.

See “LUBRICATING OIL” on page 5-7 for the oil to be used.

Battery

The battery unit may be operated at an ambient temperature down to -20°C, but battery performance may be reduced at low temperatures.

After Daily Operation

Observe the following to prevent the machine from not starting or operating due to frozen water or dirt in or on the machine.

- Remove dirt and water from the machine. Keep the hydraulic cylinder rod surfaces clean to prevent seals from being damaged from dirt mixing with water.
- Park the machine on solid, dry ground. Use boards as support, if necessary, to park the machine on.

https://truckmanualshub.com/

SEARCHER HOOK INSPECTION AND MAINTENANCE

Legal Inspection

If a periodic safety inspection is required by the laws and regulations of your country, perform that inspection in addition to the inspection items listed below.

1. Verify that all safety devices are operating properly.
2. Check the hoist accessories, including the hook block, for problems or damage.
3. Check the structural parts of the machine, including the frame and boom, for cracks, deformation and damage.
4. Check for loose or missing mounting bolts and joints.
5. Verify that the boom operates properly by stopping, extending, retracting, raising, lowering and slewing the boom.
6. Contact us or our sales service agency to request inspection and repair service as needed.

Consumables

Parts for mounting searcher hook are consumables. Replace them at periodic inspection or before they reach abrasion limits. Replace consumables regularly, which will produce economical use of this machine. Always replace with a Maeda genuine item. Check parts catalogue for correct part number for parts request.

List of Consumables	
Item	**Replacement Cycle**
Searcher hook fix bolt M12x35L strength 10.9 (4pcs)	★Every 6 months or when damage, crack, or squash is found
Searcher hook fix nut M12x1grade (4pcs)	★Every 6 months or when damage, crack, or squash is found
Searcher hook fix washer M12x3.2t (high tension)(4pcs)	★Every 6 months or when damage, crack, or squash is found
Searcher hook fix bolt M8x25L strength 10.9 (4pcs)	★Every 6 months or when damage, crack, or squash is found

★ Items include a halt period. Contact us or our sales service agency for part replacement information.

https://truckmanualshub.com/

Inspection and Maintenance List

This document only covers the searcher hook kit. For crane body, see “INSPECTION” on page 5-13 and follow its precautions.

Maintain in accordance with the laws and regulations of the relevant country and region.

Pre-Start and Post-Start Inspection Items

Inspection Item	Reference
Pre-Start – Before Starting Machine	
Check E-Boom, Frame and Hook	See “E-Boom, Frame and Hook” on page 5-56.
Check Greasing	See “Greasing” on page 5-56.
Check Searcher Hook Fix Bolts	See “Searcher Hook Fix Bolts” on page 5-56.
Installation Check of Position Pin and Lynch Pin	See “Position Pin and Lynch Pin” on page 5-56.
Post-Start – After Starting Machine	
Check Moment Limiter for Operation (Searcher Hook Mode)	See “Moment Limiter for Operation (Searcher Hook Mode)” on page 5-57.

https://truckmanualshub.com/

Pre-Start – Before Starting Machine

Check the following in this section without starting the machine and before starting work every day.

E-Boom, Frame and Hook

- Check each part of the E-Boom, frame and Hook for cracks, excessive deformation and contamination etc. In addition, check bolts nuts and pins for any looseness, drop and damage etc. If you find any abnormality, repair.

  Check hook for deformation, abnormal noise from bearing and correct function of wire rope latch (1).

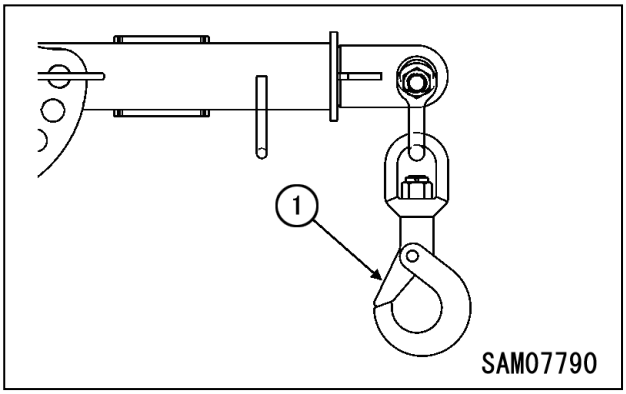

Fig. 5-120

Greasing

- Wipe off and clean old grease from contact point (3) of shackle (2) and E-boom hole, and contact point (4) of hook (1) and shackle (2), then apply new lithium grease.

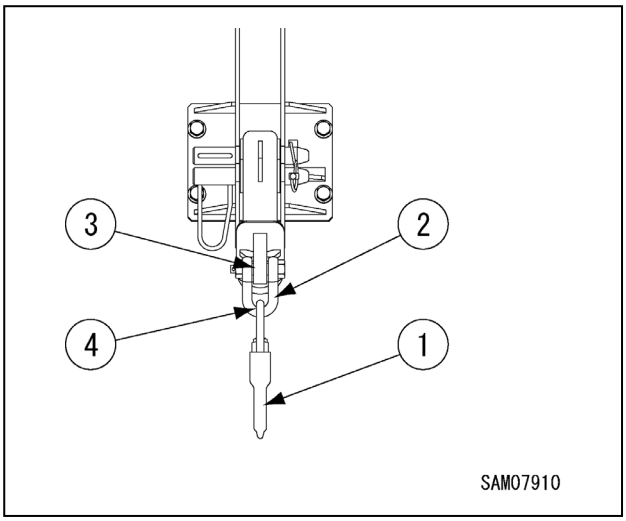

Fig. 5-121

Searcher Hook Fix Bolts

DANGER! If any damage is found on searcher hook fixing bolts, please exchange for new one's right away.

Breakage of bolts will cause the searcher hook to fall off.

- Check if bolts used are the designated type.

  Also check if there are cracks, damage, squashing, heavy dirt, or rust on bolt.

  If any abnormality is found, change the bolt for a new one even it is earlier than expected bolt life.

Position Pin and Lynch Pin

- Check if position pin is surely secured with lynch pin.

https://truckmanualshub.com/

Pre-Start – After Starting Machine

CAUTION: The checkups described in this section should be carried out after starting the machine.

See "Starting the Machine" on page 4-26 and later to execute the machine startup, travelling operations, outrigger operations and crane operations.

Moment Limiter for Operation (Searcher Hook Mode)

WARNING! If you find any abnormality with the moment limiter, immediately contact us or our sales service agency.

1. Turn the Starter Switch to the "ON" position.
2. Check with the Working Status Lamp. The red of the lamp flashes for 2 seconds and then the green and yellow flash.
3. Check the monitor display.
   Verify that no error code is displayed on the Home Screen.
   Verify that the actual searcher hook position matches the position displayed on the monitor.
   For more information on the actual position and position switching, see "Moment Limiter Settings" on page 4-120.
4. Start the machine and operate the crane as follows to verify if the moment limiter properly displays the value.

Crane Operation and Displayed Parameter	Value Displayed on Moment Limiter
Displayed "boom length" with the boom length at minimum	2.5 m
Displayed "boom length" with the boom length at maximum	8.6 m
Displayed "working radius" with the boom length of "4.4 m" and boom angle of "29.2°"	SH1 4.2 ± 0.1 m
	SH2 4.2 ± 0.1 m
	SH3 4.1 ± 0.1 m

5. Check if displayed actual load value is equal to the total weight of the load + searcher hook (20 kg) + the hoisting accessory, when the weight of the known load is hoisted. There may be slight error in accuracy depending on boom condition.
6. Operate the crane until the moment limiter display indicates the boom length is "4.4 m" and boom angle is "29.2 degrees", then measure the "boom angle" and "working radius.
   If the measured value(s) differ from the moment limiter display value, contact us or our sales service agency.
7. Lift up load and check if boom extending or boom lowering operation is auto-stopped when overloaded. If the operation is not auto-stopped in overloaded condition, stop using the machine and contact us or our sales service agency.
   This checking operation must be operated slowly, and if machine does not auto-stop by overloading, immediately stop the operation, and perform recovery operation caused by overloading.

NOTICE: When measuring actual working radius, measure from hook position of searcher hook.

https://truckmanualshub.com/

TROUBLESHOOTING

The following troubleshooting charts and procedures are provided to assist in diagnosing problems in the event of a malfunction or failure.

Contact us or our sales service agency to request inspection and repair services as indicated with a * in the Actions column, or if you suspect other problems or causes than those given below.

Machine Body

Problem	Major Cause(s)	Actions
Crane and outriggers do not operate but machine travels	Travel lever not in Crane/Outrigger position	Move travel lever to “Crane/Outrigger”.
Travelling speed, boom and hook block operation speed slow or abnormal pump noise	Low hydraulic oil level	Fill hydraulic oil to specified level. See “Check / Add Hydraulic Oil” on page 5-16.
	Hydraulic oil tank strainer and element clogged	Clean and replace filter. See “Replace Hydraulic Oil Return Filter” on page 5-29.
Hydraulic oil temperature high	Low hydraulic oil level	Fill hydraulic oil to specified level. See “Check / Add Hydraulic Oil” on page 5-16.
	High working load	Reduce working load. Increase interval between tasks.
	High ambient temperature	Take measures to protect against high temperatures.
	Warming up is turned on.	Turn off warming up.
Rubber tracks fall off or abnormal wear of sprockets	Rubber tracks loose	Adjust track tension. See “Checking Rubber Track Tension” on page 5-39.
Outriggers do not operate	Outrigger not rotated to EXTENSION position (outward)	Secure the outrigger at the EXTENSION position.
	Travel lever not in Crane/Outrigger position	Move travel lever to “Crane/Outrigger”.
	Boom is not in stow position	Set (operate) boom in stow position.
Crane does not operate	Outriggers are not in setting position	Set (operate) all four outriggers.

https://truckmanualshub.com/

Electrical Components

Problem	Major Cause(s)	Actions
Light is dim.	Defective wiring	*Check and repair loose terminals and open circuits.
Light flickers.	Defective wiring	*Check and repair.
A “slew detection abnormality” warning appears on the monitor.	Detection abnormality due to boom swaying	Slew clockwise and counterclockwise by 20 degrees respectively.
	Defective wiring	*Check and repair.
	Improper limit switch adjustment	*Adjust or replace.

Battery

Problem	Major Cause(s)	Actions
Cannot charge	Disconnect switch set to “UNLOCK”	Set disconnect switch to “LOCK”.
	Defective power supply cable	Replace cable.
	Facility circuit breaker is turned off.	Check circuit breaker.
	Status switch is turned off when starting charging.	Turn on starter switch.
	Charging plug not inserted correctly	Check charging plug.
	BMU abnormality	* Inspect and replace.
	Motor controller abnormality	* Inspect and replace.
	Over discharge	* Inspect and replace.
	Charger defect	* Inspect and replace.
Battery and controller overheat	High working load	Reduce working load. Increase interval between tasks.
	Working at high elevation	Move to lower elevation.
	High ambient temperature	Take measures to protect against high temperatures.
	Warming up is turned on.	Turn off warming up.
	Cooling fan defect	* Inspect and replace.

https://truckmanualshub.com/

Electric Motor

Problem	Major Cause(s)	Actions
Motor does not start with the starter switch turned on, even when control levers are operated.	Insufficient battery capacity	Charge battery.
	Defective wiring	* Inspect, repair, or replace.
	Operation detection limit switches incorrectly adjusted or defective	* Inspect, repair, or replace.
Motor stops during use.	Overheating	Reduce the hydraulic oil temperature, motor temperature, and motor controller temperature.
	Electric motor defect	* Inspect, repair, or replace.
	Operation detection limit switches incorrectly adjusted or defective	* Inspect, repair, or replace.
	Insufficient battery capacity	Charge battery.
Motor output is low or gradually decreases. Motor emits abnormal sound or vibration while in operation.	Insufficient battery capacity	Charge battery.
	Controller error	* Inspect, repair, or replace.
Motor overheats while in operation. Motor output is low or gradually decreases.	Motor or pump retaining bolts loose	* Inspect and replace.
	Motor or pump defect	* Inspect and replace.
Motor emits abnormal sound or vibration while in operation.	High working load	Reduce working load. Increase interval between tasks.
	Working at high elevation	Move to lower elevation.
	High ambient temperature	Take measures to protect against high temperatures.
	Warming up is turned on.	Turn off warming up.
	Defective cooling fan	* Inspect and replace.

https://truckmanualshub.com/

Radio Remote Control System

Use the following procedures if the radio remote control system does not operate or partially operates, and if the crane operates normally using manual controls.

NOTICE: Perform the following checks first, before diagnosing error codes. Always first check if the problems are corrected by applying a different operation procedure or replacing batteries.

If the failure is the result of electrical failure of the radio remote control system, the crane may still be operable under manual control.

Checks	Cause and Action
The crane is operable under the manual control from the crane.	When the crane operates, this remote control system has a failure. Otherwise, when the crane does not operate, perform the diagnosis of the crane itself.
The power to the transmitter is turned on when the Starter Switch on the machine main unit is ON.	If the power is not turned ON, turn it ON.
The Emergency Stop (EMO)/Transmitter Power OFF Switch is in the “ON” position.	Set Emergency Stop (EMO)/Transmitter Power OFF Switch on transmitter and the crane to the “OFF” position.
The transmitter is deformed or damaged.	Where the transmitter is deformed or damaged, repair or replace it.
Each operation lever of the transmitter is in its NEUTRAL position.	In the event of operation lever or control button failure, repair or replace.
The battery icon of the transmitter is blinking in red.	Replace the battery.

- Make sure that you contact us or our sales service agency for the actions marked within the table.
- Contact us or our sales service agency if you suspect any other abnormalities or causes than those given below.

Problem	Possible causes	Actions
Power is not supplied to transmitter after power-on.	Battery contact failure	Check battery for contact failure due to damage or dirt.
	Voltage is not applied to the transmitter.	Insert a fully charged battery.
		Charge battery.
Low voltage alarm goes off immediately after start of operation.	Battery contact failure	Check battery for contact failure due to damage or dirt.
	Battery is not fully charged.	Fully charge battery. Check if battery charging process is correct.
	Battery problem/service life expired	Check if transmitter functions correctly by using spare battery or fully charged battery.
Individual commands cannot be executed.	Receiver has failed.	Check receiver cable for disconnection.
	Connection to the machine is interrupted.	Check receiving status using receiver monitor LED.
	Controller has failed.	* Inspect or replace controller on machine main unit.

https://truckmanualshub.com/

Error Codes

- Contact our sales service agency if the solutions provided here do not resolve your problem.
- For solutions indicated by ★, stop using the machine immediately and contact us or our sales service agency.
- For the solutions indicated by ☆, certain functions may be restricted, but operation is still possible. Be sure to inspect and maintain the equipment after use. If necessary, contact us or our sales service agency.

Error Code	Description	Working Status Lamp flashes in red	Alarm buzzer	Solution
EO***	Output error	–	–	☆
ES***	Sensor error	●	●	★
LSIN00	Error	–	●	☆
LSIN01	Error	–	●	☆
LSIN02	Error	–	●	☆
LSIN03	Error	–	●	☆
LSIN04	Slew Origin LS Input error	–	–	☆
LSIN05	Right Slew Lever LS detection error	●	●	★
LSIN06	Left Slew Lever LS detection error	●	●	★
LSIN07	Right Slew Lever LS Sticking error	●	●	★
LSIN08	Left Slew Lever LS Sticking error	●	●	★
EV01	BMU power-supply voltage error	–	–	・Check battery charge. ・Check wiring.
EC02	TTC36X communication error	●	●	★
EC03	TTC30X communication error	●	●	★
EC20	Radio controller communication error	●	●	★
EC50	Slope angle sensor communication error	–	●	★
EC96	BMU communication error	●	●	★
EC97	Motor controller communication error	●	●	★
EC98	TTC60 communication error (power)	●	●	★
EC99	TTC60 communication error (crane)	–	–	★
SE03	Slew Sensor Input error	–	–	☆
A***	Battery charger error	–	–	★
BMU***	BMU error	–	–	★
F*****	Motor controller error	–	–	★

The numbers indicated by *** in the error code will vary depending on the individual error.

https://truckmanualshub.com/

Slewing Position Calibration

WARNING!

- **If a slewing position abnormality warning is displayed, this indicates that the slewing angle is offset. The slewing position must be calibrated.**
- **If calibration is performed while the boom is reversed 180 degrees from the BOOM STOWING position, the slewing angle will be indicated as an angle reversed by 180 degrees. Resetting will be required in this case. Contact us or our sales service agency.**
- **Failing to calibrate the slewing position or operating the crane without calibrating properly may cause the crane to topple or cause other serious accidents.**

If the slewing position abnormality warning is displayed, lower the hoisted load and correct the angle as follows:

1. Press the User Mode Switch on the Home Screen when the notification for slewing position calibration is displayed.

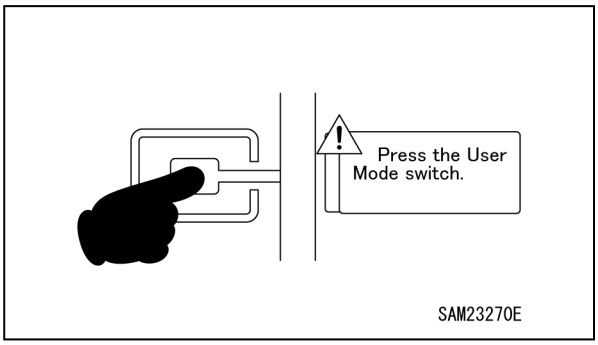

Fig. 5-122

2. Slew until the boom stowage alignment marks on the post align with the stowage position.

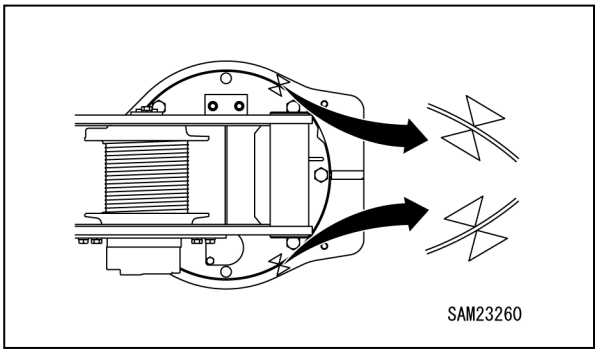

Fig. 5-123

NOTICE: You do not need to stow the boom here. Only the boom slewing position is being aligned.

3. Once the alignment marks are aligned, press the check mark to calibrate the position.

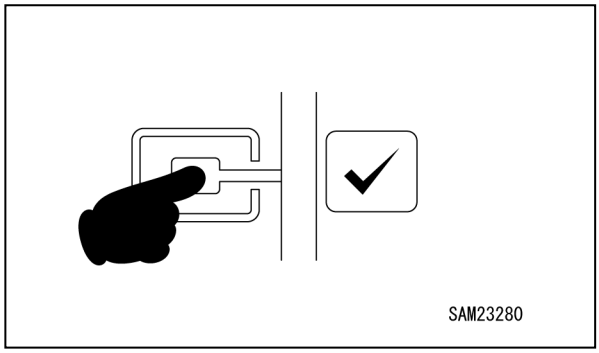

Fig. 5-124

4. Once corrected, slew the boom 20° both left and right and check to confirm that the slewing angle is displayed correctly. The angle is correct if it is displayed as 0 degrees when the boom is at the stowing position after slewing.
   Press the check mark once again after making this verification.

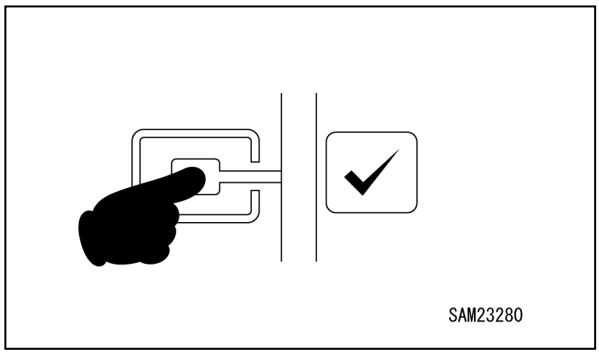

Fig. 5-125

NOTICE: If calibration was performed with the alignment marks aligned incorrectly, press the check mark, return to the Home screen, and perform the following calibration procedure.
<Procedure>

○ *Slew the boom 20 degrees in both directions left and right from the stowing position.*

After slewing

- *If the slewing angle displayed is 0 degrees at the boom stowing position → Calibration complete (If the extent of offset is within the permitted margin, the angle will be reset automatically after slewing.)*
- *If the slewing position abnormality warning is displayed again → Repeat the calibration procedure*
  (If the extent of offset is outside the permitted margin, the warning will be displayed again after slewing.)

https://truckmanualshub.com/

This Page Intentionally Left Blank

https://truckmanualshub.com/

MAEDA MINI-CRAWLER CRANE MC285CB-3 OPERATION MANUAL

Document No : 102BE-OM2009-00
First edition : 11st September 2020

Maeda Seisakusho Co., Ltd.
1095 Onbegawa, Shinonoi
Nagano, Nagano 388-8522,
Japan

No part of this manual can be reproduced in any form without permission.

https://truckmanualshub.com/

Masuda Seisakusho Co., Ltd