https://truckmanualshub.com/

Mobile crane LTM 1030-2.1

Max. lifting capacity: 35 t
Max. lifting height: 44 m
Max. working radius: 40 m

LIEBHERR

https://truckmanualshub.com/

Mobile crane LTM 1030-2.1
Compact and economic

https://truckmanualshub.com/

A long telescopic boom, high capacities, an extraordinary mobility as well as a comprehensive comfort and safety configuration marks the mobile crane LTM 1030-2.1 from Liebherr. The 35 ton crane offers state-of-the-art technology for more convenience for the practical operation.

- **30 m long telescopic boom**
- **15 m long double swing away jib**
- **24 t total weight incl. 2.3 t ballast and swing away jib at 12 t axle load**
- **Carrier width 2.55 m with tyres 445/95 R 25 (16.00 R 25)**
- **Great operational flexibility due to top capacities with full and partial ballast**
- **Sensitive working by electronic crane control**
- **LICCON2-control with mobile display unit BTT**
- **Pneumatic disc brakes**
- **Wireless remote control (option)**

https://truckmanualshub.com/

Drive train

- 6-cylinder Mercedes-Benz diesel engine, 205 kW/278 HP, max. torque 1100 Nm
- Powershift gearbox with automatic gear changing ZF Type 6 WG 210, 6 forward, 2 reverse gears
- Torque converter and lock-up clutch
- Axles 1 and 2 driven

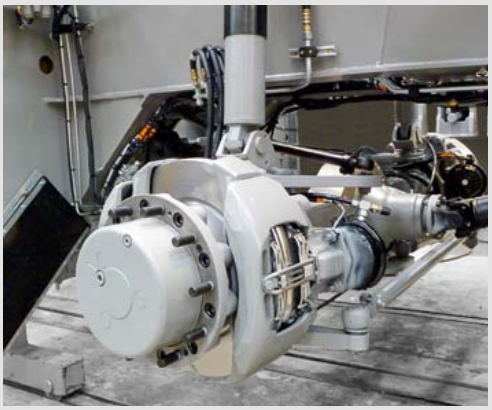

https://truckmanualshub.com/

State-of-the-art chassis and drive technology

High mobility and cost effectiveness

A powerful six-cylinder turbo diesel engine with 205 kW/278 HP ensures swift driving performance. The ZF-powershift gearbox with automatic gear changing provides best manoeuvrability and high comfort.

- Minimum crawling speed by torque converter
- ABV automatic locking preventer with ASR-drive slip control
- Crab steering
- Telma eddy current brake optional, wear free and comfortable

Compact, agile and weight-optimised

Thanks to its extremely compact design, the LTM 1030-2.1 can operate on the smallest of construction sites. At an axle load of 12 t, it can drive with up to 2.3 t of counterweight plus the swing away jib, making it flexible and economical to use.

- Chassis length only 8.53 m
- Smallest turning radius only 6.56 m
- Chassis width only 2.55 m, even with 445/95 R 25 tyres (16.00 R 25)
- Tail swing radius only 3.15 m

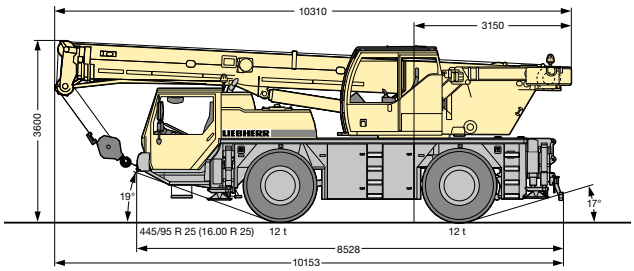

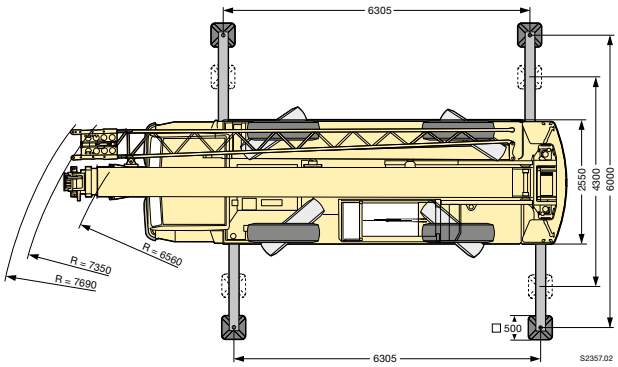

Hydro-pneumatic suspension "Niveaumatik"

- Maintenance-free suspension cylinders
- Large dimensions to cope with high axle loads
- Suspension travel +100/-100 mm
- High lateral stability when cornering
- Choice of driving states using fixed programmes

Pneumatic disc brakes

- High braking power, improved control
- Improved directional stability
- No reduction of braking force at high braking temperatures (fading)
- Longer service life
- Shorter labour times for changing the braking pads
- Brake pads with wear indicators

https://truckmanualshub.com/

The driver's cab

- Corrosion-resistant
- Safety glass on all sides
- Tinted glass
- Heated and electrically adjustable outside mirrors
- Air-sprung driver's seat with lumbar support

https://truckmanualshub.com/

Comfort and functionality

Modern driver's cab and crane cab

Both the modern driver's cab and the crane cab offer a comfortable and functional working environment. The control elements and displays are ergonomically arranged. Thus a safe and fatigue free working is assured.

Speedy and safe set-up

Setting of the outriggers, counterweight assembly and attachment of additional equipment have all been designed with speed, safety and comfort in mind. Specific ascents and handholds are provided to ensure the safety of the operating staff.

Supporting the crane – fast, comfortable and safe

- BTT blue tooth terminal, mobile control and display unit
- Electronic inclination display
- Fully automatic levelling by push button
- Engine start/stop and speed control
- Support area lighting with four integrated lights
- Support cylinder stroke: 570 mm
- One-stage outrigger beams, fully hydraulic, low-maintenance extension system

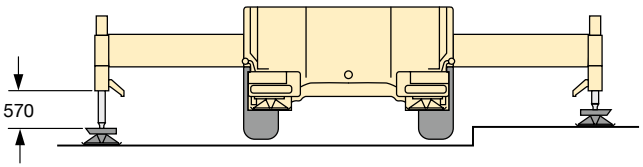

The crane cab

- Large field of vision
- Safety glasing
- Tinted screens
- Crane driver seat with lumbar support, multiple adjustable
- Heat and noise insulated interior lining
- Corrosion resistent
- Working flood lights
- Engine-independent heating

https://truckmanualshub.com/

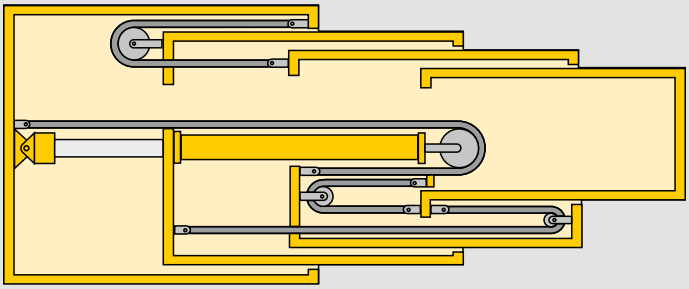

Proven hydro-mechanical telescoping system

- Reliable single step double acting hydraulic cylinder
- Low centre of gravity due to double sheave block for telescopic section 2 and 3
- Section 1 extended/retracted by hydraulic cylinder, sections 2 and 3 by ropes
- High telescopable loads

https://truckmanualshub.com/

High lifting capacities and flexible boom system

High-capacity, long telescopic boom and functional lattice extensions

The telescopic boom comprises of the base section and three telescopic sections which can be extended comfortably by a hydro-mechanic extension system to any requested length.

- 30 m long telescopic boom
- 8.6 m – 15 m long double swing away jib, attachable at 0°, 20° and 40°

High lifting capacities both with full and partial counterweight offer a wide operational range

- High lateral stability due to the oval boom profile
- Telescoping under load
- Lifting capacity 8.3 t at 30 m lifting height
- Maximum hook height: 44 m
- Maximum radius: 40 m

The double swing away jib

https://truckmanualshub.com/

Variable counterweight

Counterweight assembly – a matter of minutes

- Multiple counterweight variations 2.3 t, 3.4 t and 5.5 t
- Rapid ballasting with keyhole technology from within the crane cab (option)
- Compact counterweight dimensions, at 5.5 t counterweight only 2.31 m counterweight width
- Tail swing: only 3.15 m
- 24 t total weight incl. 2.3 t counterweight and swing away jib at 12 t axle load

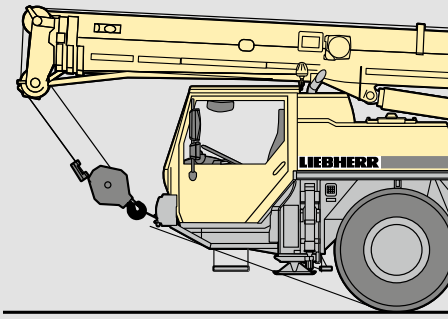

The hoist gear

- Hoist winch with integrated planetary gear and spring loaded multiple disk brake
- Line pull 33 kN at the outer layer
- Max. line speed 120 m/min

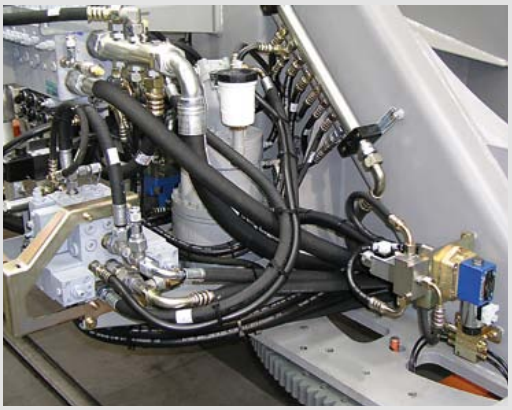

https://truckmanualshub.com/

High-power crane drive

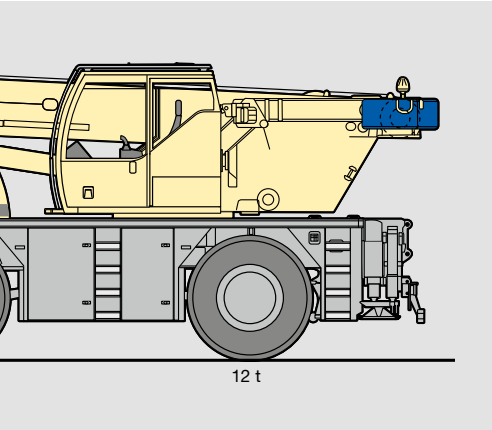

With tried-and-tested components

The drive components for crane operation are designed for high performance and ensure sensitive and precise load handling. They are specially designed to suit the crane's usage and have been subjected to hard endurance tests.

- Crane drive from chassis diesel engine
- Optimized fuel consumption by electronic engine management
- Diesel-hydraulic crane drive, open hydraulic circuits with electronic "Load Sensing" control, 4 working movements simultaneously possible
- Electric/electronic SPS crane control through the LICCON computer system
- Comfort armrest control with 2 self-centering, 4-fold multifunctional joysticks, stepless control of all crane movements, with vibration joysticks for slewing gear and winch operation, electronic pilot control
- Slewing system changeable from open to hydraulically locked as standard, thus the movement can be adjusted to the different operational conditions, e. g. sensitive control for assembly work or fast cycle work

Basic counterweight	2.3 t
Additional counterweight	3.2 t
Total	**5.5 t**

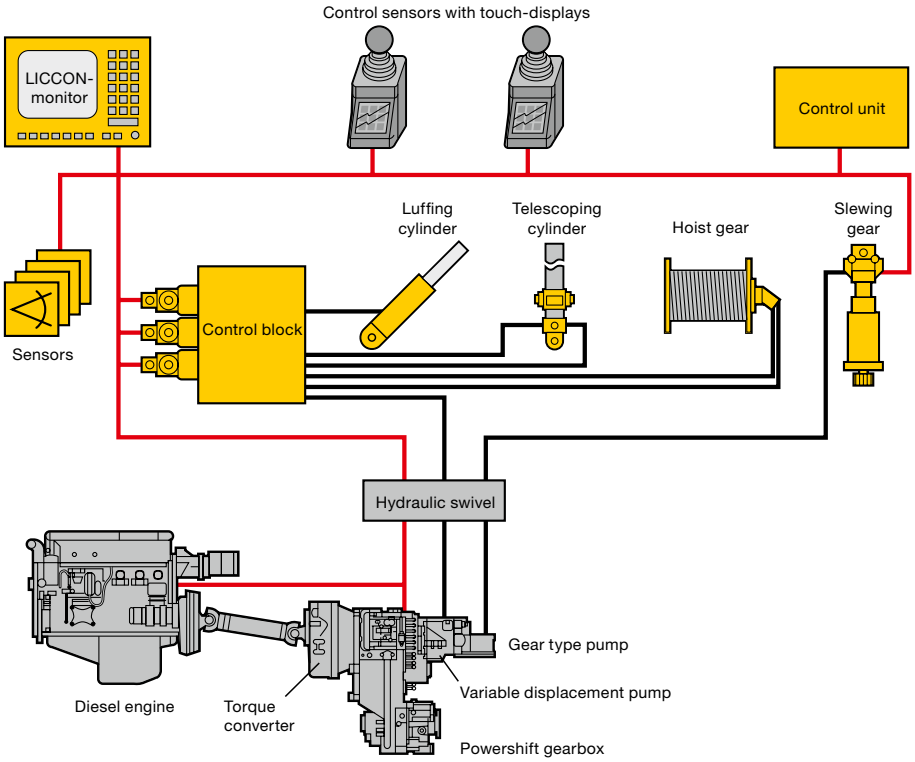

The slewing gear

- Planetary gear, spring loaded multi-disk brake
- Slewing speed from 0 – 2.4 rpm stepless adjustable
- Slewing gear changeable from open to hydraulically locked

Centralised lubrication

- Centralised lubrication system as standard for slewing ring, boom bearings, luffing ram and winch bearings
- Uniform application of lubricant
- Lubricant level visible in transparent container at all times

https://truckmanualshub.com/

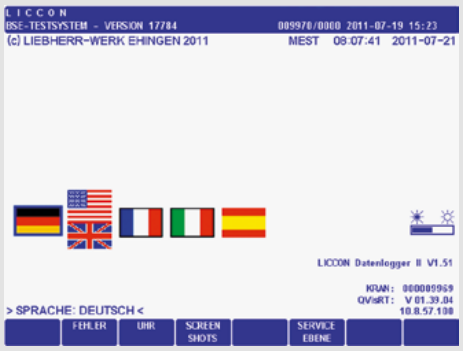

The LICCON test system

- Rapid localisation of problems on screen without any measuring instruments
- Display of error codes and descriptions
- Convenient interactive functions for monitoring all inputs and outputs
- Displays of functions and allocation of sensors and actuators

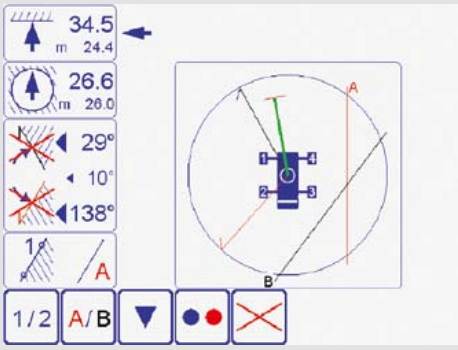

https://truckmanualshub.com/

Intelligent crane control

For functional and safe crane operation: the LICCON computer system

The soft and hardware of the mobile crane control is developed by Liebherr in-house. The centre is the LICCON computer system (Liebherr Computed Control).

- Integrated LML load moment limiter
- Key components are in-house manufactured by Liebherr
- Guaranteed spare parts availability
- Worldwide proven under the most different climate conditions
- Operator friendly

The second control generation LICCON2 is the result of a continuous development by the Liebherr specialists and enables the adaption to the constantly increasing demands of the markets due to its modern and future oriented control.

The data bus technology

Liebherr mobile cranes are completely interlaced by the data bus system. All important electric and electronic components are equipped with own microprocessors and communicate with each other by only limited data cables. For the special demands of the mobile crane Liebherr has developed own data bus systems (LSB – Liebherr-System-Bus). The data bus technology improves the reliability, the comfort and the safety for road driving and crane operation:

- Higher reliability due to remarkable lesser electric cables and contacts
- Continuous self testing of the „intelligent sensors“
- Comprehensive diagnosis possibilities, fast fault finding

The LICCON working area limiter (option)

- Relief of the crane driver by automatic monitoring of working area limits like bridges, roofs, etc.
- Simple programming
- Four different limiting functions:
  - Sheave head height limiting
  - Limiting of radius
  - Limiting of slewing
  - Limiting of borders

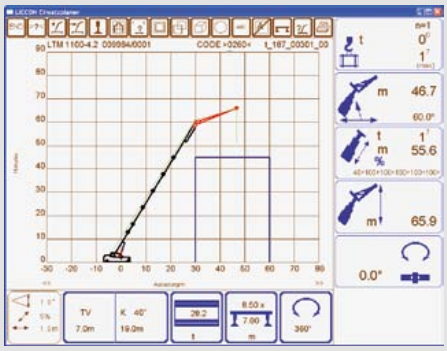

The LICCON work planner

- Computer programme for planning, simulating and documenting crane operations on a PC
- Representation of all the crane's load charts
- Automatic search for suitable crane based on entry of load, radius and lifting height parameters
- Simulation of crane operations with outline functions and supporting force display

https://truckmanualshub.com/

Colour monitor

The readability of the data on the monitor of the LICCON2 control unit in the crane cabin is improved by the colour display. Warning indications and crane utilisation are more clearly visible.

Touch display

Below the joysticks integrated in the arm rest touch displays are provided with which various working functions can be selected. Beside others these are the drive and steering programmes of the carrier, the axle suspension, the supporting of the crane, the adjustment of the working floodlights as well as the heating and ventilation control.

https://truckmanualshub.com/

LICCON2 – safe and comfortable

Attaching and detaching the hook block

The BTT - Bluetooth terminal allows the crane driver to attach the hook block or detach it from the front bumper within view by remote control of the hoist gear and the luffing cylinder of the telescopic boom.

Crane supporting

By use of the BTT the mobile crane will be set up comfortably and safely. Engine start/stop and speed regulation, electronic inclination display and automatic levelling are standard. Optionally the BTT can also display the outrigger forces.

Wireless remote control (option)

All crane movements can be controlled outside the crane cab. By this system the economy of crane operations is enhanced.

- Free visibility and closeness to the load
- Prevention of communication errors between crane driver and jobside personnel
- Independent attaching of the load by the crane driver

https://truckmanualshub.com/

PN 200.01.E03.2012

The illustrations also contain accessories and special equipment which are not contained in the standard scope of delivery. Subject to modifcations.

Liebherr-Werk Ehingen GmbH
Postfach 1361, 89582 Ehingen, Germany
☎ +49 7391 502-0, Fax +49 7391 502-33 99
www.liebherr.com, E-Mail: info.lwe@liebherr.com