Rocker arms, adjustment

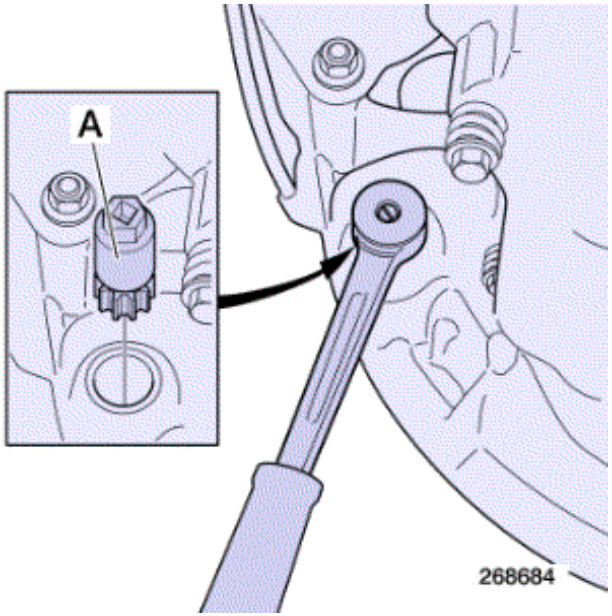

Remove the blanking plug.
Position the marks on the camshaft which indicate the number of the cylinder to adjust between the marks on the camshaft front bearing cap.
Use tool **A**.
A = 1380
Engine rotation: **anti-clockwise, from the engine flywheel end**.

Camshaft marks

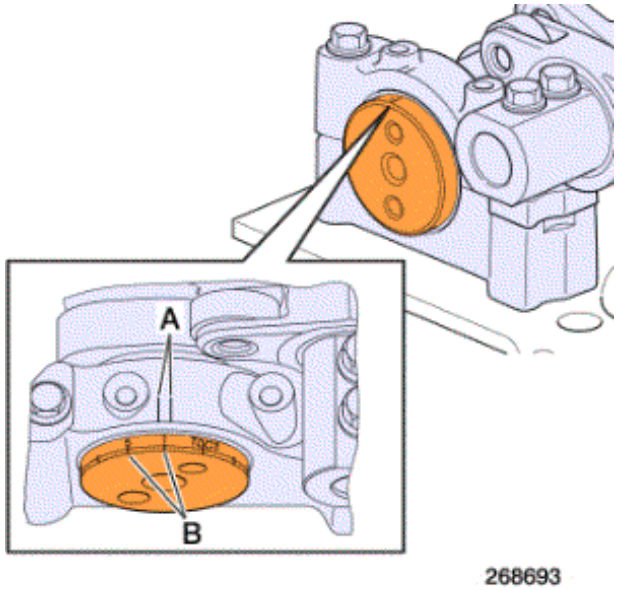

Without "Optibrake" / "Optibrake +"

The marks **(B) 1 - 5 - 3 - 6 - 2 - 4** correspond to the recommended inlet valve clearances , to the recommended exhaust valve clearances and to the recommended pump injector pre-travel distances for each relative cylinder.

Mark **(B)** must be positioned in the centre of marks **(A)** when carrying out the adjustment.

For values, see "Technical data" chapter.

See pages .

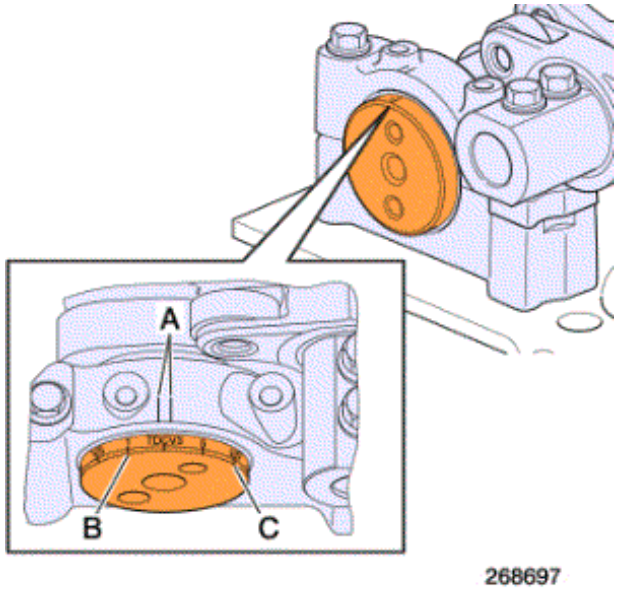

Engine equipped with "Optibrake"

The marks **(B) 1 - 5 - 3 - 6 - 2 - 4** correspond to the recommended inlet valve clearances and to the recommended pump injector pre-travel distances for each relative cylinder.

The marks **(C) V1 - V5 - V3 - V6 - V2 - V4** correspond to the recommended exhaust valve clearances for each relative cylinder.

The marks **(B)** or **(C)** must be positioned between the marks **(A)** to make the correct adjustment.

For values, see "Technical data" chapter.

See pages .

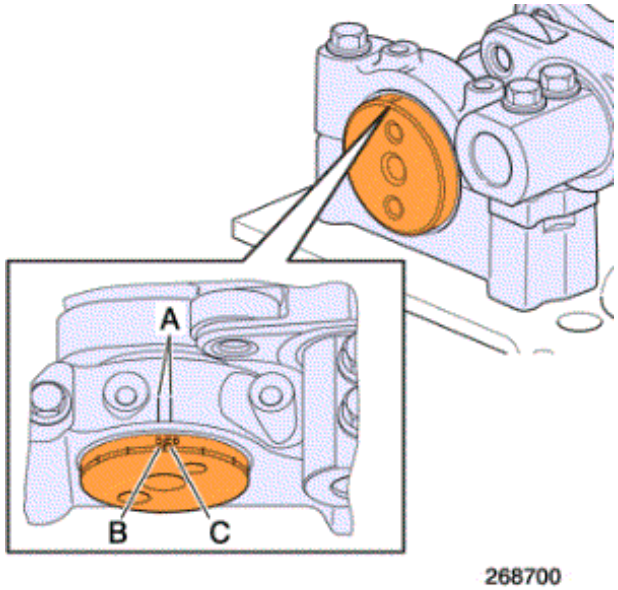

Engine equipped with "Optibrake +"

The marks **(B) 1 - 5 - 3 - 6 - 2 - 4** correspond to the recommended inlet valve clearances and to the recommended pump injector pre-travel distances for each relative cylinder.

The marks **(C) E1 - E5 - E3 - E6 - E2 - E4** correspond to the recommended exhaust valve clearances for each relative cylinder.

The marks **(B)** or **(C)** must be positioned between the marks **(A)** to make the correct adjustment.

For values, see "Technical data" chapter.

See pages .

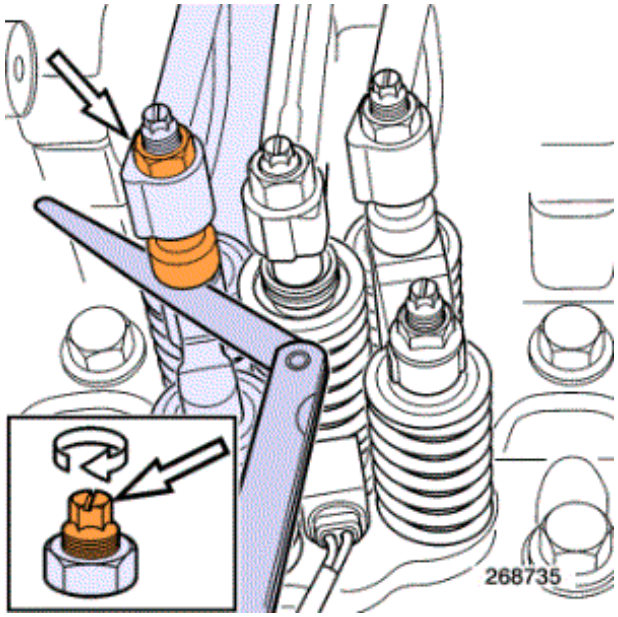

Adjustment of inlet valves

Measure the valve clearances using feeler gauges.

See pages .

Loosen the locknut and the adjuster.

Adjust the clearance between the rocker arm and the valve yoke by means of screw.

Tighten the locknut to torque while holding the adjuster.

See pages .

Make a mark on the rocker arm when adjustment is finished.

Perform the same operation on all the other cylinders.

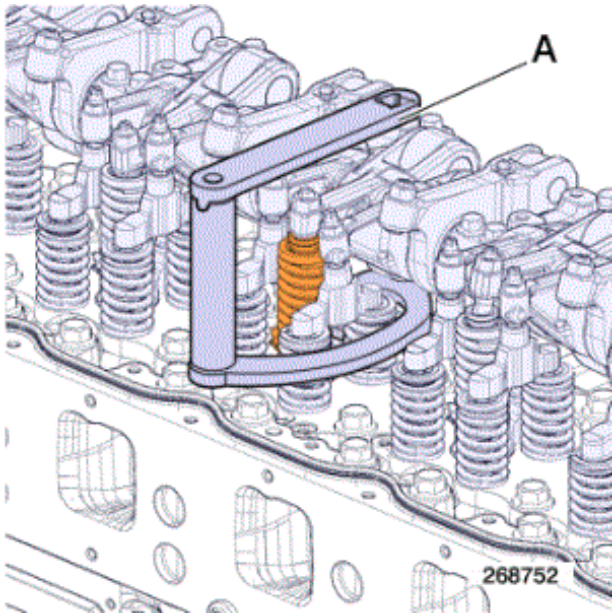

Adjustment of unit pump injectors pre-travel

Check the torque of the injector flange attachment bolts without removing the rocker arm assembly.

Use tool **A**.

A = 0162

Tighten to torque.

See pages .

This operation is to be performed at each valve adjustment maintenance.

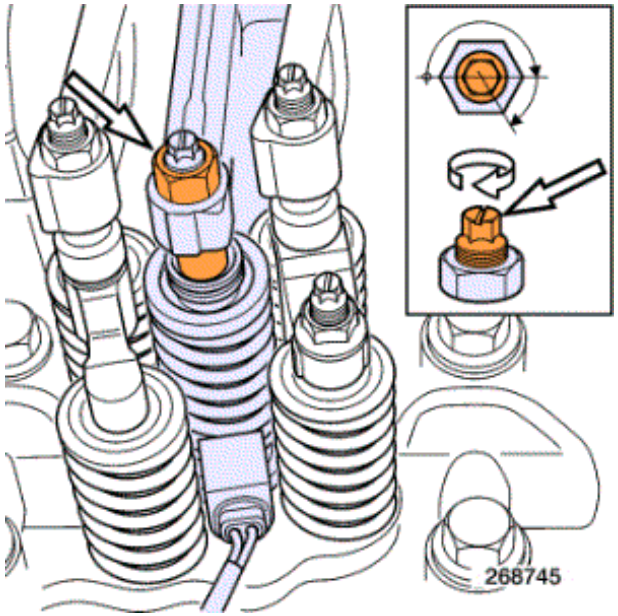

Loosen the locknut and the adjuster.
Screw up the adjuster by hand until contact is made with the pump injector.
Tighten the adjuster through **2/3** of a turn to obtain a unit pump injector preload.
Tighten the locknut to torque while holding the adjuster.
See pages .

Make a mark on the rocker arm when adjustment is finished.
Perform the same operation on all the other cylinders.
Exhaust valve adjustment

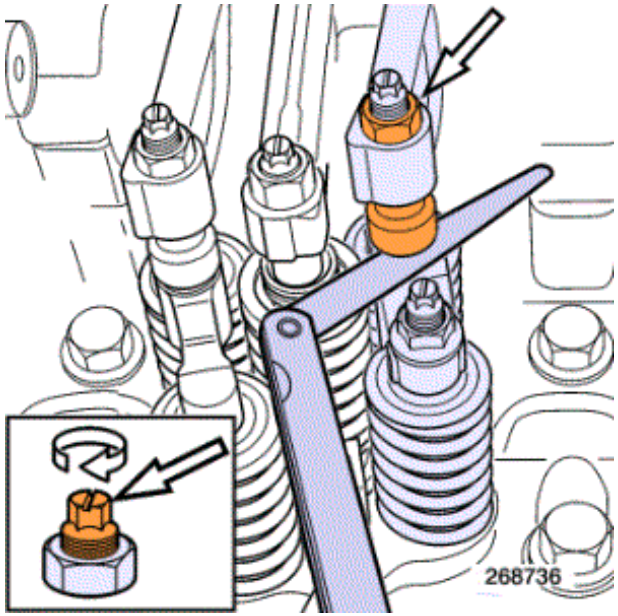

Without "Optibrake" / "Optibrake +"

Measure the valve clearances using feeler gauges.

See pages .

Loosen the locknut and the adjuster.

Adjust the clearance between the rocker arm and the valve yoke by means of screw.

Tighten the locknut to torque while holding the adjuster.

See pages .

Make a mark on the rocker arm when adjustment is finished.

Perform the same operation on all the other cylinders.

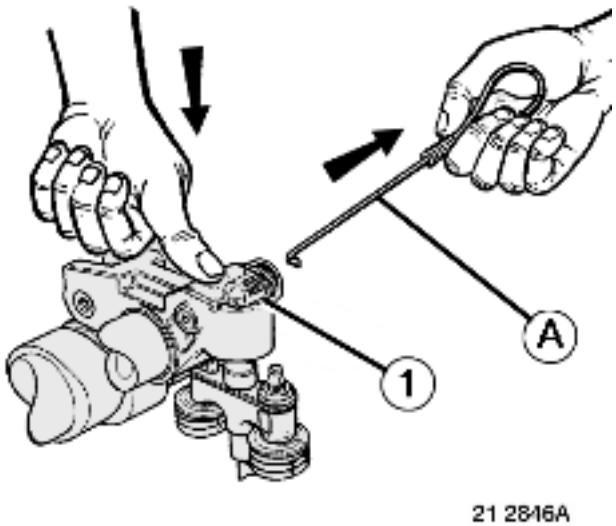

Engine equipped with "Optibrake"
Before making the adjustment, press rocker arm **(1)**.

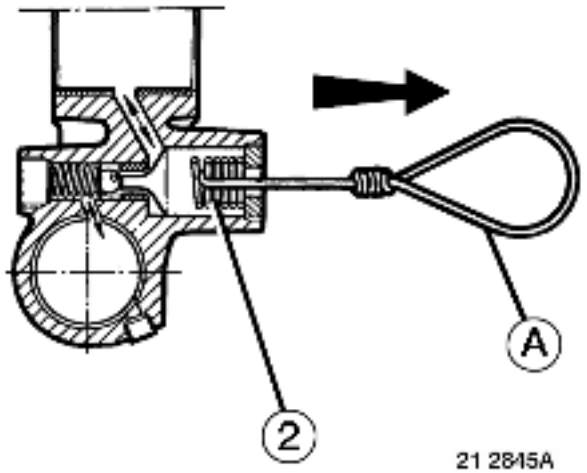

Compress valve spring **(2)** to free the oil in the rocker arm.
Use a piece of rigid iron wire to make a hook **(A)**.

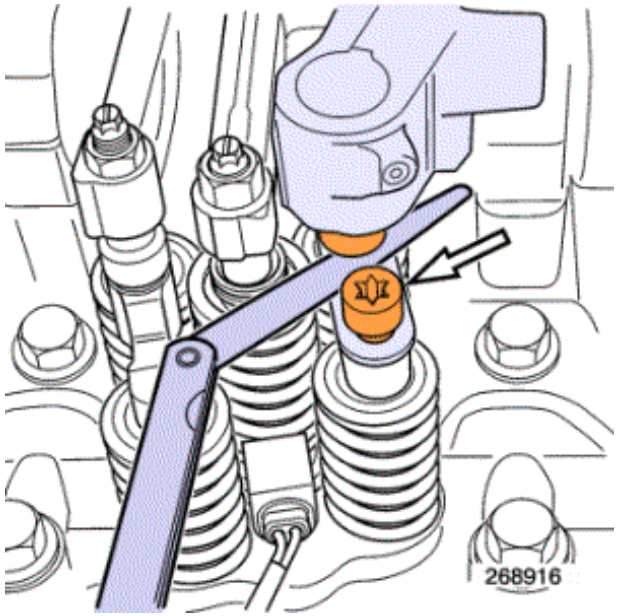

Check the clearance between the valve yoke and the exhaust rocker arm piston. Turn the piston to ensure that it is properly seated in its housing.
Use a feeler gauge corresponding to the recommended clearance.
See pages .
In the event of rocker arm play or sticking, make the check with a thicker or thinner feeler gauge in order to determine the thickness of the new adjusting shim.

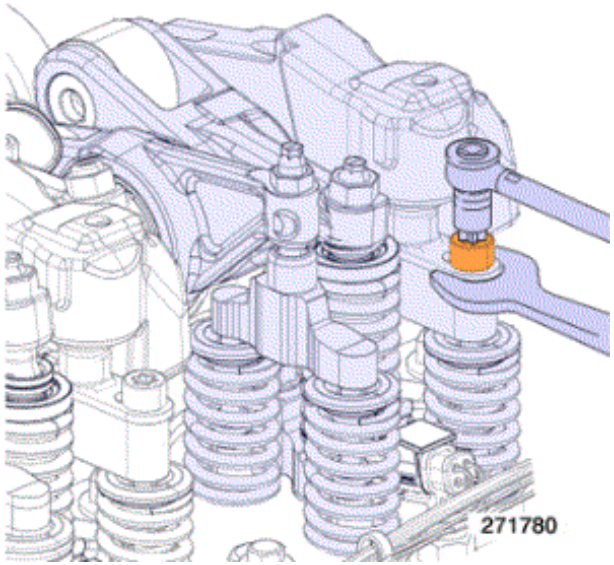

In the event of incorrect clearances.
Remove bolt.
Remove adjusting shim .

Hold the caliper in place when unbolting.

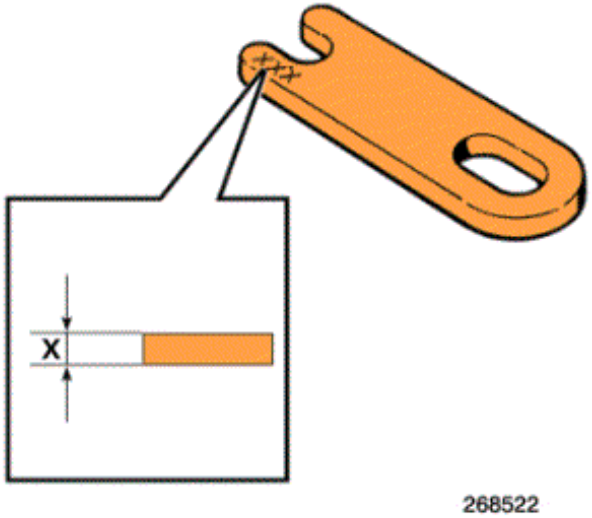

Note down the thickness **X** engraved on adjusting shim.
Determine the thickness of the new adjustment shim, in order to obtain the recommended clearance.
See pages .

You can superimpose a maximum of 2 adjusting shims, provided that they have the same thickness. Adjusting shims are available with thicknesses of ***0.05 by0.05 mm.***

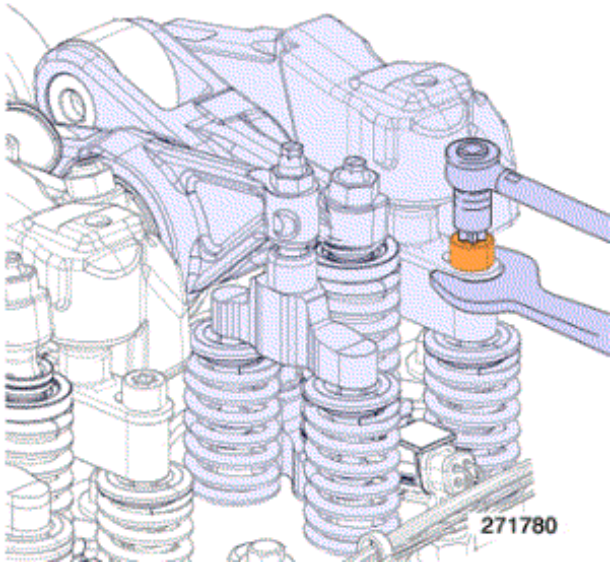

Fit shim.
Fit bolt.
Tighten to torque.
See pages .

Hold the caliper in place when tightening.
Again check the clearance between the valve yoke and the arm piston.

Make a mark on the rocker arm when adjustment is finished.
Perform the same operation on all the other cylinders.

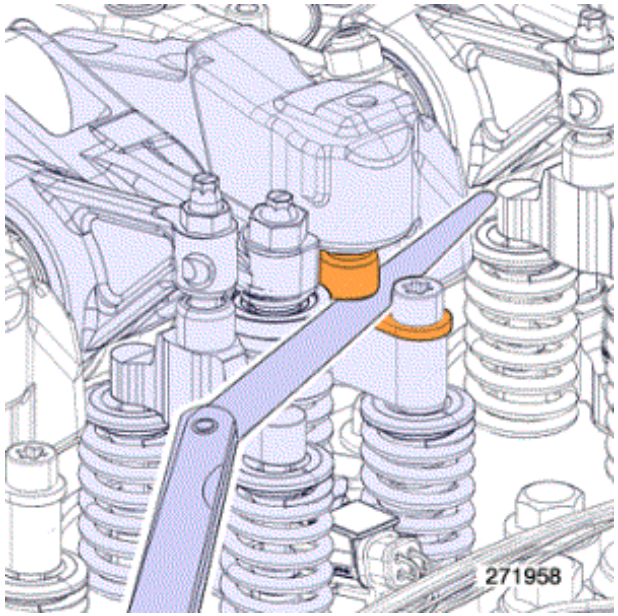

Engine equipped with "Optibrake +"

Check the clearance between the valve yoke and the exhaust rocker arm piston. Turn the piston to ensure that it is properly seated in its housing.

Use a feeler gauge corresponding to the recommended clearance.

See pages .

In the event of rocker arm play or sticking, make the check with a thicker or thinner feeler gauge in order to determine the thickness of the new adjusting shim.

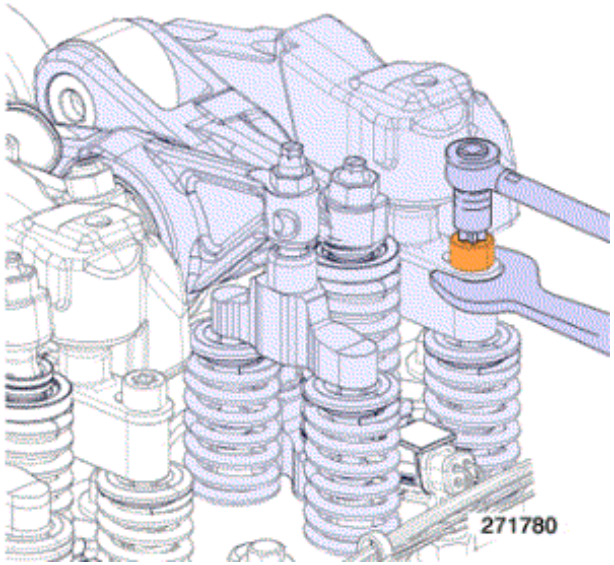

In the event of incorrect clearances.
Remove bolt.
Remove adjusting shim .

Hold the caliper in place when unbolting.

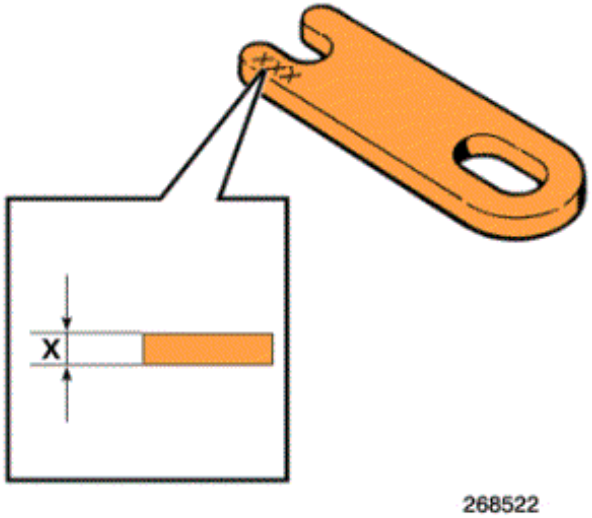

Note down the thickness **X** engraved on adjusting shim.
Determine the thickness of the new adjustment shim, in order to obtain the recommended clearance.
See pages .

You can superimpose a maximum of 2 adjusting shims, provided that they have the same thickness. Adjusting shims are available with thicknesses of ***0.05 by0.05 mm.***

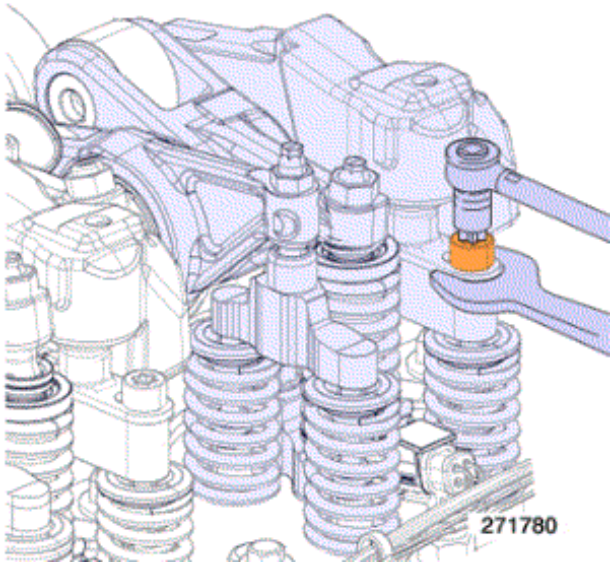

Fit shim.
Fit bolt.
Tighten to torque.
See pages .

Hold the caliper in place when tightening.

Again check the clearance between the valve yoke and the arm piston.

For adjusting the brake rocker arm, leave the feeler gauge in place.

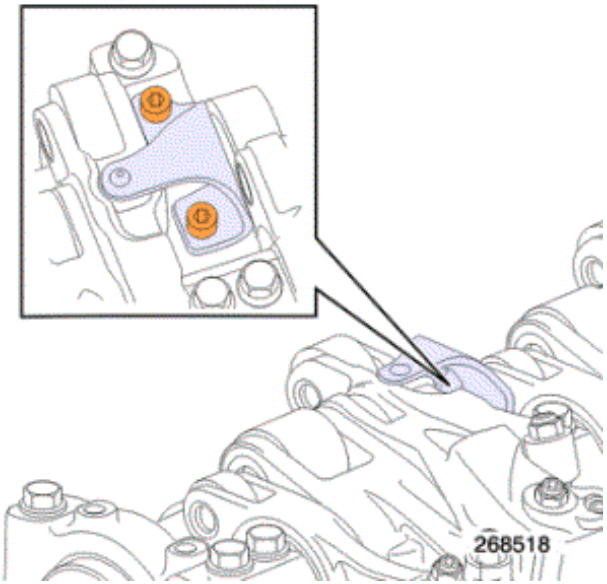

Adjustment of brake rocker arm

Loosen bolts.

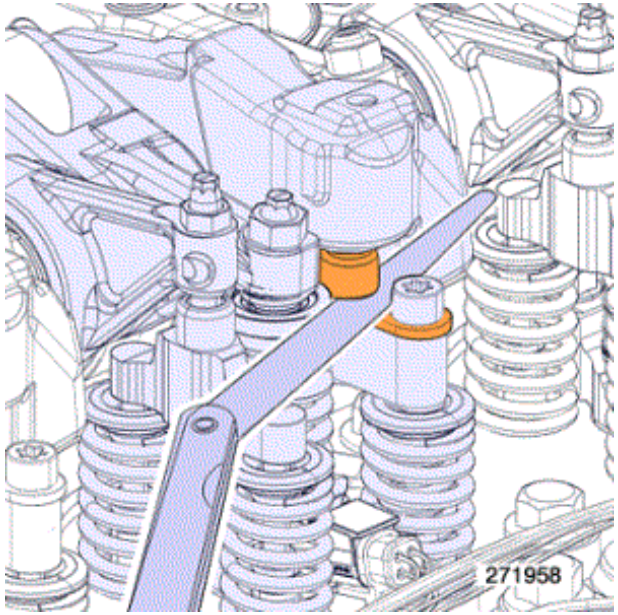

For adjusting the brake rocker arm, leave the feeler gauge in place.

The feeler gauge in place eliminates play in the exhaust valve.

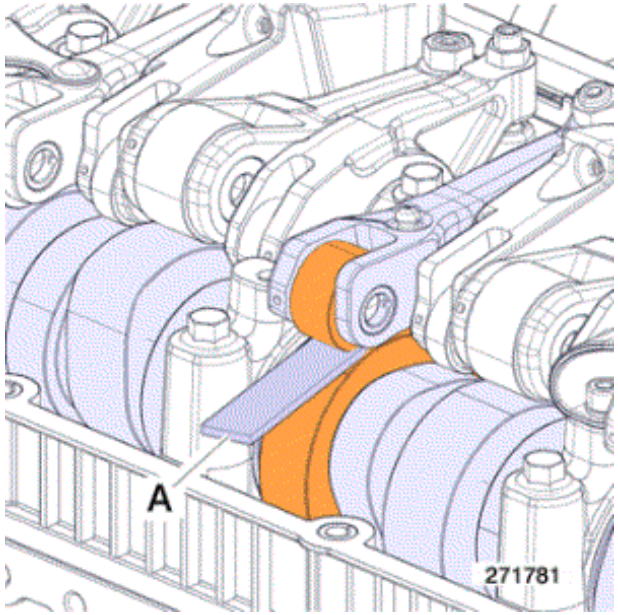

Check the play in the brake rocker arm.
Use the **2.85 mm** feeler gauge from tool **A**.
A = 0232
The checking feeler gauge should move without resistance.

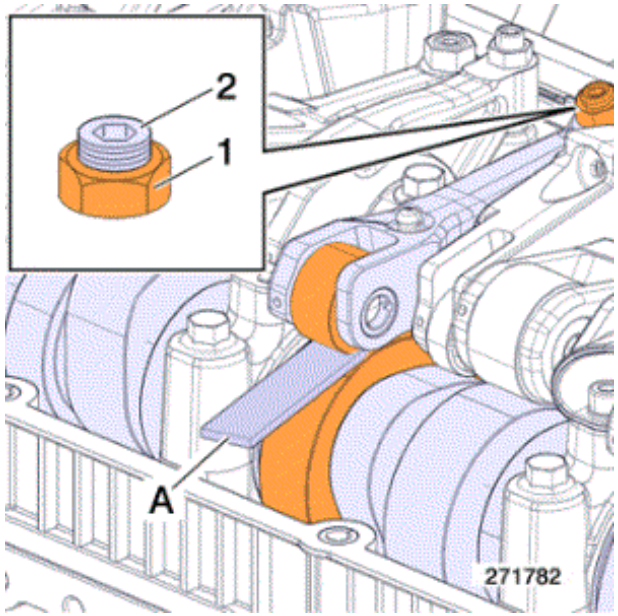

In the event of incorrect clearances.
Loosen locknut **(1)**.
Loosen bolt **(2)**.
Fit the **3.20 mm** feeler gauge from tool **A**.
A = 0232
Tighten bolt **(2)** until the exhaust valve just starts to open.
Unscrew bolt **(2)** until feeler gauge **A** can be withdrawn with slight resistance.
Tighten the locknut **(1)** to torque while holding the adjuster **(2)**.
See pages .

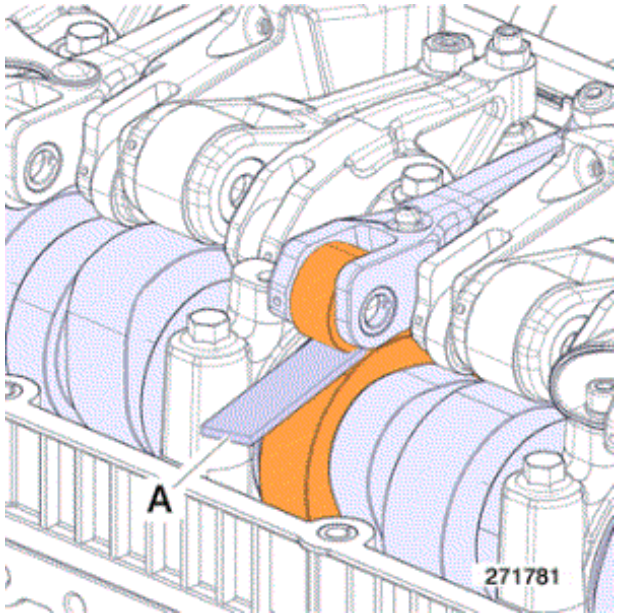

Check the play in the brake rocker arm.
Use the **2.85 mm** feeler gauge from tool **A**.
A = 0232
The checking feeler gauge should move without resistance.

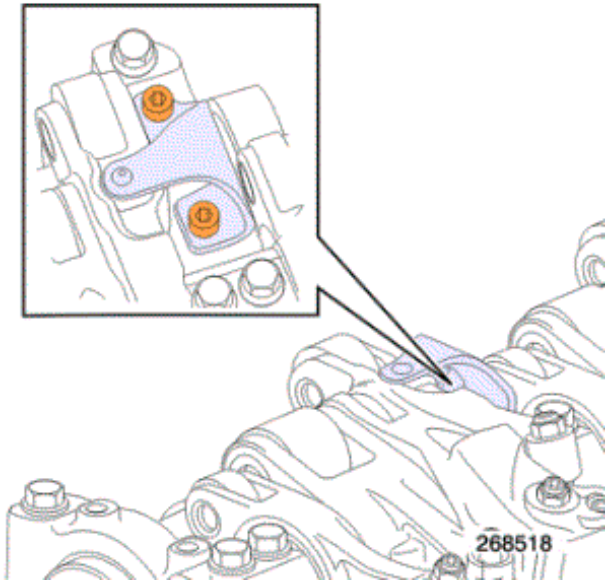

Tighten the bolts to torque.
See pages .

Make a mark on the rocker arm when adjustment is finished.
Perform the same operation on all the other cylinders.

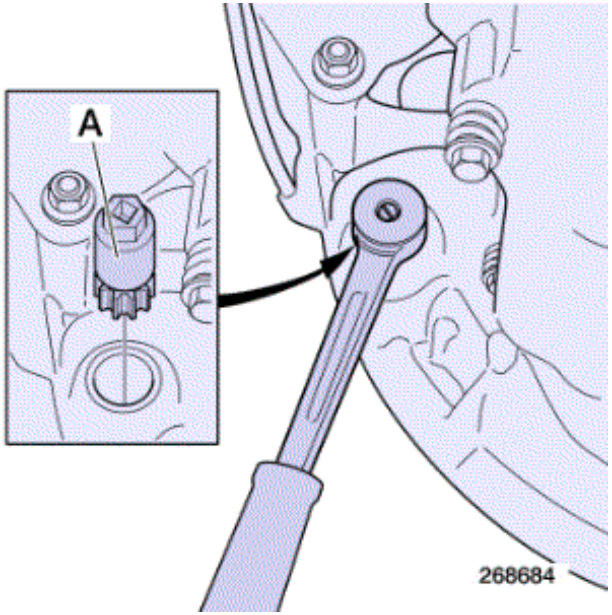

Remove tool **A**.
A = 1380
Fit blanking plug.

Tools

Specific tools

Illustration	RENAULT TRUCKS part N°	Designation	Manufacturer's reference N°	Manufacturer's code N°	Scale	Qty
	5000261380	CONTROL			1	1
	7488840162	WRENCH			2	1

	88800232			**null**	**1**	**1**

Rocker arms, tightening torques

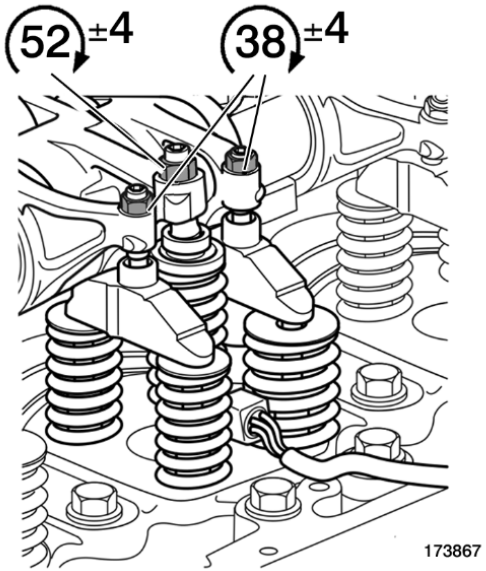

Without "Optibrake" / "Optibrake +"

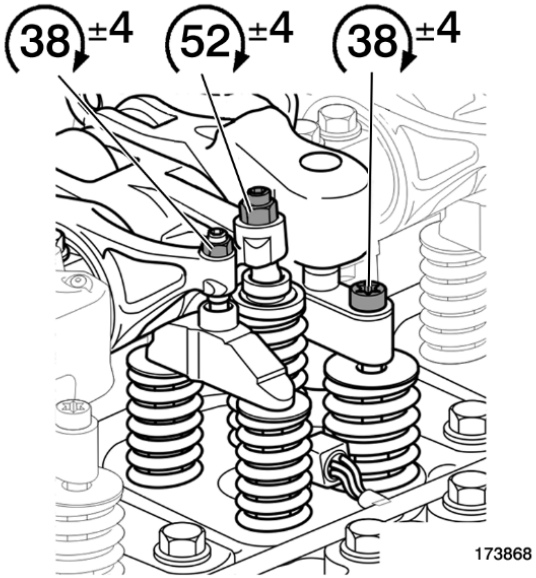

With "Optibrake"

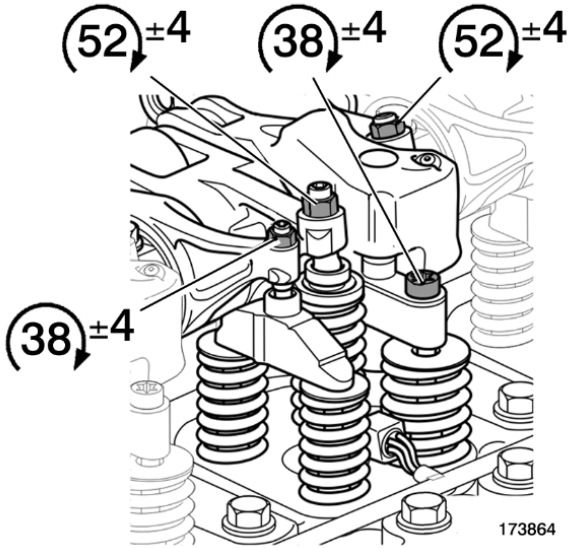

With "Optibrake +"