https://truckmanualshub.com/

EDC SYSTEM

(FOR HA57L165/H6E4S123*/H6E4S165*/ H4E4S95* H4E4S110*/ CRS BSIII / BSIV H SERIES ENGINES)

*BSIV ENGINE

ASHOK LEYLAND

MAY 2012

https://truckmanualshub.com/

CONTENTS

GROUP - 12

EDC SYSTEM - HA57L165 / H6E4S123 / H6E4S165/H4E4S95 / H4E4S110 CRS BSIII & BSIV H SERIES ENGINES

Section	Subject	Page No.
12.0	**ELECTRONIC DIESEL CONTROL SYSTEM - OVERVIEW**	**12.03**
12.1	**CONTROLS**	**12.03**
12.2	**ENGINE START / STOP PROCEDURE:**	**12.04**
12.3	**SENSORS AND ACTUATORS**	**12.05**
12.3.0	Boost pressure sensor	12.07
12.3.1	Accelerator Pedal Sensor	12.08
12.3.2	Engine Speed Sensor	12.10
12.3.3	Camshaft Speed Sensor	12.11
12.3.4	Metering Unit	12.12
12.3.5	Injectors	12.13
12.3.6	Coolant Temperature Sensor	12.15
12.3.7	Fuel Temperature Sensor	12.16
12.3.8	Rail Pressure Sensor	12.17
12.3.9	Vehicle Speed Sensor	12.18
12.4	**SWITCHES**	**12.18**
12.4.0	Brake Signal Switch	12.18
12.4.1	Clutch Signal Switch	12.18
12.5	**DIAGNOSTIC LAMP AND REQUEST SWITCHES**	**12.19**
12.5.1	Water in Fuel Sensor and Lamp	12.19
12.6	**SCR INTERFACE**	**12.20**
12.7	**CAN BACKBONE**	**12.21**
12.8	**DIAGNOSTICS**	**12.22**
12.8.0	Diagnostic Concept	12.22
12.8.1	Diagnostic Tester	12.22
12.8.2	Diagnostic request switch and Blink code	12.23
12.9	**FAILURE MODES**	**12.24**
12.10	**INSPECTION OF PARTS & CONNECTIONS AGAINST COMPLAINT**	**12.27**
12.11	**GUIDELINES FOR CHECKING SENSORS AND COMPONENT**	**12.30**
12.12	**PRECAUTIONS FOR ELECTRONIC DIESEL CONTROL SYSTEM**	**12.30**
12.13	**MAINTENANCE PROGRAMME**	**12.32**

https://truckmanualshub.com/

12.0 ELECTRONIC DIESEL CONTROL SYSTEM - OVERVIEW

Modern engine development is driven by legislative emission requirements and growing vehicle electronic architecture in the market. Following are the legislation and market driven needs.

1. High fuel injection line pressure
2. Multiple injections (Main and Pilot)
3. Flexible in fuel quantity, injection timing and fuel injection pressure independent of engine speed.
4. Environmental (Ambient, Coolant temperature etc.,) / Altitude dependent torque requirement.
5. Integration and communication with other vehicle and exhaust treatment systems Electronic control units through CAN (Automatic transmission, ABS, ACU, BCU etc.,)

The EDC (Electronic Diesel Control) system is capable of meeting the demands outlined above.

In EDC system, the driver has no direct control over the injected fuel quantity through the accelerator pedal.

The injected fuel quantity is calculated and injected based on

1. Engine operating conditions such as Boost pressure and temperature, accelerator position and ambient pressure, coolant temperature and engine speed.

EDC system is subdivided into

1. Sensors

   Detects the engine operating conditions and the driver's demand. They convert physical variables into electrical signals.

2. Electronic Control Unit (ECU)

   Processes the information received from the sensors. It controls the actuators through electrical output signals. It also provides interfaces with other systems like diagnostic tool, ABS, Automatic transmission etc.

3. Actuators

   Convert the electrical signal from the ECU into physical variable for controlling actuators such as Injectors, Metering unit.

12.1 CONTROLS

Open and Closed Loop Electronic Control

Open Loop

The actuators are operated by the ECU output signals which the ECU has calculated using the input variables, stipulated data, characteristic maps, and algorithms. The final results are not checked.

Close loop control

The actual value at the output is continually monitored against the desired value and as soon as a deviation is detected this is corrected by a change in the actuator control. The advantage of close loop control lies in the fact that disturbances from outside are detected and taken into account. In our system close loop control is used for rail pressure governing through activating metering unit.

Fuel - Injection control

In order that the engine can run with optimum combustion under all operating conditions, the ECU calculates exactly the right injection fuel quantity at right time in different conditions. Here the values of various parameters are considered.

Starting Torque Requirement

The injection fuel quantity is calculated as a function of coolant temperature and cranking speed. This will generate from the moment the starting switch is turned ON until minimum engine speed is reached.

Drive mode

When the vehicle is being driven normally, the driving torque is a function of the accelerator pedal position and engine speed and boost pressure. Calculation depends upon maps, which also consider high fuel temperature. This permits best possible alignment of the engine's output to the driver's wishes and also protect FIP parts.

Engine Idle speed control

When the accelerator pedal is not pressed, it is the job of the idle speed control to ensure that a determined idle speed is maintained. For instance, with the engine being cold, the idle speed is maintained by set value defined with respect to water temperature and the set speed is maintained similarly at increased water temperature.

https://truckmanualshub.com/

Engine Maximum speed control

This control ensures that the engine shall not to be rotated at excessive speeds. To avoid damage to the engine, the engine manufacturer stipulates a permissible maximum rotational speed that may only be exceeded for a very brief period. Beyond that an error recording is registered. In our case the recorded speed is 3000 rpm. Error code is P381.

Intermediate set - Speed control

Intermediate speed control enables to run the engine at constant speed for applications like crane, ambulances / trucks mounted with generator sets.

Vehicle speed limiter

The vehicle speed limiter function limits the vehicle's maximum speed to a set value. This can be applicated and proper activation can be performed by the customized Diagnostic tool.

Engine Torque Limitation

Max torque limitation has been predetermined and set at factory. Deviation to that will have the following effect

- Excess emission in form of smoke
- Mechanical overloading due to high torque.

Engine exhaust brake function

When the Exhaust brake is applied, in general, the injected fuel quantity is either reduced to zero or to the idle fuel quantity is reduce to zero.

Start of injection control

Start of injection has a critical effect on power output, fuel consumption, noise, and emissions. The desired value for start of injection depends on engine speed and injection fuel quantity. With the use of injector energisation, it is achieved.

12.2 ENGINE START / STOP PROCEDURE:

Before starting ensure that the gear is in neutral position and the parking brake is applied.

To reduce transmission drag on cold vehicles, depress the clutch pedal.

If it is required to start the vehicle in a garage or workshop, ensure that adequate ventilation is provided.

Engine Start Procedure

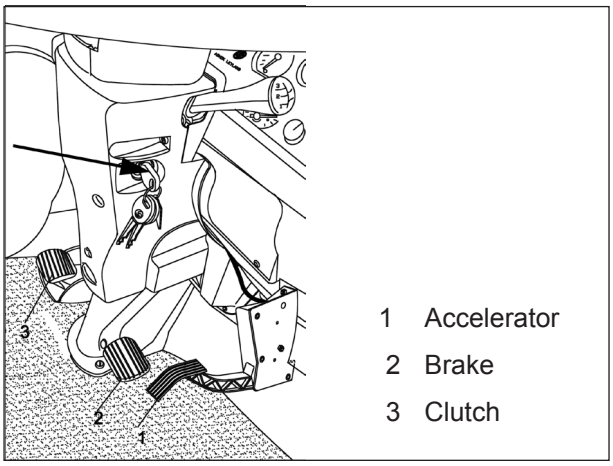

1. The ignition switch is provided in the steering column. Insert the ignition key in the ignition switch, turn clockwise for 24 V supply to vehicle electricals & EDC system.
2. Turning this key further will crank the engine. After starting the engine release the key immediately to avoid any starter motor damage.

Engine Stop Procedure

To stop the engine turn the ignition key anticlockwise.

Do’s and Don’ts:

Idle the engine always about 2 mins after starting and before switching off the engine.

Do not switch-off the engine through engaging the gears and brake.

Do not operate the starter motor for more than 10 sec. continuously. Wait for 30-60 Seconds before trying again.

https://truckmanualshub.com/

12.3 SENSORS AND ACTUATORS

FOR H SERIES 6 CYLINDER

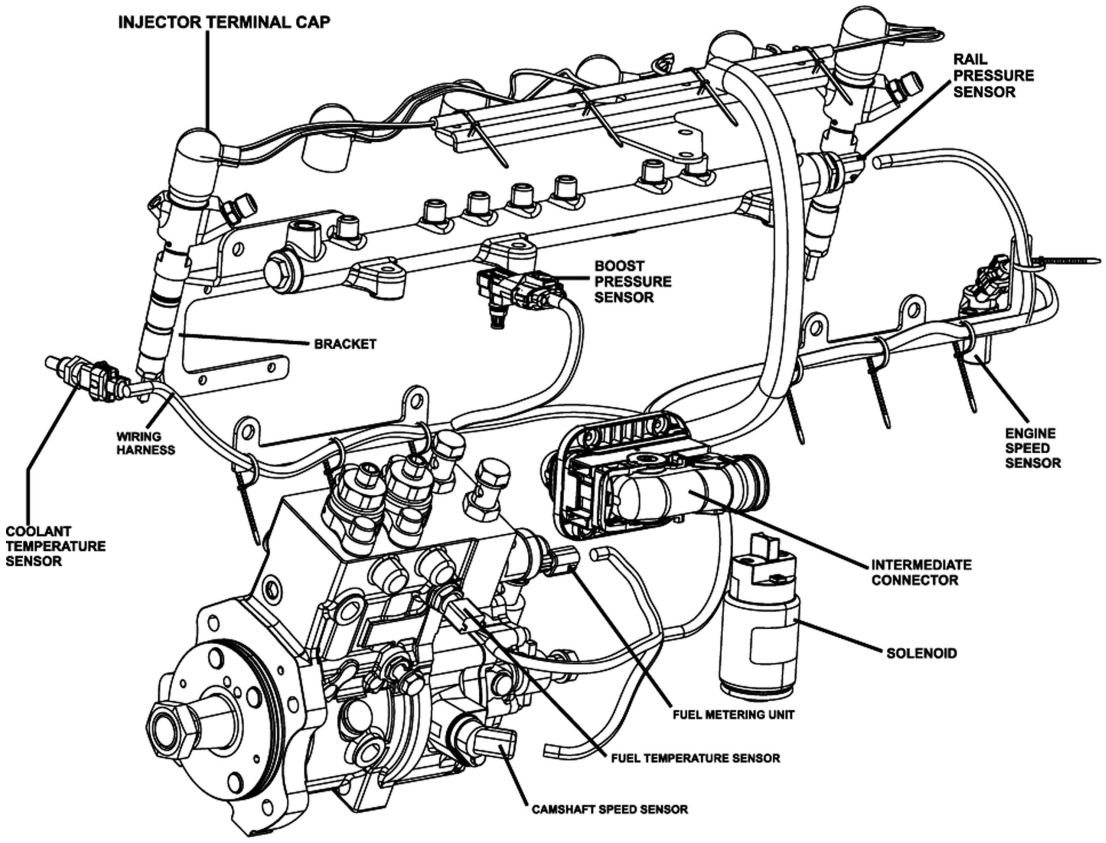

FOR H SERIES 4 CYLINDER

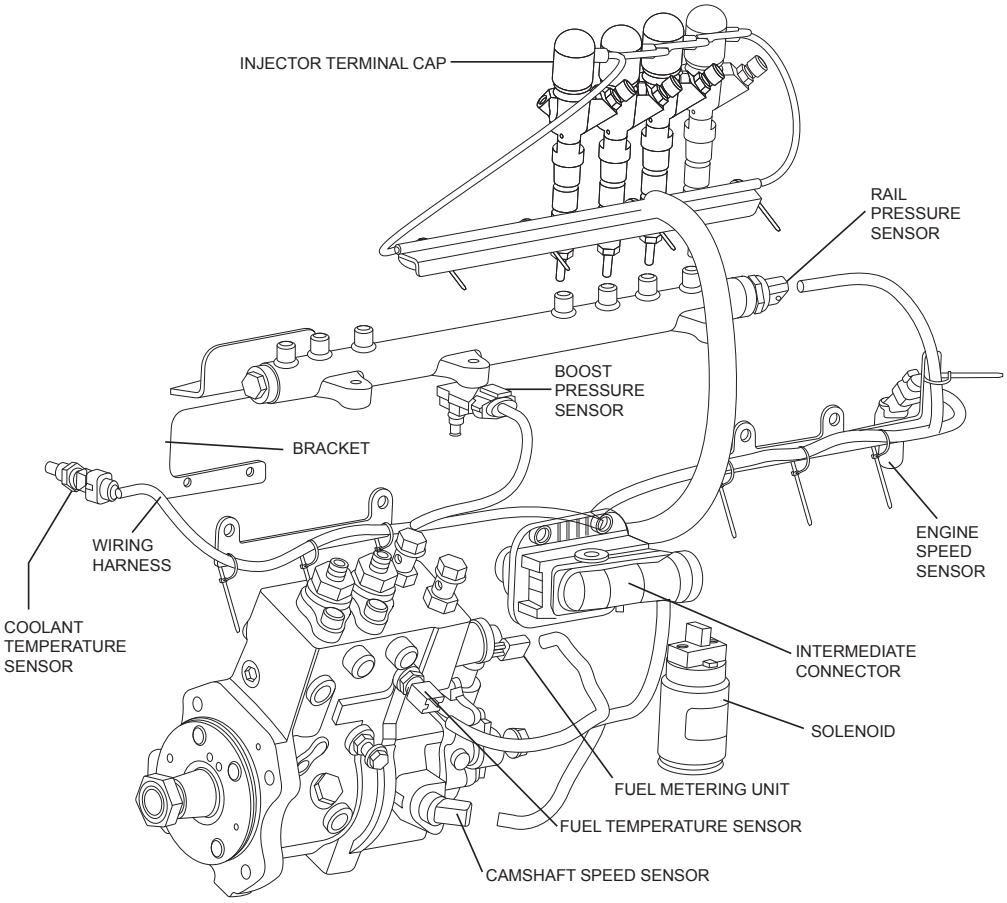

https://truckmanualshub.com/

Continuity checking for sensor with respect to ECU side connector

Note:

- Remove sensor side connector & ECU side connector also.
- If carefully seen we can find numbers written (Example 1 2 3) on the sensor connector.
- There are three types of ECU connectors one big and one small in size and one for Engine interface connector. Refer Below sketches.

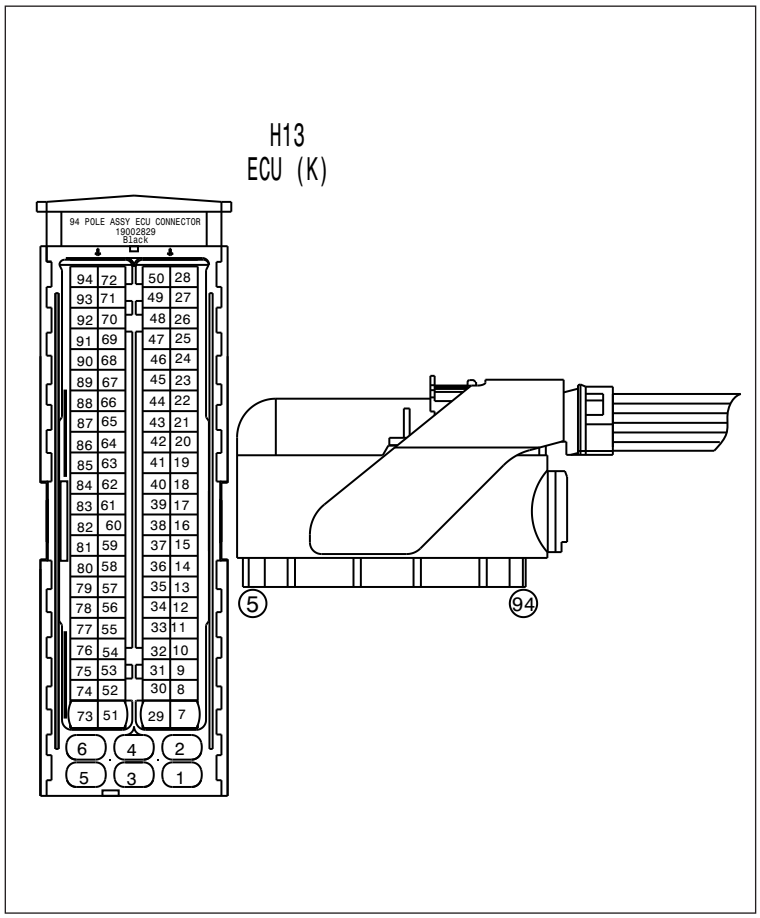

Big Connector (K type connector)

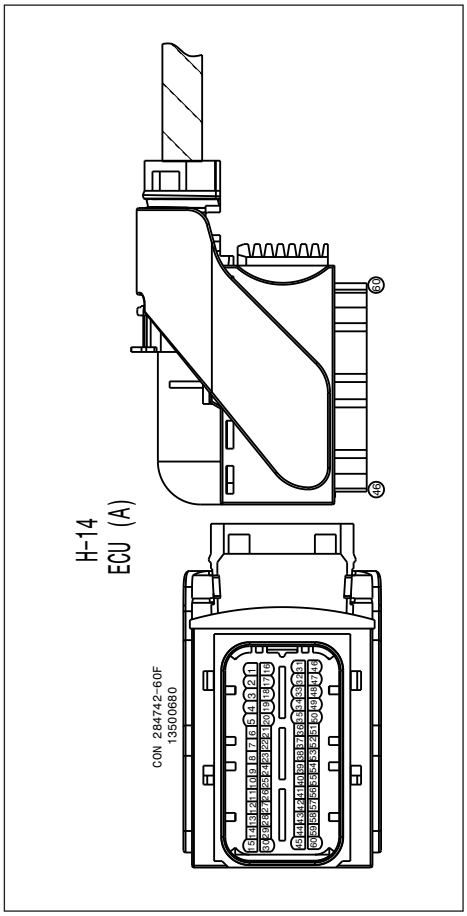

Small Connector (A type connector)

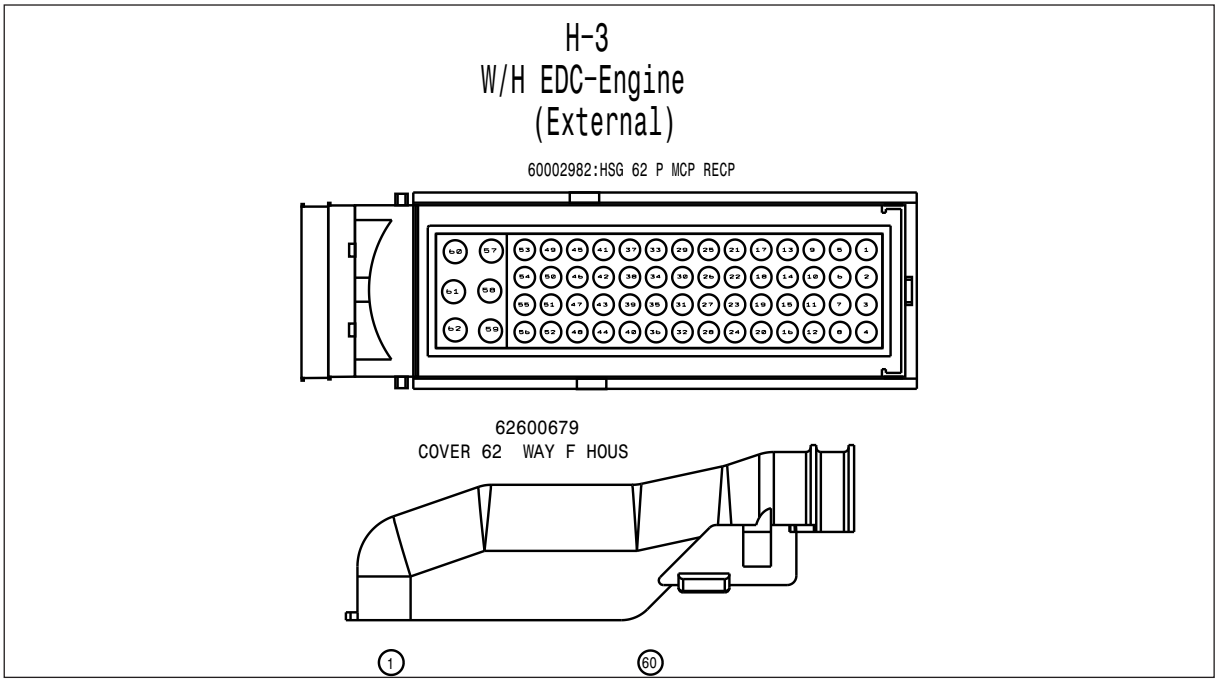

Engine Inteface Connector (A type connector)

https://truckmanualshub.com/

12.3.0 BOOST PRESSURE SENSOR

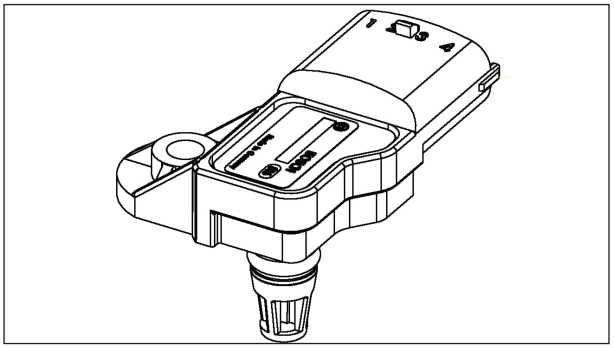

Function and Working

The sensor serves to measure the absolute intake manifold pressure. The pressure Sensor Element consists of a Silicon diaphragm, which contains Piezo resistive Semiconductor. The Pressure acts on the diaphragm causes change in electrical resistance in Circuit thus change in Output voltage.

Also, Suitable circuitry for signal conditioning is provided.

Installation

a) The pressure sensor package is inserted into the intake manifold and is sealed by using an O-ring, ensuring leak proof. Smear lubricant on O-ring (non -acid paraffin oils) during fitment.

b) Maximum tightening torque of screws : 4 - 6 Nm

Specifications :

Operating Voltage - From ECU : 5V DC

Max. Absolute Pressure (System) : 3 bar

Boost pressure sensor location

H SERIES 6 CYLINDER

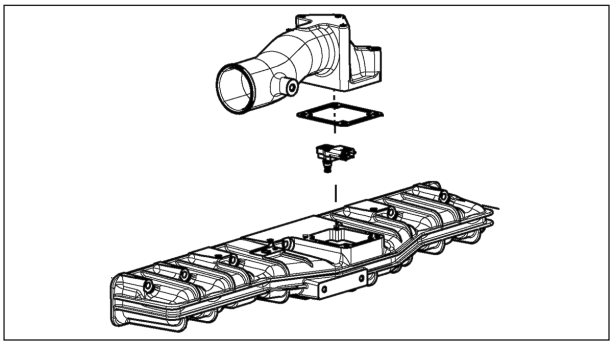

H SERIES 4 CYLINDER

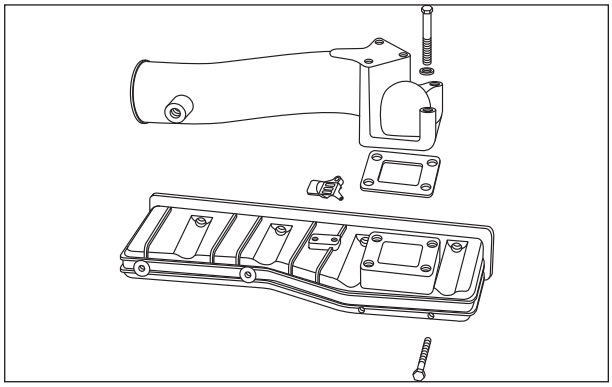

Fault Path

DTC code (Hand held diagnostic tool)	Description
P0238	Boost pressure sensor Voltage above upper limit
P0237	Boost pressure sensor Voltage below lower limit
U1001	Boost pressure sensor signal from CAN not OK .
P0236	Boost pressure sensor Plausibility error.

Effect of fault in Vehicle

- Loss of power / vehicle speed limited to 40-50 KmpH as it would refer to the default value of 1200 mbar as set in the application.

Possible cause of fault

- Open circuit of signal wire / Earth wire & Short Circuit of Signal Wire to Earth wire.
- Boost Pressure sensor defective
- Loose connection of end fittings in the sensor side as well as in the ECU Side

Service Recommendation

- Check resistance and continuity
- Measure the resistance between Pin 1 & 2 (Refer Table 1) at sensor end male connector.
- Measure the voltage between pin 1 & 4 for boost pressure sensor supply Voltage (5V DC) at sensor end male connector.

Circuit Diagram

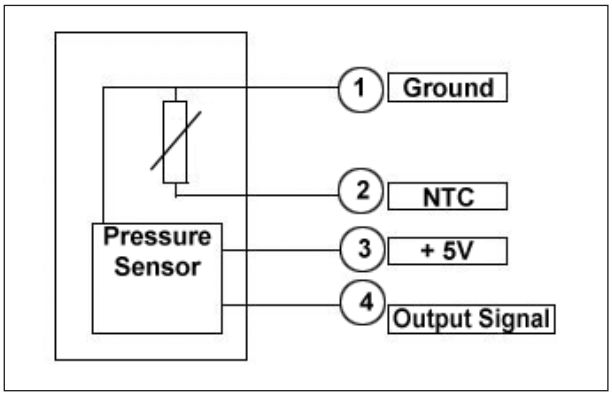

Pin configuration & Connection Details

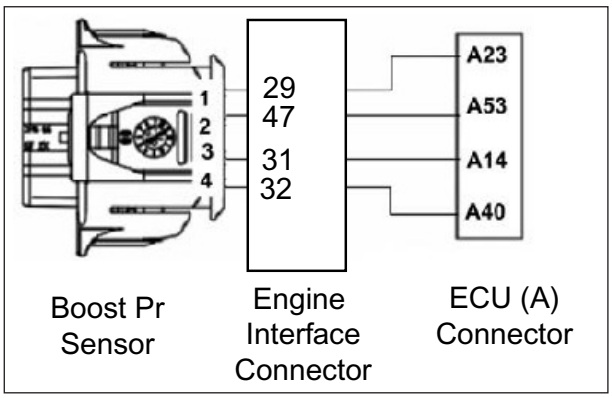

https://truckmanualshub.com/

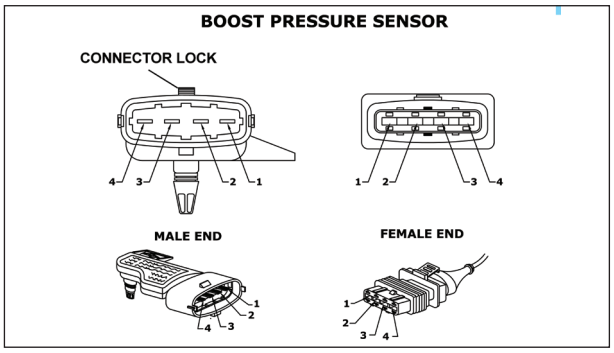

TABLE 1:

Ambient temp. in °C	Resistance in ohms		
	Minimum	Nominal	Maximum
20 ± 1	2308	2500	2726
30 ± 1	1586	1715	1853
40 ± 1	1113	1199	1291
50 ± 1	729	851	913

12.3.1 ACCELERATOR PEDAL SENSOR

Function and working:

The Sensor serves to measure demand from the driver and communicates to the ECU. It detects the pedal position by means of potentiometer sensor and transfers this information to the ECU in terms of Voltage. It consists of two potentiometer sensors for measuring the position of accelerator pedal module from 0% travel position to 100% travel position. The second sensor is incorporated as redundant and reports error in case of malfunction of the first sensor. Voltage across redundant sensor is almost half of the first sensor.

Installation:

The accelerator pedal sensor is mounted on accelerator pedal module as shown in the figure.

Tightening torque of the retaining screws: 9 Nm.

Specification:

Operating voltage : 5 V DC

Temperature range : - 40 to 80°C

Fault Path

DTC code (Hand held diagnostic tool)	Description
P0123	Acc. Pedal 1 Voltage above upper limit
P0122	Acc. Pedal 1 Voltage below lower limit
P0223	Acc.Pedal 2 Voltage above upper limit
P0222	Acc.Pedal 2 Voltage below lower limit
P2135	Synchronisation error between APP1 and APP2

Circuit diagram

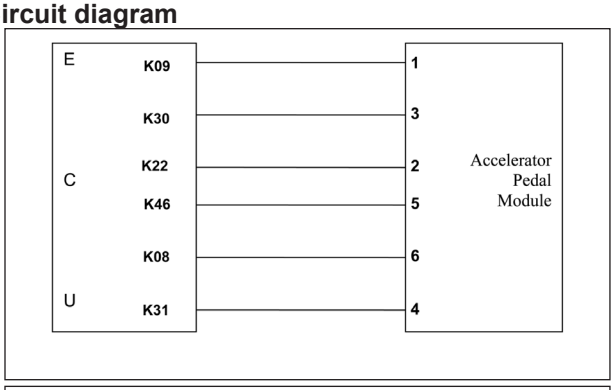

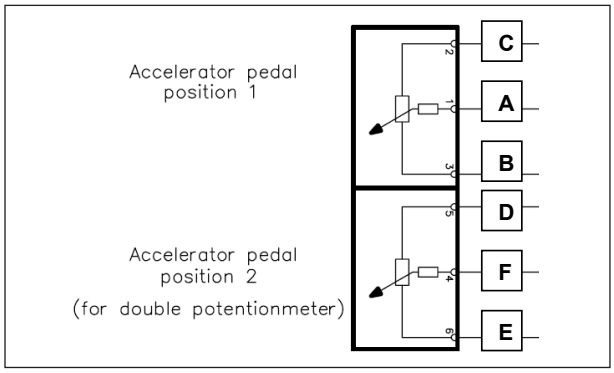

PIN	PURPOSE	PIN	PURPOSE
K09	APS1	K31	APS2
K22	VCC1	K46	VCC2
K30	GND1	K08	GND2

Pin Configuration & Connection Details

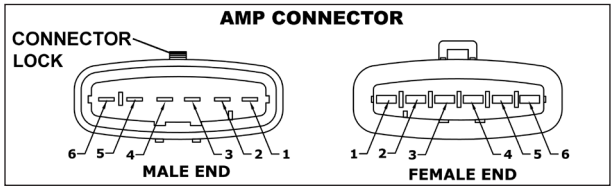

Pin 1, 2 & 3 Main Sensor

Pin 4, 5 & 6 Redundant Sensor

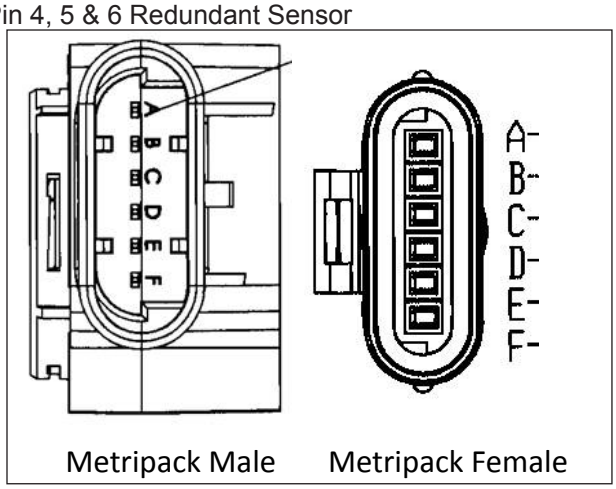

Pin A, B & C Main Sensor

Pin D, E & F Redundant Sensor

https://truckmanualshub.com/

ACCELERATOR PEDAL MODULE

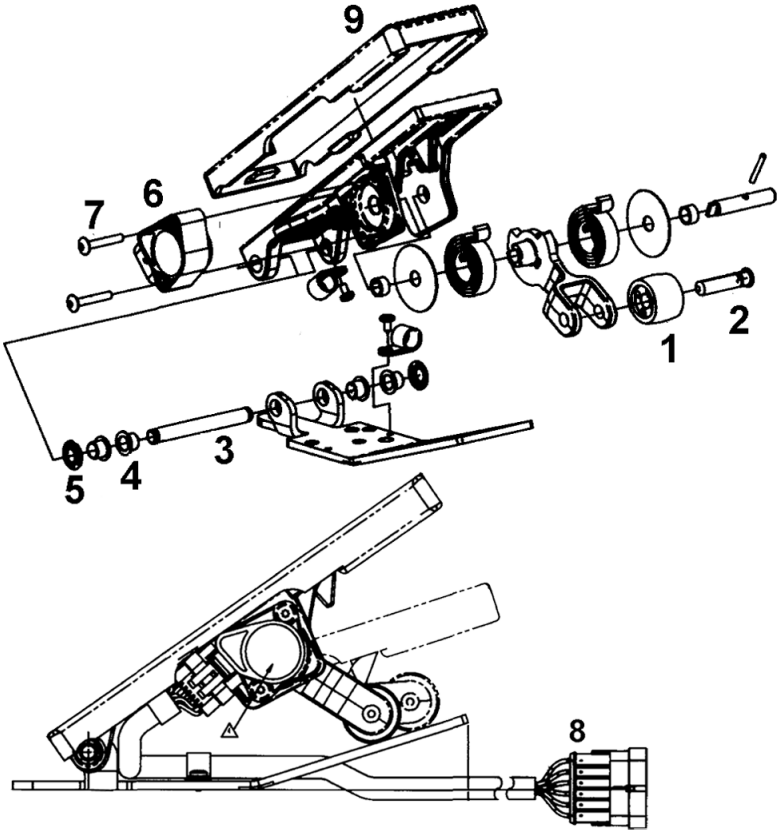

1. Roller
2. Roller Shaft
3. Tradle Pin
4. Bush
5. Nut
6. Sensor
7. Mounting Screws
8. Wiring Harness
9. Tradle Cover

FLOOR MOUNTED

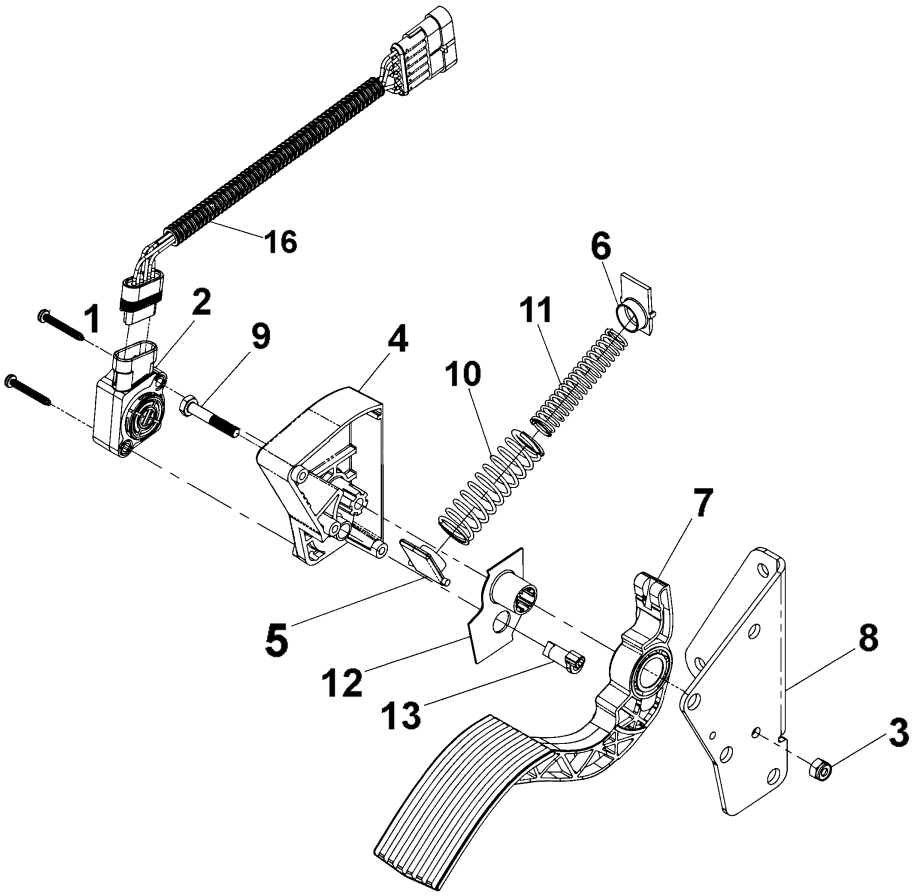

1. Sensor mounting screws
2. Sensor
3. Nut
4. Body
5. Fixed plug
6. Rocker
7. Lever arm
8. Bracket
9. Screw
10. Spring outer
11. Spring inner
12. Wear Liner
13. Shaft
16. Wiring Harness

PENDANT TYPE

Check continuity at wiring harness. If error occurs replace APM and check again.

https://truckmanualshub.com/

12.3.2 ENGINE SPEED SENSOR

Function and working:

Engine speed sensor is an inductive type. It is mounted on the flywheel housing. Electric pulses are generated when the formed slots on the flywheel pass through the sensor axis.

The electric pulse - frequency (Sine Wave) generated by the sensor is proportional to the engine speed.

Installation:

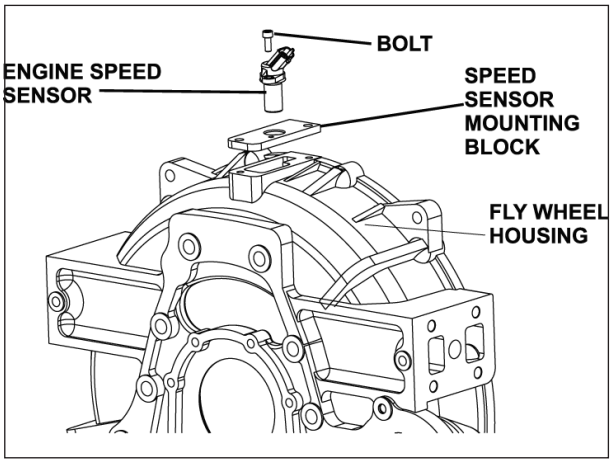

The sensor is to be mounted perpendicular to the surface of the flywheel housing using respective mounting aluminum plate. Use recommended aluminum mounting plate according to the flywheel.

Do not use force / Hammer to fit the sensor. After Fitment ensure seating of the sensor mounting face.

Tightening torque of the mounting Screws: 6 - 10 Nm.

Specification:

Resistance : 860 Ohm ± 10% at 20 °C

Fault Path

Error code (Hand held diagnostic tool)	Description
P0337	No crankshaft signal
P0336	Wrong crankshaft signal
P0016	Offset between camshaft and crankshaft
P0335	Crankshaft Pos. Backup mode active

Effect of fault

Engine will run in backup mode with signal from cam shaft sensor.

Possible cause of fault

- Faulty sensor.
- Loose contact of the sensor pin with the wiring harness connector.
- Dust on the sensor pin or sensor tip got worn out due to contact with the flywheel.
- Fitment of incorrect flywheel.
- Check for Sensor mounting plate faulty or sensor mounting bolt loose.

Service Recommendation

- Check the signal output in terms of rpm from diagnostic tester.
- Check the continuity of the sensor connector with the ECU connector. If found break in signal replace the wiring harness.
- Check if the sensor is offset with respect to Flywheel holes.
- Check for sensor mounting plate for specification. Ensure the air gap with the sensor and flywheel between 0.5 to 1.5 mm
- Check for resistance of the sensor across the two pins. It should read 860 Ohms at 20°C

Circuit Diagram

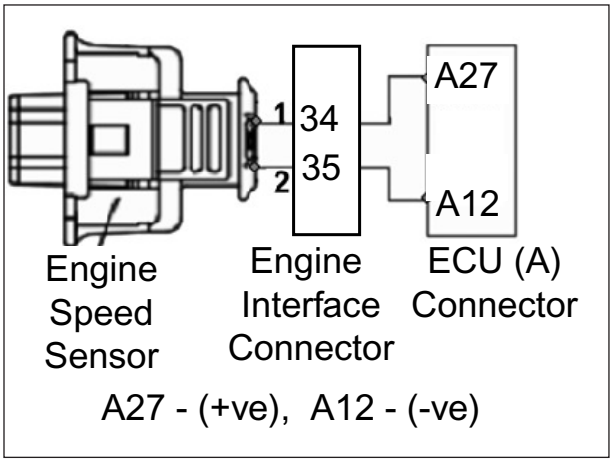

Pin Configuration & Connection Details

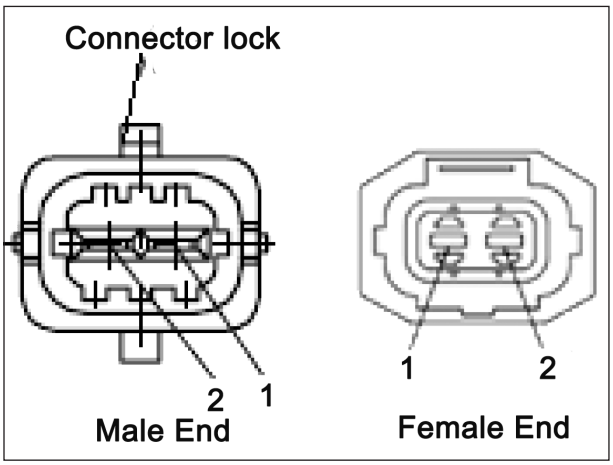

https://truckmanualshub.com/

12.3.3 CAMSHAFT SPEED SENSOR

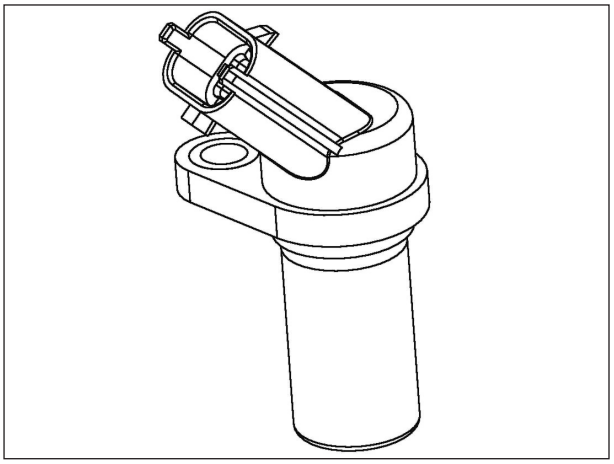

Function and working:

Cam speed sensor is an inductive type. It is mounted on the FIE .Electric pulses are generated when the formed slot inside the pump passes through sensor axis.

The electrical pulse frequency (sine wave) generated by the sensor is proportional to the engine speed.

Installation:

Mounting as per pump guide lines. Camshaft sensor should not be removed from the FIE

Specification:

860 Ohm ± 10% at 20ºC

Fault Path

Error code (Hand held diagnostic tool)	Description
P0335	Crankshaft position backup mode active (if running with phase sensor
P0342	No camshaft shaft signal
P0341	Wrong camshaft signal
P0016	Offset b/w camshaft and crankshaft.

Effect of Fault

Engine will run in backup mode with signal from crank shaft sensor.

Possible cause of fault

- Faulty sensor
- Loose contact of the sensor pin with the wiring harness connector
- Dust on the sensor pin or sensor tip got worn out due to contact with tooth profile
- Check for sensor mounting bolt loose

Service Recommendation

- Check the signal output in terms of rpm from diagnostic tester.
- Check the continuity of the sensor connector with the ECU connector. If found break in signal replace the wiring harness
- Check Synchronization error through diagnostic error. If sensor found working it will read 32.
- Check for sensor mounting on the pump.
- Check for resistance of the sensor across the two pins, it should read 860 Ohm at 20ºC. (In case of defective don't remove the sensor in anycase).

Circuit Diagram

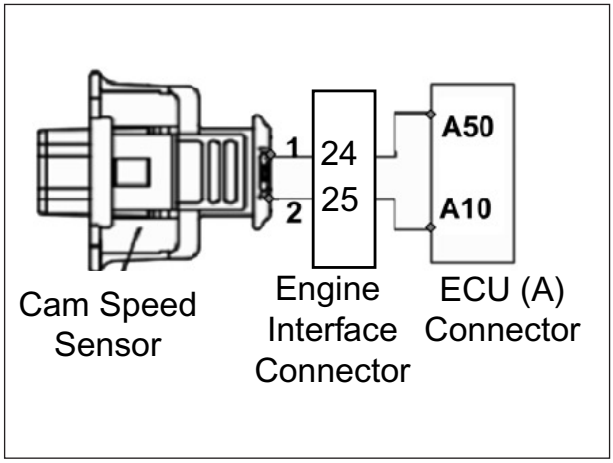

Pin Configuration and Connector Details

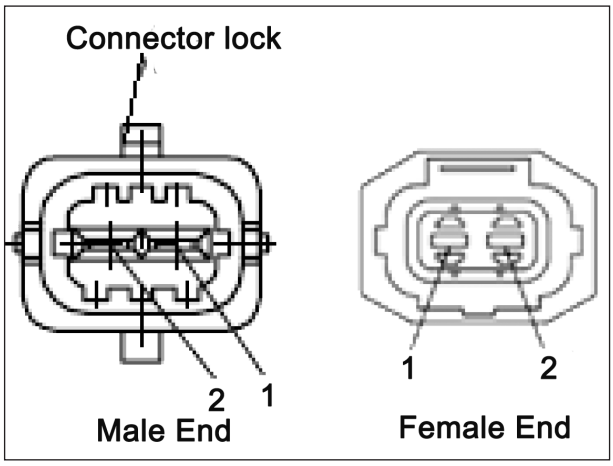

https://truckmanualshub.com/

12.3.4 METERING UNIT

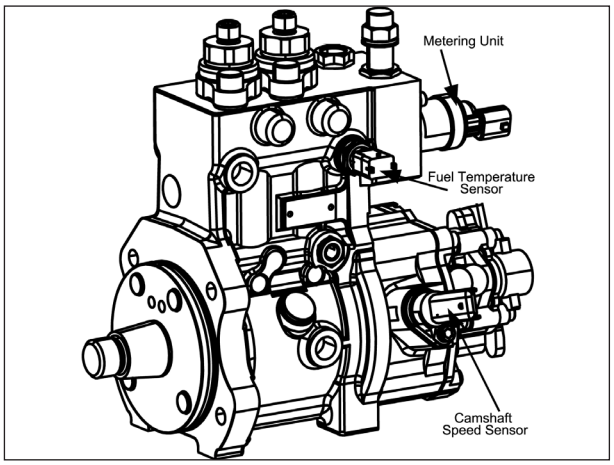

Function and working:

It is mounted on the FIE and it regulates fuel from low pressure circuit to rail as per engine quantity and pressure requirement defined in the ECU. It is controlled by PWM signal from the ECU.

Fault Path

Error Code (Hand held diagnostic tool)	Description
P1104	Maximum positive deviation of rail pressure exceeded
P1105	Maximum positive deviation of rail pressure exceeded concerning set flow of fuel
P1106	Maximum negative rail pressure deviation with MeUn on lower limit is exceeded
P1107	Minimum rail pressure exceeded
P0089	Set point of metering unit in overrun mode not plausible
P1109	Set point of fuel volume flow through the MeUn is lower than the calculated value
P1117	Set point of fuel volume flow through the MeUn exceeds maximum fuel volume flow at low idle
P0092	Metering unit output Short circuit to battery
P0091	Metering unit output Short circuit to ground
P1108	Faults for checks in MeUn controlled mode - maximum rail pressure exceeded
P0093	Faults for checks in MeUn controlled mode - rail pressure drop rate is higher then expected
P0088	Faults for checks in MeUn controlled mode - maximum positive deviation of governor exceeded concerning set flow of fuel

Effect of Fault

PRV opening, Loss of Engine Power & vehicle in Limp home mode

Possible cause of fault

Low pressure side cause

- Leakage on low pressure filter clogging.
- Pressure before gear pump is too low.
- Gear pump output is too low.
- Check for filter clogging .
- Check for leak on low pressure side.

Service Recommendation:

Connect the tester with the diagnostic socket provided on the dash board and clear all the error listed down

- Check for loose contact of metering unit and also rail pressure sensor and then check for continuity of the connector with the ECU end connector.
- If the error still repeats follow the below point.
- Flush the gear pump inlet and outlet pipes.
- Leakage in the high pressure range.
- Ensure pressure before gear pump 0.35 bar to 1 bar ABS.
- Pressure across main filter is less than 0.8 bar (Max run filter)

Circuit Diagram

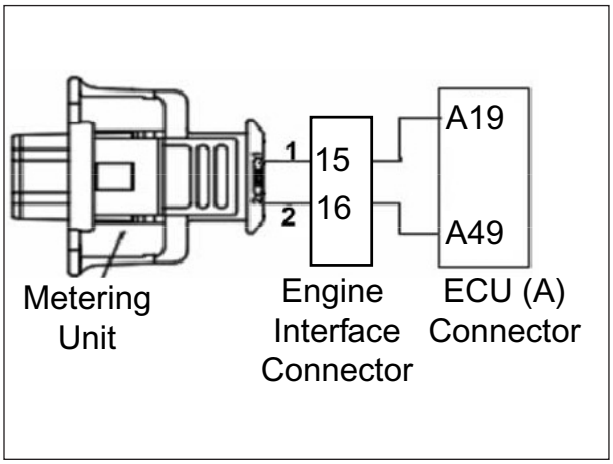

Pin Configuration and Connector Details

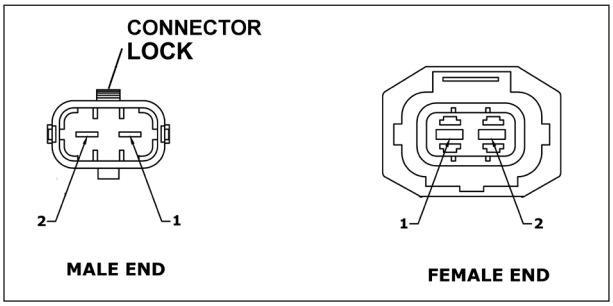

https://truckmanualshub.com/

12.3.5 INJECTORS

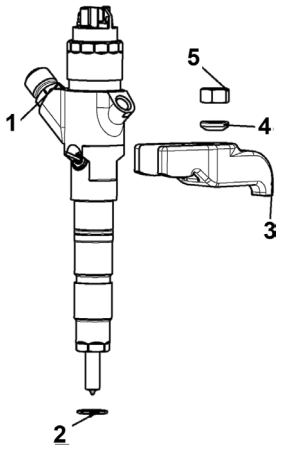

1	Injector
2	Washer
3	Injector clamp
4	Washer
5	Nut

Function and Working of Injector terminal

- Timing controlled by electrical signals to the injector solenoid.
- Injector solenoid does not directly actuate the injector needle but it controls the pressure in the control volume which inturn opens the needle.

Fault Path - H SERIES 6 CYLINDER

Injector Fault Path	Error Code (Hand held diagnostic tool)	Description
Fault path Bank 1-specific errors	P2148	Bank 1 Short circuit
	P2147	Bank 1 Short circuit on low side to ground
Fault path Bank 2-specific errors	P2151	Bank 2 Short circuit
	P2150	Bank 2 Short circuit on low side to ground
Fault path cylinder1 specific errors	P0262	Cyl 1 Short circuit on low side to Batt
Fault path cylinder2 specific errors	P0265	Cyl 2 Short circuit on low side to Battery
Fault path cylinder3 specific errors	P0268	Cyl 3 Short circuit on low side to Battery
Fault path cylinder4 specific errors	P0271	Cyl 4 Short circuit on low side to Battery
Fault path cylinder5 specific errors	P0274	Cyl 5Short circuit on low side to Battery
Fault path cylinder6 specific errors	P0277	Cyl 6Short circuit on low side to Battery

Fault Path - H SERIES 6 CYLINDER

Injector Fault Path	Error Code (Hand held diagnostic tool)	Description
Fault path Bank 1-specific errors	P2148	Bank 1 Short circuit
	P2147	Bank 1 Short circuit on low side to ground
Fault path Bank 2-specific errors	P2151	Bank 2 Short circuit
	P2150	Bank 2 Short circuit on low side to ground
Fault path cylinder1 specific errors	P0262	Cyl 1 Short circuit on low side to Batt
Fault path cylinder2 specific errors	P0265	Cyl 2 Short circuit on low side to Battery
Fault path cylinder3 specific errors	P0268	Cyl 3 Short circuit on low side to Battery
Fault path cylinder4 specific errors	P0271	Cyl 4 Short circuit on low side to Battery

Error Code (Hand held diagnostic tool)	Description
P1348	Bank 1 application dependant error
P1349	Unclassifiable error in bank 1 cable
P1350	Bank 1 application dependant error
P1341	Bank 1 application dependant error
P2146	Bank 1 Open load
P1342	Bank 1 application dependant error

Effect of Fault on Vehicle

Loss of Engine Power/ Vehicle Speed Limitation will be observed with this failure.

Delayed starting will be observed

Possible Cause of Fault

- Injector terminal nut loose.
- Injector terminal end short with engine ground.
- Injector terminal got short circuited with each other.
- Short circuit in injector Terminal wires.

https://truckmanualshub.com/

Circuit Diagram

- H SERIES 6 CYLINDER

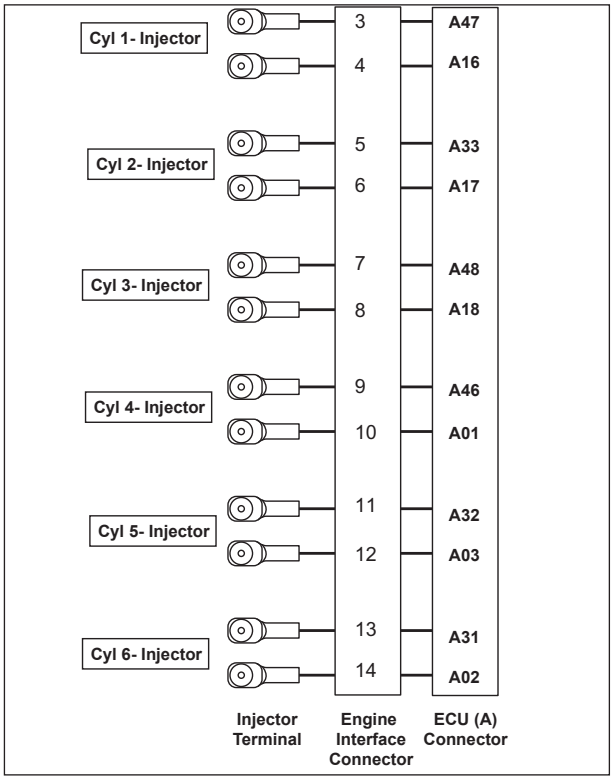

- H SERIES 4 CYLINDER

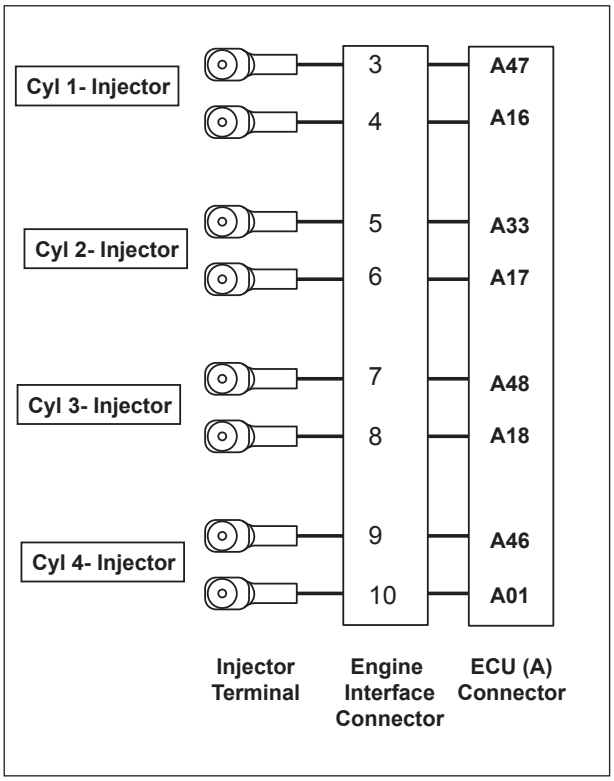

Service Recommendation

- Physically check for any loose connection of the Injector terminal.
- Check for physical contact of injector terminal or wiring harness short with each other.
- Check for continuity of the injector terminal with ECU side connector as per terminal Diagram

https://truckmanualshub.com/

12.3.6 COOLANT TEMPERATURE SENSOR

Function and working:

It is a thermistor, mounted on coolant return line from cylinder head. A semiconductor material changes its resistance when exposed to variable temperature source. Resistance decrease as temperature Increase (NTC type)

Installation

Tightening torque : 20 - 24 Nm

Specifications

Temperature range : - 40/130°C

Rated voltage : Operation by pull up resistance of 1 Kilo Ohms in ECU

Fault Path

DTC code (Hand held diagnostic tool)	Description
P0118	Coolant temperature sensor 1 Voltage above upper limit
P0117	Coolant temperature sensor 1 Voltage below lower limit
P0217	Over Coolant temperature error
U0456	Engine coolant temperature sensor 1 CAN Msg. Value defect
P0116	Engine coolant temperature sensor 1 Plausibility defect between OTS and CTS

Effect of fault

In case of sensor failure,

1) It has been programmed to switch over to default value of 105°C. The Default Value Specified in the control unit for such cases can lead to a fuel Quantity reduction and may produce white smoke output during cold start.
2) This reduction in fuel quantity will show an activated effect of limp home function.

The vehicle will run in a reduce power mode.

Possible cause of fault:

- Voltage Supply Line interruption
- Signal wire Short circuit to earth wire
- Sensor defective

Service instruction

Measure Resistance between Pin 1 & 2

At 20°C - 2.315 to 2.649 Kilo Ohms

At 40°C - 1.118 to 1.231 Kilo Ohms

At 80°C - 0.313 to 0.332 kilo Ohms

Measure Voltage between Pin A58 and A41 and the connector of the wiring harness near to sensor : > 4 V

Circuit Diagram

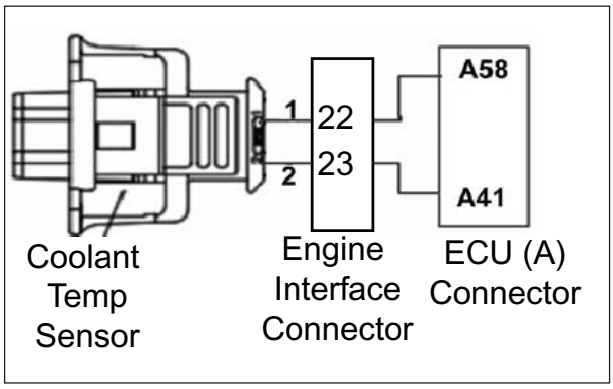

Pin Configuration & Connection Details

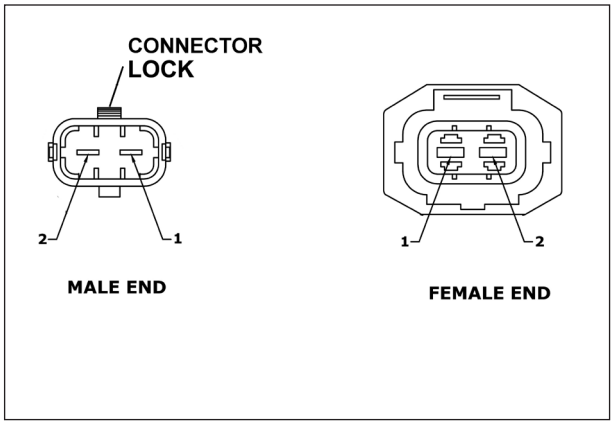

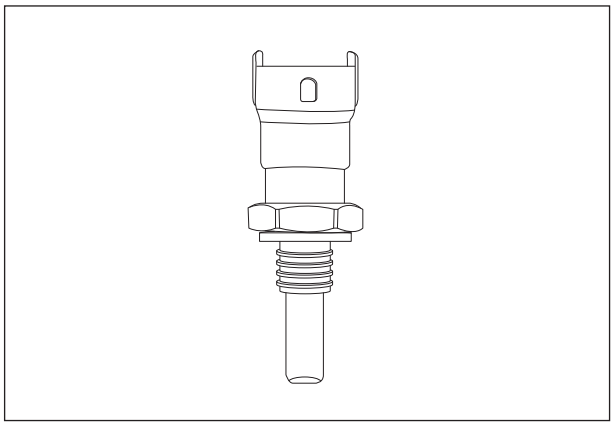

https://truckmanualshub.com/

12.3.7 FUEL TEMPERATURE SENSOR

Function and working:

It is a thermistor, mounted on FIP. A semiconductor material changes its resistance when exposed to variable temperature source. Resistance decrease as temperature Increase (NTC type)

Installation:

Tightening torque : 20 - 24 Nm

Specifications:

Temperature range : - 40/130°C

Rated voltage : Operation by pull up resistance of 1 Kilo Ohms in ECU

Fault Path

DTC code (Hand held diagnostic tool)	Description
P0183	Fuel temperature sensor voltage above upper limit
P0182	Fuel temperature sensor voltage below lower limit

Effect of fault in Vehicle

- Loss of power/ vehicle speed limitation will observed with fuel temperature sensor failure
- Also, the default value of fuel temperature will be considered as 80°C

Possible cause of Fault

- Open circuit of signal wire / earth wire & short circuit of signal wire to earth wire
- Fuel sensor defective
- Loose connection of end fittings with wiring harness

Service Recommendation

- Check the continuity of wiring harness with the sensor & the ECU. (Refer continuity terminal diagram)
- Check the resistance between the temperature sensor terminal. It should read 2.5 k ohm ± 6% at 20°C, 1.1 k ohm to 1.23 at 40°C.
- Read the temperature value from the tester. If found faulty take the pump to Bosch dealer for replacement of sensor.
- Fuel temp assumes default value of 80 deg. Drop in power by 10%

Circuit Diagram

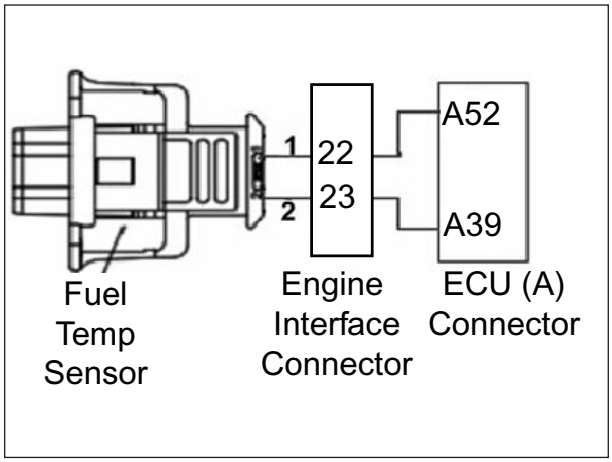

Pin Configuration and connection details

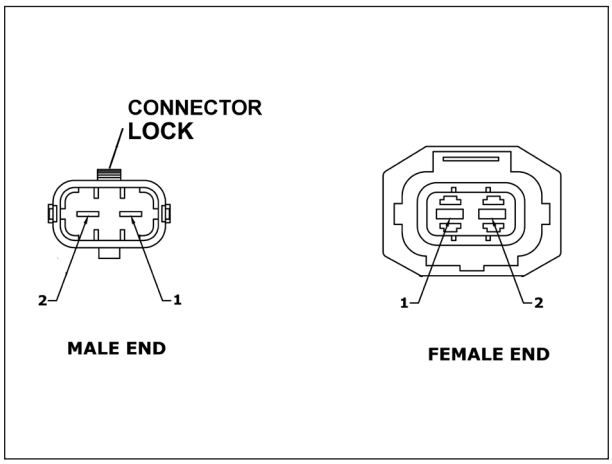

https://truckmanualshub.com/

12.3.8 RAIL PRESSURE SENSOR

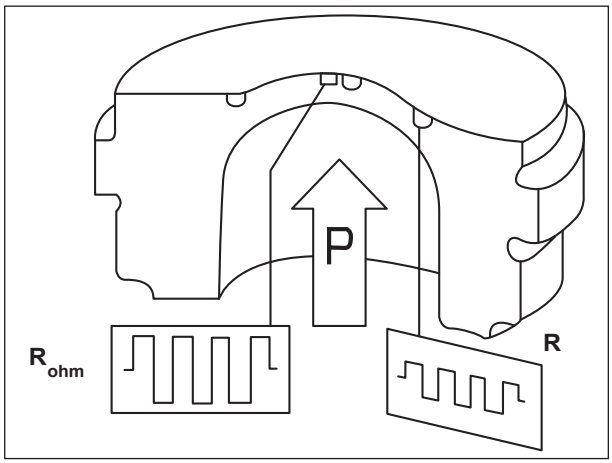

- Stainless steel diaphragm with strain gauges in metal thin film technology
- Electrical circuit with analog output
- Piezo resistor type pressure sensor
- Range up to 1800 bar abs

Fault Path

DTC code (Hand held diagnostic tool)	Description
P0193	Rail pressure sensor Voltage above upper limit
P0192	Rail pressure sensor Voltage below lower limit
P1100	Rail Pressure relief valve recognized as open
P1102	PRV did not open after pressure shock
P1110	PRV was opened more often than the technical Specification allows
P1111	PRV was open for longer time than the technical Specification allows
P1101	Rail Pressure relief valve shock requested
P1102	PRV did not open after pressure shock
P1112	PRV was open more often and for longer time than the techn. spec.allows.

Possible Causes of Fault

- Failure of rail Pressure sensor.
- Dust on the sensor pin or Pin got damage.
- Loose contact of the sensor Pin with respect to connector.
- Break of continuity with respect to sensor connector and the ECU connector.

Service Recommendation

- Connect the tester with the diagnostic socket provided on the dash board & clear all the error listed down. If the Error Still repeats follow the below points.
- Check for loose contact & then check for continuity of the connector with the ECU end connector. Read the rail pressure from the tester.
- If the rail pressure sensor value does not match with respect to rail pressure set point, take the rail to Bosch dealer for detail check.

Circuit Diagram

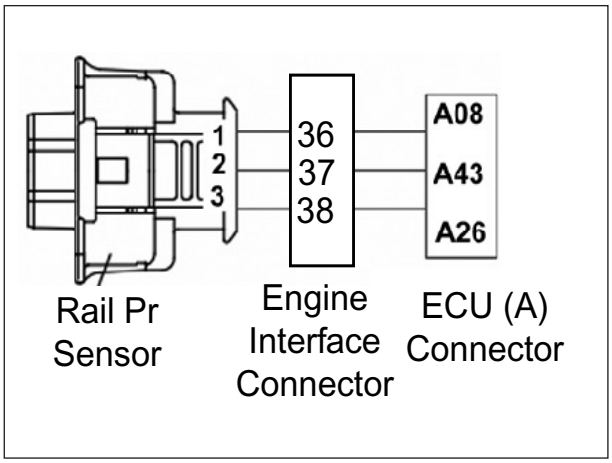

https://truckmanualshub.com/

12.3.9 VEHICLE SPEED SENSOR

Function and working:

Working on proximity principle, produces 6 or 8 pulses per revolution, pulse output is used for calculating the distance travel and speed of the vehicle.

Installation:

Vehicle speed sensor is mounted on the gearbox at speedo drive output shaft.

Specifications:

Operating Voltage	:	9 to 32 V
Supply Current	:	18mA max
Output Signal	:	V Bat - 1.5 V

Circuit Diagram

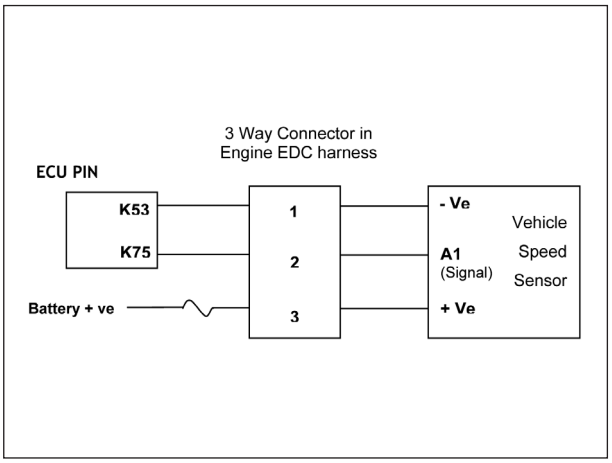

Pin Configuration & Connection details :

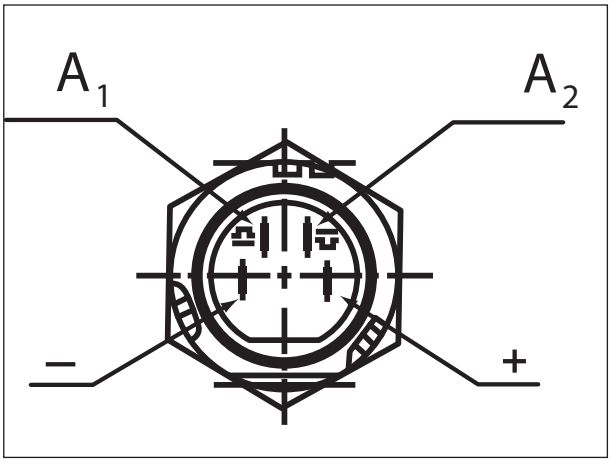

12.4 SWITCHES

12.4.0 BRAKE SIGNAL SWITCH

Function and working:

The switch is of electro-pneumatic type. Switch is mounted on the dual-control brake valve. It indicates the altered voltage level from the switch and output is fed to ECU as information. Switch operates for pressure greater than 0.5 Bar. This information is used by the ECU to activate the limp home mode in case of defective accelerator pedal sensor (Pedal stuck - Pressing brake implies this condition).

Installation:

Ensure there is no air leak after fixing.

Tightening Torque: 15 - 18 Nm

Specifications:

Four Terminals with NC and NO Contact

Supply & Output Voltage : 24VDC

Pin Configuration & Connection details and Circuit Diagram

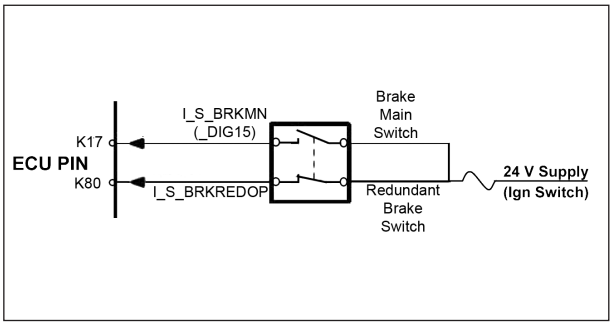

12.4.1 CLUTCH SIGNAL SWITCH

Function and working:

It is mounted on the clutch pedal to detect whether clutch is pressed or not.

Installation:

Ensure correcting setting of the switch makes positive opening and closing of the contact in the switch.

Pin Configuration & Connection details and Circuit Diagram

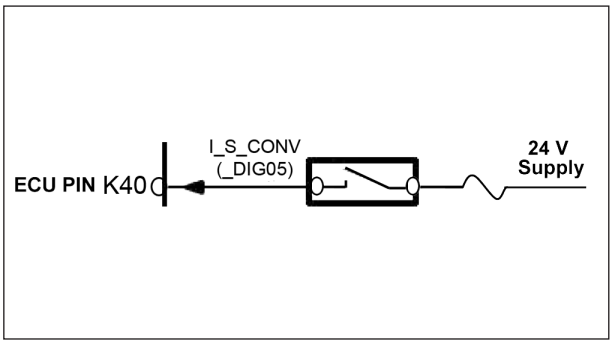

https://truckmanualshub.com/

12.5 DIAGNOSTIC LAMP AND REQUEST SWITCHES

Function and Working

Diagnostic lamp is provided on the dashboard. In event of any errors reported by the ECU in course of operation of the vehicle, the diagnostic lamp glows, indicating that there are errors reported in the system and recorded by the ECU. Only selected errors (which can have a direct effect on the engine / vehicle performance) are reported to the diagnostic lamp.

Depending on the criticality of the error reported, the ECU could either switch off the engine or change to limp home mode. Details of the errors can be viewed with the help of the diagnostic tool or using diagnostic request switch with the help of blink code.

NOTE

Diagnostic lamp is only an indicator of any error reported.

Pin Configuration & Connection details and Circuit Diagram

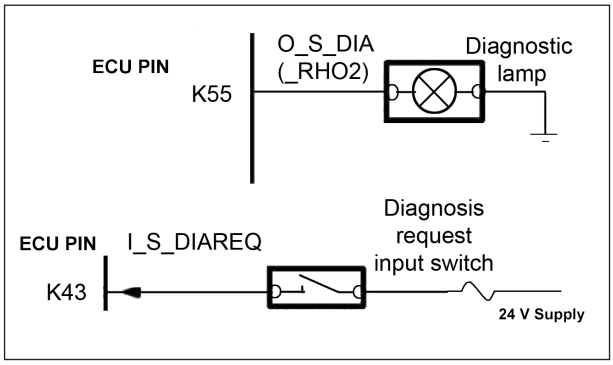

12.5.1 WATER IN FUEL SENSOR AND LAMP

Water in Fuel Sensor

Water-in-Fuel sensor is a part of the Fuel Pre-filter and has a water collecting bowl in which the sensor is mounted. As the water gets separated and collected in the bowl, level of water in the fuel is used for identifying the change in conductivity in turn gives a voltage output. This is sensed by the ECU and water level threshold is identified with the voltage threshold range as per specification and finalized after trials (partial, slow fill, gradient etc)

When the water level exceeds the threshold following are the actions performed

- Indicate the driver that a critical error has occurred which needs an immediate attention
  - o Torque reduction by 40%
  - o A Dedicated Tell-Tale lamp is made to “BLINK”
- Error is assigned as high priority to store in ECU memory for longer duration to be read by the tester

The following counters can be read through diagnostic tester:

1. **Water Detection counter:** No of times Vehicle switched off and restarted without water in bowl emptied
2. **Water Detection Duration:** Duration in seconds for which the vehicle runs and Sensor detects water

These counters should be reset (through diagnostic tester) after draining the water from the water separator bowl.

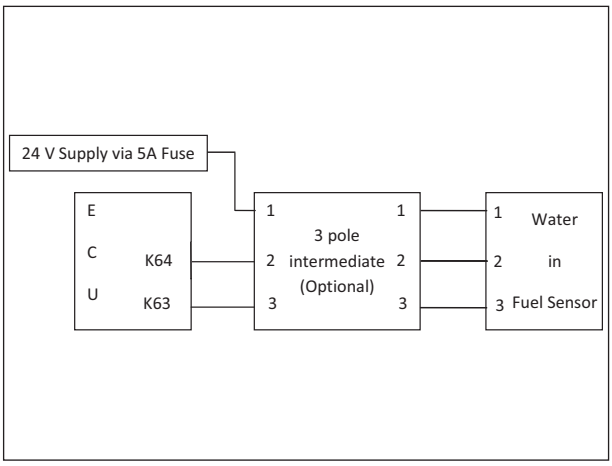

Water in Fuel Lamp

Water in fuel lamp is provided on the dashboard. Water in fuel sensor is a part of pre-filter which senses the water level in diesel. When the predefined threshold exceeds, the Water in fuel lamp starts blinking indicating the excess amount of water in diesel and brings a need for draining the water in pre-filter. Excess water in the fuel system could damage precision fuel injection equipment and engine.

Pin Configuration & Connection details and Circuit Diagram

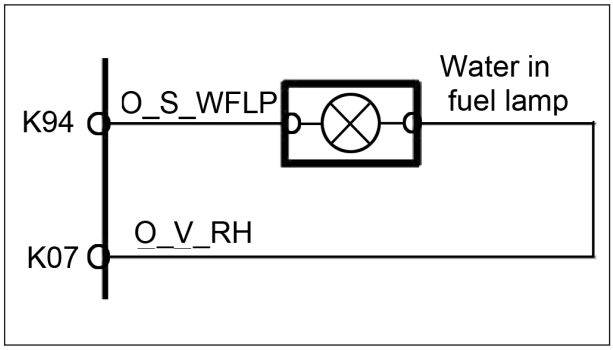

https://truckmanualshub.com/

12.6 SCR INTERFACE

In SCR system, ACU (After-treatment Control Unit) is connected to the sensors & actuators of the SCR system through wire harness which is integrated in SCR tank assembly itself. Apart from those connections, ACU needs Supply (Bat +ve, Ign Sw+, Gnd), CAN and Temp Sensors (in muffler Assy) from Vehicle side. Please refer the below schematic for ACU requirements from Vehicle side.

SCR interface wire harness is used for this purpose.

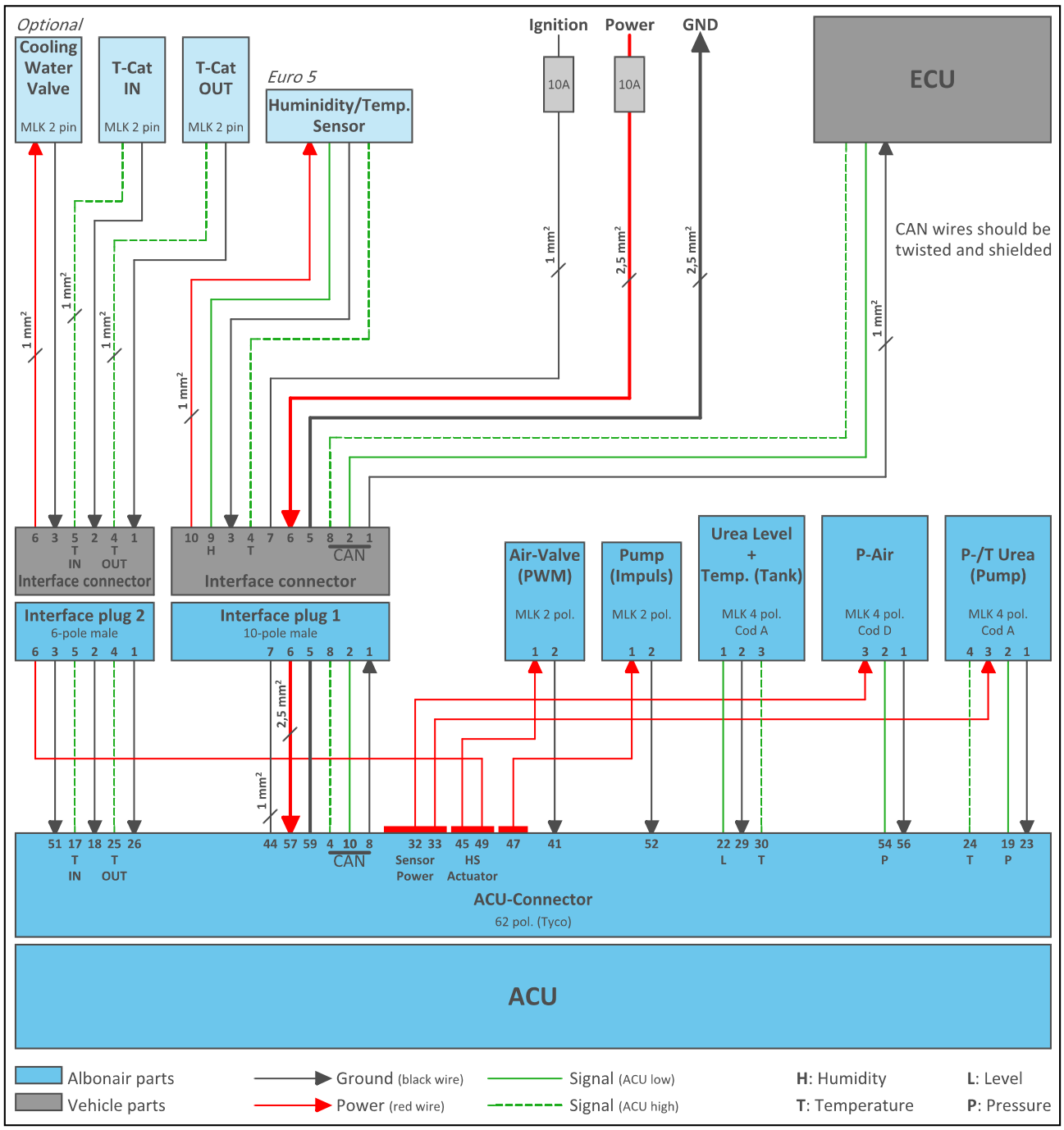

12.6.0 MALFUNCTION INDICATOR LAMP (MIL)

Function and working

SCR ACU (After treatement Control Unit) gives request to Engine ECU via CAN to lit the MIL. MIL request given by ACU when there is a malfunctioning in the SCR system. With this request, engine ECU lit the MIL located in the instrument cluster.

https://truckmanualshub.com/

12.7 CAN BACKBONE

CAN – Controller Area Network is used for communication between the Electronic Control Units (ECUs) in the vehicle. The advantages of CAN are,

1. Same sensor input can be used by different ECUs
2. One ECU can give control message to another in case of safety/emergency conditions

CAN backbone wire harness is used for this CAN communication. CAN backbone wiring layout of Viking BS4 vehicle is given below.

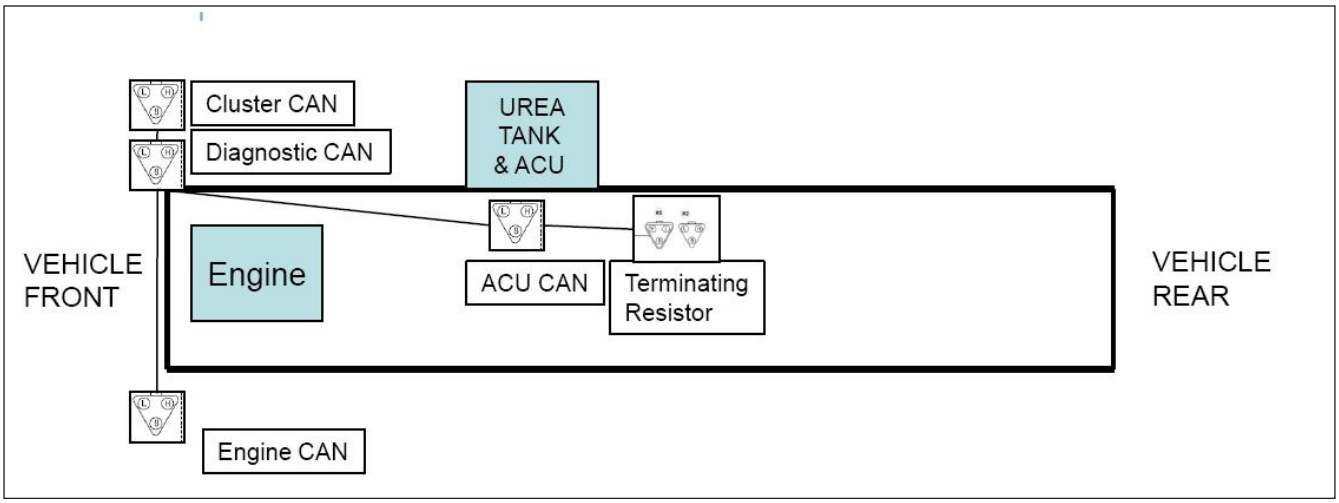

Specific 3 way triangular connectors (Deutsch make) have been used in the CAN backbone wire harness.

DT06-3S-E008

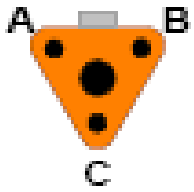

Pin A – CAN high

Pin B – CAN low

Pin C – CAN shield

Terminating resistor 120 ohms has been used in the CAN backbone to ensure proper communication.

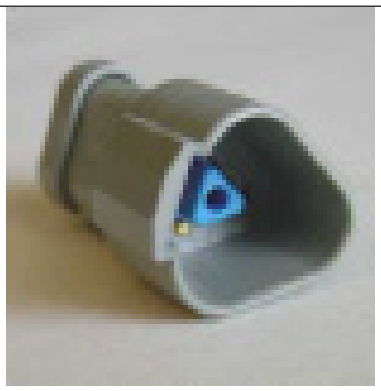

DT04-3P-P006

https://truckmanualshub.com/

12.8 DIAGNOSTICS

ECU integrated diagnostics belong to the basic scope of electronic engine -management systems. During normal vehicle monitoring algorithms checks operation, input and output signals and the overall system is checked for malfunctions and faults. If faults are discovered in the process, these are stored in the ECU memory. When the vehicle is checked in the workshop, this stored information is retrieved only by a diagnostic tool through a serial interface and provides the basis for rapid and efficient trouble shooting and to attend repair.

12.8.0 DIAGNOSTIC CONCEPT

1. Using Diagnostic Tester
2. Using Diagnostic request switch and Blink code

12.8.1 DIAGNOSTIC TESTER

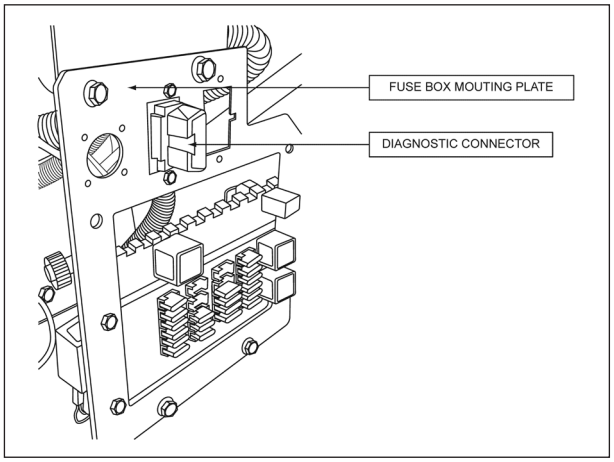

FOR U-TRUCK MODELS

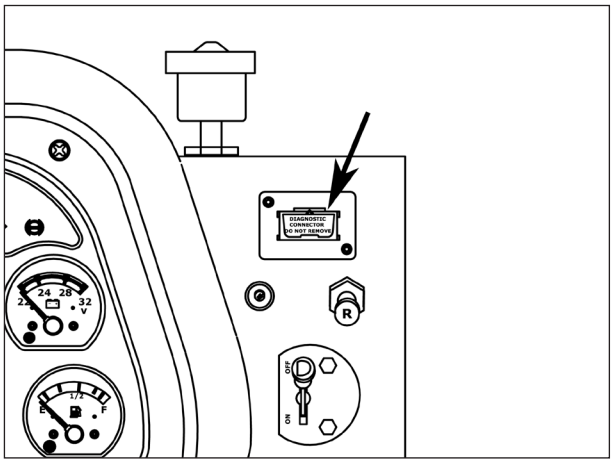

FOR GOODS MODELS

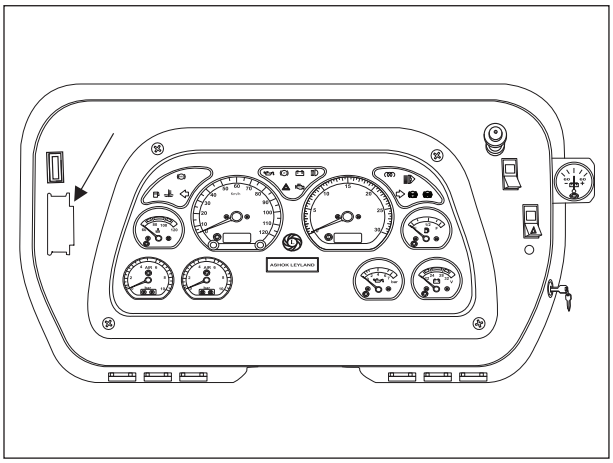

FOR PASSENGER MODELS

Use diagnostic equipment tool for reading the Error recorded in the ECU. The diagnostic socket is provided beneath dashboard.

Diagnostic Connector and Circuit Diagram

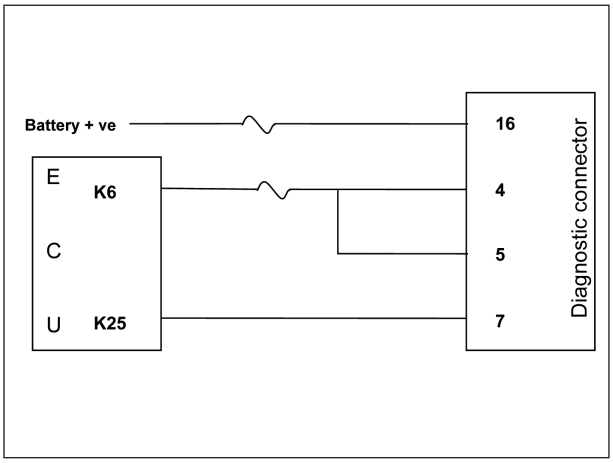

https://truckmanualshub.com/

Diagnostic connector Female (Wiring Harness side)

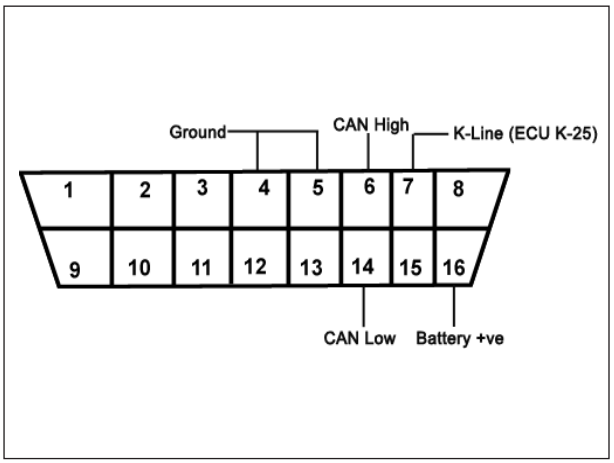

This is a 16 pin D type connector provided with cap for On Board Diagnostics (OBD II). Diagnostics tool / tester with the mating connector to be plugged in to this 16 pin connector for trouble shooting, current data monitoring and erasing the fault codes stored in the ECU memory.

CAUTION

Always ensure that the diagnostic connector is covered with cap when not in use.

In case of no power supply to the diagnostic tester check the following

- Condition of 5 amp fuse on fuse and relay box
- Continuity of the wires between ECU and the diagnostic connector.

Once the defective circuit is identified with the help of the diagnostic tool, please refer the service instruction pertaining to that sensor / actuator circuit.

12.8.2 DIAGNOSTIC REQUEST SWITCH AND BLINK CODE

When the Diagnostic Lamp is 'Blinking' or continuously 'ON',

1. Press the Diagnostic Request Switch, hold for 3 - 5 seconds and release it.
2. The Diagnostic Lamp in the instrument cluster will start blinking in a pattern to show a blink code (refer attached list - 1st digit at a higher interval & 2nd digit at a lower interval of time).
3. Repeat Step: 1 for the next error.
4. The blink code will be displayed for priority errors (up to 10) stored in the ECU error memory.

With the help of blink code and the vehicle behaviour, Diagnosis and fault finding is possible. Rectification of particular error clears the error memory.

ERROR CODES AND BLINK CODES

Refer end of the manual for Error codes and Blink codes.

https://truckmanualshub.com/

12.9 FAILURE MODES

This functioning enables the vehicle to reach the nearest dealership point for service attention, incase of any sensor failure / malfunctioning.

Sl. No.	Description	Effect on the Vehicle
Limp Home Mode		
1.	Accelerator pedal sensor malfunction	Engine idling rpm will be increased to 1450 rpm. No further increase in engine rpm to pedal movement.
Torque Reduction and Engine stop		
2.	Coolant temperature sensor malfunction	Coolant temperature sensor assumes a default value of 105°C. Torque is limited to 80%. Drop in pickup.
3.	Coolant over temperature	Loss of pickup / acceleration and loss of engine power, since full load torque is limited progressively from 100°C and engine will stop at 110°C.
4.	Fuel temperature sensor malfunction	Fuel temperature sensor assumes a default value of 80°C. Torque is limited to 90%. Drop in pickup.
5.	Fuel over temperature	Loss of pickup / acceleration and loss of engine power, since full load torque is limited progressively from 80°C and engine will stop at 95°C.
6.	Boost pressure sensor malfunction	Less pickup due to loss in engine power as Torque is limited to 1200 mbar
7.	Engine crank speed sensor failure	Engine starts with test injections. Engine speed will be limited to 1750 rpm.
8.	Engine cam speed sensor failure	Engine starts in backup mode. Engine speed will be limited to 1750 rpm.
9.	Both engine crank and cam sensor failure	Engine will not start
10.	Metering Unit	PRV (Pressure Regulating Valve) is opened and Rail pressure is maintained at predetermined lower value. Drop in pick up.
11.	Rail Pressure Sensor	Rail pressure set point is determined from substitute map. Drop in pick up.
12.	Injector	One injector failure results in no injection in that particular cylinder. Drop in pickup felt.Injector bank error results in Engine shut-off.
13.	Atmospheric pressure sensor (Part of ECU)	Default value is set to 1000 mbar.
Other Malfunctions		
14.	Vehicle speed sensor fails	Vehicle performance will not be affected in case of normal operation. During top speed function, vehicle will run with default setting by indicating loss of pickup to the driver.
15.	Clutch Switch	Vehicle performance will not be affected. Cruise control, gear detection etc will not work
16.	Brake Switch	During mechanical stuck / binding of accelerator pedal sensor and when brake is pressed, limp home function is activated. Max. engine speed during this condition is set to 850 rpm

https://truckmanualshub.com/

CIRCUIT DIAGRAM - RELAYS AND FUSES FOR CRS BSIII

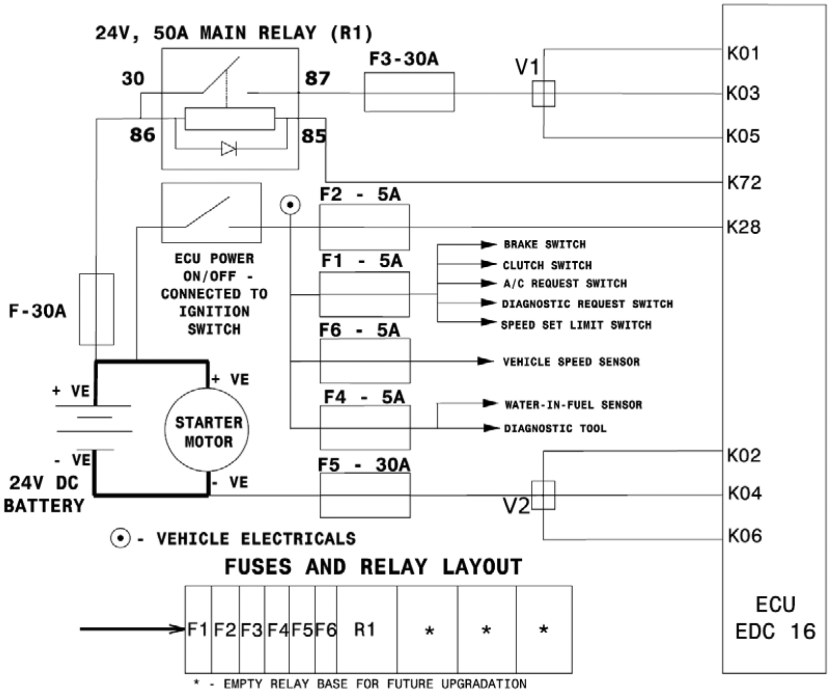

R1 – Relay – 24V
F – 30A Fuse: Battery (+ve) to Relay
F1 – 5A Fuse: EDC switch to Brake / Clutch Switch A/C & Diagnostic Request Switch
F2 – 5A Fuse: EDC switch to K28 Pin ECU
F3 – 30A Fuse: Relay to ECU supply
F4 – 5A Fuse: EDC switch to Water-in- Fuel Sensor / Diagnostic Tool
F5 – 30A Fuse: Battery (-ve) to ECU
F6 – 5A Fuse: EDC switch to Vehicle Speed Sensor

CIRCUIT DIAGRAM - RELAYS AND FUSES FOR CRS BSIV - EDC 16 SYSTEM - EDC16UC40-4.20

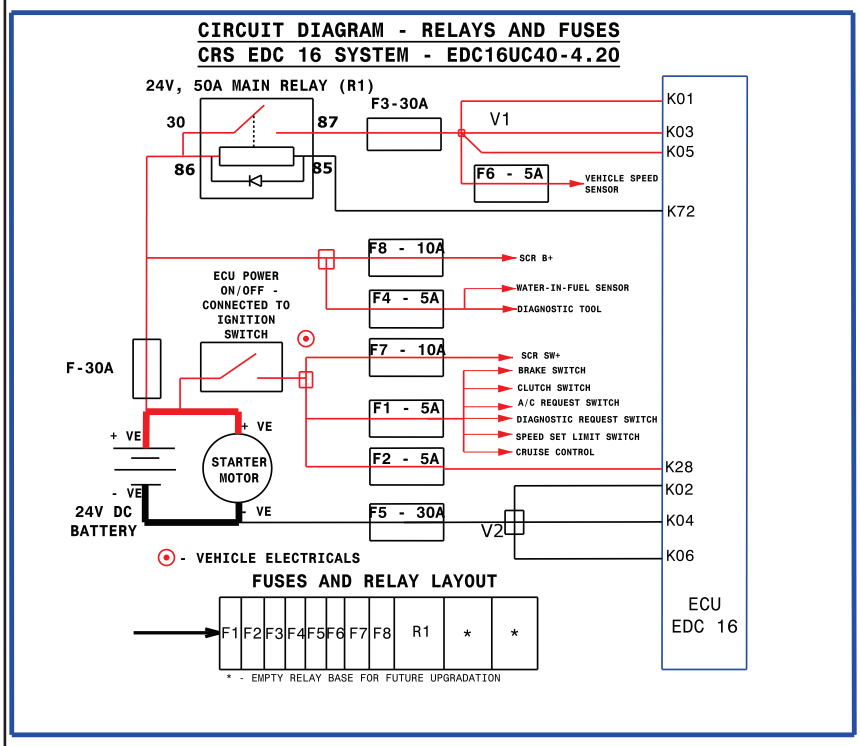

R1 – Relay – 24V
F – 30A Fuse: Battery (+ve) to Relay
F1 – 5A Fuse: EDC switch to Brake / Clutch Switch A/C & Diagnostic Request Switch
F2 – 5A Fuse: EDC switch to K28 Pin ECU
F3 – 30A Fuse: Relay to ECU supply
F4 – 5A Fuse: EDC switch to Water-in- Fuel Sensor / Diagnostic Tool
F5 – 30A Fuse: Battery (-ve) to ECU
F6 – 5A Fuse: EDC switch to Vehicle Speed Sensor
F7- 10A Fuse: EDC Switch to SCR switch (+ve)
F8- 10A Fuse: EDC Switch to SCR B(+ve)

S.NO.	NAME	DEVICE TYPE	CURRENT RATING	AL. PART NO.
1	F	FUSE	30A	F83 143 00
2	F1	FUSE	5A	F83 144 00
3	F2	FUSE	5A	F83 144 00
4	F3	FUSE	30A	F83 143 00
5	F4	FUSE	5A	F83 144 00
6	F5	FUSE	30A	F83 143 00
7	F6	FUSE	5A	F83 144 00
8	F7	FUSE	10A	F22 050 00
9	F8	FUSE	10A	F22 050 00
10	R1	RELAY	50A	F88 446 00
FUSE F(S.NO.1) WILL BE AN INLINE FUSE IN THE BATTERY POSITIVE CABLE FOR EDC SYSTEM				

https://truckmanualshub.com/

R-1
RELAY

RELAY BASE 9 PIN(5+4) B
Black
61150020

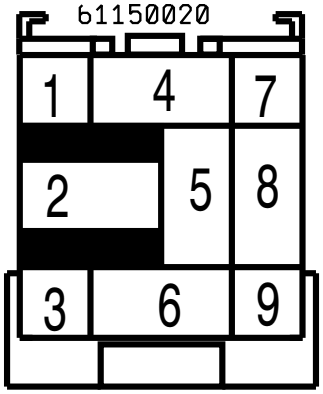

Fuse Base 6 Way
60002512

F-1
Fuse Base

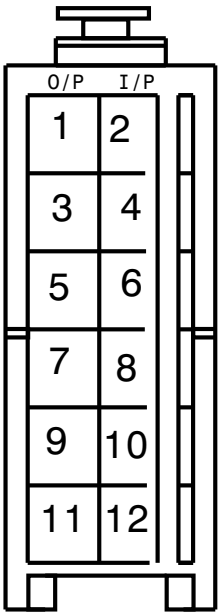

No	Description	Ratings
F1	Key SW 1	5A
F2	Key SW 2	5A
F3	Input	30A
F4	Diagnostic	5A
F5	Starter -ve	30A
F6	VSS supply	5A

60000608
Cross referance for Relay Base & Relay

Dwg View	Relay Base	Relay Pin
2	E	87
4	A	86
8	B	30
6	C	85

Relay Ckt Diagram

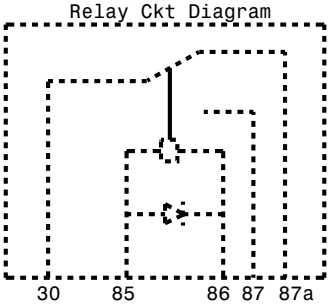

https://truckmanualshub.com/

12.10 INSPECTION OF PARTS & CONNECTIONS AGAINST COMPLAINT

Required Instruments:

a) Diagnostic Tool

b) Analog / Digital Multimeter

c) Test sockets with flying leads - If required.

Removal & Fitment of Sensors & Connectors

Electronic fuel injection equipment is used along with sensors for precise control of injected fuel quantity.

Common rail engines has the following electronic components and sensors.

Crankshaft Speed Sensor (Crs - DG6) - Mounted on flywheel housing.

Camshaft Speed Sensor (CaS - DG6) - Integrated with FIP

Fuel Temperature Sensor (FTS) - Integrated with FIP

Rail Pressure Sensor (RDS4) - Integrated with common rail

Coolant Temperature Sensor (CTS) - Mounted on thermostat housing

Boost Pressure cum Temperature Sensor (LDFT6) - Mounted on intake manifold

Metering Unit (MeUn) - Integrated with FIP

Injector Solenoid connection - Integrated with injectors.

Intermediate Connector - Fitted on a bracket (on Intake manifold)

Above components on the engine are coupled with the connectors in Engine Wiring Harness which terminates at an Intermediate Connector. This is recoupled with the mating connector of Vehicle Wiring Harness.

Through Intermediate Connector sensors/ actuators on engine are connected to Electronic Control Unit (ECU), which is mounted on chassis

The fuel injection system is electronically controlled by the ECU. It receives signal from the sensors on engine / vehicle and actuates the Metering Unit and Injectors for optimum fuel injection to achieve desired performance.

For satisfactory and safe operation of Electronic Diesel Control System, proper connection of sensors, actuators and wiring harness is necessary.

Assembly of EDC Engine Wiring Harness

Assemble the bracket for intermediate connector on intake manifold.

1. Bracket intermediate connector
2. Wiring Harness intermediate connector

Assemble the intermediate connector of wiring harness as shown above.

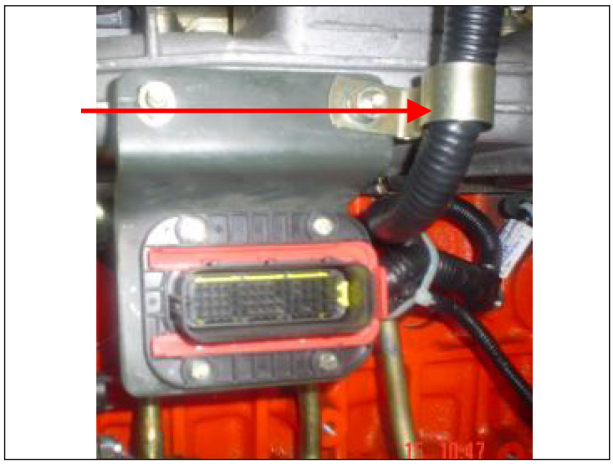

Route the corrugated sleeve containing injector cables to the top of intake manifold through clip on the bracket of intermediate connector.

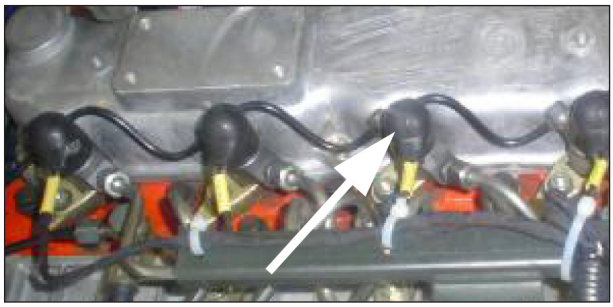

The corrugated sleeve contains 4 branches for 4 injectors. Each branch contains a sticker with cylinder no. printed on it (Ex. Cyl 1, Cyl 2 & etc.,).

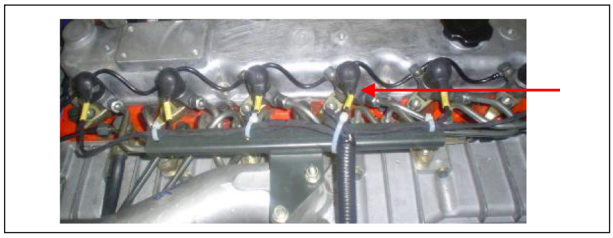

The corrugated sleeve contains 6 branches for 6 injectors. Each branch contains a sticker with cylinder no. printed on it (Ex. Cyl 1, Cyl 2 & etc.,).

https://truckmanualshub.com/

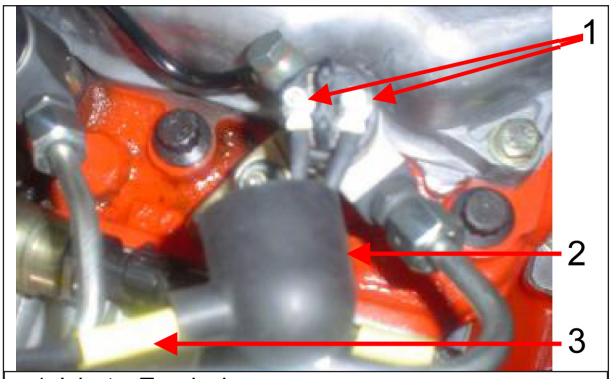

1. Injector Terminals
2. Injector cap
3. Yellow Sticker marked with cylinder no.

Tighten the wiring harness terminal on the injectors. (Tightening Torque 1.5 Nm). Make sure that the cylinder no. on the sticker matches with the corresponding injectors.

The two terminals for an injector can be connected on any of the two terminals on that injector.

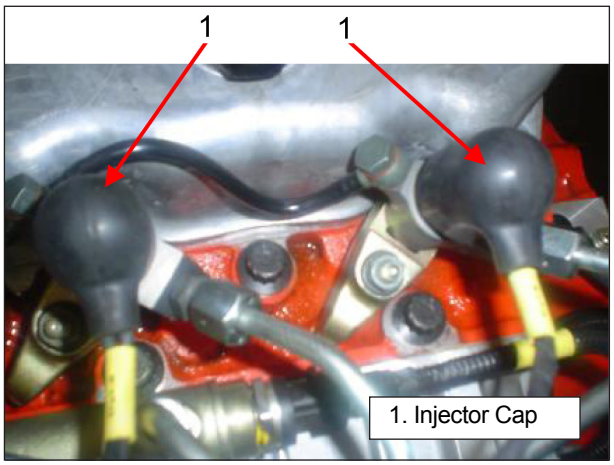

After tightening of injector terminals, ensure that the caps are properly fitted on all the injectors.

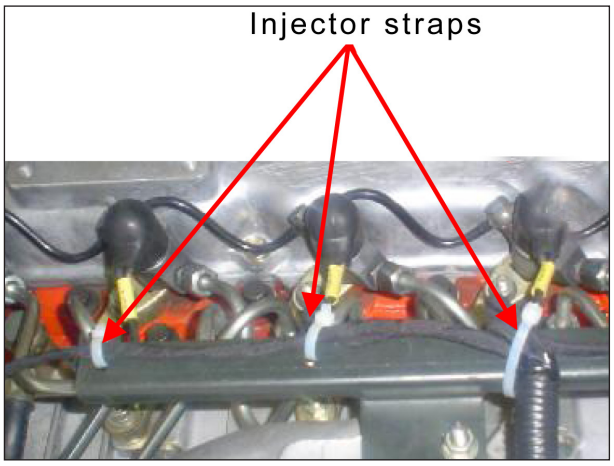

Tie all the injector branches on the bracket using cable straps as shown above.

Route the corrugated sleeve containing connectors for Boost Pressure Sensor, Coolant Temperature Sensor, Cam Speed Sensor and Fuel Temperature Sensor towards front side of engine taking it behind the intermediate connector.

1. Boost Pressure Sensor Cable
2. Coolant Temperature Sensor Cable

Connect the wiring harness for boost pressure sensor and coolant temp sensor to the respective sensors on engine. The wiring harness cables contain the sticker marked with labels BPS, CTS for identification.

Tie the cable for coolant temp sensor using cable strap on the bracket fitted with intake manifold.

https://truckmanualshub.com/

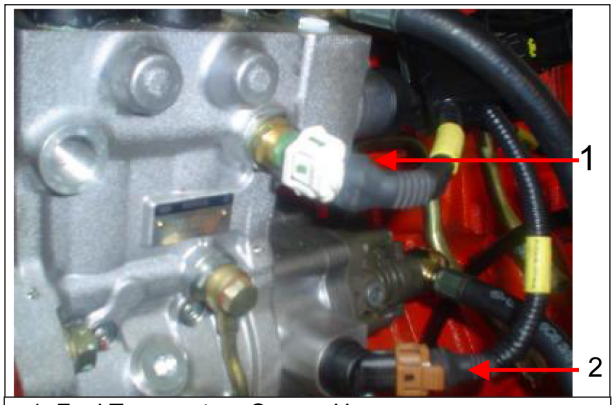

1. Fuel Temperature Sensor Harness
2. Camshaft Speed Sensor Harness

Connect the wiring harness for Fuel temperature sensor and Camshaft Speed sensor to the respective sensors on FIP.

1. Fuel Metering Unit (MeUn) Connection on FIP

Connect the wiring harness for Fuel Metering Unit, branching from intermediate connector to the metering Unit on FIP.

1. Rail Pressure Sensor Cable
2. Grid heater cable tied with bracket

Route the corrugated sleeve containing branch for Rail Pressure sensor, crankshaft speed sensor, grid heater and vehicle speed sensor towards rear side of the engine along with the bracket fitted with intake manifold.

Tie the cable on the bracket using cable strap.

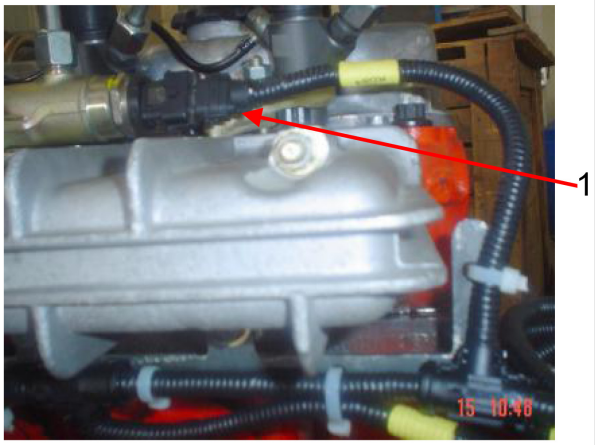

1. Rail Pressure Sensor Harness

Connect the wiring harness branch for Rail Pressure sensor to the sensor integrated with rail.

1. Crankshaft Speed Sensor Harness

Connect the Crankshaft Speed Sensor branch to the Speed sensor mounted on the flywheel housing.

Wrap the cable branching for vehicle speed sensor and tie it using cable strap.

https://truckmanualshub.com/

12.11 GUIDELINES FOR CHECKING SENSORS AND COMPONENT

1. Checking Voltage / Resistance at Component or ECU End - Allowed with proper instrument & care.
2. Few test to be carried out with Ignition 'OFF"/'ON' and Engine running mode condition to confirm the fault and after erasing the error.
3. Avoid Checking at ECU End. In case of utmost requirement ensure ECU body is always connected to Starter Negative.
4. Measure resistance of the sensor at the Connector end and on the connector at the ECU end after connecting the respective sensor. Given resistance values are as measurable at the sensor end. While measuring resistance at the ECU connector end with sensors connected, the resistance of the wire will get accounted.
5. Care to be taken not to short the supply voltage / Sensor Output with earth / Negative.

12.12 PRECAUTIONS FOR ELECTRONIC DIESEL CONTROL SYSTEM (EDC) DURING BODY BUILDING

Extreme care to be taken while assembling the body on the chassis with respect to the ECU.

General

1. The ECU should be disconnected from the harness and a dummy cap/cover with plastic bags should be put on the ECU connector. There should be no ingress of water through the wiring harness on the ECU.
2. The ECU as such should be covered in a box so that if any washing is done, the ECU will be protected.
3. Maximum cleanliness in the work area and the tools should be employed . Check to see if the ECU has become dirty during the body building phase especially at the connector end and pins. Use a soft clean & dry paint brush to remove the dust.

Ashok Leyland specific:

Ensure that the intermediate connector (supply +ve and -ve for ECU) between the DC to DC converter and wiring harness is properly locked and intact.

EDC System

Have a clear space in front of the EDC panel cover for easy removal and fitment of electrical/electronic parts of EDC panel.

Instructions

1. Before and during welding

- Disconnect battery terminals (Positive and Negative terminals of 24V supply).
- Disconnect Two connectors of the ECU and have the panel cover refitted.
- Avoid falling of hot weld spatters on wiring harness, sensors and Accelerator Pedal Module.
- Do not use Accelerator Pedal as a support during body building.
- Avoid falling of any sharp/Heavy objects on the accelerator pedal module and its connecting wire.
- Do not disturb the clamps of EDC system wiring harness unless it is very essential, but ensure it is replaced/refitted properly.

2. Do not disturb/remove the connected DC negative connection of EDC system. DC negative is connected at two places
   a) Chassis
   b) Starter Motor Negative to Engine Block
3. Do not remove or cut wires of the EDC system wiring harness. No unprescribed extension or intermediate joints are permitted.
4. Ensure fuse and connectors of the EDC system power cable (closer to the battery cable terminal ends) are kept inside the battery box.
5. To power ECU and the ECU system minimum 18 Volts at battery is required.

https://truckmanualshub.com/

6. Push start is possible when starter motor is not functioning properly and battery output is 18 Volts is minimum.
7. Before connecting the engine wiring harness, the battery terminals (Both positive and negative terminals) are to be disconnected.
8. Make sure that the lock of the connectors are fitted properly.
9. Clip/clamp the wiring harness every 500 mm.

Do's and Don'ts for Body builders, Field service

Do's

1. Reverse polarity protection: Care needs to be taken while removing the battery connection during body building and reconnect the terminals in correct polarity.
2. Check the battery condition regularly and keep the batteries in healthy condition.
3. Ensure proper connectivity of ECU/Sensor connectors with wiring harness.
4. Keep the ignition "Switch Off" while removing/ reconnecting the battery connections in the vehicle.
5. Correct tightening torques should be used for mounting the ECU and other electrical/electronic parts on EDC panel. 8 ± 2 Nm torque (M6 - 8.8 Gr).
6. Connectors of the ECU must be connected or disconnected only when the power is switched off/ ignition switch is in off position.
7. Carryout trouble shooting of EDC system with diagnostic tool.
8. Continuity check on the wiring harness with opened connector ends (No power supply to ECU can be done, if it is found extremely essential and unavoidable. Care must be taken not to damage the terminals, pins and seals.
9. Attempt verification/checking of EDC system parts including wiring harness after confirming and clearing identified mechanical troubles as there might be a wrong lead of EDC malfunction due to effect of mechanical troubles.
10. Advice drivers on Limp home functions.
11. Ensure diagnostic connector cap is present always to avoid dust / water entry and shorting. Protect diagnostic connector from tampering / damage.
12. Run EDC system engine always with batteries connected.
13. Ensure paint removal on the surface / clean surface before connecting the negative connection of EDC system and the high current negative of vehicle electrical connection.
14. Check if all the connectors are positioned properly and well connected. Positive locking to be ensured.
15. Check if the relays and fuses are properly inserted in the relay and fuse module respectively.
16. Ensure proper fitment of 15A fuse of the battery positive cable. The spare fuses (30A - 1 no. and 5A - 2 nos.) is available in the relay and fuse module.
17. Ensure that the ignition switch and battery isolator switch is off when the vehicle is in parked condition.

Dont's

1. Electrical tapping (EDC 24V/5V) not allowed from EDC wiring. Tapping should NOT be taken as this can severely affect the performance of the ECU and sensor (Discourage use of 24V by centre tapping method from batteries for additional loads)
2. Care should be taken while washing the vehicle. Do not direct jet of water on to the ECU, accelerator pedal sensors and other electrical components.
3. Diagnostic connector should not be left hanging loose and should be handled with care.
4. Do not allow / provide intermittent connections / junction in the EDC wiring harness. Maintain routing and clamping of wiring as provided by AL.
5. Do not change mounting position of the ECU/EDC panel.
6. No undue pressure to be applied on the ECU during the service.
7. Do not touch the pins of the ECU to avoid damage due to electrostatic discharge.
8. Never attempt to connect negative battery cable to positive terminal of battery and positive battery cable to negative terminal of battery. This will damage the EDC system electronic / electrical units.
9. Do not test (continuity check) ECU pins with multimeter.
10. Developed independent wiring harness for EDC system is provided with prewired connectors to avoid any disturbances and disconnection unless it is induced.
11. Do not use spanners / other heavy tools to remove the sensor and ECU connectors.
12. While coiling or bending of cables / wires avoid sharp bends or folding.
13. Do not lift the wiring harness bunch by the end connectors.
14. Do not jump start the vehicle (by connecting external batteries - master / slave method). This will cause series damage to the ECU.

https://truckmanualshub.com/

12.13 MAINTENANCE PROGRAMME

	MAINTENANCE ACTIVITY	PDI	Daily	Weekly	Monthly	Every km x 1000
1	Check tightness of engine speed sensors and clean the sensor tip for any dirt/dust deposits					40
2	Check functioning of EDC warning light		✓			
3	Check tightness of all mating connectors and ensure they are connected properly					40
4	Check and secure wiring harness away from high temperature zones on the engine/vehicle					40
5	Check functioning of EDC and sensors with diagnostic tool	✓				80

https://truckmanualshub.com/

https://truckmanualshub.com/

TROUBLE SHOOTING USING ERROR CODE / BLINK CODE

S. No	P-Codes	Blink Code	Error Description in Tester	Reaction Observed in Vehicle	Verification in Tester	Possible cause	Check Points	Further Actions
1	P1621	32	ADC High reference Voltage	No Acc. pedal response Engine will be at Low Idle	No read parameters on Tester	Internal ECU hardware defective	No check points	Replace ECU Faulty ECU to be sent for investigation
2	P1622	32	ADC Low reference Voltage					
3	P1623	32	ADC -Test impulse error					
4	P060B	32	ADC queue error					
5	P0123	64	Acc. Pedal 1 Voltage above upper limit	Limphome; 1450 rpm; No response from Acc. pedal	Tester reads 0% Acc. pedal even when Acc. pedal is pressed Acc. pedal1 raw voltage reads 5Volts Engine speed reads 1450 rpm	Open circuit of ground	Check continuity b/w pin no K30 (ECU connector) & Pin no 3 of Acc. pedal connector	If continuity is not there rectify/ replace Wiring Harness
						Short circuit between signal & supply on ECU/WH/sensor side	Disconnect ECU connector & Accelerator pedal connector while checking for continuity on the wiring harness side. Check continuity b/w ECU pin no (K09 & K22) or (K09 & K46) OR Acc. pedal connector in the wiring Harness If number embosed on connector (Tyco connector) Check continuity b/w (1 & 2) or (1 & 5) If alphabets embosed on connector (Metripack connector) Check continuity b/w (A & C) or (A & D)	If continuity is there rectify/replace Wiring Harness
						Sensor Signal short circuit to battery	Check for short circuit b/w battery supply line & sensor signal line - Check voltage at Acc. pedal connector pin no 1 & 3 (Tyco Connector) or A & B (Metripack)	If the voltage found above 5 Volts - Rectify the WH/replace
						Sensor Supply short circuit to battery	Check for short circuit b/w battery supply line & sensor supply line - Check voltage at Acc. pedal connector pin no 2 & 3 (Tyco Connector) or C & B (Metripack)	If the voltage found above 5 Volts - Rectify the WH/replace
						Sensor defective	Check resistance of the Acc ped sensor(Pin no 1 &3) : 2.21 kOhms ± 0.4 kOhms in Zero Position and 1.44 kOhms ± 0.4 kOhms in Max. Position.	If resistance is not as per spec replace sensor
						ECU defective	No check points	If all the above check points are ok Replace ECU / Faulty ECU to be sent for investigation
6	P0122	64	Acc. Pedal 1 Voltage below lower limit	Limphome; 1450 rpm; No response from Acc. pedal	Tester reads 0% Acc. pedal even when Acc. pedal is pressed Acc. pedal1 raw voltage reads 0 Volts Engine speed reads 1450 rpm	Short circuit between signal & ground on ECU/WH/Sensor end	Disconnect ECU connector & Accelerator pedal connector while checking for continuity on the wiring harness side. Check continuity b/w ECU pin no (K09 & K30) or (k09 & K08) or Acc. pedal connector in the wiring Harness If number embosed on connector (Tyco connector) Check continuity b/w (1 & 3) or (1 & 6) If alphabets embosed on connector (Metripack connector) Check continuity b/w (A & B) or (A & E)	If continuity is there rectify/replace Wiring Harness
						Signal line is open	- Check proper connection of sensor connector/ECU - Disconnect ECU connector & Accelerator pedal connector while checking for continuity. Check continuity b/w Pin no (K09 of ECU connector & Pin1 (Tyco Connector) or Pin A (Metripack Connector) of Acc. pedal connecor)	If continuity is not there rectify/ replace Wiring Harness
						supply line open	Check continuity b/e ECU connector K22 & Acc ped connector Pin no 2	If continuity is not there rectify/ replace Wiring Harness
						Sensor defective	Check resistance of the Acc ped sensor(Pin no 1 &3) : 2.21 kOhms ± 0.4 kOhms in Zero Position and 1.44 kOhms ± 0.4 kOhms in Max. Position.	If resistance is not as per spec replace sensor
						ECU defective	No check points	If all the above check points are ok Replace ECU / Faulty ECU to be sent for investigation

ASHOK LEYLAND

S. No	P-Codes	Blink Code	Error Description in Tester	Reaction Observed in Vehicle	Verification in Tester	Possible cause	Check Points	Further Actions
7	P2135	64	Plausibility b/w App1 & App2 violated	Limphome; 1450 rpm; No response from Acc. pedal	Tester reads actual Acc. pedal 0% Tester read actual raw voltage of both Acc. pedal sensors Engine speed reads 1450 rpm	Sensor defective	Check resistance of the Acc ped sensor(Pin no 1 &3) : 2.21 kOhms ± 0.4 kOhms in Zero Position and 1.44 kOhms ± 0.4 kOhms in Max. Position. Check resistance of the Acc ped sensor (Pin nos 4 & 6) :2.80 kOhms ± 0.4 kOhms in Zero Position and 2.26 kOhms ± 0.4 kOhms in Max. Position.	If resistance is not as per spec replace Acc ped module
						APP signal lines Short circuit with other signal line	Check the raw voltage of APP1 & APP2 with removal of Acc. pedal connectors - There should not be any voltage reading in the tester	Check wiring harness Remove other sensor connectors one by one and observe normal operation of the Acc. pedal through tester
8	P0223	64	Acc.Pedal 2 Voltage above upper limit	Limphome; 1450 rpm; No response from Acc. pedal	Tester reads 0% Acc. pedal even when Acc. pedal is pressed Acc. pedal2 raw voltage reads 5Volts Engine speed reads 1450 rpm	Open circuit of ground	Check continuity b/w pin no K08 (ECU connector) & Pin no 6 of Acc. pedal connector	If continuity is not there rectify/ replace Wiring Harness
						Short circuit between signal & supply on ECU/WH/sensor side	Disconnect ECU connector & Accelerator pedal connector while checking for continuity on the wiring harness side. Check continuity b/w ECU pin no (K31 & K46) or (K31 & K22) or Acc. pedal connector no (4 & 5) or (4 & 2)	If continuity is there rectify/replace Wiring Harness
						Sensor defective	Check resistance of the Acc ped sensor(Pin no 4 &6) : 2.80 kOhms 0.4 kOhms in Zero Position and 2.26 kOhms ± 0.4 kOhms in Max. Position.	If resistance is not as per spec replace sensor
							Check for short circuit b/w battery supply line & sensor supply line - Check voltage at Acc. pedal connector pin no 5 & 6	If the voltage found above 5 Volts - Rectify the WH/replace
						ECU defective	No check points	If all the above check points are ok Replace ECU / Faulty ECU to be sent for investigation
9	P0222	64	Acc.Pedal 2 Voltage below lower limit	Limphome; 1450 rpm; No response from Acc. pedal	Tester reads 0% Acc. pedal even when Acc. pedal is pressed Acc. pedal2 raw voltage reads 0 Volts Engine speed reads 1450 rpm	Short circuit between signal & ground on ECU/WH/Sensor end	Disconnect ECU connector & Accelerator pedal connector while checking for continuity on the wiring harness side. Check continuity b/w ECU pin no (K31 & K08) or (K31 & K30) or Acc. pedal connector no (4 & 6) or (4 & 3)	If continuity is there rectify/replace Wiring Harness
						Signal line is open	Check tcontinuity b/w Pin no (K31 of ECU connector & Pin4 of Acc. pedal connecor)	
						supply line open	- Check proper connection of sensor connector/ECU - Disconnect ECU connector & Accelerator pedal connector while checking for continuity. Check continuity b/e ECU connector K46 & Acc ped connector Pin no 5	If continuity is not there rectify/ replace Wiring Harness
						Sensor defective	Check resistance of the Acc ped sensor(Pin no 4 & 6) : 2.80 kOhms 0.4 kOhms in Zero Position and 2.26 kOhms ± 0.4 kOhms in Max. Position.	If resistance is not as per spec replace sensor
						ECU defective	No check points	If all the above check points are ok Replace ECU / Faulty ECU to be sent for investigation
11	P2229	12	Atmospheric pressure sensor Voltage above upper limit	No reaction in the system	Default value will be read as 1000 mbar	ECU internal Atmospheric sensor defective	No check points	Replace ECU Faulty ECU to be sent for investigation
12	P2228	12	Atmospheric pressure sensor Voltage below lower limit	No reaction in the system	Default value will be read as 1000 mbar			
13	U1000	12	Atmospheric pressure sensor signal value from CAN not OK .	Not used				
14	P2227	12	Atmospheric pressure sensor not plausible with boost pressure sensor .	No reaction in the system	Default value will be read as 1000 mbar			

ASHOK LEYLAND

S. No	P-Codes	Blink Code	Error Description in Tester	Reaction Observed in Vehicle	Verification in Tester	Possible cause	Check Points	Further Actions
15	P0649		Adjustable speed limit lamp Short circuit to battery .	Not used	Not used			
16	P0649		Adjustable speed limit lamp Short circuit to ground.					
17	P0649		Adjustable speed limit lamp no load					
18	P0649		Adjustable speed limit lamp excess temperature					
19	P2299		Acc. pedal - Brake signal not plausible	Engine speed will set to 850 rpm	Check the Acc. pedal Percentage	Stuck Accelerator pedal	Check Acc. pedal sensor mechanically stuck	Ensure proper functionality of Acc. pedal (0% to 100%)
20	P2609		Intake air heater system performance. Multi signal defect	Not used	Not used			
21	P2604		Intake Air heater “A” circuit range/ Performance. (voltage difference exceeds the higher threshold)					
22	P2605		Intake Air heater “A” circuit/open. (voltage difference falls below the lower threshold)					
23	P2606		Intake Air heater “B” circuit range/ Performance. (voltage difference exceeds the higher threshold)					
24	P2607		DFC to SRC Low error when heater is On. voltage difference falls below the lower threshold					
25	P0542		Intake air heater “A” circuit high (SCB)					
26	P0541		Intake air heater “A” circuit low (SCG)					
27	P0543		Intake air heater “A” circuit open (open)					
28	P0238	11	Boost pressure sensor Voltage above upper limit (4.8 Volts)	Pickup loss Smoke puff will be observed	Boost pressure wil read default value as 1200 mbar	Signal line short to supply (5Volts)	Check continuity b/w pin no A14 & A40 (inter connector pin 31 & 32) & at sensor end 3 & 4	Rectify / Replace WH
						Signal line short to battery (greater than 5 Volts)	check voltage b/w sinal line (A40 & A23) (inter connector pin 32 & 29) & at sensor end (4 & 1)	
						Ground is open	Check continuity b/w ECU pin A23 (inter connector pin 29) & Boost pressure sensor pin no 1	
						Sensor defective	Check the resistance value b/w pin no 3 & 4 of boost pressure sensor - It should be in bitween 3.4 kOhms to 8.2 kOhms Check the resistance value b/w pin no 1 & 4 of boost pressure sensor - It should be in bitween 2.4 kOhms to 8.2 kOhms	If the resistance is out of specified limit - Replace sensor
						ECU defective	No check points	If all the above check points are ok Replace ECU / Faulty ECU to be sent for investigation

ASHOK LEYLAND

S. No	P-Codes	Blink Code	Error Description in Tester	Reaction Observed in Vehicle	Verification in Tester	Possible cause	Check Points	Further Actions
29	P0237	11	Boost pressure sensor Voltage below lower limit	Pickup loss Smoke puff will be observed	Boost pressure wil read default value as 1200 mbar	Signal line short to ground	Check continuity b/w pin no A40 & A23 (inter connector pin 32 & 29) & at sensor end 1 & 4	Rectify / Replace WH
						Supply line open	Check continuity b/w ECU pin A14 (inter connector pin 31) & Boost pressure sensor pin no 3	
						Signal line open	Check continuity b/w ECU pin A40 (inter connector pin 32) & Boost pressure sensor pin no 4	
						Sensor defective	Check the resistance value b/w pin no 3 & 4 of boost pressure sensor - It should be in bitween 3.4 kOhms to 8.2 kOhms Check the resistance value b/w pin no 1 & 4 of boost pressure sensor - It should be in bitween 2.4 kOhms to 8.2 kOhms	If the resistance is out of specified limit - Replace sensor
						ECU defective	No check points	If all the above check points are ok Replace ECU / Faulty ECU to be sent for investigation
30	U1001	11	Boost pressure sensor signal from CAN not OK .	Not used	Not used	Not used	Not used	Not used
31	P0236	11	Boost pressure sensor Plausibility error .	Pick up loss	Boost pressure wil read default value as 1200 mbar	Not used	Not used	Not used
32	P0563		Battery Voltage above upper limit	ECU shut off leading to engine shut off	check battery voltge	Battery positive disconnected abrupt during driving	Check battery connections	Rectify the battery connections/ battery
33	P0562		Battery Voltage below lower limit	ECU shut off leading to engine shut off		Battery drain	Check battery voltage	Charge / Replace the battery
34	P0504		Brake signal is not plausible	No reactions	monitor the status of the brake while preesing & releasing brake pedal	Wiring harness connections - Not connected	Check wiring harness Check continuity across pin no K17 & brake switch pin no 4 (For main brake switch) pin no K80 &Brake switch pin no 3 (For redundant brake)	If found faulty rectify / Replace WH
						Brake switch defective	Check brake switch presence / connected	Ensure proper connections
						Brake switch swapped	Check wiring harness connections for both brakes	
						ECU defective	No check points	If all the above check points are ok Replace ECU / Faulty ECU to be sent for investigation
36	P1507		Cold start lamp short circuit to battery	Not used	Not used	Not used	Not used	
37	P1507		Cold start lamp short circuit to ground					
38	P1507		Cold start lamp no load					
39	P1507		Cold start lamp excess temperature					
40	P0118	21	Coolant temperature sensor Voltage above upper limit	Pick up loss - Torque reduction	Coolant temperatuer sensor value will read 105 Deg C	Ground is open	Check continuity b/w A41 & pin no2 (Interconnector Pin 28)	Wiring harness to be rectify/replace
					Coolant temp sensor raw voltage above 4.93 Volts	Signal line open	Check continuity b/w A58 & pin no1 (Interconnector Pin 27)	
						Sensor defective	Check the resisatnce across ECU pin A41 & A58 (Interconnector pin 28 & 27) At temp 25 deg C resistance should be between 1.87 k Ohms to 2.26 k Ohms At temp 40 deg C resistance should be between 1.08 k Ohms to 1.277 k Ohms At temp 60 deg C resistance should be between 0.555 k Ohms to 0.639 k Ohms At temp 80 deg C resistance should be between 0.304 k Ohms to 0.342 k Ohms	If resistance is not within spec then change sensor

ASHOK LEYLAND

S. No	P-Codes	Blink Code	Error Description in Tester	Reaction Observed in Vehicle	Verification in Tester	Possible cause	Check Points	Further Actions
41	P0117	21	Coolant temperature sensor Voltage below lower limit	Pick up loss - Torque reduction		Signal pin Short circuit to ground		Wiring harness to be rectify/replace
						Sensor defective	Check the resisatnce across ECU pin A41 & A58 (Interconnector pin 28 & 27) At temp 25 deg C resistance should be between 1.87 k Ohms to 2.26 k Ohms At temp 40 deg C resistance should be between 1.08 k Ohms to 1.277 k Ohms At temp 60 deg C resistance should be between 0.555 k Ohms to 0.639 k Ohms At temp 80 deg C resistance should be between 0.304 k Ohms to 0.342 k Ohms	If resistance is not within spec then change sensor
						ECU defective	No check points	If all the above check points are ok Replace ECU / Faulty ECU to be sent for investigation
52	P0704		Main Clutch signal is not plausible .	No reactions	Clutch switch status should change when clucth pedal pressed	Wiring harness connections - Not connected	Check wiring harness Check continuity across pin no K40 & Clutch switch pin no - ---	If found faulty rectify / Replace WH
						Clutch switch defective	Check clutch switch presence / connected	Ensure proper connections
						ECU defective	No check points	If all the above check points are ok Replace ECU / Faulty ECU to be sent for investigation
53	P0335	61	Crankshaft Pos. Backup mode active	Engine speed will limited to 1750 rpm	Crank shaft sensor error will register (P0337 or P0336) Sync status will read 129	Incorrect Air gap b/w sensor tip & Flywheel (Spec 0.5 to 1.5 mm)	Check air gap with Feelar gauges	Maintain air gap as per spec
				Delayed start (Higher start time then normal start time)		Improper mounting of fly wheel	Check for the dowel on the crankshaft wrt flywheel	Ensure proper fitment of flywheel
				White smoke immedeately after start		Improper machining of holes (Spec 58 holes) on flywheel	Visiual Inspection / Refer Mounting Guidelines	Change flywheel
						Loose connection or poor contact on socket.	Visiual Inspection	Ensure proper connections
						Improper allignment of sensor mounting plates	Check with special Tool	Ensure proper allignment
						Crank shaft sensor failure	Measure resistance across the terminals	Replace sensor
						Crank shaft sensor connection open	Check continuity	Rectify / Replace WH
						ECU defective	No check points	If all the above check points are ok Replace ECU / Faulty ECU to be sent for investigation
						Shielding is not available for crank signal line	Visiual inspection	replace WH with proper WH
						IF short circuit b/w positive & negative of cam - no cam signal will be reported		Rectify / Replace WH
						Open circuit of negative	check continuity b/w end of sensor connector pin no 2 to A12 (inter connector pin 33)	Rectify / Replace WH
						Open circuit of positive	check continuity end of sensor connector pin no 1 to A27 (inter connector pin 34)	Rectify / Replace WH
						Positive line short to battery	Check continuity b/w Cam shft Positive & battery - there should not be any continuity	Rectify / Replace WH

ASHOK LEYLAND

S. No	P-Codes	Blink Code	Error Description in Tester	Reaction Observed in Vehicle	Verification in Tester	Possible cause	Check Points	Further Actions
54	P0342	62	No camshaft signal	Engine speed will limited to 1750 rpm	Sync status will read as 48 (successfully engine started with test injections)	Cam shaft sensor failure	Measure resistance across the terminals	if resistance is out of spec replace sensor
55	P0341	62	Wrong camshaft signal	Delayed start (Higher start time then normal start time) White smke immediately after start		Cam shaft sensor connection open	Check continuity	Rectify / Replace WH
						Shielding is not available for cam signal line	Visiual inspection	replace WH with proper WH
						Loose connection or poor contact on socket.	Visiual inspection	Ensure proper connections
						ECU defective	No check points	If all the above check points are ok Replace ECU / Faulty ECU to be sent for investigation
						Improper fittment of Pump	Check with special Tool	Ensure proper fitment of pump
						IF short circuit b/w positive & negative of cam - no cam signal will be reported	Check continuity b/w Positive & Negative - There should not be continuity	Rectify / Replace WH
						Open circuit of negative	check continuity b/w end of sensor connector pin no 1 to A50 (inter connector pin 24)	Rectify / Replace WH
						Open circuit of positive	check continuity end of sensor connector pin no 2 to A10 (inter connector pin 25)	Rectify / Replace WH
						Positive line short to battery	Check continuity b/w Cam shft Positive & battery - there should not be any continuity	Rectify / Replace WH
56	P0337	61	No crankshaft signal	Same as backup				
57	P0336	61	Wrong crankshaft signal					
59	P0219		Engine overspeed detected	No reaction	Refer environmental conditions (error will come durin driving)	Improper downshifting of gears	No check points	Advise Proper driving
						Over run condition(Vehicle driving the engine)		
64	P1134		Non plausible fault-FMTC_trq2qBas_MAP containes non strictly monotonus q curves	No reaction	No check	Improper calibration FMTC map (During Engine calibration)	No check points	Proper calibration
65	P0183	23	Fuel temperature sensor Voltage above upper limit	No reaction	Default value will be read as 80 Deg C	Ground is open	Check continuity b/w A39 & pin no2 (Interconnector Pin 23)	Wiring harness to be rectify/replace
						Signal line open	Check continuity b/w A52 & pin no1 (Interconncetor Pin 22)	
						Sensor defective	Check the resisatnce across ECU pin A39 & A52 (Interconnector Pin 23 & 22) At temp 25 deg C resistance should be between 1.87 k Ohms to 2.26 k Ohms At temp 40 deg C resistance should be between 1.08 k Ohms to 1.277 k Ohms At temp 60 deg C resistance should be between 0.555 k Ohms to 0.639 k Ohms At temp 80 deg C resistance should be between 0.304 k Ohms to 0.342 k Ohms	If resistance is not within spec then change sensor

ASHOK LEYLAND

S. No	P-Codes	Blink Code	Error Description in Tester	Reaction Observed in Vehicle	Verification in Tester	Possible cause	Check Points	Further Actions
66	P0182	23	Fuel temperature sensor Voltage below lower limit	No reaction	Default value will be read as 80 Deg C	Signal pin Short circuit to ground		Wiring harness to be rectify/replace
						Sensor defective	Check the resisatnce across ECU pin A39 & A52 (Interconnector Pin 23 & 22) At temp 25 deg C resistance should be between 1.87 k Ohms to 2.26 k Ohms At temp 40 deg C resistance should be between 1.08 k Ohms to 1.277 k Ohms At temp 60 deg C resistance should be between 0.555 k Ohms to 0.639 k Ohms At temp 80 deg C resistance should be between 0.304 k Ohms to 0.342 k Ohms	If resistance is not within spec then change sensor
						ECU defective	No check points	If all the above check points are ok Replace ECU / Faulty ECU to be sent for investigation
67	P0692		Power stage of fan actuator short circuit to battery	Not used	Not used	Not used		
68	P0691		Power stage of fan actuator short circuit to ground					
69	P0485		No load error on fan actuator					
70	P0484		Excess temp error on fan actuator					
71	P0526		Fan speed sensor short circuit to battery					
72	P0527		Fan speed sensor short circuit to ground					
73	P2267		Water in Fuel sensor Voltage above upper limit .	Water-in-Fuel lamp continously ON in instrument cluster	P2267 Error will be registered	Signal line open	Check the Water-in-Fuel sensor connector is connected to the Wiring Harness	Connect the Water-in-Fuel Sensor to wiring harness
						Signal line open	Check continuity between K64 & Pin 2 of Water in Fuel connector	Replace / Rectify harness
						Supply line open	Check continuity between Pin 1 for Water in Fuel connector and Fuse F4 (5A)	Replace / Rectify harness
						Fuse failed	Check the Fuse F4 (5A)	Replace Fuse
74	P2266		Water in Fuel sensor Voltage below lower limit .	Water-in-Fuel lamp continously ON in instrument cluster	P2266 Error will be registered	Ground is open	Check continuity between K63 & Pin 3 of Water in Fuel connector	Replace / Rectify harness
						Sensor defective	Check resistance between K64 & Pin 2 of water fuel sensor	Change bowl (with sensor)
75	P2265		Water detection sensor active .	Water-in-Fuel lamp blinking Pickup loss observed (or) Vehicle not starting	P2265 error will be registered	Water entry in Pre-filter water seperator bowl / system	Check water seperator bowl for water entry	Drain water from the water pre-filter bowl
80	U0101		Timeout of CAN message ETC1					
81	U0104		Dfp for Time-out error of RxCCVS message					
82	U1004		Timeout of CAN message TCO1	Not used				

ASHOK LEYLAND

S. No	P-Codes	Blink Code	Error Description in Tester	Reaction Observed in Vehicle	Verification in Tester	Possible cause	Check Points	Further Actions
83	U1005		Timeout for messages TSC1-AE when active					
84	U1006		Timeout for messages TSC1-AE when inactive					
85	U1007		Timeout for messages TSC1-AR when active	Not used				
86	U1008		Timeout for messages TSC1-AR when inactive	Not used				
87	U1009		Timeout for messages TSC1-DE when active	Not used				
88	U1010		Timeout for messages TSC1-DE when inactive	Not used				
89	U1011		Timeout for messages TSC1-DR when active	Not used				
90	U1012		Timeout for messages TSC1-DR when inactive	Not used				
91	U1013		Timeout for messages TSC1-PE when active	Not used				
92	U1014		Timeout for messages TSC1-PE when inactive	Not used				
93	U1015		Timeout for messages TSC1-TE when active	Not used				
94	U1016		Timeout for messages TSC1-TE when inactive	Not used				
95	U1017		Timeout for messages TSC1-TR when active	Not used				
96	U1018		Timeout for messages TSC1-TR when inactive	Not used				
97	U1019		Timeout for messages TSC1-VE when active					
98	U1020		Timeout for messages TSC1-VE when inactive					
99	U1021		Timeout for messages TSC1-VR when active	Not used				
100	U1022		Timeout for messages TSC1-VR when inactive	Not used				
101	U1023		Timeout for CAN message WSI	Not used				
102	U1024		Timeout in CAN send messages					
103	P1530		Generic lamp 1 short circuit to battery	Not used	Not used	Not used		
104	P1530		Generic lamp 1 short circuit to ground					
105	P1530		Generic lamp 1 no load					
106	P1530		Generic lamp 1 excess temperature					

ASHOK LEYLAND

S. No	P-Codes	Blink Code	Error Description in Tester	Reaction Observed in Vehicle	Verification in Tester	Possible cause	Check Points	Further Actions
107	P1531		Generic lamp 2 short circuit to battery	Not used	Not used	Not used		
108	P1531		Generic lamp 2 short circuit to ground					
109	P1531		Generic lamp 2 no load					
110	P1531		Generic lamp 2 excess temperature					
111	P1532		Generic lamp 3 short circuit to battery	Not used	Not used	Not used		
112	P1532		Generic lamp 3 short circuit to ground					
113	P1532		Generic lamp 3 no load					
114	P1532		Generic lamp 3 excess temperature					
115	P1600		Error state of EEPROM (Communication error of CJ940)	ECU reset leading to Engine shut-off PRV open (only if engine is in running condition)	PRV counter incremented by 1 (Only if engine is in running condition)	ECU internal hardware defect	No check points	Replace ECU Faulty ECU to be investigation
116	P1601		EEPROM Error during last read operation	No reaction on the vehicle	No checks	EEPROM not initialised properly at EOL Sudden voltage drop during afterrun	Clear the error, give a complete afterrun,Reinitialise the ECU - Error should not appeare	If error reappeares reflash the ECU (at EOL)
117	P1602		EEPROM Error during last write operation					
118	P1603		EEPROM Default value used					
119	P1604	32	A recovery has occurred - Hardware error- Frequent restart occurred- Protected	ECU reset leading to Engine shut-ff PRV open (Only if engine is in running condition)	PRV counter incremented by 1 (Only if engine is in running condition)	Triggered due to other ECU recovery	No check points	Replace ECU Faulty ECU to be investigation
120	P1619		A recovery has occurred . Error when ECU reset has occurred. (recovery has occurred).				No check points	
121	P1605	37	Error stage supply voltage CJ940 lower limit - Hardware error- Frequent restart occurred- Visible.				Check if any other errors leading to recovary (Engine shut-off)	
122	P1606	32	Internal supply voltage upper limit	ECU reset leading to Engine shut-ff PRV open (Only if engine is in running condition)	PRV counter incremented by 1 (Only if engine is in running condition)	ECU Internal HW error	No check points	
123	P1607	32	Internal supply voltage lower limit			ECU Internal HW error	No check points	
124	P0113		Air temperature sensor Voltage above upper limit	No reaction				
125	P0112		Air temperature sensor Voltage below lower limit	No reaction				
126	U1002		Air temperature sensor CAN signal defect .	No reaction	Not used			

ASHOK LEYLAND

S. No	P-Codes	Blink Code	Error Description in Tester	Reaction Observed in Vehicle	Verification in Tester	Possible cause	Check Points	Further Actions
127	P1338		No. of injections limited by charge balance .					
128	P1339		No. of injections limited by qty balance .					
129	P1340		No. of injections limited by software .					
130	P1115		No.of injections limited by runtime					
131	P2148	31	Bank 1 Short circuit	Abnormal Engine noise & vibration observed	No checks	Any One cyl in Bank 1 (Cyl 1,2,3) Low side short to High Side or Batt	Check continuity b/w Pin nos (On ECU connector/intermediate connector) A47 & A16 - Inj 1 (Interconnector 3 & 4) A33 & A17 - Inj 2 (Interconnector 5 & 6) A48 & A18 - Inj 3 (Interconnector 7 & 8 A47 & K01/K05/K03 - Inj 1 A33 & K01/K05/K03 - Inj2 A48 & K01/K05/K03 - Inj3	
132	P2147	31	Bank 1 Short circuit on low side to ground			Any One cyl in Bank 1 (Cyl 1,2,3) Low side short to Ground	Check continuity b/w Pin nos (On ECU connector/intermediate connector) A47 & K02/K04/K06 - Inj 1 A33 & K02/K04/K06 - Inj 2 A48 & K02/K04/K06 - Inj3	
133	P1348	31	Bank 1 application dependant error .			Not Used		
134	P1349	31	Unclassifiable error in bank 1 cable .			Not used		
135	P1350	31	Bank 1 application dependant error .			Not Used	No Check Points	NA
136	P1341	31	Bank 1 application dependant error .			Not Used		
137	P2146	31	Bank 1 Open load .			Not Used (To be Dead calibrated in the dataset)		
138	P1342	31	Bank 1 application dependant error .			Not Used		
139	P2151	31	Bank 2 Short circuit	Abnormal Engine noise & vibration observed	No checks	Any One cyl in Bank 1 (Cyl 1,2,3) Low side short to High Side or Batt	Check continuity b/w Pin nos (On ECU connector/intermediate connector) A46 & A01 - Inj 4 (Interconnector 9 & 10) A32 & A03 - Inj 5 (Interconnector 11 & 12) A31 & A02 - Inj 6 (Interconnector 13 & 14) A46 & K01/K05/K03 - Inj 4 A32 & K01/K05/K03 - Inj 5 A31 & K01/K05/K03 - Inj 6	
140	P2150	31	Bank 2 Short circuit on low side to ground			Any One cyl in Bank 1 (Cyl 1,2,3) Low side short to Ground	Check continuity b/w Pin nos (On ECU connector/intermediate connector) A46 & K02/K04/K06 - Inj 4 A32 & K02/K04/K06 - Inj 5 A31 & K02/K04/K06 - Inj 6	
141	P1343	31	Bank 2 application dependant error .			Not Used		
142	P1344	31	Unclassifiable error in bank 2 cable .			Not used		

ASHOK LEYLAND

S. No	P-Codes	Blink Code	Error Description in Tester	Reaction Observed in Vehicle	Verification in Tester	Possible cause	Check Points	Further Actions
143	P1345	31	Bank 2 application dependant error .			Not Used	No Check Points	
144	P1346	31	Bank 2 application dependant error .			Not Used		
145	P2149	31	Bank 2 Open load .			Not Used (To be Dead calibrated in the dataset)		
146	P1347	31	Bank 2 application dependant error .			Not Used		
147	P1608	33	Injector chip under voltage .	Engine Shut off	No Checks	ECU Internal HW error	No Check Points	Replace ECU Deffective ECU to be investigation
148	P1609	33	Injector chip init error .					
149	P1610	33	Injector chip - test mode .					
150	P1611	33	Injector chip / SPL communication error .					
151	P1612	33	Injector chip parity error .	Engine Shut off	No Checks	ECU Internal HW error	No Check Points	Replace ECU Deffective ECU to be investigation
152	P1613	33	Injector chip - program flow error .					
153	P1614	33	Injector chip check during ON failed .					
154	P1615	33	Injector chip ON time out .					
155	P0262	51	Cyl 1 Short circuit on low side to Batt .	Engine Hunting	No checks	Injector low side wire short with Supply	Check lowside wire A47 (ECU) or Interconnector pin (3) to Injector for short with supply	Replace / Rectify Wire harness
156	P1301	51	Cyl 1 application dependant error .					
157	P0261	51	Cyl 1 Short circuit on low side to High side .				Check continuity b/w Pin nos On ECU connector A47 & A16 - Inj 1(or) intermediate connector 3 & 4 - Inj1	Replace / Rectify Wire harness
158	P1302	51	Unclassifiable error in injector 1 cable .					
159	P1304	41	Cyl 1 application dependant error					
160	P1305	41	Cyl 1 application dependant error					
161	P1306	41	Cyl 1 open load .	Engine Hunting	No checks	Injector low side wire short with Supply	Check continuity between ECU A47 / Interconnector 3 - Inj1 ECU A16 / Interconnector 4 - Inj1	Replace / Rectify Wire harness
162	P1307	41	Cyl 1 application dependant error .					
163	P0265	52	Cyl 2 Short circuit on low side to Battery	Engine Hunting	No checks	Injector low side wire short with Supply	Check lowside wire A33 (ECU) or Interconnector pin (5) to Injector for short with supply	Replace / Rectify Wire harness
164	P1308	52	Cyl 2 application dependant error					
165	P0264	52	Cyl 2 Short circuit on low side to High side .				Check continuity b/w Pin nos On ECU connector A33 & A17 - Inj 2(or) intermediate connector 5 & 6 - Inj2	Replace / Rectify Wire harness

ASHOK LEYLAND

S. No	P-Codes	Blink Code	Error Description in Tester	Reaction Observed in Vehicle	Verification in Tester	Possible cause	Check Points	Further Actions
166	P1309	52	Unclassifiable error in injector 2 cable .					
167	P1310	42	Cyl 2 application dependant error .					
168	P1311	42	Cyl 2 application dependant error .					
169	P1312	42	Cyl 2 open load .	Engine Hunting	No checks	Injector low side wire short with Supply	Check continuity between ECU A33 / Interconnector 5 - Inj 2 ECU A17 / Interconnector 6 - Inj 2	Replace / Rectify Wire harness
170	P1313	42	Cyl 2 application dependant error .					
171	P0268	53	Cyl 3 Short circuit on low side to Battery	Engine Hunting	No checks	Injector low side wire short with Supply	Check lowside wire A48 (ECU) or Interconnector pin (7) to Injector for short with supply	Replace / Rectify Wire harness
172	P1314	53	Cyl 3 application dependant error					
173	P0267	53	Cyl 3 Short circuit on low side to High side .				Check continuity b/w Pin nos On ECU connector A48 & A18 - Inj 3(or) intermediate connector 7 & 8 - Inj 3	Replace / Rectify Wire harness
174	P1315	53	Unclassifiable error in injector 3 cable .					
175	P1316	43	Cyl 3 application dependant error .					
176	P1317	43	Cyl 3 application dependant error .					
177	P1318	43	Cyl 3 open load .	Engine Hunting	No checks	Injector low side wire short with Supply	Check continuity between ECU A48 / Interconnector 7 - Inj 3 ECU A18 / Interconnector 8 - Inj 3	Replace / Rectify Wire harness
178	P1319	43	Cyl 3 application dependant error .					
179	P0271	54	Cyl 4 Short circuit on low side to Battery	Engine Hunting	No checks	Injector low side wire short with Supply	Check lowside wire A46 (ECU) or Interconnector pin (9) to Injector for short with supply	Replace / Rectify Wire harness
180	P1320	54	Cyl 4 application dependant error					
181	P0270	54	Cyl 4Short circuit on low side to High side .				Check continuity b/w Pin nos On ECU connector A46 & A01 - Inj 4(or) intermediate connector 9 & 10 - Inj 4	Replace / Rectify Wire harness
182	P1321	54	Unclassifiable error in injector 4 cable .					
183	P1322	44	Cyl 4 application dependant error .					
184	P1323	44	Cyl 4 application dependant error .					
185	P1324	44	Cyl 4 open load .	Engine Hunting	No checks	Injector low side wire short with Supply	Check continuity between ECU A46 / Interconnector 9 - Inj 4 ECU A01 / Interconnector 10 - Inj 4	Replace / Rectify Wire harness
186	P1325	44	Cyl 4 application dependant error .					
187	P0274	55	Cyl 5Short circuit on low side to Battery	Engine Hunting	No checks	Injector low side wire short with Supply	Check lowside wire A32 (ECU) or Interconnector pin (11) to Injector for short with supply	Replace / Rectify Wire harness

ASHOK LEYLAND

S. No	P-Codes	Blink Code	Error Description in Tester	Reaction Observed in Vehicle	Verification in Tester	Possible cause	Check Points	Further Actions
188	P1326	55	Cyl 5 application dependant error					
189	P0273	55	Cyl 5 Short circuit on low side to High side .				Check continuity b/w Pin nos On ECU connector A32 & A03 - Inj 5(or) intermediate connector 11 & 12 - Inj 5	Replace / Rectify Wire harness
190	P1327	55	Unclassifiable error in injector 5 cable .					
191	P1328	45	Cyl 5 application dependant error .					
192	P1329	45	Cyl 5 application dependant error .					
193	P1330	45	Cyl 5 open load .	Engine Hunting	No checks	Injector low side wire short with Supply	Check continuity between ECU A32 / Interconnector 11 - Inj 5 ECU A03 / Interconnector 12 - Inj 5	Replace / Rectify Wire harness
194	P1331	45	Cyl 5 application dependant error .					
195	P0277	56	Cyl 6Short circuit on low side to Battery	Engine Hunting	No checks	Injector low side wire short with Supply	Check lowside wire A31 (ECU) or Interconnector pin (13) to Injector for short with supply	Replace / Rectify Wire harness
196	P1332	56	Cyl 6 application dependant error					
197	P0276	56	Cyl 6 Short circuit on low side to High side .				Check continuity b/w Pin nos On ECU connector A31 & A02 - Inj 6(or) intermediate connector 13 & 14 - Inj 6	Replace / Rectify Wire harness
198	P1333	56	Unclassifiable error in injector 6 cable .					
199	P1334	46	Cyl 6 application dependant error .					
200	P1335	46	Cyl 6 application dependant error .					
201	P1336	46	Cyl 6 open load .	Engine Hunting	No checks	Injector low side wire short with Supply	Check continuity between ECU A31 / Interconnector 13 - Inj 6 ECU A02 / Interconnector 14 - Inj 6	Replace / Rectify Wire harness
202	P1337	46	Cyl 6 application dependant error .					
203	P0252	36	The minimal number of injections was not reached .					
204	P0575		Fault path for cruise control actuating device evaluation error	Not used				
205	P0650		MIL short circuit to battery					
206	P0650		MIL short circuit to ground					
207	P0650		MIL no load					
208	P0650		MIL excess temperature					

ASHOK LEYLAND

S. No	P-Codes	Blink Code	Error Description in Tester	Reaction Observed in Vehicle	Verification in Tester	Possible cause	Check Points	Further Actions
209	P068B	65	Main Relay does not open in time	No reaction	No veryfication possible	ECU pin no K72 shorted with ground	Check continuity b/w K72 & Ground 0 volts should be Measured at ECU pin no K01 and K02 after Ingnition off (Complete afterrun)	Rectify / replace WH
						ECU defective (Internally shorted to ground	No check points	Replace ECU Deffective ECU to be investigation
						ECU pin K28 is getting supply		
						Relay Defects	Check resistance	Replace relay
210	P068A	65	Main Relay opens too early			After run operation is inturrepted continiousely for 4		
211	P251C		Multiple state switch short circuit to battery	Not used	Not used	Not used		
212	P251B		Multiple state switch short circuit toground					
213	P251A		Multiple state switch not plausible					
214	P0685	65	Main relay 1 Short circuit to battery					
215	P0687	65	Main relay 1 Short circuit to ground					
216	P1616	32	Error counter of Watchdog or controller are not plausible or the system must shut down	Engine shut-off	No check	ECU internal communication is not proper	No check points	Replace ECU Deffective ECU to be investigation
217	U0028		Bus off in CAN A	Can messages transfer will not take place	No checks	Can Hi & Lo line are opened	Check the continuity (K62 & CAN connector A; K61 & CAN connector B) Check for message transfer	Rectify / Replace WH
						Hi & Lo short circuit		
						ECU defect	No check points	Replace ECU Deffective ECU to be investigation
218	P0216	34	Energizing time exceeds limit of overrun monitoring	Engine shut off	No checks			
219	P0321	34	Plausibility error in engine speed check .	Engine shut off	No checks			
			Faultpath for runup test					
221	P1620		Watch dog switch off path defect	Engine shut off	No check points	ECU internal communication is not proper		Replace ECU Deffective ECU to be investigation
222	P1624		Voltage monitoring upper limit shut off path defect					
223	P1625		Voltage monitoring lower limit shut off path defect					
224	P0643		Sensor supply voltage 1 above upper limit	Not used		Sensor supply line short circuit to above 5 Volt DC		
						Sensor defective		
						ECU defective		
225	P0642		Sensor supply voltage 1 below lower limit			Sensor supply line short circuit to ground		
						Sensor defective		
						ECU defective		

ASHOK LEYLAND

S. No	P-Codes	Blink Code	Error Description in Tester	Reaction Observed in Vehicle	Verification in Tester	Possible cause	Check Points	Further Actions
226	P0653	35	Sensor supply Voltage 2 above upper limit	Accelerator pedal not responding		Sensor supply line short circuit to above 5 volts	Check boost pressure, App2 supply short circuit to voltage above 5 Vols	Rectify / replace WH
						Sensor defective	Check resistance of corresponding sensors	Peplace corresponding sensor
						ECU defective	No check points	Replace ECU Deffective ECU to be investigation
227	P0652	35	Sensor supply Voltage 2 below lower limit	Accelerator pedal not responding		Sensor supply line short circuit to ground	Check boost pressure, App2 supply short circuit to ground	Rectify / replace WH
						Sensor defective	Check resistance of corresponding sensors	Peplace corresponding sensor
						ECU defective	No check points	Replace ECU Deffective ECU to be investigation
228	P0699	35	Sensor supply Voltage 3 above upper limit	Accelerator pedal not responding			Check Rail pressure, App1 supply short circuit to voltage above 5 Vols	Rectify / replace WH
							Check resistance of corresponding sensors	Peplace corresponding sensor
							No check points	Replace ECU Deffective ECU to be investigation
229	P0698	35	Sensor supply Voltage 3 below lower limit				Check Rail pressure, App1 supply short circuit to ground	Rectify / replace WH
							Check resistance of corresponding sensors	Peplace corresponding sensor
							No check points	Replace ECU Deffective ECU to be investigation
230	P1419		faultpath for shut off test				Not used	
231	P1617		System lamp Error.	No reaction	Actuate system lamp through tester Check the system lamp status	Signal line K55 short circuit to battery	Check continuity b/w K55 & Battery - Continuity should not be there	Rectify / replace WH
						System lamp short circuit to ground	Check continuity b/w K55 & Ground - Continuity should not be there	Rectify / replace WH
						System lamp no load		Rectify / replace WH
						Lamp defective		Replace lamp
						ECU defective	No check points	Replace ECU Deffective ECU to be investigation
235	P2534		No terminal15 signal detected					
236	P2532		Terminal 50 always pressed					
237	P1626	32	Deviation between TPU and system time .	ECU recovery leading to Engine Shut off	No verification possible	ECU Internal error	No check Points	Replace ECU Deffective ECU to be investigation
238	P1618	32	SPI communication failed	ECU recovery leading to Engine Shut off	No verification possible	ECU Internal error	No check Points	Replace ECU Deffective ECU to be investigation
239	P1533		Warning lamp short circuit to battery	Not Used	Not Used			
240	P1533		Warning lamp short circuit to ground					
241	P1533		Warning lamp no load					
242	P1533		Warning lamp excess temperature					
243	P0647		Air condition power stage short circuit to battery					

ASHOK LEYLAND

S. No	P-Codes	Blink Code	Error Description in Tester	Reaction Observed in Vehicle	Verification in Tester	Possible cause	Check Points	Further Actions
244	P0646		Air condition power stage short circuit to ground					
245	P0645		Air condition power stage no load					
246	P0647		Air condition power stage excess temperature					
247	P0297	63	Exceeding of the maximum vehicle speed					
248	P215B	63	Vehicle speed Distance factor not learned	Not Used				
249	P062C	63	HW signal for vehicle speed not valid	Not Used				
250	P0501	63	Vehicle speed not plausible with injection mass and speed .	Engine Speed not raising above certain limit (1200 rpm)	Check Vehicle speed (Live data) in tester in vehicle driving condition	Vehicle speed sensor fuse failed	Check fuse F6 (5A)	Replace fuse
						Vehicle speed sensor connector disconnected	Check connector	Connect the Vehicle speed sensor connector
						Vehicle speed sensor to ECU wire disconnected	Check continuity between Fuse F6 (5A) / Interconnector pin 49 to Pin 3(3 pole connector) ECU K75 / Interconnector pin 48 to Pin 2 (3 pole connector) ECU K53 / Interconnector pin 47 to Pin 1 (3 pole connector)	Rectify / Replace wire harness
251	U1036		CAN signal for vehicle speed not valid .	Engine Speed not raising above certain limit (1200 rpm)	Check Vehicle speed (Live data) in tester in vehicle driving condition	CAN cable disconnected	Check CAN cable connection Check continuity between K61 to CAN connector pin B K62 to CAN connector pin A	Rectify / Replace wire harness
252	P1435		HpTst deactivates rail pressure monitoring	Not used				
253	P0090	71	Open load of Meun output .	Pickup loss observed	Read Metering Unit actual current in live data Metering unit Open error (P0090) and PRV recognised as open in Read DTC	Wire harness or wire harness connector disconnected	Check continuity between ECU A19 / Interconnector pin 15 to Metering unit connector pin 1 ECU A49 / Interconnector pin 16 to Metering unit connector pin 2	Rectify / Replace wire harness
254	P1103	71	Excess temperature of Meun power stage .	Not Used				
255	P0092	71	Metering unit output Short circuit to battery	Pickup loss observed	Read Metering Unit actual current in live data Metering unit error (P0092) and PRV recognised as open (P1100) in Read DTC	Wire harness or wire harness connector miscontinuity Diesel flow through Metring Unit Connector	Check continuity between ECU A19 - A49 (or) Interconnector pin 15 - 16 Metering unit mating connector pin 1 - 2 Replace Metering Unit	Rectify / Replace wire harness
256	P0091	71	Metering unit output Short circuit to ground	Pickup loss observed	Read Metering Unit actual current in live data Metering unit Open error (P0091) and PRV recognised as open (P1100) in Read DTC	Wire harness or wire harness connector miscontinuity	Check continuity between A19/Interconnector pin 15 to ground or ECU K02/04/06	Rectify / Replace wire harness
257	P0254	71	Signal range check high error of metering unit ADC channel	To be dead calibrated				
258	P0253	71	Signal range check low error of metering unit ADC channel					

ASHOK LEYLAND

S. No	P-Codes	Blink Code	Error Description in Tester	Reaction Observed in Vehicle	Verification in Tester	Possible cause	Check Points	Further Actions
259	P1100	73	Rail Pressure relief valve recognised as open	Pickup loss observed	Railpressure setpoint reads 800000 mbar (live data) PRV recognised as open error (P1100) in Read DTC	Metering Unit related error (P0090 or P0092 or P 0091 or P0254 or P0253)	Check points related to corresponding P codes	
						Rail pressure sensor error (P0193 or P 0192)	Check points related to corresponding P codes	
						Rail Metering Unit related errors (P1110, P1111, P1112, p1108, P0093)	Check points related to corresponding P codes	
260	P1101	73	Rail Pressure relief valve shock requested					
261	P1102	73	PRV did not open after pressure shock .					
262	P1110	74	PRV was opened more often than the techn. Specification allows .	Pickup loss observed	PRV counter reads more than 50	PRV has opened more often	Check for P1100 related points	After rectification of P1100 error, Reset the PRV counter & Duration through tester
263	P1111	74	PRV was open for longer time than the techn. Specification allows .	Pickup loss observed	PRV duration reads more than 300 min			
264	P1112	74	PRV was open more often and for longer time than the techn. spec. allows .	Pickup loss observed	PRV counter reads more than 50 or PRV duration reads more than 300 min			
265	P0193	13	Rail pressure sensor Voltage above upper limit	Pickup loss observed	Railpressure setpoint reads 800000 mbar (live data)	Rail pressure sensor signal wire disconnected Rail pressire sensor supply wire disconnected	Check Rail pressure sensor connected Check continuity between A43 / Interconnector pin 37 to Rail pressure sensor connector pin 2 Check Rail pressure sensor connected Check continuity between A26 / Interconnector pin 38 to Rail pressure sensor connector pin3	
266	P0192	13	Rail pressure sensor Voltage below lower limit	Pickup loss observed	Railpressure setpoint reads 800000 mbar (live data)	Rail pressure sensor ground wire disconnected	Check Rail pressure sensor connected Check continuity between A08 / Interconnector pin 36 to Rail pressure sensor connector pin 1	
						Defective Sensor		
267	P1104	72	Maximum positive deviation of rail pressure exceeded	Pick up loss Speed limited to 1750 rpm	Maximum Speed will be limited to 1750 rpm	HPP Side: Leakage in the High Pressure Pipe area Injection nozzle stuck in open position Leakage in pressure limiting valve Worn HPP Worn injector		
						Low Pressure side: Pressure before gear pump too low Gear pump out put too low Filter clogged up Leak on low pressure side Ristriction from low pressure side		

ASHOK LEYLAND

S. No	P-Codes	Blink Code	Error Description in Tester	Reaction Observed in Vehicle	Verification in Tester	Possible cause	Check Points	Further Actions
268	P1105	72	Maximum positive deviation of rail pressure exceeded concerning set flow of fuel .	Pick up loss Speed limited to 1750 rpm	Maximum Speed will be limited to 1750 rpm	HPP Side: Leakage in the high pressure section Injection nozzle stuck in open position Worn high pressure pump Worn injector Leaking pressure limiting valve		
						Low Pressure Side: Pressure before gear pump too low Gear pump output too low Filter clogged up Leak on low pressure side Ristriction from low pressure side		
269	P1106	72	Maximum negative rail pressure deviation with Meun on lower limit is exceeded .	Pick up loss Speed limited to 1750 rpm	Maximum Speed will be limited to 1750 rpm	HPP Side: Metering unit is stuck in open position Zero delivery throttle clogged up Metering unit without power due to electrical error		
						Low Pressure Side: Pressure before gear pump too high Pressure after zero-delivery throttle too high		
270	P1107	72	Minimum rail pressure exceeded	Pick up loss Speed limited to 1750 rpm	Maximum Speed will be limited to 1750 rpm	HPP Side: Leakage in the high pressure section Injection nozzle stuck in open position Worn high pressure pump Worn injector Leaking pressure limiting valve		
						Low Pressure Side: Pressure before gear pump too low Gear pump output too low Filter clogged up Leak on low pressure side Ristriction from low pressure side		
271	P1108	72	Faults for checks in MeUn controlled mode - maximum rail pressure exceeded	Pick up loss Speed limited to 1750 rpm	Maximum Speed will be limited to 1750 rpm	HPP Side: Metering unit is stuck in open position Zero delivery throttle clogged up Metering unit without power due to electrical error		
						Low Pressure Side: Pressure before gear pump too high Pressure after zero-delivery throttle too high		

ASHOK LEYLAND

S. No	P-Codes	Blink Code	Error Description in Tester	Reaction Observed in Vehicle	Verification in Tester	Possible cause	Check Points	Further Actions
272	P0093	72	Faults for checks in MeUn controlled mode - rail pressure drop rate is higher then expected	Pick up loss Speed limited to 1750 rpm	Maximum Speed will be limited to 1750 rpm	Leakage in the high pressure section Injection nozzle stuck in open position Worn high pressure pump Worn injector Leaking pressure limiting valve Injector reflex too low		
273	P0089	72	Setpoint of metering unit in overrun mode not plausible .	Pick up loss Speed limited to 1750 rpm	Maximum Speed will be limited to 1750 rpm	HPP Side: Leakage in the high pressure section Injection nozzle stuck in open position Worn high pressure pump Worn injector Leaking pressure limiting valve		
						Low Pressure Side: Zero delivery is not present for metering unit Leakage in metering unit too great Defective high pressure pump		
274	P1109	72	Setpoint of fuel volume flow through the Meun is lower than the calculated value .	Pick up loss Speed limited to 1750 rpm	Maximum Speed will be limited to 1750 rpm	HPP Side: Rail pressure sensor out of tune High pressure pump defective		
						Low Pressure Side: Metering unit reflux too low		
275	P0088	72	Faults for checks in MeUn controlled mode- maximum positive deviation of governor exceeded concerning set flow of fuel	Pick up loss Speed limited to 1750 rpm	Maximum Speed will be limited to 1750 rpm	Injector is jammed		
276	P0617		Digital starter power stage short circuit to battery	Not used				
277	P0616		Digital starter power stage short circuit to ground					
278	P0615		Digital starter power stage no load					
279	P0617		Digital starter power stage excess temperature					
280	P1627		Main relay does not open in time					
281	P1628		SCG error					

ASHOK LEYLAND

S. No	P-Codes	Blink Code	Error Description in Tester	Reaction Observed in Vehicle	Verification in Tester	Possible cause	Check Points	Further Actions
282	P0217	22	Over Coolant temperature error	Loss in pickup - Gradual torque reduction with respect to coolant temp increase	Check coolant temperature, it will show more than 100 deg C	Failure in cooling sytsem	Check the cooling system	Ensure proper functionality of cooling system
						Change in sensor resistance (Drift)	Check the resisatnce across ECU pin A41 & A58 At temp 25 deg C resistance should be between 1.87 k Ohms to 2.26 k Ohms At temp 40 deg C resistance should be between 1.08 k Ohms to 1.277 k Ohms At temp 60 deg C resistance should be between 0.555 k Ohms to 0.639 k Ohms At temp 80 deg C resistance should be between 0.304 k Ohms to 0.342 k Ohms	If resistance is not with in spec then - replace the sensor
283	U1031		Performance limit active due to either stage					
284	P1117		Setpoint of fuel volume flow through the Meun exceeds maximum fuel volume flow at low idle.		No reaction	HPP Side: Leakage in the high pressure section Injection nozzle stuck in open position Worn high pressure pump Worn injector Leaking pressure limiting valve		
						Low Pressure Side: Metering unit does not work correctly for small quantities.		
285	U1025		Dfp for message DM1DCU SPN 1					
286	U1026		Dfp for message DM1DCU SPN 2					
287	U1027		Dfp for message DM1DCU SPN 3					
288	U1028		Dfp for message DM1DCU SPN 4					
289	U1029		Dfp for message DM1DCU SPN 5					
290	U1030		Dfp for message DM1DCU					
291	P0087		Failure path for minimum rail pressure					
292	P1135		Faults for checks in MeUn controlled mode		No reaction	HPP Side: Leakage in the high pressure section Injection nozzle stuck in open position Worn high pressure pump Worn injector Leaking pressure limiting valve		
						Low Pressure Side: Metering unit does not work correctly for small quantities.		

ASHOK LEYLAND

S. No	P-Codes	Blink Code	Error Description in Tester	Reaction Observed in Vehicle	Verification in Tester	Possible cause	Check Points	Further Actions
293	P1534		Remote Pedal 1 voltage above upper limit	Not used				
294	P1535		Remote Pedal 1 voltage below lower limit					
295	P1536		Remote Pedal 1 plausibility with RmtAPP2 violated					
296	P1537		Remote Pedal 2 voltage above upper limit					
297	P1538		Remote Pedal 2 voltage below lower limit					
298	P1539		Remote Pedal 2 plausibility with RmtAPP1 violated					
299	U1032		Bus door stuck at one	Not used				
300	U1033		Bus door stuck at zero					
301	U1034		Door stuck at one with clutch pressed for more than calibrated cycles	Not used				
302	U1035		Door stuck at one with clutch pressed					
303	P1540		Hand throttle voltage above upper limit					
304	P1541		Hand throttle voltage below lower limit					
305	P1542		Hand throttle plausible with low idle switch					
306	P1543		Error path for HndThrt and Brake Plausibility					

ASHOK LEYLAND