KUBOTA SHOP MANUAL

ENGLISH

KUBOTA
DIESEL ENGINE

MODELS **V3600-E3 · V3600-T-E3 · V3800-DI-T-E3 · V3300-E3BG · V3600-T-E3BG**

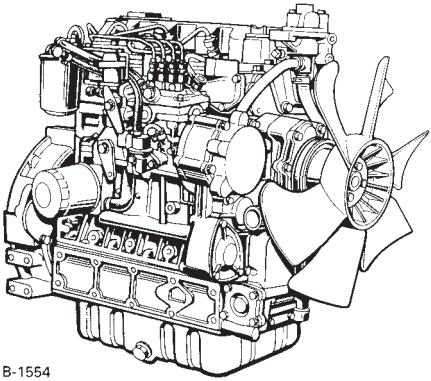

READ AND SAVE THIS MANUAL

Kubota

TO THE READER

This Workshop Manual has been prepared to provide servicing personnel with information on the mechanism, service and maintenance of V3600-E3B, V3600-T-E3B, V3800DI-T-E3B, V3600-E3CB, V3600-T-E3CB, V3800DI-T-E3CB, V3300-E3BG, V3600-T-E3BG and V3800DI-T-E3BG. It is divided into three parts, “General”, “Mechanism” and “Servicing”.

■ **General**

Information on the engine identification, the general precautions, maintenance check list, check and maintenance and special tools are described.

■ **Mechanism**

Information on the construction and function are included. This part should be understood before proceeding with troubleshooting, disassembling and servicing.

Refer to Diesel Engine Mechanism Workshop Manual (Code No. 9Y021-01876) for the one which has not been described to this workshop manual.

■ **Servicing**

Information on the troubleshooting, servicing specification lists, tightening torque, checking and adjusting, disassembling and assembling, and servicing which cover procedures, precautions, factory specifications and allowable limits.

All information illustrations and specifications contained in this manual are based on the latest product information available at the time of publication.

The right is reserved to make changes in all information at any time without notice.

Due to covering many models of this manual, information or picture being used have not been specified as one model.

October 2007

© KUBOTA Corporation 2007

SAFETY FIRST

This symbol, the industry's "Safety Alert Symbol", is used throughout this manual and on labels on the machine itself to warn of the possibility of personal injury. Read these instructions carefully.

It is essential that you read the instructions and safety regulations before you attempt to repair or use this unit.

DANGER : **Indicates an imminently hazardous situation which, if not avoided, will result in death or serious injury.**

WARNING : **Indicates a potentially hazardous situation which, if not avoided, could result in death or serious injury.**

CAUTION : **Indicates a potentially hazardous situation which, if not avoided, may result in minor or moderate injury.**

■ **IMPORTANT** : **Indicates that equipment or property damage could result if instructions are not followed.**

■ **NOTE** : **Gives helpful information.**

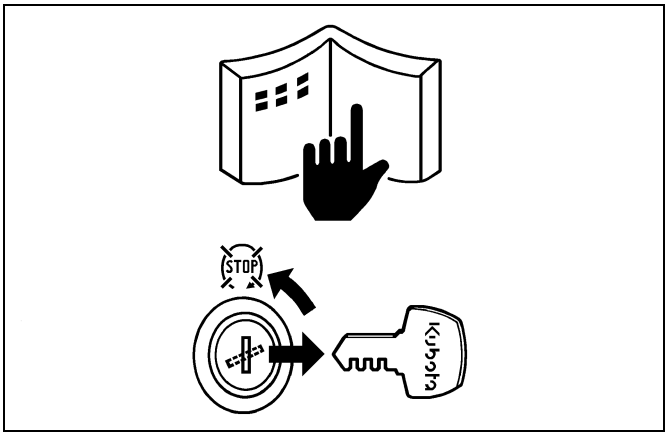

BEFORE SERVICING AND REPAIRING

- Read all instructions and safety instructions in this manual and on your engine safety decals.
- Clean the work area and engine.
- Park the machine on a firm and level ground.
- Allow the engine to cool before proceeding.
- Stop the engine, and remove the key.
- Disconnect the battery negative cable.
- Hang a "**DO NOT OPERATE**" tag in operator station.

SAFETY STARTING

- Do not start the engine by shorting across starter terminals or bypassing the safety start switch.
- Unauthorized modifications to the engine may impair the function and / or safety and affect engine life.

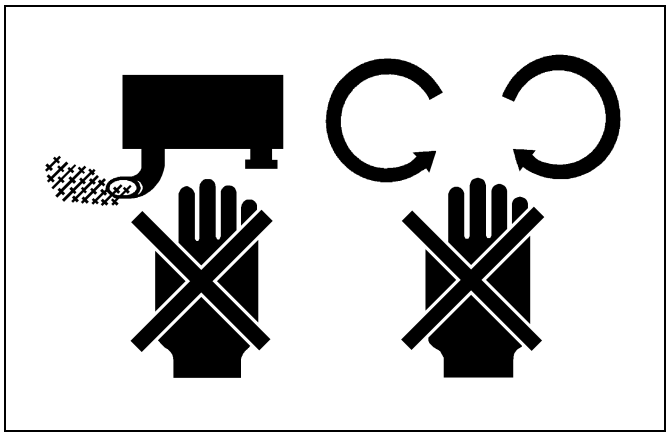

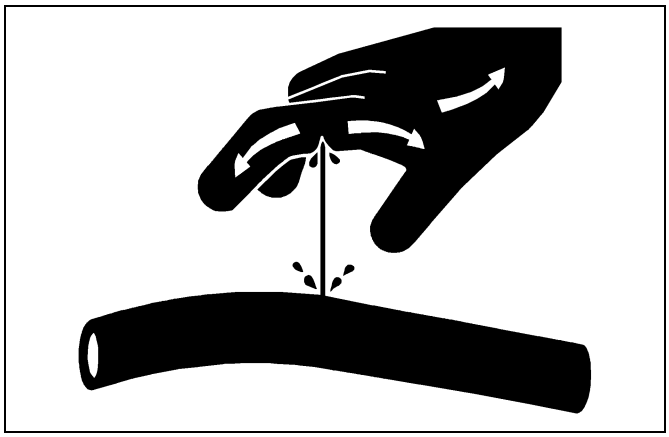

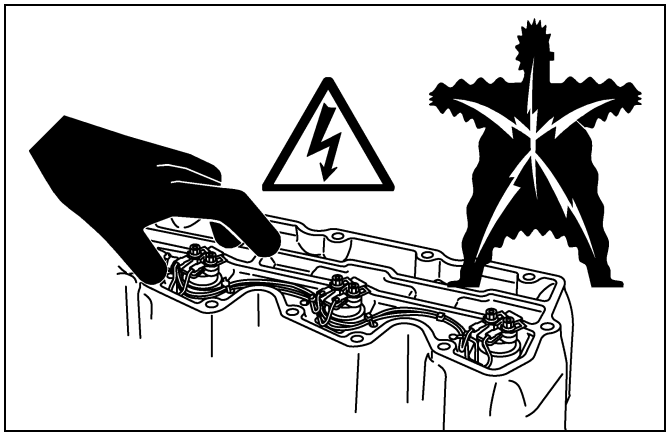

SAFETY WORKING

- Do not work on the machine while under the influence of alcohol, medication, or other substances or while fatigued.
- Wear close fitting clothing and safety equipment appropriate to the job.
- Use tools appropriate to the work. Makeshift tools, parts, and procedures are not recommended.
- When servicing is performed together by two or more persons, take care to perform all work safely.
- Do not touch the rotating or hot parts while the engine is running.
- Never remove the radiator cap while the engine is running, or immediately after stopping. Otherwise, hot water will spout out from radiator. Only remove radiator cap when cool enough to touch with bare hands. Slowly loosen the cap to first stop to relieve pressure before removing completely.
- Escaping fluid (fuel or hydraulic oil) under pressure can penetrate the skin causing serious injury. Relieve pressure before disconnecting hydraulic or fuel lines. Tighten all connections before applying pressure.
- Wear a suitable hearing protective device such as earmuffs or earplugs to protect against objectionable or uncomfortable loud noises.
- Do not open high-pressure fuel system.
  High-pressure fluid remaining in fuel lines can cause serious injury. Do not disconnect or attempt to repair fuel lines, sensors, or any other components between the high-pressure fuel pump and injectors on engines with high pressure common rail fuel system.
- High voltage exceeding 100 V is generated in the ECU, and is applied to the injector.
  Pay sufficient caution to electric shock when performing work activities.

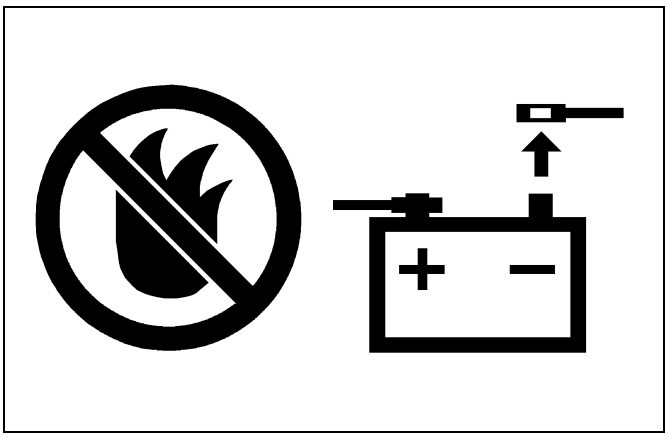

AVOID FIRES

- Fuel is extremely flammable and explosive under certain conditions. Do not smoke or allow flames or sparks in your working area.
- To avoid sparks from an accidental short circuit, always disconnect the battery negative cable first and connect it last.
- Battery gas can explode. Keep sparks and open flame away from the top of battery, especially when charging the battery.
- Make sure that no fuel has been spilled on the engine.

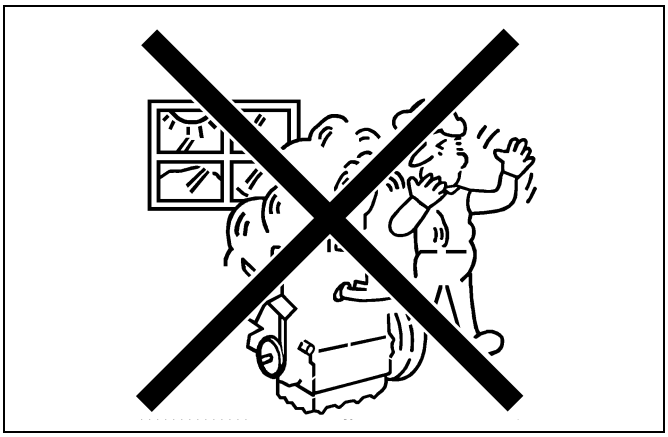

VENTILATE WORK AREA

- If the engine must be running to do some work, make sure the area is well ventilated. Never run the engine in a closed area. The exhaust gas contains poisonous carbon monoxide.

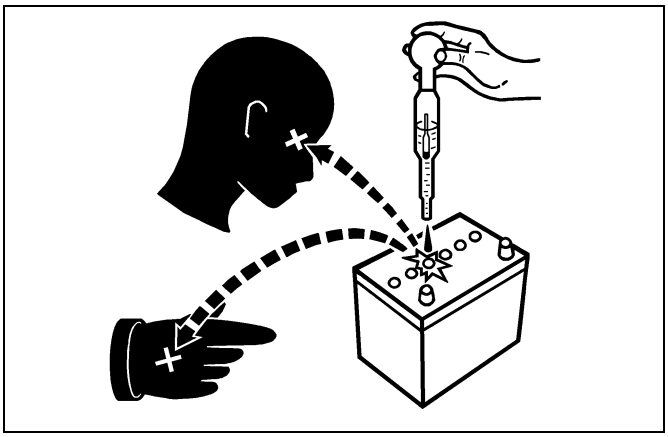

PREVENT ACID BURNS

- Sulfuric acid in battery electrolyte is poisonous. It is strong enough to burn skin, clothing and cause blindness if splashed into eyes. Keep electrolyte away from eyes, hands and clothing. If you spill electrolyte on yourself, flush with water, and get medical attention immediately.

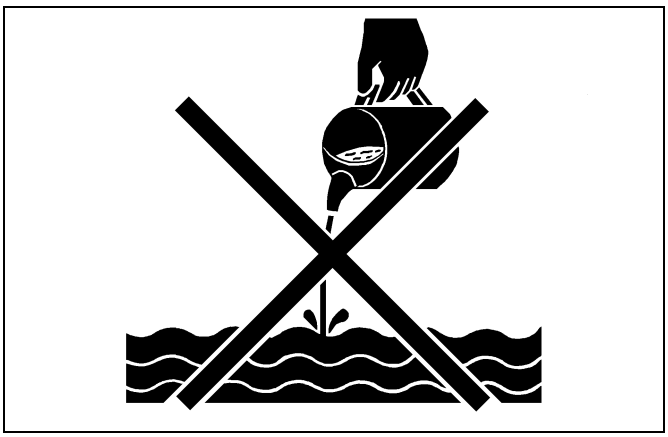

DISPOSE OF FLUIDS PROPERLY

- Do not pour fluids into the ground, down a drain, or into a stream, pond, or lake. Observe relevant environmental protection regulations when disposing of oil, fuel, coolant, electrolyte and other harmful waste.

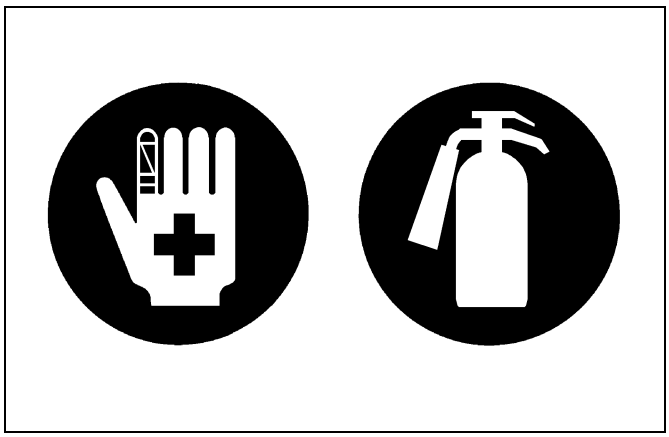

PREPARE FOR EMERGENCIES

- Keep a first aid kit and fire extinguisher handy at all times.
- Keep emergency numbers for doctors, ambulance service, hospital and fire department near your telephone.

SPECIFICATIONS

Model	V3600-E3B	V3600-E3CB	V3600-T-E3B	V3600-T-E3CB	V3800DI-T-E3B	V3800DI-T-E3CB
Number of Cylinder	4					
Type	Vertical, water-cooled, 4-cycle diesel engine					
Bore × Stroke	98 × 120 mm (3.86 × 4.72 in.)				100 × 120 mm (3.94 × 4.72 in.)	
Total Displacement	3620 cm^3 (220.9 cu.in.)				3769 cm^3 (230.0 cu.in.)	
ISO Net Continuous	40.2 kW / 2600 min^{-1} (rpm) (53.9 HP / 2600 min^{-1} (rpm))		51.5 kW / 2600 min^{-1} (rpm) (69.0 HP / 2600 min^{-1} (rpm))		60.9 kW / 2600 min^{-1} (rpm) (81.6 HP / 2600 min^{-1} (rpm))	
ISO / SAE Net Intermittent	46.3 kW / 2600 min^{-1} (rpm) (62.1 HP / 2600 min^{-1} (rpm))		59.3 kW / 2600 min^{-1} (rpm) (79.5 HP / 2600 min^{-1} (rpm))		70.1 kW / 2600 min^{-1} (rpm) (94.0 HP / 2600 min^{-1} (rpm))	
SAE Gross Intermittent	49.8 kW / 2600 min^{-1} (rpm) (66.8 HP / 2600 min^{-1} (rpm))		63.0 kW / 2600 min^{-1} (rpm) (84.5 HP / 2600 min^{-1} (rpm))		74.0 kW / 2600 min^{-1} (rpm) (99.2 HP / 2600 min^{-1} (rpm))	
Maximum Bare Speed	2800 min^{-1} (rpm)					
Minimum Bare Idling Speed	775 to 825 min^{-1} (rpm)					
Combustion Chamber	Spherical Type (E-TVCS)				Reentrant Type, Center Direct Injection Type (E-CDIS)	
Fuel Injection Pump	Bosch Type Mini Pump					
Governor	All speed mechanical governor					
Direction of Rotation	Counter-clockwise (Viewed from flywheel side)					
Injection Nozzle	BOSCH Throttle Type				Bosch P Type	
Injection Timing	0.14 rad (8.0 °) before T.D.C.		0.070 rad (4.0 °) before T.D.C.		0.10 rad (6.0 °) before T.D.C.	
Firing Order	1-3-4-2					
Injection Pressure	13.73 MPa (140.0 kgf/cm^2, 1991 psi)				1st stage 18.63 MPa (190.0 kgf/cm^2, 2702 psi), 2nd stage 23.54 MPa (240.0 kgf/cm^2, 3414 psi),	
Compression Ratio	22.6		21.8		19.0	
Lubricating System	Forced lubrication by trochoid pump					
Oil Pressure Indicating	Electrical Type Switch					
Lubricating Filter	Full Flow Paper Filter (Cartridge Type)					
Cooling System	Pressurized radiator, forced circulation with water pump					
Starting System	Electric Starting with Starter					
Starting Motor	12 V, 3.0 kW					
Starting Support Device	By Glow Plug in Combustion Chamber				Intake Air Heater in Intake Manifold	
EGR	NONE		Internal EGR (2 stage Exhaust Cam)		External EGR (EGR Cooler + Mechanical EGR Valve + Reed Valve)	
Battery	12 V, 136 AH equivalent					
Charging Alternator	12 V, 540 W					
Fuel	Diesel Fuel No. 2-D S500 or S15, see page G-7.					
Lubricating Oil	Class CF lubricating oil as per API classification is recommended. For details on recommended lubricating oils, see page G-7.					
Lubricating Oil Capacity	13.2 L (3.49 U.S.gals)					
Weight (Dry)	264 kg (582 lbs)	245 kg (540 lbs)	275 kg (606 lbs)	252 kg (556 lbs)	288 kg (635 lbs)	281 kg (619 lbs)

* The specification described above is of the standard engine of each model.
* Conversion Formula : HP = 0.746 kW, PS = 0.7355 kW

W1028103

Model	V3300-E3BG	V3600-T-E3BG	V3800DI-T-E3BG
Number of Cylinders	4		
Type	Vertical, Water-cooled, 4 cycle diesel engine		
Bore × Stroke	98 x 110 mm (3.86 x 4.33 in.)	98 x 120 mm (3.86 x 4.72 in.)	100 x 120 mm (3.94 x 4.72 in.)
Total Displacement	3318 cm^3 (202.48 cu.in.)	3620 cm^3 (220.9 cu.in.)	3769 cm^3 (230.0 cu.in.)
STANDBY ISO 3046 SAE J-1349	33.6 kW / 1800 min^{-1} (rpm) 45.0 HP / 1800 min^{-1} (rpm)	43.1 kW / 1800 min^{-1} (rpm) 57.8 HP / 1800 min^{-1} (rpm)	47.8 kW / 1800 min^{-1} (rpm) 64.1 HP / 1800 min^{-1} (rpm) (NET STANDBY SEA J-1995)
NET Continuous ISO 3046 SAE J-1349	30.6 kW / 1800 min^{-1} (rpm) 41.0 HP / 1800 min^{-1} (rpm)	39.2 kW / 1800 min^{-1} (rpm) 52.5 HP / 1800 min^{-1} (rpm)	43.5 kW / 1800 min^{-1} (rpm) 58.3 HP / 1800 min^{-1} (rpm) (NET Continuous SEA J-1995)
Governor Regulation	Less than 5 %		–
Combustion Chamber	Spherical type (E-TVCS)		Reentrant Type, Center Direct Injection Type (E-CDIS)
Fuel Injection Pump	Bosch Type Mini Pump		
Governor	All speed mechanical governor		Mechanical + Electronic governor
Direction of Rotation	Counter-clockwise (viewed from flywheel side)		
Injection Nozzle	Bosch Throttle Type		Bosch P Type
Injection Timing	0.16 rad (9.0 °) before T.D.C.	0.070 rad (4.0 °) before T.D.C.	0.096 rad (5.5 °) before T.D.C.
Firing Order	1-3-4-2		
Injection Pressure	13.73 MPa (140.0 kgf/cm^2, 1991 psi)		1st stage 18.63 MPa (190.0 kgf/cm^2, 2702 psi), 2nd stage 23.54 MPa (240.0 kgf/cm^2, 3414 psi),
Compression Ratio	22.6	21.8	19.0
Lubricating System	Forced lubrication by trochoid pump		
Oil Pressure Indication	Electrical type switch		
Lubricating Filter	Full flow paper filter (Cartridge type)		
Cooling System	Pressurized radiator, forced circulation with water pump		
Starting System	Electric Starting with Starter		
Starting Motor	12 V, 3.0 kW		
Starting Support Device	By glow plug in combustion chamber		Intake Air Heater in Intake Manifold
EGR	None	Internal EGR (2 stage Exhaust Cam)	External EGR (EGR Cooler + Mechanical EGR Valve + Reed Valve)
Battery	12 V, 136 AH, equivalent		
Charging Alternator	12 V, 540 W		
Fuel	Diesel Fuel No. 2-D S500 or S15, see page G-7.		
Lubricating Oil	Class CF lubricating oil as per API classification is recommended. For details on recommended lubricating oils, see page G-7.		
Lubricating Oil Capacity	13.2 L (3.49 U.S.gals)		
Weight (Dry)	281 kg (619 lbs)	284 kg (626 lbs)	280 kg (617 lbs)

* The specification described above is of the standard engine of each model.
* Conversion Formula : HP = 0.746 kW, PS = 0.7355 kW

W10455750

PERFORMANCE CURVES

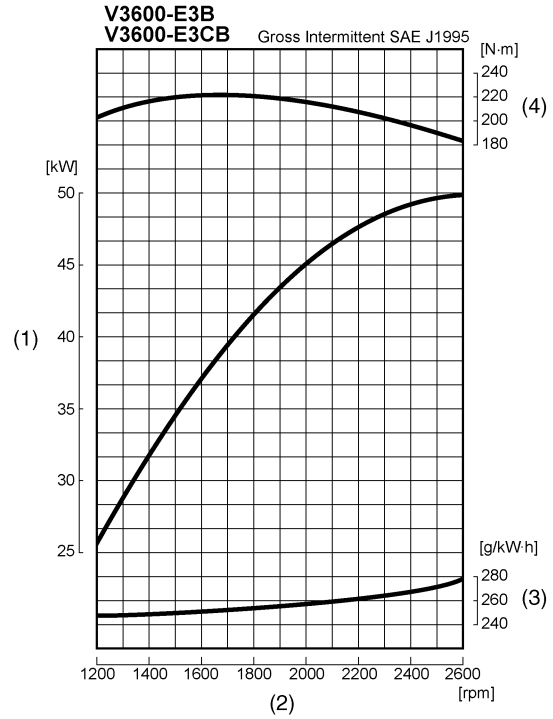

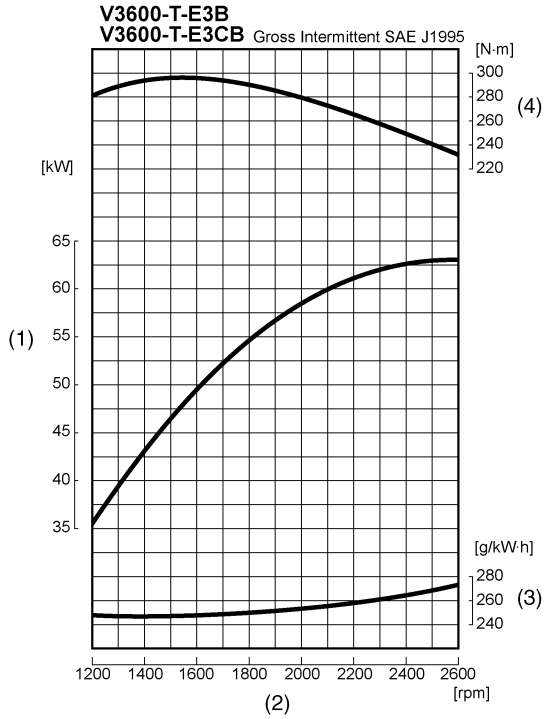

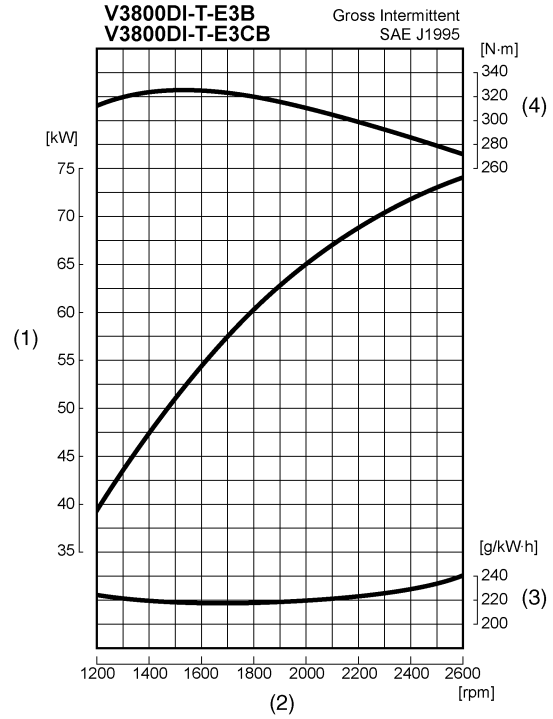

3EEABAJEP001B

(1) Brake Horse Power (2) Engine Speed (3) B.S.F.C. (4) Torque

DIMENSIONS

Unit : mm (in.)

V3600-E3B
V3300-E3BG

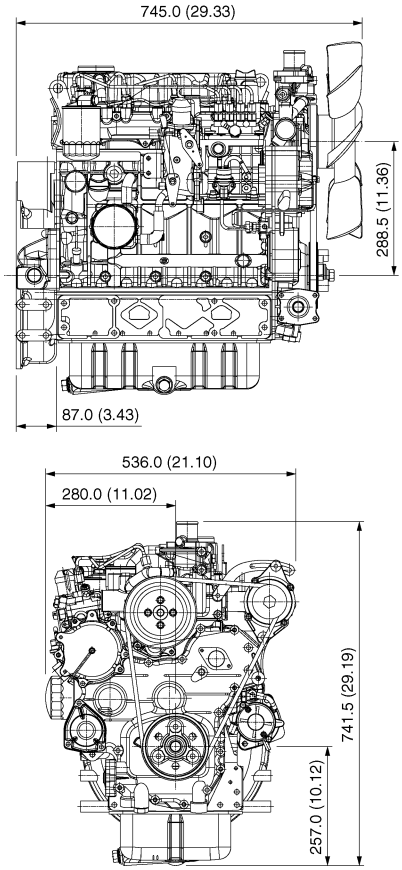

V3600-T-E3B
V3600-T-E3BG

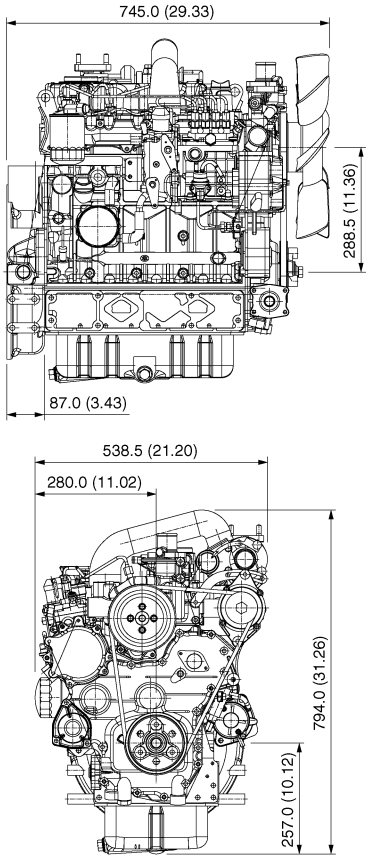

V3800DI-T-E3B
V3800DI-T-E3BG

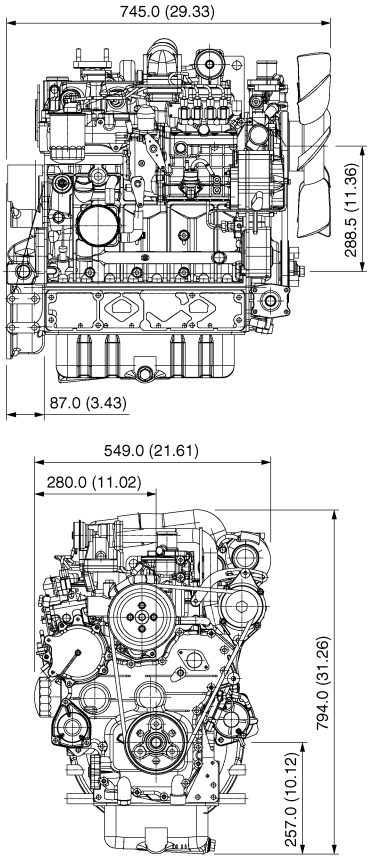

3EEABAJFP001B

Unit : mm (in.)

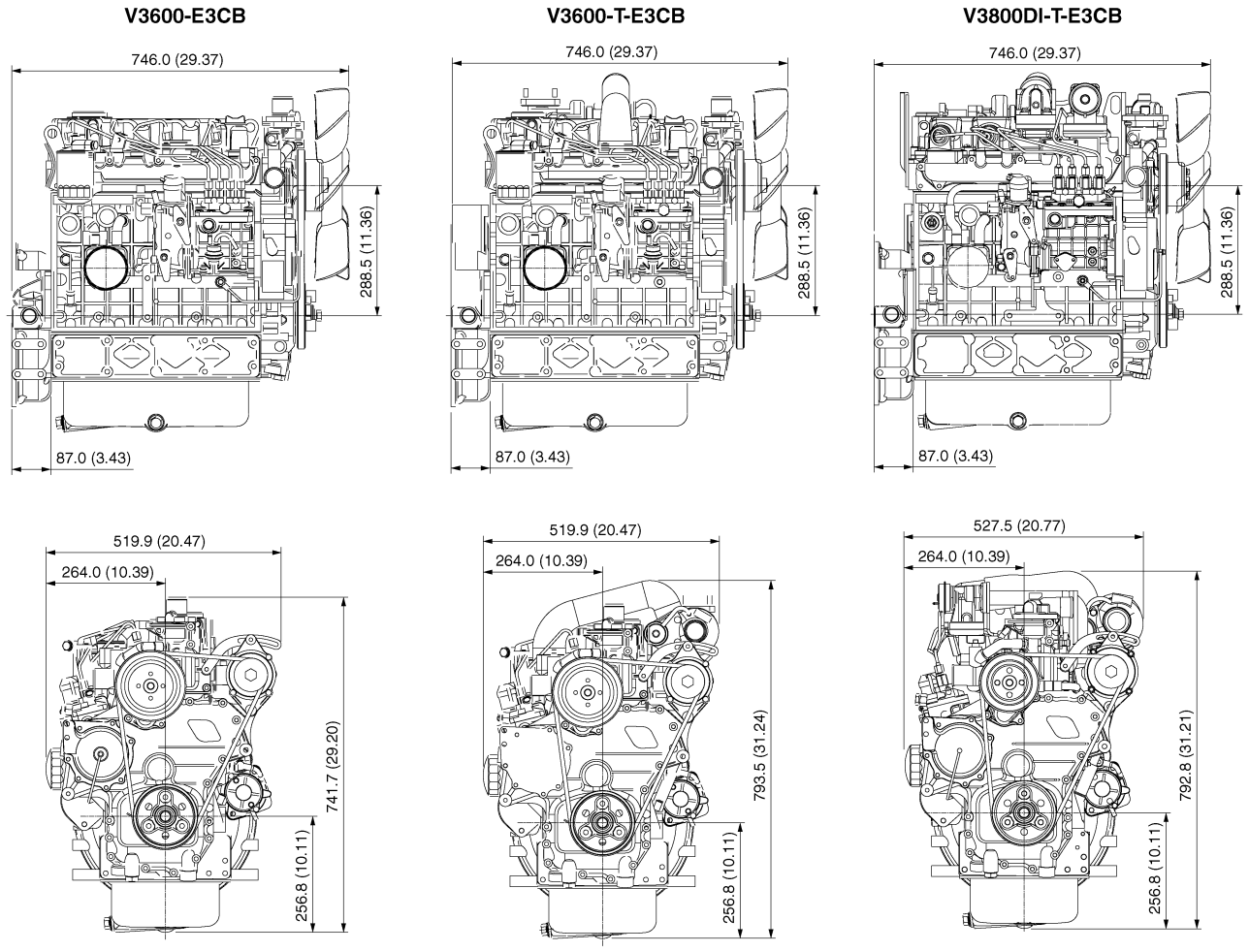

3EEABAJFP002B

GENERAL

CONTENTS

1. ENGINE IDENTIFICATION G-1
   [1] MODEL NAME AND ENGINE SERIAL NUMBER G-1
   [2] E3B ENGINE G-3
   [3] CYLINDER NUMBER G-3
2. GENERAL PRECAUTIONS G-4
3. MAINTENANCE CHECK LIST G-5
4. CHECK AND MAINTENANCE G-8
   [1] DAILY CHECK POINTS G-8
   [2] CHECK POINTS OF INITIAL 50 HOURS G-10
   [3] CHECK POINT OF EVERY 50 HOURS G-11
   [4] CHECK POINTS OF EVERY 250 HOURS G-12
   [5] CHECK POINTS OF EVERY 500 HOURS G-14
   [6] CHECK POINT OF EVERY 1000 HOURS G-18
   [7] CHECK POINTS OF EVERY 1 OR 2 MONTHS G-19
   [8] CHECK POINTS OF EVERY 1500 HOURS G-21
   [9] CHECK POINTS OF EVERY 3000 HOURS G-23
   [10]CHECK POINTS OF EVERY 1 YEAR G-28
   [11]CHECK POINTS OF EVERY 2 YEARS G-29
5. SPECIAL TOOLS G-32

1. ENGINE IDENTIFICATION

[1] MODEL NAME AND ENGINE SERIAL NUMBER

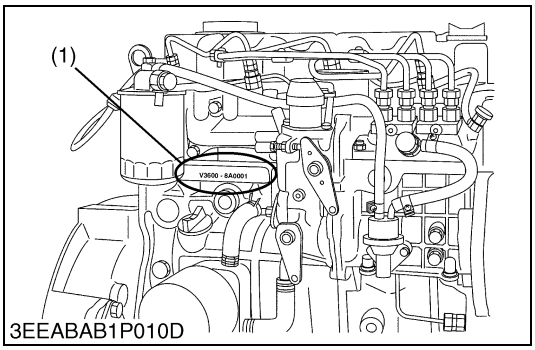

When contacting the manufacture, always specify your engine model name and serial number.

The engine model and its serial number need to be identified before the engine can be serviced or parts replaced.

■ **Engine Serial Number**

The engine serial number is an identified number for the engine. It is marked after the engine model number.

It indicates month and year of manufacture as follows.

- **Year of manufacture**

Alphabet or Number	Year	Alphabet or Number	Year
1	2001	F	2015
2	2002	G	2016
3	2003	H	2017
4	2004	J	2018
5	2005	K	2019
6	2006	L	2020
7	2007	M	2021
8	2008	N	2022
9	2009	P	2023
A	2010	R	2024
B	2011	S	2025
C	2012	T	2026
D	2013	V	2027
E	2014		

(1) Engine Model Name and Serial Number

W1010477

- **Month of manufacture**

Month	Engine Lot Number	
January	A0001 ~ A9999	B0001 ~ BZ999
February	C0001 ~ C9999	D0001 ~ DZ999
March	E0001 ~ E9999	F0001 ~ FZ999
April	G0001 ~ G9999	H0001 ~ HZ999
May	J0001 ~ J9999	K0001 ~ KZ999
June	L0001 ~ L9999	M0001 ~ MZ999
July	N0001 ~ N9999	P0001 ~ PZ999
August	Q0001 ~ Q9999	R0001 ~ RZ999
September	S0001 ~ S9999	T0001 ~ TZ999
October	U0001 ~ U9999	V0001 ~ VZ999
November	W0001 ~ W9999	X0001 ~ XZ999
December	Y0001 ~ Y9999	Z0001 ~ ZZ999

* Alphabetical letters "**I**" and "**O**" are not used.

e.g. V3600 - 8 B A001
(a) (b)(c) (d)

(a) Engine Model Name : **V3600**
(b) Year : **8** indicates **2008**
(c) Month : **A** or **B** indicates **January**
(d) Lot number : (**0001 ~ 9999** or **A001 ~ Z999**)

W1011076

[2] E3B ENGINE

[Example : Engine Model Name V3600-**E3B**-XXXX]

The emission controls previously implemented in various countries to prevent air pollution will be stepped up as Non-Road Emission Standards continue to change. The timing or applicable date of the specific Non-Road Emission regulations depends on the engine output classification.

Over the past several years, Kubota has been supplying diesel engines that comply with regulations in the respective countries affected by Non-Road Emission regulations. For Kubota Engines, E3B will be the designation that identifies engine models affected by the next emission phase (See the table below).

When servicing or repairing ###-E3B series engines, use only replacement parts for that specific E3B engine, designated by the appropriate E3B Kubota Parts List and perform all maintenance services listed in the appropriate Kubota Operator's Manual or in the appropriate E3B Kubota Workshop Manual. Use of incorrect replacement parts or replacement parts from other emission level engines (for example: E2B engines), may result in emission levels out of compliance with the original E3B design and EPA or other applicable regulations.Please refer to the emission label located on the engine head cover to identify Output classification and Emission Control Information. E3B engines are identified with "ET" at the end of the Model designation, on the US EPA label. Please note : E3B is not marked on the engine.

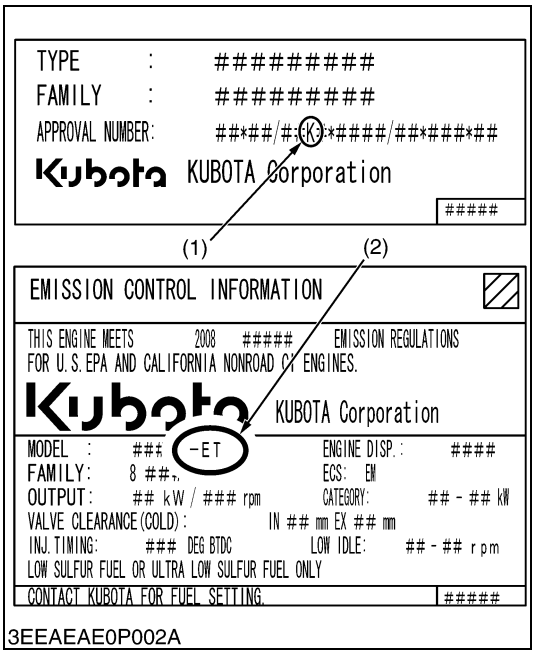

3EEAEAE0P002A

Category (1)	Engine output classification	EU regulation
K	From 19 to less than 37 kW	STAGE IIIA
J	From 37 to less than 75 kW	STAGE IIIA
I	From 75 to less than 130 kW	STAGE IIIA

Category (2)	Engine output classification	EPA regulation
ET	Less than 19kW	Tier 4
	From 19 to less than 56 kW	Interim Tier 4
	From 56 to less than 75 kW	Tier 3
	From 75 to less than 130 kW	Tier 3

(1) EU regulation engine output classification category
(2) “E3B” engines are identified with “ET” at the end of the Model designation, on the US EPA label.
“E3B” designates Tier 3 and some Interim Tier 4 / Tier 4 models, depending on engine output classification.

W1031971

[3] CYLINDER NUMBER

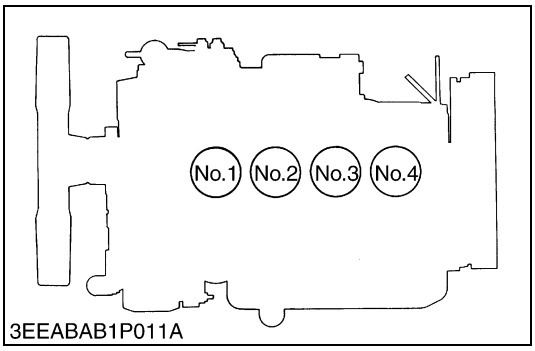

3EEABAB1P011A

The cylinder numbers of kubota diesel engine are designated as shown in the figure.

The sequence of cylinder numbers is given as No.1, No.2, No.3 and No.4 starting from the gear case side.

W1011077

2. GENERAL PRECAUTIONS

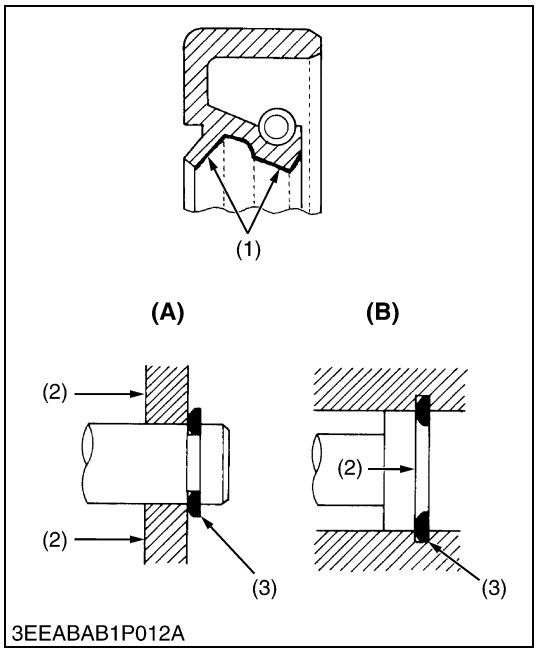

- During disassembly, carefully arrange removed parts in a clean area to prevent confusion later. Screws, bolts and nuts should be replaced in their original position to prevent reassembly errors.
- When special tools are required, use KUBOTA genuine special tools. Special tools which are not frequently used should be made according to the drawings provided.
- Before disassembling or servicing live wires, make sure to always disconnect the grounding cable from the battery first.
- Remove oil and dirt from parts before measuring.
- Use only KUBOTA genuine parts for parts replacement to maintain engine performance and to ensure safety.
- Gaskets and O-rings must be replaced during reassembly. Apply grease to new O-rings or oil seals before assembling.
- When reassembling external or internal snap rings, position them so that the sharp edge faces against the direction from which force is applied.
- Be sure to perform run-in the serviced or reassembled engine. Do not attempt to give heavy load at once, or serious damage may result to the engine.

(1) Grease
(2) Force
(3) Place the Sharp Edge against the Direction of Force

(A) External Snap Ring
(B) Internal Snap Ring

W1011734

3. MAINTENANCE CHECK LIST

To maintain long-lasting and safe engine performance, make it a rule to carry out regular inspections by following the table below.

[V3600-E3B, V3600-T-E3B, V3600-E3CB, V3600-T-E3CB, V3300-E3BG, V3600-T-E3BG]

Item	Service Interval									
	Initial 50 hrs	Every 50 hrs	Every 250 hrs	Every 500 hrs	Every 1000 hrs	Every 1 or 2 months	Every 1500 hrs	Every 3000 hrs	Every 1 year	Every 2 years
Changing engine oil	☆		☆						☆	
Replacing oil filter cartridge	☆			☆						
*Checking fuel hoses and clamps		☆								
*Cleaning air filter element (Replace the element after 6 times cleanings)			☆							
*Cleaning fuel filter			☆							
Checking battery electrolyte level			☆							
Checking radiator hoses and clamps			☆							
*Checking intake air line			☆							
Checking fan belt tension and damage	☆		☆							
*Replacing fuel filter cartridge				☆						
Replacing fan belt				☆						☆
Cleaning radiator interior				☆						
Checking valve clearance					☆					
Recharging battery						☆				
*Checking injection nozzle condition							☆			
*Checking turbocharger								☆		
Checking fuel injection pump								☆		
*Checking injection timing (spill timing)								☆		
*Replacing air filter element									☆	
Changing radiator coolant (L.L.C.)										☆
Replacing radiator hoses and clamps										☆
*Replacing fuel hoses and clamps										☆
*Replacing intake air line										☆
Replacing battery										☆

* The items listed above (* marked) are registered as emission related critical parts by KUBOTA in the U.S.EPA nonroad emission regulation.
As the engine owner, you are responsible for the performance of the required maintenance on the engine according to the above instruction.

W1029462

[V3800DI-T-E3B, V3800DI-T-E3CB, V3800DI-T-E3BG]

Item	Service Interval									
	Initial 50 hrs	Every 50 hrs	Every 250 hrs	Every 500 hrs	Every 1000 hrs	Every 1 or 2 months	Every 1500 hrs	Every 3000 hrs	Every 1 year	Every 2 years
Changing engine oil	☆			☆					☆	
Replacing oil filter cartridge	☆			☆						
*Checking fuel hoses and clamps		☆								
*Cleaning air filter element (Replace the element after 6 times cleanings)			☆							
*Cleaning fuel filter			☆							
Checking battery electrolyte level			☆							
Checking radiator hoses and clamps			☆							
*Checking intake air line			☆							
Checking fan belt tension and damage	☆		☆							
*Replacing fuel filter cartridge				☆						
Replacing fan belt				☆						☆
Cleaning radiator interior				☆						
Checking valve clearance					☆					
Recharging battery						☆				
*Checking injection nozzle condition							☆			
*Checking turbocharger								☆		
Checking fuel injection pump								☆		
*Checking injection timing (spill timing)								☆		
*Replacing air filter element									☆	
Changing radiator coolant (L.L.C.)										☆
Replacing radiator hoses and clamps										☆
*Replacing fuel hoses and clamps										☆
*Replacing intake air line										☆
Replacing battery										☆

* The items listed above (* marked) are registered as emission related critical parts by KUBOTA in the U.S.EPA nonroad emission regulation.
As the engine owner, you are responsible for the performance of the required maintenance on the engine according to the above instruction.

W1026550

■ **NOTE**

Engine Oil :

- **Refer to the following table for the suitable American Petroleum Institute (API) classification of engine oil according to the engine type (with internal EGR, external EGR or non-EGR) and the Fuel Type Used : (Low Sulfur, Ultra Low Sulfur or High Sulfur Fuels).**

Fuel Type	Engine oil classification (API classification)	
	Engines with non-EGR Engines with internal EGR	Engines with external EGR
High Sulfur Fuel [0.05 % (500 ppm) ≤ Sulfur Content < 0.50 % (5000 ppm)]	**CF** (If the "CF-4, CG-4, CH-4, or CI-4" engine oil is used with a high-sulfur fuel, change the engine oil at shorter intervals. (approximately half))	–
Low Sulfur Fuel [Sulfur Content < 0.05 % (500 ppm)] or Ultra Low Sulfur Fuel [Sulfur Content < 0.0015 % (15 ppm)]	**CF, CF-4, CG-4, CH-4** or **CI-4**	**CF** or **CI-4** (Class CF-4, CG-4 and CH-4 engine oils cannot be used on EGR type engines.)

EGR : Exhaust Gas Re-circulation

W1024941

- **CJ4 classification oil is intended for use in engines equipped with DPF (Diesel Particulate Filter) and is Not Recommended for use in Kubota E3 specification engines.**
- **Oil used in the engine should have API classification and Proper SAE Engine Oil Viscosity according to the ambient temperatures where the engine is operated.**
- **With strict emission control regulations now in effect, the CF-4 and CG-4 engine oils have been developed for use with low sulfur fuels, for On-Highway vehicle engines. When a Non-Road engine runs on high sulfur fuel, it is advisable to use a "CF or better" classification engine oil with a high Total Base Number (a minimum TBN of 10 is recommended).**

Fuel :

- **Cetane Rating : The minimum recommended Fuel Cetane Rating is 45. A cetane rating greater than 50 is preferred, especially for ambient temperatures below –20 °C (–4 °F) or elevations above 1500 m (5000 ft).**
- **Diesel Fuel Specification Type and Sulfur Content % (ppm) used, must be compliant with all applicable emission regulations for the area in which the engine is operated.**
- **Use of diesel fuel with sulfur content less than 0.10 % (1000 ppm) is strongly recommended.**
- **If high-sulfur fuel (sulfur content 0.50 % (5000 ppm) to 1.0 % (10000 ppm)) is used as a diesel fuel, change the engine oil and oil filter at shorter intervals. (approximately half)**
- **DO NOT USE Fuels that have sulfur content greater than 1.0 % (10000 ppm).**
- **Diesel fuels specified to EN 590 or ASTM D975 are recommended.**
- **No.2-D is a distillate fuel of lower volatility for engines in industrial and heavy mobile service. (SAE J313 JUN87)**
- **Since KUBOTA diesel engines of less than 56 kW (75 hp) utilize EPA Tier 4 and Interim Tier 4 standards, the use of low sulfur fuel or ultra low sulfur fuel is mandatory for these engines, when operated in US EPA regulated areas. Therefore, please use No.2-D S500 or S15 diesel fuel as an alternative to No.2-D, and use No.1-D S500 or S15 diesel fuel as an alternative to No.1-D for ambient temperatures below –10 °C (14 °F).**

1) SAE : Society of Automotive Engineers
2) EN : European Norm
3) ASTM : American Society of Testing and Materials
4) US EPA : United States Environmental Protection Agency
5) No.1-D or No.2-D, S500 : Low Sulfur Diesel (LSD) less than 500 ppm or 0.05 wt.%
No.1-D or No.2-D, S15 : Ultra Low Sulfur Diesel (ULSD) 15 ppm or 0.0015 wt.%

4. CHECK AND MAINTENANCE

[1] DAILY CHECK POINTS

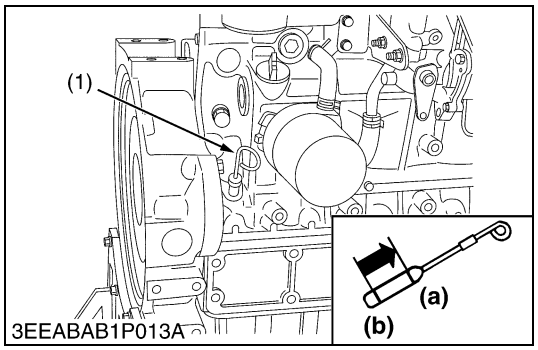

Checking Engine Oil Level

1. Level the engine.
2. To check the oil level, draw out the dipstick (1), wipe it clean, reinsert it, and draw it out again.
   Check to see that the oil level lies between the two notches.
3. If the level is too low, add new oil to the specified level.

■ **IMPORTANT**

- **When using an oil of different maker or viscosity from the previous one, drain old oil. Never mix two different types of oil.**

■ **NOTE**

- **Be sure to inspect the engine, locating it on a horizontal place. If placed on gradients, accurately, oil quantity may not be measured.**
- **Be sure to keep the oil level between upper and lower limits of the dipstick. Too much oil may cause a drop in output or excessive blow-by gas. On the closed breather type engine in which mist is sucked through port, too much oil may caused oil hammer. While too little oil, may seize the engine's rotating and sliding parts.**

(1) Dipstick
(a) Maximum
(b) Minimum

W1035676

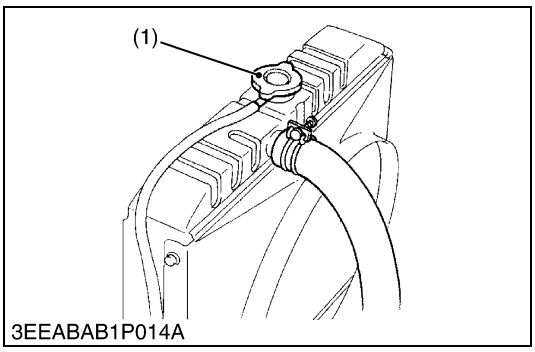

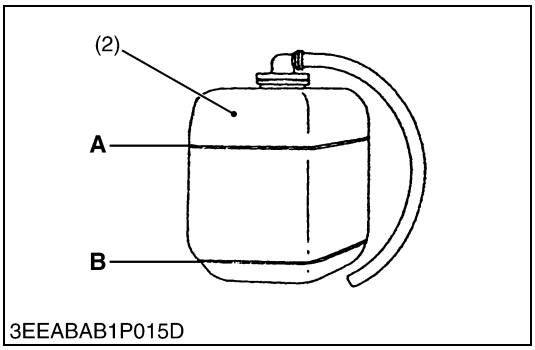

Checking and Replenish Coolant

1. Without recovery tank :
   Remove the radiator cap (1) and check to see that the coolant level is just below the port.
   With recovery tank (2) :
   Check to see that the coolant level lies between **FULL** (**A**) and **LOW** (**B**).
2. If coolant level is too low, check the reason for decreasing coolant.
   (Case 1)
   If coolant is decreasing by evaporation, replenish only fresh, soft water.
   (Case 2)
   If coolant is decreasing by leak, replenish coolant of the same manufacture and type in the specified mixture ratio (fresh, soft water and L.L.C.). If the coolant brand cannot be identified, drain out all of the remaining coolant and refill with a totally new brand of coolant mix.

CAUTION

- **Do not remove the radiator cap until coolant temperature is below its boiling point. Then loosen the cap slightly to relieve any excess pressure before removing the cap completely.**

IMPORTANT

- **During filling the coolant, air must be vented from the engine coolant passages. The air vents by jiggling the radiator upper and lower hoses.**
- **Be sure to close the radiator cap securely. If the cap is loose or improperly closed, coolant may leak out and the engine could overheat.**
- **Do not use an antifreeze and scale inhibitor at the same time.**
- **Never mix the different type or brand of L.L.C..**

(1) Radiator Cap
(2) Recovery Tank

A: FULL
B: LOW

W1035779

[2] CHECK POINTS OF INITIAL 50 HOURS

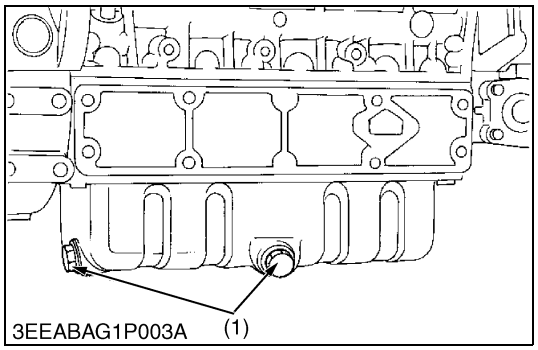

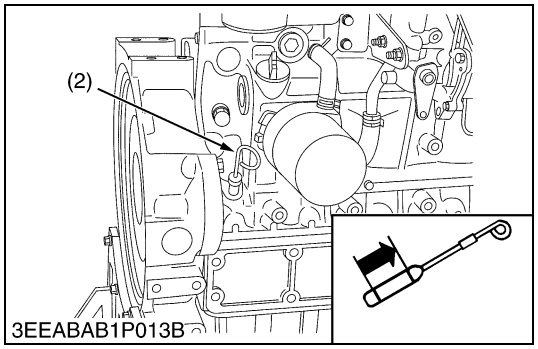

Changing Engine Oil (All model)

CAUTION

- **Be sure to stop engine before changing engine oil.**

1. Start and warm up the engine for approx. 5 minutes.
2. Place an oil pan underneath the engine.
3. To drain the used oil, remove the drain plug (1) at the bottom of the engine and drain the oil completely.
4. Screw the drain plug (1).
5. Fill new oil up to upper line on the dipstick (2).

IMPORTANT

- **When using an oil of different maker or viscosity from the previous one, drain all of the old oil.**
- **Never mix two different types of oil.**
- **Engine oil should have properties of API classification CF (See page G-7).**
- **Use the proper SAE Engine Oil according to ambient temperature.**

Above 25 °C (77 °F)	SAE 30 or SAE 10W-30 SAE 10W-40
0 °C to 25 °C (32 °F to 77 °F)	SAE 20 or SAE 10W-30 SAE 10W-40
Below 0 °C (32 °F)	SAE 10W or SAE 10W-30 SAE 10W-40

Engine oil capacity	13.2 L 3.49 U.S.gals

(1) Drain Plug (2) Dipstick

W1016604

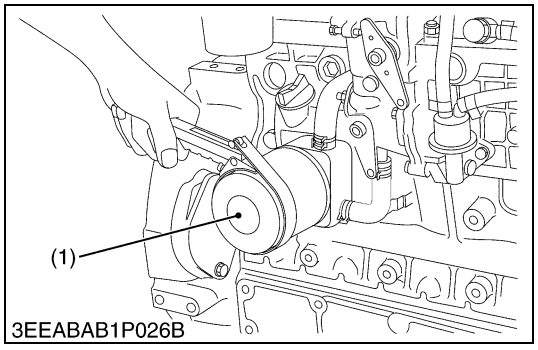

Replacing Oil Filter Cartridge (All model)

CAUTION

- **Be sure to stop the engine before changing filter cartridge.**

1. Remove the oil filter cartridge (1) with the filter wrench.
2. Apply a slight coat of oil onto the new cartridge gasket.
3. To install the new cartridge, screw it in by hand. Over tightening may cause deformation of rubber gasket.
4. After the new cartridge has been replaced, the engine oil normally decrease a little. Thus see that the engine oil does not leak through the seal and be sure to read the oil level on the dipstick. Then, replenish the engine oil up to the specified level.

IMPORTANT

- **To prevent serious damage to the engine, replacement element must be highly efficient. Use only a KUBOTA genuine filter or its equivalent.**

(1) Engine Oil Filter Cartridge

W1017137

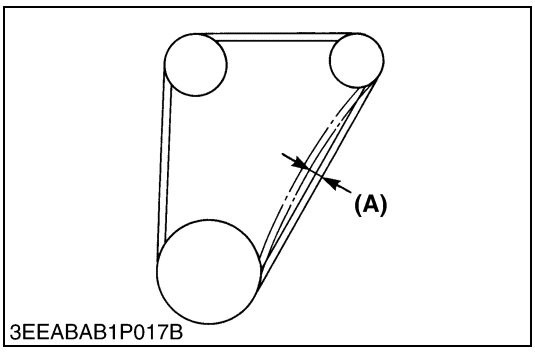

Fan Belt Tension

1. Measure the deflection **(A)**, depressing the belt halfway between the fan drive pulley and alternator pulley at specified force 98 N (10 kgf, 22 lbf).
2. If the measurement is not within the factory specifications, loosen the alternator mounting screws and relocate the alternator to adjust.

Deflection **(A)**	Factory spec.	10 to 12 mm 0.40 to 0.47 in.

(A) Deflection

W1208957

[3] CHECK POINT OF EVERY 50 HOURS

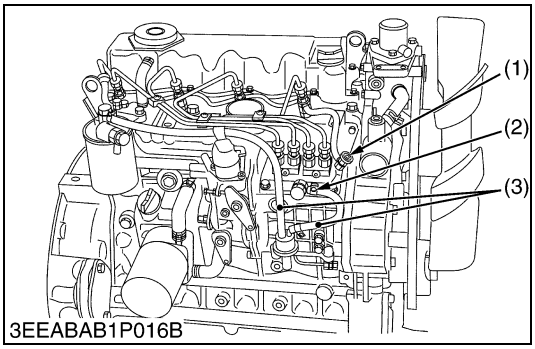

Checking Fuel Hose and Clamp Bands

1. If the clamp (2) is loose, apply oil to the threads and securely retighten it.
2. The fuel hose (3) is made of rubber and ages regardless of the period service.
   Change the fuel pipe together with the clamp every two years.
3. However, if the fuel hose and clamps are found to be damaged or deteriorate earlier than two years, then change or remedy.
4. After the fuel hose and the clamps have been changed, bleed the fuel system.

CAUTION

- **Stop the engine when attempting the check and change prescribed above.**

(When bleeding fuel system)

1. Fill the tank with fuel and open the cock.
2. Loosen the air vent coupling bolt of fuel filter a few turns.
3. When there is no more air bubbles in the fuel coming out of this coupling bolt, tighten the coupling bolt.
4. Open the air vent cock (1) on the top of fuel injection pump.
5. If equipped electrical fuel feed pump, turn the key on **AC** position and pump the fuel up for 10 to 15 seconds.
   If equipped mechanical fuel feed pump, set the stop lever on stop position and crank the engine for 10 to 15 seconds.
6. Close securely the air vent cock (1) after air bleeding.

■ **IMPORTANT**

- **Except when venting the air, be sure to keep closed the air vent coupling bolt of the fuel injection pump. Otherwise, the engine may stall.**

(1) Air Vent Cock
(2) Clamp
(3) Fuel Hose

W1035921

[4] CHECK POINTS OF EVERY 250 HOURS

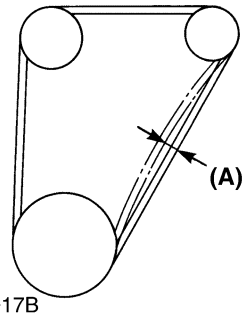

3EEABAB1P017B

Fan Belt Tension

1. Measure the deflection **(A)**, depressing the belt halfway between the fan drive pulley and alternator pulley at specified force 98 N (10 kgf, 22 lbf).
2. If the measurement is not within the factory specifications, loosen the alternator mounting screws and relocate the alternator to adjust.

Deflection **(A)**	Factory spec.	10 to 12 mm 0.40 to 0.47 in.

(A) Deflection

W1014131

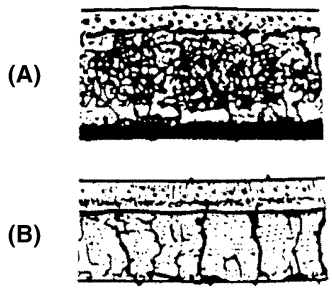

3EEABAB1P019B

Fan Belt Damage and Wear

1. Check the fan belt for damage.
2. If the fan belt is damaged, replace it.
3. Check if the fan belt is worn and sunk in the pulley groove.
4. If the fan belt is nearly worn out and deeply sunk in the pulley groove, replace it.

(A) Good **(B) Bad**

W1209480

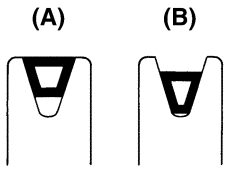

3EEABAB1P018A

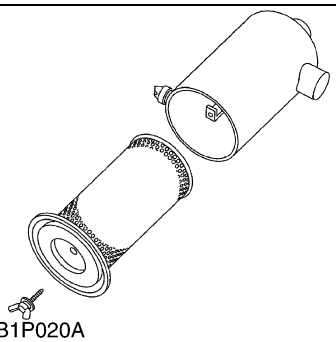
3EEABAB1P020A

Cleaning Air Cleaner Element

1. Remove the air cleaner element.
2. Use clean dry compressed air on the inside of the element.
   Pressure of compressed air must be under 205 kPa (2.1 kgf/cm^2, 30 psi).
   Maintain reasonable distance between the nozzle and the filter.

■ **NOTE**

- **The air cleaner uses a dry element. Never apply oil to it.**
- **Do not run the engine with filter element removed.**
- **Change the element once a year or every 6th cleaning.**

W1045746

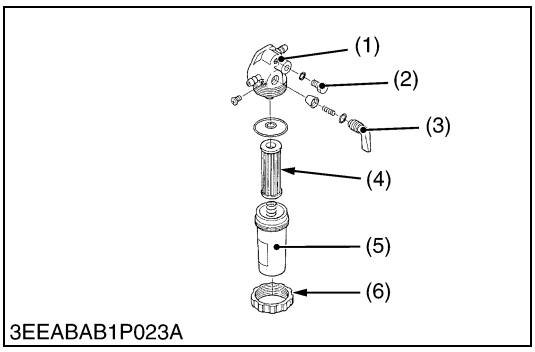

Cleaning Fuel Filter (Element Type only)

1. Close the fuel cock (3).
2. Unscrew the retaining ring (6) and remove the filter cup (5), and rinse the inside with kerosene.
3. Take out the element (4) and dip it in the kerosene to rinse.
4. After cleaning, reassemble the fuel filter, keeping out dust and dirt.
5. Bleed the fuel system.

■ **IMPORTANT**

- **If dust and dirt enter the fuel, the fuel injection pump and injection nozzle will wear quickly. To prevent this, be sure to clean the filter cup (5) periodically.**

(1) Cock Body
(2) Air Vent Plug
(3) Fuel Cock
(4) Filter Element
(5) Filter Cup
(6) Retaining Ring

W1046058

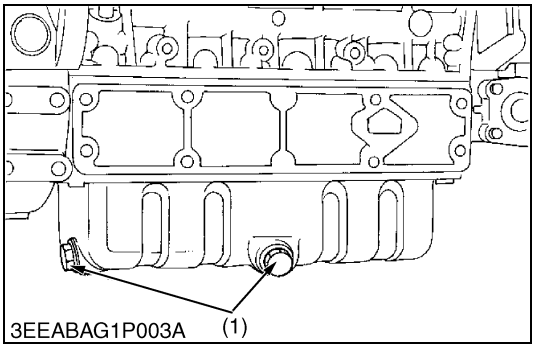

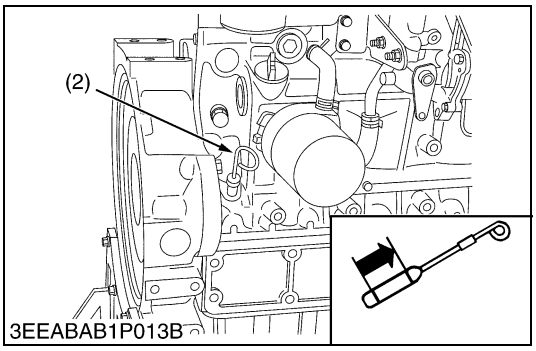

Changing Engine Oil

[V3600-E3B, V3600-T-E3B, V3600-E3CB, V3600-T-E3CB, V3300-E3BG, V3600-T-E3BG]

CAUTION

- **Be sure to stop engine before changing engine oil.**

1. Start and warm up the engine for approx. 5 minutes.
2. Place an oil pan underneath the engine.
3. To drain the used oil, remove the drain plug (1) at the bottom of the engine and drain the oil completely.
4. Screw the drain plug (1).
5. Fill new oil up to upper line on the dipstick (2).

■ **IMPORTANT**

- **When using an oil of different maker or viscosity from the previous one, drain all of the old oil.**
- **Never mix two different types of oil.**
- **Engine oil should have properties of API classification CF (See page G-7).**
- **Use the proper SAE Engine Oil according to ambient temperature.**

Above 25 °C (77 °F)	SAE 30 or SAE 10W-30 SAE 10W-40
0 °C to 25 °C (32 °F to 77 °F)	SAE 20 or SAE 10W-30 SAE 10W-40
Below 0 °C (32 °F)	SAE 10W or SAE 10W-30 SAE 10W-40

Engine oil capacity	13.2 L 3.49 U.S.gals

(1) Drain Plug
(2) Dipstick

W1014590

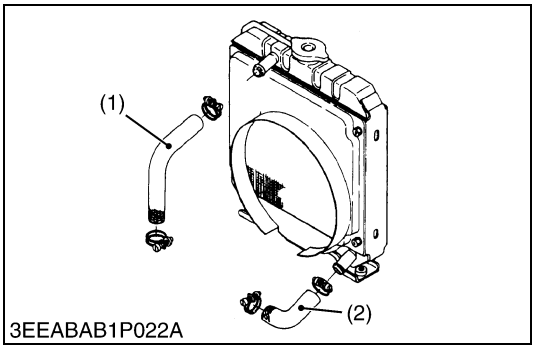

Checking Radiator Hoses and Clamp Bands

1. Check to see if the radiator hoses are properly fixed every 250 hours of operation or every six months, whichever comes first.
2. If the clamp is loose, apply oil to the threads and retighten it securely.
3. The water hose is made of rubber and tends to age. It must be replaced every two years. Also replace the clamp and tighten it securely.

(1) Upper Hose
(2) Lower Hose

W1029518

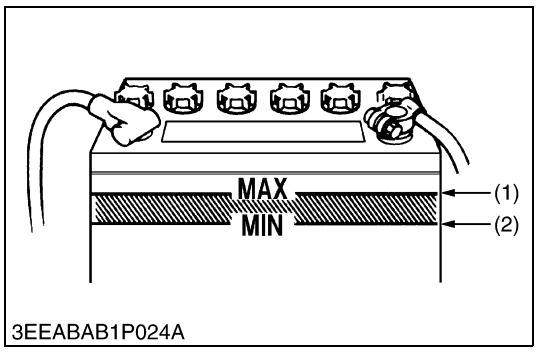

Checking Battery Electrolyte Level

1. Check the battery electrolyte level.
2. If the level is below than lower level line (2), and the distilled water to pour level of each cell.

(1) Upper Level Line (2) Lower Level Line

W1047154

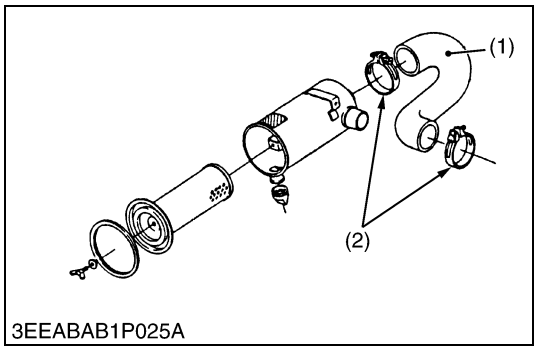

Checking Intake Air Line

1. Check to see if the intake air hose(s) are properly fixed every 250 hours of operation.
2. If the clamp is loose, apply oil to the threads and retighten it securely.
3. The intake air hose(s) is made of rubber and tends to age. It must be change every two years. Also change the clamp and tighten it securely.

■ **IMPORTANT**

- **To prevent serious damage to the engine, keep out any dust inside the intake air line.**

(1) Intake Air Hose (2) Clamp

W1029631

[5] CHECK POINTS OF EVERY 500 HOURS

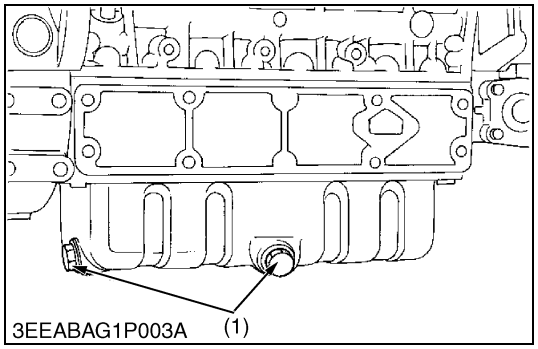

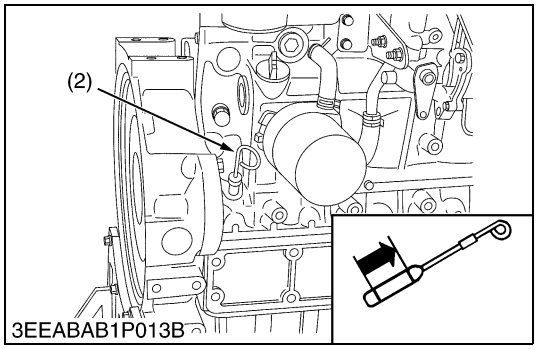

Changing Engine Oil

[V3800DI-T-E3B, V3800DI-T-E3CB, V3800DI-T-E3BG]

CAUTION

- **Be sure to stop engine before changing engine oil.**

1. Start and warm up the engine for approx. 5 minutes.
2. Place an oil pan underneath the engine.
3. To drain the used oil, remove the drain plug (1) at the bottom of the engine and drain the oil completely.
4. Screw the drain plug (1).
5. Fill new oil up to upper line on the dipstick (2).

■ **IMPORTANT**

- **When using an oil of different maker or viscosity from the previous one, drain all of the old oil.**
- **Never mix two different types of oil.**
- **Engine oil should have properties of API classification CF (See page G-7).**
- **Use the proper SAE Engine Oil according to ambient temperature.**

Above 25 °C (77 °F)	SAE 30 or SAE 10W-30 SAE 10W-40
0 °C to 25 °C (32 °F to 77 °F)	SAE 20 or SAE 10W-30 SAE 10W-40
Below 0 °C (32 °F)	SAE 10W or SAE 10W-30 SAE 10W-40

Engine oil capacity	13.2 L 3.49 U.S.gals

(1) Drain Plug (2) Dipstick

W1027890

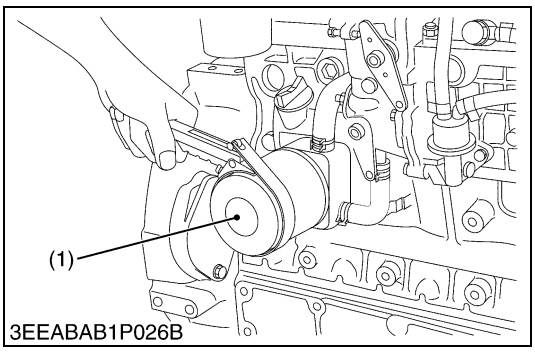

Replacing Oil Filter Cartridge (All model)

CAUTION

- **Be sure to stop the engine before changing filter cartridge.**

1. Remove the oil filter cartridge (1) with the filter wrench.
2. Apply a slight coat of oil onto the new cartridge gasket.
3. To install the new cartridge, screw it in by hand. Over tightening may cause deformation of rubber gasket.
4. After the new cartridge has been replaced, the engine oil normally decrease a little. Thus see that the engine oil does not leak through the seal and be sure to read the oil level on the dipstick. Then, replenish the engine oil up to the specified level.

IMPORTANT

- **To prevent serious damage to the engine, replacement element must be highly efficient. Use only a KUBOTA genuine filter or its equivalent.**

(1) Engine Oil Filter Cartridge

W1015117

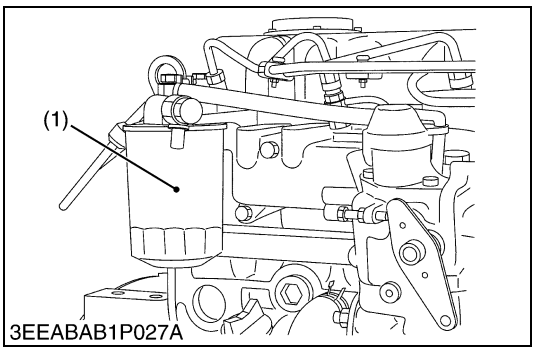

Replacing Fuel Filter Cartridge (Cartridge Type)

Water and dust in fuel are collected in the filter cartridge. So, change the filter cartridge every 500 hours service.

1. Remove the used filter cartridge with filter wrench.
2. Apply a thin film of fuel to the surface of new filter cartridge gasket before screwing on.
3. Then tighten enough by hand.
4. Loosen the air vent plug to let the air out.
5. Start engine and check for fuel leakage.

(1) Fuel Filter Cartridge

W1037062

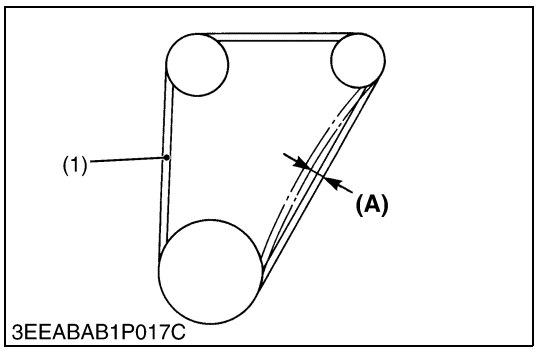

Replacing Fan Belt

1. Remove the alternator.
2. Remove the fan belt (1).
3. Replace new fan belt.
4. Install the alternator.
5. Check the fan belt tension.

Deflection **(A)**	Factory spec.	10 to 12 mm / 98 N 0.40 to 0.47 in. / 98 N (10 kgf, 22 lbf)

(1) Fan Belt **(A) Deflection**

W1052220

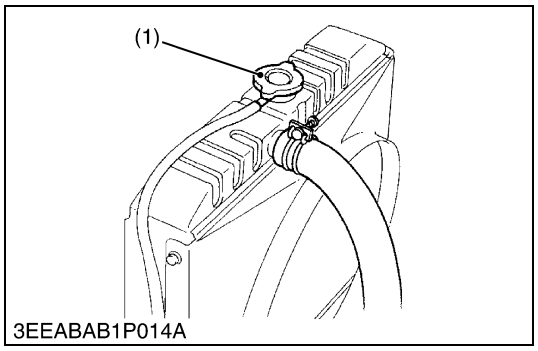

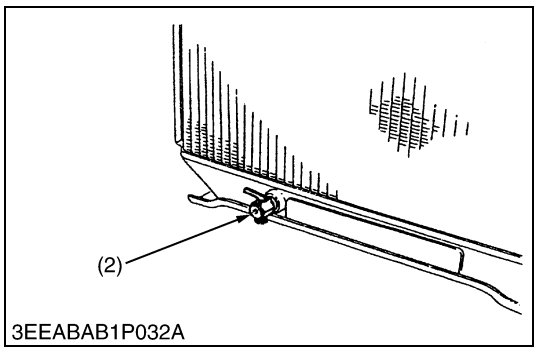

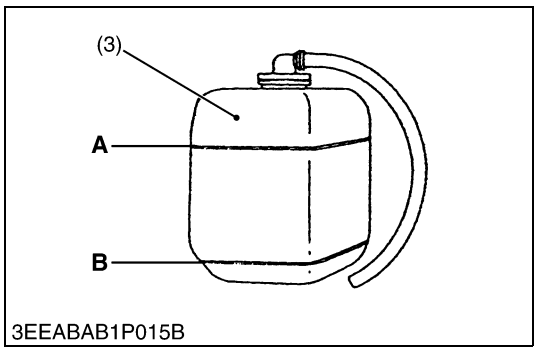

Cleaning Water Jacket and Radiator Interior

CAUTION

- **Do not remove the radiator cap when the engine is hot. Then loosen cap slightly to the stop to relieve any excess pressure before removing cap completely.**

1. Stop the engine and let cool down.
2. To drain the coolant, open the radiator drain plug (2) and remove the radiator cap (1). Then radiator cap (1) must be removed to completely drain the coolant. And open the drain cock of engine body.
3. After all coolant is drained, close the drain plug.
4. Fill with clean water and cooling system cleaner.
5. Follow directions of the cleaner instruction.
6. After flushing, fill with clean water and anti-freeze until the coolant level is just below the port. Install the radiator cap (1) securely.
7. Fill with coolant up to “FULL” (**A**) mark on the recovery tank (3).
8. Start and operate the engine for few minutes.
9. Stop the engine and let cool. Check coolant level of radiator and recovery tank (3) and add coolant if necessary.

■ **IMPORTANT**

- **Do not start engine without coolant.**
- **Use clean, fresh, soft water and anti-freeze to fill the radiator and recovery tank.**
- **When the anti-freeze is mixed with fresh, soft water, the anti-freeze mixing ratio must be less than 50 %.**
- **Securely tighten radiator cap. If the cap is loose or improperly fitted, water may leak out and the engine could overheat.**

(1) Radiator Cap **A : Full**
(2) Drain Plug **B : Low**
(3) Recovery Tank

W1038102

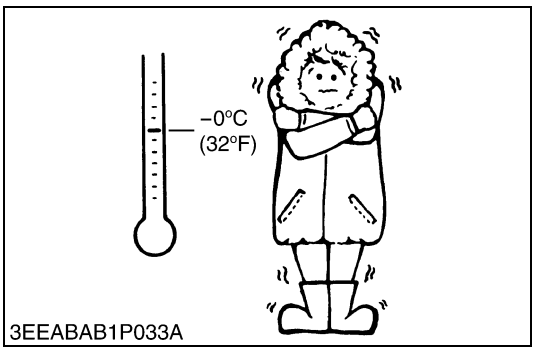

Anti-Freeze

- There are two types of anti-freeze available: use the permanent type (PT) for this engine.
- Before adding anti-freeze for the first time, clean the radiator interior by pouring fresh, soft water and draining it a few times.
- The procedure for mixing water and anti-freeze differs according to the make of the anti-freeze and the ambient temperature. Basically, it should be referred to SAE J1034 standard, more specifically also to SAE J814c.
- Mix the anti-freeze with fresh, soft water, and then fill into the radiator.

■ **IMPORTANT**

- **When the anti-freeze is mixed with fresh, soft water, the anti-freeze mixing ratio must be less than 50 %.**

Vol % anti-freeze	Freezing point		Boiling point*	
	°C	°F	°C	°F
40	–24	–11	106	223
50	–37	–35	108	226

* At 1.013 × 100000 Pa (760 mmHg) pressure (atmospheric). A higher boiling point is obtained by using a radiator pressure cap which permits the development of pressure within the cooling system.

■ **NOTE**

- **The above data represents industrial standards that necessitate a minimum glycol content in the concentrated anti-freeze.**
- **When the coolant level drops due to evaporation, add fresh, soft water only to keep the anti-freeze mixing ratio less than 50 %. In case of leakage, add anti-freeze and fresh, soft water in the specified mixing ratio.**
- **Anti-freeze absorbs moisture. Keep unused anti-freeze in a tightly sealed container.**
- **Do not use radiator cleaning agents when anti-freeze has been added to the coolant.**
  (Anti-freeze contains an anti-corrosive agent, which will react with the radiator cleaning agent forming sludge which will affect the engine parts.)

W1039218

[6] CHECK POINT OF EVERY 1000 HOURS

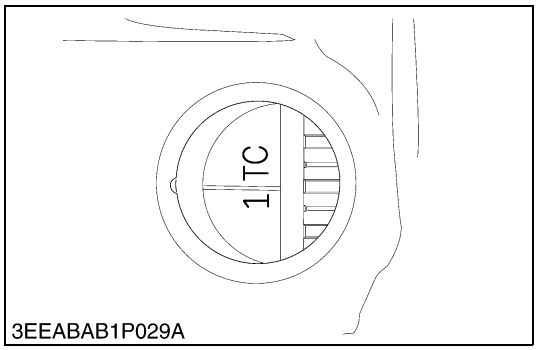

3EEABAB1P029A

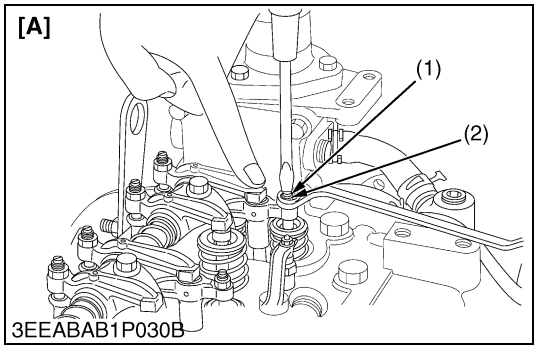

3EEABAB1P030B

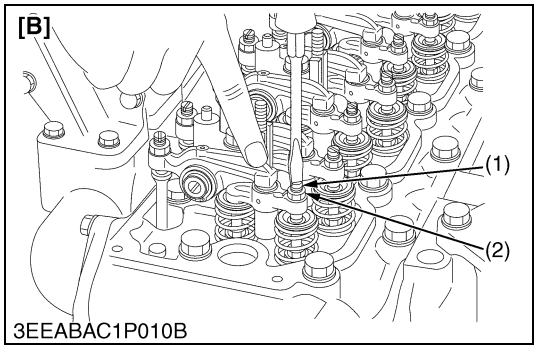

3EEABAC1P010B

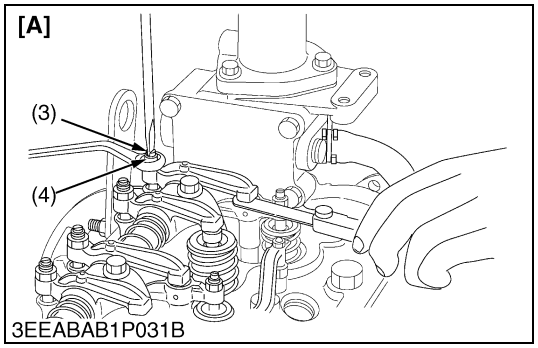

3EEABAB1P031B

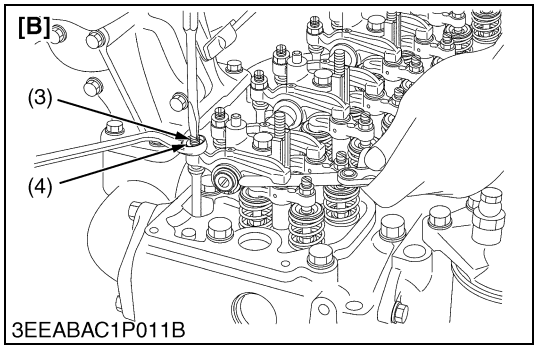

3EEABAC1P011B

Checking Valve Clearance

■ **IMPORTANT**

- **Valve clearance must be checked and adjusted when engine is cold.**

1. Remove the injection pipes.
   (V3800DI-T-E3B, V3800DI-T-E3CB, V3800DI-T-E3BG only)
2. Remove the head cover.
3. Set the No.1 piston at the compression top dead center.
4. Slightly push the rocker arm by your finger.
   (Valve bridge height adjustable type only)
5. Tighten the valve bridge height adjusting screw (1) slowly until you feel the screw touch the top of valve stem.
   (Valve bridge height adjustable type only)
6. Tighten the lock nut (2).
   (Valve bridge height adjustable type only)
7. Adjust the valve clearance with feeler gauge.
8. Tighten the lock nut (4).

Valve clearance	Factory spec.	0.23 to 0.27 mm 0.0091 to 0.010 in.

■ **NOTE**

- **After adjusting, tighten the lock nut (4) securely.**

Valve arrangement / Adjustment cylinder / Location of piston		IN.	EX
When No.1 piston is at compression top dead center	1st	☆	☆
	2nd	☆	
	3rd		☆
	4th		
When No.1 piston is at overlap position	1st		
	2nd		☆
	3rd	☆	
	4th	☆	☆

Tightening torque	Cylinder head cover screw	6.9 to 11.2 N·m 0.70 to 1.15 kgf·m 5.1 to 8.31 lbf·ft

Tightening torque	Injection pipe retaining nut	23 to 36 N·m 2.3 to 3.7 kgf·m 17 to 26 lbf·ft

(1) Valve Bridge Height Adjusting Screw
(2) Lock Nut
(3) Adjusting Screw
(4) Lock Nut

[A] V3600-E3B, V3600-T-E3B, V3600-E3CB, V3600-T-E3CB, V3300-E3BG, V3600-T-E3BG
[B] V3800DI-T-E3B, V3800DI-T-E3CB, V3800DI-T-E3BG

W1037215

[7] CHECK POINTS OF EVERY 1 OR 2 MONTHS

Recharging

CAUTION

- **When the battery is being activated, hydrogen and oxygen gases in the battery are extremely explosive. Keep open sparks and flames away from the battery at all times, especially when charging the battery.**
- **When charging battery, remove battery vent plugs.**
- **When disconnecting the cable from the battery, start with the negative terminal first. When connecting the cable to the battery, start with the positive terminal first.**
- **Never check battery charge by placing a metal object across the posts.**
  Use a voltmeter or hydrometer.

1) Slow Charging

1. Add distilled water if the electrolyte level is low. When charging, the amount of electrolyte should be slightly lower than the specified level to prevent overflow.
2. Connect the battery to the charging unit, following the manufacture's instructions.
3. As the electrolyte generates gas while charging, remove all port caps.
4. The electrolyte temperature must not exceed 40 °C (104 °F) during charging.
   If it exceed 40 °C (104 °F), decrease the charging amperage or stop charging for a while.
5. When charging several batteries in series, charge at the rate of the smallest battery in the line.

2) Quick Charging

1. Determine the proper charging current and charging time with the tester attached to the quick charger.
2. Determine the proper charging current as 1/1 of the battery capacity. If the battery capacity exceeds 50 Ah, consider 50 A as the maximum.

■ Precaution for Operating a Quick Charger

- Operate with a quick charger differs according to the type.
  Consult the instruction manual and use accordingly.

W1052658

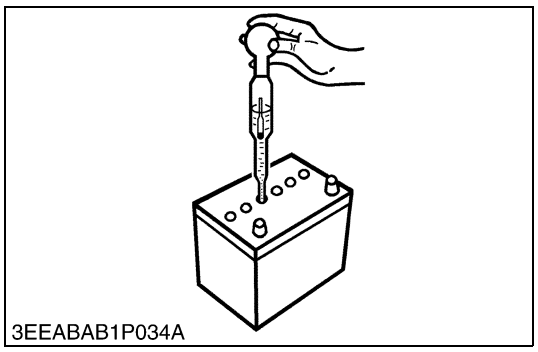
3EEABAB1P034A

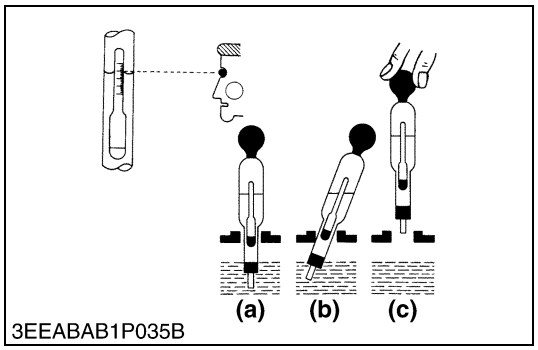

3EEABAB1P035B

Battery Specific Gravity

1. Check the specific gravity of the electrolyte in each cell with a hydrometer.
2. When the electrolyte temperature differs from that at which the hydrometer was calibrated, correct the specific gravity reading following the formula mentioned in **(Reference)**.
3. If the specific gravity is less than 1.215 (after it is corrected for temperature), charge or replace the battery.
4. If the specific gravity differs between any two cells by more than 0.05, replace the battery.

■ **NOTE**

- **Hold the hydrometer tube vertical without removing it from the electrolyte.**
- **Do not suck too much electrolyte into the tube.**
- **Allow the float to move freely and hold the hydrometer at eye level.**
- **The hydrometer reading must be taken at the highest electrolyte level.**

(Reference)

- Specific gravity slightly varies with temperature. To be exact, the specific gravity decreases by 0.0007 with an increase of 1 °C (0.0004 with an increase of 1 °F) in temperature, and increases by 0.0007 with a decreases of 1 °C (0.0004 with a decrease of 1 °F).
  Therefore, using 20 °C (68 °F) as a reference, the specific gravity reading must be corrected by the following formula :
  - Specific gravity at 20 °C = Measured value + 0.0007 × (electrolyte temperature : 20 °C)
  - Specific gravity at 68 °F = Measured value + 0.0004 × (electrolyte temperature : 68 °F)

Specific Gravity	State of Charge
1.260 Sp. Gr.	100 % Charged
1.230 Sp. Gr.	75 % Charged
1.200 Sp. Gr.	50 % Charged
1.170 Sp. Gr.	25 % Charged
1.140 Sp. Gr.	Very Little Useful Capacity
1.110 Sp. Gr.	Discharged

At an electrolyte temperature of 20 °C (68 °F)

(a) Good
(b) Bad
(c) Bad

W1012763

[8] CHECK POINTS OF EVERY 1500 HOURS

CAUTION

- **Check the injection pressure and condition after confirming that there is nobody standing in the direction the fume goes.**
- **If the fume from the nozzle directly contacts the human body, cells may be destroyed and blood poisoning may be caused.**

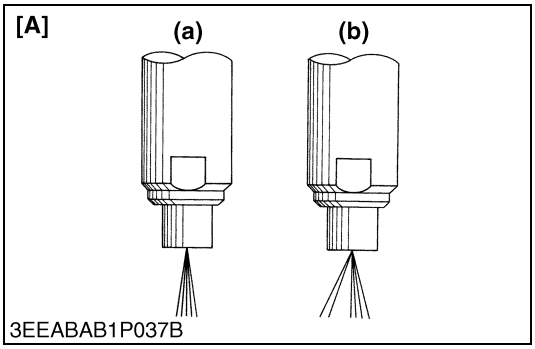

3EEABAB1P037B

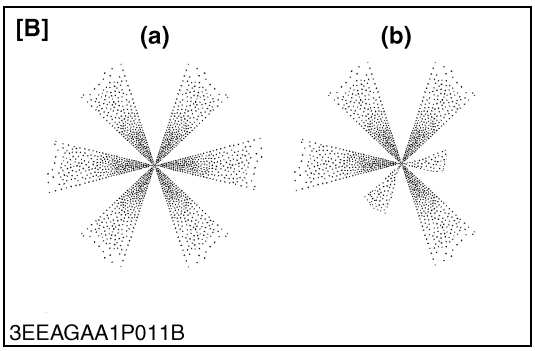

3EEAGAA1P011B

Nozzle Spraying Condition

1. Set the injection nozzle to a nozzle tester, and check the nozzle spraying condition.
2. If the spraying condition is defective,
   replace the nozzle piece. (V3600-E3B, V3600-T-E3B, V3600-E3CB, V3600-T-E3CB, V3300-E3BG, V3600-T-E3BG)
   replace the injection nozzle assembly or repair at Denso service shop. (V3800DI-T-E3B, V3800DI-T-E3CB, V3800DI-T-E3BG)

(a) Good
(b) Bad

[A] V3600-E3B, V3600-T-E3B, V3600-E3CB, V3600-T-E3CB, V3300-E3BG, V3600-T-E3BG
[B] V3800DI-T-E3B, V3800-T-E3CB, V3800DI-T-E3BG

W10411400

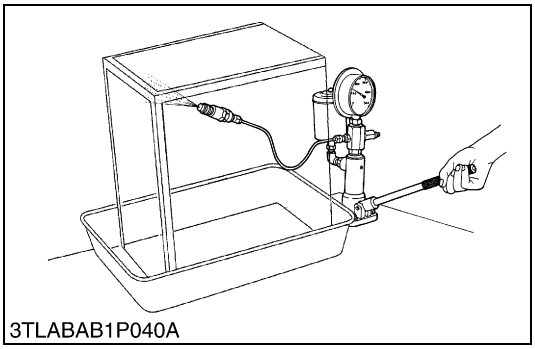
3TLABAB1P040A

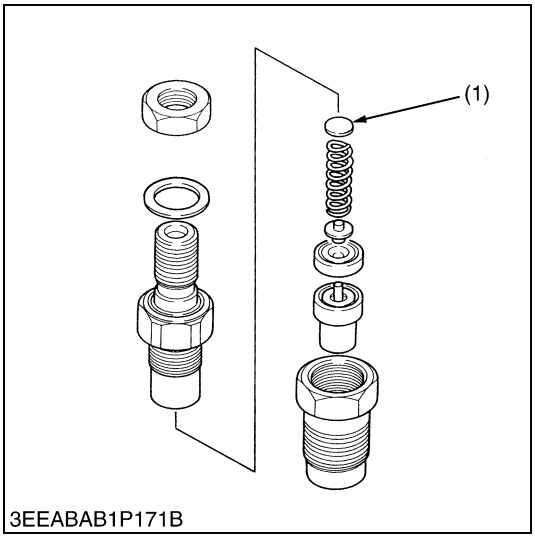

3EEABAB1P171B

Fuel Injection Pressure

[V3600-E3B, V3600-T-E3B, V3600-E3CB, V3600-T-E3CB, V3300-E3BG, V3600-T-E3BG]

1. Set the injection nozzle to a nozzle tester.
2. Slowly move the tester handle to measure the pressure at which fuel begins jetting out from the nozzle.
3. If the measurement is not within the factory specifications, replace the adjusting washer (1) in the nozzle holder to adjust it.

(Reference)

- Pressure variation with 0.025 mm (0.00098 in.) difference of adjusting washer thickness.
  Approx. 590 kPa (6.0 kgf/cm^2, 85 psi)

Fuel injection pressure	Factory spec.	13.73 to 14.70 MPa 140.0 to 150.0 kgf/cm^2 1992 to 2133 psi

(1) Adjusting Washer

W10182100

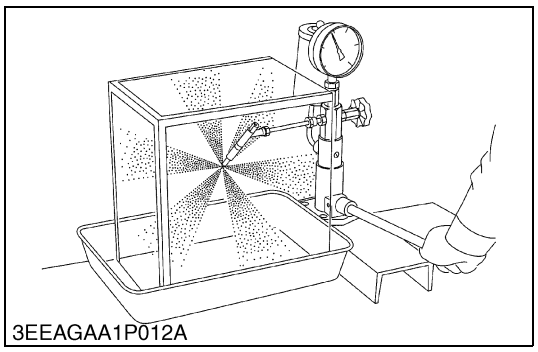
3EEAGAA1P012A

[V3800DI-T-E3B, V3800DI-T-E3CB, V3800DI-T-E3BG]
1. Set the injection nozzle to the nozzle tester.
2. Slowly move the tester handle to measure the pressure at which fuel begins jetting out from the nozzle.
3. If the measurement is not within the factory specifications, replace the injection nozzle assembly or repair at Denso service shop.

■ **NOTE**
- **Injection nozzle gasket must be replaced when the injection nozzle is removed for checking.**

Injection pressure	Factory spec.	1st stage	18.64 to 19.61 MPa 190.0 to 200.0 kgf/cm^2 2703 to 2844 psi

W10412730

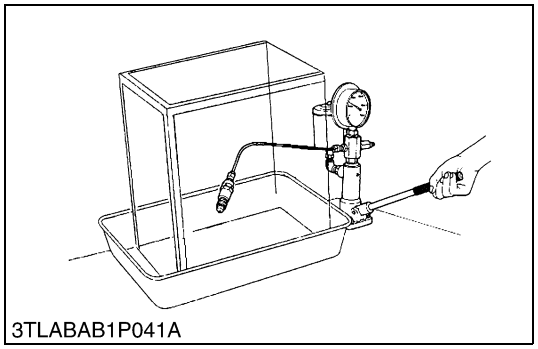
3TLABAB1P041A

Valve Seat Tightness

[V3600-E3B, V3600-T-E3B, V3600-E3CB, V3600-T-E3CB, V3300-E3BG, V3600-T-E3BG]
1. Set the injection nozzle to a nozzle tester.
2. Raise the fuel pressure, and keep at 12.75 MPa (130.0 kgf/cm^2, 1849 psi) for 10 seconds.
3. If any fuel leak is found, replace the nozzle piece.

Valve seat tightness	Factory spec.	No fuel leak at 12.75 MPa 130.0 kgf/cm^2 1849 psi

W10287890

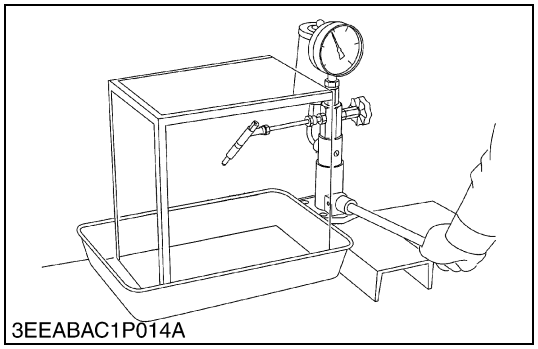
3EEABAC1P014A

[V3800DI-T-E3B, V3800DI-T-E3CB, V3800DI-T-E3BG]
1. Set the injection nozzle to a nozzle tester.
2. Raise the fuel pressure, and keep at 16.67 MPa (170.0 kgf/cm^2, 2418 psi) for 10 seconds.
3. If any fuel leak is found, replace the injection nozzle assembly or repair at Denso service shop.

Valve seat tightness	Factory spec.	No fuel leak at 16.67 MPa 170.0 kgf/cm^2 2418 psi

W10291060

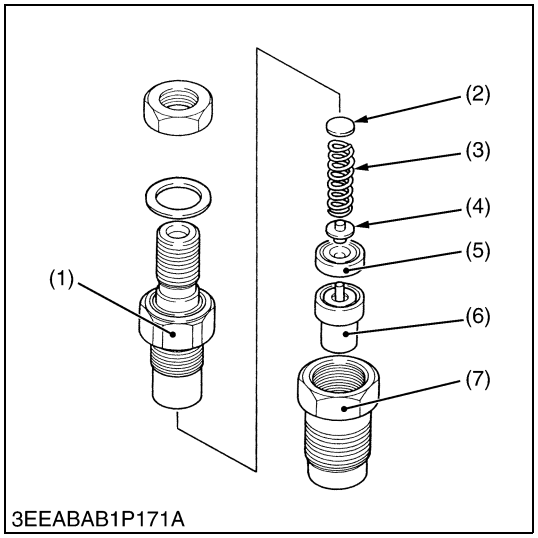

3EEABAB1P171A

Nozzle Holder

[V3600-E3B, V3600-T-E3B, V3600-E3CB, V3600-T-E3CB, V3300-E3BG, V3600-T-E3BG]
1. Secure the nozzle retaining nut (7) with a vise.
2. Remove the nozzle holder (1), and take out parts inside.

(When reassembling)
- Assemble the nozzle in clean fuel oil.
- Install the push rod (4), noting its direction.
- After assembling the nozzle, be sure to adjust the fuel injection pressure.

Tightening torque	Nozzle holder	35 to 39 N·m 3.5 to 4.0 kgf·m 26 to 28 lbf·ft
	Overflow pipe retaining nut	20 to 24 N·m 2.0 to 2.5 kgf·m 15 to 18 lbf·ft
	Nozzle holder assembly	49 to 68 N·m 5.0 to 7.0 kgf·m 37 to 50 lbf·ft

(1) Nozzle Holder
(2) Adjusting Washer
(3) Nozzle Spring
(4) Push Rod
(5) Distance Piece
(6) Nozzle Piece
(7) Nozzle Retaining Nut

W1018491

[9] CHECK POINTS OF EVERY 3000 HOURS

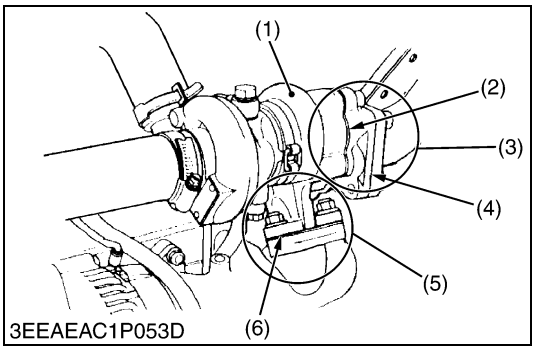

3EEAEAC1P053D

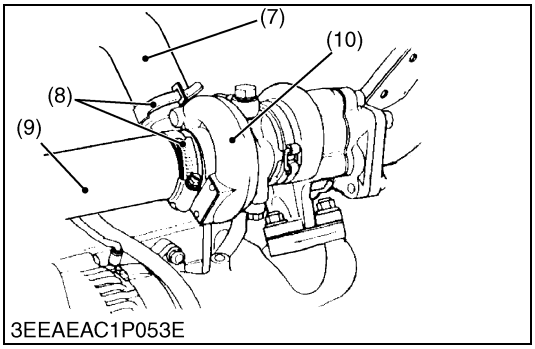

3EEAEAC1P053E

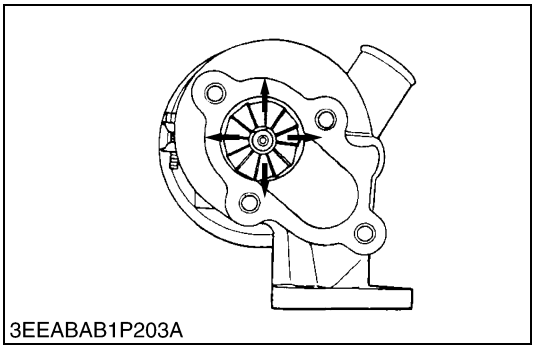
3EEABAB1P203A

Checking Turbocharger

[V3600-T-E3B, V3600-T-E3CB, V3800DI-T-E3B, V3800DI-T-E3CB, V3800DI-T-E3BG]

(Turbine Side)

1. Check the exhaust port (3) and inlet port (5) side of turbine housing (1) to see if there is no exhaust gas leak.
2. If any gas leak is found, retighten the bolts and nuts or replace the gasket (2) / (4) / (6) with new one.

(Compressor Side)

1. Check the inlet hose (9) of the compressor cover (10) to see if there is no air leak.
2. If any air leak is found, change the clamp (8) and / or inlet hoses.
3. Check the intake hose (7) and the clamp to see if there is not loose or crack.
4. If any loose or crack is found, tighten the cramp or change the hose to prevent dust from entry.

(Radial Clearance)

1. If the wheel contact to the housing, replace the turbocharger assembly with new one.

(1) Turbine Housing
(2) Gasket
(3) Exhaust Port
(4) Gasket
(5) Inlet Port
(6) Gasket
(7) Intake Hose
(8) Clamp
(9) Inlet Hose
(10) Compressor Cover

W1022082

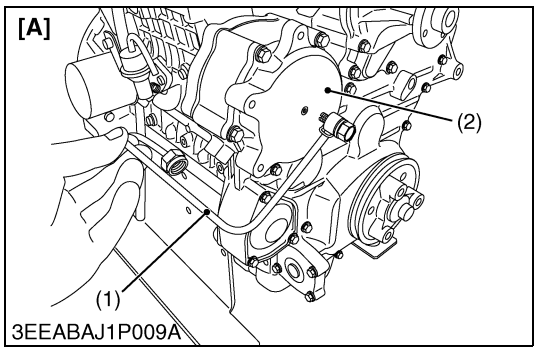

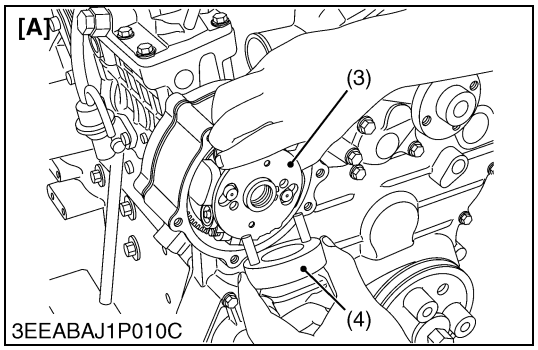

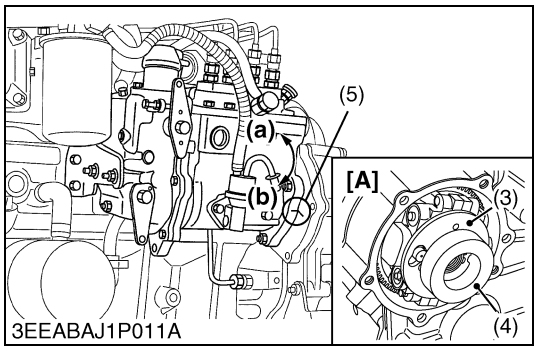

Injection Timing

1. Remove the timer gear lubricating pipe (1). (V3600-E3B, V3600-E3CB, V3800DI-T-E3B, V3800DI-T-E3CB, V3800DI-T-E3BG only)
2. Remove the gear case cover (2). (V3600-E3B, V3600-E3CB, V3800DI-T-E3B, V3800DI-T-E3CB, V3800DI-T-E3BG only)
3. Set the timer 0 ° restoring jig (4) to the timer gear(3). (V3600-E3B, V3600-E3CB, V3800DI-T-E3B, V3800DI-T-E3CB, V3800DI-T-E3BG only)
4. Make sure of matching the injection timing align mark (5) of the injection pump unit and the plate (gear case), as shown in the illustration.
5. Remove the injection pipes.
6. Remove the solenoid.

(1) Timer Gear Lubricating Pipe
(2) Gear Case Cover
(3) Timer Gear
(4) Timer 0 ° Restoring Jig
(5) Injection Timing Align Mark

[A] V3600-E3B, V3800DI-T-E3B, V3600-E3CB, V3800DI-T-E3CB, V3800DI-T-E3BG

(a) Injection Timing Advanced (V3600-E3B, V3600-T-E3B, V3800DI-T-E3B, V3300-E3BG, V3600-T-E3BG, V3800DI-T-E3BG) / Injection Timing Retarded (V3600-E3CB, V3600-T-E3CB, V3800DI-T-E3CB)

(b) Injection Timing Retarded (V3600-E3B, V3600-T-E3B, V3800DI-T-E3B, V3300-E3BG, V3600-T-E3BG, V3800DI-T-E3BG) / Injection timing Advanced (V3600-E3CB, V3600-T-E3CB, V3800DI-T-E3CB)

W1036105

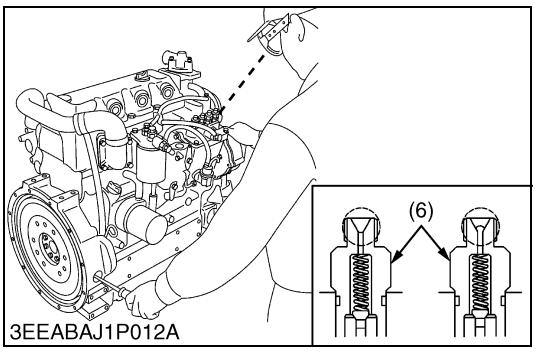

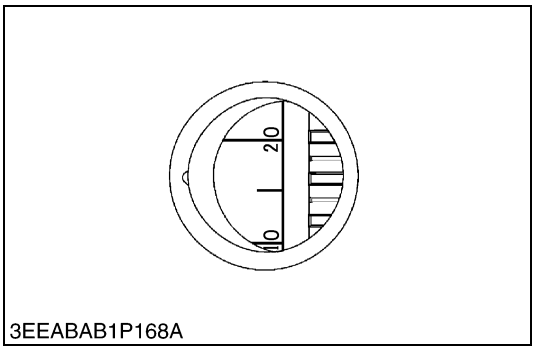

Injection Timing (Continued)

7. Turn the flywheel counterclockwise (viewed from flywheel side) until the fuel fills up to the hole of the delivery valve holder (6) for No.1 cylinder.
8. After the fuel fills up to the hole of the delivery valve holder for No.1 cylinder, turn back (clockwise) the flywheel around 1.6 rad (90 °).
9. Turn the flywheel counterclockwise to set at around 0.35 rad (20 °) before T.D.C..
10. Slowly turn the flywheel counterclockwise and stop turning when the fuel begins to come up, to get the present injection timing.
11. Check to see the degree on flywheel.
    The flywheel has mark “1TC”, “10” and “20” for the crank angle before the top dead center of No.1 piston.
12. If the injection timing is not within the specification, rotate the injection pump unit to adjust the injection timing.

■ **IMPORTANT**

- **When installing the injection pump unit to the engine body, follow the correct procedure.**
  See the “Injection Pump Unit”.

Injection timing	Factory spec.	V3600-E3B, V3600-E3CB	0.127 to 0.152 rad (7.25 ° to 8.75 °) before T.D.C.
		V3600-T-E3B, V3600-T-E3CB, V3600-T-E3BG	0.0568 to 0.0829 rad (3.25 ° to 4.75 °) before T.D.C.
		V3800DI-T-E3B, V3800DI-T-E3CB	0.0917 to 0.117 rad (5.25 ° to 6.75 °) before T.D.C.
		V3300-E3BG	0.144 to 0.170 rad (8.25 ° to 9.75 °) before T.D.C.
		V3800DI-T-E3BG	0.0829 to 0.109 rad (4.75 ° to 6.25 °) before T.D.C.

Tightening torque	Injection pipe retaining nut	23 to 36 N·m 2.3 to 3.7 kgf·m 17 to 26 lbf·ft
	Injection pump unit mounting nut	18 to 20 N·m 1.8 to 2.1 kgf·m 13 to 15 lbf·ft

(6) Delivery Valve Holder

W1049498

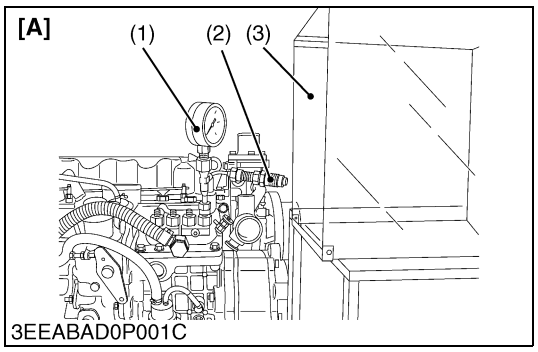

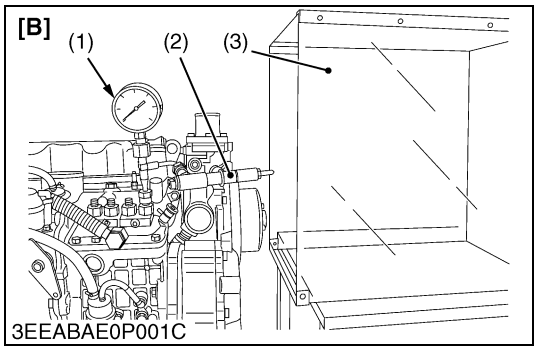

Checking Injection Pump

(Fuel Tightness of Pump Element)

1. Remove the solenoid.
2. Remove the injection pipes.
3. Install the injection pump pressure tester to the injection pump.
4. Install the injection nozzle (2) jetted with the proper injection pressure to the injection pump pressure tester (1). (Refer to the figure.)
5. Set the speed control lever to the maximum speed position.
6. Run the starter to increase the pressure.
7. If the pressure can not reach the allowable limit, replace the pump with new one or repair with a Kubota-authorized pump service shop.

(Fuel Tightness of Delivery Valve)

1. Remove the solenoid.
2. Remove the injection pipes.
3. Set a pressure tester to the fuel injection pump.
4. Install the injection nozzle (2) jetted with the proper injection pressure to the injection pump pressure tester (1).
5. Run the starter to increase the pressure.
6. Stop the starter when the fuel jets from the injection nozzle. After that, turn the flywheel by the hand and raise the pressure to (IDI : approx. 13.73 MPa (140.0 kgf/cm^2, 1991 psi)), (DI : approx. 18.63MPa (190.0 kgf/cm^2, 2702 psi)).
7. Now turn the flywheel back about half a turn (to keep the plunger free). Maintain the flywheel at this position and clock the time taken for the pressure to drop from (IDI : 13.73 to 12.75 MPa (140.0 to 130.0 kgf/cm^2, from 1991 to 1849 psi)), (DI : 18.63 to 17.65 MPa (190.0 to 180.0 kgf/cm^2, 2702 to 2560 psi)).
8. Measure the time needed to decrease the pressure from (IDI : 13.73 to 12.75 MPa (140.0 to 130.0 kgf/cm^2, 1991 to 1849 psi)), (DI : 18.63 to 17.65 MPa (190.0 to 180.0 kgf/cm^2, 2702 to 2560 psi)).
9. If the measurement is less than allowable limit, replace the pump with new one or repair with a Kubota-authorized pump service shop.

(1) Injection Pump Pressure Tester
(2) Injection Nozzle
(3) Protection Cover for Jetted Fuel

[A] V3600-E3B, V3600-T-E3B, V3600-E3CB, V3600-T-E3CB, V3300-E3BG, V3600-T-E3BG
[B] V3800DI-T-E3B, V3800DI-T-E3CB, V3800DI-T-E3BG

W1022357

Checking Injection Pump (Continued)

Fuel tightness of pump element	Allowable limit	V3600-E3B, V3600-T-E3B, V3600-E3CB, V3600-T-E3CB, V3300-E3BG, V3600-T-E3BG	13.73 MPa 140.0 kgf/cm^2 1991 psi
		V3800DI-T-E3B, V3800DI-T-E3CB, V3800DI-T-E3BG	18.63 MPa 190.0 kgf/cm^2 2702 psi
Fuel tightness of delivery valve	Factory spec.	V3600-E3B, V3600-T-E3B, V3600-E3CB, V3600-T-E3CB, V3300-E3BG, V3600-T-E3BG	10 seconds 13.73 → 12.75 MPa 140.0 → 130.0 kgf/cm^2 1991 → 1849 psi
		V3800DI-T-E3B, V3800DI-T-E3CB V3800DI-T-E3BG	10 seconds 18.63 → 17.65 MPa 190.0 → 180.0 kgf/cm^2 2702 → 2560 psi
	Allowable limit	V3600-E3B, V3600-T-E3B, V3600-E3CB, V3600-T-E3CB, V3300-E3BG, V3600-T-E3BG	5 seconds 13.73 → 12.75 MPa 140.0 → 130.0 kgf/cm^2 1991 → 1849 psi
		V3800DI-T-E3B V3800DI-T-E3CB V3800DI-T-E3BG	5 seconds 18.63 → 17.65 MPa 190.0 → 180.0 kgf/cm^2 2702 → 2560 psi

■ **NOTE**

- **Never try to disassemble the injection pump assembly. For repairs, you are strongly requested to contact a Kubota-authorized pump service shop.**

W1068099

[10] CHECK POINTS OF EVERY 1 YEAR

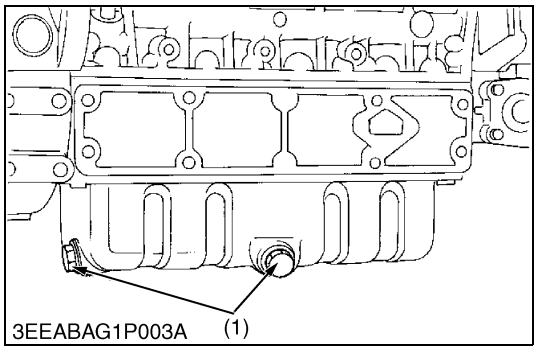

3EEABAG1P003A

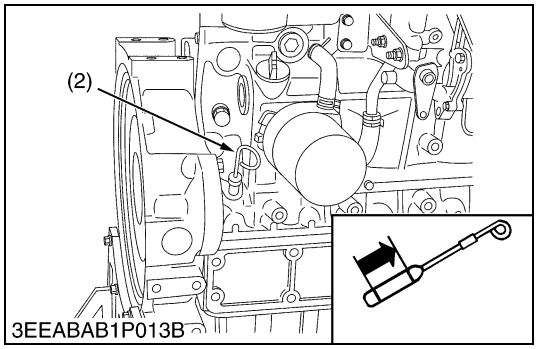

3EEABAB1P013B

Changing Engine Oil (All model)

CAUTION

- **Be sure to stop engine before changing engine oil.**

1. Start and warm up the engine for approx. 5 minutes.
2. Place an oil pan underneath the engine.
3. To drain the used oil, remove the drain plug (1) at the bottom of the engine and drain the oil completely.
4. Screw the drain plug (1).
5. Fill new oil up to upper line on the dipstick (2).

■ **IMPORTANT**

- **When using an oil of different maker or viscosity from the previous one, drain all of the old oil.**
- **Never mix two different types of oil.**
- **Engine oil should have properties of API classification CF (See page G-7).**
- **Use the proper SAE Engine Oil according to ambient temperature.**

Above 25 °C (77 °F)	SAE 30 or SAE 10W-30 SAE 10W-40
0 °C to 25 °C (32 °F to 77 °F)	SAE 20 or SAE 10W-30 SAE 10W-40
Below 0 °C (32 °F)	SAE 10W or SAE 10W-30 SAE 10W-40

Engine oil capacity	13.2 L 3.49 U.S.gals

(1) Drain Plug (2) Dipstick

W1019006

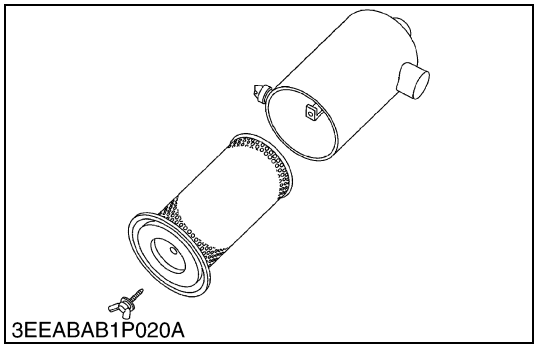
3EEABAB1P020A

Replacing Air Cleaner Element

1. Remove used air cleaner element.
2. Replace new air cleaner element.

■ **NOTE**

- **The air cleaner uses a dry element. Never apply oil to it.**
- **Do not run the engine with filter element removed.**

W1020554

[11] CHECK POINTS OF EVERY 2 YEARS

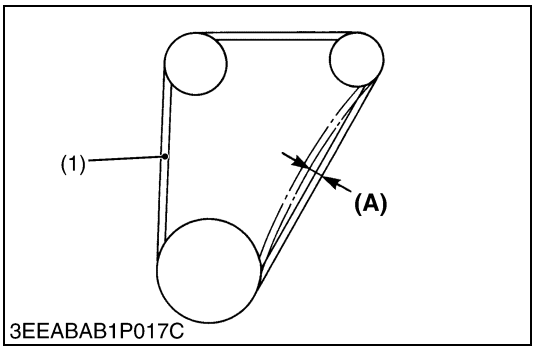

Replacing Fan Belt

1. Remove the alternator.
2. Remove the fan belt (1).
3. Replace new fan belt.
4. Install the alternator.
5. Check the fan belt tension.

Deflection **(A)**	Factory spec.	10 to 12 mm / 98 N 0.40 to 0.47 in. / 98 N (10 kgf, 22 lbf)

(1) Fan Belt **(A) Deflection**

W1019333

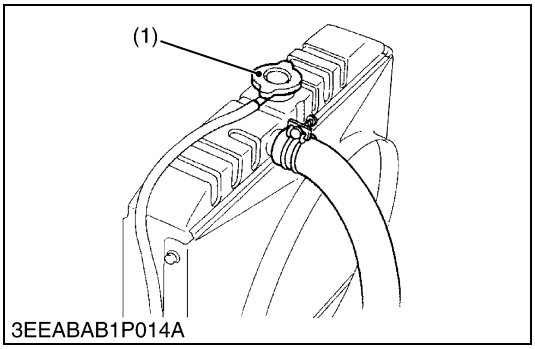

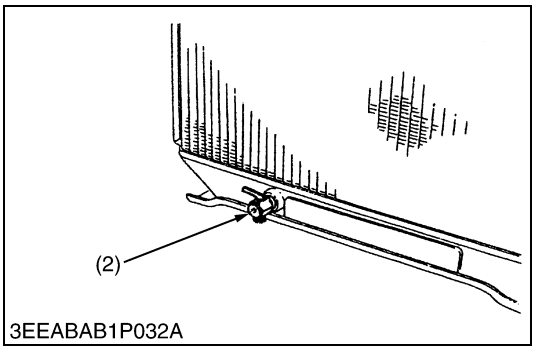

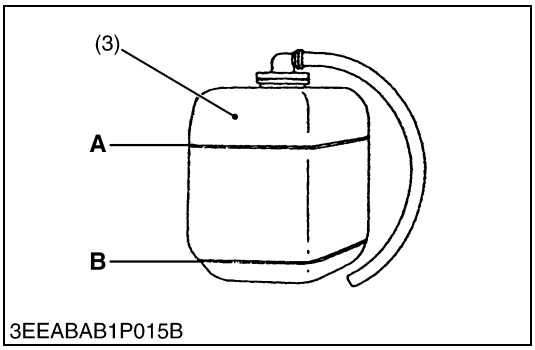

Changing Radiator Coolant (L.L.C.)

CAUTION

- **Do not remove the radiator cap when the engine is hot. Then loosen cap slightly to the stop to relieve any excess pressure before removing cap completely.**

1. Stop the engine and let cool down.
2. To drain the coolant, open the radiator drain plug (2) and remove the radiator cap (1). Then radiator cap (1) must be removed to completely drain the coolant. And open the drain cock of engine body.
3. After all coolant is drained, close the drain plug.
4. Fill with clean water and cooling system cleaner.
5. Follow directions of the cleaner instruction.
6. After flushing, fill with clean water and anti-freeze until the coolant level is just below the port. Install the radiator cap (1) securely.
7. Fill with coolant up to “FULL” (**A**) mark on the recovery tank (3).
8. Start and operate the engine for few minutes.
9. Stop the engine and let cool. Check coolant level of radiator and recovery tank (3) and add coolant if necessary.

■ **IMPORTANT**

- **Do not start engine without coolant.**
- **Use clean, fresh, soft water and anti-freeze to fill the radiator and recovery tank.**
- **When the anti-freeze is mixed with fresh, soft water, the anti-freeze mixing ratio must be less than 50 %.**
- **Securely tighten radiator cap. If the cap is loose or improperly fitted, water may leak out and the engine could overheat.**

(1) Radiator Cap **A : Full**
(2) Drain Plug **B : Low**
(3) Recovery Tank

W1024599

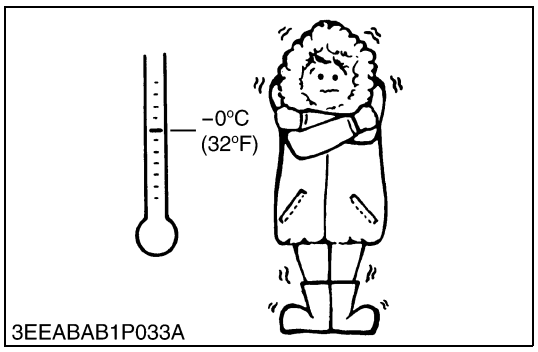

Changing Radiator Coolant (L.L.C.) (Continued)

(Anti-freeze)

- There are two types of anti-freeze available: use the permanent type (PT) for this engine.
- Before adding anti-freeze for the first time, clean the radiator interior by pouring fresh, soft water and draining it a few times.
- The procedure for mixing water and anti-freeze differs according to the make of the anti-freeze and the ambient temperature. Basically, it should be referred to SAE J1034 standard, more specifically also to SAE J814c.
- Mix the anti-freeze with fresh, soft water, and then fill into the radiator.

■ **IMPORTANT**

- **When the anti-freeze is mixed with fresh, soft water, the anti-freeze mixing ratio must be less than 50 %.**

Vol % anti-freeze	Freezing point		Boiling point*	
	°C	°F	°C	°F
40	–24	–11	106	223
50	–37	–35	108	226

* At 1.013 × 100000 Pa (760 mmHg) pressure (atmospheric). A higher boiling point is obtained by using a radiator pressure cap which permits the development of pressure within the cooling system.

■ **NOTE**

- **The above data represents industrial standards that necessitate a minimum glycol content in the concentrated anti-freeze.**
- **When the coolant level drops due to evaporation, add fresh, soft water only to keep the anti-freeze mixing ratio less than 50 %. In case of leakage, add anti-freeze and fresh, soft water in the specified mixing ratio.**
- **Anti-freeze absorbs moisture. Keep unused anti-freeze in a tightly sealed container.**
- **Do not use radiator cleaning agents when anti-freeze has been added to the coolant.**
  (Anti-freeze contains an anti-corrosive agent, which will react with the radiator cleaning agent forming sludge which will affect the engine parts.)

W1024852

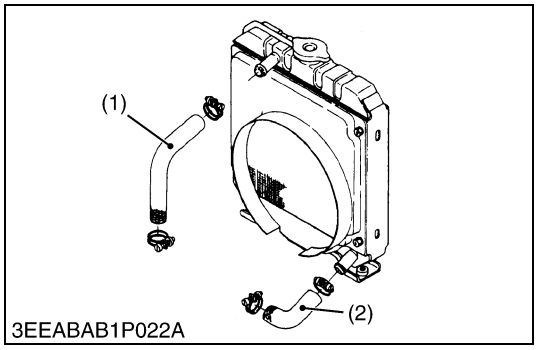

Replacing Radiator Hoses and Clamp Bands

CAUTION

- **Do not remove the radiator cap when the engine is hot. Then loosen cap slightly to the stop to relieve any excess pressure before removing cap completely.**

1. Drain the coolant.
2. Loosen the clamp bands.
3. Remove the upper hose (1) and lower hose (2).
4. Replace new upper / lower hose (1), (2) and clamp bands.
5. Tighten the clamp bands.
6. Fill with clean water and anti-freeze until the coolant level is just below the port. Install the radiator cap securely.

(1) Upper Hose (2) Lower Hose

W1024178

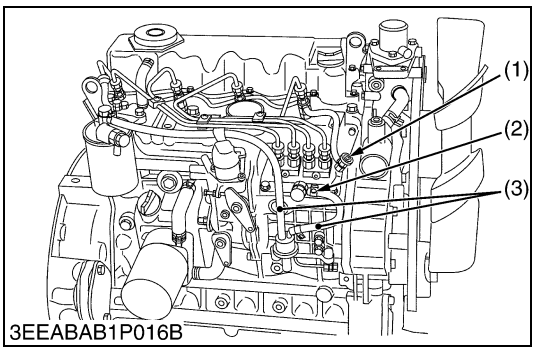

Replacing Fuel Hose and Clamp Bands

1. Loosen the clamp (2) and remove the fuel hose (3).
2. Replace new fuel hose (3) and new clamp (2).
3. Tighten the clamp (2).

CAUTION

- **Stop the engine when attempting the check and change prescribed above.**

(When bleeding fuel system)

1. Fill the tank with fuel and open the cock.
2. Loosen the air vent coupling bolt of fuel filter a few turns.
3. When there is no more air bubbles in the fuel coming out of this coupling bolt, tighten the coupling bolt.
4. Open the air vent cock (1) on the top of fuel injection pump.
5. If equipped electrical fuel feed pump, turn the key on AC position and pump the fuel up for 10 to 15 seconds.
   If equipped mechanical fuel feed pump, set the stop lever on stop position and crank the engine for 10 to 15 seconds.
6. Close securely the air vent cock (1) after air bleeding.

■ IMPORTANT

- **Except when venting the air, be sure to keep closed the air vent coupling bolt of the fuel injection pump. Otherwise, the engine may stall.**

(1) Air Vent Cock
(2) Clamp
(3) Fuel Hose

W1020090

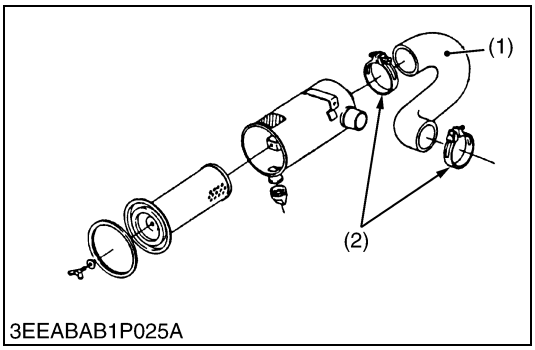

Replacing Intake Air Line

1. Loosen the clamp (2).
2. Remove the intake air hose (1) and clamp (2).
3. Replace new intake air hose (1) and new clamp (2).
4. Tighten the clamp (2).

■ NOTE

- **To prevent serious damage to the engine, keep out any dust inside the intake air line.**

(1) Intake Air Hose
(2) Clamp

W1023867

Replacing Battery

CAUTION

- **When the battery is being activated, hydrogen and oxygen gases in the battery are extremely explosive. Keep open sparks and flames away from the battery at all times, especially when charging the battery.**
- **When charging battery, remove battery vent plugs.**
- **When disconnecting the cable from the battery, start with the negative terminal first. When connecting the cable to the battery, start with the positive terminal first.**
- **Never check battery charge by placing a metal object across the posts.**

1. Disconnect the negative terminal and positive terminal.
2. Remove the battery holder.
3. Remove the used battery.
4. Replace the new battery.
5. Tighten the battery holder.
6. Connect the positive terminal.
7. Connect the negative terminal.

W1023996

5. SPECIAL TOOLS

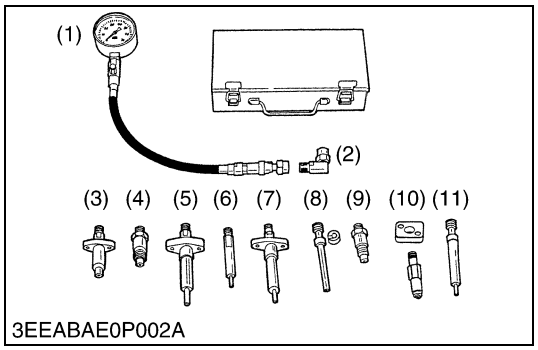

Diesel Engine Compression Tester (for Injection Nozzle Hole)

Code No: 07909-30208 (Assembly) 07909-31251 (G)
07909-30934 (A to F) 07909-31271 (I)
07909-31211 (E and F) 07909-31281 (J)
07909-31231 (H)

Application: Use to measure diesel engine compression and diagnosis of need for major overhaul.

(1) Gauge
(2) **L** Joint
(3) Adaptor **A**
(4) Adaptor **B**
(5) Adaptor **C**
(6) Adaptor **E**
(7) Adaptor **F**
(8) Adaptor **G**
(9) Adaptor **H**
(10) Adaptor **I**
(11) Adaptor **J**

W1024200

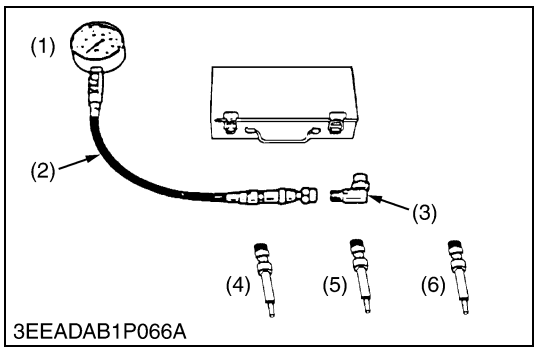

Diesel Engine Compression Tester (for Glow Plug Hole)

Code No: 07909-39081 (Assembly)
07909-31291 (K)
07909-31301 (L)
07909-31311 (M)

Application: Use to measure diesel engine compression and diagnosis of need for major overhaul.

(1) Gauge
(2) Hose Assembly
(3) **L** Joint
(4) Adaptor **K**
(5) Adaptor **L**
(6) Adaptor **M**

W1050785

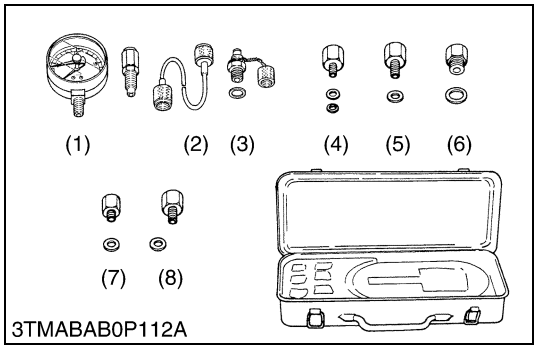

Oil Pressure Tester

Code No: 07916-32032

Application: Use to measure lubricating oil pressure.

(1) Gauge
(2) Cable
(3) Threaded Joint
(4) Adaptor **1**
(5) Adaptor **2**
(6) Adaptor **3**
(7) Adaptor **4**
(8) Adaptor **5**

W1024318

■ **NOTE**

- **The following special tools are not provided, so make them referring to the figure.**

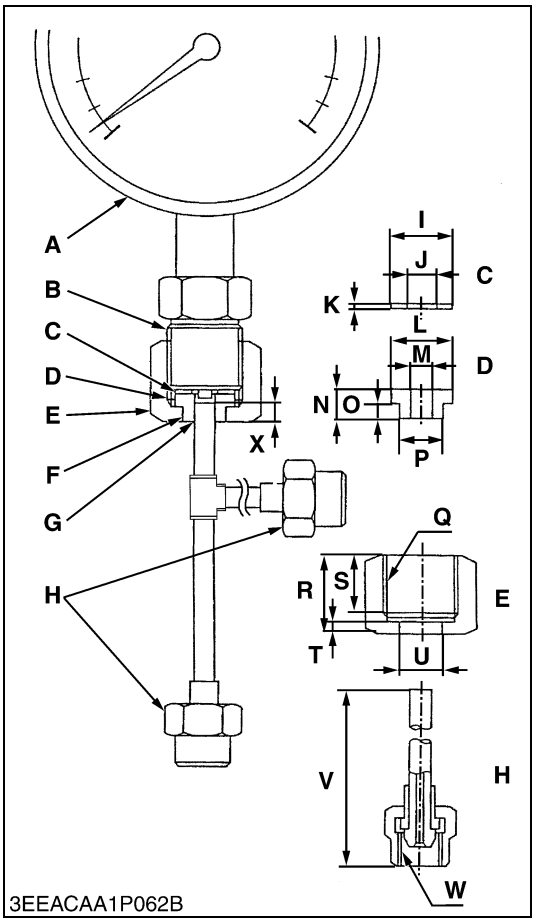

Injection Pump Pressure Tester

Application: Use to check fuel tightness of injection pumps.

A	Pressure gauge full scale : More than 29.4 MPa (300 kgf/cm^2, 4270 psi)
B	PF 1/2
C	Copper gasket
D	Flange (Material : Steel)
E	Hex. nut 27 mm (1.1 in.) across the plat
F	Adhesive application
G	Fillet welding on the enter circumference
H	Retaining nut
I	17 mm dia. (0.67 in. dia.)
J	8 mm dia. (0.3 in. dia.)
K	1.0 mm (0.039 in.)
L	17 mm dia. (0.67 in. dia.)
M	6.10 to 6.20 mm dia. (0.241 to 0.244 in. dia.)
N	8 mm (0.3 in.)
O	4 mm (0.2 in.)
P	11.97 to 11.99 mm dia. (0.4713 to 0.4720 in. dia.)
Q	PF 1/2
R	23 mm (0.91 in.)
S	17 mm (0.67 in.)
T	4 mm (0.2 in.)
U	12.00 to 12.02 mm dia. (0.4725 to 0.4732 in. dia.)
V	100 mm (3.94 in.)
W	M12 × P1.5
X	5 mm (0.2 in.)

W10252400

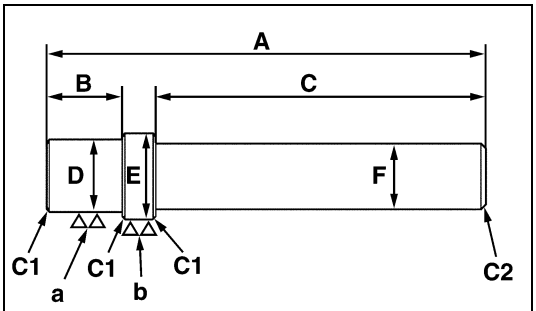

3EEABAB1P038A

Small End Bushing Replacing Tool

Application: Use to press out and to press fit the small end bushing.

[Press out]

A	157 mm (6.18 in.)
B	14.5 mm (0.571 in.)
C	120 mm (4.72 in.)
D	30.0 mm dia. (1.18 in. dia.)
E	32.95 mm dia. (1.297 in. dia.)
F	20 mm dia. (0.79 in. dia.)
a	6.3 μm (250 μin.)
b	6.3 μm (250 μin.)
C1	Chamfer 1.0 mm (0.039 in.)
C2	Chamfer 2.0 mm (0.079 in.)

[Press fit]

A	157 mm (6.18 in.)
B	14.5 mm (0.571 in.)
C	120 mm (4.72 in.)
D	30.0 mm dia. (1.18 in. dia.)
E	42.000 mm dia. (1.6535 in. dia.)
F	20 mm dia. (0.79 in. dia.)
a	6.3 μm (250 μin.)
b	6.3 μm (250 μin.)
C1	Chamfer 1.0 mm (0.039 in.)
C2	Chamfer 2.0 mm (0.079 in.)

W1040702

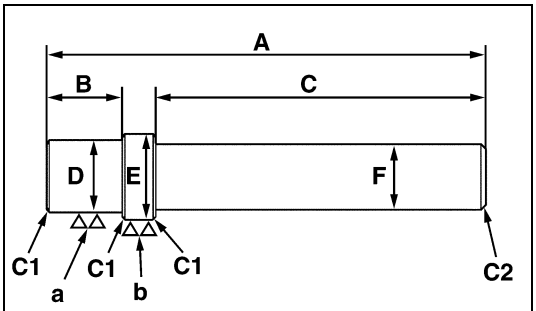

3EEABAB1P038A

Idle Gear Bushing Replacing Tool

Application: Use to press out and to press fit the bushing.

A	196 mm (7.72 in.)
B	37.5 mm (1.48 in.)
C	150 mm (5.91 in.)
D	44.95 mm dia. (1.770 in. dia.)
E	48.075 to 48.100 mm dia. (1.8928 to 1.8937 in. dia.)
F	20 mm dia. (0.79 in. dia.)
a	6.3 μm (250 μin.)
b	6.3 μm (250 μin.)
C1	Chamfer 1.0 mm (0.039 in.)
C2	Chamfer 2.0 mm (0.079 in.)

W1040289

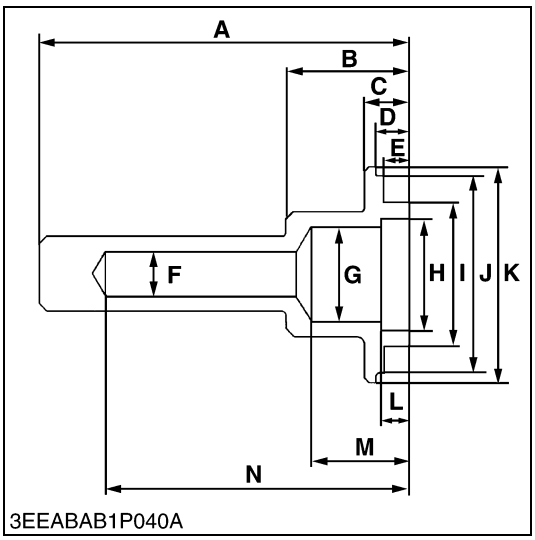

Gear Case Oil Seal Replacing Tool

Application: Use to press fit the oil seal.

A	148.8 mm (5.858 in.)
B	50 mm (2.0 in.)
C	18.8 mm (0.740 in.)
D	13.7 to 13.9 mm (0.540 to 0.547 in.)
E	11 mm (0.43 in.)
F	18 mm dia. (0.71 in. dia.)
G	38 mm dia. (1.5 in. dia.)
H	45 mm dia. (1.8 in. dia.)
I	57.90 to 58.10 mm dia. (2.280 to 2.287 in. dia.)
J	79.5 mm dia. (3.13 in. dia.)
K	87 mm dia. (3.4 in. dia.)
L	12 mm (0.47 in.)
M	40 mm (1.6 in.)
N	120 mm (4.72 in.)

W1041529

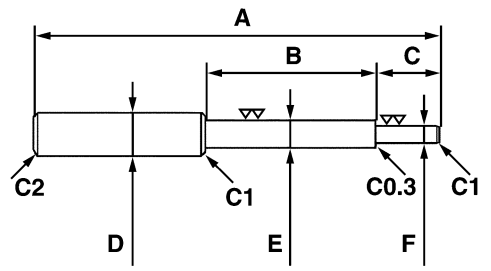

3TMABAB0P063B

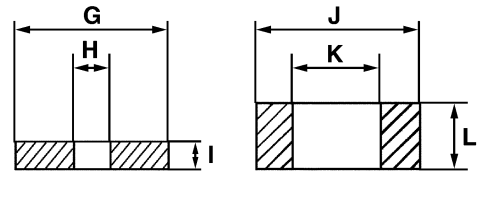

3TMABAB0P064B

Valve Guide Replacing Tool

Application: Use to press out and press fit the valve guide.

Intake valve guide (V3600-E3B, V3600-T-E3B, V3600-E3CB, V3600-T-E3CB, V3300-E3BG, V3600-T-E3BG) and Intake / Exhaust valve guide (V3800DI-T-E3B, V3800DI-T-E3CB, V3800DI-T-E3BG)

A	225 mm (8.86 in.)
B	70 mm (2.8 in.)
C	45 mm (1.8 in.)
D	20 mm dia. (0.79 in dia.)
E	11.7 to 11.9 mm dia. (0.461 to 0.468 in. dia.)
F	6.50 to 6.60 mm dia. (0.256 to 0.259 in. dia.)
G	25 mm dia. (0.98 in. dia.)
H	6.70 to 7.00 mm dia. (0.264 to 0.275 in. dia.)
I	5 mm (0.2 in.)
J	20 mm dia. (0.79 in.dia.)
K	12.5 to 12.8 mm dia. (0.493 to 0.503 in. dia.)
L	8.90 to 9.10 mm (0.351 to 0.358 in.)
C1	Chamfer 1.0 mm (0.039 in.)
C2	Chamfer 2.0 mm (0.079 in.)
C0.3	Chamfer 0.3 mm (0.01 in.)

Exhaust valve guide (V3600-E3B, V3600-T-E3B, V3600-E3CB, V3600-T-E3CB, V3300-E3BG, V3600-T-E3BG)

A	225 mm (8.86 in.)
B	80 mm (3.1 in.)
C	40 mm (1.6 in.)
D	20 mm dia. (0.79 in dia.)
E	12.96 to 12.98 mm dia. (0.5103 to 0.5110 in. dia.)
F	7.50 to 7.70 mm dia. (0.296 to 0.303 in. dia.)
G	14.5 to 15.5 mm dia. (0.571 to 0.610 in.dia.)
H	8.00 to 8.10 mm dia. (0.315 to 0.318 in. dia.)
I	5 mm (0.2 in.)
J	17.5 to 18.5 mm dia. (0.689 to 0.728 in. dia.)
K	13.1 to 13.2 mm dia. (0.516 to 0.519 in. dia.)
L	9.90 to 10.1 mm (0.390 to 0.397 in.)
C1	Chamfer 1.0 mm (0.039 in.)
C2	Chamfer 2.0 mm (0.079 in.)
C0.3	Chamfer 0.3 mm (0.01 in.)

W1038887

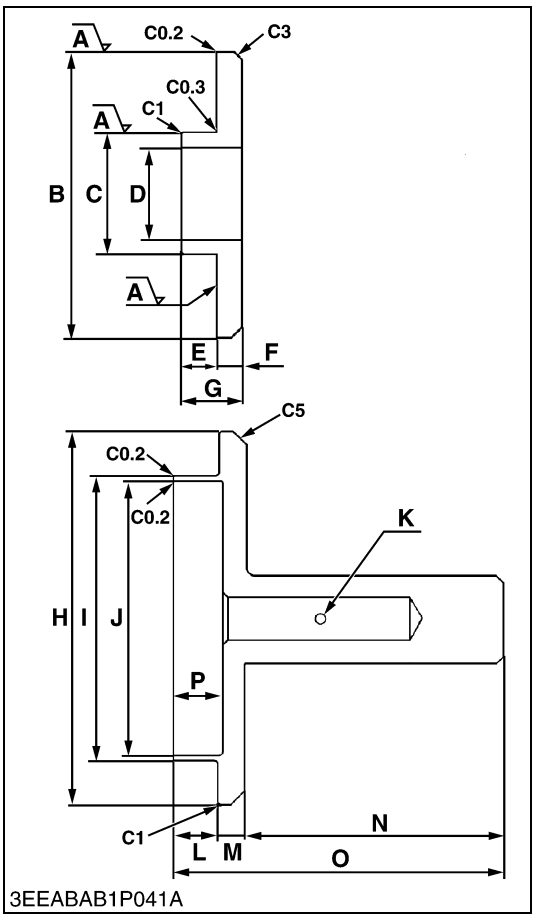

3EEABAB1P041A

Auxiliary Socket for Fixing Crankshaft Sleeve

Application: Use to fix the crankshaft sleeve of the diesel engine.

A	Rmax = 12.5 S
B	94.5 to 95.0 mm dia. (3.72 to 3.74 in. dia.)
C	40 mm dia. (1.6 in. dia.)
D	30 mm dia. (1.2 in. dia.)
E	12 mm (0.47 in.)
F	7.90 to 8.10 mm (0.311 to 0.318 in.)
G	20 mm (0.79 in.)
H	130 mm dia. (5.12 in. dia.)
I	99.40 to 99.60 mm dia. (3.914 to 3.921 in. dia.)
J	95.05 to 95.20 mm dia. (3.743 to 3.748 in. dia.)
K	3 mm dia. (0.1 in. dia.)
L	15 mm (0.59 in.)
M	10 mm (0.39 in.)
N	90 mm (3.5 in.)
O	115 mm (4.53 in.)
P	16.9 to 17.1 mm (0.666 to 0.673 in.)
C1	Chamfer 1.0 mm (0.039 in.)
C3	Chamfer 3.0 mm (0.12 in.)
C5	Chamfer 5.0 mm (0.20 in.)
C0.2	Chamfer 0.2 mm (0.008 in.)
C0.3	Chamfer 0.3 mm (0.01 in.)

W1041815

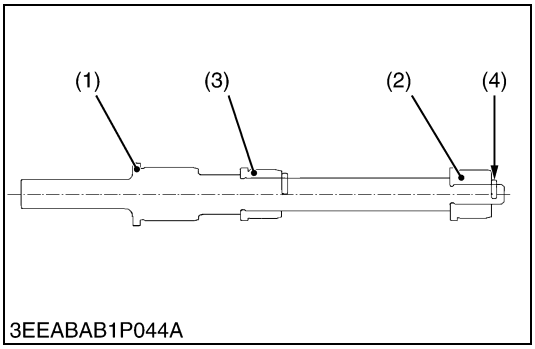

3EEABAB1P044A

Balancer Bushing Replacing Tool 1 Assembly

Application: Use to press fit the bushing.

No.	Name of Part	Q'ty.	Remarks
(1)	Shaft	1	
(2)	Piece 1	1	
(3)	Piece 2	1	
(4)	Bolt	2	M6 × P1.0

W1042867

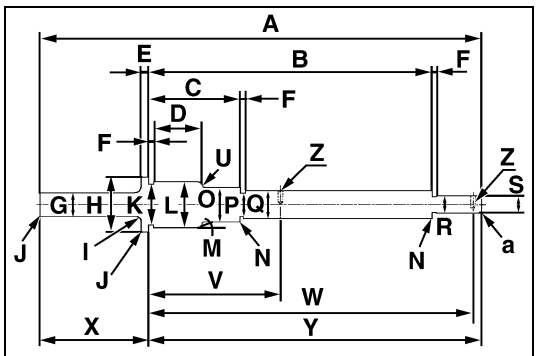

3EEABAB1P045A

Balancer Bushing Replacing Tool 1 Components Parts

1) Shaft

A	498 mm (19.6 in.)
B	318.80 to 319.20 mm (12.552 to 12.566 in.)
C	102.8 to 103.2 mm (4.048 to 4.062 in.)
D	60 mm (2.4 in.)
E	8 mm (0.3 in.)
F	5 mm (0.2 in.)
G	30 mm dia. (1.2 in. dia.)
H	65 mm dia. (2.6 in. dia.)
I	6 mm (0.2 in.)
J	Chamfer 1 mm (0.04 in.)
K	53 mm dia. (2.1 in. dia.)
L	54.7 to 54.9 mm dia. (2.154 to 2.161 in. dia.)
M	0.26 rad (15 °)
N	Chamfer 0.5 mm (0.02 in.)
O	41 mm dia. (1.6 in. dia.)
P	32 mm dia. (1.3 in. dia.)
Q	33.96 to 34.00 mm dia. (1.337 to 1.338 in. dia.)
R	18 mm dia. (0.71 in. dia.)
S	19.967 to 20.000 mm dia. (0.78611 to 0.78740 in. dia.)
U	3 mm (0.1 in.)
V	149.1 to 149.4 mm (5.870 to 5.882 in.)
W	365.10 to 365.40 mm (14.374 to 14.385 in.)
X	123 mm (4.84 in.)
Y	375 mm (14.8 in.)
Z	M6 × P1.0 depth 7 mm (0.3 in.)
a	Chamfer 2 mm (0.08 in.)

W1043162

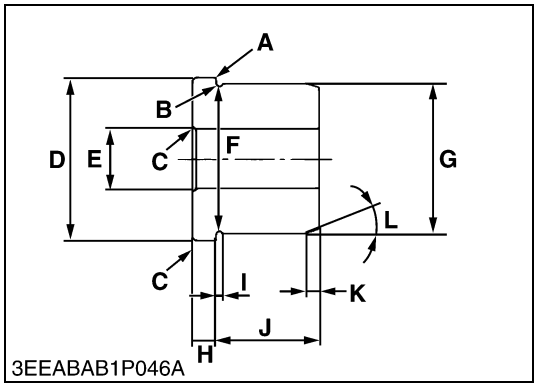

3EEABAB1P046A

2) Piece 1

A	Chamfer 0.1 mm (0.004 in.)
B	1 mm (0.04 in.)
C	Chamfer 1 mm (0.04 in.)
D	53.80 to 53.90 mm dia. (2.119 to 2.122 in. dia.)
E	20.020 to 20.041 mm dia. (0.78819 to 0.78901 in. dia.)
F	48 mm dia. (1.9 in. dia.)
G	49.934 to 49.940 mm dia. (1.9659 to 1.9661 in. dia.)
H	8 mm (0.3 in.)
I	2 mm (0.08 in.)
J	35 mm dia. (1.4 in. dia.)
K	5 mm (0.20 in.)
L	0.26 rad (15 °)

W1044434

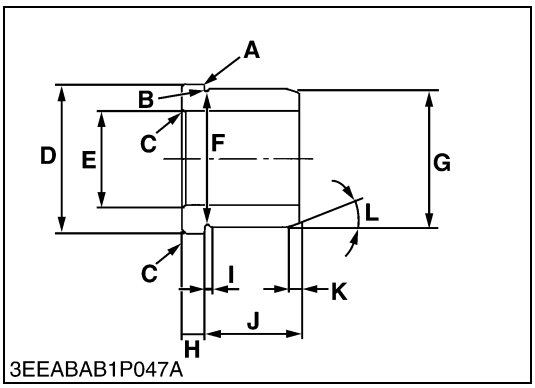

3) Piece 2

A	Chamfer 0.1 mm (0.004 in.)
B	1 mm (0.04 in.)
C	Chamfer 1 mm (0.04 in.)
D	54.30 to 54.40 mm dia. (2.138 to 2.141 in. dia.)
E	34.025 to 34.050 mm dia. (1.3396 to 1.3405 in. dia.)
F	48.5 mm dia. (1.91 in. dia.)
G	50.421 to 50.440 mm dia. (1.9851 to 1.9858 in. dia.)
H	8 mm (0.3 in.)
I	2 mm (0.08 in.)
J	35 mm dia. (1.4 in. dia.)
K	5 mm (0.2 in.)
L	0.26 rad (15 °)

W1044620

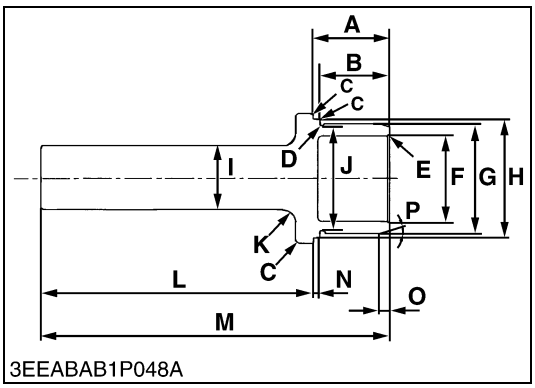

Balancer Bushing Replacing Tool 2

Application: Use to press fit the bushing.

A	35 mm (1.4 in.)
B	33 mm (1.3 in.)
C	Chamfer 0.5 mm (0.02 in.)
D	1 mm (0.04 in.)
E	Chamfer 1 mm (0.04 in.)
F	40 mm dia. (1.6 in. dia.)
G	50.921 to 50.940 mm dia. (2.0048 to 2.0055 in. dia.)
H	54.80 to 54.90 mm dia. (2.158 to 2.161 in. dia.)
I	30 mm dia. (1.2 in. dia.)
J	49 mm dia. (1.9 in. dia.)
K	6 mm (0.2 in.)
L	125 mm (4.92 in.)
M	160 mm (6.30 in.)
N	3 mm (0.1 in.)
O	5 mm (0.2 in.)
P	0.26 rad (15 °)

W1044794

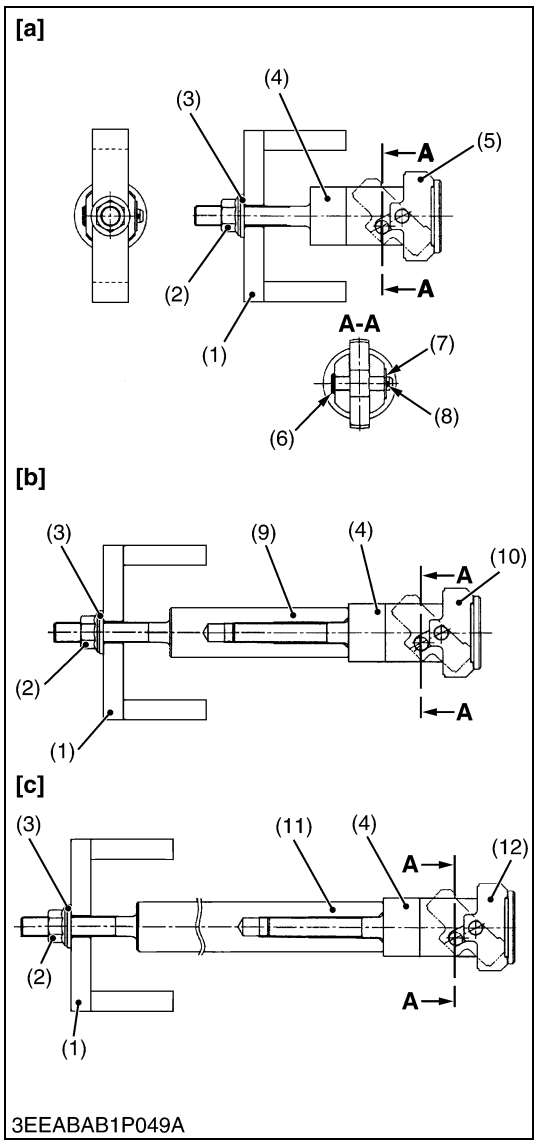

3EEABAB1P049A

Balancer Replacing Tools 3, 4, 5

Application: Use to press fit the bushing.

■ **NOTE**

- **This special tool is not provided, so make it referring to the figure.**

No.	Name of Part	Q'ty.
(1)	Bracket	1
(2)	Flange Nut	1
(3)	Washer	1
(4)	Shaft	1
(5)	Piece 1	1
(6)	Clevis	1
(7)	Washer	1
(8)	Cotter Pin	1
(9)	Joint 1	1
(10)	Piece 2	1
(11)	Joint 2	1
(12)	Piece 3	1

[a] :Tool 3
[b] :Tool 4
[c] :Tool 5
A : Section

W1045310

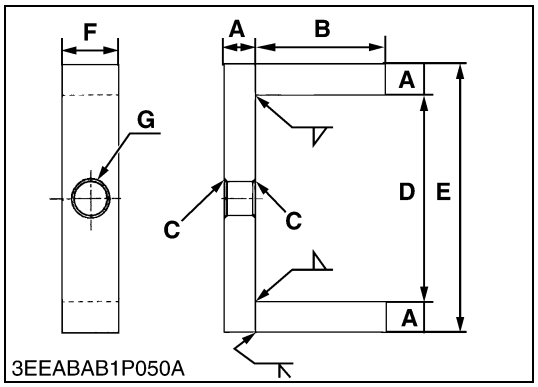

3EEABAB1P050A

Balancer Replacing Tool Components Parts

1) Bracket

A	12 mm (0.47 in.)
B	50 mm (2.0 in.)
C	Chamfer 1 mm (0.04 in.)
D	80 mm (3.1 in.)
E	104 mm (4.09 in.)
F	22 mm (0.87 in.)
G	13 mm dia. (0.51 in. dia.)

W1167794

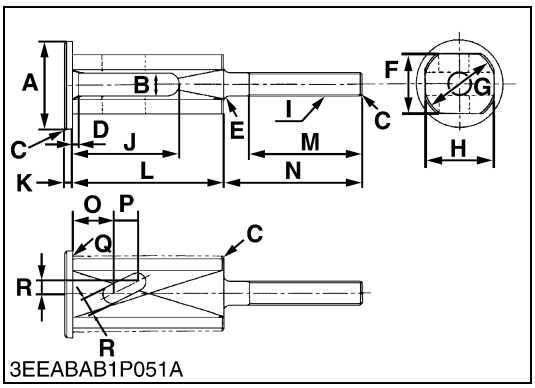

2) Shaft

A	44 mm dia. (1.7 in. dia.)
B	12 mm (0.47 in.)
C	Chamfer 1 mm (0.04 in.)
D	3 mm (0.1 in.)
E	3 mm (0.1 in.)
F	30 mm (1.2 in.)
G	38 mm (1.5 in.)
H	35 mm (1.4 in.)
I	M12 × P1.25
J	53 mm (2.1 in.)
K	4 mm (0.2 in.)
L	75 mm (3.0 in.)
M	57 mm (2.2 in.)
N	70 mm (2.8 in.)
O	19.5 mm (0.768 in.)
P	12 mm (0.47 in.)
Q	0.8 mm (0.03 in.)
R	6 mm (0.2 in.)

W1046146

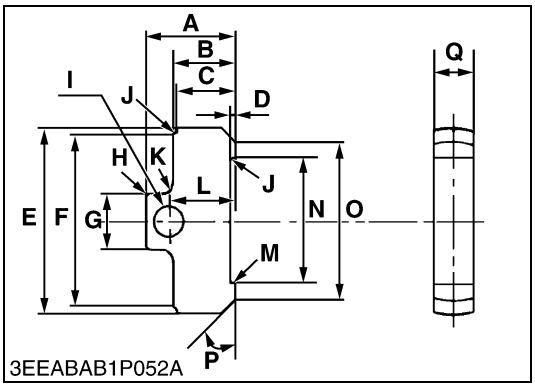

3) Piece 1

A	26 mm (1.0 in.)
B	18 mm (0.71 in.)
C	16.5 to 17.0 mm (0.650 to 0.669 in.)
D	1.5 mm (0.059 in.)
E	54.00 to 54.20 mm dia. (2.126 to 2.133 in dia.)
F	50.55 to 50.75 mm dia. (1.991 to 1.998 in dia.)
G	16 mm (0.63 in.)
H	Chamfer 1 mm (0.04 in.)
I	8.5 mm dia. (0.33 in. dia.)
J	0.4 mm (0.02 in.)
K	3 mm (0.1 in.)
L	19 mm (0.75 in.)
M	Chamfer 0.5 mm (0.02 in.)
N	36 mm (1.4 in.)
O	45 mm dia. (1.8 in. dia.)
P	0.79 rad (45 °)
Q	11.5 mm (0.453 in.)

W1047263

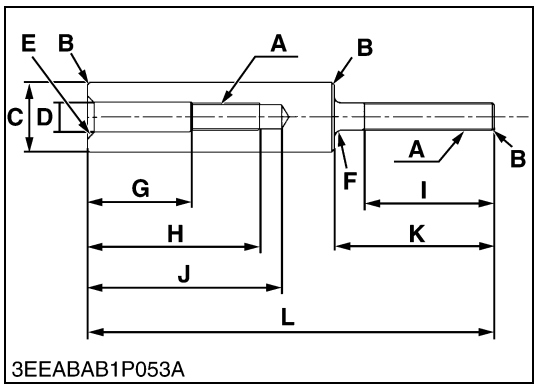

4) Joint 1

A	M12 × P1.25
B	Chamfer 1 mm (0.04 in.)
C	30 mm dia. (1.2 in. dia.)
D	13 mm dia. (0.51 in. dia.)
E	Chamfer 3 mm (0.1 in.)
F	3 mm (0.1 in.)
G	45 mm (1.8 in.)
H	75 mm (3.0 in.)
I	57 mm (2.2 in.)
J	85 mm (3.3 in.)
K	70 mm (2.8 in.)
L	178 mm (7.01 in.)

W1047709

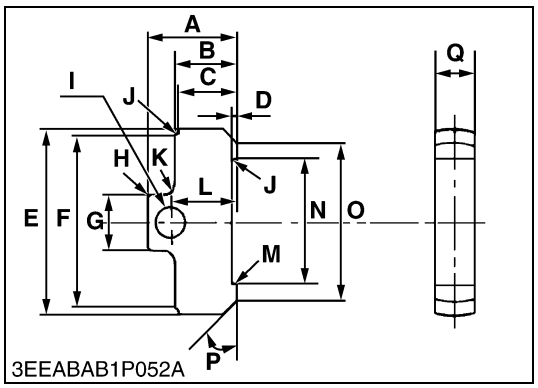

5) Piece 2

A	26 mm (1.0 in.)
B	18 mm (0.71 in.)
C	16.5 to 17.0 mm (0.650 to 0.669 in.)
D	1.5 mm (0.059 in.)
E	53.50 to 53.70 mm dia. (2.107 to 2.114 in dia.)
F	50.05 to 50.25 mm dia. (1.971 to 1.978 in dia.)
G	16 mm (0.63 in.)
H	Chamfer 1 mm (0.04 in.)
I	8.5 mm dia. (0.33 in. dia.)
J	0.4 mm (0.02 in.)
K	3 mm (0.1 in.)
L	19 mm (0.75 in.)
M	Chamfer 0.5 mm (0.02 in.)
N	36 mm (1.4 in.)
O	45 mm dia. (1.8 in. dia.)
P	0.79 rad (45 °)
Q	11.5 mm (0.453 in.)

W1048068

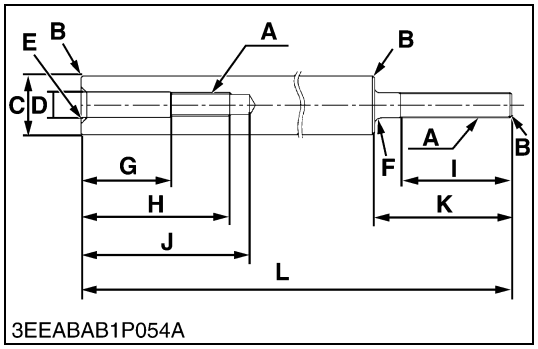

6) Joint 2

A	M12 × P1.25
B	Chamfer 1 mm (0.04 in.)
C	30 mm dia. (1.2 in. dia.)
D	13 mm dia. (0.51 in. dia.)
E	Chamfer 3 mm (0.1 in.)
F	3 mm (0.1 in.)
G	45 mm (1.8 in.)
H	75 mm (3.0 in.)
I	57 mm (2.2 in.)
J	85 mm (3.3 in.)
K	70 mm (2.8 in.)
L	394 mm (15.5 in.)

W1048305

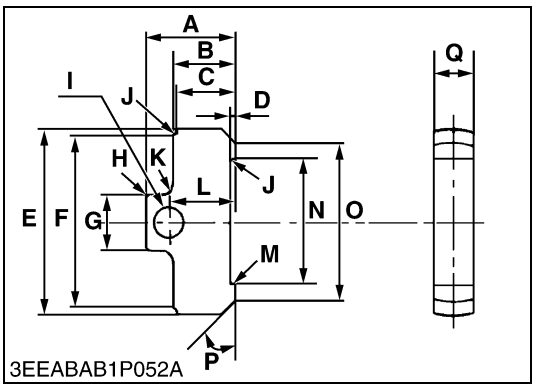

7) Piece 3

A	26 mm (1.0 in.)
B	18 mm (0.71 in.)
C	16.5 to 17.0 mm (0.650 to 0.669 in.)
D	1.5 mm (0.059 in.)
E	53.00 to 53.20 mm dia. (2.087 to 2.094 in dia.)
F	49.55 to 49.75 mm dia. (1.951 to 1.958 in dia.)
G	16 mm (0.63 in.)
H	Chamfer 1 mm (0.04 in.)
I	8.5 mm dia. (0.33 in. dia.)
J	0.4 mm (0.02 in.)
K	3 mm (0.1 in.)
L	19 mm (0.75 in.)
M	Chamfer 0.5 mm (0.02 in.)
N	36 mm (1.4 in.)
O	45 mm dia. (1.8 in. dia.)
P	0.79 rad (45 °)
Q	11.5 mm (0.453 in.)

W1048484

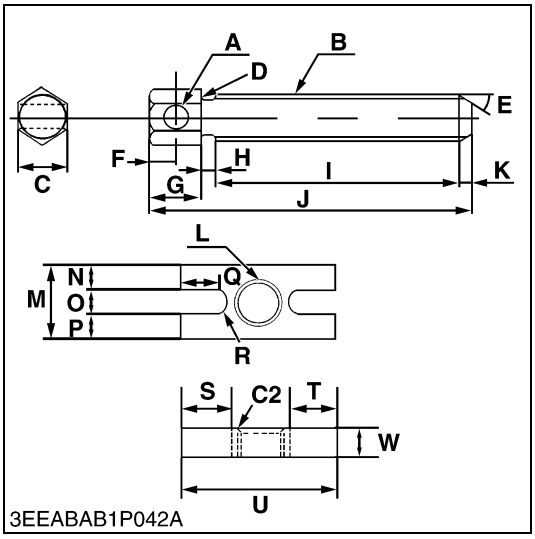

Injection Pump Gear Puller (V3600-T-E3B, V3600-T-E3CB, V3300-E3BG, V3600-T-E3BG)

Application: Use for removing the injection pump gear from governor shaft.

A	10 mm dia. (0.39 in. dia.)
B	M16 × Pitch 1.5
C	19 mm (0.75 in.)
D	0.5 mm radius (0.02 in. radius)
E	0.87 rad (50 °)
F	10 mm (0.39 in.)
G	20 mm (0.79 in.)
H	5 mm (0.2 in.)
I	95 mm (3.7 in.)
J	125 mm (4.92 in.)
K	5 mm (0.2 in.)
L	M16 × Pitch 1.5
M	30 mm (1.2 in.)
N	9.5 mm (0.37 in.)
O	11 mm (0.43 in.)
P	9.5 mm (0.37 in.)
Q	14.5 mm (0.571 in.)
R	5.5 mm radius (0.22 in. radius)
S	20 mm (0.79 in.)
T	20 mm (0.79 in.)
U	80 mm (3.1 in.)
W	12 mm (0.47 in.)
C2	Chamfer 2.0 mm (0.079 in.)

W1042094

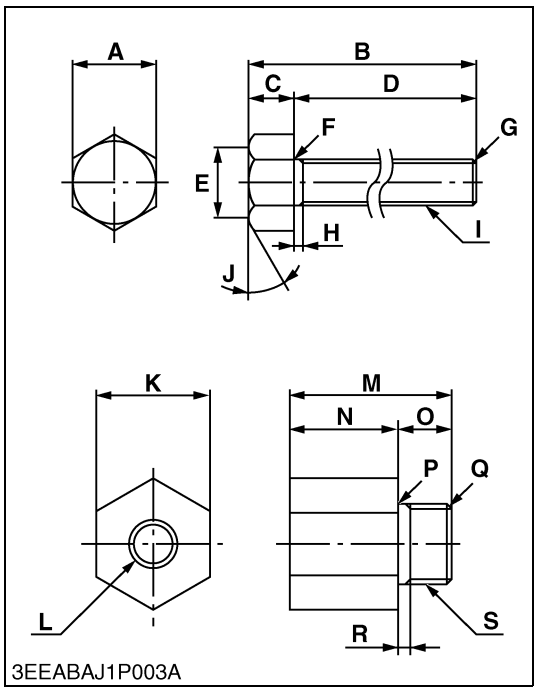

Timer Gear Puller (V3600-E3B, V3800DI-T-E3B, V3600-E3CB, V3800DI-T-E3CB, V3800DI-T-E3BG)

Application: Use for removing the timer gear from governor shaft.

A	27 mm (1.1 in.)
B	130 mm (5.12 in.)
C	15 mm (0.59 in.)
D	115 mm (4.53 in.)
E	26 mm dia. (1.0 in. dia.)
F	0.8 mm radius (0.03 in. radius)
G	Chamfer 1 mm (0.04 in.)
H	Less than 3 mm (Less than 0.1 in.)
I	M14 x Pitch 1.5
J	0.52 rad (30 °)
K	32 mm (1.3 in.)
L	M14 x Pitch 1.5
M	45 mm (1.8 in.)
N	30 mm (1.2 in.)
O	15 mm (0.59 in.)
P	0.8 mm radius (0.03 in. radius)
Q	Chamfer 1 mm (0.04 in.)
R	Less than 3 mm (Less than 0.1 in.)
S	M24 x Pitch 1.5

W1040379

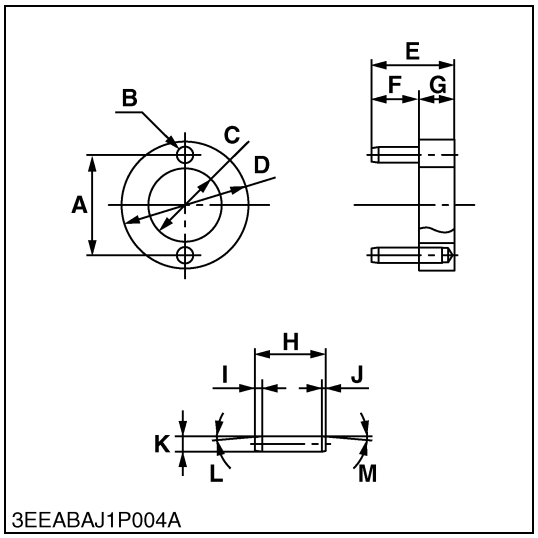

Timer 0° Restoring Jig (V3600-E3B, V3800DI-T-E3B, V3600-E3CB, V3800DI-T-E3CB, V3800DI-T-E3BG)

Application: Use for restoring 0° in the timer gear.

A	50.98 to 51.02 mm (2.007 to 2.008 in.)
B	8 mm dia. depth 12 mm (0.31 in. dia. depth 0.472 in.)
C	37 mm dia. (1.5 in. dia)
D	65 mm dia. (2.6 in. dia)
E	42 mm (1.7 in.)
F	24 mm (0.94 in.)
G	18 mm (0.71 in.)
H	36 mm (1.4 in.)
I	3.5 mm (0.14 in.)
J	1.5 mm (0.059 in.)
K	8 mm dia. (0.31 in. dia.)
L	0.09 rad (5 °)
M	0.09 rad (5 °)

W1040485

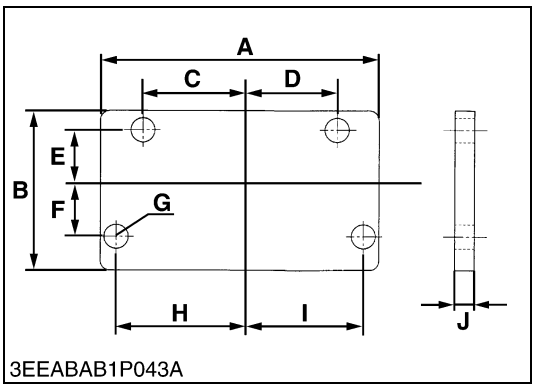

Flywheel Stopper (for SAE Flywheel and Housing)

Application: Use to loosen and tighten the flywheel screw.

A	140 mm (5.51 in.)
B	80 mm (3.1 in.)
C	49.3 mm (1.94 in.)
D	49.3 mm (1.94 in.)
E	23.8 mm (0.937 in.)
F	23.8 mm (0.937 in.)
G	11 mm dia. (0.43 in. dia.)
H	56.5 mm (2.22 in.)
I	56.5 mm (2.22 in.)
J	8 mm (0.3 in.)

W1042515

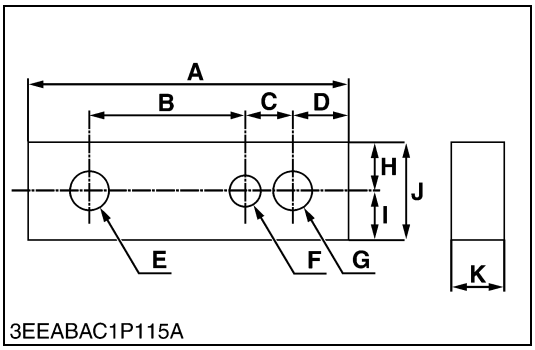

Tool for Aligning the Crankcase 1 and 2

Application: Use for aligning the crankcase 1 and 2.

A	115 mm (4.53 in.)
B	56 mm (2.2 in.)
C	17 mm (0.67 in.)
D	20 mm (0.79 in.)
E	14 mm dia. (0.55 in. dia.)
F	11 mm dia. (0.43 in. dia.)
G	14 mm dia. (0.55 in. dia.)
H	17.5 mm (0.689 in.)
I	17.5 mm (0.689 in.)
J	35 mm (1.4 in.)
K	19 mm (0.75 in.)

W1047882

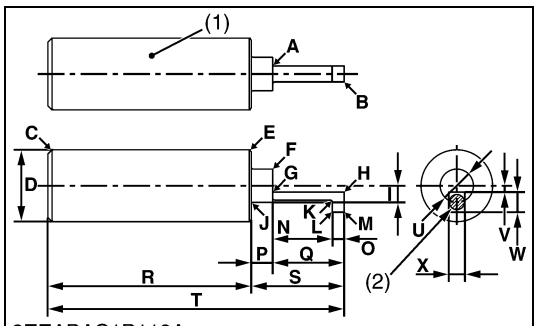

3EEABAC1P118A

Jig for Governor Connecting Rod

Application: Use for connecting the governor connecting rod to the rack pin of the fuel injection pump assembly.

A	1 mm radius (0.04 in. radius)
B	Chamfer 0.2 mm (0.008 in.)
C	Chamfer 2 mm (0.08 in.)
D	35 mm dia. (1.4 in. dia.)
E	Chamfer 1 mm (0.04 in.)
F	Chamfer 0.1 mm (0.004 in.)
G	1 mm radius (0.04 in. radius)
H	Chamfer 0.2 mm (0.008 in.)
I	8 mm radius (0.3 in. radius)
J	1 mm radius (0.04 in. radius)
K	1 mm radius (0.04 in. radius)
L	Chamfer 0.2 mm (0.008 in.)
M	Chamfer 0.2 mm (0.008 in.)
N	29 mm (1.1 in.)
O	6 mm (0.2 in.)
P	10.7 mm (0.421 in.)
Q	35 mm (1.4 in.)
R	99.3 mm (3.91 in.)
S	45.65 to 45.75 mm (1.798 to 1.801 in.)
T	145 mm (5.71 in.)
U	16.15 to 16.35 mm (0.6359 to 0.6437 in.)
V	3 mm (0.1 in.)
W	10 mm (0.39 in.)
X	8 mm (0.3 in.)

(1) Material: S45C-D

(2) Permanent Magnet: 8 mm dia. (0.3 in. dia.)
Thickness: 3 mm (0.1 in.)

W1115114

Nozzle Adaptor for Measuring Cylinder Compression Pressure (V3800DI-T-E3B, V3800DI-T-E3CB, V3800DI-T-E3BG)

Application: Use for measuring diesel engine compression pressure.

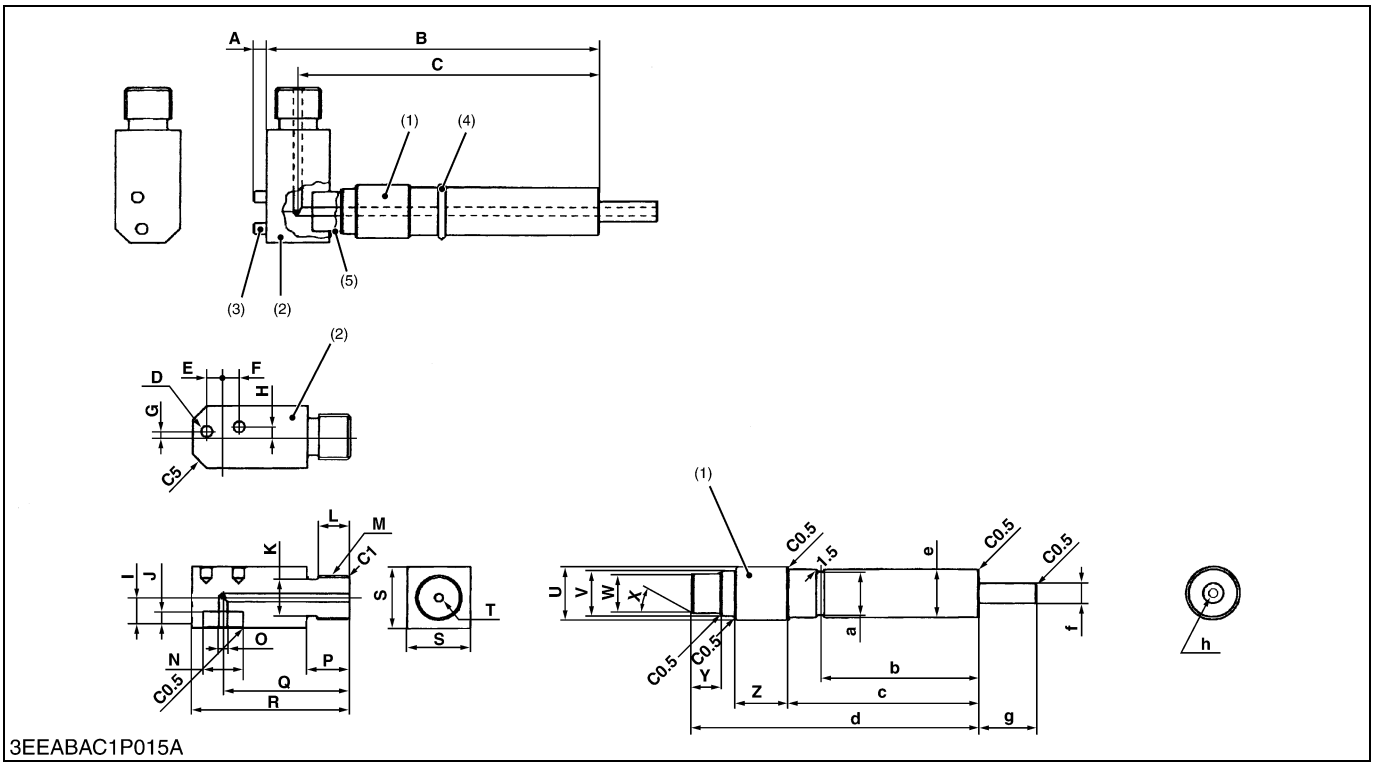

3EEABAC1P015A

A	5 mm (0.2 in.)	**T**	3.0 mm dia., 44.5 to 45.0 mm depth (0.12 in. dia., 1.76 to 1.77 in. depth)
B	115.9 to 116.1 mm (4.563 to 4.570 in.)		
C	105 mm (4.13 in.)	**U**	19 mm dia. (0.75 in. dia.)
D	4.0 mm dia., 4.0 mm depth (0.16 in dia., 0.16 in. depth)	**V**	16 mm dia. (0.63 in. dia.)
E	6.0 mm (0.24 in.)	**W**	14 mm dia. (0.55 in. dia.)
F	5.3 mm (0.21 in.)	**X**	0.52 rad (30°)
G	1.9 mm (0.075 in.)	**Y**	10 mm (0.39 in.)
H	3.5 mm (0.14 in.)	**Z**	19 mm (0.75 in.)
I	11.6 to 12.1 mm (0.457 to 0.476 in.)	**a**	14.94 to 15.00 mm dia. (0.5882 to 0.5905 in. dia.)
J	6.00 to 6.10 mm (0.237 to 0.240 in.)	**b**	55 mm (2.2 in.)
K	13 mm dia. (0.51 in. dia.)	**c**	66 mm (2.6 in.)
L	11 mm (0.43 in.)	**d**	100.0 to 100.1 mm (3.937 to 3.940 in.)
M	5/8-18UNF-2B	**e**	16.89 to 17.00 mm dia. (0.6650 to 0.6692 in. dia.)
N	14.000 to 14.011 mm dia. (0.55119 to 0.55161 in. dia.)	**f**	7.10 to 7.20 mm dia. (0.280 to 0.283 in. dia.)
O	3 mm dia. (0.1 in. dia.)	**g**	20.3 to 20.5 mm (0.800 to 0.807 in.)
P	15 mm (0.59 in.)	**h**	3.0 mm dia. (0.12 in. dia.)
Q	44 mm (1.7 in.)	**C0.5**	Chamfer 0.5 mm (Chamfer 0.02 in.)
R	55 mm (2.2 in.)	**C1**	Chamfer 1 mm (Chamfer 0.04 in.)
S	22 mm (0.87 in.)	**C5**	Chamfer 5 mm (Chamfer 0.2 in.)

(1) Material SS400
(2) Material S43C-D
(3) Pin 05012-00408
(4) O-ring 04811-00150
(5) Arc welding

MECHANISM

CONTENTS

1. FEATURE M-1
2. ENGINE BODY M-3
   [1] CYLINDER BLOCK M-3
   [2] GEAR TRAIN M-4
   [3] HALF-FLOATING HEAD COVER M-4
   [4] CYLINDER HEAD M-5
   [5] E-TVCS (V3600-E3B, V3600-T-E3B, V3600-E3CB, V3600-T-E3CB, V3300-E3BG, V3600-T-E3BG) M-6
   [6] CENTER DIRECT INJECTION SYSTEM (E-CDIS) (V3800DI-T-E3B, V3800DI-T-E3CB, V3800DI-T-E3BG) M-7
   [7] PISTON (EXCEPT V3300-E3BG) M-8
   [8] BUILT-IN DYNAMIC BALANCER (FACTORY OPTION EXCEPT V3600-E3CB, V3600-T-E3CB, V3800DI-T-E3CB) M-8
3. LUBRICATING SYSTEM M-9
   [1] OIL COOLER M-9
4. COOLING SYSTEM M-10
   [1] THERMOSTAT M-10
   [2] BOTTOM BYPASS SYSTEM M-11
5. FUEL SYSTEM M-12
   [1] GOVERNOR (STANDARD MECHANICAL TYPE) M-12
   [2] ELECTRONIC GOVERNOR (FACTORY OPTION FOR V3300-E3BG, V3600-T-E3BG, STANDARD FOR V3800DI-T-E3BG) M-14
      (1) Software Block Diagram M-14
      (2) Construction M-15
      (3) Controlling mechanism M-15
      (4) Emergency Engine Stop Function M-16
      (5) Main Components M-18
      (6) Wiring Diagram M-19
   [3] MECHANICAL TIMER WITH COLD START ADVANCE FUNCTION (V3600-E3B, V3800DI-T-E3B, V3600-E3CB, V3800DI-T-E3CB, V3800DI-T-E3BG) M-20
   [4] THROTTLE NOZZLE (V3600-E3B, V3600-T-E3B, V3600-E3CB, V3600-T-E3CB, V3300-E3BG, V3600-T-E3BG) M-22
   [5] 2 STAGE DI NOZZLE (V3800DI-T-E3B, V3800DI-T-E3CB, V3800DI-T-E3BG) M-23
   [6] INJECTION PUMP WITH F.S.P. (V3800DI-T-E3B, V3800DI-T-E3CB, V3800DI-T-E3BG) M-24
6. TURBOCHARGER SYSTEM M-25
   [1] BOOST COMPENSATOR (OPTION FOR TURBOCHARGED MODEL) M-25
7. INTAKE SYSTEM M-25
   [1] INTAKE AIR HEATER (V3800DI-T-E3B, V3800DI-T-E3CB, V3800DI-T-E3BG) M-25
8. EXHAUST GAS RECIRCULATION (EGR) SYSTEM (V3600-T-E3B, V3800DI-T-E3B, V3600-T-E3CB, V3800-T-E3CB, V3600-T-E3BG, V3800DI-T-E3BG) M-26
   [1] GENERAL M-26
      (1) Internal EGR (V3600-T-E3B, V3600-T-E3CB, V3600-T-E3BG) M-26

(2) External / Mechanical EGR (V3800DI-T-E3B, V3800DI-T-E3CB, V3800DI-T-E3BG) M-27

1. FEATURE

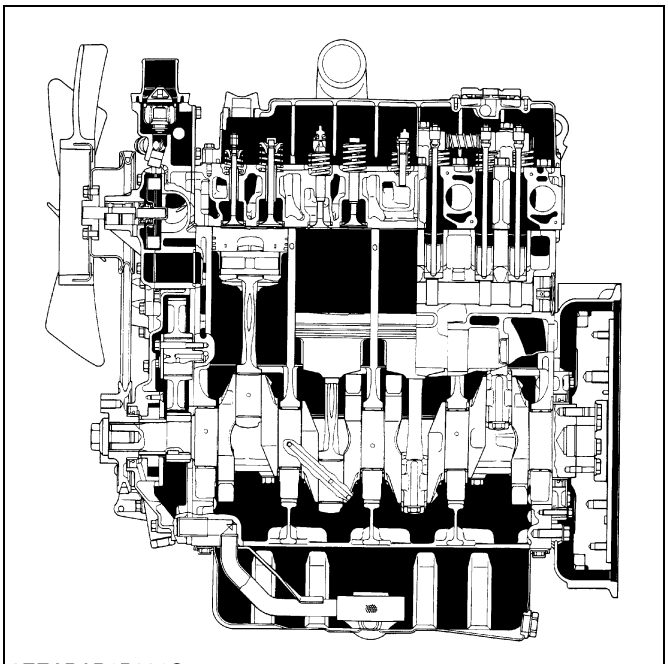

3EEABAB1P001C

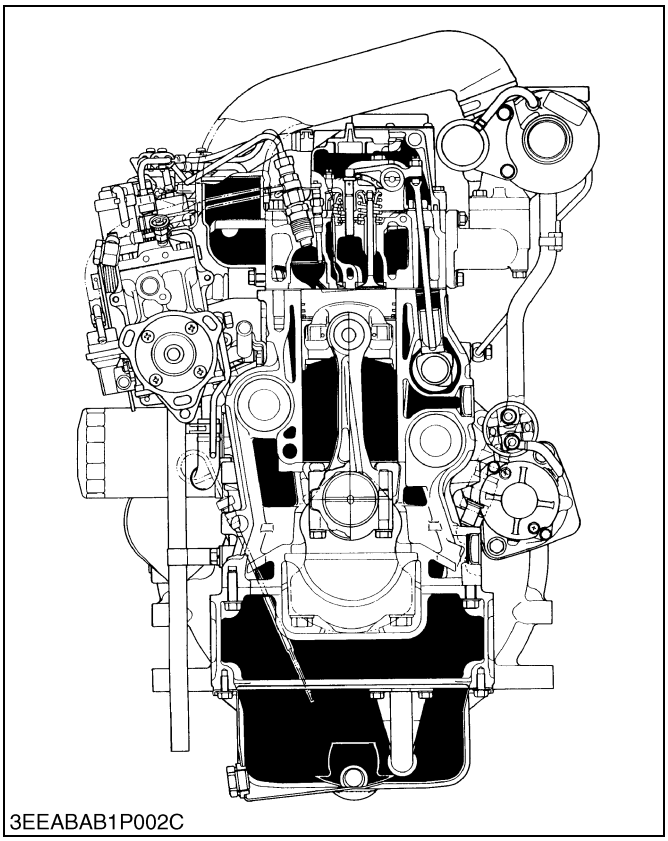

3EEABAB1P002C

[V3600-E3B, V3600-T-E3B, V3600-E3CB, V3600-T-E3CB, V3300-E3BG, V3600-T-E3BG]

V3 series IDI engine is the vertical type 4-cycle diesel engine featuring the advanced performances shown below.

This is a small sized, high power and environment conscious engine, which employs the three valve system, two inlet valves with double ports, and one exhaust valve with the new E-TVCS VERSION-II. Thus, this engine achieves high combustion efficiency and complies with various regulations of exhaust gas.

Based upon the conventional model, Kubota developed a unique governor system and various new mechanisms which reduces exhaust emission, noise and vibration and realize durability and high torque.

W1013043

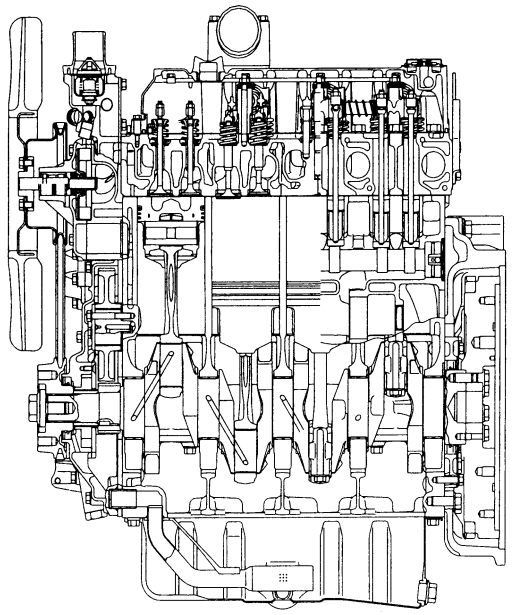

3EEABAC1P001D

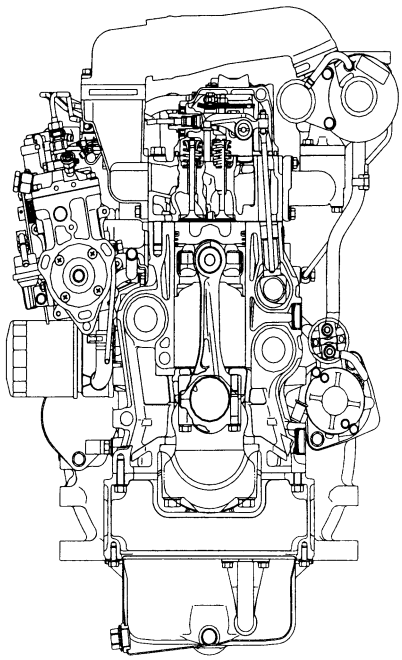

3EEABAC1P002D

[V3800DI-T-E3B, V3800DI-T-E3CB, V3800DI-T-E3BG]

The V3 series DI engine is the vertical type 4-cycle diesel engine featuring the advanced performances shown below.

This is a small sized, high power and environment conscious engine, which employs the four valve system, two inlet valves with double ports, and two exhaust valves with the new E-CDIS. Thus, this engine achieves high combustion efficiency and complies with various regulations of exhaust gas.

Based upon the conventional model, Kubota developed a unique governor system and various new mechanisms which reduces exhaust emission, noise and vibration and realize durability and high torque.

W1029683

2. ENGINE BODY

[1] CYLINDER BLOCK

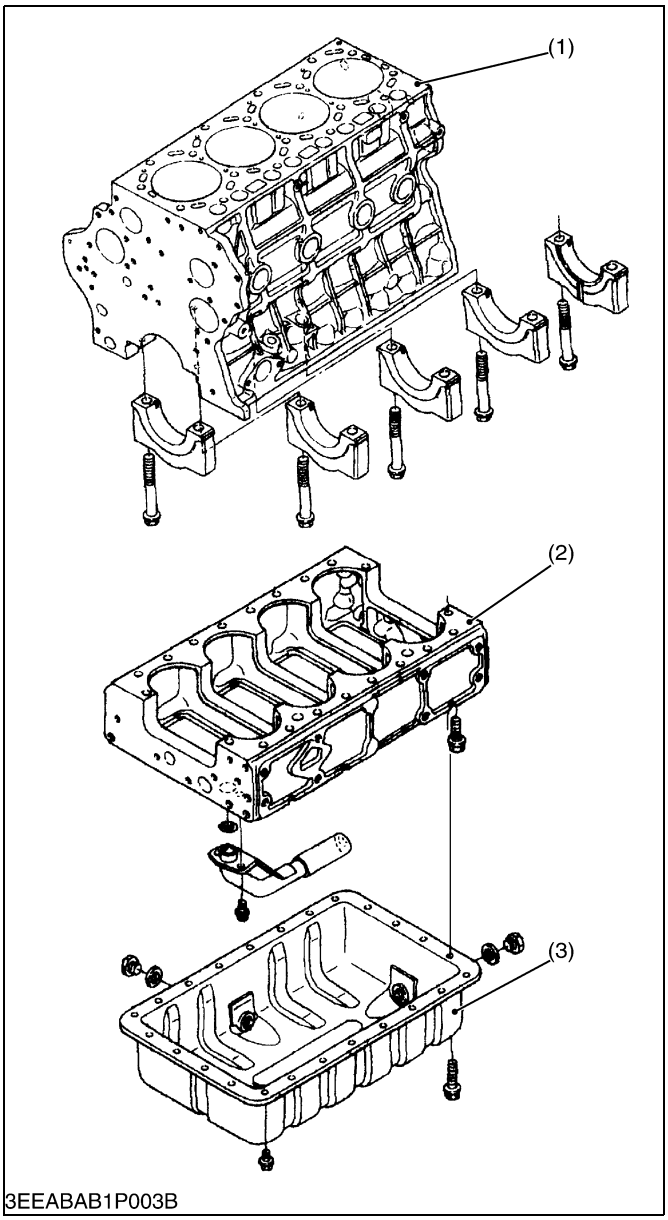

This engine employs separate type crankcases - the crankcase 1 (1) with combustion part and the crankcase 2 (2) which supports the crankcase 1 (1) and reduces noise.

Since it is a hanger type, you can easily assemble / disassemble it. The cylinder is a linerless type which enables good cooling operation, less strain and good abrasion resistance.

(1) Crankcase 1
(2) Crankcase 2
(3) Oil Pan

W1013119

[2] GEAR TRAIN

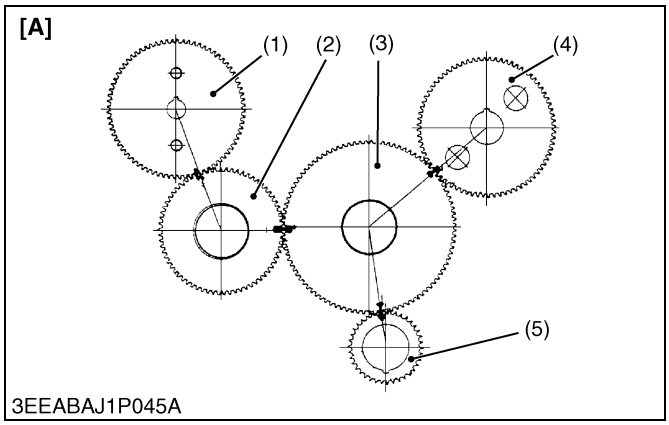

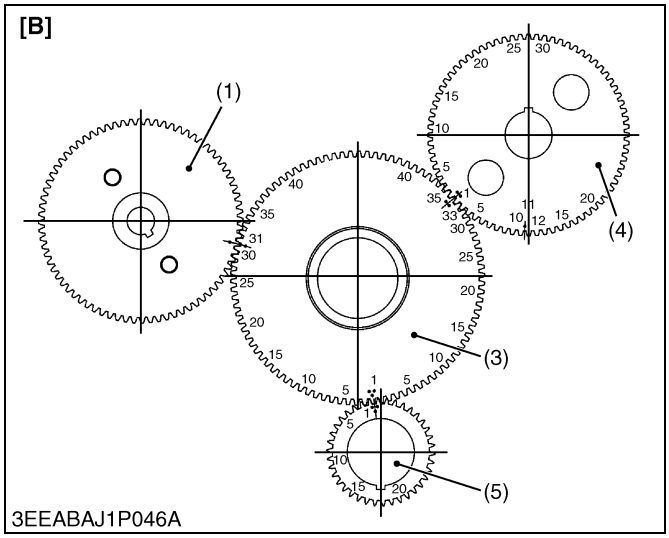

V3 series engine has 2 types of gear train. Standard type has 2 idle gears. Optional type has 1 idle gear. If the engine is optional 1 idle gear type, the engine model name has “C”. For example, V3600-E3B is standard gear train type (2 idle gears), V3600-E3CB is optional 1 idle gear type. Also, the rotating direction of fuel camshaft is opposite to standard type. For keeping the fire-order same as 1-3-4-2, high pressure pipe 2 and 3 are over-crossed.

(1) Injection Pump Gear
(2) Idle Gear 2
(3) Idle Gear 1
(4) Cam Gear
(5) Crank Gear

[A] Standard Gear Train Type (V3600-E3B, V3600-T-E3B, V3800DI-T-E3B, V3300-E3BG, V3600-T-E3BG, V3800DI-T-E3BG)
[B] Optional 1 Idle Gear Train Type (V3600-E3CB, V3600-T-E3CB, V3800DI-T-E3CB)

W1023697

[3] HALF-FLOATING HEAD COVER

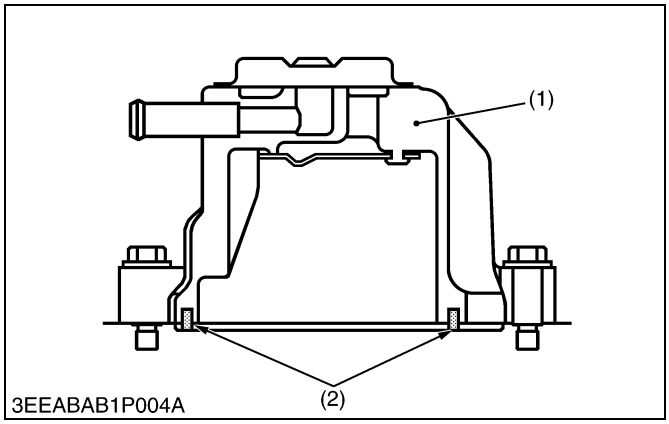

The rubber packing is fitted in to maintain the head cover 0.5 mm (0.02 in.) or so off the cylinder head. This arrangement helps reduce noise coming from the cylinder head.

(1) Cylinder Head Cover
(2) Rubber Packing

W1013327

[4] CYLINDER HEAD

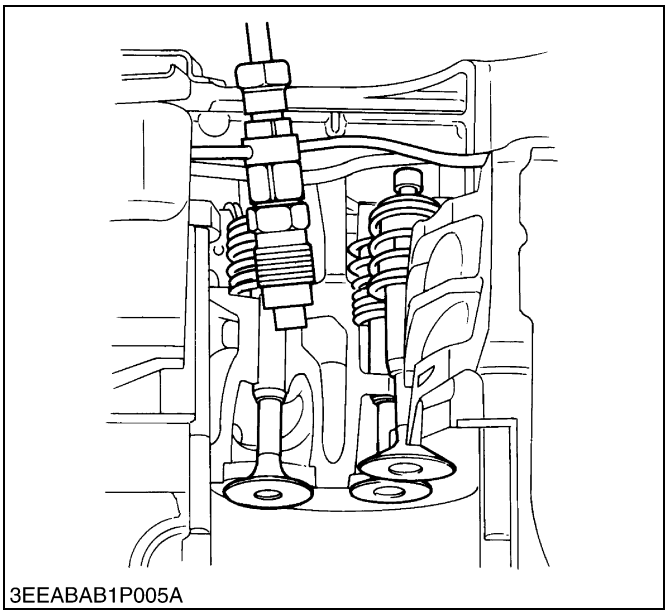
3EEABAB1P005A

[V3600-E3B, V3600-T-E3B, V3600-E3CB, V3600-T-E3CB, V3300-E3BG, V3600-T-E3BG]

V3600-E3B, V3600-T-E3B, V3600-E3CB, V3600-T-E3CB, V3300-E3BG and V3600-T-E3BG engine employ three valve system - two inlet valves and double ports, and one exhaust valve which produce good inlet inertia to improve combustion efficiency and volumetric efficiency. It also employs Kubota's unique combustion chamber with multiple injection grooves.

Besides the conventional cross port system, it employs the forced cooling method between valves to eliminate heat distortion, thus enabling durable and reliable configuration.

W1013336

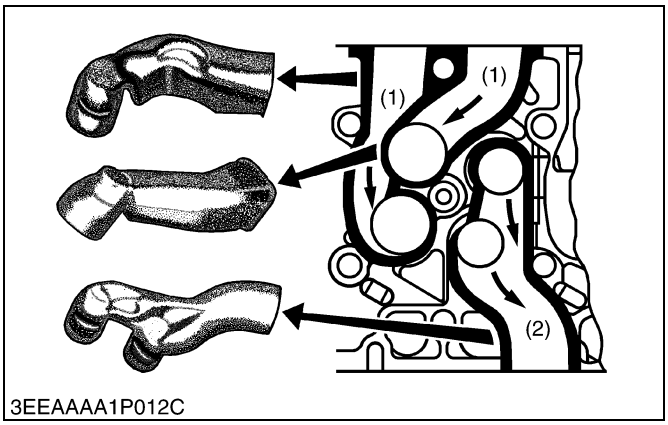

3EEAAAA1P012C

[V3800DI-T-E3B, V3800DI-T-E3CB, V3800DI-T-E3BG]

V3800DI-T-E3B, V3800DI-T-E3CB, and V3800DI-T-E3BG engine employs four valve system, the cylinder head is provided with double intake ports in order to ensure appropriate air suction and give an optimum swirl.

(1) Intake (2) Exhaust

W1028781

[5] E-TVCS (V3600-E3B, V3600-T-E3B, V3600-E3CB, V3600-T-E3CB, V3300-E3BG, V3600-T-E3BG)

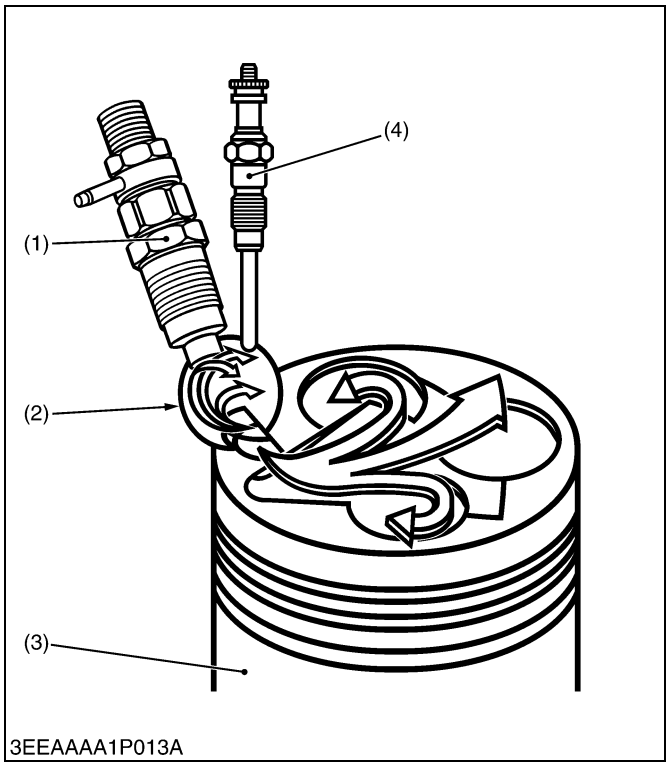

The combustion chamber (2) is of Kubota's exclusive E-TVCS combustion chamber type. Suction air is whirled to be mixed effectively with fuel, prompting combustion and reducing fuel consumption.

In the combustion chamber are installed throttle type injection nozzle (1) and rapid heating sheathed type glow plug (4). This glow plug assures easier than ever engine starts even at -15 °C (5 °F).

(1) Injection Nozzle
(2) Combustion Chamber
(3) Piston
(4) Glow Plug

W1013501

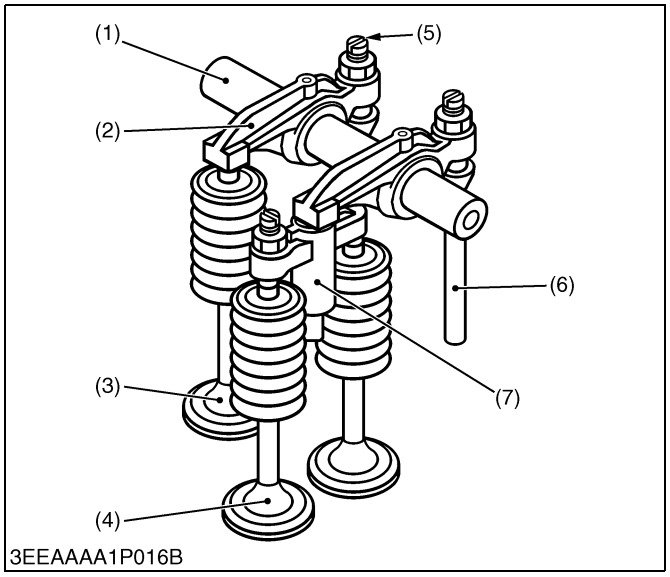

V3600-E3B, V3600-T-E3B, V3600-E3CB, V3600-T-E3CB, V3300-E3BG and V3600-T-E3BG engines have two intake and one exhaust valves per cylinder, the rocker arm contacts a bridge arm (7) instead of the valve stem tip. The bridge arm then contacts both intake valves and causes two valves to open simultaneously.

(1) Rocker Arm Shaft
(2) Rocker Arm
(3) Exhaust Valve
(4) Intake Valve
(5) Adjusting Screw
(6) Push Rod
(7) Bridge Arm

W1014671

[6] CENTER DIRECT INJECTION SYSTEM (E-CDIS) (V3800DI-T-E3B, V3800DI-T-E3CB, V3800DI-T-E3BG)

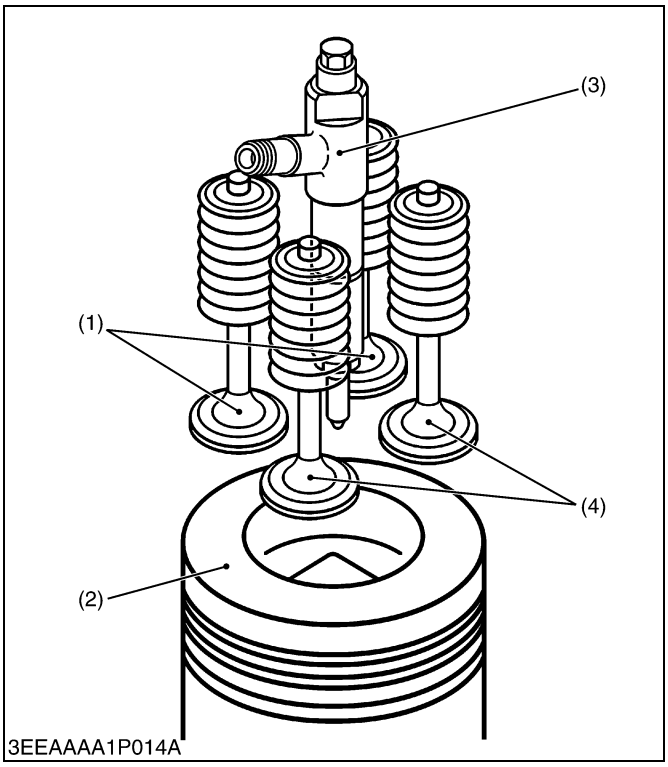

V3 series DI engine adopts the Center Direct Injection System (E-CDIS), in which the injection nozzle is positioned upright at the center of the cylinder.

This system serves to inject fuel directly at the center of the cylinder. By so doing, injected fuel and suction air can be mixed more uniformly, leading to more stable, higher combustion performance. In other words, cleaner emission, higher power output, lower fuel consumption, lower operating noise and higher start-up performance have been achieved.

(1) Exhaust Valves
(2) Piston
(3) Injection Nozzle
(4) Intake Valves

W11094950

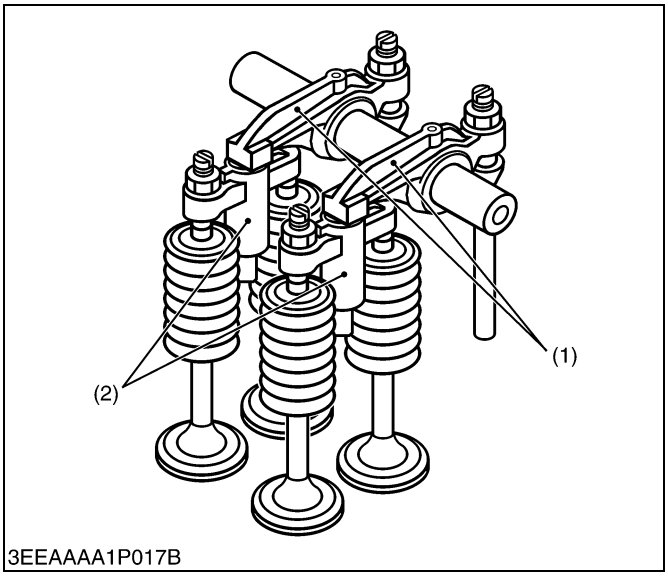

V3 series DI engine has two intake valves and two exhaust valves per each cylinder.

The rocker arm (1) contacts a bridge arm (2) instead of the valves stem tip.

The bridge arm then contacts both intake valves or bath exhaust valves and causes two valves to open simultaneously.

(1) Rocker Arm
(2) Bridge Arm

W1014724

[7] PISTON (EXCEPT V3300-E3BG)

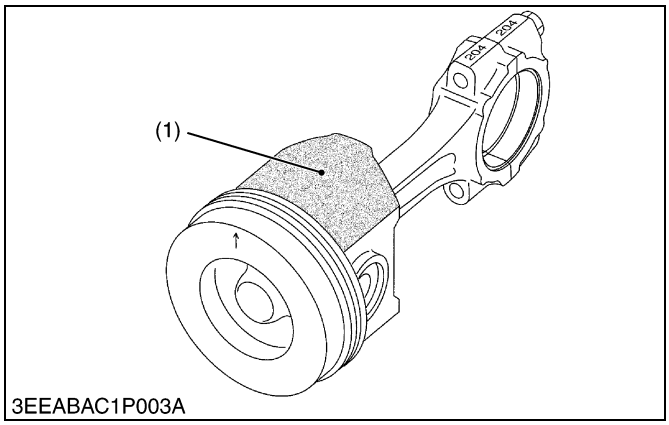

3EEABAC1P003A

Piston's skirt is coated with molybdenum disulfide★, which reduces the piston slap noise and thus the entire operating noise.

★Molybdenum disulfide (MoS_2)

The molybdenum disulfied serves as a solid lubricant, like a Graphite or Teflon. This material helps resist metal wears even with little lube oil.

(1) Molybdenum Disulfide

W1015665

[8] BUILT-IN DYNAMIC BALANCER (FACTORY OPTION EXCEPT V3600-E3CB, V3600-T-E3CB, V3800DI-T-E3CB)

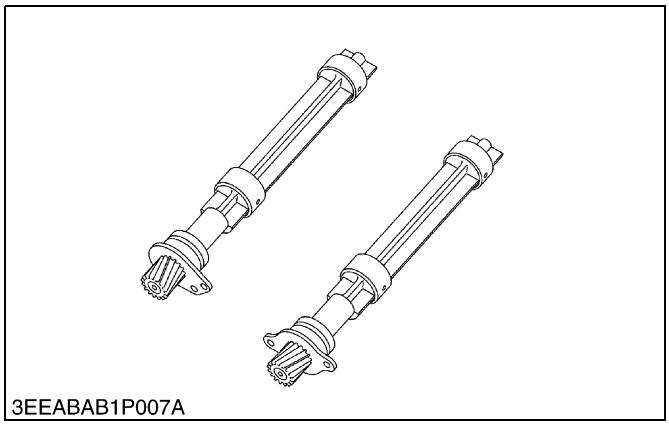
3EEABAB1P007A

Engine are sure to vibrate by piston's reciprocation. Theoretically, three-cylinder engines are much less prone to cause vibration than four-cylinder ones (second inertia, etc.). However, any engine has many moving parts in addition to its pistons and cannot be completely free from vibration.

The four cylinder engine is fitted with balance weight on crankcase to absorb the second inertia mentioned above and reduce vibration.

W1013617

3. LUBRICATING SYSTEM

[1] OIL COOLER

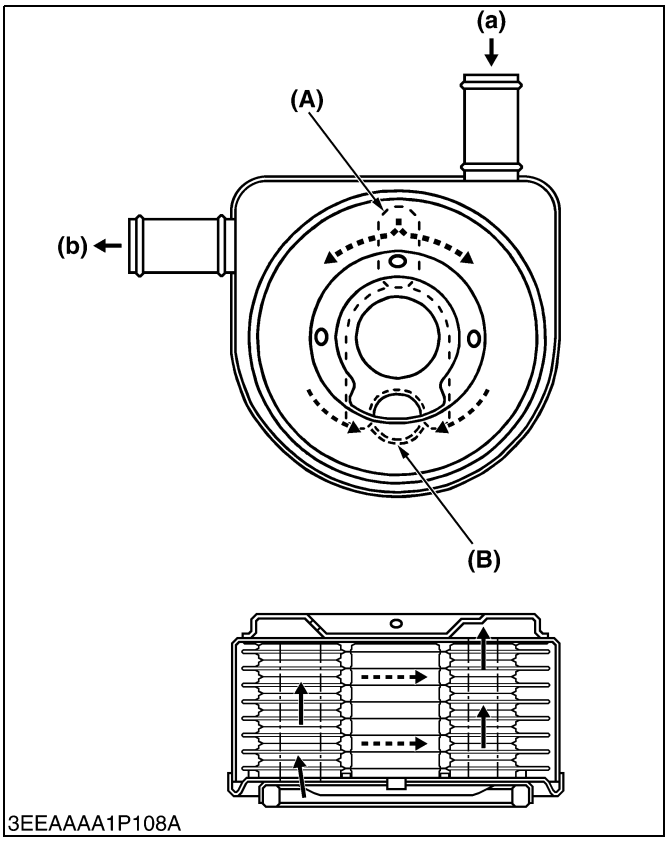

V3 series engine has a water-cooled oil cooler that not only cools hot oil, but also warms the cool engine oil shortly after start up.

As shown in the figure, the oil flows inside the connected cooler plate, whereas coolant is kept circulating outside the cooler plate, thereby cooling down or warming the oil.

(A) Oil Inlet Port
(B) Oil Outlet Port
(a) Coolant Inlet Port
(b) Coolant Outlet Port

W10344770

4. COOLING SYSTEM

[1] THERMOSTAT

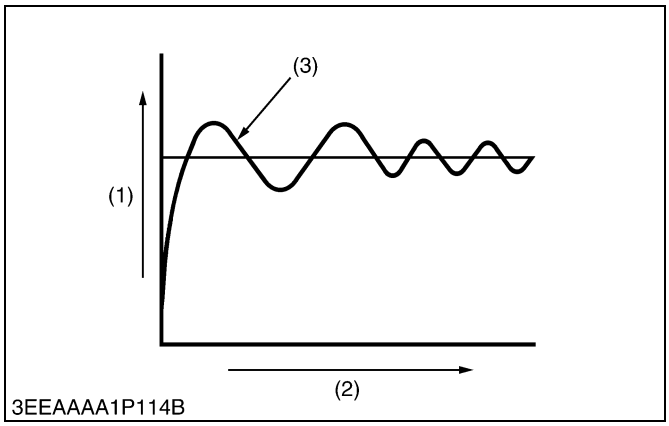

3EEAAAA1P114B

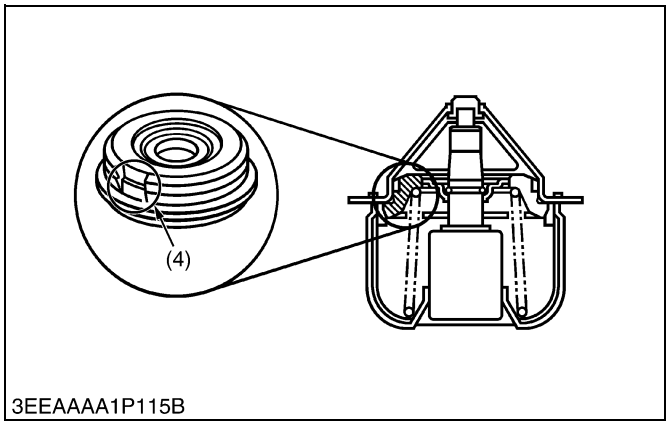

3EEAAAA1P115B

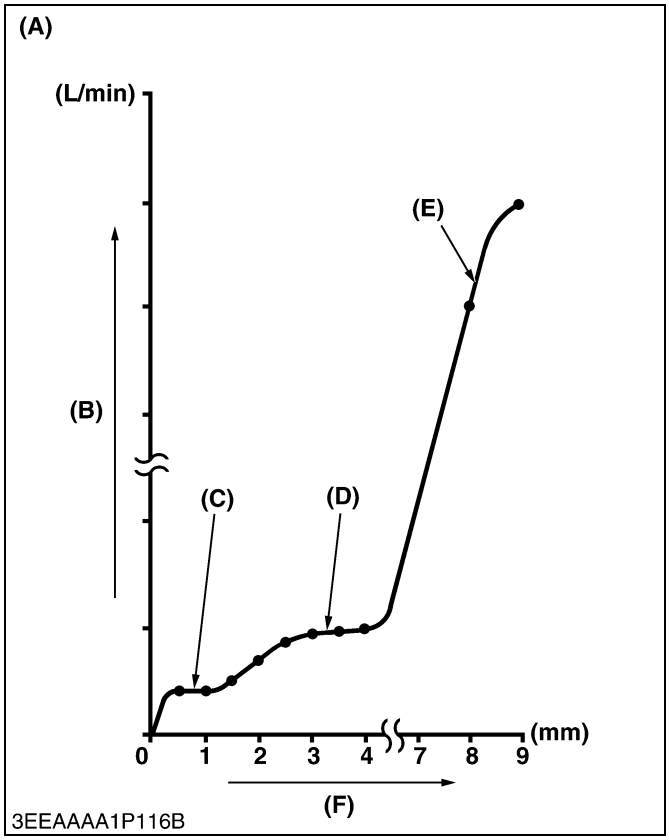

3EEAAAA1P116B

Conventional thermostatically-controlled valves (outlet water temperature control type) open against the flow of coolant. In this design, the pressure (steam pressure + water pump's discharge pressure) affects the open/close performance of such valve. In other words, the valve may be delayed in opening at a preset opening temperature opening suddenly, above the preset temperature. This is called the overshoot phenomenon.

The overshoot problem invites the undershoot phenomenon too. Too much water cooled by the radiator flows through the water passage, which suddenly closes the valve below the thermostat's preset valve closing temperature.

A repeated cycle of such overshoot and undershoot phenomena is called the water temperature hunting. This hunting problem may adversely affects the cooling system parts, and also the engine and its related components.

To cope with this trouble, the V3 series engine is equipped with the flow control thermostat. The valve has a notch to control the coolant flow rate smoothly in small steps.

(1) Coolant Temperature
(2) Time
(3) Overshoot
(4) Notch

(A) Valve Lift Versus Flow rate
(B) Flow rate
(C) At Short Valve Lift
(D) At Medium Valve Lift
(E) At High Valve Lift
(F) Valve Lift

W1013684

[2] BOTTOM BYPASS SYSTEM

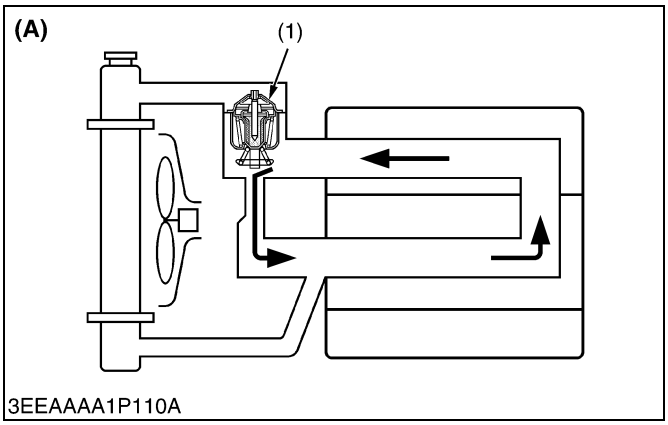

3EEAAAA1P110A

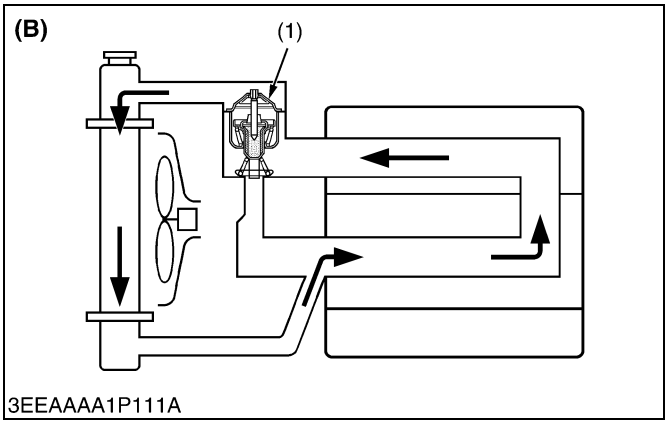

3EEAAAA1P111A

Bottom bypass system is introduced in V3 series for improving the cooling performance of the radiator.

While the temperature of coolant in the engine is low, the thermostat is held closed and the coolant is allowed to flow through the bypass pipe and to circulate in the engine.

When the temperature exceeds the thermostat valve opening level, the thermostat fully opens itself to prevent the hot coolant from flowing through the bypass into the engine.

In this way, the radiator can increase its cooling performance.

(1) Thermostat

(A) Bypass Opened
(B) Bypass Closed

W1013406

5. FUEL SYSTEM

[1] GOVERNOR (STANDARD MECHANICAL TYPE)

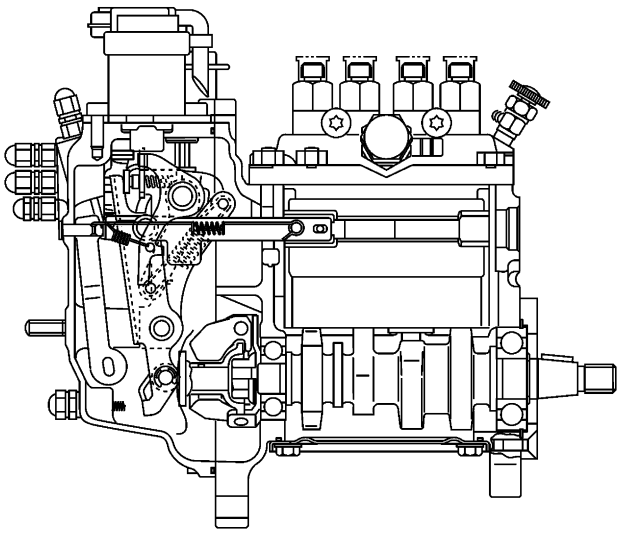

3EEAAAA1P064B

The engine employs the separated fuel injection pump in combination with Kubota's own small multi-function mechanical governor, which enable more dependability.

It also employs the torque limiting mechanism to control the maximum peak torque so that it complies with the regulations of exhaust gas.

This mechanism maintains engine speed at a constant level even under fluctuating loads, provides stable idling and regulates maximum engine speed by controlling the fuel injection rate.

This engine uses a mechanical governor that controls the fuel injection rate at all speed ranges (from idling to maximum speed) by utilizing the balance between the flyweight's centrifugal force and spring tension.

A governor shaft for monitoring engine speed is independent of the injection pump shaft and rotates at twice the speed of conventional types, providing better response to load fluctuation and delivering greater engine output.

W1013830

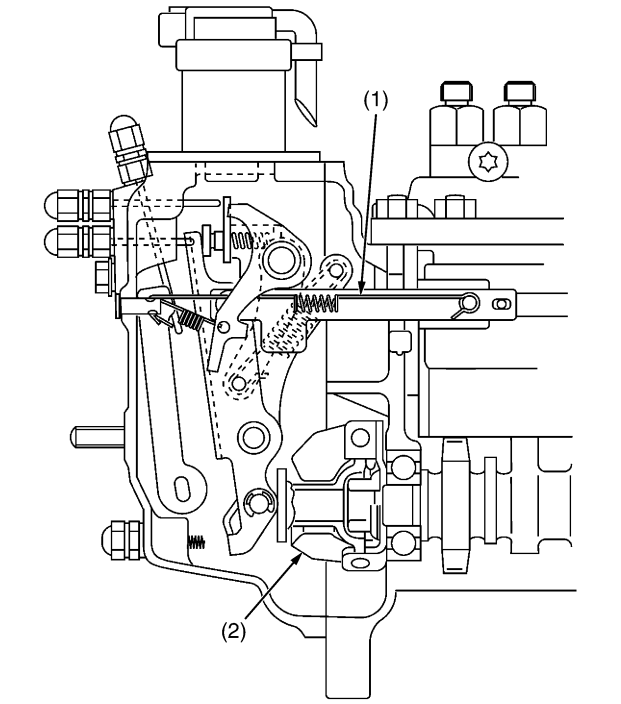

3EEAAAA1P074B

■ At Start

The stop solenoid (energized-to-run type) is powered to release the stop lever.

As no centrifugal force is applied to flyweight (2), low tension of start spring (1) permits control rack to move the starting position, supplying the amount of fuel required to start the engine.

(1) Start Spring (2) Flyweight

W1013967

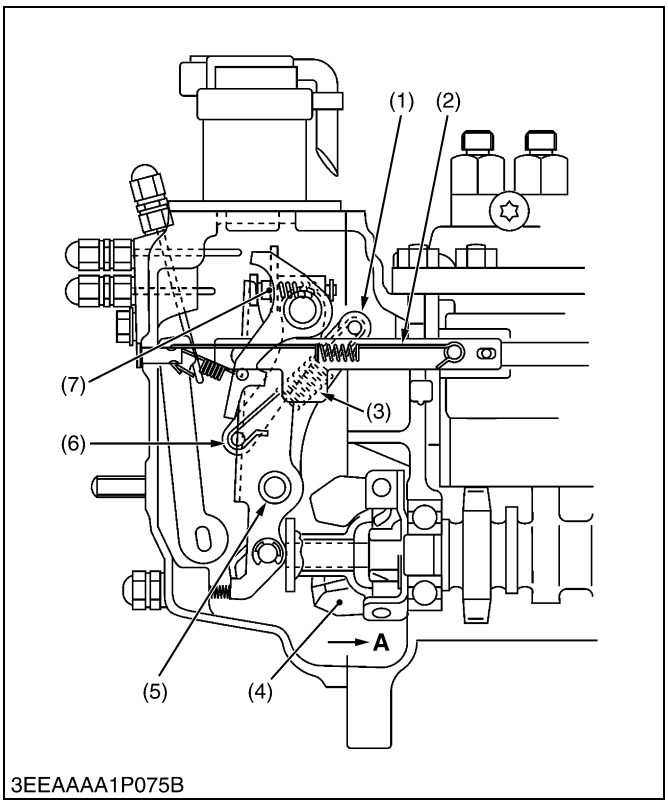

■ At Idling

Turn the speed control lever (6) clockwise to idle the engine. It tensions the governor spring (3) to pull the fork lever 2 (1).

When the fork lever 2 is pulled, it moves the torque spring pin (7) and the fork lever 1 (5) in the direction of the arrow **A** to restrain the weight. In combination with the start spring tension, it is balanced with the centrifugal force of flywheel weight to keep idling.

(1) Fork Lever 2
(2) Start Spring
(3) Governor Spring
(4) Flyweight
(5) Fork Lever 1
(6) Speed Control Lever
(7) Spring Pin

W1014034

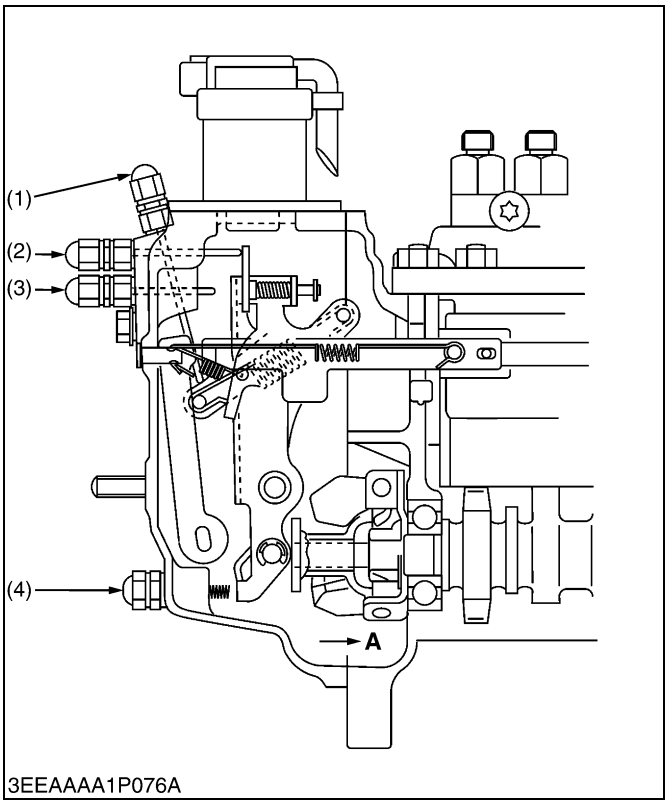

■ At rated speed with full load and overload

As the speed control lever is changed from the middle speed to high speed, the governor spring tension increases to compress the torque spring and move the fork lever 1 in the direction of the arrow **A**.

The fork lever 2 moves until it reaches the output limiting bolt to keep rated rotation and rated output.

When the engine is overloaded, the engine rotating speed decreases and the centrifugal force of flywheel weight decreases. Then the torque spring moves the fork lever 1 in the direction of arrow **A**.

The control rack moves in the direction that increases fuel supply to increase the output. It is balanced with the centrifugal force of the flywheel weight to produce low-speed output (torque output).

(1) No-load Maximum Rotation
(2) Output Limiting Bolt
(3) Torque Limiting Bolt
(4) Idling Adjusting Bolt

W1014276

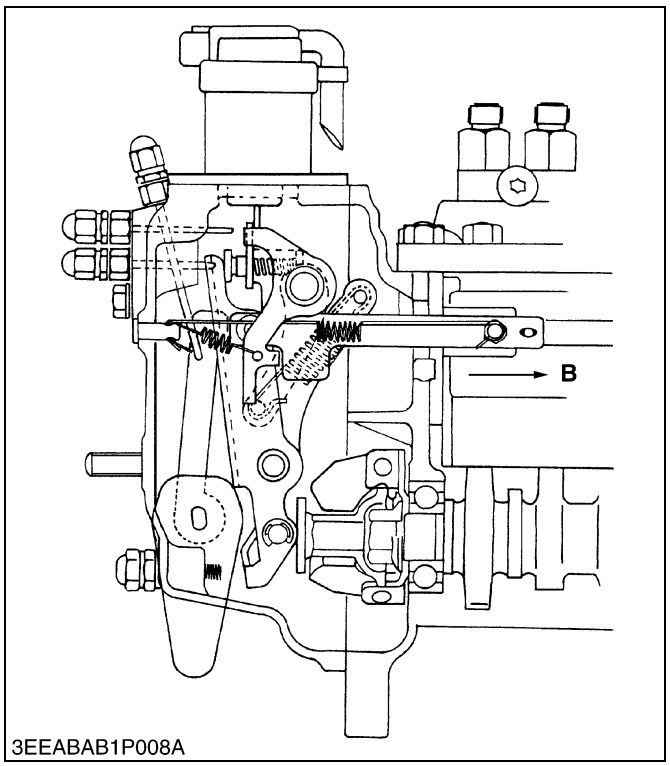

■ **To stop engine**

When the stop solenoid is turned off, the spring tension of the solenoid is released, the rod extrudes and the stop lever moves the control rack in the direction of the arrow **B** which stops the engine.

To stop the engine manually, move the external stop lever to the left.

W1014393

[2] ELECTRONIC GOVERNOR (FACTORY OPTION FOR V3300-E3BG, V3600-T-E3BG, STANDARD FOR V3800DI-T-E3BG)

The electronic governor works in conjunction with a mechanical governor. The function of the electronic governor is, by isochronous control, to maintain constant engine speed the prescribed level, even if the load changes, by controlling the fuel.

(1) Software Block Diagram

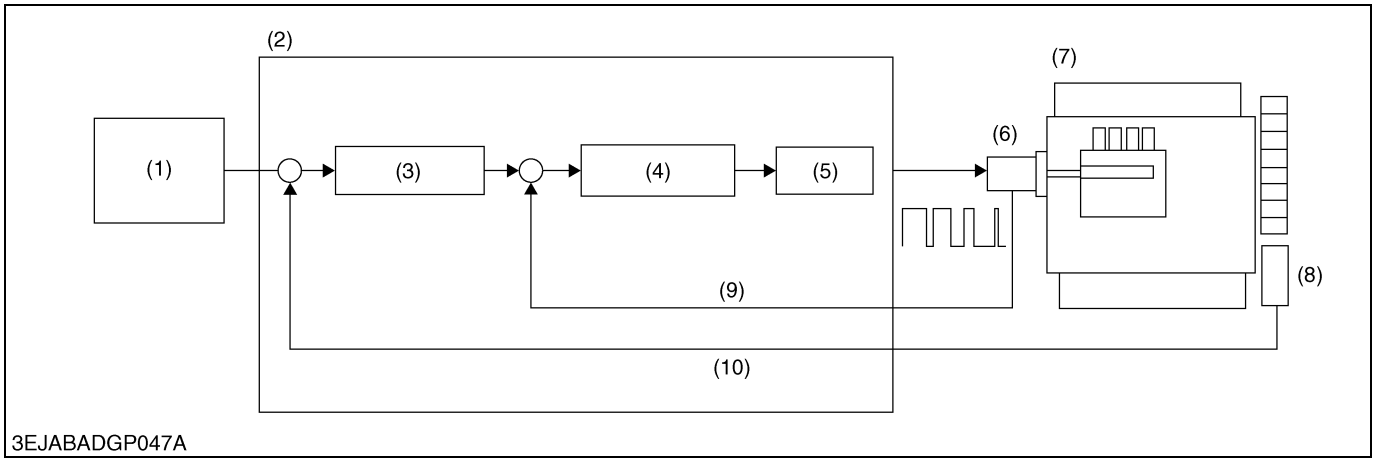

(1) Target of Engine Speed
(2) ECU
(3) Speed Control
(4) Current Control
(5) PWM
(6) Proportional Solenoid
(7) Engine
(8) Engine Speed Sensor
(9) Current of Proportional Solenoid
(10) Engine Speed

■ **NOTE**

- **Feedback Signal : Equivalent fuel injection quantity substituted from the current of engine speed and proportional solenoid.**

(2) Construction

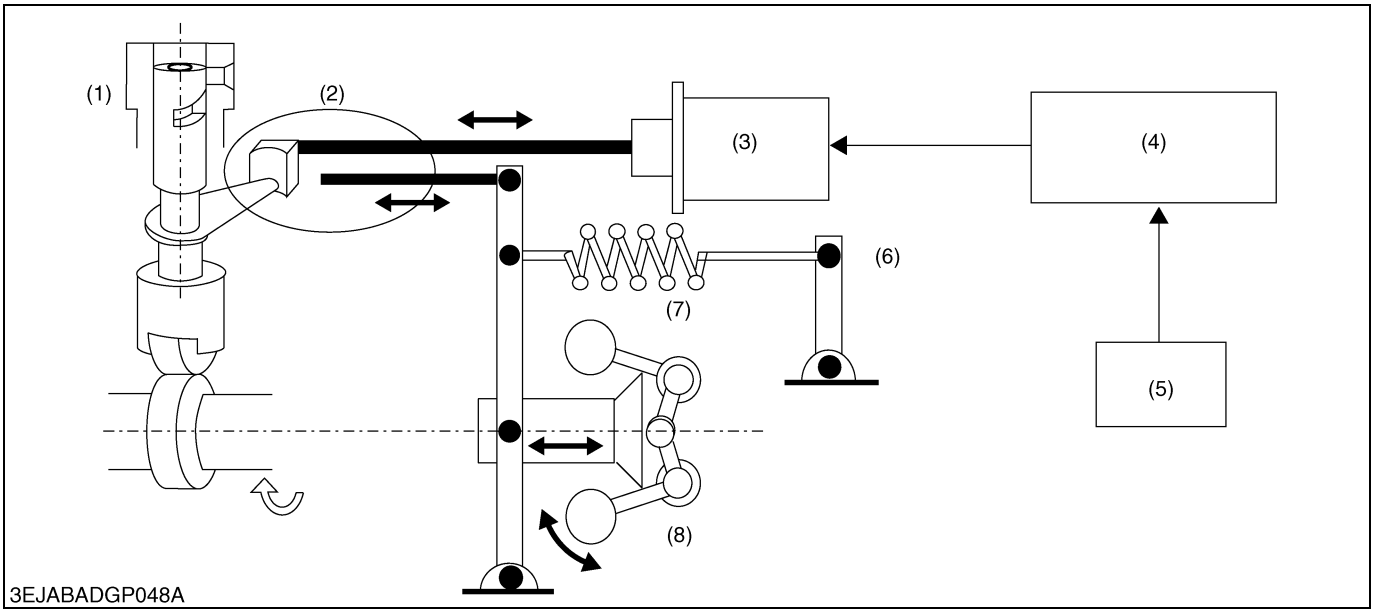

(1) Injection Pump
(2) Control Rack
(3) Proportional Solenoid
(4) ECU
(5) Engine Speed
(6) Accelerate Lever (fixed at maximum speed)
(7) Governor Spring
(8) Governor Weight

(3) Controlling mechanism

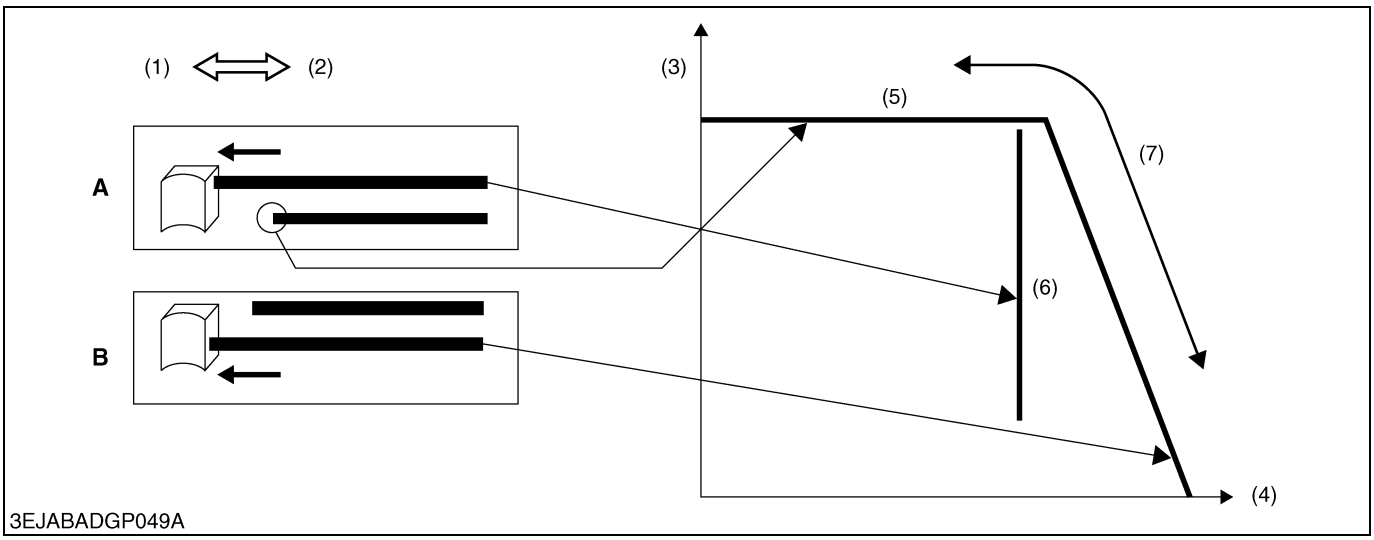

(1) Quantity Reduction
(2) Quantity Increase
(3) Fuel Quantity
(4) Engine Speed
(5) Mechanical Governor Fuel Control
(6) Isochronous Control
(7) Mechanical Governor Operating Curve

A : Within the range of the mechanical governor, free speed control occurs.
B : If the engine rotational speed increases, priority is given to the mechanical governor control function.

(4) Emergency Engine Stop Function

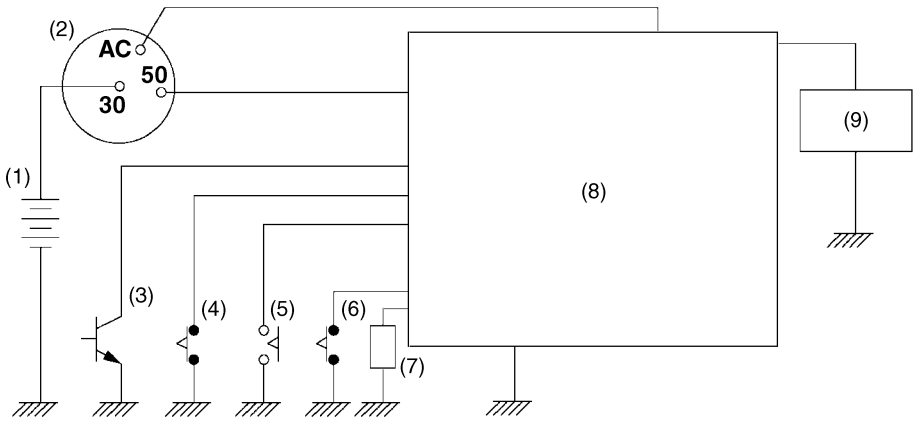

3EJADAAGP010A

(1) Battery
(2) Key Switch
(3) Alternator **L** Terminal
(4) Oil Pressure Switch
(5) Water Temperature Switch
(6) Option
(7) Engine Speed Sensor
(8) ECU
(9) Proportional Solenoid

1. Circuit design
   The ECU consists of the following function: speed control, delay timer that serves to delay detection until the oil pressure rises; sensor function that senses an oil pressure, water temperature or battery charge error and holds the error status; emergency stop function that deactivates the delay timer and lock-in circuits and forces the ECU to turn on.
2. Function details (See the block diagram.)
   - Speed control
     Rotational speed is constantly maintained at the prescribed level, even if the load changes, fuel control according to isochronous control of the Proportional Solenoid.
   - Delay timer function
     The timer provides for a delay from the instant the starter is released to the instant the sensors get started. The timer is activated by the voltage at the key switch's No. 50 terminal.
   - Sensor function
     This function serves to sense the oil pressure switch, water temperature switch, alternator **L** terminal and engine speed sensor. If any of the 4 elements gets grounded for a specified time or longer, the function is activated to hold this status.
   - Emergency stop function
     The function is used to deactivate the delay timer and force the engine to a stop.
3. Circuit behavior
   For a certain time after the key switch has been set to the **ST** position to get the engine started, the oil pressure, water temperature and battery charge status are not detected for an error and an emergency stop.
   When the key switch has been returned from the **ST** to **ON** position (**AC** terminal active), the ECU gets ready for error detection after a specified delay time.
   If the key switch is placed to the **OFF** position or any of the water temperature, oil pressure switch, battery charge circuit and engine speed sensor is detected, the ECU is activated to turn off the solenoid power.

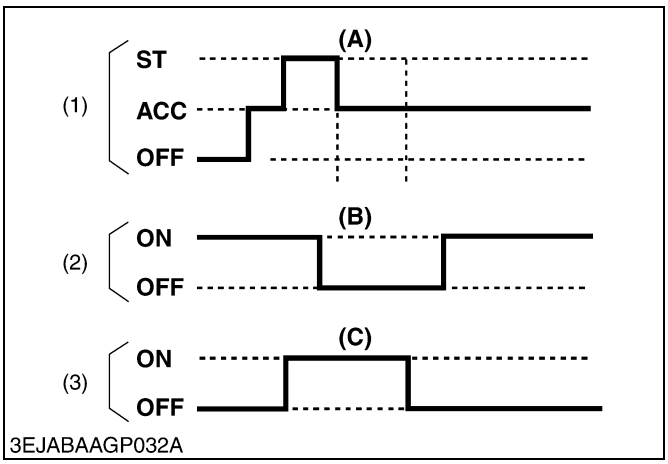

■ Emergency stop by sensor activation

1. A specified time after the key switch has been returned from the **ST** to **ON** position, the system gets ready to detect an error.
2. The oil pressure switch stays out of function while the engine is at a stop. When the oil pressure is as specified, the switch gets back to normal after the engine has got restarted.
3. If any of the sensors detects an error, the proportional solenoid power is interrupted, which brings the engine to a stop.

(1) Key Switch
(2) Oil Pressure Switch
(3) Proportional Solenoid

(A) Engine Started
(B) Delay Timer
(C) Error Detected

W1030317

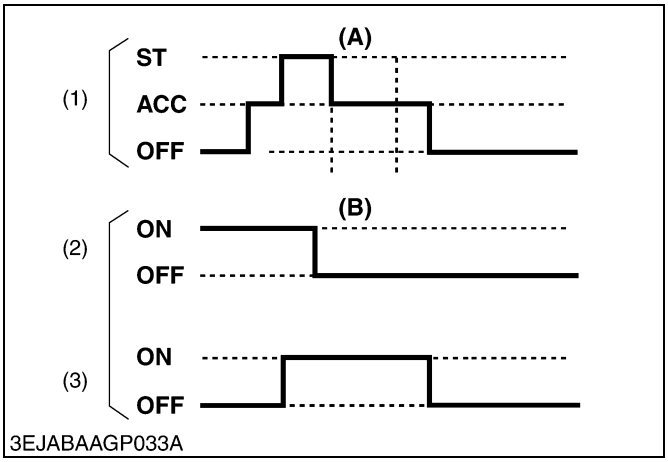

■ Usual stop

1. A specified time after the key switch has been returned from the **ST** to **ON** position, the system gets ready to detect an error.
2. The oil pressure switch stays out of function while the engine is at a stop. When the oil pressure is as specified, the switch gets back to normal after the engine has got restarted.
3. When the key switch is set to the **OFF** position, the proportional solenoid power is interrupted, which brings the engine to a stop.

(1) Key Switch
(2) Oil Pressure Switch
(3) Proportional Solenoid

(A) Engine Started
(B) Delay Timer

W1016017

(5) Main Components

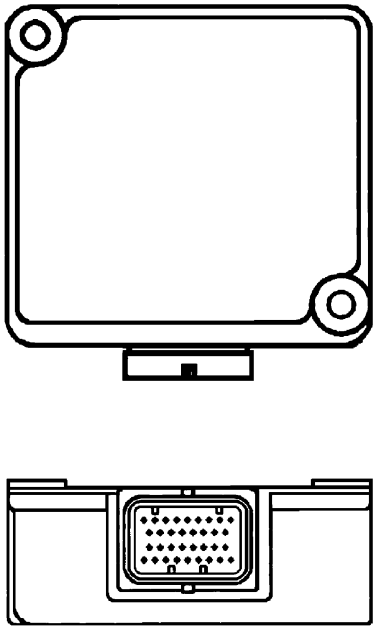

3EEAAAB1P001A

■ **ECU**

It processes the speed signal received from the speed sensor and compares it to a reference speed set with Calibration Program. The output of the control unit is a pulse width modulated signal to the proportional solenoid.

W11132660

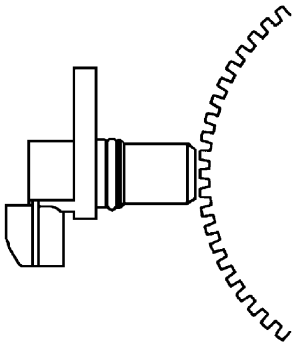

3EEAAAB1P002A

■ **Engine Speed Sensor**

The engine speed sensor detects engine speed by converting mechanical motion into electrical signals.

W11134530

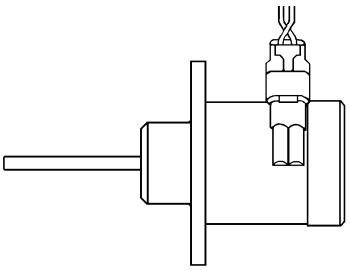

3EEAAAB1P033A

■ **Proportional Solenoid**

The actuator converts a pulse width modulated signal received from the controller, to an output rod position, proportional to the duty cycle of the pulse width modulated signal.

W11135100

(6) Wiring Diagram

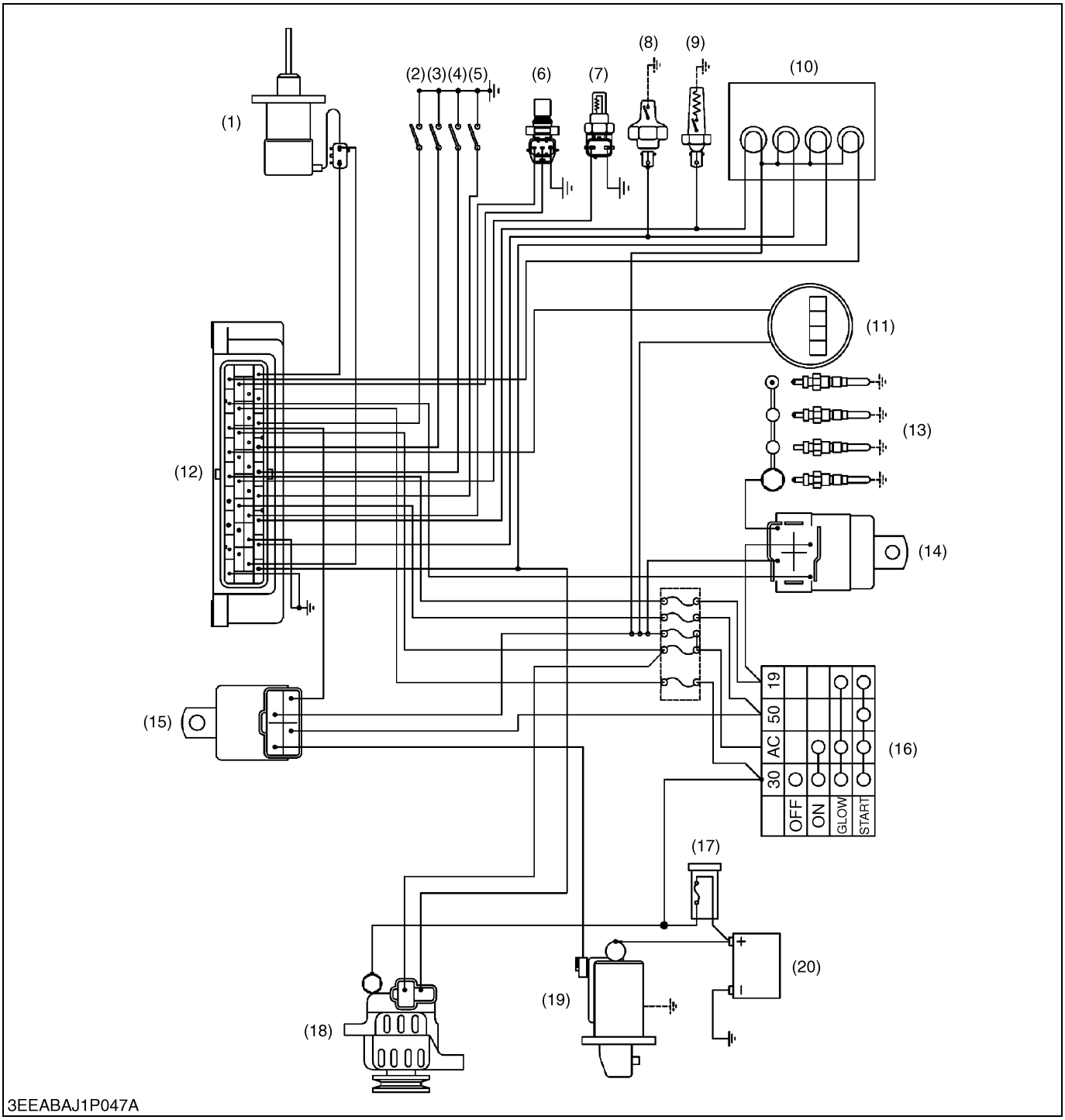

(1) Actuator
(2) Speed Switch
(3) Slow Down Switch
(4) Option
(5) Manual Stop Sensor
(6) Speed Sensor
(7) Water Temperature Sensor
(8) Oil Switch
(9) Water Temperature Switch
(10) Pilot Lamp
(11) Hour Meter
(12) Control Unit
(13) Glow Plug or Intake Air Heater
(14) Glow Plug Relay
(15) Start Relay
(16) Key Switch
(17) Slow Blow Fuse
(18) Alternator
(19) Starter
(20) Battery

[3] MECHANICAL TIMER WITH COLD START ADVANCE FUNCTION (V3600-E3B, V3800DI-T-E3B, V3600-E3CB, V3800DI-T-E3CB, V3800DI-T-E3BG)

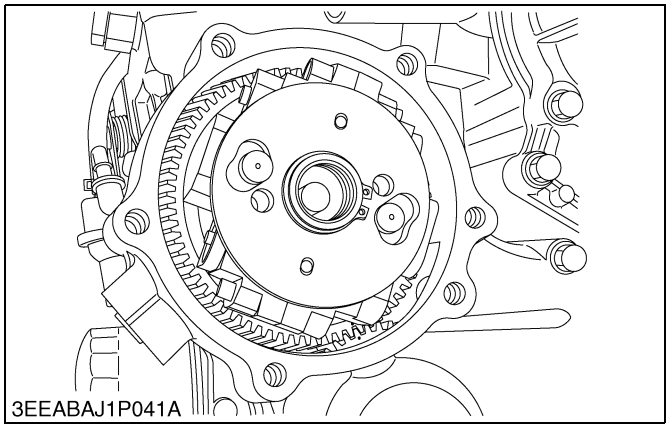

This device makes the fuel injection timing advanced by engine oil temperature and engine rpm in order to improve the engine cold start-ability and reduce the blue white smoke.

W1017432

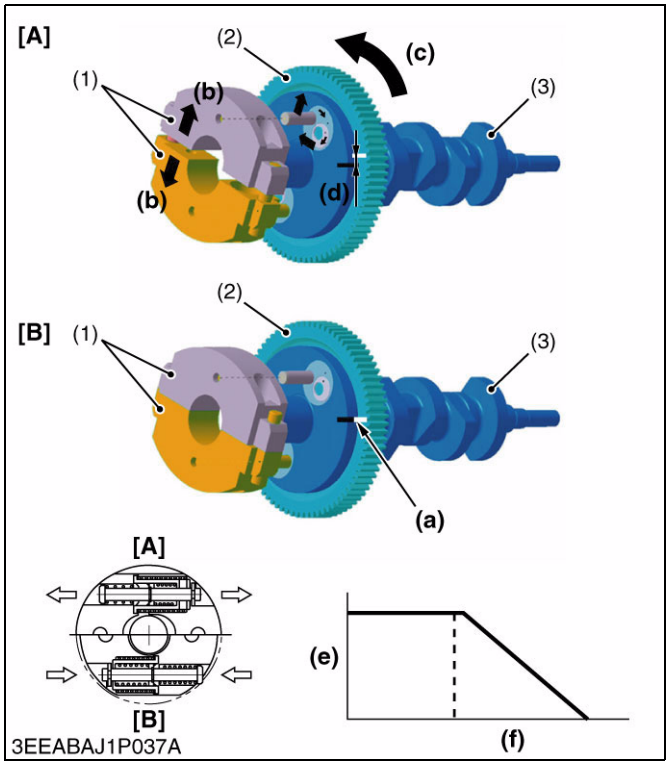

■ Thermal control

When the engine rpm is low and engine oil temperature is under 30 °C, the fuel injection timing is max. advanced.

When the engine rpm is low and engine oil temperature is higher than 70 °C, the fuel injection timing advance is 0 degree.

The fuel injection timing advance by engine oil temperature is controlled with shape memory (storage) spring.

(1) Timer Flyweight
(2) Injection Pump Gear
(3) Fuel Camshaft

[A] At Cold
[B] At Hot

(a) No Gap Between Timer and Injection Pump Gear
(b) Spring Force
(c) Advanced Injection Timing
(d) Gap Between Timer and Injection Pump Gear
(e) Advanced Injection Timing (degree)
(f) Engine Oil Temperature

W1017478

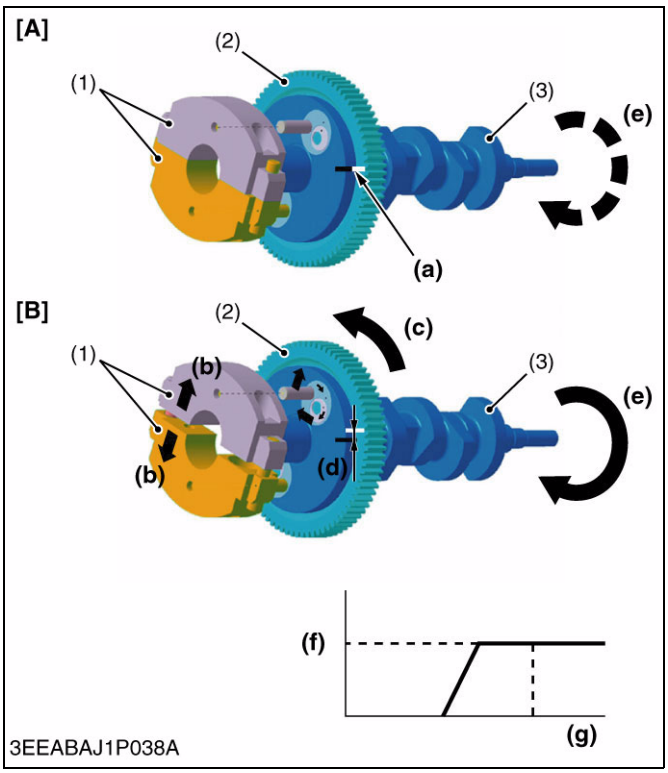

■ Speed control (Except V3800DI-T-E3BG)

If the engine rpm is higher than a certain rpm, the fuel injection timing advance by engine oil temperature does not work. At that time, the quantity of advance timing is variably changed by centrifugal force of the timer flyweights which meets engine rpm.

(1) Timer Flyweight
(2) Injection Pump Gear
(3) Fuel Camshaft

[A] At Low rpm
[B] At High rpm

(a) No Gap Between Timer and Injection Pump Gear
(b) Centrifugal Force
(c) Advanced Injection Timing
(d) Gap Between Timer and Injection Pump Gear
(e) Rotation
(f) Advanced Injection Timing (Degree)
(g) Engine rpm

W1017759

[4] THROTTLE NOZZLE (V3600-E3B, V3600-T-E3B, V3600-E3CB, V3600-T-E3CB, V3300-E3BG, V3600-T-E3BG)

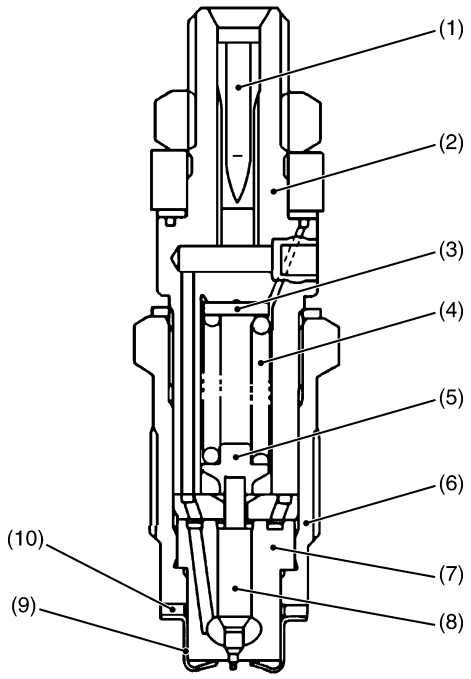

3EEAAAA1P047A

The small-size DENSO made OPD mini nozzle is of a flat-cut-provided double throttle type.

This type of nozzle is designed to control the injection quantity when the lift rate is low at start of injection, and to cut down on the knocking sound caused by excessive fuel injection by giving the needle valve section more taper than before to prevent the rapid increase in the injection quantity when the initial injection turns into the full-force injection.

Also, employed to prevent the injection quantity loss in the throttle section caused by carbon, the flat cut provided at the needle valve section helps the throttle withstand long use and reduce as much knocking sound as when it was new.

The heat seal is employed to improve the durability and reliability of the nozzle.

(1) Bar Filter
(2) Nozzle Holder Body
(3) Adjusting Washer
(4) Nozzle Spring
(5) Push Rod
(6) Retaining Nut
(7) Nozzle Piece
(8) Needle Valve
(9) Heat Seal
(10) Gasket

W1015902

[5] 2 STAGE DI NOZZLE (V3800DI-T-E3B, V3800DI-T-E3CB, V3800DI-T-E3BG)

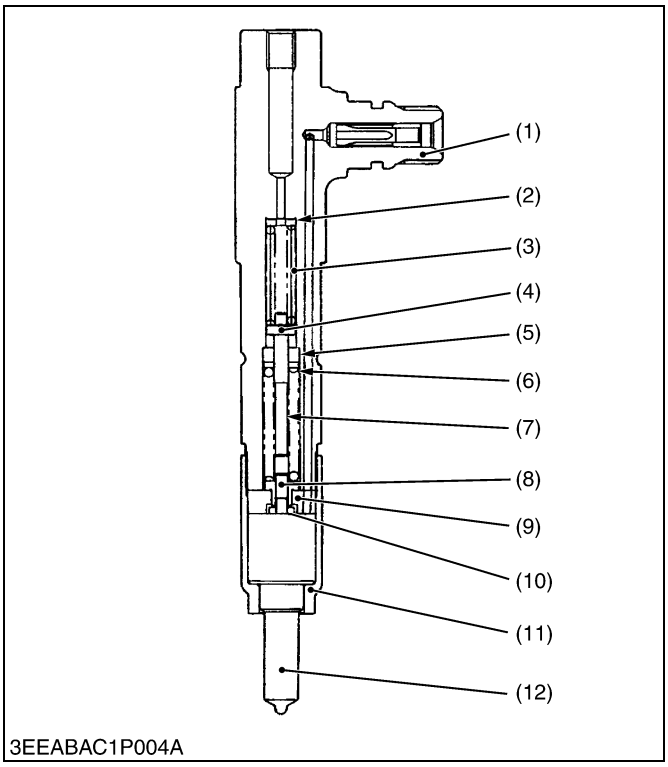

Exhaust and noise regulations are becoming increasingly strict, particularly in regard to the reduction of NOx (nitrogen oxides) and particulates.

The two-spring nozzle holder has been developed to reduce NOx (nitrogen oxides) and particulates from direct injection diesel engine exhaust.

■ **Features**

The two-spring nozzle holder limits needle valve lift at initial valve opening to throttle the injection quantity. Main injection occurs when the in-line pressure has increased sufficiently to move the needle valve through its full lift.

This gives the following features.

- Improved engine stability at low and intermediate speeds.
- Decreased engine hunting and surge.
- Decreased noise at idling.
- Decreased idling speed because of improved engine stability.
- Stabilized fuel injection characteristics from the injection pump and nozzle system, and easier matching of governor characteristics to engine demand.

(1) Nozzle Holder Body
(2) 1st Stage Injection Pressure Adjusting Shim
(3) First Spring
(4) Pressure Pin
(5) Spring Seat
(6) 2nd Stage Injection Pressure Adjusting Shim
(7) Second Spring
(8) Pre-lift Adjusting Spring Seat
(9) Chip-packing
(10) Max-lift Adjusting Washer
(11) Retaining Nut
(12) Nozzle

W1014568

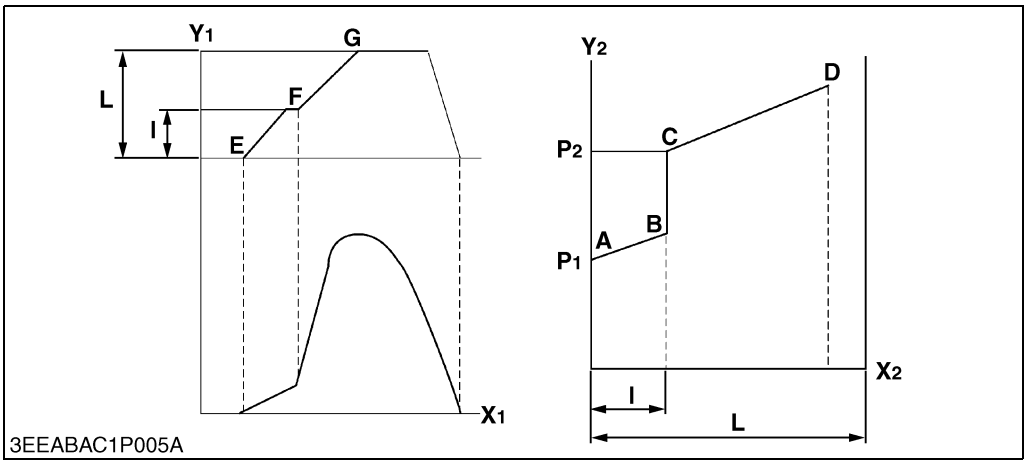

A-B : First Spring's Set Force
B-C-D : Combined Force of First and Second Springs
P1 : First Opening Pressure
P2 : Second Opening Pressure

L : Full Needle Valve Lift
I : Needle Valve Pre-lift

X1 : Cam Angle (°)
Y1 : Injection Rate (mm3/°)
X2 : Needle Valve Lift (mm)
Y2 : In-line Pressure

W1014795

■ **First opening pressure**

The force of the high pressure fuel delivered by the injection pump acts to push the needle valve up. When this force exceeds the set force of the first spring, the nozzle's needle valve pushes the first pushrod up and the valve opens. (First opening pressure is represented by point **E** in the left hand figure, and point **A** in the right hand figure.)

■ **Second opening pressure**

When the first pushrod has been lifted through the pre-lift, it contacts the second pushrod. As the set force of the second spring is acting on the second pushrod, the combined forces of both the first spring and the second spring then act on the needle valve, which will not lift unless these forces are overcome.

When the high pressure fuel (ie, in-line pressure) overcomes the combined forces of the first and second springs, the needle valve is again lifted and main injection can begin. (Second opening pressure is represented by point **F** in the bottom left hand figure and **B-C** in the above figure.)

[6] INJECTION PUMP WITH F.S.P. (V3800DI-T-E3B, V3800DI-T-E3CB, V3800DI-T-E3BG)

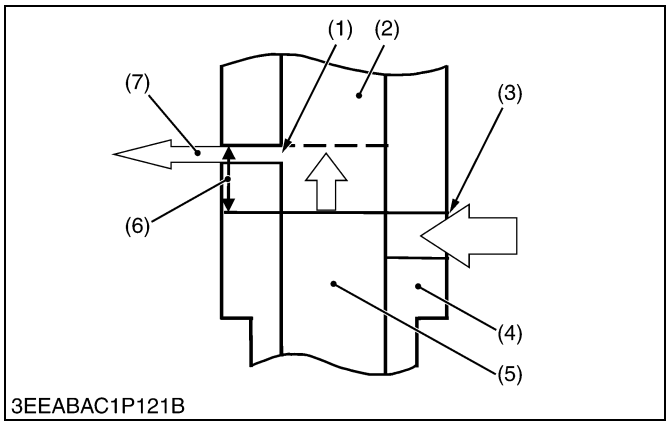

The fuel injection pump with F.S.P. (Fine Spill Port) mechanism is equipped with two functions: speed timer function and injection rate control function.

The former function works like this. As the rpm is low, the injection timing gets delayed. This helps cut down on NOx and operating noise.

The latter function serves to keep down the initial injection rate and keep up the later injection rate, which cuts down on NOx and PM as well.

(1) Fine Spill Port (F.S.P.)
(2) Plunger Chamber
(3) Main Port
(4) Cylinder
(5) Plunger
(6) F.S.P. Stroke
(7) Leaking Fuel at Initial Fuel Pressure-Feed Stage

W1014969

6. TURBOCHARGER SYSTEM

[1] BOOST COMPENSATOR (OPTION FOR TURBOCHARGED MODEL)

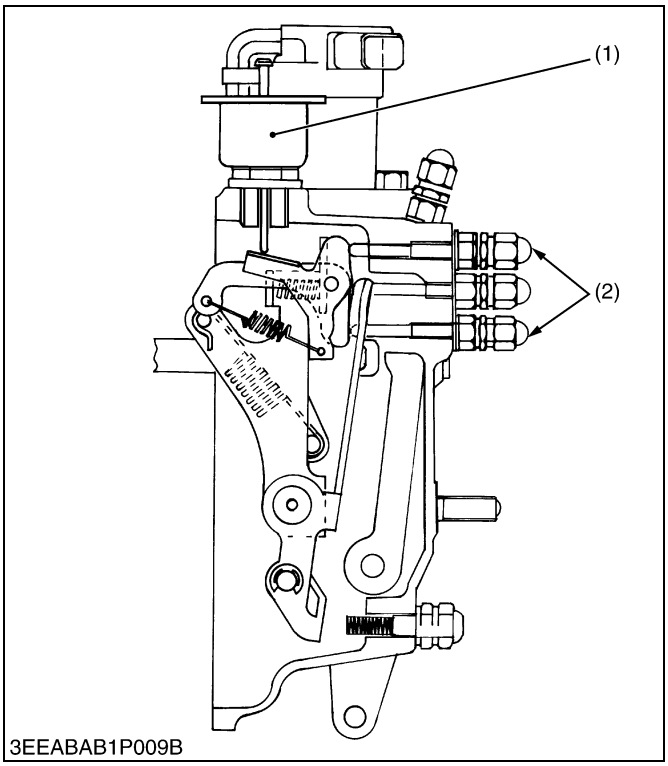

The boost compensator is controlled by the boost pressure of the control mechanism which controls transient smoke caused by oversupply of fuel when the engine starts and accelerates.

When the boost pressure is lower than working pressure of the boost actuator (1), it prevents oversupply of fuel to reduce transient smoke.

When the boost pressure is higher than working pressure of the boost actuator (1), it controls the supply of fuel to the equivalent of maximum power / rated speed output.

The boost compensator adjusting screws (2) are set and tamper-proof capped in factory, so never take off the tamper-proof cap and readjust the screws.

(1) Boost Actuator
(2) Boost Compensator Adjusting Screw

W1014569

7. INTAKE SYSTEM

[1] INTAKE AIR HEATER (V3800DI-T-E3B, V3800DI-T-E3CB, V3800DI-T-E3BG)

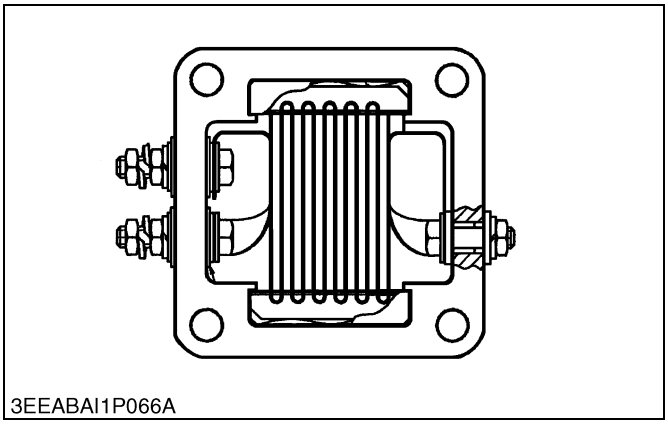

The intake air heater is introduced in order to further improve the starting performance and to reduce the white smoke at cold starting.

The intake air heater is mounted on the intake manifold. In this new construction, there is no need to arrange any glow plug on the cylinder head. This means that a multi-valve design can be implemented and that the starting performance and serviceability are enhanced.

W1015544

8. EXHAUST GAS RECIRCULATION (EGR) SYSTEM (V3600-T-E3B, V3800DI-T-E3B, V3600-T-E3CB, V3800DI-T-E3CB, V3600-T-E3BG, V3800DI-T-E3BG)

[1] GENERAL

In order to meet with the strict emission regulations, Kubota has adopted the EGR on the V3600-T and V3800DI-T. The nitrogen oxide (NOx) which is a hazardous component in exhaust gas is generated by oxidation of nitrogen in the air, due to rise of the combustion temperature in cylinders. The EGR is a system in which the exhaust gas with lean oxygen is cooled and returned to cylinders again in order to lower the combustion temperature. As a result, NOx can be decreased.

And EGR has 2 types. One is an internal EGR, the other is an external EGR.

(1) Internal EGR (V3600-T-E3B, V3600-T-E3CB, V3600-T-E3BG)

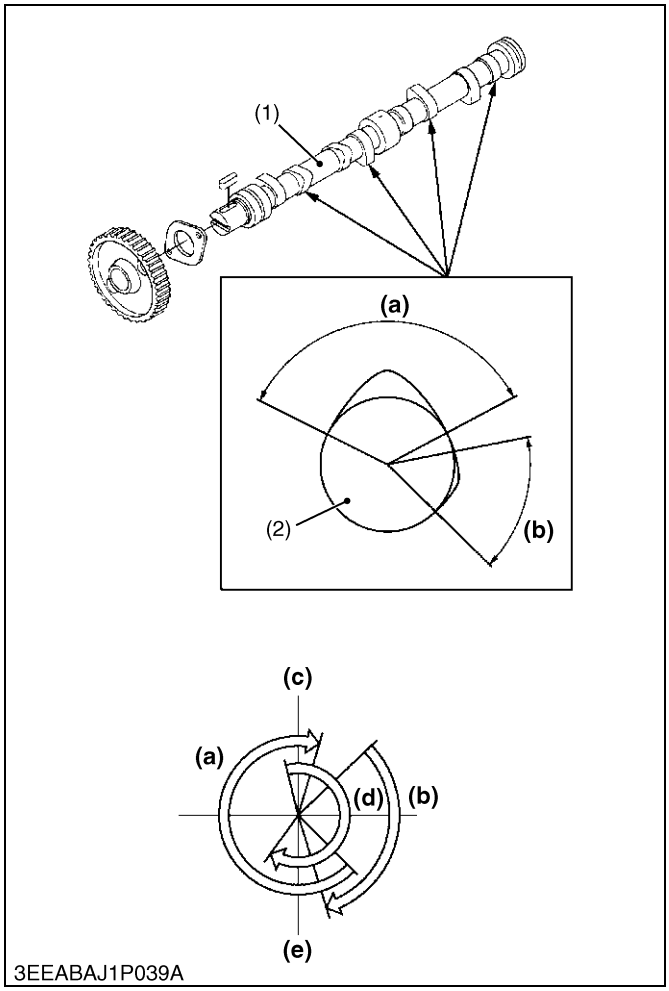

Internal EGR consists of 2 stage exhaust camshaft. At the exhaust stroke, 1st stage exhaust cam opens the exhaust valve, and exhaust gas flows into the exhaust manifold. At the suction stroke, intake valve is open and fresh air flows into the cylinder, and also, 2nd stage exhaust cam opens the exhaust valve, and exhaust gas in the exhaust manifold is sucked back into the cylinder.

(1) Camshaft
(2) 2 Stage Exhaust Cam

(a) Exhaust Stage
(b) EGR Stage
(c) T.D.C. (Top Dead Center)
(d) Intake Stage
(e) B.D.C. (Bottom Dead Center)

W1174459

(2) External / Mechanical EGR (V3800DI-T-E3B, V3800DI-T-E3CB, V3800DI-T-E3BG)

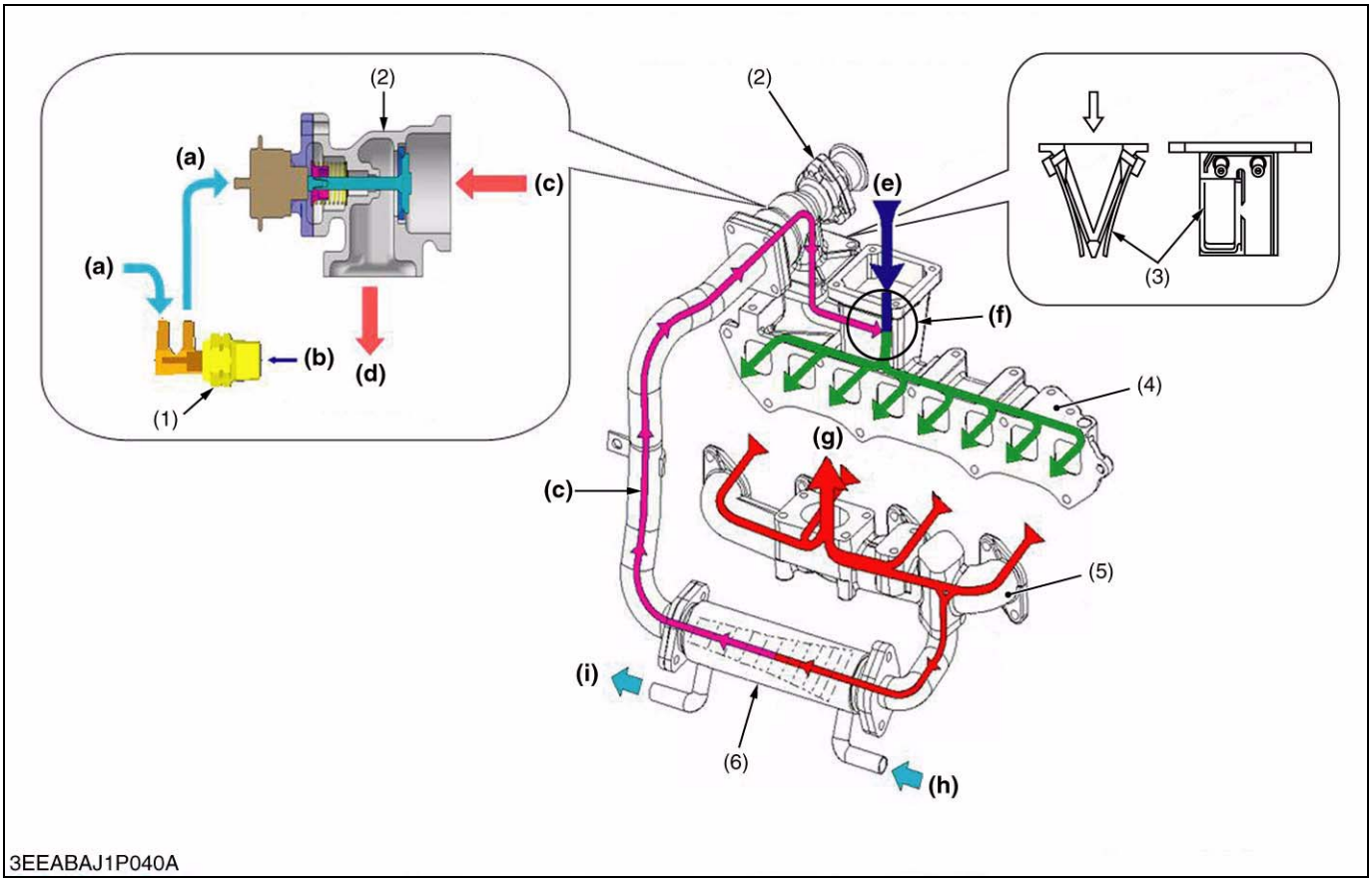

(1) Thermo Valve
(2) Mechanical EGR Valve
(3) Reed Valve
(4) Intake Manifold
(5) Exhaust Manifold
(6) EGR Cooler

(a) Boost Pressure
(b) Coolant Temperature
(c) Cooled EGR Gas
(d) To The Intake Manifold
(e) Fresh Air
(f) Cooled EGR Gas Merges with Fresh Air
(g) Exhaust
(h) Coolant Inlet
(i) Coolant Outlet

External / Mechanical EGR consists of water cooled EGR cooler, mechanical EGR valve, reed valve and thermo valve.

When the coolant temperature is getting higher, thermo valve is open and the boost pressure of intake manifold gets to reach the diaphragm of mechanical EGR valve.

If the coolant temperature is high, but the boost pressure is low, the EGR valve does not open. If coolant temperature is high, boost pressure is also high, EGR valve is open and cooled EGR gas through the water cooled EGR cooler flows into the intake manifold. And the reed valve between EGR valve and intake manifold prevents the fresh air flowing into EGR system.

(A) EGR Cooler

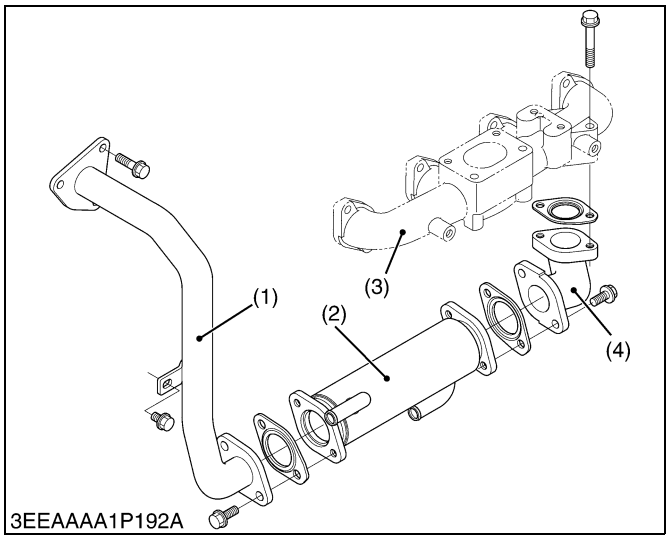

The EGR (Exhaust Gas Recirculation) cooler is used to lower combustion temperature and efficiently cool EGR gas, with the aim of reducing the NOx that is in the exhaust gas of diesel engine.

The EGR cooler is placed between the exhaust manifold and the intake manifold of the engine and returns the cooled exhaust gases to the engine suction side.

The EGR cooler has resistant to clogging up, compact and efficient tubes internally.

(1) Pipe
(2) EGR Cooler
(3) Exhaust Manifold
(4) Flange
(5) Tube

A Coolant Inlet Port
B Coolant Outlet Port

W1175338

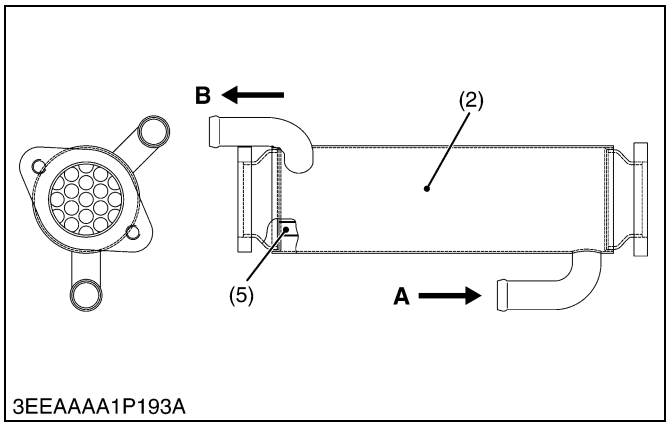

(B) Thermo Valve

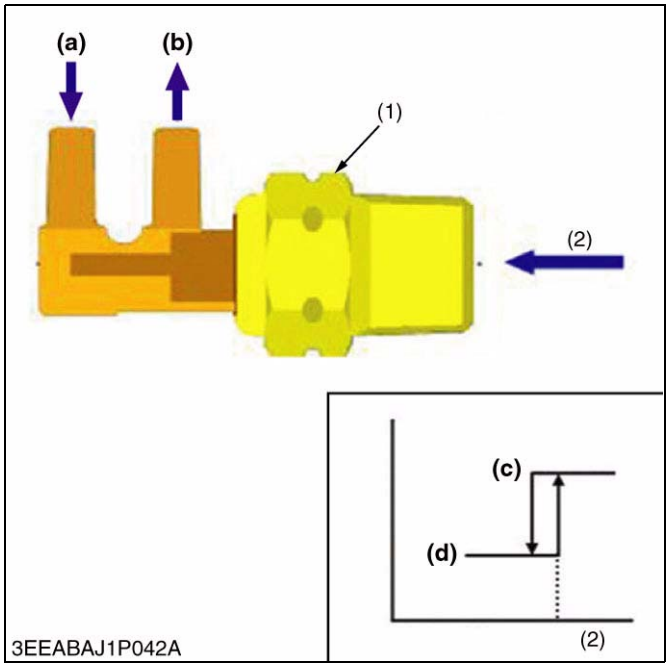

Thermo valve controls boost pressure “ON / OFF” for the EGR valve.

If the coolant temperature is low, thermo valve is closed, so that boost pressure does not reach to the EGR valve.

If the coolant temperature is high, thermo valve is open, so that boost pressure reaches to the EGR valve.

(1) Thermo Valve
(2) Coolant Temperature

(a) Boost Pressure From Intake Manifold
(b) Boost Pressure To EGR Valve
(c) Open
(d) Close

W1175753

(C) Mechanical EGR Valve

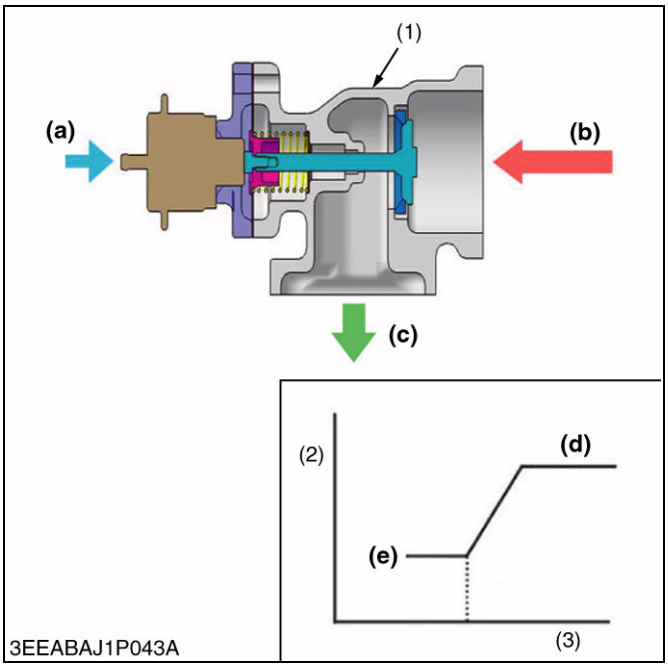

Mechanical EGR valve controls the flow of cooled EGR gas to the intake manifold.

If the boost pressure is low, EGR valve is closed, so cooled EGR gas does not flow to the intake manifold.

If the boost pressure is getting higher, EGR valve is opening and cooled EGR gas is flowing to the intake manifold.

(1) Mechanical EGR Valve
(2) EGR Valve Lift
(3) Boost Pressure

(a) Boost Pressure From Intake Manifold
(b) Cooled EGR Gas
(c) Cooled EGR Gas To The Intake Manifold
(d) Open
(e) Close

W1176088

(D) Reed Valve

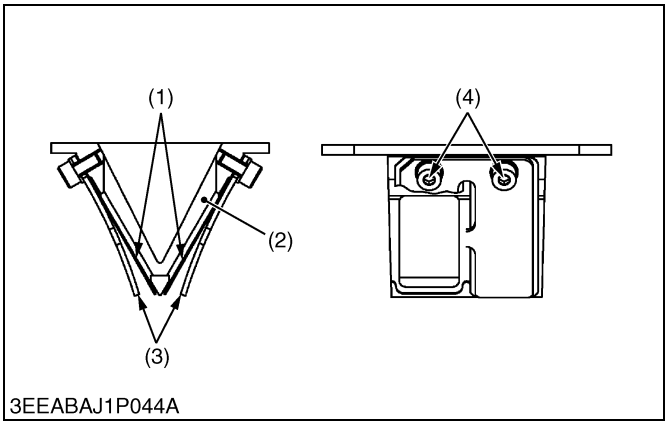

The reed valve is provided at the confluence of exhaust gas after passing the EGR valve, and intake air. It operates by the pressure difference between inside of the crankcase and the atmosphere, and prevents back flow of the mixture of exhaust gas and intake air generated by the piston and valves. It is used as the secondary air introduction device for the countermeasure against exhaust gas of four-cycle engines.

(1) Valve
(2) Case
(3) Stopper
(4) Screw

W1176594

SERVICING

CONTENTS

1. TROUBLESHOOTING S-1
   [1] ENGINE BODY S-1
   [2] ELECTRONIC GOVERNOR (FACTORY OPTION FOR V3300-E3BG, V3600-T-E3BG / STANDARD FOR V3800DI-T-E3BG) S-5
2. SERVICING SPECIFICATIONS S-7
3. TIGHTENING TORQUES S-19
   [1] TIGHTENING TORQUES FOR GENERAL USE SCREWS, BOLTS AND NUTS S-19
   [2] TIGHTENING TORQUES FOR SPECIAL USE SCREWS, BOLTS AND NUTS S-20
4. CHECKING, DISASSEMBLING AND SERVICING S-22
   [1] CHECKING AND ADJUSTING S-22
      (1) Engine Body S-22
      (2) Lubricating System S-25
      (3) Cooling System S-25
      (4) Fuel System S-28
      (5) Electrical System S-34
      (6) Turbocharger S-38
      (7) Electronic Governor (Factory Option for V3300-E3BG, V3600-T-E3BG / Standard for V3800DI-T-E3BG) S-39
   [2] EGR SYSTEM S-44
      (1) Checking the function of EGR system (V3800DI-T-E3B, V3800DI-T-E3CB, V3800DI-T-E3BG only) S-44
   [3] DISASSEMBLING AND ASSEMBLING S-46
      (1) Draining Oil and Coolant S-46
      (2) External Components S-47
      (3) TURBOCHARGER(V3600-T-E3B, V3800DI-T-E3B, V3600-T-E3CB, V3800DI-T-E3CB, V3600-T-E3BG, V3800DI-T-E3BG) S-48
      (4) Exhaust Gas Recirculation (EGR) (V3800DI-T-E3B, V3800DI-T-E3CB, V3800DI-T-E3BG) S-49
      (5) Cylinder Head and Valves S-51
      (6) Thermostat S-57
      (7) Injection Nozzle S-58
      (8) Water Pump and Oil Cooler S-71
      (9) Gear Case and Timing Gears S-72
      (10) Piston and Connecting Rod S-75
      (11) Flywheel and Crankshaft S-79
      (12) Intake Air Heater [V3800DI-T-E3B, V3800DI-T-E3CB, V3800DI-T-E3BG] S-83
      (13) Starter S-83
      (14) Alternator S-83
   [4] SERVICING S-86
      (1) Cylinder Head S-86
      (2) Timing Gears S-96
      (3) Piston and Connecting Rod S-101
      (4) Crankshaft S-104
      (5) Cylinder S-107
      (6) Oil Pump S-108
      (7) Starter S-108

(8) Alternator S-110

1. TROUBLESHOOTING

[1] ENGINE BODY

Symptom	Probable Cause	Solution	Reference Page
Engine Does Not Start	No fuel	Replenish fuel	G-11
	Air in the fuel system	Vent air	G-11
	Water in the fuel system	Change fuel and repair or replace fuel system	G-11, 13, 15
	Fuel hose clogged	Clean or replace	G-11, 31
	Fuel filter clogged	Replace	G-13, 15
	Excessively high viscosity of fuel or engine oil at low temperature	Use specified fuel or engine oil	5, 6, G-7, 10
	Fuel with low cetane number	Use specified fuel	5, 6, G-7
	Fuel leak due to loose injection pipe retaining nut	Tighten retaining nut	S-51, 53
	Incorrect injection timing	Adjust	S-28
	Fuel camshaft worn	Replace	S-66, 67
	Injection nozzle clogged	Clean or replace (V3600-E3B, V3600-T-E3B, V3600-E3CB, V3600-T-E3CB, V3300-E3BG, V3600-T-E3BG) Repair or replace (V3800DI-T-E3B, V3800DI-T-E3CB, V3800DI-T-E3BG)	S-32, 33, 34, 51, 53
	Injection pump malfunctioning	Repair or replace	S-30, 31, 68
	Seizure of crankshaft, camshaft, piston, cylinder or bearing	Repair or replace	–
	Compression leak from cylinder	Replace head gasket, tighten cylinder head screw, (glow plug (V3600-E3B, V3600-T-E3B, V3600-E3CB, V3600-T-E3CB, V3300-E3BG, V3600-T-E3BG only)) and nozzle holder	S-51, 52, 53, 54, 55, 56
	Improper valve timing	Correct or replace timing gear	S-73
	Piston ring and cylinder worn	Replace	S-77, 78, 102, 103, 107
	Excessive valve clearance	Adjust	S-24
	Stop solenoid malfunctioning	Replace	S-38

W1465430

Symptom	Probable Cause	Solution	Reference Page
Starter Does Not Run	Battery discharged	Charge	G-19, 20, S-34
	Starter malfunctioning	Repair or replace	S-36, 83, 108
	Key switch malfunctioning	Replace	–
	Wiring disconnected	Connect	–
Engine Revolution Is Not Smooth	Fuel filter clogged or dirty	Replace	G-13, 15
	Air cleaner clogged	Clean or replace	G-12, 28
	Fuel leak due to loose injection pipe retaining nut	Tighten retaining nut	S-51, 53
	Injection pump malfunctioning	Repair or replace	S-30, 31, 68
	Incorrect nozzle opening pressure	Adjust (V3600-E3B, V3600-T-E3B, V3600-E3CB, V3600-T-E3CB, V3300-E3BG, V3600-T-E3BG) Repair or replace (V3800DI-T-E3B, V3800DI-T-E3CB, V3800DI-T-E3BG)	S-32, 33, 34, 51, 53
	Injection nozzle stuck or clogged	Repair or replace	S-32, 33, 34, 51, 53
	Governor malfunctioning	Repair	S-63, 64
	Turbocharger bearing worn out	Replace the turbocharger assembly	S-48
	Turbocharger shaft bent	Replace the turbocharger assembly	S-48
	Turbocharger fin or other part damaged due to foreign matters	Replace the turbocharger assembly	S-48
Either White or Blue Exhaust Gas Is Observed	Excessive engine oil	Reduce to specified level	G-10
	Piston ring and cylinder worn or stuck	Repair or replace	S-77, 78, 102, 103, 107
	Incorrect injection timing	Adjust	S-28
Oil Leak into Exhaust Pipe or Suction Pipe	Waste oil pipe clogged or deformed	Repair or replace	S-48
	Turbocharger's piston ring seal faulty	Replace the turbocharger assembly	S-48

W1467289

Symptom	Probable Cause	Solution	Reference Page
Either Black or Dark Gray Exhaust Gas Is Observed	Overload	Reduce the load	–
	Low grade fuel used	Use specified fuel	5, 6, G-7
	Fuel filter clogged	Replace	G-13, 15
	Air cleaner clogged	Clean or replace	G-12, 28
	Deficient nozzle injection	Repair or replace nozzle	S-32, 33, 34, 51, 53
Deficient Output	Incorrect injection timing	Adjust	S-28
	Engine's moving parts seem to be seizing	Repair or replace	–
	Injection pump malfunctioning	Repair or replace	S-30, 31, 68
	Deficient nozzle injection	Repair or replace nozzle	S-32, 33, 34, 51, 53
	Compression leak	Check the compression pressure and repair	S-22, 23
	Gas leak from exhaust system	Repair or replace	S-38, 48
	Air leak from compressor discharge side	Repair or replace	S-38, 48
	Air cleaner dirty or clogged	Clean or replace	G-12, 28
	Compressor wheel turning heavily	Replace the turbocharger assembly	S-48
Excessive Lubricant Oil Consumption	Piston ring's gap facing the same direction	Shift ring gap direction	S-77, 78
	Oil ring worn or stuck	Replace	S-77, 78, 102, 103
	Piston ring groove worn	Replace piston	S-78, 103
	Valve stem and valve guide worn	Replace	S-57, 90, 91
	Crankshaft bearing and crank pin bearing worn	Replace	S-78, 82, 105, 106
	Oil leaking due to defective seals or packing	Replace	–
Fuel Mixed into Lubricant Oil	Injection pump's plunger worn	Repair or replace	S-30, 31, 68
	Deficient nozzle injection	Repair or replace nozzle	S-32, 33, 34, 51, 53
	Injection pump broken	Replace	S-68
Water Mixed into Lubricant Oil	Head gasket defective	Replace	S-55, 56
	Cylinder block or cylinder head flawed	Replace	S-87

Symptom	Probable Cause	Solution	Reference Page
Low Oil Pressure	Engine oil insufficient	Replenish	G-10
	Oil strainer clogged	Clean	S-75
	Relief valve stuck with dirt	Clean	S-73
	Relief valve spring weaken or broken	Replace	S-73
	Excessive oil clearance of crankshaft bearing	Replace	S-82, 106
	Excessive oil clearance of crankpin bearing	Replace	S-78, 105
	Excessive oil clearance of rocker arm	Replace	S-54, 94
	Oil passage clogged	Clean	–
	Different type of oil	Use specified type of oil	5, 6, G-7
	Oil pump defective	Replace	S-72, 108
High Oil Pressure	Different type of oil	Use specified type of oil	5, 6, G-7
	Relief valve defective	Replace	S-73
Engine Overheated	Engine oil insufficient	Replenish	G-10
	Fan belt broken or elongated	Replace or adjust	S-25, 26
	Coolant insufficient	Replenish	G-9, 17
	Radiator net and radiator fin clogged with dust	Clean	–
	Inside of radiator corroded	Clean or replace	G-9, 17
	Coolant flow route corroded	Clean or replace	G-9, 17
	Radiator cap defective	Replace	S-26
	Overload running	Reduce the load	–
	Head gasket defective	Replace	S-55, 56
	Incorrect injection timing	Adjust	S-28
	Unsuitable fuel used	Use specified fuel	5, 6, G-7
Battery Quickly Discharged	Battery electrolyte insufficient	Replenish distilled water and charge	G-14, 19, 20
	Fan belt slips	Adjust belt tension or replace	S-25, 26
	Wiring disconnected	Connect	–
	Rectifier defective	Replace	S-37, 83
	Alternator defective	Replace	S-37, 83
	Battery defective	Replace	G-14, 19, 20, S-34

W1469235

[2] ELECTRONIC GOVERNOR (FACTORY OPTION FOR V3300-E3BG, V3600-T-E3BG / STANDARD FOR V3800DI-T-E3BG)

■ **IMPORTANT**

- **The engine trouble divides into an electronic governor, the main body of the engine, and the operating constancy.**

Engine will not start.

Cause	Corrections	Refer to Checking
Starter Operating but Not Starting the Engine	Check operation of the solenoid	Solenoid
	Check harness of the solenoid	Solenoid
	Check harness of the glow plug / Intake air heater	Glow plug / Intake air heater
Starter Does Not Operate	Check emergency stop switch	Emergency stop switch

W1039573

Engine stopped automatically. Engine can be started again and stops again 10 seconds later.

Cause	Corrections	Refer to Checking
Trouble in the electronic governor composition parts	Check blinking pattern of the glow lamp (1)	Signal pattern sheet (1) Glow Lamp

W1041393

Engine speed cannot be controlled.

Cause	Corrections	Refer to Checking
Engine speed does not increase/ decrease	Check slow down switch	Slow down switch
	Check speed switch	Speed switch
	Check operation of the solenoid	Solenoid
	Check harness of speed sensor	Harness
Engine runs rough	Check operation of the solenoid	Solenoid
	Check harness of speed sensor	Harness

W1041483

Blinking Pattern of Glow Lamp	Cause	Refer to Checking
(1-Long and 1-Short) 3EEAAAB1P005A	Overrunning (more than 115 %)	Solenoid
(1-Long and 2-Short) 3EEAAAB1P006A	Low oil pressure	Oil sensor
(1-Long and 3-Short) 3EEAAAB1P007A	Defect of alternator	Alternator
(1-Long and 4-Short) 3EEAAAB1P008A	Coolant temperature is abnormal	Water temperature sensor
(1-Long and 5-Short) 3EEAAAB1P009A	Emergency stop switch operated	Emergency stop switch
(2-Long and 1-Short) 3EEAAAB1P010A	Abnormality of speed sensor	Speed sensor
(2-Long and 2-Short) 3EEAAAB1P011A	Solenoid malfunction	Solenoid
(2-Long and 4-Short) 3EEAAAB1P012A	Disconnection of water temperature sensor	Water temperature sensor
(2-Long and 5-Short) 3EEAAAB1P013A	Short circuit of water temperature sensor	Water temperature sensor
(2-Long and 6-Short) 3EEAAAB1P014A	Disconnection of alternator **L** Terminal	Alternator **L** Terminal

W1042224

2. SERVICING SPECIFICATIONS

ENGINE BODY

Item		Factory Specification	Allowable Limit
Cylinder Head Surface	Flatness	–	0.05 mm 0.002 in.
Top Clearance **[V3600-E3B, V3600-T-E3B, V3600-E3CB, V3600-T-E3CB, V3600-T-E3BG]**		1.05 to 1.27 mm 0.0414 to 0.0500 in.	–
[V3300-E3BG]		0.72 to 0.90 mm 0.0283 to 0.0354 in.	–
[V3800DI-T-E3B, V3800DI-T-E3CB, V3800DI-T-E3BG]		0.701 to 0.930 mm 0.0276 to 0.0366 in.	–
Compression Pressure **[V3600-E3B, V3600-E3CB, V3300-E3BG]**		4.31 MPa / 250 min^{-1} (rpm) 44.0 kgf/cm^2 / 250 min^{-1} (rpm) 626 psi / 250 min^{-1} (rpm)	3.26 MPa / 250 min^{-1} (rpm) 33.2 kgf/cm^2 / 250 min^{-1} (rpm) 472 psi / 250 min^{-1} (rpm)
[V3600-T-E3B, V3600-T-E3CB, V3600-T-E3BG]		3.92 MPa / 250 min^{-1} (rpm) 40.0 kgf/cm^2 / 250 min^{-1} (rpm) 569 psi / 250 min^{-1} (rpm)	2.99 MPa / 250 min^{-1} (rpm) 30.5 kgf/cm^2 / 250 min^{-1} (rpm) 434 psi / 250 min^{-1} (rpm)
[V3800DI-T-E3B, V3800DI-T-E3CB, V3800DI-T-E3BG]		3.47 MPa / 250 min^{-1} (rpm) 35.4 kgf/cm^2 / 250 min^{-1} (rpm) 504 psi / 250 min^{-1} (rpm)	2.56 MPa / 250 min^{-1} (rpm) 26.1 kgf/cm^2 / 250 min^{-1} (rpm) 371 psi / 250 min^{-1} (rpm)
Variance Among Cylinders		–	10 % or less

W14711090

ENGINE BODY (Continued)

Item		Factory Specification	Allowable Limit
Valve Seat **[V3600-E3B, V3600-T-E3B, V3600-E3CB, V3600-T-E3CB, V3300-E3BG, V3600-T-E3BG]**	Angle (Intake)	1.0 rad 60 °	–
	Angle (Exhaust)	0.79 rad 45 °	–
	Width	2.12 mm 0.0835 in.	–
[V3800DI-T-E3B, V3800DI-T-E3CB, V3800DI-T-E3BG]	Angle (Intake)	1.0 rad 60 °	–
	Angle (Exhaust)	0.79 rad 45 °	–
	Width (Intake)	1.6 to 2.0 mm 0.063 to 0.078 in.	–
	Width (Exhaust)	2.3 to 2.6 mm 0.091 to 0.10 in.	–
Valve Face	Angle (Intake)	1.0 rad 60 °	–
	Angle (Exhaust)	0.79 rad 45 °	–
Valve Recessing **[V3600-E3B, V3600-T-E3B, V3600-E3CB, V3600-T-E3CB, V3300-E3BG, V3600-T-E3BG]**	Intake	–0.2 to 0 mm –0.007 to 0 in.	0.4 mm 0.02 in.
	Exhaust	–0.050 to 0.15 mm –0.0019 to 0.0059 in.	0.4 mm 0.02 in.
[V3800DI-T-E3B, V3800DI-T-E3CB, V3800DI-T-E3BG]	Intake	0.60 to 0.80 mm 0.024 to 0.031 in.	1.2 mm 0.047 in.
	Exhaust	0.850 to 1.05 mm 0.0335 to 0.0413 in.	1.2 mm 0.047 in.

Item		Factory Specification	Allowable Limit
Valve Stem to Valve Guide **[V3600-E3B, V3600-T-E3B, V3600-E3CB, V3600-T-E3CB, V3300-E3BG, V3600-T-E3BG]**	Clearance (Intake)	0.055 to 0.085 mm 0.0022 to 0.0033 in.	0.1 mm 0.004 in.
	(Exhaust)	0.040 to 0.070 mm 0.0016 to 0.0027 in.	0.1 mm 0.004 in.
Valve Stem	O.D. (Intake)	6.960 to 6.975 mm 0.2741 to 0.2746 in.	–
	(Exhaust)	7.960 to 7.975 mm 0.3134 to 0.3139 in.	–
Valve Guide	I.D. (Intake)	7.030 to 7.045 mm 0.2768 to 0.2773 in.	–
	(Exhaust)	8.015 to 8.030 mm 0.3156 to 0.3161 in.	–
[V3800DI-T-E3B, V3800DI-T-E3CB, V3800DI-T-E3BG]	Clearance (Intake)	0.055 to 0.085 mm 0.0022 to 0.0033 in.	0.1 mm 0.004 in.
	(Exhaust)	0.055 to 0.085 mm 0.0022 to 0.0033 in.	0.1 mm 0.004 in.
Valve Stem	O.D. (Intake)	6.960 to 6.975 mm 0.2741 to 0.2746 in.	–
	(Exhaust)	6.960 to 6.975 mm 0.2741 to 0.2746 in.	–
Valve Guide	I.D. (Intake)	7.030 to 7.045 mm 0.2768 to 0.2773 in.	–
	(Exhaust)	7.030 to 7.045 mm 0.2768 to 0.2773 in.	–

W10490150

ENGINE BODY (Continued)

Item		Factory Specification	Allowable Limit
Valve Clearance (Cold)		0.23 to 0.27 mm 0.0091 to 0.010 in.	–
Intake Valve Timing **[V3600-E3B, V3600-E3CB]**	Open	0.17 rad (10 °) before T.D.C.	–
	Close	0.63 rad (36 °) after B.D.C.	–
[V3600-T-E3B, V3800DI-T-E3B, V3600-T-E3CB, V3800DI-T-E3CB, V3300-E3BG, V3600-T-E3BG, V3800DI-T-E3BG]	Open	0.24rad (14 °) before T.D.C.	–
	Close	0.63 rad (36 °) after B.D.C.	–
Exhaust Valve Timing **[V3600-E3B, V3600-E3CB]**	Open	0.79 rad (45 °) before B.D.C.	–
	Close	0.09 rad (5 °) after T.D.C.	–
[V3600-T-E3B, V3600-T-E3CB, V3600-T-E3BG]	Open (1st stage) (2nd stage)	0.79rad (45 °) before B.D.C. 0.82 rad (47 °) after T.D.C.	–
	Close (1st stage) (2nd stage)	0.30 rad (17 °) after T.D.C. 0.30 rad (17 °) before B.D.C.	–
[V3800DI-T-E3B, V3800DI-T-E3CB, V3300-E3BG, V3800DI-T-E3BG]	Open	0.79 rad (45 °) before B.D.C.	–
	Close	0.30 rad (17 °) after T.D.C.	–

W10527510

ENGINE BODY (Continued)

Item		Factory Specification	Allowable Limit
Valve Spring **[V3600-E3B, V3600-T-E3B, V3600-E3CB, V3600-T-E3CB, V3300-E3BG, V3600-T-E3BG]**	Free Length (Intake)	35.1 to 35.6 mm 1.39 to 1.40 in.	34.6 mm 1.36 in.
	Free Length (Exhaust)	41.7 to 42.2 mm 1.65 to 1.66 in.	41.2 mm 1.62 in.
	Tilt	–	1.0 mm 0.039 in.
[V3800DI-T-E3B, V3800DI-T-E3CB, V3800DI-T-E3BG]	Free Length (Intake)	35.1 to 35.6 mm 1.39 to 1.40 in.	34.6 mm 1.36 in.
	Free Length (Exhaust)	35.1 to 35.6 mm 1.39 to 1.40 in.	34.6 mm 1.36 in.
	Tilt	–	1.0 mm 0.039 in.
[V3600-E3B, V3600-T-E3B, V3600-E3CB, V3600-T-E3CB, V3300-E3BG, V3600-T-E3BG]	Setting Load / Setting Length (Intake)	63.5 N / 31.5 mm 6.48 kgf / 31.5 mm 14.3 lbf / 1.24 in.	45.9 N / 31.5 mm 4.68 kgf / 31.5 mm 10.3 lbf / 1.24 in.
	Setting Load / Setting Length (Exhaust)	118 N / 35.0 mm 12.0 kgf / 35.0 mm 26.5 lbf / 1.38 in.	100 N / 35.0 mm 10.2 kgf / 35.0 mm 22.5 lbf / 1.38 in.
[V3800DI-T-E3B, V3800DI-T-E3CB, V3800DI-T-E3BG]	Setting Load / Setting Length (Intake)	63.5 N / 31.5 mm 6.48 kgf / 31.5 mm 14.3 lbf / 1.24 in.	45.9 N / 31.5 mm 4.68 kgf / 31.5 mm 10.3 lbf / 1.24 in.
	Setting Load / Setting Length (Exhaust)	63.5 N / 31.5 mm 6.48 kgf / 31.5 mm 14.3 lbf / 1.24 in.	45.9 N / 31.5 mm 4.68 kgf / 31.5 mm 10.3 lbf / 1.24 in.
Rocker Arm Shaft to Rocker Arm	Clearance	0.016 to 0.045 mm 0.00063 to 0.0017 in.	0.15 mm 0.0059 in.
Rocker Arm Shaft	O.D.	15.973 to 15.984 mm 0.62886 to 0.62929 in.	–
Rocker Arm	I.D.	16.000 to 16.018 mm 0.62993 to 0.63062 in.	–
Valve Arm Bridge and Valve Arm Bridge Shaft	Clearance	0.018 to 0.042 mm 0.00071 to 0.0016 in.	0.15 mm 0.0059 in.
Valve Arm Bridge	I.D.	9.050 to 9.065 mm 0.3563 to 0.3568 in.	–
Valve Arm Bridge Shaft	O.D.	9.023 to 9.032 mm 0.3552 to 0.3555 in.	–

ENGINE BODY (Continued)

Item		Factory Specification	Allowable Limit
Push Rod	Alignment	–	0.25 mm 0.0098 in.
Tappet to Tappet Guide	Clearance	0.020 to 0.062 mm 0.00079 to 0.0024 in.	0.07 mm 0.003 in.
Tappet Guide Bore	I.D.	24.000 to 24.021 mm 0.94489 to 0.94570 in.	–
Tappet	O.D.	23.959 to 23.980 mm 0.94327 to 0.94409 in.	–
Camshaft	Side Clearance	0.070 to 0.22 mm 0.0028 to 0.0086 in.	0.30 mm 0.012 in.
	Alignment	–	0.01 mm 0.0004 in.
Cam Height **[V3600-E3B, V3600-E3CB, V3300-E3BG]**	Intake	37.63 mm 1.481 in.	37.13 mm 1.462 in.
	Exhaust	38.96 mm 1.534 in.	38.46 mm 1.514 in.
[V3600-T-E3B, V3600-T-E3CB, V3600-T-E3BG]	Intake	37.63 mm 1.481 in.	37.13 mm 1.462 in.
	Exhaust (1st stage)	38.96 mm 1.534 in.	38.46 mm 1.514 in.
	(2nd stage)	33.86 mm 1.333 in.	33.36 mm 1.313 in.
[V3800DI-T-E3B, V3800DI-T-E3CB, V3800DI-T-E3BG]	Intake	37.63 mm 1.481 in.	37.13 mm 1.462 in.
	Exhaust	38.96 mm 1.534 in.	38.46 mm 1.514 in.
Camshaft	Oil Clearance	0.050 to 0.091 mm 0.0020 to 0.0035 in.	0.15 mm 0.0059 in.
Camshaft Journal	O.D.	45.934 to 45.950 mm 1.8085 to 1.8090 in.	–
Camshaft Bearing	I.D.	46.000 to 46.025 mm 1.8111 to 1.8120 in.	–

W10590050

ENGINE BODY (Continued)

Item		Factory Specification	Allowable Limit
Timing Gear (Standard Gear Train) **[V3600-E3B, V3600-T-E3B, V3800DI-T-E3B, V3300-E3BG, V3600-T-E3BG, V3800DI-T-E3BG]**			
Idle Gear 1 to Crank Gear	Backlash	0.0490 to 0.193 mm 0.00193 to 0.00759 in.	0.22 mm 0.0087 in.
Idle Gear 1 to Cam Gear	Backlash	0.0490 to 0.189 mm 0.00193 to 0.00744 in.	0.22 mm 0.0087 in.
Idle Gear 1 to Idle Gear 2	Backlash	0.0440 to 0.185 mm 0.00174 to 0.00728 in.	0.22 mm 0.0087 in.
Idle Gear 2 to Injection Pump Gear	Backlash	0.0440 to 0.177 mm 0.00174 to 0.00696 in.	0.22 mm 0.0087 in.
Cam Gear to Balancer Gear 1 (Balancer Model Only)	Backlash	0.0470 to 0.182 mm 0.00185 to 0.00716 in.	0.22 mm 0.0087 in.
Idle Gear 1 to Balancer Gear 2 (Balancer Model Only)	Backlash	0.0440 to 0.183 mm 0.00174 to 0.00720 in.	0.22 mm 0.0087 in.
Timing Gear (Optional 1 Idle Gear Train) **[V3600-E3CB, V3600-T-E3CB, V3800DI-T-E3CB]**			
Crank Gear to Idle Gear	Backlash	0.049 to 0.193 mm 0.00193 to 0.00759 in.	0.22 mm 0.0087 in.
Idle Gear to Cam Gear	Backlash	0.049 to 0.189 mm 0.00193 to 0.00744 in.	0.22 mm 0.0087 in.
Idle Gear to Injection Pump Gear	Backlash	0.0300 to 0.165 mm 0.00119 to 0.00649 in.	0.22 mm 0.0087 in.
Idle Gear Shaft 1, 2 to Idle Gear 1, 2 Bushing	Oil Clearance	0.050 to 0.091 mm 0.0020 to 0.0035 in.	0.10 mm 0.0039 in.
Idle Gear 1, 2 Bushing	I.D.	45.025 to 45.050 mm 1.7727 to 1.7736 in.	–
Idle Gear 1, 2 Shaft	O.D.	44.959 to 44.975 mm 1.7701 to 1.7706 in.	–
Idle Gear	Side Clearance	0.15 to 0.30 mm 0.0059 to 0.011 in.	0.9 mm 0.04 in.

W10622890

ENGINE BODY (Continued)

Item		Factory Specification	Allowable Limit
Balancer Shaft (Balancer Model Only)	Side Clearance	0.070 to 0.22 mm 0.0028 to 0.0086 in.	0.3 mm 0.01 in.
Balancer Shaft (Balancer Model Only)	Alignment	–	0.02 mm 0.0008 in.
Balancer Shaft (Balancer Model Only)	Oil Clearance	0.0700 to 0.159 mm 0.00276 to 0.00625 in.	0.2 mm 0.008 in.
Balancer Shaft Journal	O.D.	50.920 to 50.940 mm 2.0048 to 2.0055 in.	–
Balancer Bearing	I.D.	51.01 to 51.08 mm 2.008 to 2.011 in.	–
Piston Pin Bore	I.D.	30.000 to 30.013 mm 1.1811 to 1.1816 in.	30.05 mm 1.183 in.
Top Ring to Ring Groove **[V3800DI-T-E3B, V3800DI-T-E3CB, V3800DI-T-E3BG only]**	Clearance	0.05 to 0.09 mm 0.002 to 0.003 in.	0.15 mm 0.0059 in.
Second Ring to Ring Groove	Clearance	0.0930 to 0.120 mm 0.00367 to 0.00472 in.	0.20 mm 0.0079 in.
Oil Ring to Ring Groove	Clearance	0.020 to 0.060 mm 0.00079 to 0.0023 in.	0.15 mm 0.0059 in.
Piston Ring Gap	Top Ring	0.30 to 0.45 mm 0.012 to 0.017 in.	1.25 mm 0.0492 in.
	Second Ring	0.30 to 0.45 mm 0.012 to 0.017 in.	1.25 mm 0.0492 in.
	Oil Ring	0.25 to 0.45 mm 0.0099 to 0.017 in.	1.25 mm 0.0492 in.
Connecting Rod	Alignment	–	0.05 mm 0.002 in.
Piston Pin to Small End Bushing	Clearance	0.020 to 0.040 mm 0.00079 to 0.0015 in.	0.15 mm 0.0059 in.
Piston Pin	O.D.	30.006 to 30.011 mm 1.1814 to 1.1815 in.	–
Small End Bushing	I.D.	30.031 to 30.046 mm 1.1824 to 1.1829 in.	–

W10648160

ENGINE BODY (Continued)

Item		Factory Specification	Allowable Limit
Crankshaft	Side Clearance	0.15 to 0.31 mm 0.0059 to 0.012 in.	0.50 mm 0.020 in.
	Alignment	–	0.02 mm 0.0008 in.
Crankshaft Journal to Crankshaft Bearing	Oil Clearance	0.018 to 0.062 mm 0.00071 to 0.0024 in.	0.20 mm 0.0079 in.
Crankshaft Journal	O.D.	74.977 to 74.990 mm 2.9519 to 2.9523 in.	–
Crank Pin to Pin Bearing	Oil Clearance	0.018 to 0.051 mm 0.00071 to 0.0020 in.	0.20 mm 0.0079 in.
Crank Pin	O.D.	52.977 to 52.990 mm 2.0857 to 2.0862 in.	–
Cylinder Bore **[V3600-E3B, V3600-E3CB V3600-T-E3B, V3600-T-E3CB, V3300-E3BG, V3600-T-E3BG]**	I.D.	98.000 to 98.022 mm 3.8583 to 3.8591 in.	98.150 mm 3.8642 in.
[V3800DI-T-E3B, V3800DI-T-E3CB, V3800DI-T-E3BG]	I.D.	100.000 to 100.022 mm 3.93701 to 3.93787 in.	100.150 mm 3.9429 in.
Cylinder Bore (Oversize) **[V3600-E3B, V3600-E3CB V3600-T-E3B, V3600-T-E3CB, V3300-E3BG, V3600-T-E3BG]**	I.D.	98.500 to 98.522 mm 3.8780 to 3.8788 in.	98.650 mm 3.8839 in.
[V3800DI-T-E3B, V3800DI-T-E3CB, V3800DI-T-E3BG]	I.D.	100.500 to 100.522 mm 3.95670 to 3.95755 in.	100.650 mm 3.96260 in.

W12715320

LUBRICATING SYSTEM

Item		Factory Specification	Allowable Limit
Engine Oil Pressure	At Idle Speed	–	50 kPa 0.5 kgf/cm^2 7 psi
	At Rated Speed	200 to 390 kPa 2.0 to 4.0 kgf/cm^2 29 to 56 psi	150 kPa 1.5 kgf/cm^2 21 psi
Engine Oil Pressure Switch	Working Pressure	40 to 50 kPa 0.4 to 0.6 kgf/cm^2 6 to 8 psi	–
Inner Rotor to Outer Rotor	Clearance	0.040 to 0.16 mm 0.0016 to 0.0062 in.	0.3 mm 0.01 in.
Outer Rotor to Pump Body	Clearance	0.100 to 0.184 mm 0.00394 to 0.00724 in.	0.3 mm 0.01 in.
Inner Rotor to Cover	Clearance	0.025 to 0.075 mm 0.00099 to 0.0029 in.	0.225 mm 0.00886 in.
Relief Valve	Working Pressure	887 kPa 9.04 kgf/cm^2 129 psi	–

W10672430

COOLING SYSTEM

Item		Factory Specification	Allowable Limit
Thermostat	Valve Opening Temperature	74.5 to 78.5 °C 166.1 to 173.3 °F	–
	Valve Opening Temperature (Opened Completely)	90 °C 194 °F	–
Radiator	Water Tightness	No leak at specified pressure	–
Radiator Cap	Air Leakage	10 seconds or more 90 → 60 kPa 0.9 → 0.6 kgf/cm^2 10 → 9 psi	–
Fan Belt	Tension	10 to 12 mm / 98 N 0.40 to 0.47 in. / 98 N (10 kgf, 22 lbf)	–

W10718840

FUEL SYSTEM

Item		Factory Specification	Allowable Limit
Injection Timing **[V3600-E3B, V3600-E3CB]**		0.127 to 0.152 rad (7.25 to 8.75 °) before T.D.C.	–
[V3600-T-E3B, V3600-T-E3CB, V3600-T-E3BG]		0.0568 to 0.0829 rad (3.25 to 4.75 °) before T.D.C.	–
[V3800DI-T-E3B, V3800DI-T-E3CB]		0.0917 to 0.117 rad (5.25 to 6.75 °) before T.D.C.	–
[V3300-E3BG]		0.144 to 0.170 rad (8.25 to 9.75 °) before T.D.C.	–
[V3800DI-T-E3BG]		0.0829 to 0.109 rad (4.75 to 6.25 °) before T.D.C.	
Pump Element **[V3600-E3B, V3600-E3CB V3600-T-E3B, V3600-T-E3CB, V3300-E3BG, V3600-T-E3BG]**	Fuel Tightness	–	13.73 MPa 140.0 kgf/cm^2 1991 psi
[V3800DI-T-E3B, V3800DI-T-E3CB, V3800DI-T-E3BG]	Fuel Tightness	–	18.63 MPa 190.0 kgf/cm^2 2702 psi
Delivery Valve **[V3600-E3B, V3600-E3CB V3600-T-E3B, V3600-T-E3CB, V3300-E3BG, V3600-T-E3BG]**	Fuel Tightness	10 seconds 13.73 → 12.75 MPa 140.0 → 130.0 kgf/cm^2 1991 → 1849 psi	5 seconds 13.73 → 12.75 MPa 140.0 → 130.0 kgf/cm^2 1991 → 1849 psi
[V3800DI-T-E3B, V3800DI-T-E3CB, V3800DI-T-E3BG]	Fuel Tightness	10 seconds 18.63 → 17.65 MPa 190.0 → 180.0 kgf/cm^2 2702 → 2560 psi	5 seconds 18.63 → 17.65 MPa 190.0 → 180.0 kgf/cm^2 2702 → 2560 psi

W10749730

FUEL SYSTEM (Continued)

Item		Factory Specification	Allowable Limit
Fuel Injection Nozzle **[V3600-E3B, V3600-E3CB V3600-T-E3B, V3600-T-E3CB, V3300-E3BG, V3600-T-E3BG]**	Injection Pressure	13.73 to 14.71 MPa 140.0 to 150.0 kgf/cm^2 1992 to 2133 psi	–
	Valve Seat Tightness	When the pressure is 12.75 MPa (130.0 kgf/cm^2, 1849 psi), the valve seat must be fuel tightness.	–
[V3800DI-T-E3B, V3800DI-T-E3CB, V3800DI-T-E3BG]	Injection Pressure (1st stage)	18.63 to 19.61 MPa 190.0 to 200.0 kgf/cm^2 2702 to 2845 psi	–
	Injection Pressure (2nd stage)	23.54 to 24.52 MPa 240.0 to 250.0 kgf/cm^2 3414 to 3556 psi	–
	Valve Seat Tightness	When the pressure is 16.67 MPa (170.0 kgf/cm^2, 2418 psi), the valve seat must be fuel tightness.	–

W12776240

ELECTRICAL SYSTEM

Item		Factory Specification	Allowable Limit
Commutator	O.D.	32.0 mm 1.26 in.	31.4 mm 1.24 in.
Mica	Undercut	0.5 mm 0.02 in.	0.2 mm 0.008 in.
Brush (Starter)	Length	18.0 mm 0.709 in.	11.0 mm 0.433 in.
Alternator	No-load Voltage	14 V at 4000 min^{-1} (rpm)	–
Rotor Coil	Resistance	2.8 to 3.3 Ω	–
Slip Ring	O.D.	22.7 mm 0.894 in.	22.1 mm 0.870 in.
Brush (Alternator)	Length	18.5 mm 0.728 in.	5.0 mm 0.20 in.
Glow Plug **[V3600-E3B, V3600-E3CB V3600-T-E3B, V3600-T-E3CB, V3300-E3BG, V3600-T-E3BG]**	Resistance (at cold occasion)	Approx. 1.0 Ω	–
Intake Air Heater **[V3800DI-T-E3B, V3800DI-T-E3CB, V3800DI-T-E3BG]**	Resistance (at cold occasion)	Approx. 0.3 Ω	–

W10788220

3. TIGHTENING TORQUES

Screws, bolts and nuts must be tightened to the specified torque using a torque wrench, several screws, bolts and nuts such as those used on the cylinder head must be tightened in proper sequence and the proper torque.

[1] TIGHTENING TORQUES FOR GENERAL USE SCREWS, BOLTS AND NUTS

When the tightening torques are not specified, tighten the screws, bolts and nuts according to the table below.

Grade / Nominal Diameter / Unit	Standard Screw and Bolt 4			Special Screw and Bolt 7		
	N·m	kgf·m	lbf·ft	N·m	kgf·m	lbf·ft
M6	7.9 to 9.3	0.80 to 0.95	5.8 to 6.8	9.81 to 11.2	1.00 to 1.15	7.24 to 8.31
M8	18 to 20	1.8 to 2.1	13 to 15	24 to 27	2.4 to 2.8	18 to 20
M10	40 to 45	4.0 to 4.6	29 to 33	48 to 55	4.9 to 5.7	36 to 41
M12	63 to 72	6.4 to 7.4	47 to 53	78 to 90	7.9 to 9.2	58 to 66

W10371750

Screw and bolt material grades are shown by numbers punched on the screw and bolt heads. Prior to tightening, be sure to check out the numbers as shown below.

Punched number	Screw and bolt material grade
None or 4	Standard screw and bolt SS41, S20C
7	Special screw and bolt S43C, S48C (Refined)

W1012705

[2] TIGHTENING TORQUES FOR SPECIAL USE SCREWS, BOLTS AND NUTS

■ **NOTE**

- **For "*" marked screws, bolts and nuts on the table, apply engine oil to their threads and seats before tightening.**
- **The letter "M" in Size x Pitch means that the screw, bolt or nut dimension stands for metric. The size is the nominal outside diameter in mm of the threads. The pitch is the nominal distance in mm between two threads.**

Item	Size x Pitch	N·m	kgf·m	lbf·ft
Cylinder head cover screw	–	6.9 to 11.2	0.70 to 1.15	5.1 to 8.31
*Cylinder head screw	M12 x 1.25	98.1 to 107	10.0 to 11.0	72.4 to 79.5
*Connecting rod screw	M10 x 1.25	79 to 83	8.0 to 8.5	58 to 61
*Flywheel screw	M12 x 1.25	98.1 to 107	10.0 to 11.0	72.4 to 79.5
*Crankshaft screw	M16 x 1.5	255 to 274	26.0 to 28.0	188 to 202
*Main bearing case screw	M14 x 1.5	138 to 147	14.0 to 15.0	102 to 108
Rocker arm bracket screw	M10 x 1.25	49 to 55	5.0 to 5.7	37 to 41
Nozzle holder assembly (V3600-E3B, V3600-T-E3B, V3600-E3CB, V3600-T-E3CB, V3300-E3BG, V3600-T-E3BG)	M20 x 1.5	49 to 68	5.0 to 7.0	37 to 50
Nozzle holder (V3600-E3B, V3600-T-E3B, V3600-E3CB, V3600-T-E3CB, V3300-E3BG, V3600-T-E3BG)	–	35 to 39	3.5 to 4.0	26 to 28
Nozzle holder clamp nut (V3800DI-T-E3B, V3800DI-T-E3CB, V3800DI-T-E3BG)	M8 x 1.25	18 to 20	1.8 to 2.1	13 to 15
Injection pipe retaining nut	M12 x 1.5	23 to 36	2.3 to 3.7	17 to 26
Overflow pipe assembly retaining nut (V3600-E3B, V3600-T-E3B, V3600-E3CB, V3600-T-E3CB, V3300-E3BG, V3600-T-E3BG)	M12 x 1.5	20 to 24	2.0 to 2.5	15 to 18
Overflow pipe assembly joint screw (V3800DI-T-E3B, V3800DI-T-E3CB, V3800DI-T-E3BG)	M6 x 1.0	9.8 to 11.2	1.0 to 1.15	7.24 to 8.31
Oil switch taper screw	R 1/8	15 to 19	1.5 to 2.0	11 to 14
Oil cooler joint screw	–	40 to 44	4.0 to 4.5	29 to 32
Oil pump cover screw	–	7.9 to 9.3	0.80 to 0.95	5.8 to 6.8
Glow plugs (V3600-E3B, V3600-T-E3B, V3600-E3CB, V3600-T-E3CB, V3300-E3BG, V3600-T-E3BG)	M10 x 1.25	20 to 24	2.0 to 2.5	15 to 18
Intake air heater terminal nut (V3800DI-T-E3B, V3800DI-T-E3CB, V3800DI-T-E3BG)	M6 x 1.0	3.5 to 5.3	0.35 to 0.55	2.6 to 3.9
Starter's terminal **B** mounting nut	M8 x 1.25	9.8 to 11	1.0 to 1.2	7.3 to 8.6

W1013236

Item	Size x Pitch	N·m	kgf·m	lbf·ft
Injection pump gear mounting nut (V3600-T-E3B, V3600-T-E3CB, V3300-E3BG, V3600-T-E3BG)	M14 x 1.5	74 to 83	7.5 to 8.5	55 to 61
Timer gear mounting nut (V3600-E3B, V3800DI-T-E3B, V3600-E3CB, V3800DI-T-E3CB, V3800DI-T-E3BG)	–	74 to 83	7.5 to 8.5	55 to 61
Injection pump unit mounting nut	M8 x 1.25	18 to 20	1.8 to 2.1	13 to 15
Gear case cover	M8 x 1.25 (7T)	24 to 27	2.4 to 2.8	18 to 20
	M8 x 1.25 (10T)	33 to 36	3.3 to 3.7	24 to 26
Relief valve retaining screw	–	69 to 78	7.0 to 8.0	51 to 57
Idle gear mounting screw	M8 x 1.25	24 to 27	2.4 to 2.8	18 to 20
Plate mounting screw (standard gear train type only)	M8 x 1.25	24 to 27	2.4 to 2.8	18 to 20
Camshaft set screw	M8 x 1.25	24 to 27	2.4 to 2.8	18 to 20
Flywheel housing mounting screw	M12 x 1.25	78 to 90	7.9 to 9.2	58 to 66
Crankcase 2 mounting screw	M10 x 1.25	49 to 55	5.0 to 5.7	37 to 41
Injection pump mounting screw	M8 x 1.25	24 to 27	2.4 to 2.8	18 to 20
Injection pump mounting nut	M8 x 1.25	18 to 20	1.8 to 2.1	13 to 15
Boost actuator (Boost compensator model only)	–	40 to 45	4.0 to 4.6	29 to 33
Governor weight mounting nut	M12 x 1.25	63 to 72	6.4 to 7.4	47 to 53
Fuel camshaft stopper mounting screw	–	7.9 to 9.3	0.80 to 0.95	5.8 to 6.8
Governor housing mounting screw	M6 x 1.0	9.8 to 11.2	1.00 to 1.15	7.24 to 8.31
Anti-rotation nut	M5 x 0.8	2.8 to 4.0	0.29 to 0.41	2.1 to 2.9
Balancer shaft set screw (Balancer model only)	M8 x 1.25	24 to 27	2.4 to 2.8	18 to 20
Bearing case cover mounting screw	M8 x 1.25	24 to 27	2.4 to 2.8	18 to 20
Alternator pulley nut	–	58.4 to 78.9	5.95 to 8.05	43.1 to 58.2
Thermo valve (V3800DI-T-E3B, V3800DI-T-E3CB, V3800DI-T-E3BG)	R 3/8	30 to 39	3.0 to 4.0	22 to 28

W1282147

4. CHECKING, DISASSEMBLING AND SERVICING

[1] CHECKING AND ADJUSTING

(1) Engine Body

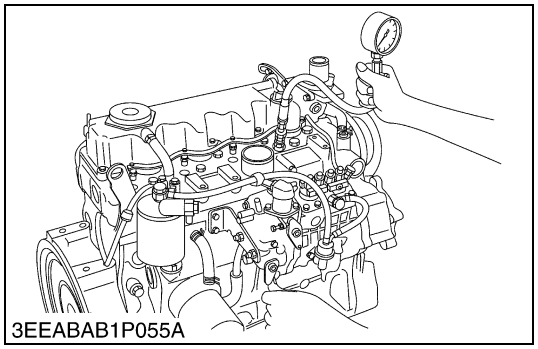
3EEABAB1P055A

Compression Pressure

[V3600-E3B, V3600-T-E3B, V3600-E3CB, V3600-T-E3CB, V3300-E3BG, V3600-T-E3BG]

1. After warming up the engine, stop it and remove the air cleaner, the muffler and all nozzle holders / all glow plugs.
2. Install a compression tester for diesel engines to nozzle holder hole / glow plug hole.
3. After making sure that the stop lever is set at the stop position (Non-injection), run the engine at 200 to 300 min^{-1} (rpm) with the starter.
4. Read the maximum pressure. Measure the pressure more than twice.
5. If the measurement is below the allowable limit, apply a small amount of oil to the cylinder wall through the nozzle hole / the glow plug hole and measure the compression pressure again.
6. If the compression pressure increase after applying oil. check the cylinder wall and piston rings.
7. If the compression pressure is still less than the allowable limit, check the top clearance, valve and cylinder head.

■ **NOTE**

- **Check the compression pressure with the specified valve clearance.**
- **Always use a fully charged battery for performing this test.**
- **Variances in cylinder compression values should be under 10 %.**

Compression pressure	Factory spec.	V3600-E3B, V3600-E3CB, V3300-E3BG	4.31 MPa / 250 min^{-1} (rpm) 44.0 kgf/cm^2 / 250 min^{-1} (rpm) 626 psi / 250 min^{-1} (rpm)
		V3600-T-E3B, V3600-T-E3CB, V3600-T-E3BG	3.92 MPa / 250 min^{-1} (rpm) 40.0 kgf/cm^2 / 250 min^{-1} (rpm) 569 psi / 250 min^{-1} (rpm)
	Allowable limit	V3600-E3B, V3600-E3CB, V3300-E3BG	3.26 MPa / 250 min^{-1} (rpm) 33.2kgf/cm^2 / 250 min^{-1} (rpm) 472 psi / 250 min^{-1} (rpm)
		V3600-T-E3B, V3600-T-E3CB, V3600-T-E3BG	2.99 MPa / 250 min^{-1} (rpm) 30.5 kgf/cm^2 / 250 min^{-1} (rpm) 434 psi / 250 min^{-1} (rpm)

Tightening torque	Nozzle holder assembly	49 to 68 N·m 5.0 to 7.0 kgf·m 37 to 50 lbf·ft
	Overflow pipe assembly retaining nut	20 to 24 N·m 2.0 to 2.5 kgf·m 15 to 18 lbf·ft
	Injection pipe retaining nut	23 to 36 N·m 2.3 to 3.7 kgf·m 17 to 26 lbf·ft

W1048776

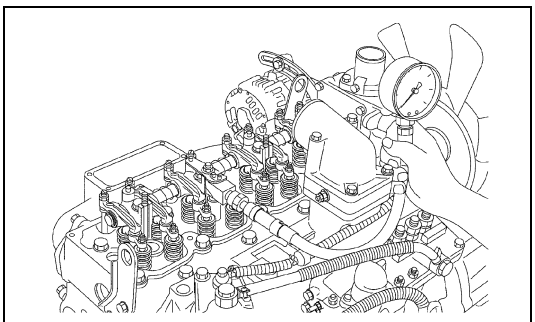
3EEABAC1P016A

[V3800DI-T-E3B, V3800DI-T-E3CB, V3800DI-T-E3BG]

1. After warming up the engine, stop it and remove the air cleaner, the muffler, high pressure pipes, cylinder head cover, overflow pipe, all nozzle holders and all nozzle gaskets.
2. Install a compression tester and nozzle adaptor for V3800DI-T-E3B, V3800DI-T-E3CB, V3800DI-T-E3BG to nozzle holder hole.
3. After making sure that the stop lever is set at the stop position (Non-injection), run the engine at 200 to 300 min^{-1} (rpm) with the starter.
4. Read the maximum pressure. Measure the pressure more than twice.

■ **NOTE**

- **Check the compression pressure with the specified valve clearance.**
- **Always use a fully charged battery for performing this test.**
- **Variances in cylinder compression values should be under 10 %.**

Compression pressure	Factory spec.	3.47 MPa / 250 min^{-1} (rpm) 35.4 kgf/cm^2 / 250 min^{-1} (rpm) 504 psi / 250 min^{-1} (rpm)
	Allowable limit	2.56 MPa / 250 min^{-1} (rpm) 26.1 kgf/cm^2 / 250 min^{-1} (rpm) 371 psi / 250 min^{-1} (rpm)

Tightening torque	Nozzle holder clamp nut	18 to 20 N·m 1.8 to 2.1 kgf·m 13 to 15 lbf·ft
	Overflow pipe assembly joint screw	9.8 to 11.2 N·m 1.0 to 1.15 kgf·m 7.24 to 8.31 lbf·ft
	Cylinder head cover screw	6.9 to 11.2 N·m 0.70 to 1.15 kgf·m 5.1 to 8.31 lbf·ft
	Injection pipe retaining nut	23 to 36 N·m 2.3 to 3.7 kgf·m 17 to 26 lbf·ft

W1476600

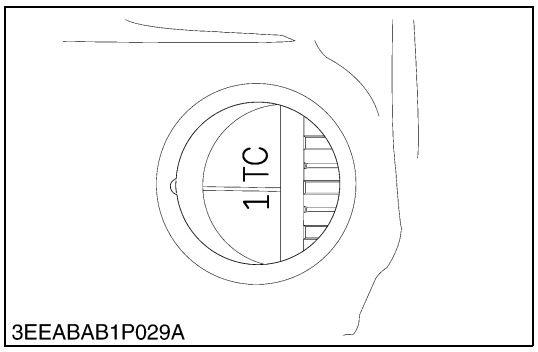

3EEABAB1P029A

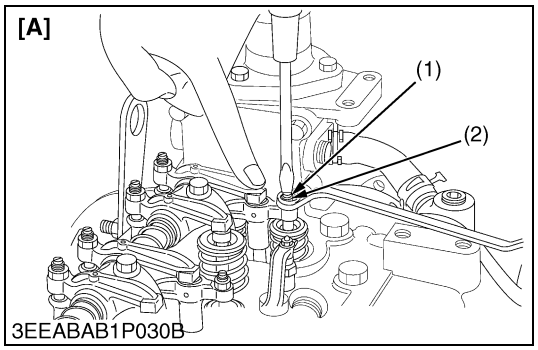

3EEABAB1P030B

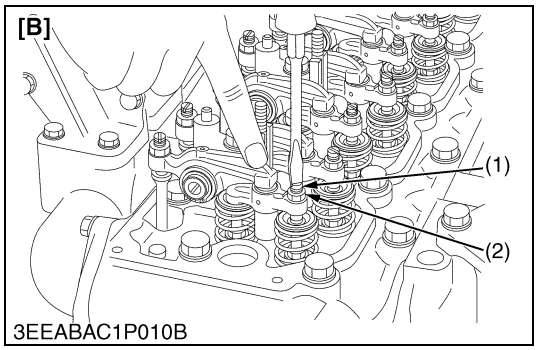

3EEABAC1P010B

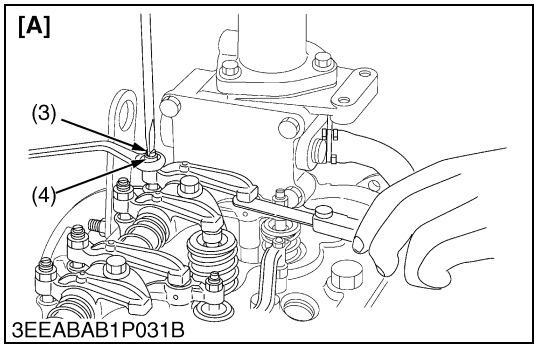

3EEABAB1P031B

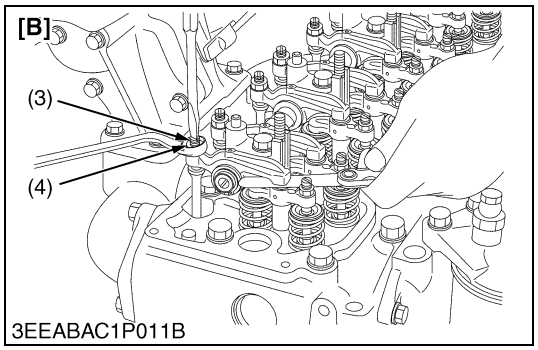

3EEABAC1P011B

Checking Valve Clearance

■ **IMPORTANT**

- **Valve clearance must be checked and adjusted when engine is cold.**

1. Remove the injection pipes.
   (V3800DI-T-E3B, V3800DI-T-E3CB, V3800DI-T-E3BG only)
2. Remove the head cover.
3. Set the No.1 piston at the compression top dead center.
4. Slightly push the rocker arm by your finger.
   (Valve bridge height adjustable type only)
5. Tighten the valve bridge height adjusting screw (1) slowly until you feel the screw touch the top of valve stem.
   (Valve bridge height adjustable type only)
6. Tighten the lock nut (2).
   (Valve bridge height adjustable type only)
7. Adjust the valve clearance with feeler gauge.
8. Tighten the lock nut (4).

Valve clearance	Factory spec.	0.23 to 0.27 mm 0.0091 to 0.010 in.

■ **NOTE**

- **After adjusting, tighten the lock nut (4) securely.**

Valve arrangement / Adjustment cylinder / Location of piston		IN.	EX
When No.1 piston is at compression top dead center	1st	☆	☆
	2nd	☆	
	3rd		☆
	4th		
When No.1 piston is at overlap position	1st		
	2nd		☆
	3rd	☆	
	4th	☆	☆

Tightening torque	Cylinder head cover screw	6.9 to 11.2 N·m 0.70 to 1.15 kgf·m 5.1 to 8.31 lbf·ft

Tightening torque	Injection pipe retaining nut	23 to 36 N·m 2.3 to 3.7 kgf·m 17 to 26 lbf·ft

(1) Valve Bridge Height Adjusting Screw
(2) Lock Nut
(3) Adjusting Screw
(4) Lock Nut

[A] V3600-E3B, V3600-T-E3B, V3600-E3CB, V3600-T-E3CB, V3300-E3BG, V3600-T-E3BG
[B] V3800DI-T-E3B, V3800DI-T-E3CB, V3800DI-T-E3BG

W1288551

(2) Lubricating System

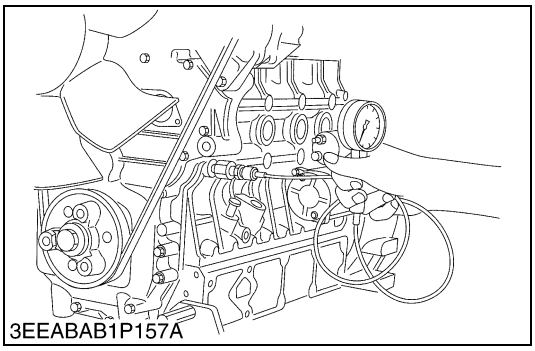
3EEABAB1P157A

Engine Oil Pressure

1. Remove the oil switch and set a pressure tester (Code No. 07916-32032).
2. Start the engine. After warming up, measure the oil pressure of both idling and rated speeds.
3. If the oil pressure is less than the allowable limit, check the following.

- Engine oil insufficient
- Oil pump defective
- Oil strainer clogged
- Oil filter cartridge clogged
- Oil gallery clogged
- Excessive oil clearance
- Foreign matter in the relief valve

(When reassembling)

- After checking the engine oil pressure, tighten the engine oil pressure switch to the specified torque.

Engine oil pressure	At idle speed	Allowable limit	50 kPa 0.5 kgf/cm^2 7 psi
	At rated speed	Factory spec.	200 to 390 kPa 2.0 to 4.0 kgf/cm^2 29 to 56 psi
		Allowable limit	150 kPa 1.5 kgf/cm^2 21 psi

Tightening torque	Oil switch taper screw	15 to 19 N·m 1.5 to 2.0 kgf·m 11 to 14 lbf·ft

W10349520

(3) Cooling System

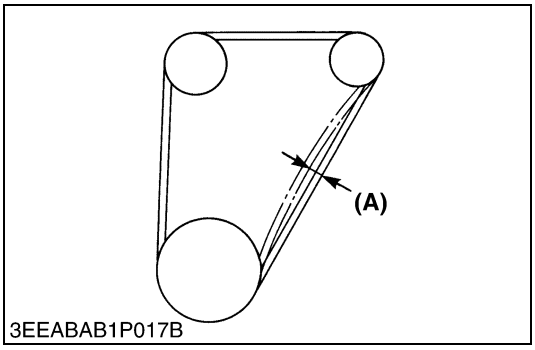

3EEABAB1P017B

Fan Belt Tension

1. Measure the deflection **(A)**, depressing the belt halfway between the fan drive pulley and alternator pulley at specified force 98 N (10 kgf, 22 lbf).
2. If the measurement is not within the factory specifications, loosen the alternator mounting screws and relocate the alternator to adjust.

Deflection **(A)**	Factory spec.	10 to 12 mm 0.40 to 0.47 in.

(A) Deflection

W1021011

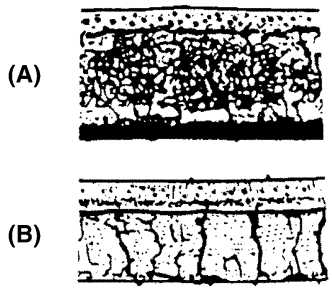

3EEABAB1P019B

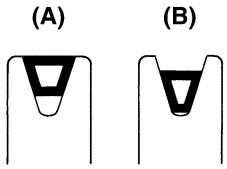

3EEABAB1P018A

Fan Belt Damage and Wear

1. Check the fan belt for damage.
2. If the fan belt is damaged, replace it.
3. Check if the fan belt is worn and sunk in the pulley groove.
4. If the fan belt is nearly worn out and deeply sunk in the pulley groove, replace it.

(A) Good **(B) Bad**

W1021108

CAUTION

- **When removing the radiator cap, wait at least ten minutes after the engine has stopped and cooled down. Otherwise, hot water may gush out, scalding nearby people.**

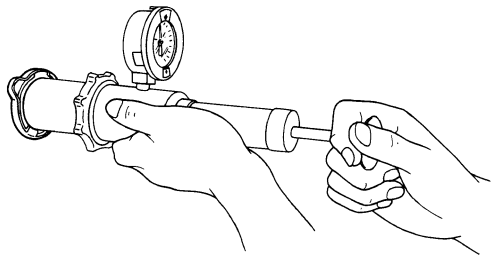
3EEABAB1P162A

Radiator Cap Air Leakage

1. Set a radiator tester on the radiator cap.
2. Set a radiator tester.
   Apply the specified pressure of 90 kPa (0.9 kgf/cm^2, 10 psi).
3. Check if the pressure drop to less than 60 kPa (0.6 kgf/cm^2, 9 psi) in 10 seconds.
4. If the pressure is less than the factory specification, replace it.

W1021320

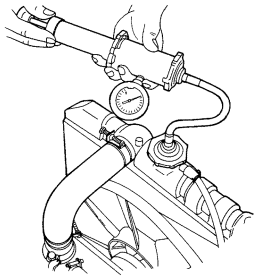
3EEABAB1P161A

Radiator Water Leakage

1. Pour a specified amount of water into the radiator.
2. Set a radiator tester.
   Increase water pressure to the specified pressure.
3. Check the radiator for water leaks.
4. If water leakage is excessive, replace the radiator.
5. If water leakage is caused by a small pinhole, correct the radiator with radiator cement.

■ **NOTE**

- **The pressure of leak test is different from each radiator specification.**
  Thus, do the leak test, refer to the test pressure of each radiator specification.

W1072497

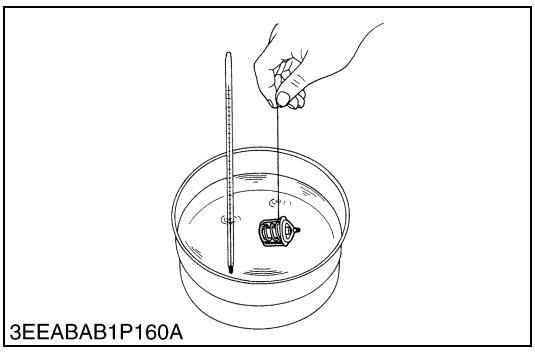
3EEABAB1P160A

Thermostat Valve Opening Temperature

1. Push down the thermostat valve and insert a string between the valve and the valve seat.
2. Place the thermostat and a thermostat in a container with water and gradually heat the water.
3. Hold the string to suspend the thermostat in the water. When the water temperature rises, the thermostat valve will open, allowing it to fall down from the string.
   Read the temperature at this moment on the thermometer.
4. Continue heating the water and read the temperature when the valve has risen by about 8 mm (0.3 in.).
5. If the measurement is not acceptable, replace the thermostat.

Thermostat's valve opening temperature	Factory spec.	74.5 to 78.5 °C 166.1 to 173.3 °F
Temperature at which thermostat completely opens	Factory spec.	90 °C 194 °F

W1071639

(4) Fuel System

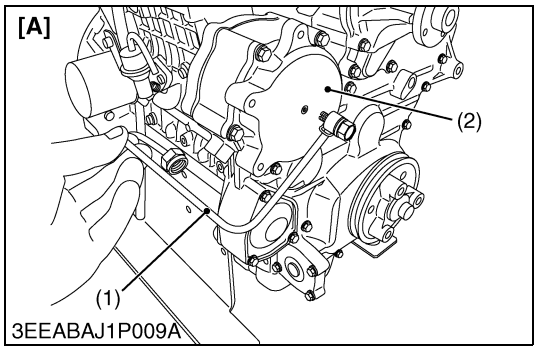

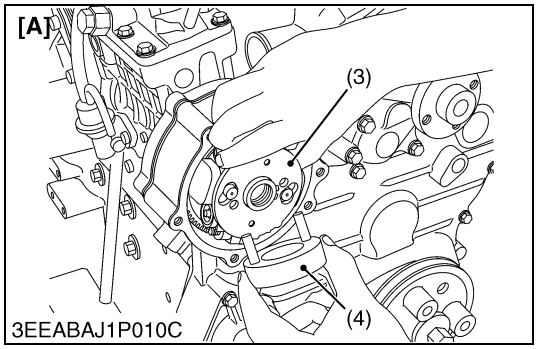

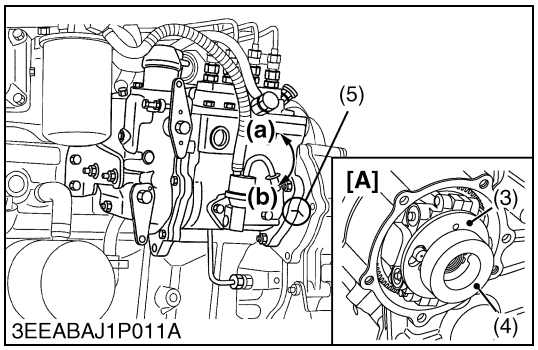

Injection Timing

1. Remove the timer gear lubricating pipe (1). (V3600-E3B, V3600-E3CB, V3800DI-T-E3B, V3800DI-T-E3CB, V3800DI-T-E3BG only)
2. Remove the gear case cover (2). (V3600-E3B, V3600-E3CB, V3800DI-T-E3B, V3800DI-T-E3CB, V3800DI-T-E3BG only)
3. Set the timer 0 ° restoring jig (4) to the timer gear(3). (V3600-E3B, V3600-E3CB, V3800DI-T-E3B, V3800DI-T-E3CB, V3800DI-T-E3BG only)
4. Make sure of matching the injection timing align mark (5) of the injection pump unit and the plate (gear case), as shown in the illustration.
5. Remove the injection pipes.
6. Remove the solenoid.

(1) Timer Gear Lubricating Pipe
(2) Gear Case Cover
(3) Timer Gear
(4) Timer 0 ° Restoring Jig
(5) Injection Timing Align Mark

[A] V3600-E3B, V3800DI-T-E3B, V3600-E3CB, V3800DI-T-E3CB, V3800DI-T-E3BG

(a) Injection Timing Advanced (V3600-E3B, V3600-T-E3B, V3800DI-T-E3B, V3300-E3BG, V3600-T-E3BG, V3800DI-T-E3BG) / Injection Timing Retarded (V3600-E3CB, V3600-T-E3CB, V3800DI-T-E3CB)

(b) Injection Timing Retarded (V3600-E3B, V3600-T-E3B, V3800DI-T-E3B, V3300-E3BG, V3600-T-E3BG, V3800DI-T-E3BG) / Injection timing Advanced (V3600-E3CB, V3600-T-E3CB, V3800DI-T-E3CB)

W1036105

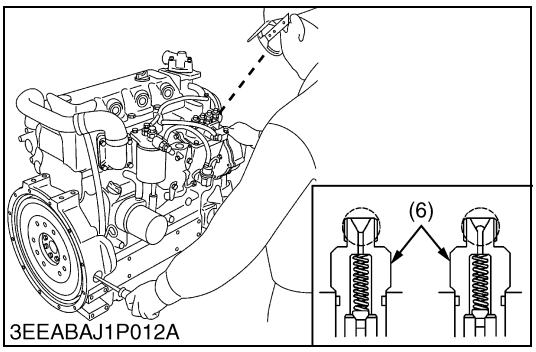

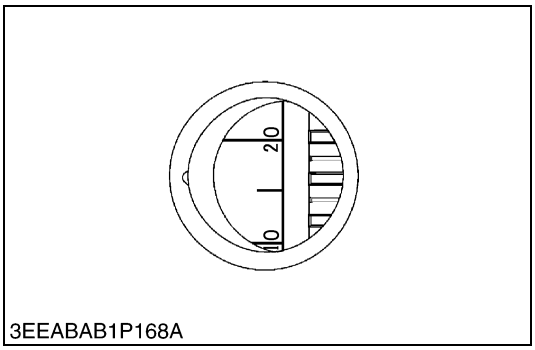

Injection Timing (Continued)

7. Turn the flywheel counterclockwise (viewed from flywheel side) until the fuel fills up to the hole of the delivery valve holder (6) for No.1 cylinder.
8. After the fuel fills up to the hole of the delivery valve holder for No.1 cylinder, turn back (clockwise) the flywheel around 1.6 rad (90 °).
9. Turn the flywheel counterclockwise to set at around 0.35 rad (20 °) before T.D.C..
10. Slowly turn the flywheel counterclockwise and stop turning when the fuel begins to come up, to get the present injection timing.
11. Check to see the degree on flywheel.
    The flywheel has mark “1TC”, “10” and “20” for the crank angle before the top dead center of No.1 piston.
12. If the injection timing is not within the specification, rotate the injection pump unit to adjust the injection timing.

■ **IMPORTANT**

- **When installing the injection pump unit to the engine body, follow the correct procedure.**
  See the “Injection Pump Unit”.

Injection timing	Factory spec.	V3600-E3B, V3600-E3CB	0.127 to 0.152 rad (7.25 ° to 8.75 °) before T.D.C.
		V3600-T-E3B, V3600-T-E3CB, V3600-T-E3BG	0.0568 to 0.0829 rad (3.25 ° to 4.75 °) before T.D.C.
		V3800DI-T-E3B, V3800DI-T-E3CB	0.0917 to 0.117 rad (5.25 ° to 6.75 °) before T.D.C.
		V3300-E3BG	0.144 to 0.170 rad (8.25 ° to 9.75 °) before T.D.C.
		V3800DI-T-E3BG	0.0829 to 0.109 rad (4.75 ° to 6.25 °) before T.D.C.

Tightening torque	Injection pipe retaining nut	23 to 36 N·m 2.3 to 3.7 kgf·m 17 to 26 lbf·ft
	Injection pump unit mounting nut	18 to 20 N·m 1.8 to 2.1 kgf·m 13 to 15 lbf·ft

(6) Delivery Valve Holder

W1290486

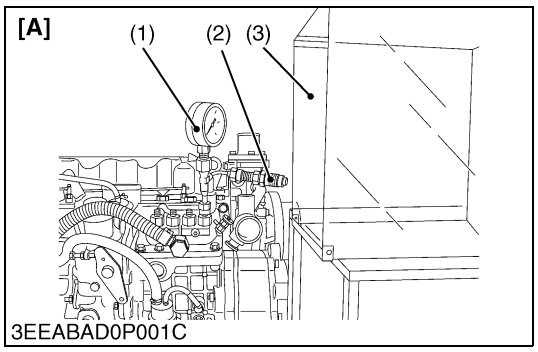

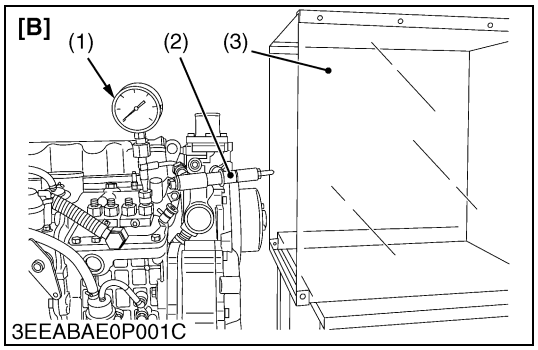

Fuel Tightness of Pump Element

1. Remove the solenoid.
2. Remove the injection pipes.
3. Install the injection pump pressure tester to the injection pump.
4. Install the injection nozzle (2) jetted with the proper injection pressure to the injection pump pressure tester (1). (Refer to the figure.)
5. Set the speed control lever to the maximum speed position.
6. Run the starter to increase the pressure.
7. If the pressure can not reach the allowable limit, replace the pump with new one or repair at a Kubota-authorized pump service shop.

Fuel tightness of pump element	Allowable limit	V3600-E3B, V3600-T-E3B, V3600-E3CB, V3600-T-E3CB, V3300-E3BG, V3600-T-E3BG	13.73 MPa 140.0 kgf/cm^2 1991 psi
		V3800DI-T-E3B, V3800DI-T-E3CB, V3800DI-T-E3BG	18.63 MPa 190.0 kgf/cm^2 2702 psi

■ **NOTE**

- **Never try to disassemble the injection pump assembly. For repairs, you are strongly requested to contact a Kubota-authorized pump service shop.**

(1) Injection Pump Pressure Tester
(2) Injection Nozzle
(3) Protection Cover for Jetted Fuel

[A] V3600-E3B, V3600-T-E3B, V3600-E3CB, V3600-T-E3CB, V3300-E3BG, V3600-T-E3BG
[B] V3800DI-T-E3B, V3800DI-T-E3CB, V3800DI-T-E3BG

W1017430

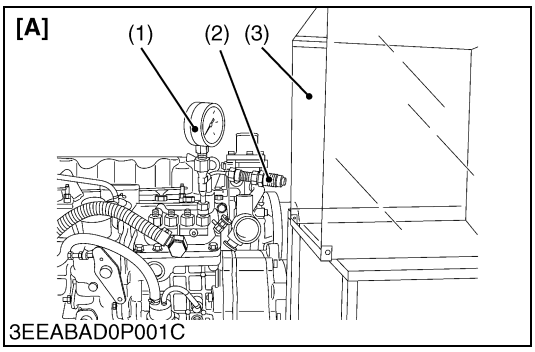

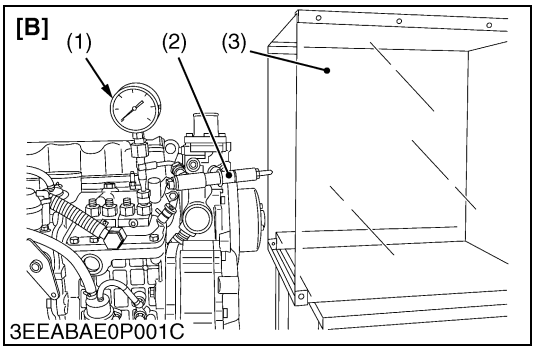

Fuel Tightness of Delivery Valve

1. Remove the solenoid.
2. Remove the injection pipes.
3. Set a pressure tester to the fuel injection pump.
4. Install the injection nozzle (2) jetted with the proper injection pressure to the injection pump pressure tester (1).
5. Run the starter to increase the pressure.
6. Stop the starter when the fuel jets from the injection nozzle. After that, turn the flywheel by the hand and raise the pressure to (IDI : approx. 13.73 MPa (140.0 kgf/cm^2, 1991 psi)), (DI : approx.18.63 MPa (190.0 kgf/cm^2, 2702 psi)).
7. Now turn the flywheel back about half a turn (to keep the plunger free). Maintain the flywheel at this position and clock the time taken for the pressure to drop from (IDI : 13.73 to 12.75 MPa (from 140.0 to 130.0 kgf/cm^2, from 1991 to 1849 psi)), (DI : 18.63 to 17.65 MPa (190.0 to 180.0 kgf/cm^2, 2702 to 2560 psi)).
8. Measure the time needed to decrease the pressure from (IDI : 13.73 to 12.75 MPa (from 140.0 to 130.0 kgf/cm^2, from 1991 to 1849 psi)), (DI : 18.63 to 17.65 MPa, (190.0 to 180.0 kgf/cm^2, 2702 to 2560 psi)).
9. If the measurement is less than allowable limit, replace the pump with new one or repair at a Kubota-authorized pump service shop.

Fuel tightness of delivery valve	Factory spec.	V3600-E3B V3600-T-E3B, V3600-E3CB, V3600-T-E3CB, V3300-E3BG, V3600-T-E3BG	10 seconds 13.73 → 12.75 MPa 140.0 → 130.0 kgf/cm^2 1991 → 1849 psi
		V3800DI-T-E3B, V3800DI-T-E3CB, V3800DI-T-E3BG	10 seconds 18.63 → 17.65 MPa 190.0 → 180.0 kgf/cm^2 2702 → 2560 psi
	Allowable limit	V3600-E3B, V3600-T-E3B, V3600-E3CB, V3600-T-E3CB, V3300-E3BG, V3600-T-E3BG	5 seconds 13.73 → 12.75 MPa 140.0 → 130.0 kgf/cm^2 1991 → 1849 psi
		V3800DI-T-E3B, V3800DI-T-E3CB, V3800DI-T-E3BG	5 seconds 18.63 → 17.65 MPa 190.0 → 180.0 kgf/cm^2 2702 → 2560 psi

■ **NOTE**

- **Never try to disassemble the injection pump assembly. For repairs, you are strongly requested to contact a Kubota-authorized pump service shop.**

(1) Injection Pump Pressure Tester
(2) Injection Nozzle
(3) Protection Cover for Jetted Fuel

[A] V3600-E3B, V3600-T-E3B, V3600-E3CB, V3600-T-E3CB, V3300-E3BG, V3600-T-E3BG
[B] V3800DI-T-E3B, V3800DI-T-E3CB, V3800DI-T-E3BG

W1017786

CAUTION

- **Check the nozzle injection pressure and condition after confirming that there is nobody standing in the direction the fume goes.**
- **If the fume from the nozzle directly contacts the human body, cells may be destroyed and blood poisoning may be caused.**

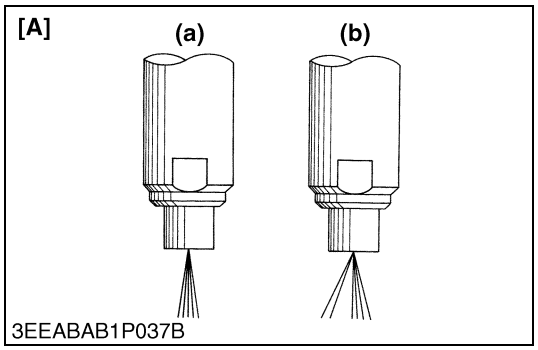

3EEABAB1P037B

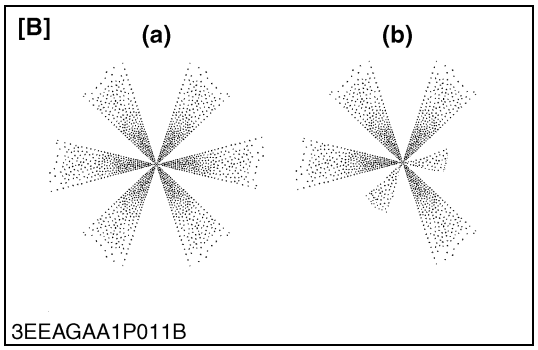

3EEAGAA1P011B

Nozzle Spraying Condition

1. Set the injection nozzle to a nozzle tester, and check the nozzle spraying condition.
2. If the spraying condition is defective,
   replace the nozzle piece. (V3600-E3B, V3600-T-E3B, V3600-E3CB, V3600-T-E3CB, V3300-E3BG, V3600-T-E3BG)
   replace the injection nozzle assembly or repair at Denso service shop. (V3800DI-T-E3B, V3800DI-T-E3CB, V3800DI-T-E3BG)

(a) Good
(b) Bad

[A] V3600-E3B, V3600-T-E3B, V3600-E3CB, V3600-T-E3CB, V3300-E3BG, V3600-T-E3BG
[B] V3800DI-T-E3B, V3800DI-T-E3CB, V3800DI-T-E3BG

W11570900

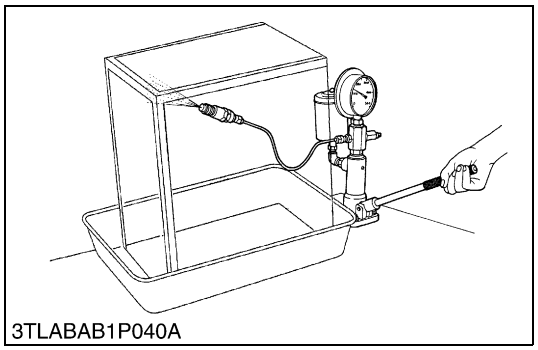
3TLABAB1P040A

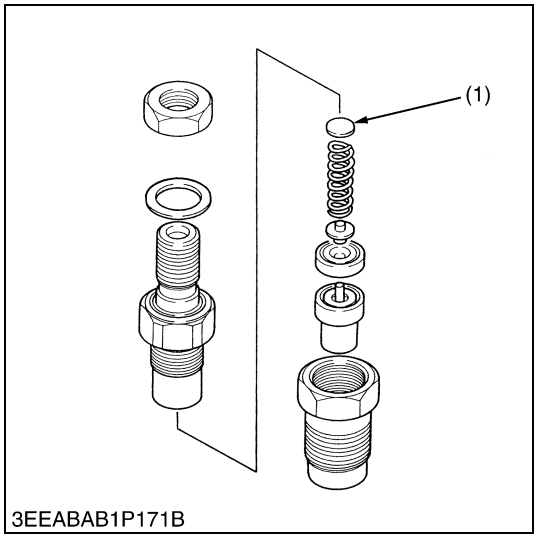

3EEABAB1P171B

Fuel Injection Pressure

[V3600-E3B, V3600-T-E3B, V3600-E3CB, V3600-T-E3CB, V3300-E3BG, V3600-T-E3BG]

1. Set the injection nozzle to a nozzle tester.
2. Slowly move the tester handle to measure the pressure at which fuel begins jetting out from the nozzle.
3. If the measurement is not within the factory specifications, replace the adjusting washer (1) in the nozzle holder to adjust it.

(Reference)

- Pressure variation with 0.025 mm (0.00098 in.) difference of adjusting washer thickness.
  Approx. 590 kPa (6.0 kgf/cm^2, 85 psi)

Fuel injection pressure	Factory spec.	13.73 to 14.70 MPa 140.0 to 150.0 kgf/cm^2 1992 to 2133 psi

(1) Adjusting Washer

W11572830

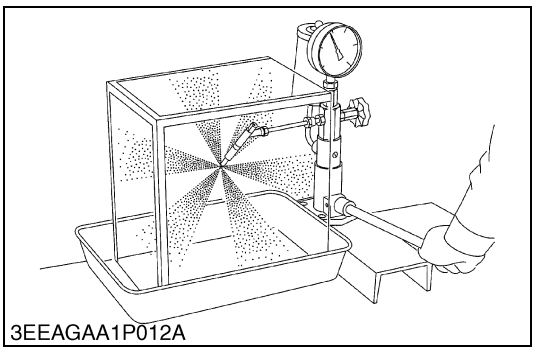
3EEAGAA1P012A

[V3800DI-T-E3B, V3800DI-T-E3CB, V3800DI-T-E3BG]

1. Set the injection nozzle to the nozzle tester.
2. Slowly move the tester handle to measure the pressure at which fuel begins jetting out from the nozzle.
3. If the measurement is not within the factory specifications, replace the injection nozzle assembly or repair at Denso service shop.

■ **NOTE**

- **Injection nozzle gasket must be replaced when the injection nozzle is removed for checking.**

Injection pressure	Factory spec.	1st stage	18.64 to 19.61 MPa 190.0 to 200.0 kgf/cm^2 2703 to 2844 psi

W10412730

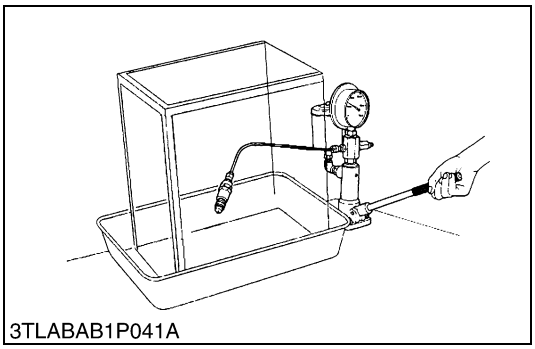
3TLABAB1P041A

Valve Seat Tightness

[V3600-E3B, V3600-T-E3B, V3600-E3CB, V3600-T-E3CB, V3300-E3BG, V3600-T-E3BG]

1. Set the injection nozzle to a nozzle tester.
2. Raise the fuel pressure, and keep at 12.75 MPa (130.0 kgf/cm^2, 1849 psi) for 10 seconds.
3. If any fuel leak is found, replace the nozzle piece.

Valve seat tightness	Factory spec.	No fuel leak at 12.75 MPa 130.0 kgf/cm^2 1849 psi

W10287890

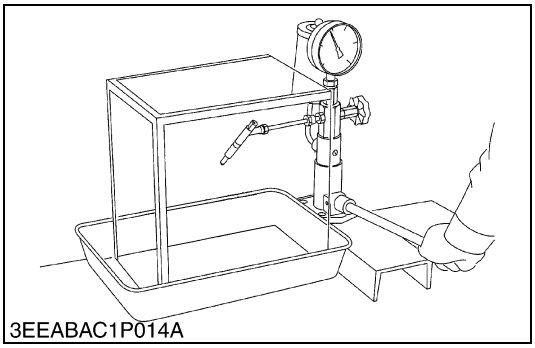
3EEABAC1P014A

[V3800DI-T-E3B, V3800DI-T-E3CB, V3800DI-T-E3BG]

1. Set the injection nozzle to a nozzle tester.
2. Raise the fuel pressure, and keep at 16.67 MPa (170.0 kgf/cm^2, 2418 psi) for 10 seconds.
3. If any fuel leak is found, replace the injection nozzle assembly or repair at Denso service shop.

Valve seat tightness	Factory spec.	No fuel leak at 16.67 MPa 170.0 kgf/cm^2 2418 psi

W10291060

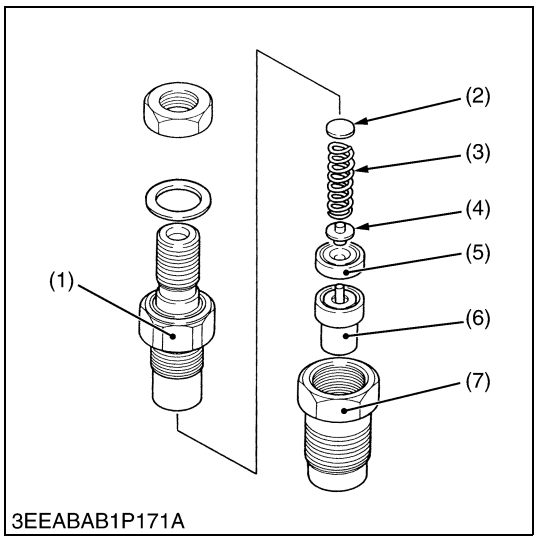

Nozzle Holder

[V3600-E3B, V3600-T-E3B, V3600-E3CB, V3600-T-E3CB, V3300-E3BG, V3600-T-E3BG]

1. Secure the nozzle retaining nut (7) with a vise.
2. Remove the nozzle holder (1), and take out parts inside.

(When reassembling)

- Assemble the nozzle in clean fuel oil.
- Install the push rod (4), noting its direction.
- After assembling the nozzle, be sure to adjust the fuel injection pressure.

Tightening torque	Nozzle holder	35 to 39 N·m 3.5 to 4.0 kgf·m 26 to 28 lbf·ft
	Overflow pipe retaining nut	20 to 24 N·m 2.0 to 2.5 kgf·m 15 to 18 lbf·ft
	Nozzle holder assembly	49 to 68 N·m 5.0 to 7.0 kgf·m 37 to 50 lbf·ft

(1) Nozzle Holder
(2) Adjusting Washer
(3) Nozzle Spring
(4) Push Rod
(5) Distance Piece
(6) Nozzle Piece
(7) Nozzle Retaining Nut

W1157863

(5) Electrical System

CAUTION

- **To avoid accidental short circuit, be sure to attach the positive cable to the positive terminal before the negative cable is attached to the negative terminal.**
- **Never remove the battery cap while the engine is running.**
- **Keep electrolyte away from eyes, hands and clothes. If you are spattered with it, wash it away completely with water immediately.**
- **Keep open sparks and flames away from the battery at all times. Hydrogen gas mixed with oxygen becomes very explosive.**

■ **IMPORTANT**

- **If the machine is to be operated for a short time without battery (using a slave battery for starting), use additional current (lights) while engine is running and insulate terminal of battery. If this advice is disregarded, damage to alternator and regulator may result.**

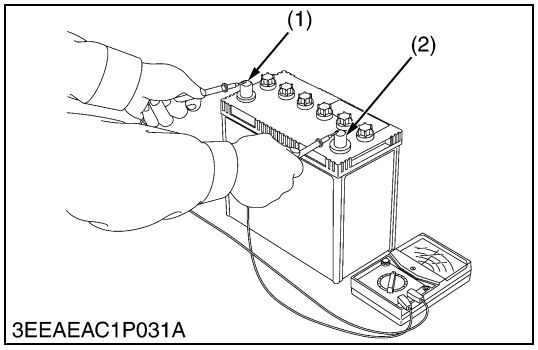

Battery Voltage

1. Stop the engine.
2. Measure the voltage with a circuit tester between the battery terminals.
3. If the battery voltage is less than the factory specification, check the battery specific gravity and recharge the battery.

Battery voltage	Factory spec.	More than 12 V

(1) Positive Terminal
(2) Negative Terminal

W10125620

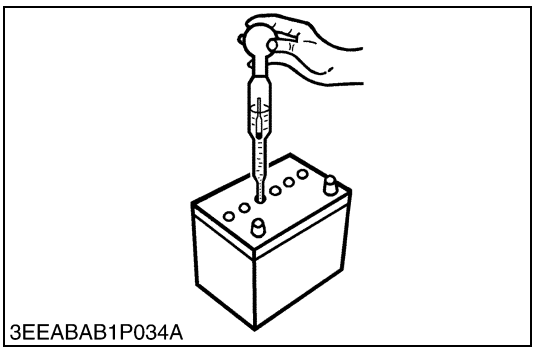
3EEABAB1P034A

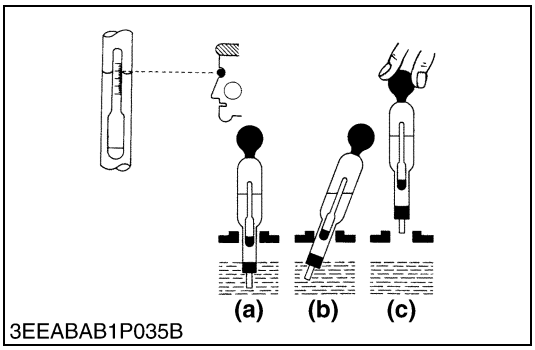

3EEABAB1P035B

Battery Specific Gravity

1. Check the specific gravity of the electrolyte in each cell with a hydrometer.
2. When the electrolyte temperature differs from that at which the hydrometer was calibrated, correct the specific gravity reading following the formula mentioned in **(Reference)**.
3. If the specific gravity is less than 1.215 (after it is corrected for temperature), charge or replace the battery.
4. If the specific gravity differs between any two cells by more than 0.05, replace the battery.

■ **NOTE**

- **Hold the hydrometer tube vertical without removing it from the electrolyte.**
- **Do not suck too much electrolyte into the tube.**
- **Allow the float to move freely and hold the hydrometer at eye level.**
- **The hydrometer reading must be taken at the highest electrolyte level.**

(Reference)

- Specific gravity slightly varies with temperature. To be exact, the specific gravity decreases by 0.0007 with an increase of 1 °C (0.0004 with an increase of 1 °F) in temperature, and increases by 0.0007 with a decreases of 1 °C (0.0004 with a decrease of 1 °F).
  Therefore, using 20 °C (68 °F) as a reference, the specific gravity reading must be corrected by the following formula :
  - Specific gravity at 20 °C = Measured value + 0.0007 × (electrolyte temperature : 20 °C)
  - Specific gravity at 68 °F = Measured value + 0.0004 × (electrolyte temperature : 68 °F)

Specific Gravity	State of Charge
1.260 Sp. Gr.	100 % Charged
1.230 Sp. Gr.	75 % Charged
1.200 Sp. Gr.	50 % Charged
1.170 Sp. Gr.	25 % Charged
1.140 Sp. Gr.	Very Little Useful Capacity
1.110 Sp. Gr.	Discharged

At an electrolyte temperature of 20 °C (68 °F)

(a) Good
(b) Bad
(c) Bad

W1019017

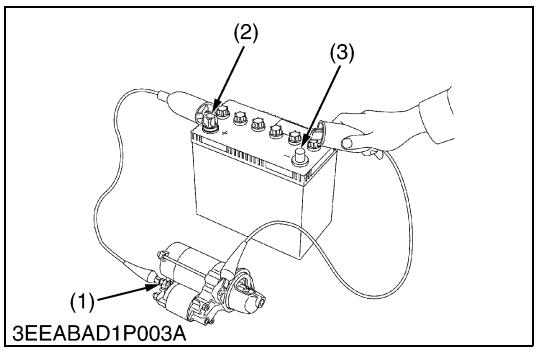

3EEABAD1P003A

Motor Test

CAUTION

- **Secure the starter to prevent it from jumping up and down while testing the motor.**

1. Disconnect the battery negative cable from the battery.
2. Disconnect the battery positive cable from the battery.
3. Disconnect the leads from the starter **B** terminal.
4. Remove the starter from the engine.
5. Connect a jumper lead from the starter **C** terminal (1) to the battery positive terminal (2).
6. Connect a jumper lead momentarily between the starter's body and the battery negative terminal (3).
7. If the motor does not run, starter is failure.
   Repair or replace the starter.

■ **NOTE**

- **B terminal : It is the terminal which connects the cable from the battery to the starter.**
- **C terminal : It is the terminal which connects the cable from the motor to the magnet switch.**

(1) **C** Terminal
(2) Positive Terminal
(3) Negative Terminal

W1019297

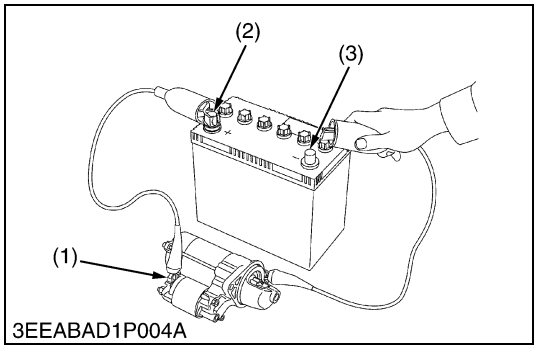

3EEABAD1P004A

Magnetic Switch Test

1. Disconnect the battery negative cable from the battery.
2. Disconnect the battery positive cable from the battery.
3. Disconnect the leads from the starter **B** terminal.
4. Remove the starter from the engine.
5. Connect a jumper lead from the starter **S** terminal (1) to the battery positive terminal (2).
6. Connect a jumper lead momentarily between the starter's body and the battery negative terminal (3).
7. If the pinion gear does not pop out, the magnetic switch is failure.
   Repair or replace the starter.

■ **NOTE**

- **B terminal : It is the terminal which connects the cable from the battery to the starter.**
- **S terminal : It is the terminal which connects the cable from the starter switch to the magnet switch.**

(1) **S** Terminal
(2) Positive Terminal
(3) Negative Terminal

0000010743E

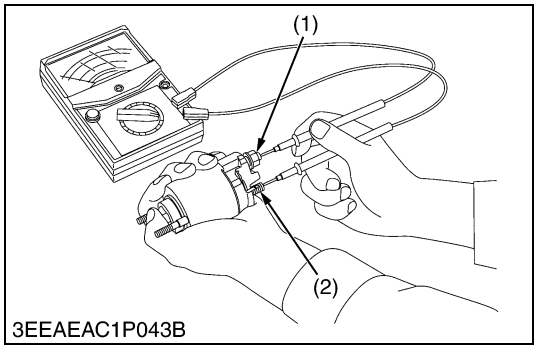

3EEAEAC1P043B

Magnet Switch Continuity Test

1. Check the continuity across the **C** terminal (1) and the **B** terminal (2) with a circuit tester, pushing in the plunger.
2. If not continuous or if a certain value is indicated, replace the magnet switch.

(1) **C** Terminal
(2) **B** Terminal

0000010771E

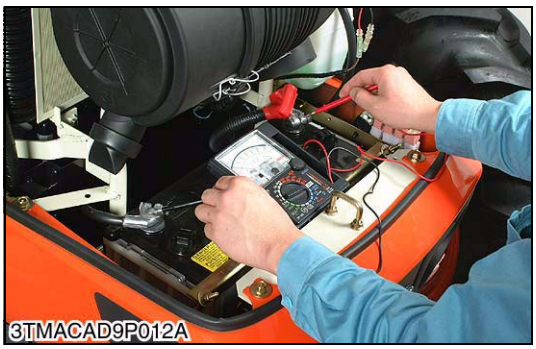

Alternator on Unit Test

(Before testing)

- Before alternator on unit test, check the battery terminal connections, circuit connection, fan belt tension, charging indicator lamp, fuses on the circuit, and abnormal noise from the alternator.
- Prepare full charged battery for the test.

■ **NOTE**

- **Be careful not to touch the rotating engine parts while engine is running.**
  Keep safety distance from the engine rotating parts.

1. Start the engine.
2. When the engine is operating measure the voltage between two battery terminals. If the voltage is between 13.8 V and 14.8 V, the alternator is operating normally.
3. If the results of alternator on unit test are not within the specifications, disassemble the alternator and check the each component part for finding out the failure. See the "DISASSEMBLING AND ASSEMBLING" and "SERVICING" for alternator.

Regulating voltage at no load	Factory spec.	13.8 to 14.8 V at 25 °C (77 °F)

0000010745E

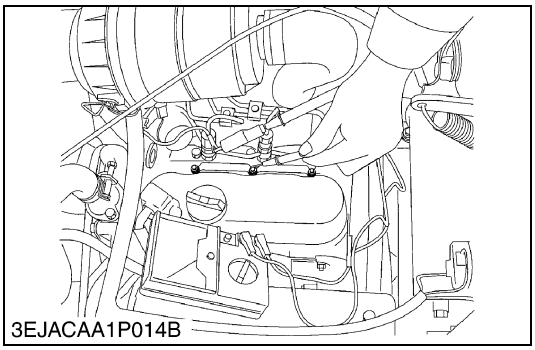

Glow Plug Lead Terminal Voltage

[V3600-E3B, V3600-T-E3B, V3600-E3CB, V3600-T-E3CB, V3300-E3BG, V3600-T-E3BG]

1. Turn the key switch to the "**GLOW** (or **PREHEAT**)" position, and measure the voltage with a circuit tester between the lead terminal and the engine body.
2. If the voltage differs from the battery voltage, the wiring harness or main switch is faulty.

Voltage	Main switch key at **GLOW** (or **PREHEAT**)	Approx. battery voltage

0000010725E

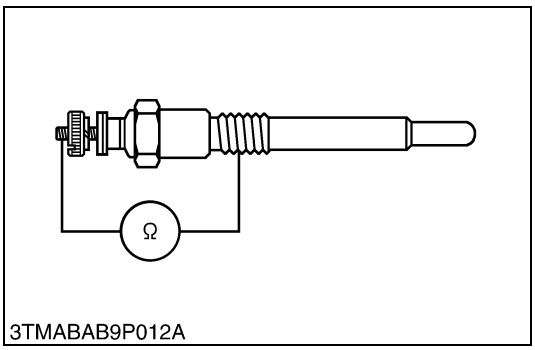

Glow Plug

[V3600-E3B, V3600-T-E3B, V3600-E3CB, V3600-T-E3CB, V3300-E3BG, V3600-T-E3BG]

1. Remove the glow plug.
2. Measure the resistance with a circuit tester between the glow plug terminal and the glow plug housing.
3. If the factory specification is not indicated, glow plug is faulty.

Resistance	Factory spec.	Approx. 1.0 Ω

Tightening torque	Glow plug	20 to 24 N·m 2.0 to 2.5 kgf·m 15 to 18 lbf·ft

W1024626

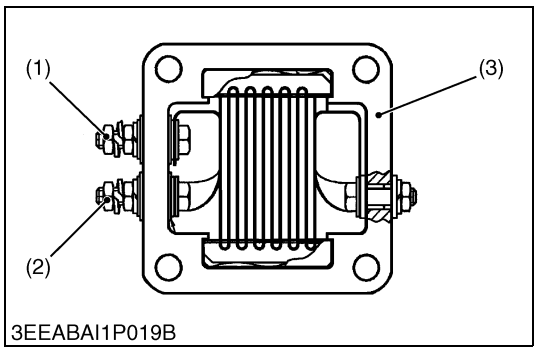

Intake Air Heater

[V3800DI-T-E3B, V3800DI-T-E3CB, V3800DI-T-E3BG]

1. Disconnect the lead.
2. Measure the resistance between each + terminal (1) / (2) and intake air heater body (3).
3. If the resistance is infinity, the intake air heater is faulty.

Intake air heater resistance	Factory spec.	Approx. 0.3 Ω (At cold occasion)

(1) + Terminal
(2) + Terminal
(3) Intake Air Heater Body

W1073774

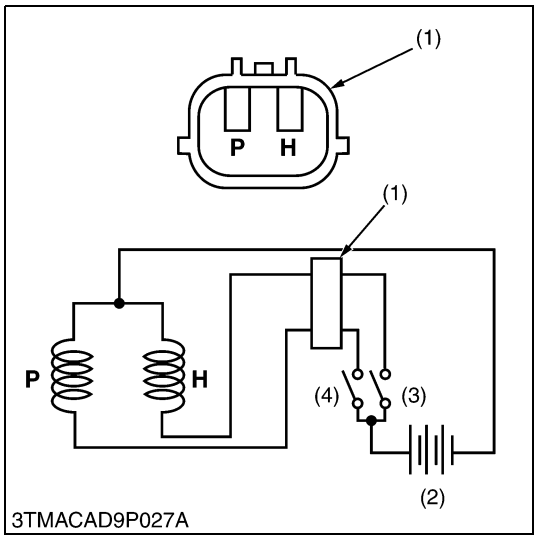

Engine Stop Solenoid

1. Remove the engine stop solenoid from the engine.
2. Connect the jumper leads from the pulling coil **P** terminal to the switch (3), and from switch (3) to the battery positive terminal.
3. Connect the jumper leads from the holding coil **H** terminal to the switch (4), and from switch (4) to the battery positive terminal.
4. Connect the jumper leads from the engine stop solenoid body to the battery negative terminal.
5. When switch (4) is turn on, the plunger pull into the solenoid body and then turn off the switch (4), the plunger comes out.
6. Turn on the switch (3) then turn on the switch (4), the plunger pull into the solenoid body and it keep in holding position after turn off the switch (4).
7. If the plunger is not attracted, the engine stop solenoid is faulty.

■ **IMPORTANT**

- **Never apply the current for pulling coil more than two seconds when inspecting.**

(1) Connector
(2) Battery
(3) Switch for Holding Coil
(4) Switch for Pulling Coil

P : Terminal for Pulling Coil
H : Terminal for Holding Coil

W1478825

(6) Turbocharger

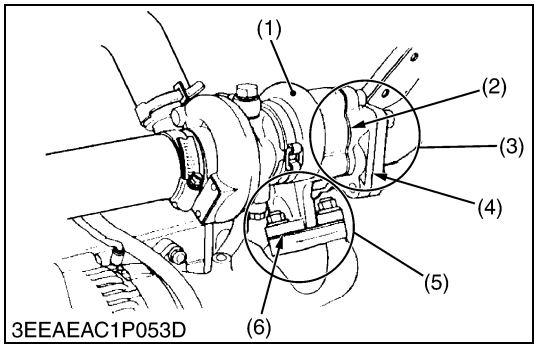

Turbine Side

1. Check the exhaust port (3) and inlet port (5) side of turbine housing (1) to see if there is no exhaust gas leak.
2. If any gas leak is found, retighten the bolts and nuts or replace the gasket (2) / (4) / (6) with new one.

(1) Turbine Housing
(2) Gasket
(3) Exhaust Port
(4) Gasket
(5) Inlet Port
(6) Gasket

W1076917

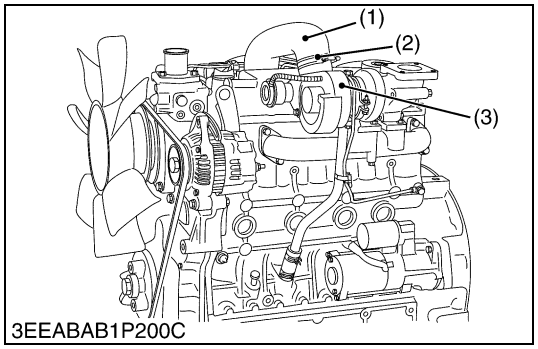

Compressor Side

1. Check the inlet hose (1) of the compressor cover (3) to see if there is no air leak.
2. Check for loose connections or cracks in the suction side of the intake hose.
3. If any air leak is found, change the clamp (2) and or inlet hoses.

(1) Inlet Hose
(2) Clamp
(3) Compressor Cover

W1077032

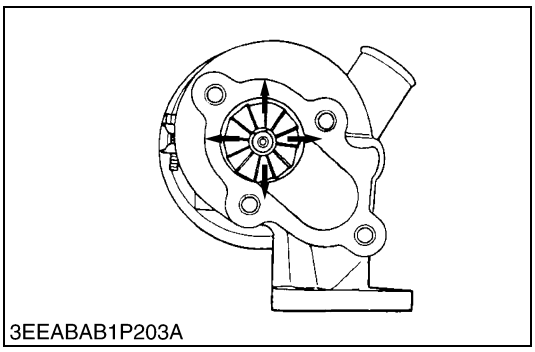
3EEABAB1P203A

Radial Clearance

1. If the wheel contact to the housing, replace the turbocharger assembly with new one.

W1077353

(7) Electronic Governor (Factory Option for V3300-E3BG, V3600-T-E3BG / Standard for V3800DI-T-E3BG)

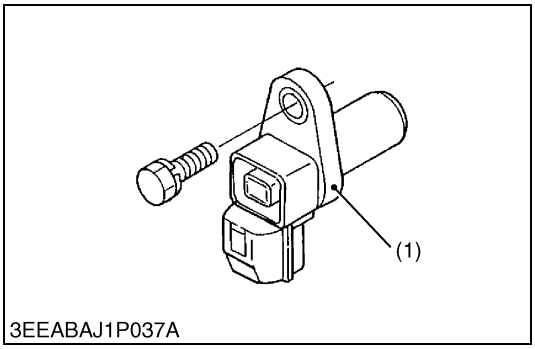

3EEABAJ1P037A

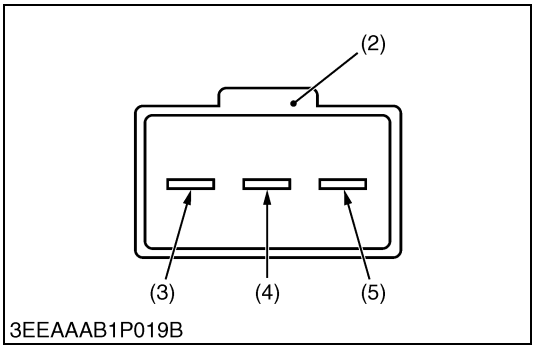

3EEAAAB1P019B

Speed Sensor

1. Disconnect the speed sensor connector (2) (3P).
2. Check the state of the harness and if it is abnormal, please replace it.
3. Turn the key switch to the ACC position.
4. Measure the voltage between the terminals of the connector (2) (harness side).
5. When the measurements are the below table value.
   The ECU is normal. The speed sensor (1) is failure, then please replace it.
6. When the measurements are out of the below table value.
   The ECU is failure, then please replace it.

Voltage	Terminal **1** - Terminal **3**	12 V
	Terminal **1** - Terminal **2**	5 V

(1) Speed Sensor
(2) Speed Sensor Connector (Harness Side)
(3) Terminal **3** (+)
(4) Terminal **2** (Signal)
(5) Terminal **1** (GND)

W1058552

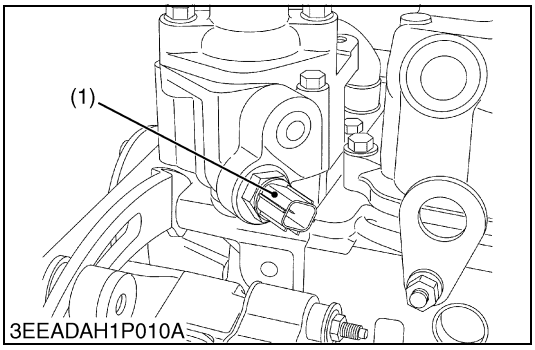

3EEADAH1P010A

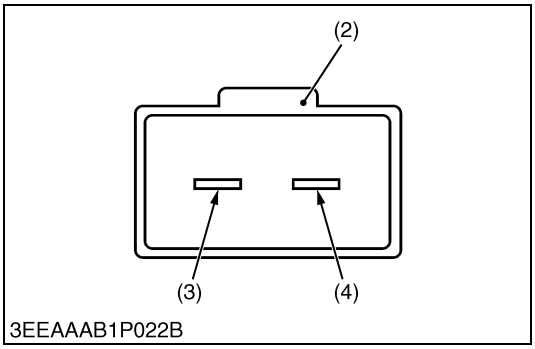

3EEAAAB1P022B

Water Temperature Sensor

1. Disconnect the water temperature sensor connector (2) (2P).
2. Check the state of the harness and if it is abnormal, please replace it.
3. Turn the key switch to the ACC position.
4. Measure the voltage between the terminals of the connector (2) (harness side).
5. When the measurements are the below table value.
   The ECU is normal. The water temperature sensor (1) is failure, then please replace it.
6. When the measurements are out of the below table value.
   The ECU is failure, then please replace it.

Voltage	Terminal **1** - Terminal **2**	5 V

(1) Water Temperature Sensor
(2) Water Temperature Sensor Connector (Harness Side)
(3) Terminal **2** (–)
(4) Terminal **1** (+)

W1059499

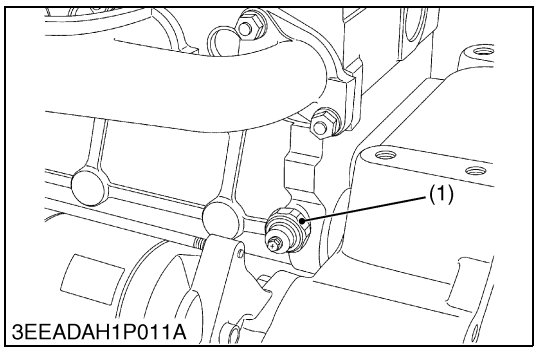

Oil Pressure Switch

1. Disconnect the connector of the oil pressure switch connector (1P).
2. Check the state of the harness and if it is abnormal, please replace it.
3. Measure the resistance between the terminal of the connector (harness side) and chassis.
4. When the measurements are the below table value.
   The ECU is normal. The oil pressure switch (1) is failure, then please replace it.
5. When the measurements are out of the below table value.
   The ECU is failure, then please replace it.

Resistance	Terminal **1** - Chassis	Infinity

(1) Oil Pressure Switch

W1059711

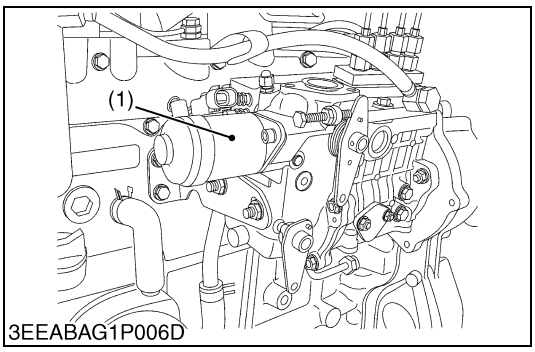

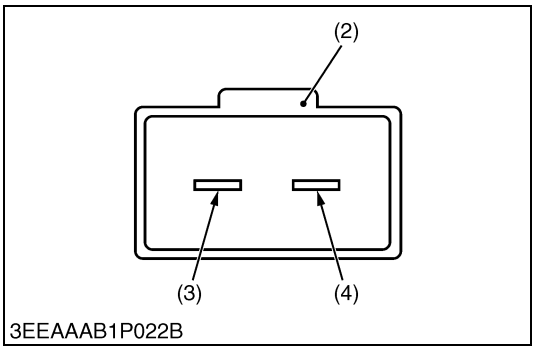

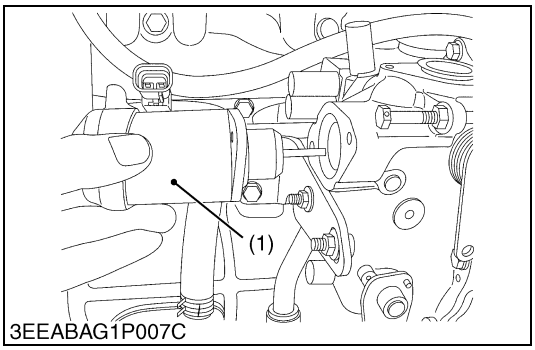

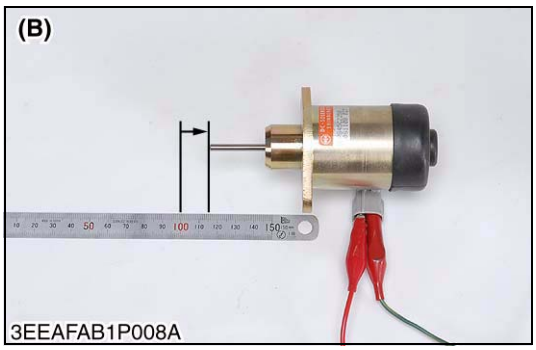

Solenoid

1. Disconnect the connector of solenoid (2) (2P).
2. Check the state of the harness and if it is abnormal, please replace it.
3. Turn the key switch to the ACC position.
4. Measure the voltage between the connector of solenoid (2) (harness side).
5. When the measurements are the below table value, the ECU is normal. Check the solenoid (1) according to the procedure of confirming the solenoid's movement.
6. When the measurements are out of the below table value, the ECU is failure, then please replace it.

Voltage	Terminal **1** - Terminal **2**	12 V

(Reference)

- The procedure of confirming the solenoid's movement

1. Measure the resistance between the connector of solenoid (2).
2. When the measurements are the below table value, the solenoid (1) is normal electrically. Check the solenoid's movement.
3. When the measurements are out of the below table value, the solenoid (1) is failure, then please replace it.
4. Remove the solenoid (1) from the engine.
5. Supply the voltage (12 V) to the solenoid (1).
6. When the rod of the solenoid (1) moves smoothly, the solenoid (1) is normal.
7. When the rod of the solenoid (1) does not move smoothly, the solenoid (1) is failure, then please replace it.

CAUTION

- Please note handling, the solenoid (1) becomes a high temperature.

Resistance	Terminal **1** - Terminal **2**	2 to 4 Ω

(1) Solenoid
(2) Connector of Solenoid
(3) Terminal **2** (–)
(4) Terminal **1** (+)

(A) Key Switch OFF Position
(B) Key Switch ON Position

W1060938

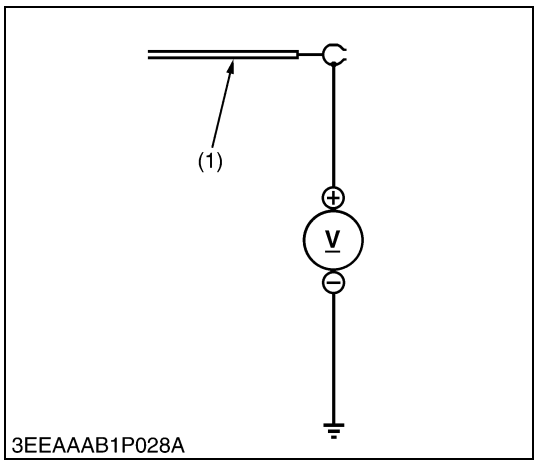

Glow Plug / Intake Air Heater Harness

1. Disconnect the glow plug / intake air heater terminal (1).
2. Check the state of the harness and if it is abnormal, please replace it.
3. Turn the key switch to the ACC position.
4. Measure the voltage between the glow plug / intake air heater terminal (1) of the connector (harness side) and chassis.
5. When the measurements are the below table value.
   The ECU is normal. Some of the glow plugs are failure, then please replace them.
6. When the measurements are out of the below table value.
   The ECU is failure, then please replace it.

Voltage	Terminal - Chassis	12 V

(1) Glow Plug / Intake Air Heater Terminal

W1061770

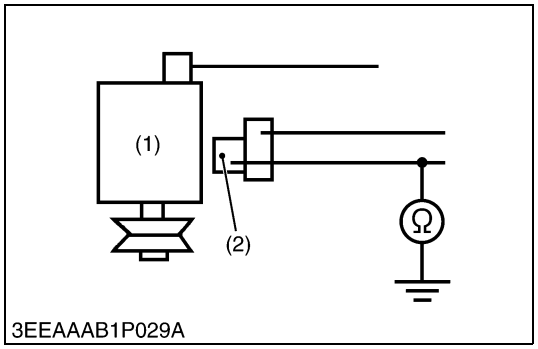

Alternator

1. Disconnect the terminal **L** (2) of the alternator (2P).
2. Check the state of the harness and if it is abnormal, please replace it.
3. Measure the resistance between the terminal **L** (2) of the connector (harness side) and chassis.
4. When the measurements are the below table value.
   The ECU is normal. The alternator is failure, then please replace it.
5. When the measurements are out of the below table value.
   The ECU is failure, then please replace it.

Resistance	Terminal **L** - Chassis	Infinity

(1) Alternator (2) Terminal **L** (Harness Side)

W1063000

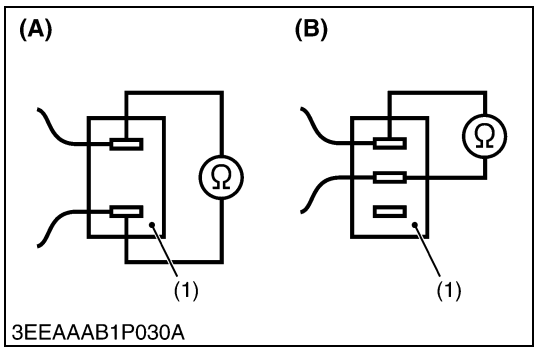

Speed Switch

1. Check the state of the harness and if it is abnormal, please replace it.
2. When the speed switch is turned **ON** and **OFF**, measure the resistance between the speed switch (terminal side) (1) of it each time.
3. When the measurements are the below table value.
   The speed switch is normal. The ECU is failure, then please replace it.
4. When the measurements are out of the below table value.
   The speed switch is failure, then please replace it.

Resistance	**ON**	0 Ω
	OFF	Infinity

(1) Speed Switch (Terminal Side)
(A) Single Pole, Single Throw
(B) Single Pole, Double Throw

W1063856

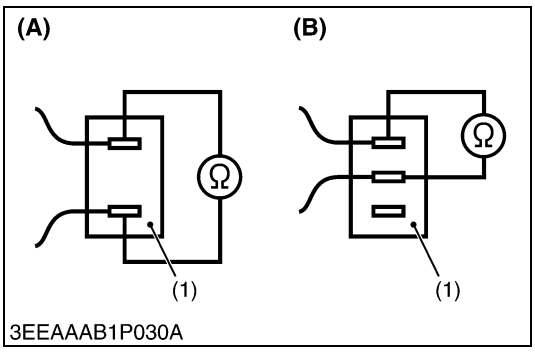

Emergency Stop Switch

1. Check the state of the harness and if it is abnormal, please replace it.
2. When the emergency stop switch is turned **ON** and **OFF**, measure the resistance between the emergency stop switch (terminal side) (1) of it each time.
3. When the measurements are the below table value.
   The emergency stop switch is normal. The ECU is failure, then please replace it.
4. When the measurements are out of the below table value.
   The emergency stop switch is failure, then please replace it.

Resistance	**ON**	0 Ω
	OFF	Infinity

(1) Emergency Stop Switch (Terminal Side)
(A) Single Pole, Single Throw
(B) Single Pole, Double Throw

W1066629

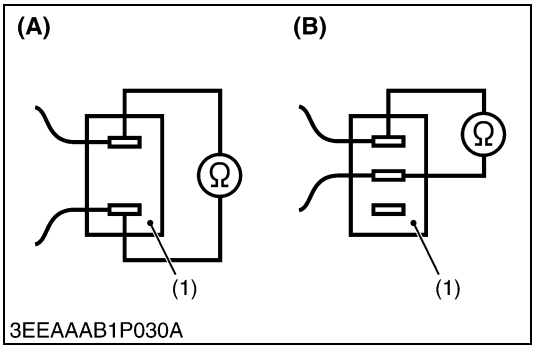

Slow Down Switch

1. Check the state of the harness and if it is abnormal, please replace it.
2. When the slow down switch is turned **ON** and **OFF**, measure the resistance between the slow down switch (terminal side) (1) of it each time.
3. When the measurements are the below table value.
   The slow down switch is normal. The ECU is failure, then please replace it.
4. When the measurements are out of the below table value.
   The slow down switch is failure, then please replace it.

Resistance	**ON**	0 Ω
	OFF	Infinity

(1) Slow Down Switch (Terminal Side)
(A) Single Pole, Single Throw
(B) Single Pole, Double Throw

W1067200

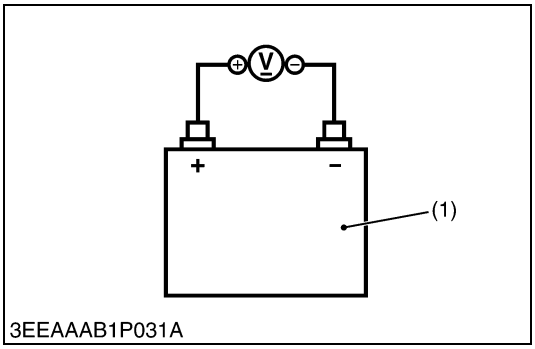

Battery

1. Measure the voltage of the battery (1) with the engine stopped.
2. When the measurements are the below table value.
   The battery is normal. The ECU is failure, then please replace it.
3. When the measurements are out of the below table value.
   The battery is failure, then please replace it.

Voltage	**+** terminal - – terminal	12 V

(1) Battery

W1067456

[2] EGR SYSTEM

(1) Checking the function of EGR system (V3800DI-T-E3B, V3800DI-T-E3CB, V3800DI-T-E3BG only)

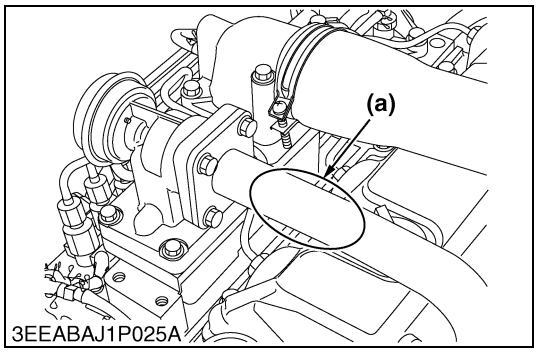

1. Check the coolant temperature and monitor the coolant temperature while checking 1) and 2).
2. If the coolant temperature is already 55 °C (131 °F), cool down the engine.
3. Start the engine and go to check 1) immediately.
4. After completing checking 1), arrange the coolant temperature is getting over 70 °C (158 °F).
5. If the coolant temperature is over 70 °C (158 °F), go to check 2).

(a) Measuring Place of EGR Pipe Surface Temperature

W1177055

1) If the coolant temperature is under 55 °C (131 °F), the surface temperature of EGR pipe must be under 50 °C (122 °F).

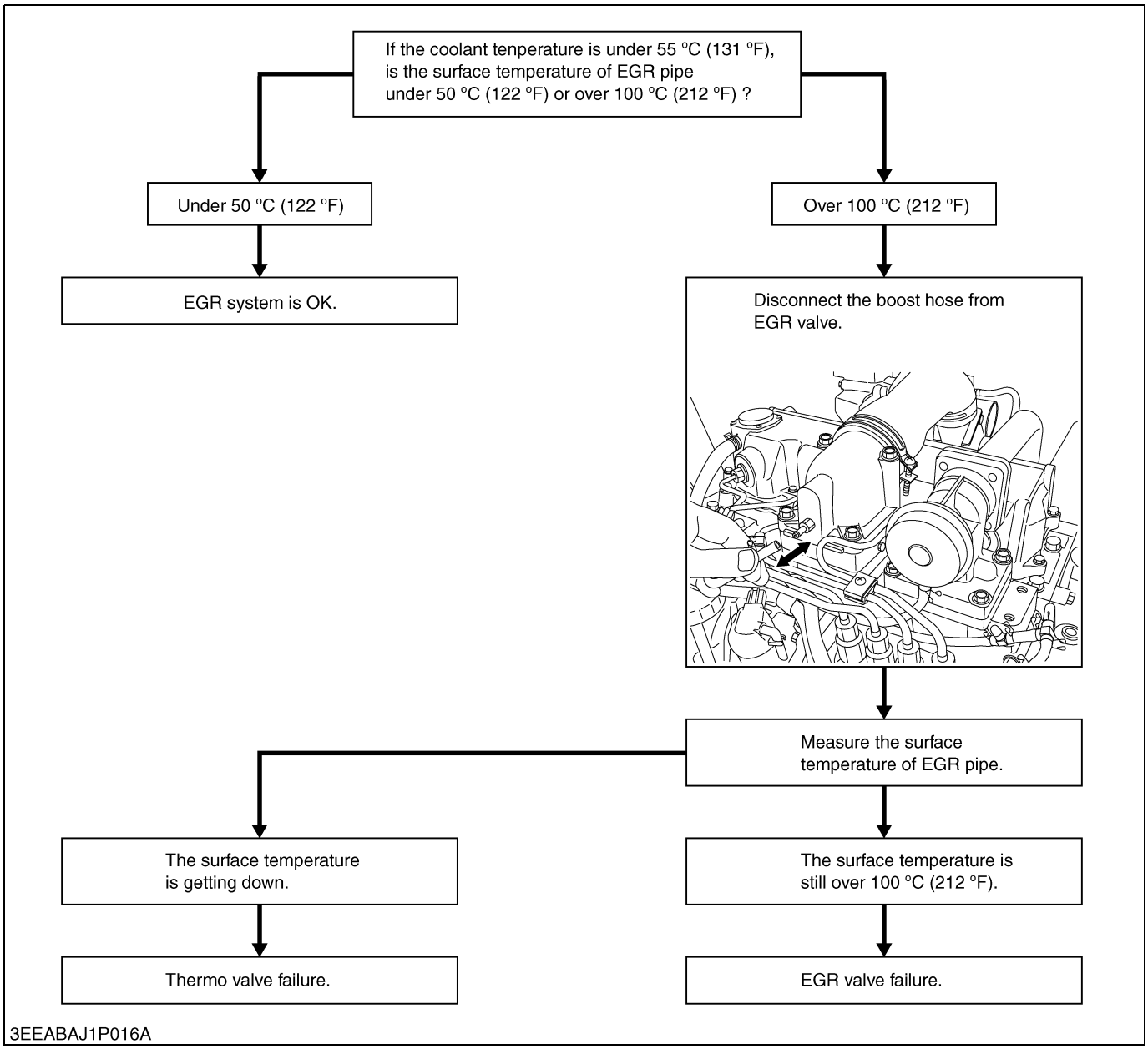

2) If the coolant temperature is over 70 °C (158 °F), the surface temperature of EGR pipe must be over 100 °C (212 °F).

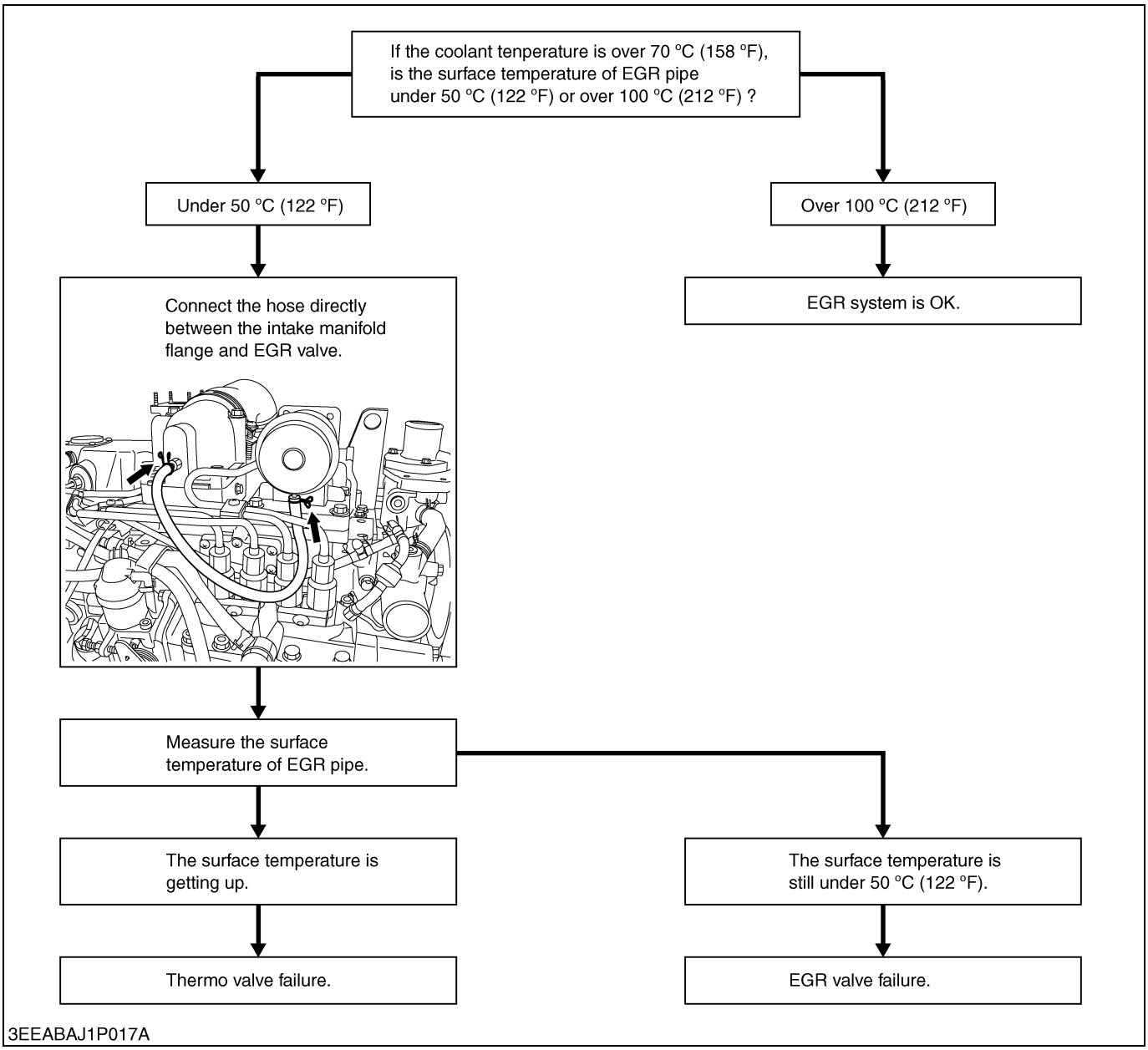

[3] DISASSEMBLING AND ASSEMBLING

(1) Draining Oil and Coolant

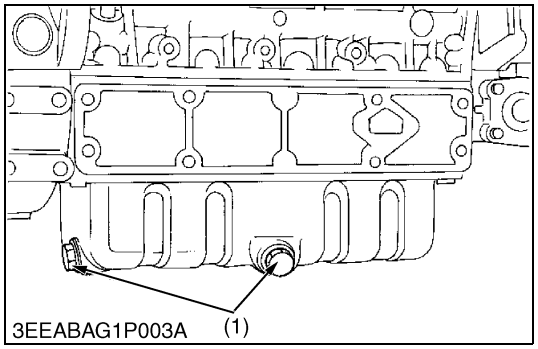

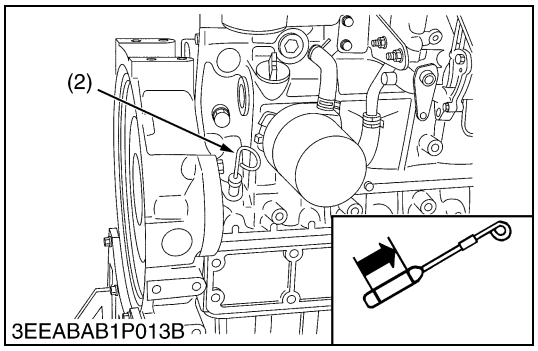

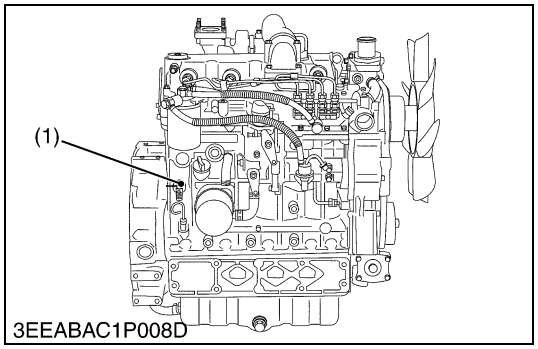

Draining Engine Oil

1. Start and warm up the engine for approx. 5 minutes.
2. Place an oil pan underneath the engine.
3. Remove the drain plug (1) to drain oil.
4. After draining, screw in the drain plug.

(When refilling)

- Fill the engine oil up to the upper line on the dipstick (2).

■ **IMPORTANT**

- **Never mix two different types of oil.**
- **Use the proper SAE Engine Oil according to ambient temperature.**

(1) Drain Plug (2) Dipstick

W1023464

Draining Coolant

CAUTION

- **Never remove radiator cap while operating or immediately after stopping. Otherwise, hot water will spout out from the radiator. Wait for more than ten minutes to cool the radiator, before opening the cap.**

1. Prepare a bucket. Open the coolant drain cock.

(1) Coolant Drain Cock

W1023496

(2) External Components

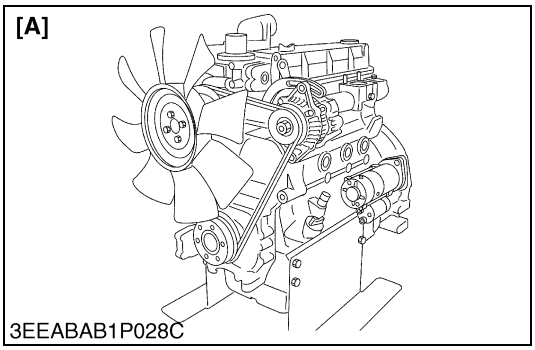

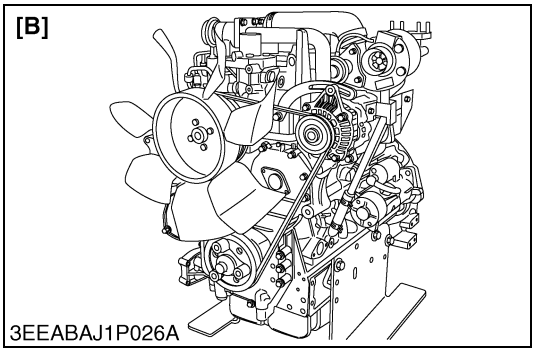

Air Cleaner, Muffler and Others (All models)

1. Remove the air cleaner and muffler.
2. Remove the fan, fan belt, alternator and starter.

(When reassembling)

- Check to see that there are no cracks on the belt surface.

■ **IMPORTANT**

- **After reassembling the fan belt, be sure to adjust the fan belt tension.**
- **Do not confuse the direction of the fan. Attach the fan with its "1C010" marking facing frontward (toward the radiator).**

[A] V3600-E3B **[B] V3800DI-T-E3B**

W1049622

(3) TURBOCHARGER (V3600-T-E3B, V3800DI-T-E3B, V3600-T-E3CB, V3800DI-T-E3CB, V3600-T-E3BG, V3800DI-T-E3BG)

CAUTION

- **While the engine is running and or just after it stops, the turbocharger is hot, be careful not to touch the turbocharger.**

■ **NOTE**

- **When detaching and attaching the turbocharger assembly, be very careful not to allow dust, dirt and other foreign matter in the oil pipes.**
- **When the turbocharger assembly has been replace, pour fresh engine oil through the oil filler port of the turbocharger.**
- **Before starting the engine, make sure that air cleaner is in position.**

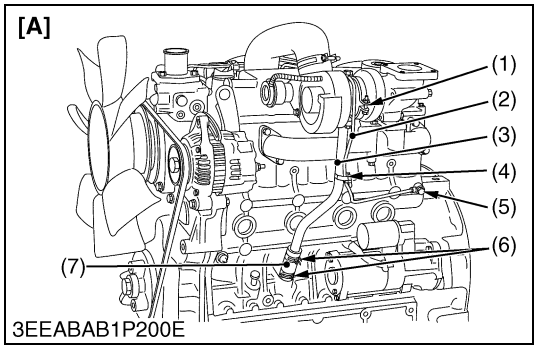

3EEABAB1P200E

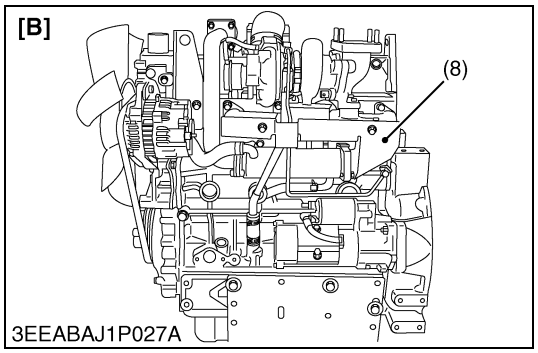

3EEABAJ1P027A

Oil Pipe

1. Remove the cover (8) (V3800DI-T-E3B, V3800DI-T-E3CB, V3800DI-T-E3BG only).
2. Remove the joint bolt (5) and clamp (4) and take off the pipe 1 (2).
3. Remove the bolts (1) and release the clamp (6).
4. Disconnect the oil pipe 2 (7) and pipe 4 (3).

(When reassembling)

- Pour fresh engine oil through the oil filler port of the turbocharger.
- Replace the gasket with new one.
- Be careful not to allow dust, dirt and other foreign matters in the oil pipes.

■ **NOTE**

- **Tape or plug all openings to prevent foreign matters from damaging the oil cavities in the turbocharger.**

(1) Bolt
(2) Oil Pipe 1
(3) Oil Pipe 4
(4) Clamp
(5) Joint Bolt
(6) Clamp
(7) Oil Pipe 2
(8) Cover

[A] V3600-T-E3B, V3600-T-E3CB, V3600-T-E3BG
[B] V3800DI-T-E3B, V3800DI-T-E3CB, V3800DI-T-E3BG

W1025983

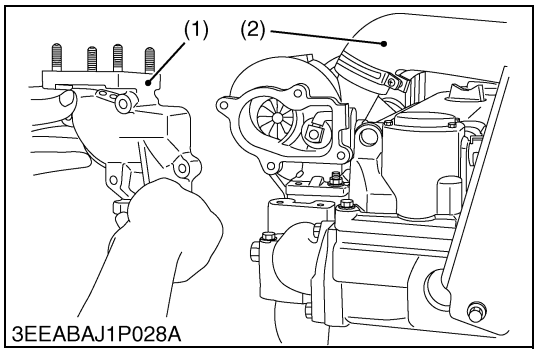

3EEABAJ1P028A

Turbocharger

1. Remove the turbocharger flange (1).
2. Remove the inlet hose (2).
3. Remove the turbocharger assembly (3).

(When reassembling)

- Replace the gasket with new one.

(1) Turbocharger Flange
(2) Inlet Hose
(3) Turbocharger Assembly

W1078106

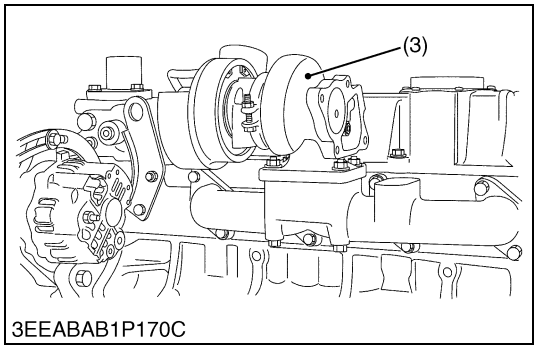

3EEABAB1P170C

(4) Exhaust Gas Recirculation (EGR) (V3800DI-T-E3B, V3800DI-T-E3CB, V3800DI-T-E3BG)

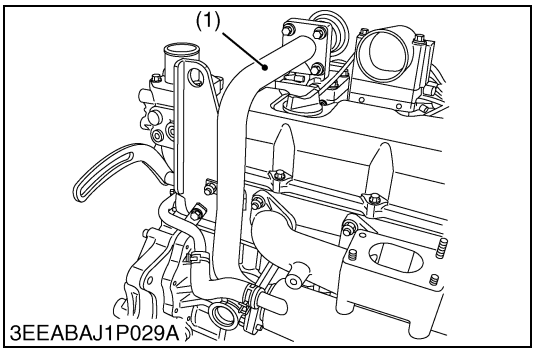

EGR Pipe

1. Remove the EGR pipe (1).

(When reassembling)

- Replace the gaskets with new ones.

(1) EGR Pipe

W1184151

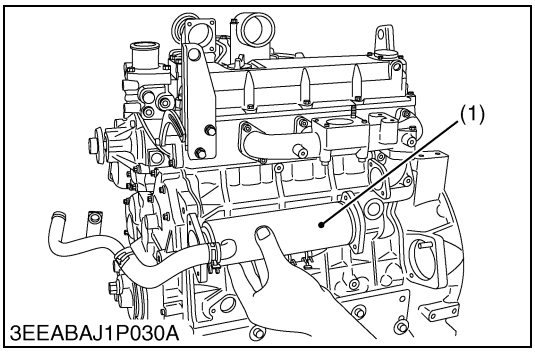

EGR Cooler

1. Remove the EGR cooler (1).

(When reassembling)

- Replace the gaskets with new ones.

(1) EGR Cooler

W1185665

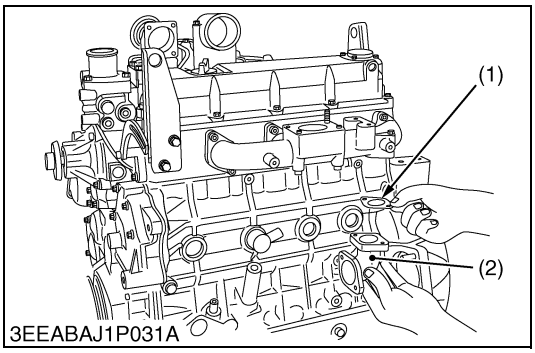

EGR Cooler Flange

1. Remove the EGR cooler flange (2).

(When reassembling)

- Replace the gaskets with new ones.

(1) Gasket
(2) EGR Cooler Flange

W1187006

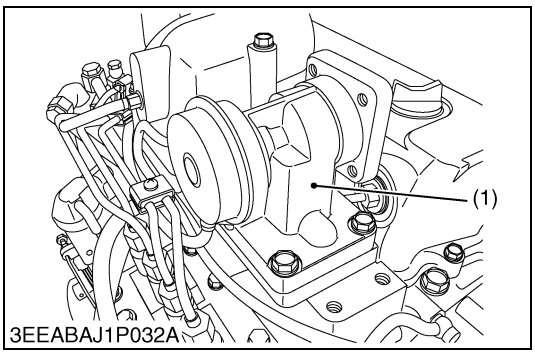

EGR Valve

1. Remove the EGR valve (1).

(When reassembling)

- Replace the gaskets with new ones.

(1) EGR Valve

W1188318

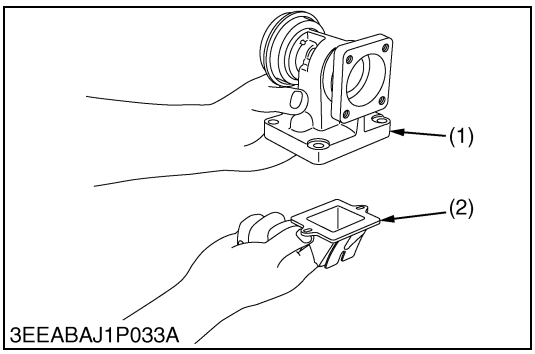

Reed Valve

1. Remove the reed valve (2) from the EGR valve (1).

(When reassembling)

- Replace the gasket with new ones.

(1) EGR Valve
(2) Reed Valve

W1188708

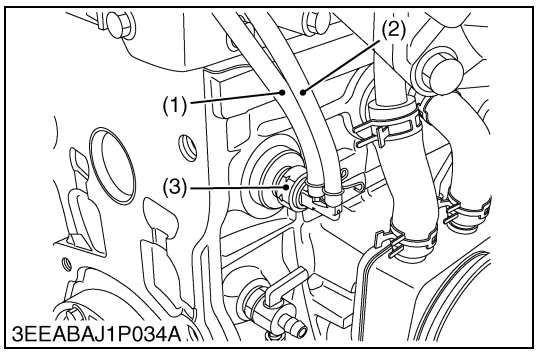

3EEABAJ1P034A

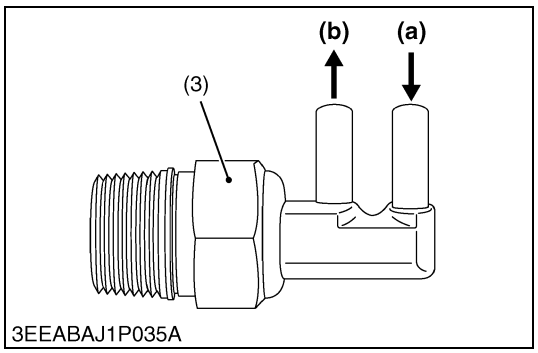

3EEABAJ1P035A

Thermo Valve (If necessary)

1. Disconnect hoses (1), (2).
2. Remove the thermo valve (3).

■ **NOTE**

- **If you drop the thermo valve (3), replace the thermo valve (3) with new one.**

(When reassembling)

- Securely connect the hoses (1), (2).

Tightening torque	Thermo valve	30 to 39 N·m 3.0 to 4.0 kgf·m 22 to 28 lbf·ft

(1) Hose to EGR Valve
(2) Hose from Intake Manifold Flange
(3) Thermo Valve

(a) Boost Pressure from Intake Manifold
(b) Boost Pressure to EGR Valve

W1188855

(5) Cylinder Head and Valves

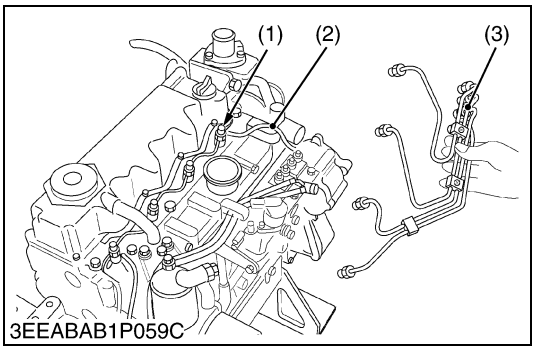

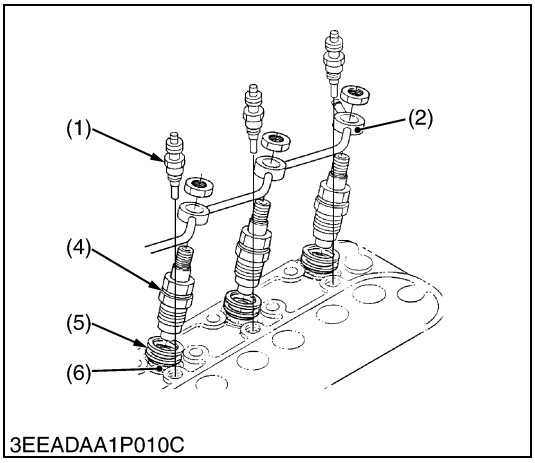

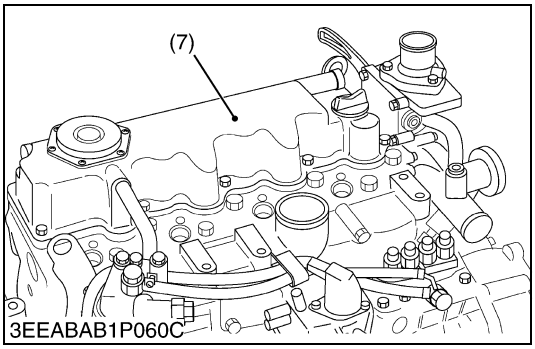

Cylinder Head Cover and Nozzle Holder

[V3600-E3B, V3600-T-E3B, V3600-E3CB, V3600-T-E3CB, V3300-E3BG, V3600-T-E3BG]

1. Remove the injection pipes (3) and overflow pipes (2).
2. Remove the glow plugs (1).
3. Remove the nozzle holder assembly (4) and copper gaskets (5).
4. Remove the heat seal (6).
5. Remove the head cover (7).

(When reassembling)

- Check to see that the cylinder head cover gasket is not defective.
- Be sure to place the heat seal.
- Tighten the head cover mounting bolts to specified torque.
- Mount the check valve with the ↓ mark toward the tank.

■ **NOTE**

- **The injection pipes connection in V3600-E3CB and V3600-T-E3CB (Optional 1 idle gear train type) are very unique. See the table below.**

Connection between injection pump and nozzle		
Injection Pump		Nozzle
1	→	1
2	→	3
3	→	2
4	→	4

Tightening torque	Cylinder head cover screw	6.9 to 11.2 N·m 0.70 to 1.15 kgf·m 5.1 to 8.31 lbf·ft
	Injection pipe retaining nut	23 to 36 N·m 2.3 to 3.7 kgf·m 17 to 26 lbf·ft
	Nozzle holder assembly	49 to 68 N·m 5.0 to 7.0 kgf·m 37 to 50 lbf·ft
	Overflow pipe assembly retaining nut	20 to 24 N·m 2.0 to 2.5 kgf·m 15 to 18 lbf·ft
	Glow plug	20 to 24 N·m 2.0 to 2.5 kgf·m 15 to 18 lbf·ft

(1) Glow Plug
(2) Overflow Pipe
(3) Injection Pipe
(4) Nozzle Holder Assembly
(5) Copper Gasket
(6) Heat Seal
(7) Head Cover

W1049737

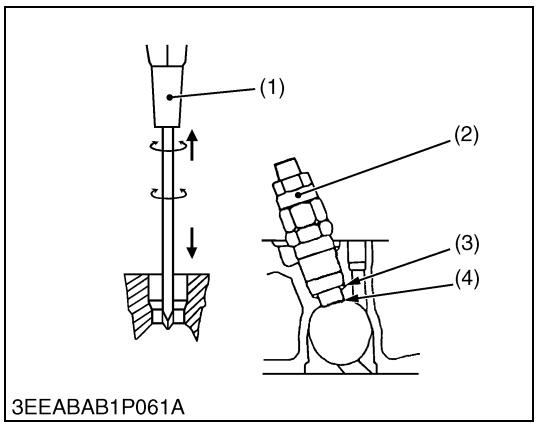

Nozzle Heat Seal Service Removal Procedure

[V3600-E3B, V3600-T-E3B, V3600-E3CB, V3600-T-E3CB, V3300-E3BG, V3600-T-E3BG]

■ **IMPORTANT**

- **Use a plus (phillips head) screw driver (1) that has a diameter which is bigger than the heat seal hole (Approx. 6 mm (1/4 in.)).**

1. Drive screw driver (1) lightly into the heat seal hole.
2. Turn screw driver three or four times each way.
3. While turning the screw driver, slowly pull the heat seal (4) out together with the injection nozzle gasket (3).
4. If the heat seal drops, repeat the above procedure.

(When reassembling)

- Heat seal and injection nozzle gasket must be changed when the injection nozzle is removed for cleaning or for service.

(1) Plus Screw Driver
(2) Injection Nozzle
(3) Injection Nozzle Gasket
(4) Heat Seal

W1021255

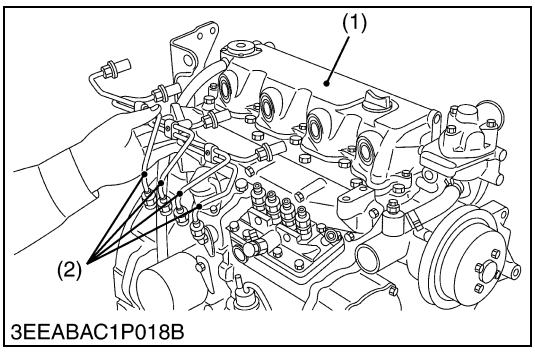

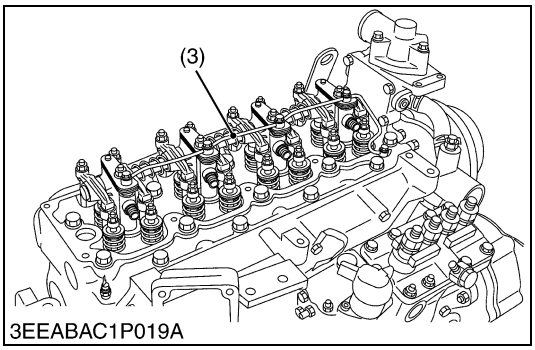

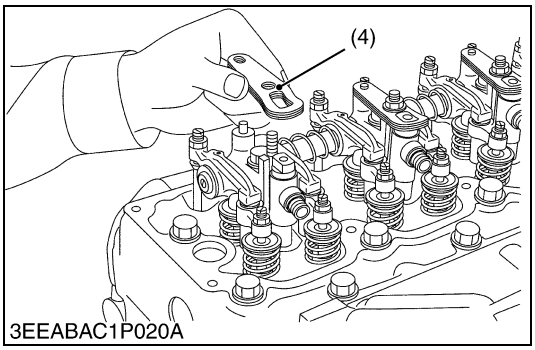

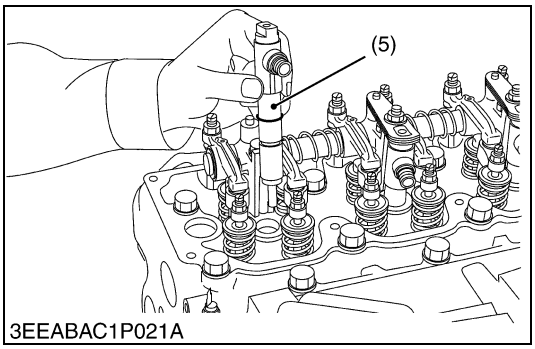

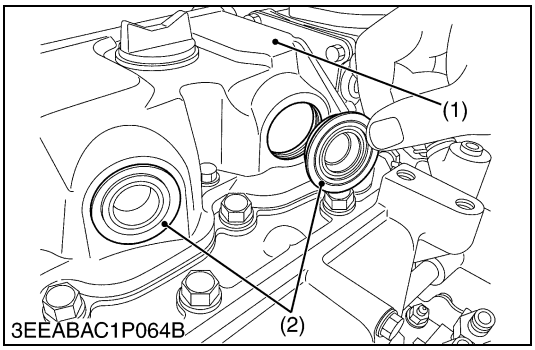

Cylinder Head Cover and Nozzle Holder

[V3800DI-T-E3B, V3800DI-T-E3CB, V3800DI-T-E3BG]

1. Remove the injection pipes (2).
2. Remove the cylinder head cover (1).
3. Remove the over flow pipe (3).
4. Remove the nozzle holder clamps (4), nozzle holder assembly (5) and nozzle gaskets.

(When reassembling)

- Check to see that the cylinder head cover gasket is not defective.
- Be sure to place the nozzle gaskets.
- Tighten the head cover mounting bolts to specified torque.
- Mount the check valve with the ↓ mark toward the tank.

■ **NOTE**

- **The injection pipes connection in V3800DI-T-E3CB (Optional 1 idle gear train type) is very unique. See the table below.**

Connection between injection pump and nozzle		
Injection Pump		Nozzle
1	→	1
2	→	3
3	→	2
4	→	4

Tightening torque	Nozzle holder clamp nut	18 to 20 N·m 1.8 to 2.1 kgf·m 13 to 15 lbf·ft
	Overflow pipe assembly joint screw	9.8 to 11.2 N·m 1.0 to 1.15 kgf·m 7.24 to 8.31 lbf·ft
	Cylinder head cover screw	6.9 to 11.2 N·m 0.70 to 1.15 kgf·m 5.1 to 8.31 lbf·ft
	Injection pipe retaining nut	23 to 36 N·m 2.3 to 3.7 kgf·m 17 to 26 lbf·ft

(1) Head Cover
(2) Injection Pipe
(3) Overflow Pipe
(4) Nozzle Holder Clamps
(5) Nozzle Holder Assembly

W1480638

Injection Nozzle Oil Seal (if necessary)

[V3800DI-T-E3B, V3800DI-T-E3CB, V3800DI-T-E3BG]

1. Remove the injection nozzle oil seal (2) from cylinder head cover (1).

(When reassembling)

- When install the injection nozzle oil seal, use the new one.

(1) Cylinder Head Cover
(2) Injection Nozzle Oil Seal

W1054100

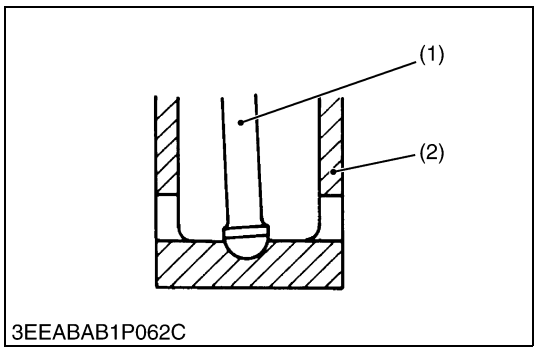

3EEABAB1P062C

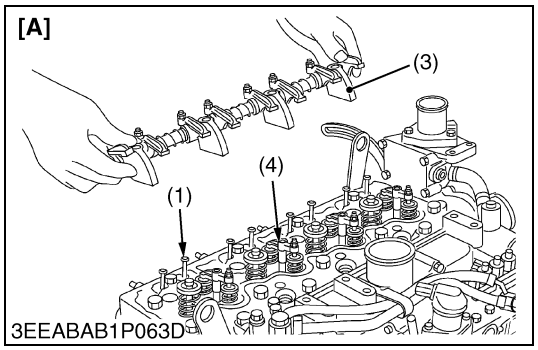

3EEABAB1P063D

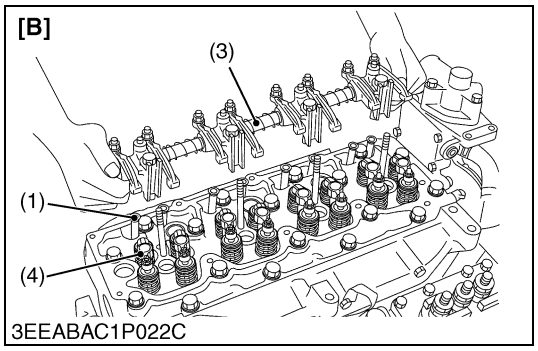

3EEABAC1P022C

Rocker Arm and Push Rod

1. Remove the rocker arm (3) as a unit.
2. Remove the push rods (1).
3. Remove the bridge arm (4).

(When reassembling)

- When putting the push rods onto the tappets (2), check to see if their ends are properly engaged with the grooves.

■ **IMPORTANT**

- **After reassembling the rocker arm, be sure to adjust the valve clearance.**

Tightening torque	Rocker arm bracket screw	49 to 55 N·m 5.0 to 5.7 kgf·m 37 to 41 lbf·ft

(1) Push Rod
(2) Tappet
(3) Rocker Arm
(4) Bridge Arm

[A] V3600-E3B, V3600-T-E3B, V3600-E3CB, V3600-T-E3CB, V3300-E3BG, V3600-T-E3BG
[B] V3800DI-T-E3B, V3800DI-T-E3CB, V3800DI-T-E3BG

W1050212

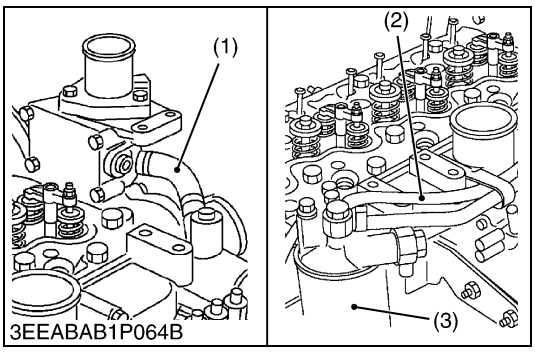

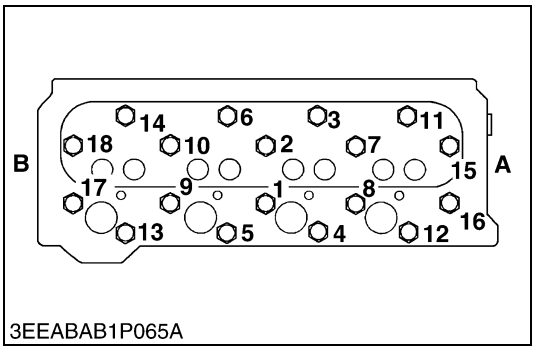

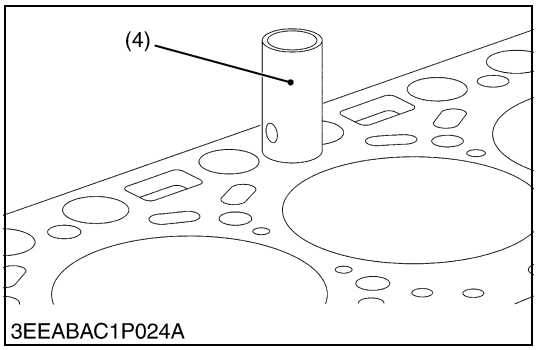

Cylinder Head and Tappet

1. Loosen the pipe band, and remove the water return pipe (1).
2. Disconnect the fuel pipe (2) first and then the fuel filter (3).
3. Remove the IN. / EX. Manifold.
4. Remove the cylinder head screw in the order of (18) to (1), and remove the cylinder head.
5. Remove the cylinder head gasket.
6. Remove the tappets (4) from the crank case.

(When reassembling)

- Replace the head gasket with a new one.
- Before installing the tappets (4), apply engine oil thinly around them.
- When mounting the gasket, set it to the knock pin hole. Take care not to mount it reversely.
- The cylinder head should be free of scratches and dust.
- Take care for handling the gasket not to damage it.
- Install the cylinder head.
- Tighten the cylinder head screw gradually in the order of (1) to (18) after applying engine oil.
- Be sure to adjust the valve clearance. See the “Valve Clearance”.
- It is not necessary to retighten the cylinder head screw after running the engine for 30 minutes.

■ **IMPORTANT**

- **When replace the piston, piston pin bush, connecting rod or crankpin bearing, select the cylinder head gasket thickness to meet with the top clearance refer to the “Selecting Cylinder Head Gasket”.**

■ **NOTE**

- **Mark the cylinder number to the tappets to prevent interchanging.**

Tightening torque	Cylinder head mounting screw	98.1 to 107 N·m 10.0 to 11.0 kgf·m 72.4 to 79.5 lbf·ft

(1) Return Pipe
(2) Fuel Pipe
(3) Fuel Filter
(4) Tappet

A : Gear Case Side
B : Flywheel Side

W1170923

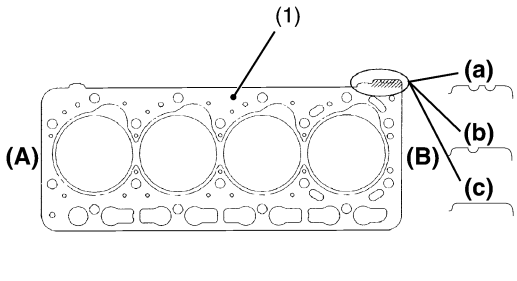

3EEABAB1P068A

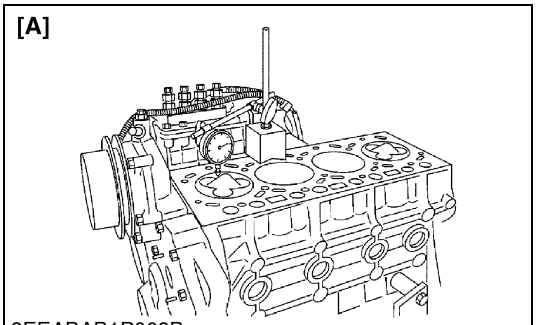

3EEABAB1P069B

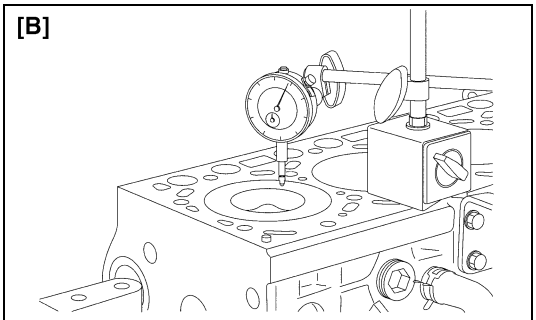

3EEABAC1P025B

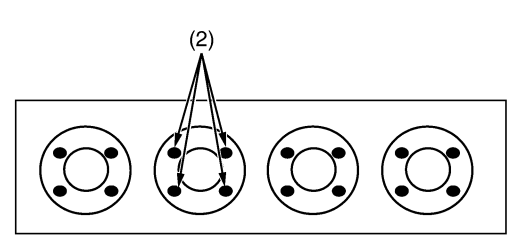

3EEABAC1P026A

Selecting Cylinder Head Gasket

■ Replacing the Cylinder Head Gasket

1. Make sure the notch mark **(a)**, **(b)** or **(c)** of cylinder head gasket (1) in advance.
2. If you do not replace piston, piston pin bush, connecting rod, crankpin bearings, or crank journal bearings, replace the same notch mark **(a)**, **(b)** or **(c)** as the original cylinder head gasket (1).

■ Selecting the Cylinder Head Gasket

- Select the cylinder head gasket (1) thickness to meet with the top clearance if replacing the piston, piston pin bush, connecting rod, crankpin bearings, or crank journal bearings.

1. Measure the piston head's protrusion (+) recessing (-) from the crankcase cylinder face (4 spots per each piston and average of four pistons) using the dial gauge as shown in figure.
2. Select the suitable cylinder head gasket refer to the table below.

[V3600-E3B, V3600-T-E3B, V3600-E3CB, V3600-T-E3CB, V3600-T-E3BG]

Notch of Cylinder Head Gasket	Thickness of cylinder head gasket		Part Code	Piston Head's protrusion or recessing from the level of crankcase cylinder face. (average of 4 pistons)
	Before tightening	After tightening		
2 notches **(a)**	0.90 mm 0.035 in.	0.80 mm 0.031 in.	1C020-03310	-0.301 to -0.420 mm -0.0118 to -0.0165 in.
1 notch **(b)**	1.00 mm 0.0394 in.	0.90 mm 0.035 in.	1C020-03600	-0.201 to -0.300 mm -0.00791 to -0.0018 in.
Without notch **(c)**	1.05 mm 0.0413 in.	0.95 mm 0.037 in.	1C020-03610	-0.150 to -0.200 mm -0.00591 to -0.00787 in.

[V3800DI-T-E3B, V3800DI-T-E3CB, V3800DI-T-E3BG]

Notch of Cylinder Head Gasket	Thickness of cylinder head gasket		Part Code	Piston Head's protrusion or recessing from the level of crankcase cylinder face. (average of 4 pistons)
	Before tightening	After tightening		
2 notches **(a)**	0.90 mm 0.035 in.	0.80 mm 0.031 in.	1G514-03310	-0.07 to +0.049 mm -0.0028 to +0.0019 in.
1 notch **(b)**	1.00 mm 0.0394 in.	0.90 mm 0.035 in.	1G514-03600	+0.050 to +0.149 mm +0.0020 to +0.0058 in.
Without notch **(c)**	1.05 mm 0.0413 in.	0.95 mm 0.037 in.	1G514-03610	+0.150 to +0.20 mm +0.0059 to +0.0078 in.

[V3300-E3BG]

Notch Mark of Cylinder Head Gasket	Thickness of cylinder head gasket		Part Code	Piston Head's protrusion or recessing from the level of crankcase cylinder face. (average of 4 pistons)
	Before tightening	After tightening		
2 notches **(a)**	0.90 mm 0.035 in.	0.80 mm 0.031 in.	1C020-03310	-0.070 to +0.049 mm -0.0027 to +0.0019 in.
1 notch **(b)**	1.00 mm 0.0394 in.	0.90 mm 0.035 in.	1C020-03600	+0.0500 to +0.149 mm +0.00197 to +0.00586 in.
Without notch **(c)**	1.05 mm 0.0413 in.	0.95 mm 0.037 in.	1C020-03610	+0.150 to +0.200 mm +0.00591 to +0.00787 in.

(1) Cylinder Head Gasket
(2) Measuring Point
(A) Gear Case Side
(B) Flywheel Side
(a) 2 Notches
(b) 1 Notch
(c) Without Notch

[A] V3600-E3B, V3600-T-E3B, V3600-E3CB, V3600-T-E3CB, V3300-E3BG, V3600-T-E3BG
[B] V3800DI-T-E3B, V3800DI-T-E3CB, V3800DI-T-E3BG

W1022965

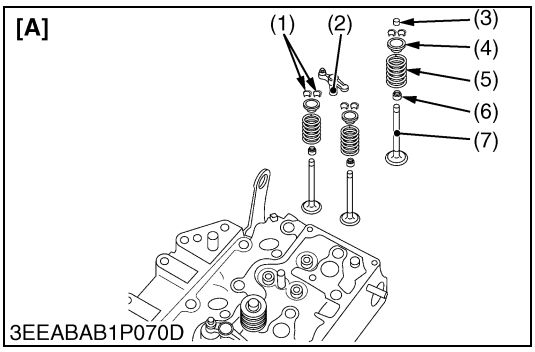

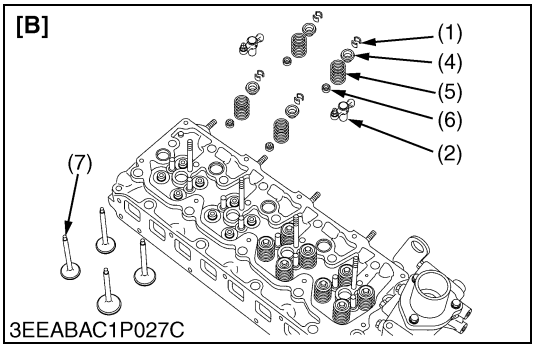

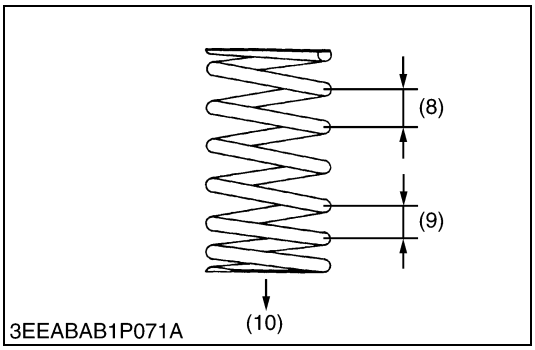

Valve

1. Remove the valve caps (3) (V3600-E3B, V3600-T-E3B, V3600-E3CB, V3600-T-E3CB, V3300-E3BG, V3600-T-E3BG only).
2. Remove the valve spring collet (1), pushing the valve spring retainer (4) by valve spring replacer.
3. Remove the valve spring retainer (4), valve spring (5) and valve stem seal (6).
4. Remove the valve (7).

(When reassembling)

- Install the intake valve spring with its small-pitch end downward (at the head side).
- Wash the valve stem and valve guide hole, and apply engine oil sufficiently.
- After installing the valve spring collets, lightly tap the stem to assure proper fit with a plastic hammer.

(1) Valve Spring Collet
(2) Arm Bridge
(3) Valve Cap
(4) Valve spring Retainer
(5) Valve Spring
(6) Valve Stem Seal
(7) Valve
(8) Large Pitch
(9) Smaller Pitch
(10) Install the spring with its smaller-pitch end downward (at the head side)

[A] V3600-E3B, V3600-T-E3B, V3600-E3CB, V3600-T-E3CB, V3300-E3BG, V3600-T-E3BG
[B] V3800DI-T-E3B, V3800DI-T-E3CB, V3800DI-T-E3BG

W1053044

(6) Thermostat

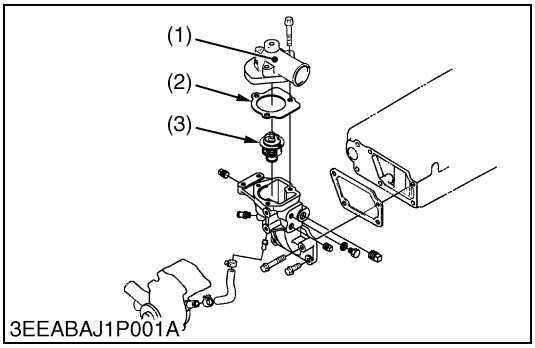

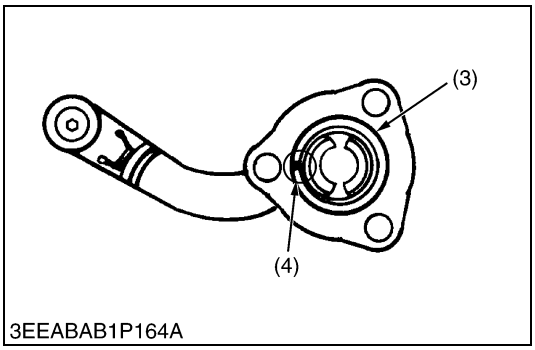

Thermostat Assembly

1. Remove the thermostat cover mounting screws, and remove the thermostat cover (1).
2. Remove the thermostat assembly (3).

(When reassembling)

- Apply a liquid gasket (Three Bond 1215 or equivalent) only at the thermostat cover side of the gasket (2).
- Attach the thermostat with its hole facing toward the air suction side.

(1) Thermostat Cover
(2) Thermostat Cover Gasket
(3) Thermostat Assembly
(4) Hole

W1072747

(7) Injection Nozzle

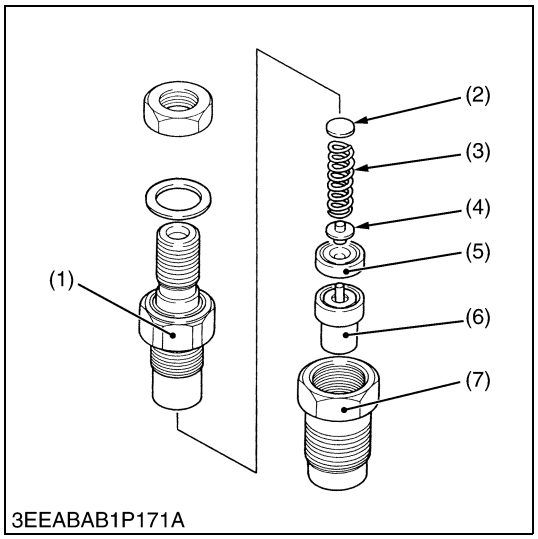

Nozzle Holder

[V3600-E3B, V3600-T-E3B, V3600-E3CB, V3600-T-E3CB, V3300-E3BG, V3600-T-E3BG]

1. Secure the nozzle retaining nut (7) with a vise.
2. Remove the nozzle holder (1), and take out parts inside.

(When reassembling)

- Assemble the nozzle in clean fuel oil.
- Install the push rod (4), noting its direction.
- After assembling the nozzle, be sure to adjust the fuel injection pressure.

Tightening torque	Nozzle holder	35 to 39 N·m 3.5 to 4.0 kgf·m 26 to 28 lbf·ft
	Overflow pipe nut	20 to 24 N·m 2.0 to 2.5 kgf·m 15 to 18 lbf·ft
	Nozzle holder assembly	49 to 68 N·m 5.0 to 7.0 kgf·m 37 to 50 lbf·ft

(1) Nozzle Holder
(2) Adjusting Washer
(3) Nozzle Spring
(4) Push Rod
(5) Distance Piece
(6) Nozzle Piece
(7) Nozzle Retaining Nut

W1089102

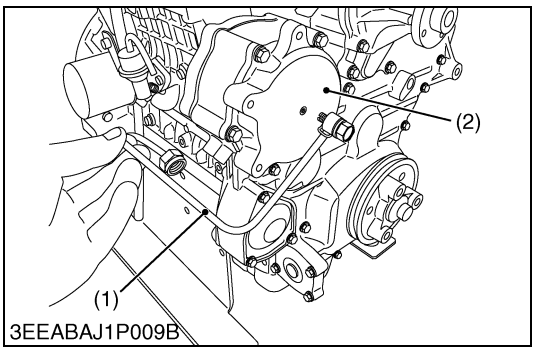

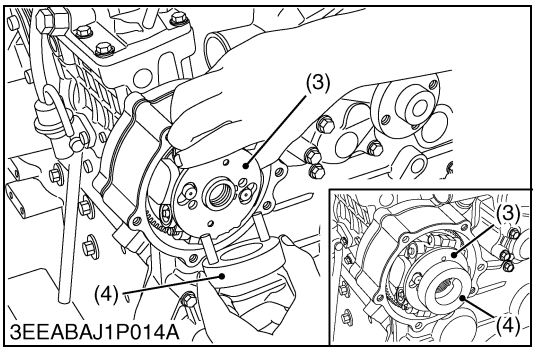

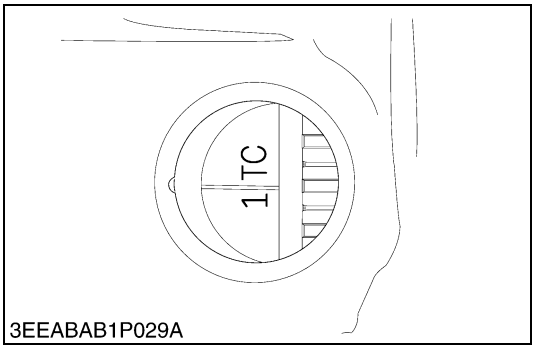

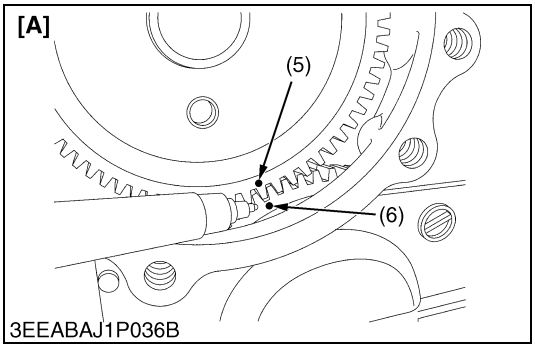

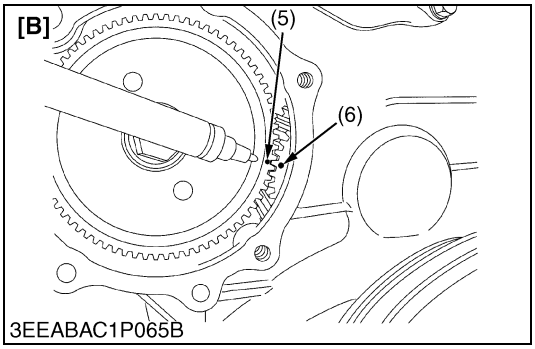

Injection Pump Unit

(Removing)

1. Removing the timer lubricating pipe (1).
   (V3600-E3B, V3800DI-T-E3B, V3600-E3CB, V3800DI-T-E3CB, V3800DI-T-E3BG only)
2. Remove the injection pump gear cover (2).
3. Set the timer 0 ° restoring jig (4) to the timer gear (3).
   (V3600-E3B, V3800DI-T-E3B, V3600-E3CB, V3800DI-T-E3CB, V3800DI-T-E3BG only)
4. Turn the flywheel counter-clockwise slowly.
5. Set the flywheel 1 TC mark to align T.D.C. mark on flywheel housing or rear end plate in order to set the No.4 piston at compression top dead center.

■ **IMPORTANT**

- **If the flywheel 1 TC mark passes T.D.C., Turn back the flywheel clockwise around 90 degree, and try to set T.D.C. again. (go back to the procedure 4..)**
- **If you set the T.D.C. by turning flywheel clockwise, the gears backlash becomes maximum.**

6. Check the injection pump gear timing mark.
   If the injection pump gear / timer gear timing mark (5) meshes to the idle gear teeth, No.4 piston is at compression top dead center.
   If not so, turn the flywheel 360 degree counter-clockwise.
   (go back to the procedure 4..)
7. Fix the flywheel not to turn.
8. Put the temporary mark (6) on the idle gear teeth, which the injection pump gear / timer gear timing mark (5) meshes, with white marking pen.
   It is very helpful to reassemble the injection pump gear / timer gear later.

(1) Timer Lubricating Pipe
(2) Injection Pump Gear Cover
(3) Timer Gear
(4) Timer 0 ° Restoring Jig
(5) Injection Pump Gear / Timer Gear Timing Mark
(6) Temporary Mark

[A] V3600-E3B, V3600-T-E3B, V3800DI-T-E3B, V3300-E3BG, V3600-T-E3BG, V3800DI-T-E3BG
[B] V3600-E3CB, V3600-T-E3CB, V3800DI-T-E3CB

W1319484

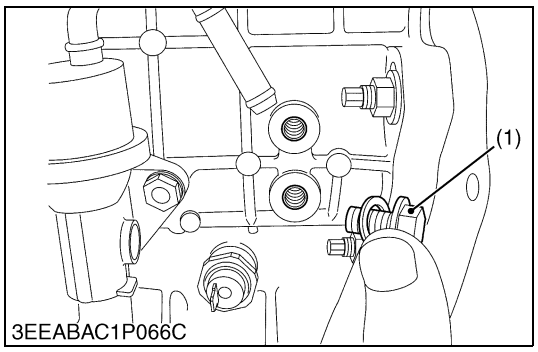

3EEABAC1P066C

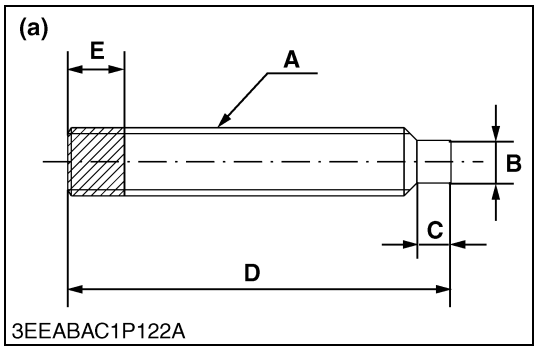

3EEABAC1P122A

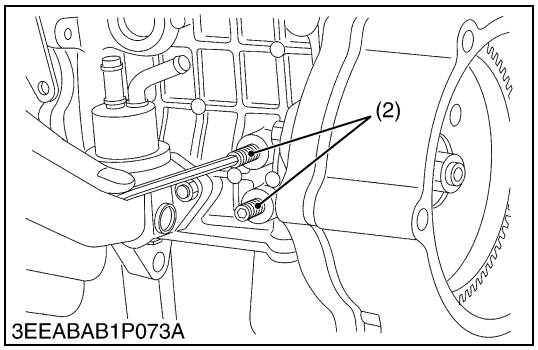

3EEABAB1P073A

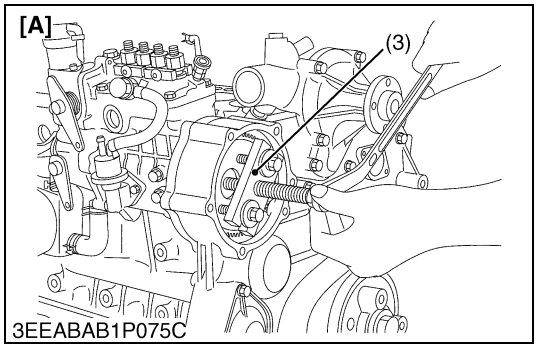

3EEABAB1P075C

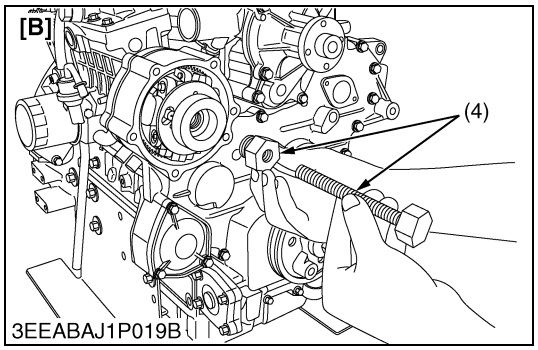

3EEABAJ1P019B

Injection Pump Unit (Continued)

9. Remove the plugs (1).

■ **NOTE**

- **When you tighten the fuel camshaft lock screw, the tightening order (upper / lower) is different in the engine model.**
- **Recommend you use a socket set screw (dog point type) as a fuel camshaft lock screw for preventing the damage of screw hole tread. (See the figure (a))**

A	M8 x Pitch 1.25
B	5.0 mm dia. (0.20 in. dia.)
C	4.0 mm (0.16 in.)
D	45 mm (1.8 in.)
E	10 mm (0.39 in.) : Conspicuously Painted

- **Do not overtighten the fuel camshaft lock screws.**

10. Tighten the upper fuel camshaft lock screw (2) securely. (V3600-E3B, V3600-T-E3B, V3800DI-T-E3B, V3300-E3BG, V3600-T-E3BG, V3800DI-T-E3BG)
    Tighten the lower fuel camshaft lock screw (2) securely. (V3600-E3CB, V3600-T-E3CB, V3800DI-T-E3CB)

■ **IMPORTANT**

- **When tighten the lock screw at this moment, the timing gears backlash becomes “0” (Zero).**

11. Tighten the lower fuel camshaft lock screw (2) securely. (V3600-E3B, V3600-T-E3B, V3800DI-T-E3B, V3300-E3BG, V3600-T-E3BG, V3800DI-T-E3BG)
    Tighten the upper camshaft lock screw (2) securely. (V3600-E3CB, V3600-T-E3CB, V3800DI-T-E3CB)
12. Remove the injection pump gear mounting nut. (V3600-T-E3B, V3600-T-E3CB, V3300-E3BG, V3600-T-E3BG)
    Remove the timer gear mounting nut and washer. (V3600-E3B, V3600-E3CB, V3800DI-T-E3B, V3800DI-T-E3CB, V3800DI-T-E3BG)
13. Set the injection pump gear puller (3) / timer gear puller (4).
14. Pull out the injection pump gear / timer gear.

(1) Plug
(2) Fuel Camshaft Lock Screw
(3) Injection Pump Gear Puller
(4) Timer Gear Puller

[A] V3600-T-E3B, V3600-T-E3CB, V3300-E3BG, V3600-T-E3BG
[B] V3600-E3B, V3800DI-T-E3B, V3600-E3CB, V3800DI-T-E3CB, V3800DI-T-E3BG

W1333801

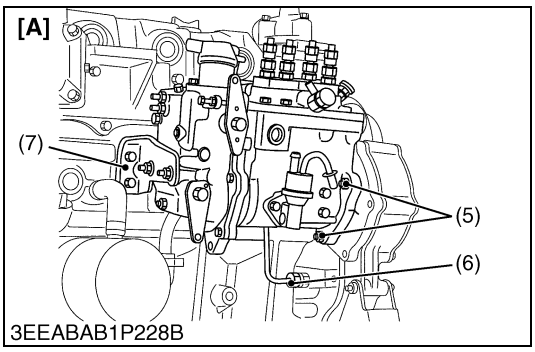

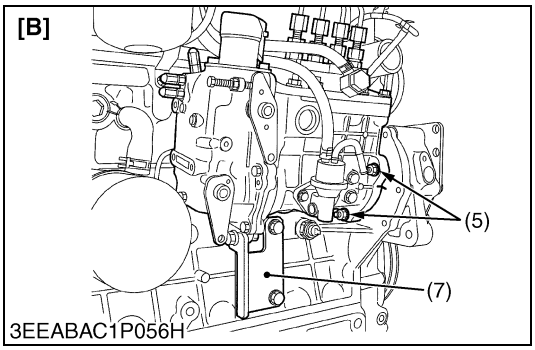

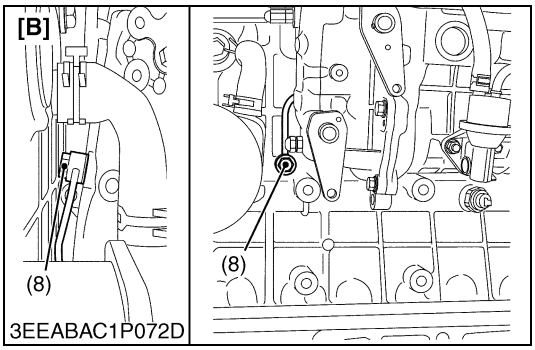

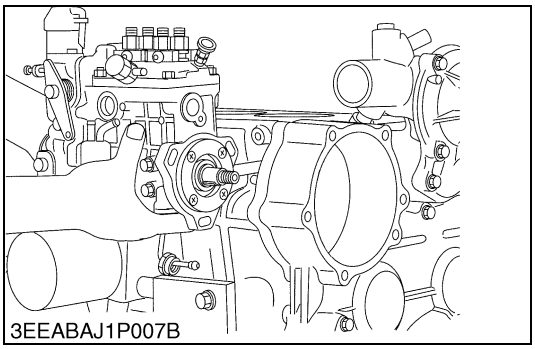

Injection Pump Unit (Continued)

15. Disconnect the governor lubricating pipe (6).
    (V3600-E3B, V3600-T-E3B, V3800DI-T-E3B, V3300-E3BG, V3600-T-E3BG, V3800DI-T-E3BG)
    Remove the governor lubricating pipe joint screw (8).
    (V3600-E3CB, V3600-T-E3CB, V3800DI-T-E3CB)
16. Remove the injection pump unit support (7).
17. Hold the injection pump unit not to drop.
18. Remove the injection pump unit mounting nuts (5).
19. Remove the injection pump unit.

(5) Injection Pump Unit Mounting Nut
(6) Governor Lubricating Pipe
(7) Injection Pump Unit Support
(8) Governor Lubricating Pipe Joint Screw

[A] V3600-E3B, V3600-T-E3B, V3800DI-T-E3B, V3300-E3BG, V3600-T-E3BG, V3800DI-T-E3BG
[B] V3600-E3CB, V3600DI-T-E3CB, V3800DI-T-E3CB

W1351736

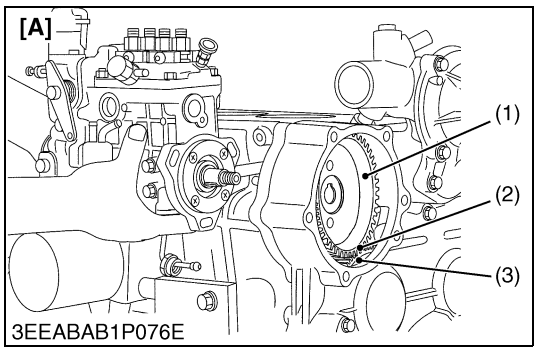

3EEABAB1P076E

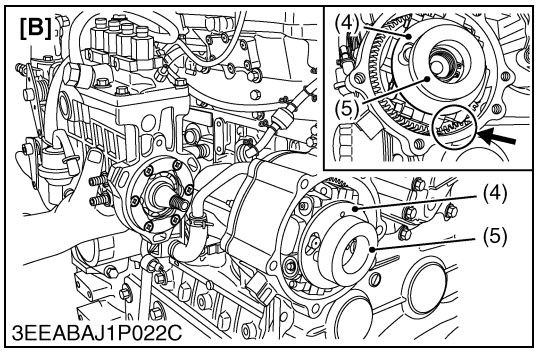

3EEABAJ1P022C

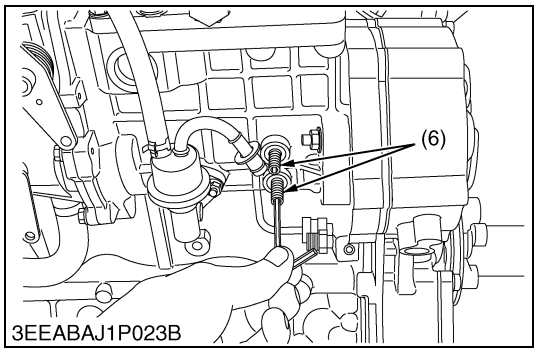

3EEABAJ1P023B

Injection Pump Unit (Continued)

(Reassembling)

1. Make sure that No.4 piston is at compression top dead center.
2. Set the timer 0 ° restoring jig (5) to the timer gear (4). (V3600-E3B, V3600-E3CB, V3800DI-T-E3B, V3800DI-T-E3CB, V3800DI-T-E3BG)
3. Set the injection pump gear (1) / timer gear (4) into the gear case position.
4. Make sure that the timing marks between injection pump gear (1) / timer gear (4) and idle gear (3) align correctly.
5. Install the injection pump unit to the injection pump gear (1) / timer gear (4) as aligning key of fuel camshaft and key way of injection pump gear (1) / timer gear (4).
6. Set the injection pump gear mounting nut / timer gear mounting nut and washer temporarily.
7. Tighten the injection pump unit mounting nuts securely.
8. Tighten the injection pump gear mounting nut / timer gear mounting nut securely.
9. Set the governor lubricating pipe.
10. Set the injection pump unit support.
11. Remove the timer 0 ° restoring jig (5). (V3600-E3B, V3600-E3CB, V3800DI-T-E3B, V3800DI-T-E3CB, V3800DI-T-E3BG)
12. Set the injection pump gear cover.
13. Set the timer gear lubricating pipe. (V3600-E3B, V3600-E3CB, V3800DI-T-E3B, V3800DI-T-E3CB, V3800DI-T-E3BG)
14. Remove the fuel camshaft lock screws (6).

■ **IMPORTANT**

- **Make sure that you remove the fuel camshaft lock screws. Otherwise, injection pump unit housing case can get a damage.**

15. Set the plugs.
16. Remove the flywheel stopper.
17. Check the injection timing. (See the “Injection Timing”.)

(1) Injection Pump Gear
(2) Timing Mark on Injection Pump Gear
(3) Timing Mark on Idle Gear
(4) Timer Gear
(5) Timer 0 ° Restoring Jig
(6) Fuel Camshaft Lock Screw

[A] V3600-T-E3B, V3600-T-E3CB, V3300-E3BG, V3600-T-E3BG
[B] V3600-E3B, V3800DI-T-E3B, V3600-E3CB, V3800DI-T-E3CB, V3800DI-T-E3BG

W1363118

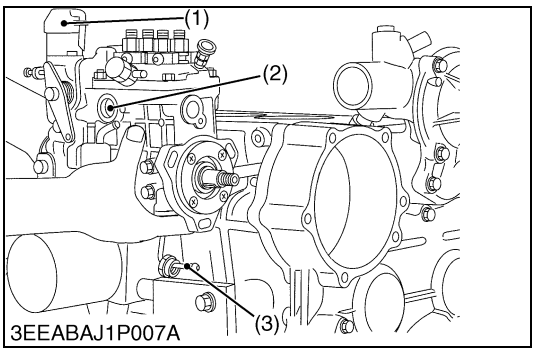

3EEABAJ1P007A

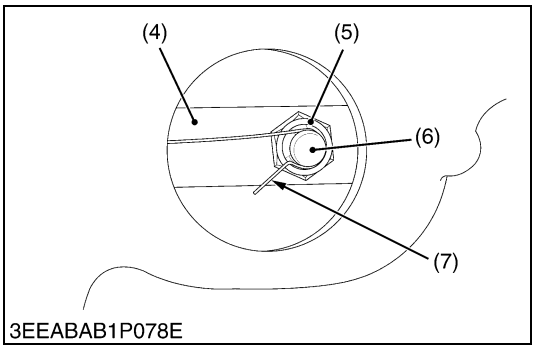

3EEABAB1P078E

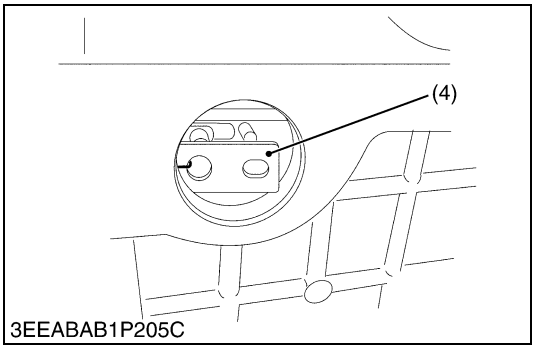

3EEABAB1P205C

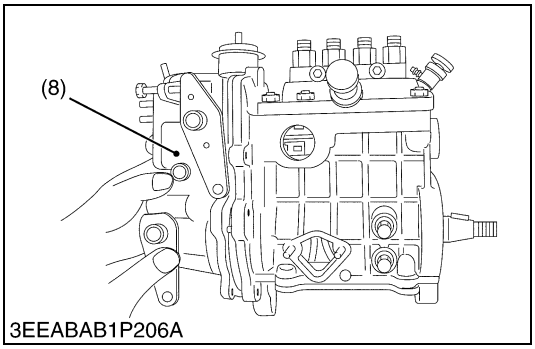

3EEABAB1P206A

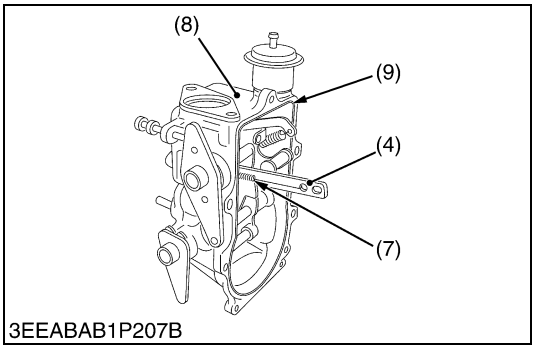

3EEABAB1P207B

Governor Housing Assembly

1. Remove the injection pump unit from the engine. (See the "Injection Pump Unit".)
2. Remove the governor lubricating pipe (3).
3. Remove the solenoid (1).
4. Detach the sight cover (2) from the injection pump unit.
5. Unhook the start spring (7) from the rack pin (6) of injection pump assembly.
6. Remove the anti-rotation nut (5).

■ **NOTE**

- **Be careful not to drop the nut inside.**

7. Slide off the governor connecting rod (4) completely from the rack pin of injection pump assembly.
8. Remove the governor housing mounting screws.
9. Remove the governor housing assembly (8) from the injection pump unit.

(When reassembling)

- When reassembling the inside parts, put the oil on each inside part slightly.
- After sliding on the governor connecting rod to the rack pin, tighten the anti-rotation nut with the specified torque with using the jig for keeping the governor connecting rod horizontal. (See the Replacing Injection Pump Assembly.)
- After tightening the anti-rotation nut, hook the start spring on the rack pin.
- Check the movement of control rack of injection pump assembly by the stop lever.

■ **NOTE**

- **When installing the governor housing assembly to the injection pump unit, be careful not to damage O-ring (9).**
- **When linking the governor connecting rod to the rack pin of injection pump, use the jig for keeping the governor connecting rod horizontal. Otherwise the control rack may be stuck, and causes to be difficult to start the engine or hunting of governor. (See the Replacing Injection Pump Assembly.)**

Tightening torque	Governor housing mounting screw	9.8 to 11.2 N·m 1.00 to 1.15 kgf·m 7.24 to 8.31 lbf·ft
	Anti-rotation nut	2.8 to 4.0 N·m 0.29 to 0.41 kgf·m 2.1 to 2.9 lbf·ft

(1) Solenoid
(2) Sight Cover
(3) Governor Lubricating Pipe
(4) Governor Connecting Rod
(5) Anti-Rotation Nut
(6) Rack Pin
(7) Start Spring
(8) Governor Housing Assembly
(9) O-ring

W1137126

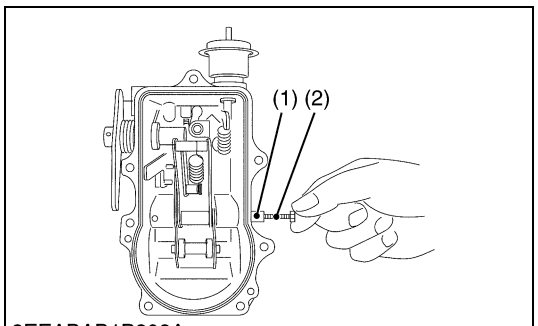

3EEABAB1P208A

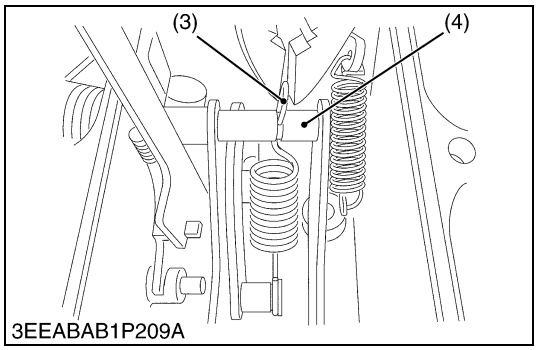

3EEABAB1P209A

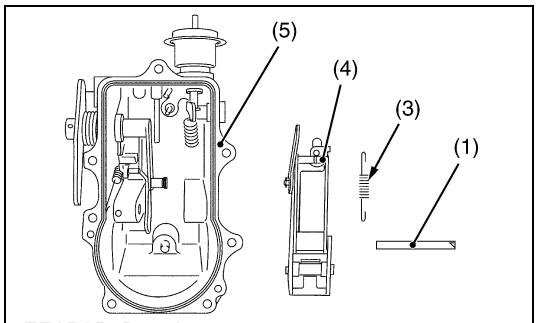

3EEABAB1P210A

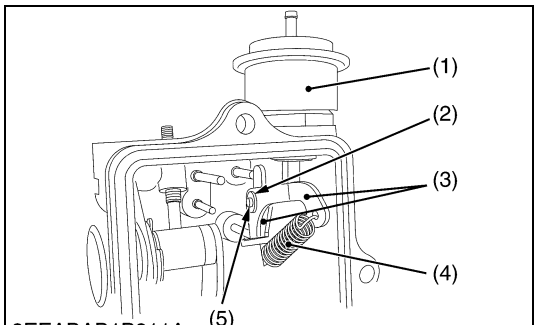

3EEABAB1P211A

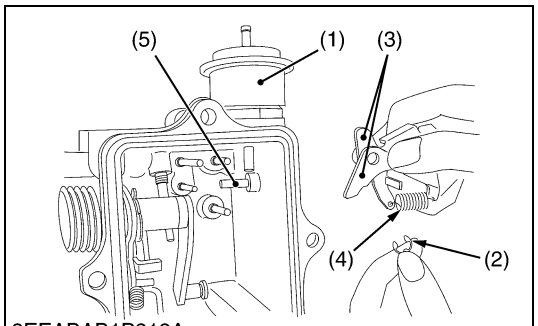

3EEABAB1P212A

Governor Fork Lever Assembly

1. Pull out the governor fork lever shaft (1) with the M4 extra bolt (Dia : 4 mm, Pitch : 0.7 mm, Length : more than 25 mm) (2).
2. Unhook the governor spring (3) at the governor fork lever (4) side.
3. Remove the governor fork lever assembly from the governor housing (5).

(When reassembling)

- After reassembling the governor housing assembly, check the movement of the governor fork lever assembly, the speed control lever and the stop lever.

■ **NOTE**

- **When assembling the inside parts, put the oil on each inside part slightly.**
- **Be careful not to deform the start spring.**

(1) Governor Fork Lever Shaft
(2) M4 Extra Bolt (Dia : 4 mm, Pitch : 0.7 mm, Length : more than 25 mm)
(3) Governor Spring
(4) Governor Fork Lever
(5) Governor Housing

W1139749

Boost Arms (If equipped Boost Compensator)

1. Remove the boost actuator (1).
2. Remove the cir-clip (2).
3. Remove the boost arms (3) and the boost spring (4) from the pin (5).

Tightening torque	Boost actuator	40 to 45 N·m 4.0 to 4.6 kgf·m 29 to 33 lbf·ft

(1) Boost Actuator
(2) Cir-clip
(3) Boost Arm
(4) Boost Spring
(5) Pin

W1141511

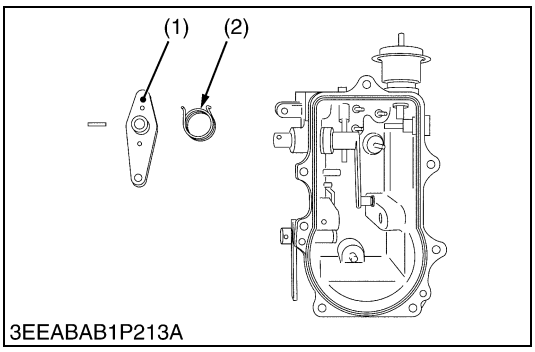

Governor Lever

1. Remove the speed control lever (1) and the return spring (2).
2. Remove the governor lever assembly (4) from the governor housing.
3. Remove the start spring (5) and the stop spring (3).

(1) Speed Control Lever
(2) Return Spring
(3) Stop Spring
(4) Governor Lever Assembly
(5) Start Spring

W1142375

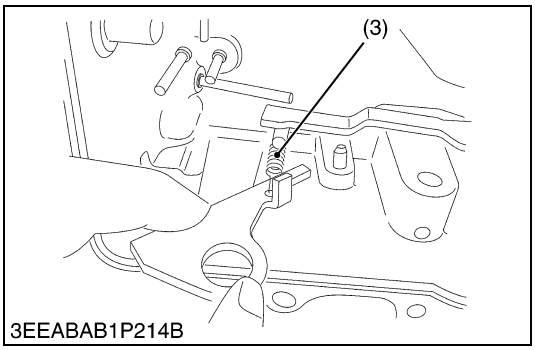

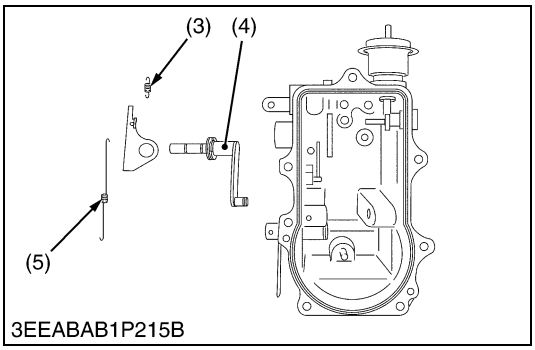

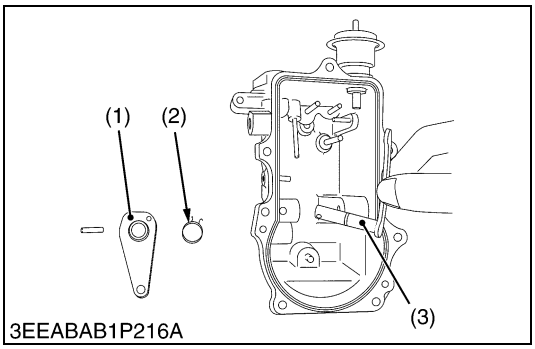

Stop Lever

1. Remove the stop lever (1) and the return spring (2).
2. Remove the stop lever shaft (3).

(1) Stop Lever
(2) Return Spring
(3) Stop Lever Shaft

W1143531

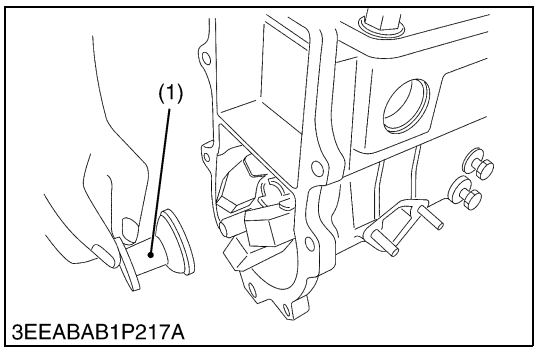

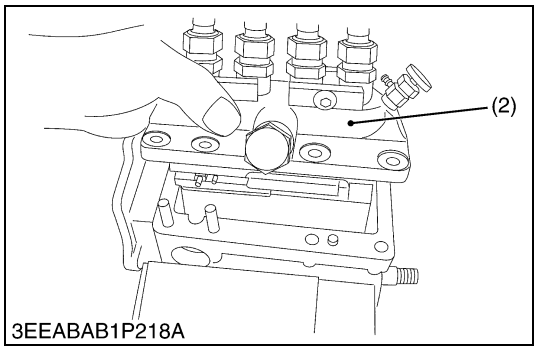

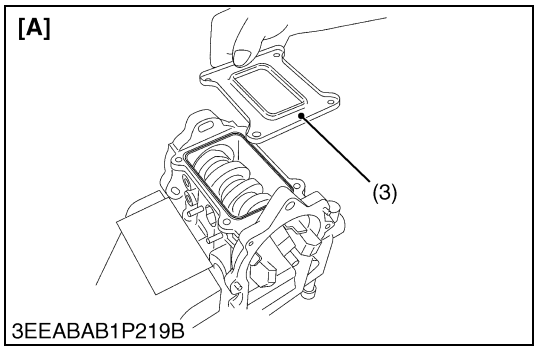

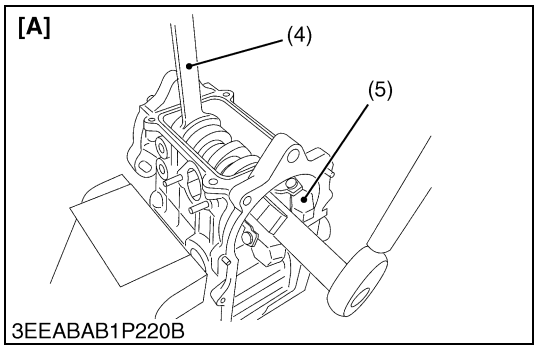

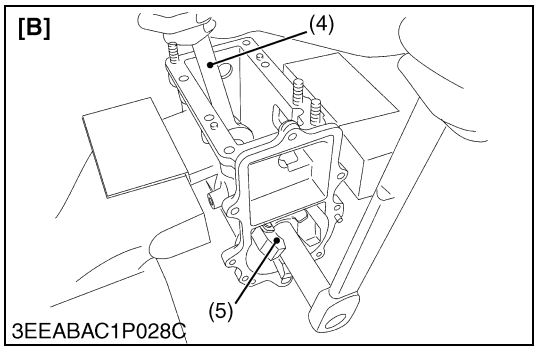

Fuel Camshaft and Governor Weight

1. Separate the governor housing assembly from the injection pump unit. (See the “Governor Housing Assembly”.)
2. Remove the governor sleeve (1).
3. Remove the injection pump assembly (2).
4. Remove the under cover (3). (V3600-E3B, V3600-T-E3B, V3600-E3CB, V3600-T-E3CB, V3300-E3BG, V3600T-E3BG only)
5. Fix the fuel camshaft with open end wrench (4).
6. Loosen the governor weight holder mounting nut to remove the governor weight (5).

(1) Governor Sleeve
(2) Injection Pump Assembly
(3) Under Cover
(4) Open End Wrench
(24 mm : V3600, V3600-T, V3300
22 mm : V3800DI-T)
(5) Governor Weight

[A] V3600-E3B, V3600-T-E3B, V3600-E3CB, V3600-T-E3CB, V3300-E3BG, V3600-T-E3BG
[B] V3800DI-T-E3B, V3800DI-T-E3CB, V3800DI-T-E3BG

W1144178

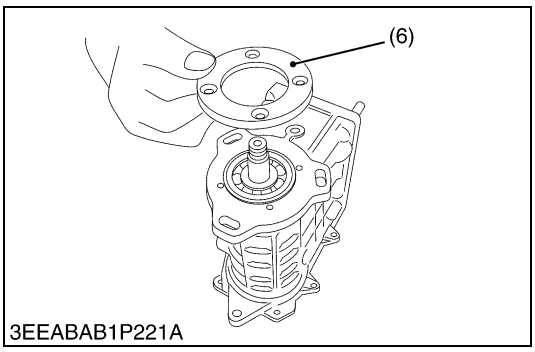

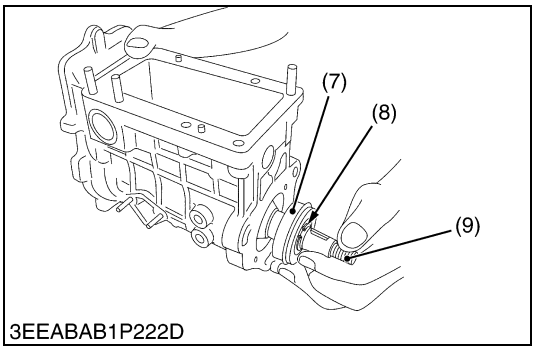

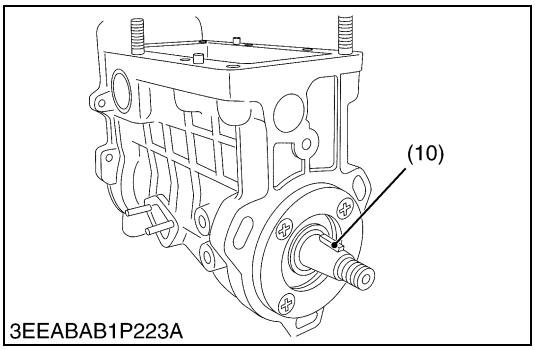

Fuel Camshaft and Governor Weight (Continued)

■ **NOTE**
- **Use a shock driver to remove the fuel camshaft bearing stopper (6).**

7. Remove the fuel camshaft bearing stopper (6).
8. Pull out the fuel camshaft and bearings (7) together from the injection pump housing.
9. Remove the spacer. (V3800DI-T-E3B, V3800DI-T-E3CB, V3800DI-T-E3BG only)
10. Remove the bearing's cir-clip (8).
11. Press out the bearings from the fuel camshaft.

Tightening torque	Injection pump mounting screw	24 to 27 N·m 2.4 to 2.8 kgf·m 18 to 20 lbf·ft
	Injection pump mounting nut	18 to 20 N·m 1.8 to 2.1 kgf·m 13 to 15 lbf·ft

(When reassembling)

■ **NOTE**
- **Be careful the direction of the governor sleeve.**
- **When reassembling the inside parts, put the oil on each inside part slightly.**

Tightening torque	Fuel camshaft stopper mounting screw	7.9 to 9.3 N·m 0.80 to 0.95 kgf·m 5.8 to 6.8 lbf·ft
	Governor weight mounting nut	63 to 72 N·m 6.4 to 7.4 kgf·m 47 to 53 lbf·ft

(6) Fuel Camshaft Bearing Stopper
(7) Bearing
(8) Cir-clip
(9) Fuel Camshaft
(10) Key of Fuel Camshaft

W1146489

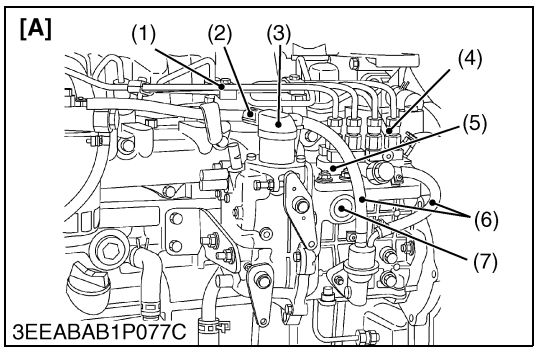

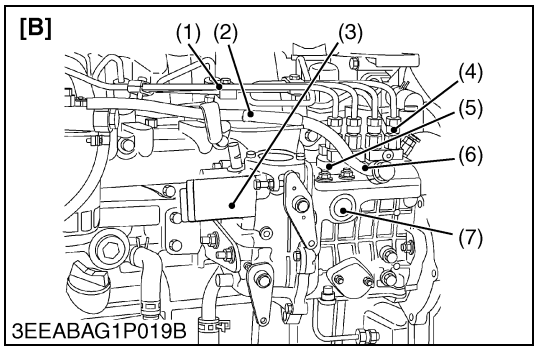

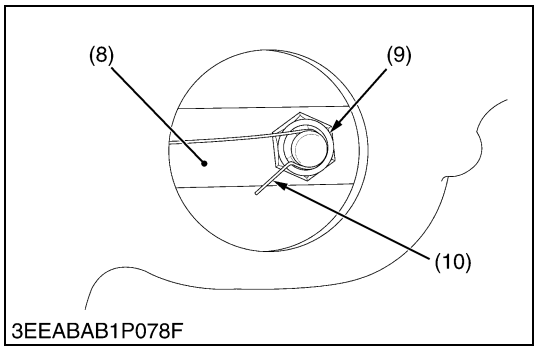

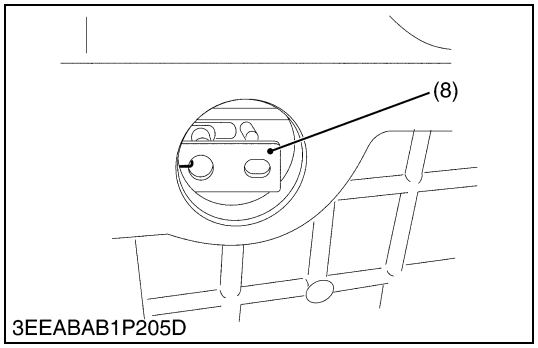

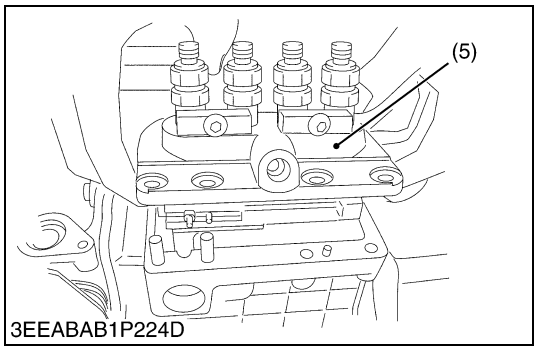

Replacing Injection Pump Assembly

■ **NOTE**

- **You can remove the injection pump assembly at any crankshaft angle.**

1. Remove the all injection pipes (1).
2. Disconnect the fuel hoses (6) and air bleeding hose (4) from the injection pump unit.
3. Remove the solenoid (3).
4. Detach the sight cover (7) from injection pump unit.

■ **IMPORTANT**

- **Do not deform the start spring (10).**

5. Unhook the start spring (10) from the rack pin of injection pump assembly.
6. Remove the anti-rotation nut (9).
7. Slide off the governor connecting rod (8) completely from the rack pin of injection pump assembly.
8. Remove the injection pump assembly mounting nuts and screws.

■ **NOTE**

- **If you can not remove the injection pump assembly easily, arrange to change the angle of injection pump unit temporarily.**

9. Remove the injection pump assembly (5).

(1) Injection Pipe
(2) Connector
(3) Solenoid
(4) Air Bleeding Hose
(5) Injection Pump Assembly
(6) Fuel Pipe
(7) Sight Cover
(8) Governor Connecting Rod
(9) Anti-Rotation Nut
(10) Start Spring

[A] Standard Mechanical Governor
[B] Electronic Governor

W1182379

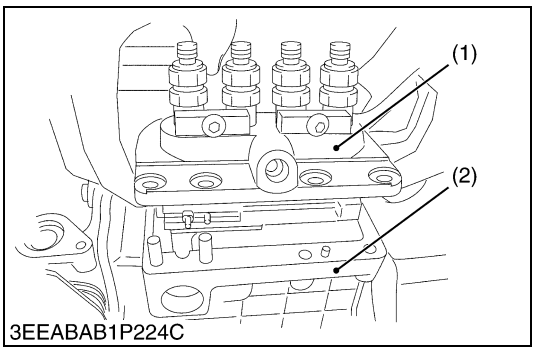

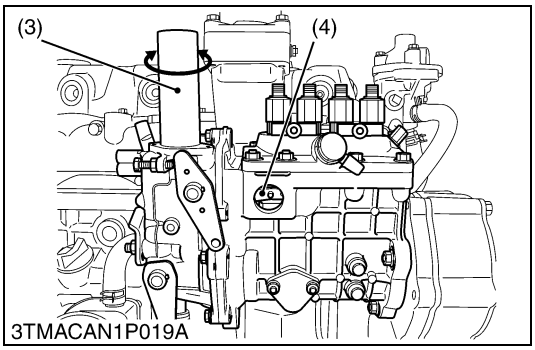

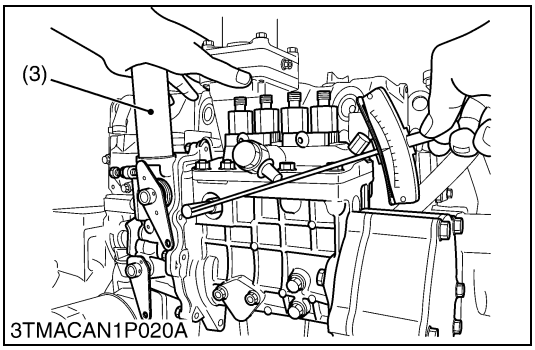

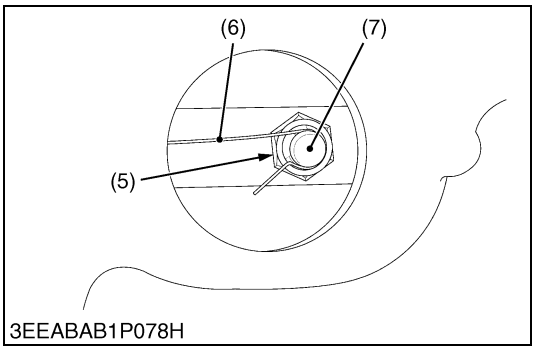

Installing Procedure of Injection Pump Assembly

1. Install the fuel injection pump assembly (1) in the injection pump unit (2) not to damage governor connecting rod.
2. Slide the governor connecting rod (4) into the rack pin (7) of the injection pump assembly (1).
3. Place the service jig (3) in the stop solenoid mounting hole / upper hole of the fuel injection pump unit.
4. Make sure the permanent magnet at the tip of the service jig is attracted to the governor connecting rod (4). To do this, turn the jig a little clockwise and counterclockwise and look into the fuel injection pump unit sight hole to see if the governor connecting rod (4) moves right and left accordingly.
5. Slightly tighten the anti-rotation nut of the governor connecting rod.
6. Holding down the service jig (3) by hand, tighten the anti-rotation nut (5) to the specified torque.
7. Hook the start spring (6) to the rack pin (7).

(1) Fuel Injection Pump Assembly
(2) Fuel Injection Pump Unit
(3) Service Jig
(4) Governor Connecting Rod
(5) Anti-rotation Nut
(6) Start Spring
(7) Rack Pin

W1069371

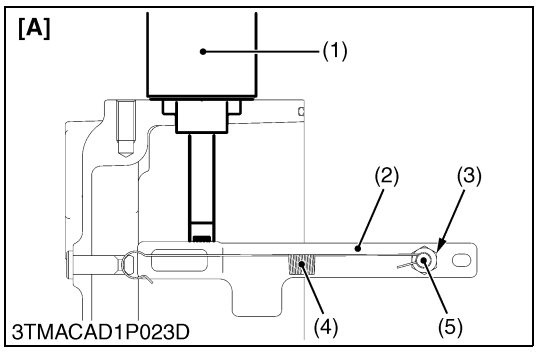

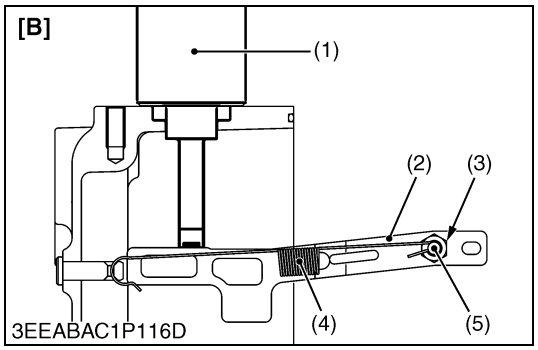

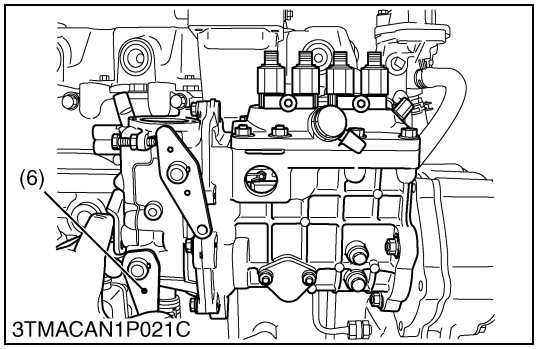

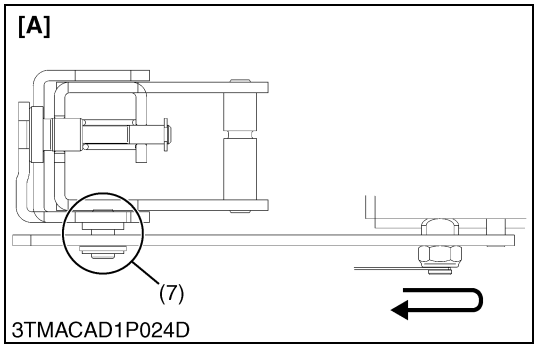

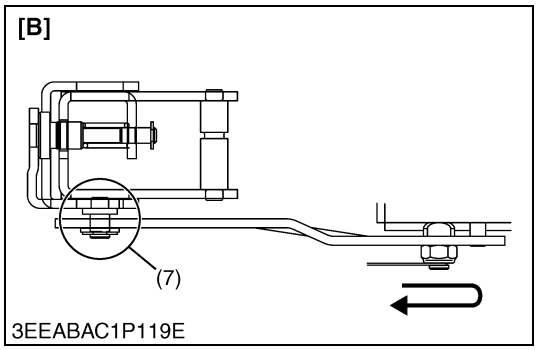

Installing Procedure of Injection Pump Assembly (Continued)

8. Take out the service jig (1).
9. Move the stop lever (6) and visually check to see if the fuel injection pump control rack comes smoothly back to the start position by the counter force of the start spring.
10. If the control rack fails to move back smoothly, remove the start spring and the anti-rotation nut, take the above steps from 2 of the former page again.
11. Finally fit the sight cover and the solenoid back into place.

Tightening torque	Anti-rotation nut	2.8 to 4.0 N·m 0.29 to 0.41 kgf·m 2.1 to 2.9 lbf·ft
	Injection pump mounting screw	24 to 27 N·m 2.4 to 2.8 kgf·m 18 to 20 lbf·ft
	Injection pump mounting nut	18 to 20 N·m 1.8 to 2.1 kgf·m 13 to 15 lbf·ft

(1) Service Jig
(2) Governor Connecting Rod
(3) Anti-rotation Nut
(4) Start Spring
(5) Rack Pin
(6) Stop Lever
(7) Sliding Point between Governor Fork Lever and Governor Connecting Rod

[A] V3600-E3B, V3600-T-E3B, V3600-E3CB, V3600T-E3CB, V3300-E3BG, V3600-T-E3BG
[B] V3800DI-T-E3B, V3800DI-T-E3CB, V3800DI-T-E3BG

W1069772

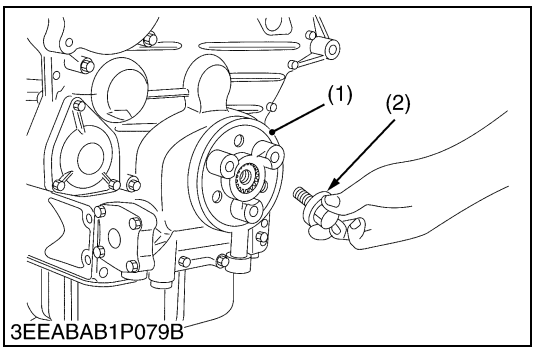

Fan Drive Pulley

1. Set the stopper to the flywheel.
2. Remove the crankshaft screw (2).
3. Draw out the fan drive pulley (1).

(When reassembling)

Tightening torque	Crankshaft screw	255 to 274 N·m 26.0 to 28.0 kgf·m 188 to 202 lbf·ft

(1) Fan Drive Pulley
(2) Crankshaft Screw

W1185033

(8) Water Pump and Oil Cooler

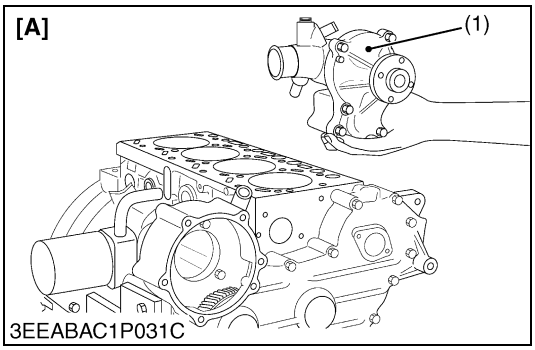

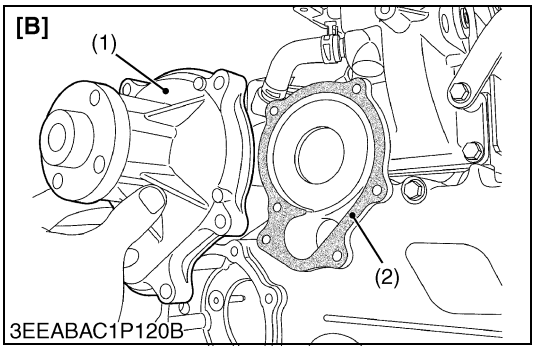

Water Pump

1. Disconnect the water hose. (V3600-E3B, V3600-T-E3B, V3800DI-T-E3B, V3300-E3BG, V3600-T-E3BG, V3800DI-T-E3BG)
2. Remove the water pump (1).

(When reassembling)

- When mounting the water pump, take care not to forget mounting the O-ring. (V3600-E3B, V3600-T-E3B, V3800DI-T-E3B, V3300-E3BG, V3600-T-E3BG, V3800DI-T-E3BG)

(1) Water Pump
(2) Gasket

[A] V3600-E3B, V3600-T-E3B, V3800DI-T-E3B, V3300-E3BG, V3600-T-E3BG, V3800DI-T-E3BG
[B] V3600-E3CB, V3600-T-E3CB, V3800DI-T-E3CB

W1187742

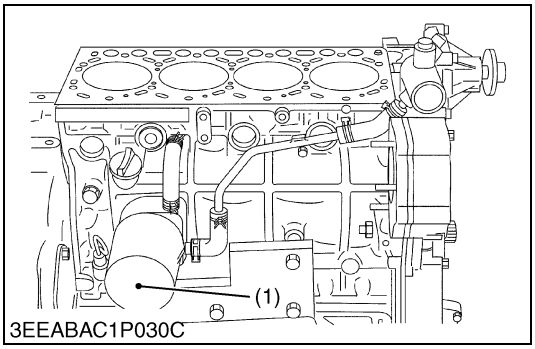

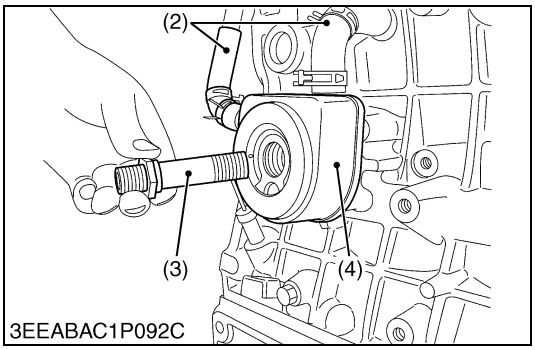

Oil Cooler

1. Remove the oil filter cartridge (1).
2. Remove the oil cooler joint screw (3).
3. Disconnect the water hoses (2).
4. Remove the oil cooler (4).

Tightening torque	Oil cooler joint screw	40 to 44 N·m 4.0 to 4.5 kgf·m 29 to 32 lbf·ft

(1) Oil Filter Cartridge
(2) Water Hose
(3) Oil Cooler Joint Screw
(4) Oil Cooler

W1032266

(9) Gear Case and Timing Gears

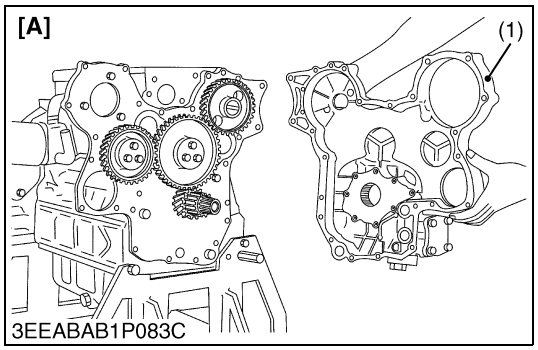

3EEABAB1P083C

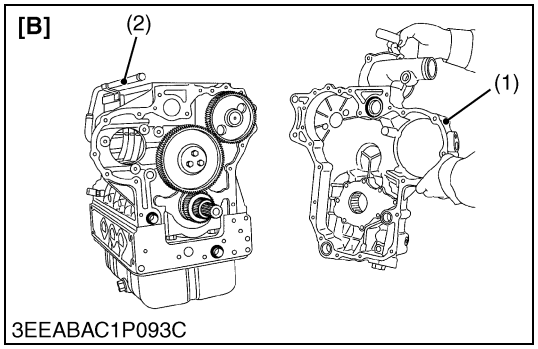

3EEABAC1P093C

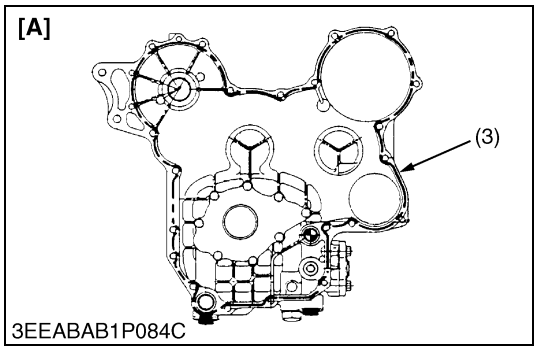

3EEABAB1P084C

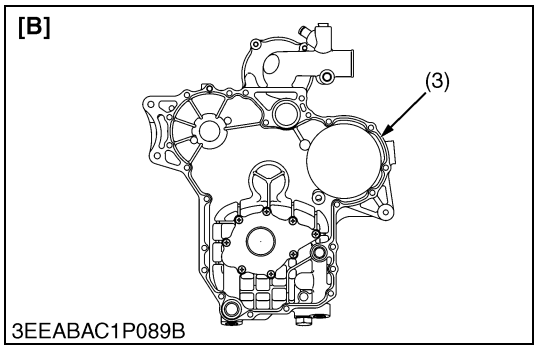

3EEABAC1P089B

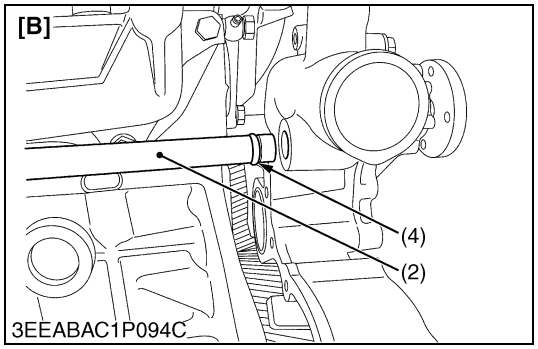

3EEABAC1P094C

Gear Case Cover

1. Remove the gear case cover (1).

(When reassembling)

- Confirm that the liquid gasket coating surface is free of water, dust and oil in order to maintain sealing effect.
- Carefully apply the adhesive evenly. (Refer to the figure on the left.)
- Be careful not to damage the water pipe (2) and O-ring (4).

■ **NOTE**

- **When mounting the adhesive-applied parts, take care to fit them to the mating parts.**
- **Assemble the adhesive-applied parts within ten minutes.**
- **Apply a liquid gasket (Three Bond 1217D) to the gear case cover.**
- **Use the new O-rings when reassembling.**

Tightening torque	Gear case cover mounting screw (7T)	24 to 27 N·m 2.4 to 2.8 kgf·m 18 to 20 lbf·ft
	Gear case cover mounting screw (10T)	33 to 36 N·m 3.3 to 3.7 kgf·m 24 to 26 lbf·ft

(1) Gear Case Cover
(2) Water Pipe
(3) Liquid Gasket
(4) O-ring

[A] V3600-E3B, V3600-T-E3B, V3800DI-T-E3B, V3300-E3BG, V3600-T-E3BG, V3800DI-T-E3BG
[B] V3600-E3CB, V3600-T-E3CB, V3800DI-T-E3CB

W1189218

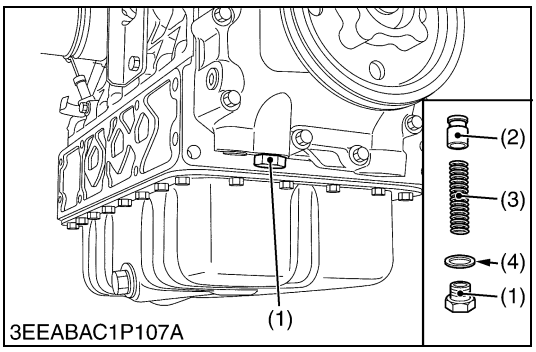

Relief Valve

1. Remove the relief valve retaining screw (1).
2. Remove the relief valve (2), the spring (3) and the packing (4).

Tightening torque	Relief valve retaining screw	69 to 78 N·m 7.0 to 8.0 kgf·m 51 to 57 lbf·ft

(1) Relief Valve Retaining Screw
(2) Relief Valve
(3) Spring
(4) Packing

W1081251

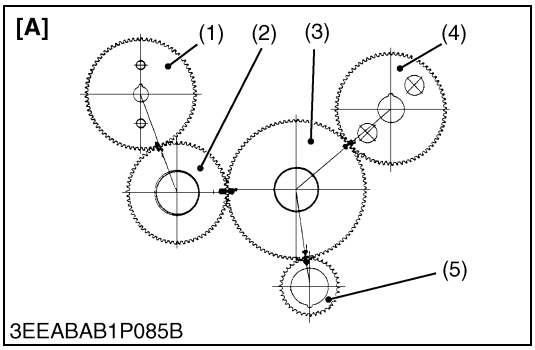

Idle Gear and Camshaft

1. Remove three set screws of the idle gear and draw out the idle gear 1, 2.
2. Remove two set screws of the camshaft stopper and draw out the camshaft.

(When reassembling)

- Set the crankshaft at the top dead center of No. 1 and 4 cylinder and the camshaft key to the top position and align the marks of idle gear 1 (3) and idle gear 2 (2) to assemble them. (Refer to the figure on the left.)
- Mount the injection pump gear (1) after installing the gear case.

Tightening torque	Camshaft set screw	24 to 27 N·m 2.4 to 2.8 kgf·m 18 to 20 lbf·ft
	Idle gear mounting screw	24 to 27 N·m 2.4 to 2.8 kgf·m 18 to 20 lbf·ft

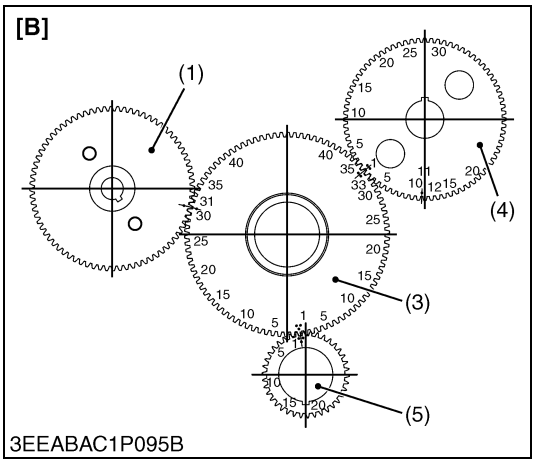

(1) Injection Pump Gear
(2) Idle Gear 2
(3) Idle Gear 1
(4) Cam Gear
(5) Crank Gear

[A] V3600-E3B, V3600-T-E3B, V3800DI-T-E3B, V3300-E3BG, V3600-T-E3BG, V3800DI-T-E3BG
[B] V3600-E3CB, V3600-T-E3CB, V3800DI-T-E3CB

W1189797

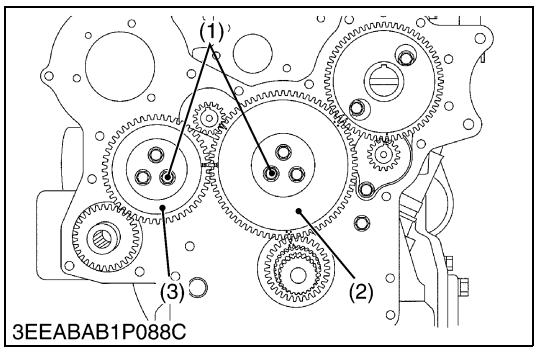

3EEABAB1P088C

Idle Gear 1 and Idle Gear 2 (for Balancer Model)

1. Remove the idle gear mounting screw (1).
2. Draw out the idle gear (2) and (3).

(When reassembling)

- When install the idle gear (2) and (3), be sure to place the 4th cylinder piston at the top dead center in compression then, align all mating marks on each gear to assemble the timing gears, set the idle gear last.

Tightening torque	Idle gear mounting screw	24 to 27 N·m 2.4 to 2.8 kgf·m 18 to 20 lbf·ft

(1) Idle Gear Mounting Screw
(2) Idle Gear 1
(3) Idle Gear 2

W1032991

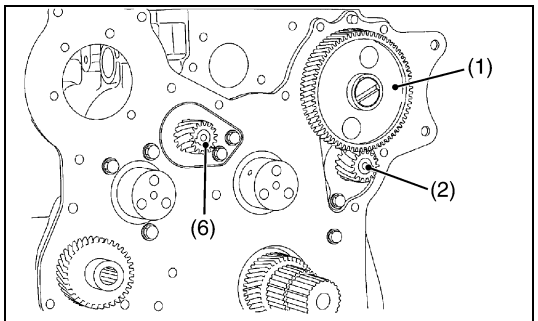

3EEABAB1P086A

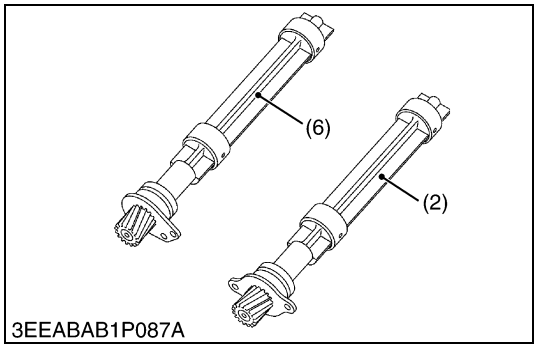

3EEABAB1P087A

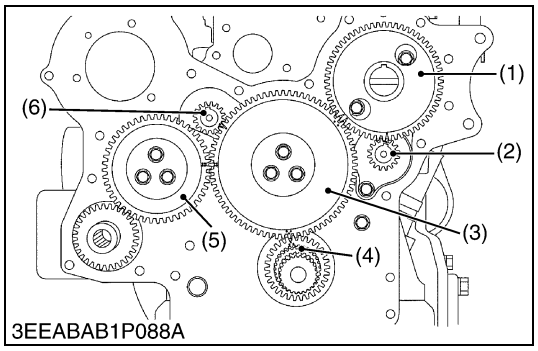

3EEABAB1P088A

Camshaft and Balancer Shaft (for Balancer Model)

1. Remove the camshaft set screws and draw out the camshaft (1).
2. Remove the balancer shaft 1 set screws and draw out the balancer shaft 1 (2).
3. Remove the balancer shaft 2 set screws and draw out the balancer shaft 2 (6).

(When reassembling)

- When install the balancer shaft 1 and 2, be sure to place the 4th cylinders piston at the top dead center in compression then, align all mating marks on each gear to assemble the timing gears, set the idle gear last.

Tightening torque	Camshaft set screw	24 to 27 N·m 2.4 to 2.8 kgf·m 18 to 20 lbf·ft
	Balancer shaft set screw	24 to 27 N·m 2.4 to 2.8 kgf·m 18 to 20 lbf·ft

(1) Camshaft
(2) Balancer Shaft 1
(3) Idle Gear 1
(4) Crank Gear
(5) Idle Gear 2
(6) Balancer Shaft 2

W1191037

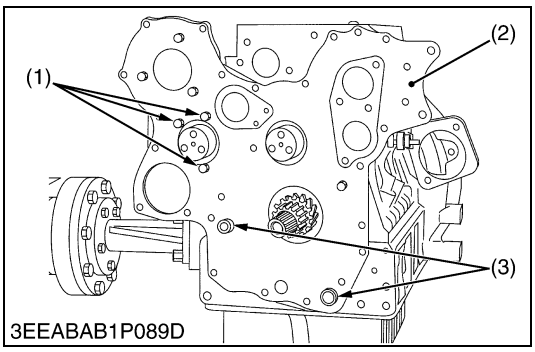

3EEABAB1P089D

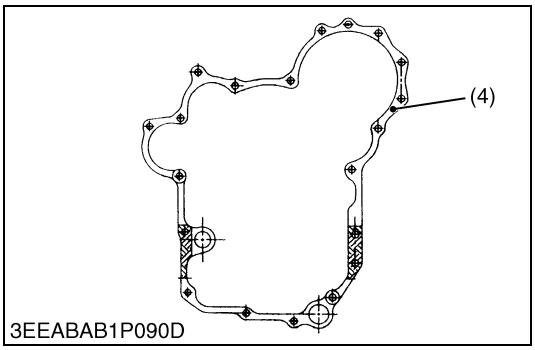

3EEABAB1P090D

Plate (Gear Case) (Except V3600-E3CB, V3600-T-E3CB, V3800DI-T-E3CB)

1. Remove the three plate mounting screws (1).
2. Remove the plate (2).

(When reassembling)

- Apply Three Bond 1217D adhesive or equivalent on the crankcase like a figure.
- Be sure to fix the O-rings (3).

Tightening torque	Plate mounting screw	24 to 27 N·m 2.4 to 2.8 kgf·m 18 to 20 lbf·ft

(1) Plate Mounting Screw
(2) Plate
(3) O-ring
(4) Liquid Gasket

W1057656

(10) Piston and Connecting Rod

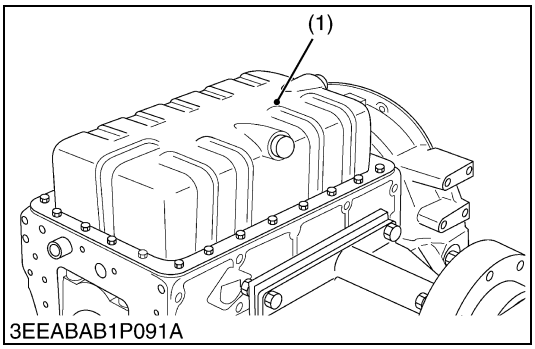

3EEABAB1P091A

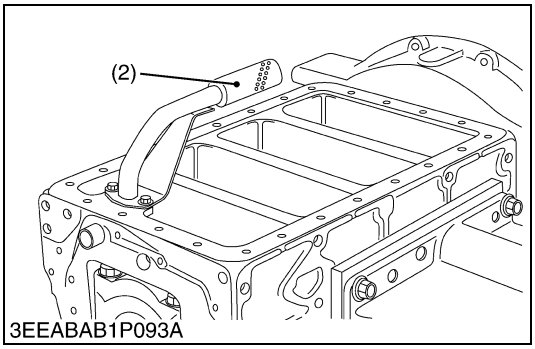

3EEABAB1P093A

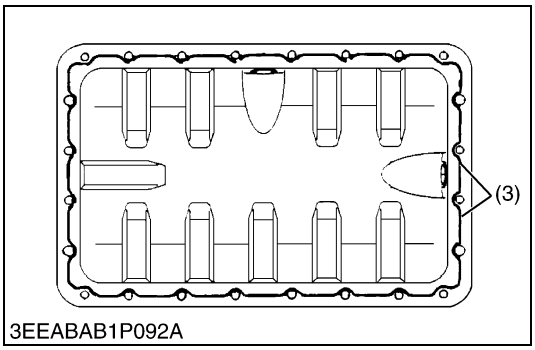

3EEABAB1P092A

Oil Pan and Oil Strainer

1. Unscrew the oil pan mounting screws and remove the oil pan (1).
2. Unscrew the oil strainer mounting screw, and remove the oil strainer (2).

(When reassembling)

- Install the oil strainer, using care not to damage the O-ring.
- Apply liquid gasket (Three Bond 1217D) to the oil pan as shown in the figure.
- Confirm that the liquid gasket coating surface is free of water, dust and oil in order to maintain sealing effect.
- Carefully apply the adhesive evenly.

■ **NOTE**

- **When mounting the adhesive-applied parts, take care to fit them to the mating parts.**
- **Assemble the adhesive-applied parts within ten minutes.**
- **To avoid uneven tightening, tighten mounting screws in diagonal order from the center.**
- **After cleaning the oil strainer, install it.**
- **Attach the oil pan with its central drain plug facing toward the air suction side.**

(1) Oil Pan
(2) Oil Strainer
(3) Liquid Gasket

W1057949

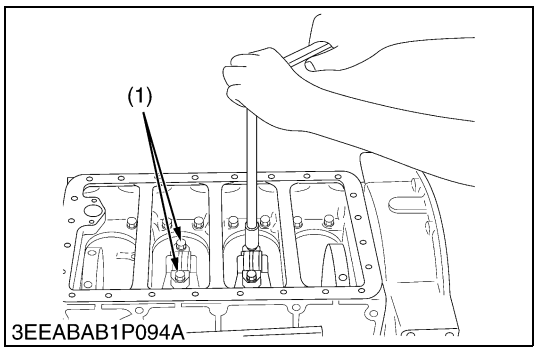

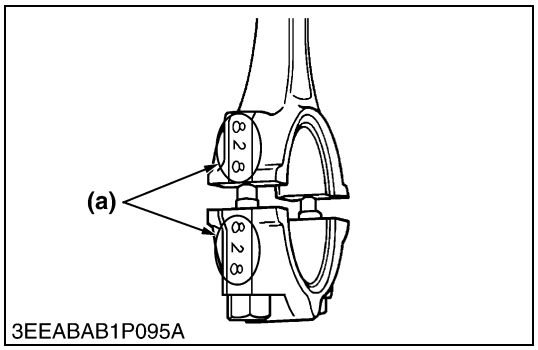

Connecting Rod Cap

1. Remove the connecting rod screws (1) from connecting rod cap.
2. Remove the connecting rod caps.

(When reassembling)

- Align the marks **(a)** with each other. (Face the marks toward the injection pump.)
- Apply engine oil to the connecting rod screws and lightly screw it in by hand, then tighten it to the specified torque.
  If the connecting rod screw won't be screwed in smoothly, clean the threads.
  If the connecting rod screw is still hard to screw in, replace it.
- When using the existing crank pin metal again, put tally marks on the crank pin metal and the connecting rod in order to keep their positioning.

Tightening torque	Connecting rod screw	79 to 83 N·m 8.0 to 8.5 kgf·m 58 to 61 lbf·ft

(1) Connecting Rod Screw **(a) Mark**

W1058252

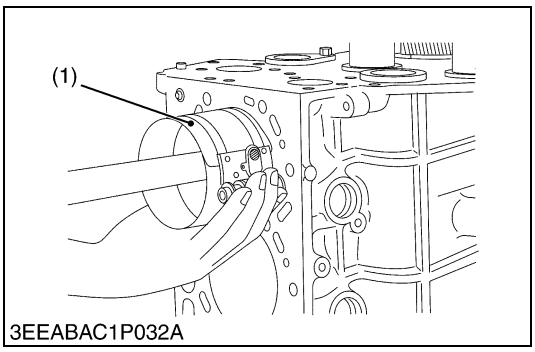

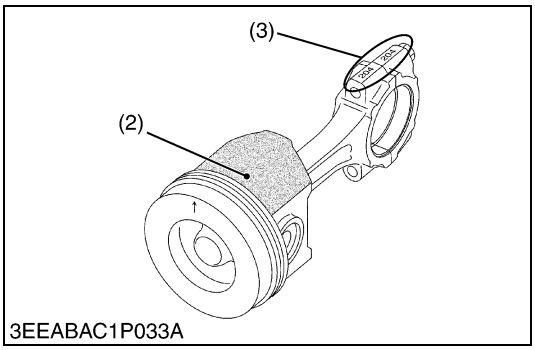

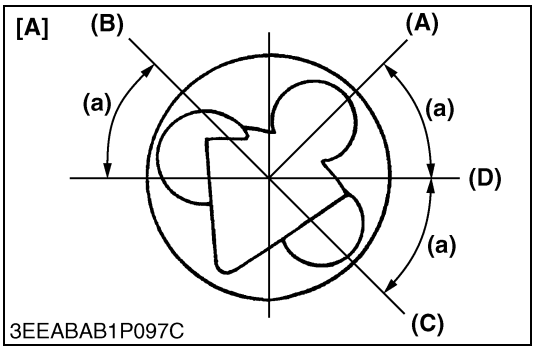

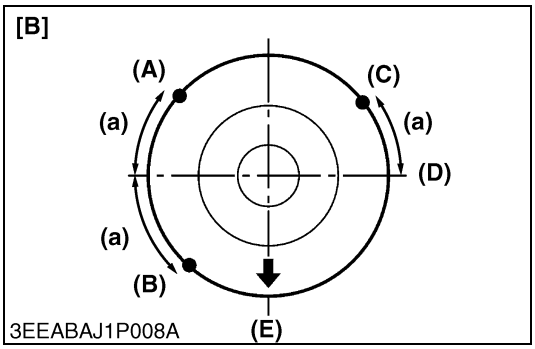

Piston

1. Clean carbon in each cylinder completely.
2. Remove a connecting rod cap.
3. Turn the flywheel to set a piston at the top dead center.
4. Push a connecting rod from the bottom side of crankcase with grip of a hammer to remove a piston.
5. Do the same procedure (2. to 4.) for each piston.

(When reassembling)

- Before inserting the piston into the cylinder, apply enough engine oil to the cylinder.
- When inserting the piston into the cylinder, face the mark (3) on the connecting rod to the injection pump.

■ **IMPORTANT**

- **Do not change the combination of cylinder and piston. Make sure of the position of each piston by marking. For example, mark "1" on the No. 1 position.**
- **When inserting the piston into the cylinder, place the gap of each piston ring like the figure.**
- **Carefully insert the pistons using a piston ring compressor (1). Otherwise, their chrome-plated section of piston rings may be scratched, causing trouble inside the liner.**
- **When inserting the piston, be careful not to damage the molybdenum disulfide coating.**

Tightening torque	Connecting rod screw	79 to 83 N·m 8.0 to 8.5 kgf·m 58 to 61 lbf·ft

(1) Piston Ring Compressor
(2) Molybdenum Disulfide Coating in piston skirt
(3) Mark
(a) 0.79 rad (45 °)

(A) Top Ring Gap
(B) Second Ring Gap
(C) Oil Ring Gap
(D) Piston Pin Hole
(E) Injection Pump Side

[A] V3600-E3B, V3600-T-E3B, V3600-E3CB, V3600-T-E3CB, V3300-E3BG, V3600-T-E3BG
[B] V3800DI-T-E3B, V3800DI-T-E3CB, V3800DI-T-E3BG

W1058433

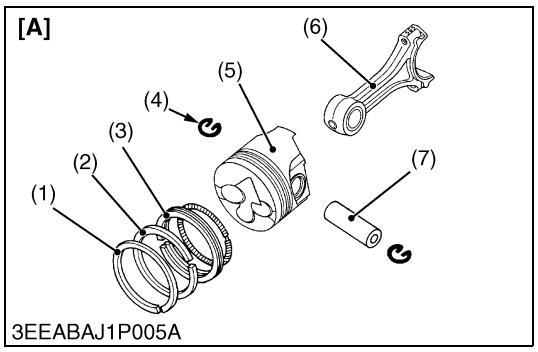

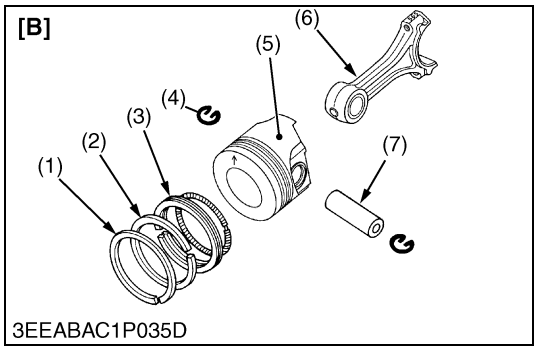

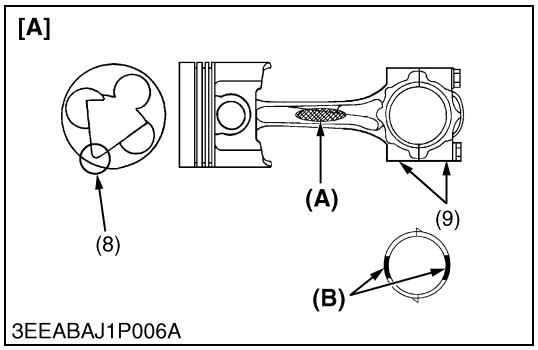

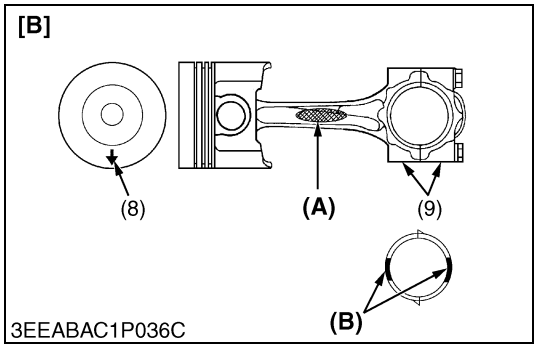

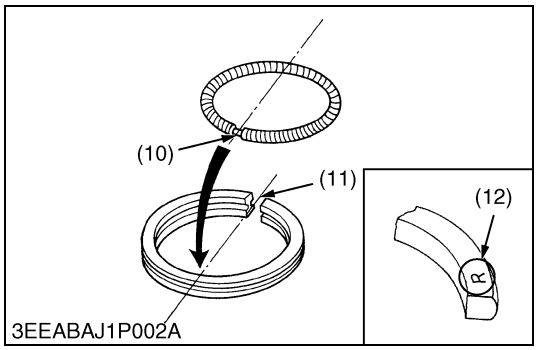

Piston Ring and Connecting Rod

1. Remove the piston rings using a piston ring tool.
2. Remove the piston pin (7), and separate the connecting rod (6) from the piston (5).

(When reassembling)

- Be sure to fix the crankpin bearing and the connecting rod are same I.D. colors.
- When installing the ring, assemble the rings so that the manufacture's mark (12) near the gap faces the top of the piston.
- When installing the oil ring onto the piston, place the expander joint (10) on the opposite side of the oil ring gap (11).
- Apply engine oil to the piston pin.
- When installing the piston pin, immerse the piston in 80 °C (176 °F) oil for 10 to 15 minutes and insert the piston pin to the piston.
- Assemble the piston to the connecting rod with the aligning the direction of the fan shaped concave (IDI) / the ↑ mark (DI) (8) of piston head and the mark (9) of connecting rod.

■ **IMPORTANT**

- **Mark the same number on the connecting rod and the piston so as not to change the combination.**

(1) Top Ring
(2) Second Ring
(3) Oil Ring
(4) Piston Pin Snap Ring
(5) Piston
(6) Connecting Rod
(7) Piston Pin
(8) Fan Shaped Concave (IDI) / ↑ mark (DI)
(9) Mark
(10) Expander Joint
(11) Oil Ring Gap
(12) Manufacture's Mark

(A) Connecting Rod ID Color : Blue or Yellow (without Color)
(B) Crankpin Bearing ID Color : Blue or Yellow (without Color)

[A] V3600-E3B, V3600-T-E3B, V3600-E3CB, V3600-T-E3CB, V3300-E3BG, V3600-T-E3BG
[B] V3800DI-T-E3B,V3800DI-T-E3CB, V3800DI-T-E3BG

W1059589

(11) Flywheel and Crankshaft

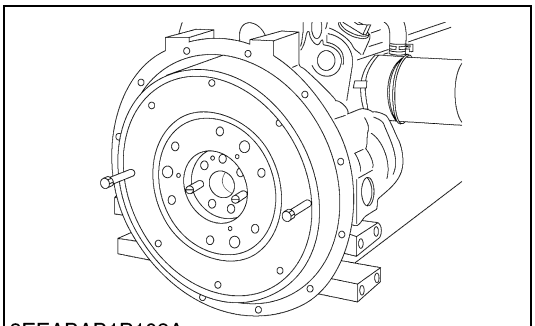
3EEABAB1P102A

Flywheel

1. Set the flywheel stopper not to turn the flywheel.

■ **NOTE**
- **Do not use an impact wrench. Serious damage will occur.**

2. Remove the flywheel screws.
3. Remove the flywheel stopper.
4. Remove the flywheel.

(When reassembling)
- Apply engine oil to the flywheel screws.
- Before fitting the flywheel and the crankshaft together, wipe oil, dust and other foreign substances off their mating faces.
- The flywheel and the crankshaft are fitting together in just one position. Make sure they are tightly fit and flywheel screw must be tighten securely.

Tightening torque	Flywheel screw	98.1 to 107 N·m 10.0 to 11.0 kgf·m 72.4 to 79.5 lbf·ft

W1060354

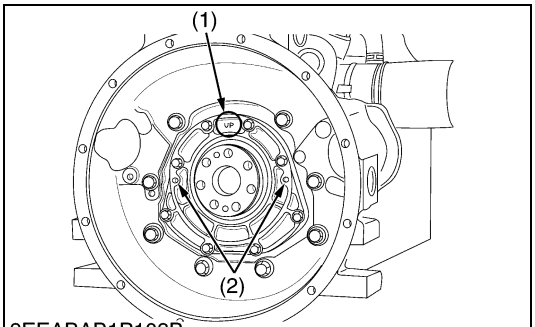

3EEABAB1P103B

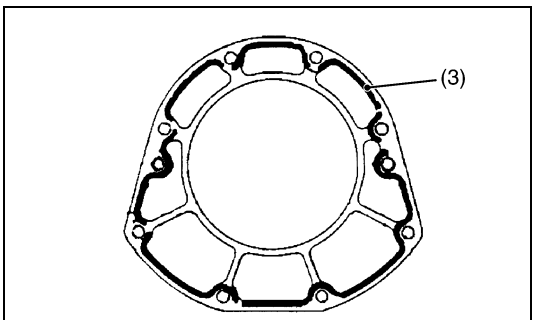

3EEABAB1P104B

Bearing Case Cover

■ **NOTE**
- **Before disassembling, check the side clearance of crankshaft. Also check it after reassembling.**

1. Remove the bearing case over mounting screws.
2. Set the screws in the jack-up holes to remove the bearing case cover.

(When reassembling)

■ **IMPORTANT**
- **In case of replacing the oil seal, insert the oil seal to the bearing case cover not to be tilted. The seal should be flush with the cover.**
- **Confirm that the liquid gasket coating surface is free of water, dust and oil in order to maintain sealing effect.**
- **Apply liquid gasket (Three Bond 1217D) to the bearing case cover as shown in the figure.**
- **Before installing the bearing case cover / oil seal assembly, lube the seal and install it not to damage the seal.**
- **Install the bearing case cover / oil seal assembly to position the casting mark "UP" on it upward.**
- **Tighten the bearing case cover mounting screws with even force on the diagonal line.**

■ **NOTE**
- **When mounting the adhesive-applied parts, take care to fit them to the mating parts.**
- **Assemble the adhesive-applied parts within ten minutes.**

Tightening torque	Bearing case cover mounting screw	24 to 27 N·m 2.4 to 2.8 kgf·m 18 to 20 lbf·ft

(1) Top Mark **"UP"**
(2) Jack-up Hole
(3) Liquid Gasket

W1060482

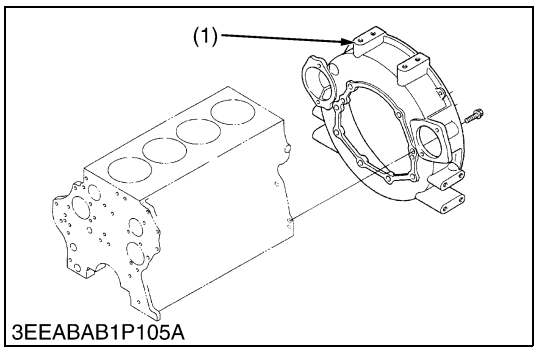

3EEABAB1P105A

Flywheel Housing

1. Remove the flywheel housing.

(When reassembling)

- Make sure the surface of the crank cases 1, 2 are clean and alignment between crankcase 1 and 2 is correct.
- Tighten the flywheel housing mounting screws with even force on the diagonal line.

Tightening torque	Flywheel housing mounting screw	78 to 90 N·m 7.9 to 9.2 kgf·m 58 to 66 lbf·ft

(1) Flywheel Housing

W1060705

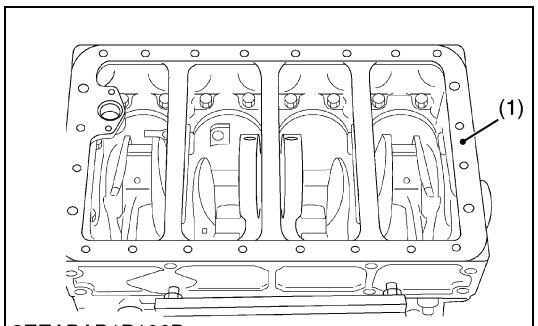

3EEABAB1P106D

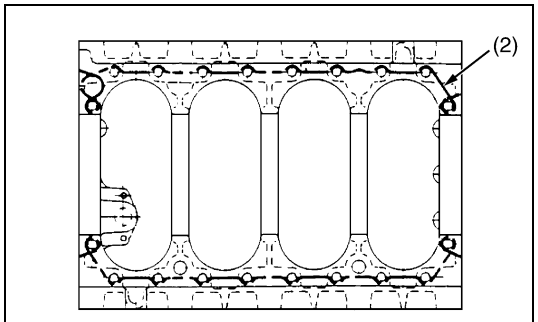

3EEABAB1P107B

Crankcase 2

1. Remove the crankcase 2 (1).

(When reassembling)

■ **IMPORTANT**

- **Make sure the crankcase 1 and 2 are clean.**
- **Apply liquid gasket (Three Bond 1217D) to the crankcase 2 as shown in the figure.**
- **Align crankcase 1 and 2 securely.**
- **Tighten the crankcase 2 mounting screws with even force on the diagonal line.**
- **Confirm that the liquid gasket coating surface is free of water, dust and oil in order to maintain sealing effect.**
- **Carefully apply the adhesive evenly.**

■ **NOTE**

- **When mounting the adhesive-applied parts, take care to fit them to the mating parts.**
- **Assemble the adhesive-applied parts within ten minutes.**

Tightening torque	Crankcase 2 mounting screw	49 to 55 N·m 5.0 to 5.7 kgf·m 37 to 41 lbf·ft

(1) Crankcase 2 (2) Liquid Gasket

W1060825

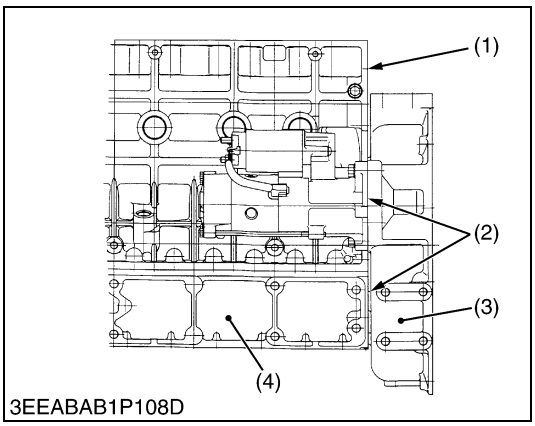

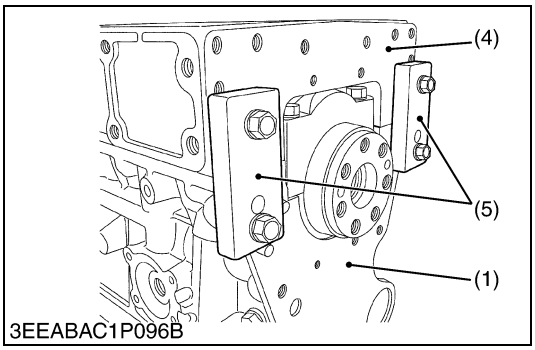

Aligning Crankcase 1 and Crankcase 2

1. Set the crankcase 2 on the crankcase 1.
2. Tighten the crankcase 2 mounting screws loosely.
3. Set the jig or flywheel housing to the specified torque of the flywheel housing screw to align the crankcase 1 and the crankcase 2 (at the flywheel side). Allowable alignment gap between the crankcase 1 and 2 must be less than 0.05 mm (0.002 in.)

Tightening torque	Crankcase 2 mounting screw	49 to 55 N·m 5.0 to 5.7 kgf·m 37 to 41 lbf·ft
	Flywheel housing mounting screw	78 to 90 N·m 7.9 to 9.2 kgf·m 58 to 66 lbf·ft

(1) Crankcase 1
(2) Gap to be smaller than 0.05 mm (0.002 in.)
(3) Flywheel Housing
(4) Crankcase 2
(5) Jig

W1111351

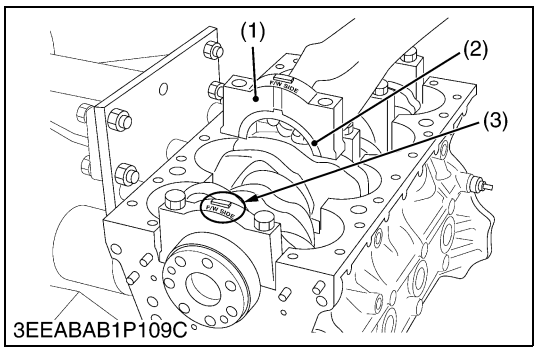

3EEABAB1P109C

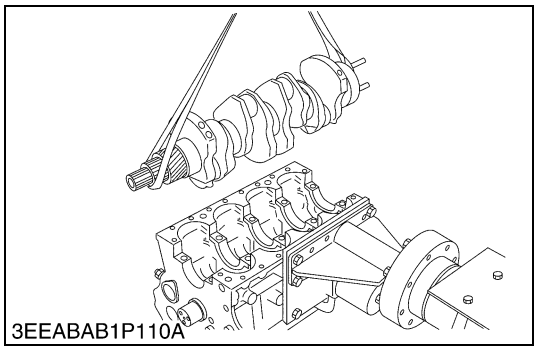
3EEABAB1P110A

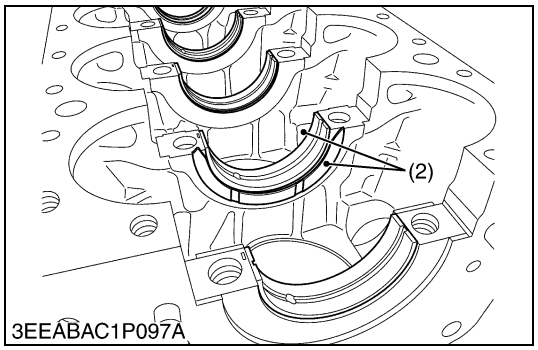

3EEABAC1P097A

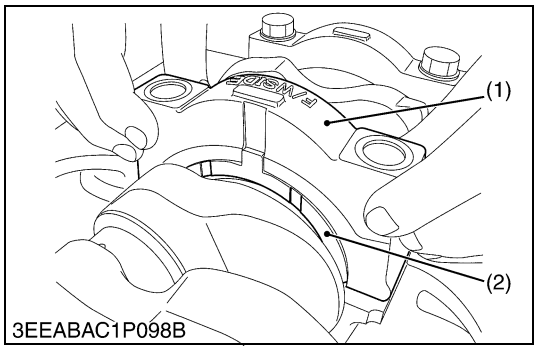

3EEABAC1P098B

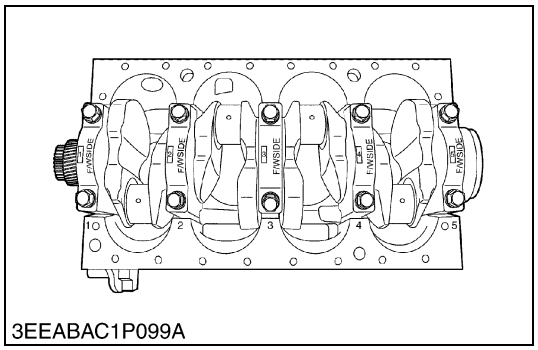

3EEABAC1P099A

Crankshaft

1. Remove the main bearing case.
2. Remove the crankshaft.

(When reassembling)

- Match the numbering marks (“1”, “2”, “3”, “4”, “5”) between main bearing case and crankcase set the casting mark “F / W SIDE” on the main bearing case facing towards the flywheel side.
- Set the thrust bearings (2), with the oil groove facing outside, into both side of the No.4 main bearing case (1) and crankcase.
- Apply oil to the bearing case screws and tighten them to the specified torque.

Tightening torque	Main bearing case screw	138 to 147 N·m 14.0 to 15.0 kgf·m 102 to 108 lbf·ft

(1) No.4 Main Bearing Case
(2) Thrust Bearing
(3) F / W SIDE Mark

W1061157

(12) Intake Air Heater [V3800DI-T-E3B, V3800DI-T-E3CB, V3800DI-T-E3BG]

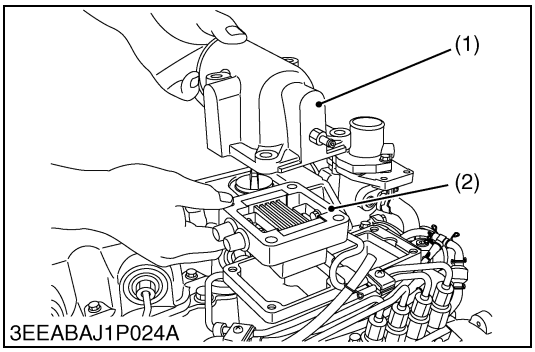

Intake Air Heater

1. Remove the inlet hose.
2. Disconnect the lead.
3. Remove the flange (1).
4. Remove the intake air heater (2).

(1) Flange
(2) Intake air heater

W1043265

(13) Starter

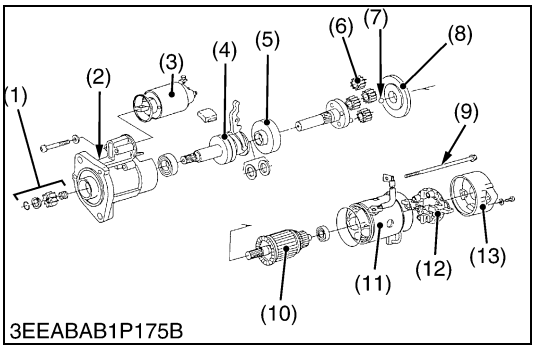

Disassembling Motor

1. Disconnect the solenoid switch (3).
2. Remove the 2 through screws (9) and the 2 brush holder lock screws. Take out the rear end frame (13) and the brush holder (12).
3. Disconnect the armature (10) and the yoke (11). Remove also the ball (7) from the tip of the armature.
4. Remove the set of packings (8), the 4 planetary gears and another packing.
5. Take out the shaft assembly. Take note of the position of the lever.

■ **IMPORTANT**

- **Before disconnecting the yoke, put tally marks on the yoke and the front bracket.**
- **Take note of the positions of the set of packings and the setup bolt.**
- **Apply grease to the gears, bearings, shaft's sliding part and ball.**

■ **NOTE**

- **Do not damage to the brush and commutator.**

(When reassembling)

- Apply grease to the parts indicated in the figure.

(1) Gear
(2) Front Bracket
(3) Solenoid Switch
(4) Overrunning Clutch
(5) Internal Gear
(6) Planetary Gear
(7) Ball
(8) Set of Packings
(9) Through Bolt
(10) Armature
(11) Yoke
(12) Brush Holder
(13) Rear End Frame

W1074237

(14) Alternator

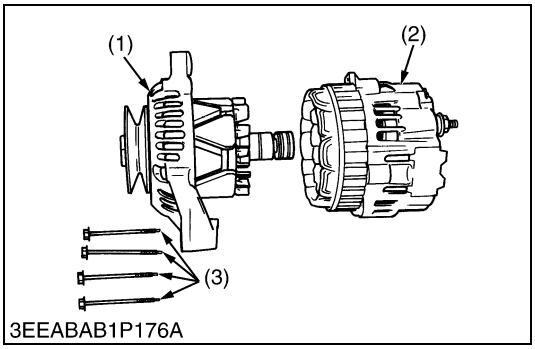

Front Bracket

1. Remove the 4 screws (3).
2. Separate the front bracket (1) and the rear bracket (2) from each other.

■ **IMPORTANT**

- **Put a tally line on the front bracket and the rear bracket for reassembling them later.**

(1) Front Bracket
(2) Rear Bracket
(3) Screw

W1074745

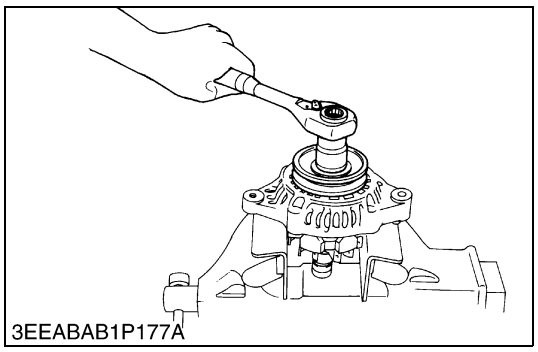
3EEABAB1P177A

Pulley

1. Hold the rotor (base of the claw) in a vise.
2. Loosen the lock nut using a M24 box wrench.

Tightening torque	Pulley nut	58.4 to 78.9 N·m 5.95 to 8.05 kgf·m 43.1 to 58.2 lbf·ft

W1074849

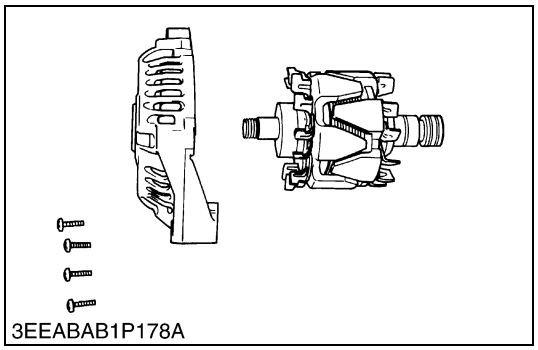
3EEABAB1P178A

Rotor

1. Remove the 4 screws to detach the bearing retainer.
2. Temporarily install the nut on the pulley screw.
3. Detach the rotor.

W1074920

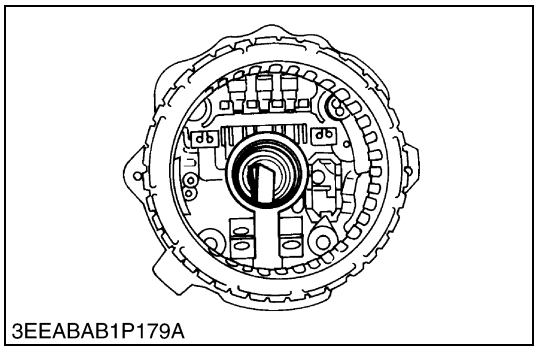
3EEABAB1P179A

Brush

1. When the rotor is detached, the 2 brushes are found to stretch out of the shaft hole.

W1075045

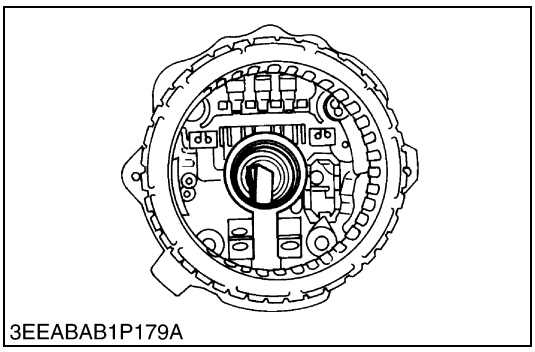
3EEABAB1P179A

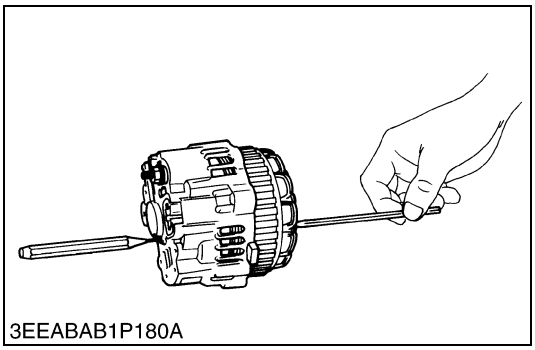
3EEABAB1P180A

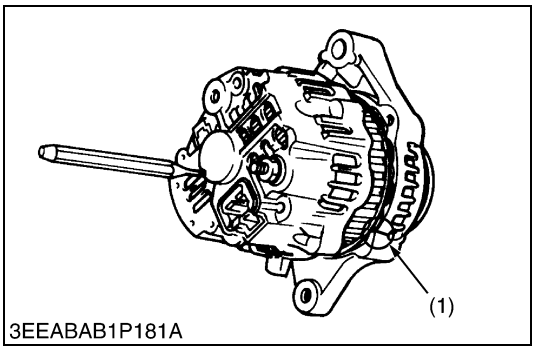

3EEABAB1P181A

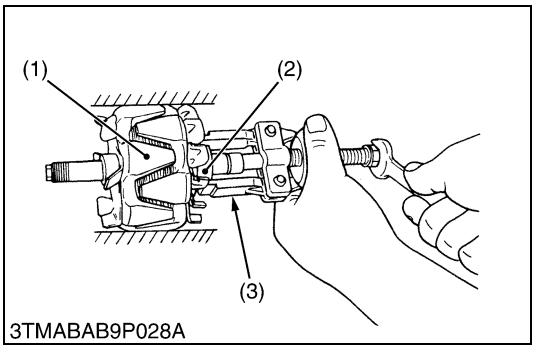

3TMABAB9P028A

Reassembling the Brush

1. Fit the brush with its sliding face in the clockwise direction when viewed from front.

■ **IMPORTANT**

- **Be sure to keep the 2 brushes deep in the brush holder. Otherwise the rotor and the rear section can not be fitted into the position.**
- **Use a 4 mm hex. wrench to push the brushes into place.**
- **Using a pin-pointed (2 mm) punch, keep the brushes from popping out.**

2. Match the tally line of the front section with that of the rear section.
3. Tighten the 4 screws.
4. Draw out the pin-pointed punch out of the brush holder.

(1) Marking

W1075117

Bearing at Slip Ring Side

1. Lightly secure the rotor (1) with a vise to prevent damage.
2. Remove the bearing (2) with a puller (3).

(1) Rotor
(2) Bearing
(3) Puller

W1019701

[4] SERVICING

(1) Cylinder Head

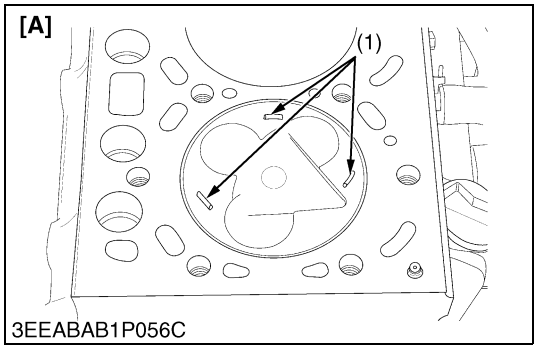

3EEABAB1P056C

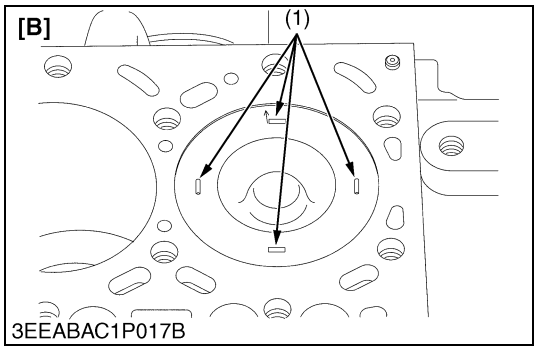

3EEABAC1P017B

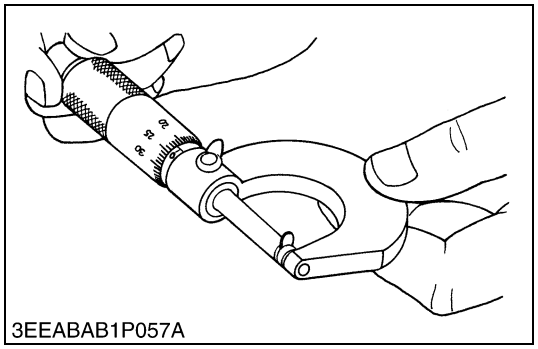
3EEABAB1P057A

Top Clearance

1. Remove the cylinder head (remove the cylinder head gasket completely).
2. Bring the piston to its top dead center fasten 1.5 mm dia. 5 to 7 mm long fuse wires to 3 to 4 spots on the piston top with grease so as to avoid the intake and exhaust valves and the combustion chamber ports. (V3600-E3B, V3600-T-E3B, V3600-E3CB, V3600-T-E3CB, V3300-E3BG, V3600-T-E3BG)
3. Bring the piston to its middle position, install the cylinder head, and tighten the cylinder head screws to specification. (Head gasket must be changed to new one).
4. Turn the crankshaft until the piston exceeds its top dead center.
5. Remove the cylinder head, and measure squeezed fuse wires for thickness.
6. If the measurement is not within the specified value, check the oil clearance of the crankpin journal and the piston pin.

Top clearance	Factory spec.	V3600-E3B, V3600-T-E3B, V3600-E3CB, V3600-T-E3CB, V3600-T-E3BG	1.05 to 1.27 mm 0.0414 to 0.0500 in.
		V3300-E3BG	0.72 to 0.90 mm 0.283 to 0.0354 in.
		V3800DI-T-E3B, V3800DI-T-E3CB, V3800DI-T-E3BG	0.701 to 0.930 mm 0.0276 to 0.0366 in.

Tightening torque	Cylinder head mounting screw	98.1 to 107 N·m 10.0 to 11.0 kgf·m 72.4 to 79.5 lbf·ft

(1) Fuse

[A] V3600-E3B, V3600-T-E3B, V3600-E3CB, V3600-T-E3CB, V3300-E3BG, V3600-T-E3BG
[B] V3800DI-T-E3B, V3800DI-T-E3CB, V3800DI-T-E3BG

W1049122

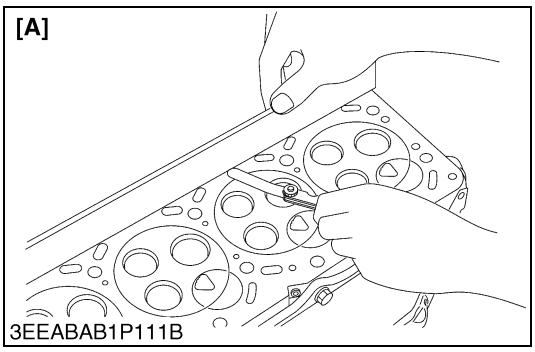

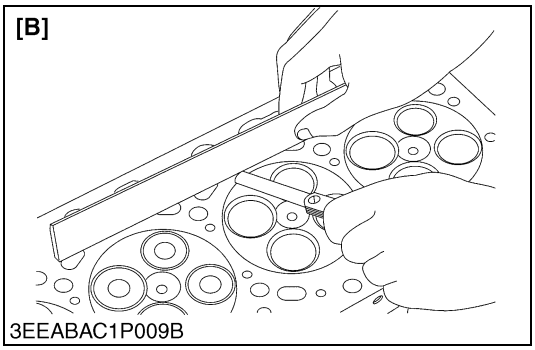

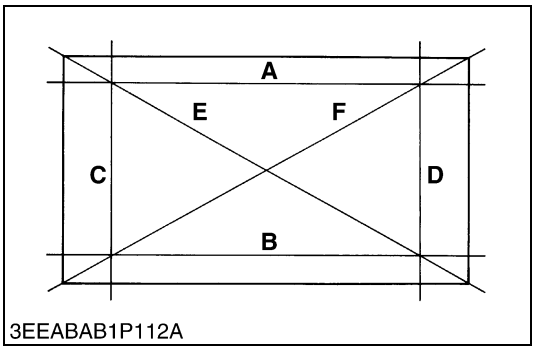

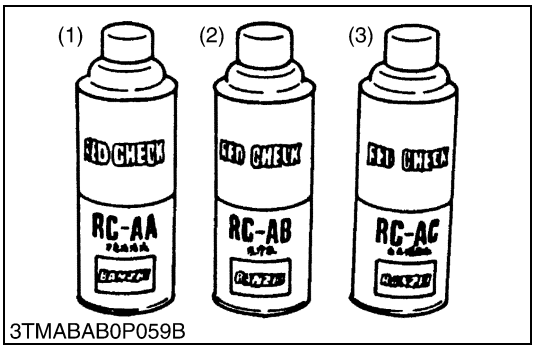

Cylinder Head Surface Flatness

1. Clean the cylinder head surface.
2. Place a straightedge on the cylinder head's four sides (**A**), (**B**), (**C**) and (**D**) and two diagonal (**E**) and (**F**) as shown in the figure to measure each clearance with feeler gauge.
3. If the measurement exceeds the allowable limit, correct it with a surface grinder.

■ **IMPORTANT**

- **Do not place the straight edge on the combustion chamber. (V3600-E3B, V3600-T-E3B, V3600-E3CB, V3600-T-E3CB, V3300-E3BG, V3600-T-E3BG)**
- **Be sure to check the valve recessing after correcting.**

Cylinder head surface flatness	Allowable limit	0.05 mm 0.002 in.

[A] V3600-E3B, V3600-T-E3B, V3600-E3CB, V3600-T-E3CB, V3300-E3BG, V3600-T-E3BG

[B] V3800DI-T-E3B, V3800DI-T-E3CB, V3800DI-T-E3BG

W1061323

Cylinder Head Flaw

1. Prepare an air spray red check.
2. Clean the surface of the cylinder head with detergent (2).
3. Spray the cylinder head surface with the red permeative liquid (1).
4. Leave it five to ten minutes after spraying.
5. Wash away the read permeative liquid on the cylinder head surface with the detergent (2).
6. Spray the cylinder head surface with white developer (3).
7. If flawed, it can be identified as red marks.

(1) Red Permeative Liquid
(2) Detergent
(3) White Developer

W1076542

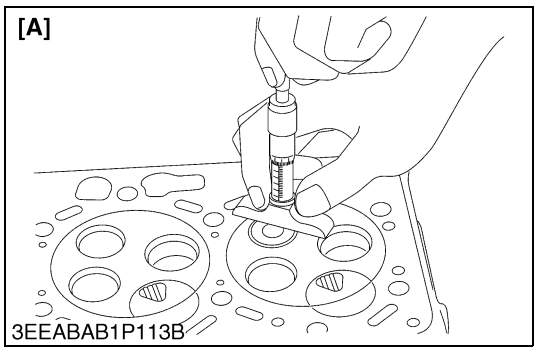

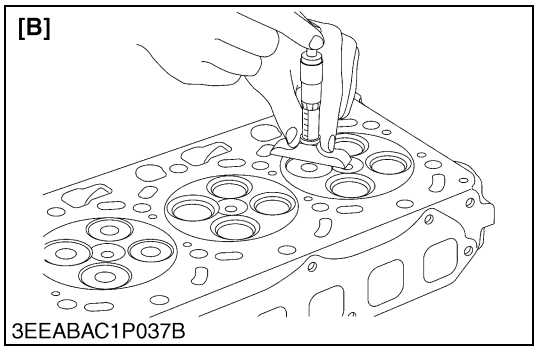

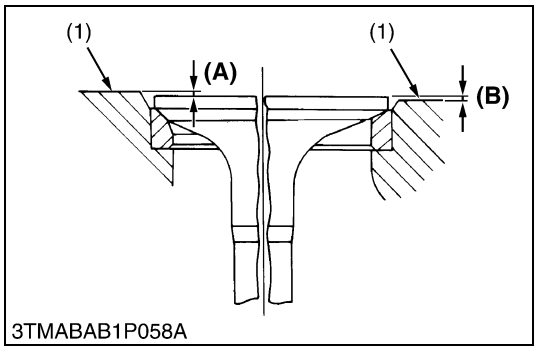

Valve Recessing

1. Clean the cylinder head, the valve face and seat.
2. Insert the valve into the valve guide.
3. Measure the valve recessing with a depth gauge.
4. If the measurement exceeds the allowable limit, replace the valve.
5. If it still exceeds the allowable limit after replacing the valve, replace the cylinder head.

[V3600-E3B, V3600-T-E3B, V3600-E3CB, V3600-T-E3CB, V3300-E3BG, V3600-T-E3BG]

Valve recessing	Factory spec.	Intake valve	(Protrusion) 0 mm (0 in.) to (recessing) 0.2 mm (0.007 in.)
		Exhaust valve	(Protrusion) 0.15 mm (0.0059 in.) to (recessing) 0.05 mm (0.0019 in.)
	Allowable limit	(recessing) 0.4 mm (0.02 in.)	

[V3800DI-T-E3B, V3800DI-T-E3CB, V3800DI-T-E3BG]

Valve recessing	Factory spec.	Intake valve	(recessing) 0.60 mm to 0.80 mm 0.024 to 0.031 in.
		Exhaust valve	(recessing) 0.850 mm to 1.05 mm 0.0335 to 0.0413 in.
	Allowable limit	(recessing) 1.2 mm 0.047 in.	

(1) Cylinder Head Surface

(A) Recessing
(B) Protrusion

[A] V3600-E3B, V3600-T-E3B, V3600-E3CB, V3600-T-E3CB, V3300-E3BG, V3600-T-E3BG
[B] V3800DI-T-E3B, V3800DI-T-E3CB, V3800DI-T-E3BG

W1061543

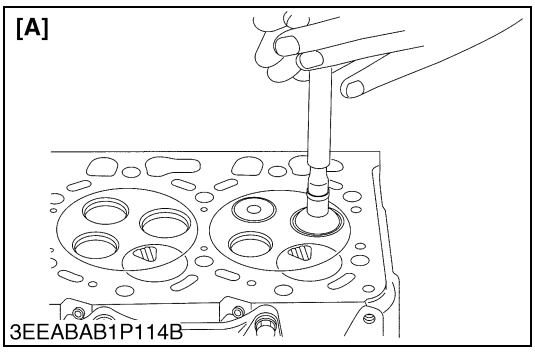

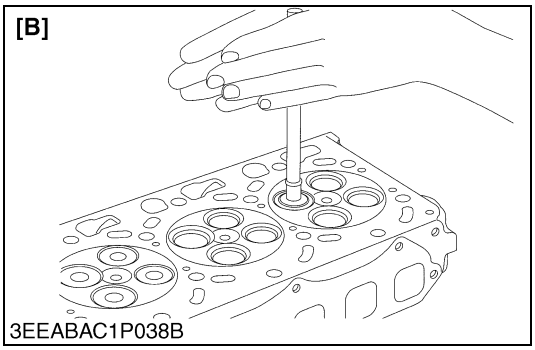

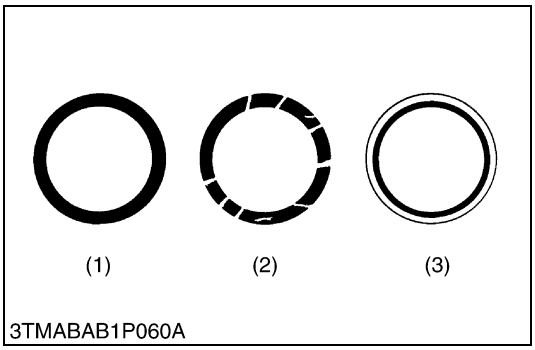

Valve Lapping

1. Apply compound evenly to the valve seat.
2. Insert the valve into the valve guide.
3. Lap the valve onto its seat with a valve flapper or screwdriver.
4. After lapping the valve, wash the compound away.
5. Lap the valve with oil again.
6. Apply prussian blue to the contact surface to check the seated rate. If it is less than 70 %, repeat valve lapping again.

■ **IMPORTANT**

- **When valve lapping is performed, be sure to check the valve recessing and adjust the valve clearance after assembling the valve.**

(1) Correct
(2) Incorrect
(3) Incorrect

[A] V3600-E3B, V3600-T-E3B, V3600-E3CB, V3600-T-E3CB, V3300-E3BG, V3600-T-E3BG
[B] V3800DI-T-E3B, V3800DI-T-E3CB, V3800DI-T-E3BG

W1061709

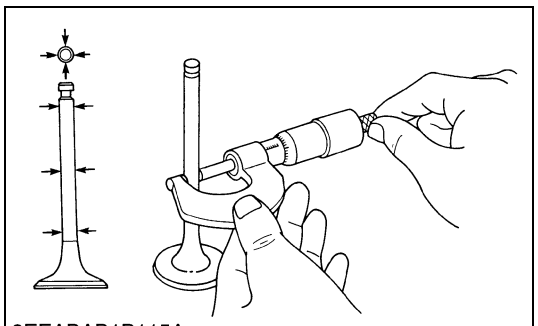
3EEABAB1P115A

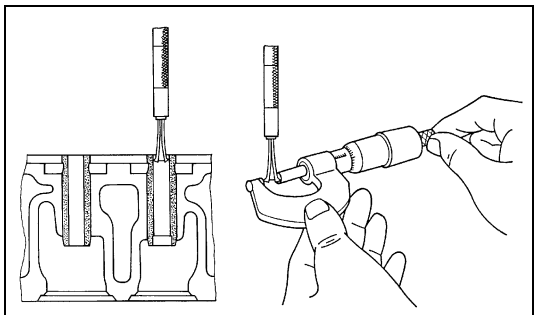
3EEABAB1P116A

Clearance between Valve Stem and Valve Guide

1. Clean carbon from the valve guide and valve stem.
2. Measure the valve stem O.D. with an outside micrometer.
3. Measure the valve guide I.D. of the cylinder head at the most wear part as shown in the figure below with a small hole gauge.
4. Calculate the clearance.
5. If the clearance exceeds the allowable limit, replace the valves.
6. If it still exceeds the allowable limit, replace the valve guide.

[V3600-E3B, V3600-T-E3B, V3600-E3CB, V3600-T-E3CB, V3300-E3BG, V3600-T-E3BG]

Clearance between valve stem and guide	Factory spec.	Intake valve	0.055 to 0.085 mm 0.0022 to 0.0033 in.
		Exhaust valve	0.040 to 0.070 mm 0.0016 to 0.0027 in.
	Allowable limit		0.1 mm 0.004 in.
Valve stem O.D.	Factory spec.	Intake valve	6.960 to 6.975 mm 0.2741 to 0.2746 in.
		Exhaust valve	7.960 to 7.975 mm 0.3134 to 0.3139 in.
Valve guide I.D.	Factory spec.	Intake valve	7.030 to 7.045 mm 0.2768 to 0.2773 in.
		Exhaust valve	8.015 to 8.030 mm 0.3156 to 0.3161 in.

[V3800DI-T-E3B, V3800DI-T-E3CB, V3800DI-T-E3BG]

Clearance between valve stem and guide	Factory spec.	Intake valve	0.055 to 0.085 mm 0.0022 to 0.0033 in.
		Exhaust valve	0.055 to 0.085 mm 0.0022 to 0.0033 in.
	Allowable limit		0.1 mm 0.004 in.
Valve stem O.D.	Factory spec.	Intake valve	6.960 to 6.975 mm 0.2741 to 0.2746 in.
		Exhaust valve	6.960 to 6.975 mm 0.2741 to 0.2746 in.
Valve guide I.D.	Factory spec.	Intake valve	7.030 to 7.045 mm 0.2768 to 0.2773 in.
		Exhaust valve	7.030 to 7.045 mm 0.2768 to 0.2773 in.

W1061883

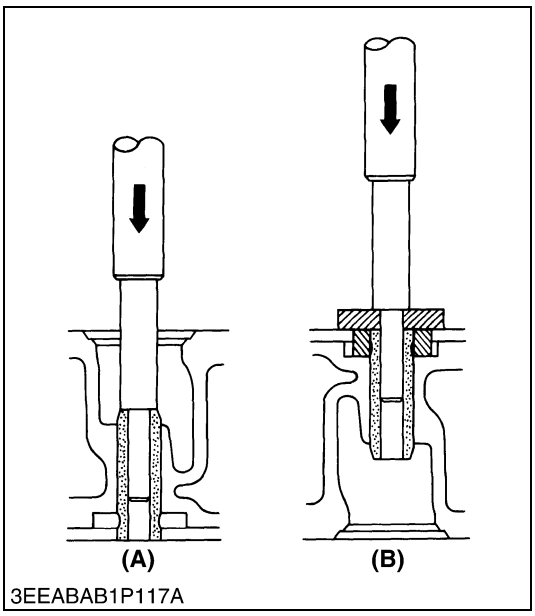

Replacing Valve Guide

(When removing)

1. Press out the used valve guide with valve guide replacing tool.

(When installing)

1. Clean a new valve guide.
2. Apply engine oil to a new valve guide.
3. Press in a new valve guide with valve guide replacing tool until it is flush with the cylinder head as shown in the figure.
4. Ream precisely the I.D. of the valve guide to the specified dimension.

■ **IMPORTANT**

- **Do not hit the valve guide with a hammer, etc. during replacement.**

(A) When Removing **(B) When Installing**

W1062212

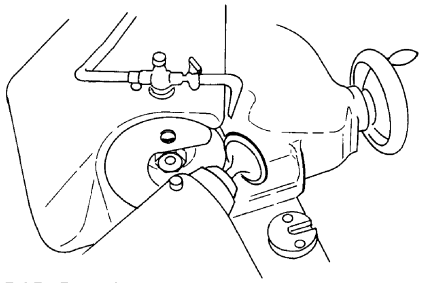

3EEABAB1P118A

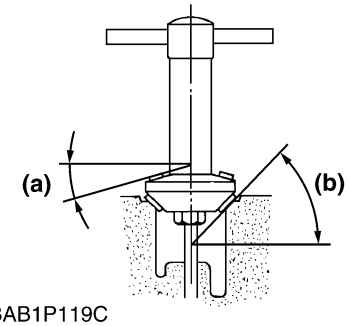

3EEABAB1P119C

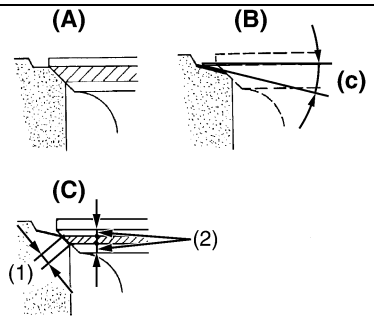

3EEABAB1P120D

Correcting Valve and Valve Seat

■ **NOTE**

- **Before correcting the valve and seat, check the valve stem and the I.D. of valve guide section, and repair them if necessary.**
- **After correcting the valve seat, be sure to check the valve recessing.**

1) Correcting Valve

1. Correct the valve with a valve refacer.

Valve face angle	Factory spec.	IN.	1.0 rad 60 °
		EX.	0.79 rad 45 °

2) Correcting Valve Seat

1. Slightly correct the seat surface with a 1.0 rad (60 °) (intake valve) or 0.79 rad (45 °) (exhaust valve) valve seat cutter.
2. Resurface the seat surface with a 0.52 rad (30 °) valve seat cutter to intake valve seat and with a 0.26 rad (15 °) valve seat cutter to exhaust valve seat so that the width is close to specified valve seat width.

[V3600-E3B, V3600-T-E3B, V3600-E3CB, V3600-T-E3CB, V3300-E3BG, V3600-T-E3BG]

Valve seat width	Factory spec.	IN.	2.12 mm 0.0835 in.
		EX.	2.12 mm 0.0835 in.

[V3800DI-T-E3B, V3800DI-T-E3CB, V3800DI-T-E3BG]

Valve seat width	Factory spec.	IN.	1.6 to 2.0 mm 0.063 to 0.078 in.
		EX.	2.3 to 2.6 mm 0.091 to 0.10 in.

3. After resurfacing the seat, do the valve lapping.
   (See the “Valve Lapping”)

Valve seat angle	Factory spec.	IN.	1.0 rad 60 °
		EX.	0.79 rad 45 °

(1) Valve Seat Width
(2) Identical Dimensions

(A) Check Contact
(B) Correct Seat Width
(C) Check Contact
(a) 0.26 rad (15 °) or 0.52 rad (30 °)
(b) 0.79 rad (45 °) or 1.0 rad (60 °)
(c) 0.52 rad (30 °) or 0.26 rad (15 °)

W10283500

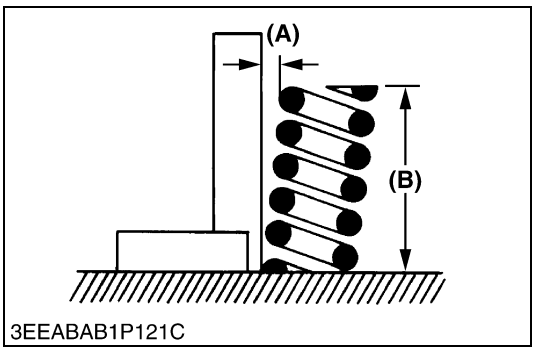

Free Length and Tilt of Valve Spring

1. Measure the free length (**B**) with vernier calipers.
2. If the measurement is less than the allowable limit, replace the spring.
3. Put the spring on a surface plate.
4. Place a square on the side of the spring.
5. Check to see if the entire side is contact with the square.
6. Rotate the spring and measure the maximum (**A**).
7. If the measurement exceeds the allowable limit, replace the spring.
8. If the entire surface of the spring for scratches, replace the spring.

Tilt (**A**)	Allowable limit	1.0 mm 0.039 in.

[V3600-E3B, V3600T-E3B, V3600-E3CB, V3600-T-E3CB, V3300-E3BG, V3600-T-E3BG]

Free length (**B**)	Factory spec.	Intake valve	35.1 to 35.6 mm 1.39 to 1.40 in.
		Exhaust valve	41.7 to 42.2 mm 1.65 to 1.66 in.
	Allowable limit	Intake valve	34.6 mm 1.36 in.
		Exhaust valve	41.2 mm 1.62 in.

[V3800DI-T-E3B, V3800DI-T-E3CB, V3800DI-T-E3BG]

Free length (**B**)	Factory spec.	Intake valve	35.1 to 35.6 mm 1.39 to 1.40 in.
		Exhaust valve	35.1 to 35.6 mm 1.39 to 1.40 in.
	Allowable limit	Intake valve	34.6 mm 1.36 in.
		Exhaust valve	34.6 mm 1.36 in.

(A) Tilt **(B) Free length**

W1063303

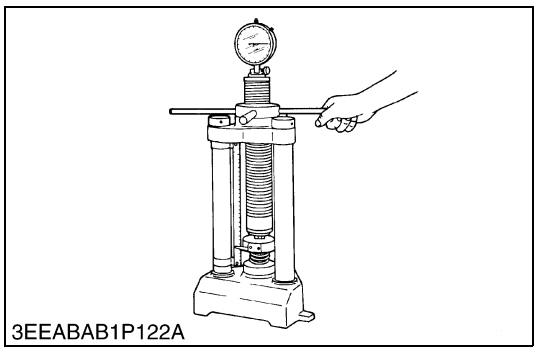
3EEABAB1P122A

Valve Spring Setting Load

1. Place the valve spring on a tester.
2. Compress it to the same length it is actually compressed in the engine.
3. Read the compression load on the gauge.
4. If the measurement is less than the allowable limit, replace the spring.

[V3600-E3B, V3600-T-E3B, V3600-E3CB, V3600-T-E3CB, V3300-E3BG, V3600-T-E3BG]

Setting load / setting length	Factory spec.	Intake valve	63.5 N / 31.5 mm 6.48 kgf / 31.5 mm 14.3 lbf / 1.24 in.
		Exhaust valve	118 N / 35 mm 12.0 kgf / 35 mm 26.5 lbf / 1.38 in.
	Allowable limit	Intake valve	45.9 N / 31.5 mm 4.68 kgf / 31.5 mm 10.3 lbf / 1.24 in.
		Exhaust valve	100 N / 35 mm 10.2 kgf / 35 mm 22.5 lbf / 1.38 in.

[V3800DI-T-E3B, V3800DI-T-E3CB, V3800DI-T-E3BG]

Setting load / setting length	Factory spec.	Intake valve	63.5 N / 31.5 mm 6.48 kgf / 31.5 mm 14.3 lbf / 1.24 in.
		Exhaust valve	63.5 N / 31.5 mm 6.48 kgf / 31.5 mm 14.3 lbf / 1.24 in.
	Allowable limit	Intake valve	45.9 N / 31.5 mm 4.68 kgf / 31.5 mm 10.3 lbf / 1.24 in.
		Exhaust valve	45.9 N / 31.5 mm 4.68 kgf / 31.5 mm 10.3 lbf / 1.24 in.

W1063470

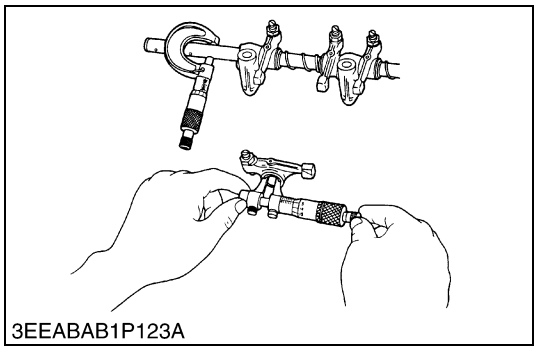
3EEABAB1P123A

Oil Clearance between Rocker Arm Shaft and Bearing

1. Measure the rocker arm bearing I.D. with an inside micrometer.
2. Measure the rocker arm shaft O.D. with an outside micrometer.
3. Calculate the oil clearance.
4. If the clearance exceeds the allowable limit, replace the rocker arm and measure the oil clearance again.
5. If it still exceeds the allowable limit, replace the rocker arm shaft.

Oil clearance of rocker arm shaft and bearing	Factory spec.	0.016 to 0.045 mm 0.00063 to 0.0017 in.
	Allowable limit	0.15 mm 0.0059 in.

Rocker arm shaft O.D.	Factory spec.	15.973 to 15.984 mm 0.62886 to 0.62929 in.
Rocker arm I.D. for shaft	Factory spec.	16.000 to 16.018 mm 0.62993 to 0.63062 in.

W1063697

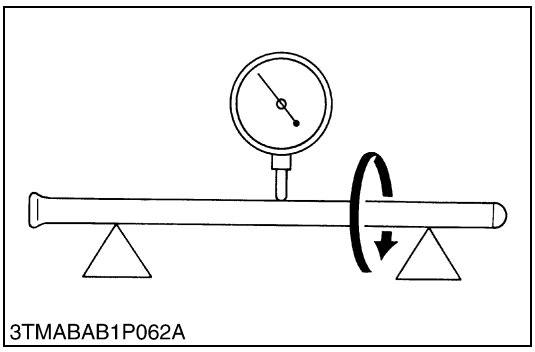
3TMABAB1P062A

Push Rod Alignment

1. Place the push rod on V blocks.
2. Measure the push rod alignment.
3. If the measurement exceeds the allowable limit, replace the push rod.

Push rod alignment	Allowable limit	0.25 mm 0.0098 in.

W10292900

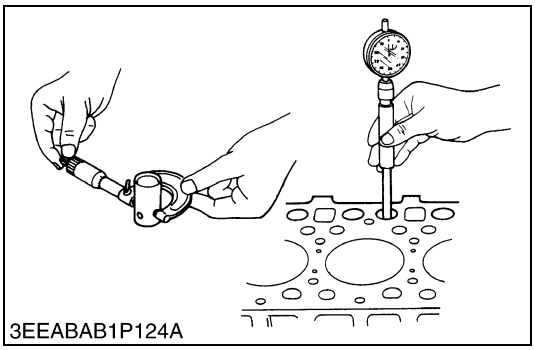
3EEABAB1P124A

Oil Clearance between Tappet and Tappet Guide Bore

1. Measure the tappet O.D. with an outside micrometer.
2. Measure the I.D. of the tappet guide bore with a cylinder gauge.
3. Calculate the oil clearance.
4. If the oil clearance exceeds the allowable limit or the tappet is damaged, replace the tappet.

Oil clearance between tappet and guide bore	Factory spec.	0.020 to 0.062 mm 0.00079 to 0.0024 in.
	Allowable limit	0.07 mm 0.003 in.

Tappet O.D.	Factory spec.	23.959 to 23.980 mm 0.94327 to 0.94409 in.
Tappet guide bore I.D.	Factory spec.	24.000 to 24.021 mm 0.94489 to 0.94570 in.

W1063847

(2) Timing Gears

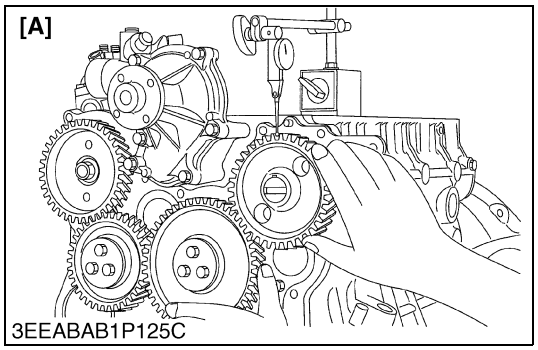

3EEABAB1P125C

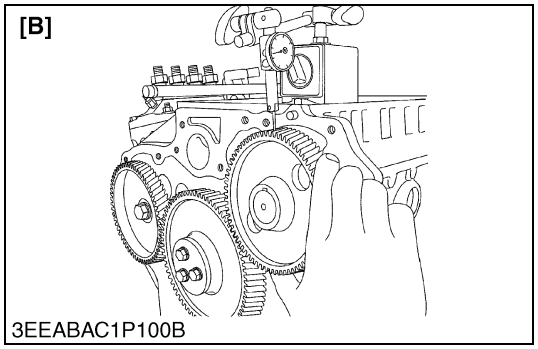

3EEABAC1P100B

Timing Gear Backlash

1. Set a dial indicator (lever type) with its tip on the gear tooth.
2. Move the gear to measure the backlash, holding its mating gear.
3. If the backlash exceeds the allowable limit, check the oil clearance of the shafts and the gear.
4. If the oil clearance is proper, replace the gear.

[V3600-E3B, V3600-T-E3B, V3800DI-T-E3B, V3300-E3BG, V3600-T-E3BG, V3800DI-T-E3BG]

Backlash between crank gear and idle gear 1	Factory spec.	0.0490 to 0.193 mm 0.00193 to 0.00759 in.
	Allowable limit	0.22 mm 0.0087 in.
Backlash between idle gear 1 and cam gear	Factory spec.	0.0490 to 0.189 mm 0.00193 to 0.00744 in.
	Allowable limit	0.22 mm 0.0087 in.
Backlash between idle gear 1 and idle gear 2	Factory spec.	0.0440 to 0.185 mm 0.00174 to 0.00728 in.
	Allowable limit	0.22 mm 0.0087 in.
Backlash between idle gear 2 and injection pump gear	Factory spec.	0.0440 to 0.177 mm 0.00174 to 0.00699 in.
	Allowable limit	0.22 mm 0.0087 in.
Backlash between cam gear and balancer gear 1 (Balancer model only)	Factory spec.	0.0470 to 0.182 mm 0.00185 to 0.00716 in.
	Allowable limit	0.22 mm 0.0087 in.
Backlash between idle gear 1 and balancer gear 2 (Balancer model only)	Factory spec.	0.0440 to 0.183 mm 0.00174 to 0.00720 in.
	Allowable limit	0.22 mm 0.0087 in.

[V3600-E3CB, V3600-T-E3CB, V3800DI-T-E3CB]

Backlash between crank gear and idle gear	Factory spec.	0.0490 to 0.193 mm 0.00193 to 0.00759 in.
	Allowable limit	0.22 mm 0.0087 in.
Backlash between idle gear and cam gear	Factory spec.	0.0490 to 0.189 mm 0.00193 to 0.0074 in.
	Allowable limit	0.22 mm 0.0087 in.
Backlash between idle gear and injection pump gear	Factory spec.	0.0300 to 0.165 mm 0.00119 to 0.00649 in.
	Allowable limit	0.22 mm 0.0087 in.

[A] V3600-E3B, V3600-T-E3B, V3800DI-T-E3B, V3300-E3BG, V3600-T-E3BG, V3800DI-T-E3BG

[B] V3600-E3CB, V3600-T-E3CB, V3800DI-T-E3CB

W1064048

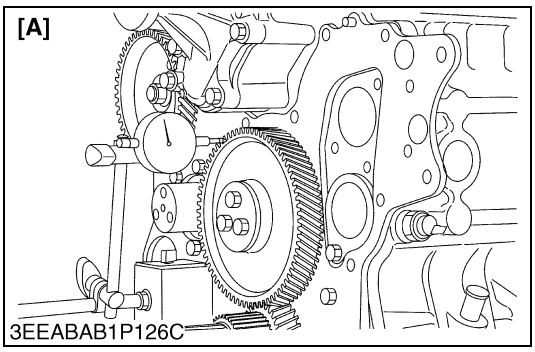

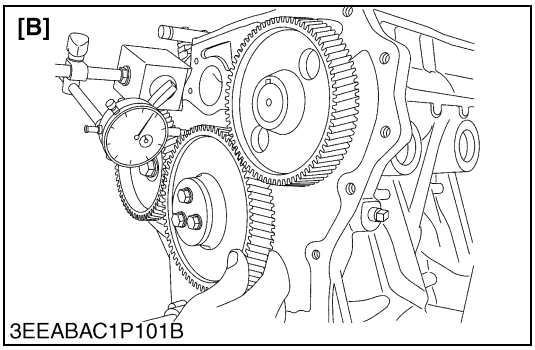

Idle Gear Side Clearance

1. Set a dial indicator with its tip on the idle gear.
2. Measure the side clearance by moving the idle gear to the front and rear.
3. If the measurement exceeds the allowable limit, replace the idle gear collar.

Idle gear side clearance	Factory spec.	0.15 to 0.30 mm 0.0059 to 0.011 in.
	Allowable limit	0.9 mm 0.04 in.

[A] V3600-E3B, V3600-T-E3B, V3800DI-T-E3B, V3300-E3BG, V3600-T-E3BG, V3800DI-T-E3BG

[B] V3600-E3CB, V3600-T-E3CB, V3800DI-T-E3CB

W1064208

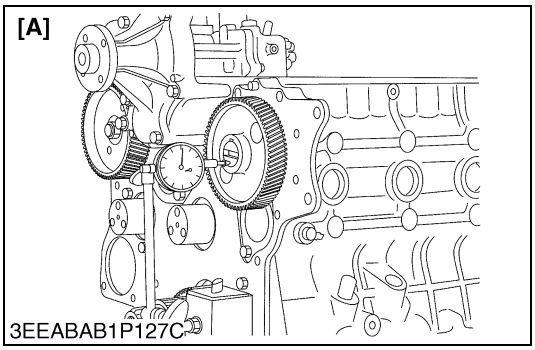

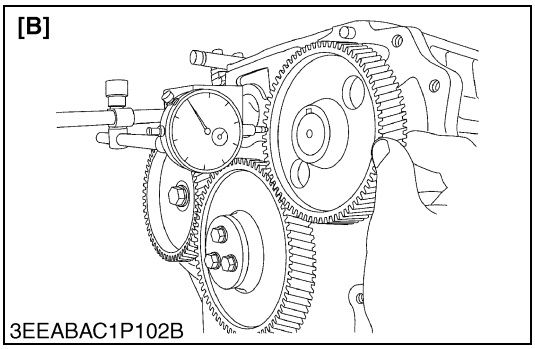

Camshaft Side Clearance

1. Set a dial indicator with its tip on the camshaft.
2. Measure the side clearance by moving the cam gear to the front and rear.
3. If the measurement exceeds the allowable limit, replace the camshaft stopper.

Side clearance	Factory spec.	0.070 to 0.22 mm 0.0028 to 0.0086 in.
	Allowable limit	0.30 mm 0.012 in.

[A] V3600-E3B, V3600-T-E3B, V3800DI-T-E3B, V3300-E3BG, V3600-T-E3BG, V3800DI-T-E3BG

[B] V3600-E3CB, V3600-T-E3CB, V3800DI-T-E3CB

W1064307

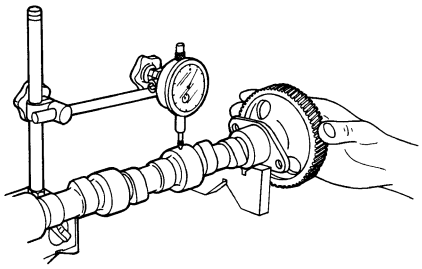
3EEABAB1P128A

Camshaft Alignment

1. Support the camshaft with V block on the surface plate.
2. Set a dial indicator with its tip on the intermediate journal at right angle.
3. Rotate the camshaft on the V blocks to get the misalignment (half of the measurement).
4. If the misalignment exceeds the allowable limit, replace the camshaft.

Camshaft alignment	Allowable limit	0.01 mm 0.0004 in.

W1064422

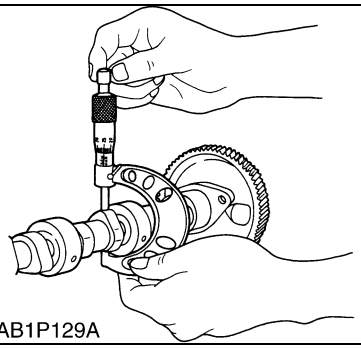
3EEABAB1P129A

Cam Height

1. Measure the height of the cam at its highest point with an outside micrometer.
2. If the measurement is less than the allowable limit, replace the camshaft.

[V3600-E3B, V3800DI-T-E3B, V3600-E3CB, V3800DI-T-E3CB, V3300-E3BG, V3800DI-T-E3BG]

Intake and exhaust cam height	Factory spec.	Intake valve	37.63 mm 1.481 in.
		Exhaust valve	38.96 mm 1.534 in.
	Allowable limit	Intake valve	37.13 mm 1.462 in.
		Exhaust valve	38.46 mm 1.514 in.

[V3600-T-E3B, V3600-T-E3CB, V3600-T-E3BG]

Intake and exhaust cam height	Factory spec.	Intake valve	37.63 mm 1.481 in.	
		Exhaust valve	1st stage	38.96 mm 1.534 in.
			2nd stage	33.86 mm 1.333 in.
	Allowable limit	Intake valve	37.13 mm 1.462 in.	
		Exhaust valve	1st stage	38.46 mm 1.514 in.
			2nd stage	33.36 mm 1.313 in.

W1064551

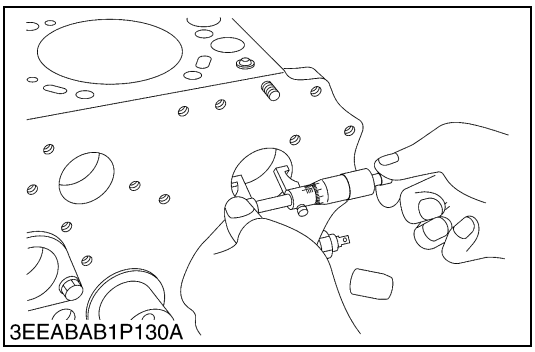
3EEABAB1P130A

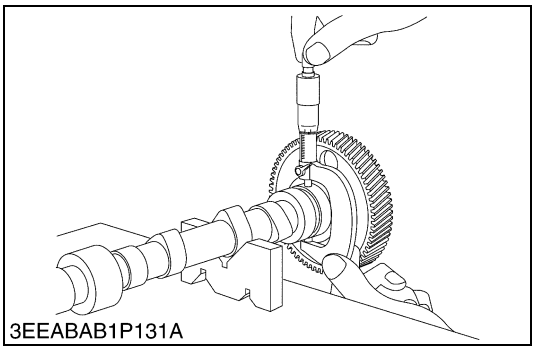
3EEABAB1P131A

Oil Clearance of Camshaft Journal

1. Measure the camshaft journal O.D. with an outside micrometer.
2. Measure the cylinder block bore I.D. for camshaft with an inside micrometer.
3. Calculate the oil clearance.
4. If the clearance exceeds the allowable limit, replace the camshaft.

Oil clearance of camshaft journal	Factory spec.	0.050 to 0.091 mm 0.0020 to 0.0035 in.
	Allowable limit	0.15 mm 0.0059 in.

Camshaft journal O.D.	Factory spec.	45.934 to 45.950 mm 1.8085 to 1.8090 in.
Camshaft bearing I.D.	Factory spec.	46.000 to 46.025 mm 1.8111 to 1.8120 in.

W1064798

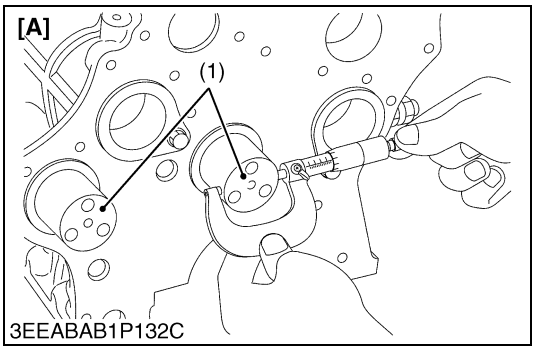

3EEABAB1P132C

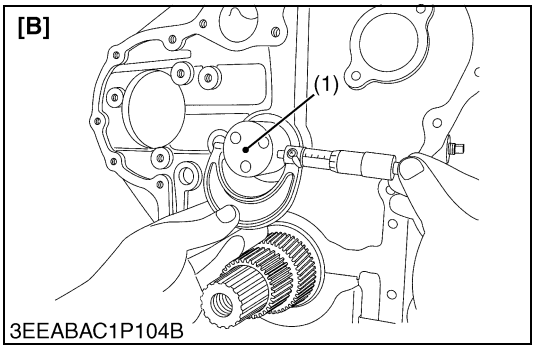

3EEABAC1P104B

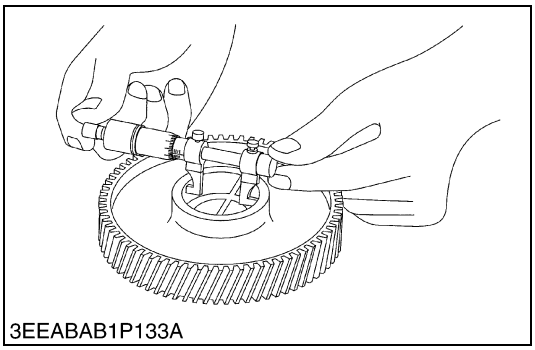
3EEABAB1P133A

Oil Clearance between Idle Gear Shaft 1, 2 and Idle Gear 1, 2 Bushing

1. Measure the idle gear shaft O.D. with an outside micrometer.
2. Measure the idle gear bushings I.D. with an inside micrometer.
3. Calculate the oil clearance.
4. If the oil clearance exceeds the allowable limit, replace the bushing.

Oil clearance between idle gear 1, 2 shaft and idle gear 1, 2 bushing	Factory spec.	0.050 to 0.091 mm 0.0020 to 0.0035 in.
	Allowable limit	0.10 mm 0.0039 in.

Idle gear 1, 2 bushing I.D.	Factory spec.	45.025 to 45.050 mm 1.7727 to 1.7736 in.
Idle gear 1, 2 shaft O.D.	Factory spec.	44.959 to 44.975 mm 1.7701 to 1.7706 in.

(1) Idle Gear Shaft

[A] V3600-E3B, V3600-T-E3B, V3800DI-T-E3B, V3300-E3BG, V3600-T-E3BG, V3800DI-T-E3BG
[B] V3600-E3CB, V3600-T-E3CB, V3800DI-T-E3CB

W1064968

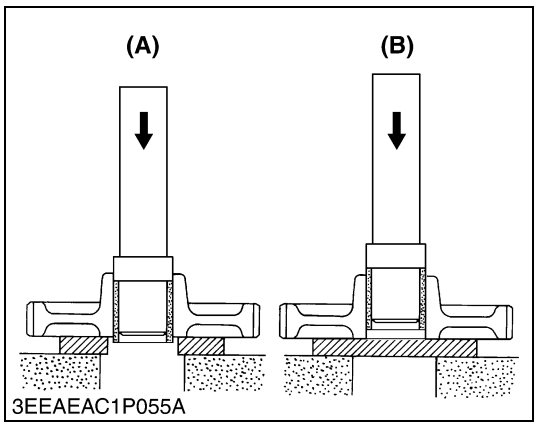

3EEAEAC1P055A

Replacing Idle Gear Bushing

(When removing)

1. Press out the used bushing with idle gear bushing replacing tool.

(When installing)

1. Clean a new idle gear bushing and idle gear bore.
2. Apply engine oil to a new idle gear bushing and idle gear bore.
3. Press in a new bushing (service parts) to the specified dimension with idle gear bushing replacing tool. (See figure.)

(A) When Removing **(B) When Installing**

W10302410

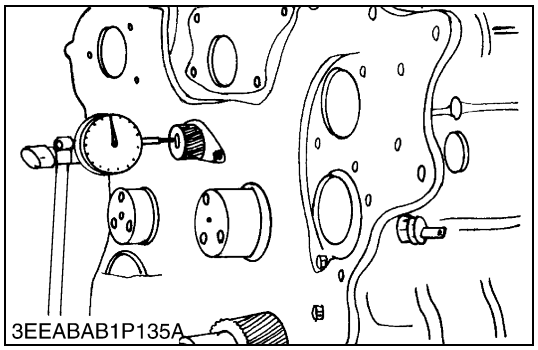
3EEABAB1P135A

Balancer Shaft Side Clearance (Balancer model only)

1. Set a dial indicator with tip on the balancer shaft.
2. Measure the side clearance by moving the balancer shaft to the front and rear.
3. If the measurement exceeds the allowable limit, replace the balancer shaft.

Side clearance	Factory spec.	0.070 to 0.22 mm 0.0028 to 0.0086 in.
	Allowable limit	0.3 mm 0.01 in.

W1065273

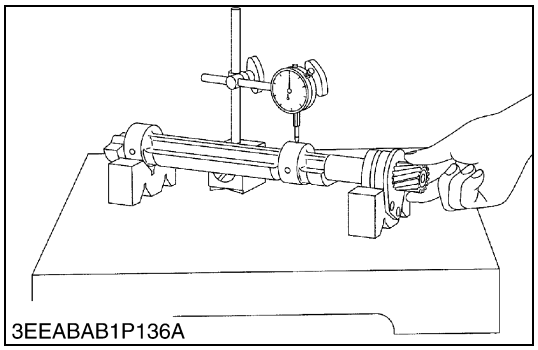
3EEABAB1P136A

Balance Shaft Alignment (Balancer model only)

1. Support the balancer shaft with V blocks on the surface plate.
2. Set a dial indicator with its tip on the intermediate journal at high angle.
3. Rotate the balancer shaft on the V block to get the misalignment (half of the measurement).
4. If the misalignment exceeds the allowable limit, replace the balancer shaft.

Balancer shaft alignment	Allowable limit	0.02 mm 0.0008 in.

W1065448

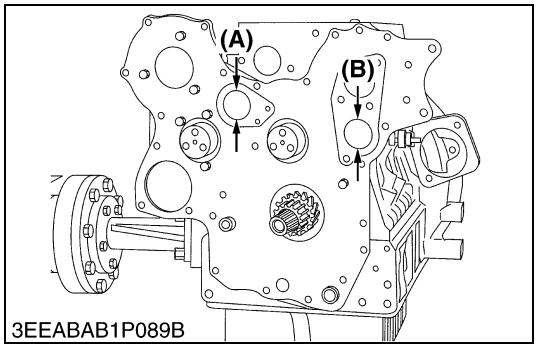

3EEABAB1P089B

Oil Clearance of Balancer Shaft Journal (Balancer model only)

1. Measure the balancer shaft journal O.D. with an outside micrometer.
2. Measure the cylinder block bore I.D. **(A)**, **(B)** for balancer shaft with an inside micrometer.
3. If the clearance exceeds the allowable limit, replace the balancer shaft.

Oil clearance of balancer-shaft journal	Factory spec.	0.0700 to 0.159 mm 0.00276 to 0.00625 in.
	Allowable limit	0.2 mm 0.008 in.

Balancer-shaft journal O.D.	Factory spec.	50.920 to 50.940 mm 2.0048 to 2.0055 in.
Balancer-shaft bearing I.D. **(A), (B)**	Factory spec.	51.01 to 51.08 mm 2.008 to 2.011 in.

(A) Balancer-shaft Bearing I.D. **(B) Balancer-shaft Bearing I.D.**

W1065581

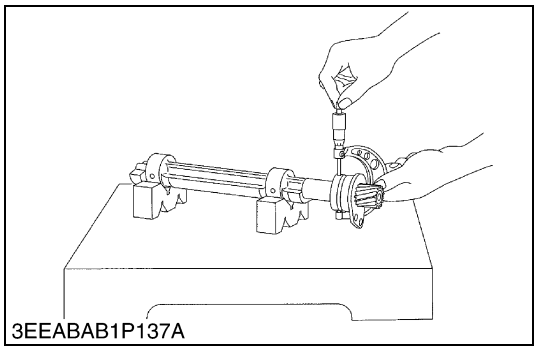
3EEABAB1P137A

(3) Piston and Connecting Rod

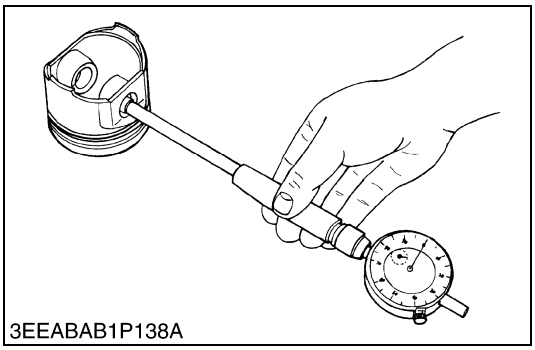
3EEABAB1P138A

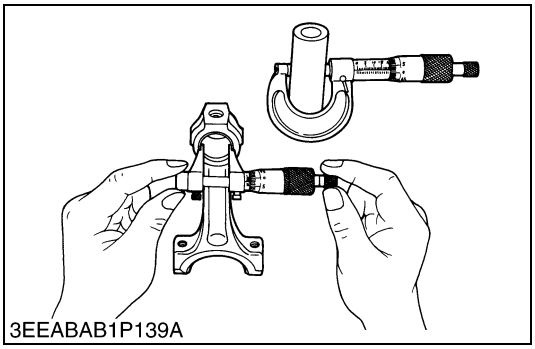
3EEABAB1P139A

Piston Pin Bore I.D.

1. Measure the piston pin bore I.D. in both the horizontal and vertical directions with a cylinder gauge.
2. If the measurement exceeds the allowable limit, replace the piston.

Piston pin bore I.D.	Factory spec.	30.000 to 30.013 mm 1.1811 to 1.1816 in.
	Allowable limit	30.05 mm 1.183 in.

W1065759

Oil Clearance between Piston Pin and Small End Bushing

1. Measure the O.D. of the piston pin where it contacts the bushing with an outside micrometer.
2. Measure the I.D. of the piston pin bushing at the connecting rod small end with a cylinder gauge.
3. Calculate the oil clearance.
4. If the clearance exceeds the allowable limit, replace the bushing.
5. If it still exceeds the allowable limit, replace the piston pin.

Oil clearance between piston pin and small end bushing	Factory spec.	0.020 to 0.040 mm 0.00079 to 0.0015 in.
	Allowable limit	0.15 mm 0.0059 in.

Piston pin O.D.	Factory spec.	30.006 to 30.011 mm 1.1814 to 1.1815 in.
Small end bushing I.D.	Factory spec.	30.031 to 30.046 mm 1.1824 to 1.1829 in.

W1065897

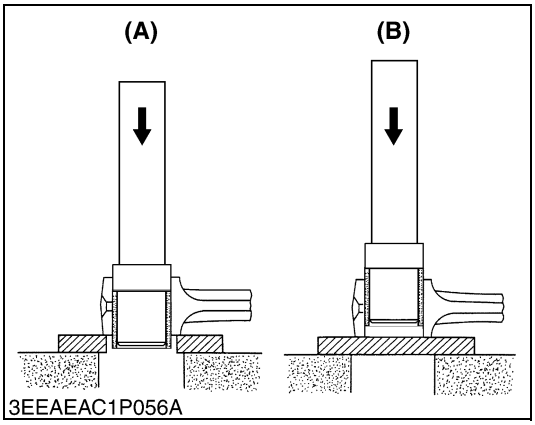

3EEAEAC1P056A

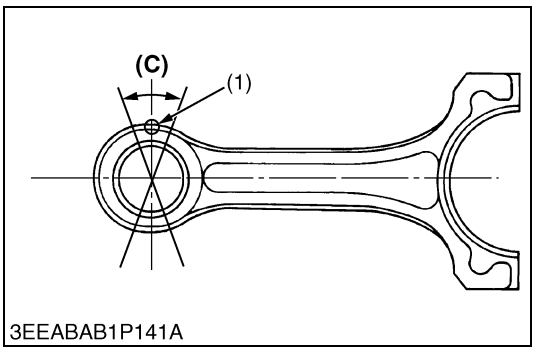

3EEABAB1P141A

Replacing Small End Bushing

(When removing)

1. Press out the used bushing with small end bushing replacing tool.

(When installing)

1. Clean a new small end bushing and bore.
2. Apply engine oil to a new small end bushing and bore.
3. Insert a new bushing onto the tool.
4. Press-fit it with a press so that the seam (1) of bushing position as shown in the figure, until it is flash with the connecting rod.

(1) Seam

(A) When Removing
(B) When Installing
(C) 0.26 rad (15 °)

W1066057

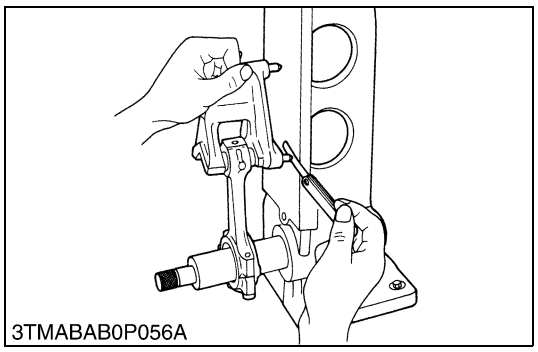
3TMABAB0P056A

Connecting Rod Alignment

■ **NOTE**

- **Since the I.D. of the connecting rod small end bushing is the basis of this check, check the bushing for wear beforehand.**

1. Remove the piston pin from the piston.
2. Install the piston pin in the connecting rod.
3. Install the connecting rod on the connecting rod alignment tool.
4. Put a gauge over the piston pin, and move it against the face plate.
5. If the gauge does not fit squarely against the face plate, measure the space between the pin of the gauge and the face plate.
6. If the measurement exceeds the allowable limit, replace the connecting rod.

Connecting rod alignment	Allowable limit	0.05 mm 0.002 in.

W1066581

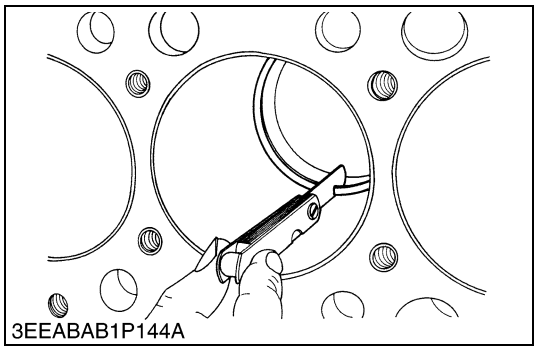
3EEABAB1P144A

Piston Ring Gap

1. Insert the piston ring into the lower part of the liner (the least worn out part) with the piston.
2. Measure the ring gap with a feeler gauge.
3. If the gap exceeds the allowable limit, replace the piston ring.

Top ring and second ring	Factory spec.	0.30 to 0.45 mm 0.012 to 0.017 in.
	Allowable limit	1.25 mm 0.0492 in.

Oil ring	Factory spec.	0.25 to 0.45 mm 0.0099 to 0.017 in.
	Allowable limit	1.25 mm 0.0492 in.

W1066430

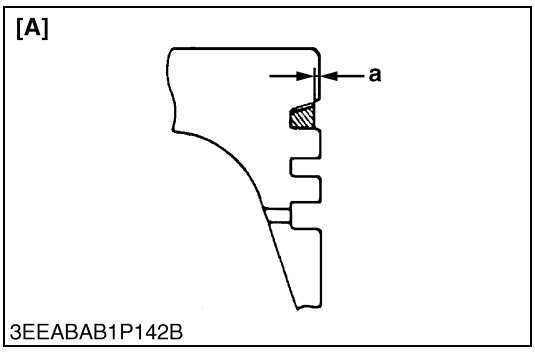

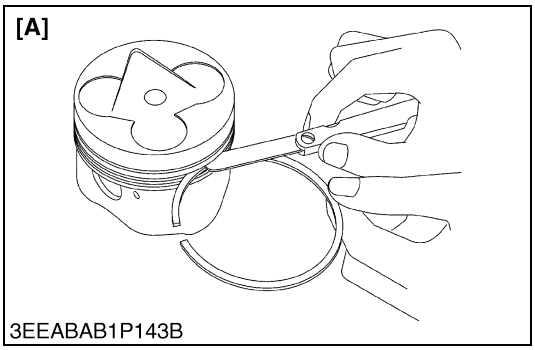

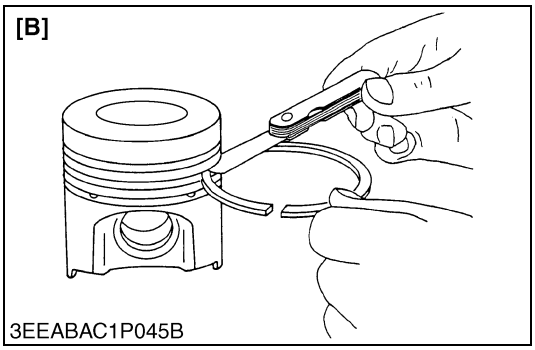

Clearance between Piston Ring and Groove

1. Remove carbon from the ring grooves.
2. Measure the clearance between the ring and the groove with a feeler gauge or depth gauge.
3. If the clearance exceeds allowable limit, replace the ring.
4. If the clearance still exceeds the allowable limit after replacing the ring, replace the piston.

[V3600-E3B, V3600-T-E3B, V3600-E3CB, V3600-T-E3CB, V3300-E3BG, V3600-T-E3BG]

Factory spec.	Second ring	0.0930 to 0.120 mm 0.00367 to 0.00472 in.
	Oil ring	0.020 to 0.060 mm 0.00079 to 0.0023 in.
Allowable limit	Second ring	0.20 mm 0.0079 in.
	Oil ring	0.15 mm 0.0059 in.

Factory specification : **a**	More than 0.2 mm 0.008 in.

[V3800DI-T-E3B, V3800DI-T-E3CB, V3800DI-T-E3BG]

Factory spec.	Top ring	0.05 to 0.09 mm 0.002 to 0.003 in.
	Second ring	0.0930 to 0.120 mm 0.00367 to 0.00472 in.
	Oil ring	0.020 to 0.060 mm 0.00079 to 0.0023 in.
Allowable limit	Top ring	0.15 mm 0.0059 in.
	Second ring	0.20 mm 0.0079 in.
	Oil ring	0.15 mm 0.0059 in.

[A] V3600-E3B, V3600-T-E3B, V3600-E3CB, V3600-T-E3CB, V3300-E3BG, V3600-T-E3BG

[B] V3800DI-T-E3B, V3800DI-T-E3CB, V3800DI-T-E3BG

W1066183

(4) Crankshaft

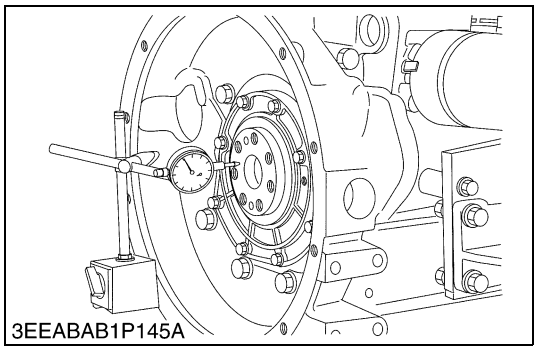
3EEABAB1P145A

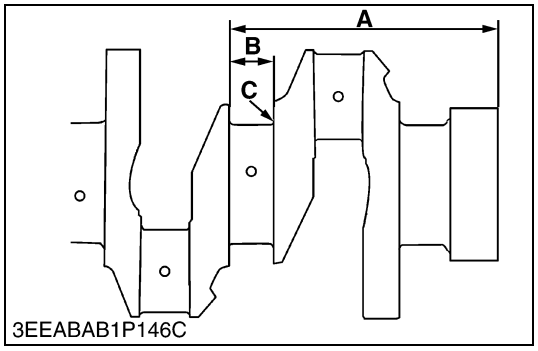

3EEABAB1P146C

Crankshaft Side Clearance

1. Set a dial indicator with its tip on the end of the crankshaft.
2. Measure the side clearance by moving the crankshaft to the front and rear.
3. If the measurement exceeds the allowable limit, replace the thrust bearings.
4. If the same size bearing is useless because of the crankshaft journal wear, replace it with an oversize one referring to the table and figure.

Crankshaft side clearance	Factory spec.	0.15 to 0.31 mm 0.0059 to 0.012 in.
	Allowable limit	0.50 mm 0.020 in.

(Reference)

- Oversize dimensions of crankshaft journal.

Oversize	0.2 mm 0.008 in.	0.4 mm 0.016 in.
Dimension **A**	169.10 to 169.15 mm 6.6575 to 6.6594 in.	169.2 to 169.25 mm 6.6615 to 6.6633 in.
Dimension **B**	29.20 to 29.25 mm 1.150 to 1.151 in.	29.40 to 29.45 mm 1.158 to 1.159 in.
Dimension **C**	2.8 to 3.2 mm radius 0.11 to 0.12 in. radius	2.8 to 3.2 mm radius 0.11 to 0.12 in. radius
The crankshaft journal must be fine-finished to higher than ∇∇∇∇. (0.8S)		

W1066738

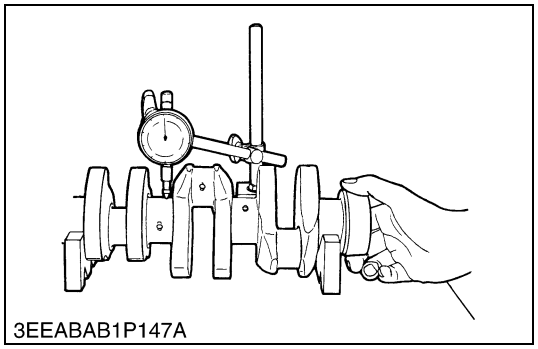
3EEABAB1P147A

Crankshaft Alignment

1. Support the crankshaft with V block on the surface plate.
2. Set a dial indicator with its tip on the intermediate journal at high angle.
3. Rotate the crankshaft on the V block to get the misalignment (half of the measurement).
4. If the misalignment exceeds the allowable limit, replace the crankshaft.

Crankshaft alignment	Allowable limit	0.02 mm 0.0008 in.

W1067285

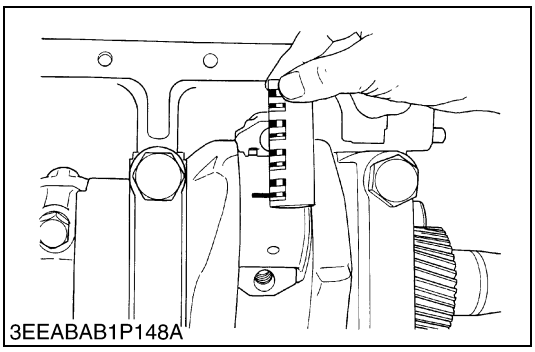
3EEABAB1P148A

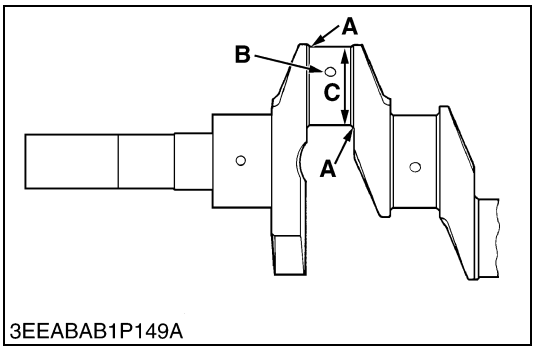

3EEABAB1P149A

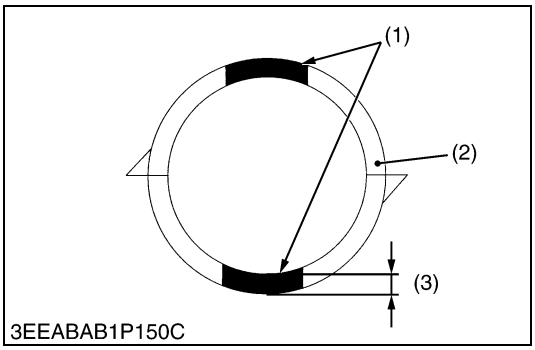

3EEABAB1P150C

Oil Clearance between Crankpin and Crankpin Bearing

1. Clean the crankpin and crankpin bearing.
2. Put a strip of plastigage on the center of the crankpin.
3. Install the connecting rod cap.
4. Tighten the connecting rod screws to the specified torque.
5. Remove the cap again.
6. Measure the amount of the flattening with the scale to get the oil clearance.
7. If the oil clearance exceeds the allowable limit, replace the crankpin bearing.
8. If the same size bearing is useless because of the crankpin wear, replace it with an undersize one referring to the table and figure.

■ **NOTE**

- **Never insert the plastigage into the crankpin oil hole.**
- **Be sure not to move the crankshaft while the connecting rod screws are tightened.**

Crankpin O.D.	Factory spec.	52.977 to 52.990 mm 2.0857 to 2.0862 in.

Oil clearance between crankpin and crankpin bearing	Factory spec.	0.018 to 0.051 mm 0.00071 to 0.0020 in.
	Allowable limit	0.20 mm 0.0079 in.

■ **IMPORTANT**

- **STD size crankpin bearing.**
  To replace it with a specific STD service part, make sure the crankpin bearing has the same ID color as the connecting rod.

ID Color	Connecting rod	Crankpin bearing		
	Large-end in. dia.	Class	Part code	Center wall thick
Blue	56.010 to 56.020 mm 2.2052 to 2.2055 in.	L	1C020-22311	1.496 to 1.501 mm 0.05890 to 0.05909 in.
Without color	56.00 to 56.01 mm 2.2048 to 2.2051 in.	S	1C020-22331	1.491 to 1.496 mm 0.05870 to 0.05889 in.

(Reference)

- Undersize dimensions of crankpin

Undersize	0.2 mm 0.008 in.	0.4 mm 0.016 in.
Dimension **A**	2.8 to 3.2 mm radius 0.11 to 0.12 in. radius	2.8 to 3.2 mm radius 0.11 to 0.12 in. radius
*Dimension **B**	1.0 to 1.5 mm relief 0.040 to 0.059 in. relief	1.0 to 1.5 mm relief 0.040 to 0.059 in. relief
Dimension **C**	52.777 to 52.790 mm dia. 2.0779 to 2.0783 in. dia.	52.577 to 52.590 mm dia. 2.0700 to 2.0704 in. dia.
The crankpin must be fine-finished to higher than ∇∇∇∇ (0.8S). *Holes to be de-burred and edges rounded with 1.0 to 1.5 mm (0.040 to 0.059 in.) relief.		

(1) ID Color
(2) Crankpin Bearing
(3) Center Wall Thick

W1067389

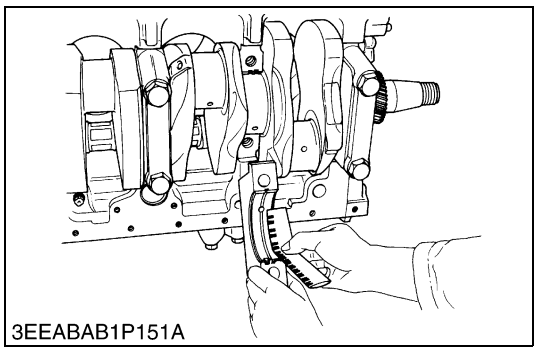
3EEABAB1P151A

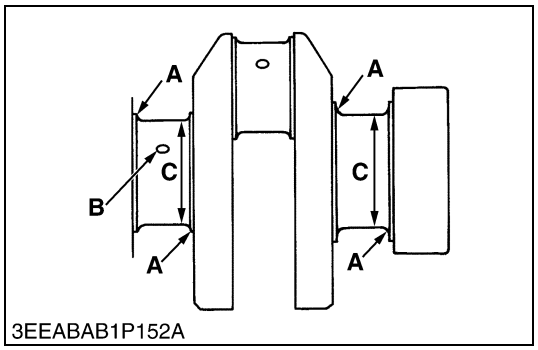

3EEABAB1P152A

Oil Clearance between Crankshaft Journal and Crankshaft Bearing

1. Clean the crankshaft journal and crankshaft bearing.
2. Put a strip of press gauge on the center of the journal.

■ **IMPORTANT**

- **Never insert the press gauge into the oil hole of the journal.**

3. Install the main bearing case.
4. Tighten the screws to the specified torque.
5. Remove the cases again.
6. Measure the amount of the flattening with the scale to get the oil clearance.
7. If the clearance exceeds the allowable limit, replace the crankshaft bearing.
8. If the same size bearing is useless because of the crankshaft journal wear, replace it with an undersize one referring to the table and figure.

Crankshaft journal O.D.	Factory spec.	74.977 to 74.990 mm 2.9519 to 2.9523 in.

Oil clearance between crankshaft journal and crankshaft bearing	Factory spec.	0.018 to 0.062 mm 0.00071 to 0.0024 in.
	Allowable limit	0.20 mm 0.0079 in.

(Reference)

- Undersize dimensions of crankshaft journal.

Undersize	0.2 mm 0.008 in.	0.4 mm 0.016 in.
Dimension **A**	2.8 to 3.2 mm radius 0.11 to 0.12 in. radius	2.8 to 3.2 mm radius 0.11 to 0.12 in. radius
*Dimension **B**	1.0 to 1.5 mm relief 0.040 to 0.059 in. relief	1.0 to 1.5 mm relief 0.040 to 0.059 in. relief
Dimension **C**	74.777 to 74.790 mm dia. 2.9440 to 2.9444 in. dia.	74.577 to 74.590 mm dia. 2.9361 to 2.9366 in. dia.
(0.8S) The crankshaft journal must be fine-finished to higher than ∇∇∇∇. *Holes to be de-burred and edges rounded with 1.0 to 1.5 mm (0.040 to 0.059 in.) relief.		

W1069159

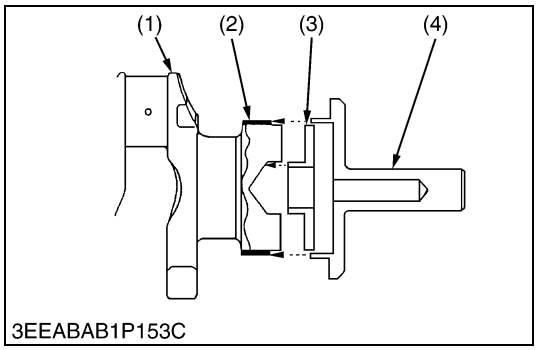

3EEABAB1P153C

Replacing Crankshaft Sleeve

1. Remove the used crankshaft sleeve (2).
2. Set the sleeve guide (3) to the crankshaft (1).
3. Heat a new sleeve to a temperature between 150 to 200 °C (302 to 392 °F).
4. Fix the sleeve to the crankshaft as shown in figure.
5. Press fit the sleeve using the auxiliary socket for pushing (4).

■ **NOTE**

- **Mount the sleeve with its largely chamfered surface facing outward.**

(1) Crankshaft
(2) Crankshaft Sleeve
(3) Sleeve Guide
(4) Auxiliary Socket for Pushing

W1069911

(5) Cylinder

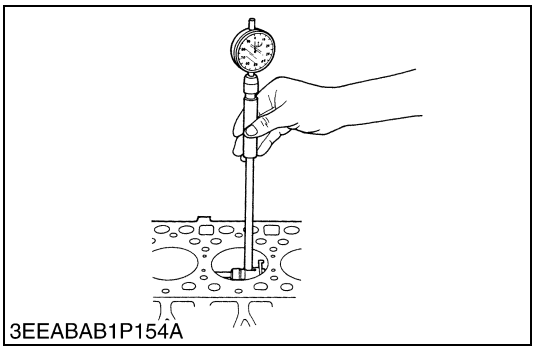
3EEABAB1P154A

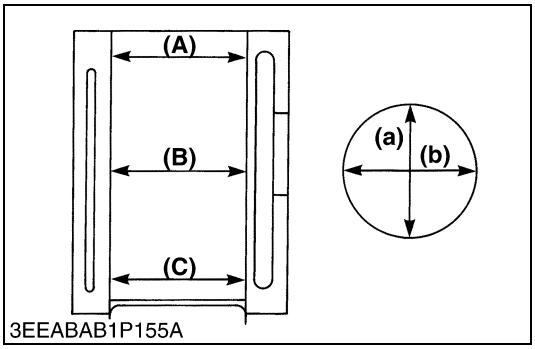

3EEABAB1P155A

Cylinder Wear

1. Measure the I.D. of the cylinder at the six positions (see figure) with a cylinder gauge to find the maximum and minimum I.D.'s.
2. Get the difference (Maximum wear) between the maximum and the minimum I.D.'s.
3. If the wear exceeds the allowable limit, bore and hone to the oversize dimension. (Refer to **"Correcting Cylinder"**.)
4. Visually check the cylinder wall for scratches. If deep scratches are found, the cylinder should be bored. (Refer to **"Correcting Cylinder"**.)

[V3600-E3B, V3600-T-E3B, V3600-E3CB, V3600-T-E3CB, V3300-E3BG, V3600-T-E3BG]

Cylinder Bore I.D.	Factory spec.	98.000 to 98.022 mm 3.8583 to 3.8591 in.
	Allowable limit	98.150 mm 3.8642 in.

[V3800DI-T-E3B, V3800DI-T-E3CB, V3800DI-T-E3BG]

Cylinder Bore I.D.	Factory spec.	100.000 to 100.022 mm 3.93701 to 3.93787 in.
	Allowable limit	100.150 mm 3.9429 in.

(A) Top
(B) Middle
(C) Bottom (Skirt)
(a) Right-angled to piston pin
(b) Piston pin direction

W1070089

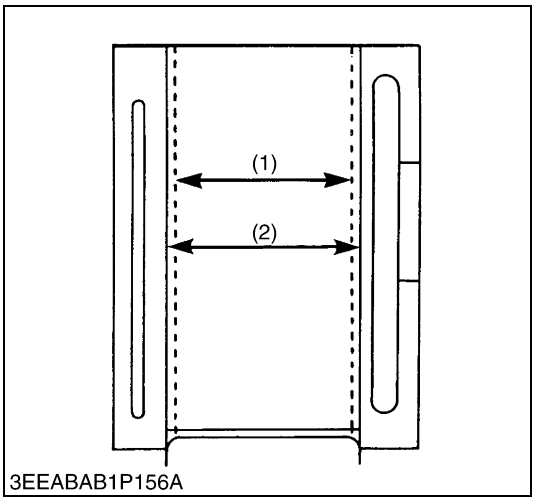

3EEABAB1P156A

Correcting Cylinder (Oversize)

1. If the cylinder is worn beyond the allowable limit, bore and hone it to the specified dimension.

[V3600-E3B, V3600-T-E3B, V3600-E3CB, V3600-T-E3CB, V3300-E3BG, V3600-T-E3BG]

Cylinder I.D. (2)	Factory spec.	98.500 to 98.522 mm 3.8780 to 3.8788 in.
Maximum wear	Allowable limit	98.650 mm 3.8839 in.
Finishing	Hone to 0.2 to 0.8 μm Rz (8 to 30 μin. Rz) ∇∇∇.	

[V3800DI-T-E3B, V3800DI-T-E3CB, V3800DI-T-E3BG]

Cylinder I.D. (2)	Factory spec.	100.500 to 100.522 mm 3.95670 to 3.95755 in.
Maximum wear	Allowable limit	100.650 mm 3.96260 in.
Finishing	Hone to 0.2 to 0.8 μm Rz (8 to 30 μin. Rz) ∇∇∇.	

1. Replace the piston and piston rings with oversize 0.5 mm (0.02 in.) ones.

■ **NOTE**

- **When the oversize cylinder is worn beyond the allowable limit, replace the cylinder block with a new one.**

(1) Cylinder I.D. (Before Correction) (2) Oversize Cylinder I.D.

W10344480

(6) Oil Pump

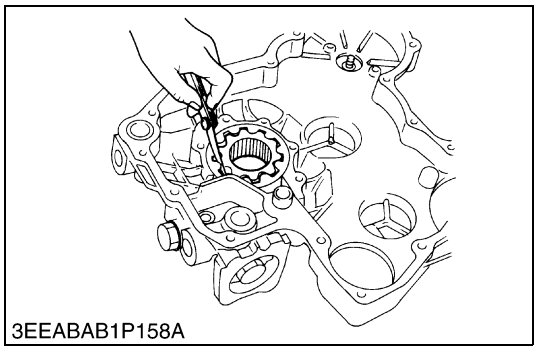
3EEABAB1P158A

Rotor Lobe Clearance

1. Measure the clearance between lobes of the inner rotor and the outer rotor with a feeler gauge.
2. If the clearance exceeds the allowable limit, replace the oil pump rotor assembly.

Clearance between inner rotor and outer rotor	Factory spec.	0.040 to 0.16 mm 0.0016 to 0.0062 in.
	Allowable limit	0.3 mm 0.01 in.

W1071254

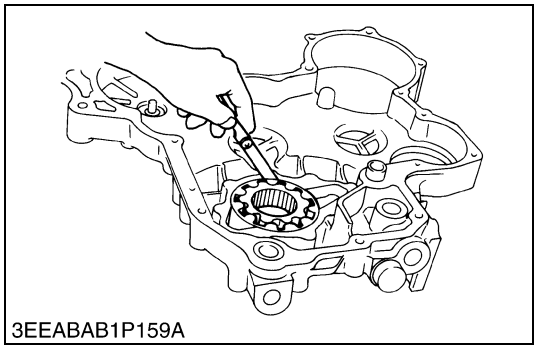
3EEABAB1P159A

Clearance between Outer Rotor and Pump Body

1. Measure the clearance between the outer rotor and the pump body with a feeler gauge.
2. If the clearance exceeds the allowable limit, replace the oil pump rotor assembly.
3. If still the clearance exceeds the allowable limit after replacing the oil pump rotor assembly, replace the gear case.

Clearance between outer rotor and pump body	Factory spec.	0.100 to 0.184 mm 0.00394 to 0.00724 in.
	Allowable limit	0.3 mm 0.01 in.

W1071334

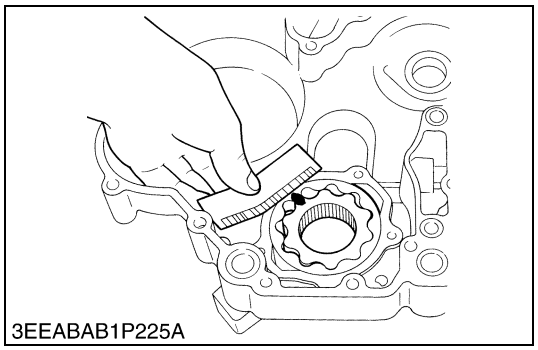
3EEABAB1P225A

Clearance between Rotor and Cover

1. Put a strip of plastigage onto the rotor face with grease.
2. Install the cover and tighten the screws with the specified torque.
3. Remove the cover carefully.
4. Measure the amount of the flattening with the scale and get the clearance.
5. If the clearance exceeds the allowable limit, replace oil pump rotor assembly and the cover.

Clearance between rotor and cover	Factory spec.	0.025 to 0.075 mm 0.00099 to 0.0029 in.
	Allowable limit	0.225 mm 0.00886 in.

Tightening torque	Oil pump cover screw	7.9 to 9.3 N·m 0.80 to 0.95 kgf·m 5.8 to 6.8 lbf·ft

W1148218

(7) Starter

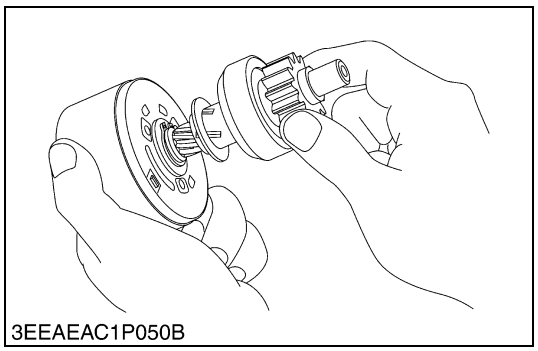
3EEAEAC1P050B

Overrunning Clutch

1. Inspect the pinion for wear or damage.
2. If there is any defect, replace the overrunning clutch assembly.
3. Check that the pinion turns freely and smoothly in the overrunning direction and does not slip in the cranking direction.
4. If the pinion slips or does not rotate in the both directions, replace the overrunning clutch assembly.

W1075769

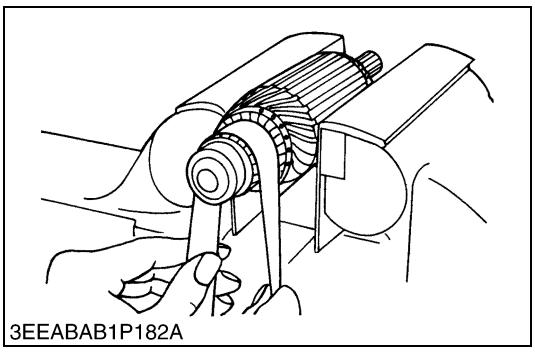
3EEABAB1P182A

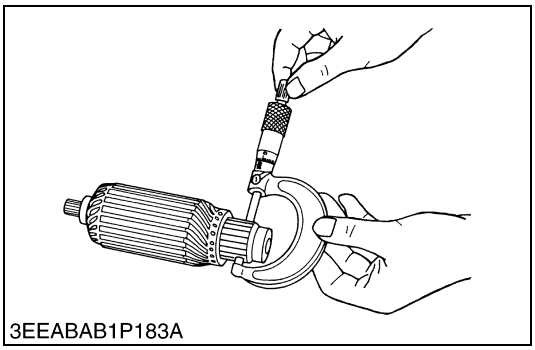
3EEABAB1P183A

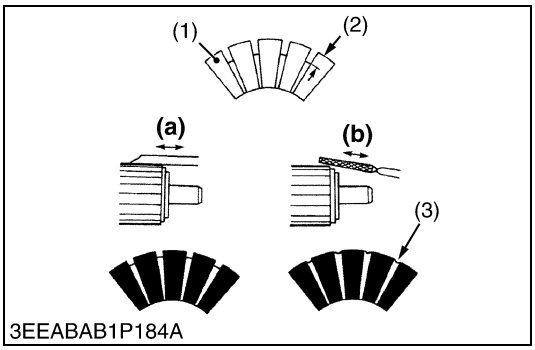

3EEABAB1P184A

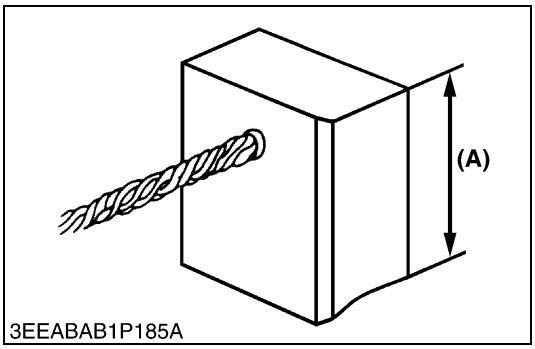

3EEABAB1P185A

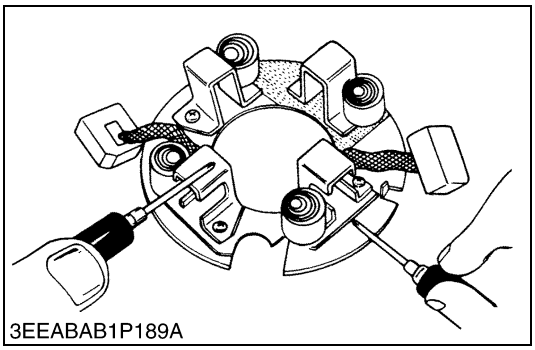
3EEABAB1P189A

Commutator and Mica

1. Check the contact face of the commutator for wear, and grind the commutator with emery paper if it is slightly worn.
2. Measure the commutator O.D. with an outside micrometer at several points.
3. If the minimum O.D. is less than the allowable limit, replace the armature.
4. If the difference of the O.D.'s exceeds the allowable limit, correct the commutator on a lathe to the factory specification.
5. Measure the mica undercut.
6. If the undercut is less than the allowable limit, correct if with a saw blade and chamfer the segment edges.

Commutator O.D.	Factory spec.	32.0 mm 1.26 in.
	Allowable limit	31.4 mm 1.24 in.

Mica under cut	Factory spec.	0.5 mm 0.02 in.
	Allowable limit	0.20 mm 0.008 in.

(1) Segment
(2) Depth of Mica
(3) Mica

(a) Good
(b) Bad

W1075277

Brush Wear

1. If the contact face of the brush is dirty or dusty, clean it with emery paper.
2. Measure the brush length **(A)** with vernier calipers.
3. If the length is less than the allowable limit, replace the yoke assembly and brush holder.

Brush length **(A)**	Factory spec.	18.0 mm 0.709 in.
	Allowable limit	11.0 mm 0.433 in.

(A) Brush Length

W1075476

Brush Holder

1. Check the continuity across the brush holder and the holder support with an ohmmeter.
2. If it conducts, replace the brush holder.

Resistance	Brush holder – Holder support	Infinity

W1076066

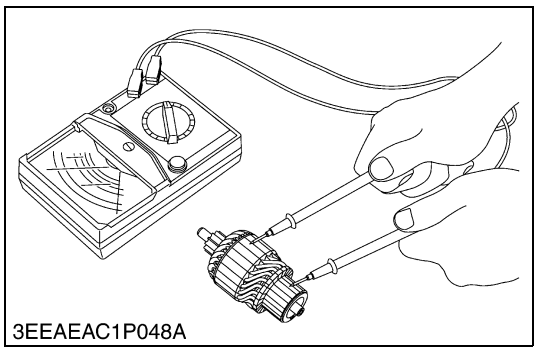
3EEAEAC1P048A

Armature Coil

1. Check the continuity across the commutator and armature coil core with an ohmmeter.
2. If it conducts, replace the armature.
3. Check the continuity across the segments of the commutator with an ohmmeter.
4. If it does not conduct, replace the armature.

Resistance	Commutator – Armature coil core	Infinity
	Commutator segment	0 Ω

W1075693

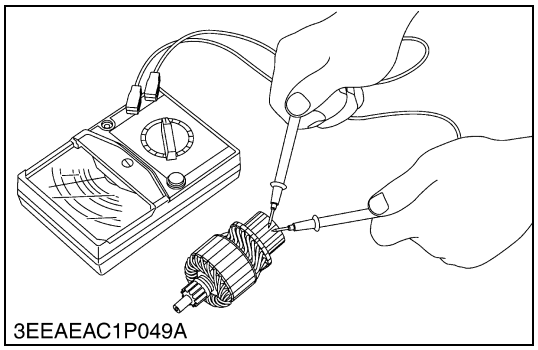
3EEAEAC1P049A

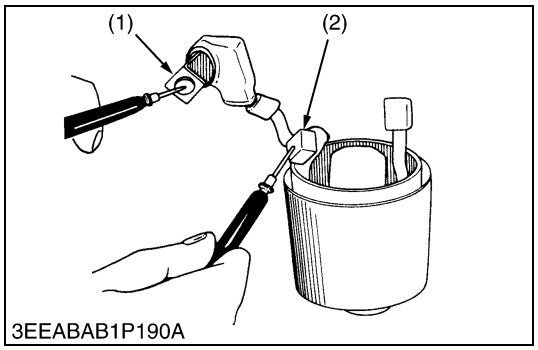

3EEABAB1P190A

Field Coil

1. Check the continuity across the lead (1) and brush (2) with an ohmmeter.
2. If it does not conduct, replace the yoke assembly.
3. Check the continuity across the brush (2) and yoke (3) with an ohmmeter.
4. If it conducts, replace the yoke assembly.

Resistance	Lead (1) – Brush (2)	0 Ω
	Brush (2) – Yoke (3)	Infinity

(1) Lead
(2) Brush
(3) Yoke

W1076156

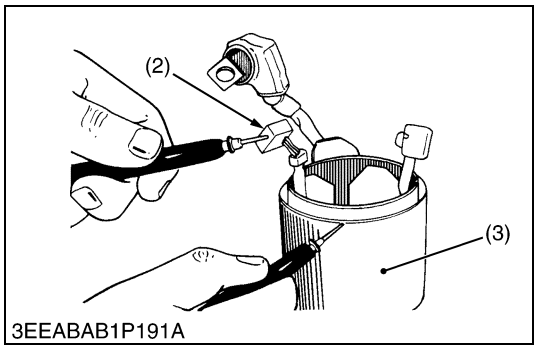

3EEABAB1P191A

(8) Alternator

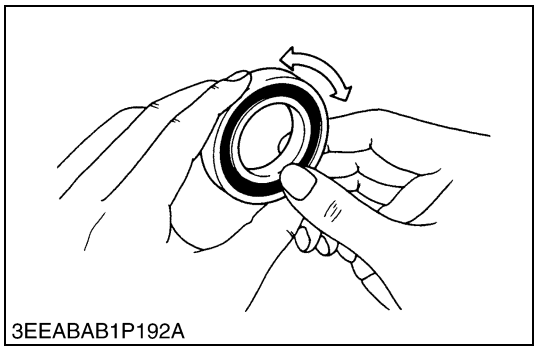
3EEABAB1P192A

Bearing

1. Check the bearing for smooth rotation.
2. If it does not rotate smoothly, replace it.

W1076281

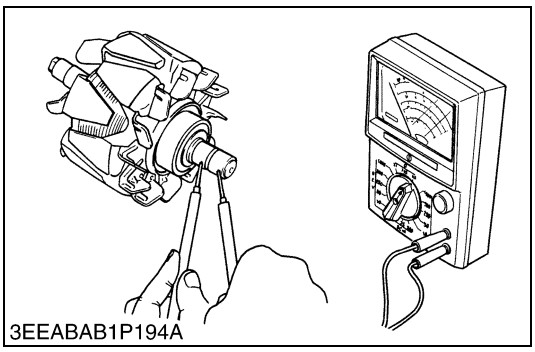
3EEABAB1P194A

Rotor

1. Measure the resistance across the slip rings with an ohmmeter.
2. If the resistance is not the factory specification, replace it.
3. Check the continuity across the slip and core with an ohmmeter.
4. If infinity is not indicated, replace it.

Resistance	Factory spec.	2.8 to 3.3 Ω

W1076422

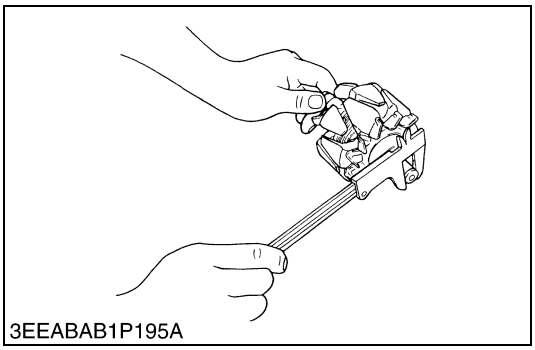
3EEABAB1P195A

Slip Ring

1. Check the slip ring for score.
2. If scored, correct with an sand paper or on a lathe.
3. Measure the O.D. of slip ring with vernier calipers.
4. If the measurement is less than the allowable limit, replace it.

Slip ring O.D.	Factory spec.	22.7 mm 0.894 in.
	Allowable limit	22.1 mm 0.870 in.

W1076592

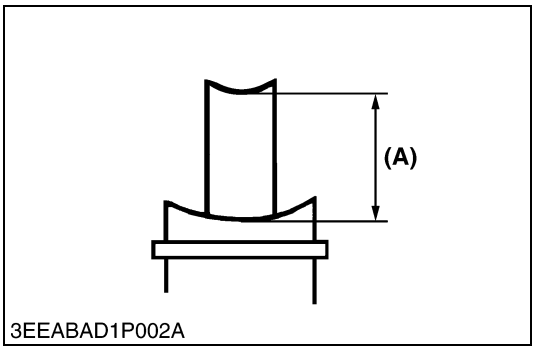

3EEABAD1P002A

Brush Wear

1. Measure the brush length **(A)** with vernier calipers.
2. If the measurement is less than allowable limit, replace it.
3. Make sure that the brush moves smoothly.
4. If the brush is defective, replace it.

Brush length **(A)**	Factory spec.	18.5 mm 0.728 in.
	Allowable limit	5.0 mm 0.20 in.

(A) Brush Length

W1076714