https://truckmanualshub.com/

17SR

Concrete solutions. Always.

Engine 3TNV70

Engine power 12,0 kW - 15,4 HP

Transport weight 1.660 - 1.770 kg

EUROCOMACH®

https://truckmanualshub.com/

17SR

Transport weight with canopy (without bucket and operator)	kg	1.660
Transport weight with cabin (without bucket and operator)	kg	1.770
Operating weight ISO 6016 with canopy (with bucket 35 kg and operator 75 kg)	kg	1.770
Operating weight ISO 6016 with cabin (with bucket 35 kg and operator 75 kg)	kg	1.880
Travelling speed (AUTO TWO SPEED)	km/h	1a : 0 ÷ 2,2 / 2a : 0 ÷ 4,1
Slew speed	rpm	10,5
ENGINE		
Type	YANMAR 3TNV70 - STAGE 5	
Max. Power (2.200 rpm)	kW - HP	12,0 - 15,4
Displacement	cc	854
Number of cylinders	n°	3
Cooling	Liquid	
Consumption	lt/h	2,4
Alternator	V (A)	12 (40)
Battery	V (Ah)	12 (65)
HYDRAULIC SYSTEM		
Pump type	variable flow	
Pump displacement	cc	8 + 8 + 6,6
Pump capacity	lt/min	16 + 16 + 13,1
Max. circuit calibration pressure	bar	220
Auxiliary system (max pressure): AUX 1 single or double effect	lt/min (bar)	29,1 (205)
PERFORMANCES		
Max. digging depth with	mm	2.220
Max. dumping height with	mm	2.460
Bucket breaking force ISO 6015	daN	1.500
Arm breaking force ISO 6015	daN	950
Traction force	daN	1.700
Specific ground pressure	kg/cm²	0,33
Max. slope	60% - 30°	
DIMENSIONS		
Maximum width	mm	990 - 1.250
Total height	mm	2.370
Rear rotation radius	mm	715
Digging arm length	mm	1.150
Tracks width	mm	230
Rollers number (for each side)	n°	3
FILLINGS		
Fuel tank	lt	25
Hydraulic oil tank	lt	20
Hydraulic circuit capacity	lt	29
Cooling system capacity	lt	4,5
Engine oil	lt	2,4
CONTROLS		
Boom, dipper stick, bucket and turret swing	2 pilot joysticks	
Track movements (included counter rotation)	2 mechanical levers	
Dozer blade	pilot lever	
Auxiliary system AUX 1 (single or double effect)	right pedal	
Boom swing	left pedal	

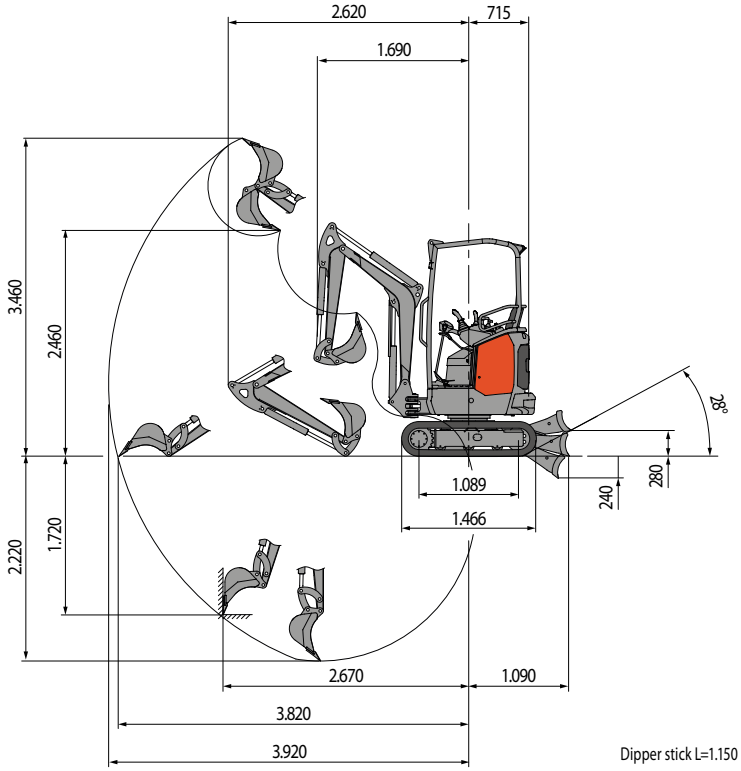

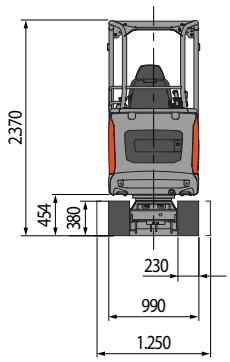

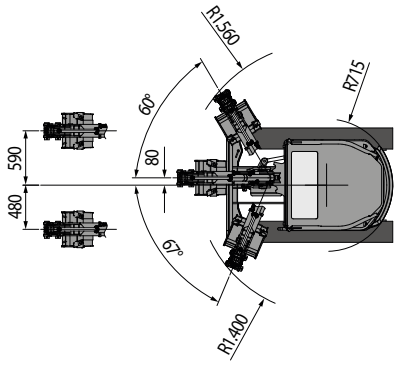

LIFTING CAPACITY
Opening arm from the rotation's center (m)
Lifting capacity (kg) at 1.0 m height

	2	3	MAX
Frontal and lowered dozer blade	*630	*450	*420
Frontal and lifted dozer blade	360	190	160
Lateral, open undercarriage	400	210	180

* Indicates the hydraulic load limit.

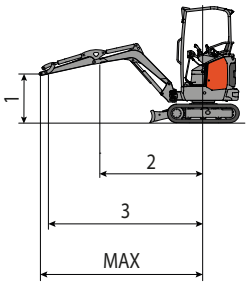

The lifting capacity is based on the ISO 10567 and it does not exceed more than the 75% of static tipping load or more than the 87% of the hydraulic lifting capacity of the machine.

EUROCOMACH®

These pictures may include optional rather than standard settings. Technical features are not binding and may be modified without notice in any moment.