Kubota

U.S.A. : **KUBOTA TRACTOR CORPORATION**
3401 Del Amo Blvd., Torrance, CA 90503, U.S.A.
Telephone : (310)370-3370
Western Division : 1175 S. Guild Avc., Lodi, CA 95240
Telephone : (209)334-9910
Central Division : 14855 FAA Blvd., Fort Worth, TX 76155
Telephone : (817)571-0900
Northern Division : 6300 at One Kubota Way, Groveport, OH 43125
Telephone : (614)835-1100
Southeast Division : 1025 Northbrook Parkway, Suwanee, GA 30024
Telephone : (770)995-8855

Canada : **KUBOTA CANADA LTD.**
5900 14th Avenue, Markham, Ontario, L3S 4K4, Canada
Telephone : (905)294-7477

France : **KUBOTA EUROPE S.A.S**
19-25, Rue Jules Vercruysse, Z.I. BP88, 95101 Argenteuil Cedex, France
Telephone : (33)1-3426-3434

Italy : **KUBOTA EUROPE S.A.S Italy Branch**
Via Grandi, 29 20068 Peschiera Borrome (MI) Italy
Telephone : (39)02-51650377

Germany : **KUBOTA (DEUTSCHLAND) GmbH**
Senefelder Str. 3-5 63110 Rodgau /Nieder-Roden, Germany
Telephone : (49)6106-873-0

U.K. : **KUBOTA (U.K.) LTD.**
Dormer Road, Thame, Oxfordshire, OX9 3UN, U.K.
Telephone : (44)1844-214500

Spain : **KUBOTA ESPAÑA S.A.**
Avenida Recomba No.5, Poligno Industrial la Laguna, Leganes, 28914 (Madrid) Spain
Telephone : (34)91-508-6442

Australia : **KUBOTA TRACTOR AUSTRALIA PTY LTD.**
25-29 Permas Way, Truganina, VIC 3029, Australia
Telephone : (61)-3-9394-4400

Malaysia : **SIME KUBOTA SDN. BHD.**
No.3 Jalan Sepadu 25/123 Taman Perindustrian Axis,
Seksyen 25, 40400 Shah Alam, Selangor Darul Ehsan Malaysia
Telephone : (60)3-736-1388

Philippines : **KUBOTA PHILIPPINES, INC.**
232 Quirino Highway, Baesa, Quezon City 1106, Philippines
Telephone : (63)2-422-3500

Taiwan : **SHIN TAIWAN AGRICULTURAL MACHINERY CO., LTD.**
16, Fengping 2nd Rd, Taliao Shiang Kaohsiung 83107, Taiwan R.O.C.
Telephone : (886)7-702-2333

Indonesia : **PT KUBOTA MACHINERY INDONESIA**
Tower A at EightyEight@Kasablanka Lantai 16
Jalan Raya Casablanka Kav. 88, Jakarta 12870 Indonesia
Telephone : (62)-21-29568-720

Thailand : **SIAM KUBOTA CORPORATION CO., LTD.**
101/19-24 Moo 20, Navanakorn Industrial Estate, Tambon Khlongnueng, Amphur Khlongluang,
Pathumthani 12120, THAILAND
Telephone : (66)2-909-0300

Korea : **KUBOTA KOREA CO., LTD.**
41-27, Jayumuyeok-gil, Baeksan-myeon, Gimje-si, Jeollabuk-do, Korea
Telephone : (82)-63-544-5822

India : **KUBOTA AGRICULTURAL MACHINERY INDIA PVT. LTD.**
No.15, Medavakkam Road, Sholinganallur, Chennai-600119, T.N., India
Telephone : (91)44-6104-1500

Vietnam : **KUBOTA VIETNAM CO., LTD.**
Lot B-3A2-CN, My Phuoc 3 Industrial Park, Ben Cat District, Binh Duong Province, Vietnam
Telephone : (84)-650-3577-507

KUBOTA Corporation

English (U.S.A.)
Code No. 6C540-6311-1

B2301.B2601

OPERATOR'S MANUAL

KUBOTA TRACTOR

MODELS B2301
B2601

1AGAEEIAP0010

READ AND SAVE THIS MANUAL

PRINTED IN JAPAN

© KUBOTA Corporation 2014

Kubota

ABBREVIATION LIST

Abbreviations	Definitions
2WD	2-Wheel Drive
4WD	4-Wheel Drive
API	American Petroleum Institute
ASABE	American Society of Agricultural and Biological Engineers, USA
ASTM	American Society of Testing and Materials, USA
DIN	Deutsches Institut für Normung, GERMANY
DT	Dual Traction [4WD]
fpm	Feet Per Minute
Hi-Lo	High Speed-Low Speed
HST	Hydrostatic Transmission
m/s	Meters Per Second
PTO	Power Take Off
RH/LH	Right-hand and left-hand sides are determined by facing in the direction of forward travel
ROPS	Roll-Over Protective Structures
rpm	Revolutions Per Minute
r/s	Revolutions Per Second
SAE	Society of Automotive Engineers, USA
SMV	Slow Moving Vehicle

California Proposition 65

⚠ WARNING ⚠

Engine exhaust, some of its constituents, certain vehicle components and fluids, contain or emit chemicals known to the State of California to cause cancer and birth defects or other reproductive harm.

IMPORTANT

The engine in this machine is not equipped by the manufacturer with a standard spark arrester.
It is a violation of California Public Resource Code Section 4442 to use or operate this engine on or near any forest-covered, brush-covered land, or grass- covered land unless the exhaust system is equipped with a working spark arrester meeting state laws. Other states or federal areas may have similar laws.

KUBOTA Corporation is ···

Since its inception in 1890, KUBOTA Corporation has grown to rank as one of the major firms in Japan.

To achieve this status, the company has through the years diversified the range of its products and services to a remarkable extent. Nineteen plants and 16,000 employees produce over 1,000 different items, large and small.

All these products and all the services which accompany them, however, are unified by one central commitment. KUBOTA makes products which, taken on a national scale, are basic necessities. Products which are indispensable. Products which are intended to help individuals and nations fulfill the potential inherent in their environment. KUBOTA is the Basic Necessities Giant.

This potential includes water supply, food from the soil and from the sea, industrial development, architecture and construction, and transportation.

Thousands of people depend on KUBOTA's know-how, technology, experience and customer service. You too can depend on KUBOTA.

UNIVERSAL SYMBOLS

As a guide to the operation of your tractor, various universal symbols have been utilized on the instruments and controls. The symbols are shown below with an indication of their meaning.

- Safety Alert Symbol
- Diesel Fuel
- Fuel-Level
- Engine-Rotational Speed
- Hourmeter/Elapsed Operating Hours
- Engine Coolant-Temperature
- Brake System
- Parking Brake
- Battery Charging Condition
- Engine Oil-Pressure
- Turn Signal
- Engine-Stop
- Engine-Run
- Diesel Preheat/Glow Plugs (Low Temperature Start Aid)
- Starter Control
- Power Take-Off Control-Off Position (Disengaged)
- Power Take-Off Control-On Position (Engaged)
- Differential Lock
- Position Control-Raised Position
- Position Control-Lowered Position
- 3-Point Lowering Speed Control
- Speed Set
- Remote Cylinder-Retract
- Remote Cylinder-Extend
- Steering Wheel-Tilt Control
- Lock
- Unlock
- Hazard Warning Lights
- Headlight
- Work Light
- 4-Wheel Drive-On
- 4-Wheel Drive-Off
- Fast
- Slow
- Read Operator's Manual
- Tractor-Forward Movement-Overhead View of Machine
- Tractor-Rearward Movement-Overhead View of Machine
- Engine Speed Control
- Master System Warning

FOREWORD

You are now the proud owner of a KUBOTA Tractor. This tractor is a product of KUBOTA quality engineering and manufacturing. It is made of fine materials and under a rigid quality control system. It will give you long, satisfactory service. To obtain the best use of your tractor, please read this manual carefully. It will help you become familiar with the operation of the tractor and contains many helpful hints about tractor maintenance. It is KUBOTA's policy to utilize as quickly as possible every advance in our research. The immediate use of new techniques in the manufacture of products may cause some small parts of this manual to be outdated. KUBOTA distributors and dealers will have the most up-to-date information. Please do not hesitate to consult with them.

SAFETY FIRST

This symbol, the industry's "Safety Alert Symbol", is used throughout this manual and on labels on the machine itself to warn of the possibility of personal injury. Read these instructions carefully. It is essential that you read the instructions and safety regulations before you attempt to assemble or use this unit.

DANGER : Indicates an imminently hazardous situation which, if not avoided, will result in death or serious injury.

WARNING : Indicates a potentially hazardous situation which, if not avoided, could result in death or serious injury.

CAUTION : Indicates a potentially hazardous situation which, if not avoided, could result in minor or moderate injury.

IMPORTANT : Indicates that equipment or property damage could result if instructions are not followed.

NOTE : Gives helpful information.

CONTENTS

⚠SAFE OPERATION ..... ⚠-1

SERVICING OF TRACTOR 1

SPECIFICATIONS 2
- SPECIFICATION TABLE 2
- TRAVELING SPEEDS 4

IMPLEMENT LIMITATIONS 5

INSTRUMENT PANEL AND CONTROLS 7

PRE-OPERATION CHECK 9
- DAILY CHECK 9

OPERATING THE ENGINE 10
- STARTING THE ENGINE 10
  - Block Heater (Option) 13
- STOPPING THE ENGINE 13
- WARMING UP 14
  - Warm-up Transmission Oil at Low Ambient Temperatures 14
- JUMP STARTING 14

OPERATING THE TRACTOR 16
- OPERATING NEW TRACTOR 16
  - Do not Operate the Tractor at Full Speed for the First 50 Hours 16
  - Changing Lubricating Oil for New Tractors 16
- BOARDING AND LEAVING THE TRACTOR 16
- OPERATING FOLDABLE ROPS 16
  - To Fold the ROPS 16
  - To Raise the ROPS to Upright Position 17
  - Adjustment of Foldable ROPS 18
- STARTING 18
  - Operator's Seat 18
  - Seat Belt 19
  - Tilt Steering Adjustment 19
  - Head Light / Turn Signal / Hazard Light Switch 20
  - Tractor Lights 21
  - Brake Pedals (Right and Left) 21
  - Range Gear Shift Lever (L-M-H) 22
  - Front Wheel Drive Lever 23
  - Hand Throttle Lever 23
  - Parking Brake 23
  - Speed Control Pedal 24
  - Speed Set Device 24
- STOPPING 25
  - Stopping 25
- CHECK DURING DRIVING 25
  - Immediately Stop the Engine if: 25
  - Easy Checker (TM) 25

Fuel Gauge 26
Coolant Temperature Gauge 26
Hourmeter / Tachometer 27
PARKING 27
Parking 27
OPERATING TECHNIQUES 28
Differential Lock 28
Operating the Tractor on a Road 28
Operating on Slopes or Rough Terrain 29
Transport the Tractor Safely 29
Directions for Use of Power Steering 29
Electrical Outlet 29

PTO 30
PTO OPERATION 30
PTO Select Lever 30
PTO Clutch Lever 31
Stationary PTO 31

3-POINT HITCH & DRAWBAR 32
3-POINT HITCH 33
Selecting the holes of lifting rods and lower links 33
Selecting the Top Link Mounting Holes 33
Drawbar 33
Lifting Rod (Right) 33
Top Link 33
Telescopic Stabilizers 34
DRAWBAR 34
Adjusting Drawbar Length 34

HYDRAULIC UNIT 35
3-POINT HITCH CONTROL SYSTEM 35
Position Control 35
3-point Hitch Lowering Speed 35
AUXILIARY HYDRAULICS 36
Hydraulic Block Type Outlet 36
DUAL REMOTE HYDRAULIC CONTROL SYSTEM 36
Control Lever and Hydraulic Hose Connections 36
Loader / Remote Control Valve Lever 37
Valve Lock 37
Hydraulic Control Unit Use Reference Chart 38

TIRES, WHEELS AND BALLAST 39
TIRES 39
Inflation Pressure 39
Dual Tires 39
WHEEL ADJUSTMENT 39
Front Wheels 40
Rear Wheels 40
Treads 41
BALLAST 44
Front Ballast 44
Rear Ballast 44

MAINTENANCE 45
SERVICE INTERVALS 45
LUBRICANTS, FUEL AND COOLANT 47

PERIODIC SERVICE 50
HOW TO OPEN THE HOOD 50
Hood 50
Engine Side Cover 51
DAILY CHECK 51
Walk Around Inspection 51
Checking and Refueling 51
Checking Engine Oil Level 52
Checking Transmission Fluid Level 52
Checking Coolant Level 53
Cleaning Evacuator Valve 53
Cleaning Grill and Radiator Screen 53
Checking Brake Pedal 54
Checking Gauges, Meter and Easy Checker (TM) 54
Checking Head Light, Hazard Light etc. 54
Checking Seat Belt and ROPS 54
Checking and Cleaning of Electrical Wiring and Battery Cables 54
Checking Movable Parts 54
EVERY 50 HOURS 55
Lubricating Grease Fittings 55
Checking Engine Start System 55
Checking Wheel Bolt Torque 56
EVERY 100 HOURS 56
Checking Battery Condition 56
Cleaning Air Cleaner Primary Element 58
Cleaning Fuel Filter 58
Adjusting Fan Belt Tension 59
Adjusting Brake Pedal 60
EVERY 200 HOURS 60
Replacing Engine Oil Filter 60
Changing Engine Oil 61
Replacing Transmission Oil Filter [HST] 61
Adjusting Toe-in 62
EVERY 400 HOURS 62
Changing Transmission Fluid 62
Replacing Hydraulic Oil Filter 63
Adjusting Front Axle Pivot [4WD] 64
Replacing Fuel Filter Element 64
Changing Front Axle Case Oil 65
EVERY 800 HOURS 65
Adjusting Engine Valve Clearance 65
EVERY 1000 HOURS or 1 YEAR 65
Replacing Air Cleaner Primary Element and Secondary Element 65
EVERY 1 500 HOURS 65
Checking Fuel Injection Nozzle Injection Pressure 65
EVERY 2000 HOURS or 2 YEARS 65
Flushing Cooling System and Changing Coolant 65
Anti-Freeze 66

EVERY 3 000 HOURS 67
Checking Injection Pump 67
EVERY 1 YEAR 67
Checking Radiator Hoses and Clamps 67
Checking Intake Air Line 67
Checking Fuel Lines 68
EVERY 2 YEARS 68
Flushing Cooling System and Changing Coolant 68
Anti-Freeze 69
Replacing Radiator Hose (Water pipes) 70
Replacing Fuel Hose 70
Replacing Intake Air Line 70
EVERY 4 YEARS 70
Replacing Radiator Hose (Water pipes) 70
Replacing Fuel Lines 70
Replacing Intake Air Line 70
SERVICE AS REQUIRED 70
Bleeding Fuel System 70
Draining Clutch Housing Water 70
Replacing Fuse 71
Replacing Light Bulb 71
Replacing Radiator Hose (Water pipes) 71
Replacing Fuel Lines 71
Replacing Intake Air Line 71

STORAGE 72
TRACTOR STORAGE 72
REMOVING THE TRACTOR FROM STORAGE 72

TROUBLESHOOTING 73
ENGINE TROUBLESHOOTING 73

OPTIONS 74

APPENDICES 75
INDEX 75

SAFE OPERATION

Careful operation is your best insurance against an accident.

Read and understand this manual carefully before operating the tractor.

All operators, no matter how much experience they may have, should read this and other related manuals before operating the tractor or any implement attached to it. It is the owner's obligation to instruct all operators in safe operation.

1. BEFORE OPERATING THE TRACTOR

1. Know your equipment and its limitations. Read this entire manual before attempting to start and operate the tractor.
2. Pay special attention to the danger, warning and caution labels on the tractor.
3. Do not operate the tractor or any implement attached to it while under the influence of alcohol, medication, controlled substances or while fatigued.
4. Before allowing other people to use your tractor, explain how to operate and have them read this manual before operation.
5. Never wear loose, torn, or bulky clothing around tractor. It may catch on moving parts or controls, leading to the risk of an accident. Use additional safety items, e.g. hard hat, safety boots or shoes, eye and hearing protection, gloves, etc., as appropriate or required.
6. Do not allow passengers to ride on any part of the tractor at anytime. The operator must remain in the tractor seat during operation.
7. Check brakes, clutch, linkage pins and other mechanical parts for improper adjustment and wear. Replace worn or damaged parts promptly. Check the tightness of all nuts and bolts regularly. (For further details, see "MAINTENANCE" section.)
8. Keep your tractor clean. Dirt, grease, and trash build up may contribute to fires and lead to personal injury.
9. Use only implements meeting the specifications listed under "IMPLEMENT LIMITATIONS" in this manual or implements approved by KUBOTA.
10. Use proper weights on the front or rear of the tractor to reduce the risk of upsets. When using the front loader, put an implement or ballast on the 3-point hitch to improve stability. Follow the safe operating procedures specified in the implement or attachment manual.
11. The narrower the tread, the greater the risk of a tractor upset. For maximum stability, adjust the wheels to the widest practical tread width for your application. (See "TIRES, WHEELS AND BALLAST" section.)

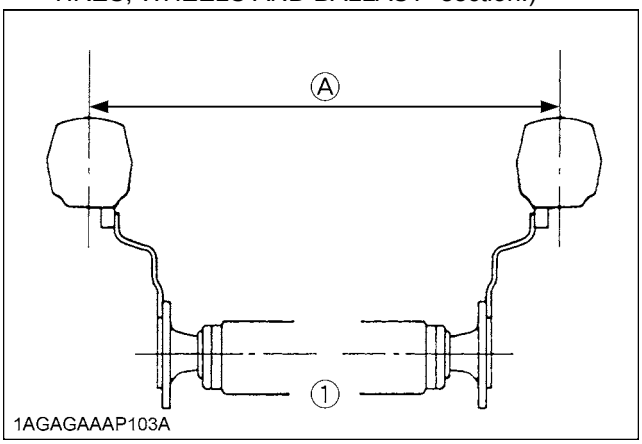

(1) Rear wheels *(A) Tread Width*

12. Do not modify the tractor. Unauthorized modification may affect the function of the tractor, which may result in personal injury.

◆ **CAB, ROPS**

1. KUBOTA recommends the use of a CAB or Roll Over Protective Structures (ROPS) and seat belt in almost all applications. This combination will reduce the risk of serious injury or death, should the tractor be upset. Check for overhead clearance which may interfere with a CAB or ROPS.
2. Set parking brake and stop engine. Remove any obstruction that may prevent raising or folding of the ROPS. Do not allow any bystanders. Always perform function from a stable position at the rear of the tractor. Hold the top of the ROPS securely when raising or folding. Make sure all pins are installed and locked.
3. If the CAB or ROPS is loosened or removed for any reason, make sure that all parts are reinstalled correctly before operating the tractor.
4. Never modify or repair any structural member of a CAB or ROPS because welding, bending, drilling, grinding, or cutting may weaken the structure.
5. If any structural member of the CAB or ROPS is damaged, replace the entire structure at your local KUBOTA Dealer.
6. If the tractor is equipped with a foldable ROPS it may be temporarily folded down only when absolutely necessary for areas with height constraints.
   (There is no operator protection provided by the ROPS in the folded position. For operator safety the ROPS should be placed in the upright and locked position and the seat belt fastened for all other operations.)

7. Always use the seat belt if the tractor has a CAB or ROPS.
   Do not use the seat belt if a foldable ROPS is down or there is no ROPS. Check the seat belt regularly and replace if frayed or damaged.

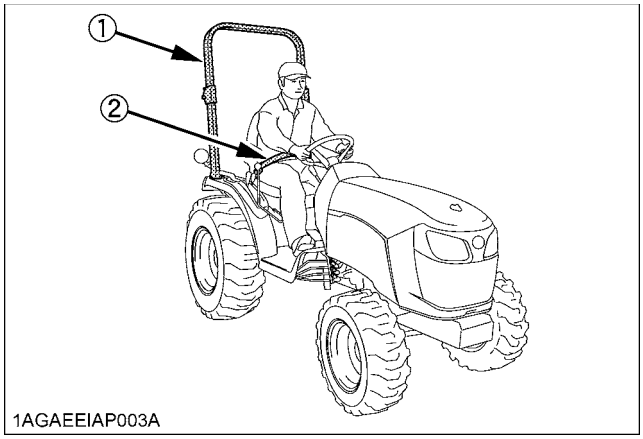

(1) ROPS
(2) Seat belt

2. OPERATING THE TRACTOR

Operator safety is a priority. Safe operation, specifically with respect to overturning hazards, entails understanding the equipment and environmental conditions at the time of use. Some prohibited uses which can affect overturning hazards include traveling and turning with implements and loads carried too high etc. This manual sets forth some of the obvious risks, but the list is not, and cannot be, exhaustive. It is the operator's responsibility to be alert for any equipment or environmental condition that could compromise safe operation.

◆ Starting

1. Always sit in the operator's seat when starting engine or operating levers or controls. Adjust seat per instructions in the operating the tractor section. Never start engine while standing on the ground.
2. Before starting the engine, make sure that all levers (including auxiliary control levers) are in their neutral positions, that the parking brake is engaged, and that both the clutch and the Power Take-Off (PTO) are disengaged or "OFF".
   Fasten the seat belt if the tractor has a CAB or a foldable ROPS in the upright and locked position.
3. Do not start engine by shorting across starter terminals or bypassing the safety start switch. Machine may start in gear and move if normal starting circuitry is bypassed.
4. Do not operate or idle engine in a non-ventilated area. Carbon monoxide gas is colorless, odorless, and deadly.
5. Check before each use that operator presence controls are functioning correctly. Test safety systems. (See "Checking Engine Start System" in "EVERY 50 HOURS" in "PERIODIC SERVICE" section.)
   Do not operate unless they are functioning correctly.

◆ Working

1. Pull only from the drawbar. Never hitch to axle housing or any other point except drawbar; such arrangements will increase the risk of serious personal injury or death due to a tractor upset.

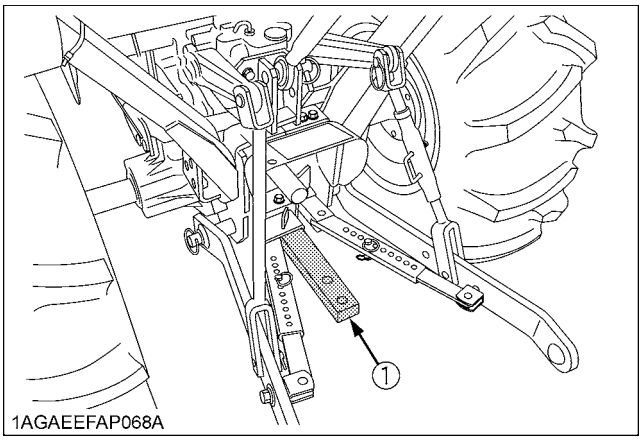

(1) Drawbar

2. For trailing PTO-driven implements, set the drawbar to the towing position.
3. Attach pulled or towed loads to the drawbar only.
4. Keep all shields and guards in place. Replace any that are missing or damaged.
5. Avoid sudden starts. To avoid upsets, slow down when turning, on uneven ground, and before stopping.
6. The tractor cannot turn with the differential locked and attempting to do so could be dangerous.
7. Do not operate near ditches, holes, embankments, or other ground surface features which may collapse under the tractor's weight. The risk of tractor upset is even higher when the ground is loose or wet. Tall grass can hide obstacles, walk the area first to be sure.
8. Watch where you are going at all times. Watch for and avoid obstacles. Be alert at row ends, near trees, and other obstructions.
9. When working in groups, always let the others know what you are going to do before you do it.
10. Never try to get on or off a moving tractor.
11. Always sit in the operator's seat when operating levers or controls.
12. Do not stand between tractor and implement or trailed vehicle unless parking brake is applied.

◆ Safety for children

Tragedy can occur if the operator is not alert to the presence of children. Children generally are attracted to machines and the work they do.

1. Never assume that children will remain where you last saw them.

2. Keep children out of the work area and under the watchful eye of another responsible adult.
3. Be alert and shut your machine down if children enter the work area.
4. Never carry children on your machine. There is no safe place for them to ride. They may fall off and be run over or interfere with your control of the machine.
5. Never allow children to operate the machine even under adult supervision.
6. Never allow children to play on the machine or on the implement.
7. Use extra caution when backing up. Look behind and down to make sure area is clear before moving.

◆ **Operating on slopes**

Slopes are a major factor related to loss-of-control and tip-over accidents, which can result in severe injury or death. All slopes require extra caution.

1. To avoid upsets, always back up steep slopes. If you cannot back up the slope or if you feel uneasy on it, do not operate on it. Stay off slopes too steep for safe operation.
2. Driving forward out of a ditch, mired condition or up a steep slope increases the risk of a tractor to be upset backward. Always back out of these situations. Extra caution is required with 4-wheel drive models because their increased traction can give the operator false confidence in the tractor's ability to climb slopes.
3. Keep all movement on slopes slow and gradual. Do not make sudden changes in speed, direction or apply brake and make sudden motions of the steering wheel.
4. Avoid disengaging the clutch or changing gears speed when climbing or going down a slope. If on a slope disengaging the clutch or changing gears to neutral could cause loss of control.
5. Special attention should be made to the weight and location of implements and loads as such will affect the stability of the tractor.
6. To improve stability on slope, set widest wheel tread as shown in "TIRES, WHEELS AND BALLAST" section.
   Follow recommendations for proper ballasting.

◆ **Driving the tractor on the road**

1. Lock the 2 brake pedals together to help assure straight-line stops. Uneven braking at road speeds could cause the tractor to tip over.

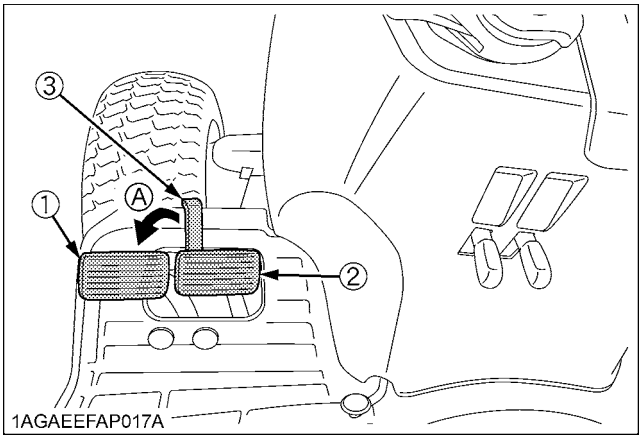

(1) Brake Pedal (LH)
(2) Brake Pedal (RH)
(3) Brake Pedal Lock
(A) Whenever travelling on the road

2. Check the front wheel engagement. The braking characteristics are different between 2 and 4-wheel drive. Be aware of the difference and use carefully.
3. Always slow the tractor down before turning. Turning at high speed may tip the tractor over.
4. Make sure that the Slow Moving Vehicle (SMV) sign is clean and visible. Use hazard lights and turn signals as required.

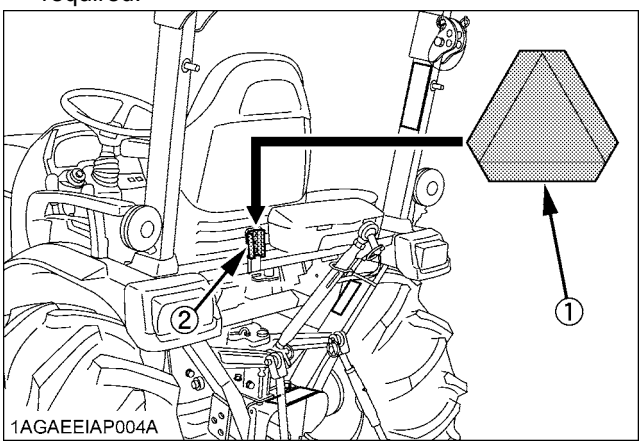

(1) SMV emblem
(2) Bracket

5. Observe all local traffic and safety regulations.
6. Turn the headlights on. Dim them when meeting another vehicle.
7. Drive at speeds that allow you to maintain control at all times.
8. Do not apply the differential lock while traveling at road speeds. The tractor may run out of control.
9. Avoid sudden motions of the steering wheel as they can lead to a dangerous loss of stability. The risk is especially great when the tractor is traveling at road speeds.

10. Keep the ROPS in the "UP" position and wear the seat belt when driving the tractor on the road.
    Otherwise, you will not be protected in the event of a tractor roll-over.
11. Do not operate an implement while the tractor is on the road. Lock the 3-point hitch in the raised position.
12. When towing other equipment, use a safety chain and place an SMV emblem on it as well.

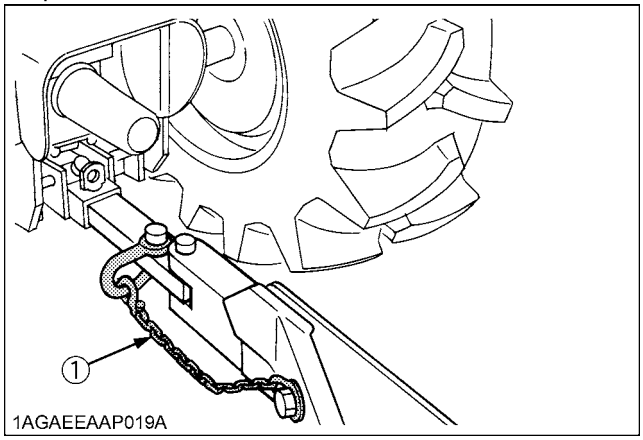

(1) Safety chain

13. Set the implement lowering speed knob in the "LOCK" position to hold the implement in the raised position.

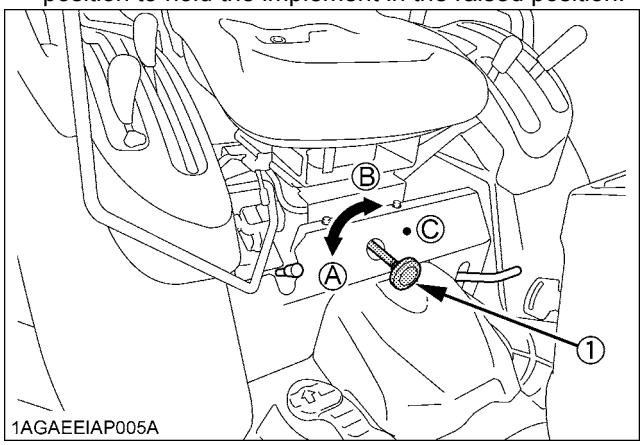

(1) 3-point hitch lowering speed knob
(A) "FAST"
(B) "SLOW"
(C) "LOCK"

3. PARKING THE TRACTOR

1. Disengage the PTO, lower all implements to the ground, place all control levers in their neutral positions, set the parking brake, stop the engine, remove the key from the ignition and lock the cab door (if equipped). Leaving transmission in gear with the engine stopped will not prevent tractor from rolling.
2. Make sure that the tractor has come to a complete stop before dismounting.
3. Avoid parking on steep slopes, if at all possible park on a firm and level surface; if not, park across a slope and chock the wheels.
   Failure to comply with this warning may allow the tractor to move and could cause injury or death.

4. OPERATING THE PTO

1. Wait until all moving components have completely stopped before getting off the tractor, connecting, disconnecting, adjusting, cleaning, or servicing any PTO driven equipment.
2. Keep the PTO shaft cover in place at all times. Replace the PTO shaft cap when the shaft is not in use.

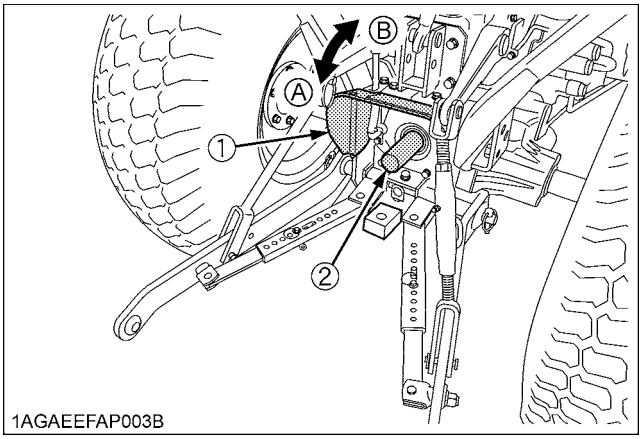

(1) PTO Shaft cover
(2) PTO Shaft cap
(A) "NORMAL POSITION"
(B) "RAISED POSITION"

3. Before installing or using PTO driven equipment, read the manufacturer's manual and review the safety labels attached to the equipment.
4. When operating stationary PTO driven equipment, always apply the tractor parking brake and place chocks behind and in front of the rear wheels. Stay clear of all rotating parts. Never step over rotating parts.

5. USING 3-POINT HITCH

1. Use the 3-point hitch only with equipment designed for 3-point hitch usage.
2. When using a 3-point hitch mounted implement, be sure to install the proper counterbalance weight on the front of the tractor.
3. When transporting on the road, set the implement lowering speed knob in the "LOCK" position to hold the implement in the raised position.

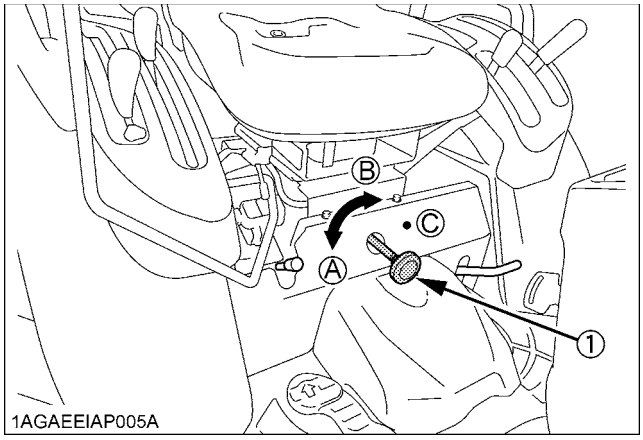

(1) 3-point hitch lowering speed knob

(A) "FAST"
(B) "SLOW"
(C) "LOCK"

6. SERVICING THE TRACTOR

Before servicing the tractor, park it on a firm, flat and level surface, set the parking brake, lower all implements to the ground, place the gear shift lever in neutral, stop the engine and remove the key.

1. Allow the tractor time to cool off before working on or near the engine, muffler, radiator, etc.
2. Do not remove radiator cap while coolant is hot. When cool, slowly rotate cap to the first stop and allow sufficient time for excess pressure to escape before removing the cap completely. If the tractor has a coolant recovery tank, add coolant or water to the tank, not the radiator. (See "Checking Coolant Level" in "DAILY CHECK" in "PERIODIC SERVICE" section.)
3. Always stop the engine before refueling. Avoid spills and overfilling.
4. Do not smoke when working around battery or when refueling. Keep all sparks and flames away from battery and fuel tank. The battery presents an explosive hazard, because it gives off hydrogen and oxygen especially when recharging.
5. Before "jump starting" a dead battery, read and follow all of the instructions. (See "JUMP STARTING" in "OPERATING THE ENGINE" section.)
6. Keep first aid kit and fire extinguisher handy at all times.
7. Disconnect the battery's ground cable before working on or near electric components.
8. To avoid the possibility of battery explosion, do not use or charge the refillable type battery if the fluid level is below the LOWER (lower limit level) mark. Check the fluid level regularly and add distilled water as required so that the fluid level is between the UPPER and LOWER levels.
9. To avoid sparks from an accidental short circuit, always disconnect the battery's ground cable (-) first and reconnect it last.

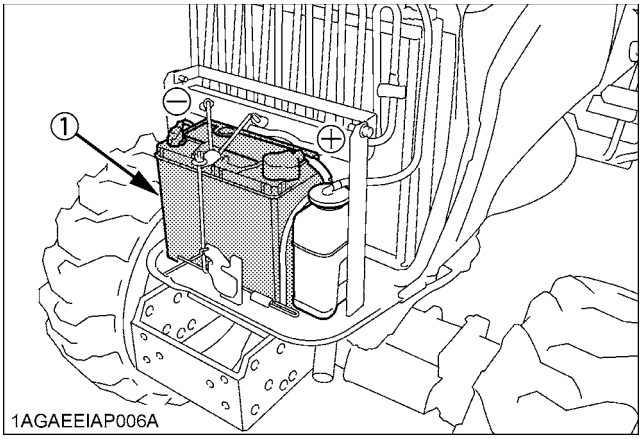

(1) Battery

10. Do not attempt to mount a tire on a rim. This should be done by a qualified person with the proper equipment.
11. Always maintain the correct tire pressure. Do not inflate tires above the recommended pressure shown in the operator's manual.

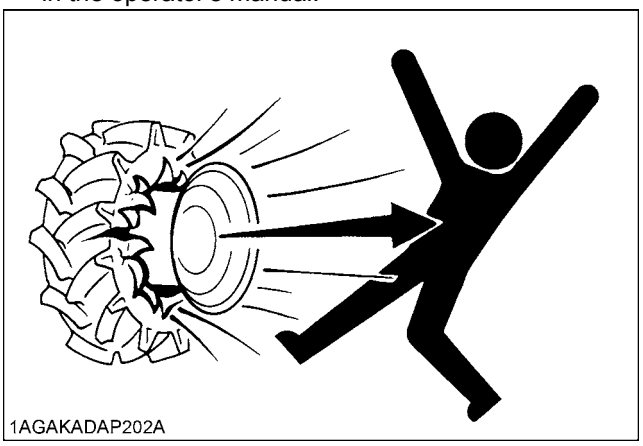

12. Securely support the tractor when either changing wheels or adjusting the wheel tread width.
13. Make sure that wheel bolts have been tightened to the specified torque.
14. Do not work under any hydraulically supported devices. They can settle, suddenly leak down, or be accidentally lowered. If it is necessary to work under tractor or any machine elements for servicing or adjustment, securely support them with stands or suitable blocking beforehand.

15. Escaping hydraulic fluid under pressure has sufficient force to penetrate skin, causing serious personal injury. Before disconnecting hydraulic lines, be sure to release all residual pressure. Before applying pressure to the hydraulic system, make sure that all connections are tight and that all lines, pipes, and hoses are free of damage.

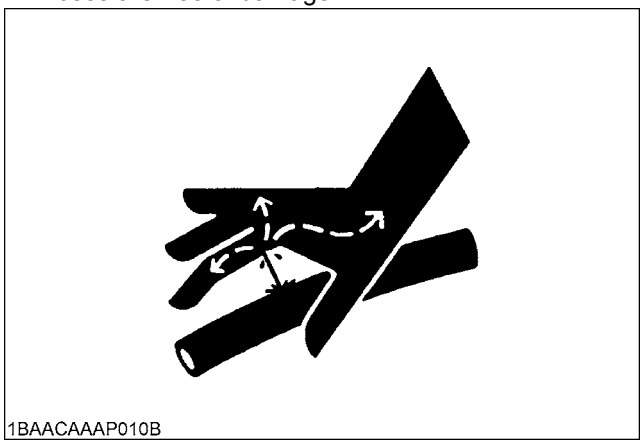

16. Fluid escaping from pinholes may be invisible. Do not use hands to search for suspected leaks; use a piece of cardboard or wood. Use of safety goggles or other eye protection is also highly recommended. If injured by escaping fluid, see a medical doctor at once. This fluid will produce gangrene or severe allergic reaction.

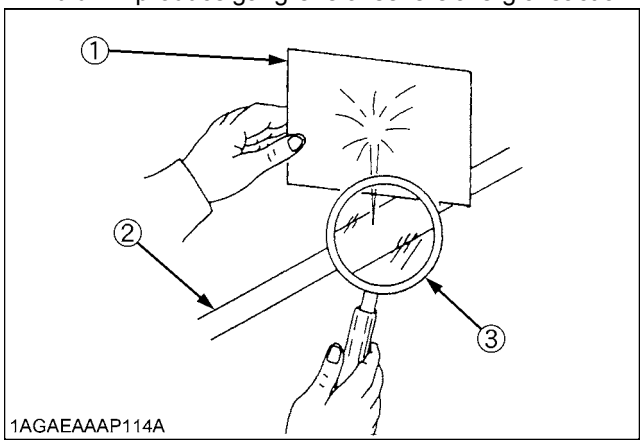

(1) Cardboard
(2) Hydraulic line
(3) Magnifying glass

7. DANGER, WARNING AND CAUTION LABELS

(1) Part No. TA240-9848-2

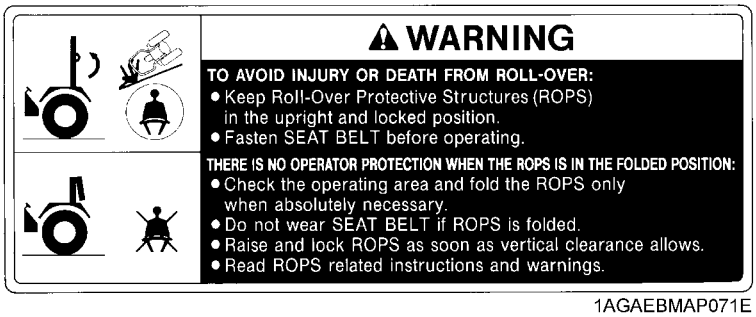

1AGAEBMAP071E

(2) Part No. TC420-4956-1

Diesel fuel only No fire

1AGAIDHAP154E

(3) Part No. 6C090-4958-2

Do not get your hands close to engine fan and fan belt.

1AGAIAZAP110A

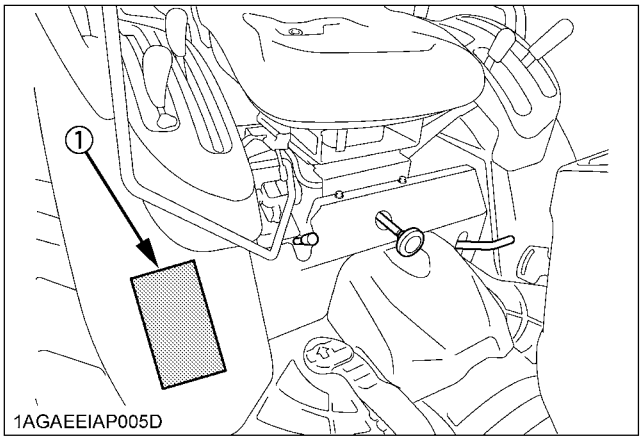

1AGAEEIAP005D

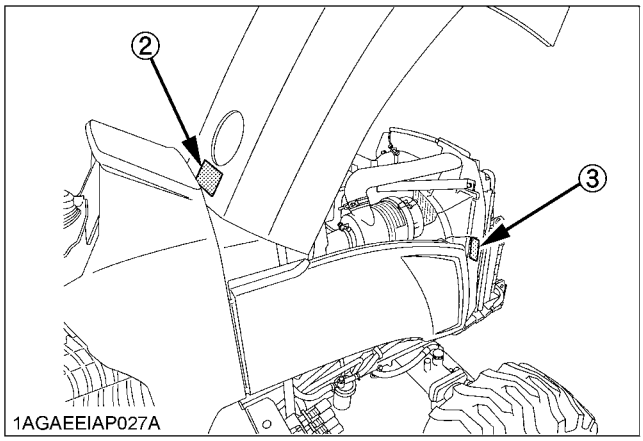

1AGAEEIAP027A

(1) Part No. 6C200-4959-1

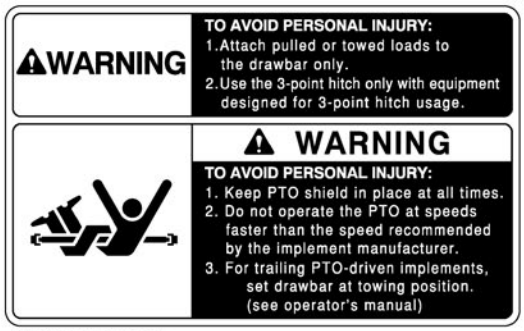

1AGAECEAP013E

(3) Part No. 6C430-4965-1

1AGAEEAAP003A

(2) Part No. 6C540-9554-1

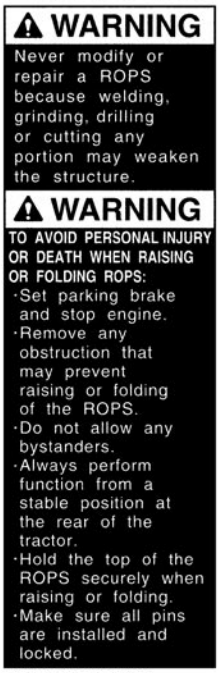

1AGAEEIAP036A

(4) Part No. 6C430-4959-1
Do not touch hot surface like muffler, etc.

1AGAEEAAP002A

(5) Part No. 6C090-4958-2
Do not get your hands close to engine fan and fan belt.

1AGAIAZAP110A

(6) Part No. 6C300-4744-1

1AGAIHFAP069A

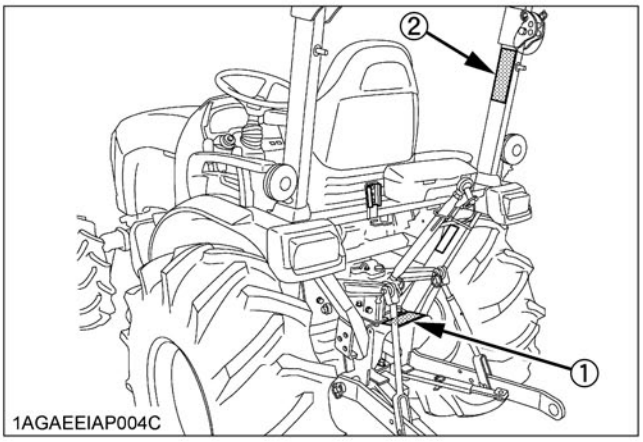

1AGAEEIAP004C

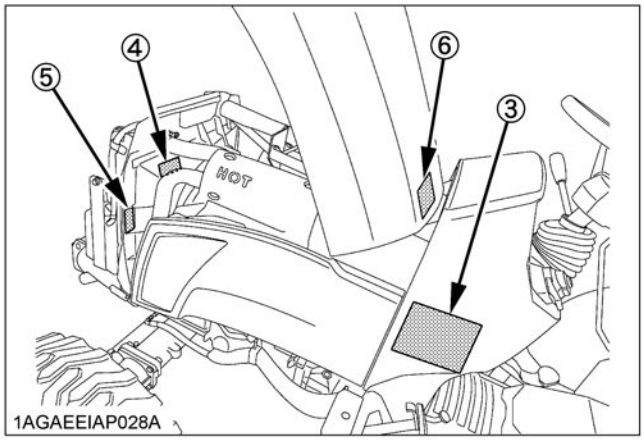

1AGAEEIAP028A

(1) Part No. 6C300-3012-2

1AGAEBQAP107A

(2) Part No. 6C540-4742-1

⚠ W A R N I N G

TO AVOID PERSONAL INJURY OR DEATH:

1. Read and understand the operator's manual before operation.
2. Before starting the engine, make sure that everyone is at a safe distance from the tractor and that the PTO is OFF.
3. Do not allow passengers on the tractor at any time.
4. Before allowing other people to use the tractor, have them read the operator's manual.
5. Check the tightness of all nuts and bolts regularly.
6. Keep all shields in place and stay away from all moving parts.
7. Lock the two brake pedals together before driving on the road.
8. Slow down for turns, or rough roads, or when applying individual brakes.
9. On public roads use SMV emblem and hazard lights, if required by local traffic and safety regulations.
10. Pull only from the drawbar.
11. Before dismounting, lower the implement to the ground, set the parking brake, stop the engine and remove the key.
12. Securely support tractor and implements before working underneath.

1AGAEEIAP035A

(3) Part No. 6C150-4743-1

1AGAEBMAP069E

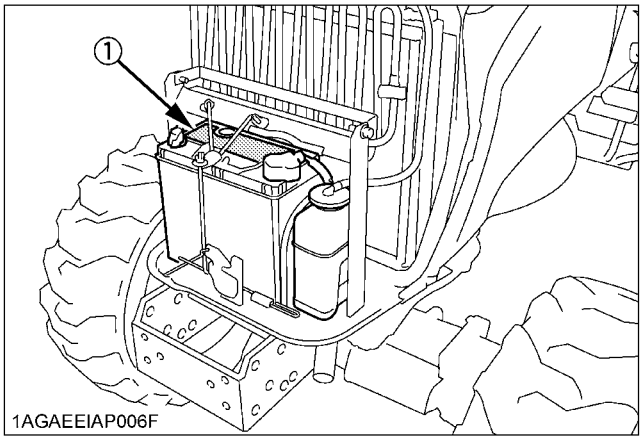

1AGAEEIAP006F

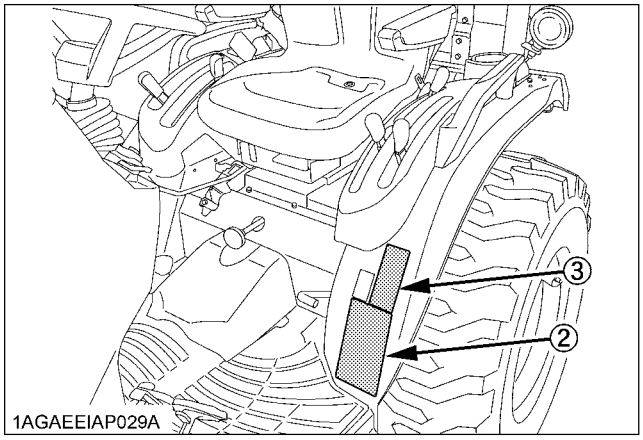

1AGAEEIAP029A

8. CARE OF DANGER, WARNING AND CAUTION LABELS

1. Keep danger, warning and caution labels clean and free from obstructing material.
2. Clean danger, warning and caution labels with soap and water, dry with a soft cloth.
3. Replace damaged or missing danger, warning and caution labels with new labels from your local KUBOTA Dealer.
4. If a component with danger, warning and caution label(s) affixed is replaced with new part, make sure new label(s) is (are) attached in the same location(s) as the replaced component.
5. Mount new danger, warning and caution labels by applying on a clean dry surface and pressing any bubbles to outside edge.

SERVICING OF TRACTOR

Your dealer is interested in your new tractor and has the desire to help you get the most value from it. After reading this manual thoroughly, you will find that you can do some of the regular maintenance yourself.
However, when in need of parts or major service, be sure to see your KUBOTA Dealer.
For service, contact the KUBOTA Dealership from which you purchased your tractor or your local KUBOTA Dealer.
When in need of parts, be prepared to give your dealer the tractor, CAB/ROPS and engine serial numbers.
Locate the serial numbers now and record them in the space provided.

	Type	Serial No.
Tractor		
CAB / ROPS		
Engine		
Date of Purchase		
Name of Dealer		
(To be filled in by purchaser)		

◆ **Warranty**
This tractor is warranted under the KUBOTA Limited Express Warranty, a copy of which may be obtained from your selling dealer. No warranty shall, however, apply if the tractor has not been handled according to the instruction given in the Operator's Manual even it is within the warranty period.

◆ **Scrapping the tractor and its procedure**
To put the tractor out of service, correctly follow the local rules and regulations of the country or territory where you scrap it. If you have questions, consult your local KUBOTA Dealer.

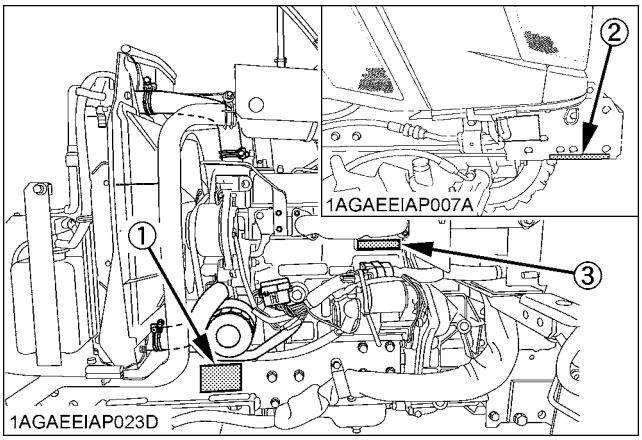

(1) Tractor identification plate
(2) Tractor serial number
(3) Engine serial number

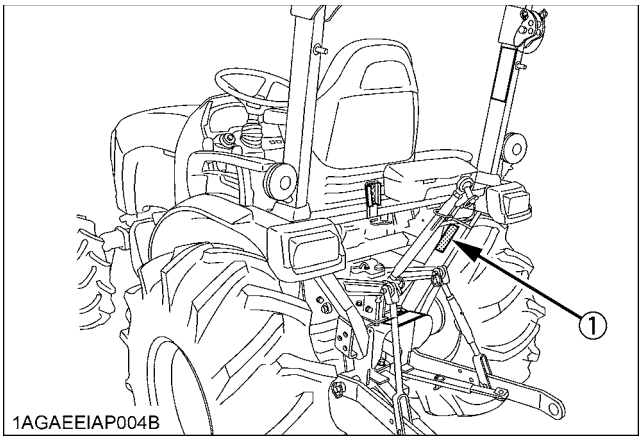

(1) ROPS identification (ROPS Serial No.)

SPECIFICATIONS

SPECIFICATION TABLE

Model				B2301HSD	B2601HSD
PTO power			kW (HP)	13.0 (17.5)*	14.5 (19.5)*
Engine	Maker			KUBOTA	
	Model			D1005-E4-D32	D1105-E4-D32
	Type			E-TVCS, liquid cooled, 3-cylinder diesel	
	Number of cylinders			3	
	Bore and stroke		mm (in.)	ϕ76x73.6 (ϕ3.0x2.9)	ϕ78x78.4 (ϕ3.1x3.1)
	Total displacement		cc (cu.in.)	1001 (61.1)	1123 (68.5)
	Engine gross power		kW (HP)	16.4 (22)*	19.0 (25.5)*
	Rated revolution		rpm	2800	
	Low idling revolution		rpm	1000 to 1100	
	Maximum torque		N-m (ft-lb)	60 (44)	71 (52)
	Battery			12V, RC : 80min, CCA : 430A	
Capacities	Fuel tank		L (U.S.gals.)	23 (6.1)	
	Engine crankcase (with filter)		L (U.S.qts.)	3.1 (3.3)	
	Engine coolant		L (U.S.qts.)	3.8 (4.0)	
	Transmission case		L (U.S.gals.)	15 (4.0)	
Dimensions	Overall length (without 3P)		mm (in.)	2380 (93.7)	2410 (94.9)
	Overall width (min. tread)		mm (in.)	1150 (45.3)	1245 (49.0)
	Overall height		mm (in.)	2130 (83.9)	2160 (85.0)
	Wheel base		mm (in.)	1560 (61.4)	
	Minimum ground clearance		mm (in.)	305 (12.0)	325 (12.8)
	Tread	Front	mm (in.)	830 (32.7)	850 (33.5)
		Rear	mm (in.)	900 (35.5)	950 (37.4)
Weight			kg (lbs.)	710 (1566)	740 (1632)
Clutch				Not applicable	
Traveling system	Tires	Front		6-12	7-12
		Rear		9.5-16	11.2-16
	Steering			Hydrostatic type power steering	
	Transmission			HST (3 ranges)	
	Brake			Dry single plate	
	Minimum turning radius (with brake)		m (feet)	2.1 (6.9)	

Model				B2301HSD	B2601HSD
Hydraulic unit	Hydraulic control system			Position control	
	Pump capacity		L / min (gals / min)	31.4 (8.3)	
	3-point hitch			SAE Category 1	
	Max. lift force	At lift points	kg (lbs.)	820 (1808)	
		24 in.behind lift point	kg (lbs.)	640 (1411)	
PTO	Rear-PTO			SAE 1-3/8, 6 splines	
	PTO / Engine speed		rpm	1 speed 540 / 2768	
	Mid-PTO			USA No. 5 (KUBOTA 10-tooth) involute spline	
	PTO / Engine speed		rpm	1 speed 2500 / 2753	

NOTE: * SAE J1995 The company reserves the right to change the specifications without notice.

TRAVELING SPEEDS

(At rated engine rpm)

Model		B2301HSD	
Tire size (Rear)		9.5 - 16 Farm / 33 x 12.5 - 15 Turf / 12 - 16.5 Industry	
	Range gear shift lever	km / h	mph
Forward	Low	0 to 5.6	0 to 3.5
	Middle	0 to 8.8	0 to 5.5
	High	0 to 19.1	0 to 11.8
Reverse	Low	0 to 4.2	0 to 2.6
	Middle	0 to 6.6	0 to 4.1
	High	0 to 14.3	0 to 8.9

Model		B2601HSD			
Tire size (Rear)		11.2 - 16 Farm		33 x 12.5 - 15 Turf / 12 - 16.5 Industry	
	Range gear shift lever	km / h	mph	km / h	mph
Forward	Low	0 to 6.0	0 to 3.7	0 to 5.6	0 to 3.5
	Middle	0 to 9.5	0 to 5.9	0 to 8.8	0 to 5.5
	High	0 to 20.4	0 to 12.7	0 to 19.1	0 to 11.8
Reverse	Low	0 to 4.5	0 to 2.8	0 to 4.2	0 to 2.6
	Middle	0 to 7.1	0 to 4.4	0 to 6.6	0 to 4.1
	High	0 to 15.3	0 to 9.5	0 to 14.3	0 to 8.9

The company reserves the right to change the specification without notice.

IMPLEMENT LIMITATIONS

The KUBOTA Tractor has been thoroughly tested for proper performance with implements sold or approved by KUBOTA. Use with implements which are not sold or approved by KUBOTA and which exceed the maximum specifications listed below, or which are otherwise unfit for use with the KUBOTA Tractor may result in malfunctions or failures of the tractor, damage to other property and injury to the operator or others. (Any malfunctions or failures of the tractor resulting from use with improper implements are not covered by the warranty.)

	Tread (max.width) with farm tires		Lower link end max. loading weight W0
	Front	Rear	
B2301HSD	830 mm (32.7 in.)	900 mm (35.4 in.)	300 kg (660 lbs.)
B2601HSD	850 mm (33.5 in.)	950 mm (37.4 in.)	

	Actual figures		
B2301 B2601	Implement weight W1 and / or size	Max. Drawbar Load W2	Trailer loading weight W3 Max. capacity
	As in the following list (Shown on the next page)	300 kg (660 lbs.)	1000 kg (2210 lbs.)

Lower link end max. loading weight.....The max. allowable load which can be put on the lower link end : W0
Implement weight.....The implement's weight which can be put on the lower link : W1
Max. drawbar load.....W2
Trailer loading weight .....The max. loading weight for trailer (without trailer's weight) : W3

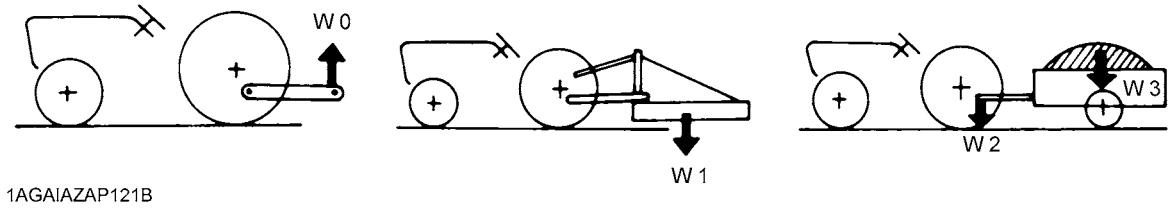

NOTE :

- Implement size may vary depending on soil operating conditions.
- Strictly follow the instructions outlined in the operator's manual of the mounted or trailed machinery or trailer, and do not operate the combination tractor - machine or tractor - trailer unless all instructions have been followed.
- Forestry Application
  Following hazards exist;
  (a) toppling trees, primarily in case a rear-mounted tree grab-crane is mounted at the rear of the tractor;
  (b) penetrating objects in the operator's enclosure, primarily in case a winch is mounted at the rear of the tractor.
  Optional equipments such as OPS (Operator Protective Structure), FOPS (Falling Object Protective Structure), etc. to deal with these hazards and other related hazards are not available for this tractor. Without such optional equipment use is limited to tractor specific applications like transport and stationary work.

Implement		Remarks		B2301	B2601
Mower	Mid-mount	Max. cutting width Max. weight	cm (in.) kg (lbs.)	152 (60) 140 (300)	
	Rotary-cutter (1 Blade)	Max. cutting width Max. weight	cm (in.) kg (lbs.)	122 (48) 204 (450)	
	Rear-mount (2 or 3 Blade)	Max. cutting width Max. weight	cm (in.) kg (lbs.)	152 (60) 227 (500)	
	Flail-mower	Max. cutting width	cm (in.)	122 (48)	
	Sickle bar	Max. cutting width	cm (in.)	152 (60)	
Rotary tiller		Max.tilling width Max. weight Slip clutch	cm (in.) kg (lbs.)	127 (50) 213 (470) Necessary	
Bottom plow		Max. size	cm (in.)	36 (14) x 1	
Disc plow		Max. size	cm (in.)	56 (22) x 1	
Cultivator		Max. size	cm (in.)	137 (54) 1 Row	
Disc harrow		Max. harrowing width Max. weight	cm (in.) kg (lbs.)	152 (60) 190 (420)	
Sprayer		Max. tank capacity	L (U.S.gals.)	190 (50)	
Front blade		Max. cutting width Sub frame	cm (in.)	152 (60) Necessary	
Rear blade		Max. cutting width Max. weight	cm (in.) kg (lbs.)	152 (60) 160 (350)	
Front loader		Max. lifting capacity (Bucket center) Max. width Sub frame	kg (lbs.) cm (in.)	360 (794) 127 (50) Necessary	
Box blade		Max. cutting width Max. weight	cm (in.) kg (lbs.)	137 (54) 227 (500)	
Back hoe		Max. digging depth Max. weight Sub frame	cm (in.) kg (lbs.)	198 (78) 320 (705) Necessary	
Snow blower		Max. digging depth Max. weight Sub frame	cm (in.) kg (lbs.)	152 (60) 200(450) Necessary	
Trailer		Max. load capacity Max. drawbar load	kg (lbs.) kg (lbs.)	1000 (2200) 300 (660)	

NOTE :
- Implement size may vary depending on soil operating conditions.

INSTRUMENT PANEL AND CONTROLS

■ Instrument Panel, Switches and Hand Controls

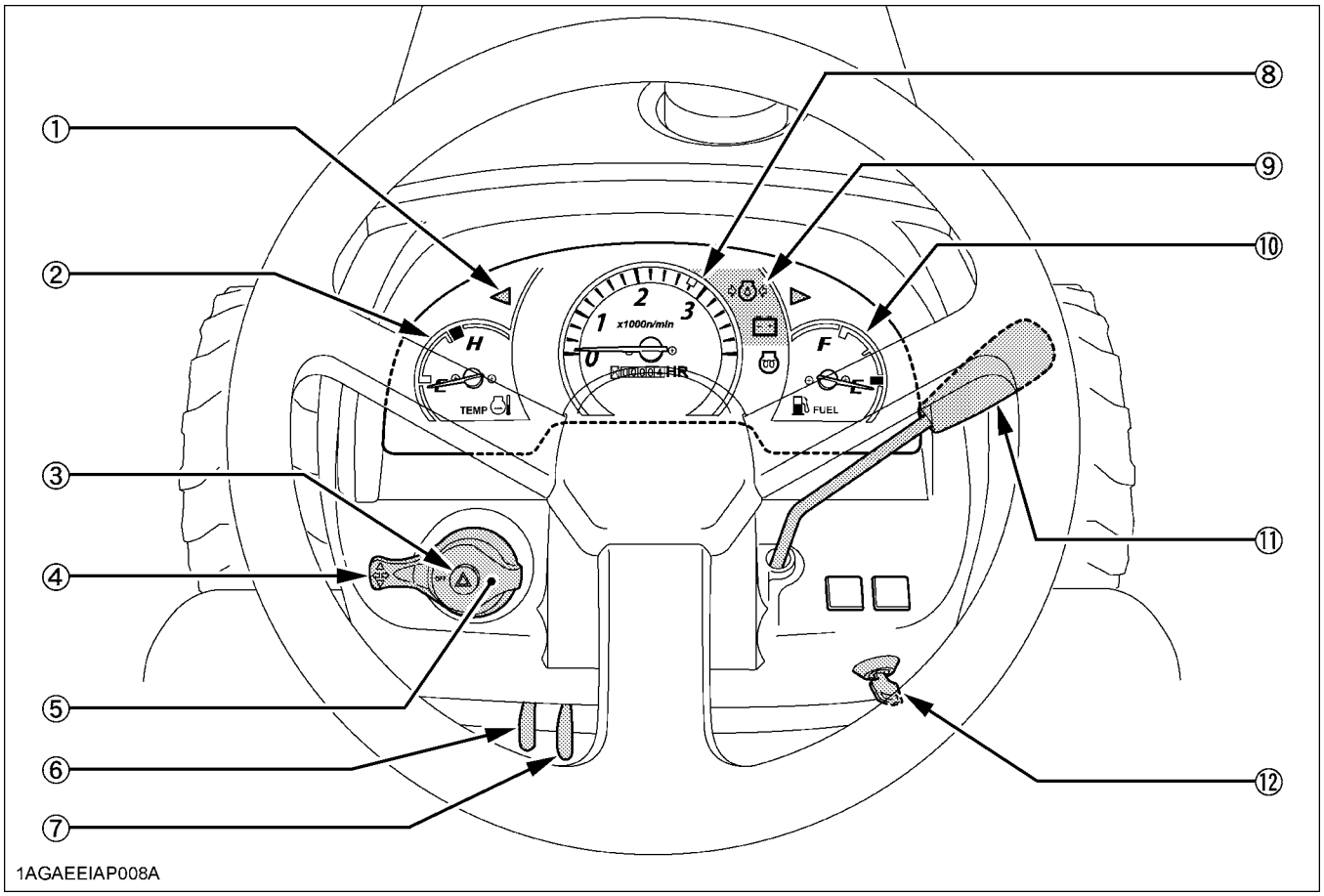

ILLUSTRATED CONTENTS

(1) Turn signal / Hazard light indicator..... 20
(2) Coolant temperature gauge..... 26
(3) Hazard light switch..... 20
(4) Turn signal light switch..... 20
(5) Head light switch..... 20
(6) Parking brake lever..... 27
(7) Speed set lever..... 24
(8) Hourmeter / Tachometer..... 27
(9) Easy Checker (TM)..... 25
(10) Fuel gauge..... 26
(11) Hand throttle lever..... 23
(12) Key switch..... 10

■ Foot and Hand Controls

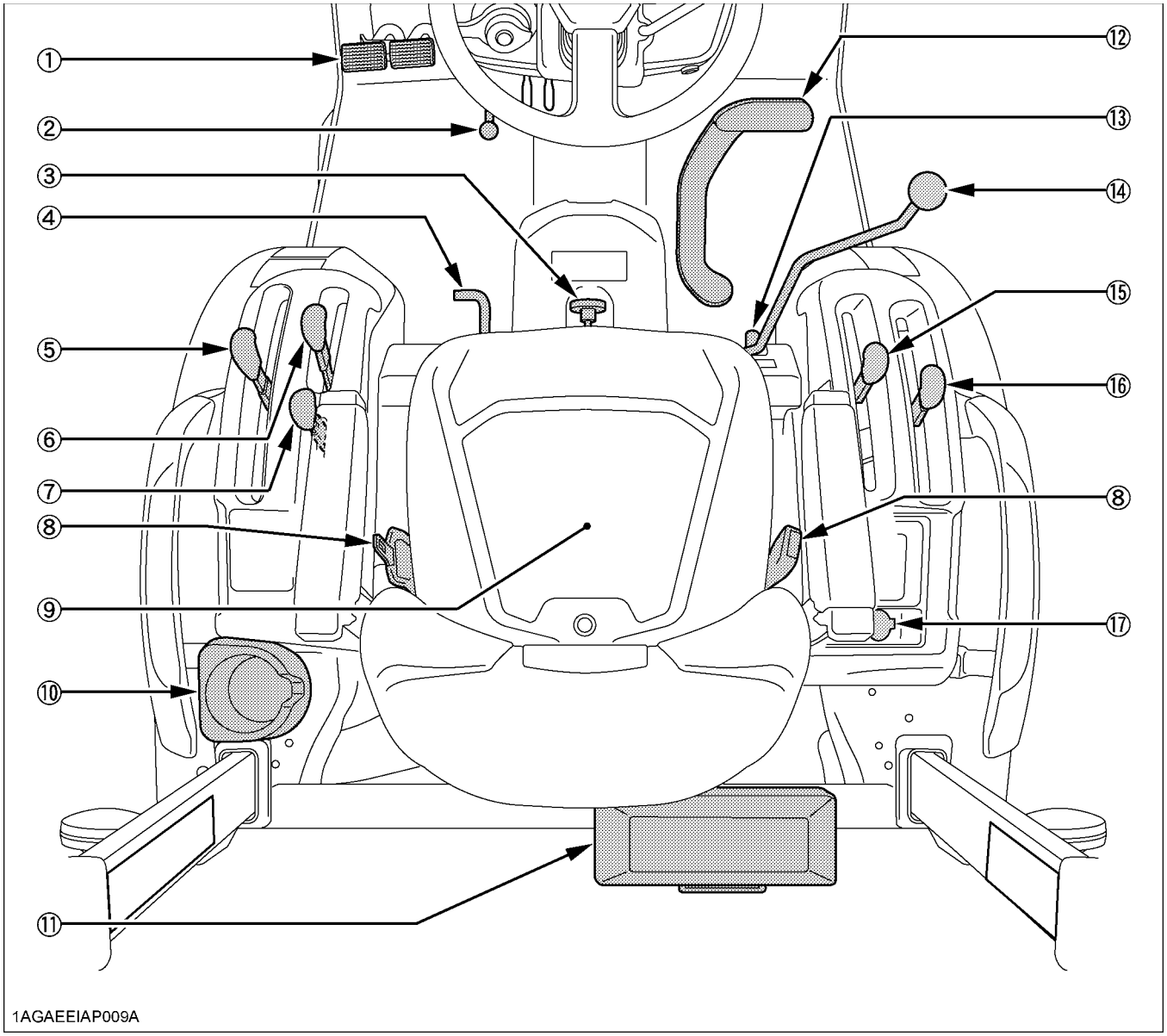

ILLUSTRATED CONTENTS

(1) Brake pedal..... 21
(2) Steering wheel tilt pedal..... 19
(3) 3-Point hitch lowering speed knob..... 35
(4) Differential lock pedal..... 28
(5) Range gear shift lever (L-M-H)..... 22
(6) PTO clutch lever..... 31
(7) PTO select lever..... 30
(8) Seat belt..... 19
(9) Operator's seat..... 18

ILLUSTRATED CONTENTS

(10) Cup holder..... ---
(11) Tool-box..... ---
(12) Speed control pedal..... 24
(13) Loader lock lever..... 37
(14) Loader control lever..... 37
(15) Front wheel drive lever..... 23
(16) Position control lever..... 35
(17) Electrical outlet..... 29

PRE-OPERATION CHECK

DAILY CHECK

To prevent trouble from occurring, it is important to know the condition of the tractor well. Check it before starting.

WARNING

To avoid personal injury or death:

- **Be sure to check and service the tractor on a level surface with the engine shut off and the parking brake "ON" and implement lowered to the ground.**

Check item

- Walk around inspection
- Check engine oil level
- Check transmission oil level
- Check coolant level
- Clean grill and radiator screen
- Check air cleaner evacuator valve
  (When used in a dusty place)
- Check brake pedal
- Check indicators, gauges and meter
- Check lights
- Check wire harness
- Check Seat belt and ROPS
- Check movable parts
- Refuel
  (See "DAILY CHECK" in "PERIODIC SERVICE" section.)
- Care of danger, warning and caution labels
  (See "DANGER, WARNING AND CAUTION LABELS" in "SAFE OPERATION" section.)

OPERATING THE ENGINE

WARNING

To avoid personal injury or death:

- **Read "Safe Operation" in the front of this manual.**
- **Read the danger, warning and caution labels located on the tractor.**
- **To avoid the danger of exhaust fume poisoning, do not operate the engine in a closed building without proper ventilation.**
- **Never start engine while standing on ground. Start engine only from operator's seat.**
- **Make it a rule to set all shift levers to the "NEUTRAL" positions and to place the PTO lever in "OFF" position before starting the engine.**

IMPORTANT :

- Do not use starting fluid or ether.
- To protect the battery and the starter, make sure that the starter is not continuously turned for more than 30 seconds.

STARTING THE ENGINE

1. Make sure the parking brake is set.

1. To set the parking brake:
   (1) Interlock the brake pedals.
   (2) Depress the brake pedals.
   (3) Latch the brake pedals with the parking brake lever.
2. To release the parking brake, depress the brake pedals again.

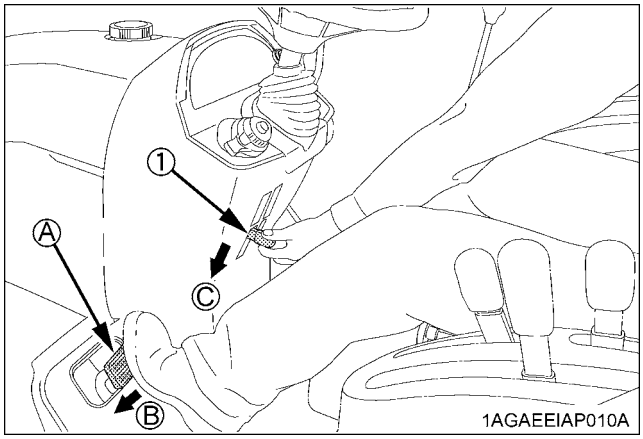

(1) Parking brake lever
(A) Interlock the brake pedals
(B) "DEPRESS"
(C) "PULL DOWN"

NOTE :

- It is recommended that the operator practice engaging and disengaging the parking brake on a flat surface without the engine running before operating the tractor for the first time.

2. Place the PTO clutch lever in the "OFF" position.

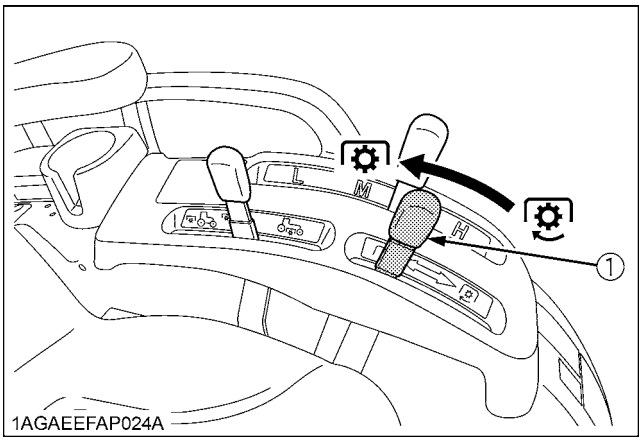

(1) PTO clutch lever
"ON" "ENGAGE"
"OFF" "DISENGAGE"

3. Place the speed set lever in "OFF" position.
Place the speed control pedal in the "NEUTRAL" position.
Place the range gear shift lever (L-M-H) in the "NEUTRAL" position.

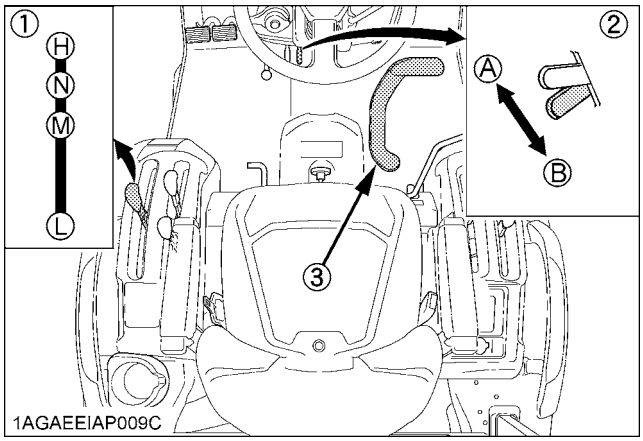

(1) Range gear shift lever (L-M-H)
(2) Speed set lever
(3) Speed control pedal
(A) "OFF"
(B) "ON"
(H) "HIGH"
(M) "MIDDLE"
(L) "LOW"
(N) "NEUTRAL POSITION"

NOTE :
- Depress the both brake pedals together, doing so the speed set lever automatically returns to the off position.
- By removing your foot from the speed control pedal, it will allow the pedal to automatically return to the neutral position.

4. Lock the loader control lever in the "LOCK" position.

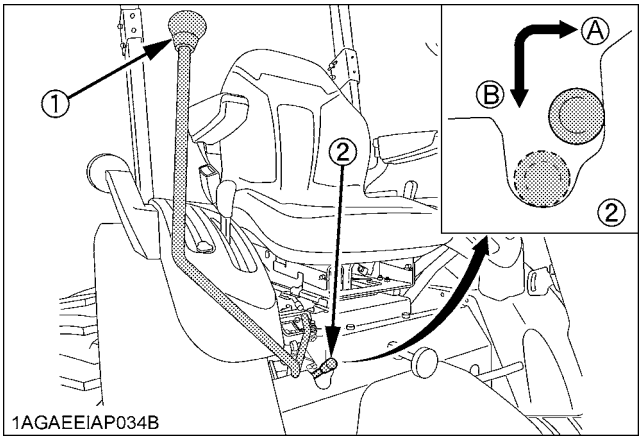

(1) Loader control lever
(2) Lock lever
(A) "UNLOCK"
(B) "LOCK"

5. Place the position control lever in the "LOWEST" position.

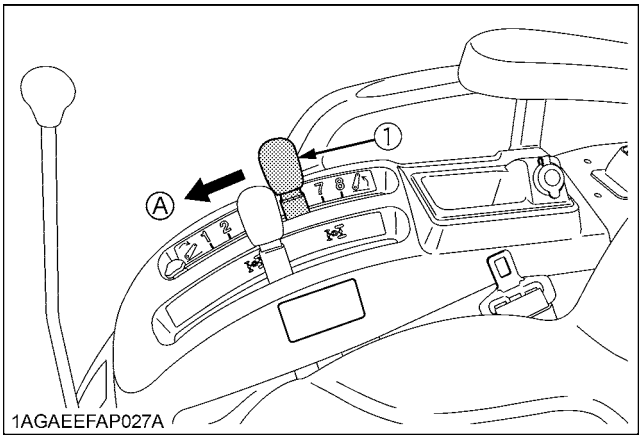

(1) Position control lever
(A) "DOWN"

6. Set the throttle lever to about 1/2 way.

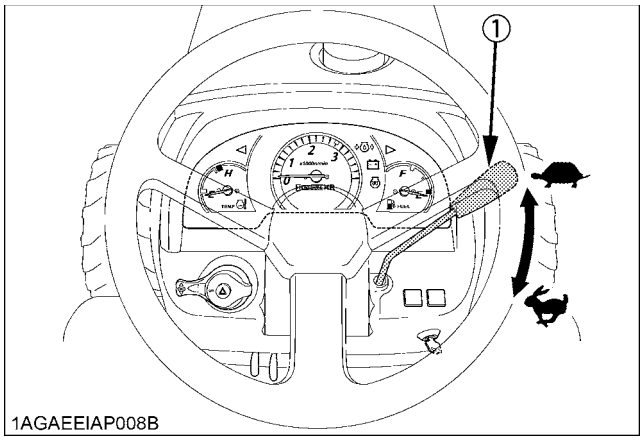

(1) Hand throttle lever

"INCREASE"
"DECREASE"

7. Insert the key into the key switch and turn it "ON".

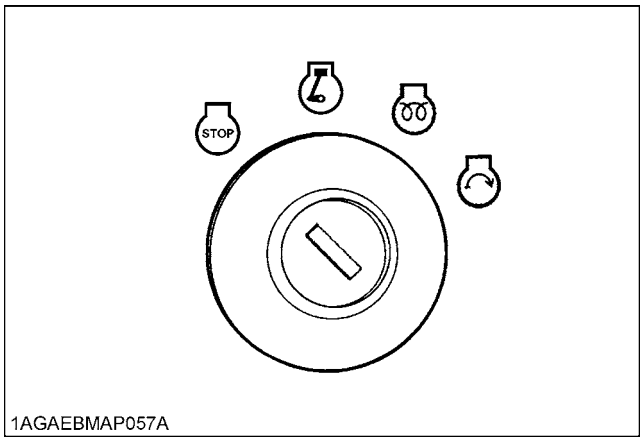

"OFF"
"ON"
"PREHEAT"
"START"

◆ **Check Easy Checker (TM) lamps:**

When the key is turned "ON", lamps (3) (4) should come on. If trouble should occur at any location while the engine is running, the indicator lamp corresponding to problem will turn "ON".

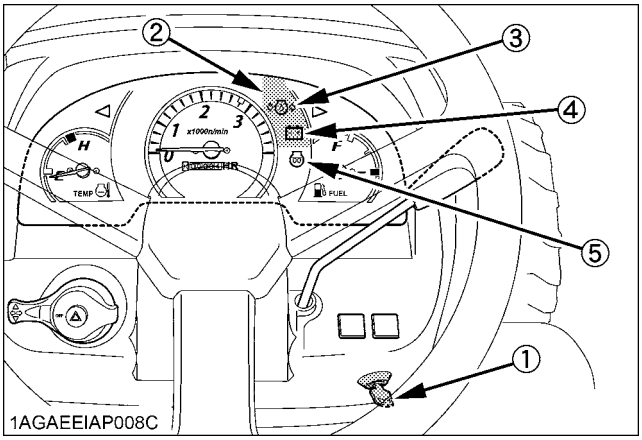

(1) Key switch
(2) Easy checker(TM)
(3) Engine oil pressure warning indicator
(4) Electrical charge warning indicator
(5) Glow plug indicator

8. Turn the key to "PREHEAT" position and hold it for about 2 to 3 seconds.

For the appropriate preheating time, refer to the table below:

Temperature	Preheating Time
Over 0 °C (32 °F)	2 to 3 sec.
0 to -5 °C (32 to 23 °F)	5 sec.
-5 to -15 °C (23 to 5 °F)	10 sec.

NOTE :
- Glow plug indicator (5) comes on while engine is being preheated.

9. Turn the key to "START" position and release when the engine starts.

IMPORTANT :
- Because of the safety devices, the engine will not start except when the PTO clutch lever is placed in the "OFF" position and speed control pedal is placed in the "NEUTRAL" position.

◆ **Cold Weather Starting**

When the ambient temperature is below -5℃ (23℉) and the engine is very cold. If the engine fails to start, turn off the key for 30 seconds. Then repeat steps **8** and **9**. To protect the battery and the starter, make sure that the starter is not continuously turned for more than 10 seconds.

■Block Heater (Option)

A block heater is available as an option from your dealer. It will assist you in starting your tractor when the ambient temperature is below -15℃ (5℉).

10. Check to see that all the lamps on the Easy Checker (TM) are "OFF".

If any lamps stays on, immediately stop the engine and determine the cause.

STOPPING THE ENGINE

1. After slowing the engine to idle, turn the key to "OFF".

2. Remove the key.

NOTE :
- If key does not stop the engine, consult your local KUBOTA Dealer.

WARMING UP

WARNING

To avoid personal injury or death:

- **Be sure to set the parking brake during warm-up.**
- **Be sure to set all shift levers to the "NEUTRAL" positions and to place the PTO clutch lever in the "OFF" position during warm-up.**

For 5 minutes after engine start-up, allow the engine to warm up without applying any load, this is to allow oil to reach every engine part. If load should be applied to the engine without this warm-up period, trouble such as seizure, breakage or premature wear may develop.

■Warm-up Transmission Oil at Low Ambient Temperatures

Hydraulic oil serves as transmission fluid. In cold weather, the oil will be cold, which will increase oil viscosity. This can cause delayed oil circulation or abnormally low hydraulic pressure for some time after engine start-up. This in turn can result in trouble in the hydraulic system. To prevent the above, observe the following instructions: Warm up the engine at about 50% of rated rpm according to the table below:

Ambient temperature	Warm-up time requirement
Above 0 °C (32 °F)	At least 5 minutes
0 to -10 °C (32 to 14 °F)	5 to 10 minutes
-10 to -20 °C (14 to -4 °F)	10 to 15 minutes
Below -20 °C (-4 °F)	More than 15 minutes

IMPORTANT :

- Do not operate the tractor under full load condition until it is sufficiently warmed up.

JUMP STARTING

WARNING

To avoid personal injury or death:

- **Battery gases can explode. Keep cigarettes, sparks, and flames away from battery.**
- **If tractor battery is frozen, do not jump start engine.**
- **Do not connect the other end of the negative (-) jumper cable to the negative (-) terminal of the tractor battery.**

When jump starting the engine, follow the instructions below to safely start the engine.

1. Bring the helper vehicle with a battery of the same voltage as disabled tractor within easy cable reach. "THE VEHICLES MUST NOT TOUCH".
2. Engage the parking brakes of both vehicles and put the shift levers in neutral. Shut both engines off.
3. Wear eye protection and rubber gloves.
4. Attach the red clamp to the positive (red, (+) or pos.) terminal of the dead battery and clamp the other end of the same cable to the positive (red, (+) or pos.) terminal of the helper battery.
5. Clamp the other cable to the negative (black, (-) or neg.) terminal of the helper battery.
6. Clamp the other end to the engine block or frame of the disabled tractor as far from the dead battery as possible.
7. Start the helper vehicle and let its engine run for a few moments. Start the disabled tractor.
8. Disconnect the jumper cables in the exact reverse order of attachment. (Steps 6, 5 and 4)

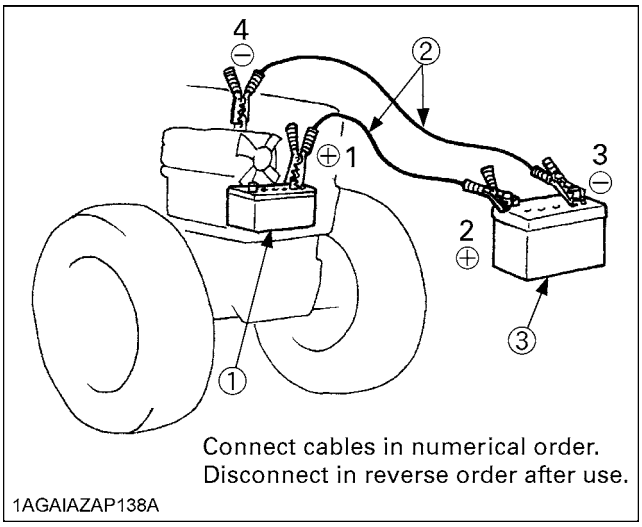

(1) Dead battery
(2) Jumper cables
(3) Helper battery

IMPORTANT :

- This machine has a 12volt negative (-) ground starting system.

- Use only same voltage for jump starting.
- Use of a higher voltage source on tractors electrical system could result in severe damage to tractor's electrical system.
  Use only matching voltage source when "Jump starting" a low or dead battery condition.

OPERATING THE TRACTOR

OPERATING NEW TRACTOR

How a new tractor is handled and maintained determines the life of the tractor.

A new tractor just off the factory production line has been, of course, tested, but the various parts are not accustomed to each other, so care should be taken to operate the tractor for the first 50 hours at a slower speed and avoid excessive work or operation until the various parts become "broken-in." The manner in which the tractor is handled during the "breaking-in." period greatly affects the life of your tractor. Therefore, to obtain the maximum performance and the longest life of the tractor, it is very important to properly break-in your tractor. In handling a new tractor, the following precautions should be observed.

■Do not Operate the Tractor at Full Speed for the First 50 Hours

- Do not start quickly nor apply the brakes suddenly.
- In winter, operate the tractor after fully warming up the engine.
- Do not run the engine at speeds faster than necessary.
- On rough roads, slow down to suitable speeds.
  Do not operate the tractor at fast speed.

The above precautions are not limited only to new tractors, but to all tractors. But it should be especially observed in the case of new tractors.

■Changing Lubricating Oil for New Tractors

The lubricating oil is especially important in the case of a new tractor. The various parts are not "broken-in" and are not accustomed to each other; small metal grit may develop during the operation of the tractor; and this may wear out or damage the parts. Therefore, care should be taken to change the lubricating oil a little earlier than would ordinarily be required.

For further details of change interval hours, see "MAINTENANCE" section.

BOARDING AND LEAVING THE TRACTOR

1. Never try to get on or off a moving tractor or jump off the tractor to exit.
2. Face the tractor when getting into or out of the tractor. Do not use the controls as hand holds to prevent inadvertent machine movements.
3. Always keep steps and floor clean to avoid slippery conditions.

OPERATING FOLDABLE ROPS

WARNING

To avoid personal injury or death:

- **When raising or folding the ROPS, apply parking brake, stop the engine and remove the key.**
  Always perform function from a stable position at the rear of tractor.
- **Fold the ROPS down only when absolutely necessary and fold it up and lock it again as soon as possible.**
- **Before proceeding to fold ROPS, check for any possible interference with installed implements and attachments.**
  If interference occurs, contact your KUBOTA Dealer.

■To Fold the ROPS

1. Remove both set bolts, maintain a hold on the ROPS.

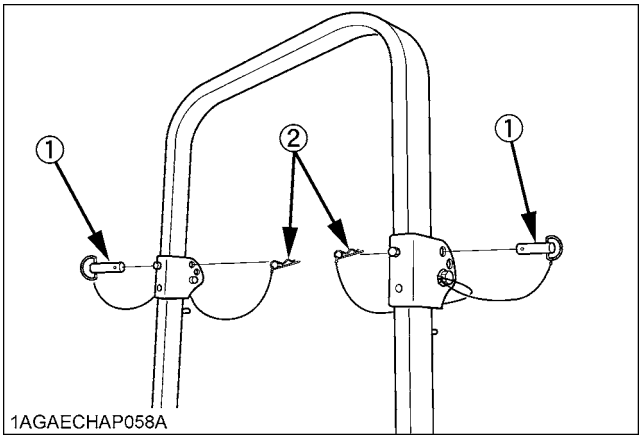

(1) Set bolt
(2) Hair pin

2. Fold the ROPS.

CAUTION

To avoid personal injury:

- **Hold the ROPS tightly with both hands and fold the ROPS slowly and carefully.**

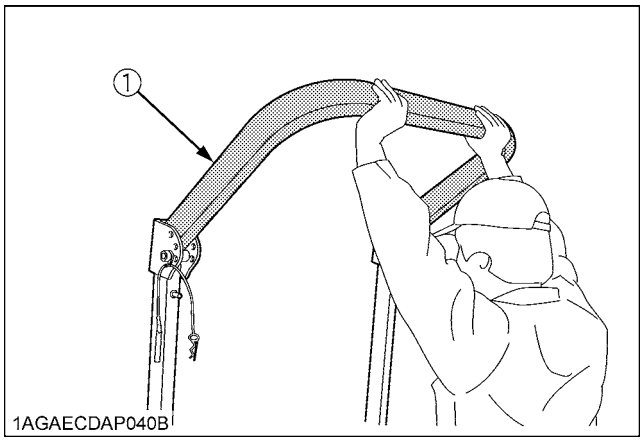

(1) ROPS

3. Insert both set bolts and secure them with the hair pins.

CAUTION

To avoid personal injury:

- **Make sure that both set bolts are properly installed and secured with the hair pins.**

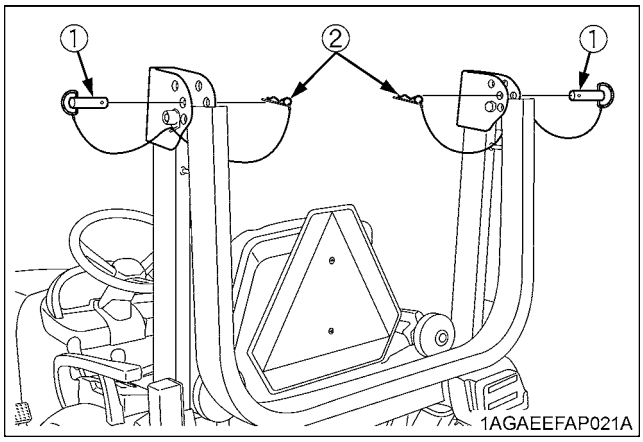

(1) Set bolt
(2) Hair pin

■To Raise the ROPS to Upright Position

1. Remove both hair pins and set bolts.

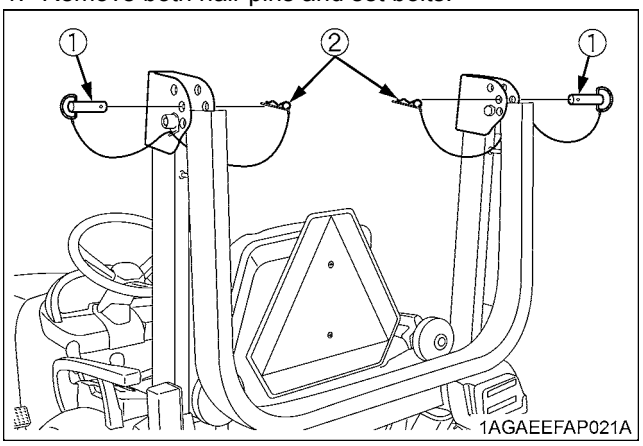

(1) Set bolt
(2) Hair pin

2. Raise ROPS to the upright position, maintain a hold on the ROPS.

CAUTION

To avoid personal injury:

- **Raise the ROPS slowly and carefully.**

3. Insert both set bolts and secure them with the hair pins.

CAUTION

To avoid personal injury:

- **Make sure that both set bolts are properly installed as soon as the ROPS is in the upright position and secured with the hair pins.**

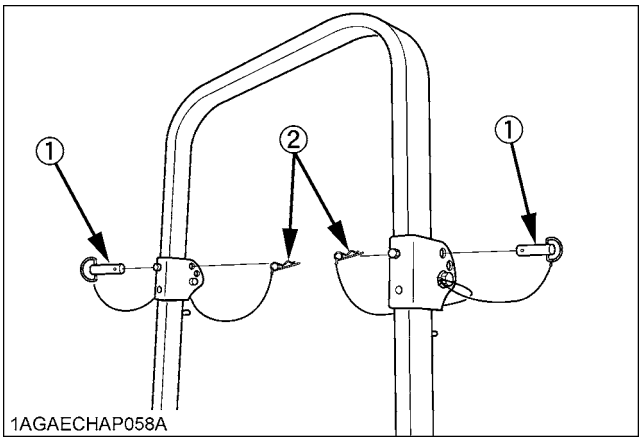

(1) Set bolt
(2) Hair pin

■Adjustment of Foldable ROPS

- Adjust free fall of the ROPS upper frame regularly.
- If you feel less friction in folding the ROPS, tighten the nut (1) until you feel the right friction in the movement.

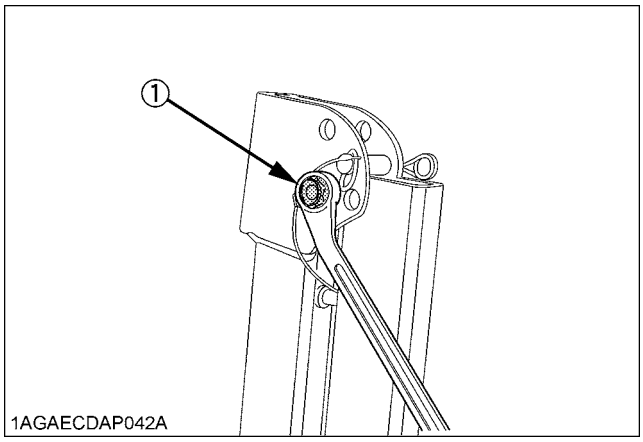

(1) Nut

STARTING

1. Adjusting the operator's position.

NOTE :
- The seat and suspension should be adjusted to ensure that the controls are comfortably at hand for the operator, ensuring that the operator maintains a good posture and minimizes risks from whole body vibration.

■Operator's Seat

WARNING

To avoid personal injury or death:
- **Make sure that the seat is completely secured after each adjustment.**
- **Do not allow any person other than the driver to ride on the tractor.**

◆ Position adjustment

Pull in the position adjust lever and slide the seat backward or forward, as required. The seat will lock in position when the lever is released.

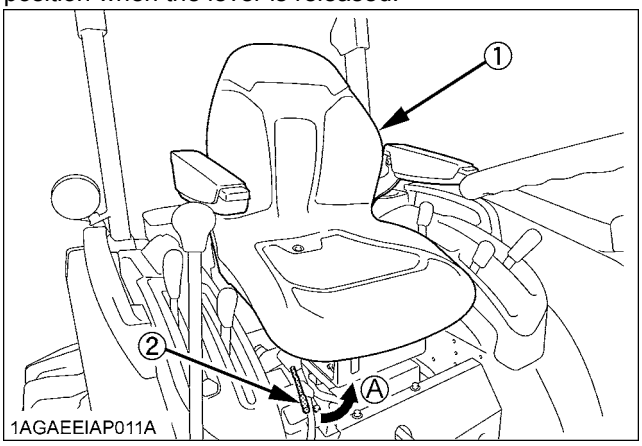

(1) Seat
(2) Position adjust lever
(A) "PULL IN"

IMPORTANT :
- After adjusting the operator's seat, be sure to check that the seat is properly locked.

◆ **Armrest angle adjustment**

The armrest angle can be adjusted by the bolts (socket size 7/16 inch).

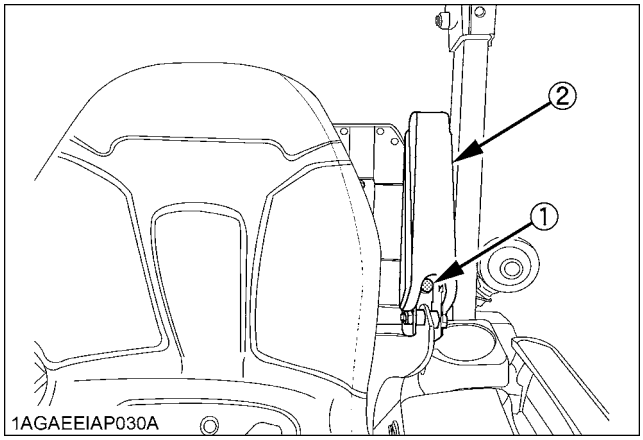

(1) Bolt
(2) Armrest

■Seat Belt

WARNING

To avoid personal injury or death:

- **Always use the seat belt when the ROPS is installed.**
- **Do not use the seat belt if a foldable ROPS is down or there is no ROPS.**

Adjust the seat belt for proper fit and connect to the buckle. The seat belt is auto-locking retractable type.

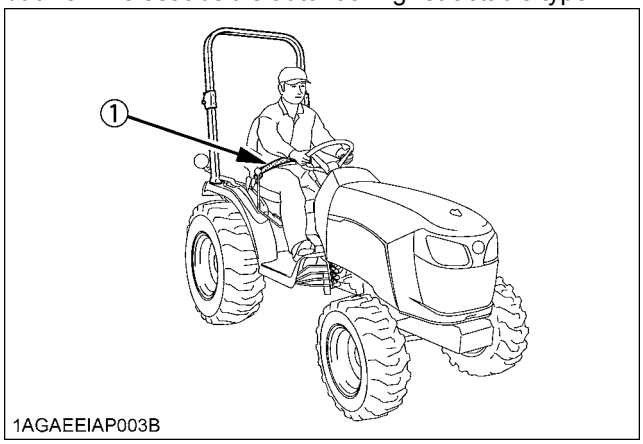

(1) Seat belt

■Tilt Steering Adjustment

CAUTION

To avoid personal injury:

- **Do not adjust the steering wheel while the tractor is in motion.**

Press down the steering wheel pedal, to release the lock so the steering wheel can be adjusted to one of three desired positions.

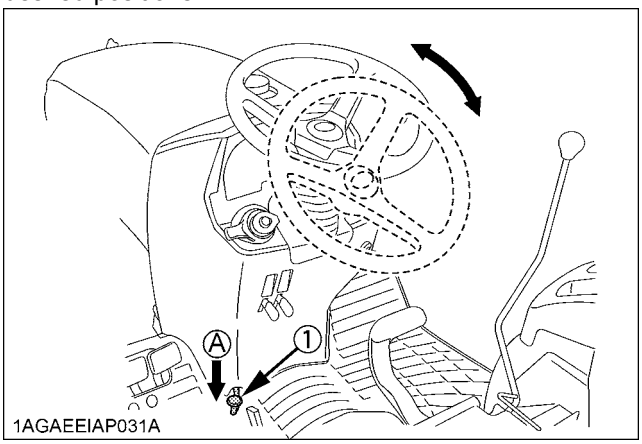

(1) Steering wheel tilt pedal (A) "PRESS DOWN"

2. Selecting light switch positions.

■Head Light / Turn Signal / Hazard Light Switch

◆ **Head Light Switch**

(A) **OFF**....Head light OFF.

(B) ..... Head light ON.

◆ **Hazard Light**

1. When hazard light switch is pushed, the hazard lights flash, along with the L/H and R/H indicators on the instrument panel.
2. Push hazard light switch again to turn off the hazard lights.

◆ **Turn Signal with Hazard Light Switch On**

1. To indicate a right turn with the hazard lights already flashing (hazard switch on), turn the turn signal switch clockwise.
2. To indicate a left turn with the hazard lights already flashing, turn the turn signal switch counterclockwise.
3. When the left or right turn signal is activated in combination with the hazard lights, the indicated turning light will flash and the other will stay on.

◆ **Turn Signal with Hazard Light Switch Off**

1. To indicate a right turn without hazard lights (hazard switch off), turn the turn signal switch clockwise.
2. To indicate a left turn without hazard lights, turn the turn signal switch counterclockwise.
3. When the left or right turn signal is activated without the hazard lights, the indicated turning light will flash and the other will stay on.

NOTE :

- The hazard light switch is operative when the key switch is in either the "ON" or "OFF" positions.
- The turn signal light switch is only operative when the key switch is in the "ON" position.
- The indicator in the hazard light switch will light up when the head light switch is turned on.
- Be sure to return the turn signal switch to center position after turning.

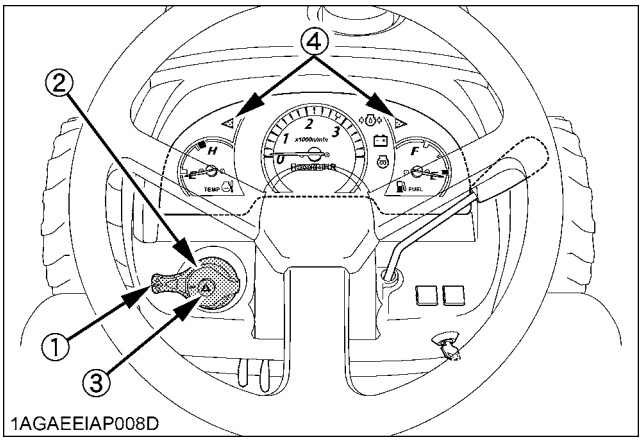

(1) Turn signal light switch
(2) Head light switch
(3) Hazard light switch
(4) Hazard / Turn signal indicator

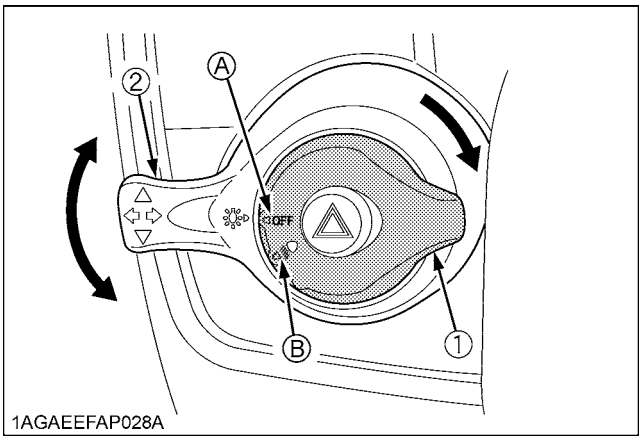

(1) Head light switch *(A) "OFF"*
(2) Turn signal light switch *(B) "ON"*

■Tractor Lights

(1) Head light
(2) Turn signal / Hazard light
(3) Tail light

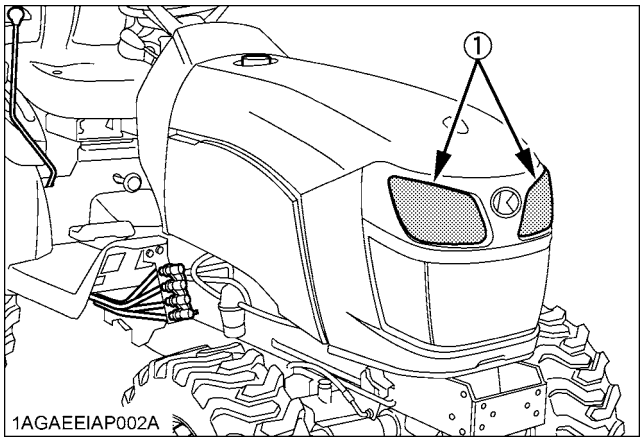

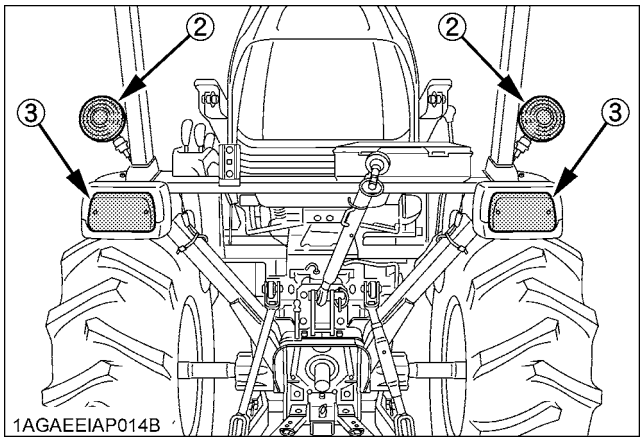

3. Checking the brake pedal.

■Brake Pedals (Right and Left)

WARNING

To avoid personal injury or death:

- **Applying only one rear wheel brake at high speeds could cause the tractor to swerve or roll-over.**

WARNING

To avoid personal injury or death:

- **An accident may occur if the tractor is suddenly braked, such as by heavy towed loads shifting forward or loss of control.**
- **The braking characteristics are different between 2 and 4 wheel drive. Be aware of the difference and use carefully.**
- **When driving on icy, wet or loose surfaces, make sure the tractor is correctly ballasted to avoid skidding and loss of steering control. Operate at reduced speed.**

1. Before operating the tractor on the road or before applying the parking brake, be sure to interlock the right and left pedals as illustrated below.
2. Use individual brakes to assist in making sharp turns at slow speeds (Field Operation Only). Disengage the brake pedal lock and depress only one brake pedal.
3. Be sure brake pedals have equal adjustment when using locked together.

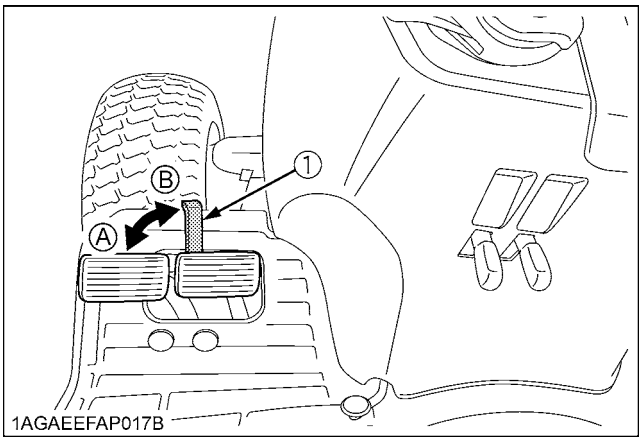

(1) Brake pedal lock *(A) "LOCK"*
(B) "RELEASE"

4. Raise the implement.
(See "HYDRAULIC UNIT" section.)

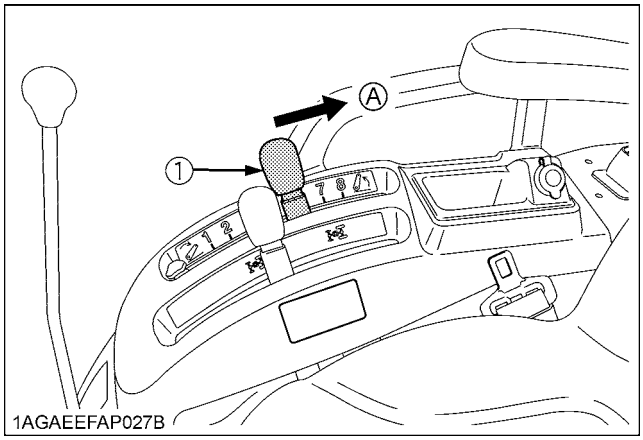

(1) Position control lever *(A) "UP"*

5. Selecting the Travel Speed.

■Range Gear Shift Lever (L-M-H)

The range gear shift can only be shifted when tractor is completely stopped.

IMPORTANT :
Do not force the range gear shift lever.

- If it is difficult to shift the range gear shift lever into the neutral position;
  (1) Depress the brake pedal firmly for several seconds.
  (2) Without reducing the brake pedal force, shift the range gear shift lever.
- If it is difficult to shift the range gear shift lever into "L", "M" or "H" from neutral position;
  (1) Slightly depress the speed control pedal to rotate the gears inside of transmission.
  (2) Release the speed control pedal to neutral position.
  (3) Shift the range gear shift lever.
- To avoid damage of transmission, stop tractor before shifting between ranges.

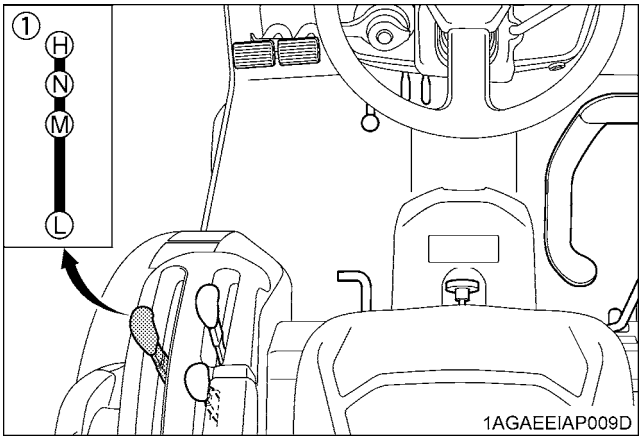

(1) Range gear shift lever (L-M-H)
(H) "HIGH"
(M) "MIDDLE"
(L) "LOW"
(N) "NEUTRAL POSITION"

■Front Wheel Drive Lever

WARNING

To avoid personal injury or death:

- **Do not engage the front wheel drive when traveling at road speed.**
- **When driving on icy, wet or loose surfaces, make sure the tractor is correctly ballasted to avoid skidding and loss of steering control. Operate at reduced speed and engage front wheel drive.**
- **An accident may occur if the tractor is suddenly braked, such as by heavy towed loads shifting forward or loss of control.**
- **The braking characteristics are different between 2 and 4-wheel drive. Be aware of the difference and use carefully.**

Use the lever to engage the front wheels with the tractor stopped. Shift the lever to "ON" to engage the front wheel drive.

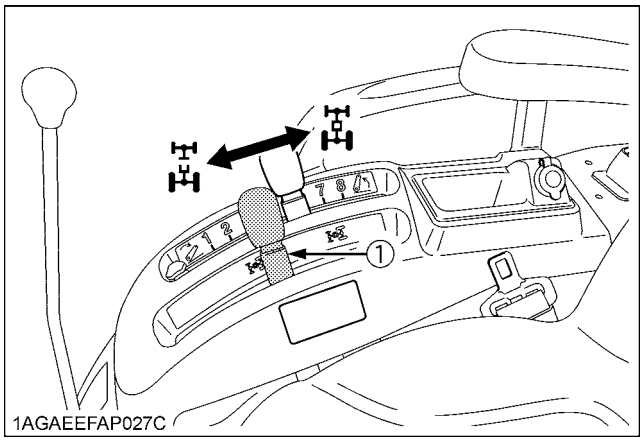

(1) Front wheel drive lever *"ON"* *"OFF"*

IMPORTANT :

- To avoid damage of transmission, when front wheel drive lever is not smoothly shifted, slightly step forward or rearward on speed control pedal.
- Tires will wear quickly if front wheel drive is engaged on paved roads.

◆ **Front wheel drive is effective for the following jobs:**

1. When greater pulling force is needed, such as working in a wet field, when pulling a trailer, or when working with a front-end loader.
2. When working in sandy soil.
3. When working on a hard soil where a rotary tiller might push the tractor forward.
4. Additional braking at reduced speeds.

6. Accelerate the Engine.

■Hand Throttle Lever

Pulling the throttle lever back increases engine speed, and pushing it forward decreases engine speed.

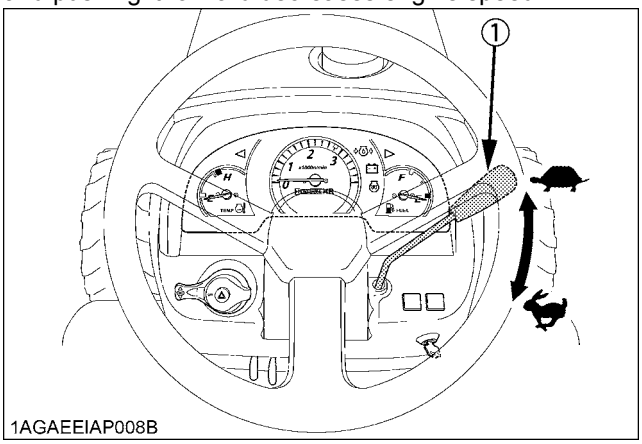

(1) Hand Throttle lever *"INCREASE"* *"DECREASE"*

7. Unlock the Parking Brake.

■Parking Brake

To release the parking brake, depress the brake pedals again.

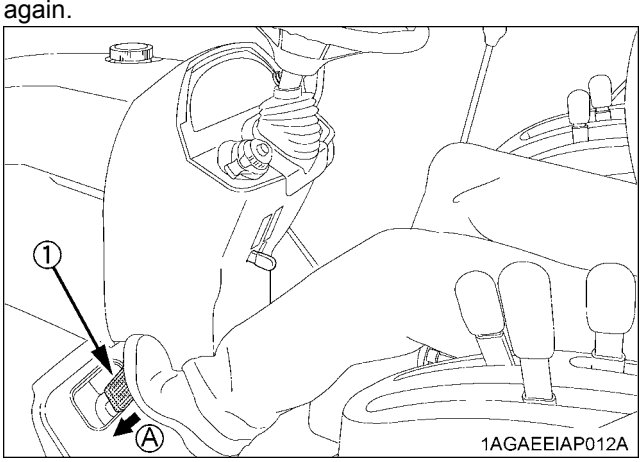

(1) Brake pedals *(A) "DEPRESS"*

8. Depress the Speed Control Pedal.

■Speed Control Pedal

WARNING

To avoid personal injury or death:

- **Do not operate if the tractor moves on level ground with the operators foot off of Speed Control Pedal.**
- **Consult your local KUBOTA Dealer.**

Forward Pedal

Depress the speed control pedal with the toe of your right foot to move forward.

Reverse Pedal

Depress the speed control pedal with the heel of your right foot to move backward.

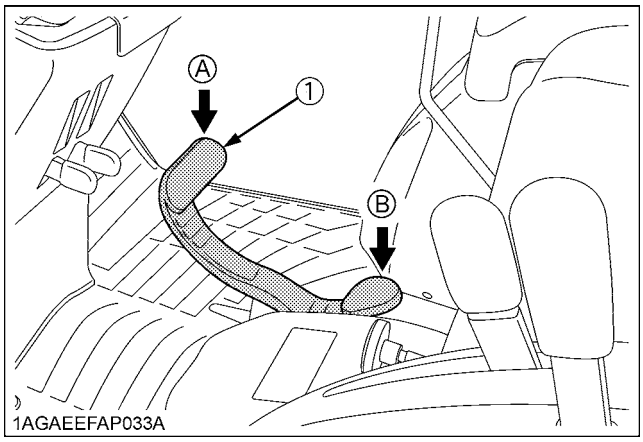

(1) Speed control pedal *(A) "FORWARD"* *(B) "REVERSE"*

IMPORTANT :

- To prevent serious damage to the HST, do not adjust the stopper bolts.

NOTE :

- When you stand up from the seat with the speed control pedal stepped on or the speed set device engaged (ON), the engine will stop regardless of whether the machine is moving or not. This is because the tractor is equipped with Operator Presence Control system (OPC).

■Speed Set Device

WARNING

To avoid personal injury or death:

- **Pull the speed set lever completely to the up position before starting the engine.**
- **Do not use the speed set device when driving on the road.**
- **Be sure to connect both the left and the right brakes to release the speed set device. The speed set device won't be released with singlebrake activation.**

The Speed Set Device is designed for tractor operating efficiency and operator comfort. This device will provide a constant forward operating speed by mechanically holding the speed control pedal at a selected position.

◆ **To engage Speed Set Device**

1. Accelerate speed to desired level using Speed Control Pedal, and push the speed set lever down to the "ON" position.
2. Release Speed Control Pedal and desired speed will be maintained.

◆ **To disengage Speed Set Device**

- Depress both brake pedals.

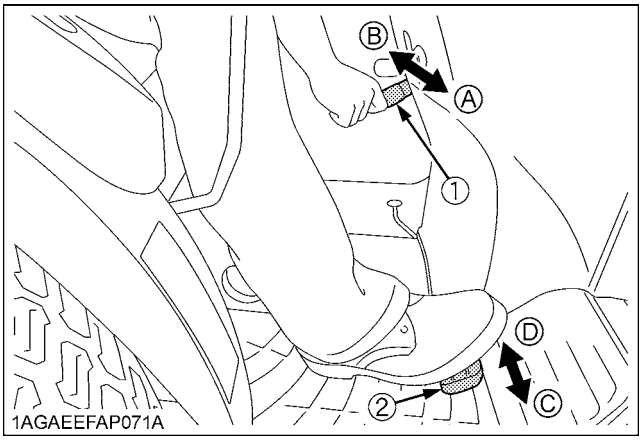

(1) Speed set lever *(A) "ON"*
(2) Speed control pedal *(B) "OFF"*
(C) "Increase"
(D) "Decrease"

NOTE :
- If you step on the pedal on the forward acceleration side, the speed set device will disengage.
- The speed set device does not disengage when the individual right or left brake is applied.
- Speed set device will not operate in reverse.
- When you stand up from the seat with the speed control pedal stepped on or the speed set device engaged (ON), the engine will stop regardless of whether the machine is moving or not. This is because the tractor is equipped with Operator Presence Control system (OPC).

IMPORTANT :
- To prevent the damage of speed set device, do not depress the reverse pedal when the speed set device is engaged.

STOPPING

■Stopping

1. Slow the engine down.
2. Step on the brake pedal.
3. After the tractor has stopped, disengage the PTO, lower the implement to the ground, shift the transmission to neutral and set the parking brake.

CHECK DURING DRIVING

■Immediately Stop the Engine if:

- The engine suddenly slows down or accelerates.
- Unusual noises suddenly are heard.
- Exhaust fumes suddenly become very dark.

■Easy Checker (TM)

If the warning lamps of the Easy Checker (TM) come on during operation, immediately stop the engine, and find the cause as shown below.
Never operate the tractor while Easy Checker (TM) lamp is on.

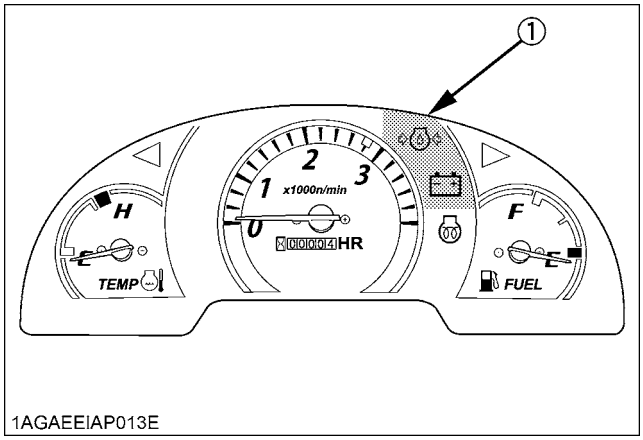

(1) Easy Checker (TM)

Engine oil pressure
If the oil pressure in the engine goes below the prescribed level, the warning lamp in the Easy Checker (TM) will come on.
If this should happen during operation, and it does not go off when the engine is accelerated to more than 1000 rpm, check level of engine oil.
(See "Checking Engine Oil Level" in "DAILY CHECK" in "PERIODIC SERVICE" section.)

Electrical charge
If the alternator is not charging the battery, the warning lamp in the Easy Checker (TM) will come on.
If this should happen during operation, check the electrical charging system or consult your local KUBOTA Dealer.

NOTE :
- For checking and servicing of your tractor, consult your local KUBOTA Dealer for instructions.

■Fuel Gauge

When the key switch is on, the fuel gauge indicates the fuel level.

Be careful not to empty the fuel tank. Otherwise air may enter the fuel system.

Should this happen, the system should be bled. (See "Bleeding Fuel System" in "SERVICE AS REQUIRED" in "PERIODIC SERVICE" section.)

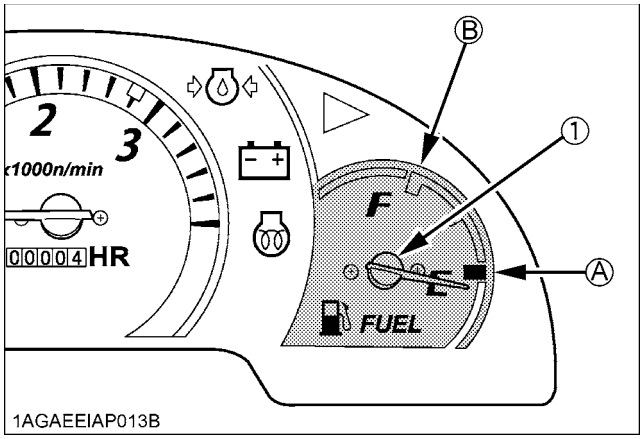

(1) Fuel gauge

(A) "EMPTY"
(B) "FULL"

■Coolant Temperature Gauge

WARNING

To avoid personal injury or death:

- **Do not remove radiator cap until coolant temperature is well below its boiling point. Then loosen the cap slightly to relieve any pressure before removing the cap completely.**

1. With the key switch "ON", this gauge indicates the temperature of the coolant. "C" for "cold" and "H" for "hot".
2. If the indicator reaches the "H" position (red zone), engine coolant is overheated. Check the tractor by referring to "TROUBLESHOOTING" section.

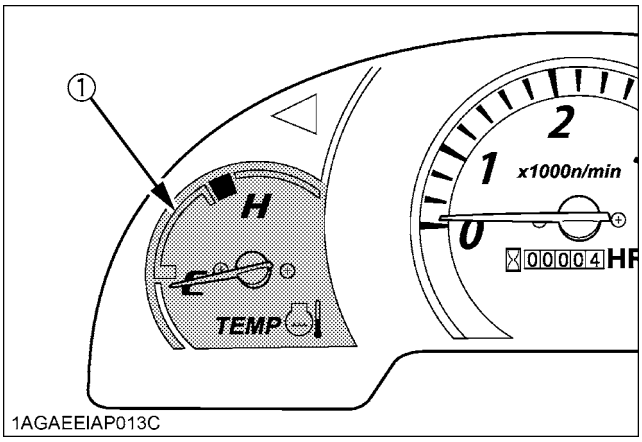

(1) Coolant temperature gauge

■Hourmeter / Tachometer

This meter gives readings for engine speed, PTO shaft speed and the hours the tractor has been operated.

1. The tachometer indicates the engine speed and the 540 PTO shaft speed location on the dial.
2. The hourmeter indicates in 5 digits the hours the tractor has been used; the last digit indicates 1/10 of an hour.

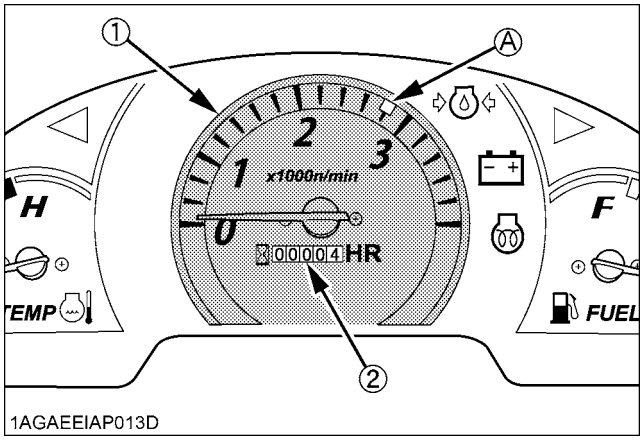

(1) Engine revolution *(A) PTO: 540 rpm*
(2) Hours used

PARKING

■Parking

WARNING

To avoid personal injury or death:

- **Always set the parking brake, stop the engine and remove the key before leaving the tractor seat.**

1. When parking, be sure to set the parking brake.
   To set the parking brake;
   (1) Interlock the brake pedals.
   (2) Depress the brake pedals.
   (3) Latch the brake pedals with the parking brake lever.

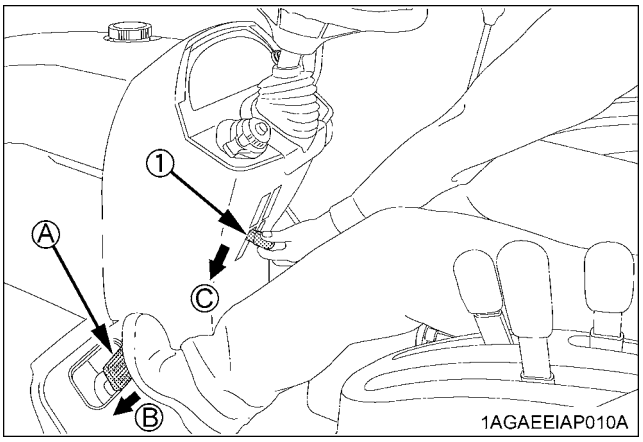

(1) Parking brake lever *(A) Interlock the brake pedals*
(B) "DEPRESS"
(C) "PULL DOWN"

2. Before getting off the tractor, disengage the PTO, lower all implements to the ground, place all control levers in their neutral positions, set the parking brake, stop the engine and remove the key.
3. If it is necessary to park on an incline, be sure to chock the wheels to prevent accidental rolling of the machine.

OPERATING TECHNIQUES

■Differential Lock

WARNING

To avoid personal injury or death due to loss of steering control:

- **Do not operate the tractor at high speed with differential lock engaged.**
- **Do not attempt to turn with the differential lock engaged.**
- **Be sure to release the differential lock before making a turn in field conditions.**

If one of the rear wheels should slip, step on the differential lock pedal. Both wheels will turn together, then reduce slippage.
Differential lock is maintained only while the pedal is depressed.

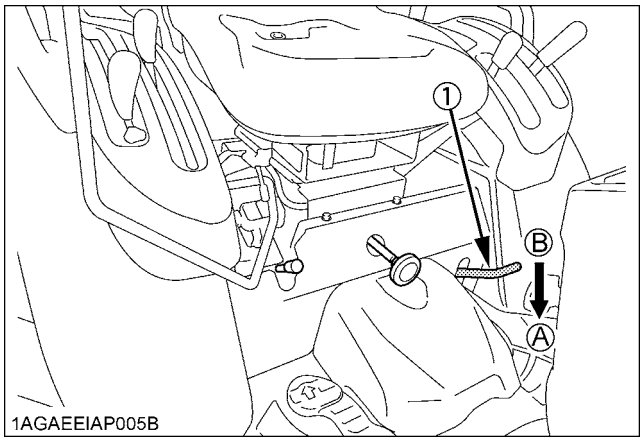

(1) Differential lock pedal *(A) Press to "ENGAGE"*
(B) Release to "DISENGAGE"

IMPORTANT :

- When using the differential lock, always slow the engine down.
- To prevent damage to power train, do not engage differential lock when one wheel is spinning and the other is completely stopped.
- If the differential lock cannot be released in the above manner, step lightly on the brake pedals alternately.

■Operating the Tractor on a Road

WARNING

To avoid personal injury or death:

- **To help assure straight line stops when driving at transport speeds, lock the brake pedals together. Uneven braking at road speeds could cause the tractor to roll-over.**
- **When traveling on road with 3-point hitch mounted implement attached, be sure to have sufficient front weight on the tractor to maintain steering ability. (See "BALLAST" section.)**
- **Towed equipment (without brake) must not exceed 1.5 times the tractor weight when traveling on roads or at high speeds.**

Be sure SMV emblem and hazard light are clean and visible. If towed or rear-mounted equipment obstructs these safety devices, install SMV emblem and hazard light on equipment.
Consult your local KUBOTA dealer for further detail.

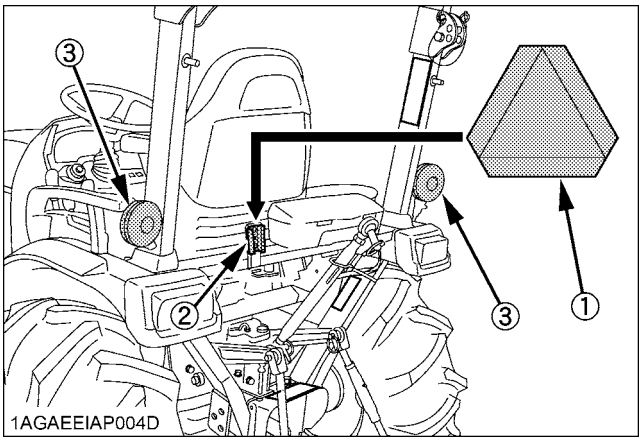

(1) SMV emblem
(2) Bracket
(3) Hazard light

■Operating on Slopes or Rough Terrain

WARNING

To avoid personal injury or death:

- **Always back up when going up a steep slope. Driving forward could cause the tractor to tip over backward. Stay off hills and slopes too steep for safe operation.**
- **Avoid changing gears when climbing or descending a slope.**
- **If operating on a slope, never disengage shift levers to neutral. Doing so could cause loss of control.**
- **Do not drive the tractor close to the edges of ditches or banks which may collapse under the weight of the tractor. Especially when the ground is loose or wet.**

1. Slow down for slopes, rough ground, and sharp turns, especially when transporting heavy, rear mounted equipment.
2. Before descending a slope, be sure that the range lever is in the low so that speed can be controlled without using brakes.

■Transport the Tractor Safely

1. The tractor, if damaged, must be carried on a truck. Secure the tractor tightly with ropes.
2. Follow the instruction below when towing the tractor: Otherwise, the tractor's powertrain may get damaged.
   - Set the all shift levers to "NEUTRAL" position.
   - If possible, start engine and select 2WD, if creep speed is fitted ensure that it is disengaged.
   - Tow the tractor using its front hitch or drawbar.
   - Never tow faster than "10 km/h (6.2 mph)".

■Directions for Use of Power Steering

1. Power steering is activated only while the engine is running. While the engine is stopped, the tractor functions in the same manner as tractors without power steering.
2. When the steering wheel is turned all the way to the stop, the relief valve is activated. Do not hold the steering wheel in this position for a long period of time.
3. Avoid turning the steering wheel while the tractor is stopped, or tires may wear out sooner.
4. The power steering mechanism makes the steering easier. Be careful when driving on a road at high speeds.

■Electrical Outlet

An electrical outlet is supplied for use with implement and electrical equipment .

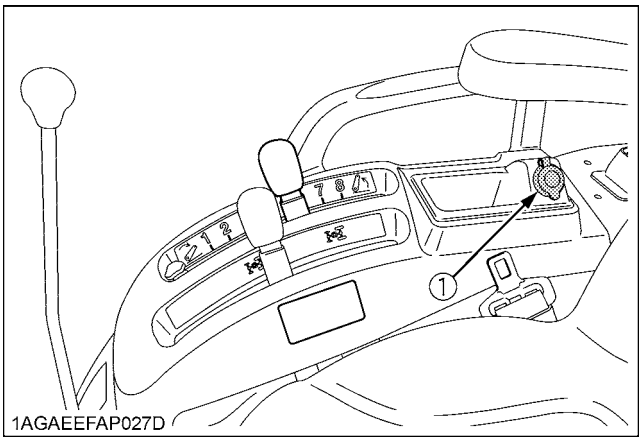

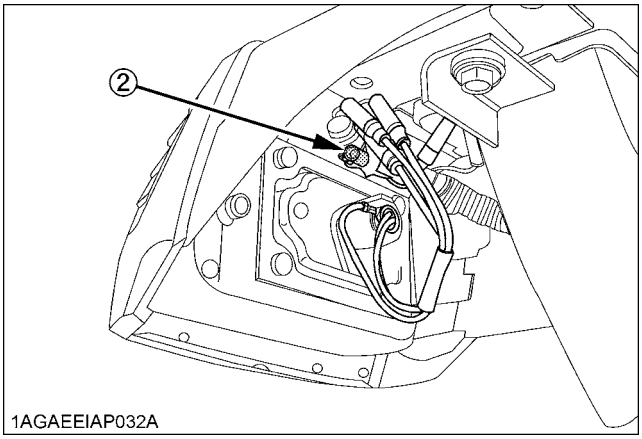

(1) Accessory electrical outlet (DC 12V, MAX 120W)
(2) Electrical outlet for work light (DC 12V, MAX 35W)

PTO

PTO OPERATION

WARNING

To avoid personal injury or death:

- **Before operation, be sure to select the correct PTO lever (mid, mid/rear, rear).**

WARNING

To avoid personal injury or death:

- **Disengage PTO, stop engine, set the parking brake, lower appropriate implements, and allow all rotating components to come to a complete stop before connecting, disconnecting, adjusting, or cleaning any PTO driven equipment.**

■PTO Select Lever

The tractor has a 540 rpm rear PTO speed and a 2 500 rpm mid-PTO speed.

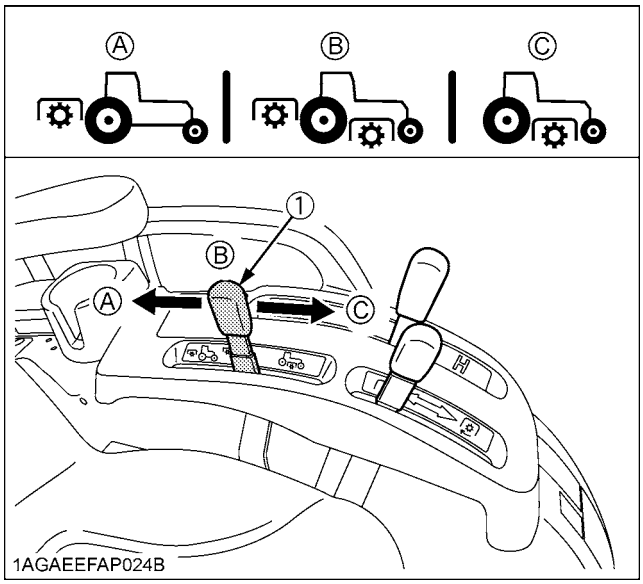

(1) PTO select lever

(A) Rear-PTO position
(B) Mid-Rear-PTO position
(C) Mid-PTO position

◆ **Mid-PTO**

To use Mid-PTO, shift the PTO select lever to Mid-PTO position and the PTO clutch lever to the "ON" position.

NOTE :

- The Mid-PTO is available for KUBOTA approved implements.

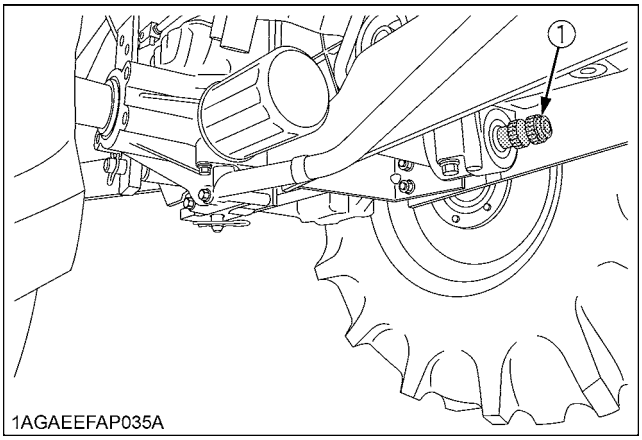

(1) Mid-PTO

◆ **Mid-Rear PTO**

To use mid and rear PTO at the same time, shift the PTO select lever to mid-rear PTO position and the PTO clutch lever to the "ON" position.

◆ **Rear PTO**

To use rear PTO, shift the PTO select lever to rear PTO position and the PTO clutch lever to the "ON" position.

◆ **Mid-PTO speed**

		B2301/B2601
Engine speed	rpm	2753
PTO speed	rpm	2500

◆ **Rear PTO speed**

		B2301/B2601
Engine speed	rpm	2768
Shaft		6-spline
PTO speed	rpm	540

■PTO Clutch Lever

1. The PTO clutch lever engages or disengages the PTO clutch which gives the PTO independent control.
2. Shift the lever to "ON" to engage the PTO clutch. Shift the lever to "OFF" to disengage the PTO clutch.

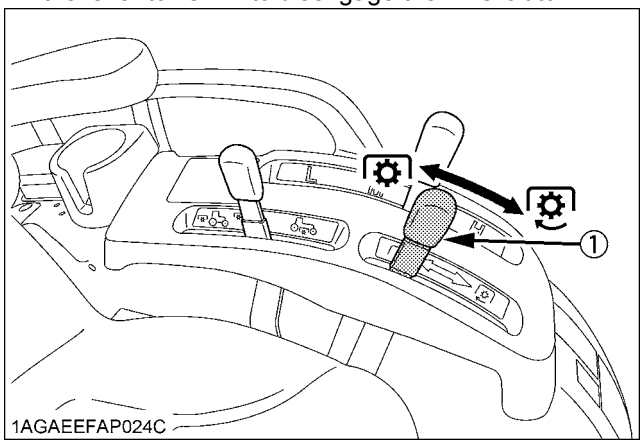

(1) PTO clutch lever *"ON" "ENGAGE"* *"OFF" "DISENGAGE"*

IMPORTANT :

- To avoid shock loads to the PTO, reduce engine throttle from high idle to low idle by pushing up on engine throttle when engaging the PTO, then open the throttle to the recommended engine rpm.
- To avoid damage to PTO clutch and implement, shift the PTO clutch lever slowly, when engaging the PTO clutch. Do not keep the PTO clutch lever half way.
- To avoid damage of transmission, when PTO select lever is not smoothly shifted, slightly shift PTO clutch lever.
- To avoid damage of transmission, do not shift PTO select lever until the PTO has stopped completely.

NOTE :

- Tractor engine will not start if the PTO clutch lever is in the engaged "ON" position.
- When you stand up from the seat with the PTO clutch lever in the "ON" position, the engine will stop regardless of the position of the PTO select lever.
  This is because the tractor is equipped with Operator Presence Control system (OPC).

■Stationary PTO

To park the tractor and use the PTO system (for chipper or pump, for example), start the PTO system in the following steps.

1. Apply the parking brake.
2. Make sure the shift levers are at NEUTRAL, and start the engine.
3. Set the PTO select lever to rear only position.
4. Set the PTO clutch lever to engage "ON".
5. Set the engine speed to provide recommended rear PTO speed.
6. Get off the tractor and place blocks at the tires.

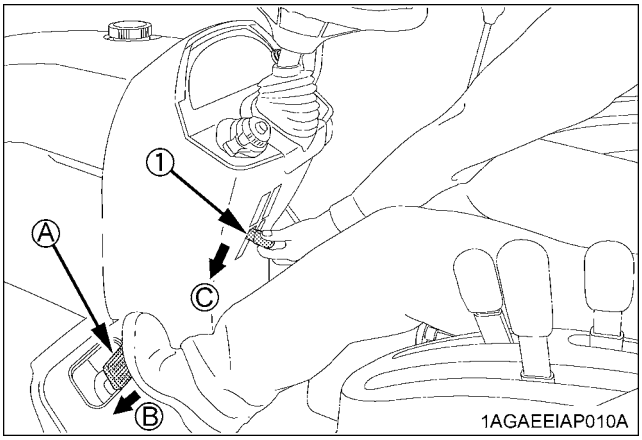

(1) Parking brake lever *(A) Interlock the brake pedals* *(B) "DEPRESS"* *(C) "PULL DOWN"*

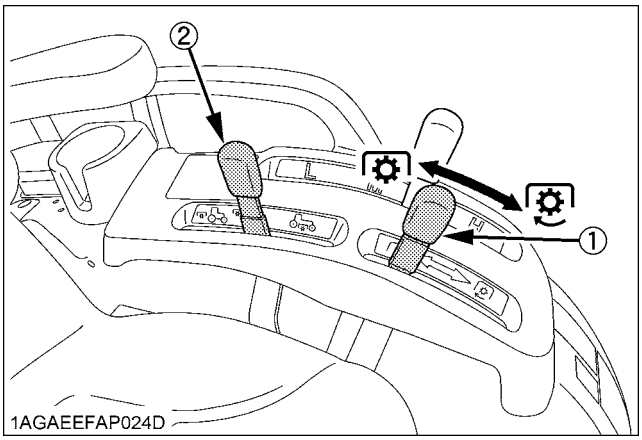

(1) PTO clutch lever *"ON"*
(2) PTO select lever *"OFF"*

NOTE :

- If the PTO system is engaged and you stand up from the seat and release the parking brake, the engine stops automatically after standing up.

3-POINT HITCH & DRAWBAR

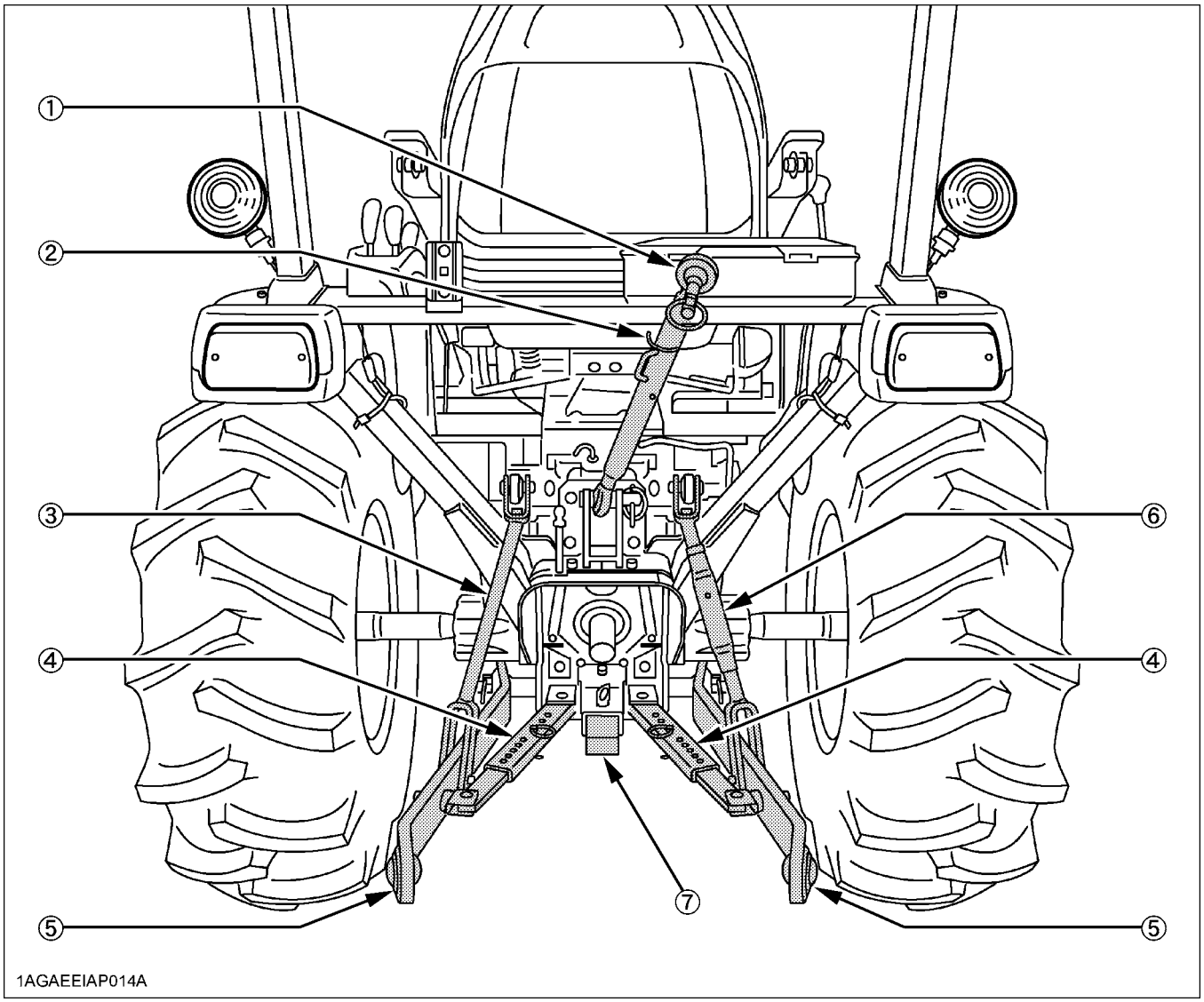

(1) Top link
(2) Top link holder
(3) Lifting rod (Left)
(4) Telescopic stabilizers
(5) Lower link
(6) Lifting rod (Right)
(7) Drawbar

3-POINT HITCH

1. Make preparations for attaching implement.

■Selecting the holes of lifting rods and lower links

There are 2 holes in the lower links. For most operations the lifting rods should be attached to the (A) holes.

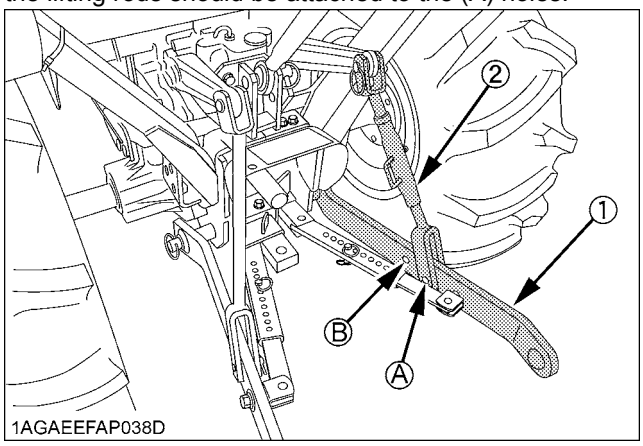

(1) Lower links *Holes: (A), (B)*
(2) Lifting rods

NOTE :
- The lifting rods may be attached to (B) hole for higher lifting height (with reduced lifting force).

■Selecting the Top Link Mounting Holes

Select the proper set of holes by referring to the "Hydraulic Control Unit Use Reference Chart" in "HYDRAULIC UNIT" section.

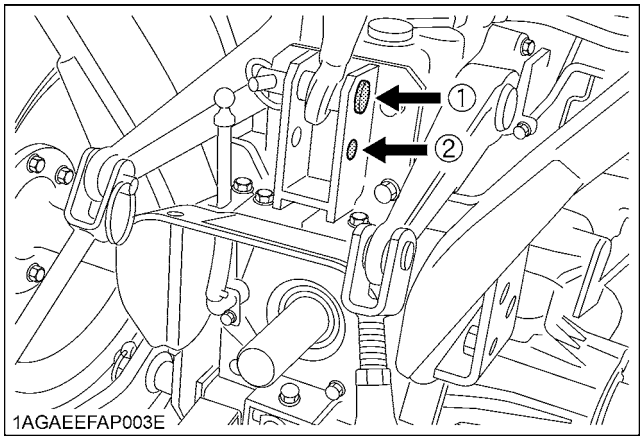

(1) Mounting hole 1
(2) Mounting hole 2

■Drawbar

Remove the drawbar if a close mounted implement is being attached.

2. Attaching and detaching implements.

WARNING

To avoid personal injury or death:
- **Be sure to stop the engine and remove the key.**
- **Do not stand between tractor and implement unless parking brake is applied.**
- **Before attaching or detaching implement, locate the tractor and implement on a firm, flat and level surface.**
- **Whenever an implement or other attachment is connected to the tractor 3-point hitch, check full range of operation for interference, binding or PTO driveline separation.**

■Lifting Rod (Right)

Level a 3-point mounted implement from side to side by turning the adjusting handle to shorten or lengthen the adjustable lifting rod with the implement on the ground. After adjustment, tighten the lock nut securely.

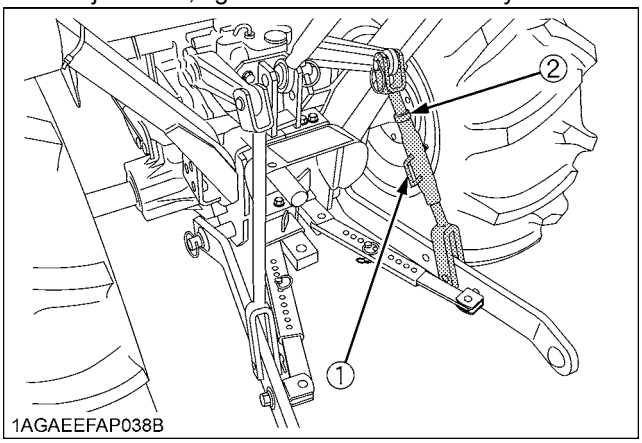

(1) Adjusting handle
(2) Lock nut

■Top Link

1. Adjust the angle of the implement to the desired position by shortening or lengthening the top link.
2. The proper length of the top link varies according to the type of implement being used.

■Telescopic Stabilizers

Adjust the telescopic stabilizers to control horizontal sway of the implement. Select the proper set of holes by referring to the "Hydraulic Control Unit Use Reference Chart" in "AUXILIARY HYDRAULICS" in "HYDRAULIC UNIT" section.

After aligning satisfactorily, insert the set-pin through any one of the 8 holes on the outer tube that align with one of the holes on the inner bar, both stabilizers will be locked.

If the set-pin is inserted through the slot to engage one of the holes on the inner bar, a limited degree of sway will be permitted.

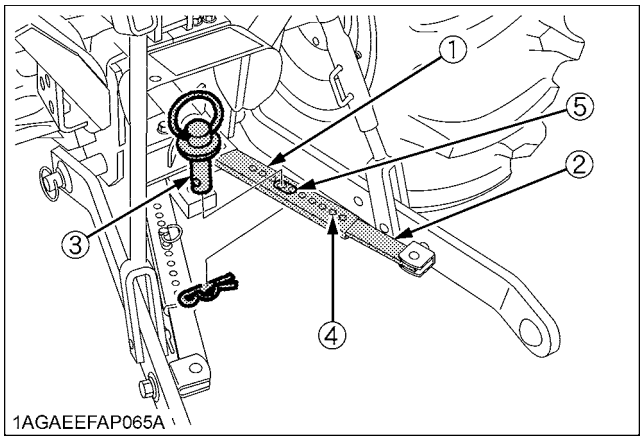

(1) Outer tube
(2) Inner bar
(3) Set-pin
(4) Hole
(5) Slot

DRAWBAR

WARNING

To avoid personal injury or death:

- **Never pull from the top link, the rear axle or any point above the drawbar. Doing so could cause the tractor to tip over rearward causing personal injury or death.**

■Adjusting Drawbar Length

When towing an implement, use of (B) hole in drawbar is recommended.

The acceptable drawbar load is provided in the "IMPLEMENT LIMITATIONS" section.

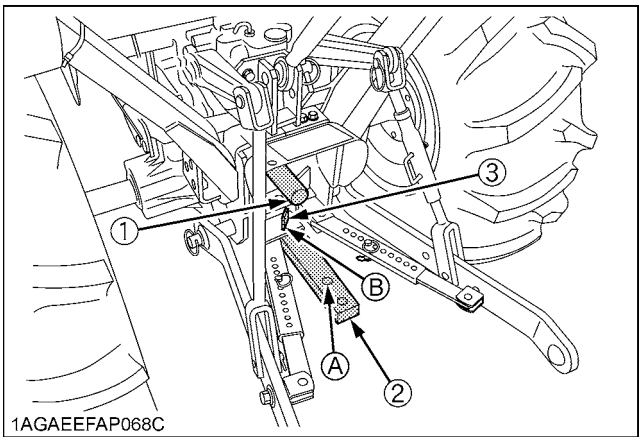

(1) PTO Shaft cap *Hole: (A), (B)*
(2) Drawbar
(3) Drawbar pin

HYDRAULIC UNIT

3-POINT HITCH CONTROL SYSTEM

WARNING

To avoid personal injury or death:

- **Before using the 3-point hitch controls, ensure that no person or object is in the area of the implement or 3-point hitch. Do not stand on or near the implement or between the implement and tractor when operating the 3-point hitch controls.**

■Position Control

This will control the working depth of 3-point hitch mounted implement regardless of the amount of pull required.

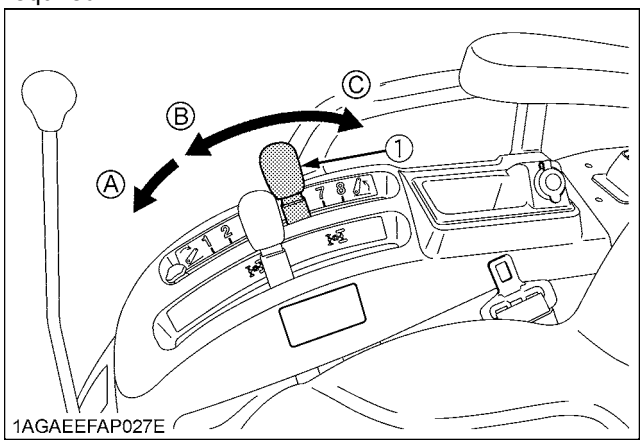

(1) Position control lever *(A) "FLOAT"* *(B) "DOWN"* *(C) "UP"*

IMPORTANT :

- If the 3-point hitch can not be raised by setting the hydraulic control lever to the UP position after long term storage or when changing the transmission oil, turn steering wheel to the right and left several times to bleed air from the system.
- Do not operate until the engine is warmed up. If operation is attempted when the engine is still cold, the hydraulic system may be damaged.
- If noises are heard when implement is lifting after the hydraulic control lever has been activated, the hydraulic mechanism is not adjusted properly. Unless corrected, the unit will be damaged. Contact your KUBOTA Dealer for adjustment.

■3-point Hitch Lowering Speed

WARNING

To avoid personal injury or death:

- **Fast lowering speed may cause damage or injury. Lowering speed of implement should be adjusted to 2 or more seconds.**

The lowering speed of the 3-point hitch can be controlled by adjusting the 3-point hitch lowering speed knob.

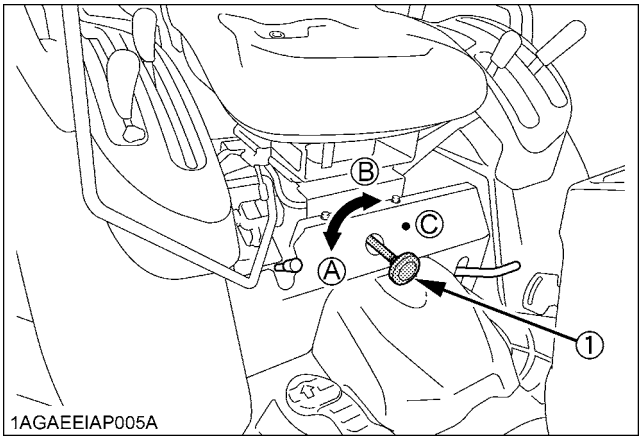

(1) 3-Point hitch lowering speed knob *(A) "FAST"* *(B) "SLOW"* *(C) "LOCK"*

AUXILIARY HYDRAULICS

Hydraulic outlet (rear) is provided on the tractor.

■Hydraulic Block Type Outlet

Hydraulic block type outlet is useful when adding hydraulically operated equipment such as front end loader, front blade, etc.

When an implement is attached
1. Remove the block cover.
2. Attach the block outlet cover. (option)

[Rear outlet]
Hydraulic outlets are provided on the tractor.

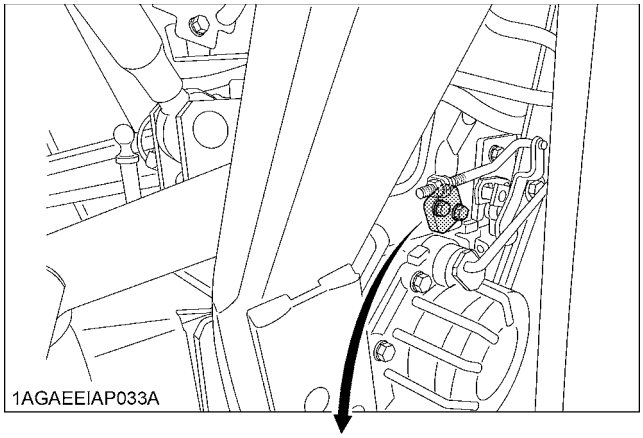

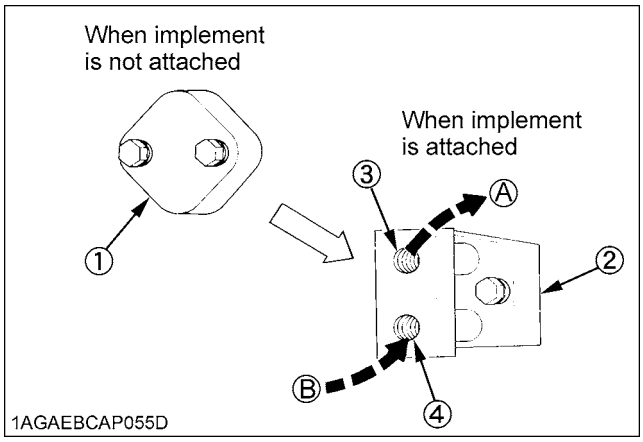

(1) Block cover
(2) Block outlet cover (option)
(3) Outlet
(4) Inlet

(A) To implement inlet
Max. flow
17.9 L/min
(4.7 U.S.gals./min)
Max. pressure
13.0 to 13.8 MPa
(133 to 141 kgf/cm²)
(1891 to 2005 psi)
(B) from implement outlet

NOTE :
- If the implement control valve has a relief valve, the tank port flow from implement should be connected to the port located on the right hand side of transmission case.

DUAL REMOTE HYDRAULIC CONTROL SYSTEM

The tractor is equipped with the double-acting 2-segment hydraulic control valve for the front loader.
To apply the hydraulic power take-off for general attachments, keep the following point in mind.

■Control Lever and Hydraulic Hose Connections

Connect the control lever in its specified direction and the hydraulic hoses to their specified ports.

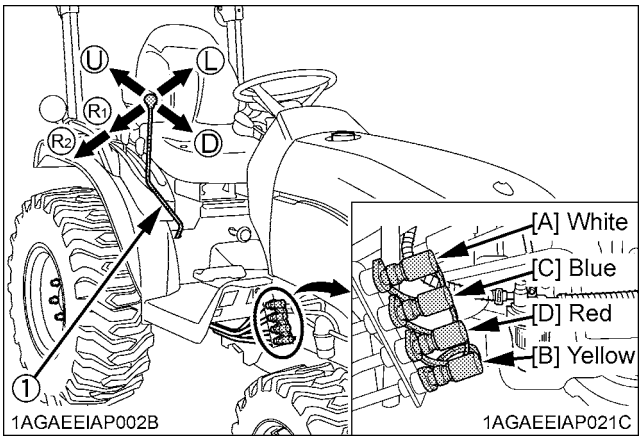

(1) Loader / Remote control valve lever
(R) "RIGHT"
(L) "LEFT"
(U) "UP"
(D) "DOWN"

Pressure →
Returning ←

Hydraulic outlet ports of first segment

Lever		UP		DOWN	
Port	[A]	In	←	Out	→
	[B]	Out	→	In	←

Hydraulic outlet ports of second segment

Lever		RIGHT		LEFT	
Port	[C]	In	←	Out	→
	[D]	Out	→	In	←

IMPORTANT :

To avoid damage of the attachments:

- Do not connect attachments through the hydraulic motor to the [C] and [D] ports. If the control lever is moved to the Regeneration position (R1), the seals on the hydraulic motor will be damaged.
- This control valve is provided with the Regeneration position. When the [C] and [D] ports are used to take off hydraulic power for the hydraulic cylinder, be sure to connect the [C] port to the "Head-End" side port of the hydraulic cylinder.
- Make the following connections when using this valve to take off hydraulic power for the hydraulic cylinder.

Colored Coupler	Hydraulic Cylinder port
[B: Yellow], [C: Blue]	Head-End side
[A: White], [D: Red]	Rod-End side

■Loader / Remote Control Valve Lever

1. Before moving the lever, make sure that the hydraulic hoses for attachments are connected.
2. Move the lever diagonally (a, b, c shown in the figure), and the first and second segments can be controlled simultaneously.

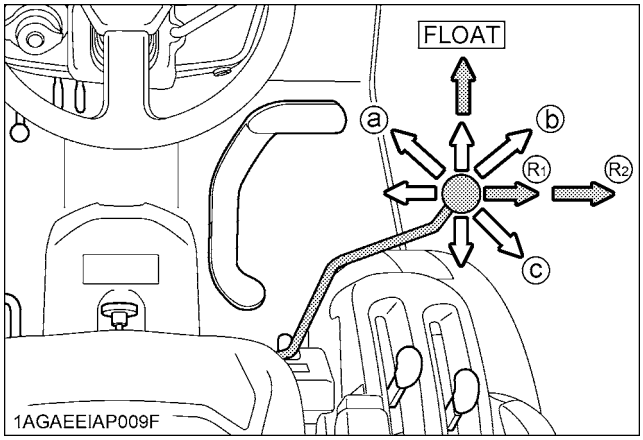

NOTE :

- Move the lever to the "FLOAT" position, and it will be held there by the detent mechanism. To use the valve as a floating valve with detents, connect the hydraulic hoses to ports [A] and [B].
- When taking off hydraulic power from port [D], the flow rate can be adjusted in 2 stages with the lever.
  The flow rate is high at position (R1) and low at position (R2). Move the lever to position (R1) or (R2) depending on the attachment in use.

■Valve Lock

WARNING

To avoid injury or death from crushing:

- **Do not utilize the valve lock for machine maintenance or repair.**
- **The valve lock is to prevent accidental actuation when implement is not in use or during transport.**

The control valve is equipped with a valve lock feature.
The control valve is locked in the "LOCK" position.
The lock is not intended and will not prevent a leak down of the implement during the period of storage.

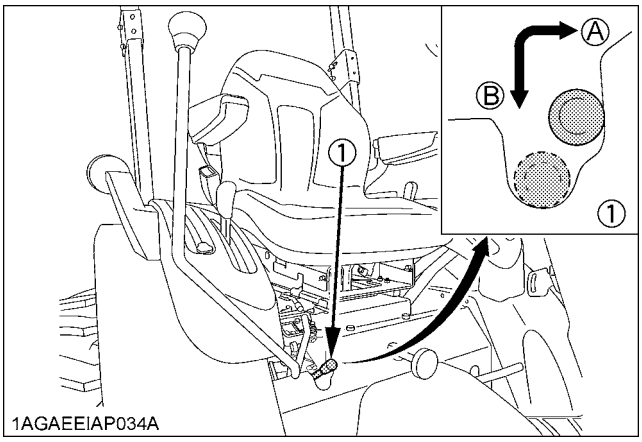

(1) Lock lever

(A) "UNLOCK"
(B) "LOCK"

■Hydraulic Control Unit Use Reference Chart

In order to handle the hydraulics properly, the operator must be familiar with the following. Though this information may not be applicable to all types of implements and soil conditions, it is useful for general conditions.

Implement	1AGAIAZAP122A Soil condition	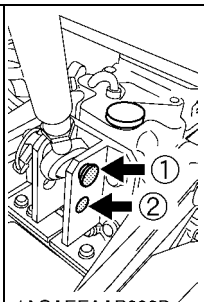 1AGAEEAAP030B Top link mounting holes	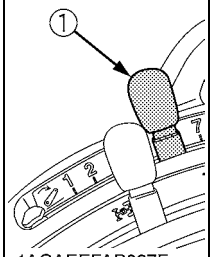 1AGAEEFAP027F (1) Position control lever	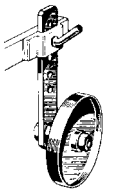 1AGAIAZAP070A Gauge wheel	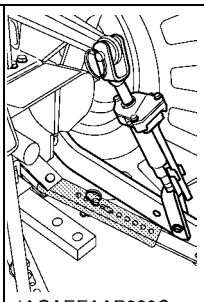 1AGAEEAAP029C Telescopic stabilizers	Remarks
Moldboard plow	Light soil Medium soil Heavy soil	(1) is standard. (2) is used only when there is some obstacle that prevents you from using the standard.	Position control	YES/NO	Loose	Insert the set-pin through the slot on the outer tube that align with one of the holes on the inner bar. For implements with gauge wheels, lower the implements to the ground.
Disc plow	---					
Harrower (spike, springtooth, disc type)	---					
Sub-soiler						
Weeder, ridger	---			YES	Tighten	Telescopic stabilizer should be tight enough to prevent excessive implement movement when implement is in raised position. For implements with gauge wheels, lower the implements to the ground.
Earthmover, digger, scraper, manure fork, rear carrier				YES/NO		
Mower (mid-and rear-mount type), hayrake, tedder...						

TIRES, WHEELS AND BALLAST

TIRES

WARNING

To avoid personal injury or death:

- **Do not attempt to mount a tire on a rim. This should be done by a qualified person with the proper equipment.**
- **Always maintain the correct tire pressure. Do not inflate tires above the recommended pressure shown in the operator's manual.**

IMPORTANT :

- Do not use tires other than those approved by KUBOTA.

■Inflation Pressure

Though the tire pressure is factory-set to the prescribed level, it naturally drops slowly over the course of time. Thus, check it regularly and inflate as necessary.

	Tire sizes	Inflation Pressure
Rear	9.5 - 16, 4PR	140kPa(1.4kgf/cm^2, 20psi)
	9.5 - 18, 4PR	160kPa(1.6kgf/cm^2, 23psi)
	315/75D - 15, 4PR	100kPa(1.0kgf/cm^2, 14psi)
	11.2 - 16, 4PR	130kPa(1.3kgf/cm^2, 18psi)
	12 - 16.5, 4PR	270kPa(2.7kgf/cm^2, 40psi)
	31x15.5 - 15, 4PR	140kPa(1.4kgf/cm^2, 20psi)
	33x12.5 - 15, 4PR	140kPa(1.4kgf/cm^2, 20psi)
Front	6 - 12, 4PR	200kPa(2.0kgf/cm^2, 28psi)
	7 - 12, 4PR	170kPa(1.7kgf/cm^2, 24psi)
	21x8.00 - 10, 4PR	160kPa(1.6kgf/cm^2, 23psi)
	23x8.50 - 12Turf, 4PR	150kPa(1.5kgf/cm^2, 22psi)
	23x8.50 - 12Ind., 4PR	250kPa(2.5kgf/cm^2, 35psi)
	24x8.50 - 12, 4PR	160kPa(1.6kgf/cm^2, 23psi)

■Dual Tires

Dual tires are not approved.

WHEEL ADJUSTMENT

WARNING

To avoid personal injury or death:

- **When working on slopes or when working with trailer, set the wheel tread as wide as practical for maximum stability.**
- **Support tractor securely on stands before removing a wheel.**
- **Do not work under any hydraulically supported devices. They can settle, suddenly leak down, or be accidentally lowered. If necessary to work under tractor or any machine elements for servicing or adjustment, securely support them with stands or suitable blocking beforehand.**
- **Never operate tractor with a loose rim, wheel, or axle.**

■Front Wheels

Front tread width can not be adjusted.

IMPORTANT :

- Do not turn front discs to obtain wider tread.
  In setting up the front wheels, make sure that the inflation valve stem of the tires face outward.
- When re-fitting or adjusting a wheel, tighten the bolts to the following torques then recheck after driving the tractor 200 m (200 yards) and 10 times of shuttle movement by 5 m (5 yards), and thereafter according to service interval. (See "MAINTENANCE" section.)

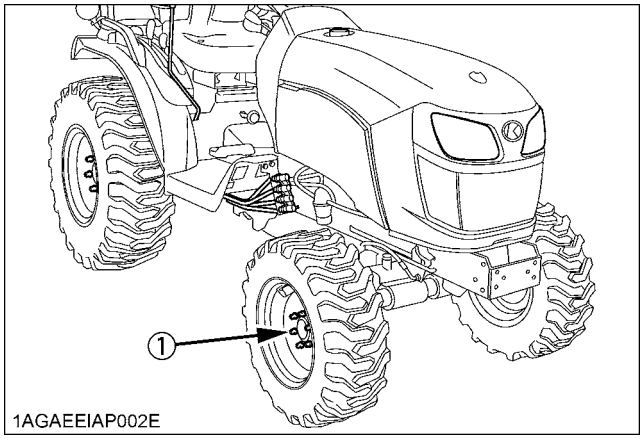

(1) 79 to 92 N-m (8.1 to 9.4 kgf-m, 58.3 to 67.9 ft-lbs)

WARNING

To avoid personal injury or death:

- **Before jacking up the tractor, park it on a firm and level ground and chock the rear wheels.**
- **Fix the front axle to keep it from pivoting.**
- **Select jacks that withstand the machine weight and set them up as shown below.**

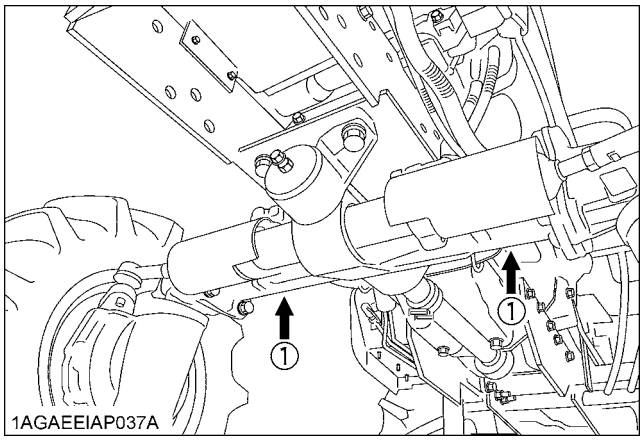

(1) Jack point

■Rear Wheels

Rear tread width can not be adjusted.

IMPORTANT :

- When re-fitting or adjusting a wheel, tighten the bolts to the following torques then recheck after driving the tractor 200 m (200 yards) and 10 times of shuttle movement by 5 m (5 yards), and thereafter according to service interval. (See "MAINTENANCE" section.)

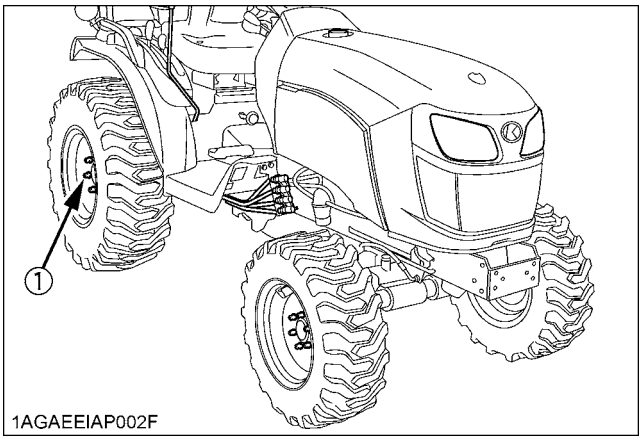

(1) 145 to 150 N-m (14.8 to 15.3 kgf-m, 107.0 to 110.6 ft-lbs)

[Wheels with beveled or tapered holes]

- Use the tapered side of lug nut.

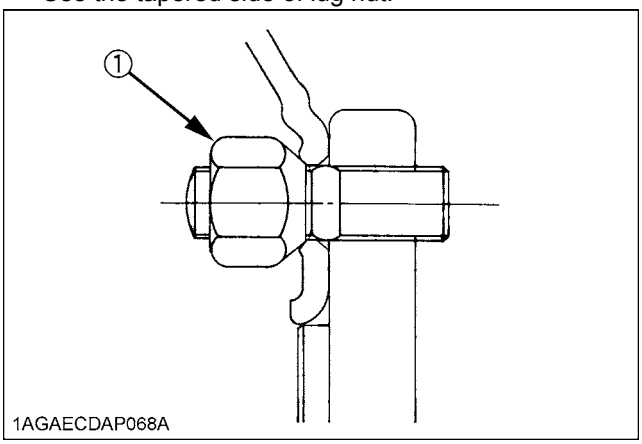

(1) Lug nut

[Wheels without beveled or tapered holes]

- Use the flat side of the lug nut. Make sure to apply the spring washer.

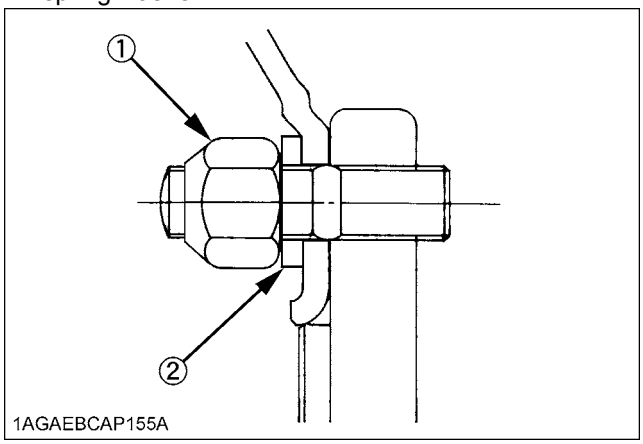

(1) Lug nut
(2) Spring washer

WARNING

To avoid personal injury or death:

- **Before jacking up the tractor, park it on a firm and level ground and chock the front wheels.**
- **Fix the front axle to keep it from swinging.**
- **Select jacks that withstand the machine weight and set them up as shown below.**

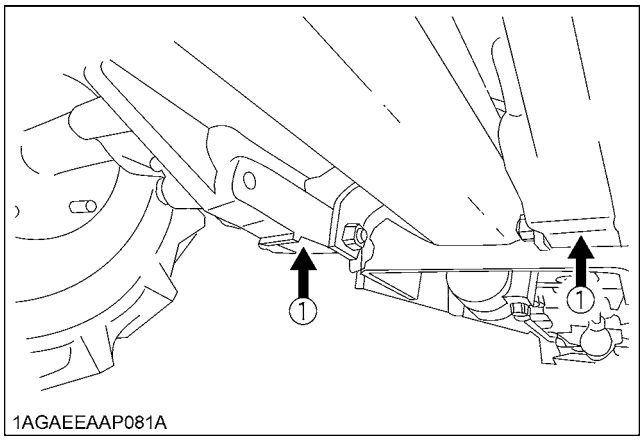

(1) Jack point

■Treads

◆ Front

[USA models]

Tire	Models	Tread
6 - 12 Farm	B2301	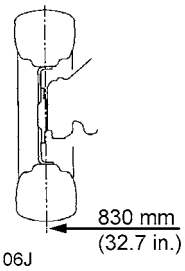
7 - 12 Farm	B2601	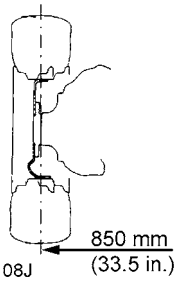
23x8.50 - 12 Turf	B2301 B2601	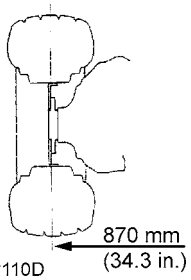
21x8.00 - 10 Bar	B2301 B2601	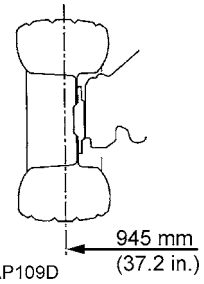
23x8.50 - 12 Ind.	B2301 B2601	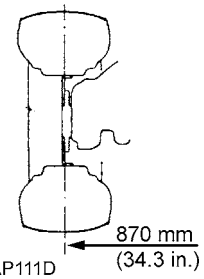

[Except USA models]

Tire	Models	Tread
6 - 12 Farm	B2301	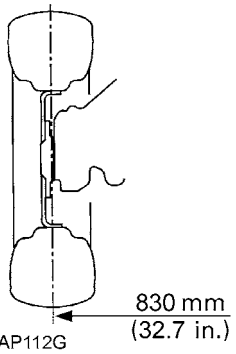 1AGAEBCAP112G
7 - 12 Farm	B2601	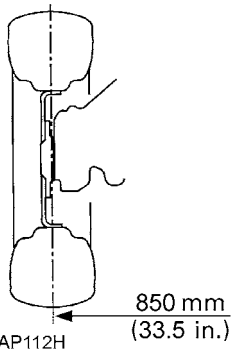 1AGAEBCAP112H
24x8.50 - 12 Turf	B2301 B2601	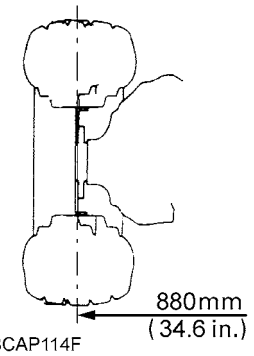 1AGAEBCAP114F

◆ **Rear**

[USA models]

Tire	Models	Tread
9.5 - 16 Farm	B2301	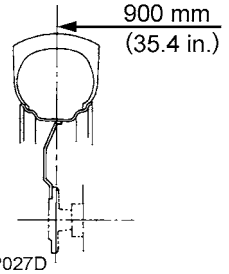 1AGAEBMAP027D
11.2 - 16 Farm	B2601	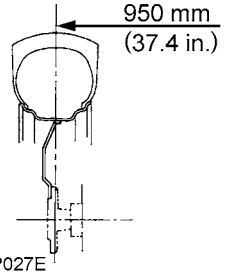 1AGAEBMAP027E
33x 12.5 - 15 Turf	B2301 B2601	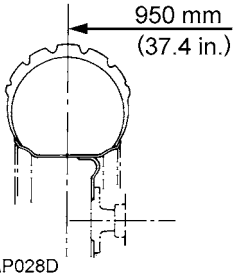 1AGAEBMAP028D
31x 15.5 - 15 Bar	B2301 B2601	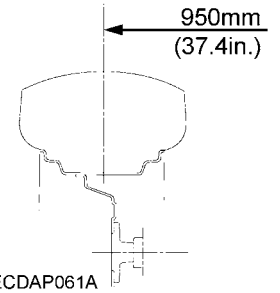 1AGAECDAP061A
12 - 16.5 Ind.	B2301 B2601	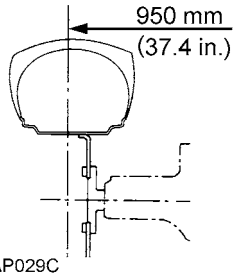 1AGAEBMAP029C

[Except USA models]

Tire	Models	Tread
9.5 - 16 Farm	B2301	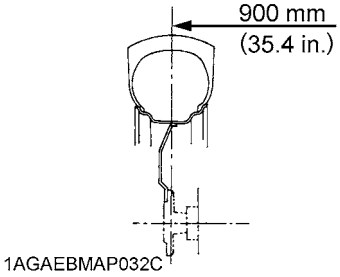
9.5 - 18 Farm	B2601	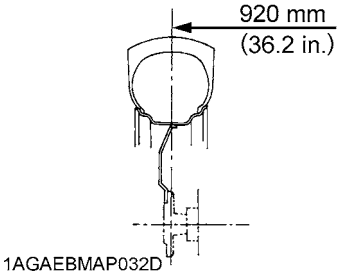
315/75D - 15 Turf	B2301 B2601	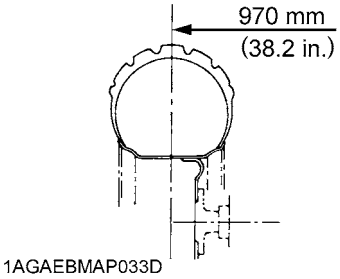

BALLAST

WARNING

To avoid personal injury or death:

- **Additional ballast will be needed for transporting heavy implements. When the implement is raised, drive slowly over rough ground, regardless of how much ballast is used.**
- **Do not fill the front wheels with liquid.**

■Front Ballast

Add weights if needed for stability and improving traction. Heavy pulling and heavy rear mounted implements tend to lift front wheels. Add enough ballast to maintain steering control and prevent tip over.
Remove weight when no longer needed.

◆ Front End Weights (option)

The front end weights can be attached to the bumper.
See your implement operator's manual for required number of weights or consult your local KUBOTA Dealer to use.

NOTE :

[For installation of up to 3 weights]

- Besides the weight, mounting bolt kit(s) are required for mounting the weight.

[For installation of up to 5 weights]

- Besides the weight, a front weight bracket and mounting bolt kit(s) are required for mounting the weight.

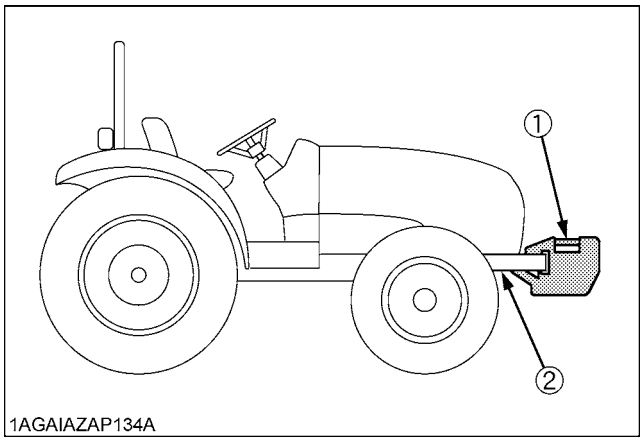

(1) Front end weights (option)
(2) Front weight bracket (option)

IMPORTANT :

- Do not overload tires.
- Add no more weight than indicated in chart.

Maximum weight	25 kg x 5 pieces (125 kg (275lbs.))

■Rear Ballast

Add weight to rear wheels if needed to improve traction or for stability. The amount of rear ballast should be matched to job and the ballast should be removed when it is not needed.
The weight should be added to the tractor in the form of liquid ballast.

◆ Liquid Ballast in Rear Tires

Water and calcium chloride solution provides safe economical ballast. Used properly, it will not damage tires, tubes or rims. The addition of calcium chloride is recommended to prevent the water from freezing. Use of this method of weighting the wheels has the full approval of the tire companies. See your tire dealer for this service.

Liquid weight per tire (75 Percent filled)

Tire sizes	9.5 - 16	11.2-16
Slush free at -10 ℃ (14 ℉) Solid at -30 ℃ (-22 ℉) [Approx. 1 kg(2 lbs.) $CaCl_2$ per 4L (1 gal.) of water]	54 kg (119 lbs.)	70 kg (155 lbs.)
Slush free at -24 ℃ (-11 ℉) Solid at -47 ℃ (-52 ℉) [Approx. 1.5 kg(3.5 lbs.) $CaCl_2$ per 4L (1 gal.) of water]	57 kg (126 lbs.)	74 kg (163 lbs.)
Slush free at -47 ℃ (-52 ℉) Solid at -52 ℃ (-62 ℉) [Approx. 2.25 kg(5 lbs.) $CaCl_2$ per 4L (1 gal.) of water]	60 kg (132 lbs.)	78 kg (172 lbs.)

IMPORTANT :

- Do not fill tires with water or solution more than 75% of full capacity (to the level of valve stem at 12 o'clock position).

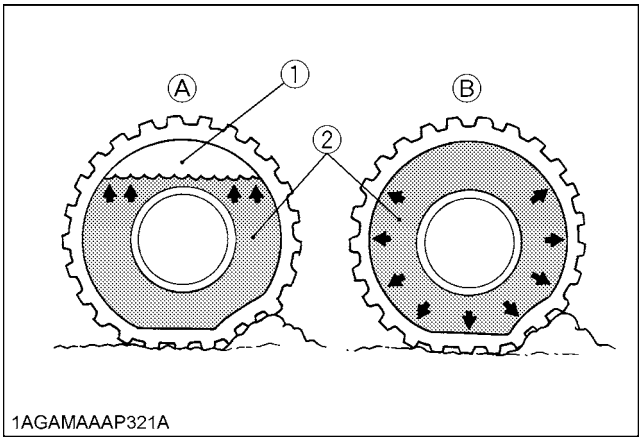

(1) Air
(2) Water

(A) Correct: 75% Full
Air compresses like a cushion
(B) Incorrect: 100% Full
Water can not be compressed

MAINTENANCE

SERVICE INTERVALS

No.	Items		Indication on hour meter															Interval	Ref. page		
			50	100	150	200	250	300	350	400	450	500	550	600	650	700	800				
1	Engine oil	Change	◎			○				○				○			○	every 200 Hr	61		
2	Engine oil filter	Replace	◎			○				○				○			○	every 200 Hr	60		
3	Transmission oil filters [HST]	Replace	◎			○				○				○			○	every 200 Hr	61		
4	Hydraulic oil filter	Replace	◎							○							○	every 400 Hr	63		
5	Transmission fluid	Change								○							○	every 400 Hr	62		
6	Front axle case oil	Change								○							○	every 400 Hr	65		
7	Front axle pivot	Adjust								○							○	every 400 Hr	64		
8	Engine start system	Check	○	○	○	○	○	○	○	○	○	○	○	○	○	○	○	every 50 Hr	55		
9	Greasing	-	○	○	○	○	○	○	○	○	○	○	○	○	○	○	○	every 50 Hr	55		
10	Wheel bolt torque	Check	○	○	○	○	○	○	○	○	○	○	○	○	○	○	○	every 50 Hr	56		
11	Battery condition	Check		○		○		○		○		○		○		○	○	every 100 Hr	56	*4	
12	Air cleaner element [Double element type] Primary element	Clean		○		○		○		○		○		○		○	○	every 100 Hr	58	*1	@
		Replace																every 1000 Hr or 1 year	65	*5	
	Air cleaner element [Double element type] Secondary element	Replace																every 1000 Hr or 1 year	65	*5	
13	Fuel filter element	Clean		○		○		○		○		○		○		○	○	every 100 Hr	58		@
		Replace								○							○	every 400 Hr	64		
14	Fan belt	Adjust		○		○		○		○		○		○		○	○	every 100 Hr	59		
15	Brake	Adjust		○		○		○		○		○		○		○	○	every 100 Hr	60		

No.	Items		Indication on hour meter															Interval	Ref. page		
			50	100	150	200	250	300	350	400	450	500	550	600	650	700	800				
16	Radiator hose and clamp	Check																every 1 year	67	*8	
		Replace																every 4 year	70	*8	
17	Fuel line	Check																every 1 year	68	*8	@
		Replace																every 4 year	70	*2 *8	
18	Intake air line	Check																every 1 year	67	*8	@
		Replace																every 4 year	70	*2 *8	
19	Toe-in	Adjust				○				○				○			○	every 200 Hr	62		
20	Engine valve clearance	Adjust															○	every 800 Hr	65	*3	
21	Fuel injection nozzle Injection pressure	Check																every 1500 Hr	65	*3	@
22	Injection pump	Check																every 3000 Hr	67	*3	@
23	Cooling system	Flush																every 2000 Hr or 2 year	65	*7	
24	Coolant	Change																every 2000 Hr or 2 year	65	*7	
25	Fuel system	Bleed																service as required	70		
26	Clutch housing water	Drain																	70		
27	Fuse	Replace																	71		
28	Light bulb	Replace																	71		
29	Fuel line	Replace																	71	*8	
30	Radiator	Replace																	71	*8	
31	Intake air line	Replace																	71	*8	

IMPORTANT :

- The jobs indicated by ◎ must be done after the first 50 hours of operation.
  *1 Air cleaner should be cleaned more often in severe dusty conditions.
  *2 Replace only if necessary.
  *3 Consult your local KUBOTA Dealer for this service.
  *4 When the battery is used for less than 100 hours per year, check the fluid level annually.
  *5 Replace in 1,000 hours or 1 year, whichever comes faster.
  *6 Check in 1,000 hours or 1 year, whichever comes faster.
  *7 Replace in 2,000 hours or 2 years, whichever comes faster.
  *8 Replace if any deterioration (crack, hardening, scar or deformation) or damage occurred.
  However, must be replaced every 4 years regardless of the condition.
- The items listed above (@ marked) are registered as emission related critical parts by KUBOTA in the U.S.EPA nonroad emission regulation. As the engine owner, you are responsible for the performance of the required maintenance on the engine according to the above instruction.
  Please see the Warranty Statement in detail.

LUBRICANTS, FUEL AND COOLANT

No.	Locations	Capacities	Lubricants	
		B2301/B2601		
1	Fuel	23 L (6.1 U.S.gals.)	No. 2-D S15 diesel fuel No. 1-D S15 diesel fuel if temperature is below -10℃(14℉)	
2	Coolant (with recovery tank)	3.8 L (4.0 U.S.qts.)	Fresh clean soft water with anti-freeze	
3	Engine crankcase (with filter)	3.1 L (3.3 U.S.qts.)	● Engine oil : Refer to next page.	
			Above 25℃(77℉)	SAE30, SAE10W-30 or 15W-40
			-10℃ to 25℃ (14 to 77℉)	SAE20, SAE10W-30 or 15W-40
			Below -10℃(14℉)	SAE10W-30
4	Transmission case	15 L (4.0 U.S.gals.)	● KUBOTA SUPER UDT-2 fluid	
5	Front axle case	3.5 L (3.7 U.S.qts.)	● KUBOTA SUPER UDT-2 fluid or SAE80 - SAE 90 gear oil	
6	Greasing	No. of greasing points	Capacity	Type of grease
	● Top link	1	Until grease overflows	Multipurpose Grease NLGI-2 OR NLGI-1 (GC-LB)
	● Lift rod [RH]	1		
	● Brake pedal	1		
	● Battery terminals	2	moderate amount	

NOTE :

The product name of KUBOTA genuine UDT fluid may be different from that in the Operator's Manual depending on countries or territories. Consult your local KUBOTA Dealer for further details.

For North American market

NOTE :

◆ **Engine Oil:**

- Oil used in the engine should have an American Petroleum Institute (API) service classification and Proper SAE Engine Oil according to the ambient temperatures as shown above:

- Refer to the following table for the suitable API classification engine oil according to the engine type (with internal EGR, external EGR or non-EGR) and the fuel.

Fuel used	Engine oil classification (API classification)	
	Oil class of engines except external EGR	Oil class of engines with external EGR
Ultra Low Sulfur Fuel [<0.0015% (15 ppm)]	**CF, CF-4, CG-4, CH-4** or **CI-4**	**CF** or **CI-4** (Class CF-4, CG-4 and CH-4 engine oils cannot be used on EGR type engines)

EGR: Exhaust Gas Re-circulation

- The CJ-4 engine oil is intended for DPF (Diesel Particulate Filter) type engines, and cannot be used on this tractor.

	except external EGR	with external EGR
Models	B2301 / B2601	---

◆ **Fuel:**

- Cetane number of 45 is minimum. Cetane number greater than 50 is preferred, especially for temperatures below -20℃ (-4℉) or elevations above 1500 m (5000 ft).
- Diesel fuels specified to EN 590 or ASTM D975 are recommended.
- No.2-D is a distillate fuel of lower volatility for engines in industrial and heavy mobile service. (SAE J313 JUN87)

◆ **Transmission Oil:**

*KUBOTA Super UDT-2: For an enhanced ownership experience, we highly recommend Super UDT-2 to be used instead of standard hydraulic/transmission fluid.
Super UDT-2 is a proprietary KUBOTA formulation that delivers superior performance and protection in all operating conditions.
Regular UDT is also permitted for use in this machine.

- Indicated capacities of water and oil are manufacturer's estimate.

For other than North American market

NOTE :

◆ **Engine Oil:**

- Oil used in the engine should have an American Petroleum Institute (API) service classification and Proper SAE Engine Oil according to the ambient temperatures as shown above:
- With the emission control now in effect, the CF-4 and CG-4 lubricating oils have been developed for use of a low-sulfur fuel on on-road vehicle engines. When an off-road vehicle engine runs on a high-sulfur fuel, it is advisable to employ the "CF or better" lubricating oil with a high Total Base Number (TBN of 10 minimum).

- Refer to the following table for the suitable API classification engine oil according to the engine type (with internal EGR, external EGR or non-EGR) and the fuel (low-sulfur or high-sulfur fuel).

Fuel used	Engine oil classification (API classification)	
	Oil class of engines except external EGR	Oil class of engines with external EGR
High Sulfur Fuel [≧ 0.05% (500 ppm)]	**CF** (If the "CF-4, CG-4, CH-4 or CI-4" lubricating oil is used with a high-sulfur fuel, change the lubricating oil at shorter intervals. (approximately half))	---
Low Sulfur Fuel [<0.05% (500 ppm)] or Ultra Low Sulfur Fuel [<0.0015% (15 ppm)]	**CF, CF-4, CG-4, CH-4** or **CI-4**	**CF** or **CI-4** (Class CF-4, CG-4 and CH-4 engine oils cannot be used on EGR type engines)

EGR: Exhaust Gas Re-circulation

- The CJ-4 engine oil is intended for DPF (Diesel Particulate Filter) type engines, and cannot be used on this tractor.

	except external EGR	with external EGR
Models	B2301 / B2601	---

◆ **Fuel:**

- Cetane number of 45 minimum. Cetane number greater than 50 is preferred, especially for temperatures below -20℃ or elevations above 1500 m.
- If diesel fuel with sulfur content greater than 0.5% (5000 ppm) sulfur content is used, reduce the service interval for engine oil and filter by 50%.
- NEVER use diesel fuel with sulfur content greater than 0.05% (500 ppm) for EXTERNAL EGR type engine.
- DO NOT use diesel fuel with sulfur content greater than 1.0% (10000 ppm).
- Diesel fuels specified to EN 590 or ASTM D975 are recommended.
- No.2-D is a distillate fuel of lower volatility for engines in industrial and heavy mobile service. (SAE J313 JUN87)

◆ **Transmission Oil:**

The oil used to lubricate the transmission is also used as hydraulic fluid. To ensure proper operation of the hydraulic system and to complete lubrication of the transmission, it is important that a multi-grade transmission fluid is used in this system. We recommend the use of **KUBOTA UDT or SUPER UDT fluid** for optimum protection and performance. (Consult your local KUBOTA Dealer for further detail.)
Do not mix different brands together.

- Indicated capacities of water and oil are manufacturer's estimate.

PERIODIC SERVICE

HOW TO OPEN THE HOOD

WARNING

To avoid personal injury or death from contact with moving parts;

- **Never open the hood or engine side cover while the engine is running.**
- **Do not touch muffler or exhaust pipes while they are hot; Severe burns could result.**
- **Support hood with other hand while unlocking support rod.**

■Hood

◆ **Open the hood**

1. Slightly pull up the hood to unlock it with pulling the release lever.

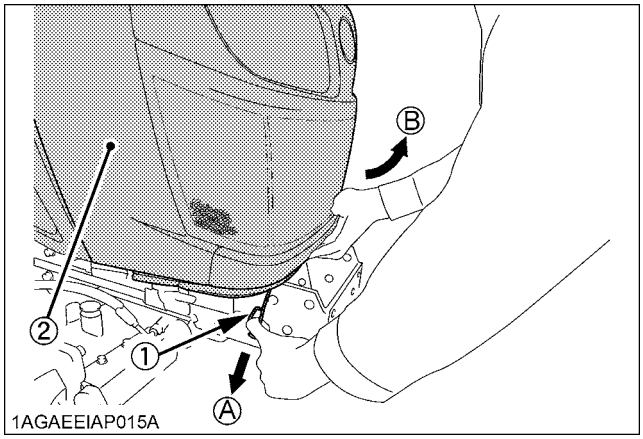

(1) Release lever *(A) "PULL"*
(2) Hood *(B) "SLIGHTLY PULL UP"*

2. Open the hood by holding its bottom with both hands.

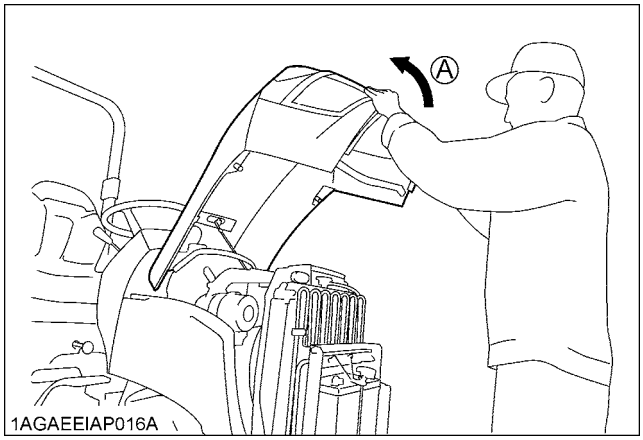

(A) "OPEN"

◆ **Close the hood**

1. To close the hood, hold the hood and release the support rod.

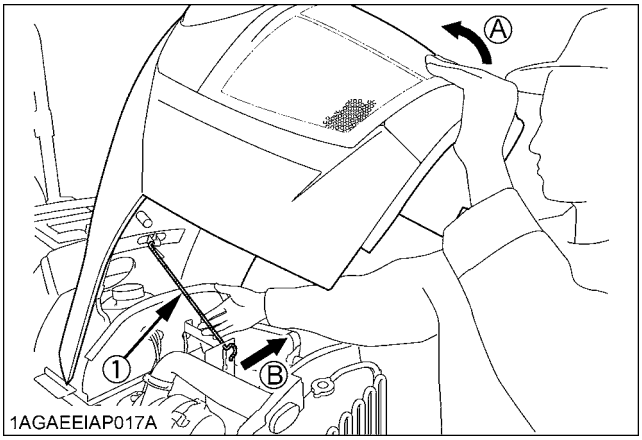

(1) Support rod *(A) "HOLD"*
(B) "PULL"

2. In closing the hood, use both hands again.

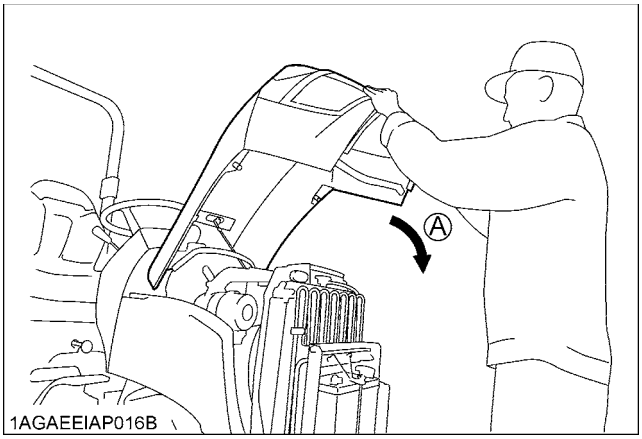

(A) "CLOSE"

3. Push the hood with both hands to lock it securely.

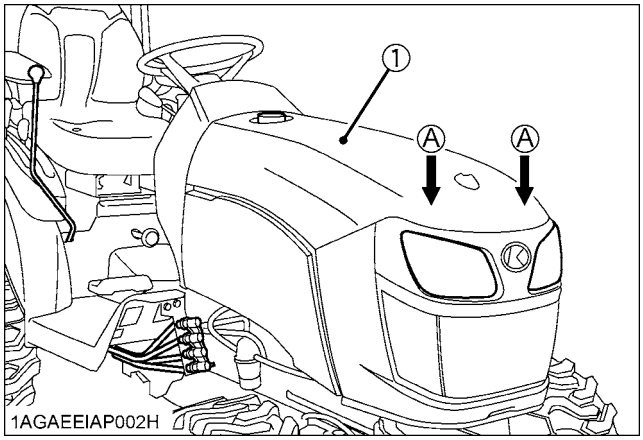

(1) Hood *(A) "PUSH"*

■Engine Side Cover

- **Removing the side cover**

1. Lift up the engine side cover and free the upper and lower projections.
2. Pull the cover toward "B" and detach the notch.

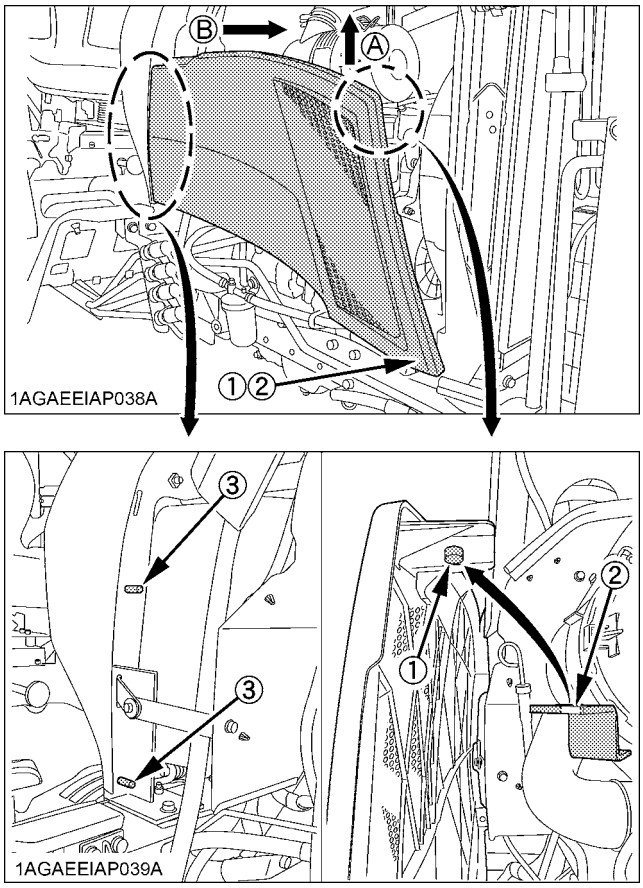

(1) Projection *(A) "LIFT UP"*
(2) Hole *(B) "PULL"*
(3) Notch

- **Attaching the side cover**

To attach the cover, take the reverse order.

DAILY CHECK

WARNING

To avoid personal injury or death:
Take the following precautions when checking the tractor.

- **Park the machine on firm and level ground.**
- **Set the parking brake.**
- **Lower the implement to the ground.**
- **All residual pressure of the hydraulic system released.**
- **Stop the engine and remove the key.**

■Walk Around Inspection

Look around and under the tractor for such items as loose bolts, trash build-up, oil or coolant leaks, broken or worn parts.

■Checking and Refueling

WARNING

To avoid personal injury or death:

- **Do not smoke while refueling.**
- **Be sure to stop the engine before refueling.**

1. Turn the key switch to "ON", check the amount of fuel by fuel gauge.
2. Fill fuel tank when fuel gauge shows 1/4 or less fuel in tank.
3. Use grade No.2-Diesel fuel at temperatures above -10℃ (14℉).
   Use grade No.1-Diesel fuel at temperatures below -10℃ (14℉).

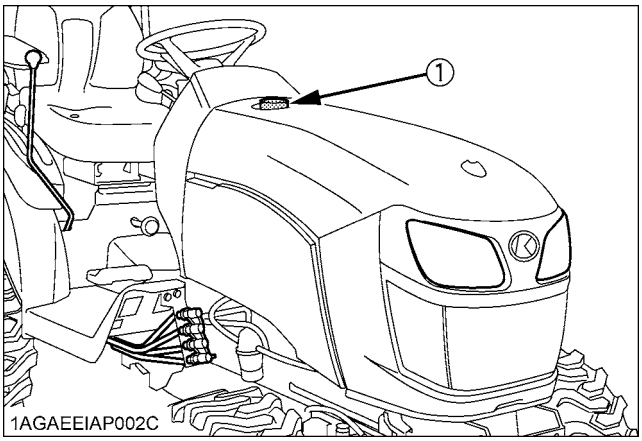

(1) Fuel tank cap

Fuel tank capacity	23 L (6.1 U.S.gals.)

IMPORTANT :
- Do not permit dirt or trash to get into the fuel system.
- Be careful not to let the fuel tank become empty, otherwise air will enter the fuel system, necessitating bleeding before next engine start.
- Be careful not to spill during refueling. If you should spill, wipe it off at once, or it may cause a fire.
- To prevent condensation (water) accumulation in the fuel tank, fill the tank before parking overnight.

■Checking Engine Oil Level

WARNING

To avoid personal injury or death:
- **Be sure to stop the engine before checking the oil level.**

1. Park the machine on a flat surface.
2. Check engine oil before starting the engine or 5 minutes or more after the engine has stopped.
3. To check the oil level, draw out the dipstick, wipe it clean, replace it, and draw it out again. Check to see that the oil level lies within the crosshatched area.
   If the level is too low, add new oil to the prescribed level at the oil inlet.
   (See "LUBRICANTS" in "MAINTENANCE" section.)

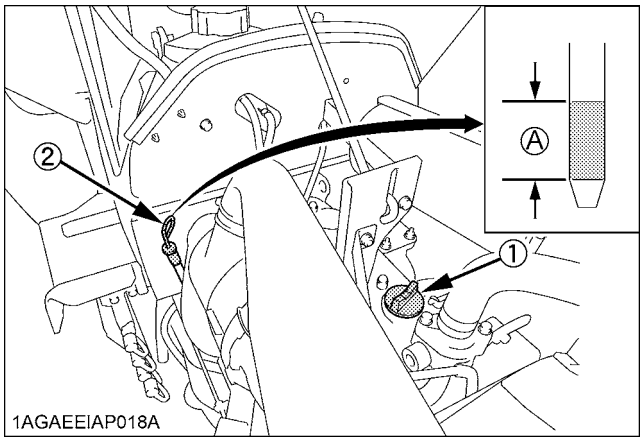

(1) Oil inlet (A) Oil level is acceptable within this range
(2) Dipstick

IMPORTANT :
- When using an oil of different maker or viscosity from the previous one, remove all of the old oil.
  Never mix two different types of oil.
- If oil level is low, do not run engine.

■Checking Transmission Fluid Level

1. Park the machine on a flat surface, lower the implement and shut off engine.
2. To check the oil level, draw out the dipstick, wipe it clean, replace it, and draw it out again. Check to see that the oil level lies within the crosshatched area.
   If the level is too low, add new oil to the prescribed level at the oil inlet.
   (See "LUBRICANTS" in "MAINTENANCE" section.)

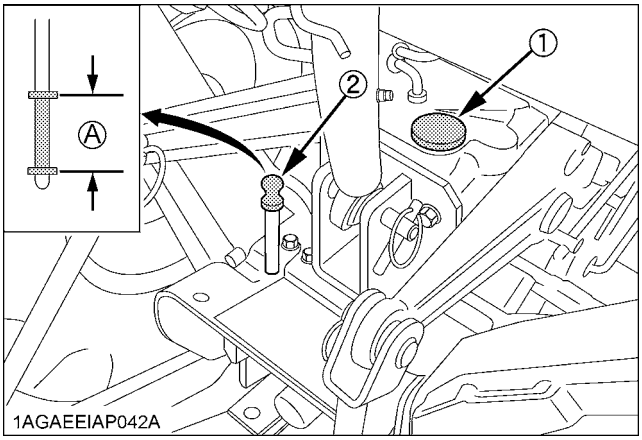

(1) Oil inlet (A) Oil level is acceptable within this range
(2) Dipstick

IMPORTANT :
- If oil level is low, do not run engine.

■Checking Coolant Level

WARNING

To avoid personal injury or death:

- **Do not remove radiator cap while coolant is hot. When cool, slowly rotate cap to the first stop and allow sufficient time for excess pressure to escape before removing the cap completely.**

1. Check to see that the coolant level is between the "FULL" and "LOW" marks of recovery tank.
2. When the coolant level drops due to evaporation, add soft water only up to the full level.
   In case of leakage, add anti-freeze and soft water in the specified mixing ratio up to the full level.
   (See "Flushing Cooling System and Changing Coolant" in "EVERY 2 000 HOURS or 2 YEARS" in "PERIODIC SERVICE" section.)

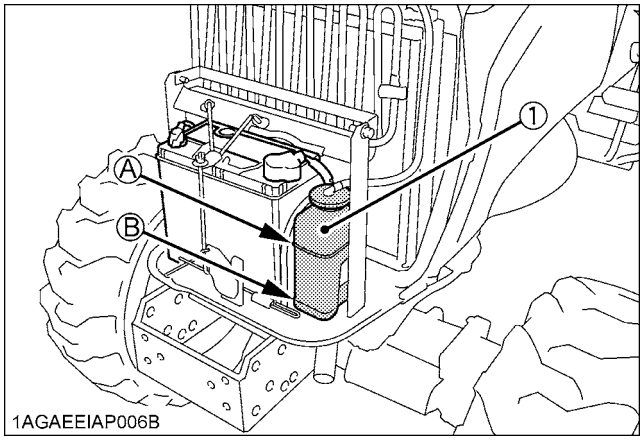

(1) Recovery tank *(A) "FULL"* *(B) "LOW"*

IMPORTANT :

- If the radiator cap has to be removed, follow the caution above and securely retighten the cap.
- Use clean, fresh soft water and anti-freeze to fill the recovery tank.
- If water should leak, consult your local KUBOTA Dealer.

■Cleaning Evacuator Valve

Open the evacuator valve to get rid of large particles of dust and dirt.

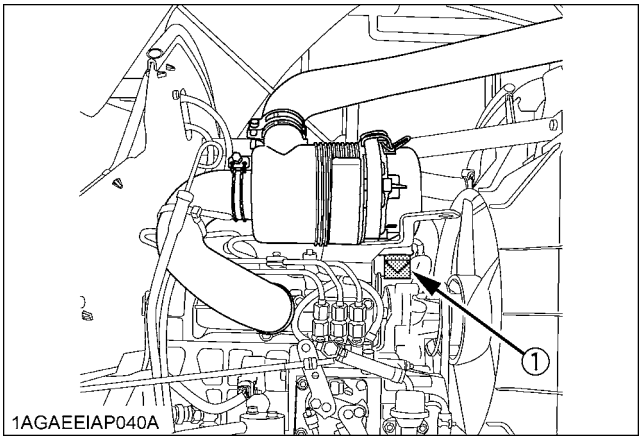

(1) Evacuator valve

■Cleaning Grill and Radiator Screen

WARNING

To avoid personal injury or death:

- **Be sure to stop the engine and remove the key before removing the screen.**

1. Check front grill and side screens to be sure they are clean of debris.
2. Detach the screen and remove all foreign material and clean the front of radiator completely.

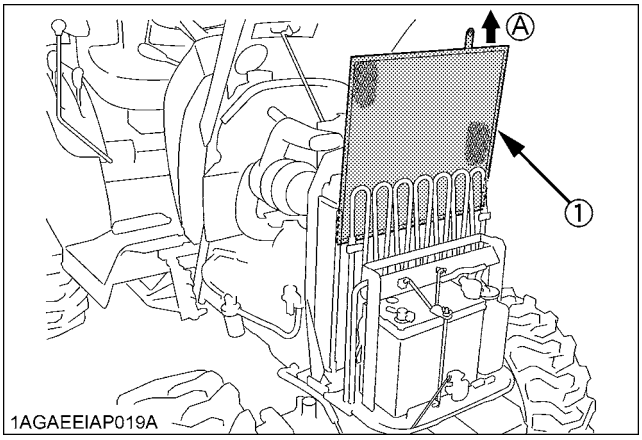

(1) Radiator screen *(A) "DETACH"*

IMPORTANT :

- Grill and screen must be clean from debris to prevent engine from overheating and to allow good air intake for the air cleaner.

■Checking Brake Pedal

1. Inspect the brake pedals for free travel, and smooth operation.
2. Adjust if incorrect measurement is found:
   (See "Adjusting Brake Pedal" in "EVERY 100 HOURS" in "PERIODIC SERVICE" section.)

■Checking Gauges, Meter and Easy Checker (TM)

1. Inspect the instrument panel for broken gauge(s), meter(s) and Easy Checker (TM).
2. Replace if broken.

■Checking Head Light, Hazard Light etc.

1. Inspect the lights for broken bulbs and lenses.
2. Replace if broken.

■Checking Seat Belt and ROPS

1. Always check condition of seat belt and ROPS attaching hardware before operating tractor.
2. Replace if damaged.

■Checking and Cleaning of Electrical Wiring and Battery Cables

WARNING

To avoid personal injury or death:

- **A loosened terminal or connector, or damaged wire may affect the performance of electrical components or cause short circuits. Leakage of electricity could result in a fire hazard, a dead battery or damage to electrical components.**
- **Replace damaged wires or connections promptly.**
- **If a fuse blows soon after replacement, DO NOT USE A LARGER THAN RECOMMENDED FUSE OR BYPASS THE FUSE SYSTEM.**
- **Many wiring connections are protected by waterproof plugs, plug and unplug these connections carefully and make sure they are sealed correctly after assembly.**
- **Accumulation of dust, chaff or spilled fuel deposits around the battery, electrical wiring, engine or exhaust system are a fire hazard.**
  CLEAN THESE AREAS BEFORE STARTING WORK.
  To avoid premature electrical malfunctions DO NOT APPLY high pressure water directly to battery, wiring, connectors, electrical components or instrument panel.

Inspect the following Regularly:

1. Check wiring for chafed or cracked insulation.
2. Check wiring harness clamps. Replace if necessary.
3. Check connectors and terminals for looseness, contamination or overheated (discolored) connections.
4. Check instrument panel for correct operation of switches and gauges.

Consult your KUBOTA Dealer regarding maintenance, diagnosis and repair.

■Checking Movable Parts

If any of the movable parts, such as levers and pedals, is not smoothly moved because of rust or sticky material, do not attempt to force it into motion.
In the above case, remove the rust or the sticky material, and apply oil or grease on the relevant spot.
Otherwise, the machine may get damaged.

EVERY 50 HOURS

■Lubricating Grease Fittings

Apply a small amount of multipurpose grease to the following points every 50 hours:
If you operated the machine in extremely wet and muddy conditions, lubricate grease fittings more often.

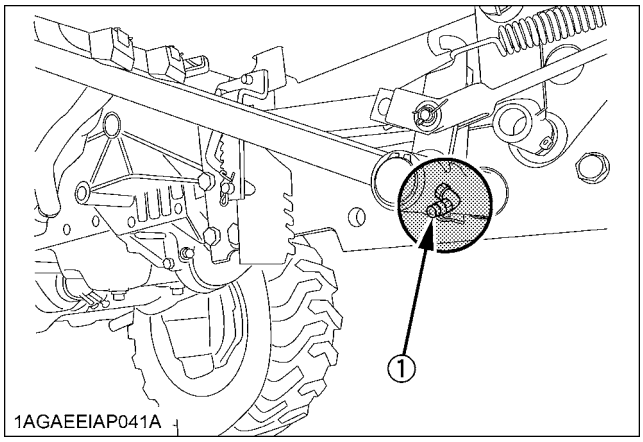

(1) Grease fitting (Brake pedals)

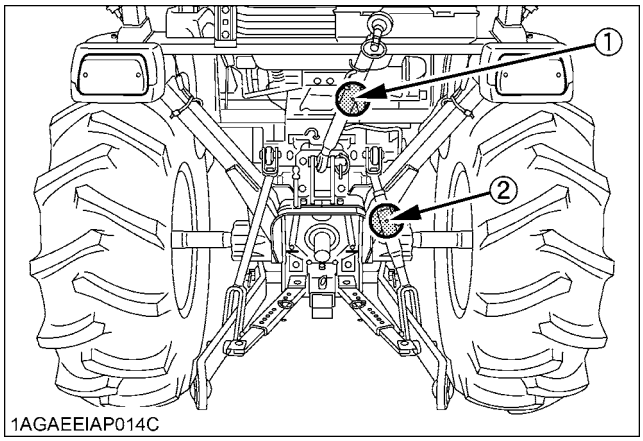

(1) Grease fitting (Top link)
(2) Grease fitting (Lifting rod, right)

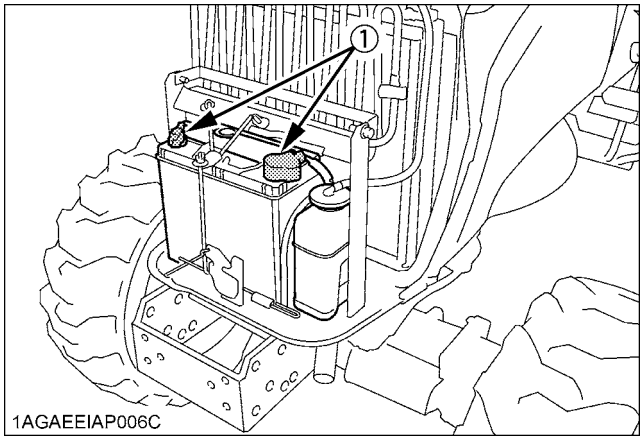

(1) Battery terminals

■Checking Engine Start System

WARNING

To avoid personal injury or death:

- **Do not allow anyone near the tractor while testing.**
- **If the tractor does not pass the test do not operate the tractor.**
- **Detach an implement before testing.**

◆ **Preparation before testing.**

1. Sit on operator's seat.
2. Set the parking brake and stop the engine.
3. Shift the range gear shift lever to "NEUTRAL" position.
4. Place the speed control pedal in "NEUTRAL" position.
5. Shift the PTO clutch lever to "OFF" position.

◆ **Test : Switch for the speed control pedal.**

1. Depress the speed control pedal.
2. Turn the key to "START" position.
3. The engine must not crank.
4. If it cranks, consult your local KUBOTA Dealer for this service.

◆ **Test : Switch for the PTO clutch lever.**

1. Place the speed control pedal in "NEUTRAL" position.
2. Shift the PTO clutch lever to "ON" position.
3. Turn the key to "START" position.
4. The engine must not crank.
5. If it cranks, consult your local KUBOTA Dealer for this service.

◆ **Test : Switches for the operator's seat and the PTO clutch lever.**

1. Sit on the operator's seat.
2. Start the engine.
3. Engage the PTO clutch lever.
4. Stand up. (Do not get off the machine.)
5. The engine must shut off after approximately 1 second.
6. If it does not stop, consult your local KUBOTA Dealer for this service.

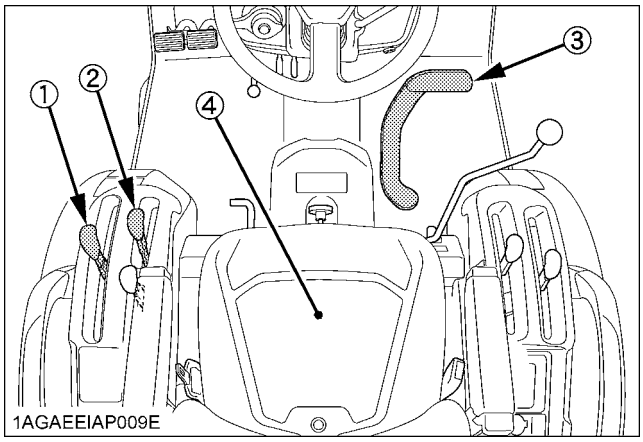

(1) Range gear shift lever (L-M-H)
(2) PTO clutch lever
(3) Speed control pedal
(4) Operator's seat

■Checking Wheel Bolt Torque

WARNING

To avoid personal injury or death:

- **Never operate tractor with a loose rim, wheel, or axle.**
- **Any time bolts and nuts are loosened, retighten to specified torque.**
- **Check all bolts and nuts frequently and keep them tight.**

Check wheel bolts and nuts regularly especially when new. If they are loose, tighten them as follows.

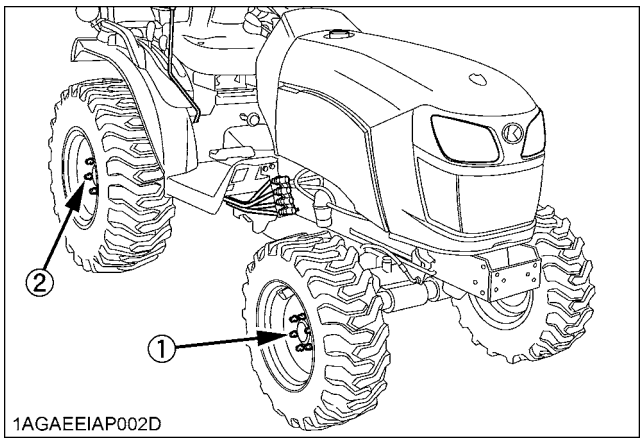

(1) 79 to 92 N-m (8.1 to 9.4 kgf-m, 58.3 to 67.9 ft-lbs.)
(2) 145 to 150 N-m (14.8 to 15.3 kgf-m, 107.0 to 110.6 ft-lbs.)

EVERY 100 HOURS

■Checking Battery Condition

DANGER

To avoid the possibility of battery explosion:
For the refillable type battery, follow the instructions below.

- **Do not use or charge the refillable type battery if the fluid level is below the LOWER (lower limit level) mark. Otherwise, the battery component parts may prematurely deteriorate, which may shorten the battery's service life or cause an explosion. Check the fluid level regularly and add distilled water as required so that the fluid level is between the UPPER and LOWER levels.**

WARNING

To avoid personal injury or death:

- **Never remove the battery cap while the engine is running.**
- **Keep electrolyte away from eyes, hands and clothes. If you are spattered with it, wash it away completely with water immediately and get medical attention.**
- **Keep open sparks and flames away from the battery at all times. Hydrogen gas mixed with oxygen becomes very explosive.**
- **Wear eye protection and rubber gloves when working around battery.**

The factory-installed battery is of non-refillable type. If the indicator turns white, do not charge the battery but replace it with new one.

Mishandling the battery shortens the service life and adds to maintenance costs.
The original battery is maintenance free, but needs some servicing.
If the battery is weak, the engine will be difficult to start and the lights will be dim. It is important to check the battery periodically.

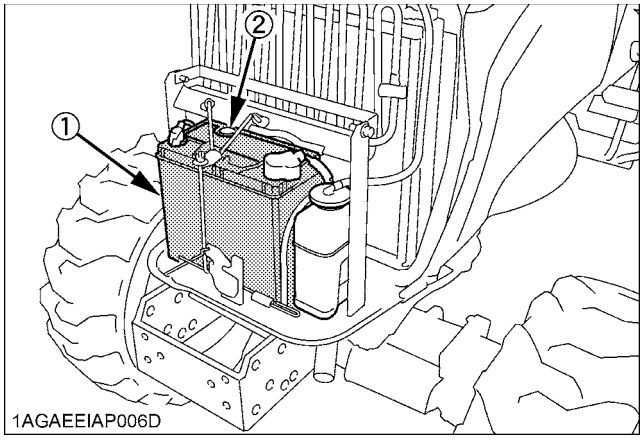

(1) Battery
(2) Indicator

◆ **How to read the indicator**

Check the battery condition by reading the indicator.

State of indicator display	
Green	Specific gravity of electrolyte and quality of electrolyte are both in good condition.
Black	Needs charging battery.
White	Needs replacing battery.

◆ **Battery Charging**

WARNING

To avoid personal injury or death:

- **When the battery is being activated, hydrogen and oxygen gases in the battery are extremely explosive. Keep open sparks and flames away from the battery at all times, especially when charging the battery.**
- **When charging the battery, ensure the vent caps are securely in place (if equipped).**
- **When disconnecting the cable from the battery, start with the negative terminal first.**
  When connecting the cable to the battery, start with the positive terminal first.
- **Never check battery charge by placing a metal object across the posts.**
  Use a voltmeter or hydrometer.

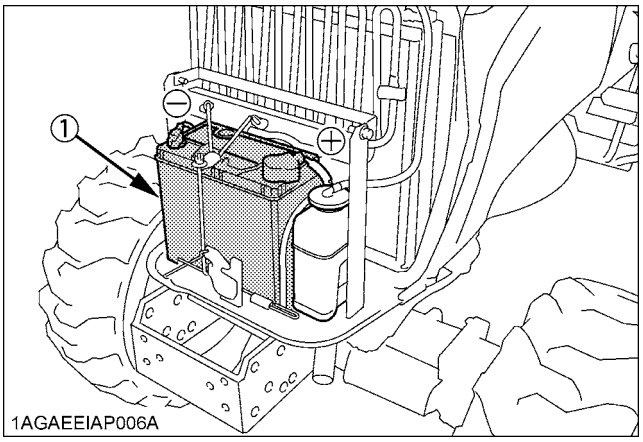

(1) Battery

1. To slow charge the battery, connect the battery positive terminal to the charger positive terminal and the negative to the negative, then recharge in the standard fashion.
2. A boost charge is only for emergencies. It will partially charge the battery at a high rate and in a short time.
   When using a boost-charged battery, it is necessary to recharge the battery as early as possible.
   Failure to do this will shorten the battery's service life.
3. The battery is charged if the indicator display turns green from black.
4. When exchanging an old battery for a new one, use battery of equal specification shown in **table 1**.

[TABLE 1]

Battery Type	Volts (V)	Capacity at 5 hr (Ah)	Reserve Capacity (min)	Cold Cranking Amps (A)	Normal Charging Rate (A)
55B24L(S)-MF	12	36	80	430	4.5

◆ **Direction for Storage**

1. When storing the tractor for a long period, remove the battery from tractor, adjust the electrolyte to the proper level and store in a dry place out of direct sunlight.
2. The battery self-discharges while it is stored.
   Recharge it once every 3 months in hot seasons and once every 6 months in cold seasons.

■Cleaning Air Cleaner Primary Element

WARNING

To avoid personal injury or death:

- **Be sure to stop the engine and remove the key before cleaning air filter element.**

1. Remove the air cleaner cover and primary element.
2. Clean the primary element:
   (1) When dry dust adheres to the element, blow compressed air from the inside, turning the element. Pressure of compressed air must be under 205 kPa (2.1 kgf/cm^2, 30 psi).
   (2) When carbon or oil adheres to the element, soak the element in detergent for 15 minutes then wash it several times in water, rinse with clean water and dry it naturally. After element is fully dried, inspect inside of the element with a light and check if it is damaged or not.
3. Replace air cleaner primary element:
   Every 1000 hours or once yearly cleaning, whichever comes first.

NOTE :

- Check to see if the evacuator valve is blocked with dust.

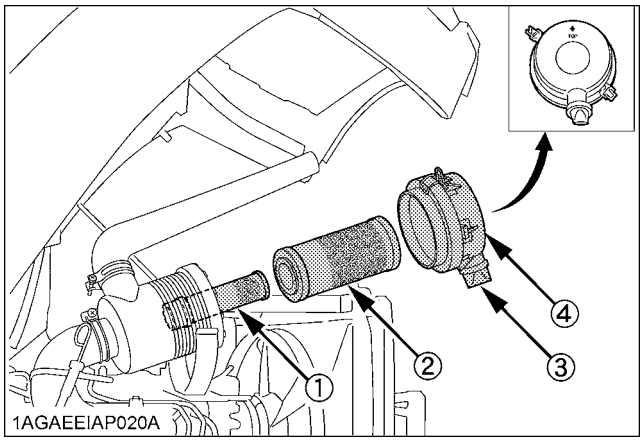

(1) Secondary (safety) element
(2) Primary element
(3) Evacuator valve
(4) Cover

IMPORTANT :

- The air cleaner uses a dry element, never apply oil.
- Do not run the engine with filter element removed.
- Be sure to refit the cover with the arrow ⬆ (on the rear of cover) upright. If the cover is improperly fitted, evacuator valve will not function and dust will adhere to the element.
- Do not touch the secondary element except in cases where replacing is required.
  (See "Replacing Air Cleaner Primary Element and Secondary Element" in "EVERY 1000 HOURS or 1 YEAR" in "PERIODIC SERVICE" section.)

◆ **Evacuator Valve**

Open the evacuator valve once a week under ordinary conditions - or daily when used in a dusty place - to get rid of large particles of dust and dirt.

■Cleaning Fuel Filter

WARNING

To avoid personal injury or death:

- **Stop the engine and remove the key before checking fuel lines and fuel filter.**
- **Check the fuel lines periodically. The fuel lines are subject to wear and aging. Fuel may leak out onto the running engine, causing a fire.**
- **Protect your hands when using kerosene to clean components.**

This job should not be done in the field, but in a clean place.

1. Loosen and remove the filter bowl, and rinse the inside with kerosene.
2. Take out the element and dip it in the kerosene to rinse.
3. After cleaning, reassemble the fuel filter, keeping out dust and dirt.
4. Bleed the fuel system.
   (See "SERVICE AS REQUIRED" in "PERIODIC SERVICE" section.)

IMPORTANT :

- When the fuel filter bowl has been removed, fuel stops flowing from the fuel tank. If the fuel tank is almost full, however, the fuel will flow back from the fuel return pipe to the fuel filter. Before checking, make sure the fuel tank is less than half-full.

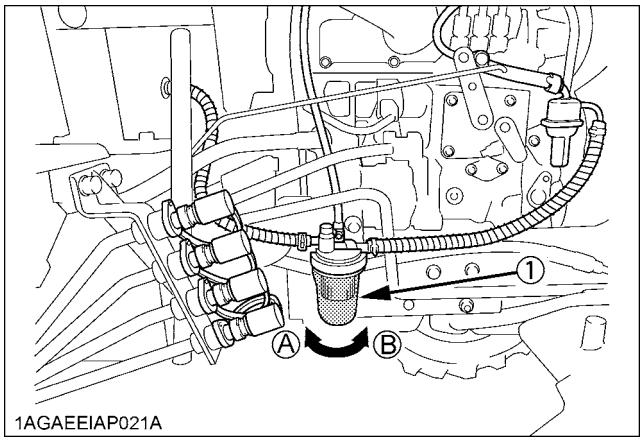

(1) Fuel filter bowl *(A) "LOOSEN"*
(B) "TIGHTEN"

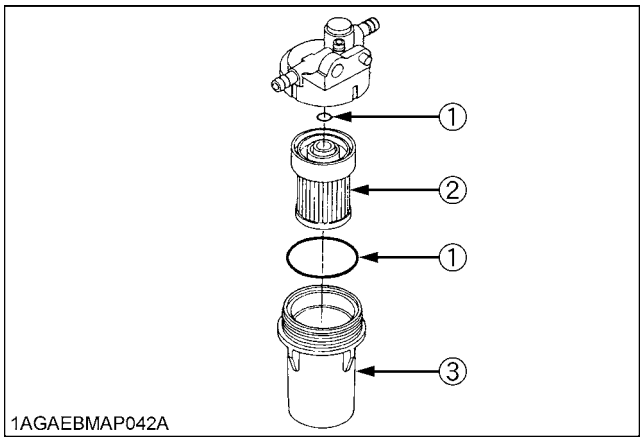

(1) O ring
(2) Filter element
(3) Filter bowl

IMPORTANT :

- If dust, dirt or water enters the fuel system, the fuel pump and injection nozzles are subject to premature wear. To prevent this, be sure to clean the fuel filter bowl and element periodically.

■Adjusting Fan Belt Tension

WARNING

To avoid personal injury or death:

- **Be sure to stop the engine and set the parking brake before checking belt tension.**

Proper fan belt tension	A deflection of between 7 to 9 mm (0.28 to 0.35 in.) when the belt is pressed in the middle of the span.

1. Stop the engine, set the parking brake, and remove the key.
2. Apply moderate thumb pressure to belt between pulleys.
3. If tension is incorrect, loosen the alternator mounting bolts and, using a lever placed between the alternator and the engine block, pull the alternator out until the deflection of the belt falls within acceptable limits.
4. Replace fan belt if it is damaged.

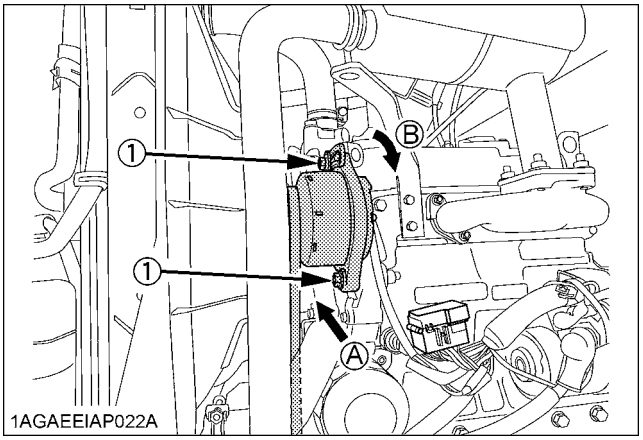

(1) Bolt *(A) Check the belt tension*
(B) To tighten

■Adjusting Brake Pedal

WARNING

To avoid personal injury or death:

- **Stop the engine and chock the wheels before checking brake pedal.**

Proper brake pedal free travel	30 to 40 mm on the pedal
	Keep the free travel in the right and left brake pedals equal.

1. Release the parking brake.
2. Slightly depress the brake pedals and measure free travel at the top of pedal stroke.
3. If adjustment is needed, loosen the lock nut and turn the turnbuckle to adjust the rod length within acceptable limits.
4. Retighten the lock nut.

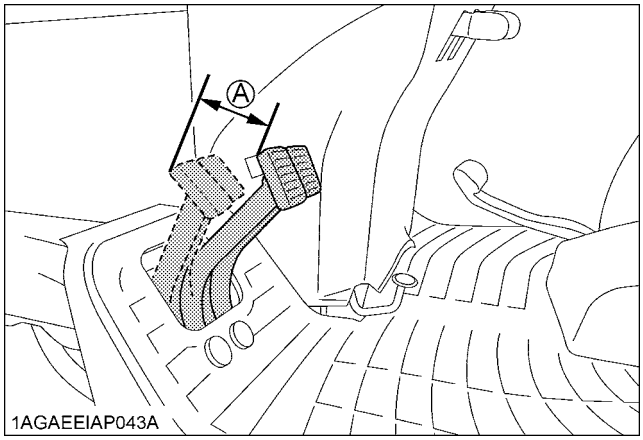

(A) Free travel

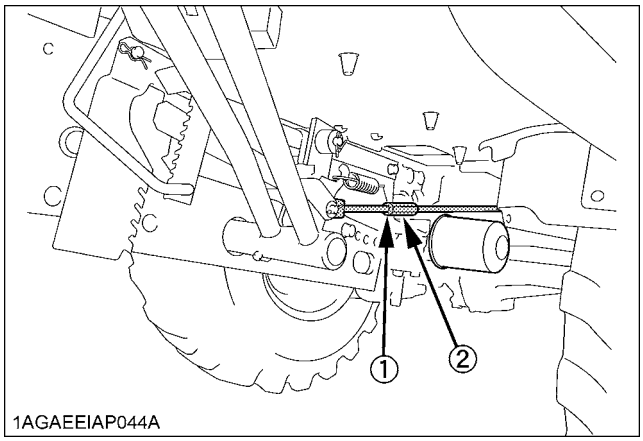

(1) Lock nut (Both sides)
(2) Turnbuckle (Both sides)

EVERY 200 HOURS

■Replacing Engine Oil Filter

WARNING

To avoid personal injury or death:

- **Be sure to stop the engine before changing the oil filter cartridge.**
- **Allow engine to cool down sufficiently, oil can be hot and can burn.**

1. Remove the oil filter.
2. Put a film of clean engine oil on the rubber seal of the new filter.
3. Tighten the filter quickly until it contacts the mounting surface.
   Tighten filter by hand an additional 1/2 turn only.
4. After the new filter has been replaced, the engine oil normally decreases a little. Make sure that the engine oil does not leak through the seal and be sure to check the oil level on the dipstick. Then, replenish the engine oil up to the prescribed level.

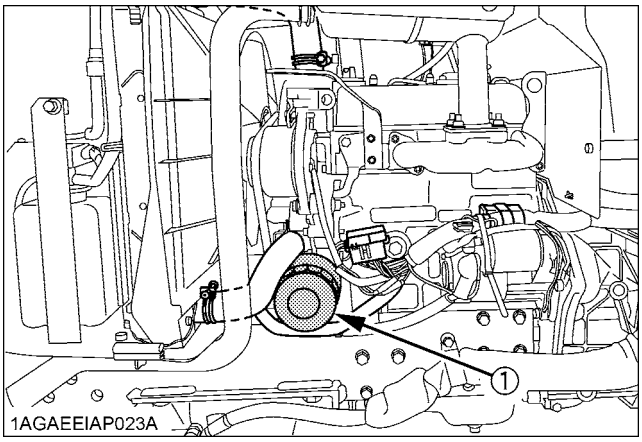

(1) Engine oil filter

IMPORTANT :

- To prevent serious damage to the engine, use only a KUBOTA genuine filter.

■Changing Engine Oil

WARNING

To avoid personal injury or death:

- **Be sure to stop the engine before changing the oil.**
- **Allow engine to cool down sufficiently, oil can be hot and can burn.**

1. To drain the used oil, remove the drain plug at the bottom of the engine and drain the oil completely into the oil pan.
   All the used oil can be drained out easily when the engine is still warm.
2. After draining reinstall the drain plug.
3. Fill with the new oil up to the upper line on the dipstick. (See "LUBRICANTS, FUEL AND COOLANT" in "MAINTENANCE" section.)

Oil capacity with filter	3.1 L (3.3 U.S.qts.)

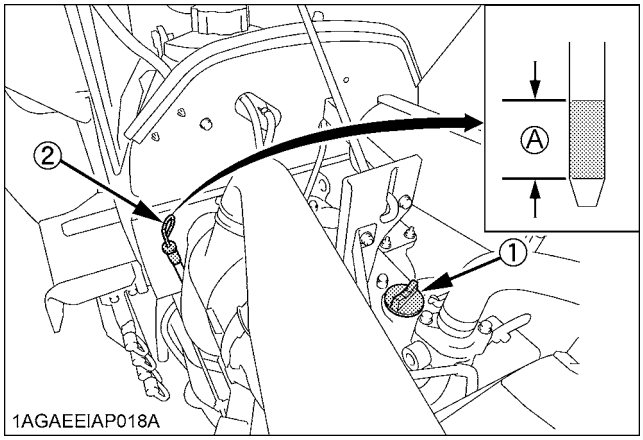

(1) Oil inlet *(A) Oil level is acceptable within this range*
(2) Dipstick

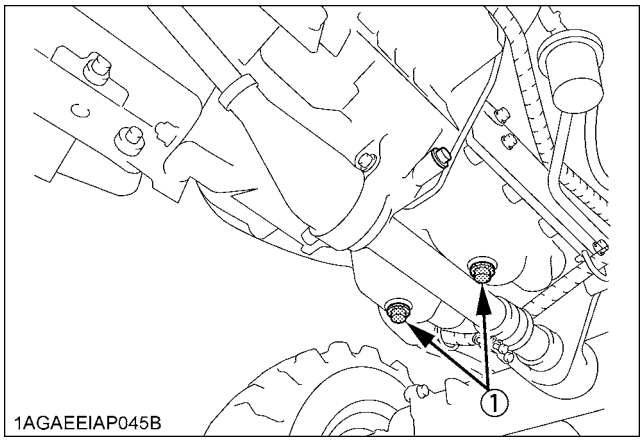

(1) Drain plug (both sides)

■Replacing Transmission Oil Filter [HST]

WARNING

To avoid personal injury or death:

- **Be sure to stop the engine before changing the oil filter cartridge.**
- **Allow engine to cool down sufficiently, oil can be hot and can burn.**

1. Place the oil pan underneath the transmission oil filter and remove the filter.
   Do not remove the hydraulic oil filter. Otherwise, the oil comes out.

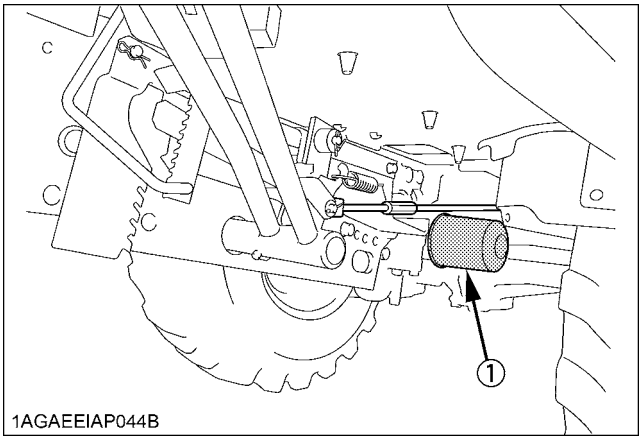

(1) Transmission oil filter [HST]

2. Put a film of clean transmission oil on the rubber seal of the new filter.
3. Quickly tighten the filter until it contacts the mounting surface, then, with a filter wrench, tighten it an additional 1 turn only.
4. After the new filter has been replaced, fill the transmission oil up to the upper limit on the dipstick.

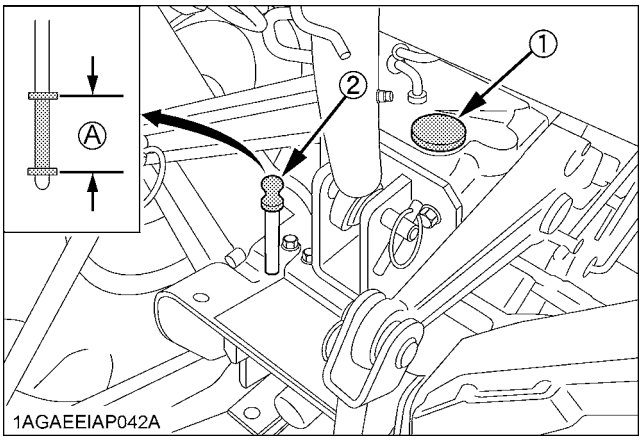

(1) Oil inlet *(A) Oil level is acceptable within this range*
(2) Dipstick

5. After running the engine for a few minutes, stop the engine and check the oil level again, add oil to the prescribed level.

6. Make sure that the transmission fluid doesn't leak past the seal on the filter.

IMPORTANT :
- To prevent serious damage to the hydraulic system, use only a KUBOTA genuine filter.
- Do not operate the tractor immediately after changing the transmission fluid.
  Run the engine at medium speed for a few minutes to prevent damage to the transmission.

■Adjusting Toe-in

1. Park tractor on a flat place.
2. Turn steering wheel so front wheels are in the straight ahead position.
3. Lower the implement, lock the park brake and stop the engine.
4. Measure distance between tire beads at front of tire, hub height.
5. Measure distance between tire beads at rear of tire, hub height.
6. Front distance should be 0 to 10 mm (0 to 3/8 in.) less than rear distance. If not, adjust tie rod length.

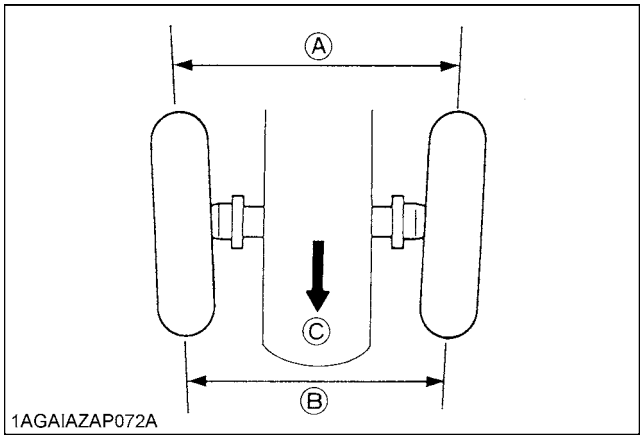

(A) Wheel - to - wheel distance at rear
(B) Wheel - to - wheel distance at front
(C) "FRONT"

◆ **Adjusting procedures**
1. Loosen the tie-rod nut.
2. Turn the tie-rod joint to adjust the rod length until the proper toe-in measurement is obtained.
3. Retighten the tie-rod nut.

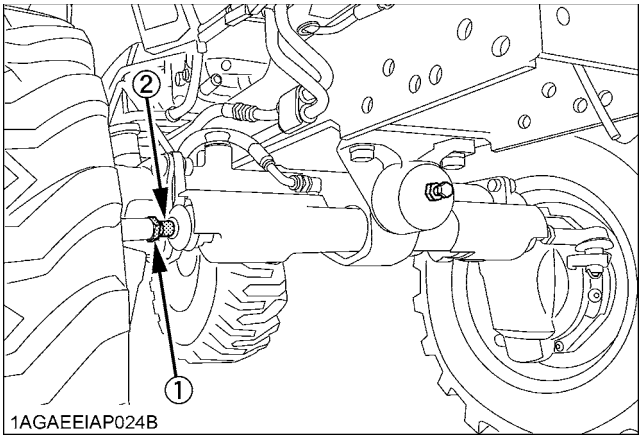

(1) Tie-rod nut
(2) Tie-rod joint

EVERY 400 HOURS

■Changing Transmission Fluid

WARNING

To avoid personal injury or death:
- **Allow engine to cool down sufficiently, oil can be hot and can burn.**

1. To drain the used oil, remove the drain plug at the bottom of the transmission case and drain the oil completely into the oil pan.
2. After draining reinstall the drain plug.
3. Fill with new KUBOTA SUPER UDT fluid up to the upper limit on the dipstick.
   (See "LUBRICANTS" in "MAINTENANCE" section and "DAILY CHECK" in "PERIODIC SERVICE" section)
4. After running the engine for a few minutes, stop it and check the oil level again; add oil to prescribed level.
5. Properly dispose of used oil.

Oil capacity	15 L (4.0 U.S.gals.)

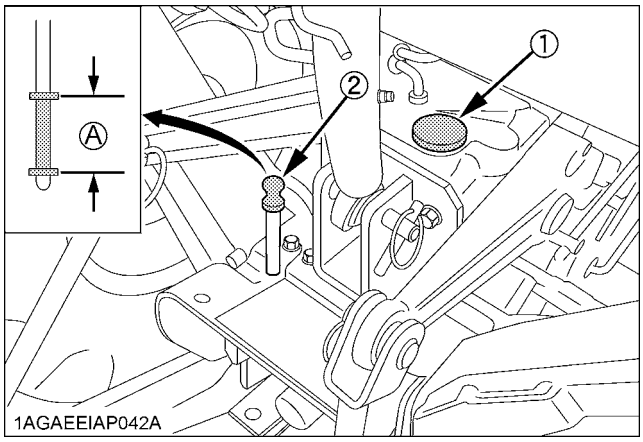

(1) Oil inlet *(A) Oil level is acceptable within this range*
(2) Dipstick

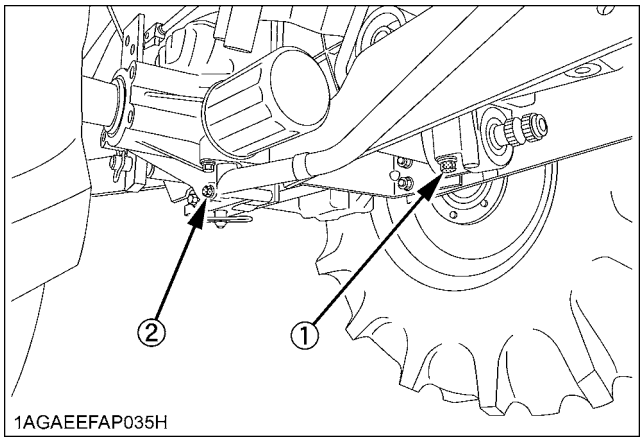

(1) Drain plug
(2) Drain plugs (Both sides)

IMPORTANT :

- If the 3-point hitch can not be raised by setting the hydraulic control lever to the UP position after long term storage or when changing the transmission oil, turn steering wheel to the right and left several times to bleed air from the system.
- Do not operate the tractor immediately after changing the transmission fluid.

■Replacing Hydraulic Oil Filter

WARNING

To avoid personal injury or death:

- **Be sure to stop the engine before changing the oil filter cartridge.**
- **Allow engine to cool down sufficiently, oil can be hot and can burn.**

1. Remove the drain plugs at the bottom of the transmission case and drain the oil completely into the oil pan.
2. After draining reinstall the drain plugs.

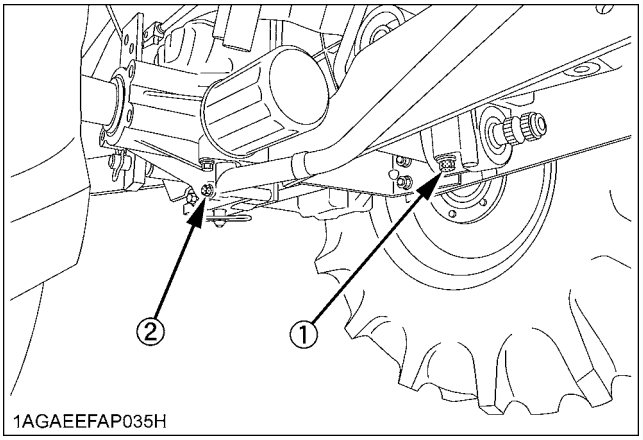

(1) Drain plug
(2) Drain plug (Both sides)

3. Remove the oil filter.

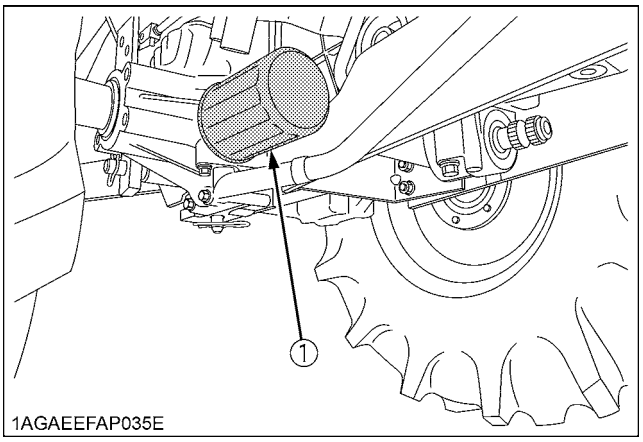

(1) Hydraulic oil filter

4. Put a film of clean transmission oil on the rubber seal of the new filter.
5. Quickly tighten the filter until it contacts the mounting surface, then tighten it by hand an additional 1/2 turn only.
6. After the new filter has been replaced, fill the transmission oil up to the upper limit on the dipstick.

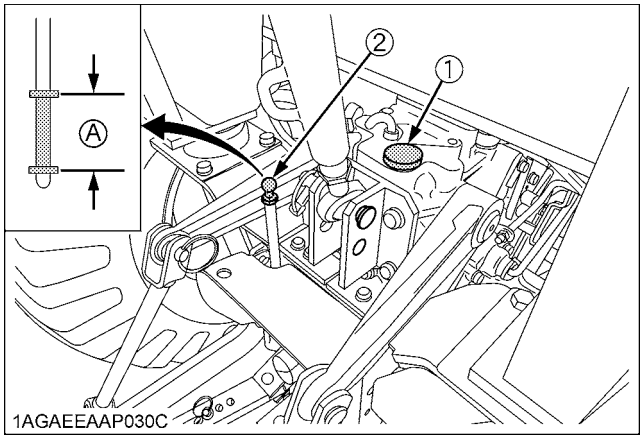

(1) Oil inlet *(A) Oil level is acceptable within this range*
(2) Dipstick

7. After running the engine for a few minutes, stop the engine and check the oil level again, add oil to the prescribed level.
8. Make sure that the transmission fluid doesn't leak past the seal on the filter.

IMPORTANT :
- To prevent serious damage to the hydraulic system, use only a KUBOTA genuine filter.

■Adjusting Front Axle Pivot [4WD]

WARNING

To avoid personal injury or death:
- **Park the tractor on a flat place.**
- **Lower the implement, lock the parking brake and stop the engine.**

If the front axle pivot pin adjustment is not correct, front wheel vibration can occur causing vibration in the steering wheel.

◆ **Adjusting procedure**

Loosen the lock nut, and tighten the adjusting screw so that the oscillating load is 50 to 100 N (5.1 to 10.2 kgf, 11.2 to 22.5 lbf). (If the adjusting screw is tightened, loosened and retightened, apply liquid gasket to its tip.) Retighten the lock nut.
Consult your local KUBOTA Dealer for further details.

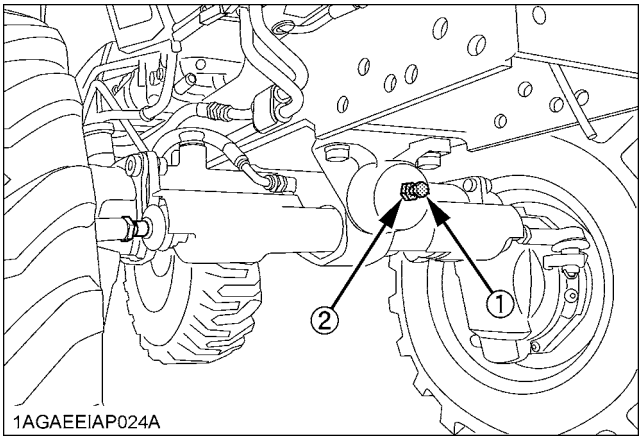

(1) Adjusting screw
(2) Lock nut

■Replacing Fuel Filter Element

(See "Cleaning Fuel Filter" in "EVERY 100 HOURS" in "PERIODIC SERVICE" section.)

■Changing Front Axle Case Oil

1. Park the tractor on a firm, flat and level surface.
2. To drain the used oil, remove the right and left drain plugs and filling plug at the front axle case and drain the oil completely into the oil pan.
3. After draining, reinstall the drain plugs.
4. Fill with new oil up to the upper notch on the dipstick. (See "LUBRICANTS, FUEL AND COOLANT" in "MAINTENANCE" section.)

IMPORTANT :
- After 10 minutes, check the oil level again; add oil to prescribed level.

5. After filling, reinstall the filling plug.
6. Properly dispose of used oil.

Oil capacity	3.5 L (3.7 U.S.qts.)

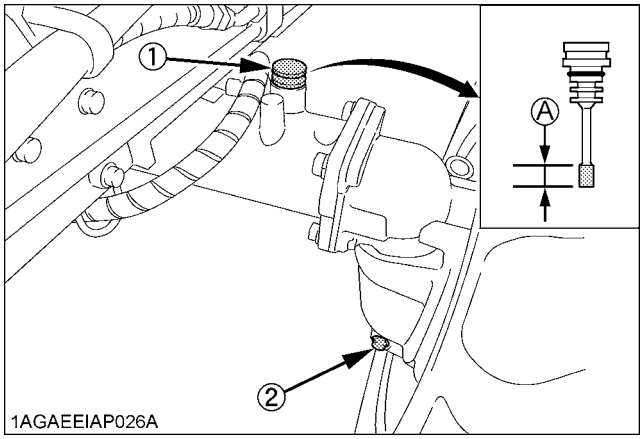

(1) Filling plug with dipstick
(2) Drain plug
(A) Oil level is acceptable within this range

EVERY 800 HOURS

■Adjusting Engine Valve Clearance

Consult your local KUBOTA Dealer for this service.

EVERY 1000 HOURS or 1 YEAR

Be sure to do the following servicing once every 1000 hours or yearly, whichever comes first.

■Replacing Air Cleaner Primary Element and Secondary Element

(See "Cleaning Air Cleaner Primary Element" in "EVERY 100 HOURS" in "PERIODIC SERVICE" section.)

IMPORTANT :
- To prevent serious damage to the engine, use only a KUBOTA genuine filter.

EVERY 1 500 HOURS

■Checking Fuel Injection Nozzle Injection Pressure

Consult your local KUBOTA Dealer for this service.

EVERY 2000 HOURS or 2 YEARS

Be sure to do the following servicing once every 2000 hours or biennially, whichever comes first.

■Flushing Cooling System and Changing Coolant

WARNING

To avoid personal injury or death:
- **Do not remove radiator cap while coolant is hot. When cool, slowly rotate cap to the first stop and allow sufficient time for excess pressure to escape before removing the cap completely.**

1. Stop the engine, remove the key and let it cool down.
2. To drain the coolant, disconnect the radiator hose (engine side), and remove the radiator cap. The radiator cap must be removed to completely drain the coolant. Use the drip pan to catch coolant.
3. After all coolant is drained, reconnect the radiator hose.
4. Fill with clean soft water and cooling system cleaner.
5. Follow directions of the cleaner instruction.
6. After flushing, fill with clean soft water and anti-freeze until the coolant level is just below the radiator cap. Install the radiator cap securely.
7. Fill with coolant up to the "FULL" mark of recovery tank.
8. Start and operate the engine for few minutes.
9. Stop the engine, remove the key and let cool.
10. Check coolant level of recovery tank and add coolant if necessary.
11. Properly dispose of used coolant.

Coolant capacity (with recovery tank)	3.8 L (4.0 U.S.gals.)

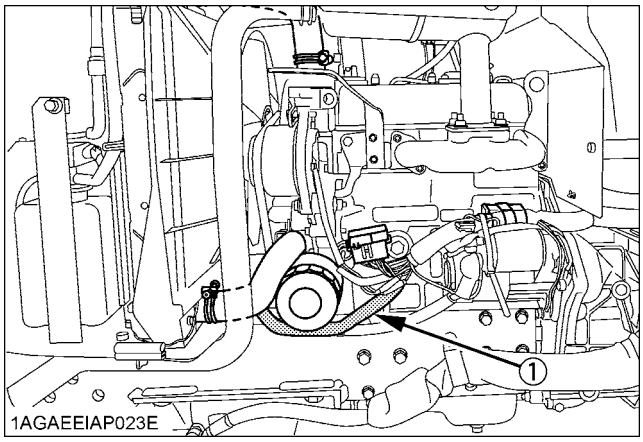

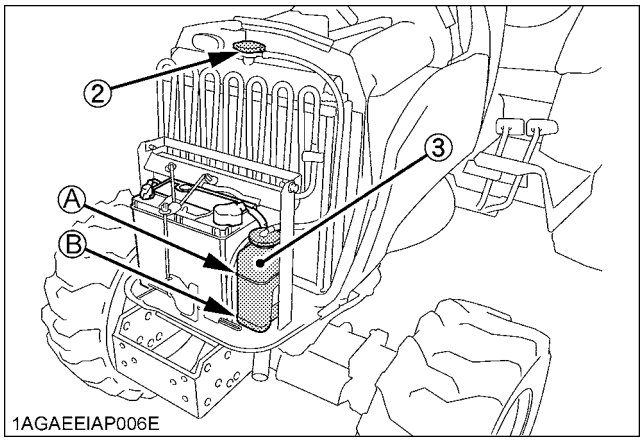

(1) Radiator hose
(2) Radiator cap
(3) Recovery tank
(A) "FULL"
(B) "LOW"

IMPORTANT :

- Do not start engine without coolant.
- Use clean, fresh soft water and anti-freeze to fill the radiator and recovery tank.
- When mixing the anti-freeze with water, the anti-freeze mixing ratio is 50%.
- Securely tighten radiator cap. If the cap is loose or improperly fitted, water may leak out and the engine could overheat.

■Anti-Freeze

WARNING

To avoid personal injury or death:

- **When using antifreeze, put on some protection such as rubber gloves. (Antifreeze contains poison.)**
- **If it is swallowed, seek immediate medical help. Do NOT make a person throw up unless told to do so by poison control or a health care professional. Use standard first aid and CPR for signs of shock or cardiac arrest. Call your local Poison Control Center or your local emergency number for further assistance.**
- **When antifreeze comes in contact with the skin or clothing, wash it off immediately.**
- **Do not mix different types of Antifreeze. The mixture can produce chemical reaction causing harmful substances.**
- **Antifreeze is extremely flammable and explosive under certain conditions. Keep fire and children away from antifreeze.**
- **When draining fluids from the engine, place some container underneath the engine body.**
- **Do not pour waste onto the ground, down a drain, or into any water source.**
- **Also, observe the relevant environmental protection regulations when disposing of antifreeze.**

Always use a 50/50 mix of long-life coolant and clean soft water in KUBOTA engines.
Consult your local KUBOTA Dealer concerning coolant for extreme conditions.

1. Long-life coolant (hereafter LLC) comes in several types. Use ethylene glycol (EG) type for this engine.
2. Before employing LLC-mixed cooling water, fill the radiator with fresh water and empty it again.
   Repeat this procedure 2 or 3 times to clean up the inside.
3. Mixing the LLC
   Premix 50% LLC with 50% clean soft water. When mixing, stir it up well, and then fill into the radiator.
4. The procedure for the mixing of water and antifreeze differs according to the make of the antifreeze and the ambient temperature. Refer to SAE J1034 standard, more specifically also to SAE J814c.

Vol % Anti-freeze	Freezing Point		Boiling Point*	
	℃	℉	℃	℉
50	-37	-34	108	226

∗ At 1.013 x 10^5Pa (760mmHg) pressure (atmospheric). A higher boiling point is obtained by using a radiator pressure cap which permits the development of pressure within the cooling system.

5. Adding the LLC
   (1) Add only water if the mixture reduces in amount by evaporation.
   (2) If there is a mixture leak, add the LLC of the same manufacturer and type in the same mixture percentage.
      ∗ Never add any long-life coolant of different manufacturer. (Different brands may have different additive components, and the engine may fail to perform as specified.)
6. When the LLC is mixed, do not employ any radiator cleaning agent. The LLC contains anticorrosive agent. If mixed with the cleaning agent, sludge may build up, adversely affecting the engine parts.
7. Kubota's genuine long-life coolant has a service life of 2 years. Be sure to change the coolant every 2000 hours or every 2 years whichever comes faster.

NOTE :
- The above data represent industry standards that necessitate a minimum glycol content in the concentrated antifreeze.

EVERY 3 000 HOURS

■Checking Injection Pump

Consult your local KUBOTA Dealer for this service.

EVERY 1 YEAR

■Checking Radiator Hoses and Clamps

WARNING

To avoid personal injury or death:
- **Be sure to stop the engine and remove the key before checking radiator hose and clamp.**
- **Allow engine and coolant to cool down sufficiently before checking.**

Inspect every year; replace if any deterioration (crack, hardening, scar, or deformation) or damage occurred.
1. If hose clamps are loose or water leaks, tighten bands securely.
2. Replace hoses and tighten hose clamps securely, if radiator hoses are swollen, hardened or cracked.

Replace hoses and hose clamps every 4 years or earlier if checked and found that hoses are swollen, hardened or cracked.

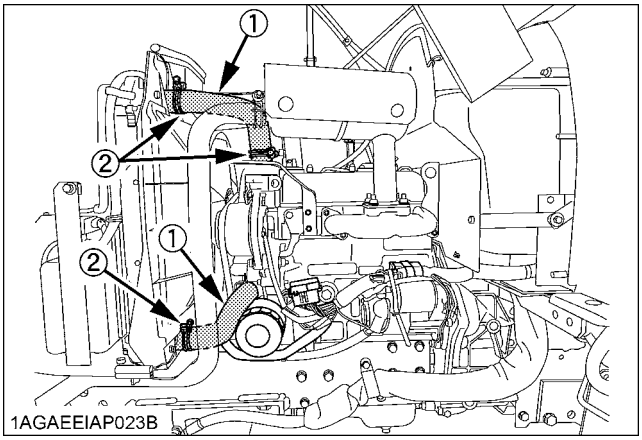

(1) Radiator hoses (2 hoses)
(2) Clamp bands (4 clamps)

■Checking Intake Air Line

1. Check to see that hoses and hose clamps are tight and not damaged.
2. If hoses and clamps are found worn or damaged, replace or repair them at once.

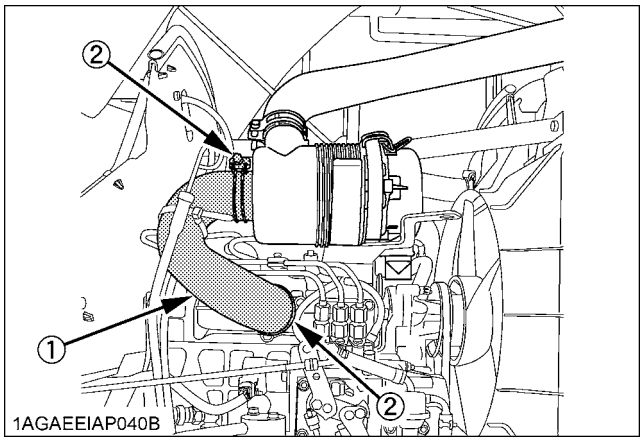

(1) Hose
(2) Hose clamps

■Checking Fuel Lines

1. Check to see that all lines and hose clamps are tight and not damaged.
2. If hoses and clamps are found worn or damaged, replace or repair them at once.

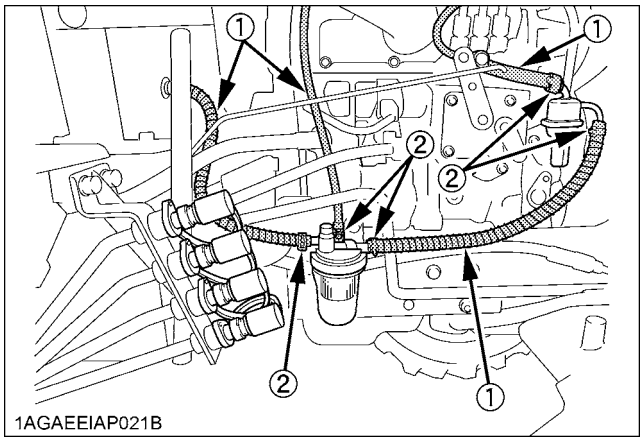

(1) Fuel lines
(2) Clamp bands

NOTE :
- If the fuel line is removed, be sure to properly bleed the fuel system.
  (See "Bleeding Fuel System" in "SERVICE AS REQUIRED" in "PERIODIC SERVICE" section.)

EVERY 2 YEARS

■Flushing Cooling System and Changing Coolant

WARNING
To avoid personal injury or death:

- **Do not remove radiator cap while coolant is hot. When cool, slowly rotate cap to the first stop and allow sufficient time for excess pressure to escape before removing the cap completely.**

1. Stop the engine, remove the key and let it cool down.
2. To drain the coolant, disconnect the radiator hose (engine side), and remove the radiator cap. The radiator cap must be removed to completely drain the coolant. Use the drip pan to catch coolant.
3. After all coolant is drained, reconnect the radiator hose.
4. Fill with clean soft water and cooling system cleaner.
5. Follow directions of the cleaner instruction.
6. After flushing, fill with clean soft water and anti-freeze until the coolant level is just below the radiator cap. Install the radiator cap securely.
7. Fill with coolant up to the "FULL" mark of recovery tank.
8. Start and operate the engine for few minutes.
9. Stop the engine, remove the key and let cool.
10. Check coolant level of recovery tank and add coolant if necessary.
11. Properly dispose of used coolant.

Coolant capacity (with recovery tank)	3.8 L (4.0 U.S.gals.)

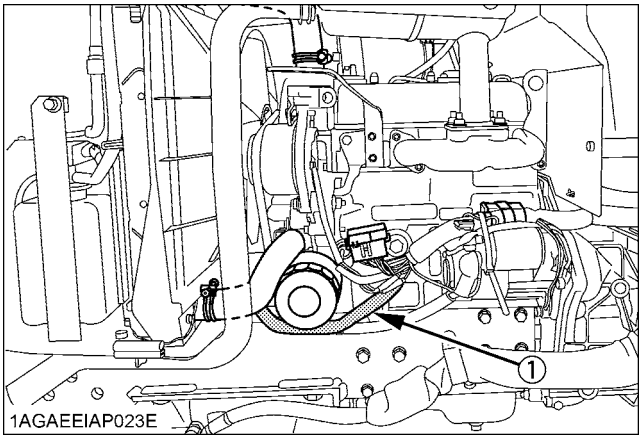

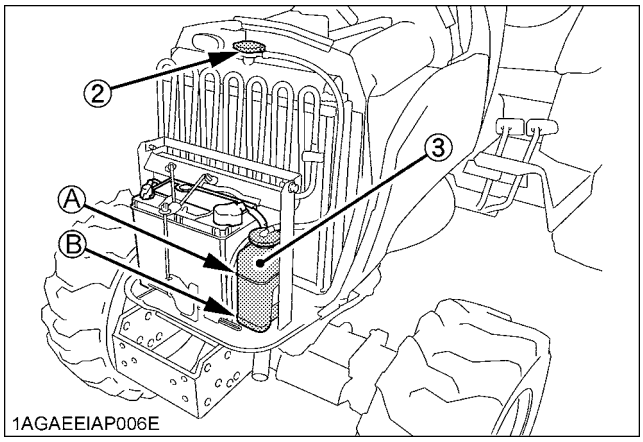

(1) Radiator hose
(2) Radiator cap
(3) Recovery tank
(A) "FULL"
(B) "LOW"

IMPORTANT :
- Do not start engine without coolant.
- Use clean, fresh soft water and anti-freeze to fill the radiator and recovery tank.
- When mixing the anti-freeze with water, the anti-freeze mixing ratio is 50%.
- Securely tighten radiator cap. If the cap is loose or improperly fitted, water may leak out and the engine could overheat.

■Anti-Freeze

WARNING

To avoid personal injury or death:
- **When using antifreeze, put on some protection such as rubber gloves. (Antifreeze contains poison.)**
- **If it is swallowed, seek immediate medical help. Do NOT make a person throw up unless told to do so by poison control or a health care professional. Use standard first aid and CPR for signs of shock or cardiac arrest. Call your local Poison Control Center or your local emergency number for further assistance.**
- **When antifreeze comes in contact with the skin or clothing, wash it off immediately.**
- **Do not mix different types of Antifreeze. The mixture can produce chemical reaction causing harmful substances.**
- **Antifreeze is extremely flammable and explosive under certain conditions. Keep fire and children away from antifreeze.**
- **When draining fluids from the engine, place some container underneath the engine body.**
- **Do not pour waste onto the ground, down a drain, or into any water source.**
- **Also, observe the relevant environmental protection regulations when disposing of antifreeze.**

Always use a 50/50 mix of long-life coolant and clean soft water in KUBOTA engines.
Consult your local KUBOTA Dealer concerning coolant for extreme conditions.

1. Long-life coolant (hereafter LLC) comes in several types. Use ethylene glycol (EG) type for this engine.
2. Before employing LLC-mixed cooling water, fill the radiator with fresh water and empty it again.
   Repeat this procedure 2 or 3 times to clean up the inside.
3. Mixing the LLC
   Premix 50% LLC with 50% clean soft water. When mixing, stir it up well, and then fill into the radiator.
4. The procedure for the mixing of water and antifreeze differs according to the make of the antifreeze and the ambient temperature. Refer to SAE J1034 standard, more specifically also to SAE J814c.

Vol % Anti-freeze	Freezing Point		Boiling Point*	
	℃	℉	℃	℉
50	-37	-34	108	226

∗ At 1.013 x 10^5Pa (760mmHg) pressure (atmospheric). A higher boiling point is obtained by using a radiator pressure cap which permits the development of pressure within the cooling system.

5. Adding the LLC
   (1) Add only water if the mixture reduces in amount by evaporation.
   (2) If there is a mixture leak, add the LLC of the same manufacturer and type in the same mixture percentage.
   ∗ Never add any long-life coolant of different manufacturer. (Different brands may have different additive components, and the engine may fail to perform as specified.)
6. When the LLC is mixed, do not employ any radiator cleaning agent. The LLC contains anticorrosive agent. If mixed with the cleaning agent, sludge may build up, adversely affecting the engine parts.
7. Kubota's genuine long-life coolant has a service life of 2 years. Be sure to change the coolant every 2 years.

NOTE :
- The above data represent industry standards that necessitate a minimum glycol content in the concentrated antifreeze.

■Replacing Radiator Hose (Water pipes)

Replace the hose and clamp.
(See "Checking Radiator Hose and Clamp" in "EVERY 200 HOURS" in "PERIODIC SERVICE" section.)

■Replacing Fuel Hose

Consult your local KUBOTA Dealer for this service.

■Replacing Intake Air Line

Consult your local KUBOTA Dealer for this service.

EVERY 4 YEARS

■Replacing Radiator Hose (Water pipes)

Replace the hoses and clamps.
(See "Checking Radiator Hoses and Clamps" in "EVERY 1 YEAR" in "PERIODIC SERVICE" section.)

■Replacing Fuel Lines

Consult your local KUBOTA Dealer for this service.

■Replacing Intake Air Line

Consult your local KUBOTA Dealer for this service.

SERVICE AS REQUIRED

■Bleeding Fuel System

Air must be removed:
1. When the fuel filter or lines are removed.
2. When the tank is completely empty.
3. After the tractor has not been used for a long period of time.

◆ **Bleeding procedure is as follows:**
1. Fill the fuel tank with fuel.
2. Start the engine and run for about 30 seconds, and then stop the engine.

■Draining Clutch Housing Water

The tractor is equipped with a drain plug under the clutch housing.
After operating in rain, snow or tractor has been washed, water may get into the clutch housing.
Remove the drain plug and drain the water, then install the plug again.

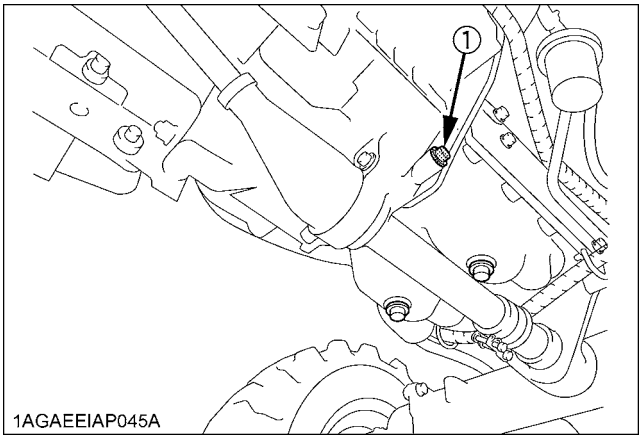

(1) Water drain plug

■Replacing Fuse

The tractor electrical system is protected from potential damage by fuses.
A blown fuse indicates that there is an overload or short somewhere in the electrical system.
If any of the fuses should blow, replace with a new one of the same capacity.

IMPORTANT :

- Before replacing a blown fuse, determine why the fuse blew and make any necessary repairs. Failure to follow this procedure may result in serious damage to the tractor electrical system. Refer to the "TROUBLESHOOTING" section of this manual or your local KUBOTA Dealer for specific information dealing with electrical problems.

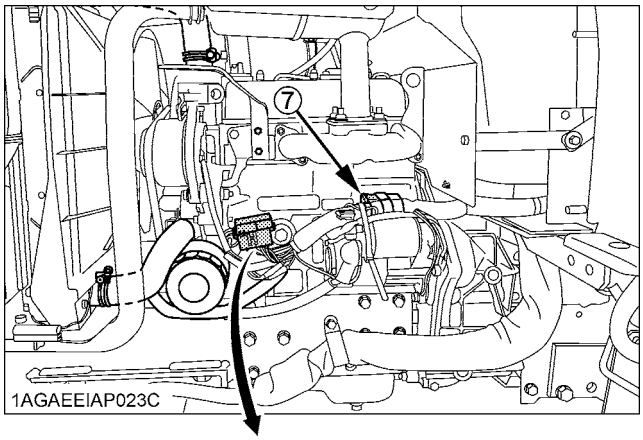

FLASHER HAZARD	10A	①
SOLENOID	30A	②
OUTLET (RIGHT SIDE) (MAX. 120W)	10A	③
HEAD LIGHT PANEL	10A	④
WORK LIGHT (MAX. 35W)	5A	⑤
GLOW LAMP	5A	⑥

1AGAEEIAP046A

◆ **Protected circuit**

FUSE No.	CAPACITY (A)	Protected circuit
(1)	10	Flasher / Hazard
(2)	30	Solenoid
(3)	10	Outlet (Right side)
(4)	10	Head Light / Panel
(5)	5	Work light
(6)	5	Glow lamp
(7)	Slow blow fuse	Check circuit against wrong battery connection

■Replacing Light Bulb

1. Head lights
   Take the bulb out of the light body and replace with a new one.
2. Other lights
   Detach the lens and replace the bulb.

Light	Capacity
Head light	23 W
Tail light / Turn signal	21 / 5 W
Hazard light / Turn signal	32 CP

Replace the below parts if any deterioration (crack, hardening, scar or deformation) or damage occurred. However, must be replaced every 4 years regardless of the condition.

■Replacing Radiator Hose (Water pipes)

Replace the hoses and clamps.
(See "Checking Radiator Hoses and Clamps" in "EVERY 1 YEAR" in "PERIODIC SERVICE" section.)

■Replacing Fuel Lines

Consult your local KUBOTA Dealer for this service.

■Replacing Intake Air Line

Consult your local KUBOTA Dealer for this service.

STORAGE

WARNING

To avoid personal injury or death:

- **Do not clean the machine while the engine is running.**
- **To avoid the danger of exhaust fume poisoning, do not operate the engine in a closed building without proper ventilation.**
- **When storing, remove the key from the key switch to avoid unauthorized persons from operating the tractor and getting injured.**

TRACTOR STORAGE

If you intend to store your tractor for an extended period of time, follow the procedures outlined below. These procedures will insure that the tractor is ready to operate with minimum preparation when it is removed from storage.

1. Check the bolts and nuts for looseness, and tighten if necessary.
2. Apply grease to tractor areas where bare metal will rust also to pivot areas.
3. Detach the weights from the tractor body.
4. Inflate the tires to a pressure a little higher than usual.
5. Change the engine oil and run the engine to circulate oil throughout the engine block and internal moving parts for about 5 minutes.
6. With all implements lowered to the ground, coat any exposed hydraulic cylinder piston rods with grease.
7. Remove the battery from the tractor. Store the battery following the battery storage procedures.
   (See "Battery" in "EVERY 100 HOURS" in "PERIODIC SERVICE" section.)
8. Keep the tractor in a dry place where the tractor is sheltered from the elements. Cover the tractor.
9. Store the tractor indoors in a dry area that is protected from sunlight and excessive heat. If the tractor must be stored outdoors, cover it with a waterproof tarpaulin.
   Jack the tractor up and place blocks under the front and rear axles so that all 4 tires are off the ground. Keep the tires out of direct sunlight and extreme heat.

IMPORTANT :

- When washing the tractor, be sure to stop the engine. Allow sufficient time for the engine to cool before washing.
- Cover the tractor after the muffler and the engine have cooled down.

REMOVING THE TRACTOR FROM STORAGE

1. Check the tire air pressure and inflate the tires if they are low.
2. Jack the tractor up and remove the support blocks from under the front and rear axles.
3. Install the battery. Before installing the battery, be sure it is fully charged.
4. Check the fan belt tension.
5. Check all fluid levels (engine oil, transmission/ hydraulic oil, engine coolant and any attached implements).
6. Start the engine. Observe all gauges. If all gauges are functioning properly and reading normal, move the tractor outside. Once outside, park the tractor and let the engine idle for at least 5 minutes. Shut the engine off and walk around tractor and make a visual inspection looking for evidence of oil or water leaks.
7. With the engine fully warmed up, release the parking brake and test the brakes for proper adjustment as you move forward. Adjust the brakes as necessary.

TROUBLESHOOTING

ENGINE TROUBLESHOOTING

If something is wrong with the engine, refer to the table below for the cause and its corrective measure.

Trouble		Cause	Countermeasure
Engine is difficult to start or won't start.		● No fuel flow.	● Check the fuel tank and the fuel filter. Replace filter if necessary.
		● Air or water is in the fuel system.	● Check to see if the fuel line coupler bolt and nut are tight. ● Bleed the fuel system. (See "Bleeding Fuel System" in "SERVICE AS REQUIRED" in "PERIODIC SERVICE" section.) ● Remove water from the system and replace the fuel filter.
		● In winter, oil viscosity increases, and engine revolution is slow.	● Use oils of different viscosities, depending on ambient temperatures. ● Use engine block heater. (Option)
		● Battery becomes weak and the engine does not turn over quick enough.	● Clean battery cables and terminals. ● Charge the battery. ● In cold weather, always remove the battery from the engine, charge and store it indoors. Install it on the tractor only when the tractor is going to be used.
Insufficient engine power.		● Insufficient or dirty fuel. ● The air cleaner is clogged.	● Check the fuel system. ● Clean or replace the element.
Engine stops suddenly.		● Insufficient fuel.	● Refuel. ● Bleed the fuel system if necessary.
Exhaust fumes are colored.	Black	● Fuel quality is poor. ● Too much oil. ● The air cleaner is clogged.	● Change the fuel and fuel filter. ● Check the proper amount of oil. ● Clean or replace the element.
	Blue white	● The inside of exhaust muffler is damp from fuel. ● Injection nozzle trouble. ● Fuel quality is poor.	● Heat the muffler by applying load to the engine. ● Check the injection nozzle. ● Change the fuel and fuel filter.
Engine overheats.		● Engine overloaded.	● Shift to lower gear or reduce load.
		● Low coolant level.	● Fill cooling system to the correct level; check radiator and hoses for loose connections or leaks.
		● Loose or defective fan belt.	● Adjust or replace fan belt.
		● Dirty radiator core or grille screens.	● Remove all trash.
		● Coolant flow route corroded.	● Flush cooling system.

If you have any questions, consult your local KUBOTA Dealer.

OPTIONS

Consult your local KUBOTA Dealer for further detail.

- Rear Work Light
  High visibility for night work.
- Front end weights
  For front ballast
- Mounting Kit (Front end weights)
  To mount Front end weights
- Engine Block Heater
  For extremely cold weather starting
- Rear Remote Hydraulics
- Alternator kit

APPENDICES

INDEX

3-point Hitch Lowering Speed 35
Air Cleaner Primary Element.....58
Air Cleaner Primary Element and Secondary Element 65
Anti-Freeze.....66
Anti-Freeze.....69
Battery Condition.....56
Block Heater (Option).....13
Brake Pedal.....54
Brake Pedal.....60
Brake Pedals (Right and Left) 21
Control Lever and Hydraulic Hose Connections 36
Coolant Level 53
Coolant Temperature Gauge.....26
Differential Lock.....28
Directions for Use of Power Steering 29
Do not Operate the Tractor at Full Speed for the First 50 Hours 16
Draining Clutch Housing Water.....70
Drawbar.....33
Drawbar Length.....34
Dual Tires.....39
Easy Checker (TM) 25
Electrical Outlet 29
Electrical Wiring and Battery Cables 54
Engine Oil.....61
Engine Oil Filter.....60
Engine Oil Level 52
Engine Side Cover 51
Engine Start System.....55
Engine Valve Clearance.....65
Evacuator Valve 53
Fan Belt Tension 59
Flushing Cooling System and Coolant 65
Flushing Cooling System and Coolant 68
Foldable ROPS 18
Front Axle Case Oil 65
Front Axle Pivot [4WD] 64
Front Ballast 44
Front Wheel Drive Lever 23
Front Wheels.....40
Fuel Filter 58
Fuel Filter Element 64
Fuel Gauge..... 26
Fuel Hose 70
Fuel Injection Nozzle Injection Pressure 65
Fuel Lines 68
Fuel Lines 70
Fuel Lines 71
Fuel System..... 70
Fuse..... 71
Gauges, Meter and Easy Checker (TM)..... 54
Grill and Radiator Screen 53
Hand Throttle Lever..... 23
Head Light / Turn Signal / Hazard Light Switch20
Head Light, Hazard Light etc. 54
Hood 50
Hourmeter / Tachometer 27
Hydraulic Block Type Outlet 36
Hydraulic Control Unit Use Reference Chart... 38
Hydraulic Oil Filter 63
Immediately Stop the Engine if:..... 25
Inflation Pressure..... 39
Injection Pump..... 67
Intake Air Line..... 67
Intake Air Line..... 70
Intake Air Line..... 70
Intake Air Line..... 71
Lifting Rod (Right)..... 33
Light Bulb..... 71
Loader / Remote Control Valve Lever 37
Lubricating Grease Fittings..... 55
Lubricating Oil for New Tractors 16
Movable Parts..... 54
Operating on Slopes or Rough Terrain..... 29
Operating the Tractor on a Road..... 28
Operator's Seat..... 18
Parking 27
Parking Brake 23
Position Control 35
PTO Clutch Lever 31
PTO Select Lever 30
Radiator Hose (Water pipes) 70
Radiator Hose (Water pipes) 70
Radiator Hose (Water pipes) 71
Radiator Hoses and Clamps..... 67
Range Gear Shift Lever (L-M-H) 22
Rear Ballast 44

Rear Wheels.....40
Refueling 51
Seat Belt.....19
Seat Belt and ROPS.....54
Selecting the holes of lifting rods and lower links. 33
Selecting the Top Link Mounting Holes.....33
Speed Control Pedal 24
Speed Set Device.....24
Stationary PTO.....31
Stopping 25
Telescopic Stabilizers.....34
Tilt Steering Adjustment 19
To Fold the ROPS 16
To Raise the ROPS to Upright Position 17
Toe-in 62
Top Link.....33
Tractor Lights 21
Transmission Fluid 62
Transmission Fluid Level.....52
Transmission Oil Filter [HST] 61
Transport the Tractor Safely.....29
Treads 41
Valve Lock.....37
Walk Around Inspection 51
Warm-up Transmission Oil at Low Ambient Temperatures 14
Wheel Bolt Torque.....56