https://truckmanualshub.com/

Model 7431
VT Plus
Parts Manual

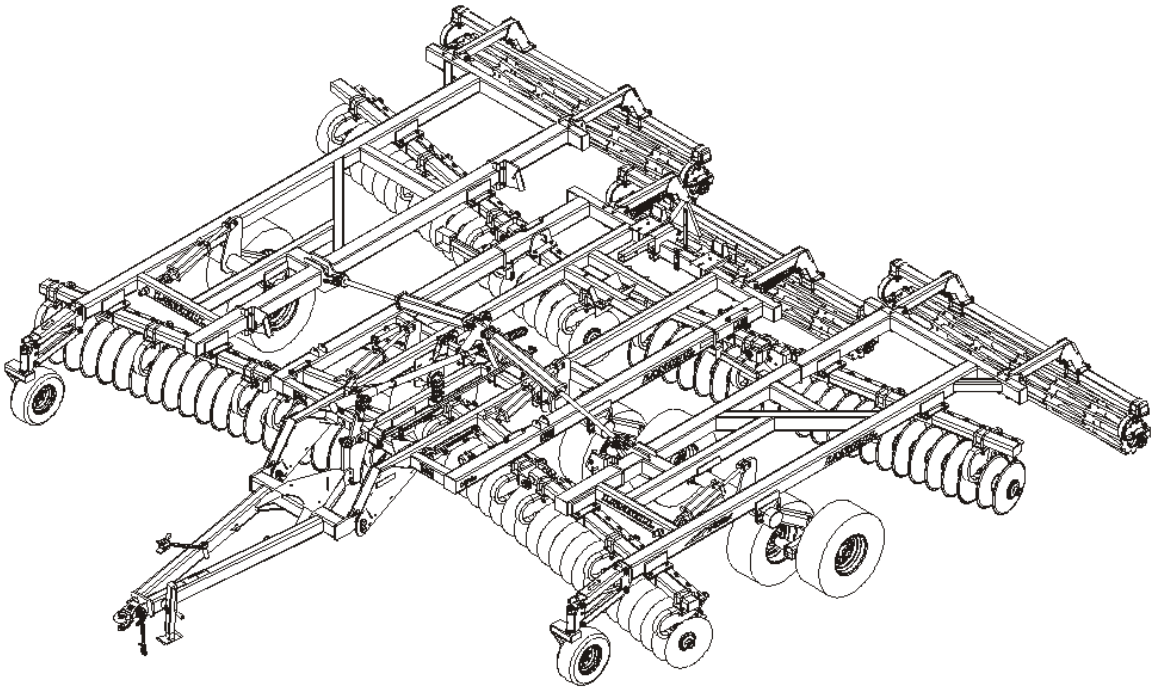

LANDOLL CORPORATION
1900 North Street
Marysville, Kansas 66508
(785) 562-5381
800-428-5655 ~ WWW.LANDOLL.COM

F-562-0419 **04/2019-Present**

https://truckmanualshub.com/

Manuals for the 7431 VT Plus

MANUAL NUMBER	MANUAL NAME
F-561	7431 VT Plus Operator’s Manual
F-562	7431 VT Plus Parts Manual

https://truckmanualshub.com/

Table of Contents

1 Illustrated Parts List

INSTRUCTIONS FOR ORDERING PARTS 1-1
Frame and Wing Assembly (20’, 23’, 26’, 29’) 1-3
Frame and Wing Assembly (33’) 1-5
Lift Wheel Assembly, Frame (20’, 23') 1-7
Lift Wheel Assembly, Frame (26', 29’) 1-11
Lift Wheel Assembly, Frame (33') 1-15
Lift Radius Rod Assembly 1-17
Lift Wheel Assembly, Wings (20’, 23’) 1-19
Lift Wheel Assembly, Wings (26’, 29, 33’) 1-23
Hitch and Leveling Linkage Assembly 1-30
Hitch Assemblies 1-33
7,000 Lb. Sidewind Jack Assembly 1-35
Leveler Screw Assembly 1-36
Depth Stop Tube Assembly (Before 4-1-2016) 1-37
Depth Stop Tube Assembly (After 4-1-2016) 1-39
Manual Leveler Assembly 1-41
Hydraulic Leveler Assembly 1-43
Front Gauge Wheel Assembly 1-45
Disc Gang Assembly 1-47
7431-20' Disc Gang Placement 1-52
7431-23' Disc Gang Placement 1-56
7431-26' Disc Gang Placement 1-60
7431-29' Disc Gang Placement 1-64
7431-33' Disc Gang Placement 1-68
Conditioner Reel Assembly 1-71
Hydraulic Conditioner Reel Assembly (20’ - 29’ Models) 1-74
Hydraulic Conditioner Reel Assembly (33’ Model) 1-78
Reel/Gangbar Assembly 1-81
Reel Double Spring Assembly 1-83
Reel Double Hydraulic Assembly 20’/23’/26’/29’ 1-85

https://truckmanualshub.com/

Reel Double Assembly 7431-33' 1-87
Double Round Reel Assembly 1-89
Double Reel Assembly Center 33' 1-91
Rear Jack Assembly 1-93
Rear Tow Arm Hitch Assembly 1-95
Cylinder 2-1/2" X 1-1/2" (1" THDS) 1-96
Cylinder 2-1/2" X 1-1/2" (1-1/8" THDS) 1-97
Cylinder - 2-1/2" X 2-1/2" 1-98
Electrical Assembly (Prior to August, 2013) 1-101
Electrical Assembly W/ Led Lights (After August, 2013) 1-103
Hydraulic Assembly 1-112
Bolt On Wing Fold Kit (7431-26) 1-115
Cylinder - Rephase Assembly 4 X 10 (1" Clevis Pins) 1-116
Cylinder - Rephase Assembly 3-3/4 X 10 (1" Clevis Pins) 1-117
Cylinder - 3-1/2" X 6" 1-118
Cylinder - 4" X 30" (1-1/2" Dia Rod) 1-119
Decal Installation 1-121

2 Numerical Index

https://truckmanualshub.com/

INSTRUCTIONS FOR ORDERING PARTS

ORDER PARTS FROM LANDOLL PARTS DISTRIBUTION CENTER

**** Repair parts must be ordered through an Authorized Dealer ****

PHONE NO: 1-800-423-4320 OR 1-785-562-5381 **FAX NO: 888-527-3909**
ORDER ONLINE: Dealer.landoll.com

IDENTIFICATION PLATE

The identification plate, which lists the model number and serial number, is located on the front of the frame **(See Figure 1-1..)**

SERIAL NUMBER NOMENCLATURE

The serial number for the Model 7431 VT Plus is located on the identification plate.

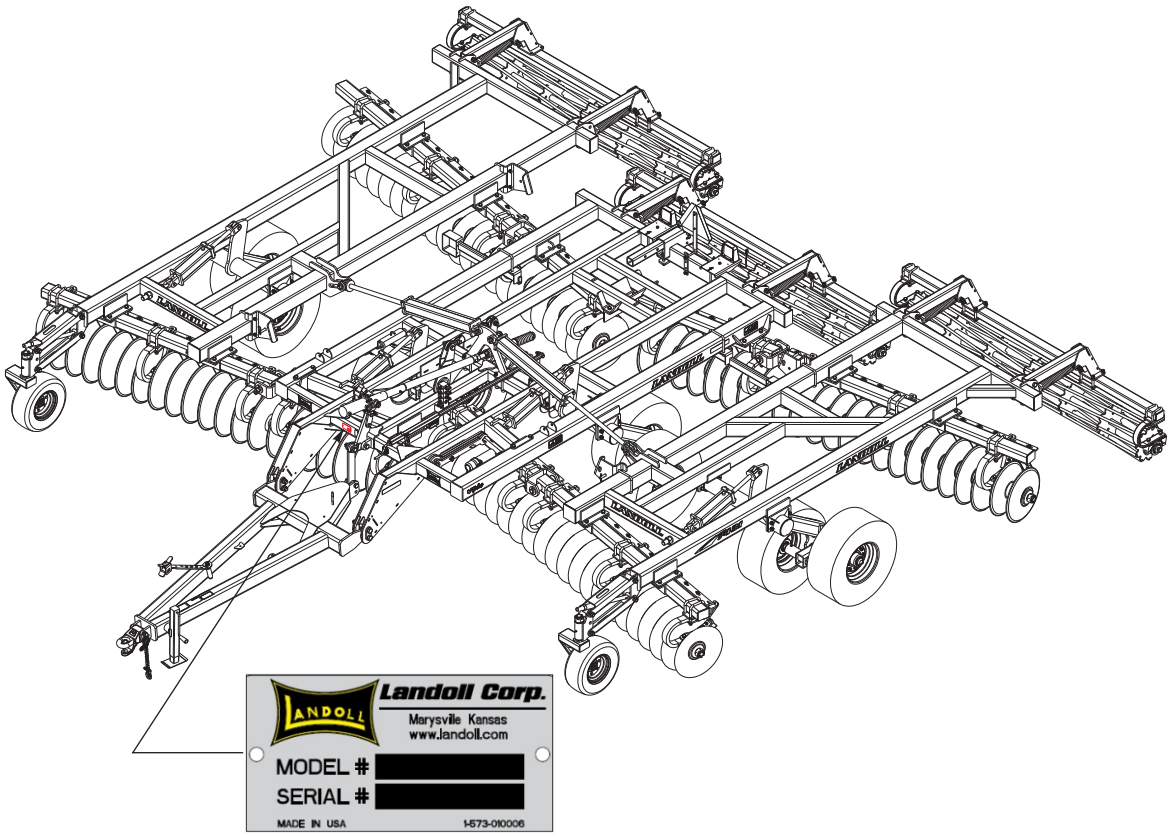

Figure 1-1: Identification Plate and Location

https://truckmanualshub.com/

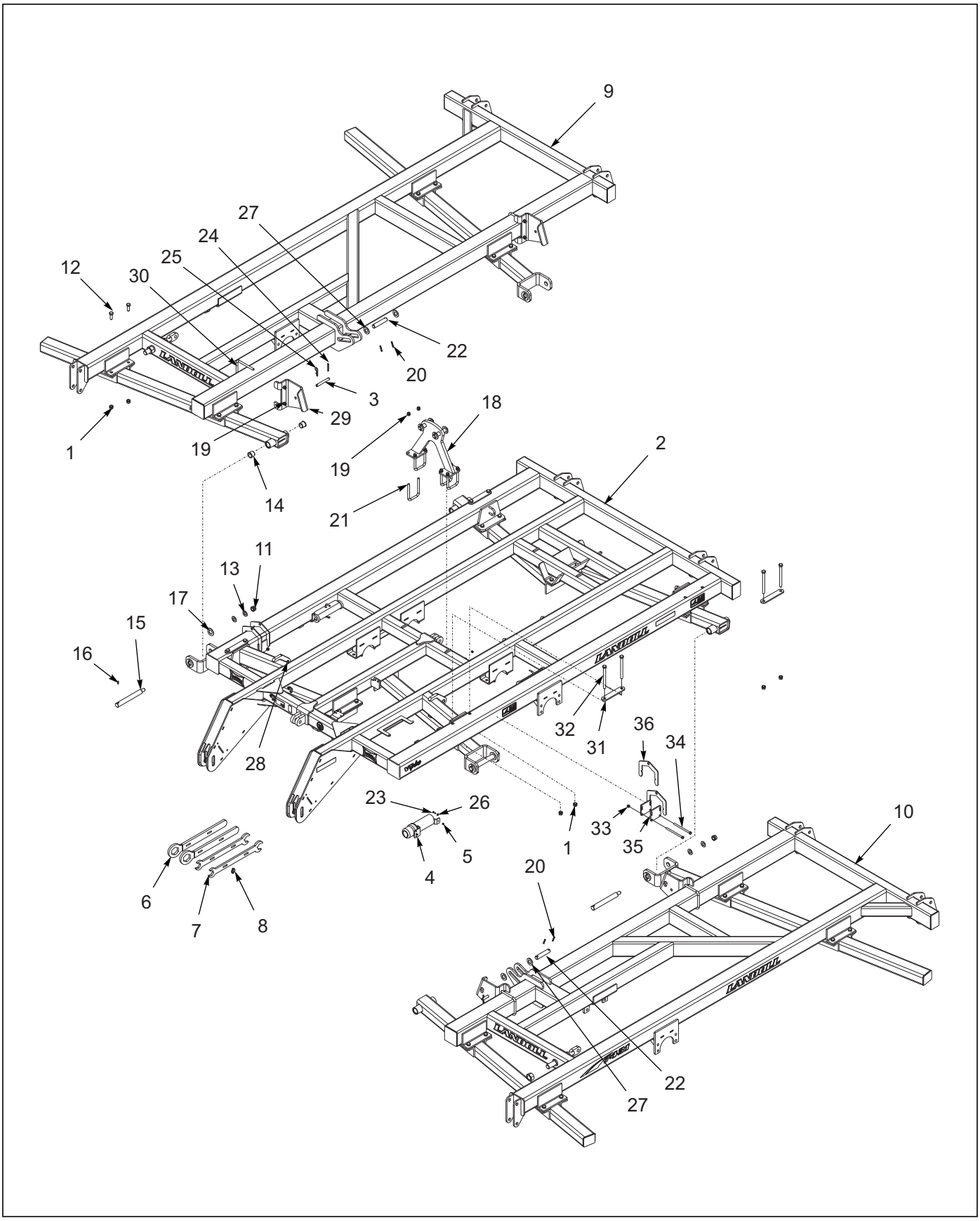

Figure 1-2: Frame and Wing Assembly (20’, 23’, 26’, 29’)

https://truckmanualshub.com/

Frame and Wing Assembly (20’, 23’, 26’, 29’)

ITEM	PART NO.	DESCRIPTION	QTY.
1	1-512-010005-15	NUT, HEX LOCK 3/4-10 GRB	
2	158737	FRAME, CENTER	
3	2-557-010409	PIN, WING LOCK	
4	142753	MANUAL HOLDER	
5	1-512-010005-01	NUT, HEX LOCK 1/4-20	
6	140533	GANG WRENCH	
7	141109	ADJUSTMENT WRENCH	
8	70239854	PIN, QUICK HITCH	
9	170232	FRAME, WING RIGHT **(20’)**	
9	158749	FRAME, WING RIGHT **(23')**	
9	158751	FRAME, WING RIGHT **(26')**	
9	158753	FRAME, WING RIGHT **(29')**	
10	170233	FRAME, WING LEFT **(20’)**	
10	158750	FRAME, WING LEFT **(23')**	
10	158752	FRAME, WING LEFT **(26')**	
10	158754	FRAME, WING LEFT **(29')**	
11	1-512-010005-19	NUT, HEX LOCK 1-8 GRB	
12	1-654-010032-05	SCREW, HEX HEAD CAP 3/4-10 X 2 GR8	
13	1-861-010032-24	WASHER, FLAT 1N	
14	140599	BEARING, FLANGE 1-1/2	
15	141152	PIN, HINGE	
16	144115	PIN, GROOVED ALLOY 1/2 X 2-1/4	
17	141266	WASHER, THRUST 1-1/2	
18	153691	MOUNT, FOLD CYLINDER NC	
19	1-512-010005-13	NUT, HEX LOCK 5/8-11 GRB	
20	1-647-010004240	PIN, SPRING SLOTTED 5/16 X 2-1/2	
21	141228	U-BOLT 5/8 X 4 X 6-1/2	
22	141244	PIN, FOLD	
23	1-654-010047-06	SCREW, HEX HEAD CAP 1/4-20 X 1 GR5	
24	0600-250-03000	ROLL PIN 1/4 X 3	
25	1-557-010013	PIN, HAIR 3/16	
26	1-861-010032-07	WASHER, FLAT 1/4	
27	116100	WASHER, FLAT 1-1/4N	
28	2-150-010008	BUSHING, STEEL	
29	153717	BRACKET, WING STABILIZER	
30	141269	U-BOLT	
31	158850	PLATE, CLAMP	
32	107491	SCREW, HEX HEAD CAP 3/4-10 X 8-1/2 GR8	
33	1-512-010005-09	NUT, HEX LOCK 1/2-13 GRB	
34	1-654-010055-20	SCREW, HEX HEAD CAP 1/2-13 X 7-1/2 GR5	
35	171025	PLATE, WING LOCK BASE	
36	171026	PLATE, WING LOCK	

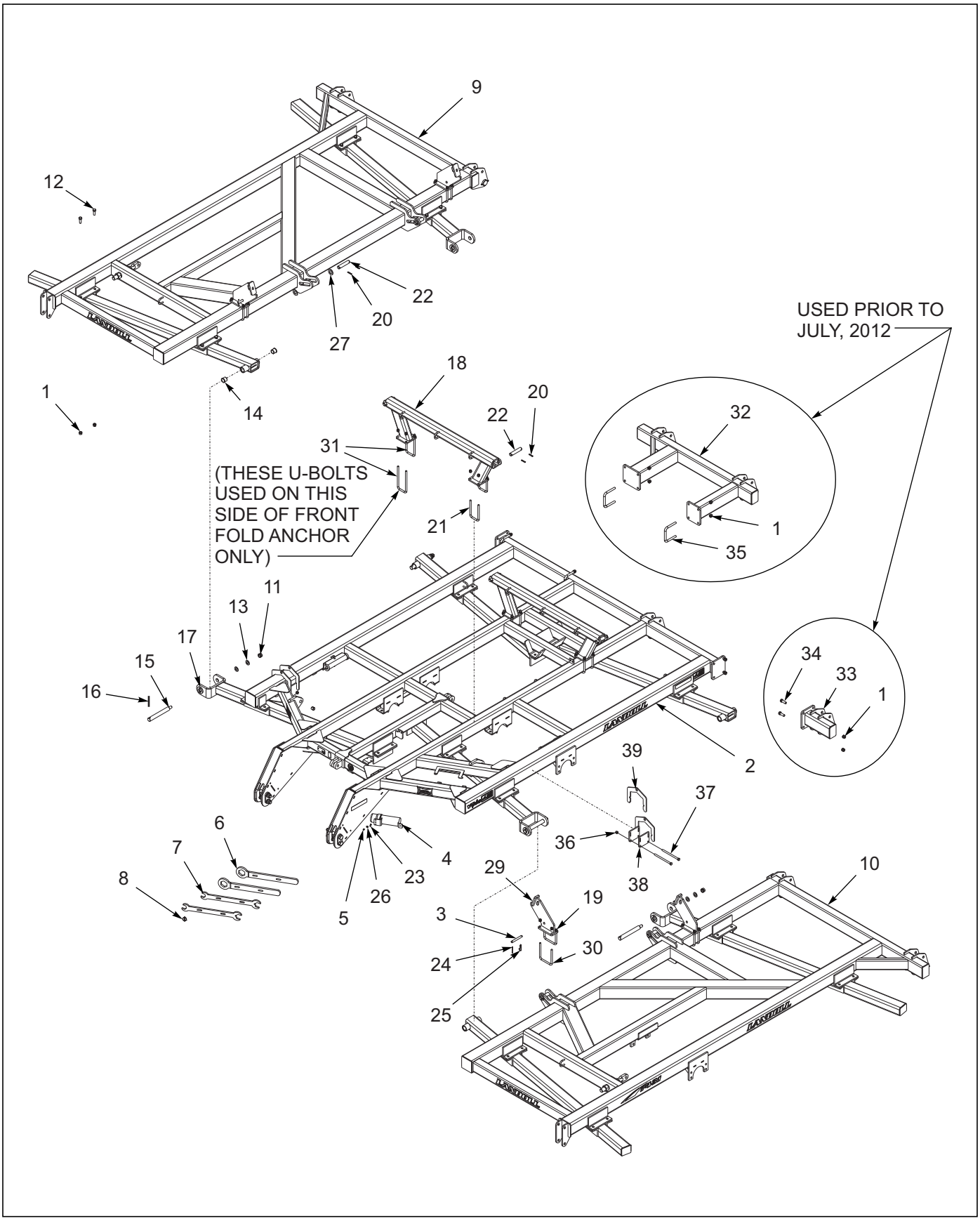

Figure 1-3: Frame and Wing Assembly (33')

https://truckmanualshub.com/

Frame and Wing Assembly (33’)

ITEM	PART NO.	DESCRIPTION	QTY.
1	1-512-010005-15	NUT, HEX LOCK 3/4-10 GRB	
2	158738	FRAME, CENTER **(PRIOR TO 07/18/2012)**	
2	171089	FRAME, CENTER **(AFTER 07/18/2012)**	
3	2-557-010409	PIN, WING LOCK	
4	142753	MANUAL HOLDER	
5	1-512-010005-01	NUT, HEX LOCK 1/4-20	
6	140533	GANG WRENCH	
7	141109	ADJUSTMENT WRENCH	
8	70239854	PIN, QUICK HITCH	
9	158755	FRAME, WING RIGHT **(PRIOR TO 07/18/2012)**	
9	158753	FRAME, WING RIGHT **(AFTER 07/18/2012)**	
10	158754	FRAME, WING LEFT	
11	1-512-010005-19	NUT, HEX LOCK 1-8 GRB	
12	1-654-010032-05	SCREW, HEX HEAD CAP 3/4-10 X 2 GR8	
13	1-861-010032-24	WASHER, FLAT 1N	
14	140599	BEARING, FLANGE 1-1/2	
15	141152	PIN, HINGE	
16	144115	PIN, GROOVED ALLOY 1/2 X 2-1/4	
17	141266	WASHER, THRUST 1-1/2	
18	156072	MOUNT, FOLD CYLINDER WC	
19	1-512-010005-13	NUT, HEX LOCK 5/8-11 GRB	
20	1-647-010004240	PIN, SPRING SLOTTED 5/16 X 2-1/2	
21	2-102-010037	U-BOLT	
22	141244	PIN, FOLD	
23	1-654-010047-06	SCREW, HEX HEAD CAP 1/4-20 X 1 GR5	
24	0600-250-03000	ROLL PIN 1/4 X 3	
25	1-557-010013	PIN, HAIR 3/16	
26	1-861-010032-07	WASHER, FLAT 1/4	
27	116100	WASHER, FLAT 1-1/4N	
28	2-150-010008	BUSHING, STEEL	
29	154667	BRACKET, WING STABILIZER	
30	141269	U-BOLT	
31	158841	U-BOLT	
32	154417	MOUNT, CHOPPER EXT DOUBLE	
33	154418	MOUNT, CHOPPER EXT SINGLE	
34	1-654-010061-06	SCREW, HEX HEAD CAP 3/4-10 X 2-1/4 GR5	
35	111392	U-BOLT	
36	1-512-010005-09	NUT, HEX LOCK 1/2-13 GRB	
37	1-654-010055-20	SCREW, HEX HEAD CAP 1/2-13 X 7-1/2 GR5	
38	171025	PLATE, WING LOCK BASE	
39	171026	PLATE, WING LOCK	

https://truckmanualshub.com/

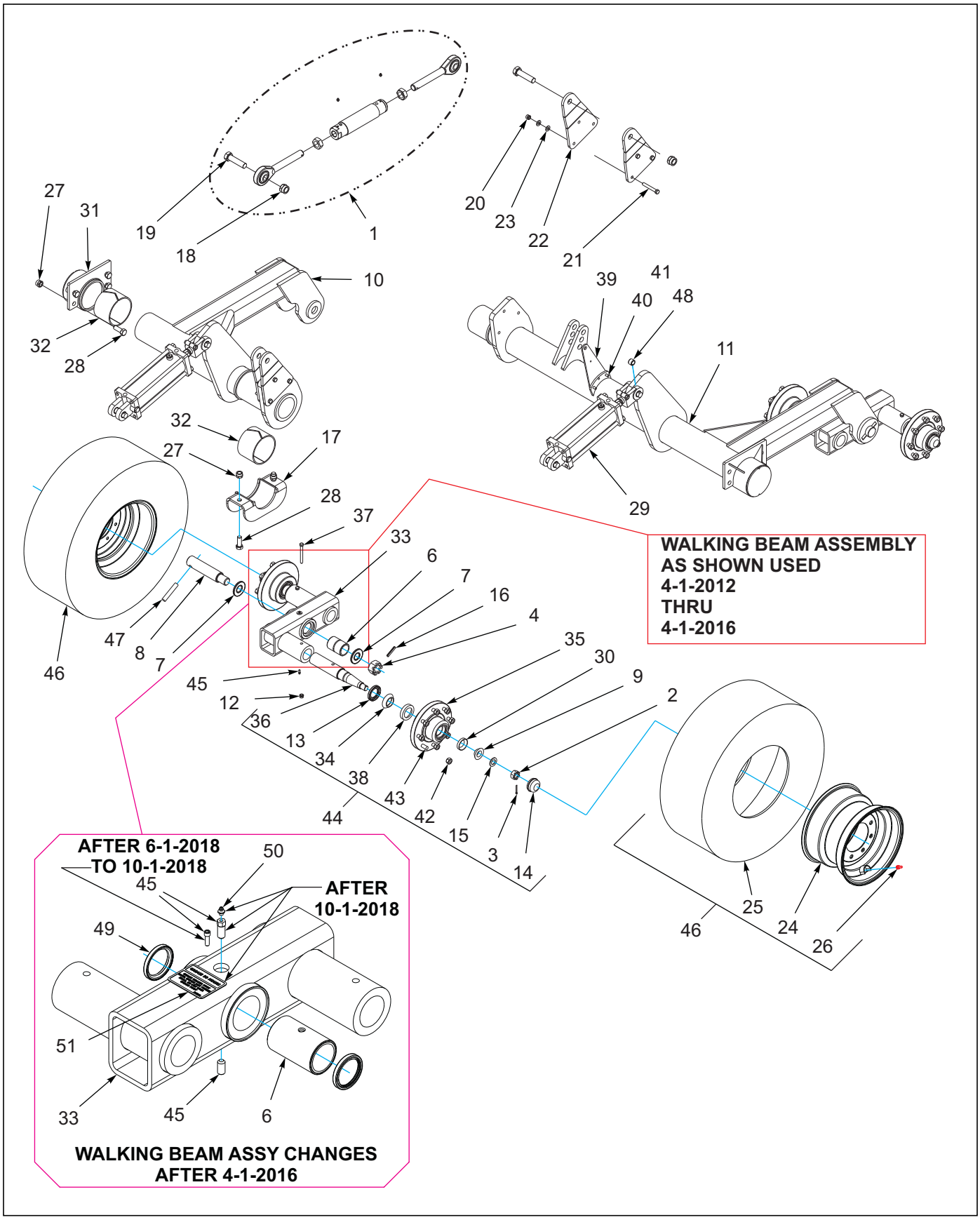

Figure 1-4: Lift Wheel Assembly, Frame (20’, 23’)

https://truckmanualshub.com/

Lift Wheel Assembly, Frame (20’, 23')

ITEM	PART NO.	DESCRIPTION	QTY.
1	158844	RADIUS ROD, LIFT ASSEMBLY **(SEE PAGE 1-17)**	
2	1-516-010001-20	NUT, HEX SLOT 1-14	
3	1-557-010362-51	PIN, COTTER 3/16 X 1-1/2	
4	119118	NUT, HEX SLOTTED 1-1/2-12	
6	158903	BUSHING, SPRING 2-1/2 X 2 X 4-5/8 **(BEFORE 4-1-2016)**	
6	200310	ASSY, TANDEM PIVOT, 2” **(AFTER 4-1-2016)**	
7	160597	WASHER, THRUST 2” **(4” OD) (BEFORE 01/01/2013)**	
7	171070	WASHER, THRUST 2” **(3-11/16” OD) (AFTER 01/01/2013)**	
8	157019	SPINDLE, WALKING BEAM	
9	1-076-010007	CONE, OUTER BEARING	
10	171085	LIFT, CENTER RIGHT **(ITEMS 20-23 & 48)**	
11	171086	LIFT, CENTER LEFT **(ITEMS 20-23 & 48)**	
12	101988	NUT, HEX LOCK 7/16-14 GRB	
13	140554	SEAL, GREASE	
14	141236	DUST CAP, WHEEL HUB	
15	141238	WASHER, SPINDLE	
16	127712	PIN, SPRING SLOTTED 3/8 X 2-1/4	
17	141234	BEARING CAP, LIFT	
18	1-512-010005-19	NUT, HEX LOCK 1-8 GRB	
19	1-654-010065-13	SCREW, HEX HEAD CAP 1-8 X 4 GR5	
20	1-512-010005-09	NUT, HEX LOCK 1/2-13 GRB	
21	1-654-010055-11	SCREW, HEX HEAD CAP 1/2-13 X 3-1/2 GR5	
22	171063	PLATE, OFFSET	
23	1-861-010032-14	WASHER, FLAT1/2	
24	140548	WHEEL, 15 X 10 8 BOLT	
25	184706	TIRE, 12.5L X 15 FI FIRESTONE **(BEFORE 11-1-2016)**	
25	204385	TIRE, FIRESTONE RADIAL 320/70R15 **(AFTER 11-1-2016)**	
26	TR416	VALVE STEM, TUBELESS TIRE **(BEFORE 11-1-2016)**	
26	TR575	VALVE STEM, TUBELESS TIRE **(AFTER 11-1-2016)**	
27	1-512-010005-15	NUT, HEX LOCK 3/4-10 GRB	
28	1-654-010061-05	SCREW, HEX HEAD CAP 3/4-10 X 2 GR5	
29	140470	CYLINDER, 4 X 10 REPHASE **(SEE PAGE 1-116)**	
30	1-076-010010	CUP, BEARING	
31	141209	BEARING CAP, LIFT	
32	140519	BEARING, UHMW 4"	
33	172962	WALKING BEAM, 2-1/4 SPINDLE **(BEFORE 4-1-2016)**	
33	198342	WALKING BEAM ASSY, 2-1/4 **(AFTER 4-1-2016)**	
34	140595	CONE, BEARING	
35	140646	HUB W/ CUPS 8 BOLT **(ITEMS 30 & 38)**	
36	141198	SPINDLE 2-1/4”	
37	141809	SCREW, HEX HEAD CAP 7/16-14 X 4 GR5	
38	140594	CUP, BEARING INNER	
39	141227	PLATE, DEPTH STOP MOUNT	
40	1-512-010005-05	NUT, HEX 3/8-16 GRB	
41	1-654-010051-06	SCREW, HEX HEAD CAP 3/8-16 X 1-1/4 GR5	
42	102600	LUG NUT **(8 BOLT)**	
43	143067	STUD BOLT **(8 BOLT)**	
44	147553	8 BOLT HUB/SPINDLE ASSY, 2-1/4” **(ITEMS 2-3,9,13-15, & 34-36)**	

https://truckmanualshub.com/

Lift Wheel Assembly, Frame (20’, 23')

ITEM	PART NO.	DESCRIPTION	QTY.
45	153804	FITTING, GREASE 1/4-28 STR LONG **(BEFORE 01/01/2013)**	
45	171024	FITTING, GREASE 1/4-28 STR SHORT **(AFTER 01/01/2013)**	
45	200129	SCREW SOCKET HD CAP 5/16-24X1 **(FROM 4-1-2016)**	
45	15G816ER	SCREW SET SOC HD CPPT.5-13X1 **(FROM 6-1-2018 TO 10-1-2018)**	
45	212046	SCREW, SET FOR ZERK **(AFTER10-1-2018)**	
46	184709	TIRE & WHEEL ASSY 12.5L X 15 **(ITEMS 24-26) (BEFORE 11-1-2016)**	
46	184708	TIRE & WHEEL ASSY, 320/70R15 **(ITEMS 24-26) (AFTER 11-1-2016)**	
47	156992	PIN, WALKING BEAM SPINDLE	
48	2-150-010008	BUSHING, 1-1/4 X 1 ID STEEL	
49	198322	SEAL, V17, DOUBLE LIP 2" **(AFTER 04/01/2016)**	
50	1-298-010001-1	ZERK FITTING 1/4 SAE **(AFTER10-1-2018)**	
51	215341	DECAL, GREASE WALKER **(AFTER10-1-2018)**	

https://truckmanualshub.com/

Table provided for general use.

NOTES:

https://truckmanualshub.com/

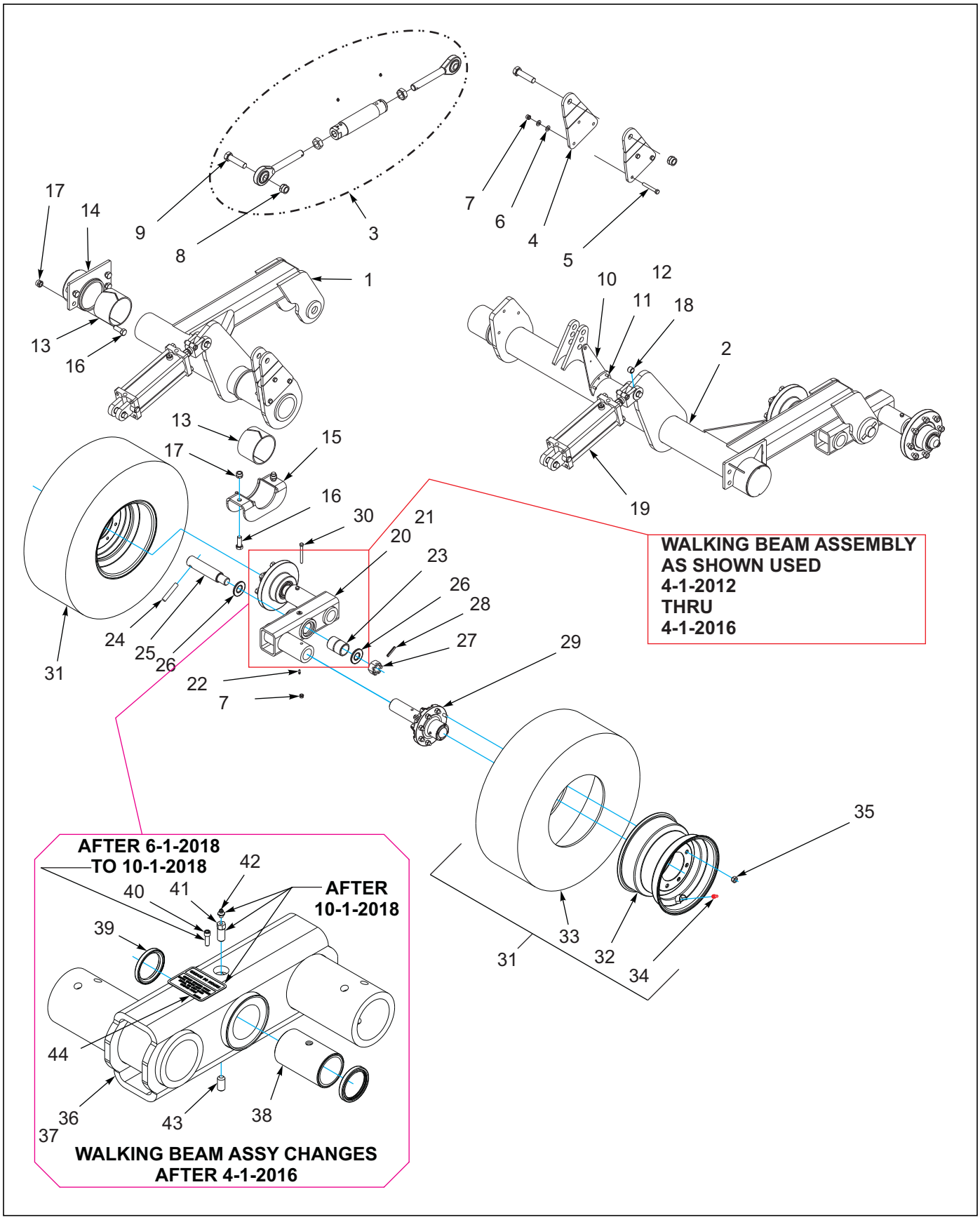

Figure 1-5: Lift Wheel Assembly, Frame (26’, 29’)

https://truckmanualshub.com/

Lift Wheel Assembly, Frame (26', 29')

ITEM	PART NO.	DESCRIPTION	QTY.
1	171085	LIFT, CENTER RIGHT **(ITEMS 4-7**	
2	171086	LIFT, CENTER LEFT **(ITEMS 4-7) (WALKING BEAM ASSEMLY & HUB//SPINDLE ASSEMBLY NOT INCLUDED)**	
3	158844	RADIUS ROD, LIFT ASSEMBLY **(SEE PAGE 1-17)**	
4	171063	PLATE, OFFSET	
5	1-654-010055-11	SCREW, HEX HEAD CAP 1/2-13 X 3-1/2 GR5	
6	1-861-010032-14	WASHER, FLAT1/2	
7	1-512-010005-09	NUT, HEX LOCK 1/2-13 GRB	
8	1-512-010005-19	NUT, HEX LOCK 1-8 GRB	
9	1-654-010065-13	SCREW, HEX HEAD CAP 1-8 X 4 GR5	
10	141227	PLATE, DEPTH STOP MOUNT	
11	1-654-010051-06	SCREW, HEX HEAD CAP 3/8-16 X 1-1/4 GR5	
12	1-512-010005-05	NUT, HEX 3/8-16 GRB	
13	140519	BEARING, UHMW 4"	
14	141209	BEARING CAP, LIFT WLDMT	
15	141234	BEARING CAP, LIFT	
16	1-654-010061-05	SCREW, HEX HEAD CAP 3/4-10 X 2 GR5	
17	1-512-010005-15	NUT, HEX LOCK 3/4-10 GRB	
18	2-150-010008	BUSHING, 1-1/4 X 1 ID STEEL **(BEFORE 7-1-2015)**	
18	192890	BUSHING 1-3/8ODX1 IDX1 STEEL **(AFTER 7-1-2015)**	
19	140470	CYLINDER, 4 X 10 REPHASE **(SEE PAGE 1-116)**	
20	172961	WALKING BEAM ASSY 3" **(BEFORE 4-1-2016) (INCLUDES ITEMS 21-23**	
21	172959	WALKING BEAM, 3" SPINDLE WLDMT	
22	153804	FITTING, GREASE 1/4-28 STR LONG **(BEFORE 01/01/2013)**	
22	171024	FITTING, GREASE 1/4-28 STR SHORT **(AFTER 01/01/2013)**	
23	158903	BUSHING, SPRING 2-1/2X2X4-5/8 **(BEFORE 4-1-2016)**	
24	156992	PIN, WALKING BEAM SPINDLE	
25	157019	SPINDLE, WALKING BEAM	
26	160597	WASHER, THRUST 2 **(4" OD) (BEFORE 01/01/2013)**	
26	171070	WASHER, THRUST 2 **(3-11/16" OD) (AFTER 01/01/2013)**	
27	119118	NUT, HEX SLOTTED 1-1/2-12	
28	127712	PIN, SPRING SLOTTED 3/8 X 2-1/4	
29	156972	8 BOLT HUB/SPINDLE ASSEMBLY **(BEFORE 02-01-2020) SEE PAGE 1-25**	
29	223440	ASSY, 8 BOLT HUB & SPINDLE **(AFTER 02-01-2020) SEE PAGE 1-27**	
30	1-654-010055-15	SCREW, HEX HEAD CAP 1/2-13 x 5 GR5	
31	171010	TIRE AND WHEEL ASSEMBLY 380/55R **(ITEMS 24-26)**	
32	171011	WHEEL, 16.5 X12, 8 BOLT, POSITIVE 1-1/2" OFFSET	
33	165236	TIRE 380/55R 16.5 IMP **(GOODYEAR)**	
34	TR575	VALVE STEM, TUBELESS TIRE	
35	102600	LUG NUT **(8 BOLT)**	
36	198344	WALKING BEAM ASSY, 3" **(AFTER 4-1-2016) (INCLUDES ITEMS 37-44)**	
37	198339	WALKING BEAM, 3" SPINDLE WLDMT	
38	200311	ASSY, TANDEM PIVOT, 2-1/2" **(AFTER 4-1-2016)**	
39	198323	SEAL, V17, DOUBLE LIP 2-1/2" **(AFTER 04/01/2016)**	
40	200129	SCREW SOCKET HD CAP 5/16-24X1 **(FROM 4-1-2016 TO 6-1-2018)**	
41	212046	SCREW, SET FOR ZERK **(AFTER 10/1/2018)**	
42	1-298-010001-1	ZERK FITTING 1/4 SAE **(AFTER 10/1/2018)**	
43	200129	SCREW SOCKET HD CAP 5/16-24X1 **(FROM 4-1-2016 TO 6-1-2018)**	
43	15G816ER	SCREW SET SOC HD CPPT.5-13X1 **(AFTER 6-1-2018)**	

https://truckmanualshub.com/

Lift Wheel Assembly, Frame (26', 29’)

ITEM	PART NO.	DESCRIPTION	QTY.
44	215341	DECAL, GREASE WALKER **(AFTER 10/1/2018)**	

https://truckmanualshub.com/

Table provided for general use.T

NOTES:

https://truckmanualshub.com/

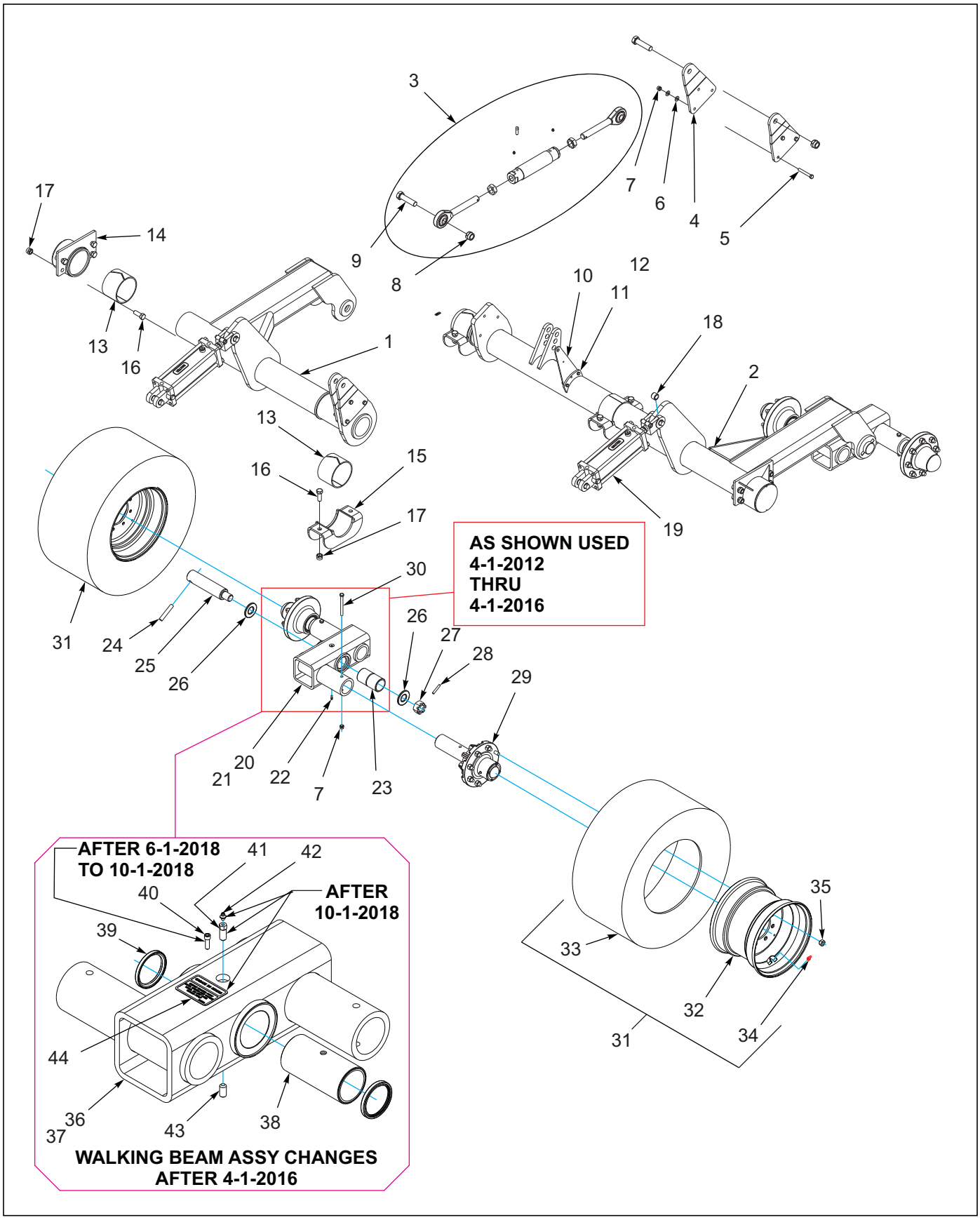

Figure 1-6: Lift Wheel Assembly, Frame (33')

https://truckmanualshub.com/

Lift Wheel Assembly, Frame (33')

ITEM	PART NO.	DESCRIPTION	QTY.
1	171087	LIFT, CENTER RIGHT **(ITEMS 4-7)**	
2	171088	LIFT, CENTER LEFT **(ITEMS 4-7) (WALKING BEAM ASSEMLY & HUB//SPINDLE ASSEMBLY NOT INCLUDED)**	
3	158844	RADIUS ROD, LIFT ASSEMBLY **(SEE PAGE 1-17)**	
4	171063	PLATE, OFFSET	
5	1-654-010055-11	SCREW, HEX HEAD CAP 1/2-13 X 3-1/2 GR5	
6	1-861-010032-14	WASHER, FLAT1/2	
7	1-512-010005-09	NUT, HEX LOCK 1/2-13 GRB	
8	1-512-010005-19	NUT, HEX LOCK 1-8 GRB	
9	1-654-010065-13	SCREW, HEX HEAD CAP 1-8 X 4 GR5	
10	141227	PLATE, DEPTH STOP MOUNT	
11	1-654-010051-06	SCREW, HEX HEAD CAP 3/8-16 X 1-1/4 GR5	
12	1-512-010005-05	NUT, HEX 3/8-16 GRB	
13	140519	BEARING, UHMW 4"	
14	141209	BEARING CAP, LIFT WLDMT	
15	141234	BEARING CAP, LIFT	
16	1-654-010061-05	SCREW, HEX HEAD CAP 3/4-10 X 2 GR5	
17	1-512-010005-15	NUT, HEX LOCK 3/4-10 GRB	
18	2-150-010008	BUSHING, 1-1/4 X 1 ID STEEL **(BEFORE 7-1-2015)**	
18	192890	BUSHING 1-3/8ODX1 IDX1 STEEL **(AFTER 7-1-2015)**	
19	140470	CYLINDER, 4 X 10 REPHASE **(SEE PAGE 1-116)**	
20	172960	WALKING BEAM, 3” SPINDLE **(BEFORE 4-1-2016) (INCLUDES ITEMS 21-23)**	
21	171065	WALKING BEAM, 3 IN SPINDLE	
22	153804	FITTING, GREASE 1/4-28 STR LONG **(BEFORE 01/01/2013)**	
22	171024	FITTING, GREASE 1/4-28 STR SHORT **(AFTER 01/01/2013)**	
23	158904	BUSHING, SPRING 3 X 2-1/2 X 6-5/8 **(BEFORE 4-1-2016)**	
24	156992	PIN, WALKING BEAM SPINDLE	
25	156991	SPINDLE, WALKING BEAM	
26	158911	WASHER, THRUST 2-1/2 **(4-1/2” OD) (BEFORE 01/01/2013)**	
26	164563	WASHER, THRUST 2-1/2 **(4-3/16” OD) (AFTER 01/01/2013)**	
27	119118	NUT, HEX SLOTTED 1-1/2-12	
28	127712	PIN, SPRING SLOTTED 3/8 X 2-1/4	
29	156972	8 BOLT HUB/SPINDLE ASSEMBLY **(BEFORE 02-01-2020) SEE PAGE 1-25**	
29	223440	ASSY, 8 BOLT HUB & SPINDLE **(AFTER 02-01-2020) SEE PAGE 1-27**	
30	1-654-010055-15	SCREW, HEX HEAD CAP 1/2-13 x 5 GR5	
31	157000	TIRE AND WHEEL ASSEMBLY **(GALAXY) (ITEMS 32-34)**	
31	165235	TIRE AND WHEEL ASSEMBLY **(GOODYEAR) (ITEMS 32-34)**	
31	215351	TIRE&WHL ASSY, VF410/50R16.5 **(BKT) (AFTTER 12-1-2018) (ITEMS 32-34**	
32	157001	WHEEL, 16.5 X1 2, 8 BOLT, NEGATIVE 1/2” OFFSET	
33	157002	TIRE, 32/1550 X 16.5 SL **(GALAXY)**	
33	165236	TIRE 380/55R 16.5 IMP**(GOODYEAR) (TO 12-1-2018) (165235)**	
33	215352	TIRE, VF410/50R16.5 **(BKT) (AFTTER 12-1-2018) (215351)**	
34	TR575	VALVE STEM, TUBELESS TIRE	
35	102600	LUG NUT **(8 BOLT)**	
36	198338	WALKING BEAM ASSY 3” **(AFTER 4-1-2016) (INCLUDES ITEMS 37-44)**	
37	198339	WALKING BEAM, 3" SPINDLE WLDMT	
38	200311	ASSY, TANDEM PIVOT, 2-1/2” **(AFTER 4-1-2016)**	

https://truckmanualshub.com/

Lift Wheel Assembly, Frame (33')

ITEM	PART NO.	DESCRIPTION	QTY.
39	198323	SEAL, V17, DOUBLE LIP 2-1/2" **(AFTER 04/01/2016)**	
40	200129	SCREW SOCKET HD CAP 5/16-24X1 **(FROM 4-1-2016 TO 6-1-2018)**	
41	212046	SCREW, SET FOR ZERK **(AFTER 10/1/2018)**	
42	1-298-010001-1	ZERK FITTING 1/4 SAE **(AFTER 10/1/2018)**	
43	200129	SCREW SOCKET HD CAP 5/16-24X1 **(FROM 4-1-2016 TO 6-1-2018)**	
43	15G816ER	SCREW SET SOC HD CPPT.5-13X1 **(AFTER 6-1-2018)**	
44	215341	DECAL, GREASE WALKER **(AFTER 10/1/2018)**	

https://truckmanualshub.com/

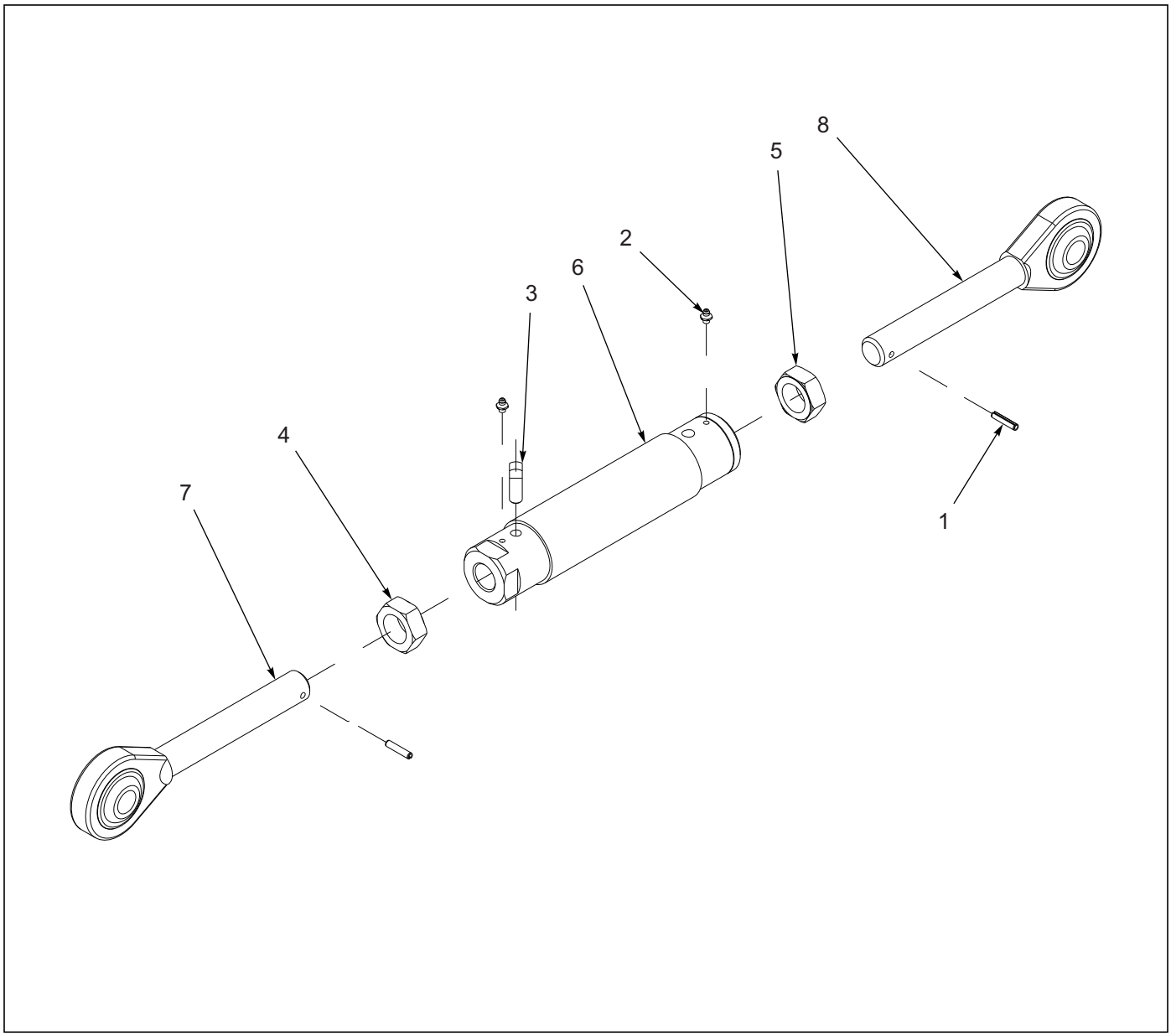

Figure 1-7: Lift Radius Rod Assembly

Lift Radius Rod Assembly

ITEM	PART NO.	DESCRIPTION	QTY.
--	158844	LIFT RADIUS ROD ASSEMBLY	
1	0600-250-01250	ROLL PIN 1/4 X 1-1/4	2
2	1-298-010001-1	ZERK FITTING	2
3	1-654-010080-2	SCREW SET1/2X1-1/4 SQHD CP PT	1
4	100823	NUT, HEX JAM 1-1/4-7 GRB	1
5	153803	NUT, HEX JAM LH 1-1/4-7	1
6	158843	RADIUS ROD WELDMENT, 13”	1
7	159557	SCREW, SHORT, RH RADIUS ROD	1
8	2-654-010097	SCREW, LH RADIUS ROD	1

https://truckmanualshub.com/

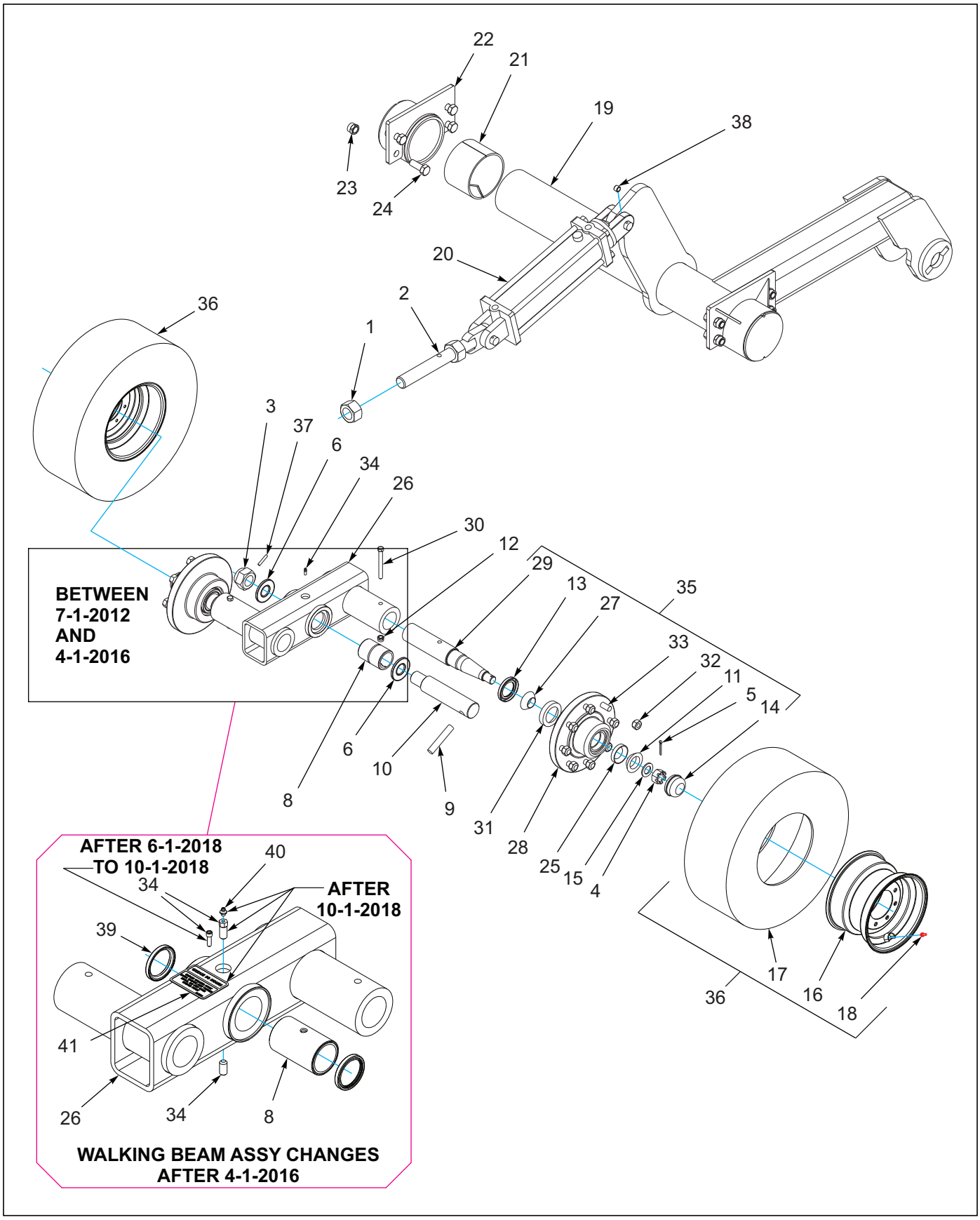

Figure 1-8: Lift Wheel Assembly, Wings (20’, 23’)

https://truckmanualshub.com/

Lift Wheel Assembly, Wings (20’, 23’)

ITEM	PART NO.	DESCRIPTION	QTY.
1	159954	NUT, HEX 1-3/4 GRB	
2	159955	ROD WELDMENT, CYLINDER ANCHOR	
3	119118	NUT, HEX SLOTTED 1-1/2-12	
4	1-516-010001-20	NUT HEX SLOT 1-14	
5	1-557-010362-51	PIN, COTTER 3/16 X 1-1/2	
6	160597	WASHER, THRUST 2” **(4” OD) (BEFORE 01/01/2013)**	
6	171070	WASHER, THRUST 2” **(3-11/16” OD) (AFTER 01/01/2013)**	
8	158903	BUSHING, SPRING 2-1/2 X 2 X 4-5/8 **(BEFORE 4-1-2016)**	
8	200310	ASSY, TANDEM PIVOT, 2” **(AFTER 4-1-2016)**	
9	156992	PIN, WALKING BEAM SPINDLE	
10	157019	SPINDLE, WALKING BEAM	
11	1-076-010007	CONE, OUTER BEARING	
12	101988	NUT, HEX LOCK 7/16-14 GRB	
13	140554	SEAL, GREASE	
14	141236	DUST CAP, WHEEL HUB	
15	141238	WASHER, SPINDLE	
16	140548	WHEEL, 15 X 10 8 BOLT	
17	184707	TIRE, 12.5L X 15 - 12PLY **(BEFORE 4-1-2016)**	
17	204385	TIRE, FIRESTONE RADIAL 320/70R15 **(AFTER 4-1-2016)**	
18	TR416	VALVE STEM, TUBELESS TIRE **(BEFORE 4-1-2016)**	
18	TR575	VALVE STEM, TUBELESS TIRE **(AFTER 4-1-2016)**	
19	170256	LIFT, WING LEFT **(20’) (NOT SHOWN)**	
19	170257	LIFT, WING RIGHT **(20’) (NOT SHOWN)**	
19	157014	LIFT, WING LEFT **(23’ - 33’) (BEFORE 9-1-2016)**	
19	157013	LIFT, WING RIGHT **(23’ - 33’) (NOT SHOWN) (BEFORE 9-1-2016)**	
19	191499	LIFT, WING LEFT **(23’ - 33’) (AFTER 9-1-2016)**	
19	191498	LIFT, WING RIGHT **(23’ - 33’) (NOT SHOWN) (AFTER 9-1-2016)**	
20	140471	CYLINDER, 3-3/4 X 10 REPHASE **(SEE PAGE 1-117)**	
21	140519	BEARING, UHMW 4"	
22	141209	BEARING CAP, LIFT	
23	1-512-010005-15	NUT, HEX LOCK 3/4-10 GRB	
24	1-654-010061-05	SCREW, HEX HEAD CAP 3/4-10 X 2 GR5	
25	1-076-010010	BEARING CUP	
26	172962	WALKING BEAM, 2-1/4 SPINDLE **(7-01-2012 THRU 3-31-2016)**	
26	198342	WALKING BEAM, 2-1/4 SPINDLE **(AFTER 4-01-2016)**	
27	140595	CONE, BEARING	
28	140646	HUB W/ CUPS 8 BOLT **(ITEMS 25 & 31)**	
29	141198	SPINDLE 2-1/4”	
30	141809	SCREW, HEX HEAD CAP 7/16-14 X 4 GR5	
31	140594	CUP, BEARING INNER	
32	102600	LUG NUT **(8 BOLT)**	
33	143067	WHEEL STUD **(8 BOLT)**	
34	153804	FITTING, GREASE 1/4-28 STR LONG **(BEFORE 01/01/2013)**	
34	171024	FITTING, GREASE 1/4-28 STR SHORT **(AFTER 01/01/2013)**	
34	200129	SCREW SOCKET HD CAP 5/16-24X1 **(FROM 4-1-2016 TO 6-1-2018)**	
34	15G816ER	SCREW SET SOC HD CPPT.5-13X1 **(FROM 6-1-2018)**	
34	212046	SCREW, SET FOR ZERK **(AFTER 10/1/2018)**	
35	147553	8 BOLT HUB/SPINDLE ASSY, 2-1/4” **(ITEMS 4-5, 11, 13-15, & 27-29)**	

https://truckmanualshub.com/

Lift Wheel Assembly, Wings (20’, 23’)

ITEM	PART NO.	DESCRIPTION	QTY.
36	184709	TIRE & WHEEL ASSY 12.5L X 15 **(ITEMS 16-18) (BEFORE 4-1-2016)**	
36	184708	TIRE & WHEEL ASSY, 320/70R15 **(ITEMS 16-18) (AFTER 4-1-2016)**	
37	127712	PIN, SPRING SLOTTED 3/8 X 2-1/4	
38	192890	BUSHING 1-3/8ODX1 IDX1 STEEL	
39	198322	SEAL, V17, DOUBLE LIP 2" **(AFTER 04/01/2016)**	
40	1-298-010001-1	ZERK FITTING 1/4 SAE **(AFTER 10/1/2018)**	
41	215341	DECAL, GREASE WALKER **(AFTER 10/1/2018)**	

https://truckmanualshub.com/

Table provided for general use.

NOTES:

https://truckmanualshub.com/

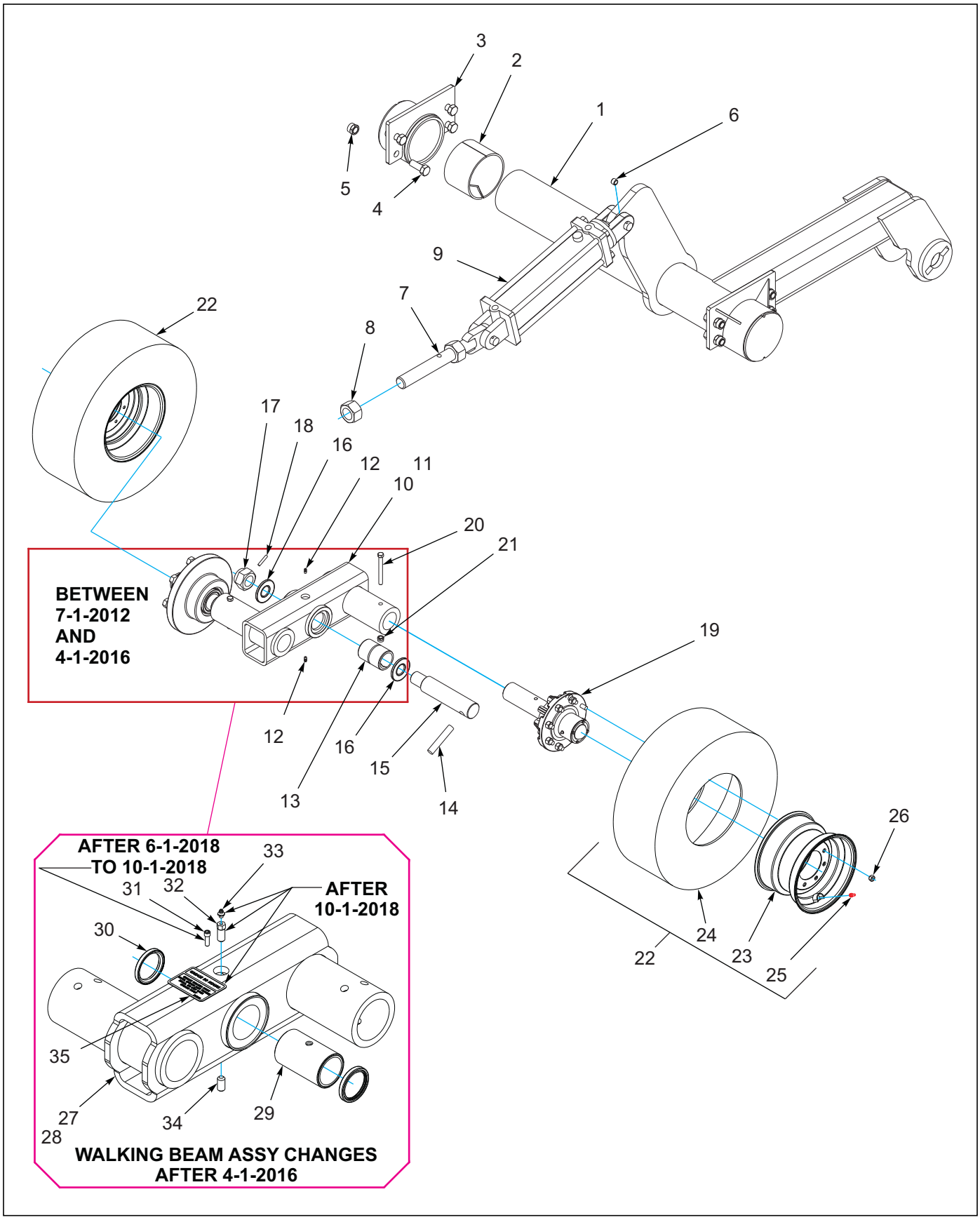

Figure 1-9: Lift Wheel Assembly, Wings (26', 29', 33')

https://truckmanualshub.com/

Lift Wheel Assembly, Wings (26’, 29, 33’)

ITEM	PART NO.	DESCRIPTION	QTY.
1	157014	LIFT, WING LEFT **(23’- 33’) (BEFORE 9-1-2016)**	
1	157013	LIFT, WING RIGHT **(23’- 33’) (NOT SHOWN) (BEFORE 9-1-2016)**	
1	191499	LIFT, WING LEFT **(23’- 33’) (AFTER 9-1-2016)**	
1	191498	LIFT, WING RIGHT **(23’- 33’) (NOT SHOWN) (AFTER 9-1-2016)**	
2	140519	BEARING, UHMW 4"	
3	141209	BEARING CAP, LIFT	
4	1-654-010061-05	SCREW, HEX HEAD CAP 3/4-10 X 2 GR5	
5	1-512-010005-15	NUT, HEX LOCK 3/4-10 GRB	
6	192890	BUSHING 1-3/8ODX1 IDX1 STEEL	
7	159955	ROD WELDMENT, CYLINDER ANCHOR	
8	159954	NUT, HEX 1-3/4 GRB	
9	140471	CYLINDER, 3-3/4 X 10 REPHASE **(SEE PAGE 1-117)**	
10	172962	WALKING BEAM, 2-1/4 SPINDLE **(BEFORE 4-1-2016)**	
11	171068	WALKING BEAM, 2-1/4 SPINDLE	
12	153804	FITTING, GREASE 1/4-28 STR LONG **(BEFORE 01/01/2013)**	
12	171024	FITTING, GREASE 1/4-28 STR SHORT **(AFTER 01/01/2013)**	
13	158903	BUSHING, SPRING 2-1/2 X 2 X 4-5/8 **(BEFORE 4-1-2016)**	
14	156992	PIN, WALKING BEAM SPINDLE	
15	157019	SPINDLE, WALKING BEAM	
16	160597	WASHER, THRUST 2” **(4” OD) (BEFORE 01/01/2013)**	
16	171070	WASHER, THRUST 2” **(3-11/16” OD) (AFTER 01/01/2013)**	
17	119118	NUT, HEX SLOTTED 1-1/2-12	
18	127712	PIN, SPRING SLOTTED 3/8 X 2-1/4	
19	156972	8 BOLT HUB/SPINDLE ASSEMBLY **(BEFORE 02-01-2020) SEE PAGE 1-25**	
19	223440	ASSY, 8 BOLT HUB & SPINDLE **(AFTER 02-01-2020) SEE PAGE 1-27**	
20	1-654-010055-15	SCREW, HEX HEAD CAP 1/2-13 X 5 GR5	
21	1-512-010005-09	NUT, HEX LOCK 1/2-13 GRB	
22	171010	TIRE & WHEEL ASSY,380/55RX16.5 **(ITEMS 23-25) (AFTER 4-1-2016)**	
23	171011	WHEEL, 8 BOLT	
24	184707	TIRE, 12.5L X 15 - 12PLY **(BEFORE 4-1-2016)**	
24	165236	TIRE 380/55R 16.5 IMP **(AFTER 4-1-2016)**	
25	TR416	VALVE STEM, TUBELESS TIRE **(BEFORE 4-1-2016)**	
25	TR575	VALVE STEM, TUBELESS TIRE **(AFTER 4-1-2016)**	
26	102600	LUG NUT **(8 BOLT)**	
27	198342	WALKING BEAM ASSY, 2-1/4 **(BETWEEN 4-1-2016 AND 11-1-2016)**	
27	198344	WALKING BEARM ASSY, 3” **(AFTER 11-1-2016)**	
28	198343	WALKING BEAM WLD 2-1/4 SPINDLE	
28	198345	WALKING BEAM WLDMT 3" SPINDLE	
29	200310	ASSY, TANDEM PIVOT, 2” **(AFTER 4-1-2016)**	
30	198322	SEAL, V17, DOUBLE LIP 2" **(AFTER 04/01/2016)**	
31	200129	SCREW SOCKET HD CAP 5/16-24X1 **(FROM 4-1-2016 TO 6-1-2018)**	
32	212046	SCREW, SET FOR ZERK **(AFTER 10/1/2018)**	
33	1-298-010001-1	ZERK FITTING 1/4 SAE **(AFTER 10/1/2018)**	
34	15G816ER	SCREW SET SOC HD CPPT.5-13X1 **(FROM 6-1-2018)**	
35	215341	DECAL, GREASE WALKER **(AFTER 10/1/2018)**	

https://truckmanualshub.com/

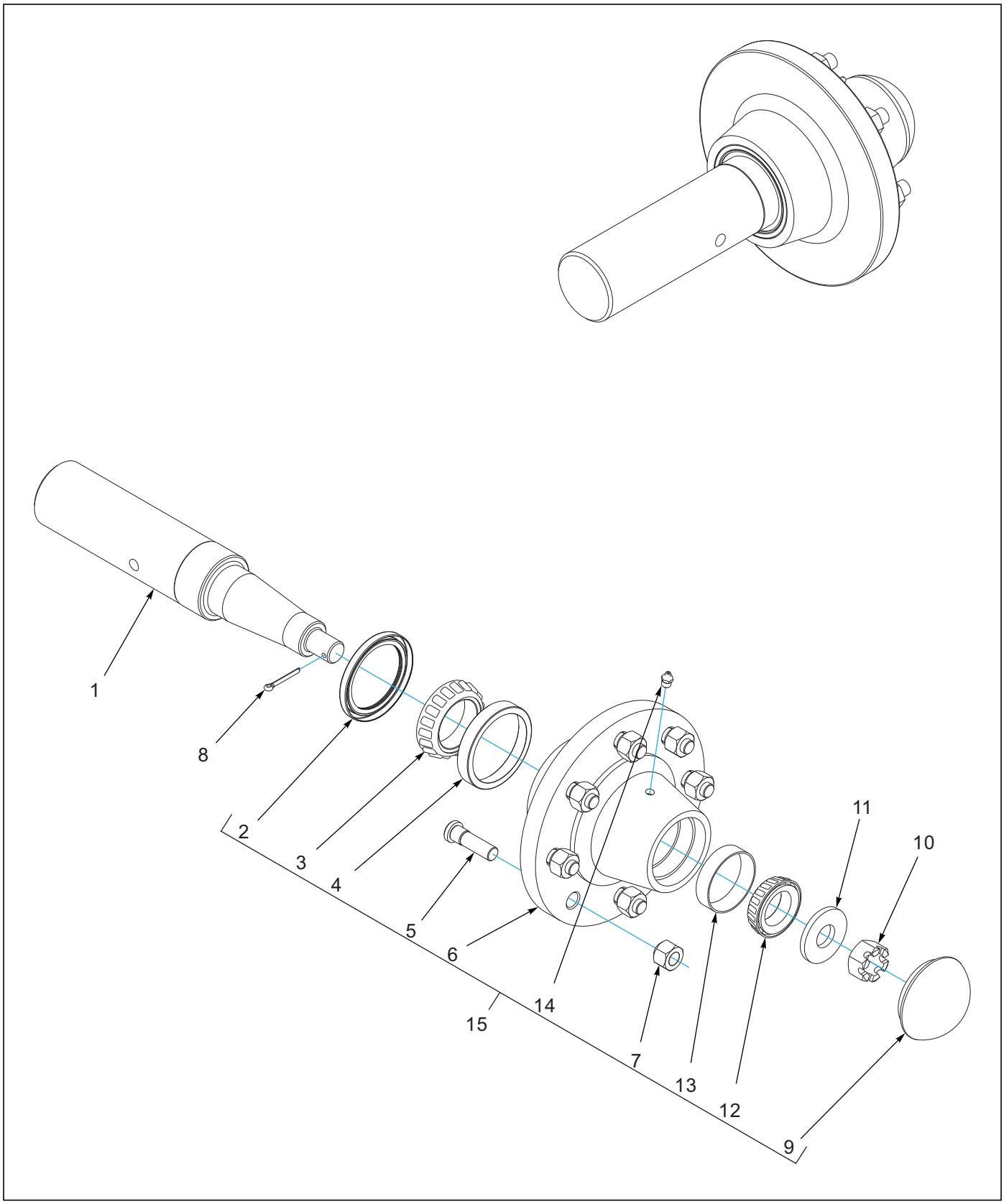

Figure 1-10: Hub and Spindle Assembly - 156972

https://truckmanualshub.com/

Hub and Spindle Assembly - 156972

ITEM	PART NO.	DESCRIPTION	QTY.
--	156972	HUB & SPINDLE ASSY, 8 BOLT **(BEFORE 2-1-2020)**	
1	156973	SPINDLE 3 X 16-1/2	1
2	159970	SEAL,TRIPLE LIP 4 ODX3 IDX3/8	1
3	156979	CONE BEARING - 387AS	1
4	111962	OUTER BEARING CUP L20HD#382A	1
5	4001060	HUB 75-8 BOLTS 5/8-18 STUD	1
6	156974	HUB W/CUPS, 8 BOLT, 7500LBS **(INCLUDES ITEMS 4, 5, 7, 13, 14)**	1
7	102600	NUT,WHEEL BOLT, 5/8	8
8	1-557-010362-51	PIN, COTTER 3/16X1-1/2	1
9	102601	HUB CAP, 8-BOLT HUB	1
10	1-516-010001-20	NUT, HX SLOT 1-14	1
11	1-861-010005	WASHER, SPINDLE 1	1
12	102498	BEARING CONE,OUTER, 1.625	1
13	102604	BEARING CUP, OUTER	1
14	5000	ZERK FITTING 1/8NPT	1
15	168859	HUB ASSY, EIGHT BOLT **(SERVICE KIT ONLY)**	

https://truckmanualshub.com/

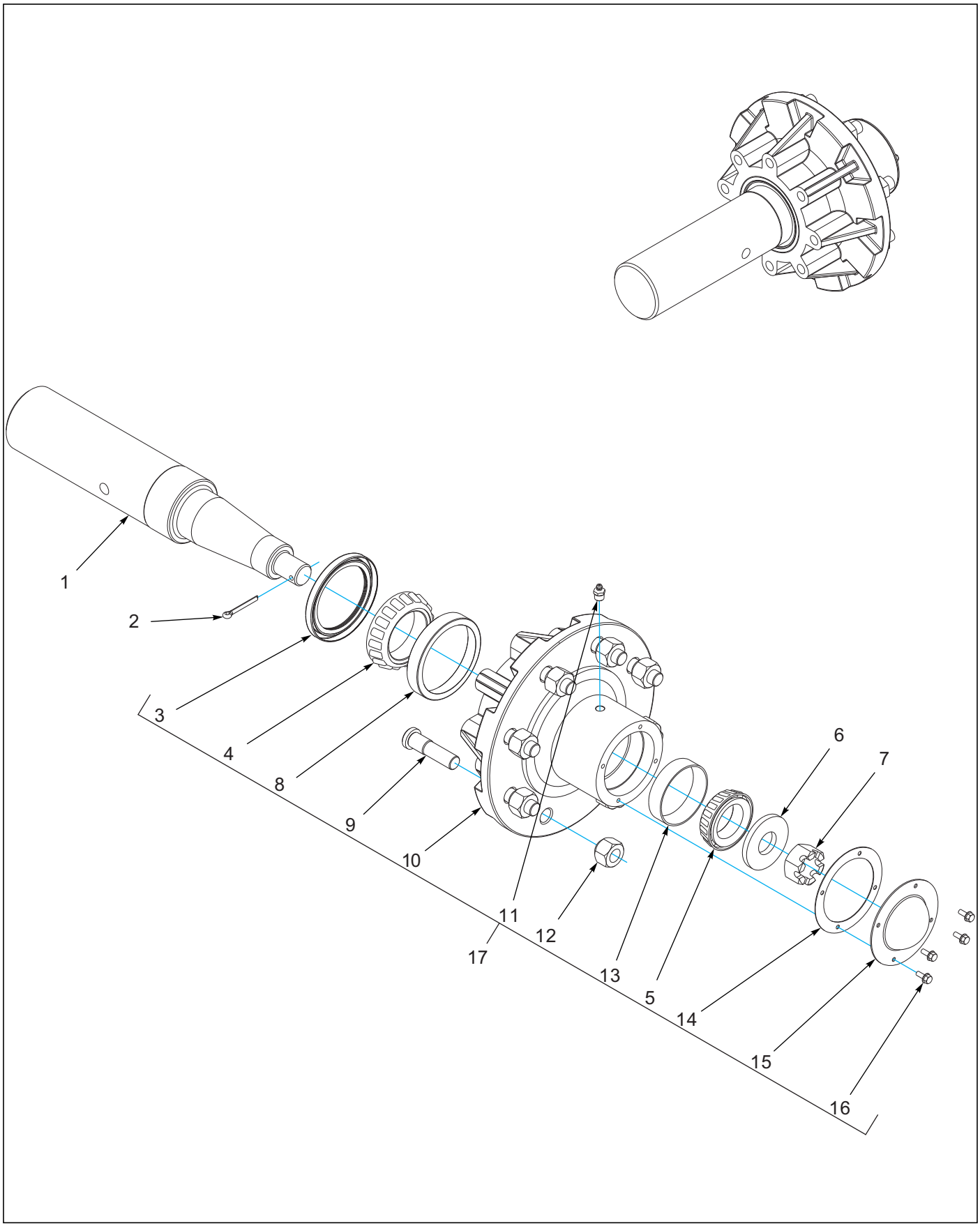

Figure 1-11: Hub and Spindle Assembly - 223440

https://truckmanualshub.com/

Hub and Spindle Assembly - 223440

ITEM	PART NO.	DESCRIPTION	QTY.
--	223440	ASSY, 8 BOLT HUB & SPINDLE **(AFTER 2-1-2020)** (NOTE: P/N 223440 HUB & SPINDLE WILL REPLACE ALL EXISTING 156972 HUB & SPINDLE ASSEMBLIES)	
1	156973	SPINDLE 3 X 16-1/2	1
2	1-557-010362-51	PIN, COTTER 3/16X1-1/2	1
3	159970	SEAL,TRIPLE LIP 4 ODX3 IDX3/8	1
4	156979	CONE BEARING - 387AS	1
5	102498	BEARING CONE,OUTER, 1.625	1
6	1-861-010005	WASHER, SPINDLE 1	1
7	1-516-010001-20	NUT, HX SLOT 1-14	1
8	111962	OUTER BEARING CUP L20HD#382A	1
9	4001060	HUB 75-8 BOLTS 5/8-18 STUD	8
10	223435	HUB ASSY W/ CUPS,GASKET,CAP **(INCLUDES ITEMS 8, 9, 11-16)**	1
11	5000	ZERK FITTING 1/8NPT	1
12	102600	NUT,WHEEL BOLT, 5/8	8
13	102604	BEARING CUP, OUTER	1
14	223439	GASKET, DUST CAP	1
15	223437	DUST CAP, BOLT ON	1
16	223438	SCREW, 10-32X1/2 HEX FLANGE	4
17	168859	HUB ASSY, EIGHT BOLT **(SERVICE KIT ONLY)**	

https://truckmanualshub.com/

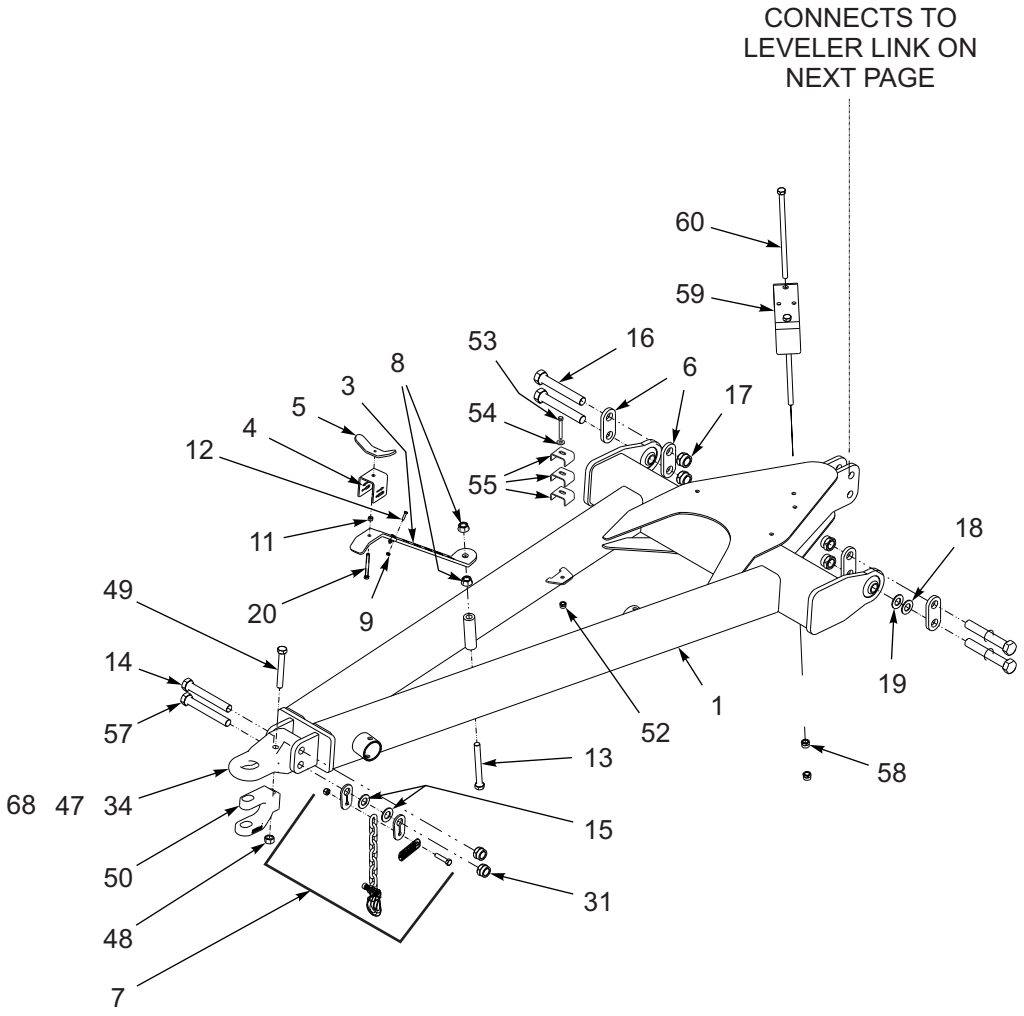

NOTE: ITEM 15 (WASHERS) ARE *NOT* INCLUDED W/ ITEM 7 (SAFETY CHAIN)

Figure 1-12: Hitch and Leveling Linkage Assembly (1 of 2)

https://truckmanualshub.com/

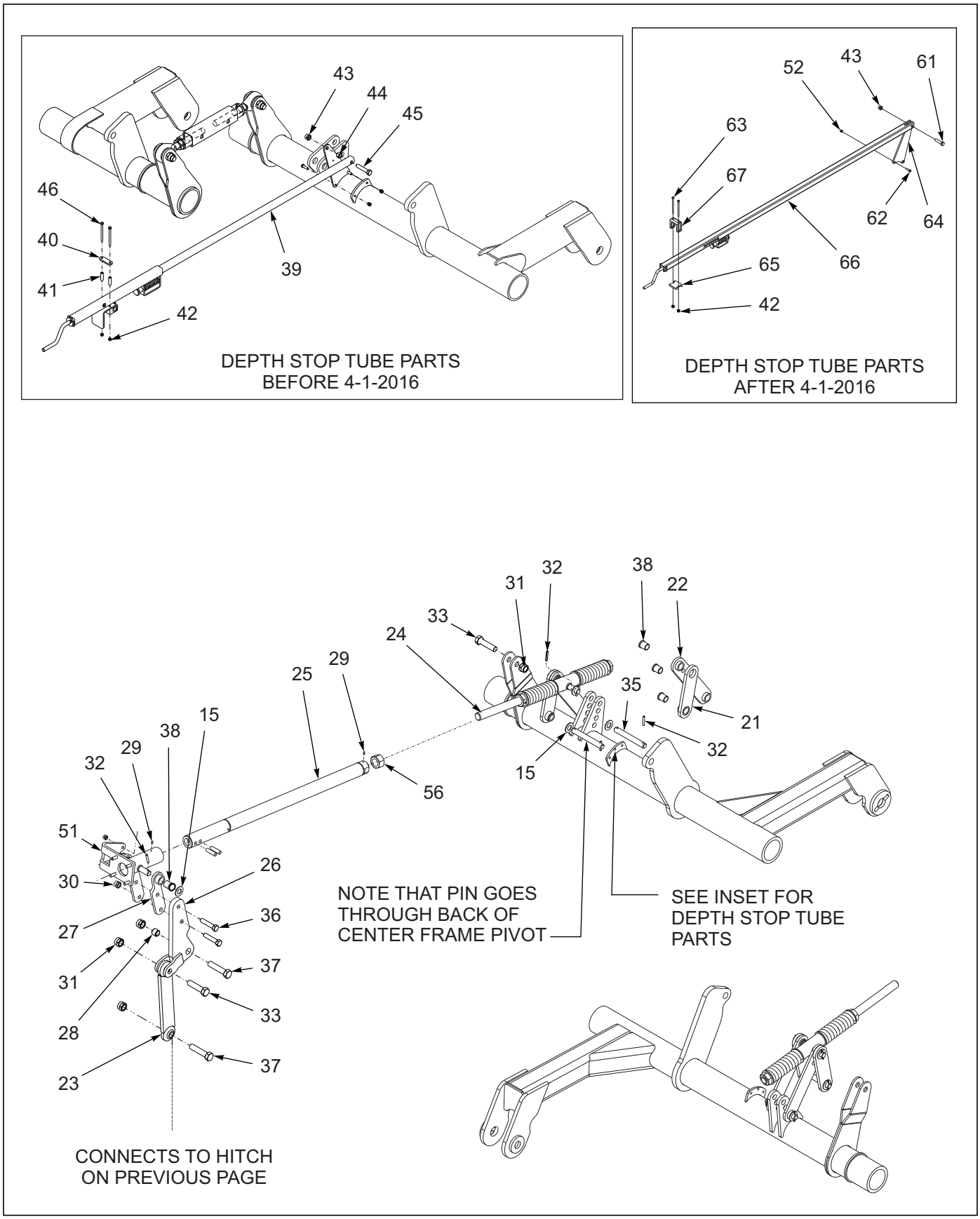

Figure 1-13: Hitch and Leveling Linkage Assembly (2 of 2)

https://truckmanualshub.com/

Hitch and Leveling Linkage Assembly

ITEM	PART NO.	DESCRIPTION	QTY.
1	140575	HITCH WELDMENT	1
2	140647	JACK, SIDEWIND 7,000LB **(NOT SHOWN) (SEE PAGE 1-35)**	1
3	141246	BRACKET, HOSE HOLDER	1
4	141247	CLAMP, HOSE HOLDER	1
5	141249	WING NUT, HOSE HOLDER	1
6	141252	PLATE, HITCH MOUNT	4
7	156950	SAFETY CHAIN 41,000 LB. **(AFTER 04/30/2010)**	1
7	141434	SAFETY CHAIN, 21,000 LB **(BEFORE 04/30/2010)**	1
8	103841	NUT, FLANGE PREVAILING TORQUE 3/4-10	2
9	1-512-010005-01	NUT HEX LOCK 1/4-20 GRB	2
11	1-512-010007-07	NUT, HEX 3/8-16	1
12	1-654-010047-06	SCREW, HEX HEAD CAP 1/4-20 X 1 GR5	2
13	1-654-010061-19	SCREW, HEX HEAD CAP 3/4-10 X 7 GR5	1
14	153696	BOLT, HITCH CLEVIS	1
15	1-861-010032-24	WASHER, FLAT 1N	AR
16	141253	SCREW, HEX HEAD CAP 1-1/8-7 X 7-1/2	4
17	141254	NUT, HEX LOCK 1-1/8-7	4
18	141255	BUSHING, MACHINE 1-1/8 X 14GA	4
19	141256	BUSHING, MACHINE 1-1/8 X 10GA	10
20	141807	SCREW, ALL THREAD 3/8-16 X 3-1/2	1
20	173044	SCREW, ALL THREAD 3/8-16 X 4-1/2	1
21	142643	LINK WELDMENT, LEVELER 8"	2
22	158778	LINK ASSEMBLY, LEVELER 13”	2
23	140606	LINK, LEVELER BALL JOINT	1
24	140607	LEVELER SCREW ASSEMBLY **(SEE PAGE 1-36)**	1
25	140616	LEVELER TUBE	1
26	140619	LINK, LEVELER L	1
27	142645	LEVELER CROSS BRACKET WLDMT **(PART OF 140525)**	REF
27	142646	LEVELER CROSS BRACKET WLDMT **(PART OF 140526)**	REF
28	2-150-010008	BUSHING, 1-1/4 X 1 ID STEEL	1
29	1-298-010001-1	ZERK FITTING 1/4	1
30	1-512-010005-15	NUT, HEX LOCK 3/4-10 GRB	2
31	1-512-010005-19	NUT, HEX LOCK 1-8 GRB	5
32	1-647-010004240	PIN, SPRING SLOTTED 5/16 X 2-1/2	8
33	1-654-010065-13	SCREW, HEX HEAD CAP 1-8 X 4 GR5	1
34	2-375-010601	HITCH, RING, CAT III	1
34	2-375-010602	HITCH RING, CAT IV **(BEFORE 9-1-2016)**	1
35	141243	PIN, LEVELER	2
36	141776	SCREW, HEX HEAD CAP 3/4-10 X 3-1/2 GR5	2
37	141777	SCREW, HEX HEAD CAP 1-8 X 4-1/2 GR5	2
38	2-073-010012	BEARING FLANGE	8
39	141220	TUBE ASSY, DEPTH STOP **(SEE PAGE 1-37)(BEFORE 4-1-2016)**	1
40	141224	PLATE, DEPTH STOP **(BEFORE 4-1-2016)**	1
41	141225	SPACER, DEPTH STOP **(BEFORE 4-1-2016)**	2
42	1-512-010005-03	NUT, HEX LOCK 5/16-18	2
43	1-512-010005-13	NUT, HEX LOCK 5/8-11 GRB	1
44	1-512-010007-11	NUT, HEX 5/8-11 GRB **(BEFORE 4-1-2016)**	1
45	1-654-010059-09	SCREW, HEX HEAD CAP 5/8-11 X 3 GR5 **(BEFORE 4-1-2016)**	1

https://truckmanualshub.com/

Hitch and Leveling Linkage Assembly

ITEM	PART NO.	DESCRIPTION	QTY.
46	123579	SCREW, HEX HEAD CAP 5/16-18 X 4 **(BEFORE 4-1-2016)**	2
47	100844	HITCH AND CLEVIS, CAT III (**ITEMS 34, & 48-50) (BEFORE 9-1-2016)**	1
48	1-512-010008-12	NUT, HEX 3/4-16 GRB	1
49	1-654-010087-16	SCREW, HEX HEAD CAP 3/4-16 X 5-1/2 GR8	1
50	100214	HITCH, CLEVIS	1
51	140526	HYDRAULIC LEVELER ASSEMBLY **(SEE PAGE 1-43)**	1
51	140525	MANUAL LEVELER ASSY **(NOT SHOWN)(SEE PAGE 1-41)**	1
52	1-512-010005-05	NUT, HEX LOCK 3/8-16 GRB	1
53	1-654-010051-11	SCREW, HEX HEAD CAP 3/8-16 X 2-1/2 GR5 **(STD. LEVELER)**	1
53	1-654-010051-13	SCREW, HEX HEAD CAP 3/8-16 X 3 GR5 **(HYD. LEVELER)**	1
53	129698	SCREW, HEX HEAD CAP 3/8-16 X 4-1/2 GR5 **(HYD. REELS)**	1
54	1-861-010032-11	WASHER, FLAT 3/8W	1
55	2-181-010001	HOSE CLAMP	AR
56	102351	NUT, HEX 1-1/2 - 6 GRB	REF
57	1-654-010125-22	SCREW, HEX HEAD CAP 1-8 X 8-1/2 GR8	1
58	1-512-010005-09	NUT, HEX LOCK 1/2-13 GRB	2
59	174695	CLAMP, HOSE HOLDER	1
60	131081	SCREW, HEX HEAD CAP 1/2-13 X 11 GR5	2
61	1-654-010059-07	SCREW, HEX HEAD CAP 5/8-11 X 2-1/2 GR5 **(AFTER 4-1-2016)**	1
62	1-654-010051-06	SCREW, HEX HEAD CAP 3/8-16 X 1-1/4 GR5	2
63	1-654-010049-19	SCREW HEX HEAD CAP 5/16-18 X 5 GR5 **(AFTER 4-1-2016)**	2
64	198352	MOUNT, DEPTH CONTROL **(AFTER 4-1-2016)**	1
65	165257	PAD, SLIDE **(AFTER 4-1-2016)**	1
66	174728	TUBE ASSEMBLY, DEPTH STOP **(SEE PAGE 1-39)(AFTER 4-1-2016)**	1
67	165265	GUIDE, DEPTH STOP **(AFTER 4-1-2016)**	1
68	-----	BALL STYLE HITCH **(SEE PAGE 1-33) (AFTER 9-1-2016)**	1

https://truckmanualshub.com/

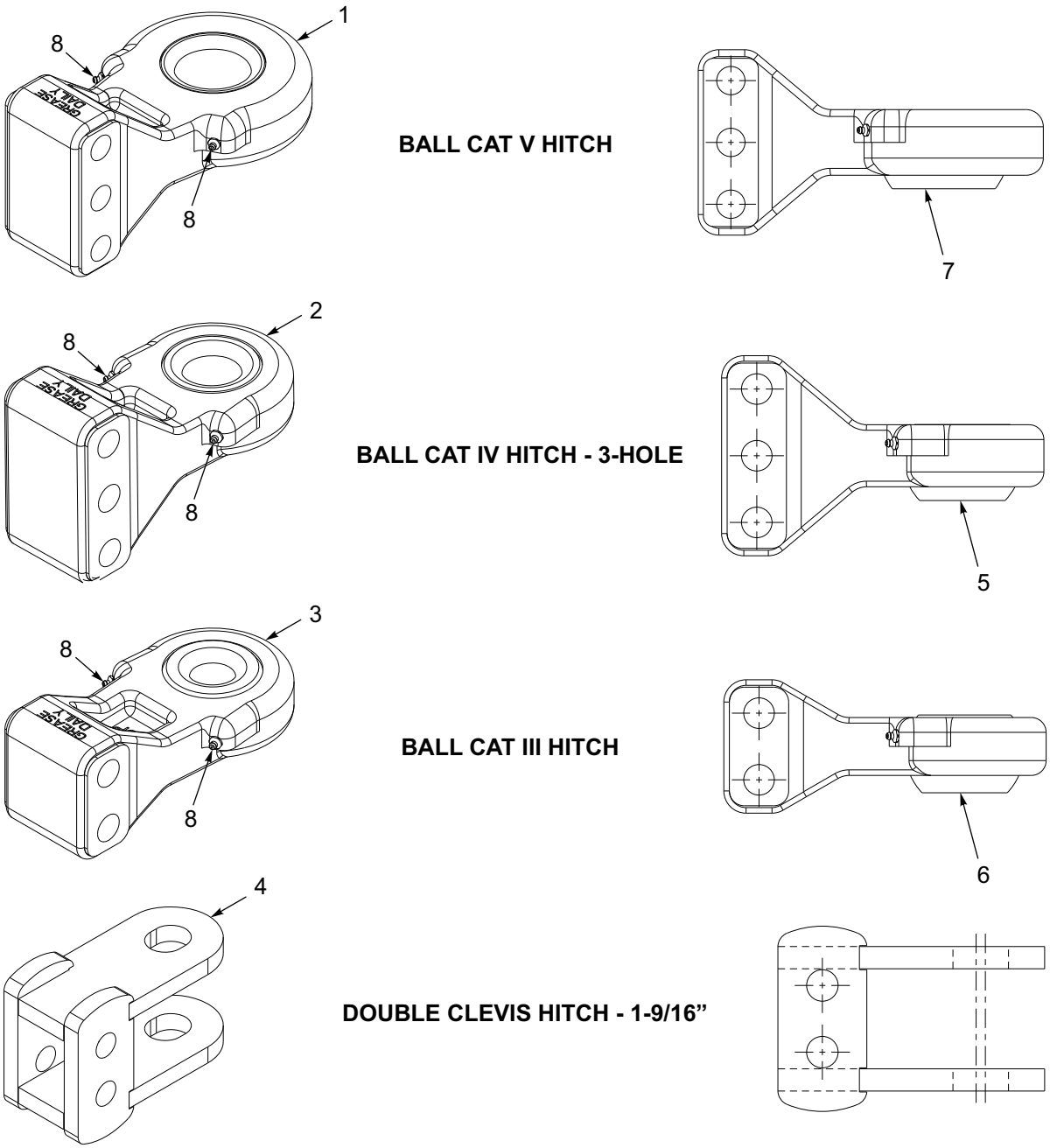

Figure 1-14: Hitch Assemblies

https://truckmanualshub.com/

Hitch Assemblies

ITEM	PART NO.	DESCRIPTION	QTY.
1	177032	HITCH, BALL V	1
2	189451	HITCH, BALL CAT IV, 3-HOLE	1
3	177030	HITCH, BALL CAT III	1
4	161550	HITCH CLEVIS, DOUBLE 1-9/16”	1
5	189454	BUSHING, SPHERICAL, 2” ID	1
6	189453	BUSHING, SPHERICAL, 1-1/2” ID	1
7	189468	BUSHING, SPHERICAL, 2-3/4” ID	1
8	1-298-010001-1	ZERK FITTING 1/4 SAE	1

https://truckmanualshub.com/

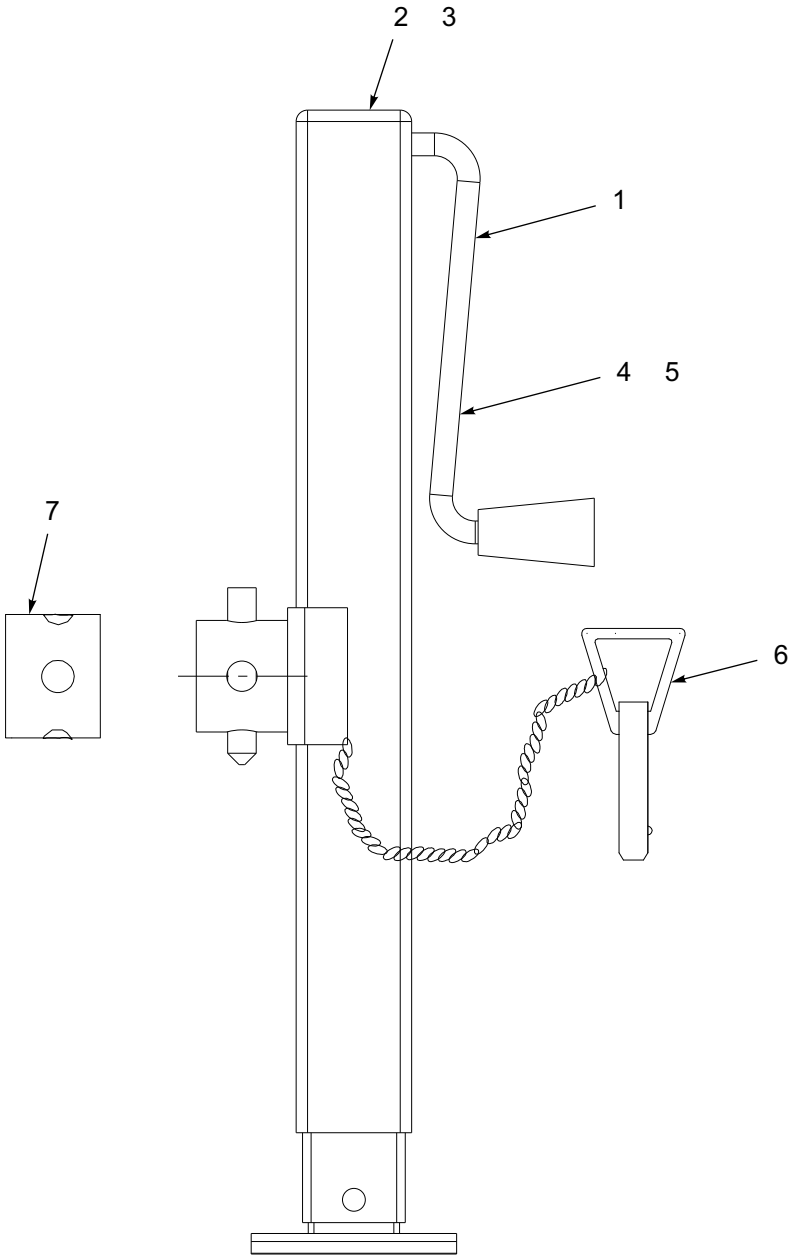

Figure 1-15: 7,000 Lb. Sidewind Jack Assembly

https://truckmanualshub.com/

7,000 Lb. Sidewind Jack Assembly

ITEM	PART NO.	DESCRIPTION	QTY.
--	140647	JACK, SIDEWIND 7000LB	
1	142189	9" HANDLE KIT **(USED WITH NORTHFIELD JACK)**	1
1	500171	9” HANDLE KIT **(USED WITH BULLDOG JACK)**	1
2	142190	GEAR KIT **(USED WITH NORTHFIELD JACK)**	1
3	142191	BEARING KIT **(USED WITH NORTHFIELD JACK)**	1
4	142192	BLACK HANDLE **(USED WITH NORTHFIELD JACK)**	1
5	142193	RETAINING CLIP **(USED WITH NORTHFIELD JACK)**	1
6	142194	5/8” PIN AND CHAIN - L **(USED WITH NORTHFIELD JACK)**	1
6	2-557-010426	PIN,DETENT 5/8 DIA W/CHAIN **(USED WITH BULLDOG JACK)**	1
7	141250	TUBE, RD, JACK MOUNT **(WELD TO IMPLEMENT FRAME)**	1

https://truckmanualshub.com/

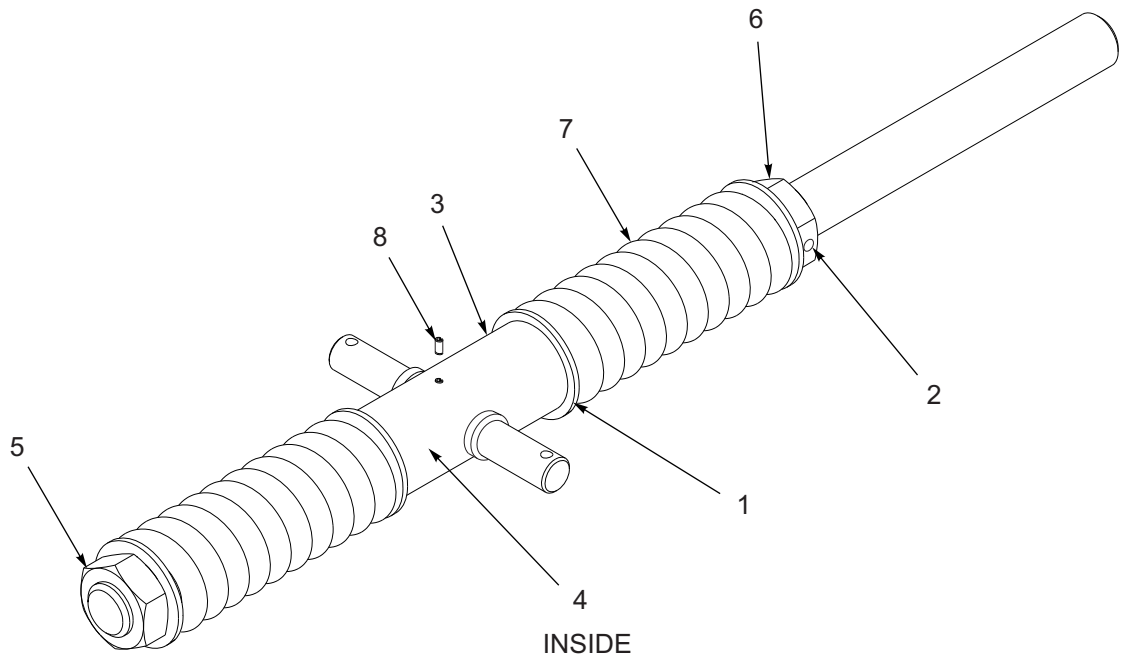

Figure 1-16: Leveler Screw Assembly

Leveler Screw Assembly

ITEM	PART NO.	DESCRIPTION	QTY.
--	140607	LEVELER SCREW ASSEMBLY	
1	1-861-010032-32	WASHER, FLAT 1-1/2	4
2	122709	SCREW, SET HEX SOCKET CUP PT 3/8-16 X 1/2	1
3	140598	CROSS, LEVELER	1
4	140599	BEARING, FLANGE 1-1/2	2
5	140609	SCREW, LEVELER	1
6	140610	NUT, HEX JAM W/O SET SCREW	1
7	140649	SPRING, LEVELER	2
8	1-298-010001-1	ZERK, FITTING 1/4	1

https://truckmanualshub.com/

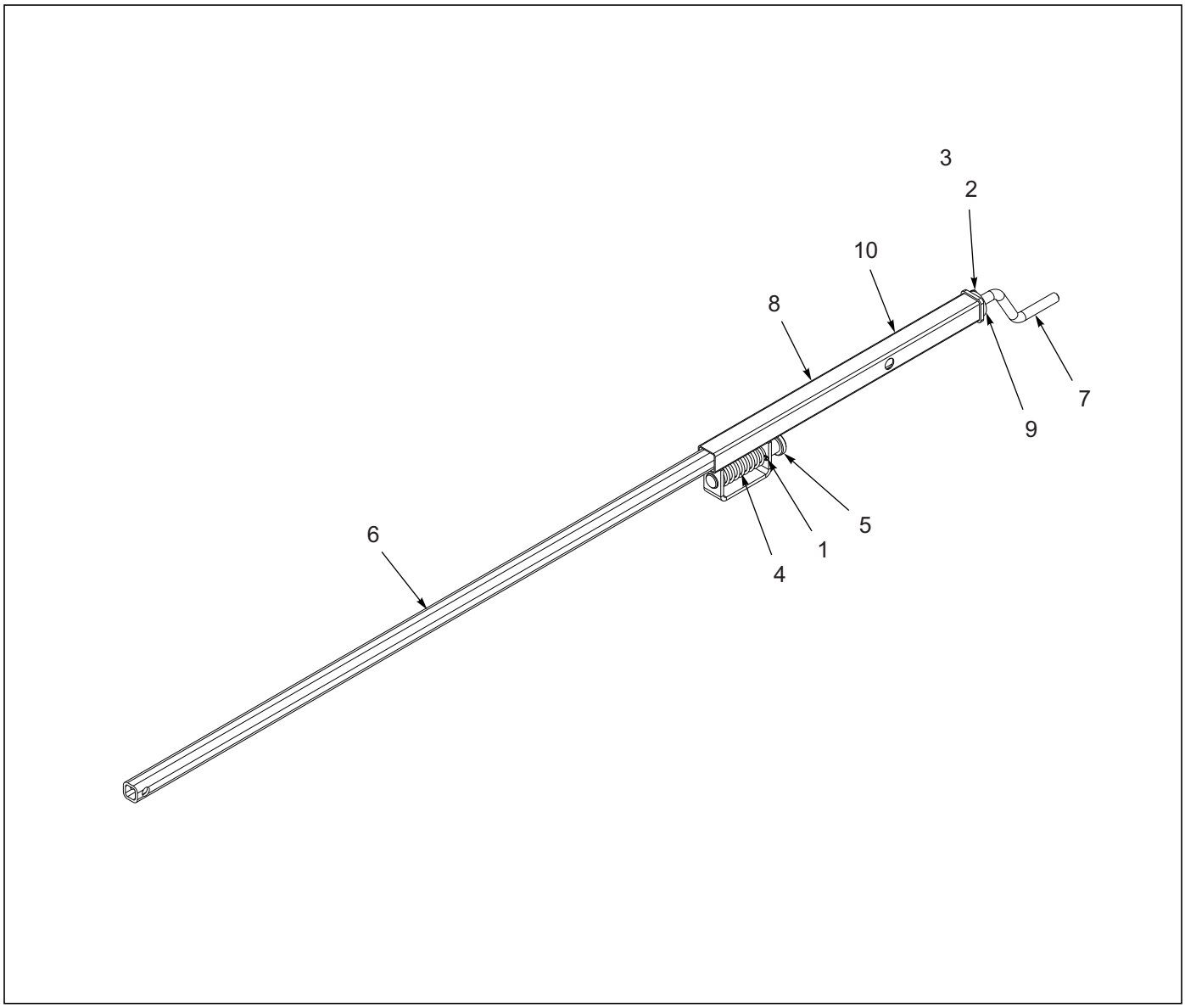

Figure 1-17: Depth Stop Tube Assembly

Depth Stop Tube Assembly (Before 4-1-2016)

ITEM	PART NO.	DESCRIPTION	QTY.
--	141220	TUBE ASSEMBLY, DEPTH STOP	
1	1-647-010004217	PIN, SPRING SLOTTED 1/4 X 1-1/2	1
2	1-654-010047-04	SCREW, HEX HEAD CAP 1/4-20 X 3/4 GR5	1
3	1-861-010034-09	WASHER, SPLIT LOCK 1/4	1
4	122917	SPRING, COMPRESSION 4-1/2 MONO	1
5	141213	PIN, DEPTH STOP	1
6	141216	TUBE, DEPTH STOP	1
7	141217	HANDLE, DEPTH STOP	1
8	141222	TUBE, DEPTH STOP	1
9	141223	WASHER, DEPTH STOP	1
10	141262	DECAL, DEPTH STOP INDICATOR	1

https://truckmanualshub.com/

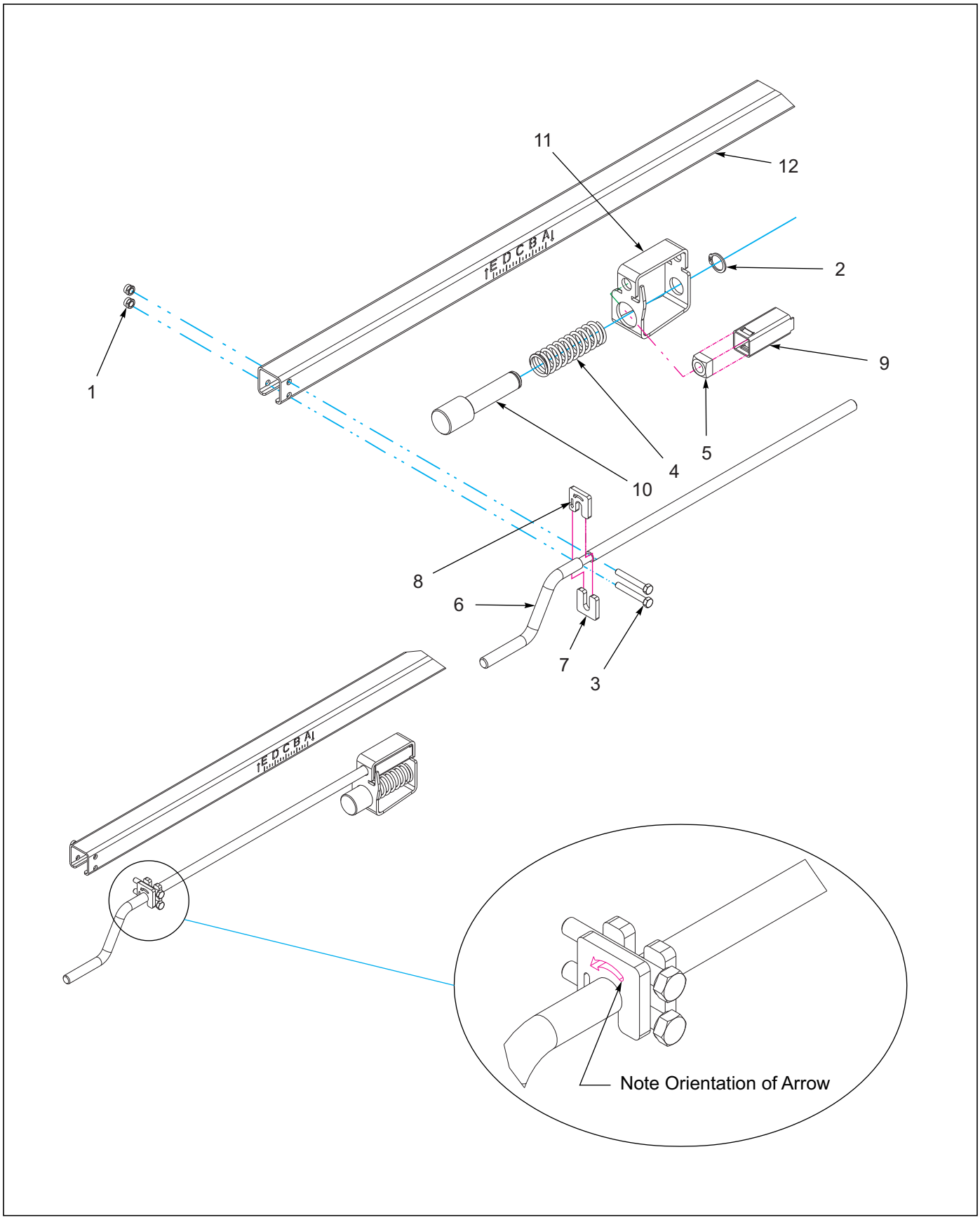

Figure 1-18: Depth Stop Tube Assembly

https://truckmanualshub.com/

Depth Stop Tube Assembly (After 4-1-2016)

ITEM	PART NO.	DESCRIPTION	QTY.
--	174728	DEPTH STOP ASSEMBLY	1
1	1-512-010005-03	NUT, HEX LOCK 5/16-18 GRB	2
2	1-630-010021-03	RING, RETAINING 1 HD	1
3	108628	SCREW, HEX HEAD CAP 5/16-18 X 2-1/4 GR5	2
4	122917	SPRING, COMPRESSION 4-1/2	1
5	144048	NUT, SQUARE 5/8-11 GR5	1
6	165258	HANDLE, DEPTH STOP	1
7	165259	STOP, HANDLE LONG	1
8	165260	STOP, HANDLE SHORT	1
9	166717	SQUARE TUBE, FLOATING	1
10	174708	PIN, DEPTH STOP	1
11	174709	SQUARE TUBE, DEPTH STOP	1
12	174710	SQUARE TUBE, DEPTH STOP, 74-3/4”	1

https://truckmanualshub.com/

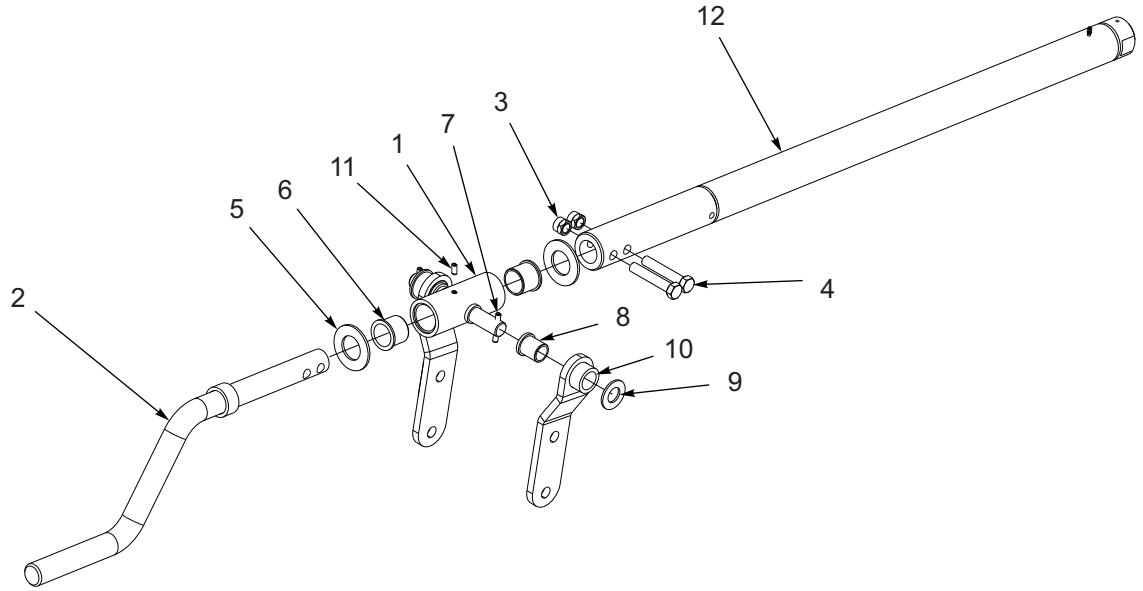

Figure 1-19: Manual Leveler Assembly

https://truckmanualshub.com/

Manual Leveler Assembly

ITEM	PART NO.	DESCRIPTION	QTY.
--	140525	LEVELER ASSEMBLY, MANUAL	
1	140598	CROSS, LEVELER	1
2	140630	HANDLE, LEVELER	1
3	1-512-010005-13	NUT, HEX LOCK 5/8-11 GRB	2
4	1-654-010059-11	SCREW, HEX HEAD CAP 5/8-11 X 3-1/2 GR5	2
5	1-861-010032-32	WASHER, FLAT 1-1/2	2
6	140599	BEARING, FLANGE 1-1/2	2
7	1-647-010004240	PIN, SPRING SLOTTED 5/16 X 2-1/2	REF
8	2-073-010012	BEARING, FLANGE	REF
9	1-861-010032-24	WASHER, FLAT 1N	REF
10	142645	LEVELER CROSS BRACKET WLDMT **(INCL ITEM 8)**	1
11	1-298-010001-1	ZERK, FITTING 1/4	1
12	140616	LEVELER TUBE	REF

https://truckmanualshub.com/

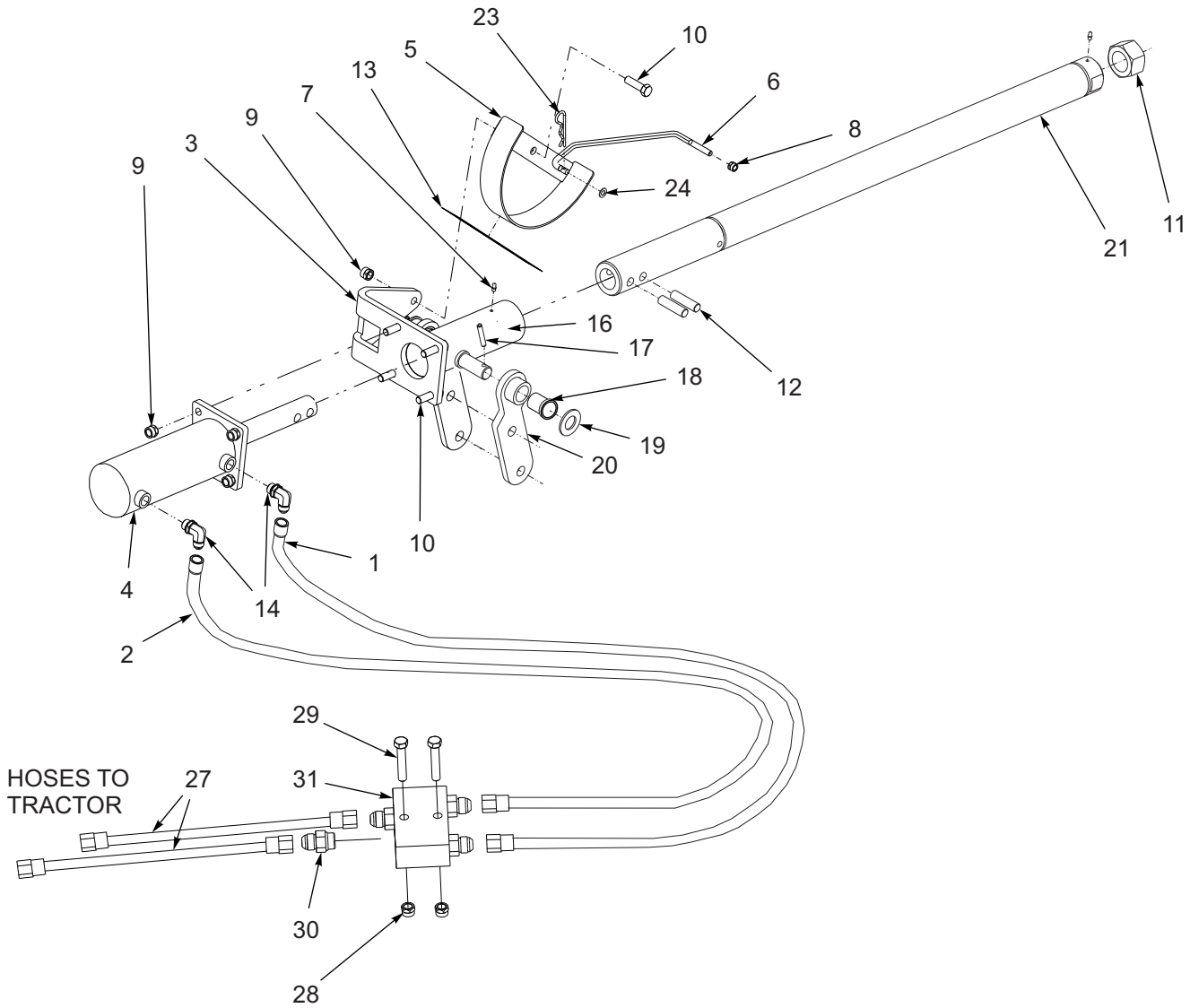

Figure 1-20: Hydraulic Leveler Assembly

https://truckmanualshub.com/

Hydraulic Leveler Assembly

ITEM	PART NO.	DESCRIPTION	QTY.
--	140526	LEVELER ASSEMBLY, HYDRAULIC	
1	141861	HOSE ASSEMBLY 3/8 X 196 **(PRIOR TO 01/01/2013)**	1
1	123547	HOSE ASSEMBLY 3/8 X 56 **(AFTER 01/01/2013)**	1
2	141865	HOSE ASSEMBLY 3/8 X 204 **(PRIOR TO 01/01/2013)**	1
2	116489	HOSE ASSEMBLY 3/8 X 64 **(AFTER 01/01/2013)**	1
3	140625	CROSS, LEVELER	1
4	140631	CYLINDER, 3-1/2 X 6 **(SEE PAGE 1-118)**	1
5	141241	GAUGE, LEVEL INDICATOR	1
6	141242	ROD, LEVEL INDICATOR	1
7	1-298-010001-1	ZERK FITTING 1/4	1
8	1-512-010005-05	NUT, HEX LOCK 3/8-16 GRB	1
9	1-512-010005-09	NUT, HEX LOCK 1/2-13 GRB	5
10	1-654-010055-05	SCREW, HEX HEAD CAP 1/2-13 X 2 GR5	5
11	102351	NUT, HEX 1-1/2 - 6 GRB	1
12	140627	PIN, LEVELER	2
13	141263	DECAL, LEVEL INDICATOR	1
14	141827	ELBOW 90 W/ 1/32 RESTRICTOR	2
15	141828	COUPLER, MALE 3/4-16 **(NOT SHOWN)**	2
16	2-573-010330-03	DECAL, LUBRICATION 50 HOURS	1
17	1-647-010004240	PIN SPRING SLOTTED 5/16 X 2-1/2	REF
18	2-073-010012	BEARING FLANGE	REF
19	1-861-010032-24	WASHER, FLAT 1N	REF
20	142646	LEVELER CROSS BRACKET WLDMT **(INCL ITEM 18)**	2
21	140616	LEVELER TUBE	REF
22	155530	HOSE WRAP, BLACK **(NOT SHOWN)**	AR
23	1-557-010403	HAIRPIN, 1/8	1
24	1-861-010032-11	WASHER, FLAT 3/8W	1
25	2-181-010001	HOSE CLAMP **(NOT SHOWN)**	1
26	1-654-010051-13	SCREW, HEX HEAD CAP 3/8-16 X 3 **(NOT SHOWN)**	1
27	174721	HOSE ASSEMBLY 3/8 X 140 **(USED AFTER 01/01/2013 IN ADDITION TO ITEMS 1 AND 2 HOSES DESIGNATED BY DATE)**	2
28	1-512-010005-05	NUT, HEX LOCK 3/8-16 GRB **(USED AFTER 01/01/2013 IN ADDITION TO ITEMS 1 AND 2 HOSES DESIGNATED BY DATE)**	2
29	1-654-010051-09	SCREW, HEX HEAD CAP 3/8-16 X 2 GR5 **(USED AFTER 01/01/2013 IN ADDITION TO ITEMS 1 AND 2 HOSES DESIGNATED BY DATE)**	2
30	202702-8-8S	ADAPTER **(USED AFTER 01/01/2013 IN ADDITION TO ITEMS 1 AND 2 HOSES DESIGNATED BY DATE)**	4
31	124696	VALVE, DOUBLE PILOT CHECK **(USED AFTER 01/01/2013 IN ADDITION TO ITEMS 1 AND 2 HOSES DESIGNATED BY DATE)**	1

https://truckmanualshub.com/

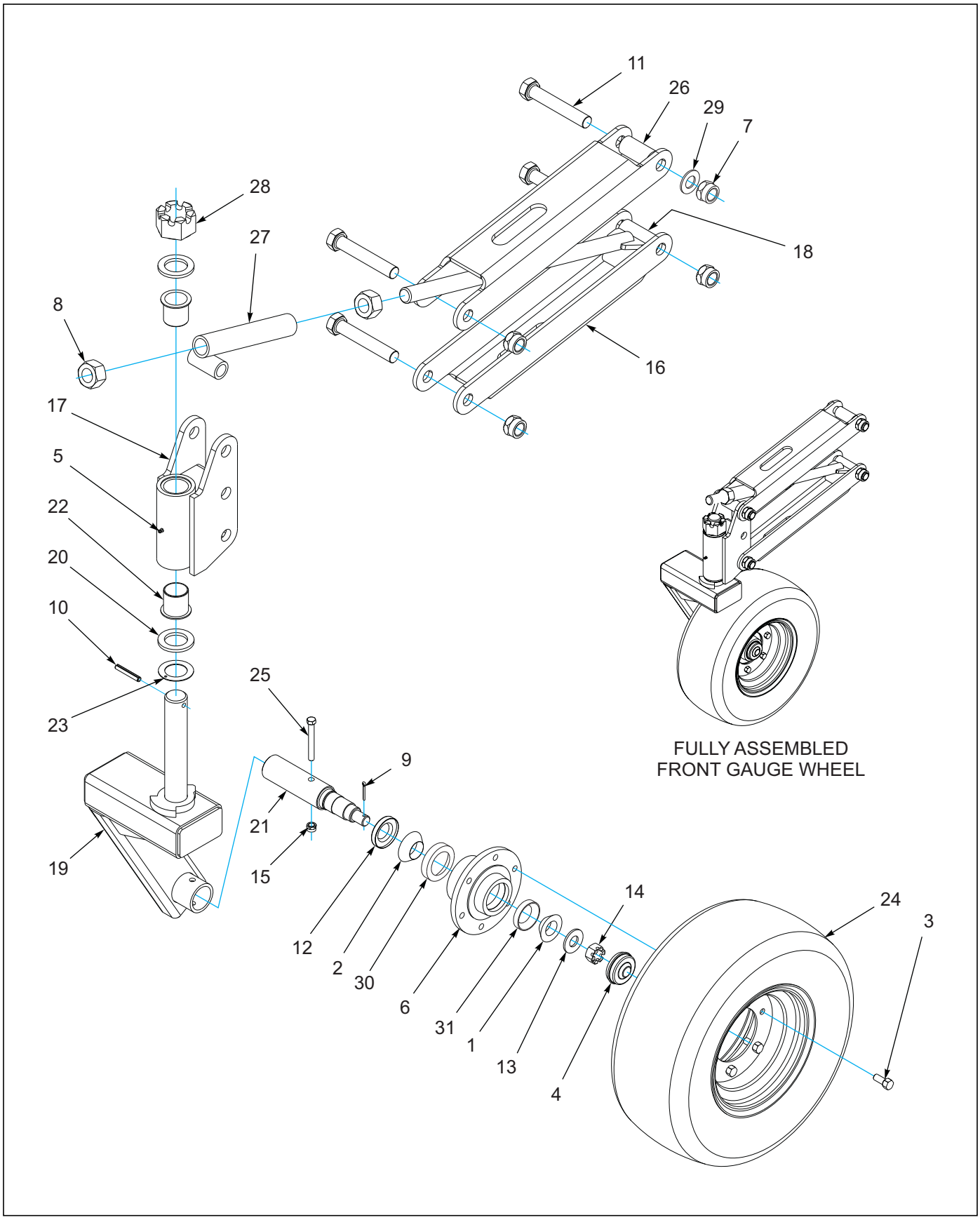

Figure 1-21: Front Gauge Wheel Assembly

https://truckmanualshub.com/

Front Gauge Wheel Assembly

ITEM	PART NO.	DESCRIPTION	QTY.
--	144200	FRONT GAUGE WHEEL ASSEMBLY	
1	1-076-010007	CONE, INNER	2
2	1-076-010009	CONE, INNER	2
3	1-104-010002	WHEEL BOLT, 1/2 X 1-3/8	6
4	1-161-010003	HUB CAP, 6 BOLT	2
5	1-298-010001-1	FITTING, GREASE 1/4-28	1
6	1-406-010012	HUB, 6 BOLT W/ CUPS	2
7	1-512-010005-19	NUT, HEX LOCK 1-8 GRB	10
8	1-512-010007-16	NUT, HEX 1-1/4 - 7	4
9	1-557-010362-40	PIN, COTTER 5/32 X 1-1/4	2
10	1-647-010004257	PIN, SPRING SLOTTED 3/8 X 2-1/2	2
11	8-105-010003	SCREW, HEX HEAD CAP 1-8 X 6 GR5	8
12	1-659-010004	1-5/8 ID GREASE SEAL	2
13	1-861-010004	WASHER, SPINDLE 7/8	2
14	100966	NUT, HEX SLOTTED 7/8-14	2
15	101988	NUT, HEX LOCK 7/16-14 GRB	2
16	140658	LINK, GAUGE WHEEL	4
17	140663	HUB, GAUGE WHEEL	2
18	140667	ROD WELDMENT, GAUGE WHEEL	2
19	140672	AXLE, GAUGE WHEEL	2
20	141154	WASHER, GANG SHAFT	4
21	141245	SPINDLE, GAUGE WHEEL	2
22	141257	BEARING, FLANGE 1-3/4	4
23	141258	WASHER, THRUST 1-3/4	2
24	141271	TIRE AND WHEEL ASSEMBLY, FRONT	2
25	141808	SCREW, HEX HEAD CAP 7/16-14 X 3-1/2 GR5	2
26	144198	SPACER, GAUGE WHEEL	2
27	144199	CROSS, GAUGE WHEEL	2
28	23085	NUT, HEX SLOTTED 1-3/4 - 5	2
29	1-861-010032-24	WASHER, FLAT 1N	4
30	1-076-010012	CUP	1
31	1-076-010010	CUP	1

https://truckmanualshub.com/

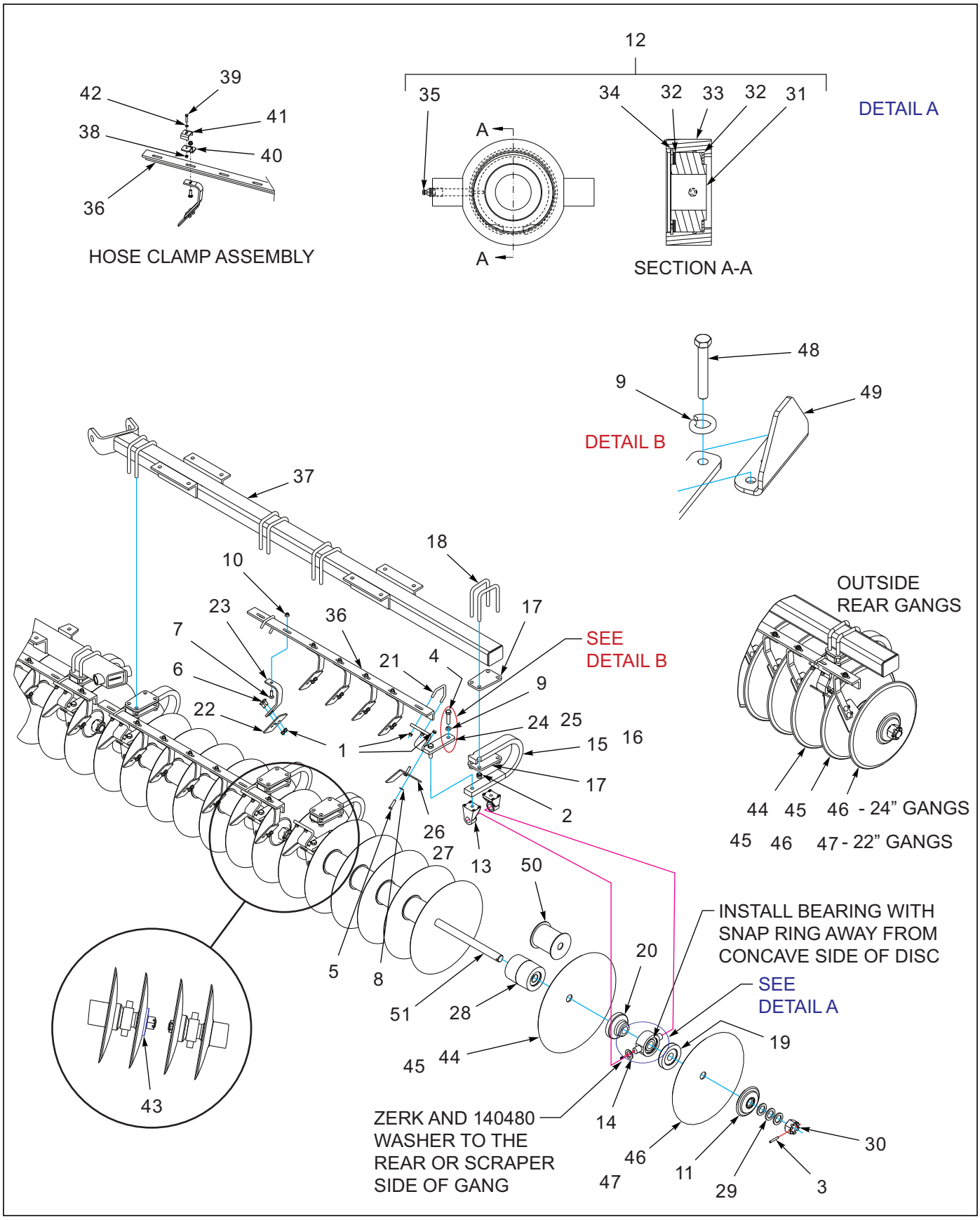

Figure 1-22: Disc Gang Assembly

https://truckmanualshub.com/

Disc Gang Assembly

ITEM	PART NO.	DESCRIPTION	QTY.
1	1-512-010005-09	NUT HEX LOCK 1/2-13 GRB	
2	1-512-010005-15	NUT HEX LOCK 3/4-10 GRB	
3	1-647-010004257	PIN, SPRING SLOTTED 3/8 X 2-1/2	
4	1-654-010032-09	SCREW, HEX HEAD CAP 3/4-10 X 3 GR8	
5	1-654-010055-05	SCREW, HEX HEAD CAP 1/2-13 X 2 GR5	
6	1-654-010070-02	SCREW, RD HEAD SQ NECK 1/2-13 X 1-1/4	
7	1-654-010070-04	SCREW, RD HEAD SQ NECK 1/2-13 X 1-3/4	
8	1-861-010032-14	WASHER, FLAT 1/2N	
9	1-861-010034-17	WASHER, SPLIT LOCK 3/4	
10	124971	NUT, HEX FLANGE LOCK 1/2-13	
11	140469	END COLLAR	
12	140477	BEARING ASSEMBLY, DISC 1.775 ID **(INCL ITEMS 31-35)**	
13	140479	MOUNT, TRUNNION BEARING	
14	140480	WASHER, TRUNNION	
15	140481	SHANK, DISC BEARING, RIGHT **(USED RIGHT FRONT AND LEFT REAR GANGS)**	
16	140482	SHANK, DISC BEARING, LEFT **(NOT SHOWN) (USED LEFT FRONT AND RIGHT REAR GANGS)**	
17	140483	PLATE, DISC SHANK MOUNT	
18	140484	U-BOLT, 3/4 X 5	
19	140485	HALF SPOOL, CONCAVE	
20	153651	HALF SPOOL, CONVEX	
21	140487	U-BOLT, SCRAPER BAR MOUNT	
22	166718	SCRA[ER. 5-1/2”	
23	144155	SCRAPER ARM	
24	140490	MOUNT, SCRAPER BAR RIGHT **(USED RIGHT FRONT AND LEFT REAR GANGS)**	
25	140491	MOUNT, SCRAPER BAR LEFT **(NOT SHOWN) (USED LEFT FRONT AND RIGHT REAR GANGS)**	
26	153649	SCRAPER, DUAL RIGHT, 7 (**22” DIA. BLADES) (USED RIGHT FRONT AND LEFT REAR GANGS)**	
26	180140	SCRAPER, DUAL RT, 7-24" LC (**24” DIA. BLADES) (USED RIGHT FRONT AND LEFT REAR GANGS)**	
27	153650	SCRAPER, DUAL LEFT 7 (**22” DIA. BLADES) (NOT SHOWN) (USED LEFT FRONT AND RIGHT REAR GANGS)**	
27	180141	SCRAPER, DUAL LT, 7-24" LC (**24” DIA. BLADES) (NOT SHOWN) (USED LEFT FRONT AND RIGHT REAR GANGS)**	
28	154668	SPOOL CAST 7 SP **(FRONT GANGS)**	
29	141154	WASHER, GANG SHAFT	
30	23085	NUT, HEX SLOTTED 1-3/4 - 5	
31	140464	BEARING, DISC 1.775ID	
32	140473	WASHER, BEARING	
33	140475	CASTING, TRUNNION BEARING	
34	140476	INTERNAL RETAINING RING	
35	5000	ZERK, FITTING 1/8	
36	-----	SCRAPER BAR **(SEE PAGES 1-54 - 1-66)**	
37	-----	GANG BAR **(SEE PAGES 1-54 - 1-66)**	
38	1-512-010005-05	NUT, HEX LOCK 3/8-16 GRB	
39	1-654-010051-08	SCREW, HEX HEAD CAP 3/8-16 X 1-3/4 GR5	

https://truckmanualshub.com/

Disc Gang Assembly

ITEM	PART NO.	DESCRIPTION	QTY.
40	141275	BRACKET, HOSE CLAMP	
41	2-181-010001	HOSE CLAMP	
42	1-861-010032-11	WASHER, FLAT 3/8	
43	153709	WASHER, DISC GANG END	
44	161530	DISC BLADE,24" X 1/4" 1-3/4ID **(STD)**	
44	172076	DISC BLADE, 24"X1/4", 1-3/4"ID **(ROLL)**	
45	155617	DISC BLADE,22"X1/4" 1-3/4 ID **(STD)**	
45	155618	DISC BLADE,22"X1/4" 1-3/4 ID **(ROLL)**	
46	186100	DISC BLADE, 20" X 1/4" 1-3/4ID **(STD)**	
46	155619	DISC BLADE,20"X1/4" 1-3/4 ID **(ROLL)**	
47	186101	DISC BLADE, 18" X 1/4" 1-3/4ID **(STD)**	
47	158898	DISC BLADE,18"X1/4" 1-3/4"ID **(ROLL)**	
48	114029	SCREW HX CAP 3/4-10X4 GR8	
49	143988	STOP, DISC SHANK	
50	153652	SPOOL WELDMENT 7" **(REAR GANGS)**	
51	-----	GANG SHAFT **(SEE PAGES 1-50 - 1-66)**	

https://truckmanualshub.com/

Table provided for general use.

NOTES:

https://truckmanualshub.com/

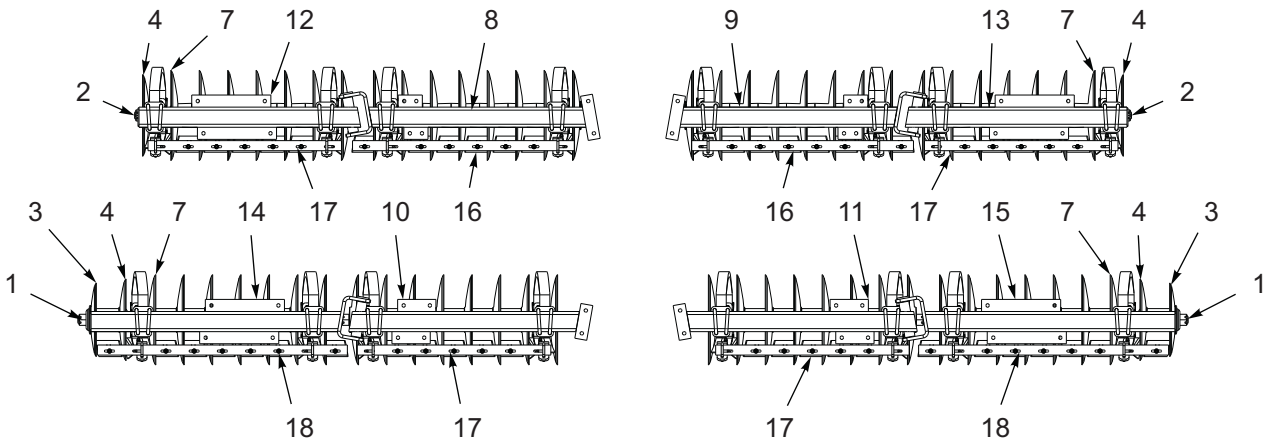

7431-20 22” 6 GA LC DISC BLADES

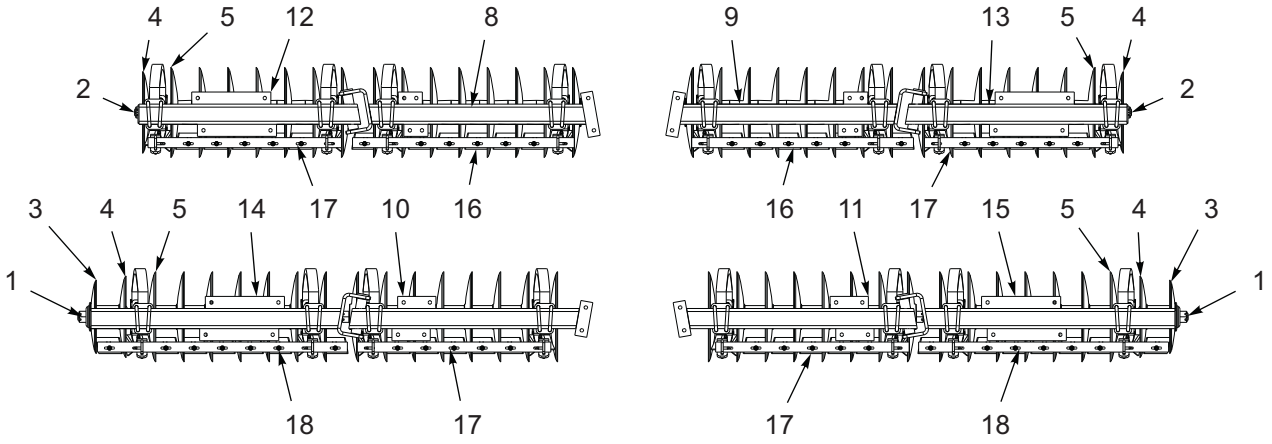

7431-20 22” 4 GA LC DISC BLADES

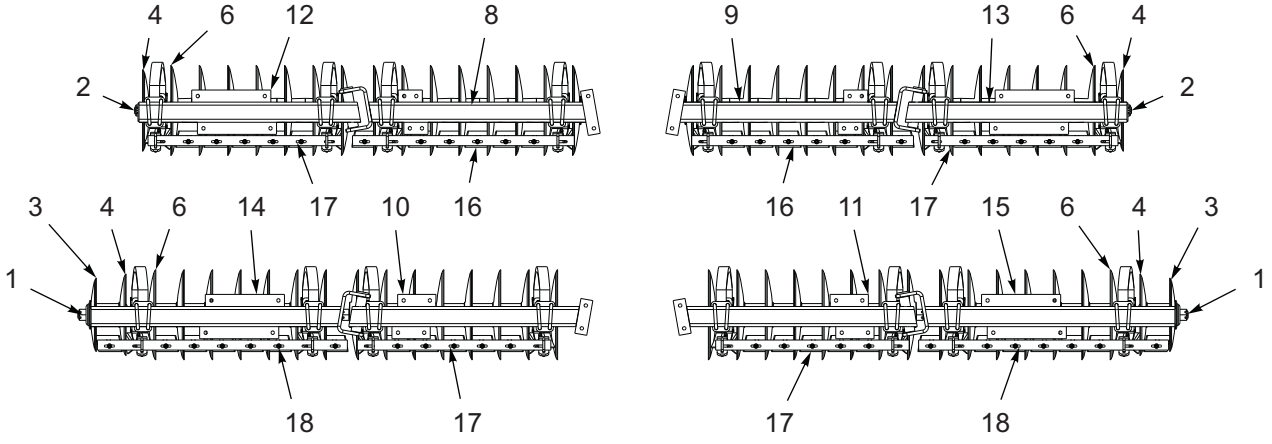

7431-20 22” 4 GA ROLLABLE LC DISC BLADES

Figure 1-23: 7431-20’ 22’’ Disc Gang Placement

https://truckmanualshub.com/

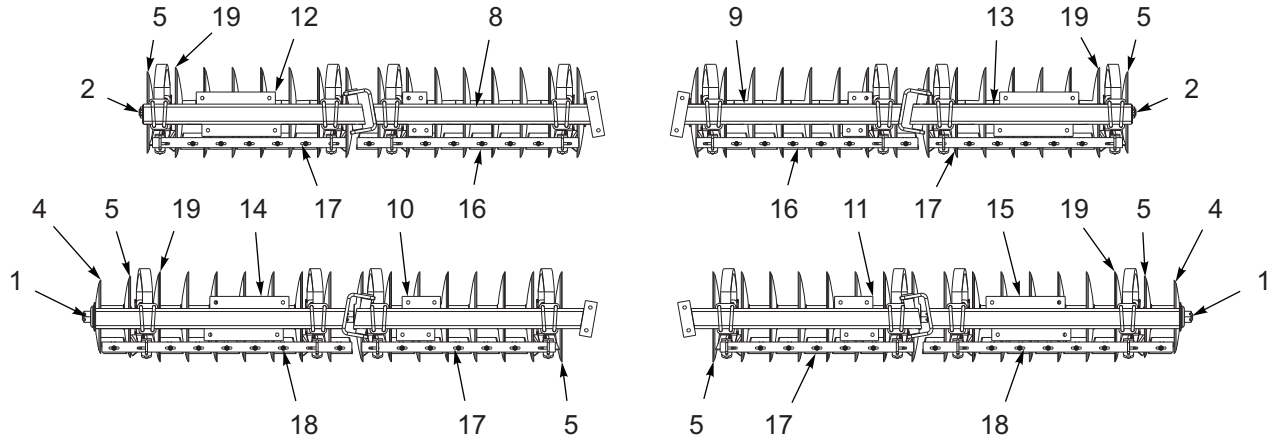

7431-20 24” 4 GA LC DISC BLADES

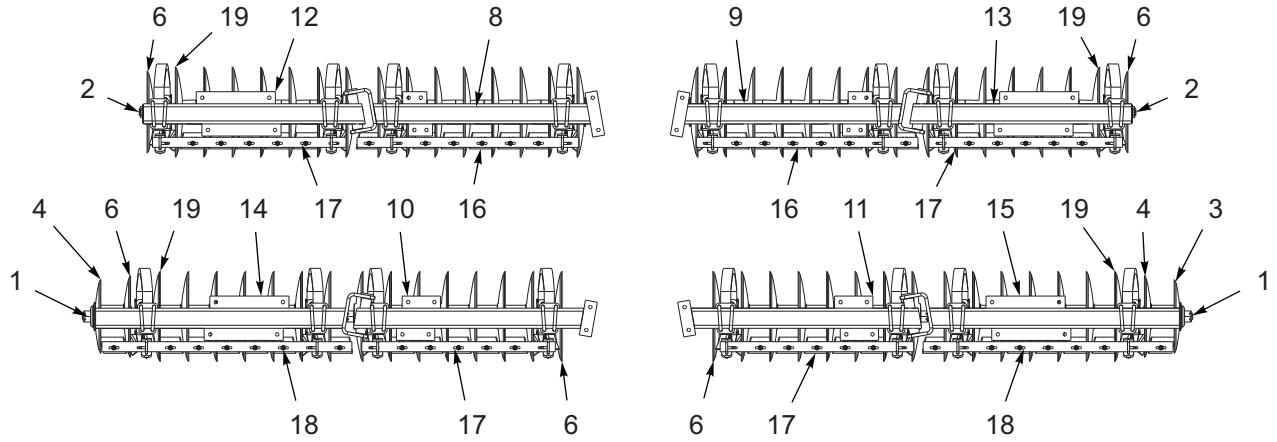

7431-20 24” 4 GA ROLLABLE LC DISC BLADES

Figure 1-24: 7431-20’ 24” Disc Gang Placement

https://truckmanualshub.com/

7431-20' Disc Gang Placement

ITEM	PART NO.	DESCRIPTION	QTY.
1	154663	SHAFT, GANG 62-1/2L	
2	153713	SHAFT, GANG 55-1/2L	
3	158898	DISC BLADE, 18” X 1/4” - 1-3/4” ID **(ROLL)**	
3	186101	DISC BLADE, 18” X 1/4” - 1-3/4” ID **(STD)**	
4	155619	DISC BLADE, 20" X 1/4” - 1-3/4” ID **(ROLL)**	
4	186100	DISC BLADE, 20" X 1/4” - 1-3/4” ID **(STD)**	
5	155617	DISC BLADE, 22" X 1/4” - 1-3/4” ID, **(STD)**	
6	155618	DISC BLADE 22" X 1/4” - 1-3/4” ID **(ROLL)**	
7	151548	DISC BLADE 22" X 6 GA - 1-3/4” ID **(STD)**	
8	153636	GANG BAR, LCF	
9	153637	GANG BAR, RCF	
10	158901	GANG BAR, LCR	
11	158902	GANG BAR, RCR	
12	170250	GANG BAR LWF	
13	170249	GANG BAR RWF	
14	170252	GANG BAR LWR	
15	170251	GANG BAR RWR	
16	153699	SCRAPER BAR, 7 SP 8 HOLE	
17	153698	SCRAPER BAR 7 SP 7 HOLE	
18	153700	SCRAPER BAR, 7 SP 9 HOLE	
19	161530	DISC BLADE,24" X 1/4" 1-3/4ID **(STD)**	
19	172076	DISC BLADE, 24"X1/4", 1-3/4"ID **(ROLL)**	

https://truckmanualshub.com/

Table provided for general use.

NOTES:

https://truckmanualshub.com/

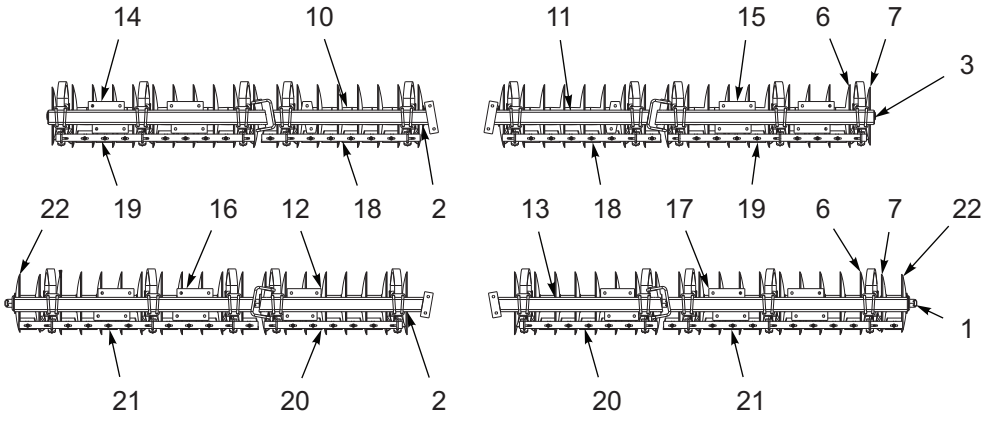

7431-23 22” 6 GA LC DISC BLADES

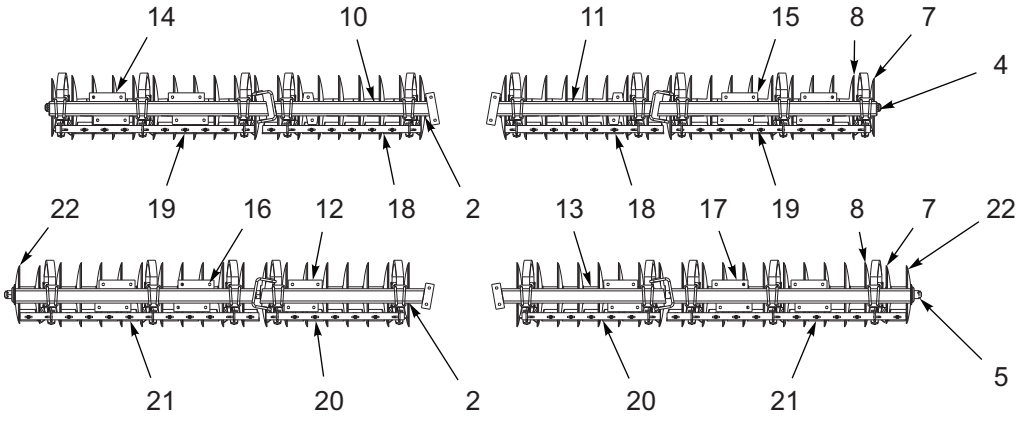

7431-23 22” 4 GA LC DISC BLADES

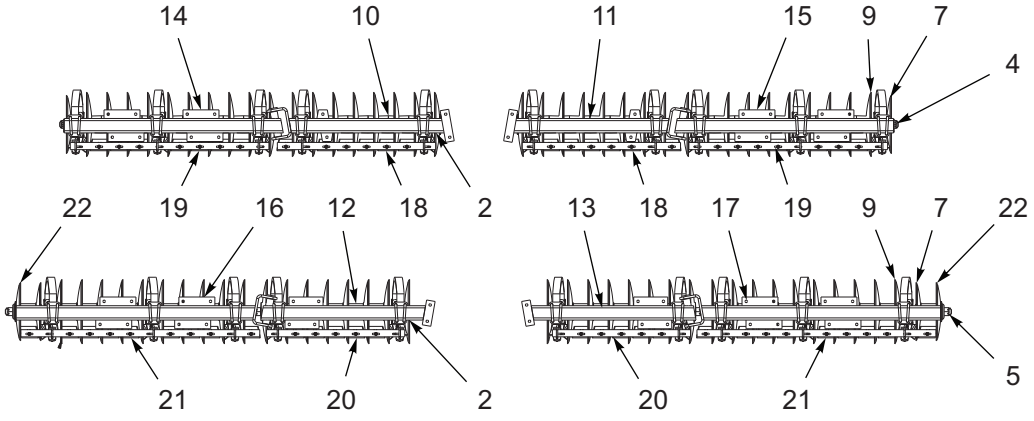

7431-23 22” 4 GA ROLLABLE LC DISC BLADES

Figure 1-25: 7431-23’ 22’’ Disc Gang Placement

https://truckmanualshub.com/

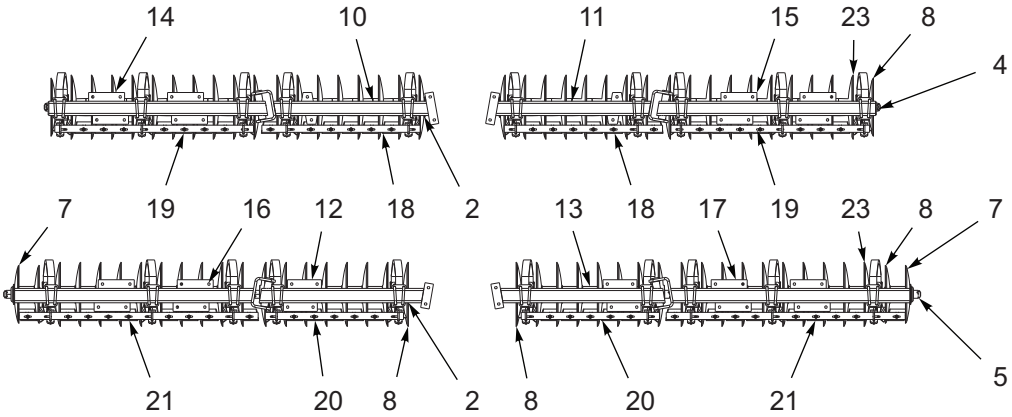

7431-23 24” 4 GA LC DISC BLADES

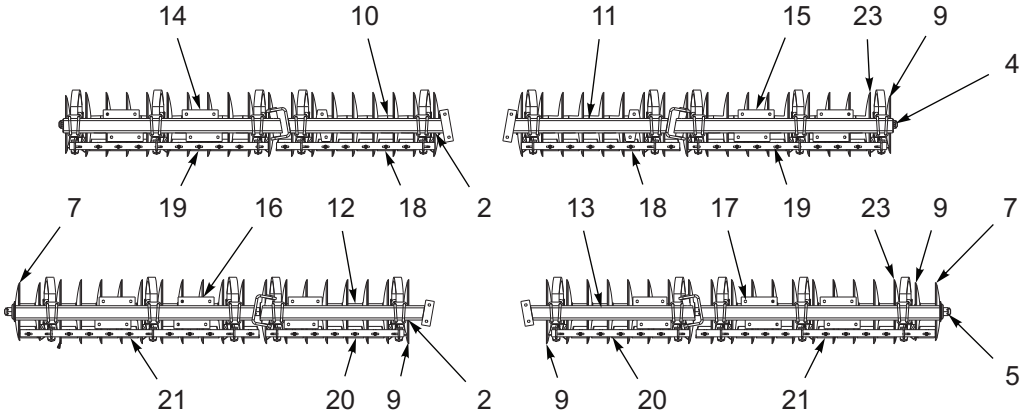

7431-23 24” 4 GA ROLLABLE LC DISC BLADES

Figure 1-26: 7431-23’ 24” Disc Gang Placement

https://truckmanualshub.com/

7431-23' Disc Gang Placement

ITEM	PART NO.	DESCRIPTION	QTY.
1	156921	SHAFT, GANG 83-1/2L	
2	153713	SHAFT, GANG 55-1/2L	
3	156922	SHAFT, GANG 76L	
4	142581	SHAFT, GANG 77L	
5	156084	SHAFT, GANG 84L	
6	151548	DISC BLADE 22" X 6 GA **(STD)**	
7	155619	DISC BLADE, 20" X 1/4” - 1-3/4” ID **(ROLL)**	
7	186100	DISC BLADE, 20" X 1/4” - 1-3/4” ID **(STD)**	
8	155617	DISC BLADE 22" X 1/4 - 1-3/4” ID **(STD)**	
9	155618	DISC BLADE 22" X 1/4 - 1-3/4” ID **(ROLL)**	
10	153636	GANG BAR, LCF	
11	153637	GANG BAR, RCF	
12	158901	GANG BAR, LCR	
13	158902	GANG BAR, RCR	
14	156166	GANG BAR LWF	
15	156167	GANG BAR RWF	
16	156168	GANG BAR LWR	
17	156169	GANG BAR RWR	
18	153699	SCRAPER BAR, 7 SP 8 HOLE	
19	153701	SCRAPER BAR, 7 SP 10 HOLE	
20	153698	SCRAPER BAR 7 SP 7 HOLE	
21	153703	SCRAPER BAR 7 AP 12 HOLE	
22	158898	DISC BLADE, 18” X 1/4” - 1-3/4” ID (**ROLL)**	
22	186101	DISC BLADE, 18” X 1/4” - 1-3/4” ID **(STD)**	
23	161530	DISC BLADE,24" X 1/4" 1-3/4ID **(STD)**	
23	172076	DISC BLADE, 24"X1/4", 1-3/4"ID **(ROLL)**	

https://truckmanualshub.com/

Table provided for general use.

NOTES:

https://truckmanualshub.com/

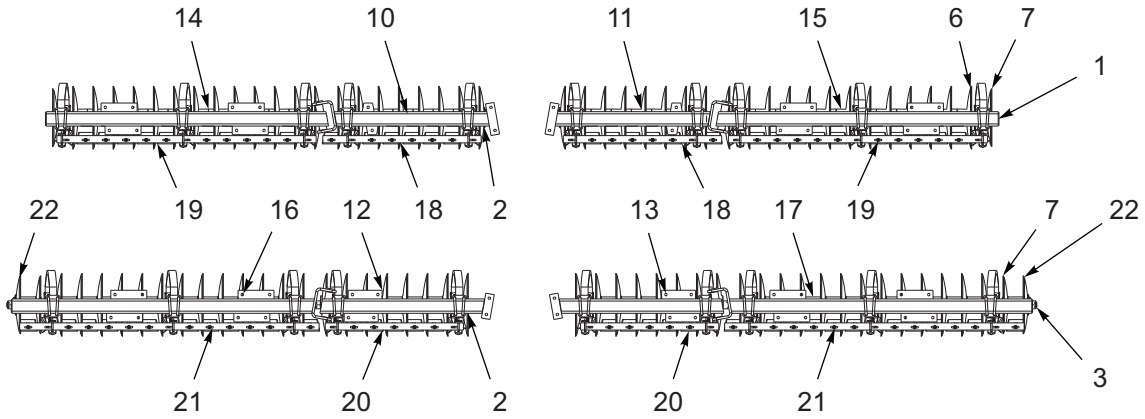

7431-26 22” 6 GA LC DISC BLADES

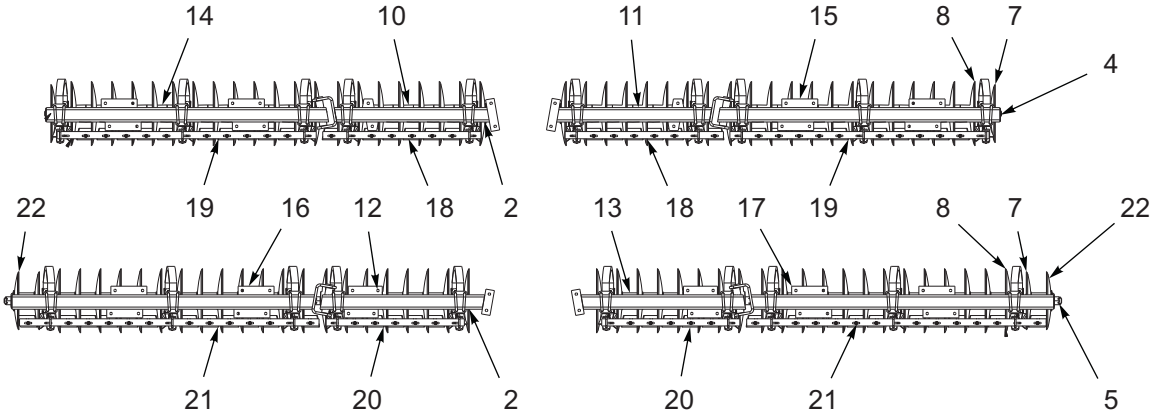

7431-26 22” 4 GA LC DISC BLADES

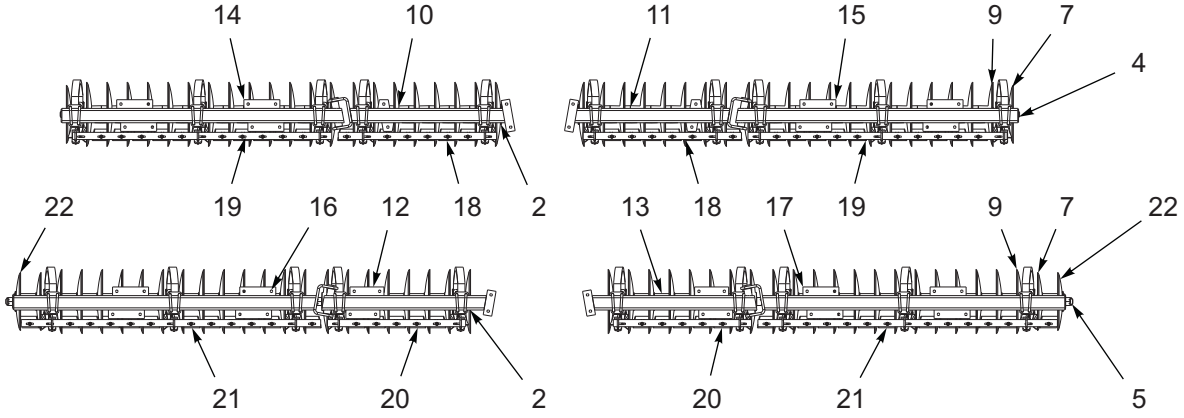

7431-26 22” 4 GA ROLLABLE LC DISC BLADES

Figure 1-27: 7431-26’ 22” Disc Gang Placement

https://truckmanualshub.com/

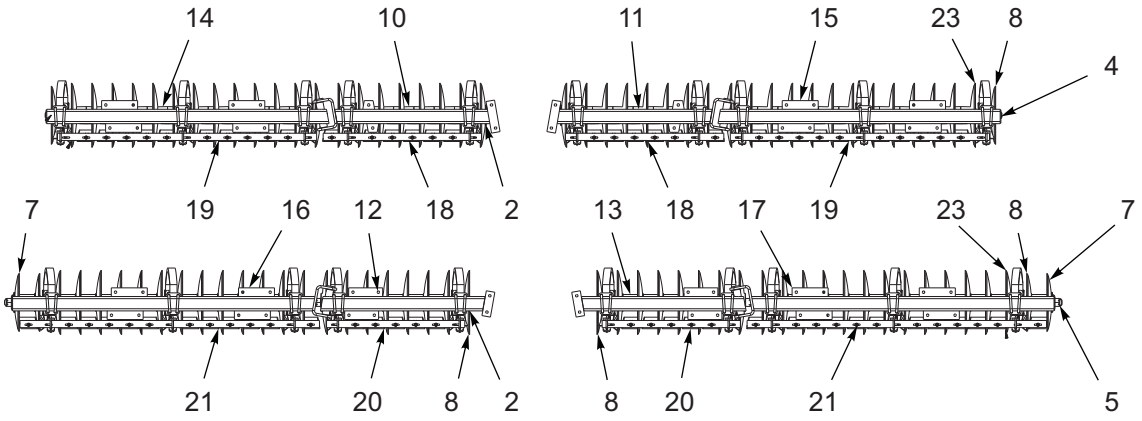

7431-26 24” 4 GA LC DISC BLADES

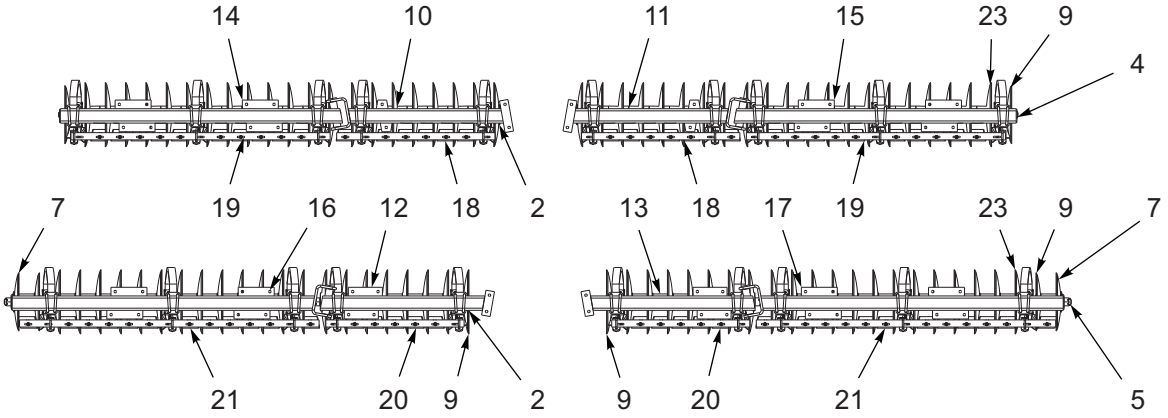

7431-26 24” 4 GA ROLLABLE LC DISC BLADES

Figure 1-28: 7431-26’ 24” Disc Gang Placement

https://truckmanualshub.com/

7431-26' Disc Gang Placement

ITEM	PART NO.	DESCRIPTION	QTY.
1	153710	SHAFT, GANG 97L	
2	153713	SHAFT, GANG 55-1/2L	
3	153711	SHAFT, GANG 104L	
4	156082	SHAFT, GANG 98L	
5	156083	SHAFT, GANG 105L	
6	151548	DISC BLADE 22" X 6 GA **(STD)**	
7	155619	DISC BLADE,20” X 1/4” - 1-3/4” **(ROLL)**	
7	186100	DISC BLADE, 20" X 1/4” - 1-3/4” ID **(STD)**	
8	155617	DISC BLADE 22" X 1/4 - 1-3/4 “ ID **(STD)**	
9	155618	DISC BLADE 22" X 1/4 - 1-3/4” ID **(ROLL)**	
10	153636	GANG BAR, LCF	
11	153637	GANG BAR, RCF	
12	158901	GANG BAR, LCR	
13	158902	GANG BAR, RCR	
14	153640	GANG BAR LWF	
15	153641	GANG BAR RWF	
16	153642	GANG BAR LWR	
17	153643	GANG BAR RWR	
18	153699	SCRAPER BAR, 7 SP 8 HOLE	
19	153704	SCRAPER BAR, 7 SP 13 HOLE	
20	153698	SCRAPER BAR 7 SP 7 HOLE	
21	153706	SCRAPER BAR 7 SP 15 HOLE	
22	158898	DISC BLADE, 18” X 1/4” - 1-3/4” ID **(ROLL)**	
22	186101	DISC BLADE, 18” X 1/4” - 1-3/4” ID **(STD)**	
23	161530	DISC BLADE,24" X 1/4" 1-3/4ID **(STD)**	
23	172076	DISC BLADE, 24"X1/4", 1-3/4"ID **(ROLL)**	

https://truckmanualshub.com/

Table provided for general use.

NOTES:

https://truckmanualshub.com/

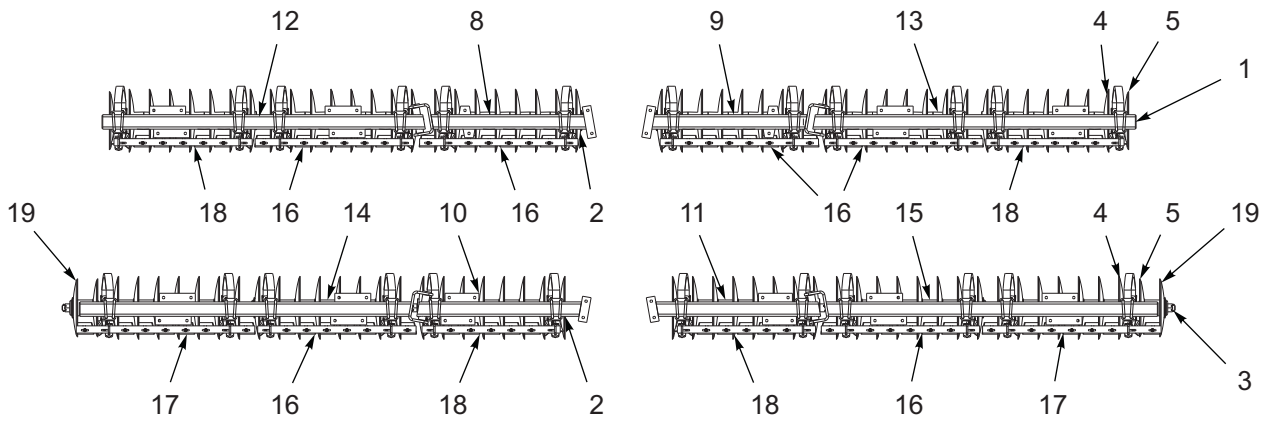

7431-29 22” 6 GA LC DISC BLADES

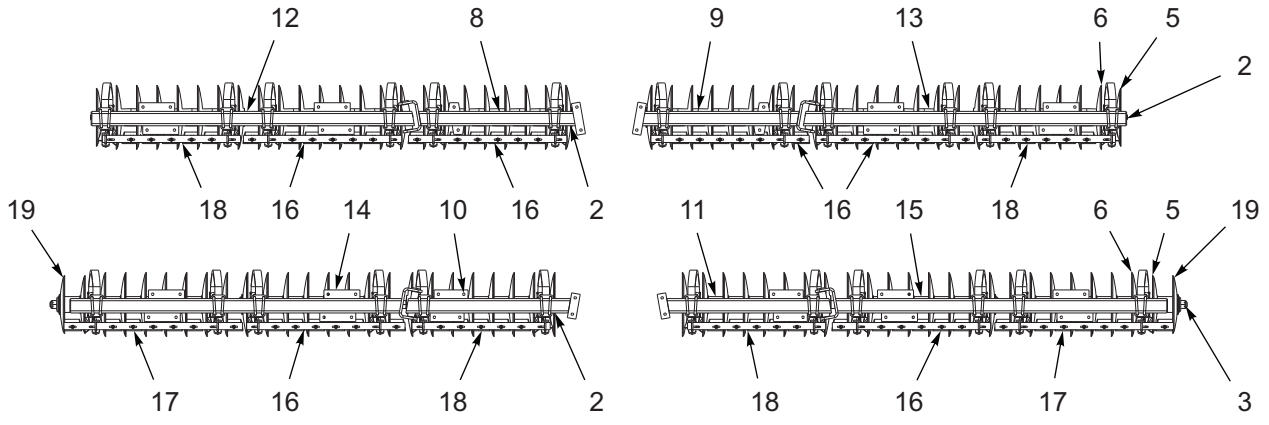

7431-29 22” 4 GA LC DISC BLADES

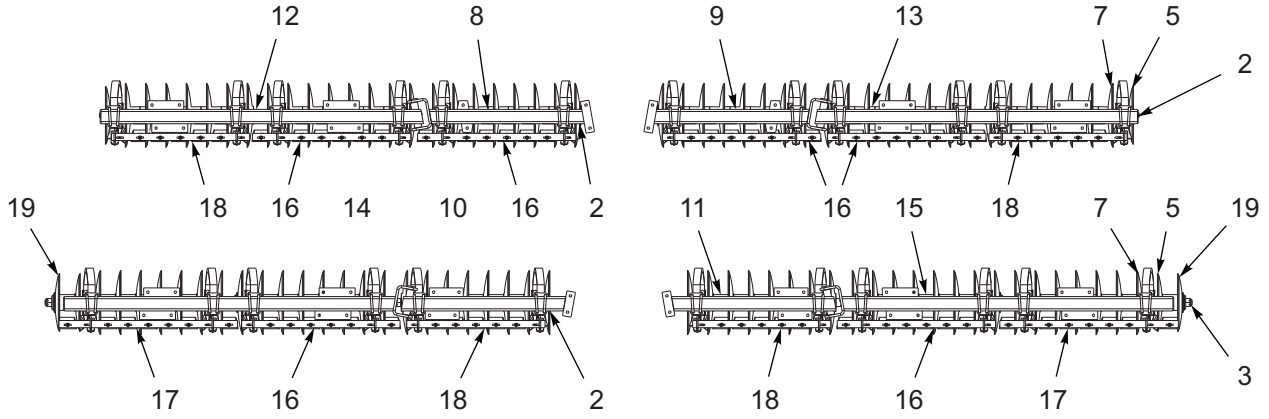

7431-29 22” 4 GA ROLLABLE DISC BLADES

Figure 1-29: 7431-29’ 22’’ Disc Gang Placement

https://truckmanualshub.com/

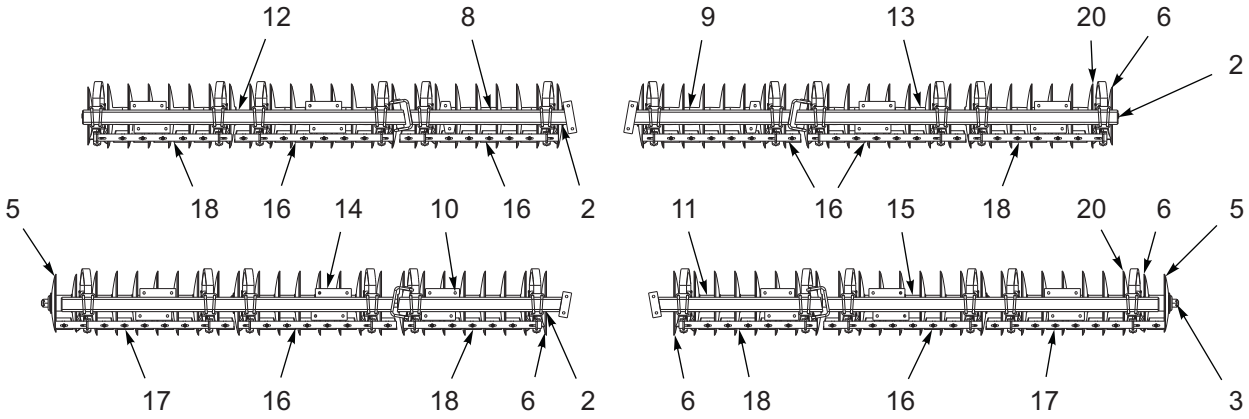

7431-29 24” 4 GA LC DISC BLADES

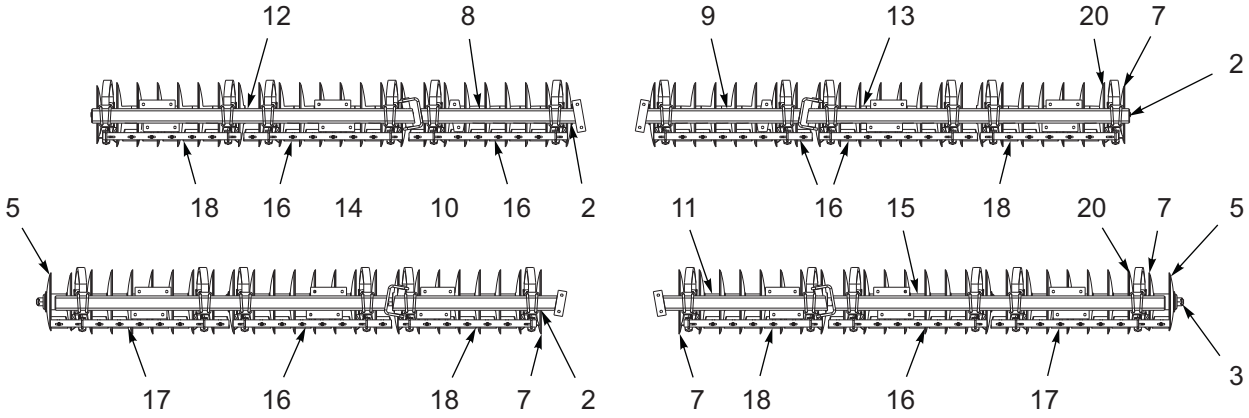

7431-29 24” 4 GA ROLLABLE DISC BLADES

Figure 1-30: 7431-29’ 24” Disc Gang Placement

https://truckmanualshub.com/

7431-29' Disc Gang Placement

ITEM	PART NO.	DESCRIPTION	QTY.
1	154662	SHAFT, GANG 55L **(6 GA)**	
2	153713	SHAFT, GANG 55-1/2L	
3	154663	SHAFT, GANG 62-1/2L	
4	151548	DISC BLADE 22" X 6 GA **(STD)**	
5	155619	DISC BLADE,20” X 1/4” - 1-3/4” ID **(ROLL)**	
5	186100	DISC BLADE, 20" X 1/4” - 1-3/4” ID **(STD)**	
6	155617	DISC BLADE 22" X 1/4 - 1-3/4” ID **(STD)**	
7	155618	DISC BLADE 22" X 1/4 - 1-3/4” **(ROLL)**	
8	153636	GANG BAR, LCF	
9	153637	GANG BAR, RCF	
10	158901	GANG BAR, LCR	
11	158902	GANG BAR, RCR	
12	153671	GANG BAR LWF	
13	153672	GANG BAR RWF	
14	153673	GANG BAR LWR	
15	153674	GANG BAR RWR	
16	153699	SCRAPER BAR, 7 SP 8 HOLE	
17	153700	SCRAPER BAR, 7 SP 9 HOLE	
18	153698	SCRAPER BAR 7 SP 7 HOLE	
19	158898	DISC BLADE, 18” X 1/4” - 1-3/4” ID **(ROLL)**	
19	186101	DISC BLADE, 18” X 1/4” - 1-3/4” ID **(STD)**	
20	161530	DISC BLADE,24" X 1/4" 1-3/4ID **(STD)**	
20	172076	DISC BLADE, 24"X1/4", 1-3/4"ID **(ROLL)**	

https://truckmanualshub.com/

Table provided for general use.

NOTES:

https://truckmanualshub.com/

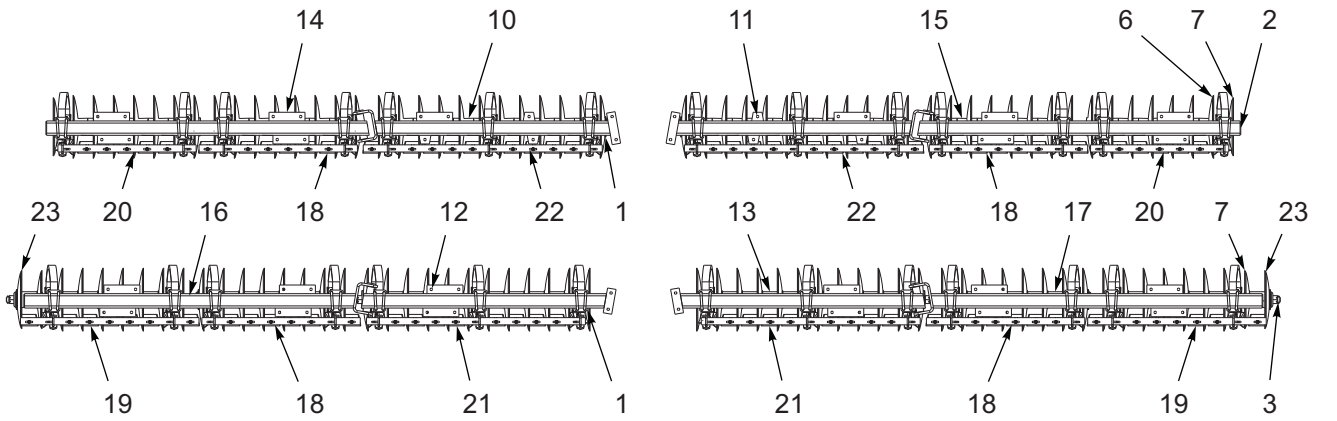

7431-33 22” 6 GA LC DISC BLADES

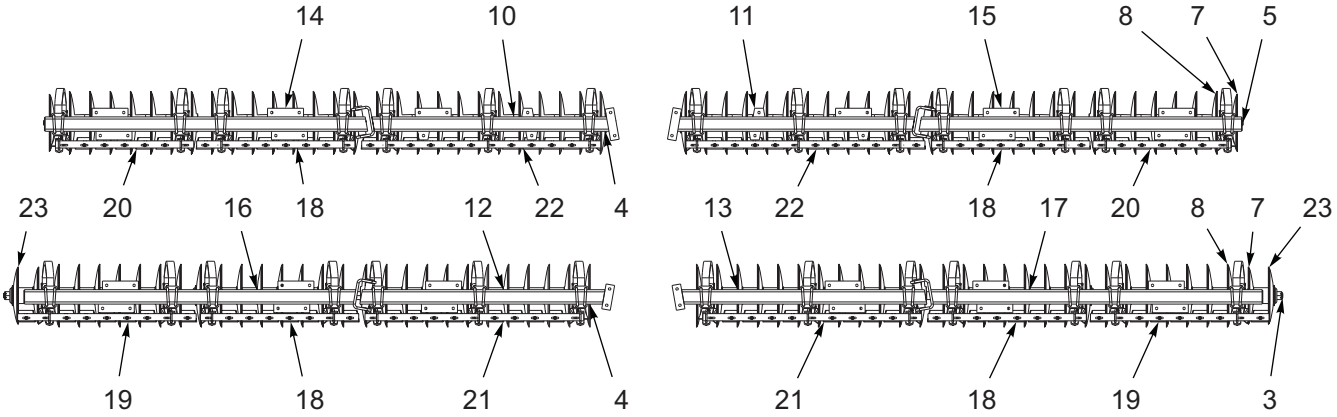

7431-33 22” 4 GA LC DISC BLADES

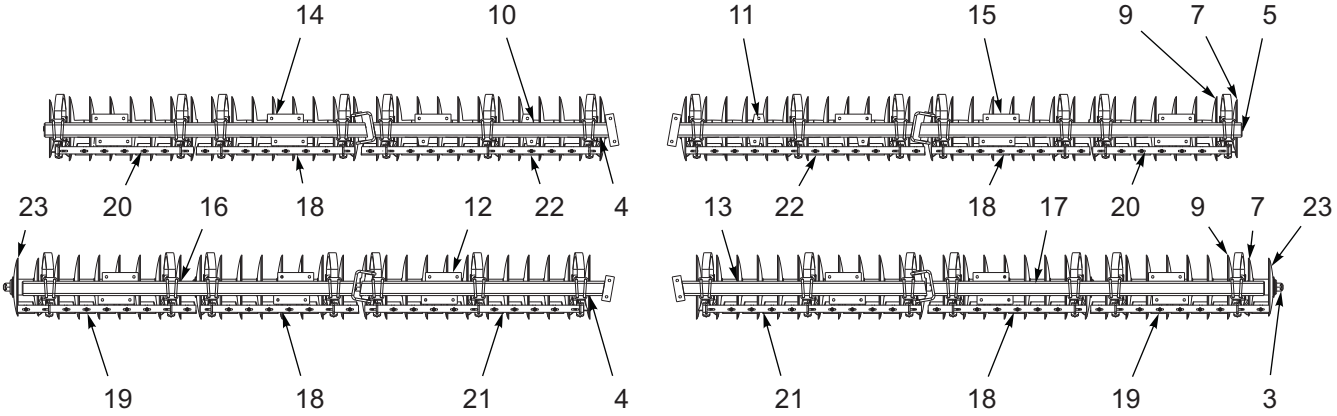

7431-33 22” 4 GA ROLLABLE LC DISC BLADES

Figure 1-31: 7431-33’ 22” Disc Gang Placement

https://truckmanualshub.com/

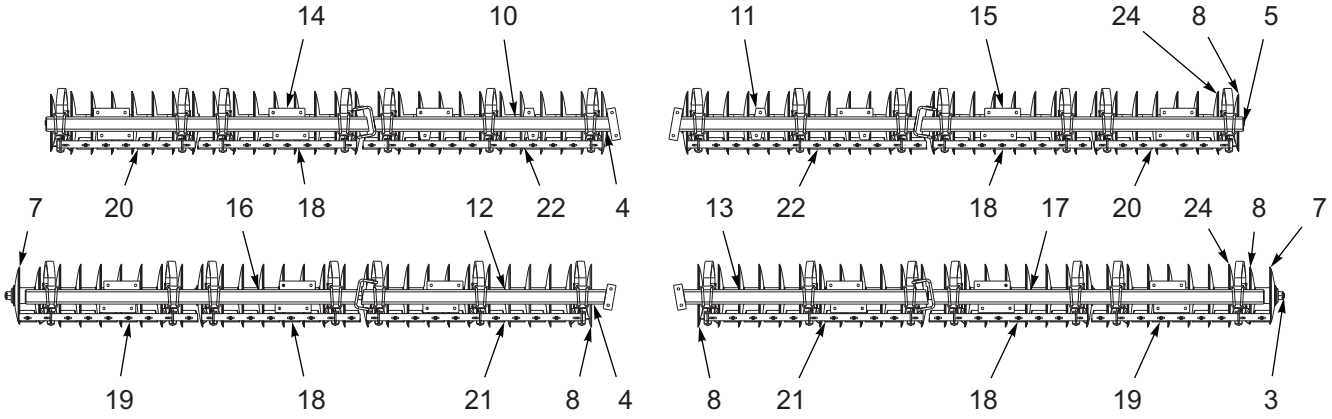

7431-33 24” 4 GA LC DISC BLADES

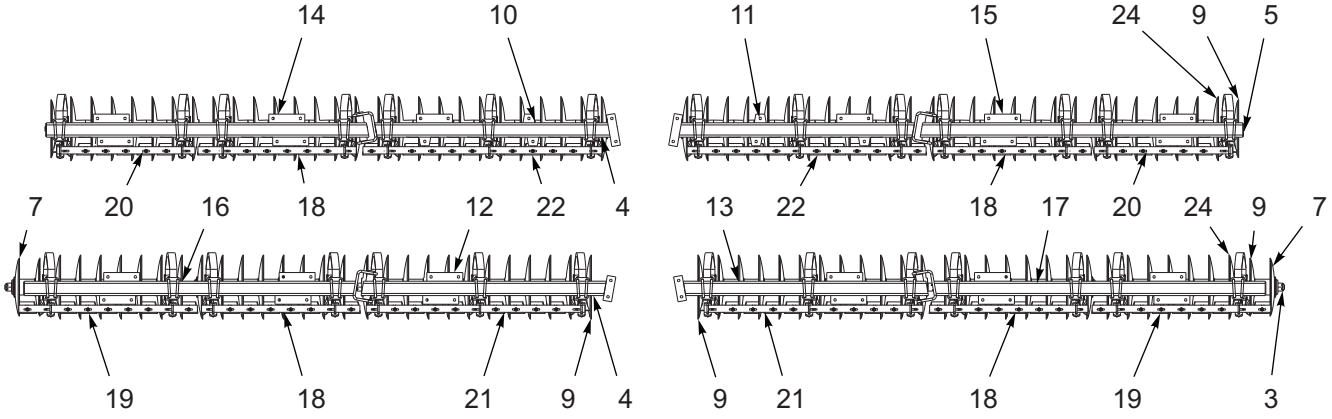

7431-33 24” 4 GA ROLLABLE LC DISC BLADES

Figure 1-32: 7431-33’ 24” Disc Gang Placement

https://truckmanualshub.com/

7431-33' Disc Gang Placement

ITEM	PART NO.	DESCRIPTION	QTY.
1	154661	SHAFT, GANG 83L	
2	154662	SHAFT, GANG 55L	
3	154663	SHAFT, GANG 62-1/2L	
4	156084	SHAFT, GANG 84L	
5	153713	SHAFT, GANG 55-1/2L	
6	151548	DISC BLADE 22" X 6 GA **(STD)**	
7	155619	DISC BLADE,20” X 1/4” - 1-3/4” ID **(ROLL)**	
7	186100	DISC BLADE, 20" X 1/4” - 1-3/4” **(STD)**	
8	155617	DISC BLADE 22" X 1/4 - 1-3/4” ID **(STD)**	
9	155618	DISC BLADE 22" X 1/4 - 1-3/4” **(ROLL)**	
10	153667	GANG BAR, LCF	
11	153668	GANG BAR, RCF	
12	153669	GANG BAR, LCR	
13	153670	GANG BAR, RCR	
14	153671	GANG BAR LWF	
15	153672	GANG BAR RWF	
16	153673	GANG BAR LWR	
17	153674	GANG BAR RWR	
18	153699	SCRAPER BAR, 7 SP 8 HOLE	
19	153700	SCRAPER BAR, 7 SP 9 HOLE	
20	153698	SCRAPER BAR 7 SP 7 HOLE	
21	153702	SCRAPER BAR 7 SP 11 HOLE	
22	153703	SCRAPER BAR 7 SP 12 HOLE	
23	158898	DISC BLADE, 18” X 1/4” - 1-3/4” ID **(ROLL)**	
23	186101	DISC BLADE, 18” X 1/4” - 1-3/4” ID **(STD)**	
24	161530	DISC BLADE,24" X 1/4" 1-3/4ID **(STD)**	
24	172076	DISC BLADE, 24"X1/4", 1-3/4"ID **(ROLL)**	

https://truckmanualshub.com/

Table provided for general use.

NOTES:

https://truckmanualshub.com/

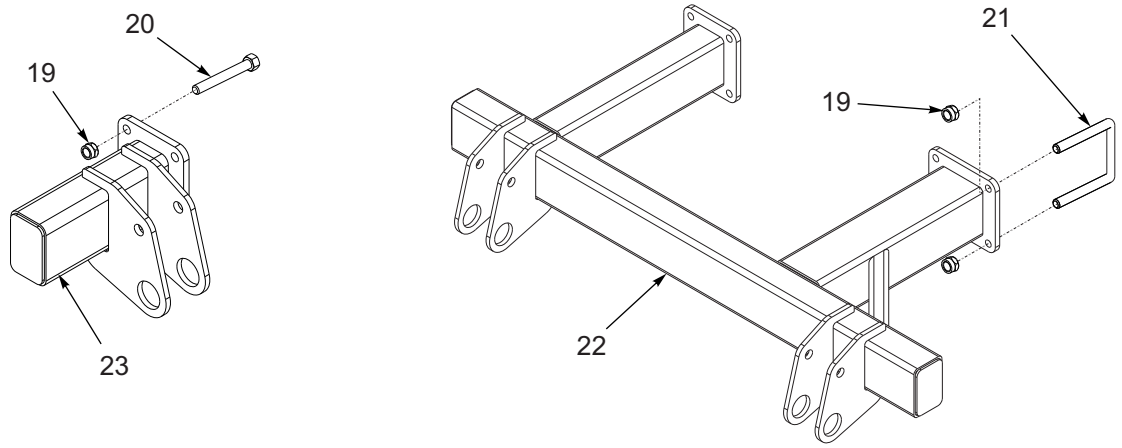

NOTE: THESE ITEMS ONLY USED ON MODELS
BUILT PRIOR TO JULY, 2012

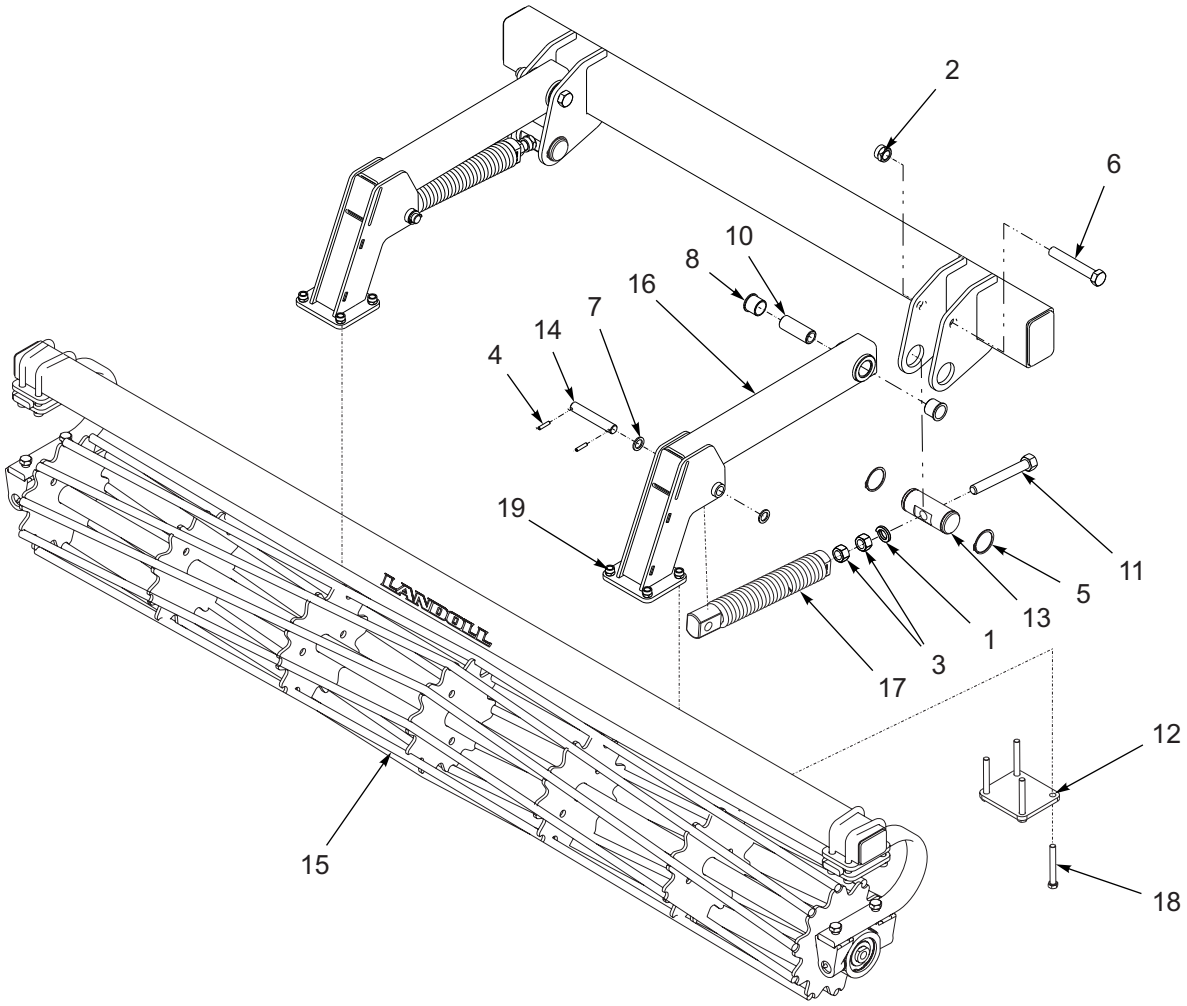

Figure 1-33: Conditioner Reel Assembly

https://truckmanualshub.com/

Conditioner Reel Assembly

ITEM	PART NO.	DESCRIPTION	QTY.
--	171018	CONDITIONER REEL ASSEMBLY **(20')**	
--	154677	CONDITIONER REEL ASSEMBLY **(23')**	
--	154678	CONDITIONER REEL ASSEMBLY **(26')**	
--	154679	CONDITIONER REEL ASSEMBLY **(29')**	
--	154681	CONDITIONER REEL ASSEMBLY **(33') (PRIOR TO JULY, 2012)**	
--	171092	CONDITIONER REEL ASSEMBLY **(33') (AFTER JULY, 2012)**	
1	1-861-010034-21	WASHER, LOCK 1"	
2	1-512-010005-19	NUT, HEX LOCK 1-8 GRB	
3	1-512-010007-14	NUT, HEX 1-8 GRB	
4	1-647-010004236	SPRING PIN, SLOTTED 5/16 X 1-1/2	
5	158896	SNAP RING	
6	100829	SCREW, HEX HEAD CAP 1-8 X 6-1/2 GR5	
7	117957	MACHINERY BUSHING	
8	140599	BEARING, FLANGE 1-1/2	
9	156953	REAR JACK MOUNT **(NOT SHOWN) (SEE PAGE 1-93)**	
10	152209	BUSHING, PIVOT 1-1/2	
11	152210	BOLT, ADJ 1 X 8	
12	154748P	PLATE, GANGBAR MOUNT	
13	158897	PIN, ADJUSTMENT W/ SNAP RING	
14	154392	PIN, PIVOT	
15	171036	CONDITION REEL/GANGBAR ASSY, 70” **(SEE PAGE 1-81)**	
15	154686	CONDITIONER REEL/GANGBAR ASSY, 91" **(SEE PAGE 1-81)**	
15	156125	CONDITIONER REEL/GANGBAR ASSY, 129" **(SEE PAGE 1-81)**	
15	155545	CONDITIONER REEL/GANGBAR ASSY, 97" **(SEE PAGE 1-81)**	
15	154687	CONDITIONER REEL/GANGBAR ASSY, 114" **(SEE PAGE 1-81)**	
15	165127	CONDITIONER REEL/GANGBAR ASSY, 156" **(SEE PAGE 1-81)**	
16	158847	ARM, REEL	
17	158795	SPRING ASSEMBLY, HEAVY 17"	
18	172884	SCREW, HEX HEAD CAP 3/4-10 X 6 GR8	
19	1-512-010005-15	NUT, HEX LOCK 3/4-10 GRB	
20	1-654-010061-06	SCREW, HEX HEAD CAP 3/4-10 X 2-1/4 GR5 **(7431-33)**	
21	111392	U-BOLT **(7431-33)**	
22	154417	MOUNT, EXT DOUBLE **(7431-33)**	
23	154418	MOUNT, EXT SINGLE **(7431-33)**	

https://truckmanualshub.com/

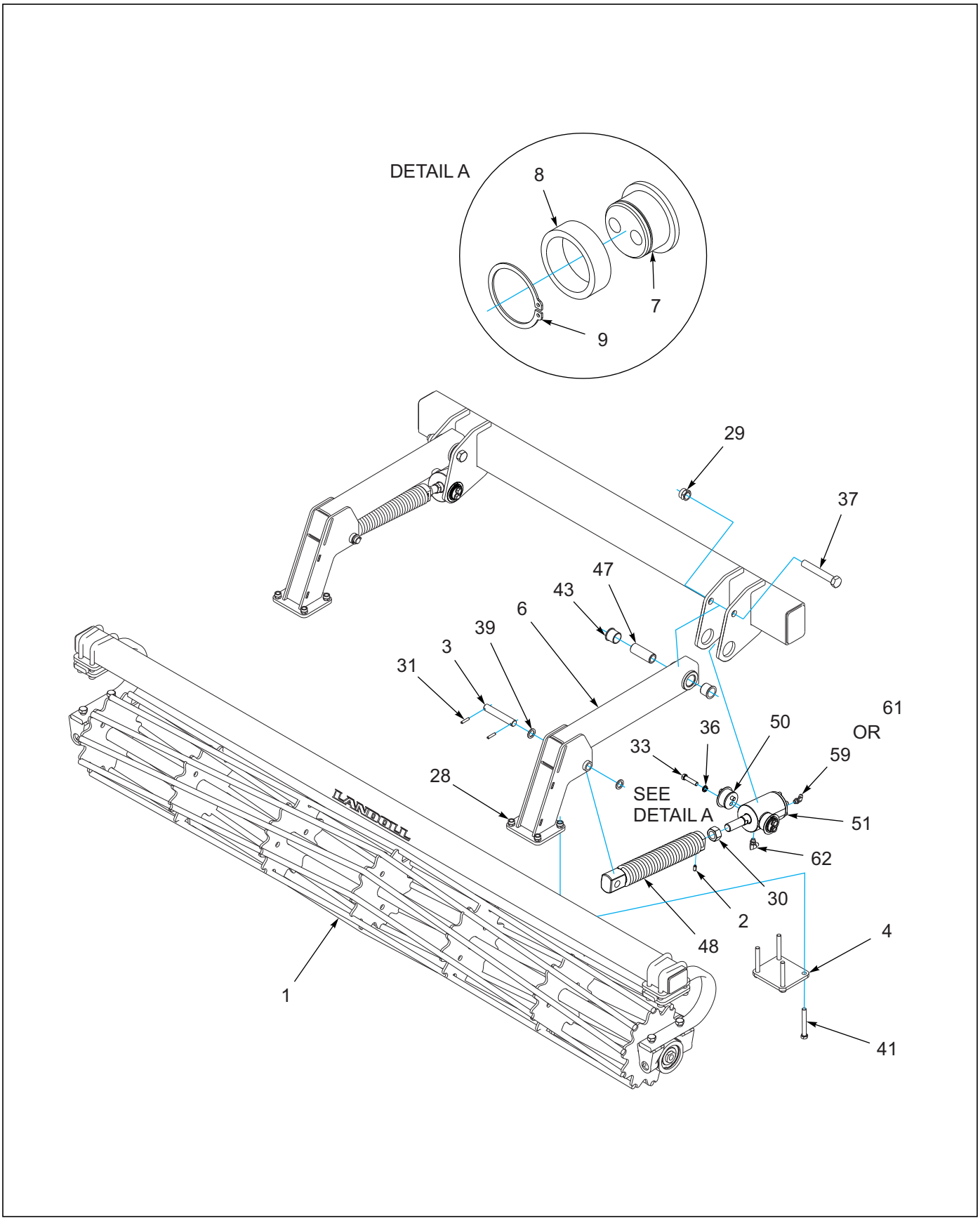

Figure 1-34: Hydraulic Conditioner Reel Assembly (20’ - 29’ Models)

https://truckmanualshub.com/

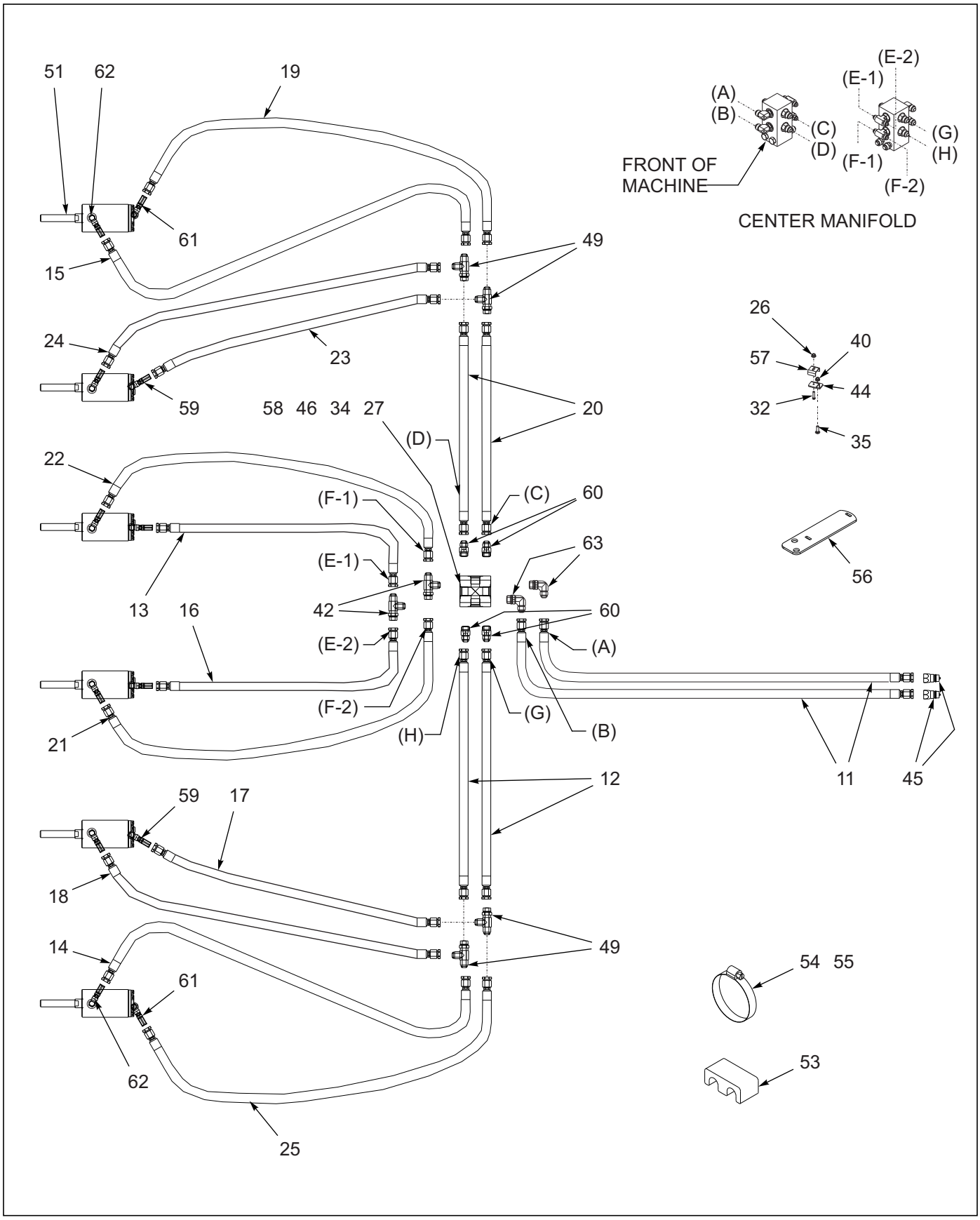

Figure 1-35: Hydraulic Conditioner Reel Assembly (20’ - 29’ Models)

https://truckmanualshub.com/

Hydraulic Conditioner Reel Assembly (20’ - 29’ Models)

ITEM	PART NO.	DESCRIPTION	QTY.
--	172984	HYDRAULIC CONDITIONER REEL ASSEMBLY **(20')**	
--	172985	HYDRAULIC CONDITIONER REEL ASSEMBLY **(23')**	
--	172986	HYDRAULIC CONDITIONER REEL ASSEMBLY **(26')**	
--	172987	HYDRAULIC CONDITIONER REEL ASSEMBLY **(29')**	
1	171036	CONDITIONER REEL/GANGBAR ASSY, 70” **(SEE PAGE 1-81)**	
1	154686	CONDITIONER REEL/GANGBAR ASSY, 91" **(SEE PAGE 1-81)**	
1	156125	CONDITIONER REEL/GANGBAR ASSY, 129" **(SEE PAGE 1-81)**	
1	155545	CONDITIONER REEL/GANGBAR ASSY, 97" **(SEE PAGE 1-81)**	
1	154687	CONDITIONER REEL/GANGBAR ASSY, 114" **(SEE PAGE 1-81)**	
2	1P444	SET SCREW, 3/8-16X3/4 NYLON	4
3	154392	PIN, PIVOT	4
4	154748P	PLATE, GANGBAR MOUNT	6
5	156953	REAR JACK MOUNT **(NOT SHOWN) (SEE PAGE 1-93)**	1
6	158847	ARM, REEL	6
7	191924	TRUNION, CYLINDER	1
8	191925	TRUNION, BEARING	1
9	18530	SNAP RING. 2 SHAFT	1
10	173025	HOSE KIT, REEL CYLINDER **(INCL. ITEMS 11 - 25) (20’)**	1
10	173026	HOSE KIT, REEL CYLINDER **(INCL. ITEMS 11 - 25) (23’)**	1
10	173027	HOSE KIT, REEL CYLINDER **(INCL. ITEMS 11 - 25) (26’)**	1
10	173028	HOSE KIT, REEL CYLINDER **(INCL. ITEMS 11 - 25) (29’)**	1
11	172972	HOSE ASSEMBLY 3/8 X 330	2
12	172978	HOSE ASSEMBLY 1/4 X 94	2
13	172979	HOSE ASSEMBLY 1/4 X 60	1
14	172979	HOSE ASSEMBLY 1/4 X 60 **(20’)**	1
14	71509788	HOSE ASSEMBLY 1/4 X 84 **(23’)**	1
14	172978	HOSE ASSEMBLY 1/4 X 94 **(26’)**	1
14	125648	HOSE ASSEMBLY 1/4 X 108 **(29’)**	1
15	172981	HOSE ASSEMBLY 1/4 X 50 **(20’)**	1
15	173000	HOSE ASSEMBLY 1/4 X 68 **(23’)**	1
15	71509788	HOSE ASSEMBLY 1/4 X 84 **(26’)**	1
15	71509004	HOSE ASSEMBLY 1/4 X 98 **(29’)**	1
16	172998	HOSE ASSEMBLY 1/4 X 75	1
17	172999	HOSE ASSEMBLY 1/4 X 42	1
18	71500165	HOSE ASSEMBLY 1/4 X 46	1
19	71500165	HOSE ASSEMBLY 1/4 X 46 **(20’)**	1
19	71509010	HOSE ASSEMBLY 1/4 X 64 **(23’)**	1
19	71509006	HOSE ASSEMBLY 1/4 X 80 **(26’)**	1
19	172978	HOSE ASSEMBLY 1/4 X 94 **(29’)**	1
20	71509004	HOSE ASSEMBLY 1/4 X 98	2
21	71509006	HOSE ASSEMBLY 1/4 X 80	1
22	71509010	HOSE ASSEMBLY 1/4 X 64	1
23	71509125	HOSE ASSEMBLY 1/4 X 30	1
24	7779-34	HOSE ASSEMBLY 1/4 X 34	1
25	7779-54	HOSE ASSEMBLY 1/4 X 54 **(20’)**	1
25	7779-78	HOSE ASSEMBLY 1/4 X 78 **(23’)**	1
25	7779-90	HOSE ASSEMBLY 1/4 X 90 **(26’)**	1
25	71509123	HOSE ASSEMBLY 1/4 X 104 **(29’)**	1

https://truckmanualshub.com/

Hydraulic Conditioner Reel Assembly (20’ - 29’ Models)

ITEM	PART NO.	DESCRIPTION	QTY.
26	1-510-010001	NUT, FLANGE LOCK 3/8-16	4
27	1-512-010005-09	NUT, HEX LOCK 1/2-13 GRB	2
28	1-512-010005-15	NUT, HEX LOCK 3/4-10 GRB	60
29	1-512-010005-19	NUT, HEX LOCK 1-8 GRB	6
30	1-512-010007-14	NUT, HEX 1-8 GRB **(BEFORE 6-8-2017)**	4
30	206675	NUT, 1-1/8-12 UNF, Z/P GR 2 **(AFTER 6-8-2017 TO 6-1-2018)**	4
30	1-511-010002-11	NUT,HEX JAM,1-1/8-12 UNF,GR2 **(AFTER 6-1-2018)**	4
31	1-647-010004236	SPRING PIN, SLOTTED 5/16 X 1-1/2	12
32	1-654-010051-07	SCREW, HEX HEAD CAP 3/8-16 X 1-1/2 GR5	4
33	1-654-010055-03	SCREW, HEX HEAD CAP 1/2-13 X 1-1/2 GR5 **(BEFORE 2-21-0216)**	24
33	1-654-010055-05	SCREW, HEX HEAD CAP 1/2-13 X 2 GR5 **(AFTER 2-21-0216)**	24
34	1-654-010055-11	SCREW, HEX HEAD CAP 1/2-13 X 3-1/2 GR5	2
35	1-654-010070-03	SCREW, RD HEAD SQ NECK 1/2-13 X 1-1/2	4
36	1-861-010034-13	WASHER, SPLIT LOCK 1/2	24
37	100829	SCREW, HEX HEAD CAP 1-8 X 6-1/2 GR5	6
38	100941	SCREW, HEX HEAD CAP 3/4-10 X 2-1/4 GR8	1
39	117957	MACHINERY BUSHING	12
40	124971	NUT, HEX FLANGE LOCK 1/2-13	4
41	172884	SCREW, HEX HEAD CAP 3/4-10 X 6 GR8	30
42	139347	ADAPTER, TEE	2
43	140599	BEARING, FLANGE 1-1/2	12
44	141275	BRACKET, HOSE CLAMP	4
45	141828	COUPLER, MALE 3/4-16	2
46	141854	BRACKET, MANIFOLD MOUNT	1
47	152209	BUSHING, PIVOT 1-1/2	6
48	158795	SPRING ASSEMBLY, HEAVY 17" **(BEFORE 6-8-2017)**	6
48	206652	SPRING ASSY 17" 1-1/8THD **(AFTER 6-8-2017)**	6
49	162569	TEE, BULKHEAD RUN	4
50	171074	TRUNION, CYLINDERV **(BEFORE 2-21-0216)**	12
50	198320	TRUNION MOUNT, ASSY **(AFTER 2-21-02016) (INCLUDES ITEMS 7-9)**	12
51	171076	CYLINDER, 2-1/2 X 1-1/2 **(BEFORE 6-8-2017) (SEE PAGE 1-96)**	6
51	206598	CYL ASM 2-1/2X1-1/2 ST 1-1/8” THD **(AFTER 6-8-2017) (SEE PAGE 1-97)**	6
52	172973	HOSE WRAP, RED **(NOT SHOWN)**	1
53	172974	CLAMP, 2 HOSE	20
54	172976	CLAMP, HOSE 4-1/2 - 6-1/2	16
55	172977	CLAMP, HOSE 2-1/2 - 8-1/2	2
56	172992	PLATE, BULKHEAD	2
57	2-181-010001	HOSE CLAMP	4
58	2-474-010022	MANIFOLD, HYDRAULIC ASSEMBLY 8 PORT	1
59	202702-6-6S	ADAPTER, STR	2
60	202702-8-6S	ADAPTER	4
61	2061-6-6S	ADAPTER, 45	4
62	2062-6-6S	ADAPTER, 90	6
63	2062-8-6S	ELBOW, 90	2

https://truckmanualshub.com/

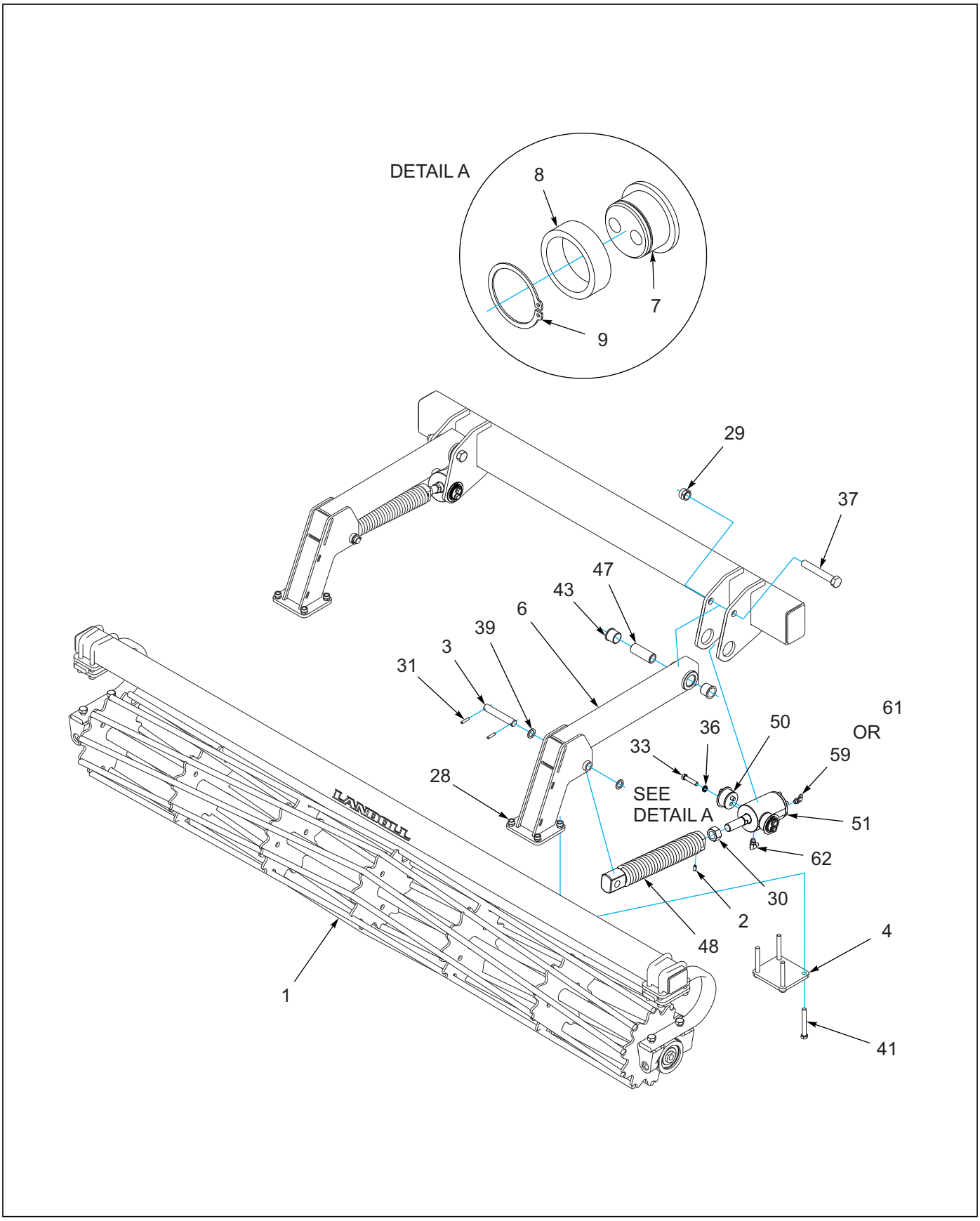

Figure 1-36: Hydraulic Conditioner Reel Assembly (33' Model)

https://truckmanualshub.com/

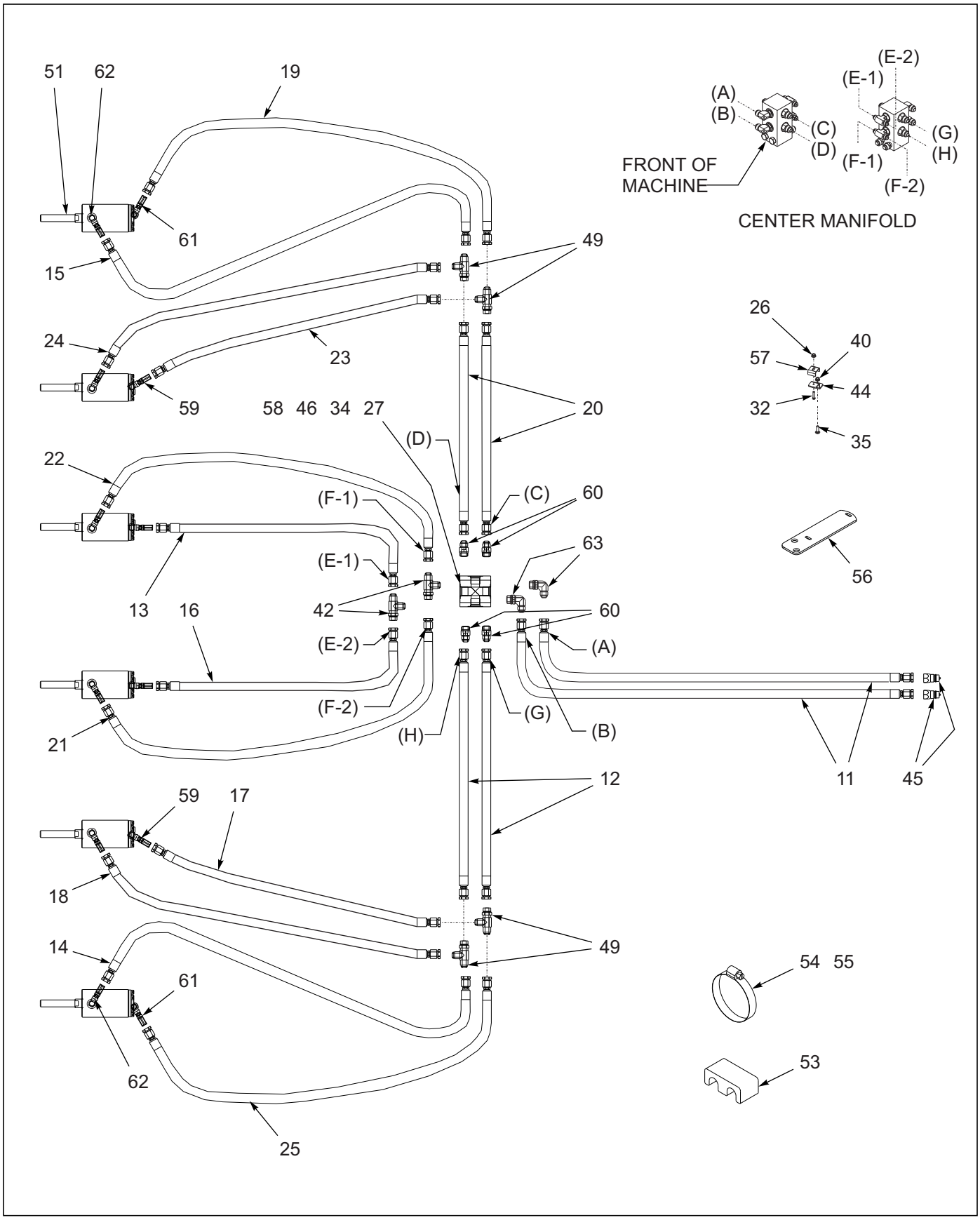

Figure 1-37: Hydraulic Conditioner Reel Assembly (33' Model)

https://truckmanualshub.com/

Hydraulic Conditioner Reel Assembly (33’ Model)

ITEM	PART NO.	DESCRIPTION	QTY.
--	172988	HYDRAULIC CONDITIONER REEL ASSEMBLY	
1	156125	CONDITIONER REEL/GANGBAR ASSY, 129" **(SEE PAGE 1-81)**	
1	165127	CONDITIONER REEL/GANGBAR ASSY, 156" **(SEE PAGE 1-81)**	
2	1P444	SET SCREW, 3/8-16X3/4 NYLON	4
3	154392	PIN, PIVOT	4
4	154748P	PLATE, GANGBAR MOUNT	6
5	156953	REAR JACK MOUNT **(NOT SHOWN) (SEE PAGE 1-93)**	1
6	158847	ARM, REEL	6
7	191924	TRUNION, CYLINDER	1
8	191925	TRUNION, BEARING	1
9	18530	SNAP RING. 2 SHAFT	1
10	173029	HOSE KIT, REEL CYLINDER **(INCL. ITEMS 11 - 25)**	1
11	172972	HOSE ASSEMBLY 3/8 X 330	2
12	172980	HOSE ASSEMBLY 1/4 X 125	2
13	7779-78	HOSE ASSEMBLY 1/4 X 78	1
14	125648	HOSE ASSEMBLY 1/4 X 108	1
15	71509004	HOSE ASSEMBLY 1/4 X 98	1
16	7779-90	HOSE ASSEMBLY 1/4 X 90	1
17	71500165	HOSE ASSEMBLY 1/4 X 46	1
18	172981	HOSE ASSEMBLY 1/4 X 50	1
19	172978	HOSE ASSEMBLY 1/4 X 94	1
20	71600529	HOSE ASSEMBLY 1/4 X 120	2
21	172978	HOSE ASSEMBLY 1/4 X 94	1
22	71509788	HOSE ASSEMBLY 1/4 X 84	1
23	7779-34	HOSE ASSEMBLY 1/4 X 34	1
24	71509008	HOSE ASSEMBLY 1/4 X 40	1
25	125648	HOSE ASSEMBLY 1/4 X 108	1
26	1-510-010001	NUT, FLANGE LOCK 3/8-16	4
27	1-512-010005-09	NUT, HEX LOCK 1/2-13 GRB	2
28	1-512-010005-15	NUT, HEX LOCK 3/4-10 GRB	60
29	1-512-010005-19	NUT, HEX LOCK 1-8 GRB	6
30	1-512-010007-14	NUT, HEX 1-8 GRB **(BEFORE 6-8-2017)**	6
30	206675	NUT, 1-1/8-12 UNF, Z/P GR 2 **(AFTER 6-8-2017 TO 9-1-2018)**	6
30	1-511-010002-11	NUT,HEX JAM,1-1/8-12 UNF,GR2 **(AFTER 6-1-2018)**	6
31	1-647-010004236	SPRING PIN, SLOTTED 5/16 X 1-1/2	12
32	1-654-010051-07	SCREW, HEX HEAD CAP 3/8-16 X 1-1/2 GR5	4
33	1-654-010055-03	SCREW, HEX HEAD CAP 1/2-13 X 1-1/2 GR5 **(BEFORE 2-21-0216)**	24
33	1-654-010055-05	SCREW, HEX HEAD CAP 1/2-13 X 2 GR5 **(AFTER 2-21-0216)**	24
34	1-654-010055-11	SCREW, HEX HEAD CAP 1/2-13 X 3-1/2 GR5	2
35	1-654-010070-03	SCREW, RD HEAD SQ NECK 1/2-13 X 1-1/2	4
36	1-861-010034-13	WASHER, SPLIT LOCK 1/2	24
37	100829	SCREW, HEX HEAD CAP 1-8 X 6-1/2 GR5	6
38	100941	SCREW, HEX HEAD CAP 3/4-10 X 2-1/4 GR8	1
39	117957	MACHINERY BUSHING	12
40	124971	NUT, HEX FLANGE LOCK 1/2-13	4
41	172884	SCREW, HEX HEAD CAP 3/4-10 X 6 GR8	35
42	139347	ADAPTER, TEE	2
43	140599	BEARING, FLANGE 1-1/2	12

https://truckmanualshub.com/

Hydraulic Conditioner Reel Assembly (33’ Model)

ITEM	PART NO.	DESCRIPTION	QTY.
44	141275	BRACKET, HOSE CLAMP	4
45	141828	COUPLER, MALE 3/4-16	2
46	141854	BRACKET, MANIFOLD MOUNT	1
47	152209	BUSHING, PIVOT 1-1/2	6
48	158795	SPRING ASSEMBLY, HEAVY 17"	6
49	162569	TEE, BULKHEAD RUN	4
50	171074	TRUNION, CYLINDERV **(BEFORE 2-21-0216)**	12
50	198320	TRUNION MOUNT, ASSY **(AFTER 2-21-02016) (INCLUDES ITEMS 7-9)**	12
51	171076	CYLINDER, 2-1/2 X 1-1/2 **(BEFORE 6-8-2017) (SEE PAGE 1-96)**	6
51	206598	CYL ASM 2-1/2X1-1/2 ST 1-1/8” THD **(AFTER 6-8-2017) (SEE PAGE 1-97)**	6
52	172973	HOSE WRAP, RED **(NOT SHOWN)**	1
53	172974	CLAMP, 2 HOSE	20
54	172976	CLAMP, HOSE 4-1/2 - 6-1/2	16
55	172977	CLAMP, HOSE 2-1/2 - 8-1/2	2
56	172992	PLATE, BULKHEAD	2
57	2-181-010001	HOSE CLAMP	4
58	2-474-010022	MANIFOLD, HYDRAULIC ASSEMBLY 8 PORT	1
59	202702-6-6S	ADAPTER, STR	2
60	202702-8-6S	ADAPTER	4
61	2061-6-6S	ADAPTER, 45	4
62	2062-6-6S	ADAPTER, 90	6
63	2062-8-6S	ELBOW, 90	2

https://truckmanualshub.com/

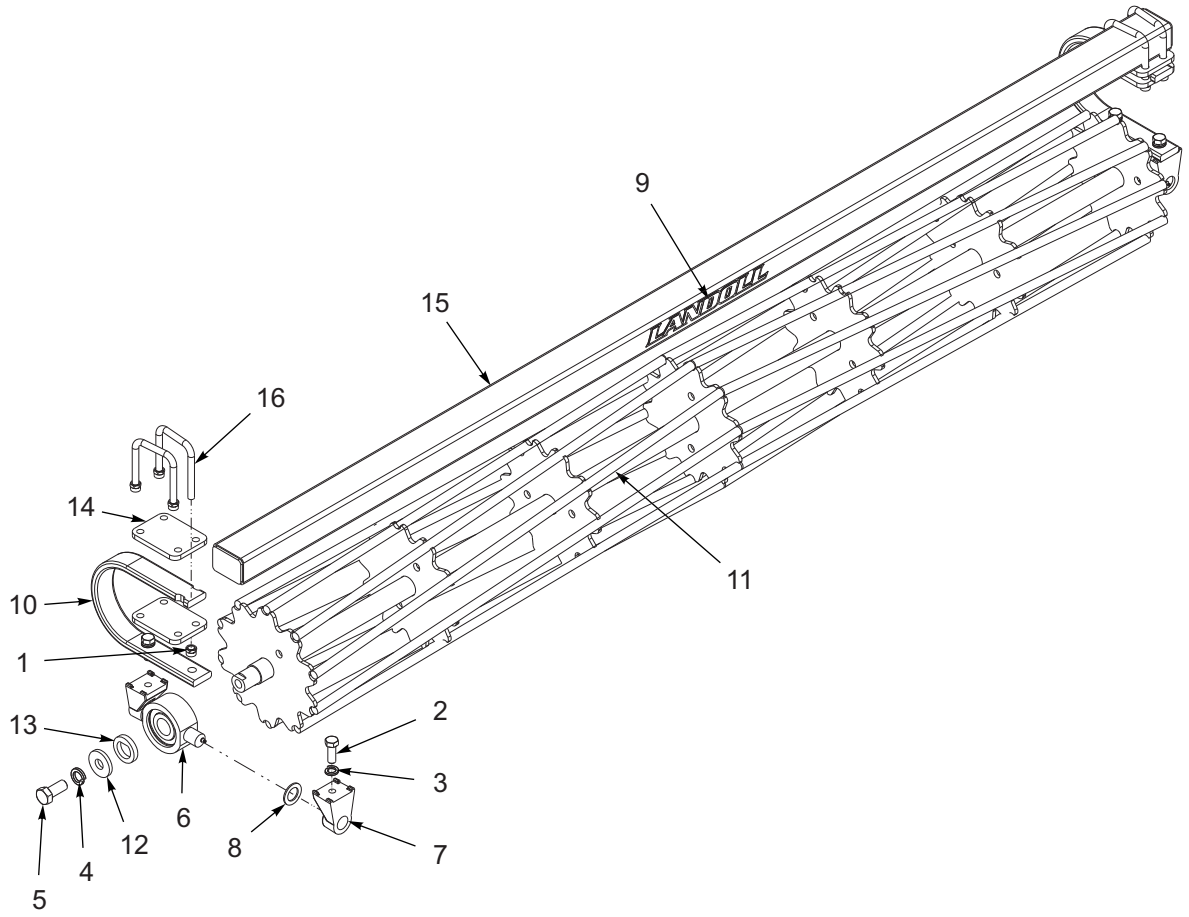

Figure 1-38: Reel/Gang Bar Assembly

https://truckmanualshub.com/

Reel/Gangbar Assembly

ITEM	PART NO.	DESCRIPTION	QTY.
--	171036	CONDITIONER REEL/GANGBAR ASSY, 70"	
--	154686	CONDITIONER REEL/GANGBAR ASSY, 91"	
--	156125	CONDITIONER REEL/GANGBAR ASSY, 129"	
--	155545	CONDITIONER REEL/GANGBAR ASSY, 97"	
--	154687	CONDITIONER REEL/GANGBAR ASSY, 114"	
--	165127	CONDITIONER REEL/GANGBAR ASSY, 156"	
1	1-512-010005-13	NUT, HEX LOCK 5/8-11 GRB	8
2	1-654-010032-05	SCREW, HEX HEAD CAP 3/4-10 X 2 GR8	4
3	1-861-010034-17	WASHER, SPLIT LOCK 3/4	4
4	1-861-010034-21	WASHER, SPLIT LOCK 1"	2
5	137943	SCREW, HEX HEAD CAP 1-8 X 2-1/4 GR5	2
6	140477	BEARING, DISC 1.775 ID ASSEMBLY	2
7	140479	MOUNT, TRUNNION BEARING	4
8	140480	WASHER, TRUNNION	2
9	148337	ATTACHMENT DECAL, LANDOLL	1
10	153716	SHANK, STRAIGHT 3/4 X 2-1/2	2
11	171037	CONDITIONER REEL, 70" **(171036)**	1
11	155520	CONDITIONER REEL, 97" **(155545)**	1
11	154692	CONDITIONER REEL, 114" **(154687)**	1
11	154691	CONDITIONER REEL, 91" **(154686)**	1
11	156124	CONDITIONER REEL, 129" **(156125)**	1
11	164378	CONDITIONER REEL 156" WLDMT **(165127)**	1
12	154185	WASHER, 3/8 THICK	2
13	154186	WASHER, FLAT TOP	2
14	154393	PLATE, SHANK MOUNT	4
15	171039	GANG BAR, 80" REEL 70" **(171036)**	1
15	155544	GANG BAR, 107" REEL 97" **(155545)**	1
15	154659	GANG BAR, 124" REEL 114" **(154687)**	1
15	155594	GANG BAR, 139" REEL 129" **(156125)**	1
15	154658	GANG BAR, 101" REEL 91" **(154686)**	1
15	165226	GANGBAR, 166" REEL 156" WLDMT **(165127)**	1
16	6-102-010009	U-BOLT	4

https://truckmanualshub.com/

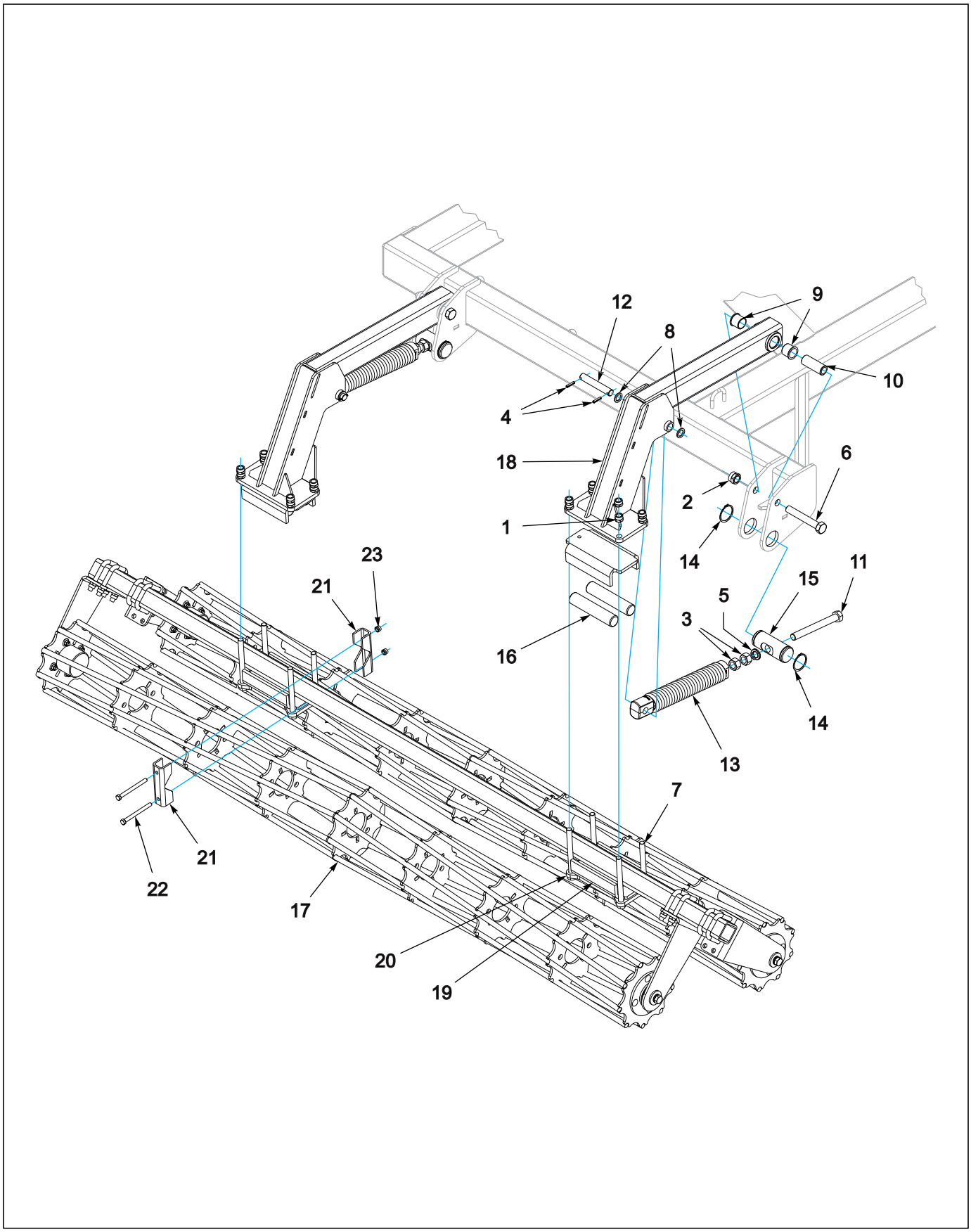

Figure 1-39: Reel Double Spring Assembly

https://truckmanualshub.com/

Reel Double Spring Assembly

ITEM	PART NO.	DESCRIPTION	QTY.
--	191949	DOUBLE REEL ASSY ROUND 7431-20	
--	191950	DOUBLE REEL ASSY ROUND 7431-23	
--	191951	DOUBLE REEL ASSY ROUND 7431-26	
--	191952	DOUBLE REEL ASSY ROUND 7431-29	
1	1-512-010005-15	NUT,HEX,SLFLKG GRB 3/4-10	48
2	1-512-010005-19	NUT 1-8 HEX SLF-LOCKING GRB	6
3	1-512-010007-14	NUT, HEX 1-8 GR2 ZP	12
4	1-647-010004236	SPRING PIN,SLOTTED 5/16X1-1/2	12
5	1-861-010034-21	WASHER, LKG HEL SPRG 1IN	6
6	100829	SCREW,HEX CAP,1-8X6-1/2,GR5	6
7	107491	SCREW,HEX CAP,3/4-10X8-1/2,GR8	24
8	117957	MACHINERY BUSHING,ZINC PLATED	12
9	140599	BEARING, FLANGE 1-1/2	12
10	152209	BUSHING, PIVOT 1-1/2	6
11	152210	BOLT, ADJ, 1 X 9	6
12	154392	PIN,PIVOT	6
13	158795	SPRING ASSY, 17"	6
14	158896	SNAP RING, 2-1/2 SHAFT	12
15	158897	PIN, ADJUSTMENT	6
16	203525	SPRING-TORSION, RUBBER, 1-3/4	24
17	-----	DOUBLE REEL ASSY **(SEE PAGE 1-89)**	
18	204505	ARM WLDMT DOUBLE REEL	6
19	204510	PLATE GANGBAR MOUNT	6
20	204511	TUBE, CLAMP	12
21	191487	CLAMP, TUBE 3X3	4
22	1-654-010055-16	SCREW HEX CAP 1/2-13X5-1/2GR5	4
23	1-512-010005-09	NUT,HEX,SLFLKG, 1/2-13 GRB	4

https://truckmanualshub.com/

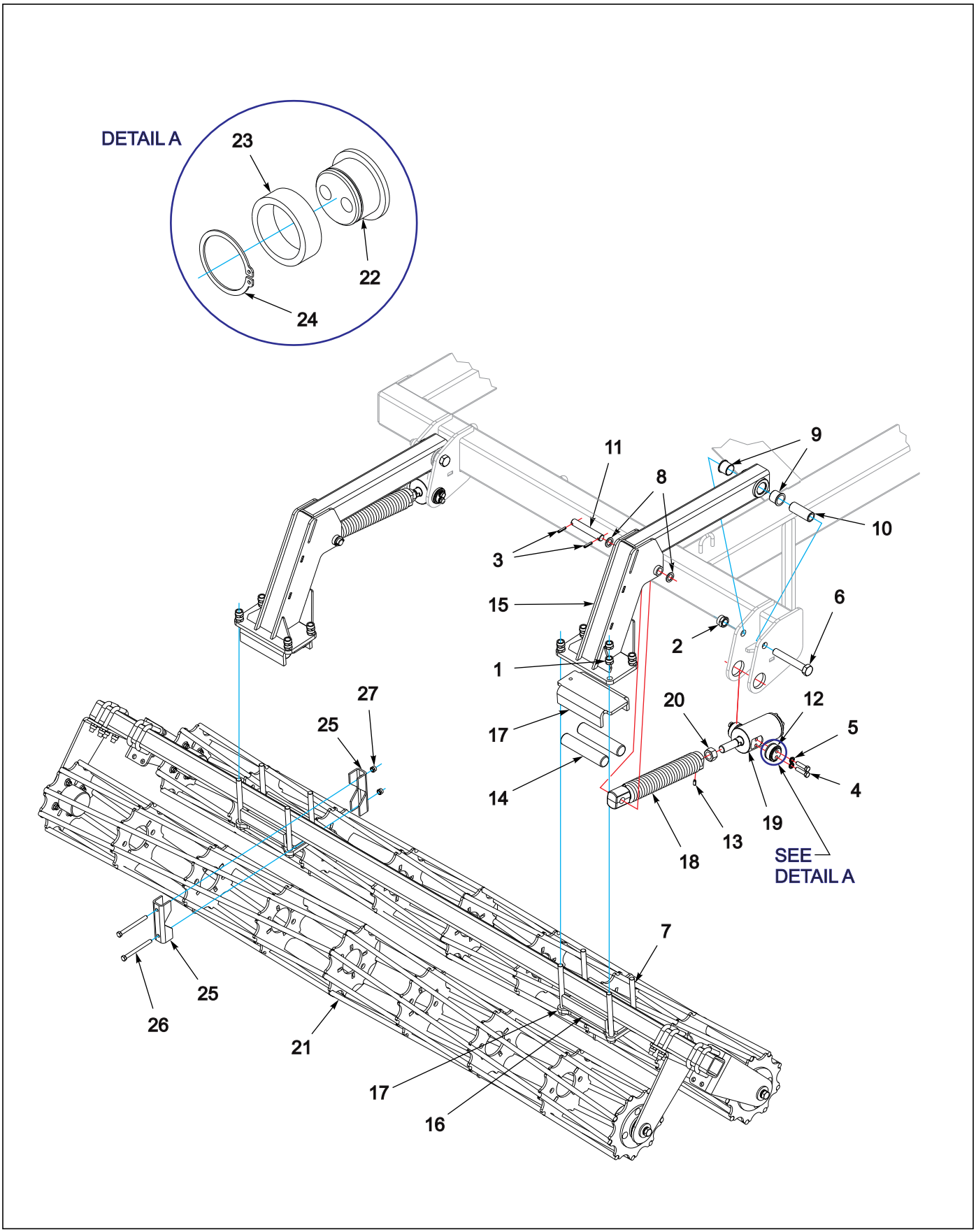

Figure 1-40: Reel Double Hydraulic Assembly 20’/23’/26’/29’

https://truckmanualshub.com/

Reel Double Hydraulic Assembly 20’/23’/26’/29’

ITEM	PART NO.	DESCRIPTION	QTY.
--	193102	HYD DOUBLE REEL ASSY 7431-20	
1	1-512-010005-15	NUT,HEX,SLFLKG GRB 3/4-10	48
2	1-512-010005-19	NUT 1-8 HEX SLF-LOCKING GRB	6
3	1-647-010004236	SPRING PIN,SLOTTED 5/16X1-1/2	12
4	1-654-010055-05	SCREW,HEX CAP,1/2-13UNCX2 GR5	24
5	1-861-010034-13	WASHER, LKG HLCL SPR, 1/2	24
6	100829	SCREW,HEX CAP,1-8X6-1/2,GR5	6
7	107491	SCREW HX CP 3/4-10X8-1/2 GR8	24
8	117957	MACHINERY BUSHING,ZINC PLATED	12
9	140599	BEARING, FLANGE 1-1/2	12
10	152209	BUSHING, PIVOT 1-1/2	6
11	154392	PIN,PIVOT	6
12	198320	ASSY, TRUNION MOUNT 1-1/4"	12
13	1P444	SET SCREW, 3/8-16 X 3/4 NYLON	6
14	203525	SPRING-TORSION, RUBBER, 1-3/4	24
15	204505	ARM WLDMT DOUBLE REEL	6
16	204510	PLATE GANGBAR MOUNT	6
17	204511	TUBE, CLAMP	12
18	206652	SPRING ASSY 17" 1-1/8 THD	6
19	206671	CYL ASM 2-1/2X2-1/2ST1-1/8THDS **(SEE PAGE 1-98)**	6
20	1-511-010002-11	NUT,HEX JAM,1-1/8-12 UNF,GR2	6
21	-----	DOUBLE REEL ASSY **(SEE PAGE 1-89)**	1
22	191924	TRUNION, CYLINDER	12
23	191925	TRUNION, BEARING	12
24	188530	SNAP RING, 2 SHAFT	12
25	191487	CLAMP, TUBE 3X3	4
26	1-654-010055-16	SCREW HEX CAP 1/2-13X5-1/2GR5	4
27	1-512-010005-09	NUT,HEX,SLFLKG, 1/2-13 GRB	4

https://truckmanualshub.com/

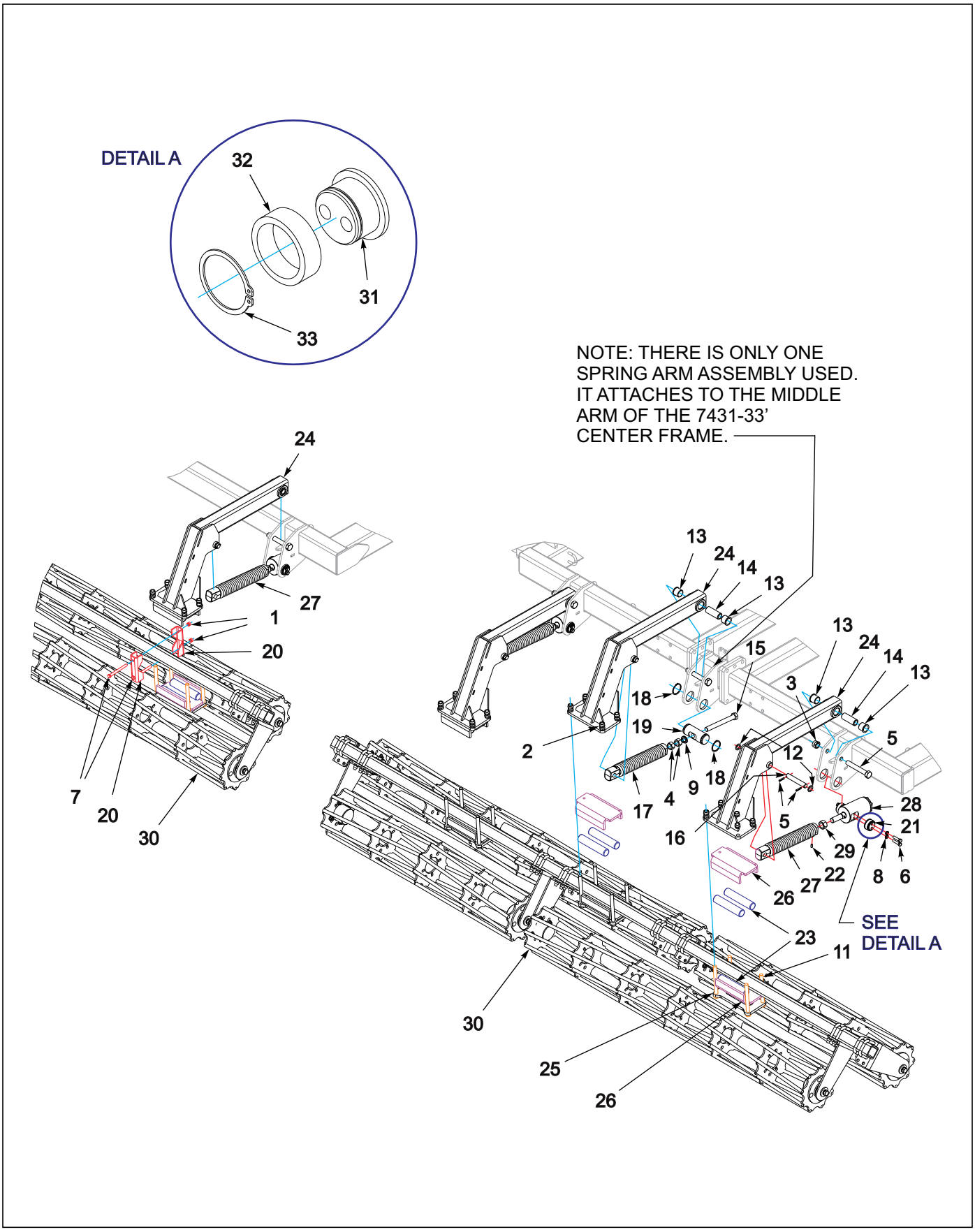

Figure 1-41: Reel Double Assembly 7431-33'

https://truckmanualshub.com/

Reel Double Assembly 7431-33’

ITEM	PART NO.	DESCRIPTION	QTY.	
--	191953	DOUBLE REEL ASSY ROUND 7431-33	*	
--	193106	HYD DOUBLE REEL ASSY RD 7431-33		*
1	1-512-010005-09	NUT,HEX,SLFLKG, 1/2-13 GRB	4	4
2	1-512-010005-15	NUT,HEX,SLFLKG GRB 3/4-10	56	56
3	1-512-010005-19	NUT 1-8 HEX SLF-LOCKING GRB	7	7
4	1-512-010007-14	NUT, HEX 1-8 GR2 ZP	14	2
5	1-647-010004236	SPRING PIN,SLOTTED 5/16X1-1/2	14	14
6	1-654-010055-05	SCREW,HEX CAP,1/2-13UNCX2 GR5	--	24
7	1-654-010055-16	SCREW HEX CAP 1/2-13X5-1/2GR5	4	4
8	1-861-010034-13	WASHER, LKG HLCL SPR, 1/2	--	24
9	1-861-010034-21	WASHER, LKG HEL SPRG 1IN	7	1
10	100829	SCREW,HEX CAP,1-8X6-1/2,GR5	7	7
11	107491	SCREW HX CP 3/4-10X8-1/2 GR8	28	28
12	117957	MACHINERY BUSHING,ZINC PLATED	14	14
13	140599	BEARING, FLANGE 1-1/2	14	14
14	152209	BUSHING, PIVOT 1-1/2	7	7
15	152210	BOLT, ADJ, 1 X 9	7	1
16	154392	PIN,PIVOT	7	7
17	158795	SPRING ASSY, 17"	7	1
18	158896	SNAP RING, 2-1/2 SHAFT	14	2
19	158897	PIN, ADJUSTMENT	7	1
20	191487	CLAMP, TUBE 3X3	4	4
21	198320	ASSY, TRUNION MOUNT 1-1/4"	--	12
22	1P444	SET SCREW, 3/8-16 X 3/4 NYLON	--	6
23	203525	SPRING-TORSION, RUBBER, 1-3/4	28	28
24	204505	ARM WLDMT DOUBLE REEL	7	7
25	204510	PLATE GANGBAR MOUNT	7	7
26	204511	TUBE, CLAMP	14	14
27	206652	SPRING ASSY 17" 1-1/8 THD	--	6
28	206671	CYL ASM 2-1/2X2-1/2ST1-1/8THDS **(SEE PAGE 1-98)**	--	6
29	1-511-010002-11	NUT,HEX JAM,1-1/8-12 UNF,GR2	--	6
30	204427	DOUBLE REEL ASSY **(SEE PAGE 1-91)**	1	1
30	204419	DOUBLE REEL ASSY, 120/120 **(SEE PAGE 1-89)**	1	1
30	204425	DOUBLE REEL ASSY, 120/120 **(SEE PAGE 1-89)**	1	1
31	191924	TRUNION, CYLINDER	--	12
32	191925	TRUNION, BEARING	--	12
33	188530	SNAP RING, 2 SHAFT	--	12

https://truckmanualshub.com/

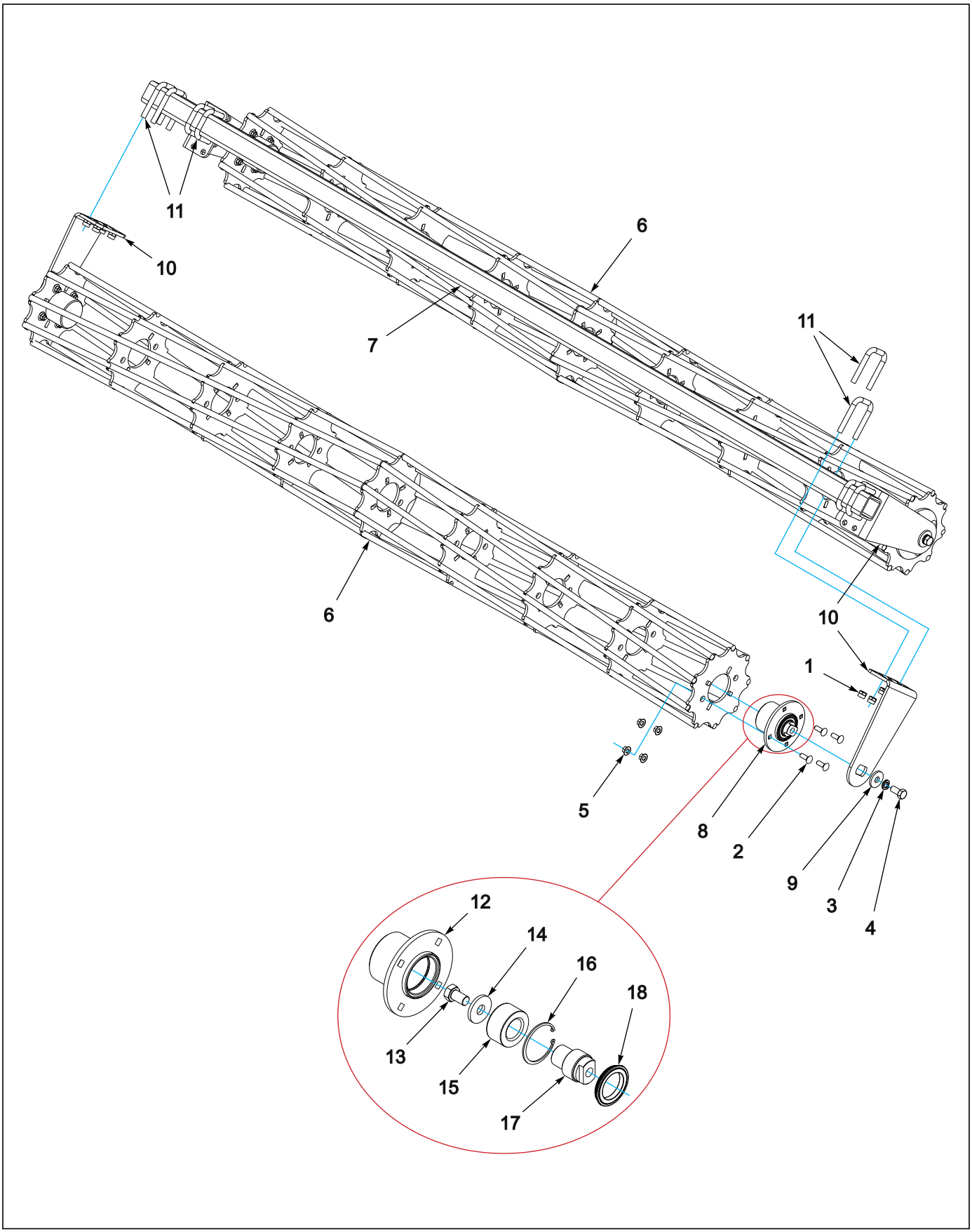

Figure 1-42: Double Round Reel Assembly

https://truckmanualshub.com/

Double Round Reel Assembly

ITEM	PART NO.	DESCRIPTION	QTY.									
--	204412	DOUBLE REEL ASSY, 90/105 **(CENTER)**	*									
--	204413	DOUBLE REEL ASSY, 105/120 **(CENTER)**		*								
--	204416	DOUBLE REEL ASSY, 75/75 **(LEFT WING)**			*							
--	204417	DOUBLE REEL ASSY, 90/90 **(LEFT WING)**				*						
--	204418	DOUBLE REEL ASSY, 105/105 **(LEFT WING)**					*					
--	204419	DOUBLE REEL ASSY, 120/120 **(LEFT WING)**						*				
--	204422	DOUBLE REEL ASSY, 75/75 **(RIGHT WING)**							*			
--	204423	DOUBLE REEL ASSY, 90/90 **(RIGHT WING)**								*		
--	204424	DOUBLE REEL ASSY, 105/105 **(RIGHT WING)**									*	
--	204425	DOUBLE REEL ASSY, 120/120 **(RIGHT WING)**										*
1	1-512-010005-13	NUT,HEX SLFLKG GRB 5/8-11	16	16	16	16	16	16	16	16	16	16
2	1-654-010070-03	SCREW RDHD SQNK1/2-13X1-1/2	16	16	16	16	16	16	16	16	16	16
3	1-861-010034-17	WASHER,LKG,HLCL SPR,3/4	4	4	4	4	4	4	4	4	4	4
4	108705	SCREW,HEXCAP,3/4-10X1-1/2 GR8	4	4	4	4	4	4	4	4	4	4
5	172509	NUT,1/2-13 WIDE FLNG TOP LCK F	16	16	16	16	16	16	16	16	16	16
6	176635	REEL WLDMT 12 DIA X 75	--	--	2	--	--	--	2	--	--	--
6	176636	REEL WLDMT 12 DIA X 90	1	--	--	2	--	--	--	2	--	--
6	176637	REEL WLDMT 12 DIA X 105	1	1	--	--	2	--	--	--	2	--
6	176638	REEL WLDMT 12 DIA X 120	--	1	--	--	--	2	--	--	--	2
7	190955	GANG BAR, DOUBLE REEL 85L	--	--	1	--	--	--	1	--	--	--
7	190956	GANG BAR, DOUBLE REEL 100 L	--	--	--	1	--	--	--	1	--	--
7	190957	GANG BAR, DOUBLE REEL 115 L	--	--	--	--	1	--	--	--	1	--
7	190959	GANG BAR, DOUBLE REEL 107-1/2	1	--	--	--	--	--	--	--	--	--
7	190960	GANG BAR, DOUBLE REEL 122-1/2 L	--	1	--	--	--	--	--	--	--	--
7	190958	GANG BAR, DOUBLE REEL 130 L	--	--	--	--	--	1	--	--	--	1
8	200222	HUB ASSY REEL	4	4	4	4	4	4	4	4	4	4
9	200259	WASHER, 3/4 HEAVY - 2-1/4	4	4	4	4	4	4	4	4	4	4
10	204400	BEARING MOUNT, REEL	4	4	4	4	4	4	4	4	4	4
11	8-102-010012	U BOLT	8	8	8	8	8	8	8	8	8	8
12	200221	HUB WLDMT REEL	4	4	4	4	4	4	4	4	4	4
13	129263	SCREW HEX CAP 3/4-10 X 1-1/4	4	4	4	4	4	4	4	4	4	4
14	200259	WASHER, 3/4 HEAVY - 2-1/4	4	4	4	4	4	4	4	4	4	4
15	174526	BEARING, DOUBLE TAPER RLLR	4	4	4	4	4	4	4	4	4	4
16	174532	INTERNAL SNAP RING	4	4	4	4	4	4	4	4	4	4
17	200218	SPINDLE REEL BEARING	4	4	4	4	4	4	4	4	4	4
18	185757	SEAL, MAINT FREE HUB HSL	4	4	4	4	4	4	4	4	4	4

https://truckmanualshub.com/

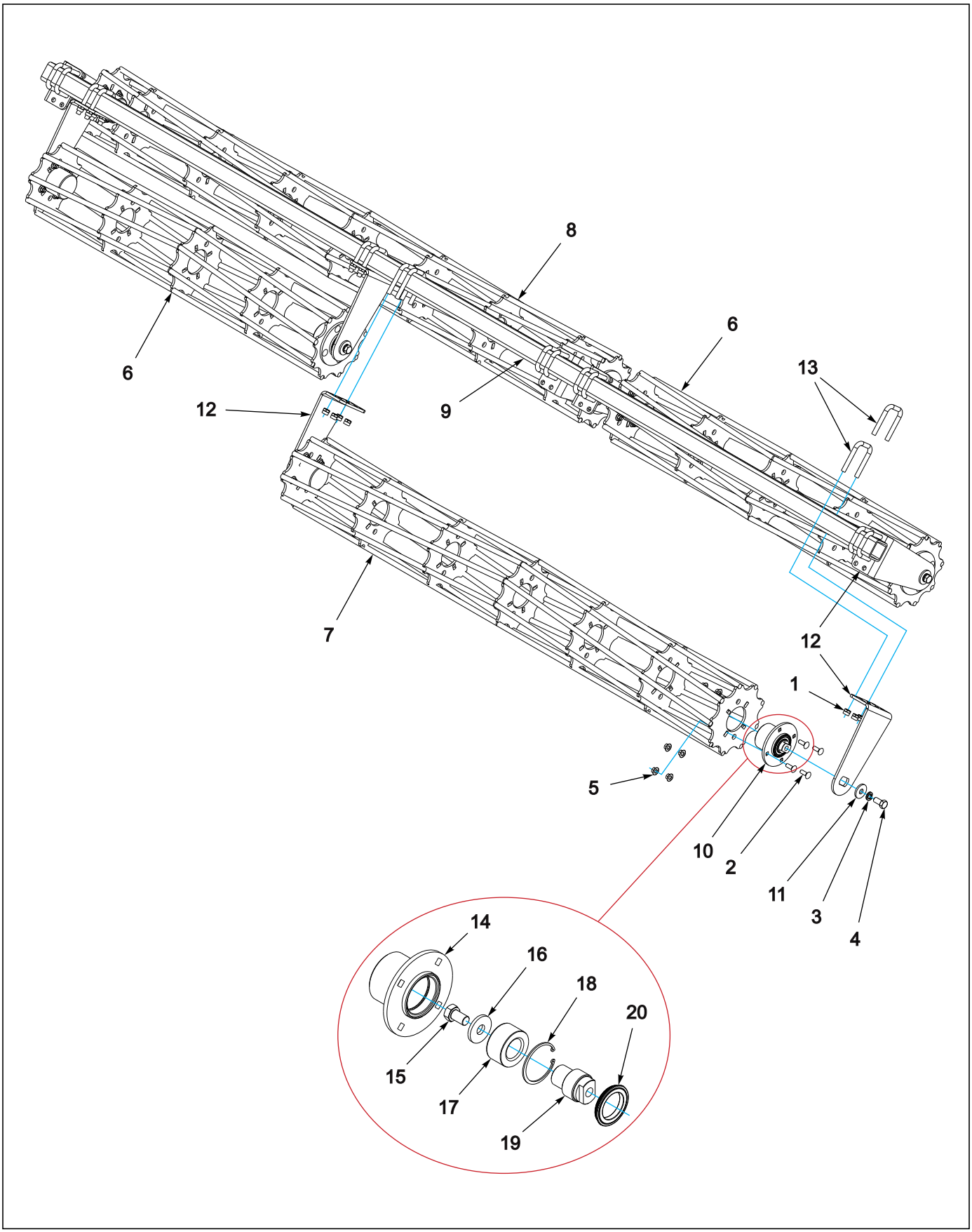

Figure 1-43: Double Reel Assembly Center 33’

https://truckmanualshub.com/

Double Reel Assembly Center 33’

ITEM	PART NO.	DESCRIPTION	QTY.
--	204427	DOUBLE FLAT REEL ASSY 105/165	
1	1-512-010005-13	NUT,HEX SLFLKG GRB 5/8-11	32
2	1-654-010070-03	SCREW RDHD SQNK1/2-13X1-1/2	32
3	1-861-010034-17	WASHER,LKG,HLCL SPR,3/4	8
4	108705	SCREW,HEXCAP,3/4-10X1-1/2 GR8	8
5	172509	NUT,1/2-13 WIDE FLNG TOP LCK F	32
6	176634	REEL WLDMT 12 DIA X 60 ROUND	2
7	176636	REEL WLDMT 12 DIA X 90 ROUND	1
8	176637	REEL WLDMT 12 DIA X 105 ROUND	1
9	191998	GANG BAR, DOUBLE REEL 174L	1
10	200222	HUB ASSY REEL	8
11	200259	WASHER, 3/4 HEAVY - 2-1/4	8
12	204400	BEARING MOUNT, REEL	8
13	8-102-010012	U BOLT	16
14	200221	HUB WLDMT REEL	4
15	129263	SCREW HEX CAP 3/4-10 X 1-1/4	4
16	200259	WASHER, 3/4 HEAVY - 2-1/4	4
17	174526	BEARING, DOUBLE TAPER RLLR	4
18	174532	INTERNAL SNAP RING	4
19	200218	SPINDLE REEL BEARING	4
20	185757	SEAL, MAINT FREE HUB HSL	4

https://truckmanualshub.com/

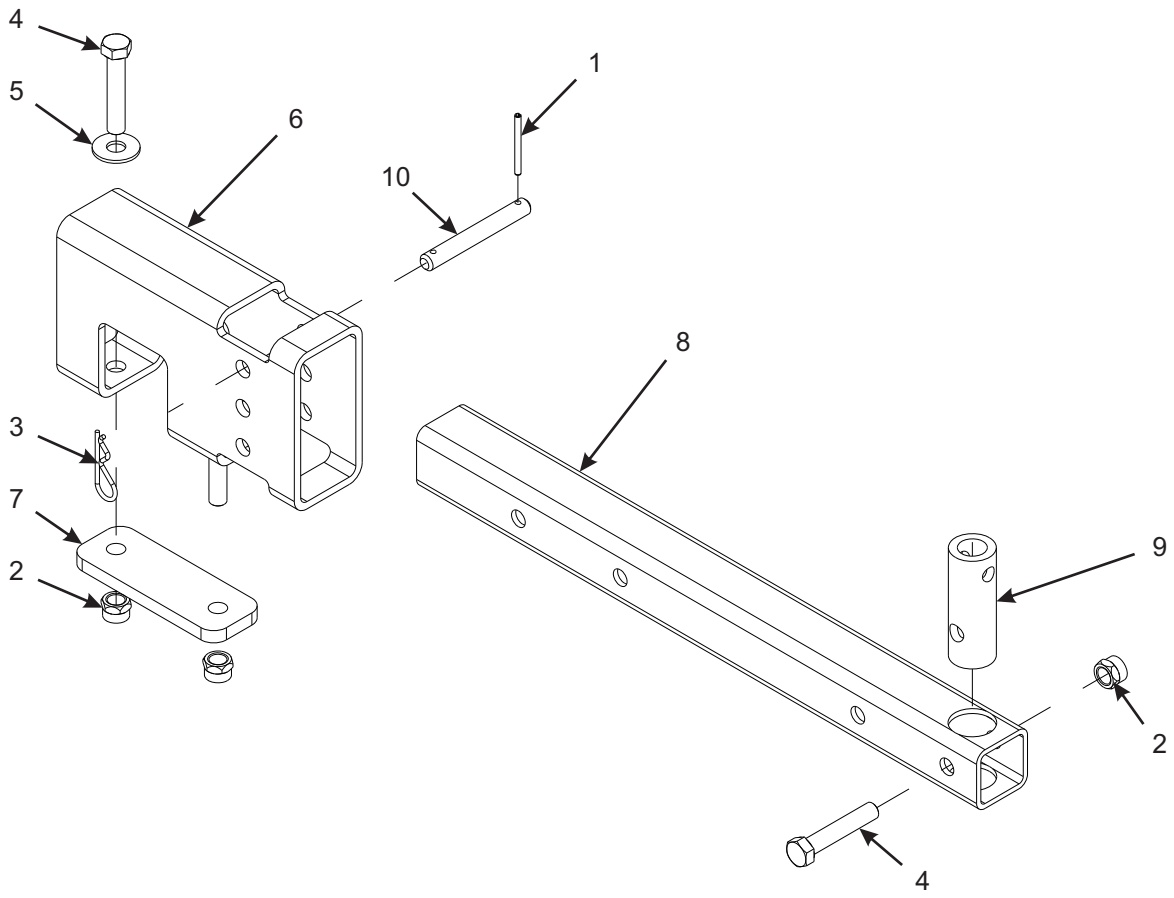

Figure 1-44: Rear Jack Assembly

https://truckmanualshub.com/

Rear Jack Assembly

ITEM	PART NO.	DESCRIPTION	QTY.
--	156953	REAR JACK MOUNT	
1	0600-250-03000	ROLL PIN, SLOTTED 1/4 X 3	1
2	1-512-010005-15	NUT, HEX LOCK 3/4-10 GRB	3
3	1-557-010013	PIN, HAIR 3/16	1
4	1-654-010061-13	SCREW, HEX HEAD CAP 3/4-10 x 4 GR5	3
5	1-861-010032-21	WASHER, FLAT 3/4W	2
6	156954	MOUNT, REAR JACK	1
7	156955	PLATE, REAR JACK MOUNT	1
8	156956	SQ. TUBE, REAR JACK	1
9	156957	TUBE, JACK MOUNT	1
10	2-557-010409	PIN, WING LOCK	1

https://truckmanualshub.com/

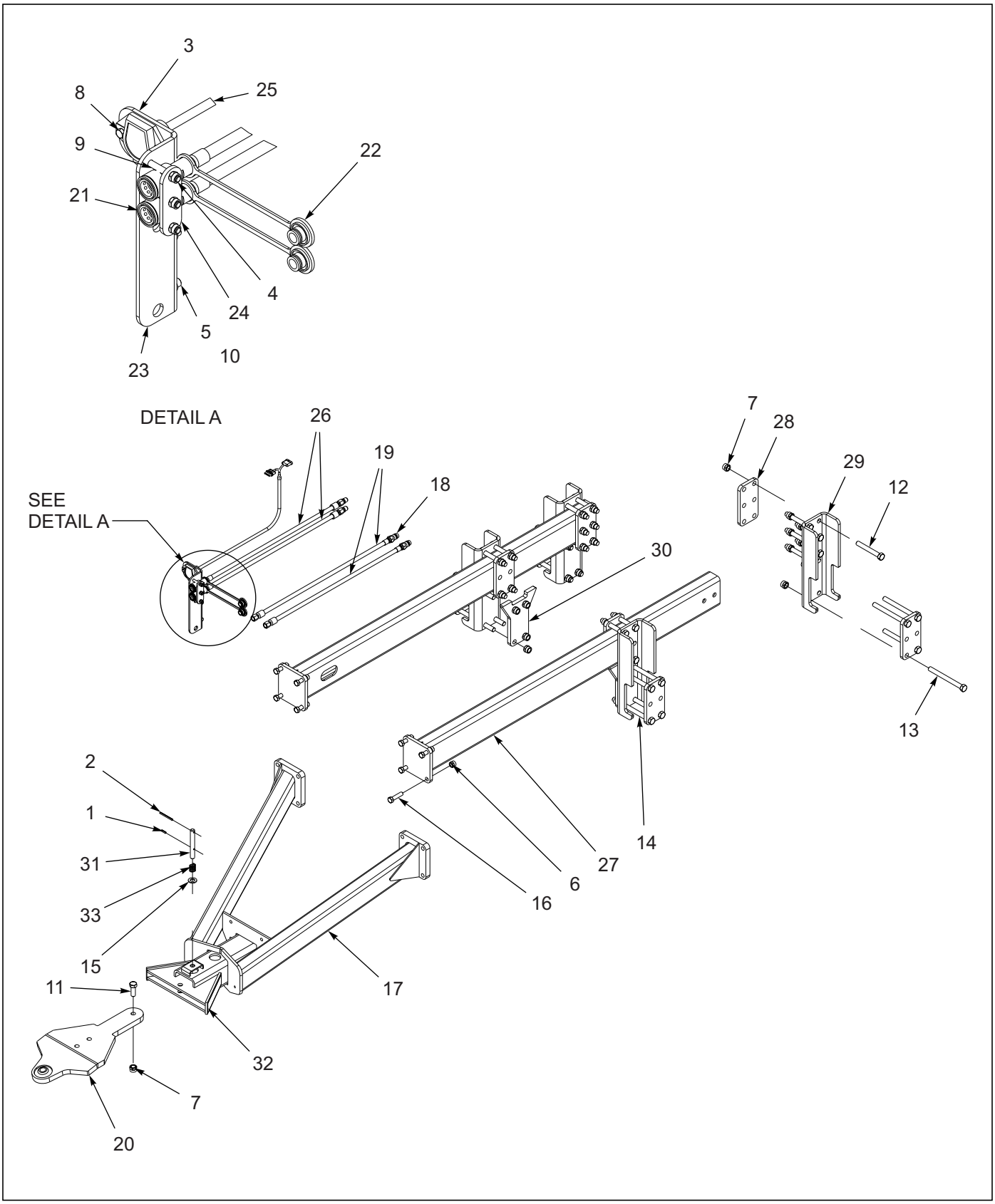

Figure 1-45: Rear Tow Arm Hitch Assembly

https://truckmanualshub.com/

Rear Tow Arm Hitch Assembly

ITEM	PART NO.	DESCRIPTION	QTY.
--	173038	REAR TOW ARM HITCH ASSEMBLY	
1	0600-250-01000	ROLL PIN, SLOTTED 1/4 X 1	1
2	0600-250-03000	ROLL PIN, SLOTTED 1/4 X 3	1
3	1-512-010005-03	NUT, HEX LOCK 5/16-18	2
4	1-512-010005-05	NUT, HEX LOCK 3/8-16 GRB **(NOT SHOWN)**	3
5	1-512-010005-09	NUT, HEX LOCK 1/2-13 GRB	2
6	1-512-010005-13	NUT, HEX LOCK 5/8-11 GRB	8
7	1-512-010005-15	NUT HEX LOCK 3/4-10 GRB	37
8	1-654-010049-05	SCREW, HEX HEAD CAP 5/16-18 X 1 GR5	2
9	1-654-010051-11	SCREW, HEX HEAD CAP 3/8-16 X 2-1/2 GR5 **(STD. LEVELER)**	3
10	1-654-010055-02	SCREW HEX HEAD CAP 1/2-13 X 1-1/4 GR5	2
11	1-654-010061-05	SCREW, HEX HEAD CAP 3/4-10 X 2 GR5	1
12	1-654-010061-16	SCREW, HEX HEAD CAP 3/4-10 X 5-1/2 GR5	20
13	1-654-010061-21	SCREW, HEX HEAD CAP 3/4-10 X 8 GR5	8
14	1-654-010061-23	SCREW, HEX HEAD CAP 3/4-10 X 9 GR5	8
15	1-861-010032-20	WASHER, FLAT 3/4 N	1
16	113299	SCREW, HEX HEAD CAP 5/8-11 X 2-1/2 GR8	8
17	140629	REAR TOW HITCH	1
18	141828	COUPLER, MALE 3/4-16 O-RING	2
19	141865	HOSE ASSEMBLY 3/8 X 204	4
20	141868	HITCH, REAR TOW BAR	1
21	142668	COUPLER, FEMALE 3/4-16 O-RING	2
22	142669	PLUG, COUPLER DUST	2
23	142670	BRACKET, COUPLER MOUNT	1
24	142671	PLATE, COUPLER	1
25	143871	HARNESS, TANDEM ADAPTER	1
26	148338	FITTING, UNION	2
27	173033	HITCH, REAR TOW ARM	2
28	173035	CLAMP, REAR TOW HITCH	8
29	173036	PLATE, CLAMP TOW HITCH	4
30	174727	PLATE, HITCH STABILIZER	2
31	3-375-010371	HITCH PIN, AGRI	1
32	528934	REFLECTOR, YELLOW	2
33	CO-975-74-2000	SPRING, COMPRESSION	1

https://truckmanualshub.com/

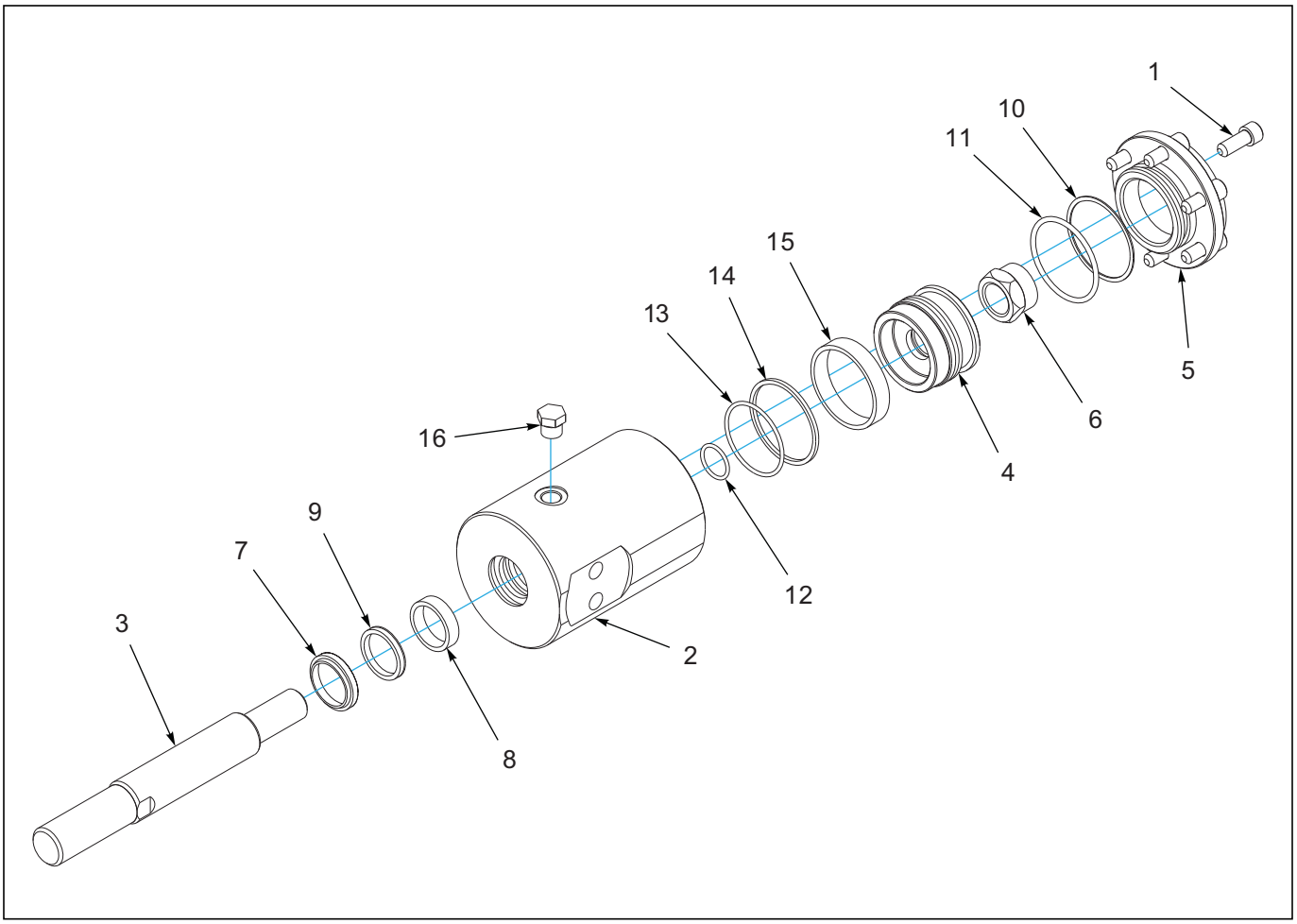

Figure 1-46: Cylinder 2-1/2 x 1-1/2 (1” Thds)

Cylinder 2-1/2” X 1-1/2” (1” THDS)

ITEM	PART NO.	DESCRIPTION	QTY.
--	171076	CYLINDER,2-1/2" X 1-1/2"STROKE	
1	-----	SCREW, HEX SOCKET 3/8-16 X 1	6
2	-----	CYLINDER, BARREL	1
3	171078	ROD 1-1/4 DIA	1
4	-----	PISTON, 2-1/2 BORE	1
5	171080	2-1/2" BASE CAP	1
6	-----	NUT, HEX, SLFLKG, 7/8-14 GRC	1
7	-----	WIPER, 1-1/4 ROD	1
8	-----	WEAR RING, 1-1/4 ROD	1
9	-----	U-CUP, 1-1/4 ROD	1
10	-----	BACKUP RING - CAP	1
11	-----	O-RING - CAP	1
12	-----	O-RING - PISTON	1
13	-----	O-RING - PISTON	1
14	-----	SEAL, 2-1/2 PISTON	1
15	-----	WEAR RING, 2-1/2 PISTON	1
16	-----	PLUG,O-RING 9/16-18 AEROQUIP	2
17	171081	SEAL KIT, 2-1/2" BORE CYL **(NOT SHOWN) (INCL. ITEMS 7 - 15)**	

https://truckmanualshub.com/

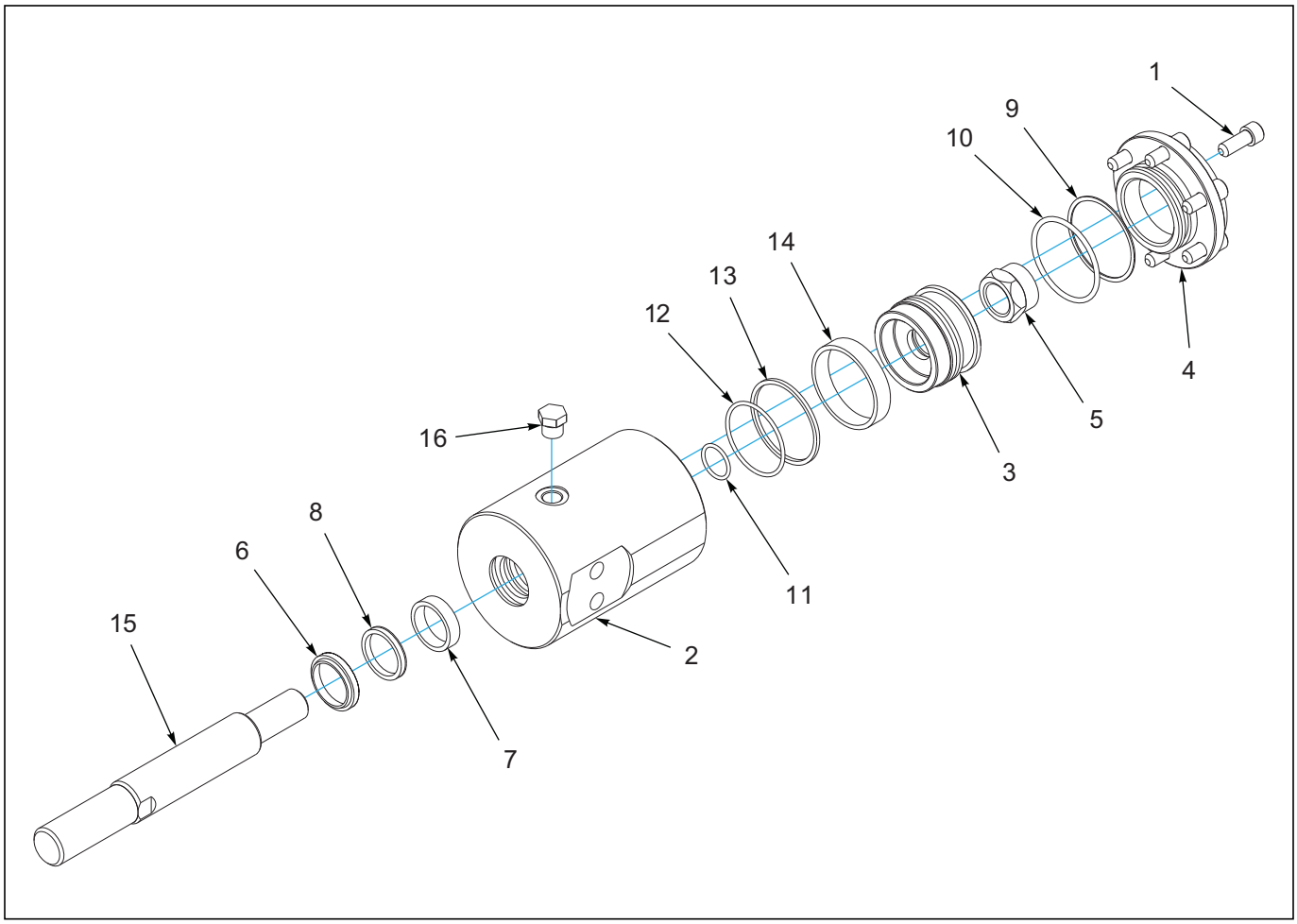

Figure 1-47: Cylinder 2-1/2 x 1-1/2 (1-1/8” Thds)

Cylinder 2-1/2” X 1-1/2” (1-1/8” THDS)

ITEM	PART NO.	DESCRIPTION	QTY.
--	206598	CYL ASM 2-1/2X1-1/2 ST1-1/8THD	
1	-----	SCREW, HEX SOCKET 3/8-16 X 1	6
2	-----	CYLINDER, BARREL	1
3	-----	PISTON, 2-1/2 BORE	1
4	171080	2-1/2" BASE CAP	1
5	-----	NUT, HEX, SLFLKG, 7/8-14 GRC	1
6	-----	WIPER, 1-1/4 ROD	1
7	-----	WEAR RING, 1-1/4 ROD	1
8	-----	U-CUP, 1-1/4 ROD	1
9	-----	BACKUP RING - CAP	1
10	-----	O-RING - CAP	1
11	-----	O-RING - PISTON	1
12	-----	O-RING - PISTON	1
13	-----	SEAL, 2-1/2 PISTON	1
14	-----	WEAR RING, 2-1/2 PISTON	1
15	206599	ROD 1-1/4 DIA	1
16	-----	PLUG,O-RING 9/16-18 AEROQUIP	2
17	171081	SEAL KIT, 2-1/2" BORE CYL **(NOT SHOWN) (INCL. ITEMS 7 - 15)**	

https://truckmanualshub.com/

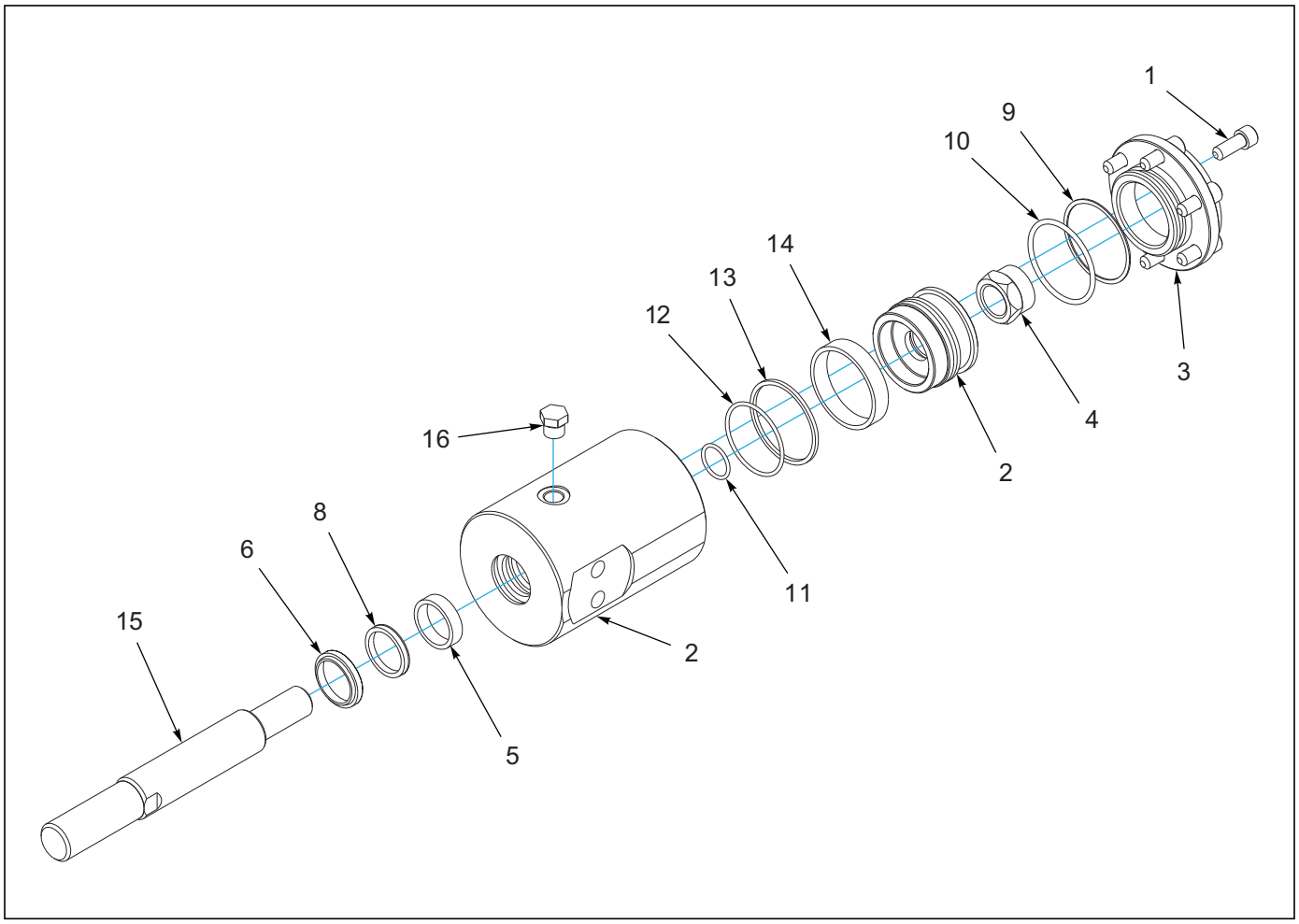

Figure 1-48: Cylinder - 2-1/2” X 2-1/2”

Cylinder - 2-1/2” X 2-1/2”

ITEM	PART NO.	DESCRIPTION	QTY.
--	206671	CYL ASM 2-1/2X2-1/2ST1-1/8THDS	
1	-----	SCREW, HEX SOCKET 3/8-16 X 1	6
2	-----	PISTON, 2-1/2 BORE	1
3	171080	2-1/2" BASE CAP	1
4	-----	NUT, HEX SLFLKG 7/8-14 GRC	1
5	-----	CYLINDER, BARREL 2-1/2” STROKE	1
6	-----	WIPER, 1-1/4 ROD	1
7	-----	WEAR RING, 1-1/4 ROD	1
8	-----	U-CUP, 1-1/4 ROD	1
9	-----	BACK-UP RING, CAP	1
10	-----	O-RING, CAP	1
11	-----	O-RING, PISTON	1
12	-----	O-RING, PISTON	1
13	-----	SEAL, 2-1/2 PISTON	1
14	-----	WEAR RING, 2-1/2 PISTON	1
15	206673	ROD 1-1/4 DIA	1
16	-----	PLUG, O-RING 9/16-18	2
17	171081	SEAL KIT, 2-1/2" BORE CYL **(NOT SHOWN) (INCL. ITEMS 7 - 15)**	

https://truckmanualshub.com/

Table provided for general use.

NOTES:

https://truckmanualshub.com/

NOTE: IF REPAIRING OR REPLACING THE 7 PIN CONNECTOR, MATCH THE LETTERS AT THE BACK OF THE HARNESS TO THE 7 PIN CONNECTOR AS SHOWN. THE COLOR OF THE WIRE JACKET DOES NOT NECESSARILY MATCH THE COLOR MARKING OF THE 7 PIN CONNECTOR.

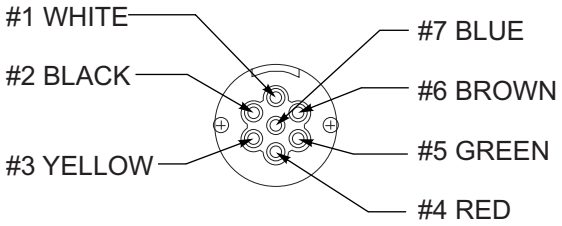

FACING 7-PIN CONNECTOR

WIRING CHART	
7-PIN CONNECTION	4-PIN CONNECTION
GRND. 1	D
YEL. 3	B
GRN. 5	A
BRN. 6	C

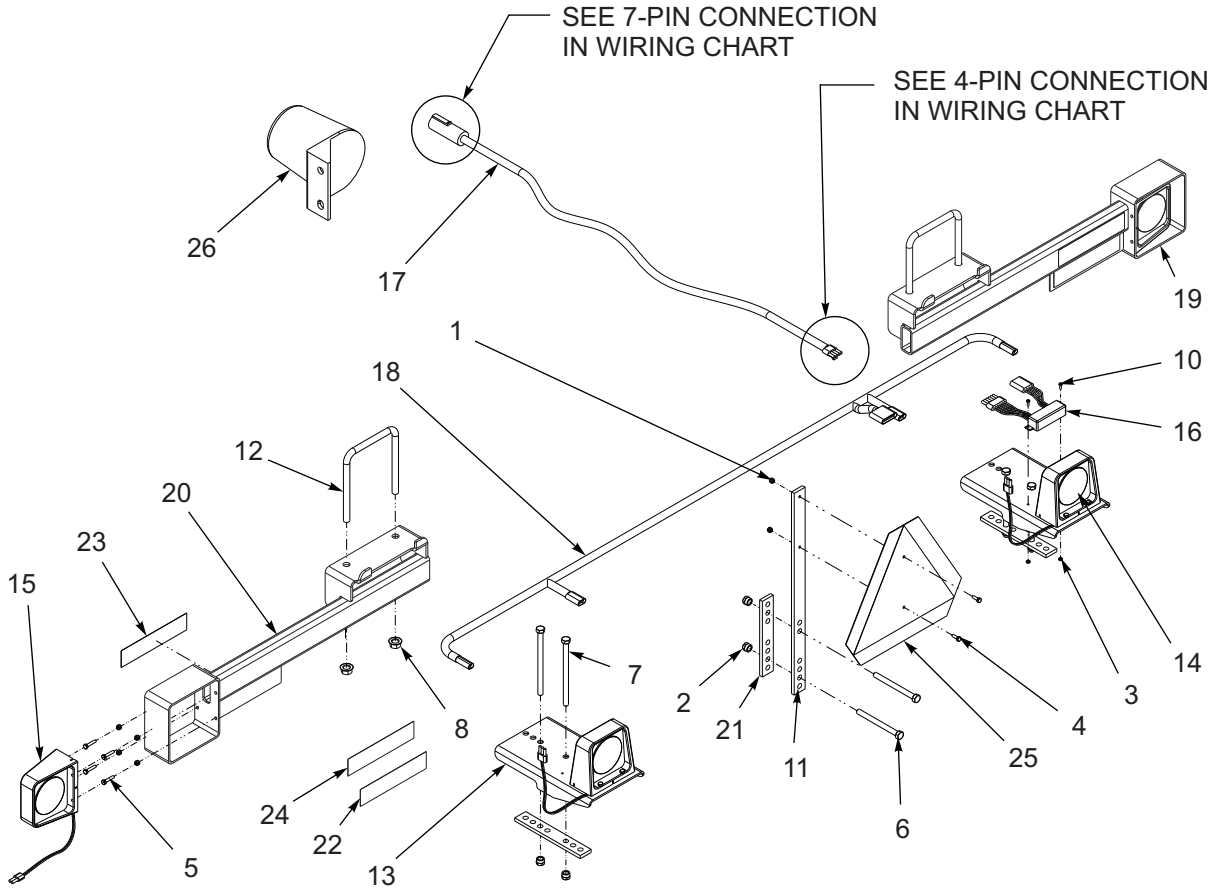

NOTE: LIGHT BRACKET WELDMENT IS NOT SOLD W/O REFLECTORS

Figure 1-49: Electrical Assembly (Prior to August, 2013)

https://truckmanualshub.com/

Electrical Assembly (Prior to August, 2013)

ITEM	PART NO.	DESCRIPTION	QTY.
--	154336	LIGHT KIT	
1	1-512-010005-01	NUT, HEX LOCK 1/4-20 GRB	18
2	1-512-010005-09	NUT, HEX LOCK 1/2-13 GRB	4
3	1-512-010007-02	NUT, HEX 8-32	2
4	1-654-010047-04	SCREW HEX CAP 1/4-20 X 3/4 GR5	2
5	1-654-010047-07	SCREW HEX CAP 1/4-20 X 1-1/4 GR5	16
6	2-102-010032	U-BOLT	1
7	1-654-010055-22	SCREW HEX CAP 1/2-13 X 8-1/2 GR5	4
8	100827	NUT, FLANGE HEAD SERRATED 5/8-11	4
9	105874	TIE SELF LOCKING 19" **(NOT SHOWN)**	15
10	107-0762	SCREW, SLOT PAN HEAD #8-32 X 1/2	2
11	164142	BRACKET, SMV MOUNTING	1
12	141269	U-BOLT, WING STABILIZER	2
13	141574	BRACKET SUPPORT, TAIL LIGHT	2
14	141576	LAMP, RED W/ BRAKE	2
15	141577	LAMP, AMBER SINGLE	2
16	141578	LIGHTING MODULE, ENHANCED	1
17	141579	HARNESS, MAIN WARNING LIGHTS **(INCL ITEM 26)**	1
18	141580	HARNESS, REAR WARNING LIGHTS	1
19	156970	BRACKET, LIGHT RH NC W/ REF **(7431-23/26/29) (INCL. ITEMS 22-24)**	1
19	154674	BRACKET, LIGHT RH WC W/ REF **(7431-33) (INCL. ITEMS 22-24)**	1
20	156971	BRACKET, LIGHT LH NC W/ REF **(7431-23/26/29) (INCL. ITEMS 22-24)**	1
20	154675	BRACKET, LIGHT RH WC W/ REF **(7431-33) (INCL. ITEMS 22-24)**	1
21	2-054-010461	BAR WARNING LIGHTS	2
22	528933	REFLECTOR, RED	2
23	528934	REFLECTOR, YELLOW	2
24	528938	STRIPE, ORANGE	2
25	70260977	SMV EMBLEM	1
26	2-368-010287	HARNESS, STOR-A-WAY	1
27	2-368-010273	HARNESS, 34" EXTENSION	1
28	100827	NUT, FLANGE HEAD SERRATED 5/8-11	2

https://truckmanualshub.com/

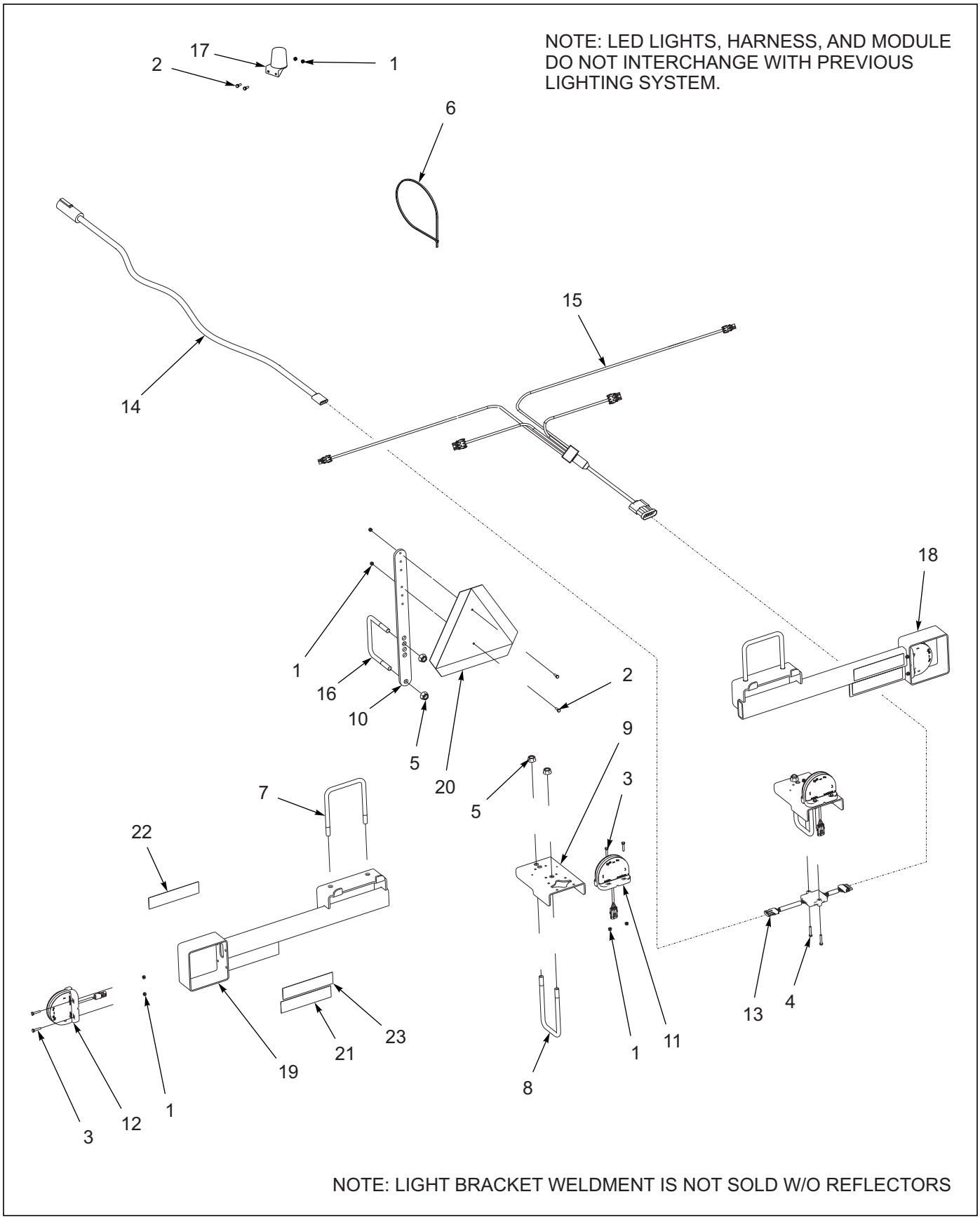

Figure 1-50: Electrical Assembly W/ LED Lights (After August, 2013) (1 of 2)

https://truckmanualshub.com/

7-PIN CONN	4-PIN TOWER	CIRCUIT	WIRE COLOR
1	D	GROUND	GROUND
2		WORK LAMPS	BLACK
3	B	LEFT FLASHING & TURN	YELLOW
4		STOP LAMPS	RED
5	A	RIGHT FLASHING & TURN	GREEN
6	C	TAIL LAMPS	BROWN
7		SWITCHED POWER (12V)	BLUE

14

	1	2	3	4	5
	2-PIN TOWER	3-PIN TOWER	6-PIN SHROUD	3-PIN TOWER	2-PIN TOWER
BLACK LEFT TURN			A	C	
WHITE GROUND	A	A	B	A	A
BROWN TAIL LIGHT		B	C	B	
YELLOW LEFT TURN			D		B
GREEN RIGHT TURN	B		E		
RED RIGHT TURN		C	F		

15

Figure 1-51: LED Warning Light Harness Wire Designations (After August, 2013) (2 of 2)

Electrical Assembly W/ Led Lights (After August, 2013)

ITEM	PART NO.	DESCRIPTION	QTY.
--	177034	LIGHT KIT	
1	1-512-010005-01	NUT, HEX LOCK 1/4-20 GRB	20
2	1-654-010047-04	SCREW, HEX HEAD CAP 1/4-20 X 3/4 GR5	2
3	1-654-010047-07	SCREW, HEX HEAD CAP 1/4-20 X 1-1/4 GR5	16
4	1-654-010047-08	SCREW, HEX HEAD CAP 1/4-20 X 1-1/2 GR5	2
5	100827	NUT, FLANGE HEAD SERRATED 5/8-11	6
6	105874	TIE SELF LOCKING 19"	15
7	141269	U-BOLT, WING STABILIZER	2
8	157648	U-BOLT, HYDRAULIC MOUNT	2
9	164138	MOUNT, TAIL LIGHT	2
10	164142	BRACKET MOUNTING, SMV	1
11	174435	LAMP, AG RED SINGLE LED	2
12	174436	LAMP, AG AMBER SINGLE LED	2
13	174437	MODULE, AG FLASHER CONTROL	1
14	174438	HARNESS, MAIN WARNING LIGHTS	1
15	174439	HARNESS, REAR WARNING LIGHTS	1
16	2-102-010032	U-BOLT	1
17	2-368-010287	HARNESS, STOR-AWAY	1
18	156970	BRACKET, LIGHT RH NC W/ REF **(7431-23/26/29) (INCL. ITEMS 21-23)**	1
18	154674	BRACKET, LIGHT RH WC W/ REF **(7431-33) (INCL. ITEMS 21-23)**	1
19	156971	BRACKET, LIGHT LH NC W/ REF **(7431-23/26/29) (INCL. ITEMS 21-23)**	1
19	154675	BRACKET, LIGHT LH WC W/ REF **(7431-33) (INCL. ITEMS 21-23)**	1
20	70260977	SMV EMBLEM	1
21	528933	REFLECTOR, RED	2
22	528934	REFLECTOR, YELLOW	2
23	528938	STRIPE, ORANGE	2

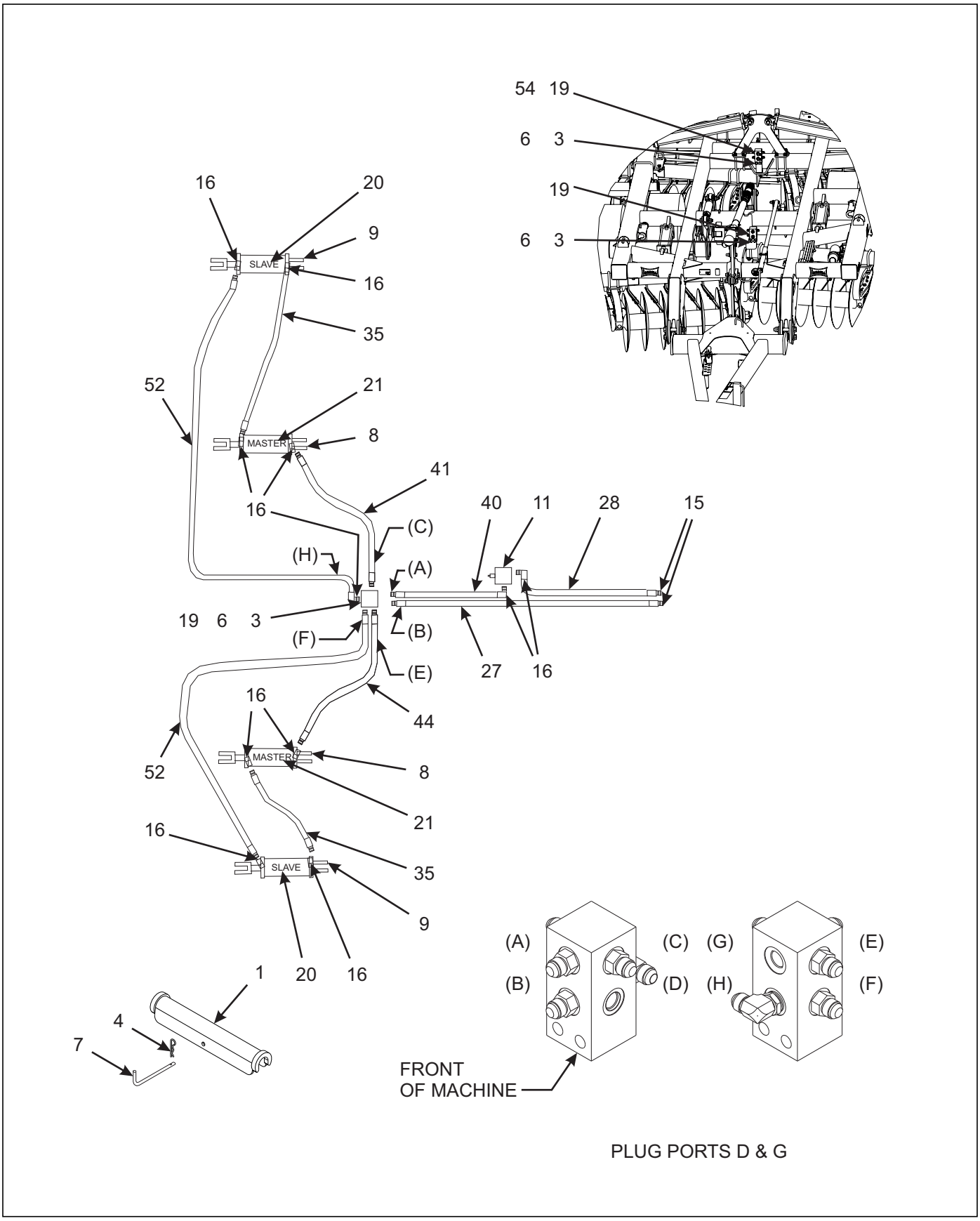

Figure 1-52: Lift Hydraulic Assembly (20’, 23’) (1 of 8)

https://truckmanualshub.com/

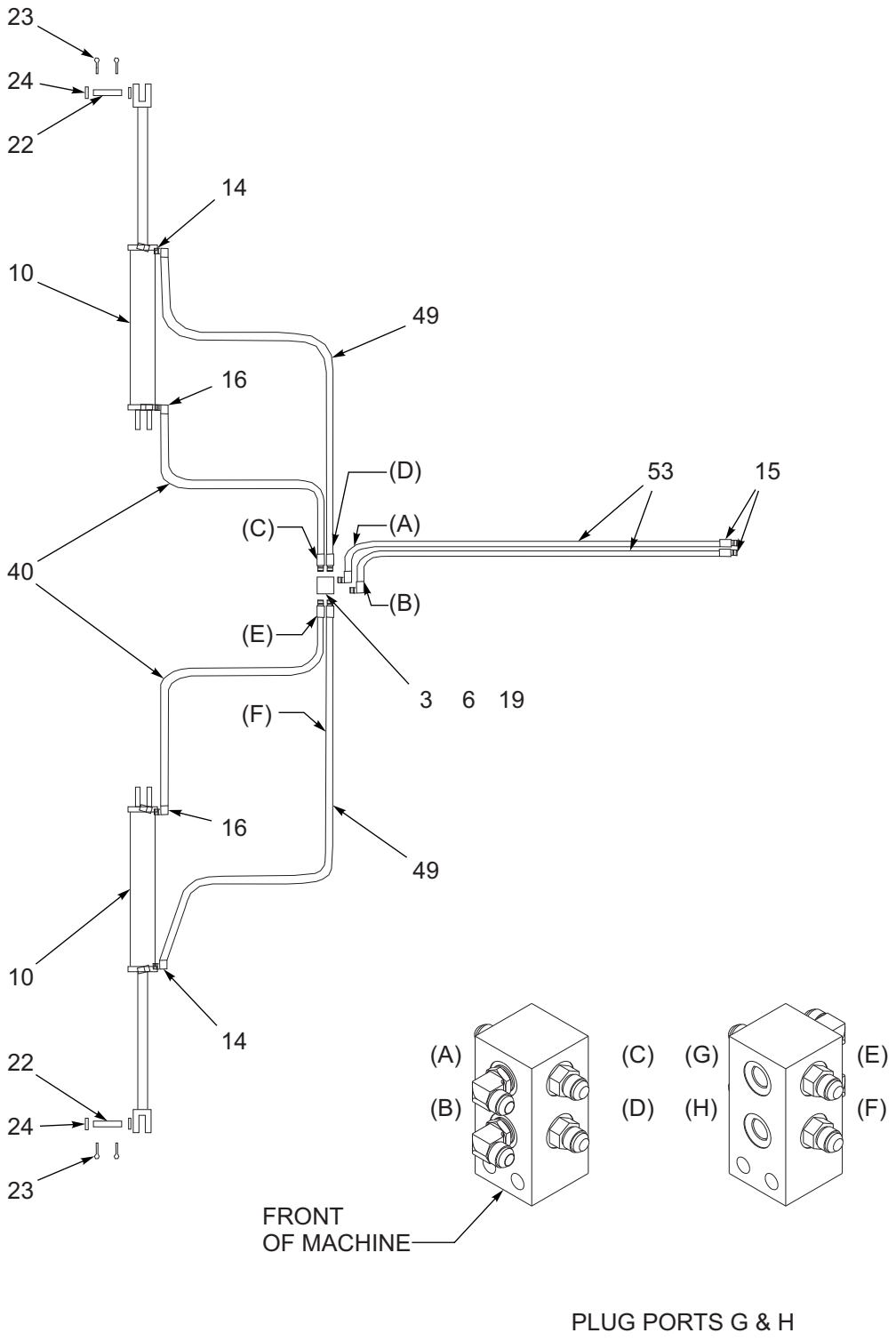

Figure 1-53: Fold Hydraulic Assembly (20’, 23’) (2 of 8)

https://truckmanualshub.com/

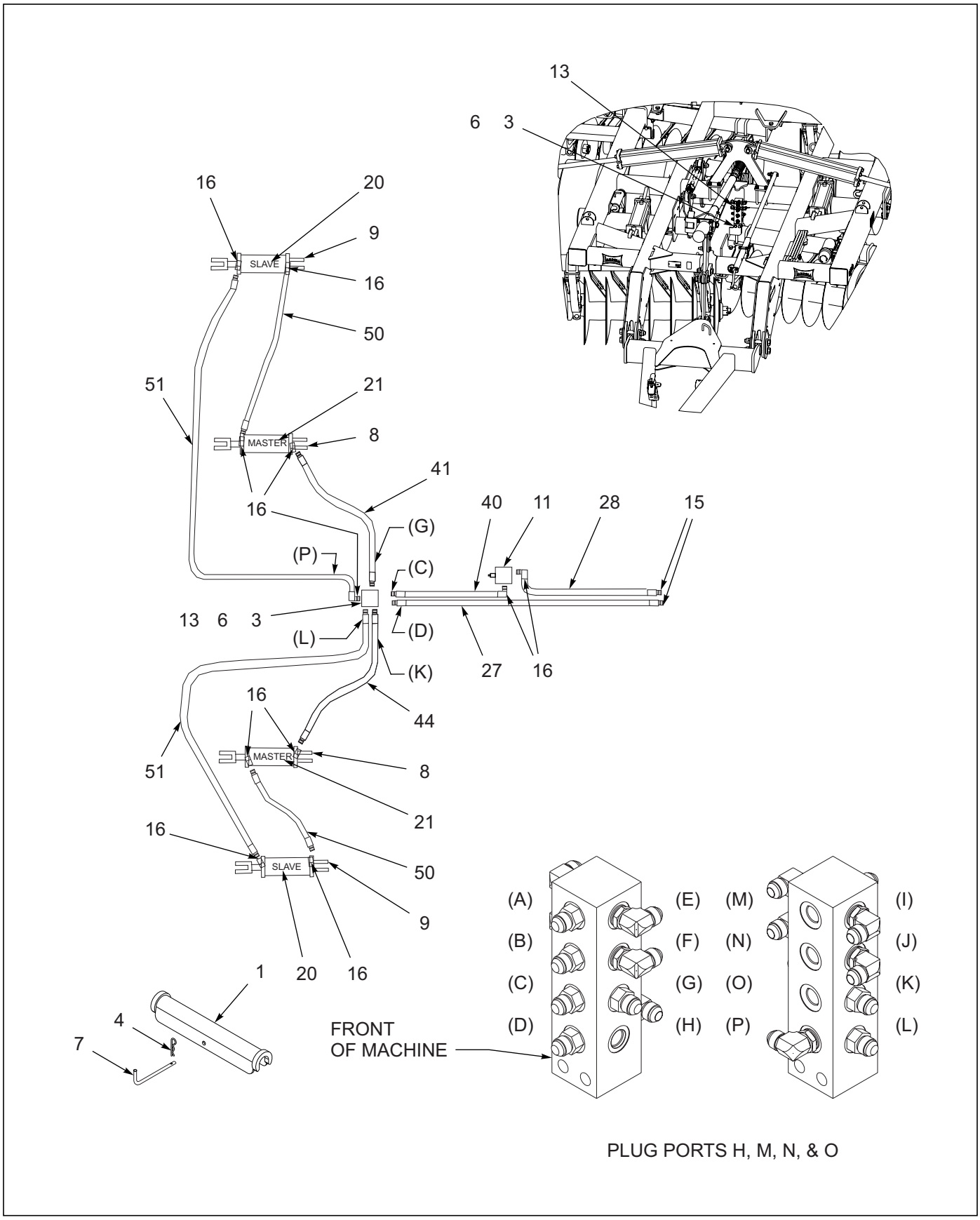

Figure 1-54: Lift Hydraulic Assembly (26') (3 of 8)

https://truckmanualshub.com/

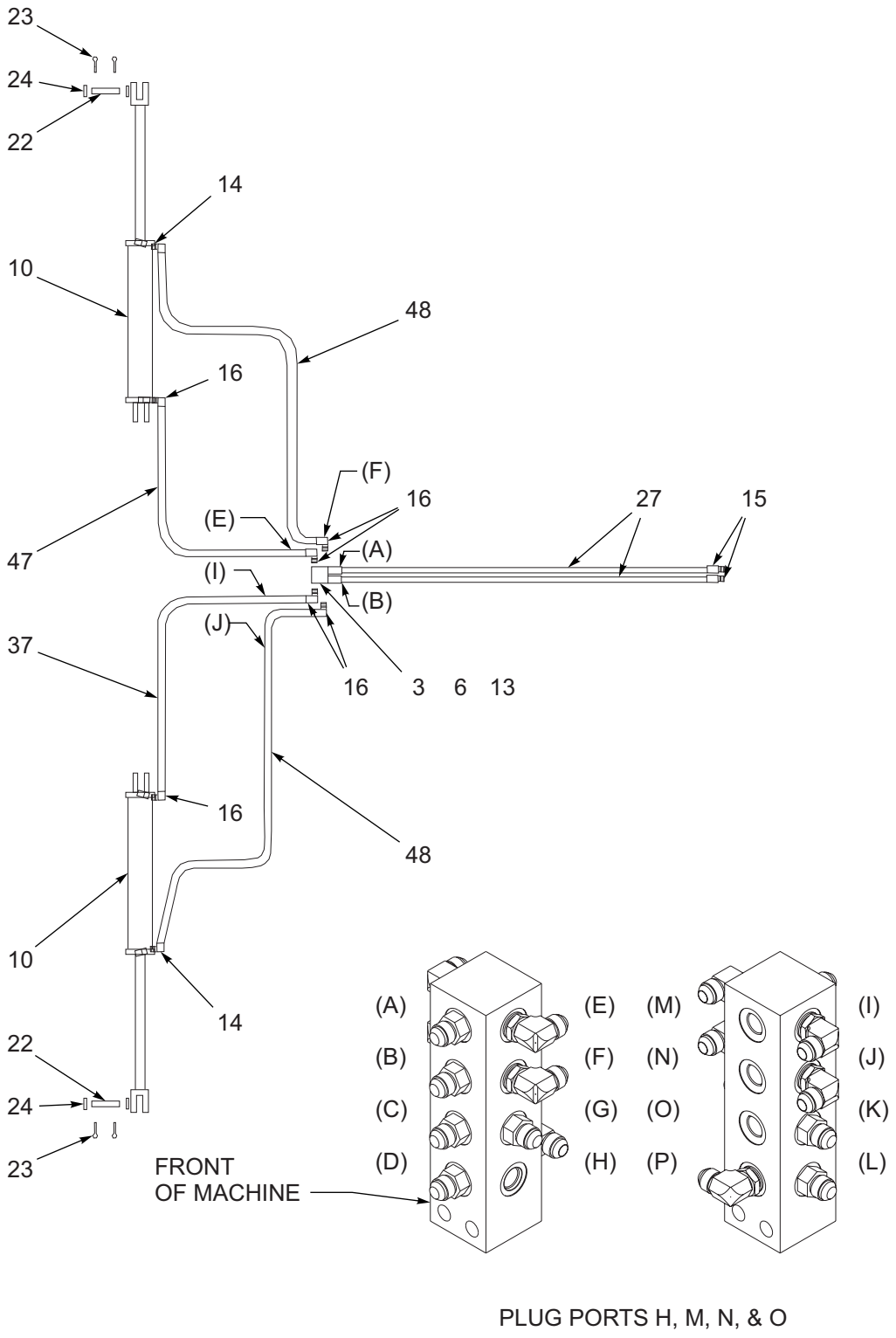

Figure 1-55: Fold Hydraulic Assembly (26' (Before 07/01/2012) (4 of 8)

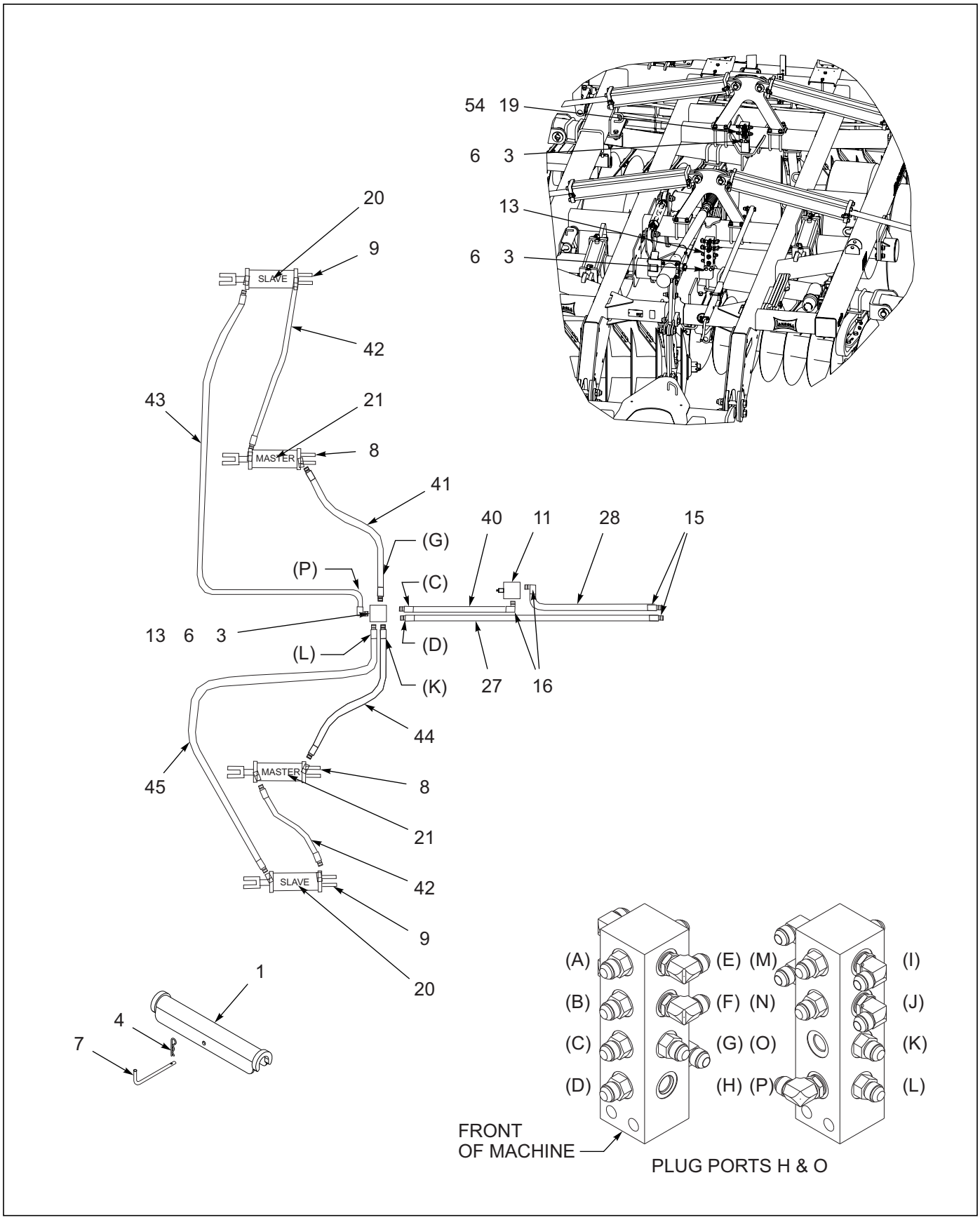

Figure 1-56: Lift Hydraulic Assembly (29') (5 of 8)

https://truckmanualshub.com/

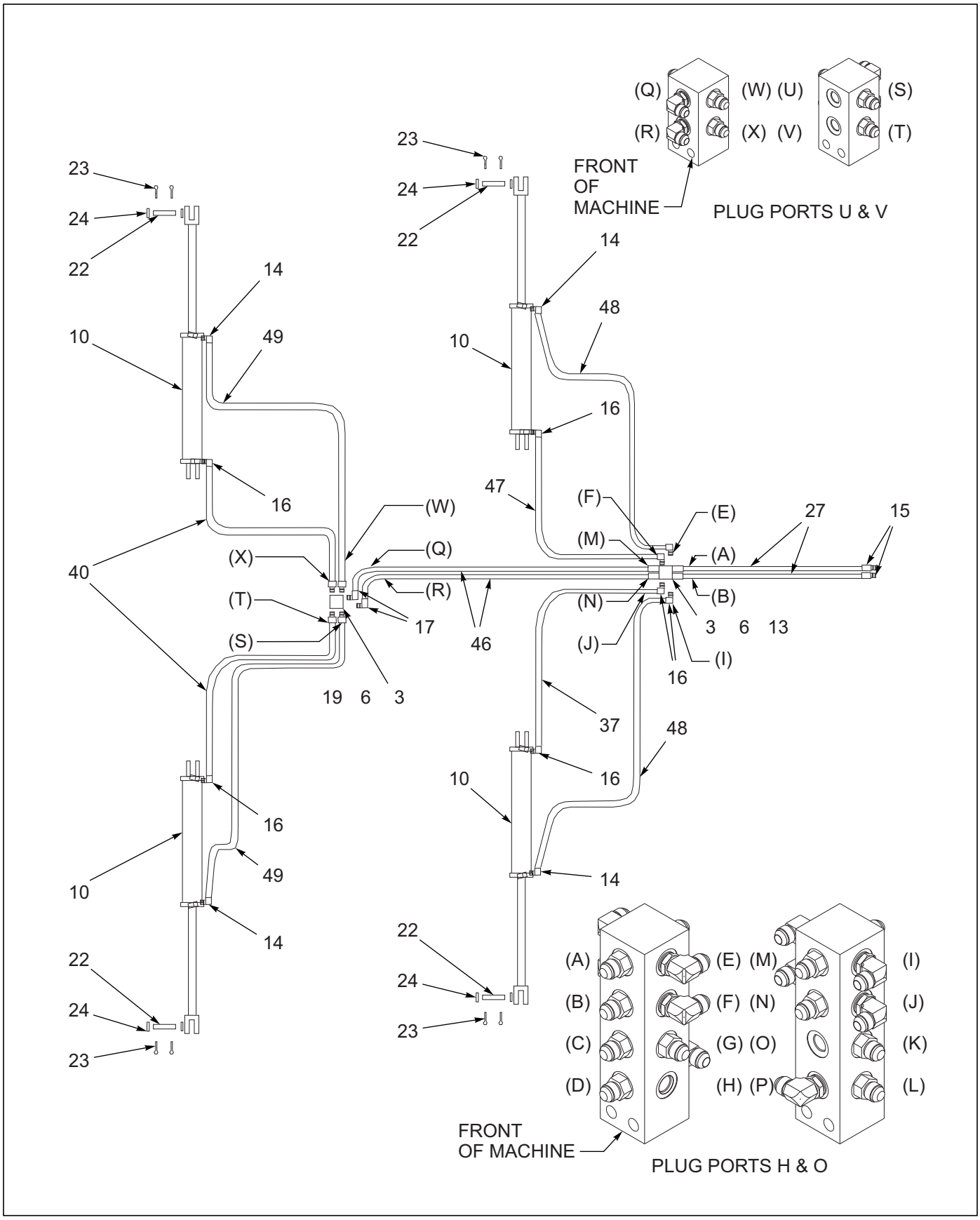

Figure 1-57: Fold Hydraulic Assembly (26') (After 07/01/2012) & 29') (6 of 8)

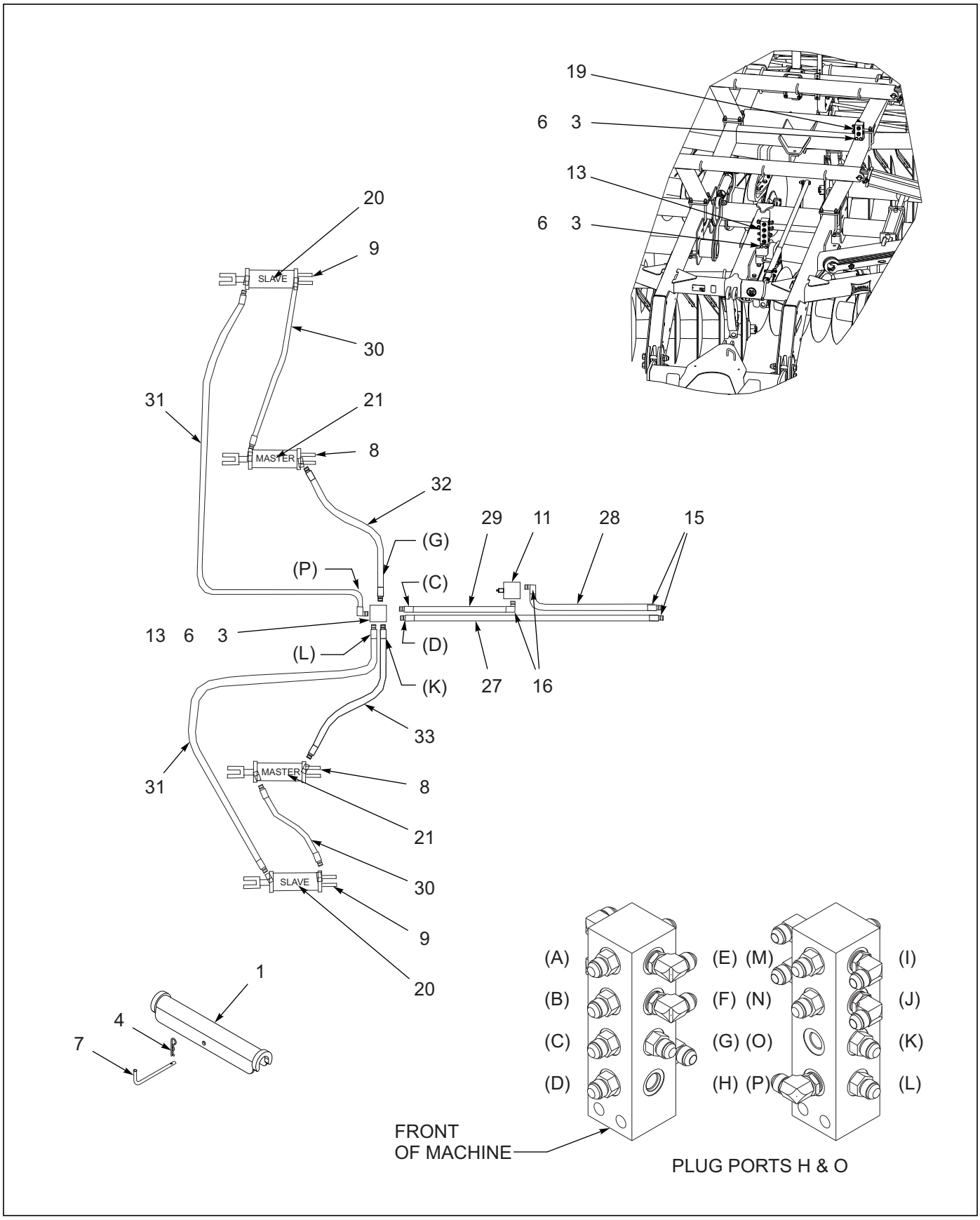

Figure 1-58: Lift Hydraulic Assembly (33') (7 of 8)

https://truckmanualshub.com/

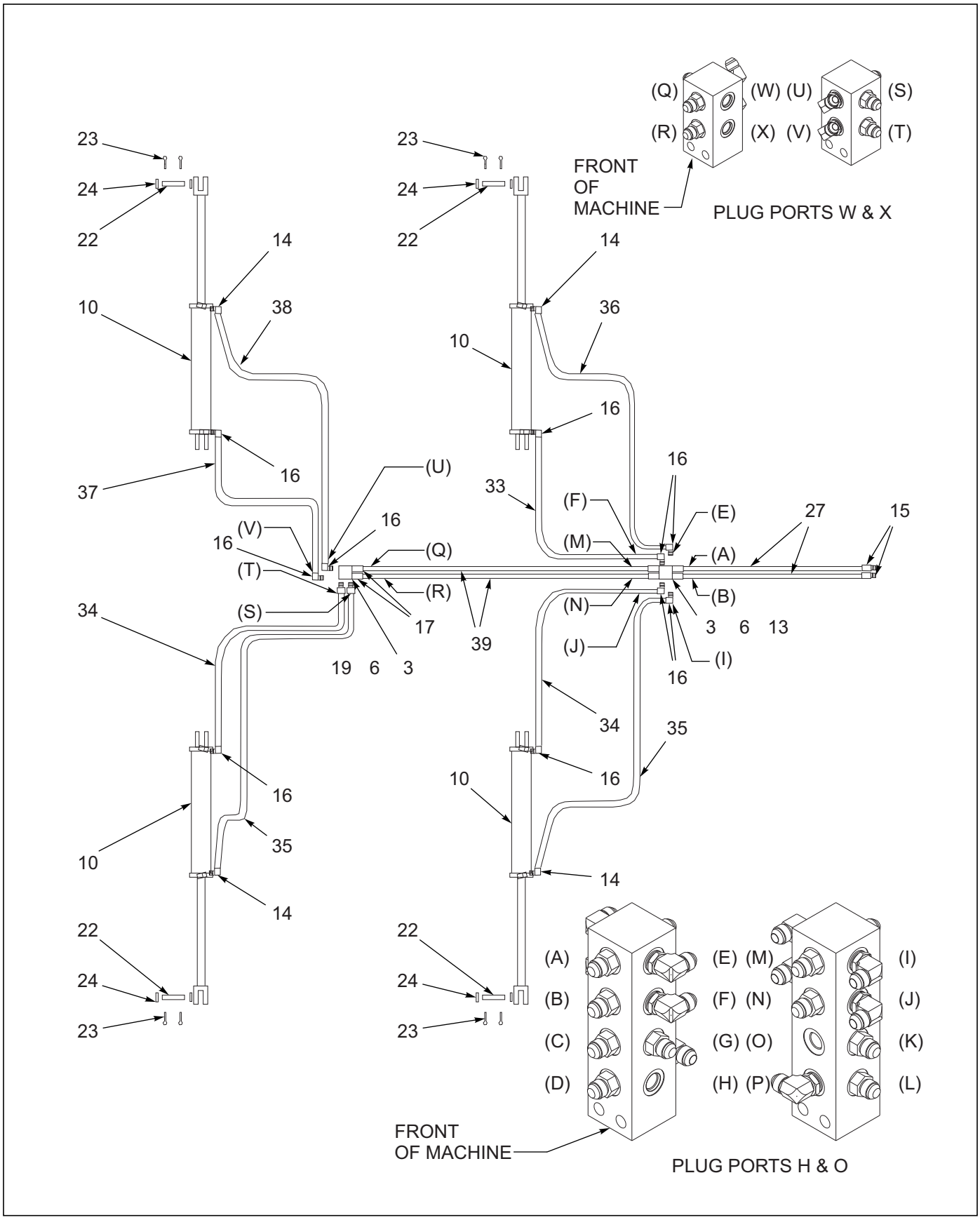

Figure 1-59: Fold Hydraulic Assembly (33') (8 of 8)

https://truckmanualshub.com/

Hydraulic Assembly

ITEM	PART NO.	DESCRIPTION	QTY.
1	141274	LOCKOUT, 1-3/8 X 10	
2	1-512-010005-05	NUT, HEX LOCK 3/8-16 GRB **(NOT SHOWN)**	
3	1-512-010005-09	NUT, HEX LOCK 1/2-13 GRB	
4	1-557-010403	HAIRPIN, 1/8	
5	1-654-010051-08	SCREW, HEX HEAD CAP 3/8-16 X 1-3/4 GR5 **(NOT SHOWN)**	
6	1-654-010055-11	SCREW, HEX HEAD CAP 1/2-13 X 3-1/2 GR5	
7	104358	L PIN, CYL STOP	
8	140470	CYLINDER, 4 X 10 REPHASE **(SEE PAGE 1-116)**	
9	140471	CYLINDER, 3-3/4 X 10 REPHASE **(SEE PAGE 1-117)**	
10	140472	CYLINDER 4 X 30 1-1/2 ROD **(SEE PAGE 1-119)**	
11	185660	VALVE, LIMIT	
11	142656	LIMIT VALVE PARTS KIT	
12	141275	BRACKET, HOSE CLAMP **(NOT SHOWN)**	
13	141594	MANIFOLD, HYDRAULIC 16 PORT	
14	141826	ELBOW 90 W/ 1/16 RESTRICTOR	
15	141828	COUPLER, MALE 3/4-16	
16	2062-8-8S	ADAPTER, 90	
17	202702-8-8S	ADAPTER	
18	2-181-010001	HOSE CLAMP **(NOT SHOWN)**	
19	2-474-010022	MANIFOLD, HYDRAULIC ASSEMBLY 8 PORT	
20	2-573-010149	DECAL, SLAVE 1	
21	2-573-010150	DECAL, MASTER	
22	141244	PIN, FOLD	
23	1-647-010004240	PIN, SPRING SLOTTED 5/16 X 2-1/2	
24	116100	WASHER, FLAT 1-1/4N	
25	155528	HOSE WRAP, BLUE **(NOT SHOWN) (USED TO WRAP LIFT HOSES)**	
26	155529	HOSE WRAP, YELLOW **(NOT SHOWN) (USED TO WRAP WING FOLD HOSES)**	
27	141865	HOSE ASSEMBLY 3/8 X 204	
28	156944	HOSE ASSEMBLY 3/8 X 184	
29	137602	HOSE ASSEMBLY 3/8 X 27	
30	153620	HOSE ASSEMBLY 3/8 X 140	
31	117163	HOSE ASSEMBLY 3/8 X 196	
32	71508984	HOSE ASSEMBLY 3/8 X 42	
33	117259	HOSE ASSEMBLY 3/8 X 48	
34	116489	HOSE ASSEMBLY 3/8 X 64	
35	116491	HOSE, 3/8 X 96	
36	122909	HOSE ASSEMBLY 3/8 X 82	
37	153842	HOSE ASSEMBLY 3/8 X 33	
38	153843	HOSE ASSEMBLY 3/8 X 67	
39	116433	HOSE ASSEMBLY 3/8 X 90	
40	147582	HOSE ASSEMBLY 3/8 X 24	
41	71508985	HOSE ASSEMBLY 3/8 X 30	
42	116492	HOSE, 3/8 X 128	
43	144343	HOSE ASSEMBLY 3/8 X 165	
44	1-397-010369036	HOSE ASSEMBLY 3/8 X 36	
45	122911	HOSE ASSEMBLY 3/8 X 168	
46	156945	HOSE ASSEMBLY 3/8 X 100	
47	147123	HOSE ASSEMBLY 3/8 X 31	

https://truckmanualshub.com/

Hydraulic Assembly

ITEM	PART NO.	DESCRIPTION	QTY.
48	116432	HOSE ASSEMBLY 3/8 X 60	
49	147584	HOSE ASSEMBLY 3/8 X 40	
50	71509382	HOSE ASSEMBLY 3/8 X 112	
51	144342	HOSE ASSEMBLY 3/8 X 150	
52	141881	HOSE ASSEMBLY 3/8 X 136	
53	147586	HOSE ASSEMBLY 3/8 X 306	
54	141854	BRACKET, MANIFOLD MOUNT	

https://truckmanualshub.com/

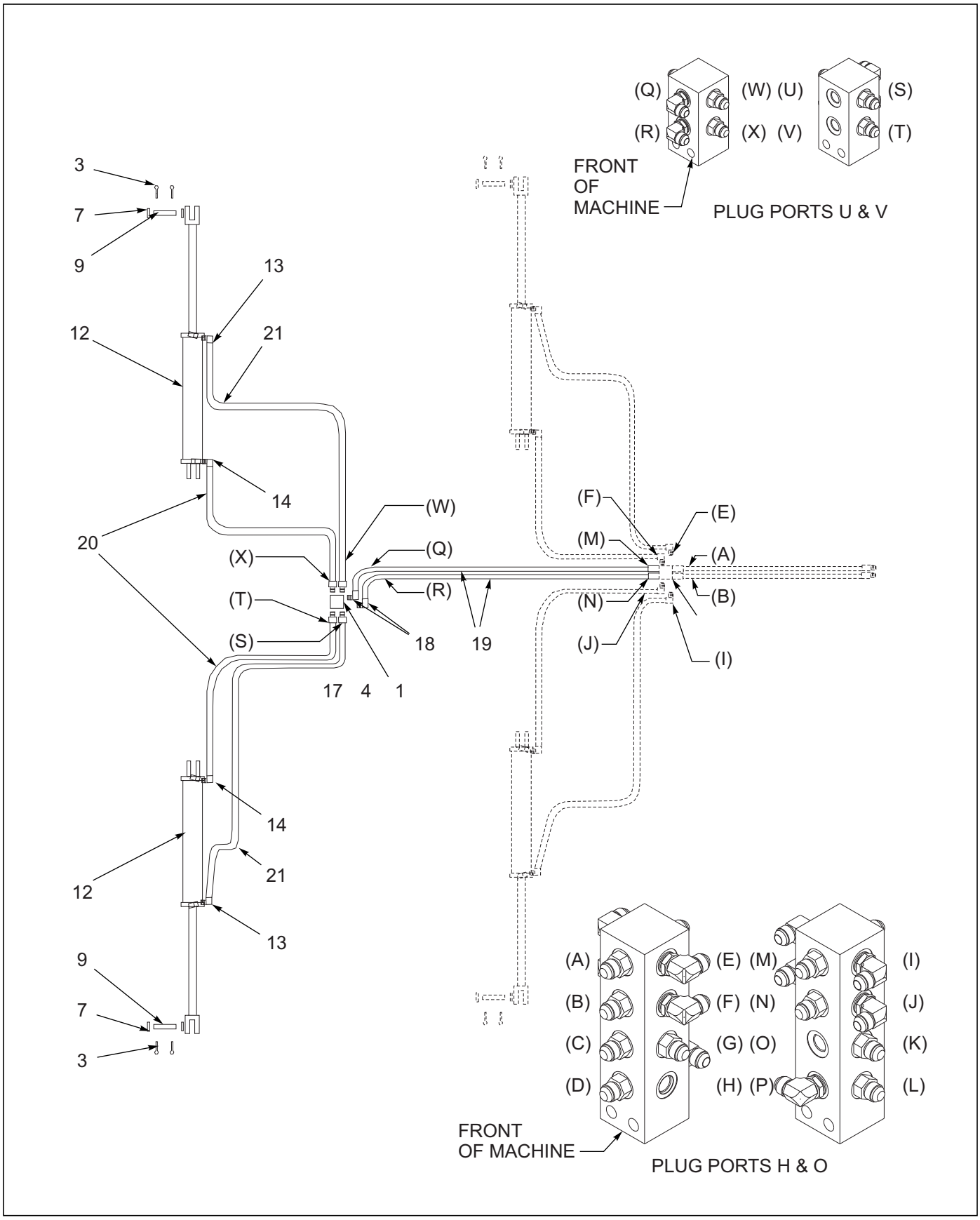

Figure 1-60: Bolt On Wing Fold Kit (7431-26) (1 of 2)

https://truckmanualshub.com/

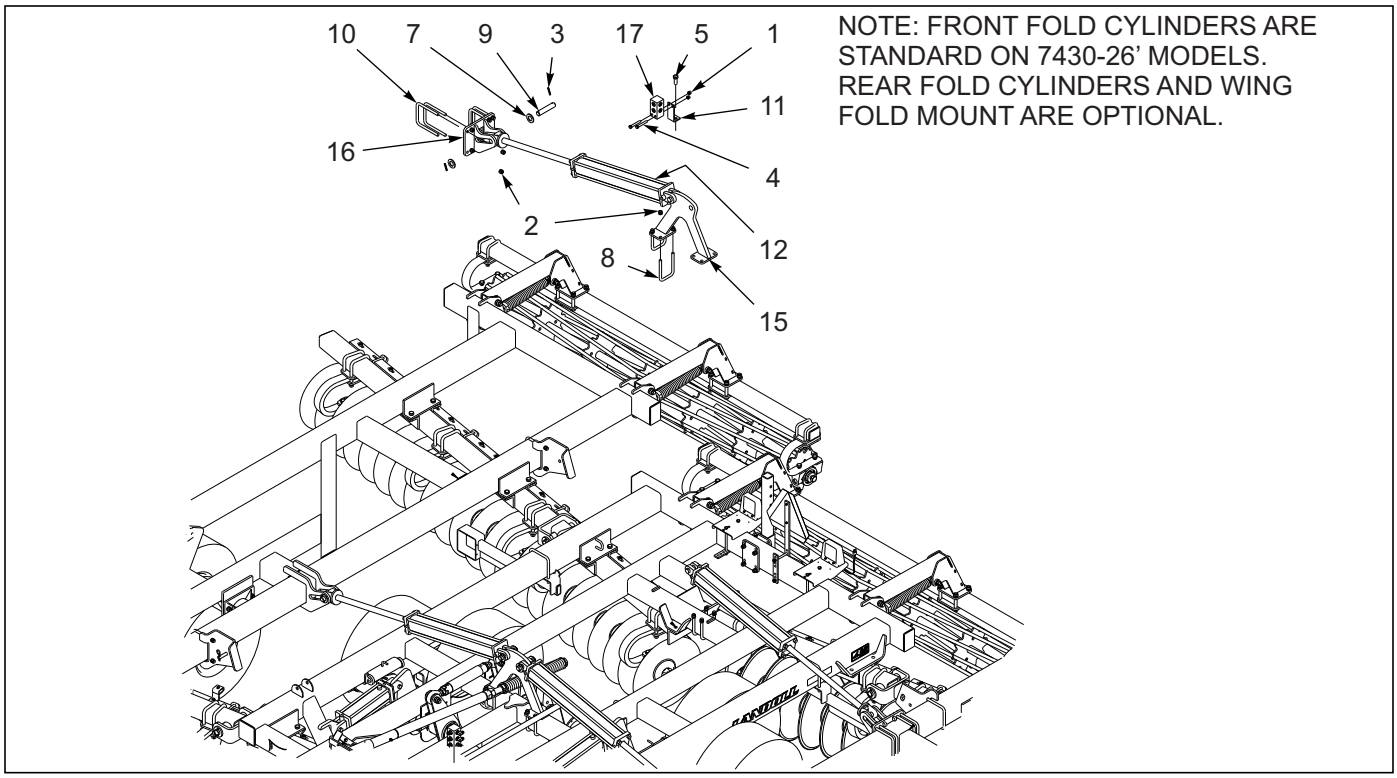

Figure 1-61: Bolt On Wing Fold Kit (7431-26) (2 of 2)

Bolt On Wing Fold Kit (7431-26)

ITEM	PART NO.	DESCRIPTION	QTY.
--	156119	BOLT ON WING FOLD KIT **(7431-26) (SEE PAGE 1-107 FOR STANDARD 7431-26' FOLD HYDRAULIC ITEMS DASHED ITEMS ON PAGE 1-114)**	
1	1-512-010005-09	NUT, HEX LOCK 1/2-13 GRB	
2	1-512-010005-13	NUT, HEX LOCK 5/8-11 GRB	
3	1-647-010004240	PIN, SPRING SLOTTED 5/16 X 2-1/2	
4	1-654-010055-11	SCREW, HEX HEAD CAP 1/2-13 X 3-1/2 GR5	
5	100941	SCREW, HEX HEAD CAP 3/4-10 X 2-1/4 GR8	
6	105874	TIE STRAP PLASTIC 21.5-24 X .301 **(NOT SHOWN)**	
7	116100	WASHER, FLAT 1-1/4N	
8	141228	U-BOLT 5/8 X 4 X 6-1/2	
9	141244	PIN, FOLD	
10	141269	U-BOLT, WING STABILIZER	
11	141854	BRACKET, MANIFOLD	
12	140472	CYLINDER 4 X 30 1-1/2 ROD **(SEE PAGE 1-119)**	
13	141826	ELBOW 90 W/ 1/16 RESTRICTOR	
14	2062-8-8S	ADAPTER, 90	
15	153691	MOUNT, FOLD CYLINDER NC	
16	156120	MOUNT, WING FOLD BOLT ON	
17	2-474-010022	MANIFOLD, HYDRAULIC ASSEMBLY 8 PORT	
18	202702-8-8S	ADAPTER	
19	156945	HOSE ASSEMBLY 3/8 X 100	
20	147582	HOSE ASSEMBLY 3/8 X 24	
21	147584	HOSE ASSEMBLY 3/8 X 40	

https://truckmanualshub.com/

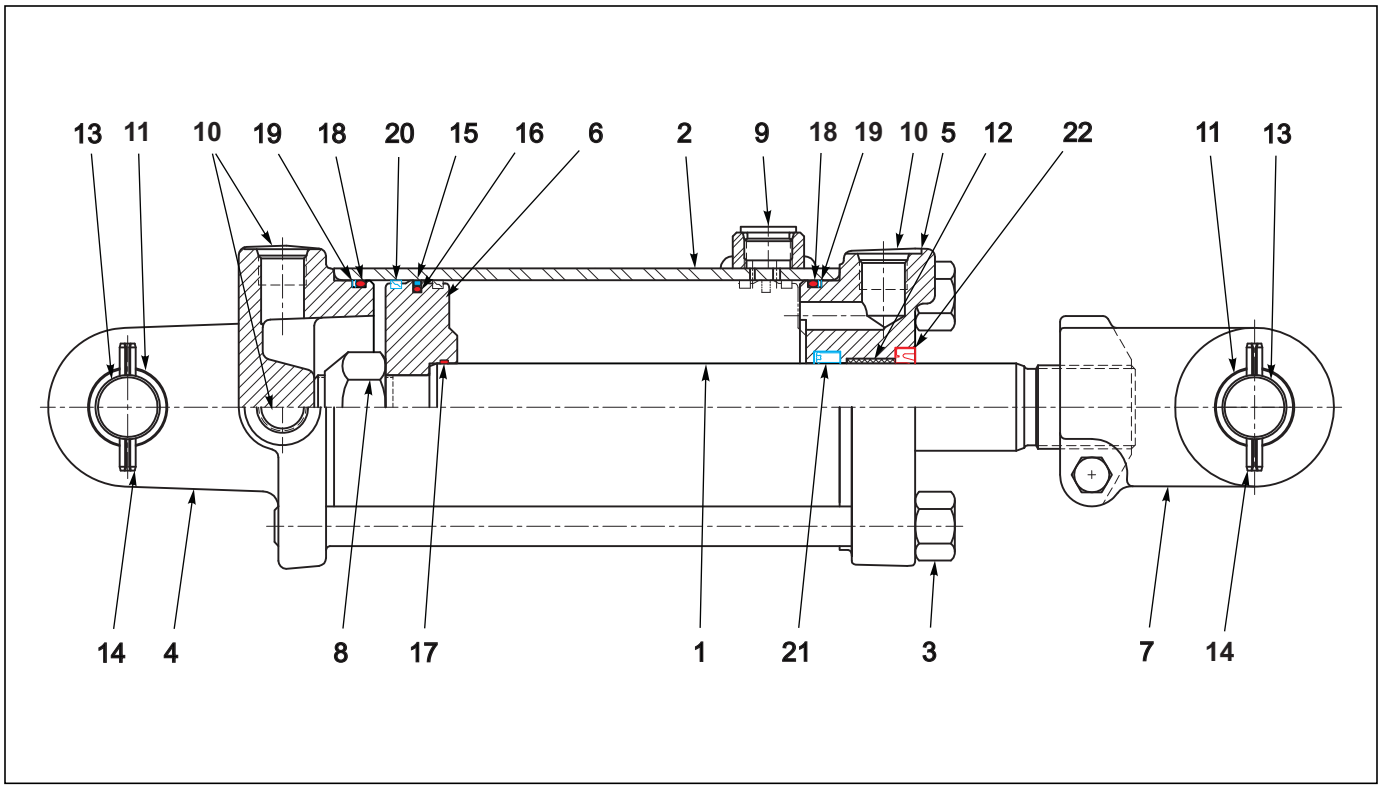

Figure 1-62: Cylinder - Rephase Assembly 4 X 10 (1” Clevis Pins)

Cylinder - Rephase Assembly 4 X 10 (1” Clevis Pins)

ITEM	PART NO.	DESCRIPTION	QTY.
--	140470	CYLINDER 4X10 REPHASE **(1” PINS)**	
1	-----	PISTON, ROD	1
2	-----	TUBE ASSY	1
3	-----	TIEROD ASSY	1
4	142114	BUTT CLEVIS ASSY	1
5	142109	GLAND ASSY	1
6	-----	PISTON	1
7	142110	CLEVIS ASSY	1
8	-----	LOCKNUT	1
9	-----	SHIPPING PLUG	1
10	-----	SHIPPING PLUG	3
11	142112	BUSHING	4
12	141301	BUSHING	1
13	143994	CLEVIS PIN	2
14	111789	ROLL PIN	4
15	-----	TEFLON SEAL	1
16	-----	O- RING	1
17	-----	O- RING	1
18	-----	O- RING	2
19	-----	BU- WASHER	2
20	-----	BEARING RING	1
21	-----	U- CUP	1
22	-----	CANNED WIPER	1
23	142111	PACKING KIT **(NOT SHOWN) (INCLUDES ITEMS 15-22)**	

https://truckmanualshub.com/

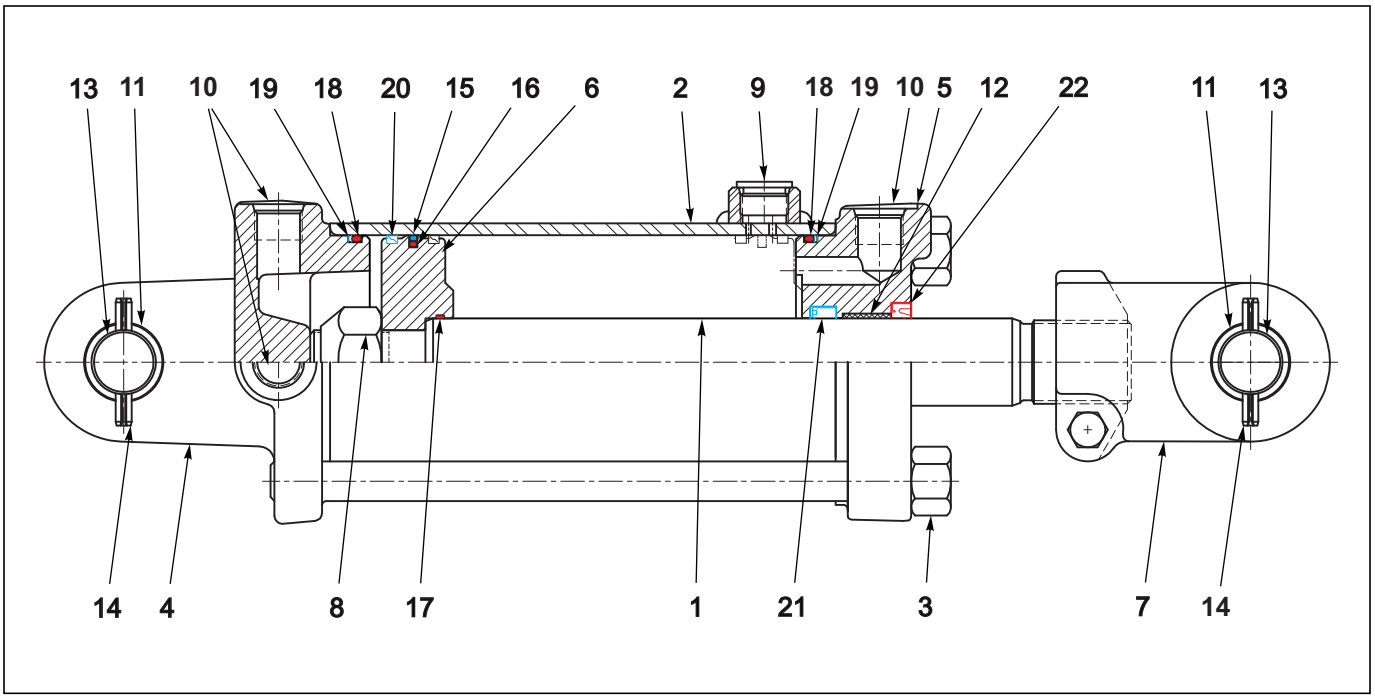

Figure 1-63: Cylinder - Rephase Assembly 3-3/4 X 10 (1” Clevis Pins)

Cylinder - Rephase Assembly 3-3/4 X 10 (1” Clevis Pins)

ITEM	PART NO.	DESCRIPTION	QTY.
--	140471	CYLINDER, 3-3/4 X 10, REPHASE **(1” PINS)**	
1	-----	PISTON, ROD	1
2	-----	TUBE ASSY	1
3	-----	TIEROD ASSY	1
4	142116	BUTT CLEVIS ASSY	1
5	111871	GLAND ASSY	1
6	-----	PISTON	1
7	142110	CLEVIS ASSY	1
8	-----	LOCKNUT	1
9	-----	SHIPPING PLUG	1
10	-----	SHIPPING PLUG	3
11	142112	BUSHING	4
12	141301	BUSHING	1
13	143994	CLEVIS PIN	2
14	111789	ROLL PIN	4
15	-----	TEFLON SEAL	1
16	-----	O- RING	1
17	-----	O- RING	1
18	-----	O- RING	2
19	-----	BU- WASHER	2
20	-----	BEARING RING	1
21	-----	U- CUP	1
22	-----	CANNED WIPER	1
23	142103	PACKING KIT **(NOT SHOWN) (INCLUDES ITEMS 15-22)**	

https://truckmanualshub.com/

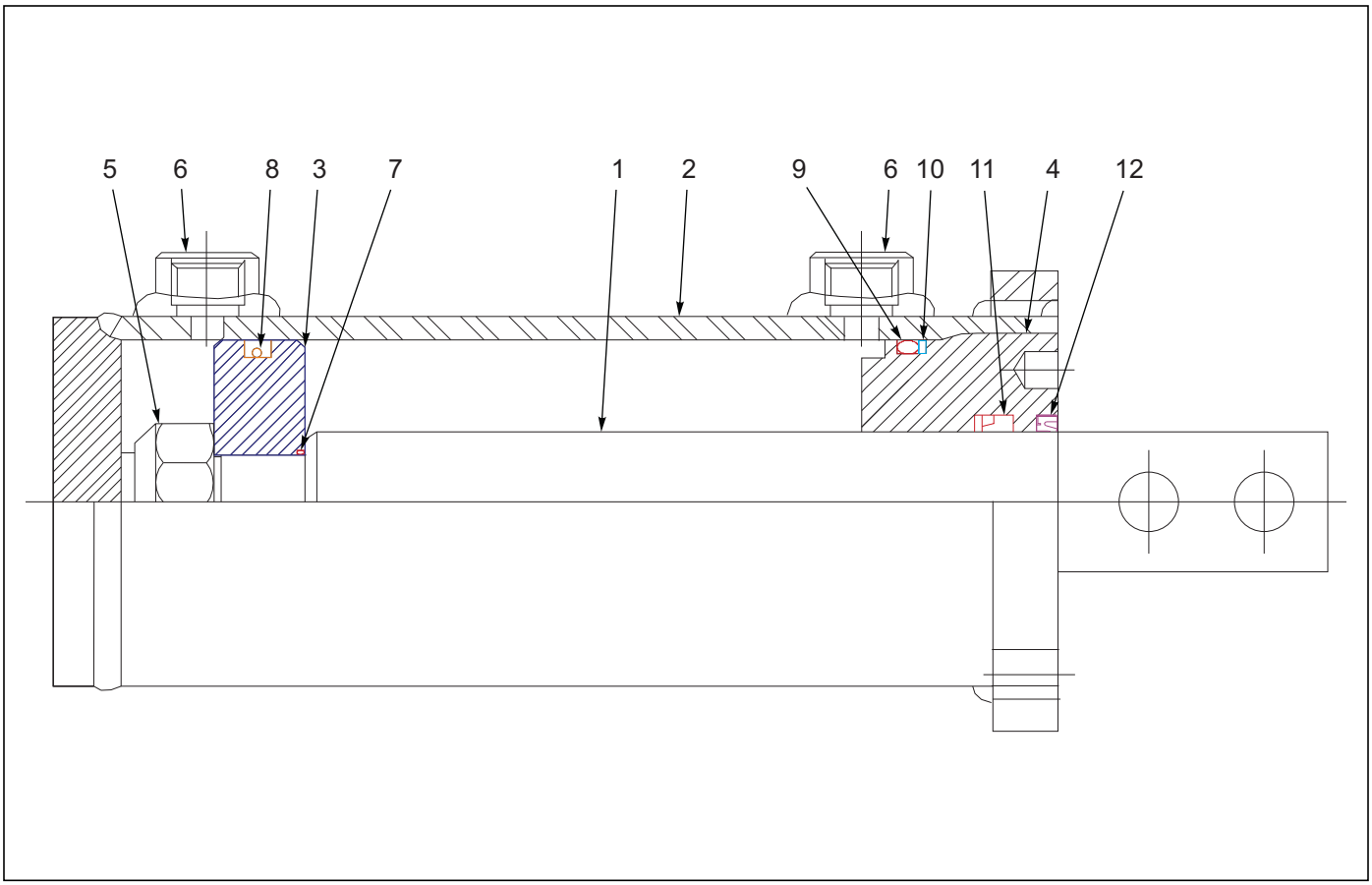

Figure 1-64: Cylinder - 3-1/2” X 6”

Cylinder - 3-1/2” X 6”

ITEM	PART NO.	DESCRIPTION	QTY.
--	140631	CYLINDER 3-1/2X6	
1	142803	PISTON ROD	1
2	-----	BUTT AND TUBE ASSEMBLY	1
3	-----	PISTON	1
4	142806	GLAND ASSY	1
5	-----	LOCKNUT	1
6	-----	PORT PLUG	2
7	-----	O-RING	1
8	-----	CROWN SEAL	1
9	-----	O-RING	1
10	-----	BU-WASHER	1
11	-----	U-CUP	1
12	-----	CANNED WIPER	1
13	142807	PACKING KIT **(NOT SHOWN) (INCLUDES ITEM 7-12)**	

https://truckmanualshub.com/

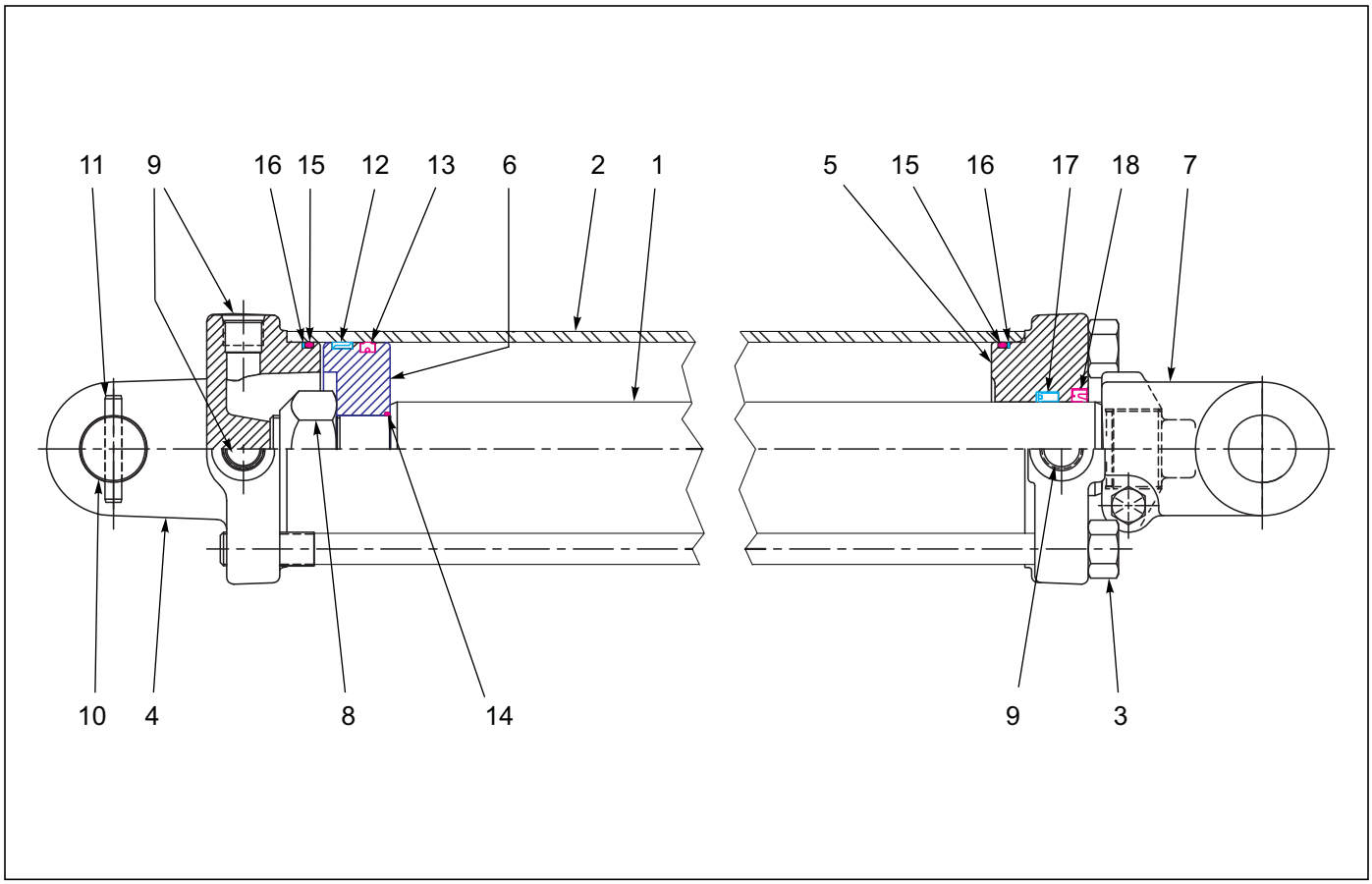

Figure 1-65: Cylinder - 4” X 30” (1-1/2” Dia Rod)

Cylinder - 4” X 30” (1-1/2” Dia Rod)

ITEM	PART NO.	DESCRIPTION	QTY.
--	140472	CYLINDER 4X30 1-1/2 ROD	
1	-----	PISTON ROD	1
2	-----	TUBE	1
3	-----	TIEROD ASSY	4
4	142119	BUTT CLEVIS ASSY	1
5	142120	GLAND	1
6	-----	PISTON	1
7	100000328	CLEVIS ASSY	1
8	-----	LOCKNUT	1
9	-----	SHIPPING PLUG	3
10	111880	CLEVIS PIN	1
11	111789	ROLL PIN	2
12	-----	BEARING RING	1
13	-----	CROWN SEAL	1
14	-----	O- RING	1
15	-----	O- RING	2
16	-----	BU- WASHER	2
17	-----	U- CUP	1
18	-----	CANNED WIPER	1
19	142113	PACKING KIT **(NOT SHOWN) (INCLUDES ITEMS 12-18)**	

https://truckmanualshub.com/

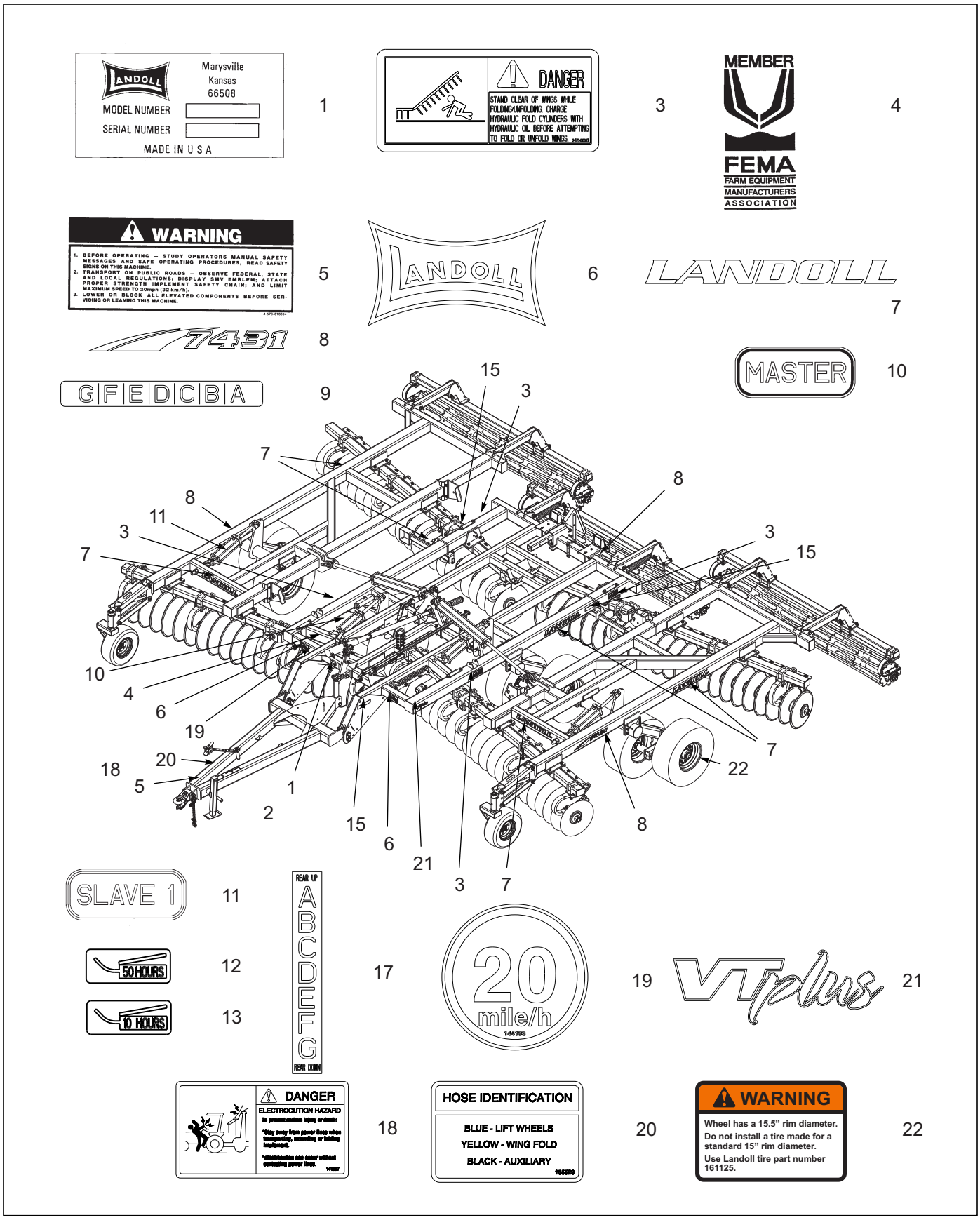

Figure 1-66: Decal Installation

https://truckmanualshub.com/

1515

Decal Installation

ITEM	PART NO.	DESCRIPTION	QTY.
1	1-573-010006	PLATE, NAME	
2	10036	FASTENER, SERIAL NUMBER PLATE	
3	2-573-010037	DECAL, DANGER, WING	
4	2-573-010198	DECAL MEMBER FEMA	
5	8-573-010084	DECAL WARNING BEFORE OPERATING	
6	141259	DECAL, LANDOLL YELLOW	
7	141260	DECAL, LANDOLL	
8	158777	DECAL, MODEL 7431	
9	141262	DECAL, DEPTH STOP INDICATOR	
10	2-573-010150	DECAL, MASTER **(SEE PAGE 1-112 FOR DECAL LOCATIONS)**	
11	2-573-010149	DECAL, SLAVE **(SEE PAGE 1-112 FOR DECAL LOCATIONS)**	
12	2-573-010330-03	DECAL LUBRICATION 50 HOURS	
13	2-573-010330-02	DECAL LUBRICATION 10 HOURS	
14	528933	REFLECTOR, RED **(SEE PAGE 1-101 FOR DECAL LOCATION)**	
15	528934	REFLECTOR, YELLOW **(SEE PAGE 1-101 FOR DECAL LOCATION)**	
16	528938	STRIPE, ORANGE **(SEE PAGE 1-101 FOR DECAL LOCATION)**	
17	141263	DECAL, LEVEL INDICATOR **(SEE PAGE 1-43 FOR DECAL LOCATION)**	
18	141597	DECAL, DANGER ELECTROCUTION	
19	144193	DECAL, SIS 20 MPH	
20	155523	DECAL, HOSE IDENTIFICATION	
21	155600	DECAL, VT PLUS	
22	163715	DECAL, WHEEL WARNING **(USED W/ TRELLEBORG WHEELS ONLY)**	

https://truckmanualshub.com/

Table provided for general use.

NOTES:

https://truckmanualshub.com/

Numerical Index

Numerics

0600-250-01000 . . . . . *1-95*
0600-250-01250 . . . . . *1-17*
0600-250-03000 . . . . . *1-3*, *1-5*, *1-93*, *1-95*
100000328 . . . . . *1-119*
100214 . . . . . *1-31*
10036 . . . . . *1-121*
100823 . . . . . *1-17*
100827 . . . . . *1-101*, *1-103*
100829 . . . . . *1-71*, *1-75*, *1-78*, *1-83*, *1-85*, *1-87*
100844 . . . . . *1-31*
100941 . . . . . *1-75*, *1-78*, *1-115*
100966 . . . . . *1-45*
101988 . . . . . *1-7*, *1-19*, *1-45*
102351 . . . . . *1-31*, *1-43*
102498 . . . . . *1-25*, *1-27*
102600 . . . . . *1-7*, *1-11*, *1-15*, *1-19*, *1-23*, *1-25*, *1-27*
102601 . . . . . *1-25*
102604 . . . . . *1-25*, *1-27*
103841 . . . . . *1-30*
104358 . . . . . *1-112*
105874 . . . . . *1-101*, *1-103*, *1-115*
107-0762 . . . . . *1-101*
107491 . . . . . *1-3*, *1-83*, *1-85*, *1-87*
1-076-010007 . . . . . *1-7*, *1-19*, *1-45*
1-076-010009 . . . . . *1-45*
1-076-010010 . . . . . *1-7*, *1-19*, *1-45*
1-076-010012 . . . . . *1-45*
108628 . . . . . *1-39*
108705 . . . . . *1-89*, *1-91*
1-104-010002 . . . . . *1-45*
111392 . . . . . *1-5*, *1-71*
111789 . . . . . *1-116*, *1-117*, *1-119*
111871 . . . . . *1-117*
111880 . . . . . *1-119*
111962 . . . . . *1-25*, *1-27*
113299 . . . . . *1-95*
114029 . . . . . *1-48*
116100 . . . . . *1-3*, *1-5*, *1-112*, *1-115*
1-161-010003 . . . . . *1-45*
116432 . . . . . *1-113*
116433 . . . . . *1-112*
116489 . . . . . *1-43*, *1-112*
116491 . . . . . *1-112*
116492 . . . . . *1-112*
117163 . . . . . *1-112*
117259 . . . . . *1-112*
117957 . . . . . *1-71*, *1-75*, *1-78*, *1-83*, *1-85*, *1-87*
119118 . . . . . *1-7*, *1-11*, *1-15*, *1-19*, *1-23*
122709 . . . . . *1-36*
122909 . . . . . *1-112*
122911 . . . . . *1-112*
122917 . . . . . *1-37*, *1-39*
123547 . . . . . *1-43*
123579 . . . . . *1-31*
124696 . . . . . *1-43*
124971 . . . . . *1-47*, *1-75*, *1-78*
125648 . . . . . *1-74*, *1-78*

https://truckmanualshub.com/

127712 . . . . . *1-7*, *1-11*, *1-15*, *1-20*, *1-23*
129263 . . . . . *1-89*, *1-91*
129698 . . . . . *1-31*
1-298-010001-1 . . *1-8*, *1-11*, *1-16*, *1-17*, *1-20*, *1-23*, *1-30*, *1-33*, *1-36*, *1-41*, *1-43*, *1-45*
131081 . . . . . *1-31*
137602 . . . . . *1-112*
137943 . . . . . *1-81*
139347 . . . . . *1-75*, *1-78*
1-397-010369036 . . . . . *1-112*
140464 . . . . . *1-47*
140469 . . . . . *1-47*
140470 . . . . . *1-7*, *1-11*, *1-15*, *1-112*, *1-116*
140471 . . . . . *1-19*, *1-23*, *1-112*, *1-117*
140472 . . . . . *1-112*, *1-115*, *1-119*
140473 . . . . . *1-47*
140475 . . . . . *1-47*
140476 . . . . . *1-47*
140477 . . . . . *1-47*, *1-81*
140479 . . . . . *1-47*, *1-81*
140480 . . . . . *1-47*, *1-81*
140481 . . . . . *1-47*
140482 . . . . . *1-47*
140483 . . . . . *1-47*
140484 . . . . . *1-47*
140485 . . . . . *1-47*
140487 . . . . . *1-47*
140490 . . . . . *1-47*
140491 . . . . . *1-47*
140519 . . . . . *1-7*, *1-11*, *1-15*, *1-19*, *1-23*
140525 . . . . . *1-31*, *1-41*
140526 . . . . . *1-31*, *1-43*
140533 . . . . . *1-3*, *1-5*
140548 . . . . . *1-7*, *1-19*
140554 . . . . . *1-7*, *1-19*
140575 . . . . . *1-30*
140594 . . . . . *1-7*, *1-19*
140595 . . . . . *1-7*, *1-19*
140598 . . . . . *1-36*, *1-41*
140599 . *1-3*, *1-5*, *1-36*, *1-41*, *1-71*, *1-75*, *1-78*, *1-83*, *1-85*, *1-87*
1-406-010012 . . . . . *1-45*
140606 . . . . . *1-30*
140607 . . . . . *1-30*, *1-36*
140609 . . . . . *1-36*
140610 . . . . . *1-36*
140616 . . . . . *1-30*, *1-41*, *1-43*
140619 . . . . . *1-30*
140625 . . . . . *1-43*
140627 . . . . . *1-43*
140629 . . . . . *1-95*
140630 . . . . . *1-41*
140631 . . . . . *1-43*, *1-118*
140646 . . . . . *1-7*, *1-19*
140647 . . . . . *1-30*, *1-35*
140649 . . . . . *1-36*
140658 . . . . . *1-45*
140663 . . . . . *1-45*
140667 . . . . . *1-45*
140672 . . . . . *1-45*
141109 . . . . . *1-3*, *1-5*
141152 . . . . . *1-3*, *1-5*
141154 . . . . . *1-45*, *1-47*
141198 . . . . . *1-7*, *1-19*
141209 . . . . . *1-7*, *1-11*, *1-15*, *1-19*, *1-23*
141213 . . . . . *1-37*
141216 . . . . . *1-37*
141217 . . . . . *1-37*
141220 . . . . . *1-30*, *1-37*
141222 . . . . . *1-37*
141223 . . . . . *1-37*
141224 . . . . . *1-30*
141225 . . . . . *1-30*
141227 . . . . . *1-7*, *1-11*, *1-15*
141228 . . . . . *1-3*, *1-115*
141234 . . . . . *1-7*, *1-11*, *1-15*

https://truckmanualshub.com/

141236 . . . . . 1-7, 1-19
141238 . . . . . 1-7, 1-19
141241 1-43
141242 1-43
141243 1-30
141244 . . . . . 1-3, 1-5, 1-112, 1-115
141245 1-45
141246 1-30
141247 1-30
141249 1-30
141250 1-35
141252 1-30
141253 1-30
141254 1-30
141255 1-30
141256 1-30
141257 1-45
141258 1-45
141259 1-121
141260 1-121
141262 . . . . . 1-37, 1-121
141263 . . . . . 1-43, 1-121
141266 . . . . . 1-3, 1-5
141269 . . . . . 1-3, 1-5, 1-101, 1-103, 1-115
141271 1-45
141274 1-112
141275 . . . . . 1-48, 1-75, 1-79, 1-112
141301 . . . . . 1-116, 1-117
141434 1-30
141574 1-101
141576 1-101
141577 1-101
141578 1-101
141579 1-101
141580 1-101
141594 1-112
141597 1-121
141776 1-30
141777 1-30
141807 1-30
141808 1-45
141809 . . . . . 1-7, 1-19
141826 . . . . . 1-112, 1-115
141827 1-43
141828 . . . . . 1-43, 1-75, 1-79, 1-95, 1-112
141854 . . . . . 1-75, 1-79, 1-113, 1-115
141861 1-43
141865 . . . . . 1-43, 1-95, 1-112
141868 1-95
141881 1-113
142103 1-117
142109 1-116
142110 . . . . . 1-116, 1-117
142111 1-116
142112 . . . . . 1-116, 1-117
142113 1-119
142114 1-116
142116 1-117
142119 1-119
142120 1-119
142189 1-35
142190 1-35
142191 1-35
142192 1-35
142193 1-35
142194 1-35
142581 1-56
142643 1-30
142645 . . . . . 1-30, 1-41
142646 . . . . . 1-30, 1-43
142656 1-112
142668 1-95
142669 1-95
142670 1-95
142671 1-95
142753 . . . . . 1-3, 1-5

https://truckmanualshub.com/

142803 . . . . . *1-118*
142806 . . . . . *1-118*
142807 . . . . . *1-118*
143067 . . . . . *1-7*, *1-19*
143871 . . . . . *1-95*
143988 . . . . . *1-48*
143994 . . . . . *1-116*, *1-117*
144048 . . . . . *1-39*
144115 . . . . . *1-3*, *1-5*
144155 . . . . . *1-47*
144193 . . . . . *1-121*
144198 . . . . . *1-45*
144199 . . . . . *1-45*
144200 . . . . . *1-45*
144342 . . . . . *1-113*
144343 . . . . . *1-112*
147123 . . . . . *1-112*
147553 . . . . . *1-7*, *1-19*
147582 . . . . . *1-112*, *1-115*
147584 . . . . . *1-113*, *1-115*
147586 . . . . . *1-113*
148337 . . . . . *1-81*
148338 . . . . . *1-95*
1-510-010001 . . . . . *1-75*, *1-78*
1-511-010002-11 . . . . . *1-75*, *1-78*, *1-85*, *1-87*
1-512-010005-01 . . . . . *1-3*, *1-5*, *1-30*, *1-101*, *1-103*
1-512-010005-03 . . . . . *1-30*, *1-39*, *1-95*
1-512-010005-05 . *1-7*, *1-11*, *1-15*, *1-31*, *1-43*, *1-47*, *1-95*, *1-112*
1-512-010005-09 *1-3*, *1-5*, *1-7*, *1-11*, *1-15*, *1-23*, *1-31*, *1-43*, *1-47*, *1-75*, *1-78*, *1-83*, *1-85*, *1-87*, *1-95*, *1-101*, *1-112*, *1-115*
1-512-010005-13 . . *1-3*, *1-5*, *1-30*, *1-41*, *1-81*, *1-89*, *1-91*, *1-95*, *1-115*
1-512-010005-15 *1-3*, *1-5*, *1-7*, *1-11*, *1-15*, *1-19*, *1-23*, *1-30*, *1-47*, *1-71*, *1-75*, *1-78*, *1-83*, *1-85*, *1-87*, *1-93*, *1-95*
1-512-010005-19 *1-3*, *1-5*, *1-7*, *1-11*, *1-15*, *1-30*, *1-45*, *1-71*, *1-75*, *1-78*, *1-83*, *1-85*, *1-87*
1-512-010007-02 . . . . . *1-101*
1-512-010007-07 . . . . . *1-30*
1-512-010007-11 . . . . . *1-30*
1-512-010007-14 . . . . . *1-71*, *1-75*, *1-78*, *1-83*, *1-87*
1-512-010007-16 . . . . . *1-45*
1-512-010008-12 . . . . . *1-31*
151548 . . . . . *1-52*, *1-56*, *1-60*, *1-64*, *1-68*
1-516-010001-20 . . . . . *1-7*, *1-19*, *1-25*, *1-27*
152209 . . . . . *1-71*, *1-75*, *1-79*, *1-83*, *1-85*, *1-87*
152210 . . . . . *1-71*, *1-83*, *1-87*
153620 . . . . . *1-112*
153636 . . . . . *1-52*, *1-56*, *1-60*, *1-64*
153637 . . . . . *1-52*, *1-56*, *1-60*, *1-64*
153640 . . . . . *1-60*
153641 . . . . . *1-60*
153642 . . . . . *1-60*
153643 . . . . . *1-60*
153649 . . . . . *1-47*
153650 . . . . . *1-47*
153651 . . . . . *1-47*
153652 . . . . . *1-48*
153667 . . . . . *1-68*
153668 . . . . . *1-68*
153669 . . . . . *1-68*
153670 . . . . . *1-68*
153671 . . . . . *1-64*, *1-68*
153672 . . . . . *1-64*, *1-68*
153673 . . . . . *1-64*, *1-68*
153674 . . . . . *1-64*, *1-68*
153691 . . . . . *1-3*, *1-115*
153696 . . . . . *1-30*
153698 . . . . . *1-52*, *1-56*, *1-60*, *1-64*, *1-68*
153699 . . . . . *1-52*, *1-56*, *1-60*, *1-64*, *1-68*
153700 . . . . . *1-52*, *1-64*, *1-68*
153701 . . . . . *1-56*
153702 . . . . . *1-68*
153703 . . . . . *1-56*, *1-68*
153704 . . . . . *1-60*
153706 . . . . . *1-60*

https://truckmanualshub.com/

153709 1-48
153710 1-60
153711 1-60
153713 . . . . . 1-52, 1-56, 1-60, 1-64, 1-68
153716 1-81
153717 1-3
153803 1-17
153804 . . . . . 1-8, 1-11, 1-15, 1-19, 1-23
153842 1-112
153843 1-112
154185 1-81
154186 1-81
154336 1-101
154392 . . . . . 1-71, 1-74, 1-78, 1-83, 1-85, 1-87
154393 1-81
154417 . . . . . 1-5, 1-71
154418 . . . . . 1-5, 1-71
154658 1-81
154659 1-81
154661 1-68
154662 . . . . . 1-64, 1-68
154663 . . . . . 1-52, 1-64, 1-68
154667 1-5
154668 1-47
154674 . . . . . 1-101, 1-103
154675 . . . . . 1-101, 1-103
154677 1-71
154678 1-71
154679 1-71
154681 1-71
154686 . . . . . 1-71, 1-74, 1-81
154687 . . . . . 1-71, 1-74, 1-81
154691 1-81
154692 1-81
154748P 1-71, 1-74, 1-78
155520 1-81
155523 1-121
155528 1-112
155529 1-112
155530 1-43
155544 1-81
155545 . . . . . 1-71, 1-74, 1-81
155594 1-81
155600 1-121
155617 . . . . . 1-48, 1-52, 1-56, 1-60, 1-64, 1-68
155618 . . . . . 1-48, 1-52, 1-56, 1-60, 1-64, 1-68
155619 . . . . . 1-48, 1-52, 1-56, 1-60, 1-64, 1-68
1-557-010013 . . . . . 1-3, 1-5, 1-93
1-557-010362-40 1-45
1-557-010362-51 . . . . . 1-7, 1-19, 1-25, 1-27
1-557-010403 . . . . . 1-43, 1-112
156072 1-5
156082 1-60
156083 1-60
156084 . . . . . 1-56, 1-68
156119 1-115
156120 1-115
156124 1-81
156125 . . . . . 1-71, 1-74, 1-78, 1-81
156166 1-56
156167 1-56
156168 1-56
156169 1-56
156921 1-56
156922 1-56
156944 1-112
156945 . . . . . 1-112, 1-115
156950 1-30
156953 . . . . . 1-71, 1-74, 1-78, 1-93
156954 1-93
156955 1-93
156956 1-93
156957 1-93
156970 . . . . . 1-101, 1-103
156971 . . . . . 1-101, 1-103
156972 . . . . . 1-11, 1-15, 1-23, 1-25

156973 . . . . . 1-25, 1-27
156974 1-25
156979 . . . . . 1-25, 1-27
156991 1-15
156992 . . . . . 1-8, 1-11, 1-15, 1-19, 1-23
157000 1-15
157001 1-15
157002 1-15
157013 . . . . . 1-19, 1-23
157014 . . . . . 1-19, 1-23
157019 . . . . . 1-7, 1-11, 1-19, 1-23
1-573-010006 1-121
157648 1-103
158737 1-3
158738 1-5
158749 1-3
158750 1-3
158751 1-3
158752 1-3
158753 . . . . . 1-3, 1-5
158754 . . . . . 1-3, 1-5
158755 1-5
158777 1-121
158778 1-30
158795 . . . . . 1-71, 1-75, 1-79, 1-83, 1-87
158841 1-5
158843 1-17
158844 . . . . . 1-7, 1-11, 1-15, 1-17
158847 . . . . . 1-71, 1-74, 1-78
158850 1-3
158896 . . . . . 1-71, 1-83, 1-87
158897 . . . . . 1-71, 1-83, 1-87
158898 . . . . . 1-48, 1-52, 1-56, 1-60, 1-64, 1-68
158901 . . . . . 1-52, 1-56, 1-60, 1-64
158902 . . . . . 1-52, 1-56, 1-60, 1-64
158903 . . . . . 1-7, 1-11, 1-19, 1-23
158904 1-15
158911 1-15
159557 1-17
159954 . . . . . 1-19, 1-23
159955 . . . . . 1-19, 1-23
159970 . . . . . 1-25, 1-27
15G816ER 1-8, 1-11, 1-16, 1-19, 1-23
160597 . . . . . 1-7, 1-11, 1-19, 1-23
161530 . . . . . 1-48, 1-52, 1-56, 1-60, 1-64, 1-68
161550 1-33
162569 . . . . . 1-75, 1-79
1-630-010021-03 1-39
163715 1-121
164138 1-103
164142 . . . . . 1-101, 1-103
164378 1-81
164563 1-15
1-647-010004217 1-37
1-647-010004236 1-71, 1-75, 1-78, 1-83, 1-85, 1-87
1-647-010004240 . 1-3, 1-5, 1-30, 1-41, 1-43, 1-112, 1-115
1-647-010004257 . . . . . 1-45, 1-47
165127 . . . . . 1-71, 1-78, 1-81
165226 1-81
165235 1-15
165236 . . . . . 1-11, 1-15, 1-23
165257 1-31
165258 1-39
165259 1-39
165260 1-39
165265 1-31
1-654-010032-05 . . . . . 1-3, 1-5, 1-81
1-654-010032-09 1-47
1-654-010047-04 . . . . . 1-37, 1-101, 1-103
1-654-010047-06 . . . . . 1-3, 1-5, 1-30
1-654-010047-07 . . . . . 1-101, 1-103
1-654-010047-08 1-103
1-654-010049-05 1-95
1-654-010049-19 1-31
1-654-010051-06 . . . . . 1-7, 1-11, 1-15, 1-31

https://truckmanualshub.com/

1-654-010051-07 . . . . . *1-75*, *1-78*
1-654-010051-08 . . . . . *1-47*, *1-112*
1-654-010051-09 . . . . . *1-43*
1-654-010051-11 . . . . . *1-31*, *1-95*
1-654-010051-13 . . . . . *1-31*, *1-43*
1-654-010055-02 . . . . . *1-95*
1-654-010055-03 . . . . . *1-75*, *1-78*
1-654-010055-05 . *1-43*, *1-47*, *1-75*, *1-78*, *1-85*, *1-87*
1-654-010055-11 *1-7*, *1-11*, *1-15*, *1-75*, *1-78*, *1-112*, *1-115*
1-654-010055-15 . . . . . *1-11*, *1-15*, *1-23*
1-654-010055-16 . . . . . *1-83*, *1-85*, *1-87*
1-654-010055-20 . . . . . *1-3*, *1-5*
1-654-010055-22 . . . . . *1-101*
1-654-010059-07 . . . . . *1-31*
1-654-010059-09 . . . . . *1-30*
1-654-010059-11 . . . . . *1-41*
1-654-010061-05 . . *1-7*, *1-11*, *1-15*, *1-19*, *1-23*, *1-95*
1-654-010061-06 . . . . . *1-5*, *1-71*
1-654-010061-13 . . . . . *1-93*
1-654-010061-16 . . . . . *1-95*
1-654-010061-19 . . . . . *1-30*
1-654-010061-21 . . . . . *1-95*
1-654-010061-23 . . . . . *1-95*
1-654-010065-13 . . . . . *1-7*, *1-11*, *1-15*, *1-30*
1-654-010070-02 . . . . . *1-47*
1-654-010070-03 . . . . . *1-75*, *1-78*, *1-89*, *1-91*
1-654-010070-04 . . . . . *1-47*
1-654-010080-2 . . . . . *1-17*
1-654-010087-16 . . . . . *1-31*
1-654-010125-22 . . . . . *1-31*
1-659-010004 . . . . . *1-45*
166717 . . . . . *1-39*
166718 . . . . . *1-47*
168859 . . . . . *1-25*, *1-27*
170232 . . . . . *1-3*
170233 . . . . . *1-3*
170249 . . . . . *1-52*
170250 . . . . . *1-52*
170251 . . . . . *1-52*
170252 . . . . . *1-52*
170256 . . . . . *1-19*
170257 . . . . . *1-19*
171010 . . . . . *1-11*, *1-23*
171011 . . . . . *1-11*, *1-23*
171018 . . . . . *1-71*
171024 . . . . . *1-8*, *1-11*, *1-15*, *1-19*, *1-23*
171025 . . . . . *1-3*, *1-5*
171026 . . . . . *1-3*, *1-5*
171036 . . . . . *1-71*, *1-74*, *1-81*
171037 . . . . . *1-81*
171039 . . . . . *1-81*
171063 . . . . . *1-7*, *1-11*, *1-15*
171065 . . . . . *1-15*
171068 . . . . . *1-23*
171070 . . . . . *1-7*, *1-11*, *1-19*, *1-23*
171074 . . . . . *1-75*, *1-79*
171076 . . . . . *1-75*, *1-79*, *1-96*
171078 . . . . . *1-96*
171080 . . . . . *1-96*, *1-97*, *1-98*
171081 . . . . . *1-96*, *1-97*, *1-98*
171085 . . . . . *1-7*, *1-11*
171086 . . . . . *1-7*, *1-11*
171087 . . . . . *1-15*
171088 . . . . . *1-15*
171089 . . . . . *1-5*
171092 . . . . . *1-71*
172076 . . . . . *1-48*, *1-52*, *1-56*, *1-60*, *1-64*, *1-68*
172509 . . . . . *1-89*, *1-91*
172884 . . . . . *1-71*, *1-75*, *1-78*
172959 . . . . . *1-11*
172960 . . . . . *1-15*
172961 . . . . . *1-11*
172962 . . . . . *1-7*, *1-19*, *1-23*
172972 . . . . . *1-74*, *1-78*
172973 . . . . . *1-75*, *1-79*

172974 . . . . . 1-75, 1-79
172976 . . . . . 1-75, 1-79
172977 . . . . . 1-75, 1-79
172978 . . . . . 1-74, 1-78
172979 1-74
172980 1-78
172981 . . . . . 1-74, 1-78
172984 1-74
172985 1-74
172986 1-74
172987 1-74
172988 1-78
172992 . . . . . 1-75, 1-79
172998 1-74
172999 1-74
173000 1-74
173025 1-74
173026 1-74
173027 1-74
173028 1-74
173029 1-78
173033 1-95
173035 1-95
173036 1-95
173038 1-95
173044 1-30
174435 1-103
174436 1-103
174437 1-103
174438 1-103
174439 1-103
174526 . . . . . 1-89, 1-91
174532 . . . . . 1-89, 1-91
174695 1-31
174708 1-39
174709 1-39
174710 1-39
174721 1-43
174727 1-95
174728 . . . . . 1-31, 1-39
176634 1-91
176635 1-89
176636 . . . . . 1-89, 1-91
176637 . . . . . 1-89, 1-91
176638 1-89
177030 1-33
177032 1-33
177034 1-103
180140 1-47
180141 1-47
184706 1-7
184707 . . . . . 1-19, 1-23
184708 . . . . . 1-8, 1-20
184709 . . . . . 1-8, 1-20
18530 . . . . . 1-74, 1-78
185660 1-112
185757 . . . . . 1-89, 1-91
186100 . . . . . 1-48, 1-52, 1-56, 1-60, 1-64, 1-68
186101 . . . . . 1-48, 1-52, 1-56, 1-60, 1-64, 1-68
1-861-010004 1-45
1-861-010005 . . . . . 1-25, 1-27
1-861-010032-07 . . . . . 1-3, 1-5
1-861-010032-11 . . . . . 1-31, 1-43, 1-48
1-861-010032-14 . . . . . 1-7, 1-11, 1-15, 1-47
1-861-010032-20 1-95
1-861-010032-21 1-93
1-861-010032-24 . . . 1-3, 1-5, 1-30, 1-41, 1-43, 1-45
1-861-010032-32 . . . . . 1-36, 1-41
1-861-010034-09 1-37
1-861-010034-13 . . . . . 1-75, 1-78, 1-85, 1-87
1-861-010034-17 . . . . . 1-47, 1-81, 1-89, 1-91
1-861-010034-21 . . . . . 1-71, 1-81, 1-83, 1-87
188530 . . . . . 1-85, 1-87
189451 1-33
189453 1-33
189454 1-33

https://truckmanualshub.com/

189468 1-33
190955 1-89
190956 1-89
190957 1-89
190958 1-89
190959 1-89
190960 1-89
191487 . . . . . 1-83, 1-85, 1-87
191498 . . . . . 1-19, 1-23
191499 . . . . . 1-19, 1-23
191924 . . . . . 1-74, 1-78, 1-85, 1-87
191925 . . . . . 1-74, 1-78, 1-85, 1-87
191949 1-83
191950 1-83
191951 1-83
191952 1-83
191953 1-87
191998 1-91
192890 . . . . . 1-11, 1-15, 1-20, 1-23
193102 1-85
193106 1-87
198320 . . . . . 1-75, 1-79, 1-85, 1-87
198322 . . . . . 1-8, 1-20, 1-23
198323 . . . . . 1-11, 1-16
198338 1-15
198339 . . . . . 1-11, 1-15
198342 . . . . . 1-7, 1-19, 1-23
198343 1-23
198344 . . . . . 1-11, 1-23
198345 1-23
198352 1-31
1P444 . . . . . 1-74, 1-78, 1-85, 1-87
200129 . . . . . 1-8, 1-11, 1-16, 1-19, 1-23
200218 . . . . . 1-89, 1-91
200221 . . . . . 1-89, 1-91
200222 . . . . . 1-89, 1-91
200259 . . . . . 1-89, 1-91
200310 . . . . . 1-7, 1-19, 1-23
200311 . . . . . 1-11, 1-15
202702-6-6S 1-75, 1-79
202702-8-6S 1-75, 1-79
202702-8-8S 1-43, 1-112, 1-115
203525 . . . . . 1-83, 1-85, 1-87
204385 . . . . . 1-7, 1-19
204400 . . . . . 1-89, 1-91
204412 1-89
204413 1-89
204416 1-89
204417 1-89
204418 1-89
204419 . . . . . 1-87, 1-89
204422 1-89
204423 1-89
204424 1-89
204425 . . . . . 1-87, 1-89
204427 . . . . . 1-87, 1-91
204505 . . . . . 1-83, 1-85, 1-87
204510 . . . . . 1-83, 1-85, 1-87
204511 . . . . . 1-83, 1-85, 1-87
2-054-010461 1-101
2061-6-6S 1-75, 1-79
2062-6-6S 1-75, 1-79
2062-8-6S 1-75, 1-79
2062-8-8S 1-112, 1-115
206598 . . . . . 1-75, 1-79, 1-97
206599 1-97
206652 . . . . . 1-75, 1-85, 1-87
206671 . . . . . 1-85, 1-87, 1-98
206673 1-98
206675 . . . . . 1-75, 1-78
2-073-010012 . . . . . 1-30, 1-41, 1-43
2-102-010032 . . . . . 1-101, 1-103
2-102-010037 1-5
212046 . . . . . 1-8, 1-11, 1-16, 1-19, 1-23
2-150-010008 . . . . . 1-3, 1-5, 1-8, 1-11, 1-15, 1-30
215341 . . . . . 1-8, 1-12, 1-16, 1-20, 1-23

https://truckmanualshub.com/

215351 1-15
215352 1-15
2-181-010001 . . . 1-31, 1-43, 1-48, 1-75, 1-79, 1-112
223435 1-27
223437 1-27
223438 1-27
223439 1-27
223440 . . . . . 1-11, 1-15, 1-23, 1-27
23085 . . . . . 1-45, 1-47
2-368-010273 1-101
2-368-010287 . . . . . 1-101, 1-103
2-375-010601 1-30
2-375-010602 1-30
2-474-010022 . . . . . 1-75, 1-79, 1-112, 1-115
2-557-010409 . . . . . 1-3, 1-5, 1-93
2-557-010426 1-35
2-573-010037 1-121
2-573-010149 . . . . . 1-112, 1-121
2-573-010150 . . . . . 1-112, 1-121
2-573-010198 1-121
2-573-010330-02 1-121
2-573-010330-03 . . . . . 1-43, 1-121
2-654-010097 1-17
3-375-010371 1-95
4001060 . . . . . 1-25, 1-27
5000 . . . . . 1-25, 1-27, 1-47
500171 1-35
528933 . . . . . 1-101, 1-103, 1-121
528934 . . . . . 1-95, 1-101, 1-103, 1-121
528938 . . . . . 1-101, 1-103, 1-121
6-102-010009 1-81
70239854 . . . . . 1-3, 1-5
70260977 . . . . . 1-101, 1-103
71500165 . . . . . 1-74, 1-78
71508984 1-112
71508985 1-112
71509004 . . . . . 1-74, 1-78
71509006 1-74
71509008 1-78
71509010 1-74
71509123 1-74
71509125 1-74
71509382 1-113
71509788 . . . . . 1-74, 1-78
71600529 1-78
7779-34 . . . . . 1-74, 1-78
7779-54 1-74
7779-78 . . . . . 1-74, 1-78
7779-90 . . . . . 1-74, 1-78
8-102-010012 . . . . . 1-89, 1-91
8-105-010003 1-45
8-573-010084 1-121

C

CO-975-74-2000 1-95

T

TR416 . . . . . 1-7, 1-19, 1-23
TR575 . . . . . 1-7, 1-11, 1-15, 1-19, 1-23

https://truckmanualshub.com/

Document Control Revision Log:

Date	Revision	End Item #	Improvement(s) Description and Comments
04/29/10	F-562-0410	New	Initial Release
11/07/18	F-562-1118	Update	Walking beam revision, Galaxy Tire/Wheel revision
02/22/19	F-587-0219	Update	Reel updates, cylinder and other revisions for Dealer Portal
04/17/20	F-587-0420	Update	Hub/Spindle and 24” disc gang Updates.l

https://truckmanualshub.com/

Equipment from Landoll Corporation is built to exacting standards ensured by ISO 9001 registration at all Landoll manufacturing facilities.

Model 7431

VT Plus
Parts Manual

Re-Order Part Number F-562-0420

LANDOLL CORPORATION
1900 North Street
Marysville, Kansas 66508
(785) 562-5381
800-428-5655 ~ WWW.LANDOLL.COM

Copyright 2010. Landoll Corporation
"All rights reserved, including the right to reproduce this material or portions thereof in any form."

Scan to go to www.landoll.com