https://truckmanualshub.com/

Operator's Manual

Do not remove this manual from the truck

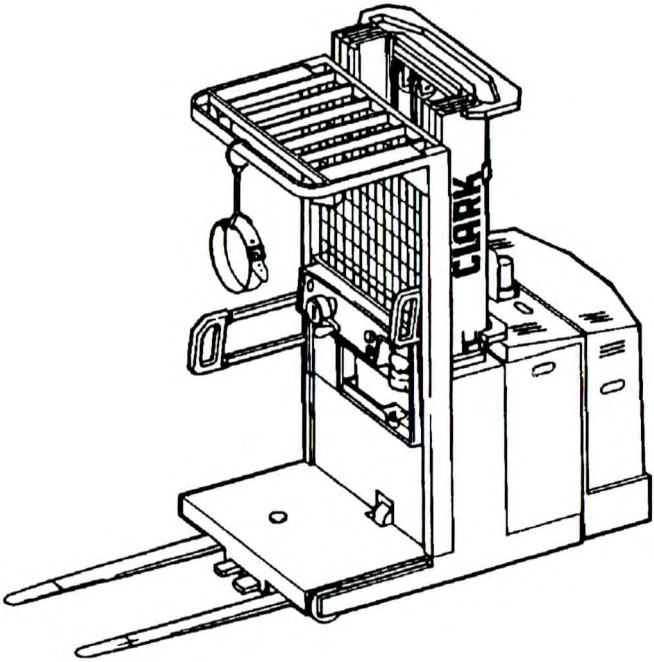

NOS-15

CLARK®

Book No. 2812984
OM-613 Rev. 1

https://truckmanualshub.com/

Record the following information pertaining to your truck.

Model No. _____

Serial No. _____

Customer Truck Identification No. _____

Truck Weight, Empty _____

Truck Rated Capacity _____

Truck Gross Weight _____

Truck Gross Weight, Loaded w/ Rated Load _____

Special Equipment or Attachments _____

IMPORTANT

Do not expose this manual to hot water or steam.

⚠ WARNING

California Proposition 65

This product contains and emits chemicals known to the State of California to cause cancer, birth defects and other reproductive harm.

https://truckmanualshub.com/

Operator's Manual

You must be trained and authorized to operate a lift truck.

YOU can prevent accidents

First: Learn safe operating rules and your company rules.

Next: Read your Operator's Manual. If you do not understand it, ask your supervisor for help.

Learn about the unit you operate.

KNOW YOUR TRUCK

Then: Practice operating your truck safely.

And: Keep your truck in safe operating condition with correct and timely maintenance.

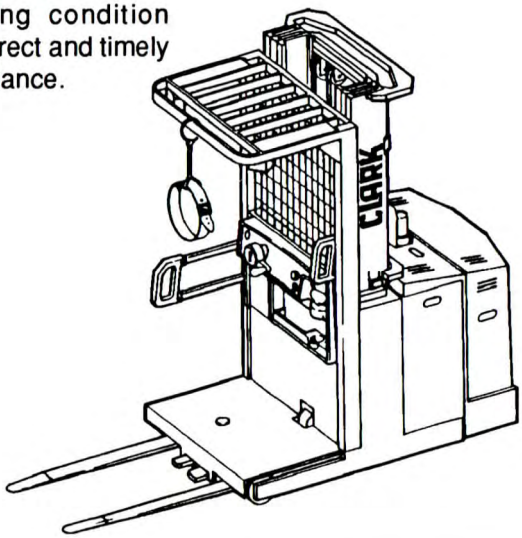

Breaking these rules will cause serious or fatal injury to yourself and others

https://truckmanualshub.com/

A Message to CLARK Lift Truck Operators

Order selector trucks are specialized machines with unique operating characteristics, designed to perform a specific job. Their function and operation is not like a car or ordinary truck. They require specific instructions and rules for safe operation and maintenance.

Safe operation of order selector trucks is of primary importance to CLARK. Our experience with order selector truck accidents has shown that when accidents happen and people are killed or injured, the causes are:

- **Operator not properly trained**
- **Operator not experienced with lift truck operation**
- **Basic safety rules not followed**
- **Lift truck not maintained in safe operating condition**

For these reasons, CLARK wants you to know about the safe operation and correct maintenance of your lift truck.

This manual is designed to help you operate your lift truck safely. This manual shows and tells you about safety inspections and the important general safety rules and hazards of order selector truck operation. It describes the special components and features of the truck and explains their functions. The correct operating procedures are shown and explained. Illustrations and important safety messages are included for clear understanding. A Section on maintenance and lubrication is included for the lift truck mechanic.

https://truckmanualshub.com/

The operator's manual is not a training manual. It is a guide to help trained and authorized operators safely operate their order selector truck by emphasizing and illustrating the correct procedures. However, it cannot cover every possible situation that may result in an accident. You must watch for hazards in your work areas and avoid or correct them. It is important that you know and understand the information in this manual and that you know and follow your company safety rules! Be sure that your equipment is maintained in a safe condition. Do not operate a damaged or malfunctioning truck. Practice safe operation every time you use your lift truck. Let's join together to set high standards in safety.

Remember, before you start operating this lift truck, be sure you understand all driving procedures. It is your responsibility, and it is important to you and your family, to operate your lift truck safely and efficiently. Be aware that the Federal Occupational Safety and Health Act (OSHA) and state laws require that operators be completely trained in the safe operation of lift trucks; it is also an (OSHA) requirement that a machine inspection be performed before every shift. If you think you need training in operating or inspecting your lift truck, ask your supervisor.

CLARK trucks are built to take hard work, but not abuse. They are built to be dependable, but they are only as safe and efficient as the operator and the persons responsible for maintaining them. Do not make any repairs to this truck unless you have been trained in safe lift truck repair procedures and are authorized by your employer.

https://truckmanualshub.com/

https://truckmanualshub.com/

Contents of this Manual

A Message to CLARK Lift Truck Operators ii

Introduction vi

How to Use this Manual viii

Safety Signs and Safety Messages x

Section 1. General Practices 1-1

Section 2. Know Your Truck 2-1

Section 3. Daily Safety Inspection 3-1

Section 4. Operating Procedures 4-1

Section 5. Planned Maintenance 5-1

Section 6. Specifications 6-1

https://truckmanualshub.com/

Introduction

CLARK welcomes you to the growing group of professionals who own, operate, and maintain CLARK lift trucks. We take pride in the long tradition of quality products and superior value the CLARK name represents. This manual familiarizes you with safety, operating, and maintenance information about your new lift truck. It has been specially prepared to help you use and maintain your CLARK truck in a safe and correct manner.

Your CLARK truck has been designed and built to be as safe and efficient as today's technology can make it. As manufactured, it meets all the applicable mandatory requirements of ANSI B56.1-1988 Safety Standard for Powered Industrial Trucks. Each truck is also furnished with equipment to help you operate safely; for example, load back rest, parking brake and horn are standard equipment.

Safe, productive operation of a order selector truck requires both skill and knowledge on the part of the operator. The operator must know, understand, and practice the safety rules and safe driving and load handling techniques described in this manual. To develop the skill required, the operator must become familiar with the construction and features of the order truck and how they function. The operator must understand its capabilities and limitations, and see that it is kept in a safe condition.

Routine Servicing and Maintenance

Regular maintenance and care of your order selector truck is not only important for economy and utilization reasons; it is essential for your safety. A faulty truck is a potential source of danger to the operator, and to other personnel working near it. As with all quality equipment, keep your truck in good operating condition by following the recommended schedule of maintenance.

https://truckmanualshub.com/

Operator Daily Inspection — Safety and Operating Checks

A order selector truck should always be examined by the operator, before driving, to be sure it is safe to operate. The importance of this procedure is emphasized in this manual with a brief illustrated review and later with more detailed instructions. CLARK dealers can supply copies of a helpful "Drivers Daily Checklist."

Planned Maintenance

In addition to the daily operator inspection, CLARK recommends that a planned maintenance and safety inspection program (PM) be performed by a trained and authorized mechanic on a regular basis. The PM will provide an opportunity to make a thorough inspection of the safety and operating condition of your lift truck. Necessary adjustments and repairs can be done during the PM, which will increase the life of components and reduce unscheduled downtime and increase safety. The PM can be scheduled to meet your particular application and lift truck usage.

The procedures for a periodic planned maintenance program that covers inspections, operational checks, cleaning, lubrication, and minor adjustments are outlined in this manual. Your CLARK dealer is prepared to help you with a Planned Maintenance Program by trained service personnel who know your lift truck and can keep it operating safely and efficiently.

https://truckmanualshub.com/

How to Use this Manual

This manual is a digest of essential information about the safe operation, the features and functions and explains how to maintain your lift truck. This manual is organized into eight major parts:

Section 1, General Practices, reviews and illustrates accepted practices for safe operation of a lift truck.

Section 2, Know Your Truck, describes the major operating components, systems, controls, and other features of your truck and tells how they function.

Section 3, Daily Safety Inspection, presents details on how to perform the operator's daily safety inspection.

Section 4, Operating Procedures, discusses specific instructions on the safe, efficient operation of your lift truck.

Section 5, Planned Maintenance, describes the PM program.

Section 6, Specifications, provides reference information and data on features, components, and maintenance items.

NOTICE: The descriptions and specifications included in this manual were in effect at the time of printing. CLARK Material Handling Company reserves the right to make improvements and changes in specifications or design, without notice and without incurring obligation. Please check with your authorized CLARK dealer for information on possible updates or revisions.

The examples, illustrations, and explanations in this manual should help you improve your skill and knowledge as a professional lift truck operator and take full advantage of the capabilities and safety features of your new lift truck.

The first Section of the manual is devoted to a review, with illustrations and brief messages, of general safety rules and the major operating hazards you can encounter while operating a lift truck. Next, you will find descriptions of the components of your specific lift truck model and how the instruments, gauges, and controls operate. Then, you will find a discussion of safe and efficient operating procedures, followed by instructions on how to tow a disabled lift truck. The later sections of the manual are devoted to maintenance and truck specifications.

Take time to carefully read the "Know Your Truck" section. By acquiring a good basic understanding of your truck's features, and how they function, you are better prepared to operate it both efficiently and safely.

In "Planned Maintenance," you will find essential information for correct servicing and periodic maintenance of your truck, including charts with recommended maintenance intervals and component capacities. Carefully follow these instructions and procedures.

Each major Section has its own table of contents, so that you can find the various topics more easily. If you cannot find a topic in the table of contents, check the index at the back of the manual.

We urge you to first carefully read the manual from cover to cover. Take time to read and understand the information on general safety rules and operating hazards. Acquaint yourself with the various procedures in this manual. Understand how all gauges, indicator lights, and controls function. Please contact your authorized CLARK dealer for the answers to any questions you may have about your lift truck's features, operation, or manuals.

Operate your lift truck safely; careful driving is your responsibility. Drive defensively and think about the safety of people who are working nearby. Know your truck's capabilities and limitations. Follow all instructions in this manual, including all IMPORTANT, CAUTION, WARNING, and DANGER messages to avoid damage to your lift truck or the possibility of any harm to yourself or others.

This manual is intended to be a permanently attached part of your lift truck. Keep it on the truck as a ready reference for anyone who may drive or service it. If the truck you operate is not equipped with a manual, ask your supervisor to obtain one and have it attached to the truck. And, remember, your CLARK dealer is pleased to answer any questions about the operation and maintenance of your lift truck and will provide you with additional information should you require it.

https://truckmanualshub.com/

Safety Signs and Safety Messages

Improper operation can cause accidents. Don't take chances with incorrect or damaged equipment. **Read** and **understand** the procedures for safe driving and maintenance outlined in this manual. Don't hesitate to ask for help. **Stay alert!** Follow safety rules, regulations, and procedures. Avoid accidents by recognizing dangerous procedures or situations before they occur. **Drive and work safely** and follow the safety signs and their messages on the truck and in this manual.

Safety signs and messages are placed in this manual and on the truck to provide instructions and identify specific areas where potential hazards exist and special precautions should be taken. Know and understand the meaning of these instructions, signs, and messages. Damage to the truck, death, or serious injury to you or other persons may result if these messages are not followed. If warning decals are damaged, they must be replaced. Contact your CLARK dealer for replacements.

NOTICE

This message is used when special information, instructions or identification are required relating to procedures, equipment, tools, pressures, capacities and other special data.

IMPORTANT

This message is used when special precautions should be taken to ensure a correct action or to avoid damage to or malfunction of the truck or a component.

CAUTION

This message is a reminder of safety practices that can result in personal injury if proper precautions are not taken.

WARNING

This message indicates a hazard exists that can result in injury or death if proper precautions are not taken.

DANGER

This message is used when an extreme hazard exists.

https://truckmanualshub.com/

General Practices

Contents

Daily Inspection 1-2
Do's and Don'ts 1-3
Operating Practices 1-4
Operator Responsibiltiy 1-5
Mounting and Dismounting Tips 1-5
Load Handling Practices 1-8
Pinch Points 1-10
Fork Safety 1-11

https://truckmanualshub.com/

Daily Inspection

At the beginning of each shift, inspect your truck and fill out a daily inspection sheet.

Check for damage and maintenance problems.

Have repairs made before you operate the truck.

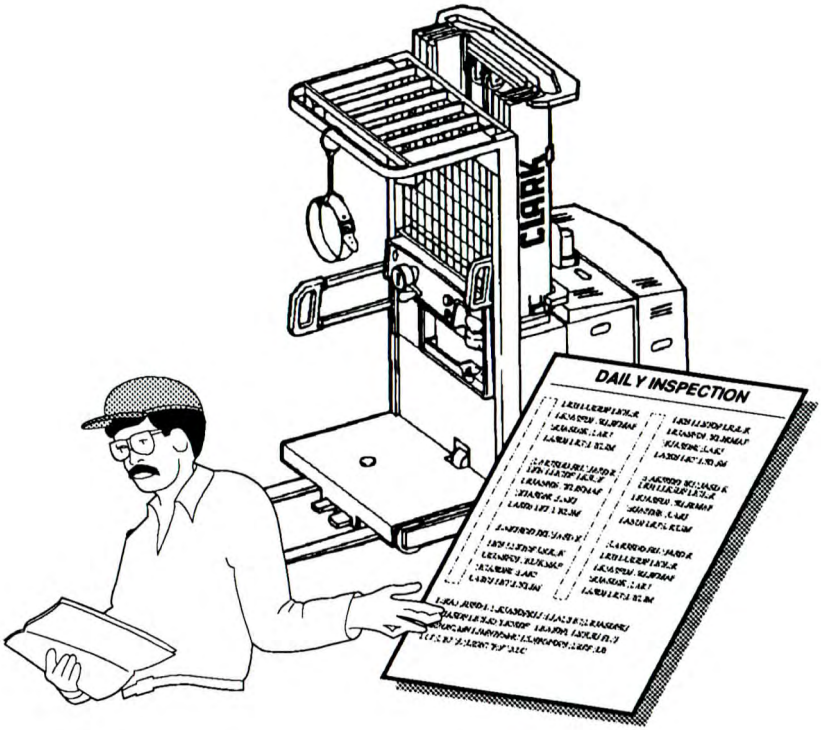

Do not make repairs yourself. Lift truck mechanics are trained professionals. They know how to make repairs safely.

https://truckmanualshub.com/

Do's and Don'ts

DON'T MIX DRUGS OR ALCOHOL WITH YOUR JOB.

DO WATCH FOR PEDESTRIANS

DON'T BLOCK SAFETY OR EMERGENCY EQUIPMENT

DO WEAR SAFETY EQUIPMENT WHEN REQUIRED

DON'T SMOKE IN "NO SMOKING" AREAS

https://truckmanualshub.com/

Operating Practices

WARNING

Your safety and the safety of those around you depends upon you, the operator, using care and careful judgement in the operation of this or any other material handling equipment. Know and understand the positions and functions of all controls before attempting to operate any material handling equipment.

Read this manual completely and make sure you understand all the controls and their functions. Make sure you understand the characteristics of speed, stability, brakes, speed limit switch and steering of this unit. If you have any questions contact your Local Authorized Clark Dealer.

The operating instructions in this guide do not replace any other rules or laws of safety that are used in or required by federal, state, local agencies or your own operational area. The operating rules listed do not follow any order of importance but are all to be learned and used in your daily operation. Make sure that your truck is correctly equipped for use in your work area according to these rules or laws.

WARNING

Always check all controls and functions in a safe area before starting to work. Always wear the safety lanyard (tether) and belt.

Operating Rules and Instructions

Operator Qualifications Trained and authorized operators only shall be permitted to operate any powered material handling trucks. Operators of powered industrial trucks shall be qualified as to their visual, auditory, physical and mental ability to operate the equipment.

Operator Training An operator's training program should center around the end user's company policies, operating conditions and trucks, as well as, any federal, state or local rules and laws. The program should be presented completely to all. Any new operators should be presented with this training program whether or not they have claimed previous experience.
If your company has questions as to the program content please refer to ASME B56.1 Section 4.19.4.

https://truckmanualshub.com/

Operator Responsibility

Powered material handling truck operators shall abide by the following rules and practices, which are clearly the operators responsibility and are not in any order of importance:

1. **Do Not** wear loose clothing, particularly cuffs and scarves or jewelry.
2. **Do Not** rush.
3. **Do Not** operate this unit with wet or greasy hands.
4. **No Riders**-passengers shall not be permitted to ride.
5. **Do Not** place any part of body between uprights of mast or outside running lines of any material handling truck.
6. **Do Not** allow anyone to stand or pass under any elevated portion of any
7. **At all times** safeguard the pedestrians. **Do Not** drive a truck up to anyone standing in front of any fixed object.
8. Know any hand signals used on this job and who has responsibility for signaling.
9. Anytime an operator is dismounted from truck, the forks and platform, whether loaded or empty, must be fully lowered. All controls should be in their neutral position and ensure brake has set to prevent movement. The key switch should be in the off position and the key removed so no unauthorized personnel can operate this order selector.
10. Know what, if any, safety equipment is required to operate this truck and use it. Hard hat, safety glasses, reflector-type vest, respirators and ear plugs may be some of the types of equipment required.

Mounting and Dismounting Tips

A. **Do Not** run.

B. The operator's compartment or platform should be maintained, free of debris at all times. The anti-skid material should be replaced before the material becomes smooth or worn away.

C. Never leave the truck unattended with the key on.

D. Always fully lower or secure all equipment before dismounting.

E. **Always** ensure brake has set and park in a clear, authorized area before leaving truck.

F. **Do Not** jump off truck.

https://truckmanualshub.com/

When a powered material handling industrial truck is to be left unattended:

A. Stop truck in a clear authorized area.

B. Lower platform and forks fully whether loaded or unloaded.

C. Place directional controls in neutral position.

D. Ensure brake has set.

E. Turn key switch to **"OFF"**, **remove** key and **disconnect** battery connectors.

F. **Never** park the order selector on any incline, if it is necessary you must block the wheels.

11. **Do Not** use this type of truck to stack if load is not unitized or can otherwise be displaced toward the operator.

When powered material handling industrial trucks are traveling:

1. **Obey and observe** all regulations concerning traffic and plant speed limits. Maintain a safe distance from pedestrians and equipment ahead, based on speed of travel.
2. **Always** wear safety lanyard (tether) and belt.
3. **Yield the right of way** to pedestrians and emergency equipment.
4. **Do Not** indulge in stunt driving or horseplay.
5. **Do Not** pass another truck traveling in the same direction at intersections, blind spots or other locations.
6. **Slow down** and sound the horn or other audible warning devices as you approach any cross aisles and other locations where vision is obstructed.
7. Keep a clear view of the path of travel and observe for traffic personnel and safe clearances.
8. **Grades, ramps or inclines:** This unit has been designed for smooth hard (level) floor operation. If it becomes necessary to operate on a grade, ramp or incline refer to ASME B56.1 for requirements. Also contact your Local Authorized Clark Dealer for additional information.
9. Always travel with forks as low as possible whether loaded or unloaded. Never elevate the forks except while in aisle to perform your standard work function.
10. Travel speeds should be determined by plant conditions that will allow the truck to be brought to a complete stop in a safe manner.

https://truckmanualshub.com/

11. **Starts, stops, turns or direction reversals** should be done in a smooth safe manner so as not to shift any of the load and/or overturn truck.
12. **Slow down** for any slippery and/or wet floors.
13. Always maintain a safe distance from the edge of docks and platforms when operating powered material handling industrial trucks.

CAUTION

Never use powered material handling trucks while on any elevated dock or platform to move freight cars.

14. Know your work area, especially but not limited to overhead objects such as lights, sprinkler, piping or ceiling mounted heating/A.C. units.
15. **Elevating Personnel:** This unit is approved for elevating the operator **only** with the use of a safety lanyard (tether) and belt.

DANGER

No other personnel should be elevated. No Riders.

16. Before driving over any bridgeplate, make sure that it has been properly secured. Drive carefully and slowly across the bridgeplate. Check its rated capacity and do not exceed it.
17. **Avoid** running into or over bumps, holes and loose material on the operating surface.
18. **While** negotiating turns, lower mast and platform, reduce speed, steer in a smooth motion. Leave adequate clearance for the forks/ load to swing.
19. **Report** any and all defects in unit noted during operation.
20. **Observe** instruments and gauges frequently to determine if they are operating properly.
21. **Do Not** permit riders on unit at any time.
22. **Carry** your load low so you have maximum stability while still maintaining ground clearance.
23. Know and understand the traffic flow patterns of your job.
24. Know and understand unit limitations and keep unit under control.

    NOTE: Rated capacity is on unit's data plate.
25. Do Not try to do too much too fast.

https://truckmanualshub.com/

Load Handling Practices

1. Only move and/or transport materials that are properly stacked, stable and secure on the pallet. Whenever handling off-center loads which are unable to be centered, operate with **extreme** caution.

WARNING

Do Not use this order selector for right angle stacking or any other stacking where the load could be displaced toward (fall onto) the operator.

2. If stacking is required of this unit contact your Local Authorized Clark Dealer in writing.
3. Handle only loads within the **rated capacity** of the unit, as stamped on data plate.

WARNING

Stability and maneuverability will be adversely affected if loads exceed the dimensions used to establish truck capacity.

4. When attachments are used, extra care should be taken in securing, manipulating, positioning and transporting the load. Operate trucks with attachments as partially loaded trucks when not handling a load.
5. Only lift load vertically, **never** push or drag horizontally.
6. Always travel with load as low as possible while still maintaining clearance, except when order selecting in aisles.

Operator Care of this Unit

The operator should check all of the following before and during operation:

1. Tires and wheels
2. Warning devices, horn, back-up alarm, speed reduction switch
3. Lights
4. Battery, battery connector conditions and battery retainer gates
5. Controllers, directional travel control and emergency disconnect
6. Lift systems including forks, cables, lift chains and limit switches
7. Braking and plugging
8. Steering mechanism

WARNING

If the unit is found to be in need of any repair, unsafe or contributes to an unsafe condition, the matter must be reported immediately to the designated authority. The unit must not be operated until it has been properly repaired to operating condition by an authorized serviceman.

WARNING

Injury or death could result if any limit switches are tampered with or bypassed. These switches were installed for your safety and the safety of others, injury or death could result.

9. **Do Not** make any repairs or adjustments unless specifically authorized to do so. Use only O.E.M. parts to repair unit.
10. **Always** wear safety eye protection when checking electrolyte level battery.
11. **Do Not** use open flames when checking electrolyte level in battery.
12. **Do Not** adjust unit while any parts are in motion.
13. **Always** use extreme caution in removing drain plugs, grease fittings or pressure caps.
14. **Do Not** smoke while working around truck.
15. Have a trained and authorized mechanic make a necessary repairs. **Do Not** attempt any repairs you do not understand.

The professional operator should also become familiar with information for the American National Safety Standard for Powered Industrial Trucks ASME B56.1 Section "For the User". This book can be requested from:

ASME
22 Law Drive
P.O. Box 2300
Fairfield, NJ 07007-2300

WARNING

As overall lift height increases, the lift capacity (weight) may be reduced. When figuring capacity on the NOS order selector you must add the weight of the operator, pallet, box or cart to the weight of the load.

https://truckmanualshub.com/

Pinch Points

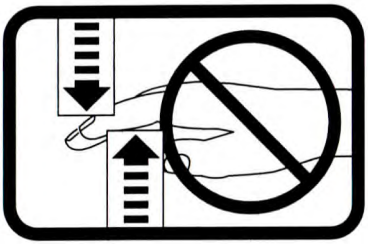

Keep hands, feet and legs out of upright.

Do not use the upright as a ladder.

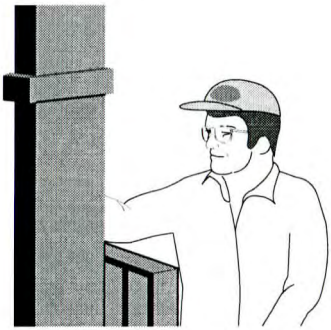

Never try to repair the upright, carriage, chain, or attachments yourself.

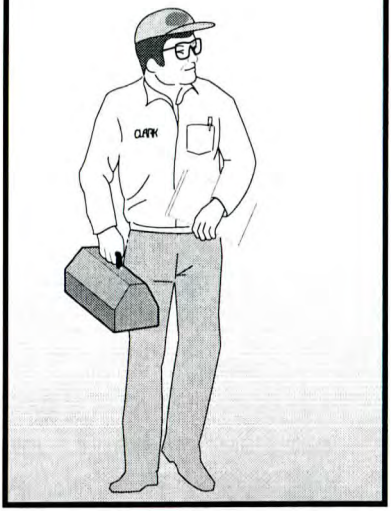

Always get a trained mechanic.

https://truckmanualshub.com/

Fork Safety

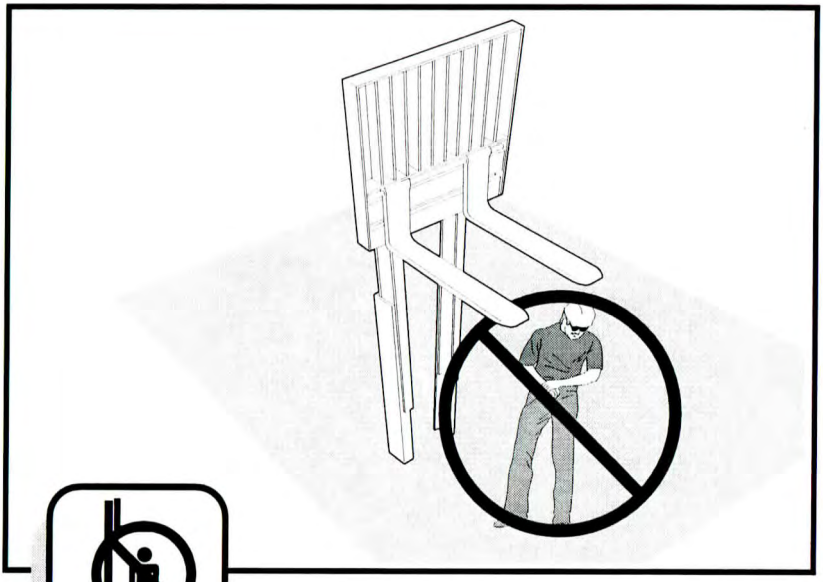

DANGER

Never allow anyone to walk under raised platform or forks.

https://truckmanualshub.com/

https://truckmanualshub.com/

Know Your Truck

Contents

Truck Data and Capacity Plate 2-2
Safety Warning Decals 2-3
Operating Controls and Functions 2-5

https://truckmanualshub.com/

Truck Data and Capacity Plate

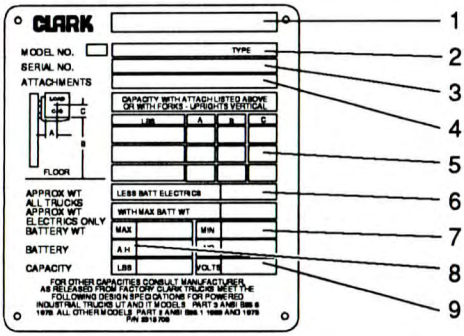

IMPORTANT

Know and understand the meaning of the data on your truck's nameplate.

1. Truck registered name.
2. Type designation. These code letters signify the type of construction with safeguards against fire, explosion, or electrical shock hazards for operation in nonclassified and classified areas. Check with the proper authority before entering areas where flammable or explosive material may be present.
3. Truck serial number and model number. Use these numbers when requesting information or ordering parts from an authorized CLARK dealer. The serial number is also stamped on the frame.
4. Attachment description (if any installed). The user must see that the truck is marked to identify the attachment(s), including the weight of the truck/attachment combination and truck capacity with the attachment.

IMPORTANT

When attachments are added or if the truck is modified, the capacity of the truck may be affected. Contact your authorized CLARK dealer for new nameplate showing the revised capacity.

5. Capacity rating, load center, and lifting height data. This shows the maximum load capacity of this truck with relation to load centers and fork heights. (See diagram on plate.) Personal injury and damage to the truck can occur if these capacities are exceeded. DO NOT EXCEED MAXIMUM SPECIFIED.
6. Truck weight, less load.
7. Battery weight.
8. Battery ampere-hour rating.
9. System voltage.

https://truckmanualshub.com/

Safety Warning Decal

The operator's warning decal contains basic instructions for safe operation of a lift truck. Read and understand these instructions and other safety messages in this manual and on the lift truck.

⚠ WARNING

BEFORE OPERATING lift truck operator must:
- Be trained and authorized.
- Read and understand operator's manual.
- Not operate a fualty lift truck.
- Not repair lift truck unless trained and authorized.

DURING OPERATION, lift truck operator must:
- Operate on a level surface only.
- Keep all body parts inside the truck.
- Not operate truck with wet or greasy hands or shoes.
- Never carry passenger or lift people.
- Keep truck away from people and obstructions.
- Avoid uneven or slippery surfaces and loose material.
- Slow down before turning.
- Do not exceed floor weights or limits.
- Enter confined areas with load end first. Be very careful when operating in confined areas to avoid being pinned.

Operating Warnings:

A. Data Plate - The Data Plate is located on the operators platform below the control console. This plate provides the truck identification and capacity information.

B. Warning Decal - The Operator Warning Decal is located on the operators manual box. This decal instructs the operator to "Read Operator's Guide".

C. Caution Decal - This decal is located on the left side front (facing mast) of the overhead guard. This decal instructs the operator to "Wear Safety Belt".

D. Caution Decal - This decal is located on the right side front (facing mast) of the overhead guard. This decal instructs the operator to keep entire body within dimensions of the platform and watch all clearances front, back, sides and overhead.

E. No Riding Decal - The No Riding Decal is located on the battery cover. This decal instructs the operator that no other personnel should be riding on the NOS-15.

F. Warning Decal - The Pinch Point Decal is located on both sides of the mast cross members and on side gates. This decal instructs the operator to keep fingers away.

https://truckmanualshub.com/

G. Warning Decal - This decal is located on the primary hydraulic lift cylinder. This decal instructs everyone not to stand on or under the truck platform or forks.

IMPORTANT

Replace any decal that is damaged, missing or cannot be read. If a decal is on a part that is replaced, make sure you install a new decal on the new part. See your Local Authorized Clark Dealer for new decals.

Do Not operate this unit unless all factory installed guards and shields are properly secured in place.

Read and observe all warnings on this unit before operating it.

Upright Warning Decal

This safety decal is placed on the upright to warn of the danger of injury from movement between rails, chains, sheaves, fork carriage, and other parts of the upright assembly. Do not climb on or reach into the upright. Personal injury will result if any part of your body is put between moving parts of the upright.

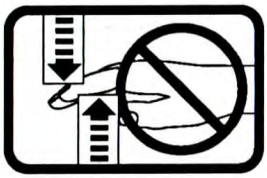

Keep Away from Forks Decal

This safety decal is placed on the upright to warn of the danger of injury from forks when they are in the raised position. Do not ride on or stand under forks or attachments. The forks can fall and cause injury or death. Always make sure that the forks are in the fully lowered position when they are not being used to handle a load.

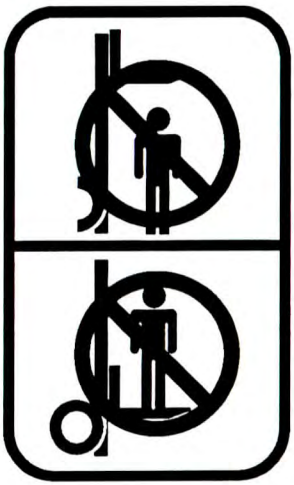

https://truckmanualshub.com/

OPERATING CONTROLS & FUNCTIONS

NOS-15 Order Selector

The NOS-15 as shown below has been designed to elevate the operator so he or she may pick or install items in storage without removing the entire stock or pallet.

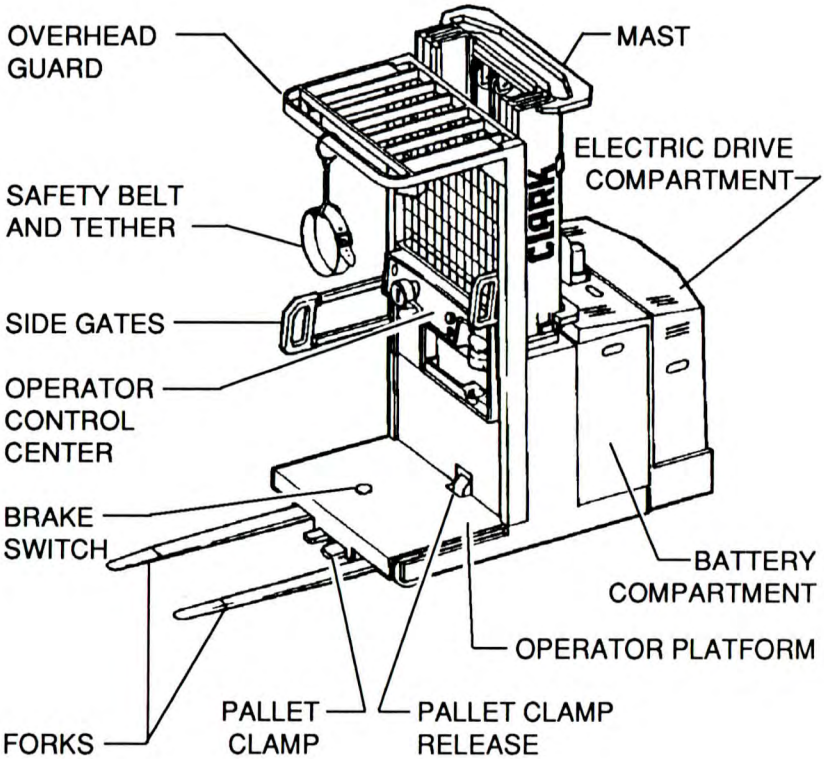

Before we explain the individual control functions of this unit, let's point out the various features:

Mast Upright

The mast upright is the lifting device for the operator's platform and forks. The lifting is done by hydraulic lift cylinders and chains.

Operator's Platform & Control Center

Provides a stable working platform from which the operator can control the NOS-15. The platform itself has its own key areas.

https://truckmanualshub.com/

Overhead Guard
Primarily used for operator's protection, also has the operator's safety lanyard (tether) and belt mounted to it.

Adjustable Forks
Easily adjusted to differing pallets or containers.

WARNING

Do not use this type of truck to stack if the load is not unitized or can otherwise be displaced toward (fall onto) the operator. If an order selector is used to stack loads, truck should be equipped with means to limit intrusions, i.e. load backrest.

Pallet Clamp With Centering Device
This item will keep the load centered as well as hold pallets secure. The pallet clamp is easily released by using the recessed pedal.

Deadman Brake Pedal
The pedal switch is conveniently located on the floor of the operator's platform. When the operator steps on the pedal switch, it will release the brake and energize the traction system. Anytime the operator removes his or her foot from the pedal switch the brake will fully apply and de-energize the traction system.

CAUTION

The brake is either fully applied or fully released, this could cause the order selector to stop abruptly. See the instructions on manually releasing the brake in case of an emergency.

Operator Fold Up Side Gates
Easily fold up so the operator can pick from either side of the truck.

Battery Compartment
The compartment is designed for easy battery removal and installation by the use of rollers mounted in the battery tray. The battery retainers are adjustable for different battery sizes (length). The battery compartment has a hinged cover with an up position latch

https://truckmanualshub.com/

Operator Control Console
This console houses many of the operational features of the NOS-15, including the Multi-Function Control Handle, Steering Control, Hour Meter, Power Cut-Off, switches for lights and fans.

Electric Drive Compartment
This compartment houses the electric drive controller, drive assembly (transmission & motor), hydraulic pump & motor and the tank.

Every order selector has been supplied with a hex key to open the compartment doors.

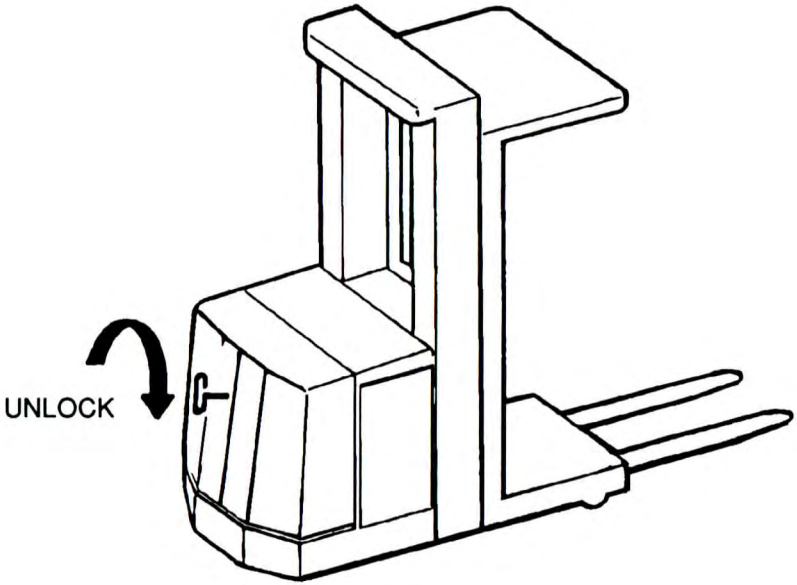

Now that we have covered the various features let us explain their operation

https://truckmanualshub.com/

Operator Control Console

As shown below the operator control console contains the main functional controls to operate the order selector in a safe and controlled manner.

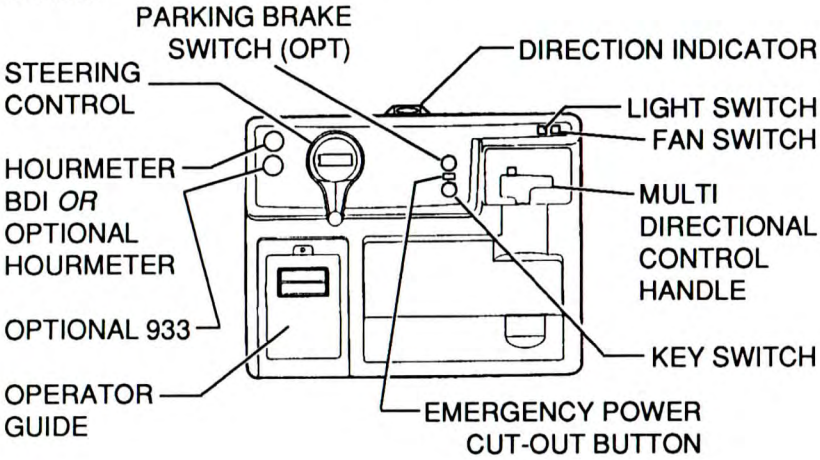

On/Off Key Switch

The on/off switch turns on power to the complete truck as long as the emergency power cut-off is not pushed in.

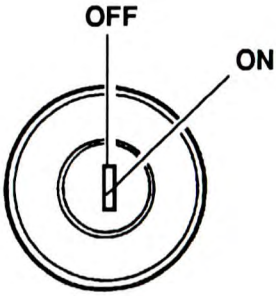

Emergency Power Cut-Off Button

This red button, located just above the on/off key switch, gives the operator the ability to shut off the power to the order selector. To shut off or cut electric power the operator just pushes the button in.

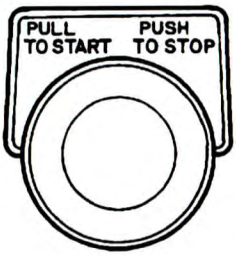

https://truckmanualshub.com/

Multi-Function Control Handle

This handle will control direction of travel, speed, lift, lower and horn. Direction and speed for the order selector is controlled by the operator with one easy motion.

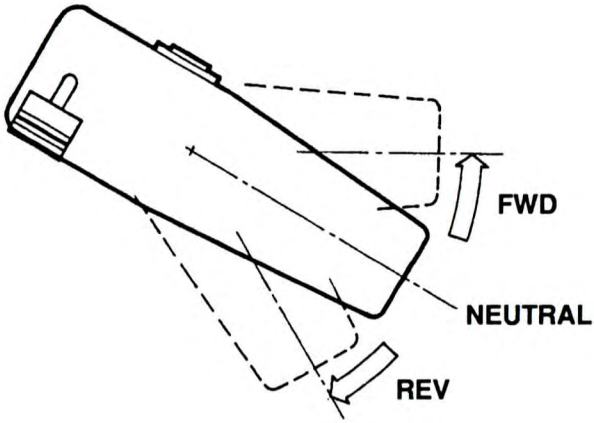

To travel, either push the handle forward (toward the mast) or pull the handle in reverse (toward the forks), as shown above. Speed is controlled by how far the handle is moved in either direction. The control handle is spring loaded to return to neutral anytime the operator releases it.

Directional changes (reversals) are possible with this electrical system's plugging feature. Plugging is also a widely recommended method of slowing or stopping the NOS-15. To slow down, stop or change directions, the operator must move the control in the opposite direction of travel. The unit will come to a smooth controlled stop unless the operator continues to hold the handle in the new direction. This will make the vehicle accelerate in that direction.

https://truckmanualshub.com/

Note to the Operator
Speeds are reduced by lift heights as shown below.

Travel Speeds

Fork Height Inches	Standard Trucks Aisle Guidance			
	Outside of Aisle		In Aisle	
See Description Below	<10 Steer	>10 Steer	<10 Steer	>10 Steer
0-36	Full Speed	Full Speed	Full Speed	Full Speed
36 - 150	1/2 Speed	1/2 Speed	1/2 Speed	1/2 Speed
151 - 180	1/2 Speed	Creep (1mph)	1/2 Speed	Creep (1mph)
181 - 243 (Opt)	Creep (1mph)	No Travel	Creep (1mph)	No Travel
243 +	No Travel	No Travel	No Travel	No Travel

Note: Certain installations may permit speeds different than shown vn. See your supervisor to determine the travel speeds in your application.

<10 = Steering turned less than 10 degrees from forward direction
>10 = Steering turned more than 10 degrees from forward direction

Lift and Lower Control
The NOS-15 has a thumb (paddle) lever which controls both the variable lift and lower speeds. Lifting is done by pushing the thumb (paddle) lever up toward the mast, the speed is varied by how far the operator pushes the paddle lever.

Note: You will hear the hydraulic pump operating only during lift operations. Lowering is also controlled by the paddle lever. As with the lifting operation, it is varied by how far you push the thumb (paddle) lever down toward the operator's platform.

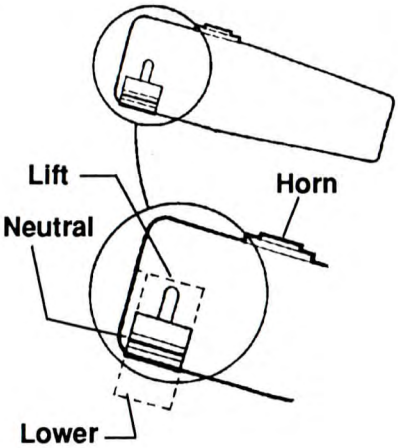

https://truckmanualshub.com/

Operational Note: The platform will normally go to a slow down/up mode the last 12" to ease sudden stops as the platform lowers or lift's. The "paddle" lever features an automatic return to neutral.

Horn

The horn button is located on the back side of the multifunctional control handle and can be easily pushed with the operator's forefinger to sound the horn.

Steering

The order selector steering tiller (lever) type handle has been chosen for its quicker response and reduced operator fatigue while maneuvering in narrow aisles. This is also assisted by having the steer wheel turn a full 180 degree radius. Steering direction is of the automotive type. Steering restrictions may apply depending on application or operation.

Steering Tiller

Electronic Drive Wheel Indicator

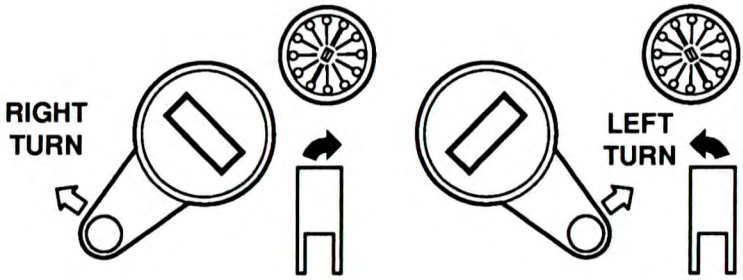

Turn the steer tiller clockwise and the vehicle will turn right. Turn the steer tiller counter-clockwise and the vehicle will turn left, as shown below. Clark has also provided an electronic drive wheel indicator so the operator will know the steer wheel position at all time.

Optional Hydraulic Power Steering

The optional power assisted steering operates full time when the key switch is on and the brake switch pedal is depressed. It requires only 2.3 turns from lock to lock (180 degrees) of steer wheel turn.

https://truckmanualshub.com/

Optional Electric Power Steering

The NOS-15 has an optional electric power steering system that was designed to provide less operator fatigue and quicker truck response for maneuverability. Please carefully read the instructions below.

WARNING

If the steering system controller detects an error or fault code in the steering system, it will shut the NOS-15 down, both drive and lift/lower control systems.

CAUTION

This steer tiller type handle does not have any stops and will turn 360 degrees. You must use the electronic drive wheel indicator to know both the direction of the drive wheel and the direction the vehicle will travel.

CAUTION

The steer handle should be turned in a steady motion to give smooth, stepless steering control. Spinning the handle too fast could cause flat spots on the drive wheel, wear out the steering generator sensors prematurely or affect the steering performance.

Hour Meter and BDI

Every NOS-15 has a combined hour meter and battery discharge indicator (BDI) as standard equipment to assist in determining battery conditions and planned maintenance schedules.

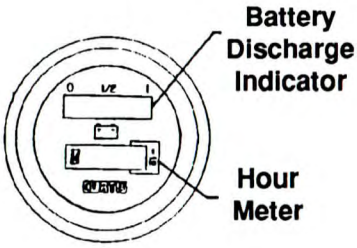

Optional Battery Discharge Indicator with Lift Interrupt

This option will not only give the operator the condition of the battery but will lock out (interrupt) the lift system electrically when the battery has become 80% discharged.

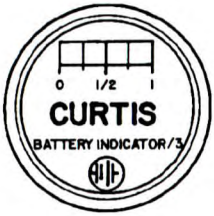

https://truckmanualshub.com/

Optional Hour Meter
This hour meter is only used with the above optional Battery Discharge Indicator with Lift Interrupt.

Light and Fan Switches
All NOS-15's have an operators fan and work light. The switches are located on the control center panel and are of rocker type, as shown below.

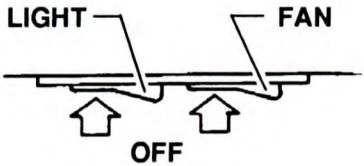

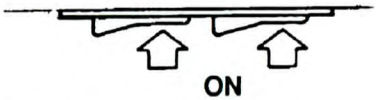

Brake Pedal (Deadman type) and Braking
As stated earlier Clark recommend's the use of the plugging feature to slow down and stop the NOS-15.

The NOS-15 has an electromagnetic brake mounted on the drive motor for stopping the vehicle. The brake is normally on and must be electrically released, by the brake switch mounted on the operator platform floor.

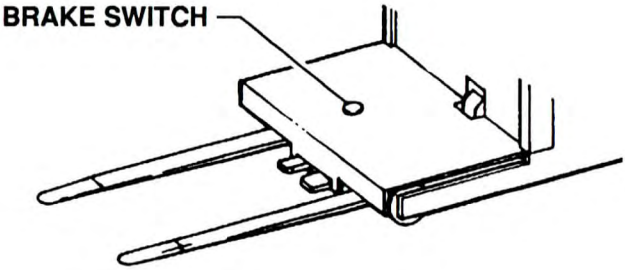

When the operator steps on the floor switch it will energize (turn off) the brake. Releasing it and suppling power to the traction control system. Any time the operator steps off the brake switch, the brake will apply fully and the traction system will be de-energized (shut off).

https://truckmanualshub.com/

Optional Brake Switch Mat

Trucks that are equipped with the switch mat assembly operates a little differently. The operator stands on the switch mat while operating the truck. To apply the brake he must step on the edge switch. As long as he is stepping on the edge switch the brake is applied. The operator may also use the park brake rocker switch located between the key switch and emergency power cut-out button on the console .

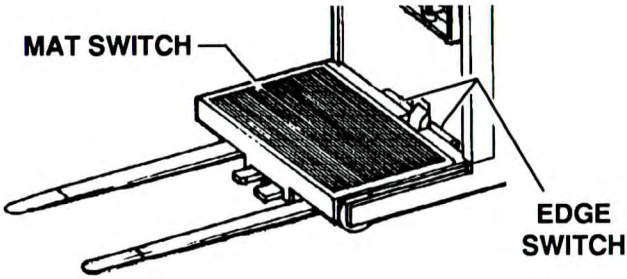

Operational Note

This brake is normally fully applied or fully released and may stop the NOS-15 abruptly.

Pallet Clamp

The pallet clamp centering device is spring loaded so the operator does not have to step down on the release pedal to have pallet enter into the clamp jaws.

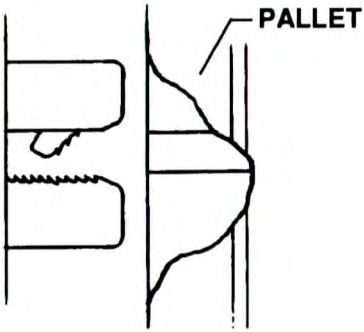

To release the pallet the operator has only a few steps to follow:

1. Lower pallet completely to floor.
2. Step on release pedal.
3. While stepping on pedal, move (travel) the NOS-15 toward the pallet slightly, then travel away from the pallet.
4. Once clear of the pallet, you may release the pedal.

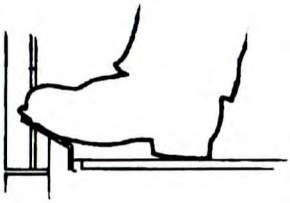

https://truckmanualshub.com/

Optional Aisle Guidance

Three different types of aisle guidance are available on the NOS-15. All three styles are shown below. Aisle guidance rail(s) provided by others.

CAUTION

Use caution when entering or leaving aisle guidance.

When the vehicle is in an aisle using any of the optional guidances the speed of li the NOS-15 will be effected at different lift heights.

Type I captures one floor - mounted rail between double rollers mounted on the order selector.

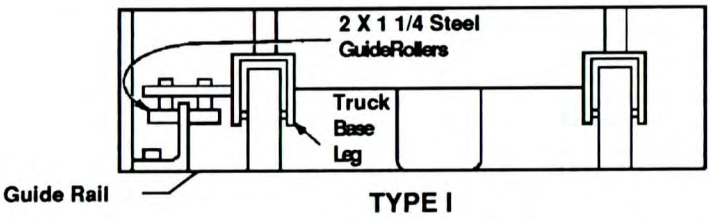

TYPE I

Type II confines the truck rollers between floor mounted guide rails on both sides of truck.

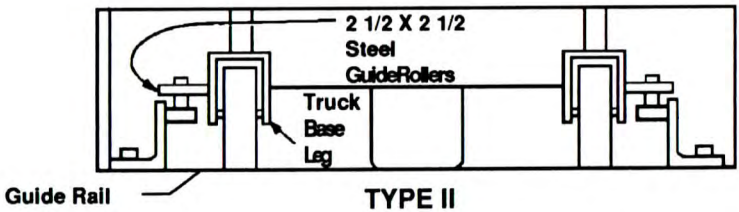

TYPE II

Type III also captures one rail between double rollers. The guide rail is elevated to allow the base legs of a standard straddle truck to enter the racks so that both order picking and restocking can be done from the same aisle.

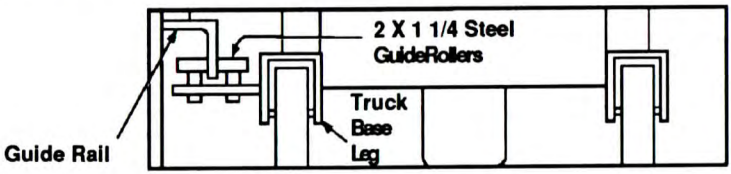

TYPE III

https://truckmanualshub.com/

https://truckmanualshub.com/

Daily Safety Inspection

Contents

Inspecting Your Truck 3-2

Visual Checks 3-3

Functional Checks 3-4

Concluding the Inspection 3-5

NOTICE

The Occupational Safety and Health Act (OSHA) requires that truck users examine their trucks before each shift to be sure they are in safe working order. Defects when found shall be immediately reported and corrected. The truck shall be taken out of service until it has been restored to safe operating condition.

https://truckmanualshub.com/

Inspecting Your Truck

Before using a NOS-15 order selector, **it is the operator's responsibility** to check its condition and be sure it is safe to operate.

Check for damage and maintenance problems; have repairs made before you operate the truck. Unusual noises or problems should be reported immediately to your supervisor or other designated authority.

Do not make repairs yourself unless you have been trained in lift truck repair procedures and authorized by your employer. Have a qualified mechanic correct all discrepancies using genuine CLARK or CLARK-approved parts.

Do not operate a truck if it is in need of repair. If it is in an unsafe condition, remove the key and report the condition to the proper authority. If the truck becomes unsafe in any way while you are operating it, **stop** operating the truck, report the problem immediately, and have it corrected.

NOS-15 should be inspected every 8 hours, or at the start of each shift. In general, the daily inspection should include the **visual** and **functional checks** described on the following pages.

As an aid in carrying out this inspection, CLARK has prepared a form called the **"Driver's Daily Checklist."** We recommend that you use this form to make a daily record of your inspections and truck condition. You may obtain copies of this form from your CLARK dealer.

WARNING

Leaking hydraulic oil may be hot or under pressure.
When inspecting a lift truck:

- **Wear safety glasses**
- **Do not check for leaks with bare hands.**

https://truckmanualshub.com/

Visual Checks

First, perform a visual inspection of the truck and its major components:

1. Walk around your lift truck and take note of obvious damage that may have been caused by operation during the last shift.
2. Check that all capacity, safety, and warning plates or decals are attached and legible.
3. Check that the battery is installed and secured in position correctly. Check battery connector for safe condition.
4. Look for any external leakage around drive axle.
5. Check for hydraulic oil leaks and loose fittings. Do not use bare hands.
6. Be sure that the driver's overhead guard and any other safety devices are in place, undamaged, and attached securely.
7. Check all of the critical components that handle or carry the load.
8. Look the upright and lift chains over. Check for obvious wear and maintenance problems such as damaged or missing parts, leaks, slack or broken chains, bent parts, and so on.
9. Carefully inspect the load forks for cracks, breaks, bending, twists, and wear. Be sure that the forks are correctly installed and locked in their proper position.
10. Inspect the wheels and tires for safe mounting and wear condition.
11. Check the hydraulic sump oil level.

https://truckmanualshub.com/

Functional Checks

Check the operation of the truck as follows:

NOTICE

Before performing these checks, familiarize yourself with the operating procedures in Section 5.

1. Test warning devices, horn, lights, and other safety equipment and accessories.
2. With the key switch on, check the diagnostic display. The diagnostic display should show the charge remaining on the battery or a fault code. If the fault code is not an operator fault code (described in "Section 5, Operating Procedures—Using the Diagnostic Display"), call a service technician.
3. Be sure all controls and systems operate freely and return to neutral properly. Check the:
   - Parking brake.
   - Hydraulic controls: lift, tilt, and aux functions.
   - Multi-function handle. (Direction/Accelerator control)
   - Steering system.

When the functional checks are completed:

1. Bring truck to complete stop.
2. Make sure the multi-function handle has returned to NEUTRAL.
3. Apply the parking brake. (Brake will automatically apply when the pedal is in the raised position)
4. Lower the lift mechanism fully and tilt the forks forward.
5. Turn the ignition switch to the OFF position.

If you are going to leave the truck unattended:

6. Remove the key.
7. Block the wheels, if the truck is parked on an incline or has the possibility of moving.
8. Unplug the battery.

https://truckmanualshub.com/

Concluding the Inspection

Make a record on the "Driver's Daily Checklist' of all the operating and truck problems that you find. Review the checklist to be sure it has been completed and turn it in to the person responsible for lift truck maintenance. Be sure any unusual noises or problems are investigated immediately.

Do not operate a lift truck that has a maintenance problem, or is not safe to operate.

Remove the key from the ignition switch and put an "Out of Service" tag on the truck.

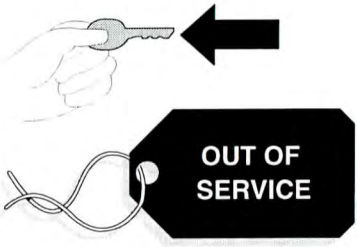

Be sure to put this Operator's Manual back in the holder in the operator's compartment. Read the manual again if you are not sure of all lift truck operating procedures.

If all of the Daily Inspection checks were normal or satisfactory, the truck can be operated.

https://truckmanualshub.com/

https://truckmanualshub.com/

Operating Procedures

Contents

Before Operating the Truck 4-2
Operation of this Unit 4-3
Before Operation Inspection 4-4
Deadman Brake Release 4-7
Emergency Platform Lowering 4-9

https://truckmanualshub.com/

Before Operating the Truck

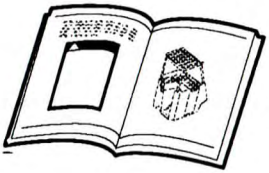

Be sure that you have read and understand the information in this *Operator's Manual* before operating the NOS-15 Order Selector.

The Operator's Manual is located conveniently in the operators compartment.

WARNING

- **This equipment can be dangerous if not used properly. Safe operation is the responsibility of the operator.**
- **Do not start or operate the truck, or any of its functions or attachments, from any place other than the designated operator's position.**

CAUTION

- **Inspect your order selector before operating at the start of the day or shift. Before putting your truck to use, check the operation of the controls and all systems.**
- **Protect yourself. Do not operate truck without a driver's overhead guard unless conditions prevent its use. Do not remove overhead guard unless specifically authorized. Use special care if operation without this safety device is required.**

https://truckmanualshub.com/

Operation of this Unit

Now that we have covered the operational controls of the unit, let's discuss the recommended operational procedure.

Since the Occupational Safety and Health Act (OSHA) requires that "only trained and authorized operators shall be permitted to operate a powered industrial truck", it is the user's responsibility to comply. The following is intended as a guide in training operators in safe truck operation, it is not a training manual nor is it intended to preclude good judgement and common sense.

For a complete listing of what should be covered in a training program obtain a copy of ASME B56.5 Safety Standard for Low Lift and High Lift Trucks.

Write to: ASME
22 Law Drive
PO Box 2300
Fairfield, NJ 07007-2300

Before Operation Inspection

Completely check the unit at the beginning of each shift or work period. Ensure that all the following checks have been made before operating the unit:

1. Check the condition of safety lanyard (tether), belt, tires and wheels.
2. Check to see that the lights are clean, working and aimed properly.
3. Check that the brakes are working properly.
4. Check for worn or cracked forks and frame.
5. Check that all the guards, horn, limit switches, steering switch, warnings, safety devices, etc. are functional.
6. Check that the battery retainers are in place.
7. Check for oil leaks.
8. Check battery fluid and hydraulic oil levels.
9. Check for full motion, proper function of all controls and plugging.
10. Check for full motion of steering without slack or tight spots.
11 Inspect the battery connectors. Check the condition of electrical cables and wiring and make a report of all worn or cracked cables.
12. Check condition of operator side gates. Be sure they are correctly positioned and secured.

https://truckmanualshub.com/

Before Operation Inspection

Do Not operate truck if it is in need of repair. If it is in need of repair, tag truck, remove the key and report the condition to the proper authority. If the truck requires repair in any way while you are operating it, stop operating the truck and report the matter immediately to the proper authority.

Only specifically authorized and qualified personnel should make repair adjustments to the truck. Understand truck limitations and operate the truck in a safe manner so as no cause injury to personnel. Do Not indulge in stunt driving or horseplay.

Be certain that your truck is the correct fire safety type for the area in which you are working. The proper type designation for the truck is on the name plate. In areas classified as hazardous, use only trucks approved for use in those areas. All hazardous areas should have classified markings.

If you are unsure of the classification of the area you wish to enter, ask your supervisor before entering.

Operational Procedures

1. Before plugging in the battery, make sure that the key switch is in the "OFF" position and emergency disconnect is pushed in.
2. Plug in the battery connector.
3. Insure that all covers are secure.
4. Mount the operator platform.
5. Lower both operator side gates completely.
6. Put on the safety lanyard (tether) and belt which must be connected to the overhead guard.
7. Pull out emergency disconnect.
8. Turn key switch on.
9. Check hour meter operation.

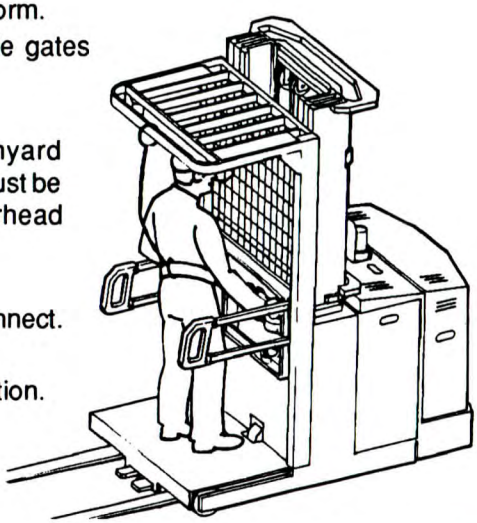

https://truckmanualshub.com/

10. Check battery condition, if gauge shows a low battery condition (red), the battery must be charged or replaced before operating the NOS-15
11. Check horn operation, if it does not work do not operate the vehicle. Always sound horn at blind corners and intersections before proceeding to travel.

WARNING

Always be sure that all body parts are kept within the operator's platform.

12. Step down on the brake pedal with your left foot, this action will release brake and power up the drive control system.
13. Check lift and lower function, report malfunctions.

WARNING

Always perform lifting checks in a clear overhead area.

14. Once platform is lowered, test the directional control as follows:
    a. Place left hand on steer tiller handle to control your steering direction.
    b. Use right hand on multifunction handle.
    c. Firmly grip the multifunction handle, slowly push it away from you (toward mast) and sound the horn. The vehicle will travel forward. If you continue to push the handle the NOS-15 should increase in speed smoothly.
    d. Let handle return to the neutral position, the NOS-15 will slow down then lift your left foot off of the brake pedal which should stop the vehicle in a smooth manner.
    e. Now test the reverse direction by stepping on the brake pedal and slowly pull the multifunction control handle toward you. The NOS-15 will move in the direction of the forks. As you continue to pull the handle the truck will increase in speed smoothly. As before the handle will return to the neutral position when released.
15. Check steering function during travel testing the operator should turn fully to the left and right.
16. Check 10 degree turn switch for correct operation.
17. When traveling with the NOS-15, the forks should be raised only enough to provide good clearance to the floor whether loaded or unloaded.
18. Use caution when entering or leaving an aisle, whether aisle guidance is used or not.
19. When in an aisle and the operator is leaving the platform to pick from pallet racks, the operator must always have the safety lanyard (tether) and belt in use. Also, the side gate must be returned to the lowered position once the operator has returned to the platform.

https://truckmanualshub.com/

CAUTION

To prolong component life, avoid "jackrabbit" starts, stops and forceful steering control movements.

Parking and Stopping Unit

1. Park units in designated parking areas only.

Make sure unit does not block fire aisles, fire equipment, stairways or walkways.

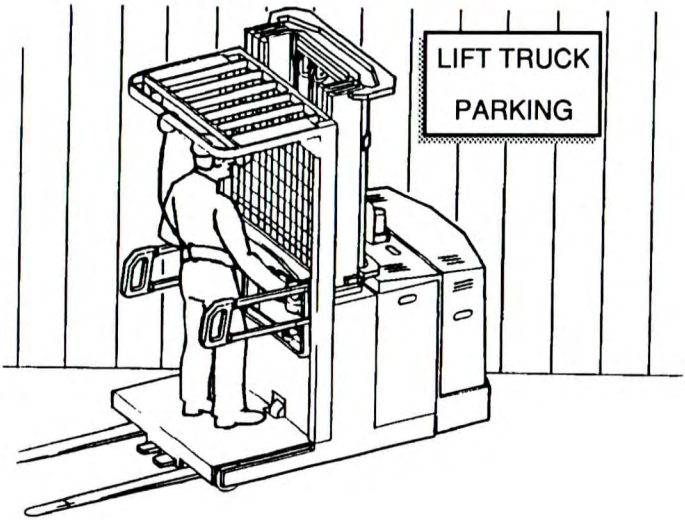

2. Lower platform and forks fully.
3. Place all controls in their "neutral" position.
4. Push in emergency stop button.
5 Turn key switch to "OFF" position and remove key.
6. Disconnect battery.
7. Remember to block the drive wheel securely to prevent accidental movement on uneven surfaces.

https://truckmanualshub.com/

Deadman Brake Manual Release

WARNING

With brake released, use extreme caution when moving truck and block wheels when no movement is required. Never park truck with brake manually released on any incline.

To manually release deadman brake follow these instructions, item by item, as listed below.

1. Open truck service doors and locate brake assembly on top of drive motor (see below).

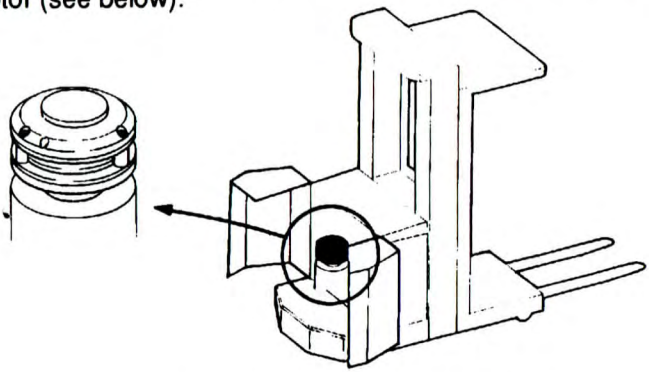

2. Use two (2) screws (1/4 x 20 - 1-1/4 in. lg.) and thread into upper brake pad (see below).

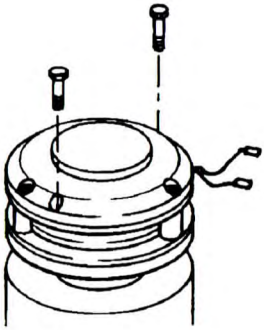

https://truckmanualshub.com/

3. Tighten both screws until brake pad clears brake rotor and is free to rotate (see below).

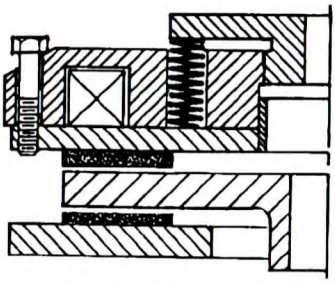

BRAKE RELEASED

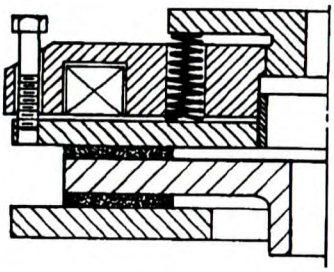

BRAKE APPLIED

Truck brake is now released (off).

To return deadman brake to normal operation follow these instructions, item by item, as listed below.

1. Remove two (2) screws from brake pad on top of drive motor (see below).

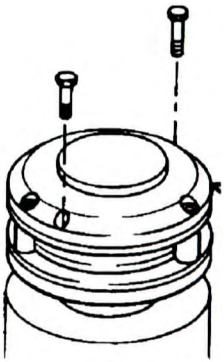

2. Close and secure truck service doors.

Deadman brake is now returned to normal operation and will be applied until released electrically by deadman brake pedal.

https://truckmanualshub.com/

Emergency Platform Lowering

To lower the platform (other than by using the Multi-Function Control Handle") follow these instructions, item by item, as listed below.

WARNING

Be sure area beneath platform is clear before any instructions are attempted. Area must remain clear until platform is fully down.

1. Open the truck service doors and locate the valve body (see below).

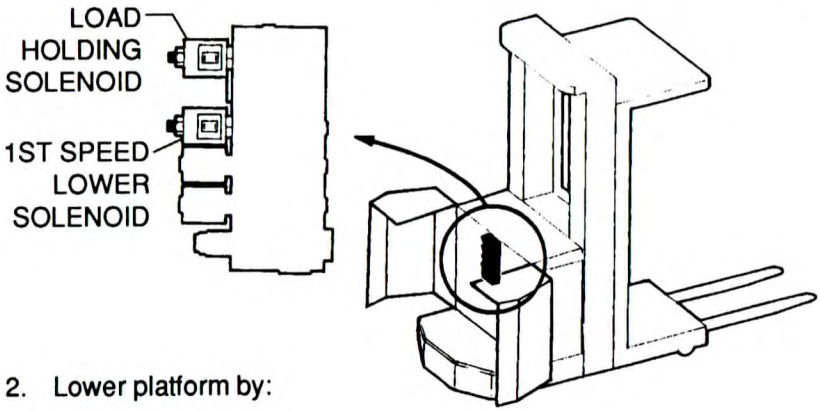

2. Lower platform by:
   a. Push in button
   b. Hold button in and rotate 1/2 turn counterclockwise.
   c. Release button

Perform the above steps on the "Load Holding" and 1st Speed Lower" solenoids (either solenoid first).

The platform will slowly lower until in full down position

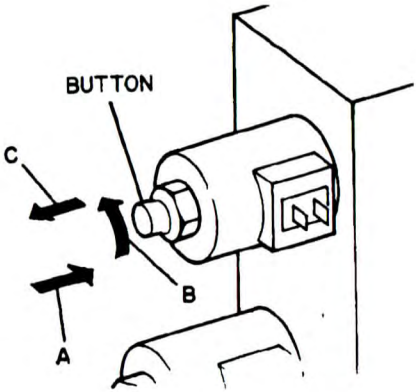

https://truckmanualshub.com/

To return to normal lift/lower operation follow the instructions, item by item, as listed below.

A. Push in button

B. Hold button in and rotate 1/2 turn clockwise

C. Release button

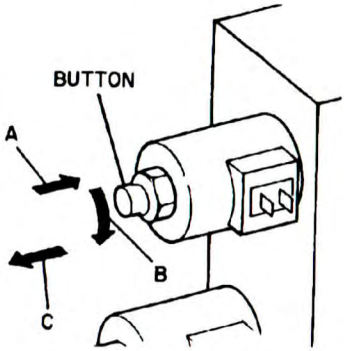

Perform the above steps on the "Load Holding" and "1st Speed Lower" solenoids (either solenoid first).

Close and secure service doors.

The valve body is now returned to normal operation with platform lift/lower controlled by the "Multi-Function" control handle.

https://truckmanualshub.com/

Planned Maintenance

Contents

Lift Truck Maintenance 5-2
Planned Maintenance 5-2
Planned Maintenance Intervals 5-3
Battery Retainment/Care 5-4
Maintenance Schedule 5-7
Lubrication 5-10
Drive Tire 5-12
PM Report Form 5-13
Visual Inspection 5-14
Air Cleaning the Truck 5-17
Battery Maintenance 5-18
Battery Handling 5-19
Battery Charging 5-20
Battery Removal 5-21
Battery Cleaning 5-22
Battery Service Records 5-22
Battery Installation 5-23

https://truckmanualshub.com/

Lift Truck Maintenance

Regular maintenance and care of your lift truck is not only important for full and efficient truck life; it is essential for your safety. The importance of maintaining your lift truck in a safe operating condition by servicing it regularly and, when necessary, repairing it promptly cannot be emphasized too strongly. Experience has shown that powered industrial trucks can cause injury if improperly used or maintained. In the interest of promoting safety, several current industry and government safety standards specify that any powered industrial truck not in safe operating condition be removed from service and that all repairs be made by trained and authorized persons.

To assist you in keeping your lift truck in service and in good operating condition, this section outlines maintenance procedures that should be done at regular intervals. This planned approach is considered essential to the life and safe performance of your truck.

It is your responsibility to be alert for any indication that your truck may need service and have it attended to promptly. You play an important part in maintenance. Only you can make sure that your lift truck regularly receives the care it needs.

CAUTION

Powered industrial trucks may become hazardous if maintenance is neglected.

Planned Maintenance

As outlined previously, you should always make a safety inspection of your lift truck before operating it. The purpose of this daily examination is to check for any obvious damage and maintenance problems, and to have minor adjustments and repairs made to correct any unsafe condition.

In addition to the daily inspection, CLARK recommends that you set up and follow a periodic planned maintenance (PM) and inspection program. Performed on a regular basis, the program provides thorough inspections and checks on the safe operating condition of your lift truck. The need for major adjustments, repairs, or replacements is found and corrections made as required, not after failure has occurred. The specific schedule (frequency) for these PM inspections depends on the conditions of your particular application and lift truck usage.

https://truckmanualshub.com/

The recommended planned maintenance and lubrication schedule lists those items considered essential to the safety, life, and performance of your truck with typical recommended service intervals. Brief procedures for inspections, operational checks, cleaning, lubrication, and minor adjustments are included for your reference.

Your local CLARK dealer is prepared to help you with your Planned Maintenance Program, if you want assistance. Your CLARK dealer has specially trained service personnel who are authorized to check your lift truck according to the applicable safety regulations.

"Section 8, Specifications," contains some useful information for selected components, lubricants, critical bolt torques, refill capacities, and settings for your truck.

If you have the need for more information on the care and repair of your truck, see your CLARK dealer.

Planned Maintenance Intervals

Typical Operating Conditions

Time intervals between maintenances are largely determined by operating conditions. For example, operation in sandy, dusty locations requires shorter maintenance intervals than operation in clean warehouses. The indicated intervals are intended for **normal** operation. The following operating conditions are defined:

Normal Operation: Basically, eight-hour material handling, mostly in buildings or in clean, open air on clean paved surfaces.

Severe Operation: Prolonged operating hours or constant usage.

Extreme Operation:

- In sandy or dusty locations, such as: cement plants, lumber mills, and coal dust or stone crushing sites
- High-temperature locations, such as: steel mills, foundries, etc.
- Sudden temperature changes, such as: constant trips from buildings into the open air, refrigeration plants, etc..

If your fork lift truck is used in severe or extreme operating conditions, you must shorten the maintenance intervals accordingly.

NOTICE

Since the operating environment of lift trucks varies widely, the above descriptions are highly generalized and should be applied as actual conditions dictate.

https://truckmanualshub.com/

Battery Retainment/Care

WARNING

Do not service battery unless you have been trained and authorized.

WARNING

Always wear protective equipment (face shield, gloves, etc.) before servicing any battery. Battery acid will cause severe burns or injury.

All NOS-15 units use a wet cell type storage battery
When Cleaning,

WARNING

Do not allow the alkaline solution to fall in the Battery Cell This will result in a dead or weak cell.

WARNING

If acid contacts your skin, eyes, or clothing, flush the area immediately with large amounts of water and contact a physician.

WARNING

Do not attempt to recharge a frozen battery; this may cause it to rupture or explode. Do Not attempt to recharge the Battery in an area where sparks are presents or near an open flame.

IMPORTANT

Use only batteries that meet the specifications listed on the nameplate.

NOS-15	Size of Batt. Compartment L x W x H	Batt. Model	AMP. HR Cap	Batt Dimen L x W x H	Approx. Weight in LBS.
24V	38.75x14.5x31.5	12-125-11	625	30.88x12.88x31.0	1225
24V	38.75x14.5x31.5	12-125-13	750	35.31x11.79x30.5	1415
24V	38.75x14.5x31.5	12-125-15	875	35.31x14x30.5	1610
36V	38.75x14.5x31.5	18-125-11	625	38.13x13.25x30.5	1740
36V	38.75x14.5x31.5	18-130-11	650	38.13x13.25x30.5	1825

https://truckmanualshub.com/

Proper care and servicing of the battery is vital to assure satisfactory operation and life of your electric truck. Battery acid is, of course, extremely corrosive and should be washed off the unit if any spillage occurs.

CAUTION

Also check with Local and State Regulations on storing, charging and cleaning of corrosive materials. There may be conditions locally which will not allow you to just wash off spillage.

The battery should always be kept in a charged state. An overly discharged battery will cause a number of operational difficulties in any electric truck, and the battery charge should be checked first if any electrical difficulties occur.

In cases of a battery not taking a charge, make sure that the charger is being attached to the battery connector and not to the connector on the unit. A battery which does not take a proper charge should be referred to the battery manufacturers's representative for service.

Battery Removal

WARNING

No Smoking

WARNING

This unit has standard battery rollers, always insure unit is on a level surface before removing any battery gate.

1. Move truck to level floor.
2. Lower platform completely.
3. Disconnect battery
4. Block Wheels.
5. Remove both battery side covers.
6. Remove battery gate from the side that the battery is to be removed.

WARNING

Wear proper protective clothing.

https://truckmanualshub.com/

Battery Removal (con't)

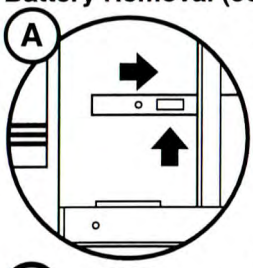

A. Lift notched end of gate and slide into slot (toward mast and platform)

B. Slide out of slot and down. Lift notched end to free gate.

C. Remove gate from truck.

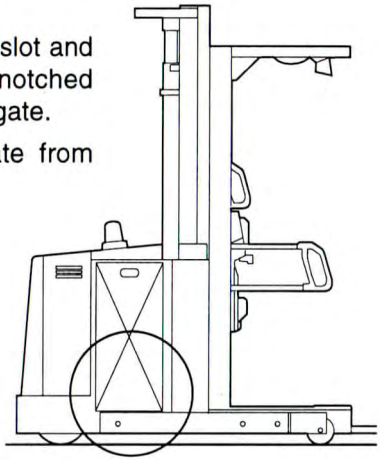

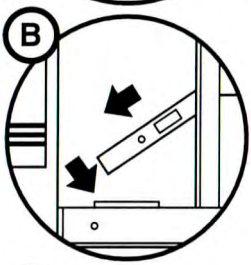

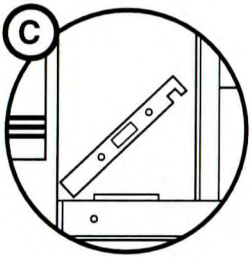

7. Remove battery by rolling onto a conveyor or equivalent handling equipment.

WARNING

If battery is not covered always put nonconductive material on top of the exposed terminals and connectors.

8. Insure other battery gate is still in truck and properly installed.
9. Install fresh battery.
10. Install battery gate- reverse instructions shown on page 5-6.

WARNING

Insure battery gate is installed properly and to the correct battery size. Check that notch is securely set in slot.

11. Replace covers.
12. Make sure key switch is off. Plug in battery and remove block.
13. Return to service.

https://truckmanualshub.com/

WARNING

Make sure that battery side gates are latched before operating unit.

Adding Water

On a routine basis after every 50 hours of operation, remove the Battery Vent Caps and inspect the Electrolyte level. The water in the Electrolyte Solution evaporates at high temperatures or with excessive charging rates. The level should be to the bottom of the Filler Neck; if not, replenish to the proper level with distilled water after charging.

Cleaning Terminals and Cable Connections

The top of the Battery must be kept clean. Tighten the vent caps and clean the battery with a brush dipped in an alkaline solution (ammonia or baking soda and water). After the foaming has stopped, flush top of battery with clear water. If terminals and cable clamps are corroded, disconnect the cables and clean them with the same alkaline solution.

NOS-15 Maintenance Schedule

Repair or replace as necessary when inspection finds this part worn or damaged:

1. Drive or hydraulic motor brushes. Springs should be replaced along with brushes.
2. Brake rotor pads
3. Contact tips.
4. Steering cables, chains. Should be replaced only, do not repair.
5. Lift chains. Should be replaced as a set only, do not repair.
6. Load wheel.

- Always repack bearing whenever a wheel is changed. Remember the largest cause of wheel failure is material getting caught in wheel.

* Trucks operating in freezer, wet or brine conditions must be serviced twice in the standard maintenance period and special types of lubricants may have to be used.

** OSHA requires the forks to be measured during Planned Maintenance. The fork must be replaced when the heel of the fork has had its thickness reduced lo 90% of its original thickness (10% of the fork has been worn off). Refer to ANSI/ASME B56. 1.

https://truckmanualshub.com/

NOS-15 Maintenance Schedule

Period	Time	Function
Daily		
-	-	Check water level in battery
-	-	Check oil level transmission.
-	-	Check all wheels and tires. Remove any and all tape, plastic and material.
-	-	Check operation of truck steering and speed change including all warning and safety devices (if equipped), horn, speed limit switch, lift limit switches, lights. Ensure that unit lifts and lowers properly.
-	-	Check electric magnetic brake operation.
-	-	Check oil levels and insure unit has been greased.
-	-	Check hydraulic tank with mast or forks fully lowered. Check for and correct any leaks.
Weekly	*100 Hours*	
-	-	Check speed of truck and plugging distance.
-	-	Check entire truck for loose items, power and control wiring, linkage, nuts and bolts.
-	-	Clean battery terminals of corrosion. Check electrolyte level. Inspect plug and battery cables.
-	-	Check lift chains, heel of the forks should not touch the floor with mast completely lowered, adjust as needed.
-	-	Clean and inspect motor brushes. Use only low pressure air or vacuum.
-	-	Check all hydraulic hoses and fittings for wear or leaks, repair as required.
-	-	Inspect contact tips.
-	-	Clean any and all dirt or corrosion from terminal area of PMC Controller units.
-	-	Check and clean operator brake floor switch of any and all dirt or foreign material.

https://truckmanualshub.com/

NOS-15 Maintenance Schedule

Period	Time	Function
30 Days	*200 Hours*	
-	-	Check steering linkage, cables and chains for proper operation. Make adjustments as needed.
*	*	Lubricate entire truck (see lubrication chart for type and points).
-	-	Check safety devices, horn, alarms (if equipped), lift limit switch, slow speed adjustment, loose chain switch for operation, lanyard (tether) and belt. Repair or adjust before truck goes back into operation.
**	**	Measure forks for wear. Check for cracks or damage.
60Days	*200Hours*	
-	-	Check entire truck frame and pivoting points for cracks or worn bearings, repair or replace as needed.
-	-	Check hydraulic pressure setting, should be 2550 +/- 50 PSI.
-	-	Inspect brake rotor and pads.
-	-	Check and adjust platform rollers.
-	-	Check drive tire and torque bolts to 200 ft. lbs.
-	-	Clean drive motor and inspect commutator. Use only low pressure air or vacuum.
Yearly	*1000Hours*	
-	-	Change transmission fluid (requires 3-3/4 pints refill).
*	*	Change hydraulic oil and filter.
-	-	Check amp draw reading for lift pumps and drive motors.
-	-	Check lift chain with wear gauge and replace as needed.
-	-	Check all mast uprights and roller re-shim or replace as needed.

https://truckmanualshub.com/

Lubrication

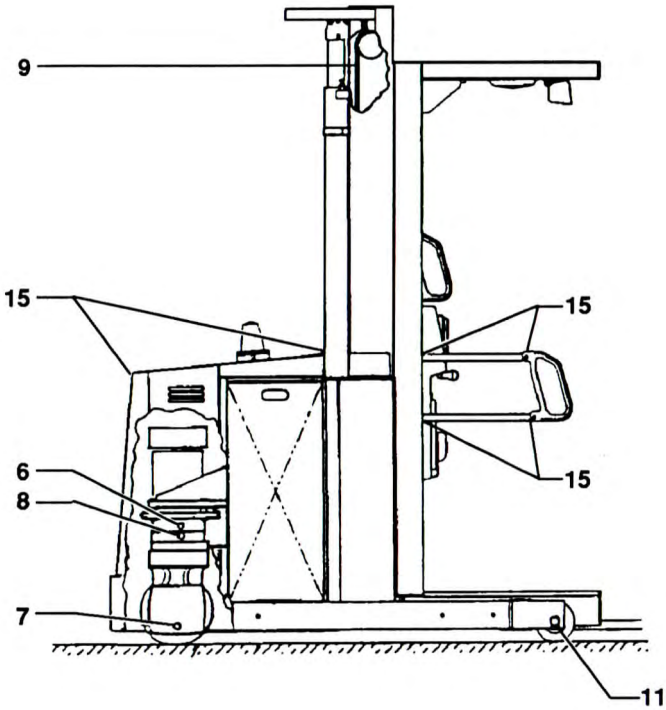

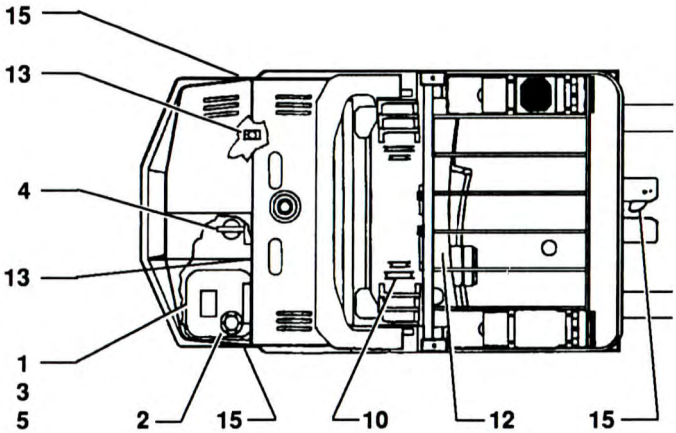

https://truckmanualshub.com/

Lubrication

Item#	Description	Lube Points	Type of Lubricant	Interval
1	Hydraulic Reservoir	(1)	Valvoline Super Hydro F32U	Check Daily Change yearly (approx. 6 gallon capacity)
2	Hydraulic Reservoir Cap	(1)	Valvoline Super Hydro F32U	30 Days; 200 hours Clean w/solvent and oil
3	Hydraulic Tank Drain	(1)		Change yearly: 2000 hours
4	Hydraulic Oil Filter	(1)	Hydraulic Oil	Replace during oil change
5	Hydraulic Res. Suction Filter	(1)		Change during oil change
6	Transmission Oil Plug	(1)	80/90 Oil	Check daily/change yearly; 2000 hrs
7	Transmission Drain Plug	(1)		Change yearly 3-3/4 pints to fill
8	Transmission Oil Level	(1)		Oil should not be below this level.
9	Lift Chain		Heavy SAE Oil	Check 30 Days: 200 hrs
10	Chain Sheave	(2)	Mobilux 22 Grease	Check 2 weeks: 150 hrs
11	Load Wheels	(2)	Mobilux 22 Grease	Check 2 weeks: 150 hrs
12	Steering Box	(1)	Mobilux 22 Grease	Check yearly: 2000 hrs Clean and Refill
13	Sprocket, Gear Shaft (Power Steering Only)	(2)	Mobilux 22 Grease	Check 2 weeks: 150 hrs
14	Battery, Roller Bearing	(8)	Mobilux 22 Grease	Check 6 months: 1000 Hrs. remove/clean/ repack
15	Pivot Points	(6)	10W Oil	Lubricate 30 Days; 200 hours

https://truckmanualshub.com/

Drive Tire

The NOS-15 requires a 12" X 41/2" X 6 1/2" poly crown drive tire.

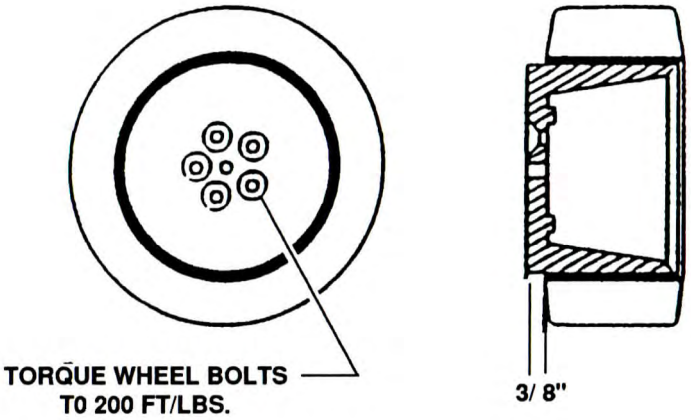

CAUTION

Caution must always be exercised when pressing a new tire onto the hub. The dimension from the face of the hub to the edge of the tire is very important in the operation of the truck.

https://truckmanualshub.com/

PM Report Form

A planned maintenance (PM) program of regular, routine inspections and lubrication is important for long life and trouble-free operation of your lift truck. Make and keep records of your inspections. Use these records to help establish the correct PM intervals for your application and to indicate maintenance required to prevent major problems from occurring during operation.

As an aid in performing and documenting your PM inspections, CLARK prepared an ***Electric Truck Planned Maintenance Report Form*** (PM Report Form). Copies of this form may be obtained from your authorized CLARK dealer. We recommend that you use this form as a checklist and a record of your inspection and truck condition.

The maintenance procedures outlined in this manual are intended to be used in conjunction with the PM Report Form. They are arranged in groupings of maintenance work that are done in a logical and efficient sequence.

You make check marks or entries on the PM Report Form when you perform the PM. Please notice on the form a special coding system for indicating the importance of needed repairs and/or adjustments.

When you have finished the PM inspections, be sure to give a copy of the report to the designated authority responsible for lift truck maintenance.

Do not make repairs or adjustments unless authorized to do so.

For safety, it is good practice to:

- Remove all jewelry (watch, rings, bracelets, etc.) before working on the truck.
- Disconnect the battery before working on electrical components.
- Always wear safety glasses. Wear a safety (hard) hat in industrial plants and in special work areas where protection is necessary and required.

https://truckmanualshub.com/

Visual Inspection

Begin the PM routine with a visual inspection of the lift truck and its components.

1. Walk around the truck and take note of any obvious damage and maintenance problems. Check for loose fasteners and fittings.
2. Check to be sure all capacity, safety, and warning plates or decals are attached and legible.

NOTICE

NAMEPLATES AND DECALS: Do not operate a lift truck with damaged or lost decals and nameplates. Replace them immediately. They contain important information.

3. Inspect the truck for any sign of external leakage: transmission fluid, etc..
4. Check for hydraulic oil leaks and loose fittings.

CAUTION

HYDRAULIC FLUID PRESSURE: Do not use your hands to check for hydraulic leakage. Fluid under pressure can penetrate your skin and cause serious injury.

5. Be sure that the driver's overhead guard, load backrest extension, and safety devices are in place, undamaged, and attached securely.

Then check all of the critical components that handle or carry the load.

WARNING

Uprights and lift chains require special attention to maintain them in safe operating condition.

- **Uprights can drop suddenly. Look at the upright, but keep hands out.**
- **Lift chain repairs and adjustments should be made by trained service personnel.**

Forks

Inspect the load forks for cracks, breaks, bending and wear. The fork top surfaces should be level and even with each other. The height difference between both fork tips should be no more than 3% of the fork length.

WARNING

If the fork blade heel is worn down by more than 10 percent, the load capacity is reduced and the fork must be replaced.

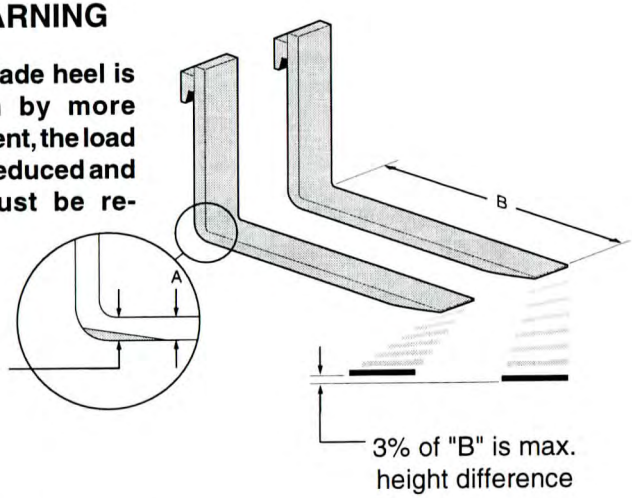

Inspect the forks for twists and bends. Put a 2"-thick wood block, at least 4" wide by 24" long, on the blade of the fork with the 4" surface against the blade. Put a 24" carpenter's square on the top of the block and against the shank. Check the fork 20" above the blade to make sure it is not bent more than 1" maximum.

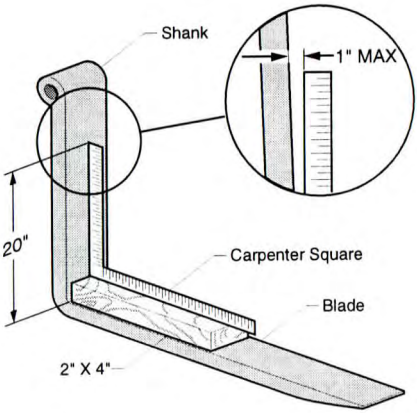

If the fork blades are obviously bent or damaged, have them inspected by a trained maintenance person before operating the truck.

Inspect the fork latches. Be sure they are not damaged or broken and operate freely and lock correctly. Check the fork stop pins for secure condition.

https://truckmanualshub.com/

Wheels and Tires

Check the condition of the drive and steer wheels and tires. Remove objects that are embedded in the tire. Inspect the tires for excessive wear and breaks or "chunking out" and bond failure between the tire and the rim.

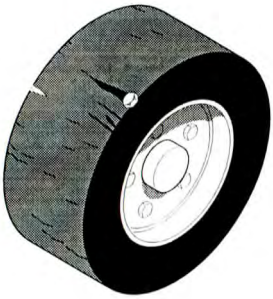

Check all wheel lug bolts to be sure none are loose or missing.

Have missing bolts replaced and loose bolts tightened to the correct torque before operating truck.

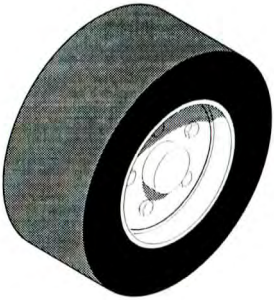

Air Cleaning the Truck

Always maintain a lift truck in a clean condition. Do not allow dirt, dust, lint, or other contaminants to accumulate on the truck. Keep the truck free from leaking oil and grease. Wipe up all oil spills. Keep the controls and floorboards clean, dry, and safe. A clean truck makes it easier to see leakage and loose, missing, or damaged parts. A clean condition helps prevent fires and helps the truck run cooler.

The environment in which a lift truck operates determines how often and to what extent cleaning is necessary. For example, trucks operating in manufacturing plants with a high level of dirt, dust, or lint, (e.g., cotton fibers, paper dust, etc.) in the air or on the floor require more frequent cleaning. If air pressure does not remove heavy deposits of grease, oil, etc., it may be necessary to use steam or liquid spray cleaner.

CAUTION

Do not steam clean electrical components

Lift trucks should be air cleaned at every PM interval, and more often if needed.

Use an air hose with special adapter or extension having a control valve and nozzle to direct the air properly. Use clean, dry, low-pressure compressed air. Restrict air pressure to 30 psi (207 kPa), maximum (OSHA requirement).

Wear suitable eye protection and protective clothing.

Air clean: upright assembly; drive axle; battery; cables; switches and wiring harness; drive, lift, and steer motors; and steer axle, steer cylinder, and linkage.

https://truckmanualshub.com/

Electric Truck Battery Maintenance

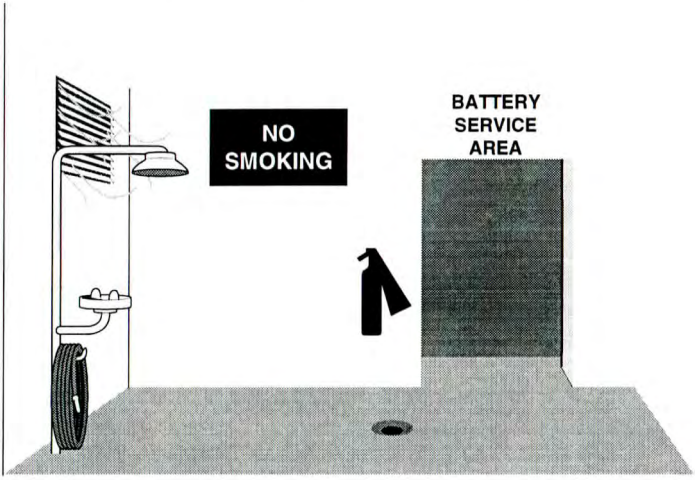

Battery charging installations must be located in areas designated for that purpose. These areas must be kept free of all non-essential combustible materials.

Facilities must be provided for:

- Flushing spilled electrolyte
- Fire protection
- Protecting charging apparatus from damage by trucks
- Adequate ventilation for dispersal of fumes from gassing batteries.

When handling acid concentrates greater than 50 percent acid (above 1.400 specific gravity), an eye wash fountain and deluge shower must be provided.

A conveyor, overhead hoist, or equivalent material handling equipment must be provided for handling batteries.

IMPORTANT

Electric truck batteries are heavy and awkward to handle. They are filled with a very hazardous chemical solution. On charge, they give off hydrogen and oxygen which, in certain concentrations, are explosive. And they are costly. Before you remove, service, or install a truck battery, carefully read the following recommendations and instructions.

https://truckmanualshub.com/

Battery Handling

1. Change (remove) or service storage batteries only in an area designated for this purpose.

2. Be sure this area has provisions to flush and neutralize spillage, to ventilate fumes from gassing batteries, and for fire protection.

3. This area should be equipped with material-handling tools designed for removing and replacing batteries, including a conveyor or overhead hoist. Use lift hooks that have safety latches.

4. Always use a special lifting device such as an insulated spreader bar to attach the hoist to the battery. The width of the spreader bar hooks must be the same as the lifting eyes of the battery, to prevent damage to the battery. If the spreader bar hooks are movable, carefully adjust the position (width) of the hooks so that the pull is directly upward (vertical) and no side load or force (pressure) is exerted on the battery case. Be sure the lift hooks are the correct size to fit the lifting eyes of the battery.

5. If the battery does not have a cover of its own or has exposed terminals and connectors, cover the top with a non-conductive material, e.g., (a sheet of plywood or heavy cardboard), prior to attaching the lifting device.

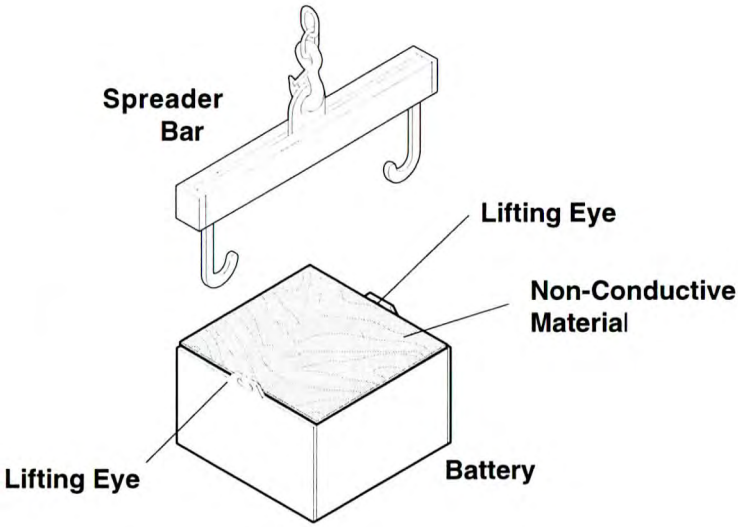

https://truckmanualshub.com/

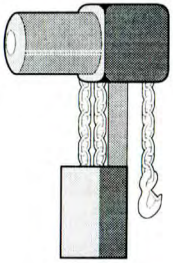

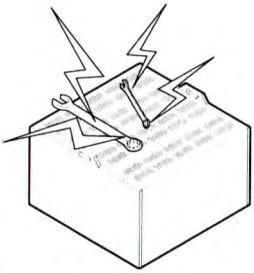

6. Chain hoists or power battery hoists must be equipped with load-chain containers to accumulate the excess lifting chain.

7. Keep all tools and other metallic objects away from the terminals.

WARNING

BATTERY SERVICE: Battery service must be done by trained and authorized personnel. Battery acid can cause severe burns and injury.

Battery Charging

1. Persons maintaining storage batteries must wear protective clothing such as face shield, long sleeves, and gloves.

2. Hydrogen emissions from charging batteries are flammable. No smoking is allowed in the charging area. Do not check the electrolyte level with an open flame. Do not allow open flame, sparks, or electric arcs in battery charging area.

WARNING

SULFURIC ACID: The battery contains corrosive acid that can cause injury. If acid contacts your eyes or skin, flush immediately with water and get medical assistance.

https://truckmanualshub.com/

WARNING

EXPLOSIVE GASES: Do not smoke or have open flames or sparks in battery charging areas or near batteries. An explosion can cause injury or death.

3. When charging batteries, the vent caps must be kept in place to avoid electrolyte spray. Care must be taken to assure that vent caps are open (clean) and functioning. The battery or compartment covers must be open to dissipate heat and gas.

IMPORTANT

If batteries discharge rapidly during normal operation or do not charge to the correct specifications, contact a qualified battery service technician to check the battery for you. Do not add electrolyte or attempt to service the battery.

Battery Removal from Truck

1. Check the designated service and charging area for fire protection, and be sure all sources of ignition are cleared from the area. **Do not smoke**. Be sure all previous noted equipment is in the area, in good repair, and working properly. If the battery is to be serviced, be sure there are provisions to flush and neutralize spillage and to disperse (ventilate) fumes from gassing batteries on charge. And, be sure there are provisions for handling electrolyte.

2. Before attempting to remove or charge a storage battery, the truck should be positioned in the designated battery service area and the parking brake applied so the truck cannot move.

3. If the battery to be handled is not equipped with its own cover, cover the battery when handling with a non-conductive material, e.g., (plywood or heavy cardboard), before attaching the lifting device.

4. Use an approved lifting device with an insulated spreader bar, to remove and transport a truck battery. Be sure the hoist and lifting chains are equipped with safety hooks.

https://truckmanualshub.com/

5. Remove the battery and move it to a safe storage location. Store batteries either on an approved battery rack or on a wooden pallet.

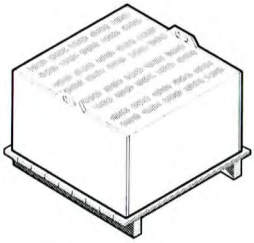

Battery Cleaning and Care

Never wash the battery when it is in the truck. The easiest and most satisfactory method of cleaning a battery is to wash it occasionally with a low-pressure cold-water spray. The top can also be washed off with a solution of baking soda and water (add a box of baking soda to a pail of water and stir until dissolved) and rinsed with clean water. It is good practice to have this solution in a battery room at all times.

IMPORTANT

During cleaning, the battery vent caps must be tightly in place.

Refer to the battery manufacturer or supplier for their recommended battery maintenance and care procedures.

BATTERY SAVER and CLEANER, CLARK Part No. 886398, may be used to clean and protect the truck battery.

New Truck Batteries: Apply a light coat of BATTERY SAVER and CLEANER to entire surface of battery. Allow to set for approximately 30 seconds, then wipe thoroughly with a wiping cloth or rag. Chemical action will dissolve rust and corrosion. After cleaning, apply a second coating for protection. This will prevent the start and growth of corrosion on battery terminals and cable connections.

Battery Service Records

Keep a record of battery service and maintenance to obtain the best service life from your battery and truck. Select a pilot cell, take readings of specific gravity and temperature before and after charging, and record the readings with the date. It is best to change the location of the pilot cell occasionally to distribute any electrolyte loss over the battery. Every 2 or 3 months, take complete battery readings (specific gravity, temperature, and voltage) and make a record of them.

How to Get Maximum Battery Life

1. Follow normal battery maintenance procedures, re-charging before 80% discharged and with periodic equalizing charges.
2. Don't add acid to a battery. Only a person trained and qualified to do battery maintenance should determine if this is necessary.
3. Lift battery only with a correctly-constructed lifting device that will not put pressure on the battery case.
4. Keep open flames, tools, and metal objects away from the top of battery to prevent short circuits and explosions.
5. Do not overcharge.
6. Check the battery electrolyte level **after** each charging. Add water if the top of the separator or plates are visible. **Do not overfill!**
7. **Keep the battery clean and dry**. Wash down as needed.
8. Keep battery service records.

Battery Installation

1. Use only a lead-acid battery with the voltage and ampere-hour rating specified for the truck.
2. When changing batteries on battery electric trucks, replacement batteries must be of the service weight that falls within the minimum/maximum range specified on truck nameplate.
3. Be sure truck is properly positioned and parking brake applied.
4. Handle battery only with approved lifting device.
5. Install the battery correctly in the truck and secure it in position.

NOTICE

Some trucks are equipped with battery stops or blocks. Others do not require them. If the truck being serviced has battery stops or blocks, be sure none are missing or damaged. Replace them as necessary. If they are an adjustable type, be sure they are correctly adjusted and tightened.

https://truckmanualshub.com/

Specifications

Model Designation - Rated Load Capacity
NOS-15 - 3000 lbs @ 24 in (1360 kg @ 600mm)

Truck Weights - with minimum battery weight:
6,760 lbs (3066kg)

Battery
Type = Lead Acid • Compartment Size: (W x L x H) =38.75 x 14.5 x 31.5
Weight (minimum) = 1,200 lbs (545 kg) •

24 volt, 12 cells, 11-17 plate, 13.8-28.9 kWh, 600-1240 amp-hr @ 6 hr rating
36 volt, 18 cells, 11-13 plate, 20.7-32.2 kWh, 600-930 amp-hr @ 6 hr rating

Transmission Ratio
21.15:1

https://truckmanualshub.com/

Additional copies of this manual may be purchased from YOUR AUTHORIZED CLARK DEALER

GREEN THE SOLUTION

CLARK® Material Handling Company

Lexington, KY 40511
Printed in USA