https://truckmanualshub.com/

Condor Operator's Manual and Maintenance Manual

AMERICAN LAFRANCE

Effective: January 2008

https://truckmanualshub.com/

https://truckmanualshub.com/

CONDOR OPERATOR'S MANUAL

01/08

Published by
American LaFrance, LLC
1090 Newton Way
Summerville, SC 29483
Printed in U.S.A.

https://truckmanualshub.com/

This page intentionally left blank.

https://truckmanualshub.com/

Foreword

Introduction

The *Condor® Operator's Manual* provides information needed to operate and understand the Condor® and its components. It is recommended that you read this manual before you operate your vehicle.

Custom-built Condor vehicles are equipped with various chassis and cab components, therefore, not all of the information contained in this manual applies to every vehicle. For details about components in your vehicle, refer to the chassis specication pages included in all new vehicles and to the component information label located inside the vehicle.

For your reference, keep this manual in the vehicle at all times.

IMPORTANT: Descriptions and specications in this manual were in effect at the time of printing. American LaFrance LLC reserves the right to discontinue models and to change specications or design at any time without notice and without incurring obligation. Descriptions and specications contained in this publication provide no warranty, expressed or implied, and are subject to revisions and editions without notice.

Environmental Concerns and Recommendations

Whenever you see instructions in this manual to discard materials, you should rst attempt to reclaim and recycle them. To preserve our environment, follow appropriate environmental rules and regulations when disposing of materials.

Event Data Recorder

This vehicle is equipped with one or more devices that record specific vehicle data. The type and amount of data recorded varies depending on how the vehicle is equipped (such as the brand of engine, if an air bag is installed, or if the vehicle features a collision avoidance system, etc.).

Customer Assistance Center

Having trouble finding service? Call American LaFrance Customer Assistance Center at 1-800-325-3100 for dealer referral and vehicle information. Our people are knowledgeable, professional, and committed to following through to help you keep your vehicle moving.

Reporting Safety Defects

If you believe that your vehicle has a defect which could cause a crash or could cause injury or death, you should immediately inform the National Highway Traffic Safety Administration (NHTSA) in addition to notifying American LaFrance, LLC.

If the NHTSA receives similar complaints, it may open an investigation, and if it finds that a safety defect exists in a group of vehicles, it may order a recall and remedy campaign. However, NHTSA cannot become involved in individual problems between you, your dealer, or American LaFrance, LLC.

To contact NHTSA, you may call the Vehicle Safety Hotline toll-free at 1-888-327-4236 (TTY: 1-800-424-9153); go to http://www.safercar.gov; or write to: Administrator, NHTSA, 400 Seventh Street, SW, Washington, DC 20590. You can also obtain other information about motor vehicle safety from http://www.safercar.gov.

Canadian customers who wish to report a safety related defect to Transport Canada, Defect Investigations and Recalls, may telephone the tollfree hotline 1-800-333-0510, or contact Transport Canada by mail at: Transport Canada, ASFAD, Place de Ville Tower C, 330 Sparks Street, Ottawa, Ontario, Canada K1A 0N5.

For additional road safety information, please visit the Road Safety website at: http://www.tc.gc.ca/roadsafety/menu.htm

4/06P
Printed in U.S.A.

https://truckmanualshub.com/

Foreword

© 2007 American LaFrance LLC. All rights reserved.

No part of this publication, in whole or part, may be translated, reproduced, stored in a retrieval system, or transmitted in any form by any means, electronic, mechanical, photocopying, recording, or otherwise, without the prior written permission of American LaFrance LLC. For additional information, please contact American LaFrance LLC., 1090 Newton Way, Summerville, SC 29483 or refer to http://www.condor.com.

https://truckmanualshub.com/

1

Vehicle Identification

Component Information Label 1.1
Federal Motor Vehicle Safety Standard (FMVSS) Labels 1.1
Canadian Motor Vehicle Safety Standard (CMVSS) Labels 1.1
Tire and Rim Labels 1.1
EPA Vehicle Noise Emission Control Label 1.1

https://truckmanualshub.com/

This page intentionally left blank.

https://truckmanualshub.com/

Component Information Label

The component information label (**Fig. 1.1**) is located on the wall below the dash panel on the primary driver's side of the vehicle. The component information label provides the following information:

- vehicle model
- vehicle identification number
- major component models
- major assemblies and installations

NOTE: Labels shown in this chapter are examples only. Actual specifications may vary from vehicle to vehicle.

Federal Motor Vehicle Safety Standard (FMVSS) Labels

NOTE: Due to the variety of FMVSS certification requirements, not all of the labels shown will apply to your vehicle.

If purchased for service in the U.S., vehicles built without a body will have a certification label (**Fig. 1.1**) attached to the left door jamb on vehicles with primary left-hand drive, and to the right door jamb on vehicles with primary right-hand drive. In addition, after the vehicle is completed, a certification label must be attached by the final-stage manufacturer. This label will be located on the left door jamb on vehicles with primary left-hand drive, and on the right door jamb on vehicles with primary right-hand drive. The certification label certifies that the vehicle conforms to all applicable FMVSS regulations in effect on the date of completion.

Canadian Motor Vehicle Safety Standard (CMVSS) Label

If purchased for service in Canada, vehicles built without a body are certified by a "Statement of Compliance" label (similar to the U.S. certification label). **Fig. 1.1**. The "Statement of Compliance" label must be attached by the final-stage manufacturer after completion of the vehicle. This label is affixed to the left door jamb on vehicles with primary left-hand drive, and to the right door jamb on vehicles with primary right-hand drive. This label certifies that the vehicle conforms to all applicable CMVSS regulations in effect on the date of completion.

Tire and Rim Labels

Tire and rim labels (**Fig. 1.1**) certify suitable tire and rim combinations that can be installed on the vehicle for the given gross axle weight rating. Tires and rims installed on the vehicle at the time of manufacture may have a higher load capacity than that certified by the tire and rim label. If the tires and rims currently on the vehicle have a lower load capacity than that shown on the tire and rim label, then the tires and rims determine the load limitations on each of the axles.

One tire and rim label is located on the left door jamb on vehicles with primary left-hand drive, and on the right door jamb on vehicles with primary right-hand drive. The second tire and rim label is affixed to one page of the incomplete vehicle document.

EPA Vehicle Noise Emission Control Label

A vehicle noise emission control label (**Fig. 1.1**) is attached to the left front door jamb and certifies that the vehicle, as built, meets applicable Federal noise emission control standards.

It is the owner's responsibility to maintain the vehicle so that it conforms to EPA regulations.

https://truckmanualshub.com/

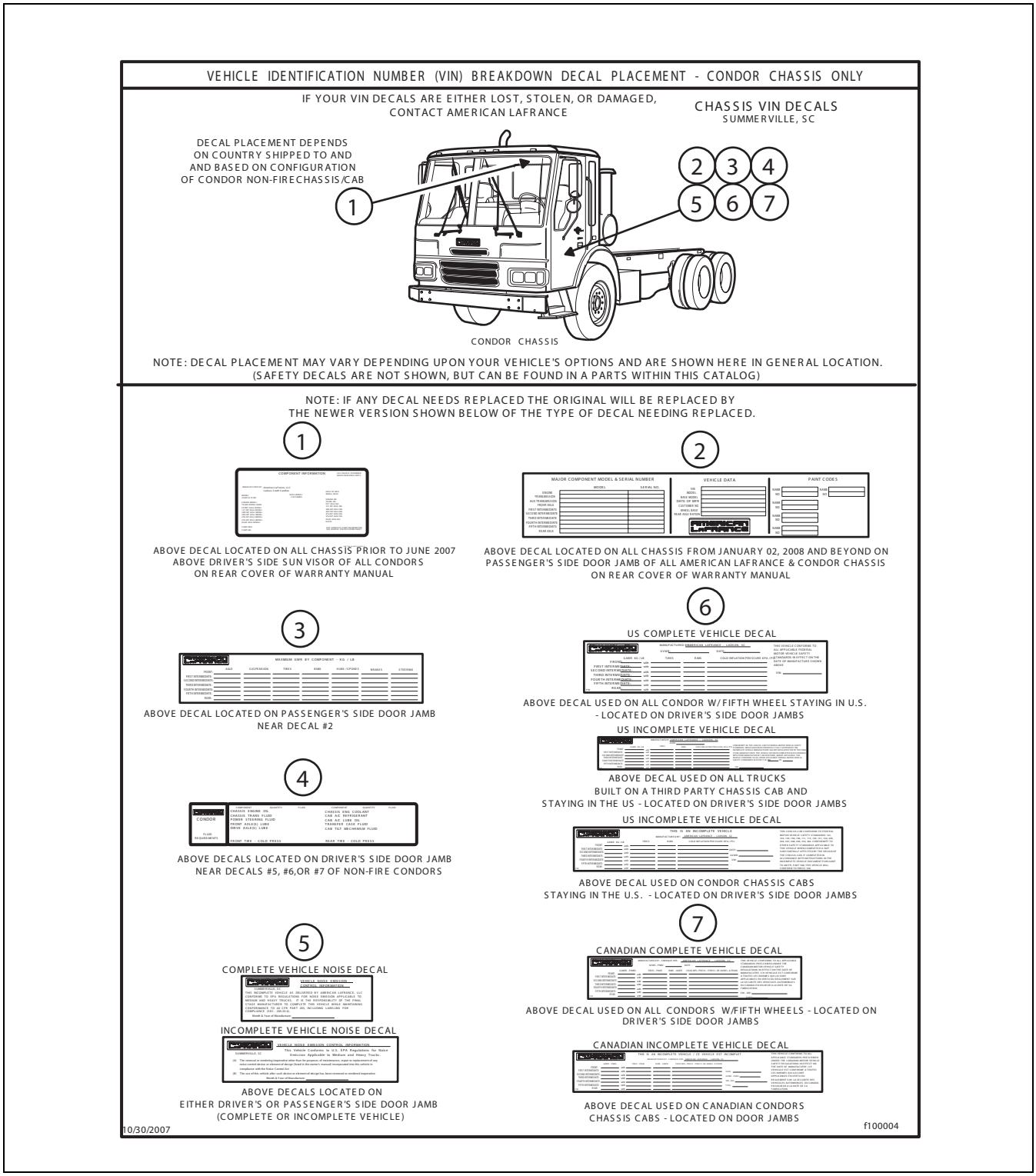

Fig. 1.1. Vehicle Decal Placement

https://truckmanualshub.com/

Vehicle Identification

VEHICLE IDENTIFICATION NUMBER (VIN) BREAKDOWN - CONDOR CHASSIS ONLY

USE THIS DECODER IF YOU HAVE AN AMERICAN LAFRANCE CONDOR CHASSIS BUILT FROM MAY 1, 2000 TO JANUARY 02, 2007 AND UP

TYPICAL VIN	1	A	F	H	A	A	A	N	2	6	R	A	6	7	5	4	6
POSITION NO.	1	2	3	4	5	6	7	8	9	10	11	12	13	14	15	16	17

Digits 1-3: World Manufacturer Identifier

Code	Manufacturer & Vehicle Type
4Z3	American LaFrance - Truck
1AF	American LaFrance, LLC - Complete Vehicle
5S X	American LaFrance, LLC - Incomplete Vehicle

Digits 12 - 17: Vehicle Production Sequence Number

As Assigned by the Manufacturer "Customer Order Number"

Digit 11: Plant of Manufacture

Code	Plant
R	Cleveland, NC (Prior to 2002)
R	Ladson, SC (2002 to 6/2007)
R	Summerville, SC (6/2007 to Present)

Digits 4 - 8: Vehicle Attribute Identifier

Digit 4 = Configuration & Chassis

Code	Configuration	Chassis	Code	Configuration	Chassis
A	4 x 2	Truck	N	8 x 4	Truck-Tractor
B	4 x 2	Truck-Tractor	P	8 x 6	Truck
D	4 x 4	Truck	R	8 x 6	Truck-Tractor
E	4 x 4	Truck-Tractor	1	8 x 8	Truck
F	6 x 2	Truck	T	10 x 4	Truck-Tractor
G	6 x 2	Truck-Tractor	U	10 x 6	Truck
H	6 x 4	Truck	V	10 x 6	Truck-Tractor
J	6 x 4	Truck-Tractor	W	12 x 4	Truck
K	6 x 6	Truck	2	12 x 6	Truck
L	6 x 6	Truck-Tractor	Z	14 x 4	Truck
Y	8 x 8	Truck	3	14 x 6	Truck
M	8 x 4	Truck	X	GLIDER	Truck

Digit 5 & 6 = Model, Cab Type & GVWR

Code	Model	Cab Type	GVWR
CE	Condor	COE	Class 7
CF	Condor	COE	Class 8
F7	Condor	COE	Glider
BU	Condor	COE	Class 7
BV	Condor	COE	Class 8
CJ	Condor	COE	GLIDER

Digit 7& 8 = Engine - Series - Fuel - Displacement - Brakes

Code	Manufacturer	Series	Fuel	Displacement	Brakes
A8	Cummins	ISM	Diesel	10.8L - 6 CYL	Air
AK	Cat	3126/CFE	Diesel	7.2L - 6 CYL	Air
AN	Cat	C10	Diesel	10.3L - 6 CYL	Air
AS	Cat	C12	Diesel	10.3L - 6 CYL	Air
B0	Detroit	Series 50	Diesel	8.3L - 6 CYL	Air
B5	Cummins	3126/CFE	CNG/LNG	8.3L - 6 CYL	Air
BS	Cummins	ISC	Diesel	8.3L - 6 CYL	Air
CA	Cummins	C8.3G	CNG/LNG	8.3L - 6 CYL	Air
CG	Detroit	Series 60	Diesel	12.7L - 6 CYL	Air
CK	Detroit	Series 60	Diesel	14L - 6 CYL	Air
CS	Mercedes-Benz	MBE-900	Diesel	6.4L - 6 CYL	Air
CY	Cummins	ISL	Diesel	8.9L - 6 CYL	Air
DA	Cat	C9	Diesel	8.8L - 6 CYL	Air
DC	Cat	C7	Diesel	7.2L - 6 CYL	Air
DE	Cat	C13	Diesel	12.5L - 6 CYL	Air
DL	Cat	C11	Diesel	11.1L - 6 CYL	Air
DN	Cummins	ISL Gas	CNG/LNG	8.9L - 6 CYL	Air
DR	Cummins	ISLG	CNG/LNG	8.9L - 6 CYL	Air
DS	Cummins	C8.3G+	CNG/LNG	8.3L - 6 CYL	Air
DT	Cummins	ISB	Diesel	6.7L - 6 CYL	Air
00	No Engine				

Digit 10: Model Year Code

Code	Year	Code	Year
V	1997	3	2003
W	1998	4	2004
X	1999	5	2005
Y	2000	6	2006
1	2001	7	2007

Digit 9: Check Digit

Calculated by Manufacturer

11/20/2007 f100003

Fig. 1.2. Vehicle Identification Number (VIN) Breakdown

https://truckmanualshub.com/

This page intentionally left blank.

https://truckmanualshub.com/

2

Instruments and Controls Identification

Instrument and Control Panel 2.1
Controls 2.1
Instrument Pod 2.11
Instruments and Gauges 2.13
Warning and Indicator Lights 2.16

https://truckmanualshub.com/

This page intentionally left blank.

https://truckmanualshub.com/

Instrument and Control Panel

Fig. 2.1 represents a typical left-hand-drive instrument and control panel equipped with all standard and many optional instruments and controls.

Fig. 2.2 represents a typical right-hand-drive instrument and control panel with all standard and many optional instruments and controls.

Fig. 2.3 represents a typical dual instrument and control panel equipped with all standard and many optional instruments and controls.

Controls

Most controls are located on the center dash panel. For the location of center dash panel controls:

- See **Fig. 2.4** for a left-hand-drive vehicle.
- See **Fig. 2.5** for a right-hand-drive vehicle.
- See **Fig. 2.6** for a dual drive vehicle.

Ignition Switch and Key

The ignition switch can be turned to four positions: OFF, ON, START, and ACCESSORY. See **Fig. 2.1**. The key can be inserted and removed only in OFF position.

With ignition switch in OFF position, whether ignition key is inserted or not, low-beam headlights, brake lights, dome lights, clearance lights, identification lights, turn signals, hazard warning lights, parking lights, and cigarette lighter will operate.

To start engine, turn ignition key 90º degrees clockwise until engine starts. After engine has started, release ignition key and it will return to ON position.

In ON position, the ignition key is turned 45º degrees clockwise. With ignition switch in ON position, all electrical systems are operable. Warning lights and buzzer for low air pressure and low oil pressure operate until engine is started and minimum pressures are built up.

In ACESSORY position, the ignition key is turned 45º degrees counterclockwise. With ignition key in ACCESSORY position, windshield wipers, heated mirrors, backup lights, radio, and all electric gauges operate.

Head Lamp Switch

The head lamp switch is a three-position switch. Press upper end of HEAD LAMP switch (**Fig. 2.8**) to turn on headlights, marker lights, taillights, clearance lights, identification lights, and instrument and control panel lights. Press lower end of HEAD LAMP switch to turn on taillights, marker lights, clearance lights, identification lights, instrument and control panel lights. With head lamp switch in middle position, all of these lights are off.

Instrument and Control Panel Dimmer Switch

Instrument and control panel lights can be brightened by moving dimmer switch lever (**Fig. 2.8**) up, or dimmed by moving lever down. To turn instrument and control panel lights off, move lever all the way down.

Daytime Running Lights

The daytime running lights are turned on when engine is started, parking brake is released, and headlight switch in OFF position. Daytime running lights illuminate headlights at a reduced intensity during daytime driving. These lights are not to be used in place of the headlights during reduced visibility or nighttime driving conditions.

For vehicles built for operation in Canada, daytime running lights are required.

WARNING

When daytime running lights are on, only headlights are illuminated at a reduced intensity. Marker lights, taillights, and trailer lights are not illuminated. Turn headlights on at dusk. Using daytime running lights at night could cause an accident resulting in personal injury or property damage.

Interior Lights

An interior light with one white bulb is mounted on the cab ceiling. Light automatically illuminates when one of the cab doors is opened and ignition switch is in ON position. The white light can also be manually turned on by pressing the dimpled end of light.

https://truckmanualshub.com/

Instruments and Controls Identification

The vehicle may also be equipped with optional map lights. Map lights are activated by pressing switch located on their base.

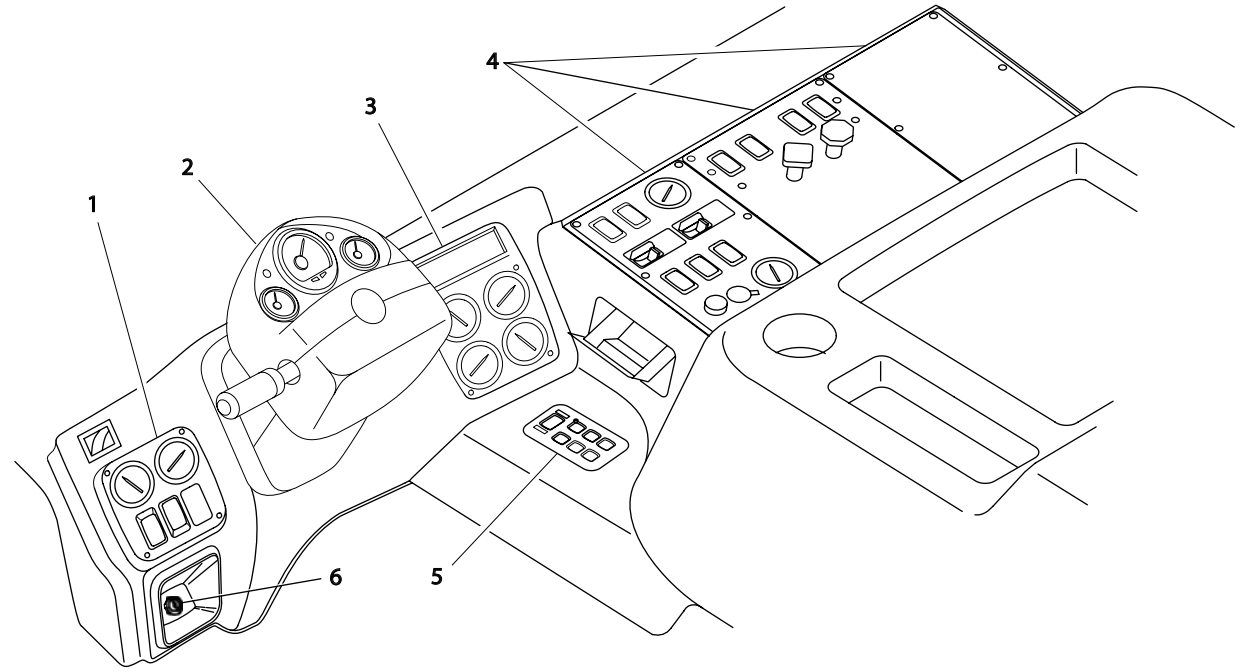

11/14/2007 f610444a

1. "A" Panel
2. Instrument Pod
3. Instrument Cluster
4. Center Dash Panel
5. Push Button Shift Selector
6. Ignition Switch

Fig. 2.1. Instrument and Control Panel for a Left-Hand-Drive Vehicle

Left-Hand/Right-Hand Drive Switch

A left-hand/right-hand drive switch is located on the center control panel on vehicles with dual drive. Press upper (LH) end of switch, before turning on ignition, switch to transfer control of throttle and transmission to left-hand drive. Press lower (RH) end of switch, before turning on ignition switch, to transfer control of throttle and transmission to right-hand drive. A guard surrounding switch helps to prevent it from being moved to opposite position unintentionally.

NOTE: Both sets of service brakes and steering controls on dual drive vehicles are always operable regardless of which position left-hand/ right-hand drive switch is in.

WARNING

When driving in standing position, do not exceed 20 mph (32 km/h). Driving faster than 20 mph (32 km/h) in standing position could result in loss of vehicle control and possible personal injury, death, or property damage.

Power Mirror Switch

Position of door-mounted and cab-mounted mirrors is controlled by an optional power mirror switch located on the center dash panel.

To move left-side mirror, press left arrow on rocker portion of POWER MIRROR switch; to move the right-side

https://truckmanualshub.com/

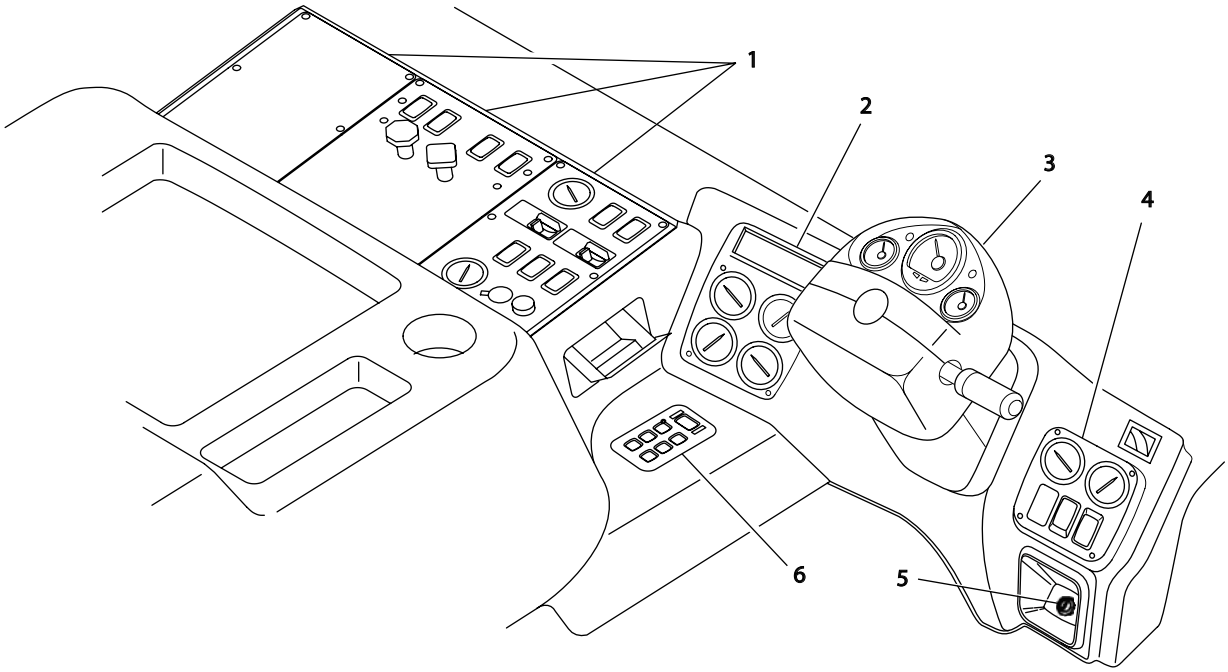

01/02/2008 f610444b

1. Center Dash Panel
2. Instrument Cluster
3. Instrument Pod
4. “A” Panel
5. Ignition Switch
6. Push Button Shift Selector

Fig. 2.2. Instrument and Control Panel for a Right-Hand-Drive Vehicle

mirror, press right arrow on rocker portion of POWER MIRROR switch. After pressing either left arrow or right arrow on rocker switch, press upper portion of power mirror switch in one or more directions until mirror is positioned as needed.

Mirror Heat Switch, Optional

Door-mounted and cab-mounted mirrors can be heated to keep them defrosted. Press upper end of MIRROR HEAT switch to heat mirrors. When mirror heat switch is on, a mirror icon is visible on switch.

Power Window Switch

Power window switches are located on center control panel. Press lower end of POWER WINDOW switch to lower window. Press upper end of POWER WINDOW switch to raise window.

Hazard Warning Light Switch

The hazard warning light switch is located on center control panel. Press upper end of HAZARD switch to turn hazard warning lights on.

Cigarette Lighter

Push cigarette lighter INWARD to heat element. Lighter will automatically pop out when element is hot.

Power Outlet

A 12V-10A power outlet is located on center control panel. Power outlet can be used for a cell phone or other accessory items that need 12V charging.

Traction Control Differential Switch, Optional

Traction control differential switch locks differential case, gearing, and rear axle shafts together to provide

https://truckmanualshub.com/

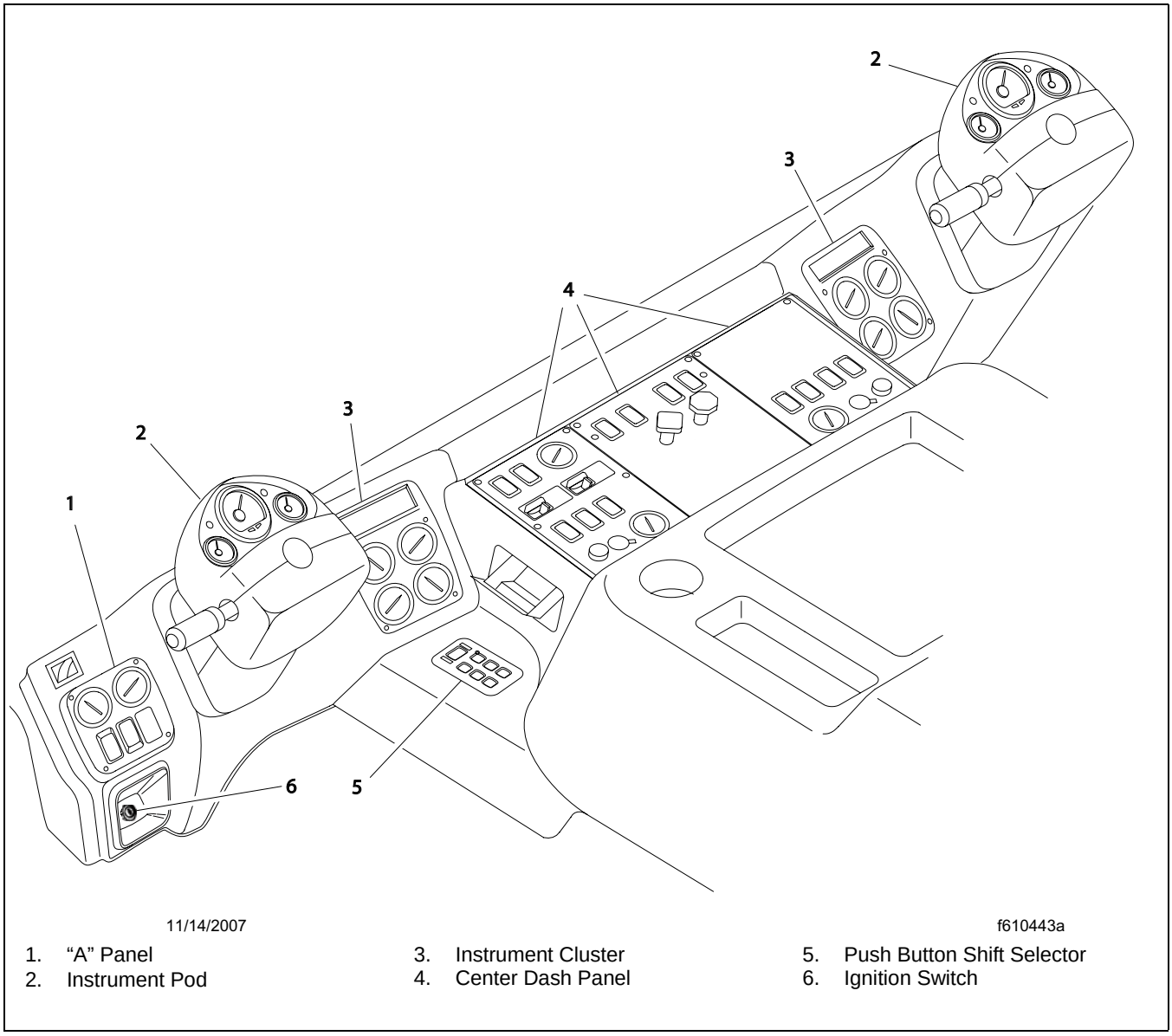

1. “A” Panel
2. Instrument Pod
3. Instrument Cluster
4. Center Dash Panel
5. Push Button Shift Selector
6. Ignition Switch

Fig. 2.3. Instrument and Control Panel for a Dual Drive Vehicle

maximum traction for use in unfavorable driving conditions such as mud or ice. Traction control differential lock should not be used when favorable driving conditions exist.

Move traction control differential switch to LOCK position while maintaining a constant vehicle speed of 25 mph (40 km/h). The indicator on switch illuminates when switch is in LOCK position. A guard surrounding switch helps to prevent it from being moved to the LOCK position unintentionally. See **Chapter 7** for complete operating instructions.

Interaxle Differential Switch

The interaxle differential switch locks tandem drive axles together allowing both axles to turn together at the same speed.

https://truckmanualshub.com/

CAUTION

The interaxle differential lock should only be used whenever the vehicle encounters poor traction conditions. However, it also increases drivetrain and tire wear. The interaxle differential lock should never be used during normal driving conditions.

Move interaxle differential switch to LOCK position when improved traction is required. Indicator on switch illuminates when switch is in LOCK position. A guard around switch helps prevent switch from unintentionally being moved to LOCK position. See **Chapter 7** for complete operating instructions.

Fifth Wheel Slide Switch, Optional

Fifth wheel slide switch allows operator to adjust air slide fifth wheel forward or rearward from inside cab. Moving fifth wheel slide switch to UNLOCK position unlocks fifth wheel slide mechanism. Changes can now be made to total length of tractor-trailer and to axle load complying with state or provincial regulations. When fifth wheel is in correct position, move switch to LOCK position locking fifth wheel to baseplate.

Indicator on switch illuminates when switch is in UNLOCK position. A guard surrounding switch helps to prevent the switch from being moved to UNLOCK position unintentionally.

CAUTION

Do not activate fifth wheel slide control valve while vehicle is in motion. Damage to fifth wheel member, kingpin, cab, trailer and ultimately entire drivetrain can occur.

Air Horn, Optional

To sound air-operated horn, pull cable located above cab door.

Parking Break Knob

Pull PARKING BRAKE knob out to apply parking brakes. Push knob in to release parking brakes. Before parking brakes can be released, air pressure in air system must contain a minimum of 65 psi (448 kPa). See **Fig.2.5**.

Trailer Air Supply Knob, Optional

After vehicle and air hoses are connected to a trailer and pressure in air system is at least 65 psi (448 kPa), TRAILER AIR SUPPLY knob must be pushed in (and should stay in) to charge trailer air supply system and release trailer spring parking brakes. Before disconnecting a trailer or when operating a vehicle without a trailer, trailer air supply knob must be pulled out.

Turn Signal/Windshield Wiper Lever

Turn Signals

The turn signal lever (**Fig. 2.10**) is located on left side of the steering column. Push lever up to activate right turn signal. Pull lever down to activate left turn signal. Turn signal lever will return to neutral position after turn has been completed.

Windshield Wipers

To turn windshield wipers on, turn windshield wiper lever. There are three intermittent wiper speeds, a standard speed, and a fast speed. See **Fig. 2.9**.

CAUTION

Do not move wiper arms manually. Wiper motor damage will occur if arms are moved.

CAUTION

Do not operate windshield wipers if covered with ice. Damage to wiper blades, wiper arms and wiper motor can occur.

https://truckmanualshub.com/

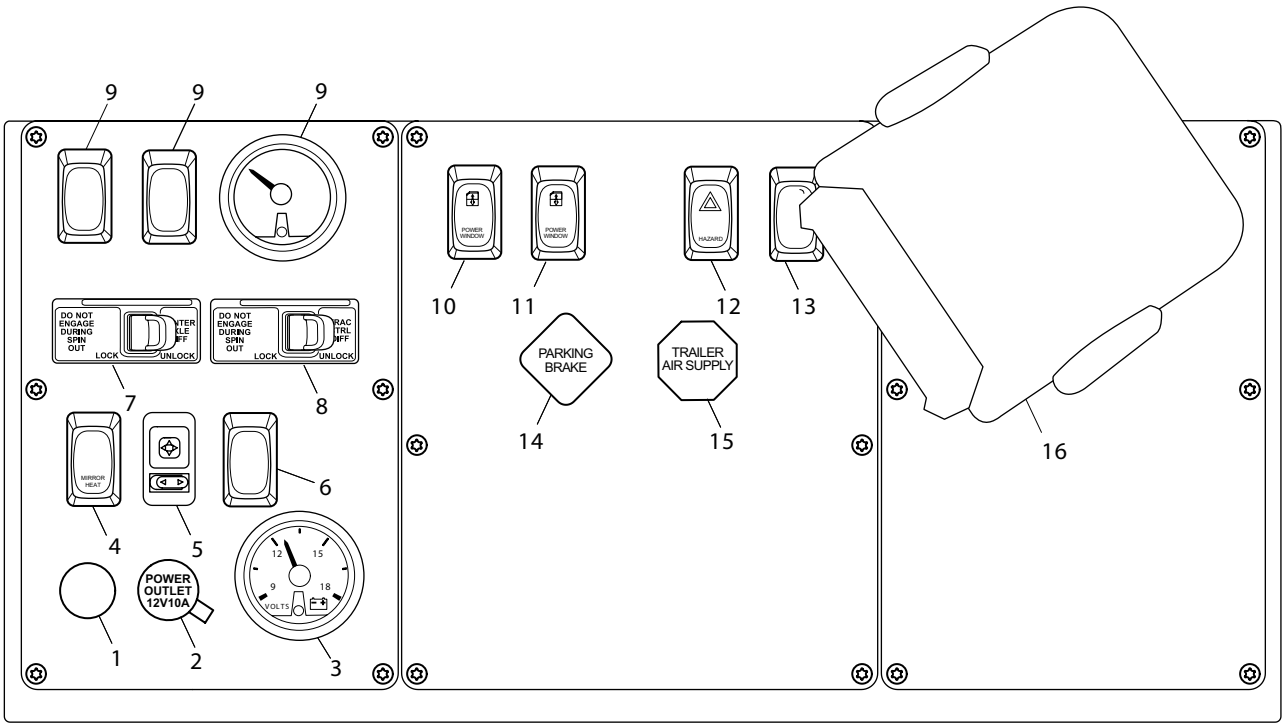

11/16/2007 f610439a

NOTE: The center dash panel for a sit-down right-hand-drive vehicle is the reverse of the sit-down left-hand-drive vehicle.

1. Cigarette Lighter
2. Power Outlet
3. Ammeter, Optional
4. Mirror Heat Switch, Optional
5. Power Mirror Switch, Optional
6. Auto Neutral Switch, Optional
7. Interaxle Differential Switch
8. Traction Control Differential Switch, Optional
9. Spare Switch/Switch/Gauge Location
10. Left-Hand Power Window Switch
11. Right-Hand Power Window Switch
12. Hazard Warning Light Switch
13. Optional Switch
14. Parking Brake Knob
15. Trailer Air Supply Knob, Optional
16. Obstacle Detection Monitor, Optional

Fig. 2.4. Center Dash Panel Controls for a Left-Hand-Drive Vehicle

https://truckmanualshub.com/

Instruments and Controls Identification

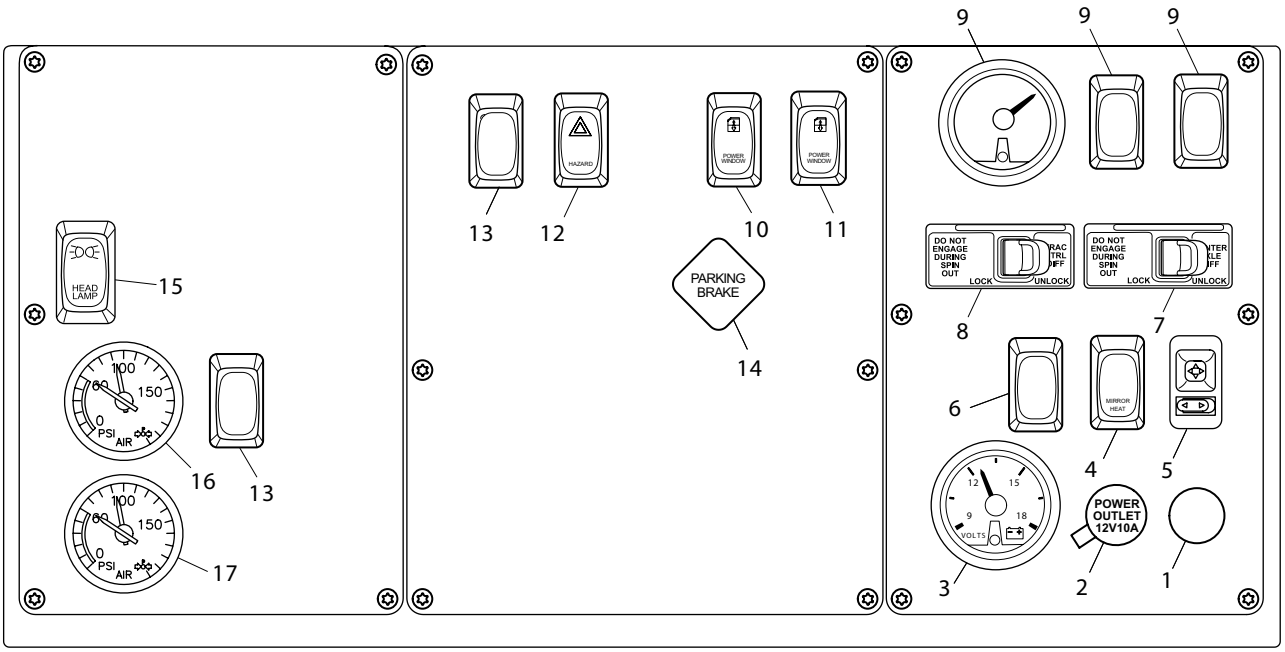

01/04/2008 f610440b

1.Cigarette Lighter
2. Power Outlet
3. Ammeter, Optional
4. Mirror Heat Switch, Optional
5. Power Mirror Switch
6. Auto Neutral Switch
7. Interaxle Differential Switch
8. Traction Control Differential Switch, Optional
9. Spare Gauge/Switch/Switch Location
10. Left-Hand Power Window Switch
11. Right-Hand Power Window Switch
12. Hazard Earning Light Switch
13. Optional Switch
14. Parking Brake Knob
15. Head Lamp Switch
16. Primary Air Pressure Gauge
17. Secondary Air Pressure Gauge

Fig. 2.5. Center Dash Panel Controls for a Right-Hand-Drive Vehicle

https://truckmanualshub.com/

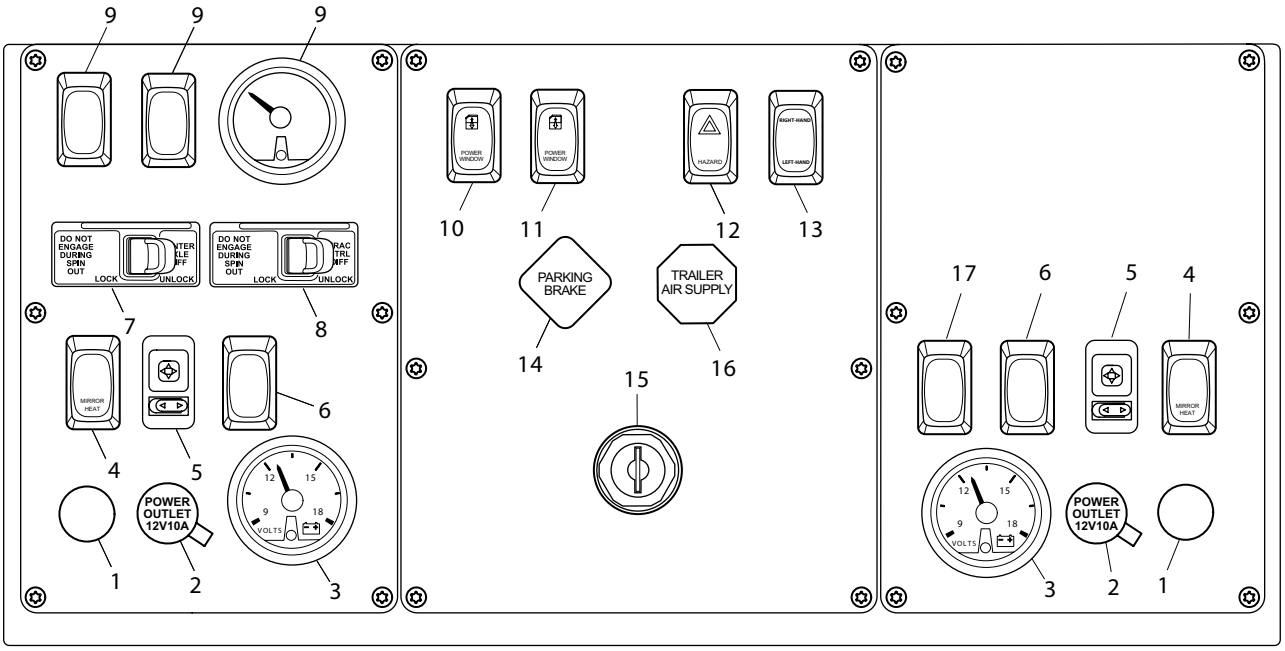

01/07/2008 f610438b

1. Cigarette Lighter
2. Power Outlet
3. Ammeter, Optional
4. Mirror Heat Switch, Optional
5. Power Mirror Switch, Optional
6. Auto Neutral Switch, Optional
7. Interaxle Differential Switch
8. Traction Control Differential Switch, Optional
9. Spare Switch/Switch/Gauge Location
10. Left-Hand Power Window Switch
11. Right-Hand Power Window Switch
12. Hazard Warning Light Switch
13. Left-Hand/Right-Hand Drive Switch
14. Parking Brake Knob
15. Ignition Switch
16. Trailer Air Supply Knob, Optional
17. Optional Switch

Fig. 2.6. Center Dash Panel Controls for a Dual Drive Vehicle

https://truckmanualshub.com/

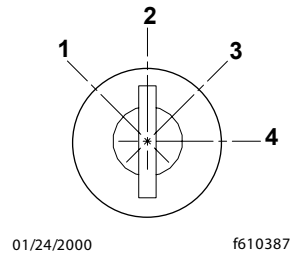

1. Accessory
2. Off
3. On
4. Start

Fig. 2.7. Ignition Switch Positions

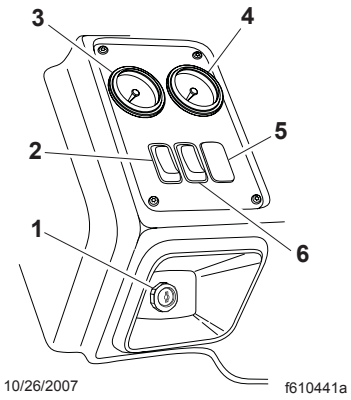

1. Ignition Switch (located here on single-drive-vehicles)
2. Head Lamp Switch
3. Brake Application Air Gauge, Optional
4. Air Restriction Gauge, Optional
5. Optional Switch
6. Instrument and Control Panel Dimmer Switch

Fig. 2..8. "A" Panel Controls

High Beam Headlamps

Push turn signal lever away from you to change head lamps from low beam to high beam. Pull turn signal lever toward you to return head lamps to low beam.

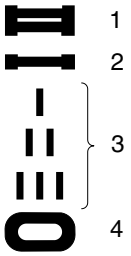

1. Fast
2. Standard
3. Intermittent
4. Off

Fig. 2.9. Windshield Wiper Speeds

Flash to Pass

Pull turn signal lever toward you and release lever to momentarily flash high-beam head lamps when head lamps are off.

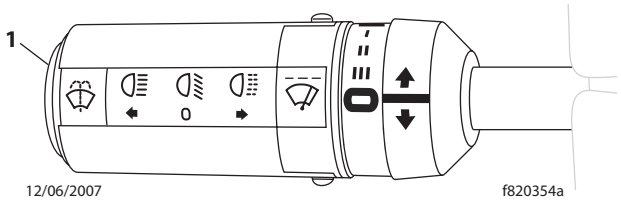

1. Windshield Washer Button

Fig. 2.10. Turn Signal/Windshield Wiper Lever

Work Brake

To use work brake, come to a complete stop and turn work brake (**Fig. 2.11**) to ON position. The work brake operates both front and rear brakes. On most applications, whenever work brake is applied, transmission shifts to NEUTRAL preventing vehicle from being driven in forward or reverse. Work brake uses less air than parking brakes and doesn't deplete air in system. Turn work brake to OFF position when ready to operate vehicle.

https://truckmanualshub.com/

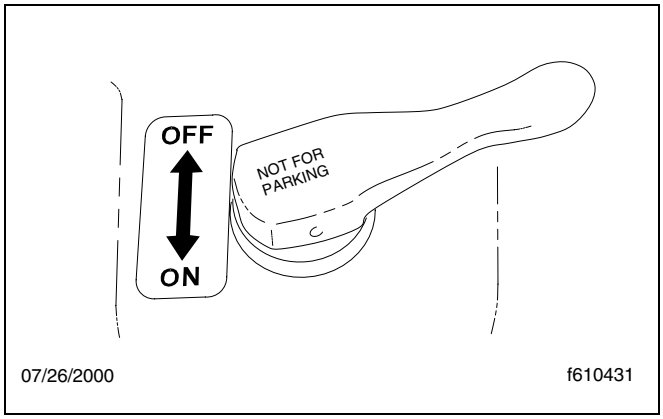

Fig. 2.11. Work Brake

WARNING

Do not use work brake to stop vehicle. Using work brake to stop vehicle may increase stopping distance, which may cause an accident resulting in death, injury, or vehicle damage.

CAUTION

On vehicles not equipped with auto-neutral feature,operating vehicle with work brake set to ON position can cause excessive wear on brake system components.

Retarder Switch, Optional

Push upper end of retarder switch, labeled RTRDR, to apply exhaust brake, engine brake, driveline retarder, or transmission retarder. See **Chapter 5** for additional information on retarder systems.

NOTE: If cruise control is on, exhaust brake cannot be used.

Battery Shutoff Switch, Optional

Battery shutoff switch, located on side of battery box (**Fig. 2.12**) cuts off all battery power to vehicle. Switch can be locked in OFF position. Switch is used when workshop procedures require that batteries be disconnected. It is also used when vehicle is placed out of service for extended periods to prevent battery discharge.

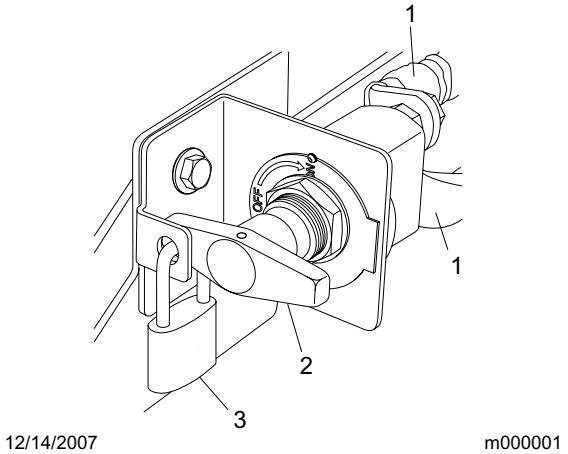

1. Battery Cables
2. Battery Shutoff Switch Handle
3. Lock

Fig. 2.12. Battery Shutoff Switch (Locked Position)

Allison Automatic Transmission Shift Selector

Allison MD and HD automatic transmissions come with a push button shift selector. See **Chapter 7** for the push button shift selector operating instructions. See **Fig. 2.13.**

Instrument Pod

The instrument pod (**Fig. 2.14**) is located on the steering column and contains the following features:

- a speedometer
- a tachometer
- an engine oil pressure gauge
- a high-beam head lamp indicator
- a check engine indicator
- speedometer message center
- turn signal indicators

See **Fig. 2.15** for Speedometer Message Center Displays.

https://truckmanualshub.com/

Instruments and Controls Identification

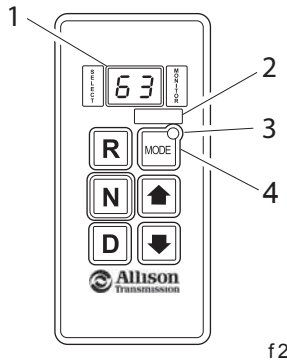

1. Digital Display
2. Mode ID
3. Mode Indicaror
4. Mode Button

NOTE: Allison Transmission Shown

Fig. 2.13. Allison and Caterpillar Automatic Transmission Push-Button Shift Selecto

Speedometer

Speedometer registers vehicle speed in both miles per hour (mph) and kilometers per hour (km/h). See **Fig. 2.14**.

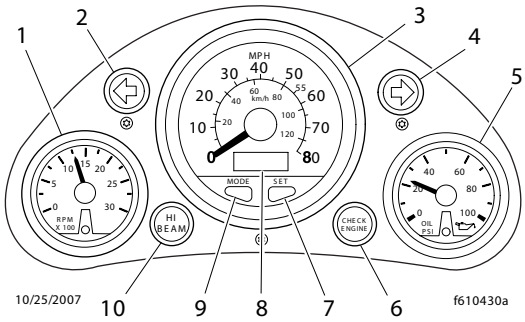

1. Tachometer
2. Left-Turn Signal Indicator
3. Speedometer
4. Right-Turn signal Indicator
5. Engine Oil Pressure Gauge
6. Check Engine Indicator
7. Set Button
8. Speedometer Message Center
9. Mode Button
10. High-Beam Head Lamp Indicator

Fig. 2.14. Instrument Pod

Speedometer Message Center

The Speedometer Message Center (SMC) provides information in a liquid crystal display (LCD) within the speedometer. SMC displays:

- an odometer (not resettable)
- two resettable trip odometers
- an hour meter (not resettable)
- diagnostics

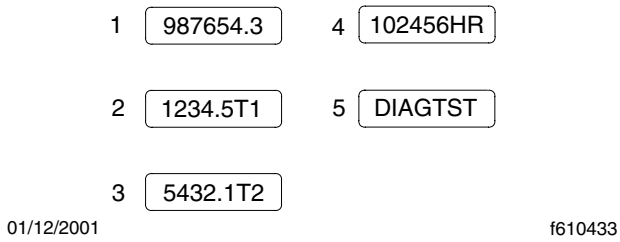

1. Odometer
2. Trip Odometer 1
3. Trip Odometer 2
4. Hour Meter
5. Diagnostic Code

Fig. 2.1. Speedometer Message Center Displays

MODE button, located on speedometer, is used to scroll through displays on speedometer message center. SMC default display is odometer. To view a different display, press and release MODE button until desired display appears. SMC display goes blank when ignition is turned off. Press either MODE button or SET button to reactivate display. Display will remain on for 10 seconds.

If a warning alarm is triggered, a warning message will override all other displays until condition that caused warning alarm is corrected. Warning message may be temporarily overridden by pressing SET button.

Tachometer

Tachometer, **Fig. 2.14**, indicates engine speed in revolutions per minute (rpm) and serves as a guide for shifting transmission and keeping engine in appropriate rpm range. For low idle and rated rpm, refer to engine identification plate.

https://truckmanualshub.com/

Tachometer

Tachometer, **Fig. 2.14**, indicates engine speed in revolutions per minute (rpm) and serves as a guide for shifting transmission and keeping engine in appropriate rpm range. For low idle and rated rpm, refer to engine identification plate.

Engine Oil Pressure Gauge

The oil pressure gauge should read as shown in **Table 1**.

Oil Pressure*		
Engine Model	**Oil Pressure at Idle Speed: psi (kPa)**	**Oil Pressure at Rated rpm: psi (kPa)**
Cummins ISC, ISL	10 (70)	30 (207)
Cummins CG+, ISM	10 (70)	40–50 (276–345)
Caterpillar CFE/ 3126B	6 (41)	48 (331)
Caterpillar C–11, C–13	10 (70)	52 (359)

* Oil pressures are given with the engine at operating temperature. With the engine cold, oil pressure may be higher

Table 2.1. Oil Pressure

Trip Odometer Operation

1. To display trip odometer 1 or trip odometer 2, press and release mode button until 1 XXXX or 2 XXXX is displayed. XXXX represents actual mileage reading.
2. To reset a trip odometer to zero, display odometer to be reset.
3. Press set button until zeros are displayed.

Warning Alarms and Messages

A warning alarm indicates that some condition in vehicle requires attention. A warning alarm can be indicated in following ways:

- a message in SMC
- a lit LED in a gauge
- an audible alarm from SMC

A warning alarm will continue until condition that caused the alarm is corrected or the set button is pressed. Once condition has been corrected, SMC will display a reset message for 10 seconds and warning indications will cease.

See **Table 2** for warning messages that may appear in SMC.Press MODE button to display another function. Warning messages will reappear every 20 seconds until alarm condition is corrected.

SMC Messages				
Message	**Condition**	**Associated Gauge LED**	**Warning Alarm**	**Reset Message**
AIR1 LO	Primary air pressure below setpoint	Primary Air Pressure	Yes	AIR1 OK
AIR2 LO	Secondary air pressure below setpoint	Secondary Air Pressure	Yes	AIR2 OK
OIL LO	Oil pressure below setpoint	Engine Oil Pressure	Yes	OIL OK
H2OT HI	Water temperature above setpoint	Water Temperature	Yes	H2OT OK
OILT HI	Oil temperature above setpoint	Engine Oil Temperature	Yes	OILT OK
TRAN HI	Transmission temperature above setpoint	Main Transmission Oil Temperature	Yes	TRAN OK

Table 2.2. SMC Messages

https://truckmanualshub.com/

Instruments and Controls Identification

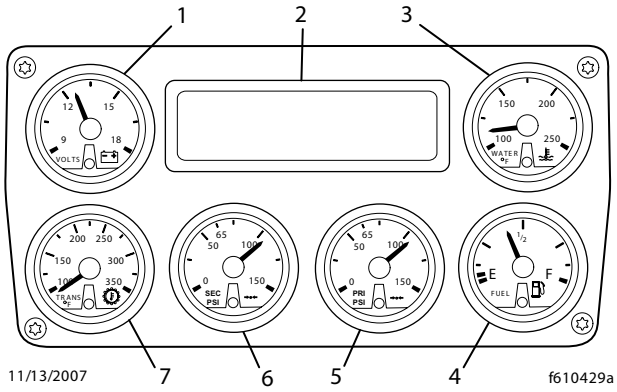

1. Voltmeter
2. Warning and Indicator Display
3. Water (Coolant) Temperature
4. Fuel Level Gauge
5. Primary Air Pressure Gauge
6. Secondary Air Pressure Gauge
7. Transmission Oil Temperature Gauge

Fig. 2.16. Instrument Cluster

Primary and Secondary Air Pressure Gauge

Primary and secondary air pressure gauge (**Fig. 2.16**) displays constant pressure in air system. Normal pressure, with engine running, is 95 to 125 psi (655 to 862 kPa). A low-air-pressure warning light and alarm come on when air pressure in system drops below a minimum pressure of 62 to 68 psi (427 to 469 kPa). When engine is started, warning light and alarm remain on until air pressure exceeds minimum pressure.

Fuel Level Gauge

Fuel level gauge (**Fig. 2.15**) indicates level of fuel in fuel tank(s).

Water Temperature Gauge

During normal engine operation, water (coolant) temperature gauge (**Fig. 2.16**) should read 175 to 195°F (79 to 91°C). If temperature remains below 160°F (71°C) or exceeds maximum temperature shown in **Table 1.1**, inspect cooling system to determine cause.

Refer to **Section 20.00** of the *Condor® Workshop Manual* for troubleshooting and repair procedures.

Maximum Water (Coolant) Temperature	
Engine Model	**Maximum Coolant Temperature: °F (°C)**
Caterpillar	220 (104)
Cummins	212–225 (100–107)

Table 1.1, Maximum Water (Coolant) Temperature

Drive Axle(s) Oil Temperature Gauge, Optional

During normal operation, the drive axle oil temperature gauges should read between 150 to 230°F (65 to 110°C). Under heavy loads, such as when climbing steep grades, temperatures up to a maximum of 250°(121°C) are not unusual.

CAUTION

A sudden increase in oil temperature that is not caused by a load increase may indicate mechanical failure. Bring vehicle to a safe stop and investigate cause to prevent further damage. Do not operate the engine until cause has been determined and corrected.

Intake-Air Restriction Indicator

Intake-air restriction indicator, located behind cab at air cleaner (**Fig. 2.17**), measures vacuum on engine side of the air cleaner at air cleaner outlet. If indicator stays locked at or above value shown under Service in H_2O heading in **Table 1.2** after engine is shut down, replace the air filter, then reset indicator by pressing reset button.

NOTE: Avoid opening air cleaner and disturbing the seals or air filter until indicator stays locked at or above value shown in **Table 1.2**.

https://truckmanualshub.com/

Intake-Air Restriction Indicator Values		
Engine Type	**Initial inH_2O**	**Service inH_2O**
Caterpillar	15	25
Cummins	10	25

Table 1.2, Intake-Air Restriction Indicator Values

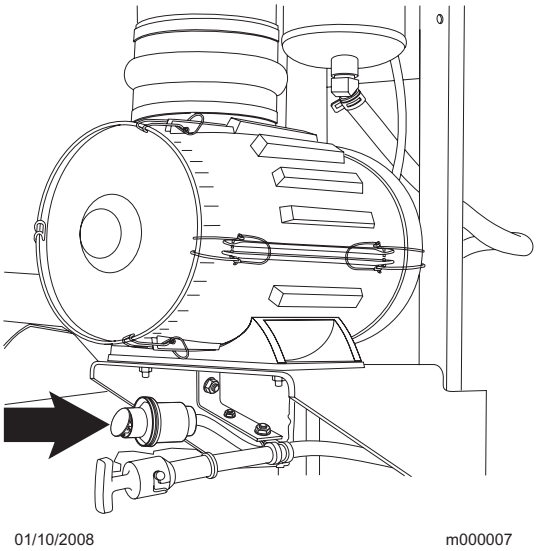

Fig. 2.17. Intake-Air Restriction Indicator

Brake Application Air Gauge, Optional

A brake application air gauge (**Fig. 2.8**) registers air pressure being used to apply brakes and should be used for reference only. Gauge will not register air pressure until the service brake is depressed.

Ammeter, Optional

Ammeter displays current flowing to and from battery. A positive reading indicates that charging system is supplying enough power to operate all electrical accessories in use and battery charge is being maintained. A negative reading indicates that electrical accessories are consuming more power than charging system can supply and batteries are being discharged.

A slightly negative reading may be corrected by increasing engine idle speed. If negative reading is high, some electrical equipment should be shut off to reduce electrical load.

Warning and Indicator Lights

See **Fig. 2.16** for the warning and indicator lights layout.

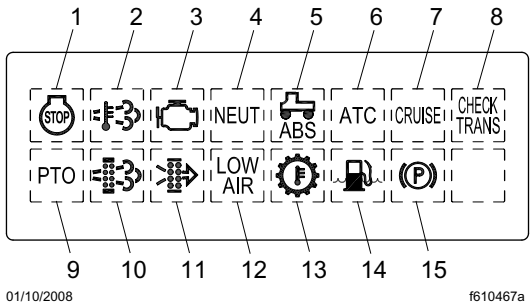

1. Stop Engine Warning
2. High Exhaust Gas Temperature
3. Grid Heat Indicator
4. Neutral Indicator
5. Antilock Braking System Warning
6. Automatic Traction Control Warning
7. Cruise Indicator
8. Check Transmission Indicator
9. Power Takeoff Indicator
10. DPF Regeneration Active
11. Air Filter Restriction Indicator
12. Low Air Pressure Warning
13. Transmission Temperature Warning
14. Water in Fuel Indicator
15. Parking Brake Indicator

Fig. 2.18. Instrument Cluster

Stop Engine Warning

Stop engine (STOP ENG) warning light comes on when engine is not functionally properly. Move vehicle out of traffic and shut down engine immediately.

Power Takeoff Indicator

Power takeoff (PTO) indicator comes on when PTO is in use.

Grid Heat Indicator

Grid heat indicator comes on when grid heater (or air intake warmer) is warming up. Start engine after indicator turns off.

https://truckmanualshub.com/

Low Air Pressure Warning

Low air pressure warning light (LOW AIR) comes on and an alarm sounds when air pressure in primary air reservoir drops below 64 to 76 psi (441 to 524 kPa).

ABS Warning

ABS (Antilock Braking System) warning light comes on when the safety circuit senses a failure in any part of ABS system. If ABS warning light stays on after engine is started, there is a malfunction in antilock brake system. See **Chapter 5** for more information on ABS.

ABS warning light is also used during diagnostics to display blink codes. For troubleshooting with blink code diagnostics, see **Group 42** of *Condor® Workshop Manual*.

ATC Warning

ATC (Automatic Traction Control) warning light comes on if vehicle is equipped with traction control and if one of the drive wheels spins during acceleration. ATC warning light will come on and remain on if there is a fault in traction control system.

Cruise Indicator

CRUISE indicator comes on when cruise control is in use.

Check Transmission Indicator

Check transmission (CHECK TRANS) indicator is a standard feature of the Allison MD and HD Series transmissions. CHECK TRANS indicator comes on when temperature in sump exceeds 250°F (121°C) or when temperature in the retarder exceeds 330°F (166°C). When check transmission indicator stays on after vehicle start-up, ECU indicates a diagnostic code. For more information on this feature, see **Chapter 7**.

Park Brake Indicator

Park brake indicator comes on when parking brake is applied. If indicator does not go off after releasing parking brake, correct problem before continuing to operate vehicle. Alarm sounds when vehicle is moving at a speed greater than 2 mph (3 km/h) with parking brake set.

Water in Fuel Indicator

WATER IN FUEL indicator comes on when there is water in fuel/water separator. Water should be drained from fuel/water separator at next convenient time. For instructions on how to drain fuel/water separator, see **Chapter 9**.

Fuel/water separator is an optional feature.

Transmission Temperature Warning

Transmission temperature (TRANS TEMP) warning light comes on when transmission-to-cooler oil temperature reaches 300°F (149°C). If warning light comes on, stop vehicle and put transmission into neutral. Accelerate engine from 1200 to 1500 rpm to allow transmission to return to a normal temperature of 160 to 220°F (71 to 104°C) before resuming operation. Check transmission oil fluid level.

Neutral Indicator

The NEUTRAL indicator comes on when auto neutral switch is on.

Air Restriction

The air restriction indicator comes on when air filter needs cleaning or changing.

Retarder Active Indicator

The retarder active (RTD ACTIVE) indicator comes on when engine brake, exhaust brake, driveline retarder, or transmission retarder is on.

Low Battery Voltage Warning

Low battery voltage warning light comes on when battery voltage is low.

https://truckmanualshub.com/

This page intentionally left blank.

https://truckmanualshub.com/

3

Vehicle Access and Features

Cab Door Locks 3.1
Folding Door 3.1
Cab Entry and Exit 3.2
Front Cab Access Panel 3.5
Cab Tilt System 3.5
Tilt and Telescoping Steering Column 3.8
Seats 3.8
Seat Belts and Tether Belts 3.10
Obstacle Detection System, Optional 3.12
Relay, Fuse, and Circuit Breaker Identification 3.12

https://truckmanualshub.com/

This page intentionally left blank.

https://truckmanualshub.com/

Cab Door Locks

The key that operates the ignition switch also locks and unlocks the cab doors from the outside, with the exception of the folding door on a stand-up-drive vehicle. The folding door has a separate cab door key.

To unlock the left-side door from outside the cab, insert the ignition key (or the cab door key for a folding door) in the lock and turn the key counterclockwise. Pull the handle out to open the door. To lock the left-side door from the outside, insert the key in the lock and turn the key clockwise.

To unlock the right-side door from outside the cab, insert the ignition key (or the cab door key for a folding door) in the lock and turn the key clockwise. Pull the handle out to open the door. To lock the right-side door from the outside, insert the key in the lock and turn the key counterclockwise.

To lock the left-or right-side door from inside the cab, with the exception of the folding door, push down the lock button (**Fig. 3.2**).

To unlock the left-or right-side door from inside the cab, with the exception of the folding door, lift up on the lock button.

Folding Door

A folding door is available on vehicles with stand-up drive. See **Fig. 3.3**. The folding door can be opened, folded up, and secured to the cab when frequent exits and entries are being made. A restraint that extends across the opening of the door is also provided. See **Fig. 3.4.**.

Use the following instructions to fold and secure the folding door.

CAUTION

Ensure all ice and mud build-up is cleared from cab and door surfaces before closing, preventing damage to door.

1. Open the folding door until it is at a 90-degree angle to the cab.
2. Lift the lower portion of the door until the door striker is connected to the latch. Lock the door in the folded position by locking the outer door lock.

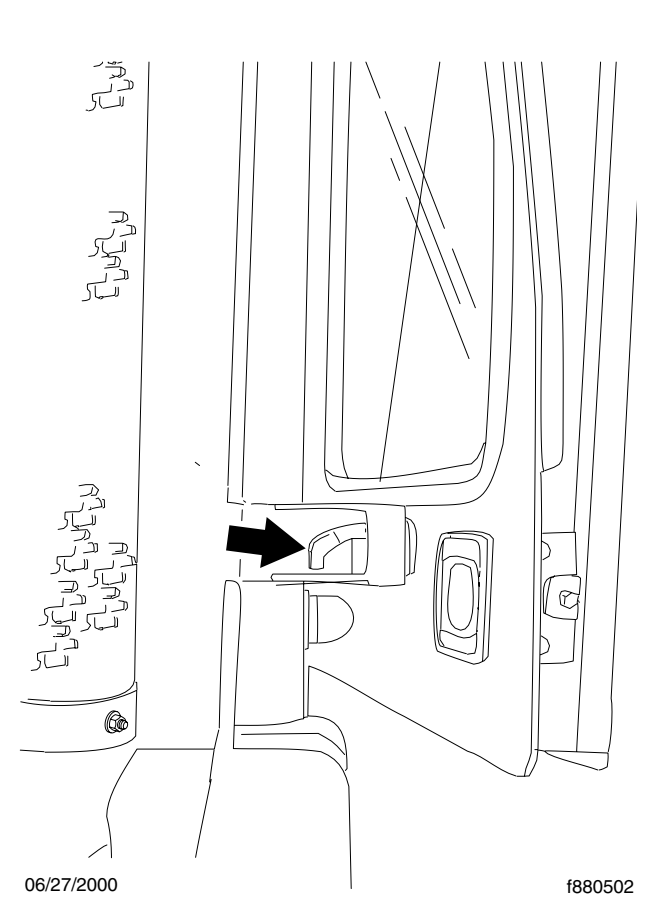

Fig. 3.1, Finger Latch

3. Move the folded door back toward the cab until the door striker is connected to the finger latch. See **Fig. 3.1.**

Use the following instructions to unfold and close the folding door.

https://truckmanualshub.com/

1. Lift up on the finger latch (**Fig. 3.1**) to release the door from its secured position to the cab.

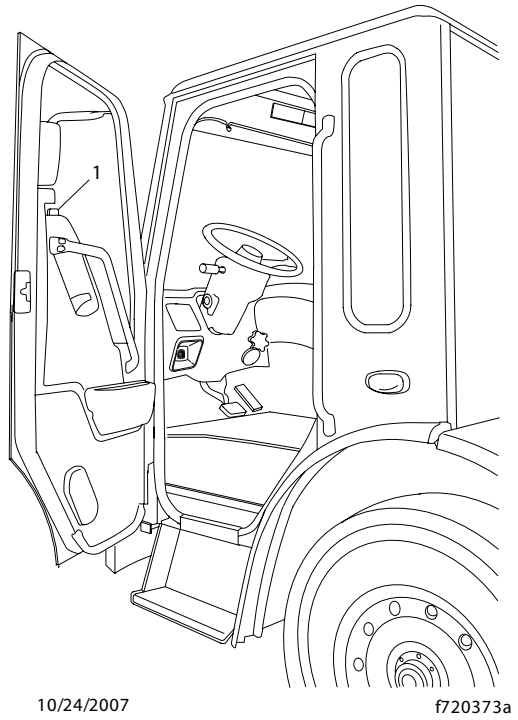

1. Lock Button

Fig. 3.2, Cab Door Lock

2. Move the folded door away from the cab until it is at a 90-degree angle to the cab.
3. Unlock the door lock (**Fig. 3.2)**.
4. Place one hand on the lower portion of the door to prevent the door from unfolding too quickly. With one hand on the door, use your other hand to pull the door handle out to release the door from its folded position. See **Fig. 3.3**.

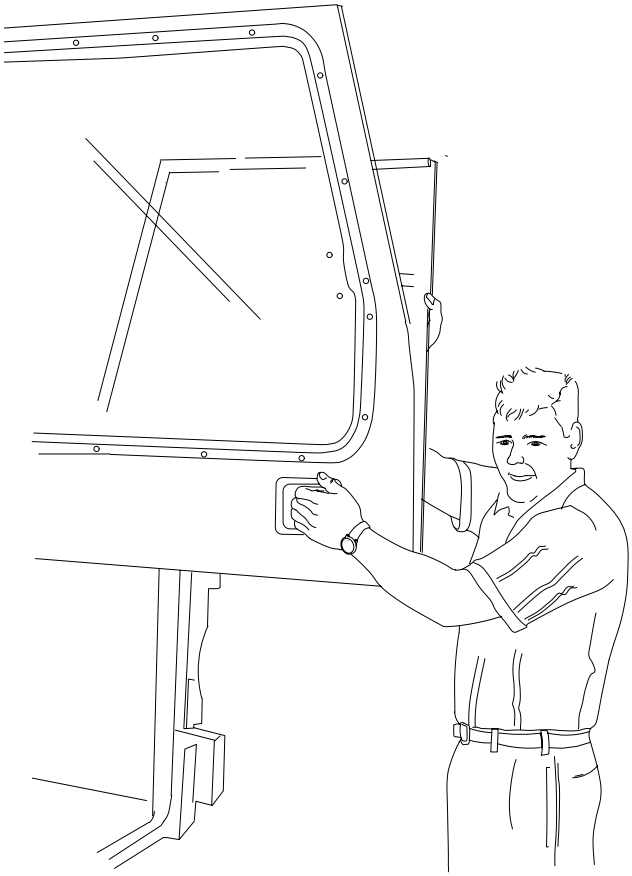

Fig. 3.3, Unfolding the Door

Cab Entry and Exit

WARNING

Wet or dirty shoe soles greatly increase the chance of slipping or falling. If shoe soles are wet or dirty, be especially careful when entering or exiting the vehicle.

Always maintain three-point contact with the cab access system while entering and exiting the cab. Three-point contact means both feet and one hand, or both hands and one foot.

https://truckmanualshub.com/

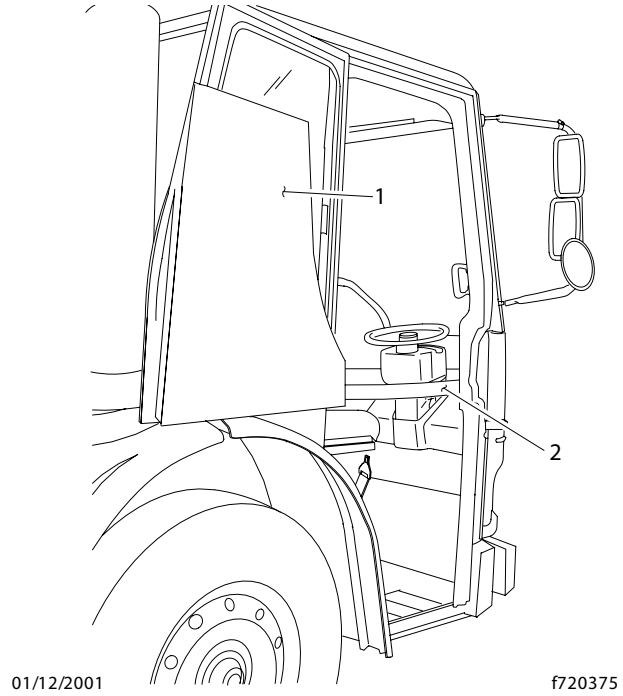

1. Folding Door
2. Restraint

Fig. 3.4, Stand-Up Drive Entry

Entering the Vehicle from the Left Side

1. Open the left-side door and place anything you are carrying in the cab.
2. Grasp the cab grab handle with your right hand and the door grab handle with your left hand.
3. Place your left foot on the cab access step (**Fig. 3.5**).
4. Move your right foot to the lower cab step and place your left foot on the upper cab step.
5. Grasp the steering wheel and pull yourself into the cab.

Exiting the Vehicle from the Left Side

1. Grasp the steering wheel with your left hand and move your left foot to the lower cab step.

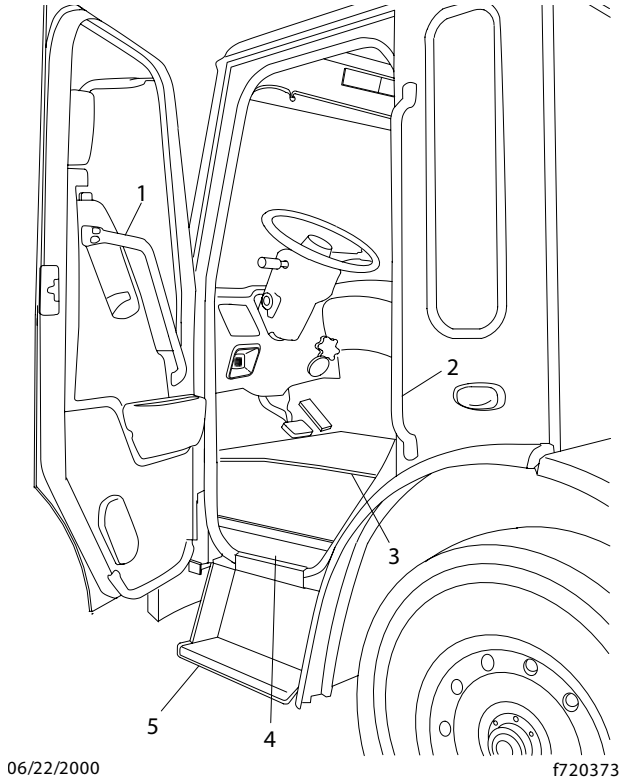

1. Door Grab Handle
2. CabGrab Handle
3. Upper Cab Step
4. Lower Cab Step
5. Cab Access Step

Fig. 3.5, Left-Side Grab Handles and Cab Access Steps

2. Grasp the cab grab handle with your right hand, the door grab handle with your left hand, and place your right foot on the cab access step.
3. Step to the ground with your left foot first.

Entering the Vehicle from the Right Side

1. Open the right-side door and place anything you are carrying in the cab.
2. Grasp the cab grab handle with your left hand and the door grab handle with your right hand.
3. Place your right foot on the cab access step.
4. Move your left foot to the lower cab step and place your right foot on the upper cab step.

https://truckmanualshub.com/

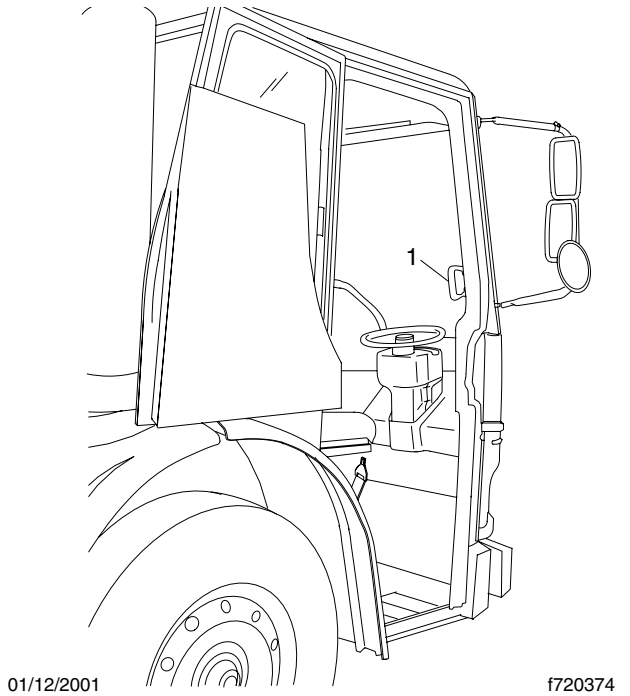

1. Interior Grab Handle

Fig. 3.6, Interior Grab Handle

5. Grasp the seat with your left hand and pull yourself into the cab.

Exiting the Vehicle from the Right Side

1. Grasp the door grab handle with your right hand, grasp the seat with your left hand, and move your right foot to the lower cab step.
2. Grasp the cab grab handle with your left hand and place your left foot on the cab access step.
3. Step to the ground with your right foot first.

Entering a Stand-Up-Drive Vehicle from the Right Side

1. Open the right-side door and place anything you are carrying in the cab.Place your right hand on the interior grab handle (**Fig. 3.6**).

1. Lock Button

Fig. 3.7, Stand-Up Drive Entry

2. Place your left foot on the cab floor, grasp the steering wheel with your left hand, and pull yourself into the cab.

Exiting a Stand-Up-Drive Vehicle from the Right Side

1. Grasp the interior grab handle with your right hand and the steering wheel with your left hand.
2. With your left foot on the cab floor, lower your right foot to the ground.

https://truckmanualshub.com/

Entering a Stand-Up-Drive Vehicle from the Left Side

1. Open the left-side door and place anything you are carrying in the cab.
2. Place your left hand on the interior grab handle.
3. Place your right foot on the cab floor, grasp the steering wheel with your right hand, and pull yourself into the cab.

Exiting a Stand-Up-Drive Vehicle from the Left Side

1. Grasp the interior grab handle with your left hand and the steering wheel with your right hand.
2. With your right foot on the cab floor, lower your left foot to the ground.

Front Cab Access Panel

The front cab access panel, when open, allows the operator access to the steering gears, air conditioner condenser, and the power takeoff (PTO) when it is mounted on the front frame.

To open the front cab access panel, simply grasp the lower corners and pull to release the access panel from the detents. See **Fig. 3.8**. Release the support rod (**Fig. 3.9**) and place the end of the support rod in the grommet under the access panel.

To close the access panel, remove the support rod from the grommet and return it to its stored location. Close the access panel and make sure the latches are secureby seating it in the detents.

Cab Tilt System

The cab can be tilted open 42 degrees to access the engine and other components. A hydraulic pump, located behind the right side of the cab, is used to operate the hydraulic cab tilt mechanism. Refer to **Fig. 3.10**.

For instructions on maintaining the fluid level in the hydraulic pump and checking the cab tilt system, refer to **Group 60** of the *Condor® Maintenance Manual*.

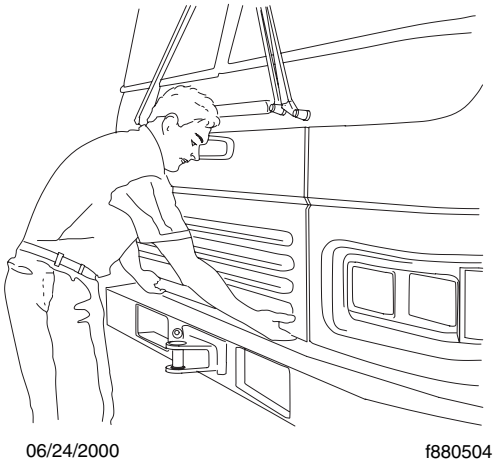

Fig. 3.8, Opening the Front Cab Access Panel

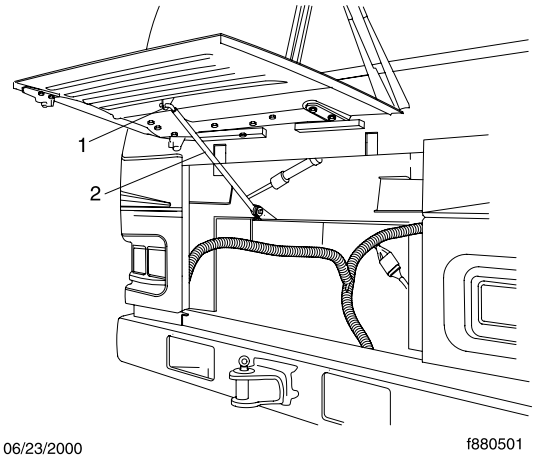

1. Grommet
2. Support Rod

Fig. 3.9, Front Cab Access Panel

https://truckmanualshub.com/

CAUTION

Do not use the tilt cylinder or tilt cylinder rod as a step or hand-hold. To do so could damage the tilt cylinder, or tilt cylinder rod.

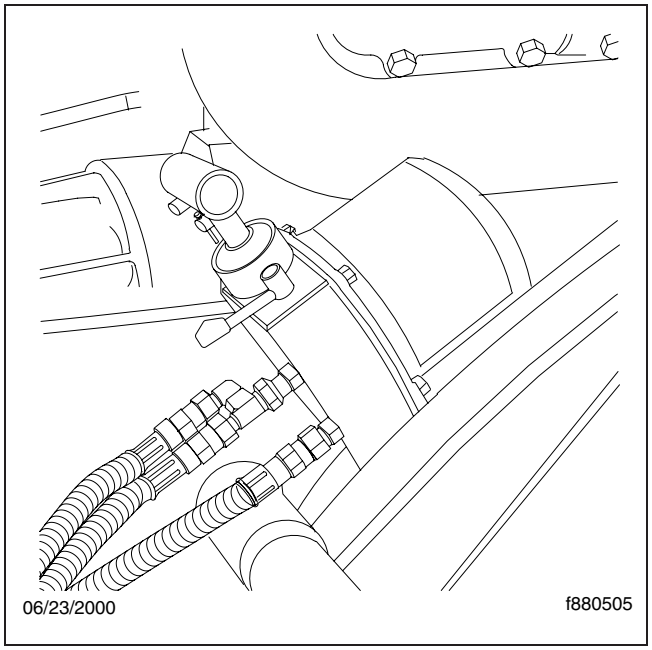

Fig. 3.10, Cab Tilt Pump

Raising the Cab

WARNING

Before tilting the cab, ensure there is adequate clearance in front and above the vehicle.

Do not tilt the cab with the engine running. Tilting the cab could engage the transmission. If the engine is running, the vehicle could move, causing an accident that could result in personal injury or property damage.

Do not tilt the cab outdoors when wind is blowing. Personal injury could occur if cab shifts position.

IMPORTANT: Before raising or lowering the cab, read the warning label on the hydraulic pump.

1. With the vehicle parked on a level surface, shut down the engine, place the transmission in neutral, and apply the brakes.
2. Secure all loose items in the cab and make sure the doors are securely latched.

WARNING

Objects falling in the cab or a door flying open could damage the vehicle or cause personal injury.

3. Make sure there are no people or objects in the path the cab will be traveling.
4. Move the pump control lever to the RAISE position.
5. Remove the pump handle from behind the primary driver's seat and attach it to the pump.
6. Raise and lower the pump handle several times to unlock the cab mounts.

IMPORTANT: Check the indicator pin on each cab mount. The cab mounts are unlocked if the pins are out. See **Fig. 3.11**.

NOTE: If air is present in the hydraulic tilt system, the pump operation may seem spongy or ineffective. If this happens, bleed the air from the system. For instructions, refer to **Group 60** of the *Condor® Workshop Manual*.

7. Continue to operate the pump handle until the cab is tilted open about 30 degrees.

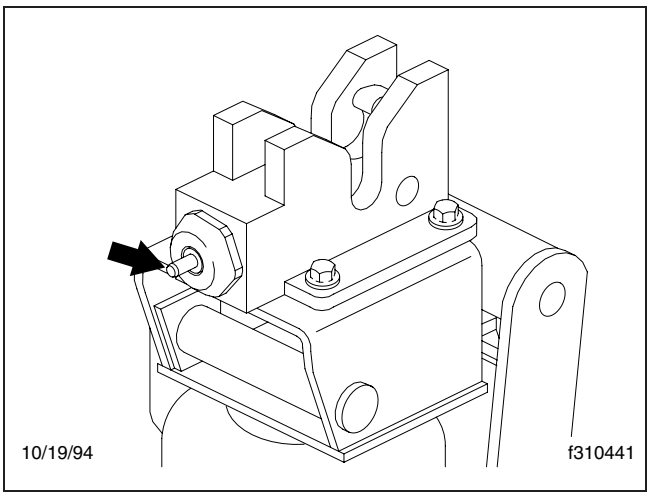

Fig. 3.11, Cab Mount Indicator Pin

https://truckmanualshub.com/

IMPORTANT: If the cab stops moving while it is being raised, don't force it to move with the tilt pump. The velocity fuses have locked up the tilt cylinders. To unlock the tilt cylinders, see "Hydraulic Lockup of Cab Tilt System."

8. Put the safety stop on the right tilt cylinder in place. See **Fig. 3.12**. The safety stop prevents the cab from dropping below a specific angle.

DANGER

Make sure the safety stop is engaged on the right tilt cylinder rod. If the safety stop isn't engaged, and the cab should drop, the result could be serious injury or death.

9. Continue to operate the pump handle until the cab has reached the 42-degree, fully open position.

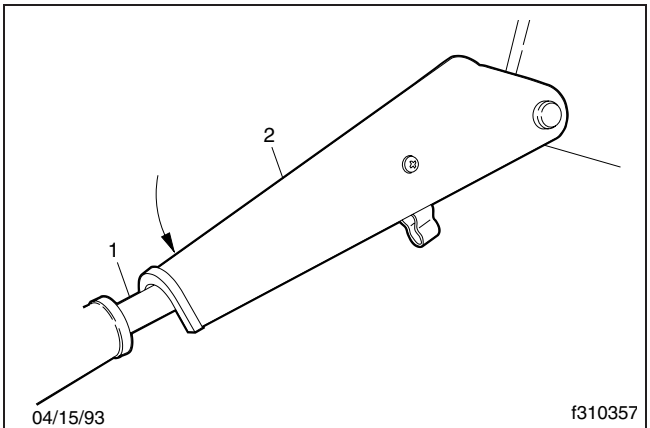

1. Tilt Cylinder Rod
2. Safety Stop

Fig. 3.12, Safety Stop In Place

Lowering the Cab

DANGER

Stay completely clear of the cab's travel path at all times. Once the safety stop has been released, don't lean over the frame rails, the engine, or the transmission for any reason. To do so could result in serious injury or death.

1. Secure all loose items in the cab and make sure the doors are securely latched.
2. Make sure the parking brakes are applied and there are no obstructions in the cab travel path.
3. Pull the safety stop release cable to lift the safety stop. Continue pulling on the safety stop release cable until the safety stop no longer rests on the tilt cylinder rod. See **Fig. 3.13**. The cab may need to be raised if the safety stop is resting against the tilt cylinder rod.
4. Move the pump control lever to the LOWER position. The cab will automatically begin to return to the operating position.

NOTE: To slow the descent of the cab, reverse the tilt pump lever.

5. After the cab is completely lowered, check the indicator pin on each cab mount. The cab mounts are locked when the pins have moved back into the piston and cylinder spring assembly. If the pins are out (**Fig. 3.11**), the cab mounts are not locked. Raise and lower the pump handle until the cab is completely lowered and the cab mounts are locked.

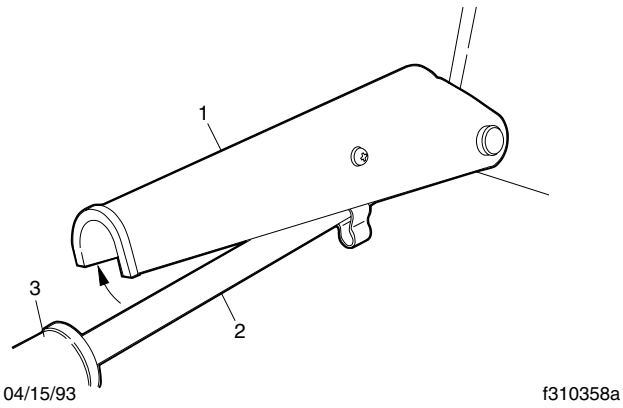

1. Safety Stop
2. Tilt Cylinder Rod
3. Tilt Cylinder

Fig. 3.13, Safety Stop Released

IMPORTANT: If the cab stops moving while it is being lowered, don't force it to move with the tilt

https://truckmanualshub.com/

pump. The velocity fuses have locked up the tilt cylinders. To unlock the tilt cylinders, see "Hydraulic Lockup of Cab Tilt System."

4. Make sure the pump control lever is in the LOWER position.
5. Remove the pump handle and return it to its stored location.

Hydraulic Lockup of Cab Tilt System

Hydraulic lockup can occur for the following reasons:

- very cold weather
- use of the wrong hydraulic fluid
- air in the system
- sudden cab movement
- a ruptured hydraulic line

Any of the above situations will cause the velocity fuses to function as safety check valves and lock up the tilt cylinders. To unlock the cylinders, the cab must be moved in the opposite direction of travel.

CAUTION

In the event the tilt cylinders lock up, check for a major problem, such as a ruptured hydraulic line or leaking hydraulic fitting. before trying to unlock the tilt cylinders. If such a problem is found, make any necessary repairs before unlocking the cylinder.

If the cab is moving toward the fully open position when the lockup occurs, move the pump control lever to the LOWER position and raise and lower the pump handle for a few strokes. This will unlock the cylinders. Move the pump control lever to RAISE and allow the cab to raise to the fully open position.

If the cab is moving toward the lowered position when the lockup occurs, move the pump control lever to the RAISE position and raise and lower the pump handle for a few strokes. This will unlock the cylinders. Move the pump control lever to LOWER and allow the cab to lower to the operating position.

Tilt and Telescoping Steering Column

WARNING

Make sure that the steering column is locked before driving the vehicle. Never tilt or telescope the steering wheel while driving the vehicle. Doing so could cause loss of vehicle control, personal injury, and property damage.

To tilt the steering column, turn the knob (**Fig. 3.14**) on the side of the steering column and tilt the column to the desired position. Tighten the knob and make sure the steering column is locked in place.

To telescope the steering column, turn the knob on the side of the steering column and pull the steering wheel closer to you or push the steering wheel farther away. Tighten the knob and make sure the steering column is locked in place.

Seats

When adjusting the seat, all adjustments should be made while seated, unless otherwise noted, and before the engine is started. The seats featured in this section may not have all of the adjustments described for each seat.

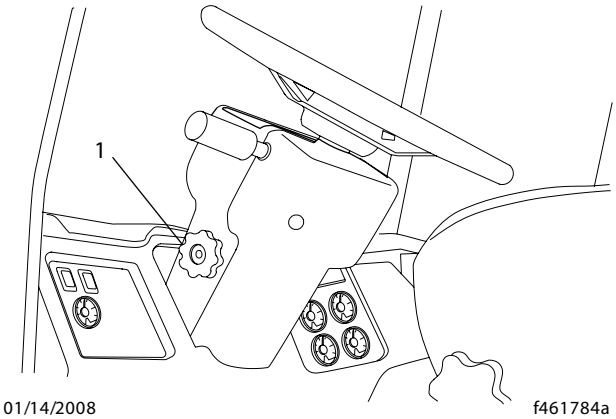

1. Tilt and Telescoping Adjustment Knob

Fig. 3.14, Tilt and Telescoping Steering Column

https://truckmanualshub.com/

WARNING

Keep hands, tools, and other objects away from the scissor points under the seats. Failure to do so could cause personal injury.

National 2000 Series Seat

Back Cushion Tilt

To tilt the back cushion, turn the back cushion tilt knob (**Fig. 3.15**) until the desired position is reached.

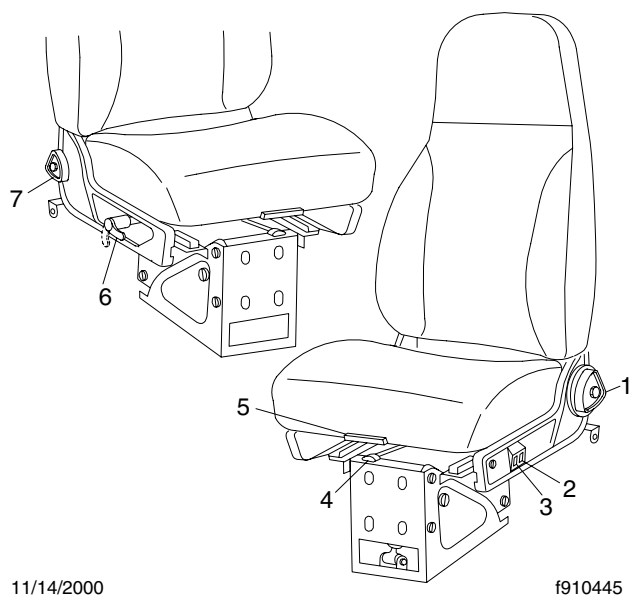

1. Back Cushion Tilt Knob
2. Lumbar Support Switch
3. Height Adjustment Switch
4. Fore and Aft Seat Adjustment Lever
5. Bottom Cushion Front Height Adjustment Handle
6. Isolator Handle
7. Rear Cushion Adjustment Knob

Fig. 3.15, National 2000 Series Seat

Height Adjustment

To raise or lower the height of the seat, use the height adjustment switch on the side of the seat.

Fore and Aft Seat Adjustment

To adjust the fore and aft position of the entire seat, move the fore and aft seat adjustment lever to the left and slide the seat forward or backward to the desired position.

Move the lever back to its original position to lock the seat in place.

Rear Cushion Adjustment

To adjust the height of the rear of the seat cushion, remove your weight from the seat and turn the rear cushion adjustment knob to one of three positions.

Isolator

Also called a Chugger Snubber, the isolator reduces the amount of road shock by isolating the occupant from the motion of the vehicle and allowing the seat to move in a simple pendulum motion. To use the isolator feature, turn the isolator handle to the horizontal position. Turn the isolator handle down when the isolator feature is not desired.

Lumbar Support

To adjust the lumbar support, use the lumbar support switch on the side of the seat to give more or less support to your lower back.

Bottom Cushion Front Height

To adjust the height of the front of the bottom cushion, lift the bottom cushion front height adjustment handle, and pull forward or push back to the desired setting.

National 2000 Series Toolbox Seat

The National 2000 Series toolbox seat features an open storage area under the seat. See **Fig. 3.16**.

https://truckmanualshub.com/

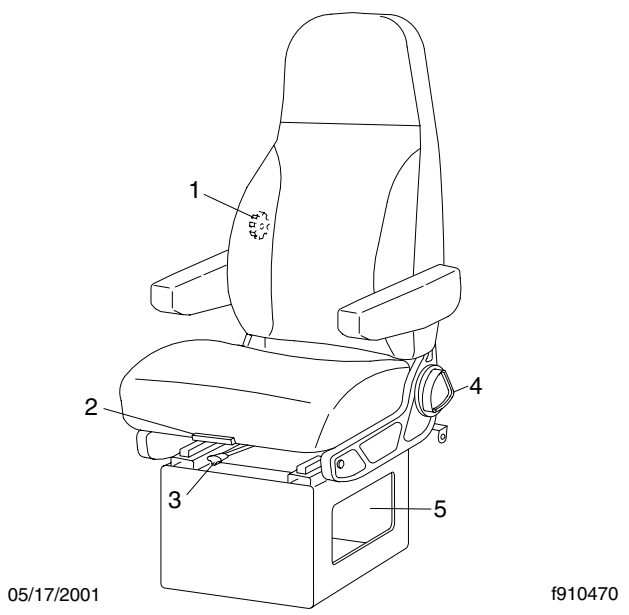

1. Lumbar Support Knob
2. Bottom Cushion Front Height Adjustment Handle
3. Fore and Aft Seat Adjustment Lever
4. Back Cushion Tilt Knob

Fig. 3.16, National 2000 Series Toolbox Seat

Back Cushion Tilt

To tilt the back cushion, turn the back cushion tilt knob until the desired position is reached.

Fore and Aft Seat Adjustment

To adjust the fore and aft position of the entire seat, move the fore and aft seat adjustment lever to the left and slide the seat forward or backward to the desired position. Move the lever back to its original position to lock the seat in place.

Lumbar Support

To adjust the lumbar support, turn the lumbar support knob on the side of the seat to give more or less support to your lower back.

Bottom Cushion Front Height

To adjust the height of the front of the bottom cushion, lift the bottom cushion front height adjustment handle, and pull forward or push back to the desired setting.

Stand-Up Seat

The stand-up seat can be adjusted for stand-up or sit-down use. The back of the seat has four forward positions and one rearward position. To adjust the position of the seat back, pull forward on the seat back adjustment handle (**Fig. 3.17**), adjust the seat to the desired position, and release the handle. When the seat back is in one of the five positions, the seat back adjustment handle will snap back into place.

To adjust the height of the stand-up seat, pull up on the height adjustment handle. Adjust the height of the seat to the desired position and push the height adjustment handle down.

Seat Belts and Tether Belts

Seat belt assemblies are designed to secure persons in the vehicle to help lessen the chance of injury or the amount of injury resulting from accidents or sudden stops. For this reason, the manufacturer urges the driver and all passengers, regardless of age or physical condition, to use seat belts when riding in the vehicle.

Seat belt assemblies in the vehicle meet Federal Motor Vehicle Safety Standard 209, "Type 1" and "Type 2" requirements. They are recommended for all persons weighing over 50 pounds (23 kg).

A child restraint system should also be provided for each child weighing 50 pounds (23 kg) or less. It should meet the requirements of Federal Motor Vehicle Safety Standard 213, "Child Restraint Systems." When providing such a restraint system, carefully read and follow all instructions pertaining to installation and usage for the child. Make certain the child remains in the restraint system at all times when the vehicle is in motion.

https://truckmanualshub.com/

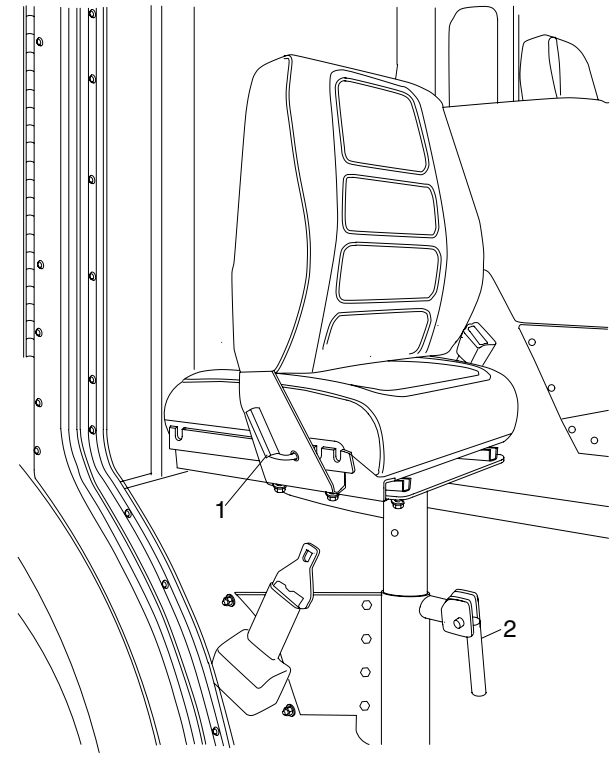

1. Seat Back Adjustment Handle
2. Height Adjustment Handle

Fig. 3.17, National 2000 Series Stand-Up Seat

In addition to seat belt assemblies, tether belts are installed on suspension-type seats. Tether belts help secure the seat to the floor and are intended to restrain the seat and seat belt in case of an accident or sudden stop.

IMPORTANT: Seat belts have a finite life that may be much shorter than the life of the vehicle. Regular inspections and replacement as needed are the only assurance of adequate seat belt security over the life of the vehicle.

Refer to **Chapter 9** for the seat belt inspection procedure.

Seat Belt Operation

Three-Point Seat Belt

While your vehicle is in motion, the combination lap and shoulder belt adjusts to your movement. However, if you brake hard, corner hard or if your vehicle receives an impact of 5 mph (8 km/h) or more, the lap and shoulder belt locks and prevents you from moving.

WARNING

Wear three-point seat belts only as described below. In case of an accident or sudden stop, injuries could result from misuse. Three-point seat belts are designed to be worn by one person at a time.

WARNING

Fasten the seat belts before driving. Fastening a three-point seat belt while driving creates a hazard.

1. Pull the lap-shoulder portion of the belt from the retractor so that the shoulder portion of the belt crosses your shoulder and chest. Insert the belt tongue into the proper buckle until you hear a snap and feel it latch.
2. Tighten the lap portion of the belt, pull up on the shoulder piece until it fits you snugly. The belt should rest as low on your hips as possible.
3. To unbuckle the three-point seat belt, push the button on the buckle as shown in **Fig. 3.18**.

https://truckmanualshub.com/

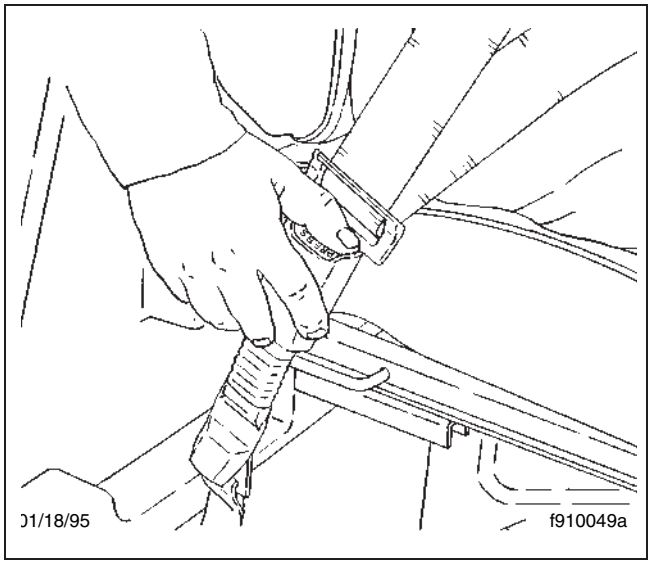

Fig. 3.18, Releasing the Three-Point Seat Belt

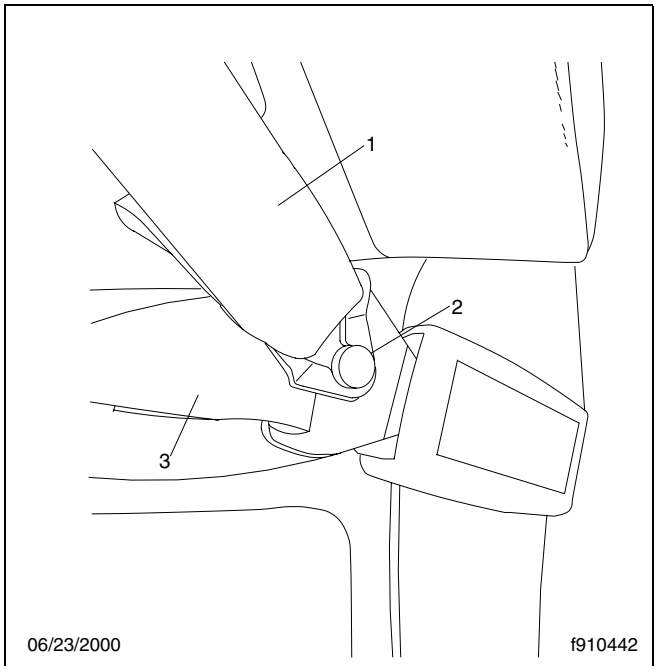

1. Shoulder Harness
2. Pin
3. Lap Belt

Fig. 3.19,

Stand-Up Drive Seat Belt and Restraint Operation

When the vehicle is equipped with a stand-up drive, a lap belt and a separate shoulder harness are provided. When the seat in a stand-up drive is used in the stand-up position, use the retractable lap seat belt. Pull the belt across your hips and insert the tongue into the buckle until you hear a snap and feel it lock. Make sure the buckle is securely fastened.

A restraint (**Fig. 3.4**) that extends across the opening of the door should also be used when driving in the stand-up position with the folding door open. Pull the restraint from the side of the cab behind the seat and hook it into the eyebolt on the side of the cab in front of the door.

When the seat in a stand-up drive is used in the sit-down position, first pull the lap belt across your hips and insert the tongue into the buckle until you hear a snap and feel it lock. Then pull the shoulder harness across your chest and attach it to the pin on the lap belt buckle. See **Fig. 3.20**. Make sure both the belt and the harness are securely fastened.

Obstacle Detection System, Optional

For instructions on how to use the monitors provided for the obstacle detection system, refer to the monitor manufacturer’s operating instructions.

Relay, Fuse, and Circuit Breaker Identification

There are three power distribution modules (PDM) located under the electrical access panel on the tunnel. For identification of the components on each of the three PDMs, refer to **Fig. 3.20**, **Fig. 3.21**, and **Fig. 3.22** and **Table 3.1**, **Table 3.2**, and **Table 3.3**.

https://truckmanualshub.com/

A set of dill blocks is located in the upper right overhead panel on vehicles with primary left-hand drive. For identification of the components on the dill block, refer to **Fig. 3.23** and **Table 3.4**.

Power Distribution Module Number 1			
Pos. No.	**Description**	**Part Number**	**Rating**
F1	Overhead Accessory Power	BUS21120 00	20A
F2	Windshield Wipers	BUS21120 00	20A
F3	Amot/Axle Lock/Tag Axle	BUS21175 00	7.5A
F4	ABS Ignition Power	BUS21175 00	7.5A
F5	Engine Ignition Power	BUS21115 00	15A
F6	Trailer Power	BUS21120 00	20A
F7	Left-Hand Power Window	BUS21120 00	20A
F8	Power Mirror Control	BUS21115 00	15A
F9	Right-Hand Power Window	BUS21120 00	20A
F10	Fuel/Water Separator	BUS21120 00	20A
F11	Transmission Ignition Power	BUS21110 00	10A
F12	Air Dryer	BUS21115 00	15A
F13	Air Tank Drain Heaters	BUS21115 00	15A
F14	Air Tank Drain Heaters	BUS21115 00	15A
F15	Gauges	BUS21175 00	7.5A
F16	HVAC Low, Med. Blower Motor	BUS21115 00	15A
R1	Windshield Wipers, High	PAC12077866	—
R2	Right-Hand Wiper, Low	PAC12077866	—
R3	Left-Hand Wiper, Low	PAC12077866	—
R4	Tag Axle	PAC12077866	—
D1	Windshield Wiper Park Cut Out	PAC12135037	—

Table 3.1, Power Distribution Module Number 1

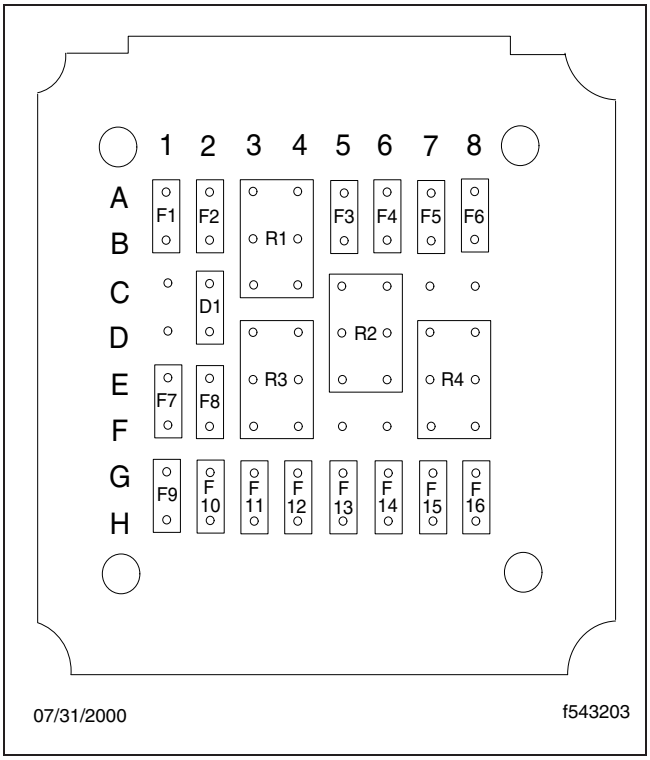

Fig. 3.20, PDM Number 1 Relay and Circuit Breaker Identification

Power Distribution Module Number 2			
Pos. No.	**Description**	**Part Number**	**Rating**
F1	Turn Signal	BUS21120 00	20A
F2	Service Brake	BUS21120 00	20A
F3	Horn	BUS21175 00	7.5A
F4	Spare	—	—
F5	Spare	—	—
F6	Diagnostic	BUS21110 00	10A
F7	Ignition Switch	BUS21115 00	15A
F8	Headlights	BUS21120 00	20A
F9	HVAC High Speed	BUS21120 00	20A
F10	Power Receptacle	BUS21120 00	20A
F11	Overhead Battery Power	BUS21120 00	20A
F12	Instrument Panel Backlighting	BUS21115 00	15A
F13	Marker Lights	BUS21120 00	20A
R1	Road/Fog Lights	PAC12077866	—

Table 3.2, Power Distribution Module Number 2

https://truckmanualshub.com/

Power Distribution Module Number 2			
Pos. No.	Description	Part Number	Rating
R2	Headlight	PAC12077866	—
R3	HVAC High	PAC12077866	—
R4	Instrument Panel Backlighting	PAC12077866	—
R5	Marker Lights	PAC12077866	—

Table 3.2, Power Distribution Module Number 2

Power Distribution Module Number 3			
Pos. No.	Description	Part Number	Rating
F1	Neutral	BUS21115 00	15A
F2	Cigar	BUS21110 00	10A
F3	Reverse	BUS21120 00	20A
F4	Cigar	BUS21110 00	10A
F5	Trailer Tail Lights	BUS21120 00	20A
F6	Beacon Light	BUS21115 00	15A
F7	Trailer Marker Lights	BUS21120 00	20A
F8	Spare	—	—
R1	Park Brake	PAC12077866	—
R2	Backup Lights/Alarm	PAC12077866	—
R3	Trailer Tail Lights	PAC12077866	—
R4	Trailer Marker Lights	PAC12077866	—
R5	Neutral	PAC12077866	—
R6	Neutral Start	PAC12077866	—
R7	Starter Lockout	PAC12077866	—
R8	Spare	—	—

Table 3.3, Power Distribution Module Number 3

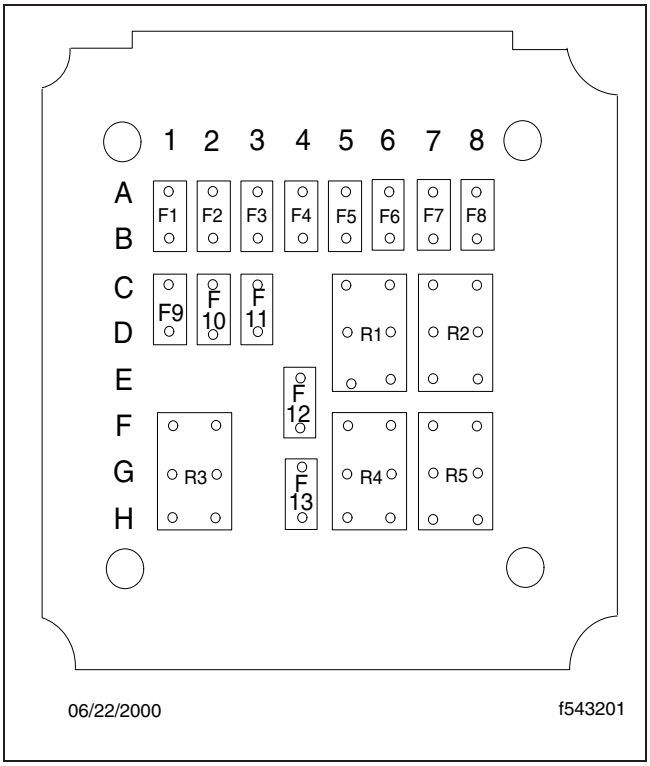

Fig. 3.21, PDM Number 2 Relay and Circuit Breaker Identification

Dill Block			
Pos. No.	Description	Part Number	Rating
CB1	CB Radio (positive)	—	—
CB2	CB Radio (negative)	—	—
F1	Spare	—	—
F2	Marker Lights	BUS21175 00	
F3	Rear Fans	BUS21175 00	
F4	CB Radio	BUS21215 00	
F5	Radio Memory	BUS21175 00	
F6	Front Fans	BUS21175 00	
F7	Radio	BUS21215 00	
F8	Camera	BUS21215 00	
R1	Spare	—	—
R2	Marker Lights	PAC12077866	—

Table 3.4, Dill Block

https://truckmanualshub.com/

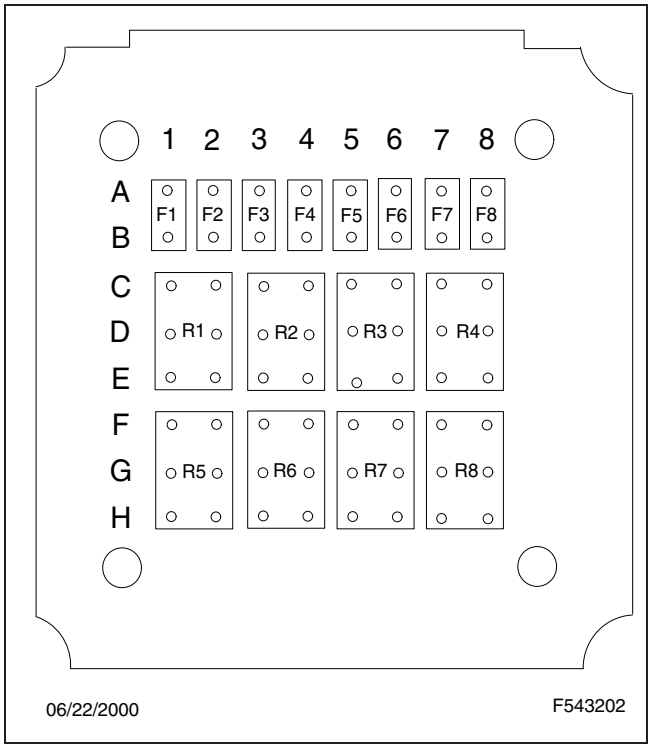

Fig. 3.22, PDM Number 3 Relay and Circuit Breaker Identification

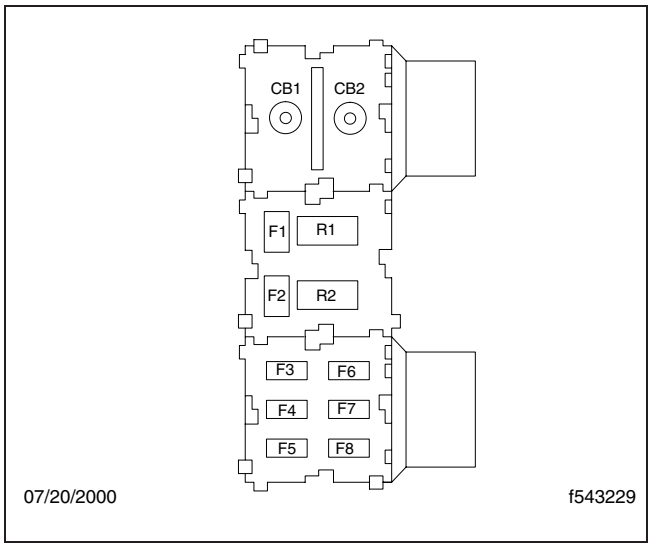

Fig. 3.23, Dill Block Identification

https://truckmanualshub.com/

This page intentionally left blank.

https://truckmanualshub.com/

4

Heater and Air Conditioner

Heater and Air Conditioner **4.1**
Heating **4.1**
Air Conditioning, Optional **4.2**

https://truckmanualshub.com/

This page intentionally left blank.

https://truckmanualshub.com/

Heater and Air Conditioner

A climate control panel (**Fig. 4.1**) allows you to control all heating, air conditioning, defrosting, and ventilating functions. Climate control panel is located on sides of overhead console unit.

A four-speed fan forces air through air outlets in overhead console. An air conditioning on/off button is installed with air temperature selection switch.

An air selection button controls direction of warm or cool air through overhead outlets.

A temperature control switch is used to select desired temperature. Turn switch counterclockwise for cool air, or clockwise for warm air.

The outlets in overhead console can be adjusted both left and right, and up and down.

Defogging and Defrosting Using Fresh Air

1. Turn temperature control switch all the way clockwise for warm air, turn fan switch to OFF, and if equipped, move air conditioning button to OFF before starting engine.
2. Remove any ice or snow from outside of windshield, door windows, and fresh air inlet grille.
3. With engine at operating temperature, turn fan switch to highest speed. Leave it in this position for 30 seconds. This will clear system of moist air.
4. Move air source button to windshield (defrost) position. If equipped, move air conditioning on/off button to ON position. In this position warm, dry air is directed to windshield.

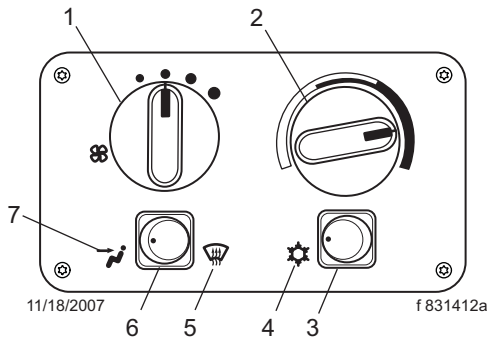

1. Fan Switch
2. Air Temperature Selection Switch
3. Air Conditioning On/ Off Button
4. Air Conditioning On
5. Defog/Defrost Position
6. Air Selection Button
7. Fresh Air Position

Fig 4.1, Climate Control Panel

Heating

1. With engine at operating temperature, move temperature control switch all the way clockwise for heat.
2. Turn fan switch to desired speed. Move air selection button to desired setting. See **Fig. 4.2**.

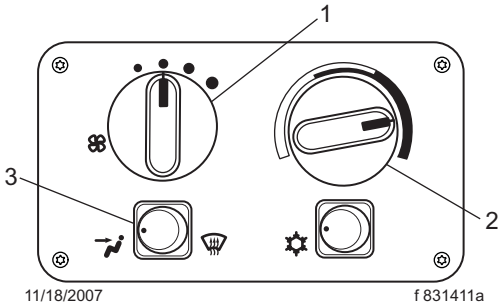

1. Fan Switch
2. Temperature Control Switch
3. Air Selection Button

Fig 4.2, Heating Settings

https://truckmanualshub.com/

Heater and Air Conditioner

IMPORTANT: If windows start to fog, move air selection button to windshield (defrost) position, and if equipped, move air conditioning on/off button to ON position. Make sure the fan is on.

4. When a comfortable temperature has been reached, adjust the fan switch setting and temperature control switch as needed to maintain the temperature.

Air Conditioning, Optional

IMPORTANT: Operate air conditioner at least five minutes each month, even during cool weather. This helps prevent drying and cracking of tubing seals, reducing refrigerant leaks in system. Operate air conditioner only after engine compartment is warm and interior of cab is 70°F (21°C) or higher. During cold weather, heater can be operated at same time to prevent discomfort.

1. If cab is hot inside, temporarily open windows to let hot air out.
2. Move air conditioning on/off button to off position and turn fan switch off before starting engine.
3. Start engine.
4. Move the air conditioning on/off button to the on position and move the air selection switch to position desired. See **Fig. 4.3**.
5. Move temperature control switch counterclockwise for cool air. In this position, no heat is given off by heater.
6. Turn the fan switch to highest speed.
7. As soon as cool air is flowing from dash panel outlets, close windows. Adjust fan switch to desired setting.
8. If air from outlets is too cold, move temperature control switch clockwise for warmer air.

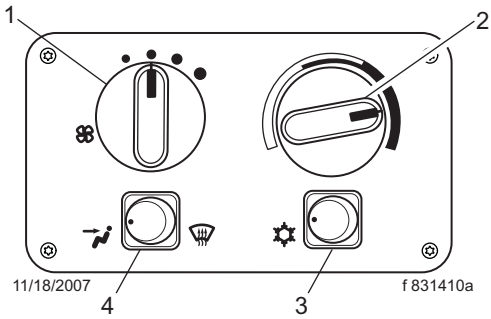

1. Fan Switch
2. Temperature Control Switch
3. Air Conditioning Button
4. Air Source Button

Fig 4.3. Air Conditioning Settings

https://truckmanualshub.com/

5

Steering, Brake, and Retarder Systems

Steering System 5.1
Air Brake System 5.1
Telma Driveline Retarder, Optional 5.5
Allison Transmission Retarder, Optional 5.6
Caterpillar Transmission Retarder, Optional. 5.7
Engine Braking System 5.7
Exhaust Braking System 5.9

https://truckmanualshub.com/

This page intentionallly left blank.

https://truckmanualshub.com/

Steering System

When there is no load on vehicle and front tires are pointed straight ahead, the steering wheel spokes should be evenly centered, or within 10 degrees of being centered. See **Fig. 5.1**. For steering wheel adjustment procedures, see **Group 46** in the *Condor® Workshop Manual*.

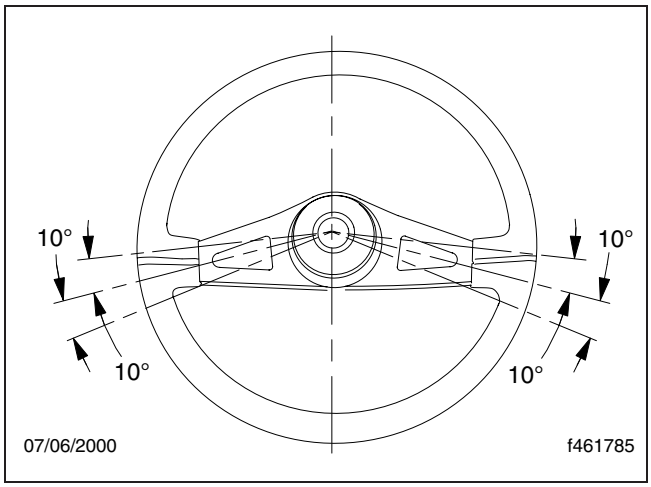

Fig. 5.1, Steering Wheel Centered

Power Steering System

Power steering system consists of a steering gear (which includes a manual steering mechanism, a hydraulic control valve, and a hydraulic power cylinder), hydraulic hoses, power steering pump, power steering reservoir, and other components. Some models are also equipped with a separate hydraulic power cylinder on the right side of the front axle. The power steering pump, driven by engine, provides power assist for the steering system. If engine is not running, there is no power assist.

If power-assist feature does not work due to hydraulic fluid loss, steering pump damage, or some other cause, bring vehicle to a safe stop. Do not drive vehicle until cause of problem is corrected.

⚠ WARNING

Driving vehicle without power-assist feature of steering system requires much greater effort, especially in sharp turns or at low speeds, which could result in an accident and possible injury.

Drivers should use power available with a power steering system carefully. If front tires become lodged in a deep chuckhole or rut, drive vehicle out instead of using steering system to lift tires from hole. Also, avoid turning tires when they are against a curb as this places a heavy load on steering components and could damage them.

Air Brake System

A dual air brake system consists of two independent air brake systems that use a single set of brake controls. Each system has its own reservoir, plumbing, and brake chambers. The primary air system operates service brakes on rear axle; secondary air system operates service brakes on front axle. On tractor-trailer combinations, service brake signals from both systems are sent to trailer.

⚠ WARNING

Do not operate the vehicle with front brakes backed off or disconnected. Backing off or disconnecting front brakes will not improve vehicle handling and may lead to loss of vehicle control resulting in property damage or personal injury.

Loss of air pressure in primary air system causes the rear service brakes to become inoperative. The front brakes will continue to be operated by secondary air system. In addition, trailer brakes will be operated by secondary air system.

Loss of air pressure in the secondary air system causes the front axle brakes to become inoperative. The rear service brakes and trailer brakes will continue to be operated by the primary air system.

IMPORTANT: When air pressure is lost in primary or secondary air system, air compressor will operate but will not replenish air supply in air system that is not leaking. There will only be enough air in the other system to get vehicle stopped. Therefore, it is important to bring vehicle

https://truckmanualshub.com/

to a safe stop and not drive the vehicle until the cause of the problem is corrected.

Vehicles are equipped with spring brake modulation. If an air pressure loss occurs in the primary air system, the rear spring brakes will be modulated (applied and released) in proportion to the service brake application. There will only be enough air in the secondary system for two to four brake applications, at which time the parking brake knob will pop out and fully apply the brakes.

Before driving your vehicle, allow time for the air compressor to build up a minimum pressure of 95 psi (655 kPa) in both the primary and secondary air systems. Monitor the air pressure system by observing the primary and secondary air pressure gauges and the low air pressure warning light and buzzer. The warning light and buzzer shut off when air pressure in both systems reaches 64 to 76 psi (441 to 524 kPa).

The low air pressure warning light and buzzer come on if air pressure drops below 64 to 76 psi (441 to 524 kPa) in either system. If this happens, check the air system pressure gauges to determine which system has low air pressure. Although vehicle speed can be reduced using the service brake, either the front or rear service brakes will have reduced stopping power or will not be operating, causing a longer stopping distance. Bring the vehicle to a safe stop and have the air system repaired before continuing.

If both the primary and secondary air systems become inoperative on tractor-trailers, the trailer service brakes or spring parking brakes will automatically apply when the air pressure drops below 35 to 45 psi (241 to 310 kPa). The tractor spring parking brakes will automatically apply when the air pressure drops below 20 to 30 psi (138 to 207 kPa). On trucks, spring parking brakes will apply when the air pressure drops below 20 to 30 psi (138 to 207 kPa). Do not wait for the brakes to apply automatically. When the low air pressure warning light and buzzer first come on, immediately bring the vehicle to a safe stop. Before continuing to operate the vehicle, correct the cause of the air loss.

WARNING

Do not drive the vehicle with the parking brakes caged. If the vehicle is driven with the parking brakes caged, there would be no means of stopping the vehicle if a complete loss of air pressure occurred. This could result in serious personal injury or vehicle damage.

IMPORTANT: Before caging the spring parking brakes, make the connection to a towing vehicle or chock the tires.

NOTE: Before a vehicle with insufficient system air pressure can be moved, the spring parking brakes must be released by applying an external air source at the gladhands, or by manually caging (manually releasing) the parking brake springs.

After correcting the brake system problem, uncage the spring parking brakes before resuming normal vehicle operation.

Operation of the Air Brakes

Before driving the vehicle, secure all loose items in the cab so that they will not y forward during a full brake application. Make sure all occupants are wearing seat belts.

During normal brake stops, depress the service brake until braking action slows down the vehicle. Increase or decrease the pressure on the pedal so that the vehicle comes to a smooth, safe stop.

The parking brake knob (**Fig. 5.2**) on the control panel applies the parking brake valve. Pulling out the knob applies both the tractor and the trailer spring parking brakes and automatically causes the trailer air supply knob to pop out.

https://truckmanualshub.com/

Fig. 5.2, Parking Brake Knob

If the vehicle is equipped for trailer towing, a trailer air supply knob (**Fig. 5.3**) on the control panel applies the trailer air supply valve. After the air hoses from the vehicle are connected to the trailer and the pressure in both air systems is at least 65 psi (448 kPa), the trailer air supply knob must be pushed in. It should stay in to charge the trailer air supply system and to release the trailer spring parking brakes. It must be pulled out before disconnecting a trailer. It must also be pulled out when operating a vehicle without a trailer. If pressure in both air systems drops to 35 to 45 psi (241 to 310 kPa), the trailer air supply knob automatically pops out exhausting the trailer air supply and applying the trailer service or spring parking brakes.

Fig. 5.3, Trailer Air Supply Knob

CAUTION

Do not use the spring parking brakes if the service brakes are hot, such as after descending a steep grade. Also, do not use the spring parking brakes during freezing temperatures if the service brakes are wet. To do so could damage the brakes if hot, or cause them to freeze during cold weather.

If the brakes are wet, drive the vehicle in low gear and lightly apply the brakes to heat and dry them. Allow hot brakes to cool before using the spring parking brakes. Always chock the tires.

If the brakes are wet, drive the vehicle in low gear and lightly apply the brakes to heat and dry them.

Allow hot brakes to cool before using the spring parking brakes. Always chock the tires.

If the trailer is not equipped with spring parking brakes, pulling out the parking brake knob applies the tractor spring parking brakes and the trailer service brakes. When the tractor and trailer parking brakes (or trailer service brakes) are both applied, the trailer brakes can be released by pushing in the trailer air supply knob, leaving the tractor parking brakes applied. Air pressure in the primary or secondary reservoir must be at least 64 psi (441 kPa) before the tractor spring parking brakes, or the trailer service or spring parking brakes, can be released.

On trailers without spring parking brakes, chock the trailer tires before disconnecting the tractor when parking just the trailer. When parking a tractor with a trailer, when the trailer is not equipped with spring parking brakes, apply the tractor spring parking brakes.

WARNING

Do not use the trailer service brakes for parking; they are not designed for this purpose. If air bleeds out of the trailer air tank during parking, the vehicle could roll causing serious personal injury or property damage.

Meritor WABCO Antilock Braking System (ABS), Air Brake Systems

The Meritor WABCO Antilock Braking System (ABS) is an electronic wheel speed monitoring and control system that works with the air brake system. ABS passively monitors vehicle wheel speed at all times, but controls wheel speed during an emergency or reduced-

https://truckmanualshub.com/

traction stop. In normal braking applications, the standard air brake system is in effect.

IMPORTANT: For proper ABS system operation, do not change tire sizes. The sizes of the tires installed during production are programmed into the electronic control unit. Installing different sized tires could result in a reduced braking force, leading to longer stopping distances.

ABS includes signal-generating tone wheels and sensors located in the wheel hubs of each sensed axle. The sensors transmit vehicle wheel speed information to an electronic control unit. The main circuit of the control unit interprets the speed sensor signals and calculates wheel speed, wheel retardation, and a vehicle reference speed. If the calculations indicate wheel lockup, the main circuit signals the appropriate solenoid control valve to reduce braking pressure. During emergency braking, the solenoid control valve alternately reduces, increases, or maintains air pressure supply in the brake chamber to prevent front and rear wheel lockup.

The electronic control unit also has a safety circuit that constantly monitors the wheel sensors, solenoid control valves, and the electrical circuitry. The ABS warning light comes on after turning on the ignition switch. The warning light goes out only if all of the ABS components are working.

If equipped with Automatic Traction Control (ATC), the ATC indicator light comes on if one of the drive wheels spins during acceleration. The light goes out when the wheel stops spinning. When the light comes on, partially release the throttle pedal until the light goes out. If slippery road conditions continue, turn the interaxle differential lock switch on. See **Chapter 7** for interaxle differential lock instructions.

CAUTION

Do not turn the interaxle differential lock switch on while the ATC indicator light is on. To do so could damage the rear axle.

Automatic Traction Control is an option available on ABS-equipped vehicles with air brake systems. It helps improve traction when vehicles are on slippery surfaces by reducing drive wheel overspin. ATC works automatically in two ways.

- If a drive wheel starts to spin, ATC applies air pressure to brake the wheel. This transfers engine torque to the wheels with better traction.
- If all drive wheels spin, ATC reduces engine torque to provide improved traction.

ATC turns itself on and off. Drivers do not have to select this feature. If drive wheels spin during acceleration, the ATC indicator comes on, indicating that the ATC is active. It goes off when the drive wheels stop spinning.

The ABS diagnostic switch is a momentary switch that turns on the blink code diagnostic capabilities. It may also be used to disable the traction control for dynamometer testing. The switch is located under dashboard at primary drive position. For information on troubleshooting with blink code diagnostics, see **Group 42** in the *Condor® Workshop Manual*.

WARNING

Failure to disable the ATC before dynamometer testing could result in serious personal injury and damage to the vehicle.

Vehicles with ATC must have the ATC disabled to test the vehicle on a dynamometer. To disable the ATC, press and hold the ABS diagnostic switch for at least three seconds. Once the system configuration code begins, ATC has been disabled. The ATC indicator comes on and stays on while disabled.

The Meritor WABCO ABS system combines one front-axle control channel with either one rear axle (the four-sensor system), or two rear axles (the six-sensor system) to form one control circuit. For example, the sensor and solenoid control valve at the left-front axle form a control circuit with the sensor(s) and solenoid valve(s) on the right rear axle(s). If during vehicle operation, the safety circuit senses a failure in any part of the ABS system (a sensor, solenoid control valve, wiring connection, short circuit, etc.), the ABS warning light comes on and the control circuit where the failure occurred is switched to normal braking action. The

https://truckmanualshub.com/

remaining control circuit will retain the ABS effect. Even if the ABS system is partially or completely inoperative, normal braking ability is maintained. An exception would be if a solenoid control valve (or combination solenoid control valve) is damaged and inoperative. As these components are an integral part of the air brake system, normal braking may be impaired or inoperative.

IMPORTANT: If any of the ABS warning lights do not work as described above or come on while driving, repair the ABS system immediately to ensure full antilock braking capability.

During emergency or reduced-traction stops, fully depress the brake pedal until the vehicle comes to a safe stop. Do not pump the brake pedal. With the brake pedal fully depressed, the ABS system will control all wheels to provide steering control and a reduced braking distance.

Although the ABS system improves vehicle control during emergency braking situations, the driver still has the responsibility to change driving styles depending on the existing traffic and road conditions. For example, the ABS system cannot prevent an accident if the driver is speeding or following too closely on slippery road surfaces.

Automatic Slack Adjusters

Automatic slack adjusters are required on all vehicles equipped with air brakes manufactured after October 20, 1994. Automatic slack adjusters should never be manually adjusted except during routine maintenance of the foundation brakes (e.g., replacing shoes), during slack adjuster installation or in an emergency situation.

When the brake pushrod stroke exceeds the legal brake adjustment limit on a vehicle, there is likely a mechanical problem with the foundation brake components or the adjuster is improperly installed.

Visit a repair facility as soon as possible when brakes equipped with automatic slack adjusters are determined to be out of adjustment.

WARNING

Manually adjusting an automatic slack adjuster to bring the pushrod stroke within legal limits is likely masking a mechanical problem. Adjustment is not repairing. In fact, continual adjustment of automatic slack adjusters may result in premature wear of the adjuster itself. Further, the improper adjustment of some automatic slack adjusters may cause internal damage to the adjuster, thereby preventing it from properly functioning.

Telma Driveline Retarder, Optional

The Telma driveline retarder is used to slow the vehicle and lessen the demand on the service brakes. The retarder unit is attached to the forward side of the rear differential and is controlled by the service brake pedal. The retarder is applied when the retarder switch (**Fig. 5.4**) is turned on. The amount of retarder engagement is determined by brake pedal position via two pressure switches connected to the front brake air line. When the retarder is applied it creates electromagnetic drag to slow the vehicle. The vehicle brake lights will be on when the retarder is applied. The retarder can be turned off by pressing lower end of retarder switch.

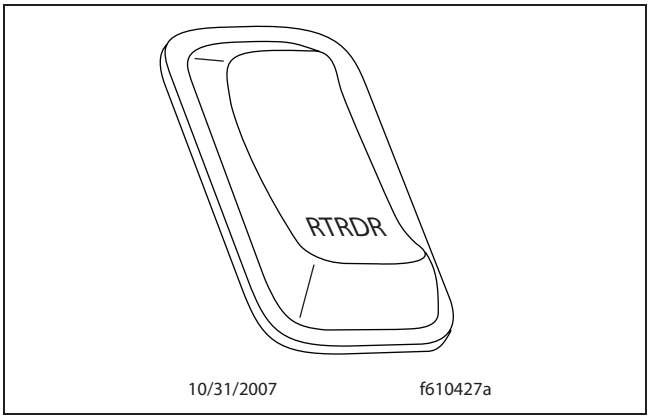

Fig. 5.4, Retarder Switch

https://truckmanualshub.com/

Telma Driveline Retarder Operation

WARNING

Do not use Telma driveline retarder during inclement weather or when road surfaces are slippery. Turn the retarder switch to OFF during inclement weather or when road surfaces are slippery.

CAUTION

Operate retarder only when engine is at closed throttle. In event of overheating, decrease use of retarder and use service brakes.

CAUTION

When descending a grade, remember that frequent use of service brakes causes them to become hot, resulting in a reduction of stopping ability. Grade descent speed should be slow enough to allow service brakes to be used infrequently. This allows service brakes to remain cool retain their effectiveness.

When vehicle braking is required, the driveline retarder may be used. There is no time limit for operation of the driveline retarder.

CAUTION

If driveline retarder fails to shut off when brake pedal is released, turn retarder switch to OFF and DO NOT use retarder until the system has been repaired. If retarder fails to shut off when retarder switch is turned OFF, engine should be shut down and retarder repaired before continuing operation. Failure to do so could result in damage to the engine, transmission, and driveline.

Allison Transmission Retarder, Optional

The Allison transmission retarder is used to slow the vehicle and to lessen the demand on the service brakes. This self-contained retarder is located at the output of the transmission and consists of a vaned rotor that rotates in a vaned cavity. The rotor is driven by the output shaft. An external accumulator holds transmission fluid until the retarder is applied. When retarder is applied, fluid from the accumulator is pressurized and directed into retarder cavity. The interaction of transmission fluid with rotating and stationary vanes slows retarder rotor speed, along with the output shaft, slowing the vehicle.

Allison Transmission Retarder Operation

WARNING

Do not use Allison transmission retarder during inclement weather or when road surfaces are slippery. Turn retarder switch to OFF during inclement weather or when road surfaces are slippery.

CAUTION

Operate transmission retarder only when engine is at closed throttle. In the event of overheating, decrease use of retarder and use service brakes.

To apply transmission retarder, retarder switch (**Fig. 5.4**) must be turned ON. Transmission retarder is automatically applied by both the throttle and brake systems. When the throttle pedal is released, the retarder is either 30 percent or 50 percent engaged. Depending on the type of retarder installed on vehicle, the remainder of retarder engagement can be gained by depressing brake pedal. When retarder is applied, the retarder active (RTD ACTIVE) indicator is turned on along with the vehicle brake lights.To disengage transmission retarder, release brake pedal and turn retarder switch to OFF.

CAUTION

When descending a grade, remember that frequent use of service brakes causes them to become hot, reducing stopping ability. Grade descent speed should be slow enough to allow service brakes to

https://truckmanualshub.com/

be used infrequently. This allows service brakes to remain cool while retaining their effectiveness.

Transmission retarder can be used to slow a vehicle whenever the service brakes fail. By energizing transmission retarder as soon as a service brake problem is apparent, a retarding effect is applied to the vehicle. As grade conditions permit, the transmission retarder will stop the vehicle.

WARNING

Using transmission retarder as a primary braking system when service brakes are operable is very dangerous. This can cause long, unpredictable, stopping distances that could result in personal injury or property damage.

When vehicle braking is required, the transmission retarder may be used with the service brakes. There is no time limit for operation of the transmission retarder.

CAUTION

If the transmission retarder fails to shut off when the service brake pedal is released, turn the retarder switch OFF and do not use the transmission retarder until the system is repaired. If transmission retarder fails to shut off when retarder switch is turned off, the engine should be shut down and the transmission retarder repaired before continuing operation. Failure to do so could result in damage to the engine and transmission.

The transmission oil temperature for an Allison automatic transmission, without a retarder, should not exceed 300°F (149°C) during normal operation. On a transmission with a retarder, the transmission oil temperature should not exceed 330°F (160°C) during normal operation.

CAUTION

A sudden increase in oil temperature not caused by a load increase may indicate mechanical failure. Bring vehicle to a safe stop and investigate the cause preventing further damage. Do not operate engine until the cause has been determined and repaired.

NOTE: If transmission oil temperature rises too high, an alarm sounds and the TRANS TEMP indicator comes on.

An Allison MD or HD transmission with an output retarder has a maximum operating temperature of 330°F (160°C).

CAUTION

Transmissions that have reached the maximum temperature need to be cooled. Stop the vehicle, place the transmission in neutral (N), and raise the engine rpm to 1000 - 1200 rpm. If the transmission does not cool down, shut down the engine. Do not operate the vehicle until the problem has been determined and repaired. Operating the vehicle under these circumstances could damage the transmission.

Caterpillar Transmission Retarder, Optional

TBD

Engine Braking System

NOTE: For information not covered in this section, see the engine manufacturer’s operator’s manual.

Engine Braking Switch

The engine brake switch controls the degree of engine braking. Normally there are two paddle switches, a two-position ON/OFF switch to activate the engine brake, and a two-position HI-LO switch to control the amount of engine braking.

To turn the two-position ON/OFF switch to ON, raise the paddle. When the two-position switch is on, an

https://truckmanualshub.com/

amber LED (light-emitting diode) illuminates inside the switch.

To turn the two-position HI-LO switch on high, raise the paddle (at the Hi-Lo icon). To turn the two-position HI-LO switch on low, lower the paddle (at the ENG BRK legend). See **Fig. 5.5**.

https://truckmanualshub.com/

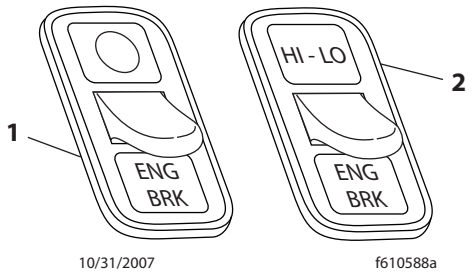

1. On/Off Switch
2. Hi-Lo Switch

Fig. 5.5, Engine Brake Switches

Jacobs Engine Brake

The Jacobs Engine Brake is a diesel retarder that uses the engine to aid in slowing and controlling the vehicle. When applied, the engine brake alters the operation of the engine's exhaust valves so that the engine works as a power-absorbing air compressor. This provides a retarding or slowing action to the vehicle's drive wheels, enabling you to have improved vehicle control without using the service brakes. This results in reduced service brake maintenance.

Jacobs Engine Brake Operation With Automatic Transmission

WARNING

Using the Jacobs engine brake as a primary braking system when service brakes are operable is very dangerous. This can cause long, unpredictable, stopping distances that could result in personal injury or property damage.

The operation of the Jacobs Engine Brake is fully automatic once it is turned on. When you move your foot off the throttle pedal, the engine brake is automatically applied. When pressure is applied to the throttle pedal, the Jacobs Engine Brake is deactivated. The engine brake will continue to be applied after the service brake has been depressed giving the combined power of both the engine brake and the service brakes to the drive wheels.

Vehicles equipped with an antilock braking system have the ability to turn the engine brake off if a wheel slip condition is detected. The engine brake will automatically be turned back on when the wheel slip condition is no longer detected.

The electronic engine controls will deactivate the engine brake when engine speed falls below approximately 1000 rpm or when the vehicle slows down to a preset speed, which varies depending on the vehicle and engine configuration. This prevents stalling the engine.

Since the engine brake is most effective at higher speeds, gear selection is very important. You obtain maximum retarding power when you use the lowest possible gear without exceeding the recommended engine speed for engine braking. Best retarding performance is obtained at engine speeds between 1800 rpm and high idle. Below 1700 rpm, retarding power may be significantly reduced.

IMPORTANT: Before turning on the engine brake (ENG BRK) switch (**Fig. 5.6**), be sure the engine has reached full operating temperature.

The engine brake switch must be in either the LO or HI position in order to operate the Jacobs Engine Brake. Once it is in either of those positions, merely take your foot off the throttle pedal to slow your vehicle. Depending on the engine model, LO will provide one-third or one-half of the full braking capacity of the engine. HI

https://truckmanualshub.com/

will provide maximum engine braking. Apply the service brakes when it's time to come to a complete stop.

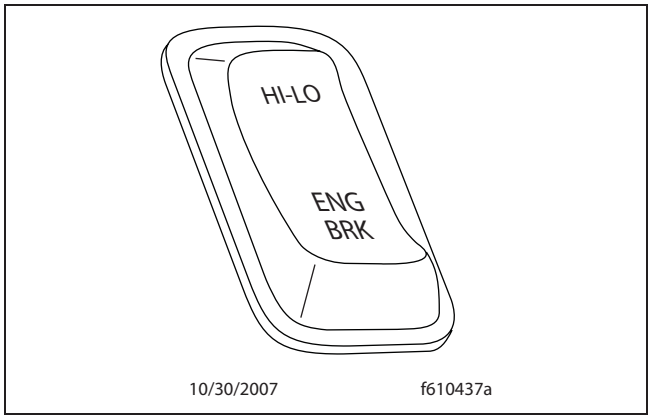

Fig. 5.6, Engine Brake Switch

WARNING

Do not use the engine brake if road surfaces are slippery. Using the engine brake on wet, icy, or snow-covered roads could result in loss of vehicle control, possibly causing personal injury and property damage.

Exhaust Braking System

NOTE: For information not covered in this section, see the engine manufacturer's operator's manual.

Exhaust Brake Switch

The optional exhaust brake is controlled by a dash-mounted rocker switch to help slow the vehicle when the accelerator is released.

To turn the exhaust brake on, press on the upper part of the rocker (at the light inside the switch). The exhaust brake turns off automatically. See **Fig. 5.7**.

When the exhaust brake switch is on, an amber LED illuminates inside the switch. When the panel lights are on, the EXHST BRK legend is backlit in green.

Starting the Engine

Before starting the engine, make sure that the lower half of the exhaust break switch is pressed in and the amber light is not illuminated. Do not turn the exhaust brake on until the engine has reached normal operating temperatures.

Fig. 5.7, Exhaust Brake Switch

Exhaust Brake Operating Characteristics

When you remove your feet from both the accelerator and clutch pedals and the retarder switch is on, the exhaust brake is applied. The following conditions should exist if the brake is operating properly:

- A slight change in the sound of the engine may be noticed when the exhaust brake is applied.
- Exhaust smoke should appear normal.
- Engine temperature should remain in the normal operating range.
- Road speed usually decreases when the exhaust brake is applied during a descent. When the vehicle is carrying a heavy load or the grade is extremely steep, you may need to apply the service brakes occasionally.
- Do not expect a retarding effect similar to sudden hard application of the service brakes. The exhaust brake retards the vehicle with a smooth braking effect.
- During a descent, the tachometer usually shows a drop in rpm depending on the grade and the vehicle load.
- Depending on the grade and vehicle load, you may or may not feel the retarding force acting

https://truckmanualshub.com/

against your body when the brake is applied. The retarding force of the brake may not always be noticed, but it is actually preventing the vehicle from going much faster.

Driving Downhill

While approaching a steep grade, make sure that the upper half of the exhaust brake switch is in the ON position with the amber light illuminated. The exhaust brake comes on as soon as you remove your foot from the accelerator pedal. While going down the grade, use a low enough gear to safely descend with a minimum application of the service brakes. As a general guideline, use the same gear as you would to ascend the hill.

CAUTION

Do not allow engine to exceed its governed speed, or serious engine damage could result.

Apply the service brakes to reduce the engine rpm or make a slower descent by using a lower gear.

WARNING

Do not use exhaust brake when driving on slippery or low traction road surfaces. Failure to follow this precaution could result in a loss of vehicle control and possible personal injury or property damage.

Shutting Off the Engine

Make sure retarder switch is turned off before shutting off the engine.

Pacbrake Exhaust Brake

The Pacbrake exhaust brake is intended as a supplement to the service brakes and will not bring the vehicle to a complete stop. The Pacbrake will assist in the control or reduction of road speed in conjunction with, or independent of, the service brakes. The amount of retarding or braking force is controlled by the driver.

Pacbrake Operation (Caterpillar)

The Pacbrake is controlled by the exhaust brake switch and the throttle pedal. All applications are additionally affected, controlled, or governed by engine speed through transmission gear selection. The Allison MD3060 transmission has automatic downshifting when the exhaust brake is requested. See the information on the "Allison World Transmission" later in this chapter.

On some applications, when the Pacbrake is in use, it may be necessary to check that the cruise control is not set and that the throttle is in the idle position.

On some applications the engine, transmission, cruise control, and the Pacbrake exhaust brake may electronically interact with each other, which automatically operates their functions. Following are some examples of the programmed options that may be available with the cruise control in the on position:

- The coast mode engages the Pacbrake when the service brake is applied and disengages when the service brake is released.
- The latch mode engages the Pacbrake when the service brake is applied and the Pacbrake remains on after the service brake is released. The Pacbrake is disengaged when another input (depressing the throttle or clutch, engine speed drops below 800 rpm, or the exhaust brake switch is turned off) is supplied.
- The manual mode does not require the cruise control switch to be on and operates the Pacbrake manually at the driver’s discretion.

The amount of braking power the engine will develop is related to the speed (rpm) of the engine. The higher the engine rpm, the greater the retarding power.

Certain conditions may require that transmission be downshifted in order to generate adequate rpm for the amount of retarding power required. Pacbrake exhaust brakes are designed and approved for safe use at 300 rpm above the engine’s maximum governed rpm. Refer to individual engine manufacturer’s specifications.

The Pacbrake will function best if it is used all of the time. However, if the vehicle is used inconsistently or seasonally, it may be necessary to perform a preventive maintenance procedure.

1. With the engine shut down, use any oil-free or non-petroleum based high-heat lubricant and spray or coat a sufficient amount on the restricter valve

https://truckmanualshub.com/

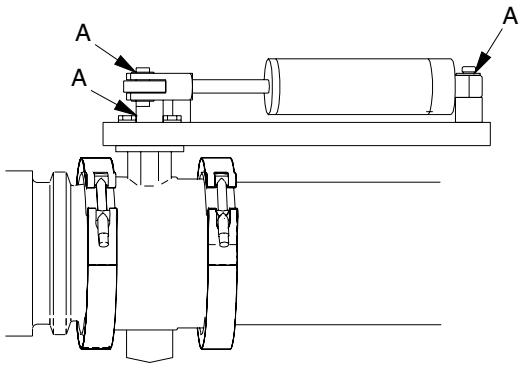

03/06/2000 f490228

A. Lubrication Points

Fig. 5.8, PacBrake Exhaust Brake and Air Cylinder

shaft and the attaching locations at each end of the actuation cylinder. See **Fig. 5.8**.

2. With your hands or a pair of pliers, motion the valve several times to distribute the lubricant down the shaft and the attaching locations.

NOTE: Starting the engine and idling for short periods of time is not recommended. During a cold engine start-up, enough moisture is developed within the engine and the exhaust system to create a corrosion hazard that could affect the future operation of the Pacbrake. The brake housing may trap water in the valve shaft bore causing corrosion in an improper or nonfunctional brake. If it is necessary to periodically start the engine, it is recommended that normal operating temperatures be attained before shutting down the engine.

Allison World Transmission

Pacbrake exhaust brakes on engines that are used with the Allison World Transmission MD series, are interfaced with the transmission electronic control module (ECM). An exhaust brake enabled transmission ECM will usually provide converter lockup in gears two through six. Effective exhaust braking begins when the transmission automatically downshifts into fifth gear (62 mph or less). Once on, the Pacbrake exhaust brake will control road speed and/or slow the vehicle sufficiently that the transmission will automatically downshift, if necessary, to Allison's preselect mode.

The preselect mode is normally assigned to second gear; however, the transmission can be reprogrammed by an Allison Transmission Distributor to third or fourth gear should the operator desire. If additional retarding power is required before the automatic downshifting occurs, you can select a lower transmission gear on the Allison shift selector.

https://truckmanualshub.com/

6

Engines

Engine Starting 6.1
Cold Weather Starting 6.3
Starting After Extended Shutdown or Oil Change 6.4
Engine Break-In 6.4
Engine Operation 6.4
Cold Weather Operation 6.7
High Altitude Operation 6.9
Engine Shutdown 6.9
Clutches 6.10

https://truckmanualshub.com/

This page intentionally left blank.

https://truckmanualshub.com/

Engine Starting

NOTE: For information not covered in this section, see the engine manufacturer's operator's manual.

For cold weather starting, refer to "Cold Weather Starting" later in this chapter.

Before starting the engine, the driver should be familiar with the vehicle warning system in order to bring the vehicle to a safe stop if the engine malfunctions. If the driver doesn't understand how the warning system works, an engine shutdown could occur causing a safety hazard. To become familiar with the warning system, read **Chapter 2**.

Whenever you start an engine, watch for any signs of engine problems. If the engine vibrates, misfires, or makes unusual noises, turn the engine off as soon as possible and determine the cause of the problem. Frequently, engine damage may be avoided by a quick response to early indications of problems.

CAUTION

When starting a vehicle equipped with a manual transmission and clutch lock out switch, the clutch pedal must be fully depressed during the entire start sequence. Failure to do so can cause the pinion to release and re-engage, which could cause ring gear and starter pinion damage.

If a vehicle does not start on the first attempt, make sure that the engine has completely stopped rotating before reapplying the starter switch. Failure to do so can cause the pinion to release and re-engage, which could cause ring gear and starter pinion damage.

Moving a vehicle with the starter and/or using the starter to bump the engine for maintenance procedures is strictly prohibited. Use of these methods to bump the engine over or move the vehicle can cause the pinion to release and re-engage, which could cause ring gear and starter pinion damage.

IMPORTANT: Ring gear and starter pinion damage caused by improper starting procedures is not warrantable.

Pre-Start

NOTE: These pre-start steps apply to all engines.

1. Perform the engine pretrip inspection and daily maintenance checks in **Chapter 9**.
2. Set the parking brake.
3. For manual transmissions, place the transmission in neutral and disengage the clutch. For automatic transmissions, make sure the transmission shift control is in neutral or park.
4. Turn ignition switch to the ON position (**Fig. 6.1**), if applicable, all the electronic gauges on the instrument pod and instrument cluster complete a full sweep of the dials, the warning and indicator lights should come on, and the buzzer sounds for three seconds.

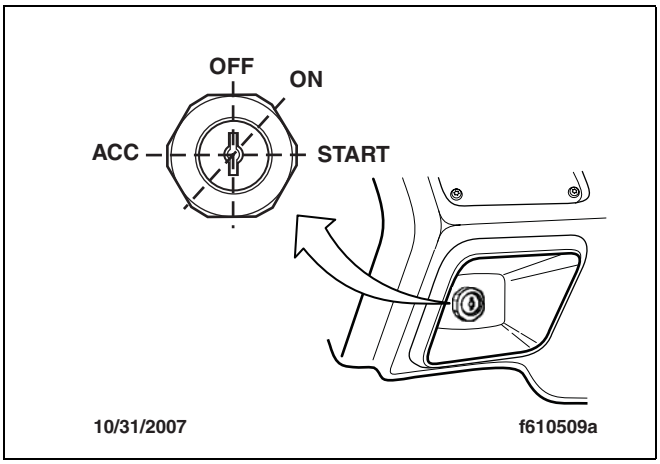

Fig. 6.1, Ignition Switch Positions

Starting Precautions, All Engines

CAUTION

When starting a vehicle equipped with a manual transmission and clutch lock out switch, the clutch pedal must be fully depressed during the entire start sequence. Failure to do so can cause the pinion to release and re-engage, which could cause ring gear and starter pinion damage.

If a vehicle does not start on the first attempt, make sure that the engine has completely stopped rotat-

https://truckmanualshub.com/

ing before reapplying the starter switch. Failure to do so can cause the pinion to release and re-engage, which could cause ring gear and starter pinion damage.

Moving a vehicle with the starter and/or using the starter to bump the engine for maintenance procedures is strictly prohibited. Use of these methods to bump the engine over or move the vehicle can cause the pinion to release and re-engage, which could cause ring gear and starter pinion damage.

IMPORTANT: Ring gear and starter pinion damage caused by improper starting procedures is not warrantable.

WARNING

Never pour fuel or other flammable liquid into the air inlet opening in the air intake in an attempt to start the vehicle. This could result in a ash re causing serious personal injury or property damage.

CAUTION

Don't crank the engine for more than 30 seconds at a time during any of the following procedures. Wait two minutes after each try to allow the starter to cool. Failure to do so could cause starter damage.

CAUTION

Protect the turbocharger during the start-up by not opening the throttle or accelerating the engine above 1000 rpm until minimum engine idle oil pressure registers on the gauge. Failure to do so could damage the turbocharger.

Caterpillar

NOTE: Before doing these steps, do the steps in the "Pre-Start" section.

1. Turn the ignition switch to the on position. The CHECK ENGINE indicator on the instrument pod comes on for five seconds. If equipped with an air intake heater, the GRID HEAT indicator comes on for a minimum of two seconds, regardless of coolant temperature.

IMPORTANT: If equipped with an air intake heater and if the GRID HEAT indicator comes on for more than two seconds, wait until the light turns off before attempting to start the engine.

2. Turn the ignition switch to the START position. Do not depress the throttle pedal while the engine is cranked. Release the ignition key the moment the engine starts.
   - 2.1. If the engine does not start after 30 seconds of cranking, turn the ignition switch to the OFF position.
   - 2.2. Wait two minutes to allow the starter motor to cool. Turn the ignition switch back to the ON position and try to start the engine again.
   - 2.3. As soon as the engine starts, release the ignition switch allowing the engine to run at a slow idle.

CAUTION

If the oil pressure is less than 5 psi (35 kPa), shut down the engine immediately to prevent serious damage. If the vehicle is equipped with an automatic shutdown system, the engine will shut down after 30 seconds.

3. The engine may be operated at low load and speed once the engine oil pressure has reached 10 psi (69 kPa) and air pressure (if applicable) has reached 64 to 76 psi (441 to 524 kPa).
4. When the engine has reached the normal operating temperature of 183°F (84°C), the engine may be operated at full load.

Cummins

CAUTION

Never attempt to start any Cummins IS series electronic engine (ISB, ISC, ISL) using ether or any other starting fluid. Serious engine damage could result.

https://truckmanualshub.com/

NOTE: Before doing these steps, do the steps in the "Pre-Start" section.

1. Turn the ignition switch to the on position. The CHECK ENGINE indicator on the instrument pod will come on. Leave the ignition switch on until the CHECK ENGINE indicator goes off. If equipped with an air intake heater, the GRID HEAT indicator comes on for a minimum of two seconds, regardless of coolant temperature.

IMPORTANT: If equipped with an air intake heater and if the GRID HEAT indicator comes on for more than two seconds, wait until the light turns off before attempting to start the engine.

2. Turn the ignition switch to the start position. Do not depress the throttle pedal while the engine is cranked. After the engine starts, release the ignition key.

CAUTION

Do not rev the engine if the oil pressure gauge indicates no oil pressure. Shut down the engine if no oil pressure appears within approximately ten seconds. Check to determine the cause of the problem. Operating the engine with no oil pressure will damage the engine.

3. Allow the engine to gradually warm up to operating temperature and develop a stable oil pressure.

NOTE: When the engine is started, it takes a short time to build up a lubricating oil film between the shafts and bearings, and between the pistons and liners.

4. If minimum oil pressure at idle of 10 psi (69 kPa) does not register within 15 seconds, shut down the engine.

CAUTION

To protect the turbocharger during the start-up do not open the throttle or accelerate the engine above 1000 rpm until minimum engine idle oil pressure registers on the gauge. Failure to do so could damage the turbocharger.

5. Idle the engine for three to five minutes at 1000 rpm before operating the engine under load.

Cold Weather Starting

NOTE: For information not covered in this section, see the engine manufacturer’s operator’s manual.

WARNING

Do not use any starting aid, such as ether, in engines with an air intake heater. This could cause an explosion and serious personal injury or death.

Modern electronic engines do not normally require special starting aids. At low temperatures, air intake heaters, manifold heaters, or water jacket heaters are sometimes used to assist in starting.

Caterpillar

Caterpillar truck engines with direct injection are designed to start at temperatures above 32°F (0°C) without using start systems. If the temperature is below 32°F (0°C), start ability will be improved by the use of a block heater.

CAUTION

Directing ether at heater element in the air intake heater could cause extensive engine damage.

CAUTION

When using starting fluid, follow the engine manufacturer’s instructions carefully. Use starting fluid sparingly and spray it only while cranking the engine. Excessive ether can cause piston and ring damage. Use ether for cold weather starting purposes only.

https://truckmanualshub.com/

Cummins

Cummins ISB,ISC and ISL engines are equipped with an intake air heater. It is optional onthe ISM engines. Startability during low temperatures will improve with the use of a block heater.

WARNING

Starting fluid is highly flammable and explosive. It can cause serious injury or death if improperly handled. Do not smoke where starting fluid is in use. Keep sparks, flames, and arc welding equipment away from starting fluid.

Use starting fluid only as directed by the engine manufacturer's instructions.

Starting After Extended Shutdown or Oil Change

NOTE: For information not covered in this section, see the engine manufacturer's operator's manual.

An engine in storage for an extended period of time (over winter, for example) may accumulate water in the oil pan. Oil diluted by water cannot provide adequate bearing protection at start-up. For this reason, change the engine oil and filters after extended storage.

Do the following steps after an oil change or after the engine has been shut down for more than three days:

1. Make sure the transmission is filled with the correct type of transmission fluid as specified by the transmission manufacturer.
2. Make sure the fuel tank is full. If air has entered the fuel system, prime the fuel system, using the engine manufacturer's instructions.
3. If the engine is equipped with a fuel/water separator, drain off any accumulated water.
4. Check the drive belts to make sure they are in good condition and properly adjusted. Replace any drive belts that are cracked, worn, or glazed.
5. Check the turbocharger for signs of oil or exhaust leaks. Correct any problems before starting the engine.
6. Check the engine mounting bolts for tightness. Refer to the Maintenance Manual and retighten he mounting bolts to the proper torque specifications.
7. Make sure the battery cable connections are clean and tight. Check for corrosion around terminal lugs.
8. Check that the batteries are charged.
9. Start the engine. See "Engine Starting."

Engine Break-In

Caterpillar

Every Caterpillar engine must pass a full-load operation test on a dynamometer before shipment, eliminating the need for a break-in period. Only an initial operational check is necessary.

Cummins

Cummins engines are run on a dynamometer before being shipped from the factory. In most applications, the engine can be put to work immediately, but the operator has an opportunity to establish conditions for the best service life during the initial 100 hours or 3000 miles (5000 km) of service by:

1. Operating as much as possible at three-quarter load.
2. Avoiding operation at engine idle speeds or at maximum horsepower levels longer than 5 minutes.
3. Developing the habit of closely watching the engine instruments during operation. Let up on the throttle (where applicable) if the oil temperature reaches 250°F (121°C) or if the coolant temperature exceeds 195°F (91°C).
4. Operating with a power requirement that allows acceleration to governed speed when conditions require more power.
5. Checking the oil level periodically during the break-in period.

Engine Operation

NOTE: For information not covered in this section, see the engine manufacturer's operators's manual.

https://truckmanualshub.com/

DANGER

Don’t operate the engine in an area where flammable vapors such as gasoline or diesel fumes are present. Shut down the engine when in an area where flammable liquids or gases are being handled. Failure to observe these precautions could result in serious injury or death.

Operating any vehicle in an area where there are concentrated flammable vapors (such as diesel, gasoline, natural gas, or propane fumes) can create a hazardous situation. These vapors can be drawn into the engine through the air intake, and cause engine overspeed. Be especially cautious of low-lying or closed-in areas, and always check for signs that flammable vapors may be present.

All diesel engines have been built to comply with the requirements of the Federal (U.S.) Clean Air Act. Once an engine is placed in service, the responsibility for meeting both state and local regulations is with the owner/operator. Good operating practices, regular maintenance, and correct adjustments are factors which help keep the engine within regulations.

Adequate maintenance of the engine, which is the responsibility of the owner/operator, is essential to keep the emission levels low.

While you are driving, watch for any signs of engine problems. If the engine overheats, uses excessive fuel or lubricating oil, vibrates, misfires, makes unusual noises, or shows an unusual loss of power, turn the engine off as soon as possible and determine the cause of the problem. Frequently, engine damage may be avoided by a quick response to early indications of problems.

CAUTION

Stop the engine at the first sign of malfunction. Almost all malfunctions give some warning to the operator before significant damage occurs. Many engines are saved because alert operators heed the warning signs (sudden drop in oil pressure, unusual noises, etc.) and immediately shut down the engine.

All electronic engines have an engine protection system designed to warn the driver of engine malfunctions. If the driver doesn’t understand the how the shutdown protection system works, and engine shutdown could occur, causing a safety hazard.

IMPORTANT: On vehicles with the shutdown protection system, a red engine protecting (ENG PROT) warning light illuminates when the ignition switch is turned to the ON position.

The warning and derate system does not cause an engine shutdown, but derates the engine, allowing it to be brought safely to a place where the engine can be serviced. See **"Engine Shutdown"** for information on the shutdown protection (standard) and warning/derate (optional) system.

NOTE: Long periods of idling are not good for an engine because the combustion chamber temperatures drop so low that the fuel may not burn completely. This will cause carbon to clog the injector spray holes and piston rings, and could result in stuck valves.

For long powertrain life, use the following information when operating the engine and shifting gears.

Update following per latest Engine Operators manual becomes available.

Caterpillar

Proper operation, driving techniques, and maintenance are key factors in obtaining the maximum life and economy of a vehicle engine. Follow the directions in the Caterpillar Operation and Maintenance Manual and this manual for trouble-free, economical engine operation.

Idling

The idle speed is adjustable on Caterpillar electronic engines. Consult your Caterpillar dealer for information. The idle rpm is preset between 700 and 750 rpm. Avoid excess idling. If the vehicle is parked for more than five minutes, stop the engine. An engine can burn from 0.7 to 1.5 gallons (2.8 to 5.7 L) of fuel per hour

https://truckmanualshub.com/

while the engine is idling. Excessive idling can cause carbon buildup and/or cause the engine to slobber, which is harmful to the engine.

Caterpillar electronic engines do not require long warm-up periods. Typically, the engine should be at normal operating temperature in a few minutes. Begin operating the engine at low load. After normal oil pressure is reached and the temperatures gauges begin to rise, the engine may be operated at full load.

Getting Started

Select a gear that allows a smooth, easy start without increasing engine speed above low idle. Jerky starts waste fuel and put stress on the drivetrain.

Continue to upshift until cruising speed is reached. Use only the rpm needed to make an upshift into the next gear. This technique will improve fuel economy because the engine will be operating at the lowest rpm needed to pull the load.

Keep the engine rpm to a minimum. For CFE/3126B engines, use an rpm that is from 1400 to 2000 rpm. For C–10 and C–12 engines, use an rpm that is from 1200 to 1600 rpm.

The amount of rpm that is required to upshift increases as the vehicle speed increases, unless upshifts are made on upgrades. Experience with the vehicle will show the amount of rpm that is required to upshift under various conditions.

Uphill Operation

On uphill grades, allow the engine to lug downward to between 1440 to 1550 rpm for CFE/3126B engines and between 1100 to 1200 rpm for C–10 and C–12engines before downshifting. Continue to downshift in this manner until you reach a gear that maintains the desired speed. Continue to operate the engine at this low rpm if the vehicle will crest the top of the hill without a downshift in the transmission. Begin upshifting as the grade of the hill decreases and the engine begins to accelerate above 2000 rpm for CFE/3126B engines or above 1600 rpm for C–10 and C–12 engines. Driving this way will provide optimum fuel economy and performance.

NOTE: Allowing the engine to lug below peak torque is permissible if the vehicle is cresting the top of a hill. However, extended operation at an engine rpm that is below peak torque (1400 rpm for CFE/3126B engines and 1200 rpm for C–10 and C–12 engines) will raise the exhaust temperature and the cylinder pressure. This can lead to reduced engine service life.

IMPORTANT: On Caterpillar CFE/3126B engines, do not allow the engine to exceed 2900 rpm. On Caterpillar C–10 and C–12 engines, do not allow the engine to exceed 2300 rpm in any situation or 2100 rpm if equipped with an engine brake.

Downhill Operation

On a downhill grade, do not coast or put the transmission in neutral. If no engine power is needed, disengage the cruise control. Select the correct gear that does not allow the engine speed to exceed 2900 rpm for CFE/3126B engines or 2300 rpm for C–10 and C–12 engines. Use the service brakes to control the speed of the vehicle. As a basic rule, select the same gear that would be required to go up the grade.

Cummins

Proper operation, driving techniques, and maintenance are key factors in obtaining the maximum life and economy of a vehicle engine. Follow the directions in the *Cummins Operation and Maintenance Manual* and in this manual for trouble-free, economical vehicle engine operation.

CAUTION

Do not keep the engine at low idle for long periods. Idling for periods longer than 10 minutes can damage the engine, causing the combustion chamber temperatures to drop so low that the fuel will not burn completely. This will cause carbon to build up around the injector spray holes and piston rings, and can cause the valves to stick.

Monitor the oil pressure and coolant temperature gauges frequently. Refer to the *Cummins Operation and Maintenance Manual* for recommended operating pressures and temperatures. Shut down the engine if any pressure or temperature does not meet the specications.

https://truckmanualshub.com/

CAUTION

Continuous operation with a coolant temperature below 140°F (60°C), or a coolant temperature above 212°F (100°C) can damage the engine.

If an overheating condition occurs, reduce the power output of the engine by releasing the throttle pedal pressure or by shifting the transmission to a lower gear, or both, until the temperature returns to the normal operating range. If the engine temperature does not return to normal, shut off the engine and refer to the troubleshooting section in the Cummins Operation and Maintenance Manual.

Most failures give an early warning. Look and listen for changes in performance, sound, or engine appearance that can indicate service or engine repair is needed. Some of these changes are:

- engine misfires
- vibration
- unusual engine noises
- sudden changes in engine operating temperatures or pressures
- excessive smoke
- loss of power
- an increase in oil consumption
- an increase in fuel consumption
- fuel, oil, or coolant leaks

CAUTION

Do not operate the engine at full throttle below peak torque rpm for more than 30 seconds. Operating the engine below peak torque rpm will shorten the engine life to overhaul and can cause serious engine damage.

Cummins engines are designed to operate successfully at full throttle under transient conditions down to peak torque engine speed. This is consistent with recommended operating practices.

Operation of the engine below peak torque rpm can occur during gear shifting due to the difference of ratios between transmission gears, but engine operation must not be sustained for more than 30 seconds at full throttle below peak torque rpm.

CAUTION

Do not operate the engine beyond high-idle speed (2900 rpm for ISC engines, 2600 rpm for ISL engines, and 2300 for ISM engines) under any circumstances. Operating the engine beyond high-idle speed can cause severe engine damage. When descending a steep grade, use a combination of transmission gears and engine or service brakes to control the vehicle and engine speed.

Cold Weather Operation

NOTE: For information not covered in this section, see the engine manufacturer’s operator’s manual.

Satisfactory performance of a diesel engine operating in low ambient temperatures requires modification of the engine, surrounding equipment, operating practices, and maintenance procedures. The lower the temperature, the greater the amount of modification required.

The modified engine must still be capable of operation in warmer climates without extensive changes. Accessories, such as block heaters, or oil pan heaters, should be designed so that they can be disconnected when not needed with little effect on the engine.

If satisfactory engine temperature is not maintained, maintenance costs will increase due to greater engine wear. If the engine coolant temperature becomes too low, raw fuel will wash the lubricating oil off the cylinder walls and dilute the crankcase oil, causing all moving parts of the engine to suffer from poor lubrication.

The following information is provided to engine owners, operators, and maintenance personnel on how the modifications can be applied to get satisfactory performance from their diesel engines.

There are three basic objectives:

https://truckmanualshub.com/

- Reasonable starting characteristics followed by practical and dependable warm up of the engine and equipment.
- A unit or installation which is as independent as possible from external influences.
- Modifications which maintain satisfactory operating temperatures with a minimum increase in maintenance of the equipment and accessories.

IMPORTANT: If a winterfront is used on a vehicle with an electronic engine equipped with a charge air cooler, make sure that there are slit openings distributed across the face of the winterfront to allow airflow through the entire charge-air-cooler core. Do not use a winterfront with closed areas that block uniform air ow across all sections of the charge-air-cooler crossflow tubes. This will adversely affect the operation and durability of the charge air cooler.

If the engine is in good mechanical condition and the precautions necessary for cold weather operation are taken, ordinary cold weather will not cause difficulty in starting or loss of efficiency.

On all engines, the following steps are necessary when operating in cold weather:

1. Check for cracks in the battery cases, for corrosion of the terminals, and for tightness of the cable clamps at the terminals.
2. Charge the batteries to full capacity. Replace any battery that is unable to hold full charge or is physically damaged.

   If so equipped, turn off the battery disconnect switch after the engine is shut down, to prevent battery discharge.
3. Have the alternator output checked at an authorized American LaFrance service provider.
4. Check the condition and tension of the drive belts.
5. Use low-viscosity lubricating oils for adequate lubrication.
6. At temperatures below 32°F (0°C), do not use summer-grade (2-D) diesel fuel. To avoid fuel problems due to paraffin separation, use winter-grade (1-D or winterized 2-D) diesel fuel only.

NOTE: Fuel cloud point is the temperature at which wax crystals become visible, which is generally above the pour point of the fuel. To keep the fuel filter elements from plugging with wax crystals, the cloud point should be no higher than the lowest ambient temperature at which the engine must start.

7. When the use of unblended summer-grade diesel fuel in winter cannot be avoided, install a thermostatically-controlled fuel heater. Fuel heaters can prevent wax from clogging the fuel filters and formation of ice crystals from water in the fuel.

IMPORTANT: If a fuel heater is used, make sure it has thermostatic controls to prevent excessive heating of the fuel in warm weather. Excessive heating of fuel can cause a loss of engine power.

Caterpillar

If the engine does not start, prime the fuel system.

For cold weather operation, use the following guidelines:

1. When starting the engine in temperatures below 32°F (0°C), use engine lubricants of lower viscosity. Refer to the Caterpillar Operation and Maintenance Manual for specifications.
2. When the temperature is below freezing, use sufficient antifreeze solution in the cooling system to prevent freezing.
3. For starting below 0°F (–18°C), an optional cold-weather starting assist is recommended. For temperatures below –10°F (–23°C), consult your Caterpillar dealer for recommendations.
4. When customer parameters include cold mode operation, the system puts the engine into cold mode if the temperature condition is not met. In cold mode, the low idle adjusts to 1000 rpm. The system also advances the timing, to reduce white smoke emissions and improve warm-up time.

NOTE: This temperature condition requires that the sum of the coolant temperature and the inlet air temperature is below 127°F (35°C).

https://truckmanualshub.com/

5. The system will keep the engine in cold mode until the temperature condition has been met.

   After cold mode has been completed, operate the vehicle at low load and low rpm until the engine coolant reaches normal operating temperature of 183°F (84°C).

Cummins

Operating diesel engines in extremely cold environments is possible if they are properly prepared and maintained. The correct fuels, lubricants, and coolants must be used for cold weather operation. See **Table 6.1** for the recommended fuels, lubricants, and coolants in the appropriate cold weather ranges.

Recommended Fuels, Lubricants, and Coolants for Cold Weather Operation with Cummins Engines			
Commodity	**Engine Model**	**Winterize –25°F to 32°F (–32°C to 0°C)**	**Arctic Specification –65°F to –25°F (–54°C to –32°C)**
Fuel	ISC, ISL, ISM	Fuel is to have maximum cloud and pour points 43°F (6°C) lower than the ambient temperature in which the engine operates.	Fuel is to have maximum cloud and pour points 43°F (6°C) lower than the ambient temperature in which the engine operates.
Lubricant	ISC	Use multiviscosity oil that meets API CG–4/SF or CF–4/SF.	Use synthetic arctic oil that meets API CE/SF or higher, such as 5W–20 or 5W–30.
	ISL	Use multiviscosity oil that meets API CG–4 or CH–4.	Use synthetic arctic oil that meets API CE/SF or higher, such as 5W–20 or 5W–30.
	ISM	Use multiviscosity 10W–30 oil.	Use arctic oil meeting API CH4 or CES 20071specications.
Coolant	ISC, ISL	Use 50 percent ethylene glycol or propylene glycol antifreeze and 50 percent water in your coolant mixture.	Use 60 percent ethylene glycol or propylene glycol antifreeze and 40 percent water in your coolant mixture.
	ISM	Use 50 percent ethylene glycol antifreeze and 50 percent water in your coolant mixture.	Use 60 percent ethylene glycol antifreeze and 40 percent water in your coolant mixture.

Table 6.1, Recommended Fuels, Lubricants, and Coolants for Cold Weather Operation with Cummins Engines

High Altitude Operation

NOTE: For information not covered in this section, see the engine manufacturer's operator's manual.

Engines lose horsepower when operated at high altitude because the air is too thin to burn as much fuel as at sea level. This loss is about three percent for each 1000 feet (300 m) altitude above sea level for a naturally aspirated engine. Most turbocharged engines are rated for higher altitudes than naturally aspirated engines.

An engine will have smoky exhaust at high altitudes unless a lower gear is used. The engine will not demand full fuel from the fuel system unless the engine is altitude-compensated by the use of a turbocharger. Shift gears as needed to avoid excessive exhaust smoke.

Engine Shutdown

NOTE: For information not covered in this section, see the engine manufacturer's operator's manual.

CAUTION

Stop the engine at the first sign of malfunction. Almost all malfunctions give some warning to the operator before significant damage occurs. Many engines are saved because alert operators heed the warning signs (sudden drop in oil pressure, unusual noises, etc.) and immediately shut down the engine.

https://truckmanualshub.com/

Caterpillar

CAUTION

Stopping the engine immediately after it has been working under load can result in overheating and accelerated wear of the engine components. Excessive temperatures in the turbocharger center-housing will cause oil coking problems. Follow the procedure, outlined below, to allow the engine to cool.

1. With the vehicle stopped, apply the parking brakes. Reduce the engine speed to low idle.
2. Place the transmission shift lever in neutral.

NOTE: If the engine has been operating at low loads, run it at low idle for 30 seconds before stopping. If the engine has been operating at highway speed or at high loads, run it at low idle for three minutes to reduce and stabilize internal engine temperatures before stopping.

3. Turn off the ignition switch and shut down the engine.

NOTE: Perform periodic maintenance as instructed in the Maintenance Interval Schedule in the Caterpillar Operation and Maintenance Manual.

4. An engine, if equipped with an idle shutdown timer, can be set to shut down after a preset amount of time.
   - 4.1. Ninety seconds before the preset shutdown time, the CHECK ENGINE light will begin to ash at a rapid rate.
   - 4.2. To disable the idle shutdown timer, press down on the clutch or brake pedal at any time during the final ninety seconds. The idle shutdown timer will be disabled until reset.

Cummins

1. With the vehicle stopped, apply the parking brakes and place the transmission in neutral.
2. Allow the engine to idle three to five minutes after a full load operation before shutting it down. This allows adequate cool down for the pistons, cylinder liners, bearings, and turbocharger components.
3. Turn the ignition switch to the off position to shut down the engine.

NOTE: Perform periodic maintenance as instructed in the Maintenance Interval Schedule in the Cummins Operation and Maintenance Manual.

4. Allow the engine to idle one to two minutes before shutting it down. This allows the lubricating oil and the coolant to carry heat away from the combustion chambers, bearings, shafts, and seals. The extreme heat may cause bearings to seize or oil seals to leak.

IMPORTANT: Bearings and seals in the turbocharger are subjected to the high heat of combustion exhaust gases. While the engine is running, this heat is carried away by oil circulation, but if the engine is stopped suddenly, the turbocharger temperature may rise as much as 115°F (46°C).

Clutches

General Information

Clutches are designed to absorb and dissipate more heat than encountered in typical operation. The temperatures developed in typical operation will not break down the clutch friction surfaces. However, if a clutch is slipped excessively, or asked to do the job of a fluid coupling, high temperatures develop quickly and destroy the clutch. Temperatures generated between the flywheel, driven discs, and pressure plates can be high enough to cause the metal to ow and the friction facing material to char and burn.

CAUTION

Do not allow sustained slippage of the clutch; this could severely damage the clutch disc, pressure plate, or flywheel. Damage caused by clutch slippage due to improper break-in is not warrantable.

Heat and wear are practically nonexistent when a clutch is fully engaged. But during the moment of

https://truckmanualshub.com/

engagement, when the clutch is picking up the load, it generates considerable heat. An improperly adjusted or slipping clutch will rapidly generate sufficient heat to destroy itself.

To ensure long service life of the clutch; start in the right gear, be alert to clutch malfunctions, and know when to adjust the clutch.

Clutch Operation

Starting the Vehicle in the Proper Gear

An empty truck can be started in a higher transmission gear ratio than a partially or fully loaded truck. A good rule of thumb for the driver to follow is: select the gear combination that allows you to start moving with an idling engine, or if necessary, just enough throttle to prevent stalling the engine. After the clutch is fully engaged, the engine should be accelerated to the correct rpm for the upshift into the next higher gear.

Gear Shifting Techniques

Many drivers upshift into the next gear, or even skip-shift into a higher gear, before the vehicle has reached the proper speed. This type of shifting is almost as bad as starting off in a gear that is too high, since the engine rpm and vehicle speeds are too far apart requiring the clutch to absorb the speed difference with friction, creating heat. For transmission operating instructions, see **Chapter 7**.

The clutch brake is applied by fully depressing the clutch pedal. Its purpose is to stop the transmission gears from rotating in order to engage the transmission gears quickly in making an initial start.

CAUTION

Never apply the clutch brake while the vehicle is moving. The clutch pedal should never be pressed down fully before putting the transmission in neutral. Considerable heat will be generated, which will be detrimental to the friction discs, release bearings and transmission front bearings.

CAUTION

Overloading will not only result in damage to the clutch, but also to the entire powertrain.

Excessive Vehicle Overload, or Overloading the Clutch

Clutches are designed for specific vehicle applications and loads. These limitations should not be exceeded.

Riding the Clutch Pedal

Riding the clutch pedal is very destructive to the clutch, since partial clutch engagement permits slippage, generating excessive heat. Riding the clutch pedal will also put a constant thrust load on the release bearing, which can thin out the lubricant. Release bearing failures can be attributed to this type of misuse.

Holding the Vehicle on an Incline With a Slipping Clutch

A slipping clutch accumulates heat faster than it can be dissipated, resulting in early clutch failures. Never use the clutch to hold a vehicle on a hill.

WARNING

Do not coast with the clutch released (pedal depressed) and the transmission in gear. High driven disc rpm could cause the clutch facing to be thrown off the disc. Flying debris could cause injury to persons in the cab.

Coasting With the Clutch Released (pedal down) and the Transmission in Gear

Coasting with the clutch released and the transmission in gear can cause high driven disc rpm through multiplication of ratios from the final drive and transmission.

Engaging the Clutch While Coasting

Engaging the clutch while coasting can result in tremendous shock loads and possible damage to the clutch, as well as to the entire drivetrain.

https://truckmanualshub.com/

Reporting Erratic Clutch Operation Promptly

Reporting erratic clutch operation as soon as possible will give maintenance personnel a chance to inspect and lubricate the clutch components, make necessary internal clutch and linkage adjustments, etc.

Free pedal should be included and commented on daily in the driver's report, since clutch free pedal is the maintenance department's guide to the condition of the clutch and the release mechanism.

See **Group 25** of the *Condor® Workshop Manual* for clutch adjustment procedures and specifications.

CAUTION

Operating the vehicle with incorrect free pedal could result in clutch damage.

Clutch brake squeeze is an increased resistance (greater than the force of the clutch spring) felt as the clutch pedal approaches the end of its stroke. If the gears grind when shifting into first or reverse gear with the clutch pedal fully depressed, the clutch is out of adjustment or the clutch brake is worn and needs to be replaced.

Clutch Adjustments

Clutches have an internal adjustment and external linkage adjustment. See **Group 25** of the *Condor® Workshop Manual* for clutch adjustment procedures and specifications.

CAUTION

Operating the vehicle with the clutch improperly adjusted could result in clutch or clutch brake failure.

Lubrication

On vehicles equipped with a greaseable release bearing, the release bearing and linkage should be lubricated at frequent intervals. See **Group 25** of the *Condor® Maintenance Manual* for intervals and procedures.

CAUTION

Failure to lubricate the release bearing and linkage as recommended could result in release bearing and clutch damage.

https://truckmanualshub.com/

7

Transmissions and Rear Axles

Transmissions **7.1**
Rear Axles **7.8**

https://truckmanualshub.com/

This page intentionally left blank.

https://truckmanualshub.com/

Transmissions

Allison MD and HD Series Transmissions

The Allison MD and HD automatic transmissions are electronically controlled and come with a push button shift selector. See **Fig. 7.1**. The automatic transmissions provide six forward ranges and one reverse range.

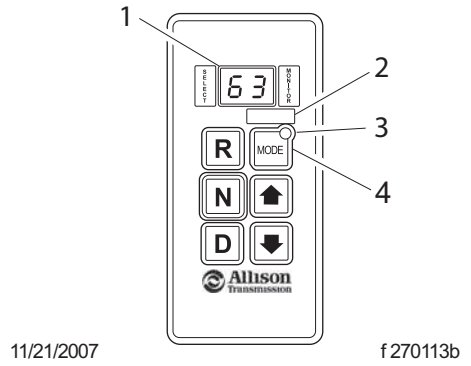

1. Digital Display
2. Mode Identification
3. Mode Indicator
4. Mode Button

Fig. 7.1, Push Button Shift Selector

The push button shift selector has a **R** (Reverse), a **N** (Neutral), a **D** (Drive), an up arrow, a down arrow, a **MODE** button and a digital display.

WARNING

Do not leave the vehicle unattended with the engine running. If you leave the vehicle and the engine is running, the vehicle can move suddenly, which could result in personal injury or property damage.

If you must leave the engine running, do not leave the vehicle until you do the following.

- Put the transmission in **N** (Neutral).
- Apply the work brake or the parking brake and make sure it is properly engaged.
- Chock the rear tires and take any other steps necessary to keep the vehicle from moving.

R (Reverse)

Press the **R** button to select reverse. The digital display will show **R** when reverse is selected. Completely stop the vehicle and let the engine return to idle before shifting from a forward range to reverse, or from reverse to a forward range.

N (Neutral)

Press the **N** button to select neutral. The digital display will display **N** when neutral is selected. It is not necessary to press neutral before starting the vehicle. The **ECU** (electronic control module) automatically places the transmission in neutral at start-up. Always select neutral before turning off the engine.

Neutral is also used during stationary operation of the power takeoff (PTO).

WARNING

Do not let the vehicle coast in neutral. If the vehicle is allowed to coast in neutral, the engine brake will not work and you could lose control of the vehicle. This can cause an accident possibly resulting in personal injury or property damage. Coasting in neutral can also cause severe transmission damage.

D (Drive)

When the **D** button is pushed, the highest forward range will appear in the display. The transmission will initially attain first range when drive is selected (except for those units programmed to start in second range). As vehicle speed increases, the transmission will upshift automatically through each range. As the vehicle slows, the transmission will downshift automatically.

5, 4, 3, and 2 (Fifth, Fourth, Third, and Second Ranges)

NOTE: The Allison automatic transmissions can be programmed to include a sixth range.

Occasionally, road conditions, load, or traffic conditions will make it desirable to restrict automatic shifting to a lower range. Lower ranges provide greater braking for

https://truckmanualshub.com/

going down grades. The lower the range, the greater the braking effect.

Push the up or down arrows on the push button shift selector to select individual forward ranges. The digital display will display your choice of range. When a lower range is selected, the transmission may not downshift until the vehicle speed is reduced.

WARNING

When going downhill, use a combination of downshifting, braking, and other retarding devices to control vehicle speed and the engine's rated governed speed. Failure to do so could reduce vehicle braking, possibly causing loss of vehicle control and resulting in personal injury or property damage.

IMPORTANT: When descending a hill, downshift to a lower transmission range to increase engine braking and to help you maintain control. The transmission has a feature to prevent automatic upshifting above the lower range selected. However, during downhill operation, if the engine governed speed is exceeded in the lower range, the transmission may upshift to the next higher range.

1 (First Range)

Use the first range when pulling through mud or deep snow, when maneuvering in tight spaces, or when driving up or down steep grades. First range provides the vehicle with its maximum driving torque and maximum engine braking effect. Push the down arrow until the first range appears on the display.

Up and Down Arrows

When a lower range is desired, after **D** has been pressed, press the down arrow until the desired range is shown on the display. Pressing the down arrow continuously causes the range position to continue to go down until the button is released or the lowest range is attained.

When the transmission is in drive and the down arrow has the transmission in a lower range position, press the up arrow to shift to a higher selector position. Pressing the up arrow continuously causes the range position to continue to rise until the button is released or the highest available position is attained.

Pressing the up or down arrows does not override the transmission automatic shifting operation. If a higher or lower position is selected, the transmission continues shifting through the ranges according to the vehicle operating characteristics until the highest or lowest selected position is reached.

If your transmission is equipped with an oil level sensor, the up and down arrows can be used to access transmission fluid level information. Fluid level information is displayed after the first simultaneous press of the up and down arrows. Press both arrows again to obtain diagnostic data.

To exit the fluid level display mode, press any range button on the push button shift selector.

1. Park the vehicle on a level surface, shift to neutral, and apply the parking brake.
2. Press the up and down arrows at the same time.

NOTE: The fluid level check may be delayed until the following conditions are met:

- The fluid temperature is above 140°F (60°C) and below 220°F (104°C).
- The transmission is in neutral.
- The vehicle has been stationary for about two minutes to allow the fluid to settle.
- The engine is at idle.
- The transmission output shaft is stopped.

The fluid level diagnostic displays occur one character at a time.

- Correct Fluid Level: o,L, which represents fluid (oil) level check mode, is displayed followed by o,K which indicates that the fluid is within the correct fluid level zone. The sensor display and the transmission dipstick may not agree because the oil level sensor compensates for fluid temperature.
- Low Fluid Level: o,L is displayed followed by Lo and the number of quarts the transmission fluid is low.

https://truckmanualshub.com/

- High Fluid Level: o,L is displayed followed by HI and the number of quarts the transmission is overfilled.
- Invalid for Display: o,L is displayed followed by a dash (–) and a numerical display. The numerical display is a fault code and indicates that conditions are not proper to receive the fluid level information, or that there is a system malfunction. See **Table 7.1** for fault codes that may be displayed.

Oil Level Fault Codes	
Fault Code	**Cause of Code**
o,L,–,0,X	Settling time too short
o,L,–,5,0	Engine speed (rpm) too low
o,L,–,5,9	Engine speed (rpm) too high
o,L,–,6,5	Neutral must be selected
o,L,–,7,0	Sump fluid temperature too low
o,L,–,7,9	Sump fluid temperature too high
o,L,–,8,9	Output shaft rotation
o,L,–,9,5	Sensor failure *

* Report sensor failure display to an Allison Transmission distributor or dealer in your area.

Table 7.1, Oil Level Fault Codes

Mode Button

The mode button is programed to start a specialized input or output function. The mode indicator comes on when the MODE button is pressed to obtain a specific function operation. A mode identification label, located above the MODE button, identifies the function associated with a mode change.

Diagnostic Data

Press the up and down arrows on the push button shift selector at the same time and release. Press the up and down arrows simultaneously a second time to obtain diagnostic data. When the CHECK TRANS (check transmission) indicator stays on after vehicle start-up, the ECU indicates a diagnostic code. Poor performance may turn on a diagnostic code without turning on the CHECK TRANS indicator. Up to five diagnostic codes can be recorded.

Diagnostic codes can be read and cleared by using the Pro-Link® 9000 Diagnostic Tool or by using the shift selector. Use of the Pro-Link® 9000 Diagnostic Tool is described in the instruction manual furnished with each tool. Code reading, clearing methods, and complete code descriptions are written in the applicable troubleshooting manual.

Allison 2500, 3000 RDS and 3500 RDS Series Transmissions

Allison 2500 Series Transmissions

Allison 2500 automatic transmissions are electronically controlled and come with a lever-type shift selector. See **Fig. 7.2**. The automatic transmissions provide four forward ranges and one reverse range.

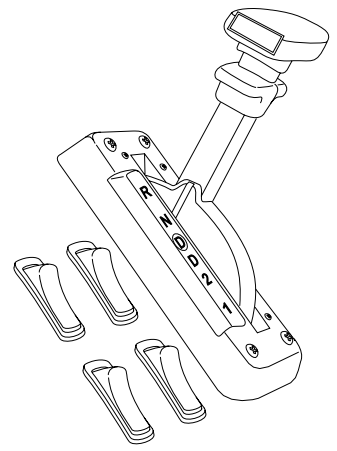

01/23/2008 f100000

Fig. 7.2, Transmission Shift Selector

WARNING

Do not leave the vehicle unattended with the engine running. If you leave the vehicle and the engine is running, the vehicle can move suddenly, which could result in personal injury or property damage.

If you must leave the engine running, do not leave the vehicle until you do the following.

- Put the transmission in neutral.
- Apply the work brake or the parking brake and make sure it is properly engaged.

https://truckmanualshub.com/

- Chock the rear tires and take any other steps necessary to keep the vehicle from moving.

R (Reverse)

Raise the reverse-lockout tabs and move the lever-type transmission selector to the R position to select reverse. Release the lockout tabs and selector will lock in the R position.

CAUTION

Reverse-lockout tabs prevent the transmission selector from accidentially shifted into R (Reverse).

Completely stop the vehicle and let the engine return to idle before shifting from a forward range to reverse, or from reverse to a forward range.

Raise the reverse-lockout tabs and move the lever-type transmission selector out of the R position and select N (Neutral) or one of the forward gears. Release the lockout tabs and selector will lock in the desired gear position.

N (Neutral)

WARNING

Do not let the vehicle coast in neutral. If the vehicle is allowed to coast in neutral, the engine brake will not work and vehicle control can be lost. This can cause an accident possibly resulting in personal injury or property damage. Coasting in neutral can also cause severe transmission damage.

Move the lever-type transmission selector to the **N** position on the selector console:

- Whenever engine turned on or off.
- Check vehicle accessories.
- Anytime engine needs to idle for five-minutes or longer.
- For stationary operation of power take-off (PTO), if vehicle is equipped with a PTO.

D (Drive)

Move the lever-type transmission selector to the D position on the selector console:

WARNING

Drive (D) cannot be obtained due to an active inhibitor.The range selected cannot be obtained, resulting in unexpected vehicle movement. To avoid injury and/or property damage, always apply service brake when selecting D or other forward transmission ranges.

CAUTION

Do not let vehicle idle in D or any forward range for more than five minutes. Extended idling in D can result in transmission overheating and damage.

The transmission will initially attain first range when drive is selected. As vehicle speed increases, the transmission will upshift automatically through each range. As the vehicle slows, the transmission will downshift automatically through each gear range.

1, 2, and (D) (First, Second, and Third Ranges)

Occasionally, road conditions, load, or traffic conditions will make it desirable to restrict automatic shifting to a lower range. Lower ranges provide greater braking for going down grades. The lower the range, the greater the braking effect.

Push the up or down arrows on the push button shift selector to select individual forward ranges. The digital display will display your choice of range. When a lower range is selected, the transmission may not downshift until the vehicle speed is reduced.

WARNING

When going downhill, use a combination of downshifting, braking, and other retarding devices to control vehicle speed and the engine's rated governed speed. Failure to do so could reduce vehicle braking, possibly causing loss of vehicle control and resulting in personal injury and/or property damage.

https://truckmanualshub.com/

IMPORTANT: When descending a hill, downshift to a lower transmission range to increase engine braking and to help you maintain control. The transmission has a feature to prevent automatic upshifting above the lower range selected. However, during downhill operation, if the engine governed speed is exceeded in the lower range, the transmission may upshift to the next higher range.

1 (First Range)

Use the first range for the following:

- When pulling through mud or deep snow.
- When maneuvering in very tight places.
- When driving up or down very steep grades.

First range supplies the vehicle with its maximum driving torque and maximum engine braking effect.

2 (Second Range)

Use the second range for the following:

- For driving in heavy city traffic.
- For braking on steeper downgrades.

Actual ranges are determined by specific programming by vehicle manufacturer.

(D) (Third Range)

Use the third range for the following:

- Driving in city traffic.
- Braking on steep downgrades.

Actual ranges are determined by specific programming by vehicle manufacturer.

Allison 3000 RSD and 3500 RSD Series Transmissions

WARNING

Do not leave the vehicle unattended with engine running. If you leave the vehicle and the engine is running, the vehicle can move suddenly, which could result in personal injury and/or property damage.

If you must leave the engine running, do not leave the vehicle until you do the following.

- Put the transmission in **N** (Neutral).
- Ensure engine is at low idle (500 - 800 rpm).
- Apply parking brake and emergency brake.
- Chock wheels to prevent vehicle movement.

Apply the work brake or the parking brake and make sure it is properly engaged.

The Allison 3000 RSD and 3500 RSD automatic transmissions are electronically controlled and come with either a push button-type shift selector or a lever-type shift selector. See **Fig. 7.3**. The RSD transmissions can be programmed to provide up to six forward ranges and one reverse range.

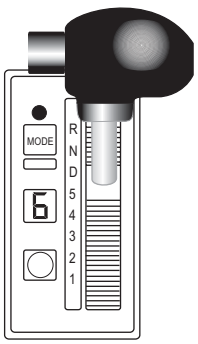

Fig. 7.3, Transmission Shift Selectors

The lever shift selector is an electro-mechanical control. Typical positions are:

- **R** (Reverse)
- **N** (Neutral)
- **D** (Drive)
- **1-6** (selection of forward range positions)

R (Reverse)

Raise the reverse-lockout tabs and move the lever-type transmission selector to the R position to select reverse. Release the lockout tabs and selector will lock in the R position.

https://truckmanualshub.com/

CAUTION

The reverse-lockout tabs prevent the transmission selector from inadvertently being shifted into R (Reverse).

Completely stop the vehicle and let the engine return to idle before shifting from a forward range to reverse, or from reverse to a forward range.

Raise the reverse-lockout tabs and move the lever-type transmission selector out of the R position and select N (Neutral) or one of the forward gears. Release the lock-out tabs and selector will lock in the desired gear position.

N (Neutral)

WARNING

Do not let the vehicle coast in neutral. If the vehicle is allowed to coast in neutral, the engine brake will not work and vehicle control can be lost. This can cause an accident possibly resulting in personal injury or property damage. Coasting in neutral can also cause severe transmission damage.

Move the lever-type transmission selector to the N position on the selector console:

- Transmission must always be in N whenever the engine turned on or off.
- To check vehicle accessories.
- Anytime engine needs to idle for five-minutes or longer.
- For stationary operation of the power take-off (PTO), if vehicle is equipped with a PTO.

D (Drive)

Move the lever-type transmission selector to the D position on the selector console:

WARNING

Drive (D) cannot be obtained due to an active inhibitor.The range selected cannot be obtained, resulting in unexpected vehicle movement. To avoid injury and/or property damage, always apply the service brake when selecting D or other forward transmission ranges.

CAUTION

Do not let vehicle idle in D or any forward range for more than five minutes. Extended idling in D can result in transmission overheating and transmission damage.

The transmission will initially attain first range when drive is selected. As vehicle speed increases, the transmission will upshift automatically through each range. As the vehicle slows, the transmission will downshift automatically through each gear range.

1, 2, and (D) (First, Second, and Third Ranges)

Occasionally, road conditions, load, or traffic conditions will make it desirable to restrict automatic shifting to a lower range. Lower ranges provide greater braking for going down grades. The lower the range, the greater the braking effect.

Push the up or down arrows on the push button shift selector to select individual forward ranges. The digital display will display your choice of range. When a lower range is selected, the transmission may not downshift until the vehicle speed is reduced.

WARNING

When going downhill, use a combination of downshifting, braking, and other retarding devices to control vehicle speed and the engine's rated governed speed. Failure to do so could reduce vehicle braking, possibly causing loss of vehicle control and resulting in personal injury and/or property damage.

IMPORTANT: When descending a hill, downshift to a lower transmission range to increase engine braking and to help you maintain control. The transmission has a feature to prevent automatic upshifting above the lower range selected. However, during downhill operation, if the engine gov-

https://truckmanualshub.com/

erned speed is exceeded in the lower range, the transmission may upshift to the next higher range.

1 (First Range)

Use the first range for the following:

- When pulling through mud or deep snow.
- When maneuvering in very tight places.
- When driving up or down very steep grades.

First range supplies the vehicle with its maximum driving torque and maximum engine braking effect.

2 (Second Range)

Use the second range for the following:

- For driving in heavy city traffic.
- For braking on steeper downgrades.

Actual ranges are determined by specific programming by vehicle manufacturer.

(D) (Third Range)

Use the third range for the following:

- For driving in city traffic.
- For braking on steep downgrades.

Actual ranges are determined by specific programming by vehicle manufacturer.

The lever selector includes the following:

- **Hold Override Button**
- **Mode Button**
- **Digital Display**
- **Display Mode/Diagnostic Button**

Hold Override Button

The lever shift selector has threelocked positions to prevent accidentally selecting **R** (Reverse), **N** (Neutral) or **D** (Drive). To select **R**, **N** or **D**, press the **Hold Override Button** and move the shift selector to the desired selection. Once **D** is selected, the lower forward gears may be selected without depressing the **Hold Override Button**.

Mode Button

The **Mode** button allows the operator to select a secondary shift pattern, PTO enable (if equipped with PTO) or other functions pre-programmed into the TCM/ECU.

When the Diagnostic Display Mode has been entered, the **Mode** button can be used to view and toggle through diagnostic code information. After viewing the first diagnostic code in the digital display, press the **Mode** button to view the 2nd diagnostic code. Repeat this procedure to view the 3rd, 4th and 5th code positions.

NOTE: Visully check the digital display whenever the shift lever is moved. The letter **N** should appear in the digital display whenever **N** (Neutral) button is depressed.

Digital Display

Under normal driving conditions, when **D** (Drive) is selected, the digital display shows the highest forward range available for the shift schedule selected.

There are certain abnormal operations that can be displayed by the digital display. For example, conditions that illuminate the **CHECK TRANS** light disable the shift selector and the digital display shows the range actually attained.

The transmission will not shift into range if a **CHECK TRANS** code is active. When **R** or **D** has been selected and the digital display is flashing, the requested range has not been attained due toan inhibit function.

Check for active codes if no other inhibit function has been located. Once **D** (Drive) is attained, the transmission will shift into the lowest range programmed for the **D** (Drive) position, usually first-position.

Display Mode/Diagnostic Button

The Display Mode/Diagnostic button allows access to fluid level check information and diagnostic code information. Depress the Display Mode/Diagnostic button once to obtain transmission fluid level information and a second time to obtain diagnostic code information.

The fluid level diagnostic displays occur one character at a time.

- Correct Fluid Level: o,L, which represents fluid (oil) level check mode, is displayed followed by o,K which indicates that the fluid is within the cor-

https://truckmanualshub.com/

rect fluid level zone. The sensor display and the transmission dipstick may not agree because the oil level sensor compensates for fluid temperature.

- Low Fluid Level: o,L is displayed followed by Lo and the number of quarts the transmission fluid is low.
- High Fluid Level: o,L is displayed followed by HI and the number of quarts the transmission is overfilled.
- Invalid for Display: o,L is displayed followed by a dash (–) and a numerical display. The numerical display is a fault code and indicates that conditions are not proper to receive the fluid level information, or that there is a system malfunction. See **Table 7.1** for fault codes that may be displayed.

Oil Level Fault Codes	
Fault Code	**Cause of Code**
o,L,–,0,X	Settling time too short
o,L,–,5,0	Engine speed (rpm) too low
o,L,–,5,9	Engine speed (rpm) too high
o,L,–,6,5	Neutral must be selected
o,L,–,7,0	Sump fluid temperature too low
o,L,–,7,9	Sump fluid temperature too high
o,L,–,8,9	Output shaft rotation
o,L,–,9,5	Sensor failure *

* Report sensor failure display to an Allison Transmission distributor or dealer in your area.

Table 7.2, Oil Level Fault Codes

Caterpillar CX-31 Transmissions

TBD

Rear Axles

Meritor™ Traction Control Differential Lock, Optional

The Meritor™ traction control differential lock provides maximum traction in unfavorable driving conditions such as mud or ice. When the traction control differential switch (**Fig. 7.4**) is in the LOCK position, a clutch collar completely locks the differential case, gearing, and axle shafts together. This maximizes traction to both wheels. The lock position will also protect against spinout damage to the differential. The traction control differential lock should not be used when favorable road conditions exist.

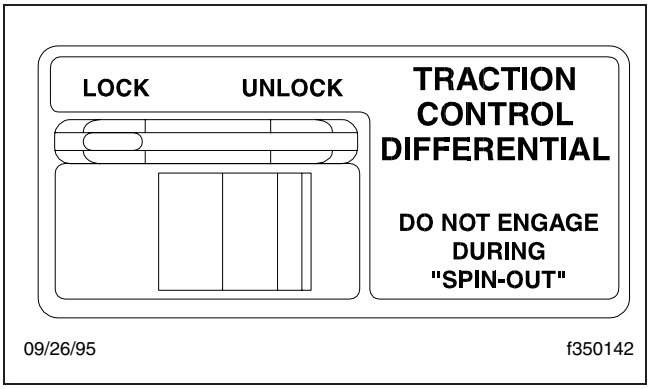

Fig. 7.4, Traction Control Differential Switch

When the traction control differential switch is in the LOCK position, the indicator on the traction control differential switch will come on.

⚠ WARNING

Be especially careful when driving under slippery conditions with the differential locked. Though forward traction is improved, the vehicle can still slip sideways, causing possible loss of vehicle control, personal injury, and property damage.

Operation of Traction Control Differential Lock

1. When maximum traction is needed, and while the wheels are not spinning, slipping, or losing traction, move the traction control differential switch to the LOCK position while maintaining a constant vehicle speed under 25 mph (40 km/h).

⚠ WARNING

Lock the main differential only when the vehicle is standing still or moving less than 25 mph (40 km/h). Never lock the main differential when the vehi-

https://truckmanualshub.com/

cle is traveling down steep grades or when the wheels are slipping. This could damage the differential or lead to loss of vehicle control, causing personal injury and property damage.

NOTE: The traction control differential lock system on some vehicles is connected through the low speed range of the transmission. If this type of differential lock system is used, the transmission must be operating in the low speed range to allow the differential to lock.

2. Let up momentarily on the accelerator to relieve torque on the gearing, allowing the traction control differential lock to lock.
3. Proceed cautiously and never exceed 25 mph (40 km/h). When the traction control differential lock is fully locked, the vehicle will have an understeer condition when making turns. See **Fig. 7.5**.
4. When driving conditions have improved and the vehicle can operate safely at speeds above 25 mph (40 km/h), move the traction control differential switch to the UNLOCK position when the vehicle is stopped or traveling under 25 mph (40 km/h) and while the wheels are not spinning, slipping, or losing traction.
5. Let up momentarily on the accelerator to relieve torque on the gearing, allowing the traction control differential lock to unlock. It may take up to one-half mile (0.8 km) of driving before the differential unlocks.

NOTE: If the traction control differential lock system is connected through the low range speed of the transmission, shifting out of low speed range will also unlock the differential.

6. When the traction control differential switch is in the UNLOCK position, the indicator on the traction control differential switch will go off.
7. Resume driving at normal speed.

Meritor™ Tandem Drive Axles With Interaxle Differential Lock

Meritor tandem drive axles have an interaxle differential lock feature. The interaxle differential lock is controlled by the interaxle differential switch (**Fig. 7.6**)on the control panel.

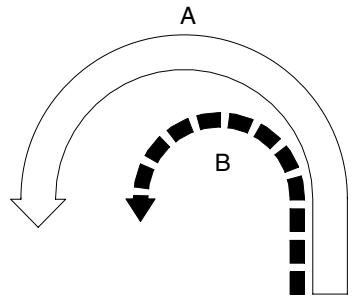

02/09/96 f350079a

A. Turning radius when differential is locked/understeer condition.
B. Turning radius when differential is unlocked.

Fig. 7.5, Turning Radii

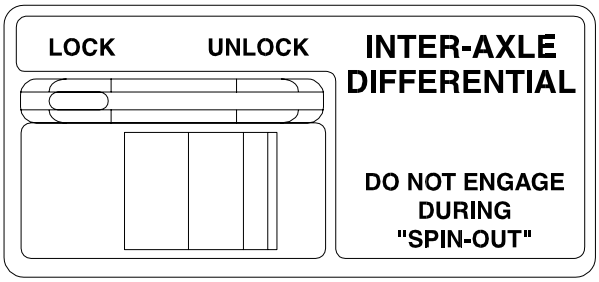

09/26/95 f350141

Fig. 7.6, Interaxle Differential Switch

When the interaxle differential switch is in the UNLOCK position, there is differential action between the two axles. The differential compensates for different wheel speeds and variations in tire size. Keep the interaxle differential switch in the UNLOCK position when driving on roads where traction is good.

When the interaxle differential switch is in the LOCK position, the axles are locked together and the driveshaft becomes a solid connection between the two axles. Power entering the forward axle is transmitted straight through to the rear axle so that both axles turn together at the same speed. The interaxle differential lock should be used when the vehicle encounters poor

https://truckmanualshub.com/

traction conditions; however, it also increases drivetrain and tire wear and should be used only when improved traction is required.

When the interaxle differential switch is in the LOCK position, the indicator on the interaxle differential switch comes on. The indicator will go off when the switch is moved to the UNLOCK position.

https://truckmanualshub.com/

8

Fifth Wheels

Fontaine® Fifth Wheels **8.1**

https://truckmanualshub.com/

This page intentionally left blank.

https://truckmanualshub.com/

WARNING

Do not use trailer service brakes for parking; they are not designed for this purpose. If air bleeds out of trailer air tank during parking, vehicle could roll causing serious personal injury or property damage.

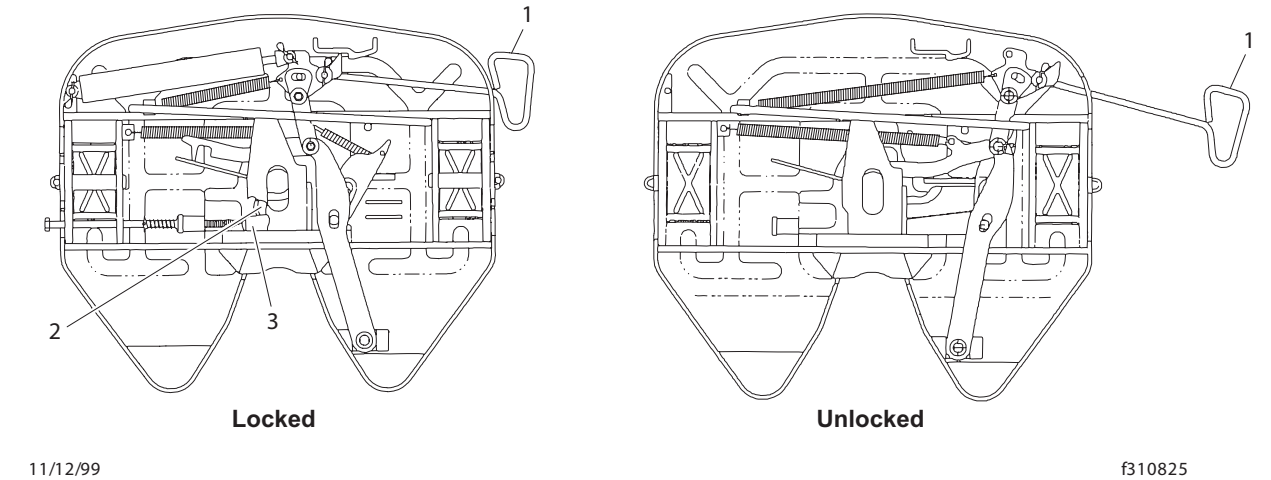

NOTE: Ensure safety latch is down when control handle is locked.

1. Release Handle 2. Jaw 3. Wedge

Fig. 8.3, Fontaine 6000 Series fifth Wheel, Locked and Unlocked (bottom view)

4. Lower trailer landing gear until the weight is removed from the fifth wheel.
5. Disconnect tractor-to-trailer air system lines and electrical cable. Plug the air lines to prevent dirt or foreign material from entering lines.

CAUTION

Before attempting to lock or unlock the fifth wheel lock mechanism of a sliding type fifth wheel, the slide release plungers must be in the locked position. This prevents the sliding member from moving rapidly to the far forward or rearward position, which could damage the fifth wheel or kingpin.

6. Release kingpin locking mechanism by pulling release handle to unlocked position. See **Fig. 8.3**.
7. Slowly drive tractor away from trailer.

Fifth Wheel Slide Operation for Fontaine Fifth Wheels

1. Connect trailer kingpin to tractor fifth wheel. For instructions, refer to Fontaine "Fifth Wheel Locking Operation" in this chapter.
2. After positive lockup of the fifth wheel lock mechanism has been accomplished, release slide assembly by moving the fifth wheel slide switch in the cab to the UNLOCK position.
3. Lower trailer landing gear just enough to remove weight from tractor.
4. Pull trailer air supply valve to cut off air supply to trailer.
5. Chock front and rear trailer tires to prevent trailer from moving.

https://truckmanualshub.com/

9

Daily or Weekly Inspection and Maintenance

Daily or Weekly Inspection and Maintenance Checklist **9.1**
Daily or Weekly Inspection and Maintenance Procedures **9.2**

https://truckmanualshub.com/

This page intentionally left blank

https://truckmanualshub.com/

Daily or Weekly Inspection and Maintenance Checklist

Use the following inspection checklist to help ensure that the vehicle components are in good working condition. See **Table 9.1**.

Inspections cannot be done quickly. The following inspections may seem to be overly time-consuming, however, careful inspections save time by eliminating stops later to adjust items overlooked or forgotten.

Each numbered item in the table below corresponds to numbered instructions found under "Daily or Weekly Inspection and Maintenance Procedures."

If any system or component does not pass this inspection, corrections must be made before operating the vehicle. Refer to the Condor® Workshop Manual for repair procedures, and the Condor® Maintenance Manual for lubricant recommendations, specifications, and maintenance intervals.

NOTE: Apply the parking brakes and chock the tires.

No.	Interval	Maintenance
1	After Trip	Drain air brake system air reservoirs.
2	Before Trip	Check fluid level in windshield washer reservoir.
3	Before Trip	Check coolant level in surge tank.
4	Before Trip	Check engine oil level.
5	Weekly	Inspect batteries and battery cables.
6	Weekly	If equipped with oil-lubricated wheel bearings, check front hub lubricant level.
7	Weekly	Raise cab and examine steering gear components.
8	Weekly	Check the radiator and charge air cooler cooling fins for accumulated debris that may clog the fins.
9	Weekly	Check condition of coolant hoses and heater hoses.
10	Weekly	Check condition of drive belts.
11	Weekly	Inspect engine for fuel, oil and coolant leaks.
12	Weekly	Inspect engine and chassis wiring harnesses.
13	Before Trip	Check intake-air restriction indicator mounted on air cleaner outlet.
14	Before Trip	Inspect the fuel tank(s), fuel lines, and connections for leaks
15	Before Trip	Check the fuel level in the fuel tank(s) and ensure the fuel cap vent area is clean.
16	Before Trip	If equipped, with a fuel/water seperator, check the sight bowl.
17	Weekly	Check transmission oil cooler for debris and leaks
18	Weekly	Inspect front and rear suspension components, including the springs, spring hangers, equalizers, shocks and all fasteners.
19	Before Trip	Be sure the windshield wiper blades are tensioned against the windshield.
20	Before Trip	Clean the head lamps, rearview and down-view mirrors, and the outside of thewindshieldandallwindowglass.
21	Before Trip	Check for excessive play at the steering wheel(s)
22	Before Trip	Adjust driver's seat, then align the rear- view and down-view mirrors.
23	Before Trip	Check seat belts for secure mounting and damage.
24	Before Trip	Check cab interior for loose items, and secure or remove them.
25	Before Trip	Check power steering fluid level.
26	Before Trip	IIf equipped with an intake-air restriction gauge on the instrument and control panel, check the LED on the gauge
27	After Trip	Check automatic transmission fluid level by using the push button shift selector or by using the dipstick.
28	Before Trip	Make sure the electric horn, air horn, windshield wipers and washer, heater, defroster, and mirror heat are operating properly.
29	Before Trip	If equipped with a backup alarm, check the operation of the backup alarm.
30	Before Trip	Check all interior and exterior lights.
31	Before Trip	Check the outer surfaces of cab and body for visible surface breaks and damage. Make sure cab doors are secure.
32	Weekly	Inspect all air brake components.
33	Weekly	Check for brake lining wear on all wheels.
34	Weekly	Ensure brakes are adjusted on all axles.
35	Before Trip	Check tire inflation pressures.
36	Before Trip	Inspect each tire for tread separations, cracks, cuts, and penetrations.
37	Weekly	Ensure all lug nuts and rim nuts are properly tightened.

https://truckmanualshub.com/

No.	Interval	Maintenance
38	Before Trip	Ensure air brakes, service brakes and emergency brakes function properly.
39	Weekly	Test parking brakes on an inclined surface.
40	Weekly	Check all accessory air system components for leaks.
41	Before Trip	If equipped with a fifth wheel, inspect and ensure components have adequate lubrication.
42	Before Trip	If equipped with a fifth wheel, inspect the 7-way trailer cable receptacle(s) for good connections.
43	Before Trip	If equipped with a fifth wheel, connect a trailer to the tractor and inspect the trailer systems for leaks.
44	Weekly	If equipped with a Vogel chassis lubrication system, verify lubrication system is functioning correctly and has no leaks.

Table 9.1. Inspection Intervals

Daily or Weekly Inspection and Maintenance Procedures

Whenever equipment requires adjustment, replacement, repair, addition of lubricants, or a change of lubricants, refer to the Condor® Workshop Manual for repair procedures, and to the Condor® Maintenance Manual for lubricant recommendations, specifications, and maintenance intervals.

1. Air reservoirs serve as storage tanks for compressed air. They collect water condensed from the air and small amounts of oil from the air compressor. Water and oil normally enter the reservoir in the form of vapor because of the heat generated during compression. After the water and oil condense, drain the resulting emulsion as follows.

WARNING

Failure to drain the air reservoirs as instructed could cause sludge formation in the air brake system. Sludge could adversely affect braking, causing loss of control, which could cause death, personal injury, or property damage.

NOTE: If the air reservoirs are not equipped with manual drain valves, they must be drained daily. If they are equipped with automatic drain valves, they must be drained in this same manner at least once a week.

1.1. Open the air reservoir drain valve or pull the drain cable located on the forward end of the air reservoir. Block the valve open.

WARNING

When draining the air reservoir, do not look into the air jets or direct them toward anyone. Dirt or sludge particles may be in the airstream and could cause injury.

1.2. Exhaust the remaining air and moisture from the system by opening the drain cocks on the bottoms of the remaining air reservoirs. Block the valves open.

1.3. Water and oil emulsion often form pockets which will not drain while compressed air is in the reservoirs. Because of these pockets, leave the valves blocked open during the first part of the post-trip inspection.

1.4. If the drained water is cloudy or oily, it may indicate a problem with the compressor. If oil is allowed to contaminate the air dryer, it will not remove the water from the air brake system which could adversely affect braking.

https://truckmanualshub.com/

2. Check that the windshield washer reservoir (**Fig. 9.1**) is filled. Add washer fluid as needed.

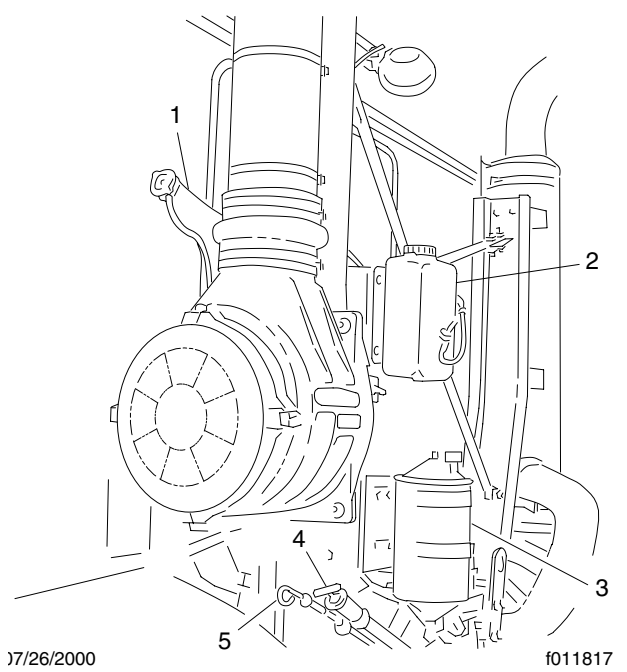

1. Coolant Surge Tank
2. Windshield Washer Fluid Reservoir
3. Power Steering Fluid Reservoir
4. Transmission Dipstick
5. Engine Dipstick

Fig. 9.1. Reservoir and Dipstick Locations

WARNING

Washer fluids may be flammable and poisonous. Do not expose washer fluid to an open flame or any burning material, such as a cigarette. Always comply with the washer fluid manufacturer's recommended safety precautions.

3. Check the coolant level in the surge tank (**Fig. 9.1**). If the coolant is low, check the amount of antifreeze protection. If the protection is adequate, add a 50/50 mixture of water and antifreeze. If additional protection is needed, add antifreeze only. Fill the surge tank with coolant to the MAX line.

CAUTION

Failure to repair the engine shutdown/warning system could result in a sudden engine shutdown, without warning, during vehicle operation.

4. Check the engine oil level. See **Fig. 9.1**. If the oil is low, add enough oil to bring the level up to the **H** (high) mark or FULL mark on the dipstick. Refer to the engine manufacturer's operation and maintenance manual for recommended lubricants.

CAUTION

Operating the engine with the oil level below the L (low) or ADD mark, or above the H (high) or FULL mark, could result in engine damage.

5. Inspect the batteries and battery cables as follows.
   5.1. Check for loose connections.

WARNING

Battery posts, terminals, and related accessories contain lead and lead compounds, chemicals known to the State of California to cause cancer and reproductive harm. To prevent possible personal injury, always wash your hands after handling battery parts and related accessories.

   5.2. Be sure the battery hold-down is secure. If it is loose, tighten the hold-down bolts; if it is broken, replace it.
   5.3. Remove any corrosion from the hold-down and the top of the battery.

CAUTION

Take care to keep the vent plugs tight so that the neutralizing solution does not enter any of the battery cells and damage the battery.

   5.4. Use a baking soda and water solution to neutralize the acid present, then rinse off the soda solution with clean water.

https://truckmanualshub.com/

5.5. If the battery posts or cable terminals are corroded, disconnect the terminals from the posts. Clean them with a soda solution and a wire or nylon brush. After cleaning, connect the terminals to the battery posts, then apply a thin coat of nonconductive grease or petroleum jelly to the posts and terminals to help retard corrosion.

WARNING

Do not short the battery posts or cable terminals to the battery hold-down. Doing so could cause damage to the vehicle electrical components, which could result in personal injury or property damage.

6. Check the level of the wheel bearing lubricant in the hub cap at each end of the front axle. See **Fig. 9.2**. If needed, fill the hubs to the level indicated on the hub cap. Use the lubricant recommended for the drive axle. See **Group 35** of the Condor® Maintenance Manual for recommended lubricants.

IMPORTANT: Before removing the fill plug on the hub cap, always clean the hub cap and the plug.

7. Examine the steering gear mounting bolts, pitman arm nut(s), and the drag link nuts for tightness. Inspect the steering drive shaft(s) and steering linkage(s) for excessive looseness or other damage. Check the power cylinder mount bolts and ball-joint nuts for tightness. Tighten loose nuts, and replace damaged parts as needed.
8. Good airflow through the radiator core and charge air cooler is essential for proper engine cooling. The cores allow air passage, but form a particle barrier which tends to collect insects and airborne debris.

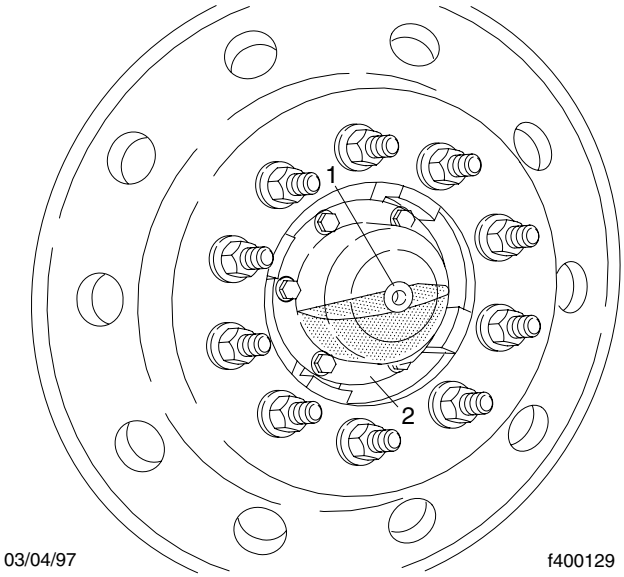

1. Fill Plug
2. Hub Cap

Fig. 9.2. Wheel Bearing Lubricant Checking

Inspect the radiator and charge air cooler for clogged fins. Use compressed air or water directed from the fan side of the core to backflush any material restricting airflow.

On vehicles equipped with air conditioning, also inspect and clean the condenser. If clogged, the condenser can restrict airflow through the radiator.

On vehicles equipped with an air/oil power steering cooler, inspect the fins of the heat exchanger for damage or clogging. Use compressed air or water to backflush any material restricting airflow.

Bent or damaged fins should also be straightened to permit airflow across all areas of the cores.

Repair or replace the radiator if it is leaking.

NOTE: When traveling through areas of high insect concentrations, it may be necessary to clean the exterior of the radiator or charge air cooler core as often as every 200 miles (320 km).

https://truckmanualshub.com/

9. Make sure the radiator inlet and outlet coolant hoses and heater hoses are pliable and are not cracking or ballooning. Replace hoses that show signs of cracking, weakening, or ballooning. Replace all hoses, including heater hoses, at the same time. Service-type knitted or braided yarn-reinforced neoprene hose is acceptable. Silicone hoses, having an extended service life, can be substituted for the reinforced neoprene type.

   Tighten hose clamps as necessary, but do not overtighten as hose life can be adversely affected.

   Be sure the hose support brackets are securely fastened. Make sure the hoses are not located near sources of wear, abrasion, or high heat.

10. Check the fan belt(s), alternator belt, and refrigerant compressor belt for signs of glazing, frayed edges, breaks, cracks, or oil contamination. If a belt is glazed, worn, damaged, or oil soaked, replace the belt.

    Check all of the V-belts for proper tension. Use your index finger to apply about 25 lb (11 kg) force at the center of the belt free-span. See **Fig. 9.3**. When belt deflection is about 1/2 to 3/4 inch (13 to 19 mm), stop and adjust the belt tension.

    If the accessory drive has a poly-vee V-belt and spring loaded self tensioning-idler, there is no adjustment for belt tension.

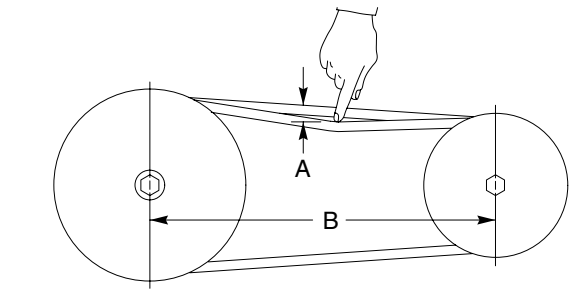

1. Deflection
2. Belt Free-Span

Fig. 9.3. Checking Belt Tension

11. Check the engine for fuel, oil, or coolant leaks and correct any leaks found.

12. Inspect the engine and chassis for loose wiring, chafed insulation, and damaged or loose hold-down clamps. Tighten loose wires or hold-down clamps and replace damaged wiring or clamps.

13. Check the intake-air restriction indicator (**Fig. 9.4**) mounted on the air cleaner outlet to determine if the air cleaner filter needs to be changed. Replace the filter if the indicator stays locked at 25 inH_2O. After replacing the filter, reset the restriction indicator by pressing the reset button. See **Group 09** of the *Condor® Workshop Manual* for filter replacement instructions.

    Check the engine intake-air piping from the air cleaner to the engine intake. Inspect the piping for loose connections, cracks, torn or collapsed hoses, punctures, and other damage. Tighten loose connections and replace damaged components. Make sure the piping system is airtight so that all of the intake air passes through the air cleaner.

CAUTION

Failure to maintain a sealed air intake system could allow the entry of dirt and contaminants into the engine. This could adversely affect engine performance and result in engine damage.

https://truckmanualshub.com/

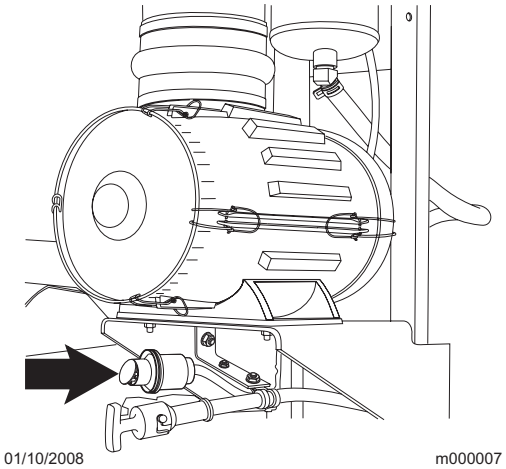

Fig. 9.4. Intake-Air Restriction Indicator

14. Inspect the fuel tank(s), fuel lines, and connections for leaks. Replace a leaking fuel tank. Repair or replace any leaking lines or connections.

WARNING

Never fill fuel tanks to more than 95 percent of their liquid capacity. This could make them more likely to rupture from impact, possibly causing fire and resulting in serious personal injury or death by burning.

Do not mix gasoline or alcohol with diesel fuel. This mixture could cause an explosion, possibly resulting in serious personal injury or death. Do not fill the fuel tanks in the presence or sparks, open flames, or intense heat. These could ignite the fuel, possibly causing severe burns.

IMPORTANT: Use only ultra low-sulfur diesel fuels. Ultra low-sulfur diesel fuels have a maximum 0.05 percent sulfur content, compared to a 0.26 to 0.30 percent sulfur content. Failure to use ultra low-sulfur diesel fuels may void the warranty on emission components.

15. Check the fuel level in the tank. To keep condensation to a minimum, the fuel tank should be filled at the end of each day, but not to more than 95 percent of liquid capacity. Federal regulations prohibit filling a fuel tank to more than 95 percent of its liquid capacity. Select the proper grade of fuel, as specified by the engine manufacturer.

    Fuel should always be strained or filtered before being put into the tanks. This will lengthen the life of the engine fuel filter and reduce the chances of dirt getting into the engine.

    Before installing the fuel cap, clean the area with a rag, or if necessary, clean the cap with solvent.

    Prime the fuel system if needed.

    15.1. Remove the fuel tank cap.

    15.2. Loosen the fuel supply line at the fuel transfer pump.

    15.3. Partially cover the fuel tank opening with your hand. Using an air hose, apply no more than 5 psi (35 kPa) air pressure to the fuel tank and look for a constant fuel flow at the loosened fuel supply line.

    15.4. Remove the air hose and tighten the fuel supply line.

CAUTION

Don’t crank the engine for more than 30 seconds at a time during any of the following procedures. Wait two minutes after each try to allow the starter to cool. Failure to do so could cause starter damage.

    15.5. Start the engine. Once the engine has started, it may run rough. If this occurs, run the engine at low idle until it runs smoothly.

    IMPORTANT: To prevent fuel loss or entry of air into a fuel line, make sure that all fuel line connections are tight.

16. If equipped with a fuel/water separator, drain the water from the fuel/water separator as follows.

    IMPORTANT: When draining fluid from a fuel/water separator, drain the fluid into an appropriate container and dispose of it properly. Many states now issue fines for draining fuel/water separators onto the ground. Stop draining the fluid when you see uncontaminated fuel come out of the separator drain valve.

https://truckmanualshub.com/

16.1. Check the water level in the sight bowl. To drain the water, loosen the valve at the bottom of the bowl two full turns and allow the water to run out.

16.2. Close and tighten the valve finger tight.

16.3. Check the filter element and replace it if it is clogged.

16.4. Rust streaks may indicate loose fittings and components.

17. Remove any debris found on the transmission oil cooler. Check the transmission oil cooler for leaks.

18. Inspect the front and rear suspension components, including the springs, shocks, and suspension brackets.

    Check for broken spring leaves, loose U-bolts, cracks in the suspension brackets, and loose fasteners in the spring hangers and shackles. Inspect the shock absorbers for loose fasteners and leaks.

    Tighten all loose fasteners and replace any component that is worn, cracked, or otherwise damaged.

WARNING

Do not replace individual leaves of a damaged front or rear suspension leaf spring assembly; replace the complete spring assembly. Visible damage, such as cracks or breaks, to one leaf causes hidden damage to other leaves. Replacement of only the visibly damaged part(s) is no assurance that the spring is safe. If cracks or breaks exist on front spring assemblies in either of the two top leaves, a loss of vehicle control could occur. Failure to replace a damaged spring assembly could cause an accident resulting in serious personal injury or property damage.

19. Be sure the windshield wiper blades are tensioned against the windshield. Inspect the wiper blades for damage and deteriorated rubber. Replace the wiper arms if the wiper blades are not tensioned against the windshield. Replace damaged or deteriorated wiper blades.

WARNING

Replace wiper arms and blades when necessary to maintain good visibility. Poor visibility could interfere with the driver's ability to control the vehicle, possibly resulting in serious personal injury or death.

20. Clean the inside of the windshield, the gauges on the instrument and control panel, and all window glass.

21. Check the steering wheel(s) for excessive play. With the front tires straight ahead, turn the steering wheel until motion is observed at the front wheels. Align a reference mark on a ruler, then slowly turn the steering wheel in the opposite direction until motion is again detected at the wheels. Measure the lash (free play) at the rim of the steering wheel. See **Fig. 9.5**.

    Excessive lash exists if steering wheel movement exceeds 2-1/2 inches (64 mm). If there is excessive lash, check the steering system for wear or incorrect adjustment of the linkage and steering gear before operating the vehicle.

22. Adjust the driver's seat, then align the rearview and down-view mirrors.

23. Inspect the seat belts. If equipped with a stand-up drive, check the restraint.

WARNING

Inspect and maintain seat belts as instructed below. Worn or damaged seat belts could fail during a sudden stop or crash, possibly resulting in serious injury or death.

IMPORTANT: Seat belts have a finite life which may be much shorter than the life of the vehicle. Regular inspections and replacement as needed are the only assurance of adequate seat belt security over the life of the vehicle.

NOTE: When any part of a seat belt system needs replacement, the entire seat belt must be replaced, both retractor and buckle side.

https://truckmanualshub.com/

23.1. Check the web for fraying, cuts, or extreme wear, especially near the buckle latch plate and in the D-loop guide area.

23.2. Check the web for extreme dirt or dust, and for severe fading from exposure to sunlight.

23.3. Check the buckle and latch for operation and for wear or damage.

23.4. Check the Komfort Latch for function and cracks or other damage.

23.5. Check the web retractor for function and damage.

23.6. Check the mounting bolts for tightness, and tighten any that are loose.

24. Check the cab interior for loose items, and secure or remove them. If provided, ensure the following emergency equipment is in place and in good working condition.
    - a fully charged fire exchanger.
    - triangular reflectors
    - flares
    - tire chains (in cold weather)

25. With the engine cool, use a shop towel or a clean rag to clean the area around the power steering reservoir fill cap. See **Fig. 9.1**. Remove the cap and dipstick assembly. Check the cold power steering fluid level. The level should be at FULL COLD with the engine off.

    Start the engine and run it at idle until it reaches operating temperature. Remove the dipstick, and check that power steering fluid reaches the FULL HOT line. If the fluid level is low, add enough fluid to bring the level up to the FULL HOT mark on the dipstick. See **Table 9.1** for recommended power steering fluids.

    Install the dipstick and remove the chocks from the tires.

    Do not start the engine until the static transmission fluid level has been checked. It should be near the HOT FULL mark. Failure to do so can result in transmission damage.

    After starting the engine, make sure the oil-and air-pressure warning systems are working. When the engine is started, oil-and air-pressure warnings will come on until the oil pressure rises above a preset minimum and the air pressure in both the primary and secondary air reservoir systems goes above 64 to 76 psi (441 to 524 kPa). If the air pressure in both systems is above 64 to 76 psi when the engine is started, test the low pressure warning system by lowering the pressure to below this range or until the warning system comes on. If the warning systems do not come on when the ignition is turned on, repair the systems.

Recommended Power Steering Fluids		
Fluid Type	**Approved Fluid**	
Automatic Transmission	Dexron®II Type "E" Type "F" Mobil 210	
Heavy-Duty Engine Oil	Shell Rotella T	30W
	Shell Rotella T	SAE 30
	Chevron Chevron Custom Mobil Super Texaco Union	10W-40
	Union Unocal Guardol	15W-40
Hydraulic Fluid	Chevron	Torque 5
	Exxon Nuto	H32
Power Steering Fluid	Fleetrite	PSF
	Texaco	TL-1833

Table 9.1, Recommended Power Steering Fluids

CAUTION

Failure to repair the engine shutdown/warning system could result in a sudden engine shutdown, without warning, during vehicle operation.

26. Check the intake-air restriction gauge on the instrument and control panel to determine if the air cleaner filter needs to be changed. If the LED on the intake-air restriction gauge is lit, replace the filter. After replacing the filter, reset the intake-air restriction indicator mounted on the air cleaner out-

https://truckmanualshub.com/

let by pressing the reset button. See **Group 09** of the *Condor® Workshop Manual* for filter replacement instructions.

27. To check the automatic transmission fluid level using the push button shift selector, see **Chapter 7**.

    To check the automatic transmission fluid level using the dipstick, use the following instructions.

CAUTION

Do not allow foreigNmatter to enter the transmission. Dirt or foreign matter in the hydraulic system may cause undue wear of transmission parts, make valves stick, and clog passages.

27.1. Clean all dirt away from around the end of the fluid fill tube before removing the dipstick.

IMPORTANT: It is important to check the fluid level cold to determine if the transmission has a sufficient amount of fluid to be safely operated until a hot check can be performed.

27.2. Run the engine for at least one minute. If the transmission fluid is at the normal operating temperature of 160° to 200°F (71° to 93°C), skip to substep 11. If the transmission is not at normal operating temperature begin with the cold check by performing the following substeps.

WARNING

Set the parking brake while checking the transmission fluid level. Failure to do so could result in the vehicle moving unexpectedly, which could cause personal injury or property damage.

27.3. Shift from drive to neutral, and then shift to reverse to fill the hydraulic system.

27.4. Shift to neutral and allow the engine to idle at 500 to 800 rpm.

27.5. With the engine running at idle, remove the dipstick from the tube and wipe it clean.

27.6. Insert the dipstick into the tube, then remove it.

27.7. Check the fluid level reading and repeat the check procedure to verify the reading.

27.8. If the fluid level is within the COLD RUN band, the transmission may be operated until the fluid is hot enough to perform a hot run check.

WARNING

Do not fill above the COLD RUN band if the transmission fluid is below the normal operating temperature. As the fluid temperature increases, so does the fluid level. Filling above the COLD RUN band when the transmission is below normal operating temperature may result in an overfilled transmission, which causes fluid foaming and aeration. Fluid foaming and aeration cause transmission overheating and erratic shifting.

27.9. If the fluid level is not within the COLD RUN band, add or drain fluid as needed to adjust the fluid level to the middle of the COLD RUN band. See **Table 9.2** for transmission fluid grade and temperature information.

Allison Transmission Fluid Grades and Temperatures	
Viscosity Grade	**Ambient Temperature Below Which Preheat is Required: °F (°C)**
SAE 0W-20	–22 (–30)
TransSynd™	–22 (–30)
Dexron® III	–17 (–27)
SAE 10W	–4 (–20)
SAE 10W-30	–4 (–20)
SAE 15W-40	5 (–15)
SAE 30	32 (0)
SAE 40	50 (10)

Table 9.2, Allison Transmission Fluid Grades and Temperatures

NOTE: Perform a hot run check by completing the following substeps at the first opportunity after the transmission reaches the normal operating temperature of 160° to 200°F (71° to 93°C).

27.10. Shift the transmission to neutral.

https://truckmanualshub.com/

27.11. Operate the engine at idle (500 to 800 rpm) until normal operating temperature is reached. Check that the transmission sump oil temperature is 160°F (71°C).

27.12. With the engine idling, remove the dipstick from the tube and wipe it clean.

27.13. Insert the dipstick into the tube and remove it.

27.14. Check the fluid level reading and repeat the check procedure to verify the reading. Safe operating level is within the HOT RUN band on the dipstick. The HOT RUN band is between the HOT FULL and HOT ADD marks.

27.15. If the fluid level is not within the HOT RUN band, add or drain fluid as needed to bring the fluid level within the HOT RUN band. See **Table 9.2** for transmission fluid grade and temperature information.

28. Make sure that both the electric horn and the air horn work. Then check the windshield wiper and washer controls. These devices must be in good working order for safe vehicle operation. If they are not working, repair them before trip departure.

29. If equipped with a backup alarm, check the operation of the backup alarm.

30. Turn on the head lamps and hazard warning lights. Check the operation of the interior lights. If any of the control panel lights or interior lights are not working, replace them.

    Be sure the brake lights, taillights, marker lights, head lamps, clearance lights, identification lights, and turn-signal lights are working and are clean. See **Fig. 9.5**. Test the high-and low-beam headlights. Replace lights that are not working.

    Be sure all reflectors and lenses on the vehicle are in good condition and are clean. Replace any broken reflectors or lenses.

31. Check the outer surfaces of the cab and body for visible surface breaks and damage. Make sure the cab doors are secure.

⚠ DANGER

Do not loosen or remove the parking brake clamp ring (Fig. 9.6) for any purpose. The parking/ emergency brake section of the brake chamber is not intended to be serviced. Serious injury or death may result from sudden release of the power spring.

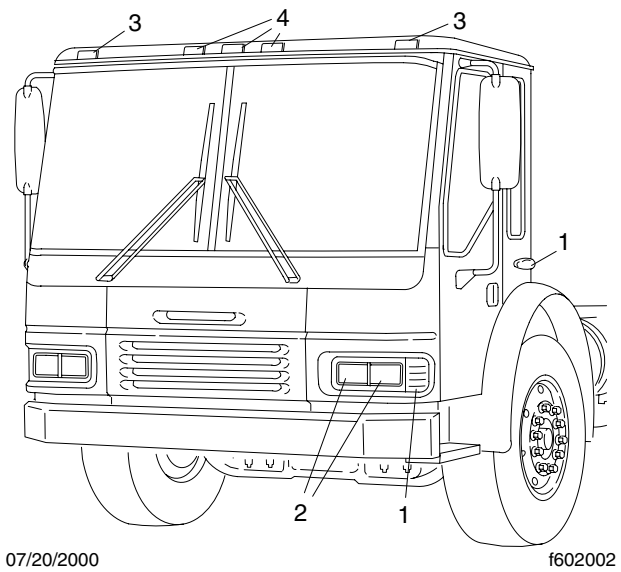

1. Turn Signal Light/Marker Light
2. Head Lamp
3. Clearance Light
4. Identification Light

Fig. 9.5. Exterior Lights

Before doing any repairs or adjustments on a service/parking brake chamber, read the applicable warnings and instructions available from the equipment manufacturer.

https://truckmanualshub.com/

WARNING

Do not operate the vehicle with the front brakes backed off or disconnected. Backing off or disconnecting the front brakes will not improve vehicle handling and may lead to loss of vehicle control resulting in property damage or personal injury.

CAUTION

If the external breather tube or breather cap is missing or incorrectly installed, road dirt and debris can adversely affect the operation of the brake chamber. Once inside of the chamber, dirt and debris can cause the internal parts of the chamber to deteriorate faster.

NOTE: Vehicles operating under severe or adverse conditions should be checked more frequently.

32. Look for worn clevis pins on brake chamber pushrods, and missing or damaged cotter pins on the brake chamber pushrod clevis pins. Replace worn clevis pins and install new cotter pins if necessary.

    Visually inspect the piston rod engagement with the clevis. At least seven threads of engagement are required. There should be 1-inch (25-mm) clearance from the centerline of the clevis pin hole to the end of the piston rod. See **Fig. 9.7**.

    See if the chamber piston rod is in line with the slack adjuster. Misalignment can cause the piston rod to rub on the service chamber and cause a dragging brake.

    Visually inspect the exterior surfaces of the chamber for damage. Make sure that breather holes in the service section(s) are open and free of debris. Refer to instructions available from the equipment manufacturer to replace any damaged parts.

    On all parking brake installations, check for presence of an end cover cap or dust plug and make sure the cap or plug is securely snapped into place. On most MGM parking brake chambers equipped with an integral release bolt, an end cover cap is installed over the release bolt. Be sure the end cover cap is snapped tightly in place.

    Check for rusted connections, missing snap rings, and damaged camshaft grease seals. Repair or replace damaged or missing parts.

    Check the air reservoir band fasteners. Tighten loose nuts 20 lbf·ft (27 Nm). Make sure the outside surfaces of the reservoirs are painted to prevent corrosion damage. Inspect the reservoir surfaces for damage, such as cracks and dents. Replace corroded or damaged reservoirs with new ones. Do not repair damaged reservoirs. Old or used reservoirs are not acceptable as replacements. If a reservoir requires replacement, see **Group 42** of the *Condor® Workshop Manual* for instructions.

    Inspect all hoses and air lines as follows.

    32.1. Check the clearance between the rubber hoses and the exhaust manifold or other hot spots. Excessive heat will cause the material in the hoses to deteriorate rapidly or become brittle. Provide at least six inches (150 mm) of clearance. More clearance is needed if the hose is located above the heat source.

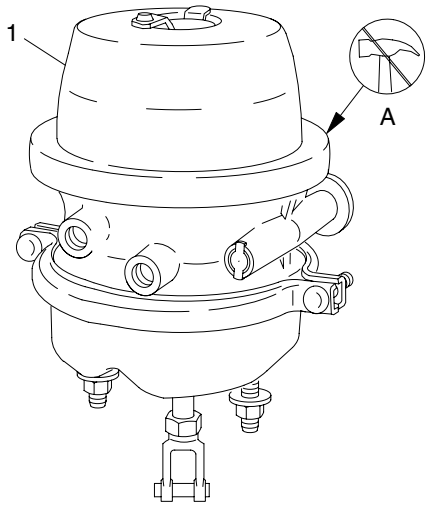

)2/22/2000 f421352

A. Do not remove this clamp ring.

1. MGM TR–T (TR Series) Brake Chamber shown.

Fig. 9.6. Parking Brake Chamber Clamp

https://truckmanualshub.com/

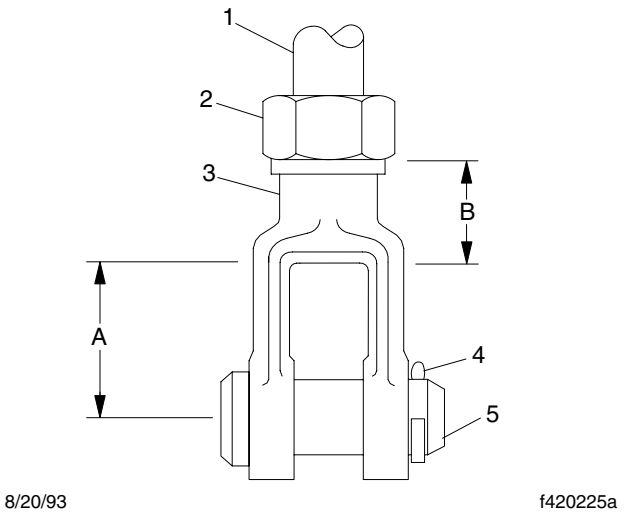

A. Minimum of 1-inch (25-mm) clearance between centerline of clevis pin hole and piston rod end.
B. Minimum of seven threads engagement.

1. Piston Rod
2. Piston Rod Nut
3. Clevis
4. Cotter Pin
5. Clevis Pin

Fig. 9.7. Piston Rod Engagement with the Clevis

32.2. Check for kinks, dents, or swelling of the hoses. If damaged, replace the hose with the same size and type.

32.3. Do not route the hose on top of anything likely to be stepped on or walked on.

32.4. Check for damage to hoses located near moving parts, such as drivelines, kingpins, suspensions, and axles. If the moving parts are catching or pinching the lines, correct as needed.

32.5. Check for hose damage caused by abrasion. If abraded, replace the hose. Check for the cause of abrasion, such as loose or damaged hose clamps. Repair or replace the clamps as needed.

32.6. Observe the hose cover condition, especially hoses exposed to water splash and ice. If dried out or ragged (the wire or liner is showing through the cover), replace the hose(s).

32.7. Inspect nylon air tubing. In cold weather, nylon tubing is more sensitive to nicks and cuts. Replace nicked or cut tubing even if it is not leaking.

32.8. Check the minimum bend radii of all hoses. The minimum bend radius of a hose is the bend that the hose will withstand without experiencing damaging stresses or kinking. See **Table 9.3** and **Table 9.4**.

When a rubber hose does not meet minimum bend radius requirements, the outside may appear smooth even if the inner tube is kinked. Reroute the hose or replace it with one of adequate length if the bend radius is not withiNminimum specifications. See **Fig. 9.8**.

32.9. Check straight hose installations (those hoses that do not bend along their routings). Pressure changes can cause a hose to lengthen up to two percent or shorten up to four percent. A 100-inch (254-mm) length of hose, for example, can contract to 96 inches (244 mm). If the hose has no slack when it is exhausted of air, replace it with one of adequate length to avoid a possible blowoff from the fitting during vehicle operation.

Nylon Tube Minimum Bend Radii			
Number	**Inside Diameter: inches**	**Outside Diameter: inches**	**Minimum Bend: inches (mm)**
4	0.170	1/4	1.00 (25)
6	0.251	3/8	1.50 (38)
8	0.376	1/2	2.00 (51)
10	0.439	5/8	2.50 (64)
12	0.566	3/4	3.00 (76)

Table 9.3, Nylon Tube Minimum Bend Radii

https://truckmanualshub.com/

Wire Braid Hose Minimum Bend Radii			
Number	**Inside Diameter: inches**	**Outside Diameter: inches**	**Minimum Bend inches (mm)**
4	3/16	0.49	0.75 (19)
5	1/4	0.55	1.00 (25)
6	5/16	0.62	1.25 (32)
8	13/32	0.74	1.75 (44)
10	1/2	0.83	2.25 (57)
12	5/8	0.96	2.75 (70)
16	7/8	1.21	3.50 (89)
20	1-1/8	1.49	4.50 (114)

Table 9.4, Wire Braid Hose Minimum Bend Radii

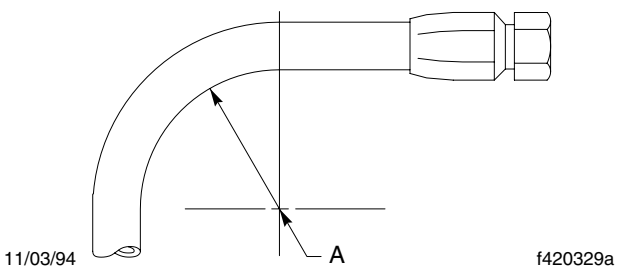

NOTE: Center of hose bend radius should be well away from the fitting.

A. Bend Radius

Fig. 9.8. Bend Radius

32.10. Check for kinked or twisted hoses. A seven-percent twist in the hose can reduce its life by up to 90 percent. Also, a twisted hose under pressure tends to untwist. This will cause it to loosen the fitting. Reconnect hoses that are twisted.

33. Inspect the front air brake lines for leaks at the fitting where they enter the air chamber.

    With an assistant at the front wheels to inspect the brake lines, turn the wheels to full lock in one direction. While holding the service brake pedal down, inspect the front brake air lines closely where they enter the air chambers.

    Turn the wheels to full lock in the other direction, hold the service brake pedal down, and repeat the inspection.

    If there is a leak, the hose should be replaced.See **Group 42** of the *Condor® Workshop Manual* for the hose replacement procedure.

34. Check the brake lining wear on all vehicles, including those with automatic slack adjusters. Proper brake operation is dependant on periodic maintenance and inspection of the brake linings.

    34.1. If the axle assembly is not equipped with a dust shield or backing plate, measure the axle brake lining thickness. If any of the linings are worn to less than 1/4 inch

    (6.5 mm) at the thinnest point, replace the linings on all brake assemblies on that axle. See **Group 42** of the *Condor® Workshop Manual* for instructions.

    34.2. If the axle assembly is equipped with a dust shield or backing plate, remove the inspection plugs to inspect the brake lining thickness. If any of the brake linings are worn to less than approximately 1/4 inch

    (6.4 mm) at the thinnest point, replace the linings on all brake assemblies on that axle. See **Group 42** of the *Condor® Workshop Manual* for instructions.

    34.3. Install the inspection plugs in the dust shields or backing plates if equipped.

IMPORTANT: Brake checking and adjusting is necessary for all vehicles, including trucks equipped with automatic slack adjusters.

35. Inspect the slack adjusters as follows.

    For Meritor slack adjusters, see **Fig. 9.9**.

    For Haldex slack adjusters, see **Fig. 9.10**.

    Check the boot for cuts, tears, or other damage. Replace it if necessary.

    Chock the rear tires, then release the parking brake.

https://truckmanualshub.com/

Check for correct brake chamber stroke:

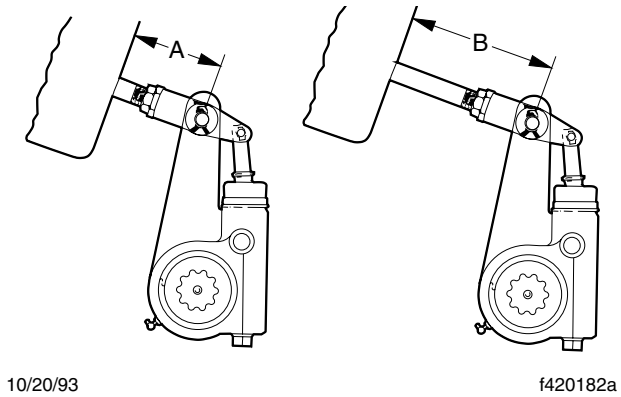

NOTE: B minus A must be within values listed in the

1. With the brakes released, measure this distance.
2. With the brakes applied, measure this distance.

Fig. 9.9. Brake Stroke Check, Meritor Automatic Slack Adjuster

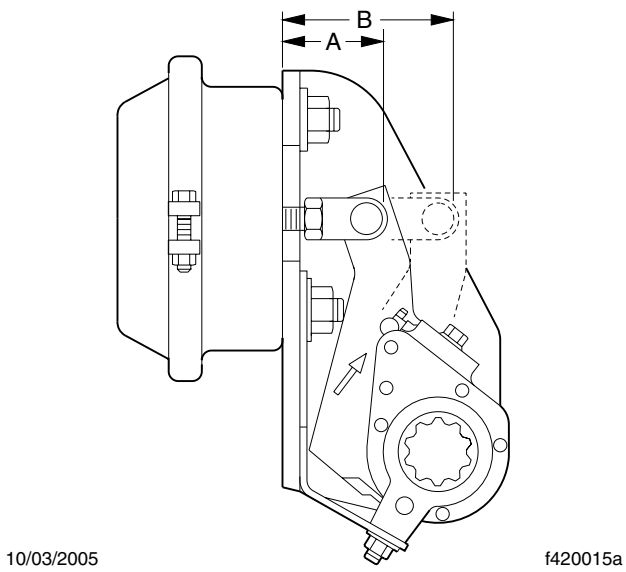

A. With the brakes released, measure this distance.
B. With the brakes applied, measure this distance.

Fig. 9.10. Brake Stroke Check, Haldex Automatic Slack Adjuster

- With the brakes fully released, measure the distance from the base of the brake chamber to the center of the clevis pin.
- Build air pressure to 100 psi (690 kPa), then shut down the engine. With the brakes fully applied, measure the distance from the bottom of the brake chamber to the center of the clevis pin.

The difference betweeNmeasurement A and measurement B is the brake chamber stroke.

The brake chamber stroke must be less than the measurements shown in **Table 9.5**. Long stroke design is indicated by a tag, or embossing, on the brake chamber.

Maximum Allowable Brake Chamber Stroke	
Chamber Size	**Maximum Allowable Stroke: inches (mm)**
16	1-3/4 (44)
16 (long stroke)*	2 (51)
20	1-3/4 (44)
20 (long stroke)*	2 (51)
24	1-3/4 (44)
24 (long stroke)*	2-1/2 (64)
30	2 (51)
30 (long stroke)*	2-1/2 (64)
36	2-1/4 (57)

* Long stroke design is indicated by a tag, or embossing, on the brake chamber.

Table 9.5, Maximum Allowable Brake Chamber Stroke

- If the stroke is greater than the specified range, check brake components including drums, camshafts, camshaft bushings, anchor pins, rollers, chamber brackets, the clevis, and clevis pins. See **Group 42** of the *Condor® Workshop Manual* for instructions.
- If there are no problems with the foundation brakes, manually adjust the slack adjuster. See **Group 42** of the *Condor® Workshop Manual* for instructions.

CAUTION

Do not hammer on the control arm. This may cause internal damage.

https://truckmanualshub.com/

IMPORTANT: Do not use installation templates to check the slack adjuster angles. Installation templates are used only when installing a new slack adjuster or reinstalling the existing slack adjuster. Also, automatic slack adjusters should never need to be adjusted during normal use. The only time they need adjustment is during installation, removal, or to back off the brake shoes during repair work. Constant manual adjustment will shorten internal clutch life.

36. Using an accurate tire pressure gauge, check the inflation pressures of the tires before each trip. Tires should be checked when cool. Be sure the valve stem caps are on every tire and that they are screwed on finger-tight. Inflate the tires to the applicable pressures if needed.

See **Table 9.6** or **Table 9.7** for the correct tire inflation pressures for the vehicle load. The information in this table is representative of most tires. Operator should verify the load vs. tire pressure with local tire representatives as needed.

When traveling at unusual speeds, use **Table 9.8** to adjust tire pressure.

If a tire has been run at or underinflated, check the wheel for proper lockring and side-ring seating before adding air. Check for possible wheel, rim, or tire damage.

Moisture inside a tire can result in body ply separation or a sidewall rupture. During tire inflation, compressed air reservoirs and lines must be kept dry. Use well-maintained inline moisture traps and service them regularly.

Tire Load Limits, Michelin Radial Ply Tubeless Tires at Various Cold Inflation Pressures													
Size	**Load Range Ply Rating**	**Axle**	**Max Speed: mph (km/h)**	**Pressure: psi (kPa)**									
				90 (621)	**95 (655)**	**100 (689)**	**105 (724)**	**115 (793)**	**120 (827)**	**123 (848)**	**125 (862**	**130 (896)**	**131 (903)**
11R22.5	G/14	Single Dual	75 (120)	—	—	6175 5750	—	—	—	—	—	—	—
11R22.5	H/16	Single Dual	75 (120)	—	—	—	—	6610 5950	—	—	—	—	—
11R22.5	G/14	Single Dual	65 (105)	—	—	6175 5750	—	—	—	—	—	—	—
11R22.5	G/14	Single Dual	65 (105)	—	—	—	6175 5840	—	—	—	—	—	—
11R22.5	H/16	Single Dual	65 (105)	—	—	—	—	—	6610 6005	—	—	—	—
12R22.5	H/16	Single Dual	65 (105)	—	—	—	—	7390 6610	—	—	—	—	—
12R22.5	H/16	Single Dual	65 (105)	—	—	—	—	7390 6750	—	—	—	—	—
12R22.5	H/16	Single Dual	55 (88)	—	—	—	—	7390 6750	—	—	—	—	—
12R22.5	H/16	Single Dual	65 (105)	—	—	—	—	—	15,660 27,800	—	—	—	—
235/80R22.5	G/14	Single Dual	65 (105)	4675 4410	—	—	—	—	—	—	—	—	—
255/70R22.5	H/16	Single Dual	65 (105)	—	—	—	—	5510 5205	—	—	—	—	—

Table 9.6, Tire Load Limits, Michelin Radial Ply Tubeless Tires at Various Cold Inflation Pressures

Daily or Weekly Inspection and Maintenance

Tire Load Limits, Michelin Radial Ply Tubeless Tires at Various Cold Inflation Pressures													
Size	Load Range Ply Rating	Axle	Max Speed: mph (km/h)	Pressure: psi (kPa)									
				90 (621)	95 (655)	100 (689)	105 (724)	115 (793)	120 (827)	123 (848)	125 (862	130 (896)	131 (903)
255/80R22.5	G/14	Single Dual	65 (105)	—	5205 4810	—	—	—	—	—	—	—	—
275/80R22.5	G/14	Single Dual	75 (120)	—	—	6175 5675	—	—	—	—	—	—	—
275/80R22.5	H/16	Single Dual	75 (120)	—	—	—	—	6940 6175	—	—	—	—	—
275/70R22.5	H/16	Single Dual	65 (105)	—	—	—	—	—	—	— 6395	—	—	6945 —
275/80R22.5	G/14	Single Dual	65 (105)	—	—	6175 5675	—	—	—	—	—	—	—
315/80R22.5	L/20	Single Dual	55 (88)	—	—	—	—	—	—	—	—	9000 8255	—
315/80R22.5	L/20	Single Dual	55 (88)	—	—	—	—	—	—	—	—	10,000 8255	—
315/80R22.5	L/20	Single Dual	65 (105)	—	—	—	—	—	—	—	—	9000 8255	—
385/65R22.5	J/18	Single Dual	65 (105)	—	—	—	—	—	—	—	9370 —	—	—
385/65R22.5	J/18	Single Dual	62 (100)	—	—	—	—	—	—	—	—	9920 —	—
425/65R22.5	L/20	Single Dual	65 (105)	—	—	—	—	—	—	—	11,400 —	—	—
445/65R22.5	L/20	Single Dual	65 (105)	—	—	—	—	—	—	—	—	—	12,800 —

Table 9.6, Tire Load Limits, Michelin Radial Ply Tubeless Tires at Various Cold Inflation Pressures

https://truckmanualshub.com/

Tire Load Limits, Goodyear Tubeless Tires at Various Cold Inflation Pressures								
Size	Load Range Ply Rating	Axle	Max Speed: mph (km/h)	Pressure: psi (kPa)				
				100 (689)	105 (724)	110 (758)	120 (827)	125 (862)
11R22.5	G/14	Single Dual	75 (120)	—	6175 5750	—	—	—
11R22.5	H/16	Single Dual	75 (120)	—	—	— 5800	6610 —	—
11R22.5	G/14	Single Dual	65 (105)	—	6175 5750	—	—	—
11R22.5	H/16	Single Dual	65 (105)	—	—	— 5800	6610 —	—
12R22.5	H/16	Single Dual	65 (105)	—	—	—	7390 6750	—
275/70R22.5	H/16	Single Dual	75 (120)	—	—	—	—	6610 6175
295/75R22.5	G/14	Single Dual	75 (120)	— 5675	—	6175 —	—	—
295/75R22.5	H/16	Single Dual	75 (120)	—	—	— 6005	6610 —	—
295/80R22.5	H/16	Single Dual	75 (120)	—	—	—	—	7830 6940
315/80R22.5	J/18	Single Dual	75 (120)	—	—	—	—	8820 7390
315/80R22.5	J/18	Single Dual	65 (105)	—	—	—	8270 7610	—
315/80R22.5	L/20	Single Dual	55 (88)	—	—	—	9000 7750	—
315/80R22.5	J/18	Single Dual	75 (120)	—	—	—	8270 7610	—
385/65R22.5	J/18	Single Dual	65 (105)	—	—	—	9370 —	—

Table 9.7, Tire Load Limits, Goodyear Tubeless Tires at Various Cold Inflation Pressures

https://truckmanualshub.com/

Variations in Load and Inflation Limits According to Speed		
Speed Range: mph (km/h)	**Inflation Pressure Increase: psi (kPa)**	**Percent Increase/ Decrease in Load**
70–75(113–121)	10 (69)	(–10)
61–70 (98–113)	10 (69)	0
51–60 (82–97)	0	0
41–50 (66–80)	0	+9
31–40 (50–64)	0	+16
21–30 (34–48)	10 (69)	+24
11–20 (18–32)	15 (103	+32

Table 9.8, Variations in Load and Inflation Limits According to Speed

WARNING

Do not operate the vehicle with underinflated or overinflated tires. Incorrect inflation can stress the tires and make the tires and rims more susceptible to damage, possibly leading to rim or tire failure and loss of vehicle control, resulting in serious personal injury or death.

37. Inspect the tires for bulges, cracks, cuts, or penetrations. A tire pressure check will assist in uncovering hidden damage. A weekly pressure loss of 4 psi (28 kPa) or more in a tire may indicate damage and the tire should be inspected and repaired or replaced.

    Check the tire tread depth. If tread is less than 4/32 inch (3 mm) on front tires, or less than 2/32 inch (1.5 mm) on rear tires, the tires should be replaced.

    Tires should also be inspected for oil contamination. Fuel oil, gasoline, and other petroleum derivatives, if allowed to contact the tires, will soften the rubber and destroy the tire.

38. Check to make sure the wheel nuts or rim nuts are tight.

    38.1. Remove all dirt and foreign material from the assembly. Dirt or rust streaks from the stud holes (**Fig. 9.12**), metal buildup around stud holes, or out-of-round or worn stud holes (**Fig. 9.11**) may be caused by loose wheel nuts.

    See **Group 40** of the *Condor® Workshop Manual* for torque specifications and the correct tightening sequence.

WARNING

Insufficient wheel nut (rim nut) torque can cause wheel shimmy, resulting in wheel damage, stud breakage, and extreme tire tread wear. Excessive wheel nut torque can break studs, damage threads, and crack discs in the stud hole area. Use the recommended torque values and follow the proper tightening sequence.

Wheel damage could result in loss of a wheel resulting in property damage, serious personal injury, or death.

    38.2. Examine the rim and wheel assembly components (including rims, rings, flanges, studs, and nuts) for cracks or other damage.

    See **Group 40** of the *Condor® Workshop Manual* for service procedures on the studs, hubs, and wheel and tire servicing.

https://truckmanualshub.com/

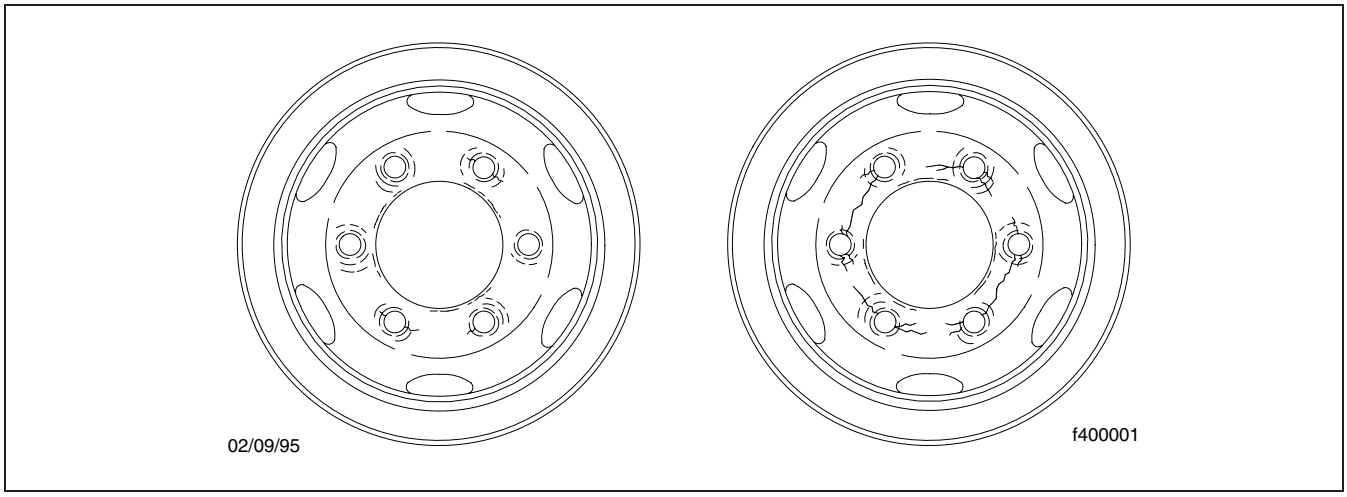

Fig. 9.11. Worn Stud Holes

38.3. Replace broken, cracked, badly worn, bent, rusty, or sprung rings and rims.

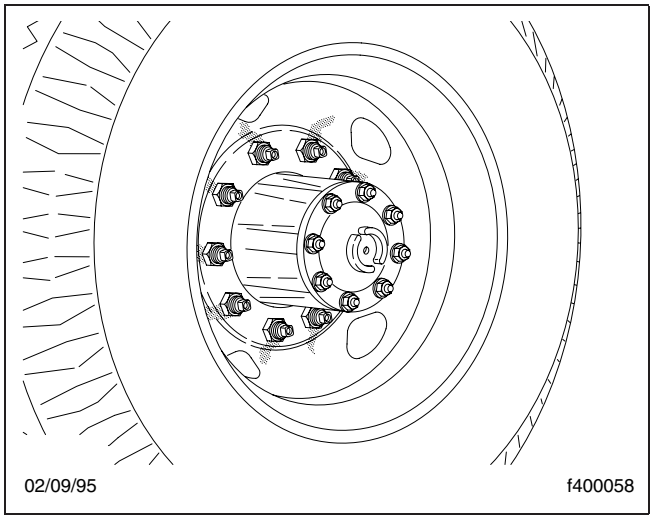

Fig. 9.12. Dirt and Rust Streaks from the Stud Holes

WARNING

Have any worn or damaged wheel components replaced by a qualified person using the wheel manufacturer's instructions and the wheel industry's standard safety precautions and equipment. Otherwise a vehicle or workshop accident could occur, possibly resulting in serious personal injury or death.

39. Check components of the air brake system for proper operation as follows.

NOTE: Be sure the tires are chocked.

39.1. Check the air governor cut-in and cut-out pressures. Run the engine at fast idle. The air governor should cut out the air compressor at approximately 115 to 125 psi (793 to 862 kPa). With the engine idling, make a series of foot valve applications. The air governor should cut in the air compressor at approximately 95 to 100 psi (655 to 689 kPa). If the air governor does not cut in and out as described above, it must be adjusted to these specifications. If the air governor cannot be adjusted or repaired, replace it before operating the vehicle. See **Group 40** of the *Condor® Workshop Manual* for adjusting or replacing the air governor.

39.2. Check the air pressure buildup time as follows.

Release the parking brakes on the vehicle by pushing in the parking brake knob.

With the air system fully charged to 120 psi (827 kPa), make one full brake application and note the air pressure reading on the gauge. Continue to reduce the air pressure by moderate brake applications to a maximum of 90 psi (620 kPa), then run the engine at governed rpm. If the time required to raise

https://truckmanualshub.com/

the air pressure to 120 psi (827 kPa) (from the pressure noted after one brake application) is more than 30 seconds, eliminate any leaks or replace the air compressor before operating the vehicle.

39.3. Check the air pressure reserve. With the air system fully charged to 120 psi (827 kPa), stop the engine and note the air pressure. Then make one full brake application and observe the pressure drop. If it drops more than 25 psi (172 kPa), all areas of leakage must be eliminated before operating the vehicle.

39.4. Check the air leakage in the system.

With the parking brakes applied, the transmission out of gear, and the tires chocked, charge the air system until the cut-out pressure of 115 to 125 psi (793 to 862 kPa) is reached.

With the service brakes released, shut down the engine, wait one minute and note the air pressure gauge reading. Observe the air pressure drop in psi (kPa) per minute.

Charge the air system until the cut-out pressure of 115 to 125 psi (793 to 862 kPa) is reached. With the parking brakes released and the service brake applied, shut down the engine, wait one minute, and note the air pressure gauge reading. Observe the air pressure drop in psi (kPa) per minute.

If leakage exceeds 2 psi (14 kPa) per minute with the service brakes released or 3 psi (21 kPa) per minute with the service brakes applied, repair all areas of leakage before driving the vehicle.

40. Remove the chocks from the tires and release the spring parking brakes.

41. When starting to move the vehicle and before picking up speed, test the brakes with the foot valve and parking brake knob to be sure they will bring the vehicle to a safe stop.

42. Pull the parking brake knob with the vehicle on an incline (the ramp surface should be made of Portland cement or equivalent). If the parking brakes do not hold the vehicle in place when set, repair the parking brake system. See **Group 42** of the *Condor® Workshop Manual* for instructions.

43. Check accessory air system components such as air suspension seats and air horns for leaks.

44. If equipped with a fifth wheel, inspect it and check it for adequate lubrication.

WARNING

Keep the fifth wheel plate lubricated to prevent binding between the tractor and trailer. A binding fifth wheel could cause erratic steering and loss of vehicle control, possibly resulting in serious personal injury or death.

44.1. Lubricate the fifth wheel top plate with automotive chassis grease or use a plastic lube plate to provide a lubricated surface. Use engine oil to lubricate the pivot points within the fifth wheel.

NOTE: Vertical movement of the kingpin is provided to accommodate the use of a plastic lube plate in place of automotive grease on the bearing surfaces of the kingpin and the fifth wheel top plate. The plastic must not exceed 3/16 inch (5 mm) in thickness. If a plastic lube plate is used it must be 10 inches (25.4 cm) in diameter or larger.

44.2. Operate the handle and make sure the jaws open and close freely.

44.3. Visually check all the bolts and nuts that attach the fifth wheel to the fifth wheel mounting plate to be sure they are tight.

44.4. Visually check the fifth wheel assembly for cracks, wear, and fractured welds. Repair or replace damaged or worn components.

WARNING

Repair or replace damaged or worn fifth wheel components. The use of damaged or worn components could cause the trailer to detach from the tractor, possibly resulting in serious personal injury or death.

https://truckmanualshub.com/

44.5. Before connecting the fifth wheel to the trailer kingpin, always be sure that the fifth wheel top plate is lubricated with automotive chassis grease or that the plastic lube plate is installed on the fifth wheel top plate.

44.6. After connecting the fifth wheel to the trailer kingpin, check that the fifth wheel lock mechanism is locked to the trailer kingpin. See **Chapter 8** for coupling instructions.

WARNING

Check to be sure that the trailer is securely connected to the truck. Failure to achieve complete fifth wheel lockup may result in the trailer becoming detached from the truck possibly resulting in serious personal injury or death.

44.7. Make sure that the electrical cable is connected to the trailer and that the brake lights and taillights are working.

45. If equipped with a fifth wheel, inspect the 7-way trailer cable receptacle(s) for good connections.

    Clean and grease the 7-way socket and plug regularly, especially in regions where magnesium chloride or calcium chloride are used as road de-icers. These chemicals are highly corrosive to brass and copper, the base materials for the contact pins used in the 7-way receptacles. Clean the socket and plug with a plug brush and apply a moderate amount of dielectric grease to both the socket and plug pins. See **Group 15** of the *Condor® Maintenance Manual* for an approved dielectric grease.

46. Hook the trailer to the truck and inspect the trailer system.

    46.1. Make sure all fifth wheel connections are engaged and locked. Check that all connections to the dolly or trailer hitch and safety chains are secure.

    46.2. Make sure the gladhands in front of each trailer are engaged and that all air hoses are properly suspended.

    46.3. Make sure the air shutoff valves are turned on and air is available to the lines on the trailer.

    46.4. Make sure all light cables are connected and correctly suspended.

    Check that all trailer lights are working.

47. If equipped with a Vogel chassis lubrication system, perform a system check to verify that the lubrication system is functioning correctly. Turn on the vehicle ignition and observe the dash mounted indicator lamp. The indicator lamp on the dash and at least one LED (PAUSE or CONTACT) on the control unit should all come on following ignition activation. The indicator lamp on the dash will go out after 3 seconds. This confirms that the lubrication system is operating correctly. For further information see **Group 31** of the *Condor® Maintenance Manual*.

https://truckmanualshub.com/

This page intentionally left blank.

https://truckmanualshub.com/

10

Cab Appearance

Cab Washing and Polishing **10.1**
Care of Chromed Finishes and Stainless-Steel Parts **10.1**
Dashboard Care **10.1**
Vinyl Upholstery Cleaning **10.1**
Cloth Upholstery Cleaning **10.2**

https://truckmanualshub.com/

This page intentionally left blank.

Cab Appearance

Cab Washing and Polishing

To protect the finish of your new vehicle, follow these guidelines carefully:

- During the first 30 days, rinse your vehicle frequently with water. If the vehicle is dirty, use a mild liquid soap. Do not use detergent.
- During the first 30 days, do not use anything abrasive on your vehicle. Brushes, chemicals, and cleaners may scratch the finish.
- During the first 120 days, do not wax your vehicle.

To extend the life of the finish of your cab, follow these guidelines:

- Avoid washing your vehicle in the hot sun.
- Always use water. After the cab is completely washed, dry it with a towel or chamois.
- Do not dust painted surfaces with a dry cloth, as this will scratch the paint.
- Do not remove ice or snow from a painted surface with a scraper of any sort.
- To prevent damage to the finish, wax it regularly. Before waxing, if the finish has become dull, remove oxidized paint using a cleaner specially designed for this purpose. Remove all road tar and tree sap before waxing. It is recommended that a quality brand of cleaner or cleaner-polish and polishing wax be used.
- Do not let diesel fuel or antifreeze stand on a painted surface. If either should occur, rinse the surface off with water.
- To prevent rust, have any nicks or other damage on the finish touched up as soon as possible.
- Park your vehicle in a sheltered area whenever possible.

Care of Chromed Finishes and Stainless-Steel Parts

To prevent rust, keep chromed finishes and stainless-steel parts clean and protected at all times. This is especially important during winter driving and in coastal areas where there is exposure to salt air.

When cleaning chromed finishes or stainless-steel parts, use clean water and a soft cloth or sponge. A mild detergent may also be used.

Sponge gently, then rinse. If necessary, use a nonabrasive chrome cleaner to remove stubborn rust or other material. Do not use steel wool.

IMPORTANT: Use only nonabrasive chrome cleaners on stainless-steel parts. This prevents scratching and marring of the polished surfaces.

To help protect the chromed finishes after cleaning, apply a coat of polishing wax to the surface. Never use wax on parts that are exposed to high heat, such as exhaust pipes.

Dashboard Care

Periodically wipe the dashboard with a water-dampened cloth. A mild detergent can be used, but avoid using strong detergents.

Vinyl Upholstery Cleaning

To prevent soiling, frequent vacuuming or light brushing to remove dust and dirt is recommended. Harsh cleaning agents can cause permanent damage to vinyl upholstery. To preserve the upholstery and prevent damage, carefully review the following sections for recommended cleaning procedures. Waxing or refinishing improves soil resistance and cleanability for all vinyls. Any hard wax, such as that used on automobiles, may be used.

Ordinary Dirt

Wash the upholstery with warm water and mild soap, such as saddle or oil soap. Apply soapy water to a large area and allow to soak for a few minutes, then rub briskly with a cloth to remove the dirt. This can be repeated several times, as necessary.

If dirt is deeply imbedded, use a soft bristle brush after applying the soap.

If dirt is extremely difficult to remove, wall-washing preparations normally found around the home can be used. Powdered cleaners, such as those used for sinks and tiles, are abrasive and must be used with caution

Cab Appearance

as they can scratch the vinyl or give it a permanent dull appearance.

Chewing Gum

Harden the gum with an ice cube wrapped in a plastic bag, then scrape off with a dull knife. Any remaining traces of gum can be removed with an all-purpose light oil (peanut butter will also work) and wiped off.

Tars, Asphalts, and Creosote

Each of these items stains vinyl after prolonged contact. They should be wiped off immediately and the area carefully cleaned, using a cloth dampened with naphtha.

Paint, Shoe Heel Marks

Paint should be removed immediately. Do not use paint remover or liquid-type brush cleaner on vinyl. An unprinted cloth, dampened with naphtha or turpentine may be used. Use care to prevent contact with parts of the upholstery that are not vinyl.

Sulfide Stains

Sulfide compounds, such as those found in eggs and some canned goods, can stain after prolonged contact with vinyl. These stains can be removed by placing a clean, unprinted piece of cloth over the spotted area and pouring a liberal amount of six percent hydrogen peroxide onto the cloth.

Allow the saturated cloth to remain on the spot for 30 to 60 minutes. For stubborn spots, allow the hydrogen-peroxide saturated cloth to remain on the area overnight. Use caution to prevent the solution from seeping into the seams, or it will weaken the cotton thread.

Nail Polish and Nail Polish Remover

Prolonged contact with these substances causes permanent damage to vinyl. Careful blotting immediately after contact minimizes damage. Do not spread the liquid during removal.

Shoe Polish

Most shoe polishes contain dyes which penetrate vinyl and stain it permanently. Shoe polish should be wiped off as quickly as possible using naphtha or lighter fluid. If staining occurs, try the same procedure as that under "Sulfide Stains."

Ball Point Ink

Ball point ink can sometimes be removed if rubbed immediately with a damp cloth, using water or rubbing alcohol. If this does not work, try the procedure used under "Sulfide Stains."

Miscellaneous

If stains do not respond to any of the treatments described above, it is sometimes helpful to expose the vinyl to direct sunlight for up to 30 hours. Mustard, ball point ink, certain shoe polishes, and dyes often bleach out in direct sunlight, leaving the vinyl undamaged.

Cloth Upholstery Cleaning

To prevent soiling, frequent vacuuming or light brushing to remove dust and dirt is recommended. Spot clean with a mild solvent or upholstery shampoo or the foam from a mild detergent. When using a solvent or a dry-cleaning product, follow instructions carefully and clean only in a well-ventilated area. Avoid any product that contains carbon tetrachloride or other toxic materials. With either method, pretest a small area before proceeding. Use a professional upholstery cleaning service when extensive cleaning is needed.

Grease and Oil-Based Stains

Dampen a small absorbent cloth with dry-cleaning solvent or spot remover. Apply carefully to the spot from the outer edge to the center. Pat and blot with a clean, dry cloth. Repeat several times as necessary, turning the cloth so that the stain does not redeposit on the fabric.

Sugar and Water-Based Stains

Apply water-based detergent or cleaner, working in circular motions. Pat and blot as dry as possible. Repeat, if necessary, before drying thoroughly.

Chewing Gum or Wax

Harden the gum or wax with an ice cube wrapped in a plastic bag, then scrape off with a dull knife. Excess wax can be absorbed by placing a thick white blotter over the wax and heating with a warm (not hot) iron.

https://truckmanualshub.com/

Remove the remainder by using the same procedure under "Grease and Oil-Based Stains."

Mildew

Brush the dry fabric with a soft brush. Sponge with detergent, and blot. If the fabric is colorfast, dilute a teaspoon of bleach in one quart (one liter) of cool water. Apply with a swab directly on the mildew stain. Dab repeatedly with clear, cool water, and blot dry.

https://truckmanualshub.com/

This page intentionally left blank.

https://truckmanualshub.com/

11

In an Emergency

Hazard Warning Lights 11.1
Fire Extinguisher, Optional 11.1
Emergency Kit, Optional 11.1
First Aid Kit, Optional 11.1
Towing 11.1
Emergency Starting with Jumper Cables 11.3
Fire in the Cab 11.4

https://truckmanualshub.com/

This page intentionally left blank.

https://truckmanualshub.com/

Hazard Warning Lights

The hazard warning light switch (**Fig. 11.1**) is located on the center control panel. Press the upper end of the hazard warning light switch to turn the hazard warning lights on. All of the turn signal lights and the turn signal indicators will ash when the hazard warning light switch is on.

If there is an emergency while driving, cautiously pull off the road. Turn on the hazard warning lights. Place the reflectors or ares along the side of the road to alert other drivers that an emergency situation exists.

WARNING

Use extreme care when placing ares in emergency situations that involve exposure to flammable substances such as fuel. An explosion or re could occur causing serious personal injury.

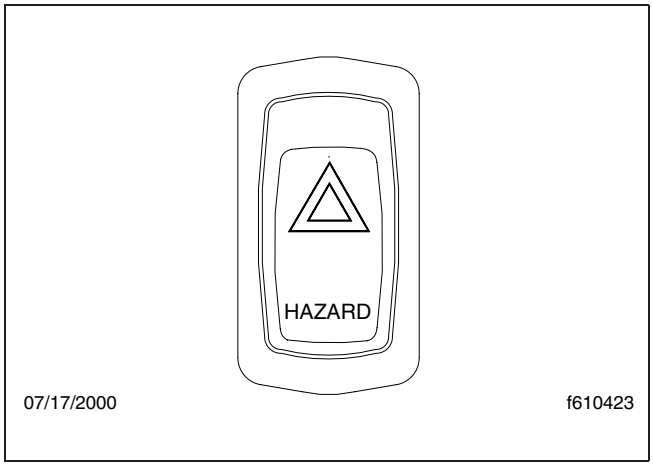

Fig. 11.1. Hazard Warning Light Switch

Fire Extinguisher, Optional

If equipped with a re extinguisher (**Fig. 11.2**), it is located inside the left-hand door on vehicles with primary left-hand-drive, and inside the right-hand door on vehicles with primary right-hand drive.

Emergency Kit, Optional

If equipped with an emergency kit, it is located behind the primary driver's seat. The emergency kit contains triangular reflectors. It may also contain flares.

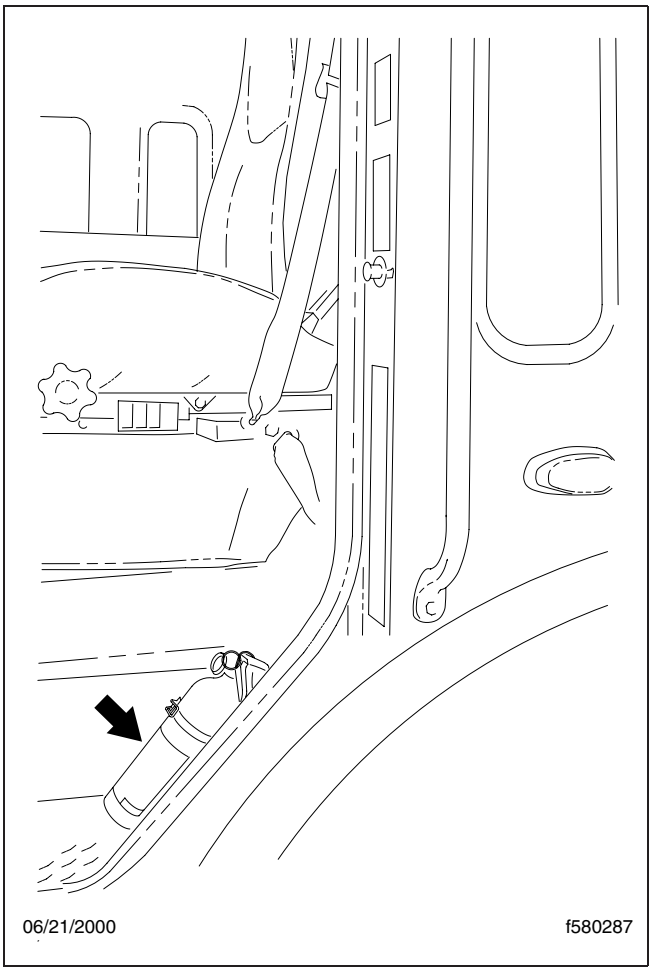

Fig. 11.2. Location of Fire Extinguisher

First Aid Kit, Optional

If equipped with a first aid kit, it is located behind the primary driver's seat.

Towing

When it is necessary to tow the vehicle, make sure the instructions below are closely followed to prevent damage to the vehicle.

https://truckmanualshub.com/

WARNING

Do not tow an unbraked vehicle if the combined weight of both vehicles is more than the sum of the gross axle weight ratings (GAWR) of the towing vehicle. Otherwise brake capacity will be inadequate, which could result in personal injury or death.

Front Towing Hookup

NOTE: It is recommended that towing be performed using an underslung hookup that lifts up from under the front axle beam and secures the lifting device at the spring pack.

1. Disconnect the battery ground cables.

CAUTION

Failure to remove the axle shafts when towing the vehicle with the rear wheels on the ground could result in damage to the transmission and other parts.

2. Remove both drive axle shafts. If a vehicle with tandem axles is to be lifted and towed, remove only the rearmost drive axle shafts.
3. Cover the ends of the hubs with metal plates or plywood cut to t the axle opening and drilled to t the axle shaft studs. This prevents lubricant from leaking out and will keep contaminants from getting into and damaging the wheel bearings and axle lubricant.

CAUTION

Failure to protect the frame rails from the chains could cause damage, leading to eventual frame failure.

4. If a vehicle with tandem axles is to be lifted and towed, chain the forward rear-axle assembly to the vehicle frame. Use protection to keep the chains from damaging the frame.
5. Attach the towing device. Due to the many variables that exist in towing, positioning of the lifting and towing device is the sole responsibility of the tow truck operator. Front tow hooks (**Fig. 11.3**) are standard; rear tow hooks are optional.
6. Lift the vehicle and secure the safety chains. If extra towing clearance is needed, remove the front wheels.

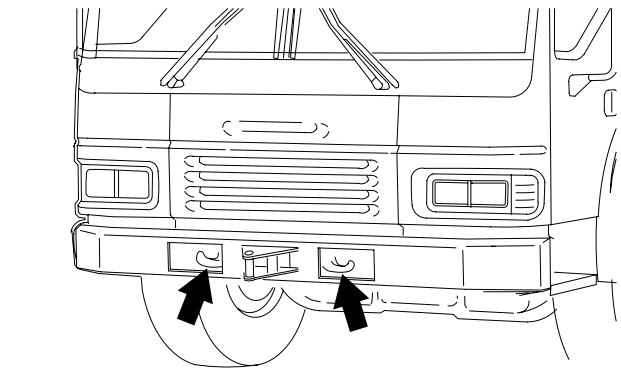

Fig. 11.3. Front Tow Hooks

WARNING

Failure to lower the vehicle could result in the air fairing striking an overhead obstruction, such as a bridge or overpass, and causing vehicle damage or personal injury.

7. Connect the clearance lights, taillights, and turn signal lights. Connect any special towing lights required by local regulations.

WARNING

Failure to chock the tires or connect the tow truck's air brake system before releasing the spring parking brakes could allow the disabled vehicle to suddenly roll. This could cause property damage or personal injury.

8. Chock the disabled vehicle's tires and connect the tow truck's air brake system to the vehicle being

https://truckmanualshub.com/

towed. Then release the spring parking brakes and remove the chocks.

Emergency Starting with Jumper Cables

When using jumper cables, follow the instructions below.

WARNING

Batteries release explosive gas. Do not smoke when working around batteries. Put out all flames and remove all sources of sparks or intense heat in the vicinity of the battery. Do not allow the vehicles to touch each other. Do not lean over the batteries when making connections, and keep all other persons away from the batteries. Failure to follow these precautions could lead to severe personal injury as a result of an explosion or acid burns.

CAUTION

Make sure both starting systems have the same voltage outputs, and avoid making sparks. Otherwise the vehicle charging systems could be severely damaged. Also, do not attempt to charge isolated, deep-cycle batteries with jumper cables. Follow the manufacturer's instructions when charging deep-cycle batteries.

1. Apply the parking brakes and turn off the lights and all other electrical loads.
2. Connect an end of one jumper cable to the positive terminal or positive jump-start post of the booster batteries, and connect the other end of the cable to the positive terminal or positive jump-start post of the discharged batteries. See **Fig. 11.4**.

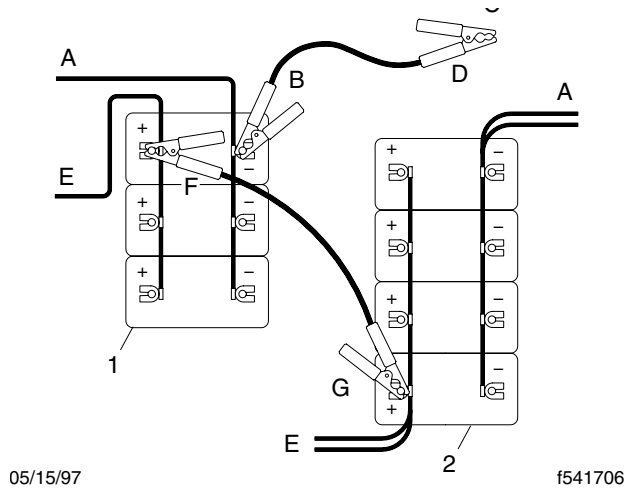

A.	To Ground	E.	To Starter
B.	Connect 3rd	F.	Connect 1st
C.	To Frame (ground)	G.	Connect 2nd
D.	Connect Last		
1.	Booster Batteries	1.	Discharged Batteries

Fig. 11.4. Jumper Connections

WARNING

Do the next step exactly as instructed and do not allow the clamps of one cable to touch the clamps of the other cable. Otherwise, a spark could occur near a battery, possibly resulting in severe personal injury from explosion and acid burns.

3. Connect one end of the second jumper cable to the negative terminal or negative jump-start post (**Fig. 11.5**) of the booster batteries, and connect the other end of the cable to a ground at least 12 inches (300 mm) away from the batteries of the vehicle needing the start. The vehicle frame is usually a good ground. Do not connect the cable to or near the discharged batteries.

https://truckmanualshub.com/

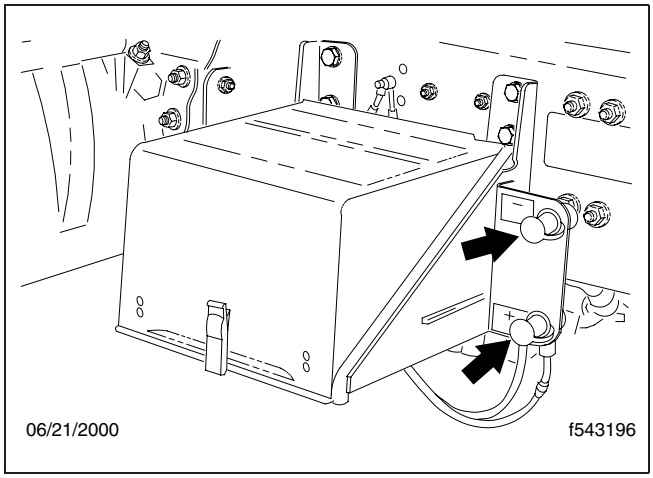

Fig. 11.5. Jump-Start Posts

4. Start the engine of the vehicle with the booster batteries and let the engine run a few minutes to charge the batteries of the other vehicle.
5. Attempt to start the engine of the vehicle with the batteries receiving the charge. Do not operate the starter longer than 30 seconds and wait at least two minutes between starting attempts to allow the starter to cool.
6. When the engine starts, let it idle a few minutes.

WARNING

Do the next step exactly as instructed and do not allow the clamps of one cable to touch the clamps of the other cable. Otherwise, a spark could occur near a battery, possibly resulting in severe personal injury from explosion and acid burns.

7. Disconnect the grounded cable from the frame or other nonbattery location, then disconnect the other end of the cable.
8. Disconnect the remaining cable from the newly charged batteries or jump-start post first, then disconnect the other end.

Fire in the Cab

The incidence of fire in heavy-and medium-duty trucks is rare according to data from the National Highway Traffic Safety Administration. Federal Motor Vehicle Safety Standard #302 limits the flammability of specified materials used inside the cab, but despite this, most materials will burn. The cab of this vehicle contains urethane foam, which is of concern in this respect.

WARNING

Urethane foam is flammable! Do not allow any flames, sparks, or other heat sources such as cigarettes or light bulbs to contact urethane foam. Urethane foam in contact with such heat sources could cause a serious, rapid fire, which could result in death, severe burns, or poisonous smoke inhalation, as well as damage to the vehicle.

In Case of a Cab Fire

WARNING

As quickly as possible, bring vehicle to a safe stop, apply parking brake, turn off ignition and get out of vehicle.

https://truckmanualshub.com/

CONDOR MAINTENANCE MANUAL

12/08

Published by
American LaFrance, LLC
1090 Newton Way
Summerville, SC 29483
Printed in U.S.A.

https://truckmanualshub.com/

This page intentionally left blank.

https://truckmanualshub.com/

FOREWORD

Scheduled maintenance provides a key element for the safe operation of your American LaFrance vehicle. A proper maintenance program also helps to minimize downtime and to safeguard warranties. This maintenance manual provides information necessary for years of safe, reliable, and cost-efficient vehicle operation.

Perform the operations in this maintenance manual at scheduled intervals based upon hours of operation. Perform daily or weekly inspection and maintenance as outlined in the vehicle operator's manual. Your American LaFrance Dealership has the qualified technicians and equipment to perform this maintenance for you. Your dealership can also set up a scheduled maintenance program tailored specifically to your needs. Optionally, your American LaFrance Dealership can assist you in learning how to perform the maintenance procedures in this manual.

IMPORTANT: Descriptions and specifications in this manual were in effect at the time of printing. American LaFrance, LLC reserves the right to discontinue models at any time, or change specifications and design without notice and without incurring obligation.

For additional information, please contact American LaFrance, LLC, Customer Support, 1090 Newton Way, Summerville, SC 29483, U.S.A. or refer to http://www.condortrucks.com.

ENVIRONMENTAL CONCERNS AND RECOMMENDATIONS

Whenever you see instructions in this manual to discard materials, you should attempt to reclaim and recycle them. To preserve our environment, follow appropriate environmental rules and regulations when disposing of materials.

NOTICE: PARTS REPLACEMENT CONSIDERATIONS

Do not replace suspension, axle, or steering parts (such as springs, wheels, hubs, and steering gears) with used parts. Used parts may have been subjected to collisions or improper use and have undetected structural damage.

© 2008 American LaFrance, LLC

All rights reserved. No part of this publication, in whole or in part, may be translated, reproduced, stored in a retrieval system, or transmitted in any form by any means, electronic, mechanical, photocopying, recording, or otherwise, without the prior written permission of American LaFrance, LLC.

American LaFrance, LLC
Customer Support
1090 Newton Way
Summerville, SC 29483

https://truckmanualshub.com/

This page intentionally left blank.

https://truckmanualshub.com/

Index

Title of Maintenance Operation (MOP)	MOP Number
Scheduled Maintenance Intervals	00-01
Service Schedule Tables	00-02
Standard Vehicle Maintenance Schedule Table	00-03
Hydraulic Lock-up	00-04
Lubrication and Fluid Level Check	00-05
Chassis Lubrication	00-06
Lubrication and Fluid Level Check Locations	00-07
Initial Maintenance Inspection Operations	00-08
M1 Maintenance Interval Operations	00-10
M2 Maintenance Interval Operations	00-11
M3 Maintenance Interval Operations	00-11
Maintenance Operation Sets Table	00-12
Noise Emission Controls Maintenance	00-13
Verification of Inspections Log	00-14
Metric/U.S. Customary Conversion Tables	00-15
Torque Specifications Tables	00-16
List of Abbreviations	00-17

https://truckmanualshub.com/

This page intentionally left blank.

https://truckmanualshub.com/

Scheduled Maintenance Intervals

Performing regular maintenance on your American LaFrance vehicle will help ensure that it delivers safe, reliable service and optimum performance for years to come. Failure to follow a regular maintenance program can result in inefficient operation and unscheduled down time.

When vehicle reaches period given for a maintenance interval, see Maintenance Interval Operation Table for a list of maintenance operations to be performed at that maintenance interval. Use maintenance operation reference numbers to find detailed instructions in manual on each operation.

NOTE: Maintenance instructions in this manual are based on average vehicle use and normal operating conditions. Unusual vehicle operating conditions may require service at more frequent intervals.

https://truckmanualshub.com/

Service Schedule Tables: 00–02

Maintenance Interval Operation	Maintenance Interval				
	Frequency	Miles	km	Hours	Months
Initial Maintenance (IM)	first	5,000	8,045	250	--
Maintenance 1 (M1)	every	5,000	8,045	250	6
Maintenance 2 (M2)	every	10,000	16,090	500	12
Maintenance 3 (M3)	every	20,000	32,180	1000	24

Table 1. Standard Service Schedule Table

Severe Maintenance Interval Operation	Maintenance Interval				
	Frequency	Miles	km	Hours	Months
Initial Severe Maintenance (SIM)	first	2,500	4,0225	125	--
Severe Maintenance 1 (SM1)	every	2,500	4,0225	125	3
Severe Maintenance 2 (SM2)	every	5,000	8,045	250	6
Severe Maintenance 3 (SM3)	every	10,000	16,090	500	12

Table 2. Severe Service Schedule Table

https://truckmanualshub.com/

Standard Vehicle Maintenance Schedule Table: 00–03

Vehicle Maintenance Schedule						
Maint. No.	**Maintenance Interval**	**Service Date**	**Miles**	**km**	**Hours**	**Months**
1st	IM and M1		5,000	8,045,	250	6
2nd	M1 and M2		10,000	16,090,	500	12
3rd	M1		15,000	24,135,	750	18
4th	M1, M2 and M3		20,000	32,180,	1000	24
5th	M1		25,000	40,225,	1250	30
6th	M1 and M2		30,000	48,270,	1500	36
7th	M1		35,000	56,315,	1750	42
8th	M1, M2 and M3		40,000	64,360,	2000	48
9th	M1		45,000	72,405,	2250	54
10th	M1 and M2		50,000	80,450,	2500	60
11th	M1		55,000	88,495,	2750	66
12th	M1, M2, and M3		60,000	96,540,	3000	72
13th	M1		65,000	104,585,	3250	78
14th	M1 and M2		70,000	112,630,	3500	84
15th	M1		75,000	120,675,	3750	90
16th	M1, M2, and M3		80,000	128,720,	4000	96
17th	M1		85,000	136,765,	4250	102
18th	M1 and M2		90,000	144,810,	4500	108
19th	M1		95,000	152,855,	4750	114
20th	M1, M2, and M3		100,000	160,900,	5000	120

Table 3. Standard Vehicle Maintenance Schedule

https://truckmanualshub.com/

Hydraulic Lock-up

Hydraulic lockup can occur for any of following resons:

- very cold weather
- using wrong hydraulic fluid
- air in hydraulic system
- sudden cab movement
- a ruptured hydraulic line

Any of above situations will cause velocity fuses to function as safety check valves and lock up tilt cylinders. To unlock cylinders, cab must be moved in opposite direction of travel.

CAUTION

In the event tilt cylinders lock up, check for a major problem, such as a ruptured hydraulic line or leaking hydraulic fitting. Make all necessary repairs before unlocking the hydraulic tilt cylinders.

If cab is moving toward fully open position when lockup occurs, move pump control lever to LOWER position and raise and lower pump handle for a few strokes. This will unlock the cylinders. Move pump control lever to RAISE and allow cab to raise to fully open position.

If the cab is moving toward lowered position when lockup occurs, move pump control lever to RAISE position and raise and lower the pump handle for a few strokes. This will unlock cylinders. Move pump control lever to LOWER and allow cab to lower to operating position.

https://truckmanualshub.com/

Initial Maintenance Inspection Operations: 00–08

The Initial Maintenance Inspection Operations tables list all maintenance operations to be performed at IM maintenance inspection. Maintenance operation numbers are reference numbers used to help find detailed instructions in manual for maintenance operations to be performed.

Maintenance Operation Number	Operation Description	Check
26-01	Allison Transmission Fluid and Filter Changing	
31-01	Frame Fastner Torque Inspection	
32-03	Suspension U-bolt Torque Inspection	
33-04	All-Axle Alignment Inspection	
35-02	Axle Lubricant and Filter Changing and Magnetic Strainer Cleaning	

Table 4. Initial Maintenance Inspection Operation

https://truckmanualshub.com/

M1 Maintenance Interval Operations 00–10

The M1 Maintenance Interval Operations, **Table 5**, lists all maintenance operations to be preformed at M1 Maintenance Interval. Maintenance operation numbers are reference numbers used to help locate detailed instructions in this manual on maintenance operations to be performed.

Maintenance Operation Number	Operation Description	Check
00-05	Bulk Fluid and Lubrication Inspection	
01-02	Engine Drive Belt Inspection	
15-01	Alternator, Battery and Starter Check	
20-01	Fan Drive and Clutch Inspection	
20-02	Radiator Pressure Relief Cap Check	
26-01	Allison Transmission Fluid and Filter changing	
26-02	Transmission Fluid Level Inspection	
26-03	Transmission Cooler Inspection	
31-01	Frame Fastner Torque Inspection	
31-05	Chassis Lubrication System Inspection	
31-06	Chassis Lubrication System Reservoir Checking and Refilling	
32-03	Suspension U-bolt Torque Inspection	
33-04	All-Axle Alignment Inspection	
35-01	Drive Axle Lubricant Level and Breather Check	
35-02	Axle Lubricant and Filter Changing and Magnetic Strainer Cleaning	
40-01	Wheel Lugnuts and Rimnuts Inspection	
42-04	Telma® Axle Retarder Brake Inspection	
46-01	Power Steering Reservoir Fluid Level Check	
49-01	Exhaust System Inspection	
60-01	Cab Tilt Pump Reservoir Fluid Level and System Check	
72-01	Door Seal, Door Latch and Door Hinge Lubrication	
83-01	Air Conditioner Inspection	
83-02	Evaporator Drain Hose Check	

Table 5. M1 Maintenance Interval Operations

https://truckmanualshub.com/

M2 Maintenance Interval Operations 00–11

The M2 Maintenance Interval Operations, **Table 6**, lists all maintenance operations that are to be performed at the M2 maintenance interval. Maintenance operation numbers are reference numbers used to locate detailed instructions in this manual for maintenance operations to be perfromed.

Perform all M1 maintenance interval operations at M2 maintenance level.

Maintenance Operation Number	Operation Description	Check
00-06	Chassis Lubrication at M2	
00-09	M1 Maintenance Interval Operations	
01-01	Engine Noise Panel Inspection (Noise Emission Control)	
09-01	Air Cleaner Element Inspection and Replacement	
32-01	Suspension Inspection	
32-02	Suspension Lubrication	
33–01	Knuckle Pin Lubrication	
33-02	Tie Road Inspection	
33–03	Tie Rod Lubrication	
41–01	Driveline Inspection	
41–02	Driveline Lubrication	
42-03	Bendix AD-9 Air Dryer Inspection	
42–05	Camshaft Bracket Lubrication	
42–06	Automatic Slack Adjuster Inspection and Lubrication	
42–07	Disc Brake Caliper Lubrication	
46–02	Miter Box Lubrication	
46–03	Drag Link Lubrication	
46–04	Power Steering Gear Lubrication	
46-06	Power Steering Cooler Inspection	
47-01	Fuel Filter replacement	
47-02	Fuel/Water Separator Sight Bowl Cleaning and Element Replacement	

Table 6. M2 Maintenance Interval Operations

https://truckmanualshub.com/

M3 Maintenance Operation Sets Table 00–11

The M3 Maintenance Interval Operations table lists all maintenance operations that are to be performed at M3 maintenance interval. Maintenance operation numbers are reference numbers used to help you find detailed instructions in this manual on the maintenance operations to be performed. Perform all maintenance interval operations in M1 and M2 when performing M3 maintenance interval operations.

Maintenance Operation Number	Operation Description	Check
00–09	M1 Maintenance Interval Operations	
00–10	M2 Maintenance Interval Operations	
01-03	Engine Support Fasteners Inspection	
20–03	Radiator Pressure Flushing and Coolant Changing	
26–01	Allison Transmission Fluid and Filter Changing	
32–01	Suspension U-bolt Torque Checking	
35–02	Axle Lubricant and Filter Changing and Magnetic Strainer Cleaning	
42–01	Air Brake System Valve Inspection	
42–02	Bendix AD-9 Air Dryer Desiccant Replacement	
46–05	Power Steering Fluid and Filter Changing	

Table 7. M3 Maintenance Interval Operations

https://truckmanualshub.com/

Maintenance Operation Sets Table 00–12

Operation	Operation Description	Check			
		Initial	M1	M2	M3
01–01	Engine Noise Panel Inspection (noise emission control)			•	•
01–02	Engine Drive Belt Inspection		•	•	•
01-03	Engine Support Fasteners Inspection				•
09–01	Air Cleaner Element Inspecting and Replacing			•	•
15–01	Alternator, Battery, and Starter Checking	•	•	•	•
20–01	Fan Drive and Clutch Inspection		•	•	•
20–02	Pressure Relief Cap Checking		•	•	•
20–03	Radiator Pressure Flushing and Coolant Changing				•
26–01	Allison Transmission Fluid and Filter Changing	•			•
26–02	Transmission Fluid Level Inspection		•	•	
26–03	Transmission Cooler Inspection	•	•	•	•
31–01	Frame Fastener Torque Check	•			
31–05	Chassis Lubrication System Inspection			•	•
31-06	Chassis Lubrication System Reservoir Checking and Refilling			•	•
32–01	Suspension Inspection	•		•	•
32–02	Suspension Lubrication			•	•
33–01	Knuckle Pin Lubrication			•	•
33–02	Tie Rod Inspection			•	•
33–03	Tie Rod Lubrication			•	•
33–04	All-Axle Alignment Checking	•			
35–01	Drive Axle Lubricant Level and Breather Check		•	•	
35–02	Axle Lubricant and Filter Changing, and Magnetic Strainer Cleaning	•			•
35–03	Ridewell Self-Steer Tag Axle Check	•			•
40–01	Wheel Lug Nut and Rim Nut Inspection		•	•	•
40–02	Toe-In Inspection			•	•
41–01	Driveline Inspection			•	•
41–02	Driveline Lubrication			•	•
42–01	Air Brake System Valve Inspection				•
42–02	Bendix AD-9 Air Dryer Desiccant Replacement				•
42–03	Bendix AD-9 Air Dryer Inspection			•	•
42–04	Telma® Axle Retarder Brake Inspection Axle Retarder Brake Inspection		•	•	•
42–05	Camshaft Bracket Lubrication			•	•
42–06	Automatic Slack Adjuster Inspection and Lubrication			•	•

https://truckmanualshub.com/

Maintenance Operation Sets Table 00–12

Operation	Operation Description	Check			
		Initial	M1	M2	M3
42–07	Disc Brake Caliper Lubrication			•	•
46–01	Power Steering Reservoir Fluid Level Check		•	•	•
46–02	Drag Link Lubrication			•	•
46–03	Power Steering Gear Lubrication			•	•
46–04	Drag Link Inspection			•	•
46–05	Power Steering Fluid and Filter Changing				•
46–06	Power Steering Cooler Inspection			•	•
46–07	Right-Hand Steering Ram Lubrication			•	•
47-01	Fuel Filter Replacement			•	•
47-02	Fuel/Water Separator Sight Bowl Cleaning and Element Replacement			•	•
47-03	Fuel Tank Band Nut Tightening	•		•	•
49–01	Exhaust System Inspection		•	•	•
60–01	Tilt Pump Reservoir Fluid Level and System Check		•	•	•
72–01	Door Seal, Door Latch and Door Hinge Lubrication		•	•	•
83–02	Air Conditioner Inspection		•	•	•

Table 8. Maintenance Operation Sets

https://truckmanualshub.com/

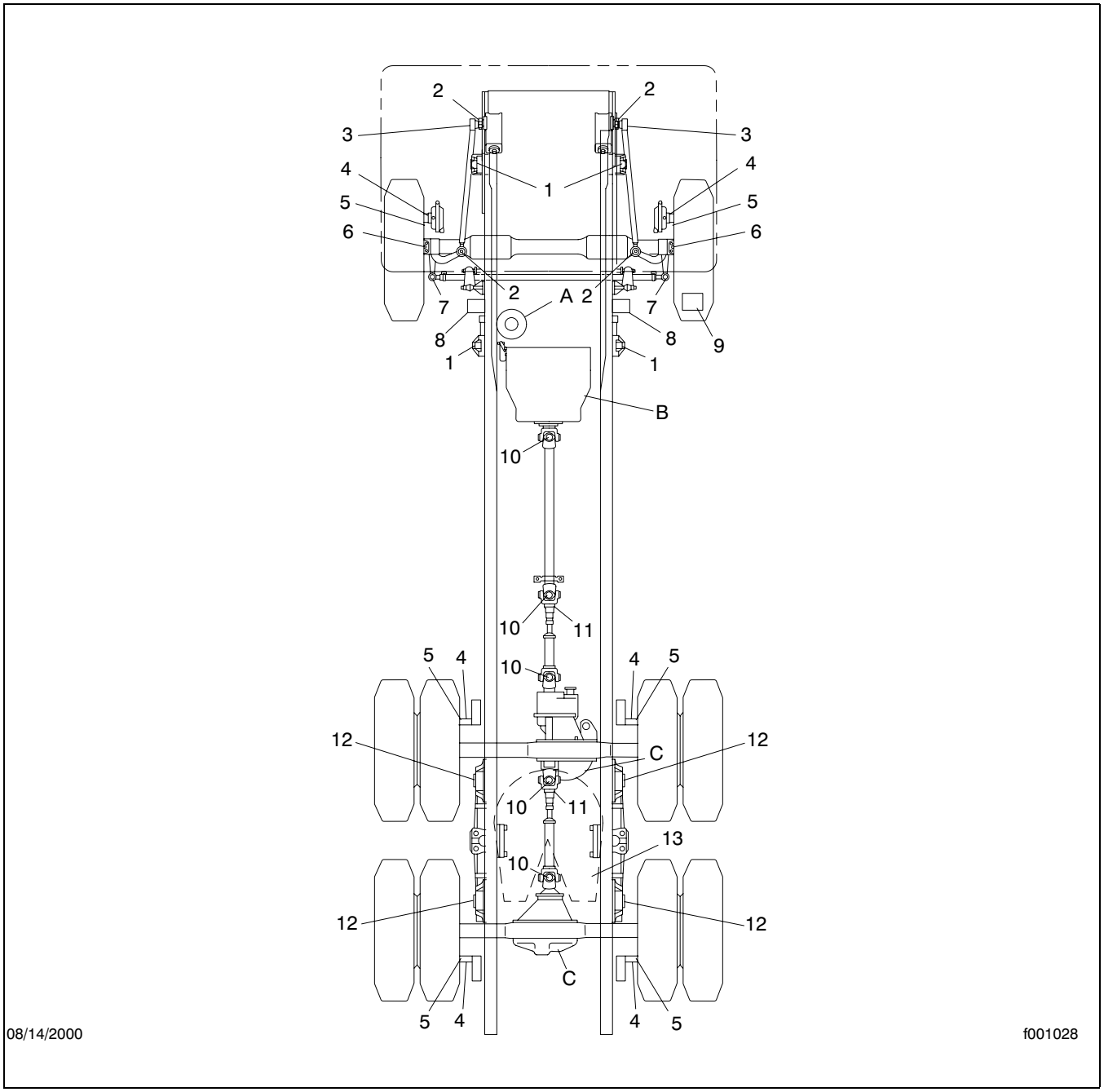

Fig. 1. Lubrication and Fluid Level Check Locations

https://truckmanualshub.com/

Lubrication and Fluid Level Check Locations 00–07

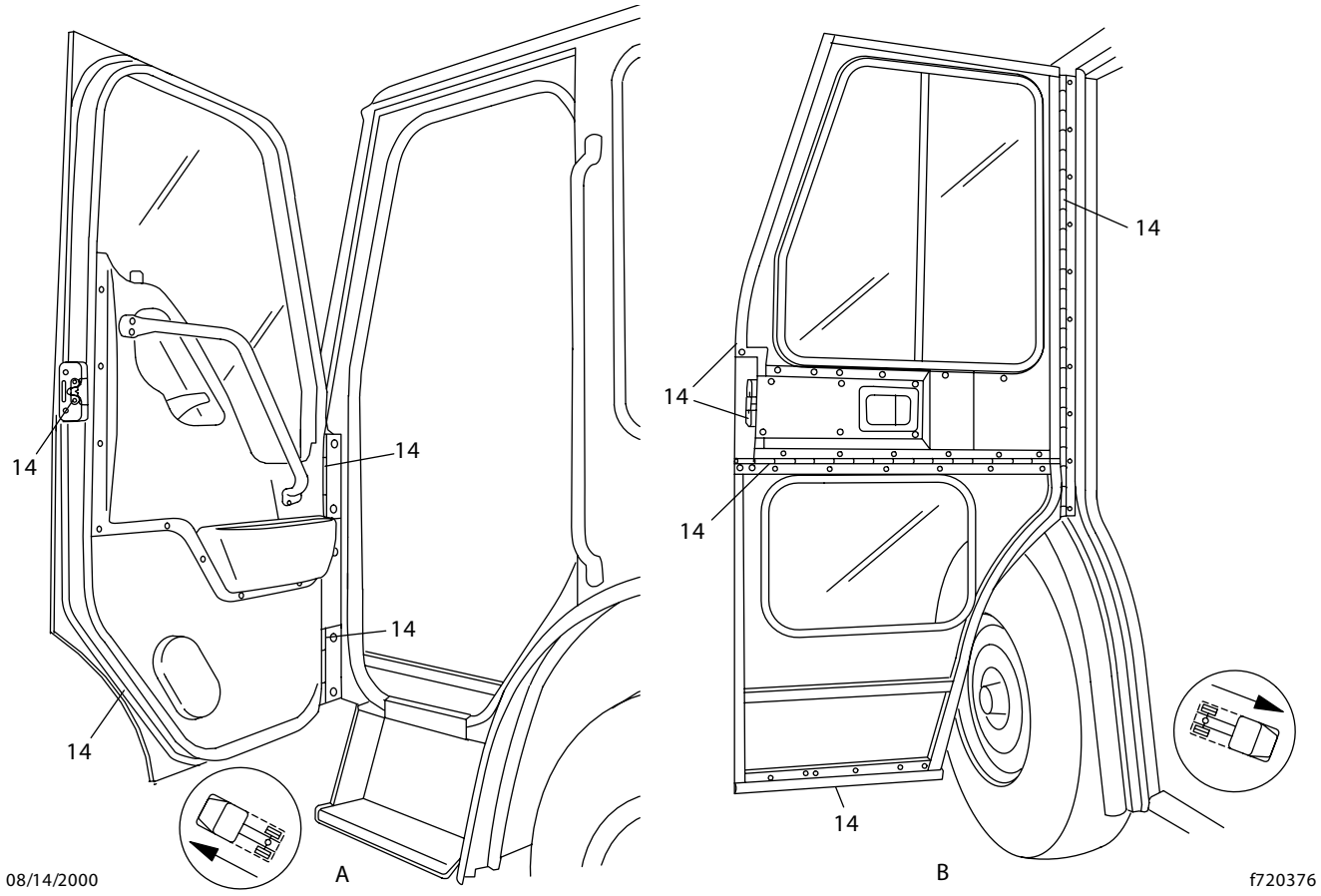

A. Standard Door

B. Stand-Up Right-Hand Drive Fold-Up Door

Fig. 2. Lubrication Check Locations

No.	MOP No. *	Component	Remarks
A	**46-01**	Power Steering Reservoir	Check that power steering fluid is at full mark and add fluid as needed.
B	**26-02**	Transmission	Ensure transmission oil level is correct. Add proper fluid as needed.
C	**35-01**	Axle Lubricant	Check that axle lubricant is at proper level. Add lubricant as needed.

No.	MOP No. *	Component	Remarks
1	**32-02**	Front Suspension	Refer to maintenance operation for detailed procedures.
2	**46-02**	Drag Link	Lubricate grease fittings on pitman arm and axle steering arm.
3	**46-03**	Power Steering Gear	Lubricate grease fitting at output shaft trunnion.

https://truckmanualshub.com/

No.	MOP NO. *	Component	Remarks
4	**42-05**	Camshaft Bracket	Lubricate grease fitting
5	**42-07**	Caliper Bushing	Lubricate grease fitting
6	**42-06**	Automatic Slack Adjuster	Lubricate grease fitting
7	**33-01**	Knuckle Pin	Lubricate 2 grease fittings (top and bottom) at both ends of axle.
8	**33-03**	Tie Rod	Lubricate two grease fittinigs; one at each tie rod.
9	**60-04**	Cab Latch	Lubricate cab latches and cab latch piston pin
10	**60-02**	Cab Tilt Pump Reservoir	Check pump fluid is at proper level. Add fluid as needed.
11	**41-02**	Driveline U-Joint	Lubricate each U-Joint grease fitting, if equipped.
12	**32-02**	Rear Suspension	Refer to maintenance operation for detailed procedures.
13	**31-02**	Fifth Wheel Inspection	Refer to maintenance operation for detailed procedures.
14	**72-01**	Door Seal, Latch and Hinge	Lubricate all door seals, door latches and hinges on cab.

https://truckmanualshub.com/

Noise Emission Controls Maintenance

Federal Law, Part 205: Transportation Equipment Noise Emission Controls

Part 205, Transportation Equipment Noise Emission Controls, requires vehicle manufacturer to furnish, with each new vehicle, such written instructions for proper maintenance, use, and repair of vehicle by ultimate purchaser to provide reasonable assurance of elimination or minimization of noise-emission-control degradation throughout life of vehicle. In compliance with the law, noise emission controls maintenance information in each applicable group of this manual, in conjunction with vehicle workshop manual, provides these instructions to owners.

Recommendations for Replacement Parts

Replacement parts used for maintenance or repair of noise emission controls should be genuine American LaFrance parts. If other than genuine American LaFrance parts are used for replacement or repair of components affecting noise emission control, the owner should be sure that such parts are warranted by their manufacturer to be equivalent to genuine American LaFrance parts in performance and durability.

American LaFrance Noise Emission Controls Warranty

Refer to vehicle owner's warranty information book for warranty information concerning noise emission controls.

Tampering With Noise Controls is Prohibited

Federal law prohibits following acts or causing thereof:

1. Removal or rendering inoperative by any person (other than for purposes of maintenance, repair, or replacement) of any device or element of design incorporated into any new vehicle for the purpose of noise control, prior to its sale or delivery to ultimate purchaser, or while it is in use.
2. The use of vehicle after such device or element of design has been removed or rendered inoperative by any person.

   Among those acts presumed to constitute tampering are acts listed below:

   A. Removal of engine noise-deadening panels.
   B. Removal of cab-tunnel noise-deadening panels.
   C. Removal of, or rendering inoperative, engine speed governor so as to allow engine speed to exceed manufacturer's specifications.
   D. Removal of, or rendering inoperative, fan clutch, including bypassing the control on any thermostatic fan drive to cause it to operate continuously.
   E. Removal of fan shroud.
   F. Removal of, or rendering inoperative, exhaust components, including exhaust pipe clamping.
   G. Removal of air intake components.

Maintenance Instructions

Scheduled intervals are in maintenance tables in this group. A "Verification of Inspections Log (Groups 01, 20, 49, and 60)" follows, and should be filled in each time noise emission controls on vehicle are maintained or repaired.

https://truckmanualshub.com/

Verification of Inspections Log

Verification of Inspections Log, Groups 01, 20, 49, and 60				
Date	**Mileage**	**Item**	**Cost**	**Maintenance Facility**
Group 01 — Engine Noise Panels				
Group 20 — Fan Clutch				
Group 49 — Exhaust System Components				
Group 60 — Cab Tunnel Panels				

https://truckmanualshub.com/

Metric/U.S. Customary Conversion Tables 00–15

When You Know U.S. Customary	Multiply By	For Metric	When You Know Metric	Multiply By	For U.S. Customary
Length					
inches (in)	25.4	millimeters (mm)		0.03937	inches (in)
inches (in)	2.54	centimeters (cm)		0.3937	inches (in)
feet (ft)	0.3048	meters (m)		3.281	feet (ft)
yards (yd)	0.9144	meters (m)		1.094	yards (yd)
miles (mi)	1.609	kilometers (km)		0.6215	miles (mi)
Area					
square inches (in^2)	645.16	square millimeters (mm^2)		0.00155	square inches (in^2)
square inches (in^2)	6.452	square centimeters (cm^2)		0.155	square inches (in^2)
square feet (ft^2)	0.0929	square meters (m^2)		10.764	square feet (ft^2)
Volume					
cubic inches (in^3)	16387.0	cubic millimeter (mm^3)		0.000061	cubic inches (in^3)
cubic inches (in^3)	16.387	cubic centimeters (cm^3)		0.06102	cubic inches (in^3)
cubic inches (in^3)	0.01639	liters (L)		61.024	cubic inches (in^3)
fluid ounces (oz)	29.54	milliliters (mL)		0.03381	fluid ounces (oz)
pints (pt)	0.47318	liters (L)		2.1134	pints (pt)
quarts (qt)	0.94635	liters (L)		1.0567	quarts (qt)
gallons (gal)	3.7854	liters (L)		0.2642	gallons (gal)
cubic feet (ft^3)	28.317	liters (L)		0.03531	cubic feet (ft^3)
cubic feet (ft^3)	0.02832	cubic meters (m^3)		35.315	cubic feet (ft^3)
Weight/Force					
ounces (av) (oz)	28.35	grams (g)		0.03527	ounces (av) (oz)
pounds (av) (lb)	0.454	kilograms (kg)		2.205	pounds (av) (lb)
U.S. tons (t)	907.18	kilograms (kg)		0.001102	U.S. tons (t)
U.S. tons (t)	0.90718	metric tons (t)		1.1023	U.S. tons (t)
Torque/Work Force					
inch–pounds (lbf·in)	11.298	Newton–centimeters (N·cm)		0.08851	inch–pounds (lbf·in)
foot–pounds (lbf·ft)	1.3558	Newton–meters (N·m)		0.7376	foot–pounds (lbf·ft)
Pressure/Vacuum					
inches of mercury (inHg)	3.37685	kilo Pascals (kPa)		0.29613	inches of mercury (inHg)
pounds per square inch (psi)	6.895	kilo Pascals (kPa)		0.14503	pounds per square inch (psi)

Table 9.Metric/U.S. Customary Conversion

When You Know	Subtract	Then Divide By	To Get	When You Know	Multiply By	Then Add	To Get
degrees Fahrenheit (°F)	32	1.8	degrees Celsius (°C)		1.8	32	degrees Fahrenheit (°F)

Table 10. Temperature Conversion

https://truckmanualshub.com/

Torque Values for U.S. Customary Thread Fasteners With Lubricated* or Plated Threads†								
Thread Diameter Pitch	Regular Hex				Flanged			
	Grade 5 Bolt	Grade 5 or B Nut	Grade 8 or 8.2 Bolt	Grade 8 or C Nut	Grade 5 Bolt	Grade B Nut	Grade 8 or 8.2 Bolt	Grade G Nut
	Torque: lbf·ft (N·m)		Torque: lbf·ft (N·m)		Torque: lbf·ft (N·m)		Torque: lbf·ft (N·m)	
	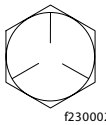 f230002	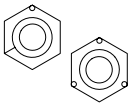 f230003	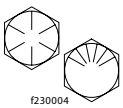 f230004	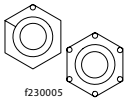 f230005	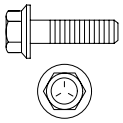 f230006	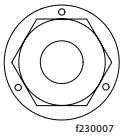 f230007	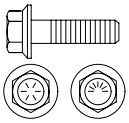 f230008	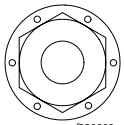 f230009
1/4–20	7 (9)		8 (11)		6 (8)		10 (14)	
1/4–28	8 (11)		9 (12)		7 (9)		12 (16)	
5/16–18	15 (20)		16 (22)		13 (18)		21 (28)	
5/16–24	16 (22)		17 (23)		14 (19)		23 (31)	
3/8–16	26 (35)		28 (38)		23 (31)		37 (50)	
3/8–24	30 (41)		32 (43)		25 (34)		42 (57)	
7/16–14	42 (57)		45 (61)		35 (47)		60 (81)	
7/16–20	47 (64)		50 (68)		40 (54)		66 (89)	
1/2–13	64 (87)		68 (92)		55 (75)		91 (123)	
1/2–20	72 (98)		77 (104)		65 (88)		102 (138)	
9/16–12	92 (125)		98 (133)		80 (108)		130 (176)	
9/16–18	103 (140)		110 (149)		90 (122)		146 (198)	
5/8–11	128 (173)		136 (184)		110 (149)		180 (244)	
5/8–18	145 (197)		154 (209)		130 (176)		204 (277)	
3/4–10	226 (306)		241 (327)		200 (271)		320 (434)	
3/4–16	253 (343)		269 (365)		220 (298)		357 (484)	
7/8–9	365 (495)		388 (526)		320 (434)		515 (698)	
7/8–14	402 (545)		427 (579)		350 (475)		568 (770)	
1-8	—		582 (789)		—		—	
1-12	—		637 (863)		—		—	
1-14	—		652 (884)		—		—	

* American LaFrance recommends that all plated and unplated fasteners be coated with oil before installation.

† Use these torque values if either bolt or nut is lubricated or plated (zinc-phosphate conversion-coated, cadmium-plated, or waxed).

Table 11. Torque Values for U.S. Customary Thread Fasteners With Lubricated or Plated Threads

https://truckmanualshub.com/

Torque Specifications Tables 00–16

Torque Values for U.S. Customary Thread Fasteners With Lubricated* or Plated Threads†						
Thread Diameter Pitch	Regular Hex				Flanged	
	Grade 5 Bolt	Grade 5 or B Nut	Grade 8 or 8.2 Bolt	Grade 8 or C Nut	Grade 8 or 8.2 Bolt	Grade G Nut
	Torque: lbf·ft (N·m)		Torque: lbf·ft (N·m)		Torque: lbf·ft (N·m)	
	f230002	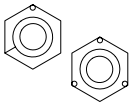 f230003	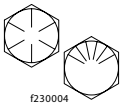 f230004	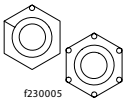 f230005	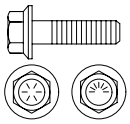 f230008	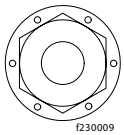 f230009
1/4–20	8 (11)		10 (14)		—	
1/4–28	9 (12)		12 (16)		—	
5/16–18	15 (20)		22 (30)		22 (30)	
5/16–24	17 (23)		25 (34)		—	
3/8–16	28 (38)		40 (54)		40 (54)	
3/8–24	31 (42)		45 (61)		—	
7/16–14	45 (61)		65 (88)		65 (88)	
7/16–20	50 (68)		70 (95)		—	
1/2–13	70 (95)		95 (129)		95 (129)	
1/2–20	75 (102)		110 (149)		—	
9/16–12	100 (136)		140 (190)		140 (190)	
9/16–18	110 (149)		155 (210)		—	
5/8–11	135 (183)		190 (258)		190 (258)	
5/8–18	155 (210)		215 (292)		—	
3/4–10	240 (325)		340 (461)		340 (461)	
3/4–16	270 (366)		380 (515)		—	
7/8–9	385 (522)		540 (732)		—	
7/8–14	425 (576)		600 (813)		—	
1-8	580 (786)		820 (1112)		—	
1-12	635 (861)		900 (1220)		—	
1-14	650 (881)		915 (1241)		—	

* Threads may have residual oil, but will be dry to touch.

† Male and female threads (bolt and nut) must both be unlubricated and unplated; if either is plated or lubricated, use **Table 7**. American LaFrance recommends that all plated and unplated fasteners be coated with oil before installation.

Table 12. Torque Values for U.S. Customary Thread Fasteners With Dry (Unlubricated) Plain (Unplated) Threads

https://truckmanualshub.com/

Torque Values for Metric Thread Fasteners With Lubricated* or Plated Threads†				
Thread Diameter–Pitch	Class 8.8 Bolt	Class 8 Nut	Class 10.9 Bolt	Class 10 Nut
	Torque: lbf·ft (N·m)		Torque: lbf·ft (N·m)	
	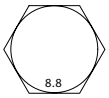	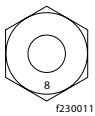	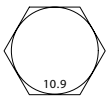	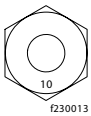
M6	5 (7)		7 (9)	
M8	12 (16)		17 (23)	
M8 x 1	13 (18)		18 (24)	
M10	24 (33)		34 (46)	
M10 x 1.25	27 (37)		38 (52)	
M12	42 (57)		60 (81)	
M12 x 1.5	43 (58)		62 (84)	
M14	66 (89)		95 (129)	
M14 x 1.5	72 (98)		103 (140)	
M16	103 (140)		148 (201)	
M16 x 1.5	110 (149)		157 (213)	
M18	147 (199)		203 (275)	
M18 x 1.5	165 (224)		229 (310)	
M20	208 (282)		288 (390)	
M20 x 1.5	213 (313)		320 (434)	
M22	283 (384)		392 (531)	
M22 x 1.5	315 (427)		431 (584)	
M24	360 (488)		498 (675)	
M24 x 2	392 (531)		542 (735)	
M27	527 (715)		729 (988)	
M27 x 2	569 (771)		788 (1068)	
M30	715 (969)		990 (1342)	
M30 x 2	792 (1074)		1096 (1486)	

* American LaFrance recommends that all plated and unplated fasteners be coated with oil before installation.

† Use these torque values if either bolt or nut is lubricated or plated (zinc-phosphate conversion-coated, cadmium-plated, or waxed).

Table 13. Torque Values for Metric Thread Fasteners With Lubricated or Plated Threads

https://truckmanualshub.com/

List of Abbreviations 00–17

The following is a list of definitions for abbreviations and symbols used in American LaFrance publications.

A..... amperes
ABS..... antilock braking system
ABS..... acrylonitrile-butadiene-styrene
A/C ..... air conditioner
AC ..... alternating current
ACPU ..... air conditioning protection unit
ADLO ..... auto-disengagement lockout
a.m. ..... *ante meridiem* (midnight to noon)
AM..... amplitude modulation
amp(s)..... ampere(s)
AMU ..... air management unit
ANSI..... American National Standards Institute
API ..... American Petroleum Institute
ARI ..... Air Conditioning and Refrigeration Institute
ASA..... American Standards Association
ASF ..... American Steel Foundries
ASR..... automatic spin regulator
assy...... assembly
ASTM ..... American Society for Testing and Materials
ATC ..... automatic temperature control
ATC ..... automatic traction control
ATC ..... automatic transmission control
ATF..... automatic transmission fluid
attn..... attention
aux. ..... auxiliary
av ..... *avoirdupois* (British weight system)
AWG..... American wire gauge
AWS ..... American Welding Society
BAT ..... battery
BBC..... bumper-to-back-of-cab
BOM ..... bill of material
BTDC ..... before top dead center
Btu(s)..... British thermal unit(s)
C..... common (terminal)
CAC..... charge air cooler
CAN..... controller area network
CARB..... California Air Resources Board
CAT ..... Caterpillar
CB ..... circuit breaker
CB ..... citizens' band
CCA..... cold cranking amperes
CD-ROM..... compact-disc/read-only memory
CDTC ..... constant discharge temperature control
CEL ..... check-engine light
CFC ..... chlorouorocarbons (refrigerant-12)
cfm ..... cubic feet per minute
CFR ..... Code of Federal Regulations
CLS..... coolant level sensor
cm..... centimeters
cm³ ..... cubic centimeters
CMVSS ..... Canadian Motor Vehicle Safety Standard
Co. ..... company
COE ..... cab over engine
Corp. ..... corporation
CPU ..... central processing unit
cSt ..... centistokes (unit of measurement for describing the viscosity of general liquids)
cu ft ..... cubic feet
cu in ..... cubic inches
CUM..... Cummins
CWS ..... collision warning system
DC..... direct current
DDA ..... Detroit Diesel Allison
DDC ..... Detroit Diesel Corporation
DDE ..... Detroit Diesel Engines
DDEC..... Detroit Diesel Electronic (engine) control
DDR ..... diagnostic data reader
DDU ..... driver display unit
DGPS..... differential global positioning system
dia...... diameter
DIP..... dual inline package (switch)
DLA ..... data link adaptor
DLU ..... data logging unit
DMM ..... digital multimeter
DOT ..... Department of Transportation
DRL ..... daytime running lights
DRM..... dryer reservoir module
DSM..... district service manager
DTC ..... discharge temperature control
DVOM ..... digital volt/ohm meter
ea...... each
EBS ..... electronic braking system
ECAP..... electronic control analyzer programmer
ECAS..... electronically controlled air suspension
ECI..... electronically controlled injection
ECM..... electronic control module
ECU ..... electronic control unit
EDM..... electronic data monitor
EEPROM. .. electrically erasable programmable read-only memory
EMI ..... electromagnetic interference
EOA ..... electric over air
EP ..... extreme pressure (describes an antiwear agent added to some lubricants)
EPA..... Environmental Protection Agency
EPS..... engine position sensor

https://truckmanualshub.com/

etc. ..... *et cetera* (and so forth)
ETEC..... electronic truck engine control
EUI ..... electronic unit (fuel) injectors
FAS ..... Freightliner air suspension
Fig...... figure
fl oz ..... fluid ounces
FLA ..... post-1984 advancements Freightliner COE
FLB ..... enhanced Freightliner FLA COE
FLC ..... steel-cab Freightliner 112 Conventional
FLD ..... post-1984 advancements Freightliner 112/120 aluminum-cab Conventional
FM ..... frequency modulation
FMCSA ..... Federal Motor Carrier Safety Administration
FMI ..... failure mode identifier
FMSI..... Friction Materials Standards Institute
FMVSS..... Federal Motor Vehicle Safety Standard
FRP ..... berglass reinforced plastic
FSA ..... Field service authorization
ft..... feet
ft³..... cubic feet
ft³/min ..... cubic feet per minute
FTL..... Freightliner
F.U.E.L. ..... fuel usage efficiency level
g ..... grams
gal ..... gallons
GAWR ..... gross axle weight rating
GL ..... gear lubricant
GND ..... ground
gpm..... gallons per minute
GPS..... global positioning system
GVWR ..... gross vehicle weight rating
HCU ..... hydraulic control unit
HD ..... heavy-duty
HEPA ..... high-efficiency particulate air (lter)
HFC..... hydrogenated fluorocarbons (refrigerant-134a)
hp..... horsepower
hp..... high pressure
HRC ..... Rockwell "C" hardness
hr(s) ..... hour(s)
htr ..... heater
HVAC ..... heating, ventilating and air conditioning
H/W ..... hardware
ICU ..... instrumentation control unit
i.d. ..... inside diameter
ID..... identification
IFI ..... Industrial Fasteners Institute
IGN..... ignition
ILO ..... *in lieu of* (in the place of)
in ..... inches
in³ ..... cubic inches
Inc. ..... incorporated
inH$_2$O ..... inches of water
inHg..... inches of mercury
IP ..... instrument panel
ISO ..... International Organization for Standardization
k..... kilo (1000)
kg ..... kilograms
km ..... kilometers
km/h ..... kilometers per hour
kPa ..... kilo Pascals
kW ..... kilowatts
L ..... liters
lb ..... pounds
lbf·ft ..... pounds force feet
lbf·in ..... pounds force inches
LCD ..... liquid crystal display
LED ..... light-emitting diode
LH ..... left-hand
LH DR..... left-hand drive
LHK ..... liters per hundred kilometers
LHS ..... low hydrogen steel
LLC..... limited liability company
L/min ..... liters per minute
LPG ..... liquefied petroleum gas
m ..... meters
max. ..... maximum
MESA ..... Mining Enforcement Safety Act
mfr. ..... manufacturer
mi ..... miles
MID ..... message identifier
MIL ..... military specification
min. ..... minutes
min. ..... minimum
misc. ..... miscellaneous
mL ..... milliliters
mm ..... millimeters
mod. ..... module
mpg ..... miles per gallon
mph ..... miles per hour
MSHA ..... Mining Safety and Health Administration
MVDA ..... Motor Vehicle Dealers Association
n ..... negative (front axle wheel alignment specification)
N/A ..... not applicable
N·cm ..... Newton-centimeters
NC ..... normally closed (terminal or switch)
NHTSA ..... National Highway Traffic Safety Administration
NIOSH ..... National Institute for Occupational Safety and Health
NLGI ..... National Lubricating Grease Institute

https://truckmanualshub.com/

List of Abbreviations 00–17

N·m..... Newton-meters
NO..... normally open (terminal or switch)
no...... number
NPT..... national pipe thread
NPTF..... national pipe thread fitting
NSBU..... neutral start/backup
NT..... nylon tube or nylon tubing
OCV..... open circuit voltage
o.d...... outside diameter
O.D...... overdrive
OEM..... original equipment manufacturer
OSHA..... Occupational Safety and Health Administration
oz..... ounces
ozf·in..... ounces force inches
p..... positive (front axle wheel alignment specification)
parm..... parameter
PC..... personal computer
PCB..... printed circuit board
PDC..... parts distribution center
PDM..... power distribution module
PEEC..... programmable electronic engine control
PID..... parameter identifier
PLC..... power line carrier
PLD..... Pumpe-Linie-Düse (pump-line-nozzle)
p.m...... post meridiem (noon to midnight)
p/n..... part number
PSA..... pressure sensitive adhesive
psi..... pounds per square inch
psia..... pounds per square inch, atmosphere
psig..... pounds per square inch, gauge
pt..... pints
pt..... points
PTCM..... pressure time control module
PTO..... power take-off
pvc..... polyvinyl chloride
PWM..... pulse width modulation
qt..... quarts
qty...... quantity
R & O..... rust inhibitors and oxidants
R–12..... refrigerant-12 (CFC)
R–134a..... refrigerant-134a (HFC)
RAM..... random access memory
recirc..... recirculation
Ref(s)...... reference(s)
RFI..... radio frequency interference
RH..... right-hand
RH DR..... right-hand drive
R/I..... removal and installation
RMA..... return material authorization
ROM..... read-only memory
rpm..... revolutions per minute
R/R..... removal and replacement
RSG..... road speed governor
RTV..... room temperature vulcanizing
RV..... recreational vehicle
SAE..... Society of Automotive Engineers
SB..... service bulletin
SD..... severe duty
SDU..... step deployment unit
SEL..... shutdown engine light
SI..... service information
SI..... Système International
SID..... subsystem identifier
SMC..... sheet molded compound
S/N..... serial number
SPACE..... seat pretensioner activation for crash survival enhancement
SRT..... standard repair time
SSD..... side sensor display
SST..... stainless steel
std...... standard
S/W..... software
SW..... switch
TAM..... thermocouple amplifier module
TBS..... turbo boost sensor
TCU..... transmission control unit
TDC..... top dead center
TDR..... technician diagnostic routine
temp..... temperature
TIG..... tungsten inert gas
TPS..... thermal protection switch
TPS..... throttle position sensor
TRS..... timing reference sensor
TSO..... truck sales order
U.D...... underdrive
UNC..... unfied national coarse
UNF..... unfied national fine
U.S...... United States
U.S.A...... United States of America
USC..... United States customary (measures)
V..... volts
VDC..... vehicle data computer
Vdc..... volts, direct current
VIN..... vehicle identification number
VIP..... vehicle instrumentation and protection (Kysor)
VOC..... volatile organic compounds
VOM..... volt-ohmmeter
VSG..... variable speed governor

https://truckmanualshub.com/

VSS ..... vehicle speed sensor
WB ..... wire braid
WI ..... work instructions
WOT ..... wide open throttle
- ..... minus or negative
+ ..... plus or positive
± ..... plus-or-minus
> ..... greater than
< ..... less than
x ..... by (used in fastener size descriptions)
" ..... inches
° ..... degrees (of an angle)
°C ..... degrees Celsius (centigrade)
°F ..... degrees Fahrenheit
..... number
% ..... percent
& ..... and
© ..... copyright
™ ..... trademark
® ..... registered trademark

https://truckmanualshub.com/

This page intentionally left blank.

https://truckmanualshub.com/

Index, Alphabetical

Title of Maintenance Operation (MOP) **MOP Number**

Engine Drive Belt Inspection 01–01

Engine Support Fasteners Checking 01–02

https://truckmanualshub.com/

This page intentionally left blank.

https://truckmanualshub.com/

01–01 Engine Drive Belt Inspection

Worn or loose drive belts may cause premature bearing failure or engine overheating. Excessive tension or too little tension on the belt may result in excessive and premature belt wear. Poly-V belts, or serpentine belts, are retained by a spring belt tensioner that requires no tension adjustment. Replace the engine drive belt if any conditions described in the Visual Inspection section, below, are found. V-belts are installed as individual belts, and as matched sets. When replacing a matched set of belts, always replace both belts at the same time. Matched belts must be from the same belt manufacturer. To inspect a belt, gently twist the belt to view the belt sidewalls and bottom. Visually inspect all drive belts for the following conditions, then perform the belt tension inspection:

Visual Inspection

1. Inspect belt for glazing. See **Fig. 1**, Ref. A. Glazing is represented by shiny sidewalls caused by friction created when a loose belt slips in the pulleys.
2. Inspect the belt for ply separation. See **Fig. 1**, Ref. B. Oil, grease and belt dressing can cause the belt layers to separate. Repair oil or coolant leaks before replacing the damaged belts. Do not use belt dressing on any belt.
3. Check the belt for a jagged or streaked sidewall. See **Fig. 1**, Ref. C. Jagged or streaked sidewalls are the result of foreign objects, such as sand or gravel in the pulley, or a rough pulley surface.
4. Check for tensile breaks; breaks in the cord body. See **Fig. 1**, Ref. D. Cuts in a belt are usually caused by foreign objects in the pulley, or by prying or forcing the belt during removal or installation.
5. Check for uneven ribs on serpentine (poly-V) belts. See **Fig. 1**, Ref. E. Foreign objects in the pulley will erode the undercord ribs, causing the belt to lose its gripping power.
6. Check the drive belts for cracks. See **Fig. 1**, Ref. F. Small irregular cracks are usually the signs of an old belt.
7. Visually inspect the pulleys for excessive play or wobble. Excessive play or wobble indicates a failure of the pulley bearing. Check for belt squealing or squeaking. Replace all bearings as necessary.

NOTE: If it is difficult to distinguish the location of a suspected bearing noise, place a stethoscope on the component being checked, not the pulley, to isolate the area from outside interference.

8. Inspect all pulleys for foreign objects, oil, or grease in the grooves.

Belt Tension Inspection

Spring-Tension Type

On belts equipped with a spring belt tensioner, the belt tension is adjusted automatically. Ensure tensioner is holding tension on the belt by inserting the end of a breaker bar in the 1/2-inch square hole on the forward face of the tensioner. Rotate the tensioner down, away from the belt. When the breaker bar is released slowly, the belt tensioner should return to its original position. If not, see **Group 01** of the *Condor® Workshop Manual* for replacement instructions.

https://truckmanualshub.com/

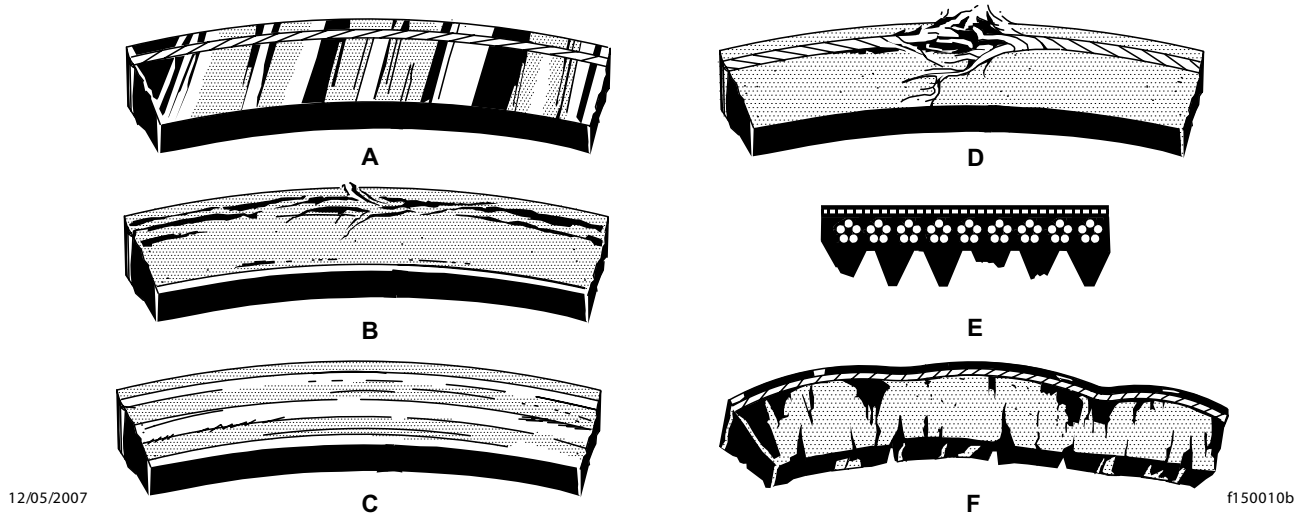

A. Glazing
B. Separating Layer
C. Side Streaked Walls
D. Tensile Break
E. Uneven Ribs
F. Cracks

Fig 1. Drive Belt Replacement Conditions, V-Belts

01-02 Engine Support Fasteners Checking

Check rear engine-support fasteners (see **Fig. 2,** Ref. 4) for tightness. Using a torque wrench, tighten the 3/4-inch fasteners to 215 - 265 lbf-ft (292 - 359 Nm).

Check the front engine-support fasteners for tightness. Using a torque wrench, tighten the 5/8-inch fasteners to 125 lbf-ft (170 Nm).

NOTE: During engine overhaul or whenever engine has been removed, inspect lower and upper isolators (see **Fig. 2,** Ref.1 and Ref. 6) and replace if worn. See **Group 01** of the *Condor Workshop Manual* for procedures.

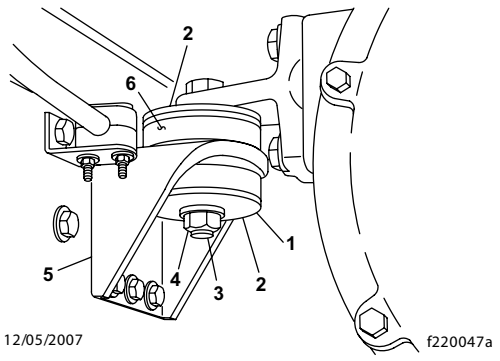

1. Lower Isolator
2. Engine Support Washer
3. 3/4-10 Capscrew
4. 3/4-10 Hexnut
5. Engine Mount
6. Upper Isolator

Fig 2. Rear Engine Mount

https://truckmanualshub.com/

Index, Alphabetical

Title of Maintenance Operation (MOP) **MOP Number**

Air Cleaner Element Inspecting and Replacing 09–01

https://truckmanualshub.com/

This page intentionally left blank.

https://truckmanualshub.com/

09–01 Air Cleaner Element Inspection and Replacement

Inspect air cleaner element for holes or tears at recommended interval. If air cleaner element is damaged, replace it. See **Group 09** of the *Condor® Workshop Manual* for removal and installation instructions.

Replace air cleaner element when filter restriction reaches maximum allowable restriction. See **Table 1** for specific restriction values for your engine. See **Group 09** of the *Condor® Workshop Manual* for removal and installation procedures.

Intake-Air Restriction Indicator Values		
Engine Type	**Initial inH_2O**	**Service inH_2O***
Caterpillar	12	25
Cummins	12	25

* maximum allowable restriction

Table 1. Intake-Air Restriction Indicator Values

https://truckmanualshub.com/

This page intentionally left blank.

https://truckmanualshub.com/

Index, Alphabetical

Title of Maintenance Operation (MOP) **MOP Number**

Alternator, Battery, and Starter Checking 15–01

https://truckmanualshub.com/

This page intentionally left blank.

https://truckmanualshub.com/

15–01 Alternator, Battery, and Starter Checking

WARNING

Batteries generate explosive gas as a by-product of their chemical process. Do not smoke when working around batteries. Put out all flames and remove any source of sparks or intense heat in the vicinity of battery compartment. Ensure battery compartment has been completely vented before disconnecting or connecting battery cables.

Battery acid is extremely harmful if splashed in eyes or on skin. Always wear a face shield and protective clothing when working around batteries.

1. Check tightness of alternator bracket fasteners; using a torque wrench, tighten fasteners as needed. For torque values, see **Group 15** of the *Condor® Workshop Manual*.
2. Check that all electrical connections at alternator and starter are clean. Clean and tighten all charging system electrical connections, including connections at the starter B terminal and where alternator charging cable terminates.
3. Inspect battery cables for wear, and replace as needed. Clean the cable connector terminals with a wire brush. See **Group 54** of the *Condor® Workshop Manual* for troubleshooting instructions, for adjustment, repair, or replacement instructions:
   - 3.1. Clean and tighten battery ground cable, terminal and clamps.
   - 3.2. Inspect retainer assembly or battery-hold-downs and battery box. Replace worn or damaged parts. Remove any corrosion with a wire brush and wash with a weak solution of baking soda and water. Rinse with clean water, and dry. Paint retainer assembly, if needed, to prevent rusting.
   - 3.3. Check that foreign objects, such as stones, bolts, and nuts are removed from battery box.
   - 3.4. After cleaning, connect cables to battery terminals, use a torque wrench to tighten them to torque specifications listed on battery, generally 10 to 15 lbf·ft (14 to 20 Nm).
   - 3.5. Spray each connection with dielectric red enamel and coat the battery terminals with dielectric grease; see **Table 1**.

Approved Dielectric Protectants	
Protectant Material	**Approved Brand**
Dielectric Grease	Lubriplate FLP DS–ES
Dielectric Red Enamel Spray-On Application	3M 1602 IVI-Spray Sealer
	Spray-On B–6–665
Dielectric Red Enamel Brush-On Application	Glyptal 1201EW-Low VOC, Red; Order at www.glyptal.com or 1-800-GLP-1201

Table 1, Approved Dielectric Protectants

4. Check alternator wiring for missing insulation, kinks and heat damage. Replace or repair as necessary. Inspect terminals on battery lock-out switch and magnetic switch. Ensure all terminal connections are clean and tight. Coat terminal connections with dielectric red enamel after cleaning; see **Table 1**.

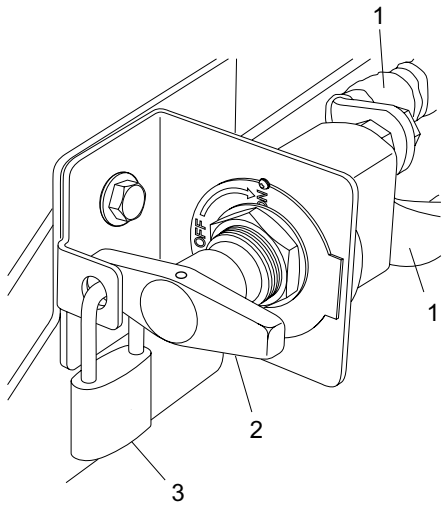

1. Battery Cable
2. Battery Lock-out Switch Control Handle
3. Lock

Fig 1. Battery Lock-Out Switch

https://truckmanualshub.com/

This page intentionally left blank.

https://truckmanualshub.com/

Index, Alphabetical

Title of Maintenance Operation (MOP)	MOP Number
Fan Drive and Clutch Inspecting (noise emission control)	20–01
Pressure Relief Cap Checking	20–02
Radiator Pressure Flushing and Coolant Changing	20–03

https://truckmanualshub.com/

This page intentionally left blank.

https://truckmanualshub.com/

20–01 Fan Drive and Clutch Inspecting (noise emission control)

Horton DriveMaster® Fan Clutch

NOTE: If any part of fan clutch needs repairing or replaced after performing checks below, see **Group 20** of *L-Line and A-Line Workshop Manual.*

1. Turn Battery Lockout Switch to OFF position and secure with lock.
2. Drain all air from primary and secondary air tanks. If equipped with an air starter, drain air starter reservoir.

⚠ WARNING

Ensure batteries are disconnected using Battery Lockout Switch and secured with a padlock preventing accidental starting of engine. Ensure all air is drained from primary and secondary air tanks and, if applicable, drain air starter reservoir. Should engine start during this procedure, the fan could engage resulting in severe personal injury.

3. Inspect all electrical connections and wiring to fan clutch solenoid. Secure connections, if loose. Replace all wires and connectors if damaged.
4. Clean fan clutch air solenoid valve filter, if equipped.
   - 4.1. Unscrew fan clutch solenoid valve air filter assembly and remove filter element.
   - 4.2. Clean filter element with approved cleaning solvent.
   - 4.3. Using a clean, lint free cloth, wipe of any excess solvent.
   - 4.4. Reassemble clutch valve solenoid air filter assembly and re-install on vehicle.
5. Visually inspect fan for bent, cracked or damaged blades.Replace fan if damaged.
6. Inspect for adequate clearance between fan blades and other components.
7. Check fan belt for excessive wear, incorrect tension and alignment. Replace if necessary and correct any tension or alignment as needed.
8. Check for excessive wear on friction facing. Replace friction facing if it is worn to a 3/16-inch (4.8mm) thickness or less. Also, inspect friction facing for oil contamination or burn marks. If evidence or oil or burn marks are found, replace friction facing.
9. Unlock and turn Battery Lockout Switch to ON position. Start engine and charge air system to 120 psi (827 kPa). Manually engage and disengage fan clutch.

   Check fan and fan clutch from a distance. Look for any noticeable vibration, fan blade contact, fan clutch slippage, and overall fan clutch operation.

   If fan clutch does not operate correctly, see **Group 20** of *L-Line and A-Line Workshop Manual* for troubleshooting and repair procedures.
10. With air system charged to 120 psi (827 kPa), check fan clutch for audible air leaks, using a suitable listening device.

    Check solenoid valve, air filter assembly, air hoses and fittings. See **Fig. 1**. Using a wet finger or a soapy water solution, check components for leaks.

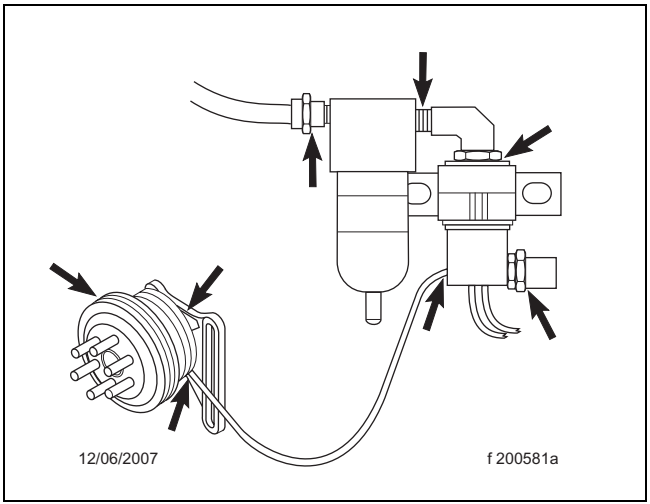

Fig 1. Checking Air Leaks (Horton DriveMaster)

11. If air leak is detected, remove fan blade. Install new seal kit. See **Group 20** of *L-Line and A-Line Workshop Manual* for repair procedures.
12. Check fan drive for discoloration or any other signs of slippage or overheating.

https://truckmanualshub.com/

NOTE: Fan clutch may slip if air supply pressure is below 70 psi (483 kPa) or if there is a leak inside fan clutch. All air leaks must corrected for proper operation.

13. Check fan clutch bearings.
    - 13.1. Turn in both directions and feel for worn hub bearings.
    - 13.2. If possible, remove drive belt and check for worn sheave bearings by turning sheave in both directions.
    - 13.3. If either hub or sheave bearings are worn, replace them, using a Horton DriveMaster Super Kit.
14. For instructions and kit part number, see **Group 20** of the *L-Line and A-Line Workshop Manual*.

20–02 Pressure Relief Cap Checking

WARNING

Do not remove or loosen surge tank cap until engine and cooling system have completely cooled. Use extreme care when removing cap. A sudden release of pressure from removing cap prior to system cooling can result in a surge of scalding coolant that could cause serious personal injury.

CAUTION

The radiator cap currently installed may not be the same one installed when the vehicle was built. If the radiator cap must be replaced, make sure that it is correct cap for the cooling system of vehicle. Because radiator cap pressure rating affects operating temperature of the engine, installing an improperly rated radiator cap may have adverse effects on cooling system, and engine operating temperatures. This could cause premature engine wear or damage.

1. Remove surge tank cap.
2. Using a radiator-cap tester, check pressure cap to see if it maintains pressure to within 10% of pressure rating marked on cap. If it doesn't, replace cap. See **Fig. 2**. Make sure replacement radiator cap is correctly rated for cooling system of vehicle.
3. There is a second valve in radiator cap that opens under vacuum. This prevents collapse of hoses and other parts that are not internally supported when the system cools. Inspect vacuum-relief valve to be sure it is not stuck.
4. Ensure cap seals properly on coolant filler neck seat, and that radiator cap gasket is not damaged. On vehicles with screw on caps with O-rings, ensure O-ring is not cracked or deteriorated. Replace cap if gasket or O-ring shows deterioration or damage.

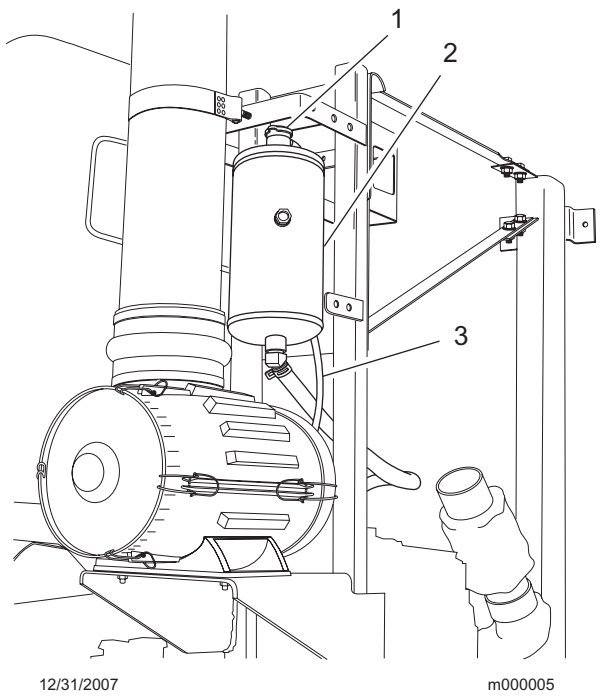

1. Surge Tank Cap
2. Surge Tank
3. Surge Tank Overflow Hose

Fig 2. Surge Tank Location

https://truckmanualshub.com/

20–03 Radiator Pressure Flushing and Coolant Changing

NOTE: For additional instructions on cleaning and flushing engine's cooling system, see applicable engine manufacturer's maintenance and operation manual.

1. Park vehicle, apply parking brakes, chock tires and tilt cab.
2. Place a suitable container under elbow of heat exchanger for automatic transmission.
   The container should be capable of holding at least 60 quarts (56.8 liters) of fluid.

WARNING

Do not remove or loosen surge tank cap until engine and cooling system have completely cooled. Use extreme care when removing cap. A sudden release of pressure from removing cap prior to the system cooling can result in a surge of scalding coolant that can cause serious burns to personnel.

3. Remove surge tank cap.

WARNING

Do not attempt to drain cooling system until coolant and engine are cool. Draining cooling system prior to system cooling can result in severe burns to personnel due to scalding.

4. Open draincock located at heat exchanger. See **Fig. 3**. Allow coolant to drain.
5. Close draincock. Tighten draincock, but do not overtighten.
6. Disconnect radiator upper and lower hoses, and install surge tank cap. Attach flushing gun nozzle to radiator at lower radiator hose opening. Run water until radiator is full.

CAUTION

When flushing radiator, do not apply more than 15 psi (103 kPa) air pressure. Excessive pressure can damage radiator.

7. Gradually, apply air pressure to help dislodge sediment built up in radiator core. Do not apply more than 15 psi (103 kPa) air pressure to radiator. Pressures exceeding 15 psi (103 kPa) could damage radiator core.
8. Shut off air at pressure gun nozzle and allow radiator to refill with water.
9. Repeat previous two steps until clean water flows from radiator.
10. Open draincock at heat exchanger and allow radiator to drain. Close and tighten draincock after radiator has been drained. Do not overtighten draincock.
11. Connect all hoses. The hose clamps can be either T-bolt clamps (**Fig. 4**) or Breeze Constant-Torque clamps (**Fig. 5**).

    When working with T-bolt type hose clamps, tighten clamps 55 lbf-in (620 Ncm). These clamps are now standard on hoses with an inside diameter greater than 2 inches (51 mm).

https://truckmanualshub.com/

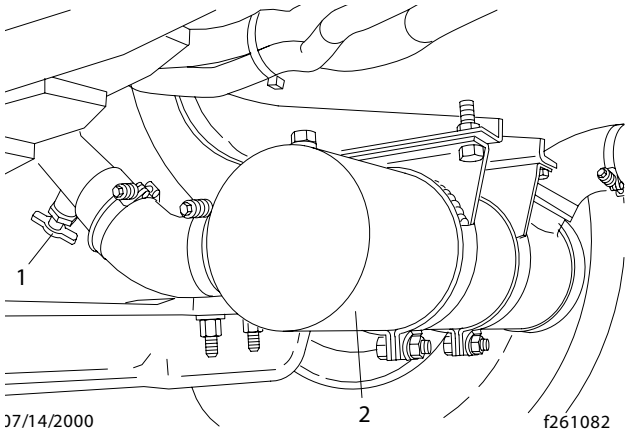

1. Coolant Draincock
2. Transmission Cooler

Fig 3. Coolant Draincock

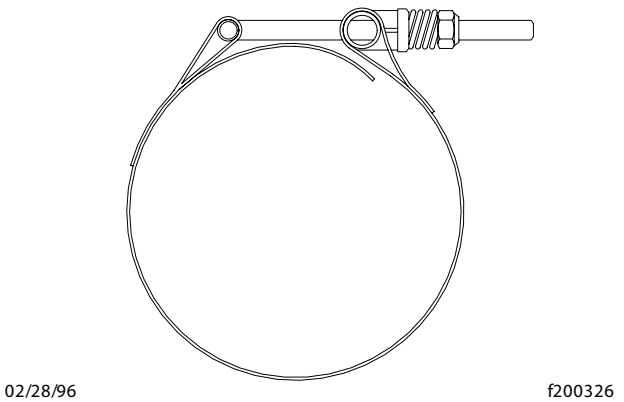

Fig 4. T-Bolt Type Hose Clamp

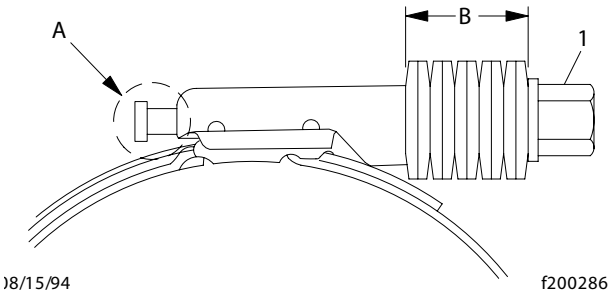

A. The screw tip must extend about 1/4 inch (6 mm).
B. The belleville washer stacks must be collapsed almost flat.
1. Tightening Screw Hex

Fig 5. Breeze Constant-Torque Hose Clamp Installation

When installing Breeze Constant-Torque hose clamps, clamps must be tightened to correct torque. Screw tip of clamp must extend about 1/4 inch (6 mm) from clamp housing, and belleville washer stacks must be collapsed almost flat. Use a torque wrench to install these hose clamps correctly. The correct installation torque for Breeze Constant-Torque hose clamps is as follows:

For Breeze Constant-Torque hose clamps with a 5/16-inch tightening screw hex: 55 lbf·in (620 Ncm).

For Breeze Constant-Torque hose clamps with a 3/8-inch tightening screw hex: 90 lbf·in (1020 Ncm).

NOTE: All hose clamps will lose torque after installation due to *compression set*. However, when correctly installed, Breeze Constant-Torque clamps will hold enough torque to automatically adjust and keep consistent sealing pressure. During vehicle operation and shutdown, screw tip may adjust according to temperature and pressure changes. Torque may need adjusting for individual applications.

12. Place a pan under coolant filter, if equipped, to catch engine coolant.
13. Remove coolant filter with a strap or chain wrench by turning counterclockwise. Install a new coolant filter by turning clockwise and hand tighten only.
14. Fill cooling system with new coolant. See **Table 1** for vehicle's coolant capacity. Certain equipment such as fuel heaters, water filters and

https://truckmanualshub.com/

auxiliary heaters may increase coolant capacity and require additional coolant. Cooling system is full when coolant level reaches MAX line on surge tank. American LaFrance recommends the use of a precharged and premixed antifreeze when refilling cooling system. See **Table 2** for a list of some of the precharged antifreeze available. Use of an equivalent antifreeze to those listed in table is also acceptable. Always ensure antifreeze used meets American LaFrance's specifications and is at proper concentration for protection in vehicle operating area. See **Table 3** for antifreeze protection information. American LaFrance specifies that antifreeze must be an ethylene glycol solution that meets GM 6038 M Engineering Standards or aethylene glycol solution that has less than 0.1% anhydrous sodium metasilicate, and meets either GM 1825 M or GM 1899 M Engineering Standards. If supplemental coolant additives are being used, add supplements to coolant as necessary. See coolant additive manufacturer's instructions for correct amount of additive required. Don't forget to consider volume of supplemental coolant additive being added to system when determining the amount of coolant required to refill system.

15. Replace surge tank cap.
16. Lower cab, start engine, and turn on cab heater. Allow engine to warm up to normal operating temperature. Check the radiator and hoses for leaks. Repair if necessary.

NOTE: Mixing the factory-installed purple-pink coolant (pre-charged with a borate/nitrate-based additive) with the common green coolant will cause a color change.

17. Shut off the engine, then check the coolant level in surge tank. Add coolant if level is not between MIN and MAX lines on surge tank.

Engine Coolant Capacity	
Engine	**Capacity with 1100 sq. inch Radiator quarts (liters)**
Caterpillar CFE	34.4 (32.6)
Caterpillar C-12	31.5 (29.8)
Cummins ISC	31.2 (29.5)
Cummins ISL	31.2 (29.5)
Cummins ISM	30.5 (28.8)
Detroit Diesel Series 60	49.1 (46.7)

Table 1. Engine Coolant Capacity

	Approved Antifreeze	
Manufacturer	**Antifreeze**	**Type**
Caterpillar	Caterpillar Diesel Engine Antifreeze/Coolant	Contains supplemental additives and available as a premixed solution
Cummins	Fleetguard® Compleat Premix	Premixed solution with supplement additives
Detroit Diesel	Detroit Diesel Power Cool	Premixed solution with supplement additives
Old World Industries	Fleet Charge™	With supplemental additives

Table 2. Approved Antifreeze

https://truckmanualshub.com/

Maximum Coolant Protection in F(C) at Various Antifreeze Concentrations														
COOLING SYSTEM CAPACITY* gal (L)	ETHYLENE-GLYCOL BASE ANTIFREEZE REQUIRED gallons (liters)													
	2 (8)	3 (11)	4 (15)	5 (19)	6 (23)	7 (26)	8 (30)	9 (34)	10 (38)	11 (42)	12 (45)	13 (49)	14 (53)	15 (57)
9 (34)	14 (–10)	0 (–18)	–21 (–29)	–12 (–24)	–62 (–52)†									
10 (38)	16 (–9)	4 (–16)	–12 (–24)	–34 (–37)	–62 (–52)†									
11 (42)	18 (–8)	8 (–13)	–6 (–21)	–23 (–31)	–47 (–44)	–62 (–52)†								
12 (45)	19 (–7)	10 (–12)	0 (–18)	–15 (–26)	–34 (–37)	–57 (–49)								
13 (49)	21 (–6)	13 (–11)	3 (–16)	–9 (–23)	–25 (–31)	–45 (–43)	–62 (–52)†							
14 (53)		15 (–9)	6 (–14)	–5 (–19)	–18 (–28)	–34 (–37)	–54 (–48)							
15 (57)		16 (–9)	8 (–13)	0 (–18)	–12 (–24)	–26 (–32)	–43 (–42)	–62 (–52)†						
16 (61)		17 (–8)	10 (–12)	2 (–17)	–8 (–22)	–19 (–28)	–34 (–37)	–52 (–47)	–62 (–52)†					
17 (64)		18 (–8)	12 (–11)	5 (–15)	–4 (–20)	–14 (–26)	–27 (–33)	–42 (–41)	–58 (–50)					
18 (68)		19 (–7)	14 (–10)	7 (–14)	0 (–18)	–10 (–23)	–21 (–29)	–34 (–37)	–50 (–46)	–62 (–52)†				
19 (72)		20 (–7)	15 (–9)	9 (–13)	2 (–17)	–7 (–22)	–16 (–27)	–28 (–33)	–42 (–41)	–56 (–49)				
20 (76)			16 (–9)	10 (–12)	4 (–16)	–3 (–19)	–12 (–24)	–22 (–30)	–34 (–37)	–48 (–44)	–62 (–52)†			
21 (79)			17 (–8)	12 (–11)	6 (–14)	0 (–18)	–9 (–23)	–17 (–27)	–28 (–33)	–41 (–41)	–54 (–48)	–62 (–52)†		

For cooling system capacities not shown, the required amount of antifreeze can be calculated, using the following: Ethylene-glycol base antifreeze in a 25% solution protects to 10°F (12°C), 33% to 0°F (–18°C), 40% to –12°F (–24°C), 50% to –34°F (–37°C), and 60% to –62°F (–52°C).

† 60% ethylene-glycol base antifreeze and 40% water by volume gives maximum coolant protection (–62°F [–52°C]). Exceeding 60% antifreeze diminishes coolant protection; concentrated ethylene-glycol base antifreeze will freeze at approximately 0°F (–18°C).

Table 3. Maximum Coolant Protection in °F (°C) at Various Antifreeze Concentrations

https://truckmanualshub.com/

Maximum Coolant Protection in F(C) at Various Antifreeze Concentrations														
COOLING SYSTEM CAPACITY* gal (L)	ETHYLENE-GLYCOL BASE ANTIFREEZE REQUIRED gallons (liters)													
	2 (8)	3 (11)	4 (15)	5 (19)	6 (23)	7 (26)	8 (30)	9 (34)	10 (38)	11 (42)	12 (45)	13 (49)	14 (53)	15 (57)
22 (83)			18 (–8)	13 (–11)	8 (–13)	2 (–17)	–6 (–21)	–14 (–26)	–23 (–31)	–34 (–37)	–47 (–44)	–59 (–51)		
23 (87)			19 (–7)	14 (–10)	9 (–13)	4 (–16)	–3 (–19)	–10 (–23)	–19 (–28)	–29 (–34)	–40 (–40)	–52 (–47)	–62 (–52)†	
24 (91)			19 (–7)	15 (–9)	10 (–12)	5 (–15)	0 (–18)	–8 (–22)	–15 (–26)	–24 (–31)	–34 (–37)	–46 (–43)	–58 (–50)	
25 (95)			20 (–7)	16 (–9)	12 (–11)	7 (–14)	1 (–17)	–5 (–21)	–12 (–24)	–20 (–29)	–29 (–34)	–40 (–40)	–52 (–47)	–62 (–52)†

For cooling system capacities not shown, the required amount of antifreeze can be calculated, using the following: Ethylene-glycol base antifreeze in a 25% solution protects to 10°F (12°C), 33% to 0°F (–18°C), 40% to –12°F (–24°C), 50% to –34°F (–37°C), and 60% to –62°F (–52°C).

† 60% ethylene-glycol base antifreeze and 40% water by volume gives maximum coolant protection (–62°F [–52°C]). Exceeding 60% antifreeze diminishes coolant protection; concentrated ethylene-glycol base antifreeze will freeze at approximately 0°F (–18°C).

Table 3. Maximum Coolant Protection in °F (°C) at Various Antifreeze Concentrations

https://truckmanualshub.com/

This page intentionally left blank.

https://truckmanualshub.com/

Index, Alphabetical

Title of Maintenance Operation (MOP)	MOP Number
Eaton Fuller Clutch Release Bearing Lubrication	25–01
Eaton Fuller Clutch Release Cross-Shaft Lubrication	25–02

https://truckmanualshub.com/

This page intentionally left blank.

https://truckmanualshub.com/

25-01 Eaton Fuller Clutch Release Bearing Lubrication

1. Park vehicle on a level surface. Apply parking brakes and chock rear tires.

NOTE: Some clutch release bearings are equipped with a lubrication extension that extends outside the clutch housing. It is not necessary to remove the clutch inspection plate when lubrication extension is used.

2. Remove clutch inspection plate.

NOTE: For lubricating release bearing, Eaton Fuller recommends a lithium base, high-temperature grease that meets NLGI Grade 1 or Grade 2 specification.

3. Wipe away all dirt from grease fitting. See **Fig. 1**. Use a low-pressure-type grease gun equipped with recommended grease and lubricate bearing until excess grease purges from rear of release bearing (toward transmission).

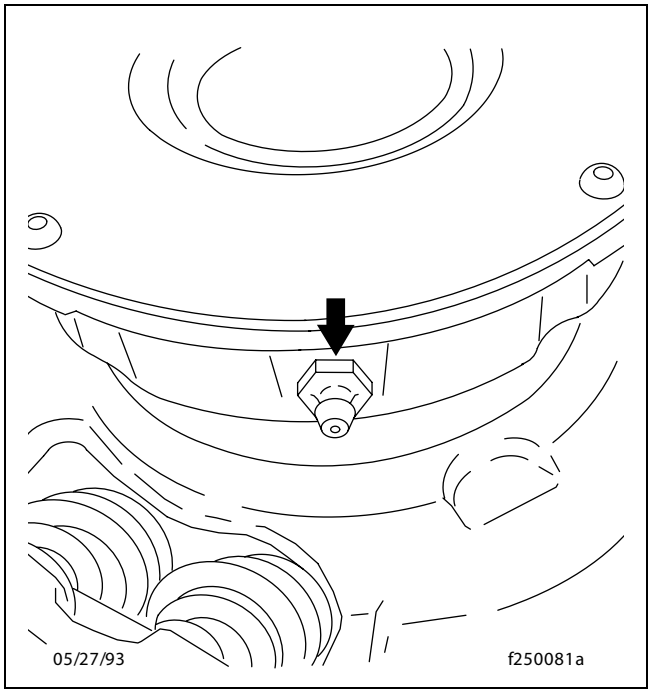

Fig 1. Release Bearing Grease Fitting

CAUTION

Do not over-lubricate the clutch release bearing. Over-lubrication could contaminate the clutch internally, causing and premature failure. Do not use chassis grease or multipurpose lubricants. Use a lithium-base, high temperature grease meeting NLGI Grade 1 or Grade 2 specifications.

4. Wipe off excess grease and apply to both yoke finger and sleeve bushing contact points. See **Fig. 2**.

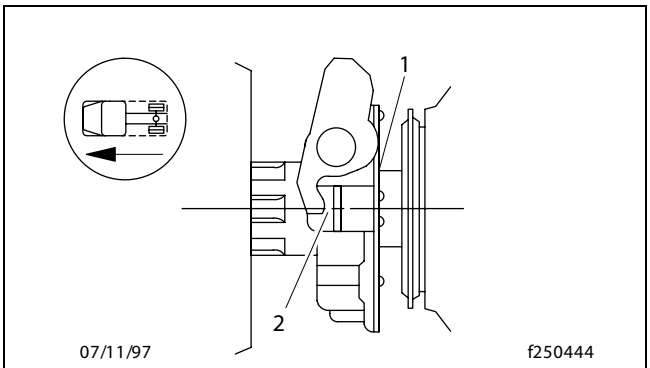

1. Sleeve Bushing Contact Point
2. Yoke Finger Contact Points

Fig 2. Grease the Contact Points

5. Install clutch inspection plate.
6. Remove wheel chocks.

https://truckmanualshub.com/

25-01 Eaton Fuller Clutch Release Cross-Shaft Lubrication

The clutch release cross-shaft is equipped with two grease fittings in transmission clutch housing. See **Fig. 4** and **Fig. 5**. Wipe all dirt from the grease fittings and lubricate with multipurpose chassis grease.

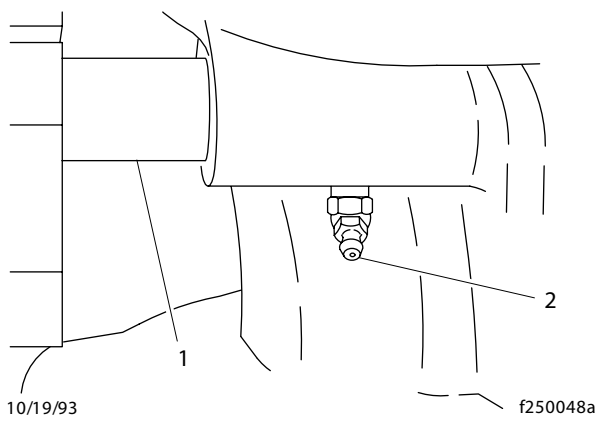

1. Clutch Release Cross Shaft
2. Grease Fitting

Fig 3. Cross Shaft Grease Fitting - Left Side

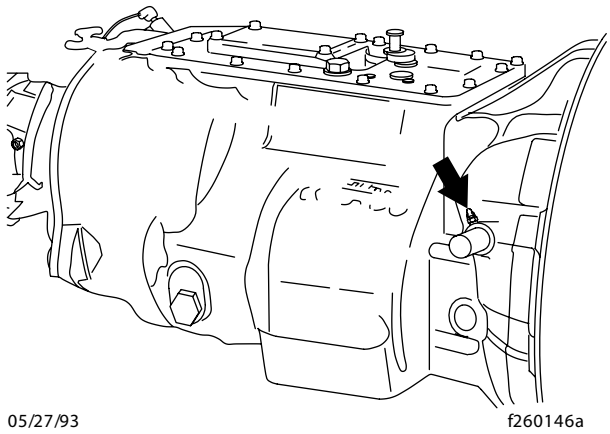

Fig 4. Cross Shaft Grease Fitting - Right Side

https://truckmanualshub.com/

Index, Alphabetical

Title of Maintenance Operation (MOP)	MOP Number
Transmission Cooler Inspection	26–03
Transmission Fluid and Filter Changing	26–01
Transmission Fluid Level Inspection	26–02

https://truckmanualshub.com/

This page intentionally left blank.

https://truckmanualshub.com/

26–01 Transmission Fluid and Filter Changing

Allison 2000 Series Transmissions

1. Park vehicle on a level surface and apply parking brakes.
2. Run engine until transmission fluid reaches normal operating temperature of 160° F to 200°F (71°C to 93°C). Shift transmission to neutral (N) and shut down engine.

CAUTION

To prevent dirt from entering transmission, use only clean containers and fillers for transmission fluid. Do not use fillers or containers that have been used for water or antifreeze. Dirt, water or antifreeze can damage transmission.

3. Clean area around drain plug. Place a drain pan under transmission and remove drain plug. Examine fluid as it drains. If only transmission filter is being replaced, do not drain fluid.

NOTE: A sizable amount of transmission fluid will drain as filter is removed. After changing filters, check fluid level to ensure it is at proper operating level.

4. Using a standard strap-type filter wrench, remove filter by turning it counterclockwise.
5. Remove magnet from filter attachment tube or from top of filter element.
6. Clean any metal debris from magnet. Next, install magnet on filter attachment tube.
7. Lubricate filter gasket with a thin coating of clean transmission fluid.
8. Using your hand, install filter by turning it clockwise until filter gasket comes in contact with converter housing or cooler manifold. Next, tighten filter by turning it one more complete turn.
9. Install drain plug and sealing washer. Using a torque wrench, tighten drain plug 22 to 30 lbf-ft (30 to 40 Nm).
10. Clean area around fill tube and remove dipstick. Using a clean funnel in fill tube, add transmission fluid. See **Table 1** for approved transmission lubricants, and **Table 2** for lubricant capacities.

Lubricant Type*	Temperature: °F(°C)
All Allison Transmissions	
Castrol TranSynd™ (synthetic)	Above -22 (-30)
Dexron® III	Above -13 (-25)
* Lubricants listed in order of preference. Do not mix types of oil.	

Table 1. Approved Allison Transmission Lubricants

Allison Transmission Lubricant Capacities	
Transmission Model	**Fill Capacity:* qt. (L)**
On-Highway Transmissions	
1000/2000/2400 Series (standard sump)	15 (14)
1000/2000/2400 Series (shallow sump)	13 (12)
MD3060/3066/3560 (shallow sump)	10.5 (10)
* Quantities listed are approximate. Add the recommended amount of fluid as listed under fill capacity, then perform a “hot check” and add fluid as needed. **Do Not overfill**.	
** Add 3 quarts (3 liters) if transmission is equipped with PTO	

Table 2. Allison Transmission Lubricant Capacities

11. Check and adjust fluid level using procedure under “Checking the Fluid Level.”

Allison 3000/4000 Series Transmissions

CAUTION

Transmission fluid and filters must be changed whenever there is evidence of dirt or a high temperature condition. A high temperature condition is indicated when the transmission fluid is discolored, has a strong odor or has exceeded oil analysis limits shown in Table 3.

When draining transmission fluid, check for evidence of dirt or water contamination. A small amount of condensation will accumulate in fluid during operation.

Water contamination is normally characterized as a milky discoloration of transmission fluid. Obvious contamination of transmission fluid indicates a leak between water and fluid areas of transmission cooler. Inspect and pressure-test the cooler to confirm leak; replace leaking transmission coolers.

https://truckmanualshub.com/

Transmission protection and fluid change intervals can be optimized by monitoring fluid oxidation according to the tests and limits shown in **Table 3**. Consult your local telephone directory for fluid analysis firms. To ensure consistent and accurate fluid analysis, use only one fluid analysis firm. Refer to the Allison Technician's Guide for Automatic Transmission Fluid, GN2055EN, for additional information.

Test	Limit
Viscosity	±25 percent change from new fluid
Total Acid Number	An increase of 3.0mg of KOH to neutralize a g of fluid change from new fluid
Solids	2 percent by volume maximum

Table 3, Fluid Oxidation Measurement Limits

IMPORTANT: For transmissions that are filled with TranSynd™, the lubricant must be changed every 50,000 miles (80 400 km) or 24 months or 2,000 hours, whichever comes first. Transmissions with petroleum-based lubricants must have lubricant changed at each Maintenance 2 (M2) interval.

NOTE: TranSynd™ is a full synthetic transmission fluid developed by Allison Transmission and Castrol Ltd. This fluid meets Allison specifications for Severe Duty and Extended Drain Intervals. TranSynd™ is fully qualified to the Dexron ®-III specification.

1. Park the vehicle on a level surface. Apply parking brakes, and chock rear tires.
2. Operate the vehicle until transmission reaches its normal operating temperature: 160° to 200°F (71°C to 93°C).

CAUTION

To prevent burns from hot transmission fluid, wear protective gloves when removing the fluid drain plug.

3. Clean area around drain plug and transmission fluid pan. Place a drain pan under transmission and remove drain plug. Examine the fluid as it drains. If only filter is being changed, do not drain fluid.
4. Remove the 12 mounting bolts (six each) from two filter covers.
5. Remove filter covers, O-rings, and two square-cut seals from transmission. See **Fig. 1**.
6. Remove the filters from the bottom of control module.
7. Lubricate new O-rings with transmission fluid, and install them on cover assemblies.
8. Install a new square-cut seal on each cover assembly, and install fluid filter elements on cover assemblies.
9. Install the filter and cover assemblies into filter compartment.
10. Align each cover assembly with holes in channel plate sump, and push cover assemblies in by hand to seat seals.

CAUTION

Do not use the bolts to draw the filter covers to the sump. This can damage the covers, seals, or sump.

11. Install six bolts in each cover, and using a torque wrench, tighten bolts38to 44 lbf-ft (51 to 61 Nm).
12. Replace the drain plug O-ring, and install the drain plug. See **Fig. 1**. Tighten the drain plug 18 to 24 lbf-ft (25to 32Nm).
13. Refill the transmission with fresh Dexron® III transmission fluid and check fluid level.

    See **Table 4** for transmission lubricant capacities.

Transmission Lubricant Capacities	
Transmission Make and Model	**Capacity Quarts (Liters)**
Allison	
MD3060/3066 Initial ll w/Standard Sump	29 (27)
MD3060/3066 Rell w/Standard Sump	19 (18)
HD4060/4560 Initial ll w/Standard Sump	51 (48)
HD4060/4560 Rell w/Standard Sump	39 (37)

Table 4, Transmission Lubricant Capacities

NOTE: Do not overfill transmission. Follow instructions in this manual to check fluid.

https://truckmanualshub.com/

26–02 Transmission Fluid Level Inspection

Allison Transmission—Dipstick Method

CAUTION

Operating a transmission with fluid level higher or lower than recommended can result in transmission damage. Do not overfill transmission.

Do not mix types and brands of transmission fluid, because of possible incompatibility. Do not use fluid additives, friction modifiers, extreme-pressure gear fluids, or multi-viscosity lubricants.

Cold Check

Clean all dirt from around the end of fluid fill tube before removing the dipstick. Do not allow foreign matter to enter transmission. Dirt or foreign matter in hydraulic system may cause undue wear of transmission parts, make valves stick, and clog passages.

It is important to check fluid level cold to determine if the transmission has a sufficient amount of fluid to be safely operated until a hot check can be performed.

1. Park vehicle on a flat, level surface.
2. Apply parking brake and chock tires.
3. Run engine for at least one minute.

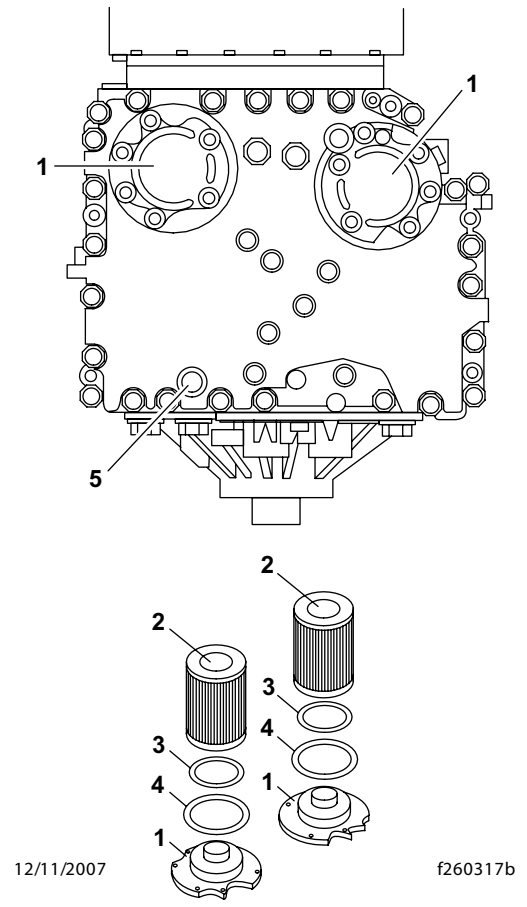

1. Filter Cover
2. Filter Element
3. Filter Element O-Ring
4. Square-Cut Seal
5. Drain Plug

Fig 1. Allison Transmission Filter Location and Components

4. Shift from DRIVE to NEUTRAL, and then shift to REVERSE to ll the hydraulic system.
5. Shift to NEUTRAL and allow the engine to idle at 500 to 800 rpm.
6. With engine running at idle, remove dipstick from tube and wipe it clean.
7. Insert dipstick into tube and remove thedipstick.

https://truckmanualshub.com/

8. Check fluid level reading and repeat check procedure to verify reading.

   If fluid level is within COLD RUN band, transmission may be operated until fluid is hot enough to perform a hot check.

   If fluid level is not within COLD RUN band, add or drain fluid as needed to adjust fluid level to middle of COLD RUN band. See **Fig. 2**.

CAUTION

As the fluid temperature increases, so does fluid level. Do not ll above the COLD RUN band if transmission fluid is below normal operating temperature.

NOTE: Perform a hot check at the first opportunity after the normal operating temperature, 160 to 200°F (71 to 93°C), has been reached.

Hot Check

1. Park the vehicle on a flat, level surface. Apply parking brake and chock tires.
2. Shift transmission to NEUTRAL.

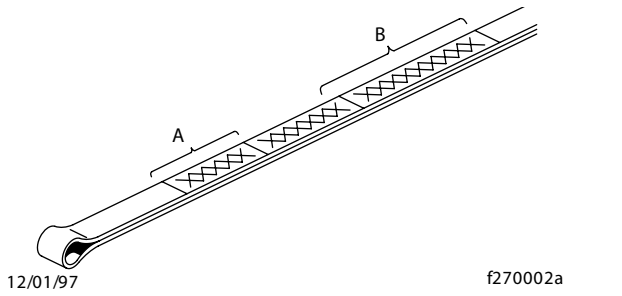

A. Cold Run Band B. Hot Run Band

Fig 2, Dipstick Markings

3. Operate engine at idle (500 to 800 rpm) until normal operating temperature is reached. Check that sump temperature is 160 to 200F (71 to 93C). Check that converter-out temperature is 180 to 220°F (82 to 104°C).
4. With engine idling, remove dipstick from tube and wipe it clean.
5. Insert the dipstick into tube and remove dipstick.
6. Check fluid level reading and repeat check procedure to verify reading. Safe operating level is within the HOT RUN band on dipstick. The HOT RUN band is between HOT FULL and HOT ADD marks.

   If fluid level is not within HOT RUN band, add or drain fluid as needed to bring fluid level within HOT RUN band. See **Fig. 2**.

Visually inspect the breather valve on transmission.

Allison Transmission—Electronic Method (3000/4000 Series Only)

Before checking transmission oil level, the following conditions must be met:

- The engine must be at idle.
- The transmission must be in neutral.
- The transmission output shaft must be stopped.
- The transmission fluid must be within normal operating temperatures of 140°F (60°C) to 220°F (104°C).

1. Start the engine, allow transmission fluid to reach operating temperature, and place transmission in neutral.
2. On push-button shift selectors, press both up and down arrow buttons once at same time and release. On lever shift selectors, press the DIAGNOSTICS (the button with the Allison Logo) button once.
3. The ECU performs a system check. If a problem is found during the system check, an oil level sensor diagnostic code will be displayed. Oil level sensor diagnostic codes are listed in **Table 5**.

https://truckmanualshub.com/

Oil Level Sensor Diagnostic Codes	
Code	**Description**
O-L-5-0	Engine speed too low
O-L-5-9	Engine speed too high
O-L-6-5	Transmission not in neutral
O-L-7-0	Sump Temperature too low
O-L-7-9	Sump Temperature too high
O-L-8-9	Output shaft rotating
O-L-9-5	Sensor failure

Table 5, Oil Level Sensor Diagnostic Codes

4. If system check revels any problems, as indicated by an oil level sensor diagnostic code, correct problem. System check will automatically perform a recheck.
5. After a 2-minute waiting period has passed, to allow fluid to drain, digital display will flash a oil level indicator code one digit/letter at a time. Oil level indicator codes are listed in **Table 6.**

Oil Level Indicator Codes	
Code	**Description**
O-L-O-K	Fluid level is within proper limits
L-O-0-1	Fluid level is 1 quart low
L-O-0-2	Fluid level is 2 quarts low
H-I-0-1	Fluid level is 1 quart high
H-I-0-2	Fluid level is 2 quarts high

Table 6, Oil Level Indicator Codes

CAUTION

On lever shift selectors be prepared for the vehicle to shift into gear.

6. On push-button shift selectors, press the neutral button to exit oil level mode. On lever shift selectors, shift selector to either drive or reverse to exit oil level mode.
7. Check for historical or active fault codes. If codes are displayed, contact an authorized transmission service center for repairs.

Caterpillar CX-31 Transmission - Electronic Method

Before checking the transmission oil level, following conditions must be met:

- Engine must be at idle.
- Transmission must be in neutral.
- Transmission output shaft must be stopped.
- Transmission fluid must be within normal operating temperatures of 140°F (60°C) to 220°F (104°C).

1. Start engine, allow transmission fluid to reach operating temperature, and place transmission in neutral.
2. On push-button shift selectors, press both up and down arrow buttons once at same time and release. On lever shift selectors, press DIAGNOSTICS button once.
3. The ECU performs a system check. If a problem is found during the system check, an oil level sensor diagnostic code will be displayed. Oil level sensor diagnostic codes are listed in **Table 7**.

Oil Level Sensor Diagnostic Codes	

Table 7. Caterpillar Oil Level Sensor Diagnostic Codes

4. If system check revels any problems, as indicated by an oil level sensor diagnostic code, correct the problem. System check will automatically perform a recheck.
5. After a 2-minute waiting period has passed, to allow fluid to drain, digital display will flash a oil level indicator code one digit/letter at a time. Oil level indicator codes are listed in **Table 8.**

https://truckmanualshub.com/

Oil Level Indicator Codes	

Table 8. Oil Level Indicator Codes

CAUTION

On lever shift selectors be prepared for the vehicle to shift into gear.

6. On push-button shift selectors, press neutral button to exit oil level mode. On lever shift selectors, shift the selector to either drive or reverse to exit oil level mode.
7. Check for historical or active fault codes. If codes are displayed, contact an authorized transmission service center for repairs.

26–03 Transmission Cooler Inspection

Visually check transmission cooler (or heat exchanger), which is mounted below radiator at front of the vehicle. Check for loose fittings, cracks, and loose fasteners. Tighten loose fasteners and fittings, as needed. Replace any part of cooler that is worn, dented, cracked or otherwise damaged.

https://truckmanualshub.com/

Index, Alphabetical

Title of Maintenance Operation (MOP)	MOP Number
Frame Fastener Torque Checking	31–01
Fifth Wheel Inspection	31–02
Fifth Wheel Lubrication	31–03
Vogel Chassis Lubrication System Check	31–04
Vogel Chassis Lubrication System Inspection	31–05
Vogel Chassis Lubrication System Reservoir Checking and Refilling	31–06

https://truckmanualshub.com/

This page intentionally left blank.

https://truckmanualshub.com/

31–01 Frame Fastener Torque Checking

Frame brackets and components secured with Huck-bolt® fasteners do not require a torque check, however, they should be inspected for damage and any signs of insufficient torque. All frame brackets and components are to be checked at the Initial Maintenance Inspection. Check the torque of frame fasteners to offset the effects of *bedding in* (or seating). When checking torque, torque the nut, not the bolt head whenever possible. This will give a true torque reading by eliminating bolt body friction. When checking the torque of frame fasteners, inspect the frame for cracks and other damage. Set a click-type torque wrench to the maximum torque of the fastener you are checking. Apply pressure until the torque wrench clicks. Do not loosen the bolt to check the torque. See the applicable torque table in **Group 00** for torque specifications.

CAUTION

Continued vehicle operation with loose fasteners could result in bracket or frame damage.

Inspect and check the fasteners at the following locations:

- Axle Stops
- Engine Trunnion Supports
- Equalizer Brackets
- Exhaust Brackets
- Frame Crossmembers and Gussets
- Frame Brackets
- Front Suspension Brackets
- Radius Rods
- Rear Engine Supports
- Rear Suspension Brackets
- Shock Absorbers
- Torque Arm Mounts
- Torsion Bar Mounts
- All Other Frame Fasteners

Any component that shows signs of cracking, or other damage must be repaired or replaced. See the vehicle workshop manual for repair or replacement information in the respective section for the component in question.

31–02 Fifth Wheel Inspection

WARNING

All fifth wheel maintenance, adjustment, and rebuilding must be done only by a qualified mechanic. Improper or incomplete procedures could result in a possible disengagement of the trailer from the tractor, which could result in personal injury or property damage.

Parts are under spring compression. Wear safety goggles while servicing the fifth wheel. Failure to do so can result in personal injury, due to parts ejecting with force.

Fontaine

1. Disconnect the tractor from the trailer. For instructions, see the vehicle operator's manual.
2. Thoroughly steam-clean the fifth wheel.
3. Look for cracks in the fifth wheel assembly, mounting brackets, and mounting parts.
4. Check the jaw and stationary jaw for mushrooming, and check that the serrations at the jaw and wedge are in good condition.
5. Test the safety lock latch for free operation.

NOTE: The safety lock latch is located at the front of the fifth wheel on the top plate.

6. Visually check for loose nuts or bolts (see **Fig. 1**)on the fifth wheel and on the mounting. Set a torque wrench to the maximum torque value for the bolt being checked, and confirm that the torque is to specification. Do not loosen the bolt to check the torque value. See **Group 00** for bolt torque specifications.
7. Visually check all springs to see if they are securely fastened, and are not deformed.

WARNING

Do not disassemble the fifth wheel to inspect the springs. The springs are under extreme pressure, and could cause serious injury.

https://truckmanualshub.com/

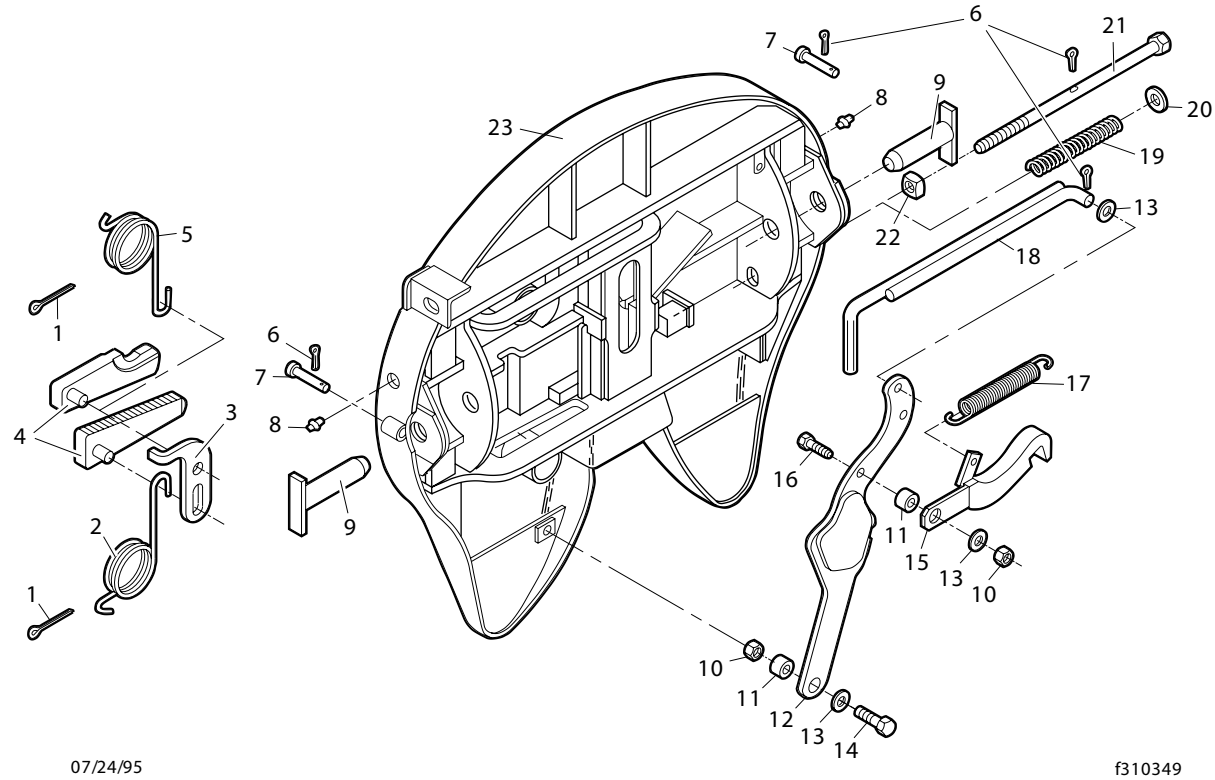

1. Cotter Pin, 3 inch
2. Wedge Spring
3. Timer
4. Jaw and Wedge
5. Jaw Spring
6. Cotter Pin, 1 inch
7. Retaining Pin
8. Grease Fitting
9. Bushing Pin
10. Locknut, 1/2–13
11. Pivot Bushing
12. Operating Handle
13. Flatwasher, 1/2 inch
14. Bolt, 1/2–13 x 2
15. Bumper
16. Bolt, 1/2–13 x 1-1/2
17. Bumper Spring
18. Release Handle
19. Wedge Stoprod Spring
20. Flatwasher, 5/8 inch
21. Wedge Stoprod
22. Nut, Square, 5/8–11
23. Fifth Wheel Top Plate

Fig. 1. Fontaine 6000/7000 Series Fifth Wheel (right-side release shown)

8. Check wedge adjustment.
   - 8.1. Open the kingpin lock, and vertically insert a two-inch-diameter shaft.
   - 8.2. Release the lock by tripping the release latch at the bottom of the throat.
   - 8.3. Adjust the wedge stop at the end of the wedge to approximately 1/4-inch (6-mm) clearance by turning the wedge stop rod located on the right side of the top plate.
9. Replace cracked, worn, or damaged parts with new parts. Replace all loose mounting bolts with 5/8–11 SAE grade 8 bolts, grade C locknuts, and hardened washers. Do not re-use bolts, nuts, and washers on fifth wheel mountings.
10. After inspecting the fifth wheel, lubricate all moving parts with a chassis or multipurpose grease.Apply a generous coating of grease to the top plate to fill the grooves, or depressions, on the top plate. See **Maintenance Operation 31–03** for lubrication instructions.

https://truckmanualshub.com/

31–03 Fifth Wheel Lubrication

To maintain proper fifth wheel operation, always lubricate the fifth wheel after an inspection has been performed.

IMPORTANT: Lubricate the fifth wheel:

- After power washing, or steam cleaning.
- If the vehicle operates in harsh conditions such as salt spray from road surfaces, or in extremely dusty environments.
- After any service that requires the removal of lubrication from the fifth wheel head or components.

WARNING

Failure to properly lubricate the fifth wheel could result in a possible disengagement of the trailer from the tractor, which could result in personal injury or property damage.

Fontaine

Use a multipurpose extreme pressure (EP) chassis grease, and lubricate all moving parts on the fifth wheel. When lubricating the top plate at the two grease fittings for the bracket bearing area, tilt the top plate forward and backward to evenly distribute the grease. Separate the jaw and wedge with a pry tool, and lubricate the serrations using a brush to distribute the grease. On slide-mount applications, lubricate the slide rail and tapered wedges for smooth operation.

Once the fifth wheel's moving parts are lubricated, apply a liberal coating of grease to the top plate and the trailer kingpin plate.

application. On slide-mount applications, lubricate the base plate rails and the plungers for smooth operation.

31–04 Vogel Chassis Lubrication System Check

The following system check will verify that the electrical system of the Vogel system is functioning correctly. This check should be performed during routine maintenance checks.

Turn on the vehicle ignition while observing the dash mounted indicator lamp. The indicator lamp on the dash and at least one LED (PAUSE or CONTACT) on the control unit should all come on following ignition activation. The indicator lamp on the dash will go out after 3 seconds. The control unit performs a self diagnostic check during this 3 second interval. The Initiate a manual override lube cycle by depressing PAUSE or the CONTACT LED on the control unit and releasing the DK button on the control unit. will remain lit during the entire ignition on-time. If The PAUSE LED will go off and the CONTACT LED the system is in PAUSE mode (waiting for the next on the control unit will activate for the preset pump lubrication cycle) the PS LED remains lit to show that running time (factory preset for 2.6 minutes) while monitoring with the pressure switch is activated. the power is applied to the pump. The PS LED will go off and will light up again once sufficient system pressure has been attained to prefill all lubrication lines. The CONTACT and PS LEDs will remain lit for the remainder of the pump running period. Following completion of the pump running period, the CONTACT LED will go off and the PAUSE LED will light up again as the control unit counts time until the next lubrication cycle starts. The PS LED stays lit to show that monitoring by the pressure switch is preset.

https://truckmanualshub.com/

The LED sequence provides visual confirmation of system performance and failure. The CS LED is not used in fluid grease applications and will not light up with the

systems described in the Vogel Chassis Lubrication System. **Table 1** summarizes the control unit LED light sequence.

31–05 Vogel Chassis Lubrication System Inspection

Inspect the vehicle before it is washed or pressure cleaned, as areas of under-or over-lubrication are best observed at this time.

CAUTION

Vogel lubrication lines cannot be attached to the grease fittings of disc brake calipers. The Vogel lubrication system is not compatible with grease used in the disc brake calipers. Attaching Vogel lube lines to the grease fittings of disc brake calipers could cause premature wear and/or damage to the disc brakes.

If a garage with a pit is available, drive the vehicle over the pit as visual inspection is easier from beneath the vehicle. Verify that all originally attached lubrication lines are still connected. If necessary, reattach or replace damaged line(s). Pay particular attention to those points closest to the road surface. See the manufacturer's service literature for instructions.

Inspect the points being lubricated. A seal of lubricant around the outside of the bushings should be visible. This assures that the point is being flushed of contaminants.

If all the lubrication points are under-or over-lubricated, adjust the control/unit timer. If an individual lubrication point is over-or under-lubricated, trace the line back to the distribution block. Replace the metering cap with a larger one if under-lubricated or a smaller one if over-lubricated. See the manufacturer's service literature for instructions.

31–06 Vogel Chassis Lubrication System Reservoir Checking and Refilling

Gain access to the chassis lubrication system reservoir and observe the lubricant level in the reservoir. The reservoir is marked with a minimum fill line. If the grease level drops below the minimum level, air will be pumped through the main line distribution network. If this occurs a fault LED will be displayed on the dash for the duration of the ignition ON time and the system will have to be bled. See the manufacturer's service literature for instructions.

IMPORTANT: Use only fluid grease of NLGI grades00 or 000. See **Table 2** for lubricants that have been approved for use to maintain the system warranty of the Vogel lubrication system.

1. Refill the reservoir. See **Fig. 2**.
   - 1.1. Remove the cap on the unit by pressing both hands at the side of the cap and lift it off.
   - 1.2. Connect the quick disconnect adaptor to the filling hose of the hand crank pump and connect it to the refilling connector.
   - 1.3. Refill the reservoir.

   NOTE: There is not a maximum fill line on the reservoir. However, you can see the fluid in the reservoir as it is being filled. Add fluid until it appears to be at the top of the reservoir.
2. Manually test the lubrication system using instructions found in the manufacturer's service literature.

Pos.	Description	Duration	LEDs
1	Vehicle ignition is off, no power to the lubrication system	As long as the ignition is off	N/A
2	The ignition is switched on, lubrication system gets power	3 seconds	PAUSE, PS, Cab Lamp
3	System pause time, system counts down time to the next lubrication cycle	Remainder of preset pump pause time or until manual override occurs	PAUSE, PS

https://truckmanualshub.com/

Pos.	Description	Duration	LEDs
4	Countdown complete, contact time starts, pump motor activates	Preset contact (pump running) time (factory preset for 2.6 minutes)	CONTACT
5	System pressure of 360 psi (2482 kPa)	Contact time minus the time the pump needs to build up pressure	CONTACT, PS
6	The pump turns off, counts down pause time to the next lubrication cycle or until manual override occurs	Duration of preset pause time	PAUSE, PS
7	A fault has occurred and the system could not build up pressure during contact (pump running) time	Until manual override (press the DK button) occurs and the fault is remedied	FAULT, Cab Lamp

Table 1. LED Light Sequences

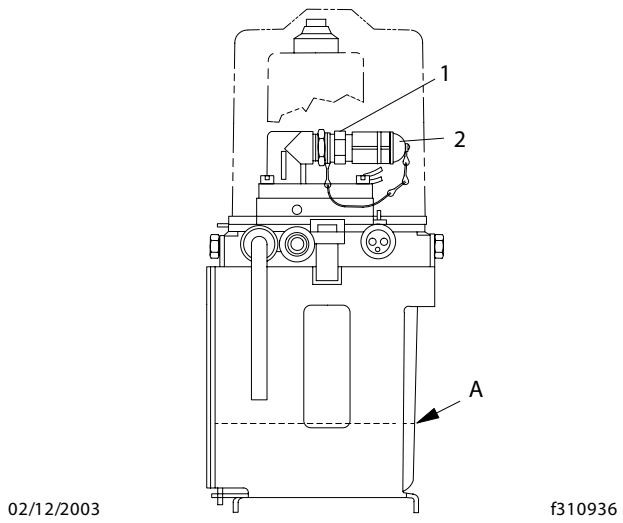

A. Minimum Fill Line
1. Refill connector
2. Cap

Fig. 2. Vogel Chassis Lubrication Pump Assembly

https://truckmanualshub.com/

Fluid Grease of NLGI Grades 00 and 000		
Grade	**Type**	**Supplier**
NLGI 00	Alvania EP R00 Chevron Dura-Lith 00 EP Conolith 00 Drydene Lithium EP 00 Mobilith SHC 007 Unocal MM Grease Lithium 00	Shell Chevron Conoco Dryden Mobil 76 Unocal
NLGI 000	EP Conolith 000 Lidok 000 Mobilux EP 023 Novatex Grease EP 000 Drydene Lithium EP 000 Unocal MM Grease Lithium 000	Conoco Exxon Mobil Texaco Dryden 76 Unocal
Biodegradable Grease	SL WR AA1 00 SL WR AA1 000	Sentinel Sentinel

Table 2. Fluid Grease of NLGI Grades 00 and 000

https://truckmanualshub.com/

Index

Title of Maintenance Operation (MOP)	MOP Number
Suspension Inspection	32–01
Suspension Lubrication	32–02
Suspension Fastener Torque Check	32–03

https://truckmanualshub.com/

This page intentionally left blank.

https://truckmanualshub.com/

32–01 Suspension Inspection

Front Suspension Check

WARNING

Do not replace individual leaves of a damaged leaf spring assembly; replace the complete spring assembly. Visible damage (cracks or breaks) to one leaf causes hidden damage to other leaves. Replacement of only visibly damaged parts is no assurance that the spring is safe. On front spring assemblies, if cracks or breaks exist in the two top leaves, loss of vehicle control could occur. Failure to replace a damaged spring assembly could cause an accident, resulting in serious personal injury or property damage.

Inspect the front spring assemblies for cracked, broken, or abnormally bent leaves. If any of these conditions exist, replace the spring assembly. See **Group 32** of the *Condor® Workshop Manual* for instructions.

Front and Rear Suspension Shock Absorber Check

Make sure the shock absorber brackets are tight, and the shock absorber is not striking or rubbing the frame or some other part of the chassis. Striking or rubbing the frame is characterized by chafe marks on the shock absorber body and the frame rail. Check the rubber mounting bushings for cracks, cuts, swelling, and dry rot. Also, check the bushings for missing pieces. Replace the bushings as needed. See **Fig. 1**.

Inspect the shock absorber for oil leakage. If the shock absorber is damaged or leaking, replace it with a new one. See **Group 32** of the *Condor® Workshop Manual* for replacement instructions.

Rear Suspension Check

Leaf Spring Suspension

WARNING

Do not replace individual leaves of a damaged leaf spring assembly; replace the complete spring assembly. Visible damage (cracks or breaks) to one leaf causes hidden damage to other leaves. Replacement of only visibly damaged parts is no assurance that the spring is safe. Failure to replace a damaged spring assembly could cause an accident, resulting in serious personal injury or property damage.

Replace worn, cracked, or damaged spring brackets. Failure to do so could result in bracket breakage, possibly leading to loss of vehicle control and resulting in personal injury or property damage.

1. Inspect the forward and rear spring brackets and equalizer brackets for wear, cracks, and other damage. If any of these conditions exist, replace the damaged bracket(s). See **Group 32** of the *Condor® Workshop Manual* for instructions.
2. Inspect the drive axle(s) frame crossmember and gussets for wear, cracks, and other damage. If any of these conditions exist, replace the damaged parts. See **Group 32** of the *Condor® Workshop Manual* for instructions.

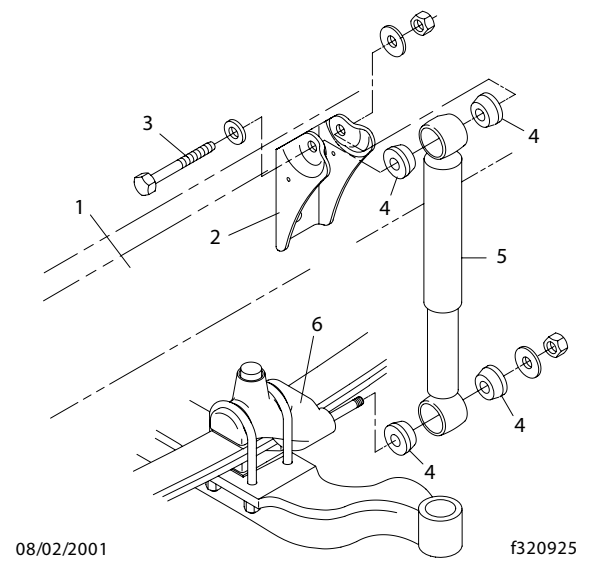

1. Frame Rail
2. Upper Mounting Bracket
3. Upper Mounting Bolt
4. Bushing
5. Shock Absorber
6. Axle Stop/Lower Shock Absorber Bracket

Fig. 1. Shock Absorber Mounting (front suspension shown)

https://truckmanualshub.com/

CAUTION

Failure to replace suspension crossmembers or gussets if cracked, worn, or otherwise damaged could result in damage to the vehicle chassis.

3. Without detaching the torque arms, attempt to move (by hand) each radius-rod end up, down, in, and out. If there is any movement, replace the torque arm. If a torque arm needs to be replaced, See **Group 32** of the *Condor® Workshop Manual* for instructions.
4. Inspect the weld seams between the torque arm tube and the shorter bushing tubes. If there are cracks, replace the torque arm. Do not weld the torque arm for any reason.
5. Inspect the rubber bushing ends. See **Fig. 2**. Replace the torque arm for any of the following reasons:
   - If there are gaps between the rubber bushing and the pin or outer steel sleeve.
   - If either bushing end contacts a torque arm pin mounting bolt.
   - If there are cracks in the bushing.
   - If part of the rubber bushing extends beyond the outer circumference of the outer bushing sleeve.

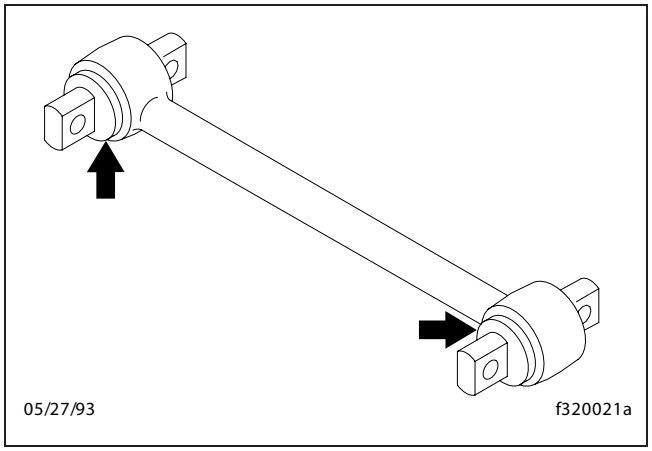

Fig. 2. Torque Arm Bushings

6. Block up the frame enough to take chassis weight off the springs. Attempt to move the equalizer up and down, using a pry bar between the top of the equalizer and top of the equalizer bracket; apply hand pressure only. See **Fig. 3**. If movement at the center of the equalizer exceeds 1/8 inch (3 mm), replace the equalizer bushings. See **Group 32** of the *Condor® Workshop Manual* for instructions.

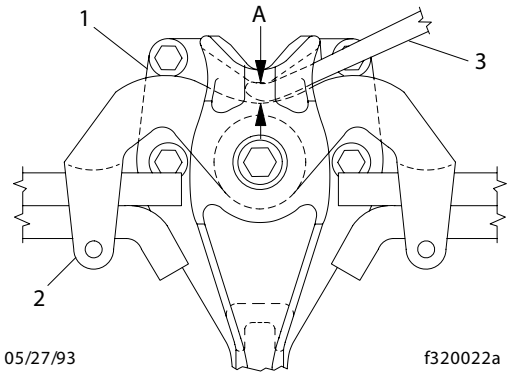

Measure the change in gap at this point.

1. Equalizer Bracket
2. Equalizer
3. Pry Bar

Fig. 3. Side View of the Equalizer

7. With the vehicle unloaded, attempt to move the equalizer side to side, using a pry bar between the equalizer and frame rail. Apply hand pressure only. See **Fig. 4**. If clearance between the equalizer assembly and any frame component or fastener is less than 1/8 inch (3 mm), replace the equalizer bushings. See **Group 32** of the *Condor® Workshop Manual* for instructions.

https://truckmanualshub.com/

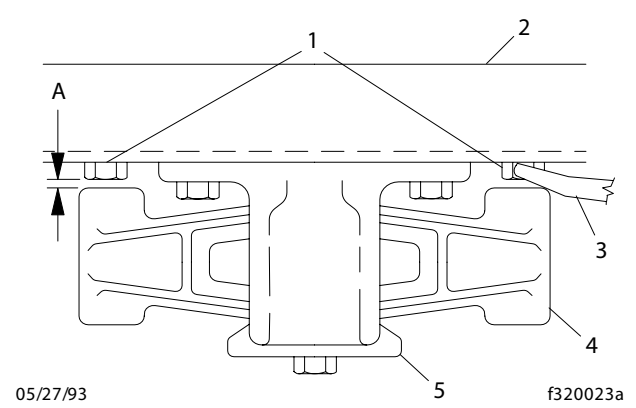

A. 1/8" (3 mm) Clearance
1. Frame Fasteners
2. Frame Rail
3. Pry Bar
4. Equalizer
5. Equalizer Bracket

Fig. 4. Side View of the Equalizer

AirLiner Suspension

WARNING

Do not replace individual leaves of a damaged leaf spring assembly; replace the complete spring assembly. Visible damage (cracks or breaks) to one leaf causes hidden damage to other leaves. Replacement of only visibly damaged parts is no assurance that the spring is safe. Failure to replace a damaged spring assembly could cause an accident, resulting in serious personal injury or property damage.

Inspect the forward and rear spring brackets for wear, cracks, and other damage. If any of these conditions exist, replace the damaged bracket(s). See **Group 32** of the *Condor® Workshop Manual* for instructions.

WARNING

Replace worn, cracked, or damaged spring brackets. Failure to do so could result in bracket breakage, possibly leading to loss of vehicle control and resulting in personal injury or property damage.

Inspect the crossmember(s) and gussets for wear, cracks, and other damage. If any of these conditions exist, replace the damaged parts. See **Group 32** of the *Condor® Workshop Manual* for instructions.

IMPORTANT: Before checking the AirLiner suspension height, make sure there is no load on the chassis, and the trailer is unhitched.

1. Park the vehicle on a level surface, using a light application of the brakes. Do not apply the parking brakes. Shift the transmission into neutral, and build the secondary air pressure to at least 100psi (690 kPa). Shut down the engine.
2. Mark the location of the front and rear tires on the floor, and chock the tires on one axle only.
3. Check the length of the overtravel lever between its pivot points. See **Fig. 5**, Ref. A. If the vehicle is equipped with an adjustable leveling valve, the length should be 8 inches (203 mm). If the length is incorrect, See **Group 32** of the *Condor® Workshop Manual* for adjustment procedures.

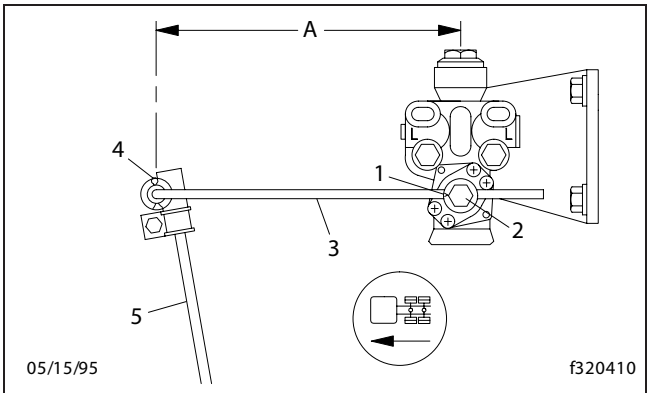

A. Measure the length of the overtravel lever between
1. V-Shaped Mark
2. Adjustment Locknut
3. Overtravel Lever
4. Cotter Pin
5. Linkage Rod

Fig. 5. AirLiner Overtravel Lever and Linkage Rod Measurement

4. On single-drive rear axle configurations, measure the distance from the bottom of the left axle stop to the top of the fastener pad. On tandem (dual-drive) rear axle configurations, measure the distance from the bottom of the forward most left axle stop

https://truckmanualshub.com/

to the top of the axle fastener pad. See **Fig. 6**, Ref. A. See **Table 1** for the correct distances.

Suspension Height Adjustment Distances			
Suspension Type	**Distance in Inches (mm)**		
	Minimum	**Target**	**Maximum**
20/40K AirLiner	2-3/8 (60)	2-5/8 (67)	2-7/8 (73)
23/46K AirLiner	2-3/4 (70)	3 (76)	3-1/4 (83)
Low/Mid-Ride Height AirLiner	2-1/4 (57)	2-1/2 (64)	2-3/4 (70)

Table 1, Suspension Height Adjustment Distances

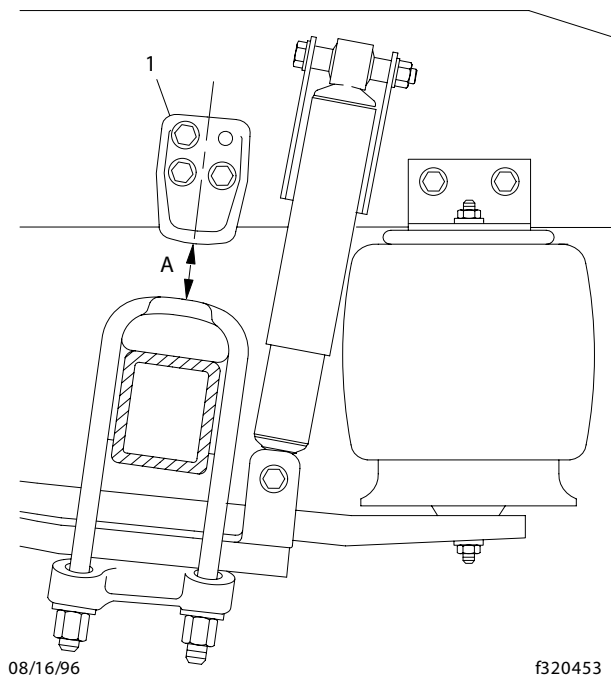

A. Measure height here.
1. Left Forward most Axle Stop

Fig. 6. AirLiner Axle Stop Measurement

5. If the axle stop measurement is not correct, See **Group 32** of the *Condor® Workshop Manual* for adjustment procedures.
6. Apply the parking brakes, and remove the chocks.

TufTrac Suspension

Inspect all suspension fasteners for the proper torque values. See **Group 00** of this manual for proper bolt torque specifications. Visually inspect the frame for elongated holes or abnormal wear at the suspension mounting points, and have the frame repaired as needed. If elongated holes are found on the frame, check the suspension alignment. Check brackets and torque rods for damage or loose fasteners

Chalmers Tandem Axle Suspension

Chock the front tires to prevent the vehicle from moving. Place the transmission in neutral, and release the parking brakes before inspecting the Chalmers rear suspension.

Power-wash the Chalmers rear suspension, or clean it with a hard-bristle brush before performing a visual inspection.

1. Visually inspect the rubber bushings for cracks or other damage.

   Try to move the torque rod ends using your hands only, and check for any free-play. If free-play is felt, replace the torque rod end bushing. Do not use a pry bar to check for free-play. Use of a pry bar may lead to premature bushing replacement.

2. Lift the rear of the vehicle and support the frame on jack stands to unload the suspension components. The vehicle is lifted high enough when the beam ends are off of the saddles. All jack stands must be of sufficient strength and rigidity to safely support the vehicle. Do not perform any work on or around a vehicle that is supported solely by a lifting device.

   Visually inspect the walking beam for cracks or other damage. If damage is found, replace the walking beam.

   Keep the vehicle supported by the jack stands for the next operation.

https://truckmanualshub.com/

3. Manipulate the walking beam so that a micrometer, vernier, or dial caliper may be used to determine the wear area thickness on the bottom face. See **Fig. 7**. Measurements should be taken a minimum of 1/2 inch from the beam flange edges to eliminate any edge wear that may have occurred. Subtract the wear area thickness (see **Fig. 7**, Ref. B) from the thickness at the non-wear area (see **Fig. 7**, Ref. A) to determine the amount of wear.

   If the beams show any wear greater than 0.062 inch (1.5 mm), a Chalmers wear plate must be installed, or the walking beam must be replaced.

4. Rotate the restrictor cans 360 degrees and visually inspect the cans for cracks, severe corrosion, and distortion. If any of these conditions are present, or the restrictor can is missing, replace the restrictor can.

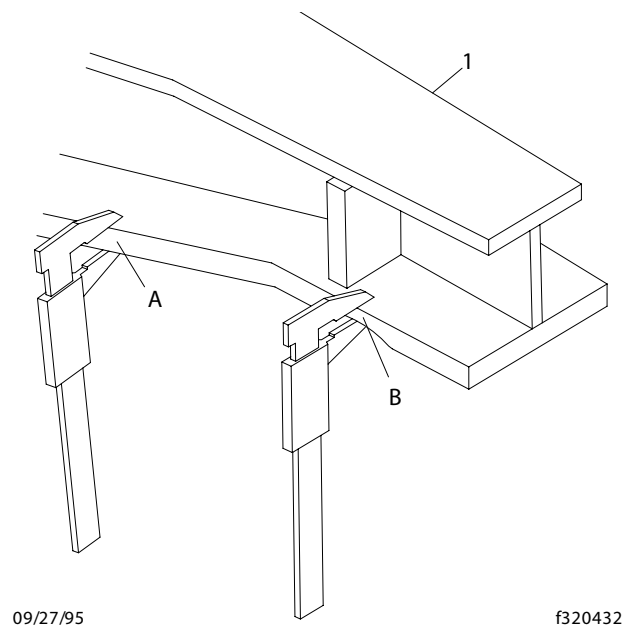

A. Non-Wear Area
B. Wear Area
1. Walking Beam

Fig. 7. Walking Beam End Wear Thickness

WARNING

Replace all cracked or missing restrictor cans. Failure to do so could lead to loss of vehicle control, which could result in personal injury. Vehicles with cracked or missing restrictor cans may be driven slowly to the nearest workshop for restrictor can replacement.

Chalmers Single Axle Suspension

1. Chock the front tires to prevent the vehicle from moving. Place the transmission in neutral, and release the parking brakes before inspecting the Chalmers rear suspension.
2. Power-wash the Chalmers rear suspension, or clean it with a hard-bristle brush before performing a visual inspection.
3. Visually inspect the rubber bushings for cracks or other damage.

   Try to move the torque rod ends using your hands only, and check for any free-play. If free-play is felt, replace the torque rod end bushing. Do not use a pry bar to check for free-play. Use of a pry bar may lead to premature bushing replacement.

4. Rotate the restrictor cans 360 degrees and visually inspect the cans for cracks, severe corrosion, and distortion. If any of these conditions are present, or the restrictor can is missing, replace the restrictor can.

WARNING

Replace all cracked or missing restrictor cans. Failure to do so could lead to loss of vehicle control, which could result in personal injury. Vehicles with cracked or missing restrictor cans may be driven slowly to the nearest workshop for restrictor can replacement.

Hendrickson HN Series

1. Park the vehicle on a level surface, apply the parking brakes, and chock the front tires.
2. Visually inspect the end beam connection for distorted or frayed rubber. Also look for the equalizing beam being lower in the beam hanger. If either of these conditions are found replace the rubber end bushings and all connecting parts.

   The gap at each side of the visible rubber on the lower part of the end bushing is normal. See **Fig. 8**.

https://truckmanualshub.com/

Place a jack stand under each beam end (see **Fig. 8**) and check for movement of the rubber end bushing inner casting. If movement is noted replace the rubber end bushing and all connecting parts.

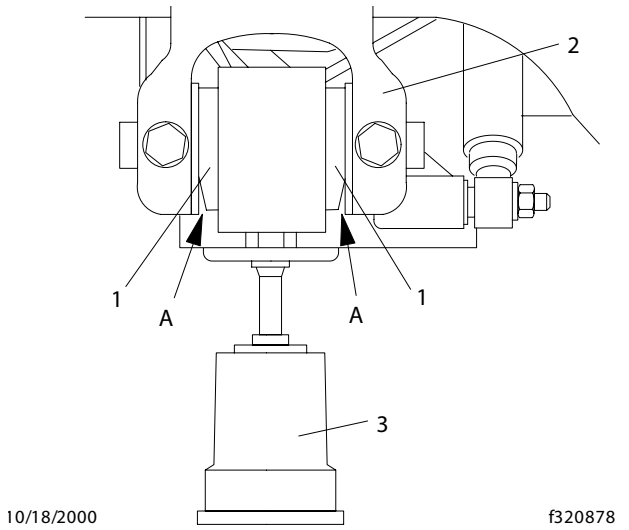

A. Gap in Rubber End Bushing
1. Rubber End Bushing
2. Bar Pin Axle Bracket
3. Jack

Fig. 8. Beam End Connection

WARNING

If movement is noted, do not operate the vehicle. Replace the rubber end bushings and all connecting parts. The above condition can result in costly repair, downtime, possible separation of components, loss of vehicle control, property damage, or personal injury.

3. Inspect all torque rods and transverse rods for looseness, or shredded rubber. With the brakes applied, slowly rock an empty vehicle while an assistant visually checks the action at both ends of the rod. Or with the vehicle shut down, a lever check can be made with a long pry bar placed under each rod end and pressure applied.

   Whether the rod ends are straddle mount or tapered stud, they can be renewed by pressing out the worn end, and installing a cartridge type replacement. A two-piece rod is also available to cut and weld to the desired length.

4. Visually inspect the rebound strap to make sure it is intact and not torn. If the rebound strap is not intact, or is torn replace it.

5. Visually inspect the auxiliary spring. The normal height of an unloaded auxiliary spring is 4 inches(10 cm). Replacement is recommended when the height of the auxiliary spring decreases to 3-1/2 inches (9 cm) or below. See **Fig. 9**.

NOTE: When bolster springs are replaced, it is recommended that both bolster springs on a beam be replaced even if only one shows wear.

6. Visually inspect all four bolster springs. Make sure that there is no rubber trapped or in contact with sharp metal edges from overhanging metal plates.

   Replace the bolster spring if swelling due to contamination of oil or grease, increases the rubber diameter to 1/4 inch (6.4 mm) beyond it's normal position.

   Replace the bolster spring if separation of the rubber from the bonded metal surface to a depth greater than 1-1/2 inches (3.8 cm) is found. See **Fig. 10**.

NOTE: Creases formed by folding of the rubber surface under load should be ignored. These appear as strips on the surface, polished by wear or covered with tacky rubber.

It is also recommended that all tightening torques on the Hendrickson HN Series suspension be checked once a year. See **Table 2** for torque specifications.

https://truckmanualshub.com/

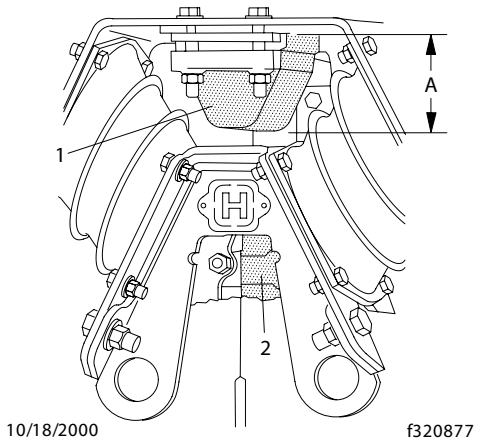

A. 3–1/2" (9 cm) Minimum Height Unloaded
1. Auxiliary Spring
2. Rebound Strap

Fig. 9. Auxiliary Spring Assembly

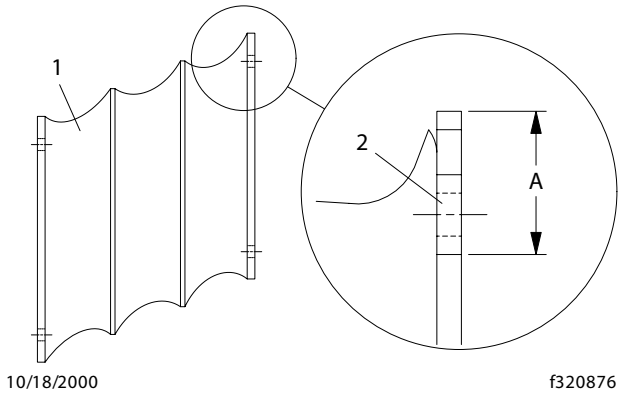

A. Acceptable 1–1/2" (3.8 cm) Separation of Rubber
1. Bolster Spring
2. Damaged Area of Rubber

Fig. 10. Bolster Spring

Hendrickson RTE Series

1. Park the vehicle on a level surface, apply the parking brakes, and chock the front tires.

   Raise the rear of the vehicle until the rear wheels are suspended in the air, then support the vehicle with safety stands.

2. Check the torque of the number-one spring hangar (double-lock-bolt design) lock bolt nuts. If a loose connection has caused pin hole wear, replace the hangar. See **Table 3** for torque specifications.
3. Inspect the pin hole in the outboard leg of the number one spring hangar (draw-key design) for wear or elongation.

WARNING

Wear at this point requires hangar replacement, or premature fracture of the spring hangar pin may occur, with possible separation of components and loss of vehicle control. This could result in serious personal injury.

4. Visually inspect the cam surface of the number-two spring hangar for wear due to operating mileage. Also, inspect the outside legs for wear which can be caused by worn spring eye bushings.

NOTE: RTE (extended-leaf-spring) suspensions require a minimum gap of 3/8 inch (9.5 mm) between the cam surface of the number-two spring hangar and the top of the main leaf in the unloaded condition. See **Fig. 11**. If this gap is less than 3/8 inch (9.5 mm), the extended-leaf portion of the spring will not perform satisfactorily for an empty ride.

5. Inspect the cam surface on the number-three spring hangar (extended-leaf-springs only) for wear. Excessive wear will reduce the gap available at the number-two spring hangar. See the previous note.
6. Place a block of wood on the leaf spring. See **Fig. 12**. Place a pry bar on the block of wood and insert the end of the pry bar under the frame hangar. Attempt to lift the frame hangar, as shown in **Fig. 12**. Also, with an empty chassis and the brakes applied, attempt to rock the chassis back and forth while observing the spring eye.In either case, if 1/8 inch or more of movement is observed, the bushing and pin should be replaced. This also could indicate that a broken spring eye and spring are connected to the spring hangar through the wrapper eye of the second leaf. In this case, the main leaf or the complete spring should be replaced immediately.

https://truckmanualshub.com/

Hendrickson HN Series Suspension Torque Values		
Description	**Hendrickson Thread/Grade**	**Torque: lbf•ft (N•m)**
Shock Absorber Locknut	5/8–18 UNF–2B Grade C	70–90 (95–122)
Bolster Spring Bolt Locknut	7/16–20 UNF–2B Grade C	33–45 (45–61)
Auxiliary Spring Locknut	1/2–13 UNC–2B Grade C	75–105 (101–142)
Transverse Rod Locknut (tapered stud)	1 -1/18–12 UNC–2B Grade 5	175–225 (237–305)
Bar Pin Bushing Locknut	1–8 UNC–2A Grade 8	450–600 (610–813)
Bar Pin Bushing Bolt Head	1–8 UNC–2A Grade 8	500–650 (677–881)
Vee Bracket Locknut	3/4–10 UNC–2B Grade C	220–300 (298–407)

Table 2, Hendrickson HN Series Suspension Torque Values

RTE Series Suspension Torque Values		
Description	**Size**	**Torque: lbf1 ft (N1 m)**
Top Pad to Spring Aligning Setscrew	—	100–150 (135–200)
Top Pad Nut	—	275–400 (375–542)
Spring Hanger Pin Double Locknut	1/2–13	45–63 (61–85)
Spring Hanger Pin Draw-Key Nut	1/2–13	75–100 (101–135)
Torque Rod Straddle Mount Nut	5/8–11	190 (260)
Saddle Cap Stud	7/8–14	55–65 (75–90)
Saddle Cap Locknut	7/8–14	225–275 (305–373)
Bar Pin Locknut	1–8	450–600 (610–813)
Spring Center Bolt	7/16–20	50–60 (70–80)
	1/2–20	65–75 (90–100)
Rebound Spacer Locknut	1/2–13	38–45 (51–61)

Table 3, RTE Series Suspension Torque Values

https://truckmanualshub.com/

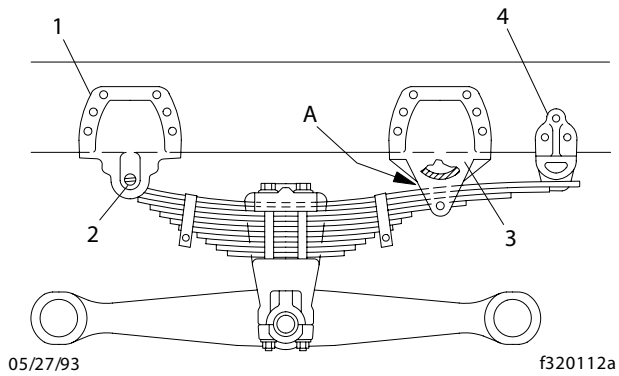

A. Minimum gap of 3/8" (9.5 mm).

1. Forward (no. 1) Spring Hanger
2. Spring Eye Pin
3. Rear (no. 2) Spring Hanger
4. Rear (no. 3) Extension

Fig. 11. RTE Suspension (unloaded)

Neway Suspension

WARNING

Inspect the components and check their operation. Failure to perform these inspections and checks could result in separation of worn suspension components and loss of vehicle control, possibly causing personal injury and property damage.

1. Park the vehicle on a level surface. Apply the parking brakes and chock the tires to prevent the vehicle from moving.
2. Inspect the rear suspension for any signs of damage, loose components, wear, or cracks. Replace any damaged components to prevent failure or equipment breakdown.

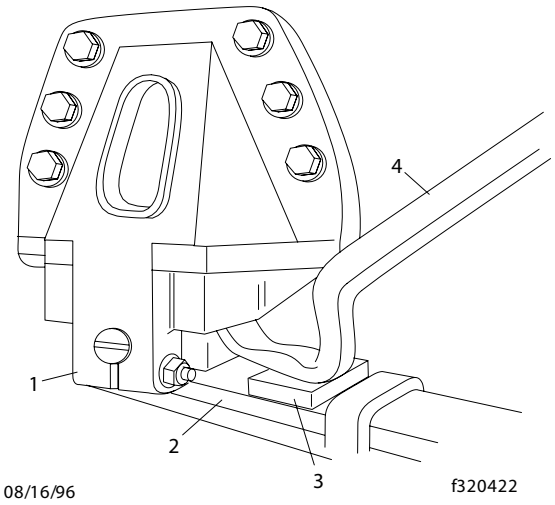

1. Frame Bracket
2. Leaf Spring
3. Wood Block
4. Pry Bar

Fig. 12. Hendrickson RTE Series Frame Bracket Inspection

3. Inspect all bolts and nuts at the pivot and axle connections to assure they are properly torqued. Check all other nuts and bolts for proper torque. See **Group 00** of this manual for proper torque specifications.
4. Check the air pressure gauge to confirm that there is in excess of 65 psi (448 kPa) in the air system, and inspect the air springs for sufficient and equal firmness.

NOTE: Height control valves control all air springs.Check for air leaks by applying a soapy solution, then checking for bubbles, at all air connections and fittings.

5. Check the riding height of the air suspension by measuring the distance from the centerline of the rear axle (see **Fig. 13**) to the bottom of the frame rail. If the riding height is incorrect, adjust the air-suspension.

Teyco 79 KB

Inspect all suspension fasteners for the proper torque values. See **Group 00** of this manual for proper bolt torque specifications. Visually inspect the frame for elongated holes at the suspension mounting points,

https://truckmanualshub.com/

and have the frame repaired as needed. If elongated holes are found on the frame, check the suspension alignment. Check brackets and torque rods for damage or loose fasteners

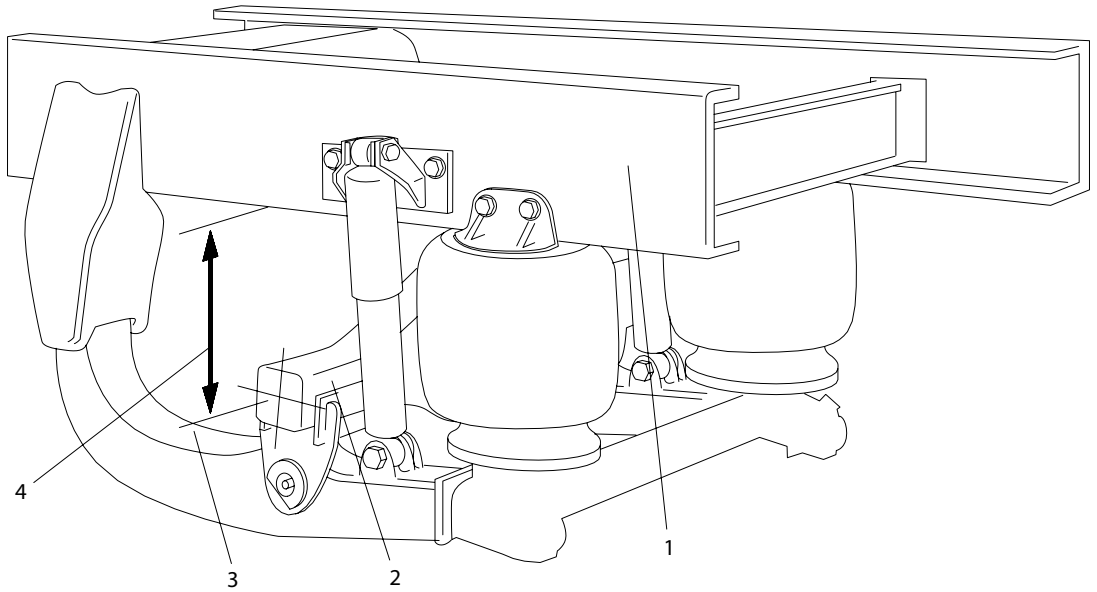

1. Frame Rail
2. Axle Housing
3. Axle Centerline
4. Suspension Ride Height

Fig. 13. Neway Ride Height Inspection

32–02 Suspension Lubrication

Front Suspension

Wipe all dirt away from the grease fittings (if equipped) on the spring-eye bushings. Apply multipurpose chassis grease with a pressurized grease gun until the old grease is forced out.

NOTE: Service Schedule IV vehicles equipped with a 12,000 lb (5452 kg) front axle are fitted with maintenance-free rubber bushings, and do not require lubrication.

Rear Suspension

American LaFrance TufTrac

No lubrication is required on the TufTrac rear suspension.

Chalmers

No lubrication is required on the Chalmers rear suspension.

American LaFrance Spring

Single Axle

No lubrication is required on American LaFrance single axle rear suspensions.

Tandem Axle

Lubricate the equalizer cap-and-tube assembly bushings by applying multi-purpose chassis grease at the grease fitting until the old grease is forced out from the cap-and-tube assembly. See **Fig. 14**.

Hendrickson HN Series

No lubrication is required on Hendrickson HN Series rear suspensions.

https://truckmanualshub.com/

Hendrickson RTE Series

For Hendrickson RTE Series, lubricate the bronze, ball-indented bushings in the spring eye, as follows:

1. Park the vehicle on a level surface, apply the parking brakes, and chock the front tires.

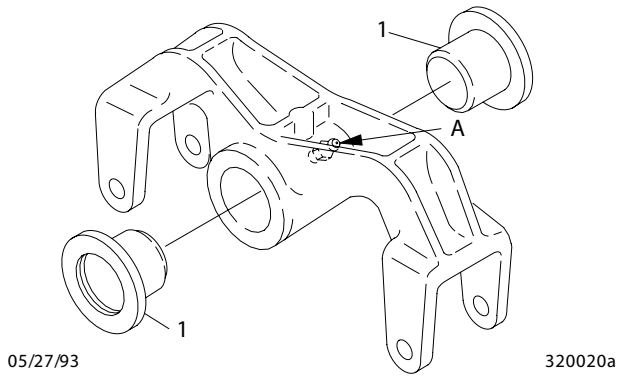

A. Minimum gap of 3/8" (9.5 mm).

1. Forward (no. 1) Spring Hanger

Fig. 14. Equalizer Assembly Lubrication

2. Raise the rear of the vehicle until the rear wheels are suspended in the air, then support the vehicle with safety stands. This relieves the load on the bushings and pins to allow the proper flow of lubricant around them.
3. Use a multi-purpose chassis grease and lubricate the bronze, ball-indented bushings in the spring eyes at the grease fitting. See **Fig. 15**. Continue to lubricate until grease exits both ends of the bushing. If the pin will not accept lubricant, remove the pin and clean the lubrication channels where lubricant may have hardened. Remove the safety stands and lower the vehicle after lubrication is complete.

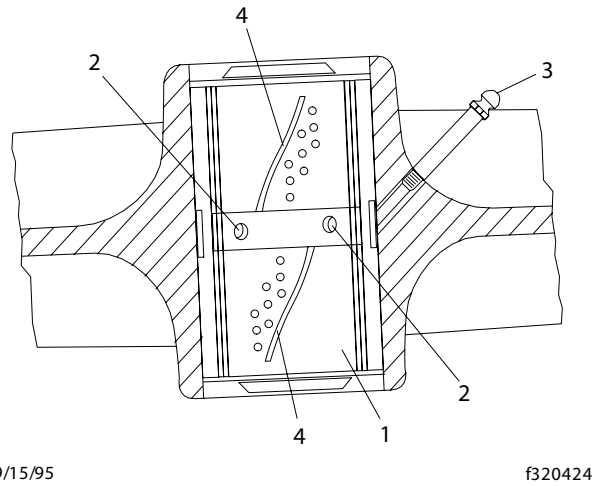

1. Bronze Bushing
2. Lubrication Hole
3. Grease Fitting
4. Lubrication Groove

Fig. 15. Hendrickson RTE Series Bushing Lubrication

Neway

No lubrication is required on Neway rear suspensions.

Reyco

No lubrication is required on Reyco rear suspensions.

32–03 Suspension Fastener Torque Check

CAUTION

Failure to retorque fastener nuts could result in spring breakage and abnormal tire wear.

1. Park the vehicle on a flat surface and apply the parking brakes. Chock the tires to prevent the vehicle from moving.
2. Check the fastener torque in a diagonal pattern. Set a click-type torque wrench to the highest torque value for the fastener being checked. See **Table 4** for fastener torque specifications. Turn the wrench in a clockwise motion (looking up) until the torque wrench clicks.

https://truckmanualshub.com/

3. Remove the chocks.

Fastener Torque Values		
Description	**Size**	**Torque: lbf1 ft (N1 m)**
Spring Assembly Fastener High Nuts*	5/8–18	Stage 1: Hand Tighten Stage 2: 60 (81) Stage 3: 200 (271) Stage 4: 180 to 230 (245 to 313)
	3/4–16	Stage 1: Hand Tighten Stage 2: 60 (81) Stage 3: 200 (271) Stage 4: 270 to 330 (367 to 449)
	7/8–14	Stage 1: Hand Tighten Stage 2: 60 (81) Stage 3: 200 (271) Stage 4: 420 to 500 (571 to 680)
	1–14	Stage 1: Hand tighten Stage 2: 60 (81) Stage 3: 200 (271) Stage 4: 520 to 600 (707 to 816)

* Tighten in a diagonal pattern as shown in **Fig. 16**.

Table 4, fastener Torque Values

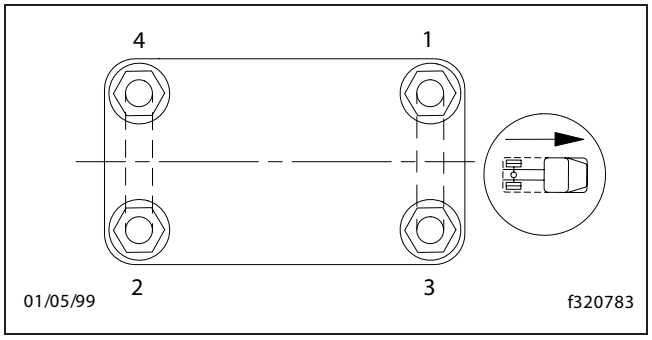

Fig. 16. Tightening Pattern for Fastener High Nuts

https://truckmanualshub.com/

Index

Title of Maintenance Operation (MOP)	MOP Number
Knuckle Pin Lubrication	33–01
Tie Rod Inspection	33–02
Tie Rod Lubrication	33–03
All-Axle Alignment Checking	33–04

https://truckmanualshub.com/

This page intentionally left blank.

https://truckmanualshub.com/

33–01 Knuckle Pin Lubrication

When lubricating knuckle pin bushings, do not raise the front axle. Wipe the lube fittings clean, and apply multipurpose chassis grease, NLGI Grade 1 (6% 12-hydroxy lithium stearate grease) or NLGI Grade 2 (8% 12-hydroxy lithium stearate grease) until new grease is seen at the bushing grease seal opposite the fittings. The grease seal will accept grease pressure without damage, and is designed to have grease pumped out through it during lubrication. Even if grease leaks out around the top, or bottom-plate gasket, continue pumping until new grease is seen at the bushing seal opposite the grease fitting. See **Fig. 1**.

33–02 Tie Rod Inspection

Inspect the tie-rod ends as follows:

1. Shake the cross-tube. A loose fit, or movement between the tapered shaft of the ball and the cross-tube socket members indicates that the tie-rod end assembly must be replaced.
2. The threaded portion of the tie-rod end assembly must be inserted all the way into the cross-tube split for adequate clamping. See **Fig. 2**. Replace the components if this cannot be done. For instructions, see **Group 33** of the *Condor® Workshop Manual*.

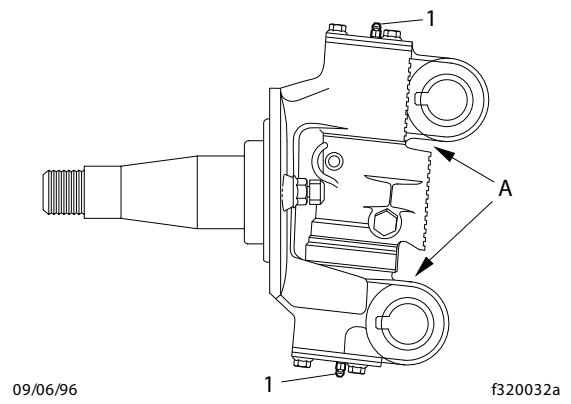

A. Grease Exit
1. Grease Fitting

Fig. 1, Meritor Knuckle Pin Lubrication

33–03 Tie Rod Lubrication

Before lubricating the tie-rod ends, wipe the grease fittings clean. Then, pump multipurpose chassis grease, NLGI Grade 1 (6% 12-hydroxy lithium stearate grease) or NLGI Grade 2 (8% 12-hydroxy lithium stearate grease), into the tie-rod ends until all used grease is forced out and fresh grease is seen at the ball stud neck.

33–04 All-Axle Alignment Checking

Drive Axle Alignment Checking

Check the axle alignment, parallelism, and thrust angle measurements for the rear drive axles. Use the applicable procedure and specifications in **Group 35** of the Condor® Workshop Manual.

Toe-In Checking, Front Axle

See **Group 33** in the *Condor® Workshop Manual* for wheel alignment procedures.

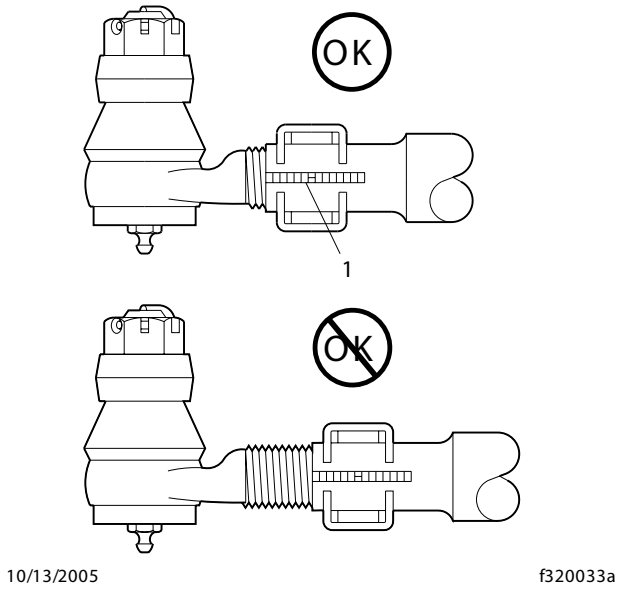

NOTE: Shown without pinch bolt to provide clarity.

1. Cross-Tube Split

Fig. 2, Tie-Rod End Adjustment

https://truckmanualshub.com/

This page intentionally left blank.

https://truckmanualshub.com/

Index

Title of Maintenance Operation (MOP)	MOP Number
Drive Axle Lubricant Level and Breather Check	35–01
Axle Lubricant and Filter Changing, and Magnetic Strainer Cleaning	35–02

https://truckmanualshub.com/

This page intentionally left blank.

https://truckmanualshub.com/

35–01 Drive Axle Lubricant Level and Breather Check

Meritor Axle

CAUTION

Failure to keep the rear axle filled to the proper level with the correct lubricant can result in rear axle damage.

1. Park the vehicle on level ground, apply the parking brakes, and chock the tires.
2. Clean the fill plug and the area surrounding the fill plug on the side of the axle carrier. See **Fig. 1**. Remove the plug.

NOTE: Some Meritor axles have a small tapped and plugged hole near and below the housing oil fill hole. This smaller hole is for a lubricant temperature indicator only, and should not be used as a fill or level hole.

3. Check that the lubricant is level with the bottom of the fill hole. See **Fig. 2**. If low, check for oil leaks, and correct as needed. Add the specified lubricant. See **Table 1** for recommended Meritor drive axle lubricants.

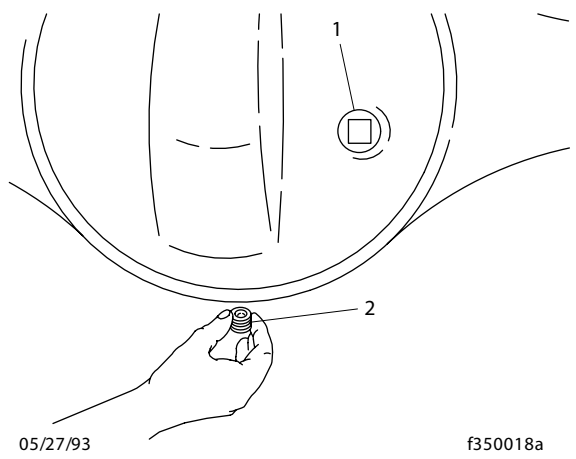

1. Oil Fill Plug 2. Drain Plug

Fig. 1. Axle Housing Drain and Fill Plugs

Meritor Drive Axle Recommended Lubricants			
Type	**Ambient Temp.**	**SAE Viscosity Grade**	**Meritor Specif.**
Synthetic Gear Oil	–40F (–40C) and up*	75W–90	0–76–N
	–40F (–40C) and up*	75W–140	0–76–M
Hypoid Gear Oil API Service Classification GL–5	–12.2C (+10F) and up†	85W–140	0–76–A
	–26.1C (–15F) and up*	80W–140	0–76–B
	–26.1C (–15F) and up*	75W–90	0–76–D
	–40C (–40F) and up*	75W–140	0–76–E
	–40C (–40F) to +2C (+35F)	75W	0–76–J
	–40C (–40F) and up*	75W–140	0–76–L

* There is no upper limit on these outside temperatures, but axle sump temperature must never exceed 250F (121C).

† There is no upper limit on these ambient temperatures, but axle sump temperature must never exceed 121C (250F).

Table 1. Recommended Meritor Drive Axle Lubricants

4. Install fill plug and use a torque wrench to tighten fill plug to 35 lbf-ft (47 Nm).
5. For a two-speed axle with a shift unit, check the lubricant level of the shift unit; refer elsewhere in this maintenance operation to the shift unit lubricant level inspection procedure.
6. On non-drive axles using oil-lubricated wheel bearings, check oil level at the wheels, and add oil if low. Use the same lubricant as specified for the drive axle.

NOTE: When adding to or checking the oil level, make certain the hub cap and plug are clean before removing the plug; this will minimize the possibility of dirt and road grime entering the assembly.

https://truckmanualshub.com/

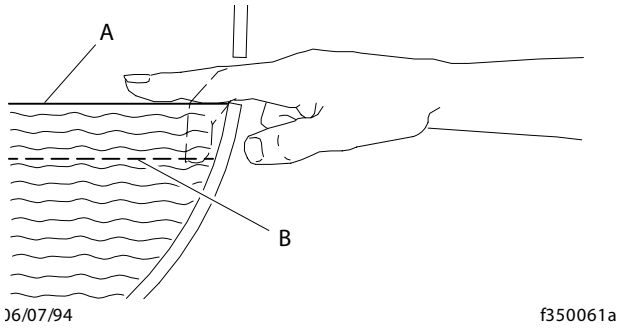

A. Correct (lube level at bottom of fill hole)
B. Incorrect (lube level below fill hole)

Fig. 2. Axle Lubricant Level Inspection

Two-Speed-Axle Shift Unit Lubricant Level Inspection

Meritor Axles

If equipped with a two-speed-axle shift unit, use the following directions.

CAUTION

Failure to keep lubricant at the specified level could cause damage to the axle shift unit.

1. Clean the shift unit oil fill plug, and the area surrounding the plug. See **Fig. 3**. Turn fill plug in a counterclockwise motion and remove the plug.
2. Insert a finger or pipe cleaner into the fill plughole and check the fluid level. The lubricant level should be even with the bottom of the fill hole. If low, add specified lubricant.

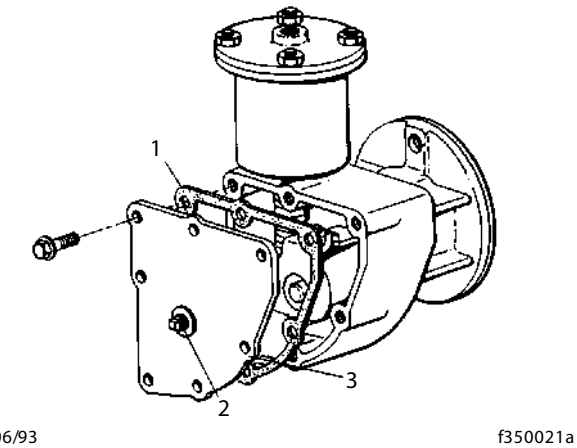

1. Housing Cover Gasket
2. Oil Fill Plug
3. Shift Unit Housing Cover

Fig. 3. Two-Speed Axle Shift Unit

CAUTION

Before adding additional lubricant, make sure of the type currently in the shift unit. To prevent component damage, do not mix engine oil with automatic transmission fluid.

CAUTION

Do not mix commercially available automatic transmission fluid with kerosene.

IMPORTANT: When the ambient temperature is above 0° F (–18° C), use SAE 10 heavy-duty engine oil, API service classication SD (sulfated ash content must not exceed 1.85%). When the ambient temperature is below 0° F (–18° C), use one part kerosene to three parts SAE 10 heavy-duty engine oil, API service classication SD (sulfated ash content must not exceed1.85%). This cold-weather mixture can be safely used up to 32° F(0° C).

Commercially available automatic transmission fluid may be used in place of SAE 10 engine oil. Automatic transmission fluid can be used for all temperatures.

Apply a small amount of Loctite® 242, or equivalent sealant, to the threads of the fill plug. Install the fill plug

https://truckmanualshub.com/

finger-tight, then, using a wrench, tighten it 1-1/2 turns past finger-tight.

Axle Breather Check

Axle housing breathers must remain clean and unclogged. Whenever the axle lubricant level is inspected, check the axle breather to be sure that it is open. Check more often under adverse operating conditions. If the breather is plugged, clean or replace it as needed. See **Fig. 4**.

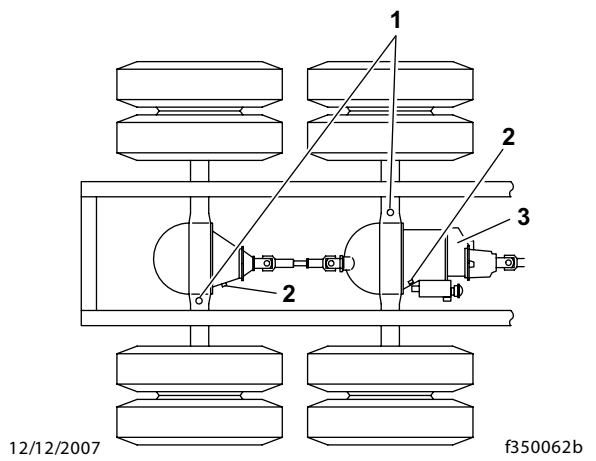

1. Axle Housing Breathers
2. Carrier Oil Fill Plugs
3. Interaxle Differential

Fig. 4. Fill Plug and Axle Housing Breather Locations

35–02 Axle Lubricant and Filter Changing, and Magnetic Strainer Cleaning

CAUTION

Failure to change lubricant as recommended could result in axle damage.

Meritor

Single drive axles equipped with traction equalizers may require a "limited-slip friction modifier" to correct a slip-stick condition, as described in the vehicle driver's manual. Meritor's experience shows that the following additives (friction modifiers) perform adequately:

A. For all synthetic gear oils other than Mobil, add 1.6 ounces (35 mL) of additive for each pint (0.5 L) of lube capacity:
   - Elco No. 2 Friction Modifier (Elco Corp.).
   - Lubrizol No. 6178 (Lubrizol Corp.).
   - Hi-Tec E-336 (Edwin Cooper, Inc.).
   - Equa-Torque No. 2411 (Sta-Lube Corp.).
   - Equa-Torque No. 2414 (Sta-Lube Corp.).

B. For Mobilube SHC (synthetic) use Mobil No. 204 (Mobil Oil Corporation). Add 1.1 ounces (23 mL) of additive for each pint (0.5 L) of lube capacity.

IMPORTANT: These friction modifiers generally deteriorate faster than conventional extreme-pressure additives, so the lubricant change schedule must be shortened when using these additives. The traction equalizer additive (and recommended drive axle lubricant) must be changed at the Maintenance 2 (M2) interval, instead of the Maintenance 3 (M3) interval recommended in the Maintenance Operation Chart for axles that require only those lubricants recommended in **Table 1**.

1. Park the vehicle on level ground, apply the parking brakes, and chock the tires.
2. Remove the axle carrier fill plug (see **Fig. 1**), then remove the drain plug from the bottom of the housing and completely drain the lubricant while the unit is warm. Allow sufficient time for all old lubricant to drain. On dual drive axles, it is also necessary to remove the plug at the bottom of the interaxle differential housing to drain the lubricant.
3. If so equipped, replace the axle oil filter. Remove the oil filter, using a suitable filter strap wrench. See **Fig. 5**. Discard used axle oil filter.

NOTE: There may be about one pint (0.5 L) of lubricant remaining in the filter. Be careful not to spill it when removing the filter.

4. Using the specified drive axle lubricant, coat the face of the gasket on a new oil filter. Install the filter over the adapter, and tighten the filter one full turn after the gasket contacts the base; do not overtighten the filter.

https://truckmanualshub.com/

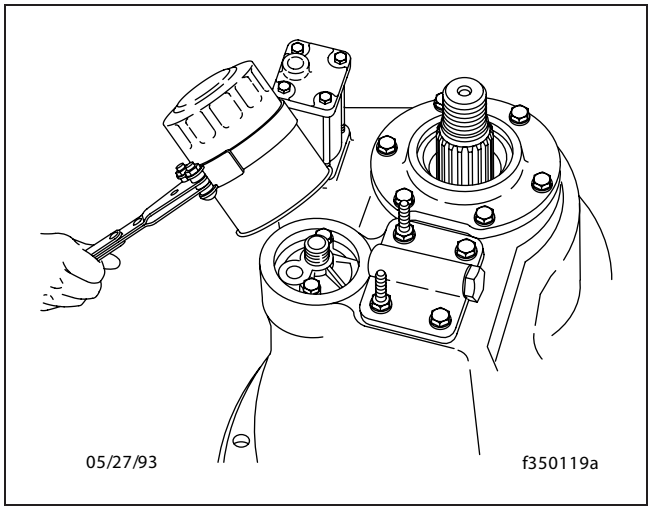

Fig. 5. Axle Oil Filter Removal

5. For a new or reconditioned axle, flush the axle with clean flushing oil, then drain it thoroughly. It is necessary to flush the axle the first time (only) when axle lubricant is changed.

CAUTION

Axles should never be flushed with a solvent, such as kerosene.

6. Clean the fill and drain plugs. For magnetic plugs, a piece of key stock or any other convenient steel slug may be used to short the two magnetic poles and divert the magnetic field.

NOTE: Meritor recommends plugs with elements having a minimum pickup capacity of 1-1/2 pounds (0.7 kg) of low-carbon steel, in plate or bar form. Magnets will rapidly lose effectiveness as collected material bridges the gap between the two poles. Clean or change the plugs before this occurs. It may be necessary to clean or change the plugs one or more times between lubrication change intervals.

7. After cleaning the drain plug(s), install and use a torque wrench to tighten to 35 lbf-ft (47 Nm).
8. With the vehicle on a level surface, fill the axle housings to the bottom of the fill hole, using specified lubricant. See **Table 1** for recommended axle lubricants, and **Table 2** for drive axle lubricant capacities.

Meritor Drive Axle Lubricant Capacities		
Axle Model		**Capacity* pints (liters)**
Single-Drive†		
RS–23–160		39.5 (18.7)
RS–23–161		37.2 (17.6)
RS–23–186		47.3 (22.4)
RS–26–185		46.6 (22)
RS–30–185		46.6 (22)
RS–30–380		46.6 (22)
Tandem-Drive		
RT–40–145, RT–40–145P	Forward	30.2 (14.3)
	Rear	25.8 (12.2)
RT–44–145P	Forward	25.2 (12)
	Rear	22.9 (11)
RT–46–160, RT–46–164	Forward	39.1 (18.5)
	Rear	34.4 (16.3)
RT–46–160P	Forward	39.3 (18.6)
	Rear	34.7 (16.4)
RT–50–160	Forward	38.1 (18)
	Rear	33.2 (15.7)
RT–52–185, RT–58–185, RT–58–380	Forward	56.1 (26.5)
	Rear	36.1 (17.1)
RT–52–380	Forward	56.1 (26.5)
	Rear	58.2 (27.5)
RT–70–380	Forward	54.4 (25.7)
	Rear	53.1 (25.1)

* Quantities listed are approximate. Fill axle until lubricant is level with bottom of fill hole with vehicle on level ground.

† Refer to "Traction Equalizer Additives" in the text.

Table 2. Meritor Drive Axle Lubricant Capacities

NOTE: Some Meritor axles have a small tapped and plugged hole near and below the housing lubricant fill hole. This smaller hole is for a lubricant temperature indicator only, and should not be used as a fill or level hole.

9. Install and tighten the fill plug 35 lbf-ft (47 Nm).
10. Whenever the interaxle differential housing has been drained, add an additional 2 pints (1 L) of

https://truckmanualshub.com/

specified lubricant directly into the interaxle differential housing.

11. For a two-speed axle with a shift unit, change the shift unit lubricant; refer elsewhere in this maintenance operation to the shift unit lubricant changing procedure.
12. Remove the chocks, then drive the vehicle, unloaded, for 1 or 2 miles (2 or 3 km) at speeds not to exceed 25 mph (40 km/h), to thoroughly circulate lubricant throughout the carrier and housing assemblies.

Two-Speed-Axle Shift Unit Lubricant Changing

1. Remove the shift unit housing cover. See **Fig. 3**. Drain and discard the old lubricant. Discard the housing cover gasket.
2. Thoroughly wash the axle shift parts and housing cover, and allow them to air dry.
3. Install the housing cover and a new cover gasket. Tighten the housing cover capscrews 7.5 to 9.2 lbf-ft (10.2 to 12.5 Nm), then remove the oil fill plug from the cover.

IMPORTANT: When the ambient temperature is above 0°F (–18°C), use SAE 10 heavy-duty engine oil, API service classication SD (sulfated ash content must not exceed 1.85%). When the ambient temperature is below 0°F (–18°C), use one part kerosene to three parts SAE 10 heavy-duty engine oil, API service classication SD (sulfated ash content must not exceed 1.85%). This cold-weather mixture can be safely used up to 32°F(0°C).

Commercially available automatic transmission fluid may be used in place of SAE 10 engine oil. Automatic transmission fluid can be used for all temperatures; do not mix it with kerosene. To prevent component damage, do not mix engine oil and automatic transmission fluid.

4. Fill the shift unit housing through the oil fill hole until specified lubricant is level with the bottom of the oil fill hole.
5. Apply a small amount of Loctite® 242, or equivalent sealant, to the threads of the fill plug. Install the plug finger-tight on the rear axle housing. Use a wrench and tighten it an additional 1-1/2 turns.

https://truckmanualshub.com/

This page intentionally left blank.

https://truckmanualshub.com/

Index

Title of Maintenance Operation (MOP) **MOP Number**

Wheel Nut and Rim Nut Checking 40–01

Toe-In Inspection 40–02

https://truckmanualshub.com/

This page intentionally left blank.

https://truckmanualshub.com/

40–01 Wheel Nut and Rim Nut Check

IMPORTANT: After a wheel has been installed, the wheel or rim nut torque must be rechecked after 50 to 100 miles (80 to 160 km) of operation.

See **Table 1** for wheel nut torque specifications, and **Fig. 1** for the wheel nut tightening sequence.

CAUTION

Insufficient wheel nut and rim nut torque can cause wheel shimmy, resulting in wheel damage, stud breakage, and extreme tire tread wear. Excessive wheel nut torque can break studs, damage threads, and crack discs in the stud hole area. Use the recommended torque values, and follow the tightening sequence shown in Fig. 1.

When checking wheel nuts on a dual disc assembly, remove one outer nut at a time, tighten the inner nut, then reinstall the outer nut. Repeat this procedure for all wheel nuts, using the tightening sequence shown in **Fig. 1**.

Wheel Fastener Torques			
Description	**Nut Size**	**Wheel Manufacturer**	**Torque (dry threads) lbf–ft (Nm)**
10-Stud Disc Wheel With Two-Piece Flanged Locknuts			
Front and Rear Wheel Nut	—	Alcoa	450–500 (610–680)*
10-Stud Disc Wheel With Ball-Seat Nuts			
Front and Rear Wheel Nut	M22 x 1.5	Budd (Uni–Mount 10)	390–440 (530–600)*
10-Stud Disc Wheel With Inner and Outer Locknuts			
Front Wheel Nut	1-1/8–16	Alcoa	400–500 (540–680)
		All Others	450–500 (610–680)
Rear Wheel Inner Nut	3/4–16	Alcoa	400–500 (540–680)
		All Others	450–500 (610–680)
Rear Wheel Outer Nut	1-1/8–16	Alcoa	400–500 (540–680)
		All Others	450–500 (610–680)
Wheel Stud Retainer Nut	3/4–16	All	175–200 (235–270)
Spoke Wheel Rim Nuts			
Front Wheel Nut, 6-Spoke	3/4–10	Gunite	200–225 (271–305)†
Rear Wheel Nut, 5-and 6-Spoke With Non-Corrugated Channel Spacer	3/4–10	Gunite	200–225 (271–305)
Rear Wheel Nut, 5-and 6-Spoke With Corrugated Channel Spacer	3/4–10	Gunite	240–260 (325–350)

* Torque values given are for lubricated threads.

† On front axles with over 12,000 lbs (5448 kg) capacity, tighten the wheel nuts 240 to 265 lbf–ft (325 to 359 Nm). Gunite part number W–854 nut with a phosphate-and-oil coating must be used.

Table 1, Wheel Fastener Torques

https://truckmanualshub.com/

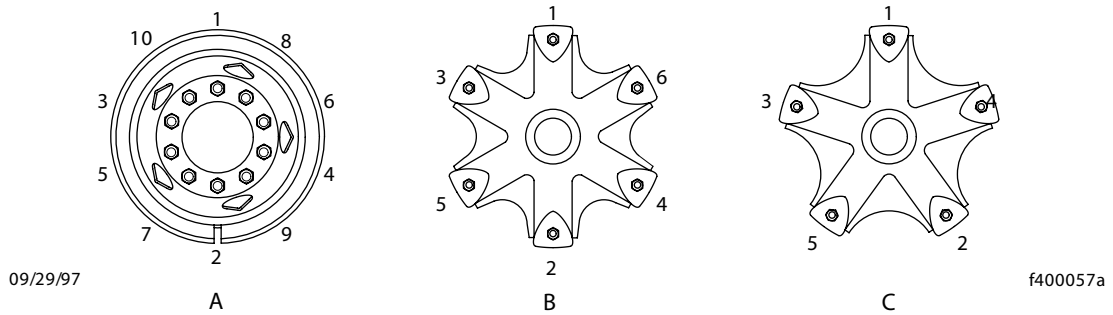

A. 10-Stud Disc Wheel B. 6-Spoke Wheel C. 5-Spoke Wheel

Fig. 1. Wheel Nut and Rim Nut Tightening Sequence

40–02 Toe-In Inspection

For vehicle alignment to be accurate, the shop floor must be level in every direction. The turn plates for the front wheels must rotate freely without friction, and the alignment equipment must be calibrated every three months by a qualified technician from the equipment-manufacturer. American LaFrance dealers must have proof of this calibration history.

1. Apply the parking brakes, and chock the rear tires. If the vehicle is equipped with an all-wheel-drive brake, only the drive axle brake should be applied.
2. Raise the front of the vehicle until the tires clear the ground. Check that the safety stands will support the combined weight of the cab, axle, and frame. Place safety stands under the axle.
3. Using spray paint or a piece of chalk, mark the entire center rib of each front tire.
4. Place a scribe or pointed instrument against the marked center rib of each tire, and turn the tires. The scribe must be held firmly in place so that a single straight line is scribed all the way around each front tire.
5. Place a turn-plate or turntable under both front tires. Remove the safety stands from under the axle, then lower the vehicle. Remove the lock-pins from the gauges; make sure the tires are exactly straight ahead.

NOTE: If turn-plates or turntables are not available, lower the vehicle. Remove the chocks from the rear tires and release the parking brakes. Move the vehicle backward and then forward about six feet (two meters).

6. Place a trammel bar at the rear of the front tires; locate the trammel pointers at spindle height, and adjust the pointers to line up with the scribe lines on the center ribs of the front tires. See **Fig. 2**. Lock in place. Check that the scale is set on zero.
7. Place the trammel bar at the front of the tires, see **Fig. 3**, and adjust the scale end so that the pointers line up with the scribe lines. See **Fig. 4**.
8. Read the toe-in from the scale, and compare it to the toe-in specification in **Group 33** of the *Condor® Workshop Manual*. If corrections are needed, see **Group 33** of the *Condor® Workshop Manual* for instructions on adjusting the toe-in.

https://truckmanualshub.com/

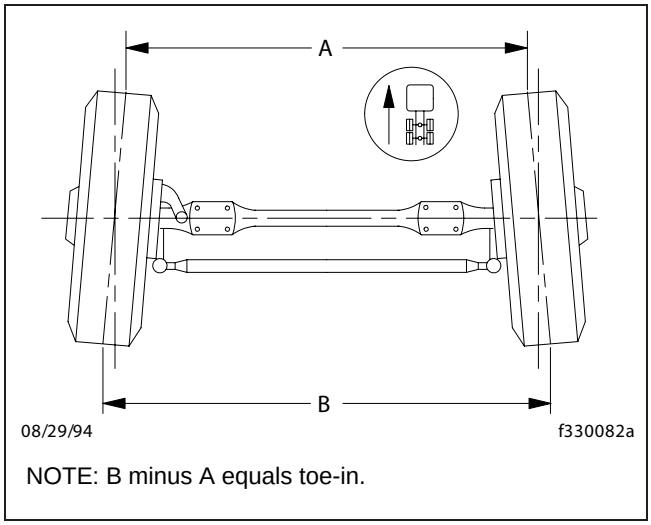

Fig. 2. Wheel Toe-In (overhead view)

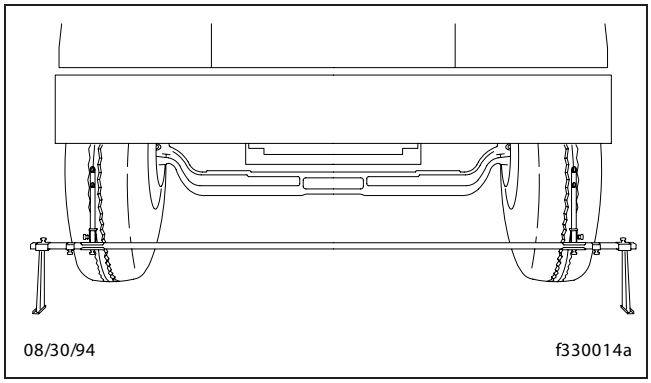

Fig. 3. Trammel Bar Positioning

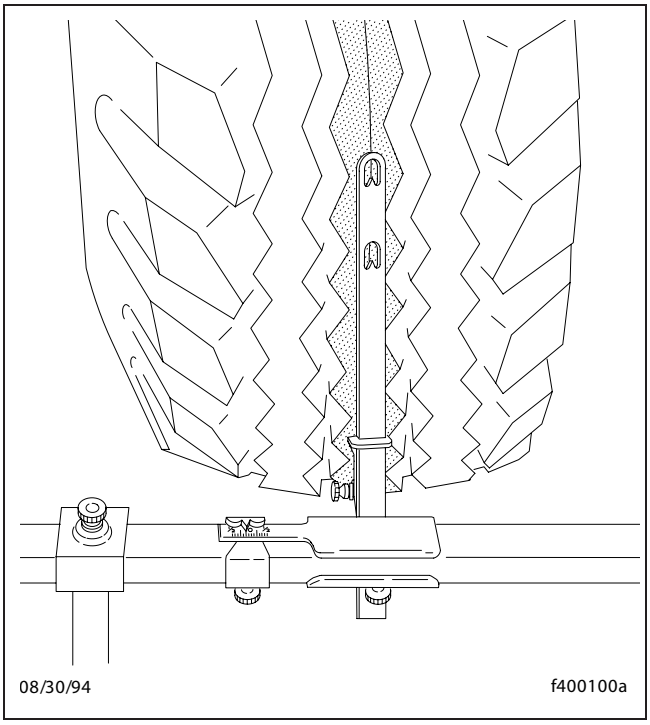

Fig. 4. Setting Trammel Bar Pointers

https://truckmanualshub.com/

This page intentionally left blank.

https://truckmanualshub.com/

Index

Title of Maintenance Operation (MOP)	MOP Number
Driveline Inspection	41–01
Driveline Lubrication	41–02

https://truckmanualshub.com/

This page intentionally left blank.

https://truckmanualshub.com/

41–01 Driveline Inspection

1. Park the vehicle on a flat, level surface, apply the parking brakes and chock the tires.

CAUTION

Due to the extreme load occurring at high-speed rotation, a loose or broken capscrew at any point in the driveline will weaken the driveline connection, which could eventually result in serious vehicle damage. Do not over-tighten bearing-cap-screws or yoke-strap capscrews.

2. *For driveline universal joints with bearing caps*, tighten bearing-cap capscrews 43 lbf-ft (49 Nm). See **Fig. 1**, Ref. 1.

   For RPL series universal joints, tighten bearing-cap capscrews 125 lbf-ft (169 Nm). See **Fig. 2**.

   For driveline universal joints with yoke straps, tighten yoke-strap capscrews 125 lbf-ft (169 Nm).See **Fig. 3**.

3. Check the driveline yokes for cracks, and check end-yokes for looseness. See **Fig. 3**.

   Replace cracked yokes.

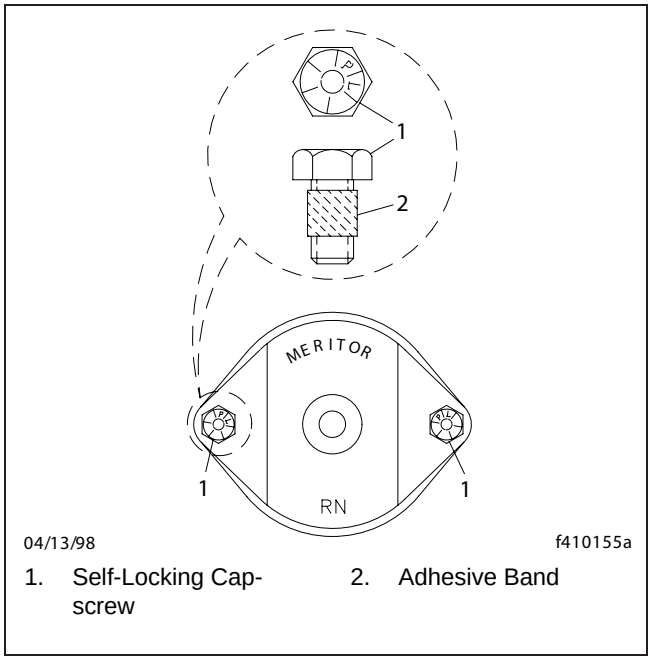

1. Self-Locking Capscrew
2. Adhesive Band

Fig. 1, Meritor U-Joint Fasteners for Bearing Caps

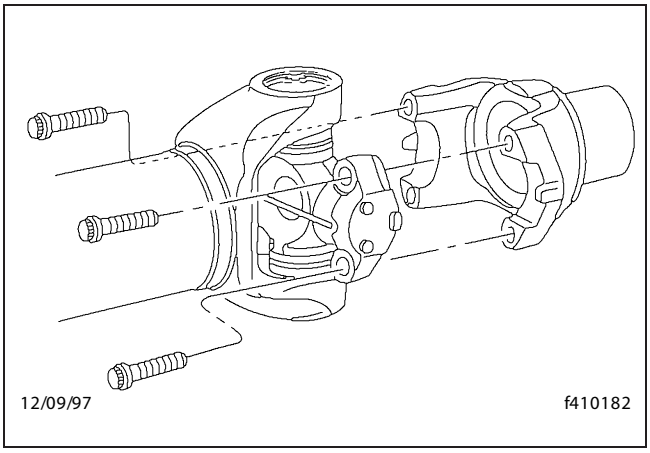

Fig. 2, Meritor RPL Series U-Joint

If any end-yoke can be moved in or out on its shaft, or can be rocked on its shaft, disconnect the driveshaft and U-joint from the yoke, then check the drive component's shaft seal for leakage or other visible damage that may have been caused by the loose yoke. Replace the seal if needed, then tighten the yoke nut. See **Group 41** of the *Condor® Workshop Manual* for torque specifications. If the yoke is still loose after tightening the yoke nut, replace the end-yoke and yoke nut.

Replace the prevailing torque locknut (end-yoke nut) if it was removed for yoke replacement, seal replacement, or any other reason.

4. Check U-joint assemblies for wear by moving the driveshaft up and down, and from side to side. If any movement of the U-joint cross in the bearings can be felt or seen, replace the U-joint assembly.
5. Check if the midship bearing and mounting are loose or have deteriorated, by attempting to move the driveshaft up and down, and from side to side. If the bearing is loose on its shaft, or rattles, replace it. If the bearing mount is loose on the frame, tighten the mounting fasteners to the proper torque value. See **Group 41** of the *Condor® Workshop Manual* for torque specifications.Replace the midship bearing assembly if the rubber cushion is deteriorated or oil-soaked.
6. Check slip joints for spline wear by moving the sleeve-yoke and splined shaft back and forth. See **Fig. 4**. If the slip joint can be twisted in a clockwise, or counterclockwise movement greater than 0.007

https://truckmanualshub.com/

inch (0.18 mm), replace both the sleeve-yoke and the splined shaft.

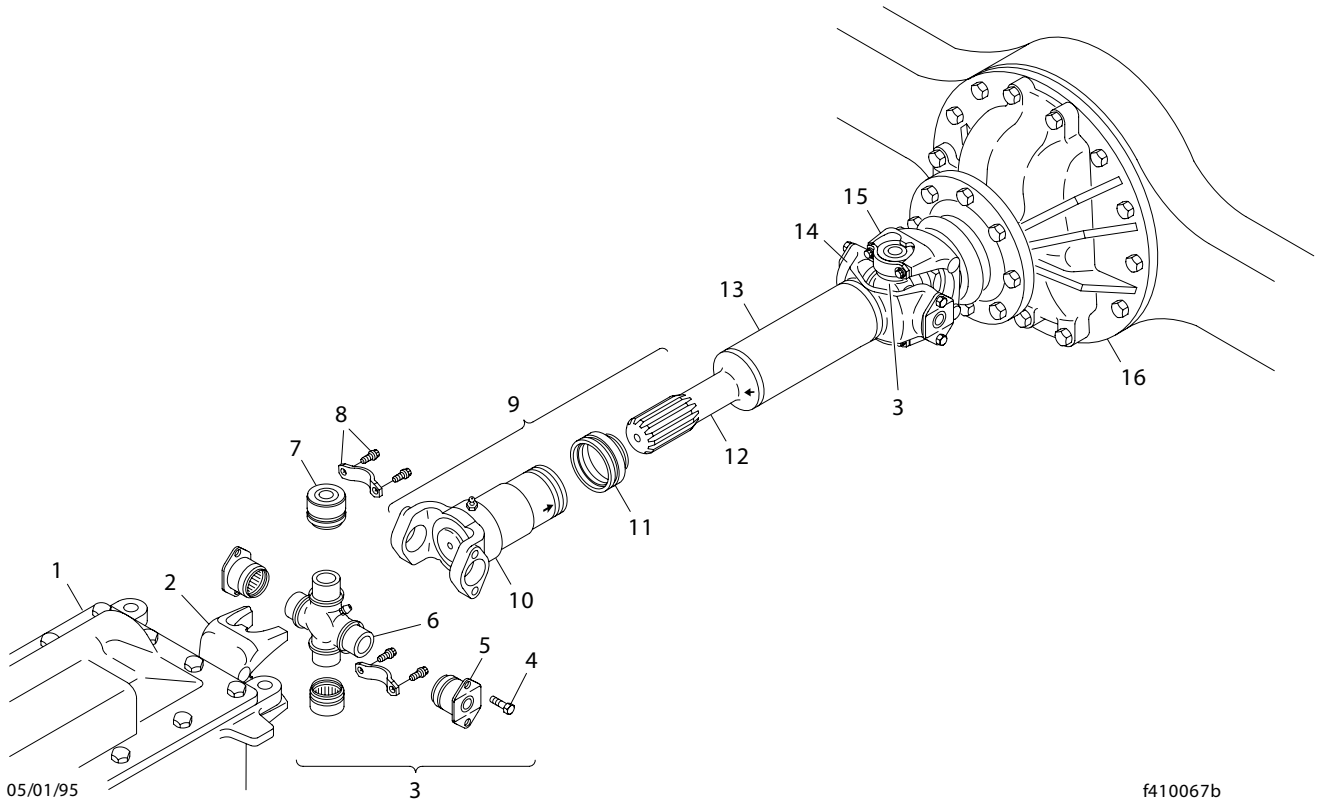

NOTE: Not all fasteners are shown.

1. Transmission
2. Transmission Output-Shaft End-Yoke (yoke-strap type)
3. U-Joint Assembly
4. Bearing Cap Self-Locking Capscrew
5. Bearing Cap
6. U-Joint Cross
7. Bearing Cup (for yoke strap)
8. Yoke Strap and Capscrew
9. Slip-Joint Assembly
10. Sleeve-Yoke (bearing-cap type)
11. Dust Cap
12. Splined Stub Shaft
13. Driveshaft Tube
14. Tube-Yoke (bearing-cap type)
15. Axle Input-Shaft End-Yoke (yoke-strap type)
16. Rear Axle

Fig. 3, Components of a Basic Driveline

7. Visually examine the driveshaft tubes for dents, bends, twists, or other damage. If any tube appears to be damaged, see **Group 41** of the *Condor® Workshop Manual* for repair and replacement instructions.
8. Examine the driveshaft for evidence of missing balance weights, and for build-up of foreign material. Remove any foreign material. If there is any evidence that balance weights are missing, remove the driveshaft and have it balanced.
9. For driveshafts with slip joints, check to be sure the yoke plug is not loose or missing. See **Fig. 5**, Ref. 2. Repair or replace the yoke plug as needed. If the yoke plug is missing, the splined shaft may be hitting the plug and knocking it out. Contact your

https://truckmanualshub.com/

Regional Service Office for assistance in determining the correct driveshaft length.

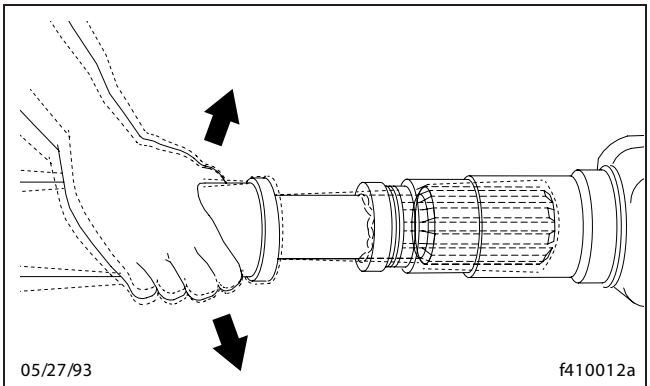

Attempt to move the sleeve-yoke and splined shaft back and forth.

Fig. 4, Slip Joint Spline Wear Checking

41–02 Driveline Lubrication

Universal Joint Lubrication

NOTE: Vehicles equipped with Meritor RPL Series drivelines do not require periodic lubrication.

1. Park the vehicle on a flat surface, apply the parking brakes and chock the tires.
2. Wipe all old grease and dirt from each U-joint grease fitting. See **Fig. 5**, Ref. 8.
3. Use a hand-type grease gun, or a high-pressure gun with a low-pressure adapter, to lubricate U-joints. If a low-pressure adapter is not used, U-joints may not receive enough grease.

   Using lithium 12-Hydroxy stearate grease (NLGI Grade 1 or Grade 2, with EP additives), lubricate until new grease can be seen at all four U-joint-seals. Fresh grease must be seen escaping from all four bearing-cap seals of each U-joint. On yokes equipped with a yoke-bearing cap, if most of the grease being added to a U-joint can be seen escaping from just one of the U-joint seals, check the torque on the capscrews at that seal.
4. Tighten the bearing-cap capscrews 43 lbf·ft (49 Nm). If the capscrews were already tight, or all of the U-joint seals still do not purge, remove the bearing cap at that seal, and examine the seal for damage. If the seal is damaged, replace the complete U-joint.
5. If grease does not appear at one seal, use a prying tool to pry the U-joint trunnion away from the non-purging seal, or tap the driveshaft or yoke with a plastic or rawhide mallet on the side opposite the dry seal, while continuing to lubricate. If grease still does not appear, loosen the capscrews at the bearing with the dry seal, to relieve seal tension. Lubricate the U-joint until new grease is seen at the seal, then tighten the capscrews to the correct torque specifications. If the bearing will not take grease, replace the U-joint. See **Group 41** of the Condor® Workshop Manual for replacement instructions.
6. Check the purged grease. If it appears rusty, gritty, or burned, replace the U-joint.
7. Wipe the purged grease from the seals, and any excess grease from the grease fitting.

Slip Joint Spline Lubrication

NOTE: Vehicles equipped with Meritor RPL Series drivelines do not require periodic lubrication.

1. If equipped with a grease fitting, wipe all old grease and dirt from the slip joint grease fitting. See **Fig. 5**, Ref. 1.
2. Use a hand-type grease gun or a high-pressure gun with a low-pressure adapter, to lubricate the slip joint. Add multipurpose chassis grease (lithium 12-hydroxy stearate, NLGI Grade 1 or Grade 2, with EP additives) until it appears at the pressure-relief hole in the yoke plug. Then cover the relief hole with your finger, while continuing to apply gun pressure until new grease appears at the slip joint seal. See **Fig. 5**. This ensures complete lubrication of the splines.
3. Wipe the purged grease from the pressure-relief hole and slip joint seal, and any excess grease from the grease fitting.

https://truckmanualshub.com/

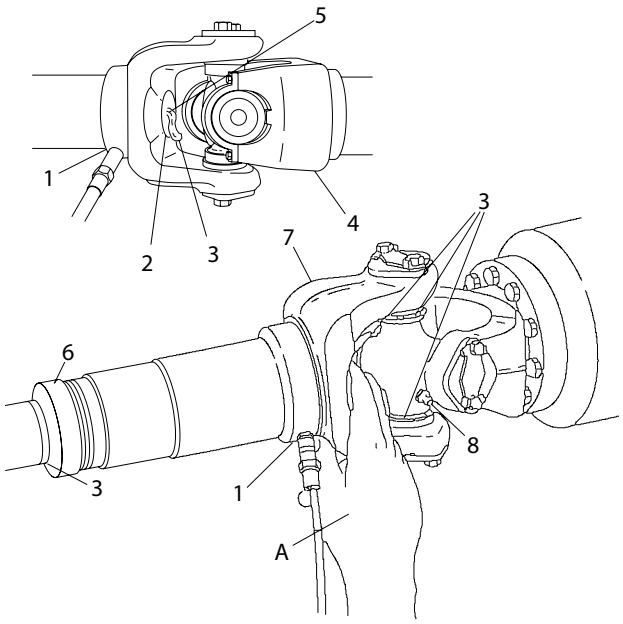

A. After grease appears, cover the pressure-relief hole while continuing to lubricate.
1. Slip Joint Grease Fitting (with grease gun attached)
2. Yoke Plug
3. Grease
4. Half-Round Yoke
5. Yoke Plug Pressure-Relief Hole
6. Slip Joint Seal
7. Full-Round Yoke
8. U-Joint Grease Fitting

Fig. 5, Slip Joint and U-Joint Lubrication

https://truckmanualshub.com/

Index

Title of Maintenance Operation (MOP)	MOP Number
Air Brake System Valve Inspection	42–01
Bendix AD-9 Air Dryer Desiccant Replacement	42–02
Bendix AD-9 Air Dryer Inspection	42–03
Bendix AD-IP Air Dryer Desiccant Replacement	42–04
Telma® Axle Retarder Brake Inspection	42–05
Camshaft Bracket Lubrication	42–06
Automatic Slack Adjuster Inspection and Lubrication	42–07
Disc Brake Caliper Lubrication	42–08

https://truckmanualshub.com/

This page intentionally left blank

https://truckmanualshub.com/

42–01 Air Brake System Valve Inspection

NOTE: There is no scheduled air valve maintenance on vehicles equipped with Bendix® air valves and a Bendix air dryer if air dryer desiccant is replaced as scheduled every 18 months. If the desiccant is not changed, maintenance will have to be performed to air brake valves. See **Group 42** of the *Condor® Workshop Manual* for procedures.

42–02 Bendix AD-9 Air Dryer Desiccant Replacement

1. Park vehicle on a level surface. Apply parking brakes and chock tires.
2. Completely drain all air reservoirs. Air pressure gauges should read 0 psi (0 kPa).

WARNING

Drain all air from air reservoirs and air lines. Disconnecting an air line containing compressed air can result in line whipping as air escapes, which could result in personal injury or property damage.

WARNING

Cover ends of all disconnected air lines and plug all ports on air dryer unit preventing contamination from entering air system. Contamination can damage internal components of air dryer and cause premature brake failure.

3. Identify, tag, and disconnect three air lines from dryer end cover.
4. Disconnect harness connector from heater and thermostat assembly.
5. Loosen capscrew securing upper mounting bracket strap.
6. Remove two capscrews securing air dryer to lower mounting bracket. Mark position of mounting bracket to end cover, and mark capscrews to ease installation.
7. Remove upper mounting bracket strap cap-screw, and remove air dryer from vehicle.
8. Place air dryer on a bench and remove remaining six capscrews, 12 washers, six Nylok® nuts, and air dryer housing. See **Fig. 1**.
9. Discard Nylok nuts. Remove end-cover-to-housing O-ring.
10. Clamp desiccant cartridge in a vise.

CAUTION

Clamping end cover or housing in a vise can damage unit and reduce air dryer's ability to hold air pressure. This can result in a failure of the brake system.

11. Twist end cover counterclockwise releasing cartridge from end cover. Rotate end cover until it completely separates from desiccant cartridge.

NOTE: Up to 50 lbf-ft (68 Nm) of torque may be necessary to remove desiccant cartridge from end unit.

12. Inspect condition of O-ring seals. If they are cracked, crimped, or otherwise damaged, replace them ensuring an airtight seal. Clean O-ring grooves of any dirt or obstruction.

CAUTION

Dirt or obstructions in O-ring grooves can cause an O-ring failure resulting in an air leak.

13. Lubricate O-rings with silicone or lithium grease and install them in the end cover.
14. Install the desiccant cartridge on end cover. Turn cartridge clockwise until desiccant cartridge makes contact with end cover.
15. Place desiccant cartridge in a vise, and turn end cover clockwise an additional 180 to 225 degrees to fully tighten desiccant cartridge to end cover.

NOTE: Desiccant cartridge torque should not exceed 50 lbf-ft (68 Nm).

16. Place housing over desiccant cartridge and align mounting holes with end cover.

IMPORTANT: Replace, do not reuse Nylok nuts on air dryer cover.

17. Install six capscrews, 12 washers and six new Nylok nuts. Torque capscrews in a star pattern (see **Fig. 2**) 270 to 385 lbf-in (3060 to 4340 Ncm).

https://truckmanualshub.com/

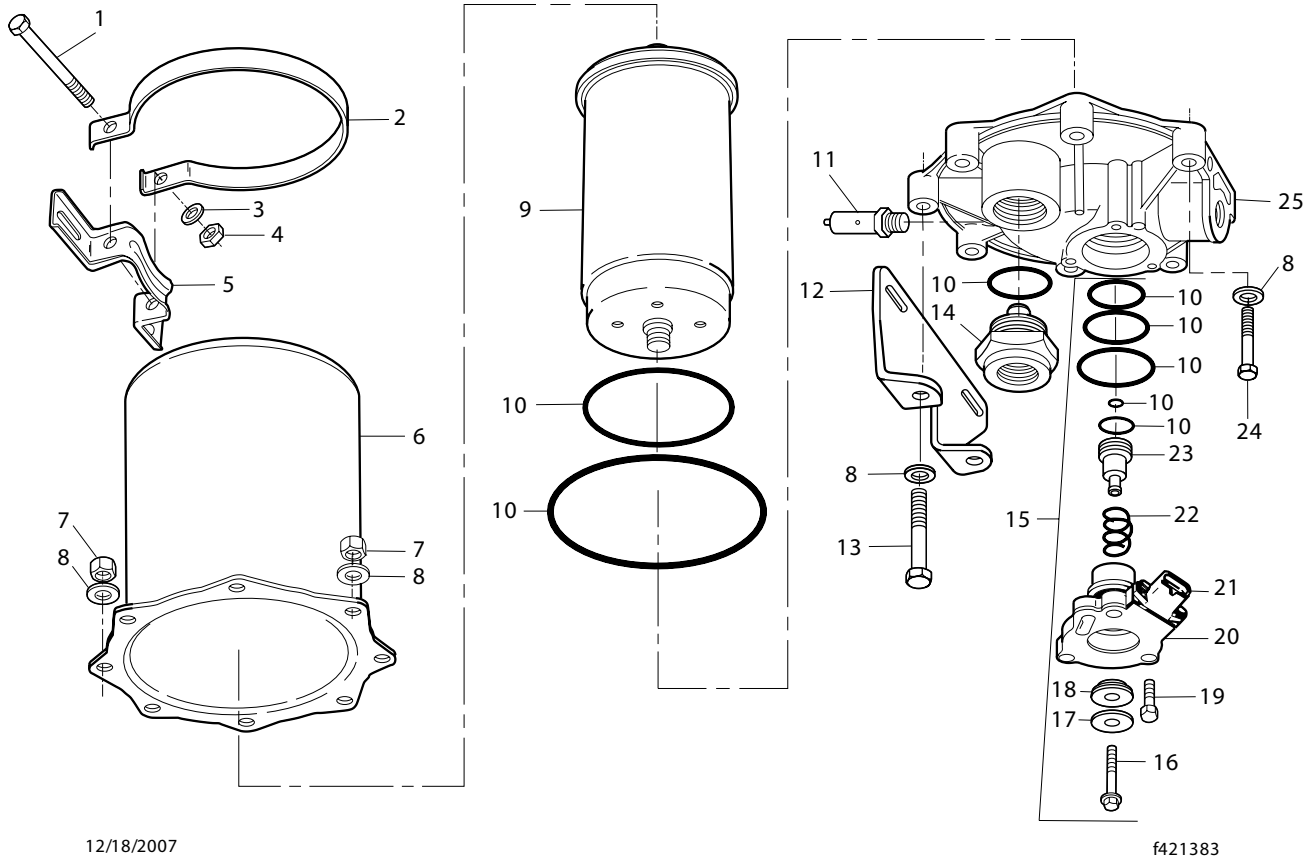

1. 5/16" x 4-1/2" Upper Mounting Bracket Capscrew
2. Upper Mounting Bracket Strap
3. 5/16" Lockwasher
4. 5/16" Nylok® Nut
5. Upper Mounting Bracket
6. Housing
7. Nylok® Nut
8. 3/8" Special Washer
9. Desiccant Cartridge
10. O-Ring
11. Safety Valve
12. Lower Mounting Bracket
13. 3/8" Capscrew (long)
14. Check Valve Assembly
15. Purge Valve Assembly
16. Purge Valve Bolt
17. Exhaust Diaphragm
18. Purge Valve
19. 1/4" Tapping Screw
20. Purge Valve Housing
21. Heater and Thermostat Housing
22. Return Spring
23. Purge Piston

Fig. 1. Air Dryer (exploded view of Bendix AD-9 shown)

https://truckmanualshub.com/

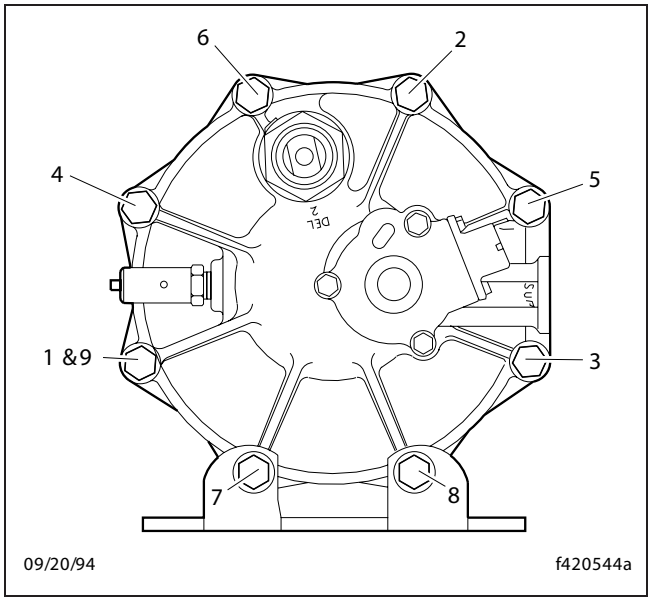

Fig. 2. Bendix AD-9 End Cover to Housing Torque Pattern

17. Install air dryer on lower mounting bracket. Install two previously marked capscrews, four washers, and two new Nylok nuts. Torque two remaining capscrews 270 to 385 lbf-in (3060 to 4340 Ncm). Install capscrew, two washers, and new Nylok nut in upper mounting bracket strap. Torque upper mounting bracket strap capscrew 80 to 120 lbf-in (904 to 1356 Ncm).
18. Connect and tighten the three air lines. Connect the harness connector to heater and thermostat assembly until lock tab snaps in place.
19. Start the engine, build air pressure, and check air brake system for leaks. If any air leaks are present, see **Group 42** of the *Condor® Workshop Manual* for diagnosis and repair information.

42–03 Bendix AD-9 Air Dryer Inspection

1. Check for moisture in air brake system by opening reservoir drain cocks. Examine discharge. A trace of water in discharge is normal. A discharge of a milky gray liquid indicates excessive moisture is present in air system and desiccant cartridge needs to be replaced. See **Group 42** in vehicle workshop manual for troubleshooting procedures.

   Following conditions could cause small amounts of moisture to be found in air system:

   - An outside air source has been used to charge air brake system. This air did not pass through drying bed.
   - Air usage is unusually high and not normal.This may be due to accessory air demands or some unusual air requirement that does not allow compressor to load and unload in a normal fashion. Check for air system leaks.
   - Air dryer has been installed on a system that had previously been operated without an air dryer. This type of system will be saturated with moisture, and several weeks of operation may be needed to fully dry system.
   - The temperature range in your area fluctuates more than 30 degrees in one day. Small amounts of water can accumulate in air brake system due to condensation. Under these conditions, the presence of moisture is normal and should not be considered an indication of poor air dryer performance.
2. Visually inspect air dryer for external damage, and ensure unit is mounted tightly on frame. If air dryer mounting is loose, see **Group 42** of the *Condor® Workshop Manual* for mounting instructions.
3. Turn on ignition switch, but don't start engine.
4. Disconnect harness connector from air dryer.
5. Connect red voltmeter lead to wire 94 on air dryer's harness connector and black lead to a chassis ground point. Check for battery voltage. If voltage is not found, check and repair the open circuit or short to ground in wire 94.
6. Connect a voltmeter between the two terminals on air dryer's harness connector. If voltage is not found, repair open in the ground circuit wiring.
7. Use an ohmmeter to check resistance between terminals on end cover. See **Fig. 3**. End cover contains heater/thermostat. If heater/thermostat is between 40º and 90º F (5º to 32º C), the heater/thermostat measured resistance will be infinite ohms. If measured resistance is less than infinity, replace heater/ thermostat.

https://truckmanualshub.com/

8. Remove heater/thermostat assembly and place it in a freezer for about five minutes to cool it below 40º F (5º C). Remove cold heater/thermostat assembly and check resistance between heater/thermostat terminals. Resistance should be 1.5 to 3.0 ohms. As the temperature of heater/thermostat assembly increases, the ohm reading will increase. When the temperature goes above 45º F (7º C) measured resistance should be infinite ohms. If heater/thermostat does not operate as outlined, replace it.

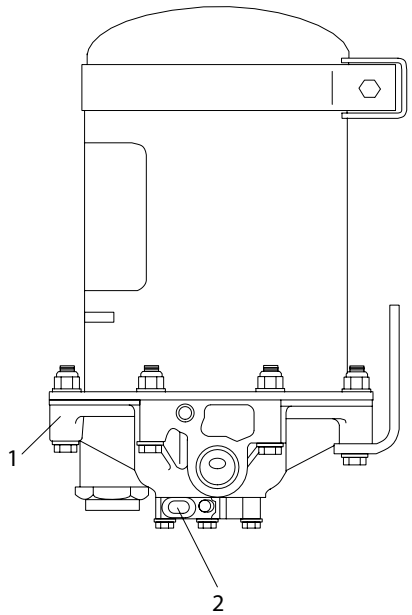

1. End Cover Assembly
2. Heater/Thermostat Terminals

Fig. 3. Bendix AD-9 Air Dryer Heater and Thermostat Check Location

42-04 Bendix AD-IP Air Dryer Desiccant Replacement

Removing Old Desiccant Cartridge

The Bendix AD-IP air dryer contains a desiccant cartridge secured to a die cast aluminum end cover using a single cartridge bolt. See **Fig. 5**. The aluminum end cover contains a check valve assembly, safety valve, heater and thermostat assemblies and purge valve assembly.

For ease of maintenance, all replaceable assemblies, including the desiccant cartridge, can be removed without having to remove the air dryer from its mounting on vehicle.

1. Park vehicle on a level surface. Apply parking brakes and chock tires.
2. Completely drain all air reservoirs. Air pressure gauges should read 0 psi (0 kPa).

WARNING

Drain ALL air from air reservoirs and air lines to 0 psi (0 kPa). Disconnecting an air line that contains compressed air may result in line whipping as air escapes, which could result in personal injury or property damage.

CAUTION

Compressor discharge line could still retain some residual air pressure that could discharge rapidly when hose is removed.

CAUTION

Cover ends of all disconnected air lines and plug all ports on air dryer unit preventing contamination from entering the air system. Contamination can damage internal components of air dryer resulting in premature brake failure.

3. Disconnect all electrical power from vehicle using battery disconnect switch (located between air dryer and battery box). See **Fig. 4**. Place a lock on battery disconnect switch handle (in OFF position) preventing any accidental application of electrical power.
4. Identify, tag, and disconnect three air lines from dryer end cover.
5. Disconnect electrical harness connector from heater and thermostat assembly.
6. Using a socket wrench, loosen desiccant cartridge bolt.
7. Turn or “clock” the desiccant cartridge slightly to separate it from end cover.

https://truckmanualshub.com/

8. Remove desiccant cartridge bolt out of end cover.
9. Remove two O-rings from cartridge bolt and discard.
10. Remove desiccant cartridge from air dryer end cover.

CAUTION

Disassembly of desiccant cartridge should not be attempted. Detail repair parts are not available. The desiccant cartridge contains a 150# spring that cannot be mechanically caged. A maintenance kit should be ordered from Bendix. This kit contains all parts needed to replace desiccant cartridge.

Installing New Desiccant Cartridge

1. Install two new O-rings on carriage bolt.
2. Place desiccant cartridge on end cover and ensure it is properly seated and flush on end cover.

CAUTION

It may be necessary to rotate new desiccant cartridge slightly until anti-rotation lugs are properly aligned allowing cartridge to rest flush against end cover.

3. Using a socket wrench, tighten desiccant cartridge bolt, securing it to end cover.
4. Using a torque wrench, tighten desiccant cartridge bolt to 65-75 lbf-ft (88.1-101.7 Nm). Minimum torque needed is 45 lbf-ft (54.2 Nm).

CAUTION

Do not over-tighten desiccant cartridge bolt. A torque setting above the recommended setting (65-75 lbf-ft (88.1-101.7 Nm) can result in damage to the cast aluminum end cover.

5. Reconnect air lines to end cover.
6. Reconnect electrical harness to end cover.
7. Remove lock and turn battery disconnect switch to ON position. See **Fig. 4**.
8. Start engine and charge air system.
9. Check for any air leaks around air dryer assembly. Repeat above steps if air leaks are found.
10. Stop engine.

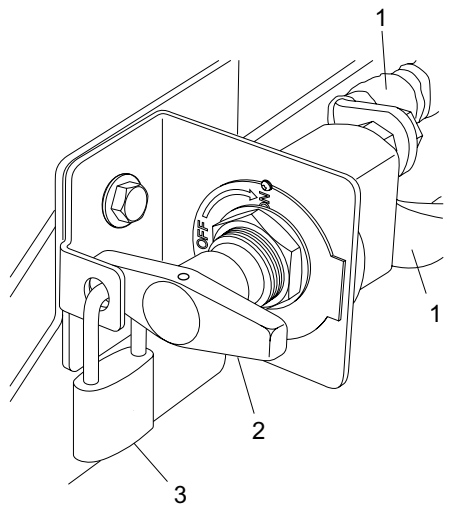

12/14/2007 m000001

1. Battery Cables
2. Battery Lockout Switch Handle
3. Lock

Fig. 4. Battery Disconnect Switch (Shown Locked)

https://truckmanualshub.com/

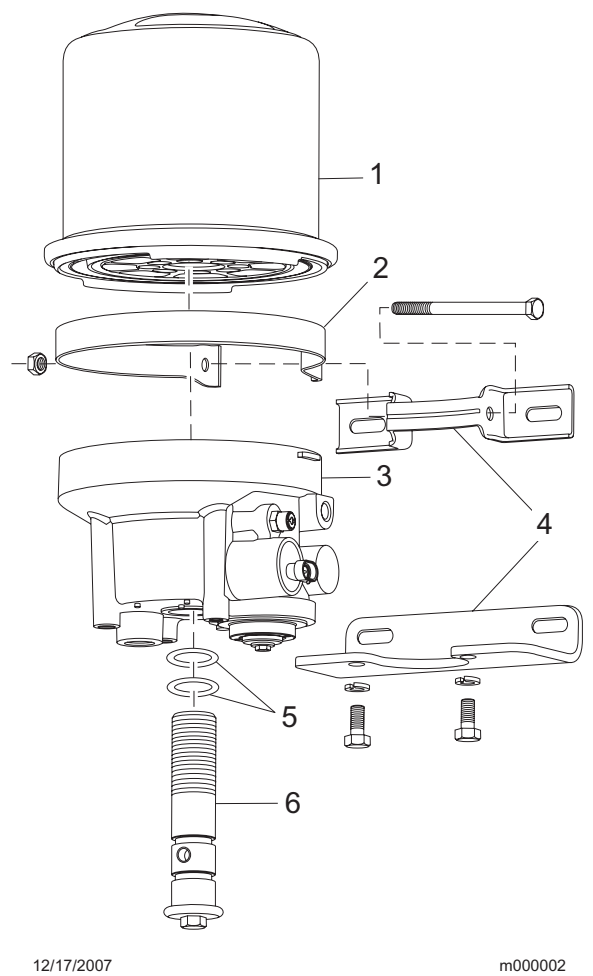

1. Desiccant Filter
2. Mounting Strap
3. Bendix AD-IP Air Dryer
4. Mounting Brackets
5. O-rings
6. Cartridge Bolt

Fig. 5. Air Dryer (exploded view of Bendix AD-IP shown)

42–05 Telma® Axle Retarder Brake Inspection

Visually inspect condition of Telma axle retarder. See **Fig 6**. Check fasteners for tightness. Using a steam cleaner, wash axle retarder every six months.

Telma axle retarder brake, mounted to front of axle, does not need lubrication. However, Telma driveline retarder, which can be used on tandem-axle vehicles, *does* need routine lubrication. This type of retarder is equipped with a standard grease fitting and needs to be lubricated with Supertelmaco 3, a lithium soap grease specifically designed for this type of application.

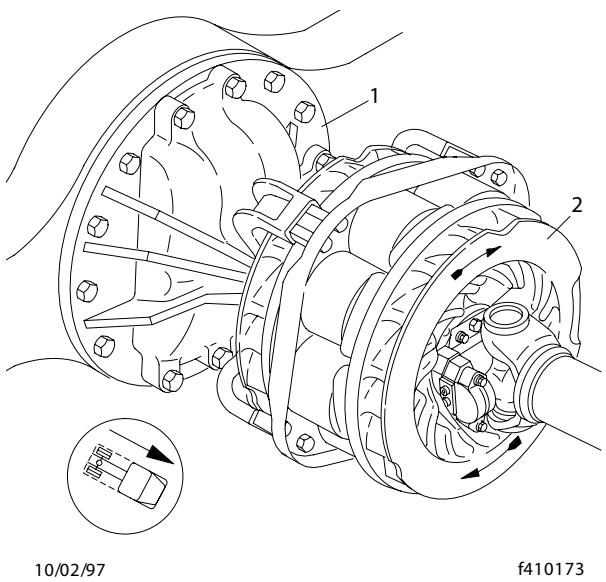

1. Differential
2. Axle Retarder Brake

Fig. 6. Telma Axle Retarder Brake

42–06 Camshaft Bracket Lubrication

Pump grease into camshaft bracket until it appears at slack adjuster end of bracket. See **Fig. 7**.

https://truckmanualshub.com/

Use an NLGI Grade 1 or Grade 2 multipurpose chassis grease. If grease leaks out under cam head, camshaft bracket grease seal is worn or damaged. See **Group 32** of *Condor® Workshop Manual* for grease seal replacement instructions.

Camshaft brackets without grease fittings are fitted with special seals and packed with extended-lubrication-interval chassis grease. Grease them only when camshaft is disassembled for servicing.

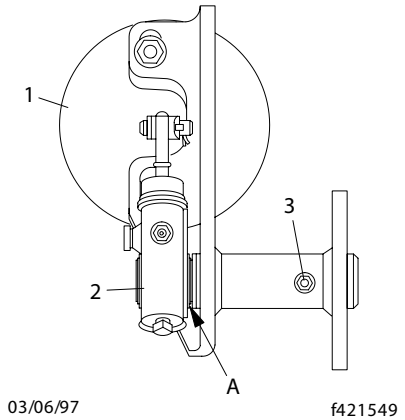

A. Grease
1. Brake Chamber
2. Slack Adjuster
3. Non-Pressure-Relief Grease Fitting

Fig. 7. Camshaft Bracket Lubrication

42–07 Automatic Slack Adjuster Inspection and Lubrication

Automatic slack adjusters must be lubricated periodically to ensure proper brake operation.

⚠ WARNING

Failure to lubricate slack adjusters can lead to dragging brakes or brake failure, resulting in personal injury and/or property damage.

Gunite

Lubricate a Gunite automatic slack adjuster at grease fitting until grease flows from grease-relief opening.

For operating temperatures of –20º F (–29º C) and higher use Texaco Multifak EP-2 or Mobil Grease No. 77.

For operating temperatures between –20º F (–29º C) and –40º F (–40º C), use Lubriplate Aero Grease.

Haldex/Eaton

Lubricate a Haldex/Eaton automatic slack adjuster at grease fitting with any extreme-pressure NLGI Grade 1 or Grade 2 grease if operating temperature is –20º F (–29º C) and above. If operating temperature is below –20º F (–29º C), use a low-temperature extreme-pressure grease.

Meritor

Lubricate slack adjuster at grease fitting (see **Fig. 8**, Ref. 7) until grease is forced past pressure-relief capscrew (Ref. 5) or past gear splines around inboard snap ring. Use high-temperature, NLGI Grade 1 waterproof grease.

Some Meritor slack adjusters may be permanently lubricated.

https://truckmanualshub.com/

42–08 Disc Brake Caliper Lubrication

On vehicles equipped with disc brakes, lubricate both grease fittings on each disc brake caliper. Lubricate disc brake slides when replacing calipers.

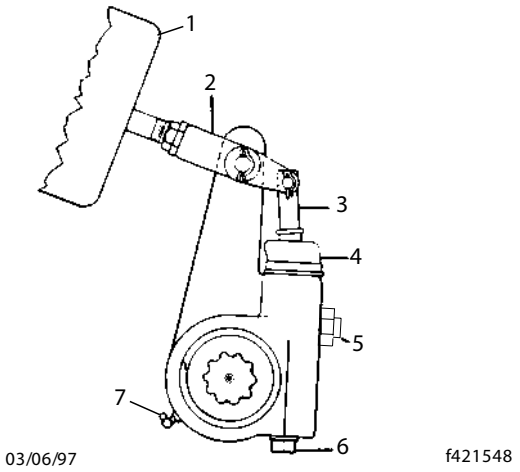

1. Brake Chamber
2. Clevis
3. Actuator Rod
4. Boot
5. Pressure-Relief Capscrew, Gasket, Pawl Spring, and Pawl
6. Manual Adjusting Nut

Fig. 8. Meritor Automatic Slack Adjuster

https://truckmanualshub.com/

Index

Title of Maintenance Operation (MOP)	MOP Number
Power Steering Reservoir Fluid Level Check	46–01
Power Steering Fluid and Filter Changing	46–02
Power Steering Cooler Inspection	46–03
Power Steering Gear Lubrication	46–04
Drag Link Inspection	46–05
Drag Link Lubrication	46–06
Right-Hand Steering Ram Lubrication	46–07

https://truckmanualshub.com/

This page intentionally left blank.

https://truckmanualshub.com/

46–01 Power Steering Reservoir Fluid Level Check

1. Apply parking brakes and chock tires to prevent vehicle from moving.

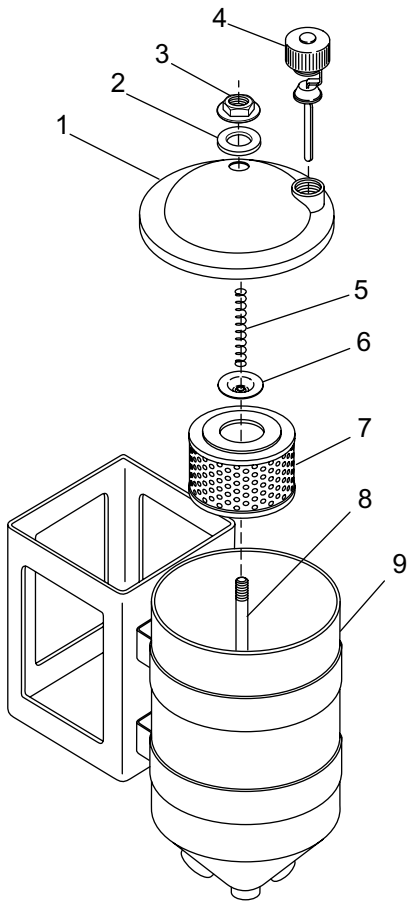

12/19/2007 m000003a

1. Reservoir Cover
2. Rubber Washer
3. Flanged Nut
4. Vented Fill Cap and Dipstick
5. Filter Spring
6. Filter Top Plate
7. Reservoir Filter
8. Threaded Shaft
9. Power Steering Reservoir

Fig 1. Power Steering Reservoir (exploded view)

10. With engine cool, use a shop towel or a clean rag to clean area around power steering reservoir fill cap. See **Fig. 1**. Twist cap counterclockwise to remove cap and dipstick assembly. Check cold power steering fluid level. Level should be at FULL COLD with engine off.

    Start engine and run it at idle until it reaches operating temperature. Remove dipstick, and check that power steering fluid reaches FULLHOT line. If the fluid level is low, add enough fluid to bring level up to the FULL HOT mark on the dipstick. Dexron II or Dexron III is the recommended fluid for the power steering system.
11. Install dipstick and turn clockwise to secure.
12. Remove chocks from tires.

46–02 Power Steering Fluid and Filter Changing

⚠ WARNING

Fill only with approved clean fluid. Do not mix fluid types. Failure to use the proper fluid could cause seal deterioration and leaks. Fluid leaks could eventually cause loss of power steering assist. This could lead to an accident resulting in personal injury or property damage.

1. Apply parking brakes and chock rear tires.
2. Place a drain pan under power steering reservoir, and remove the steering gear-to-reservoir return hose at the reservoir. Drain the power steering fluid into the drain pan and dispose of fluid properly. Plug return line fitting on reservoir.
3. Use one hand to apply downward pressure to power steering reservoir cover. Remove the flanged nut and rubber washer. See **Fig. 1**. Remove the cover.

NOTE: Always replace power steering reservoir filter when changing fluid.

4. Lift out filter spring and filter top plate, then remove filter. It may be necessary to wiggle filter to remove it from its base. Do not use pliers to aid in removal of the filter; pliers could cause metal chips to enter the steering system. Clean inside of reservoir using a lint-free cloth.

https://truckmanualshub.com/

5. Place disconnected end of steering gear-to-reservoir hose in a drain pan. Do not start engine while draining the system. Raise front of vehicle with a floor jack and support it with jack stands. Have someone turn steering wheel to full lock left and right. Capture fluid flowing from hose in a drain pan. Add fluid to reservoir, as needed. When clean power steering fluid flows from hose into drain pan, remove plug from reservoir and reconnect steering gear-to-reservoir hose to reservoir. Remove jack stands and lower vehicle.
6. With larger opening at top, install a new filter into the reservoir. Install filter top plate so its center fits into opening at top of filter. Install filter spring.
7. Clean reservoir cover and O-ring seal. Inspect O-ring and cover for cracks, deformities, or damage. Replace O-ring seal or cover as needed.
8. Install reservoir cover over threaded shaft. Apply a slight downward pressure while installing the rubber washer and flanged nut. Tighten nut until it is snug.
9. Fill power steering reservoir with approved power steering fluid to FULL COLD mark on dipstick.
10. Start the engine and operate it at idle. Turn steering wheel to full lock left and right to adjust fluid level and remove any existing air from power steering pump and gear. Recheck fluid level. Add fluid as needed. System is properly bled when steering pump does not labor when turning the wheel.
11. Check for leaks in power steering system, and repair as needed. Top off power steering fluid level as needed.
12. or NLGI Grade 1 (6% 12-hydroxy lithium stearate grease); Grade 2 is preferred.

46–03 Power Steering Cooler Inspection

Inspect power steering cooler, if equipped. Check for a build-up of insects, leaves, and other debris on cooling fins. Use a water spray to wash away the debris. Replace cooler, as necessary.

46–04 Power Steering Gear Lubrication

CAUTION

Apply grease to the sector shaft only with a hand-type grease gun. See Fig. 3. Use of a high-pressure power grease gun will supply grease too quickly and could affect the high pressure seal, contaminating the hydraulic fluid.

Using a hand-type grease gun, apply NLGI Grade 2 or 3 multipurpose chassis grease until it starts to come out past the sector shaft seal.

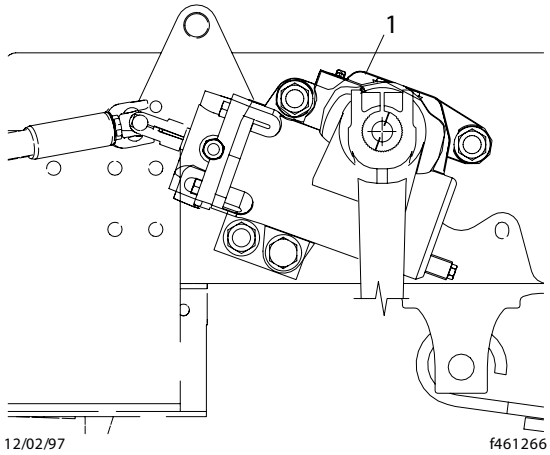

1. Sector Shaft Grease Fitting

Fig 2. TRW TAS Series Sector Shaft Lubrication

46–05 Drag Link Inspection

WARNING

All steering system components are critical for safe operation of the vehicle. Failure to maintain the steering system as specified may result in loss of steering control, which could lead to personal injury and property damage.

Have someone turn steering wheel from left to right. Check for movement between the ball stud end at both pitman arm and steering arm. Also check if ball stud nut is loose.

https://truckmanualshub.com/

If ball stud end is loose, replace drag link. If ball stud nut is loose, replace the and cotter key. See **Group 00** for proper torque specifications.

Visually inspect the boot of drag link at both pitman arm and steering arm end for cracks, splits, or other damage. Replace boot as needed. See **Group 46** of *Condor® Workshop Manual* for drag link removal and installation instructions.

Grasp drag link near pitman arm end, then push and pull laterally to check for axial movement in ball stud end. If it is loose, replace drag link. See **Group 46** of *Condor® Workshop Manual* for replacement instructions. If there is 1/8-inch (3-mm) movement or more, do not drive vehicle until drag link is replaced.

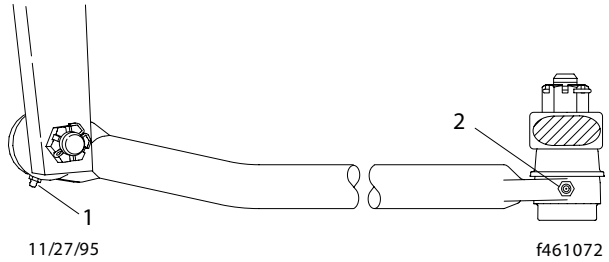

1. NOTE: The grease fitting is on inboard side of ball stud.
1. Grease Fitting at Pitman Arm
2. Grease Fitting at Axle Steering Arm

Fig 3. Drag Link

46–06 Drag Link Lubrication

1. Using a clean rag, wipe all dirt from both drag link grease fittings. See **Fig. 3**.
2. Using a pressure gun, apply clean grease to grease fittings until old grease is forced out of socket. Use multipurpose chassis grease NLGI Grade 2 (8% 12-hydroxy lithium stearate grease) or NLGI Grade 1 (6% 12-hydroxy lithium stearate grease); Grade 2 is preferred.

46–07 Right-Hand Steering Ram Lubrication

WARNING

All steering system components are critical for safe operation of the vehicle. Failure to maintain the steering system as specified may result in loss of steering control, which could lead to personal injury and property damage.

Visually inspect steering ram for cracks, splits, or other damage. Lubricate as necessary, and replace ram as needed.

https://truckmanualshub.com/

This page intentionally left blank.

https://truckmanualshub.com/

Index

Title of Maintenance Operation (MOP)	MOP Number
Fuel Filter Replacement	47–01
Fuel/Water Separator Sight Bowl Cleaning and Element Replacement	47–02
Fuel Tank Band-Nut Tightening	47–03

https://truckmanualshub.com/

This page intentionally left blank.

https://truckmanualshub.com/

47–01 Fuel Filter Replacement

Refer to the engine manufacturer's service manual for removal and installation procedures.

47–02 Fuel/Water Separator Sight Bowl Cleaning and Element Replacement

Alliance or Racor Fuel/Water Separator Element Replacement

The only service necessary on Alliance or Racor fuel separators is to replace the filter element.

Alliance or Racor

WARNING

Diesel fuel is flammable and can ignite if exposed to open flame, intense heat, or other ignition source. Do not drain fuel near, or expose fuel vapor to open flame or intense heat. Exposure to open flame or intense heat could start a fire, possibly resulting in personal injury or property damage. When working on a fuel system, have a fire extinguisher within arm's reach.

1. Drain off some fuel by loosening vent plug and opening drain valve.
2. Disconnect water sensor and heater connections, if equipped.
3. Remove element and bowl, together, by turning counterclockwise.
4. Remove bowl from the element, and clean O-ring.
5. Apply a coating of clean fuel or motor oil to new O-ring and element seal.
6. Spin bowl onto new element, then spin them both onto the filter head snugly, by hand only.

CAUTION

Do not use tools to tighten. This can lead to over-tightening and damage to equipment.

7. Connect the water sensor and heater connectors, if equipped.
8. Prime the fuel separator.

8.1. Loosen the vent plug. Then operate the primer pump until the fuel purges at the vent plug. See **Fig. 1**.

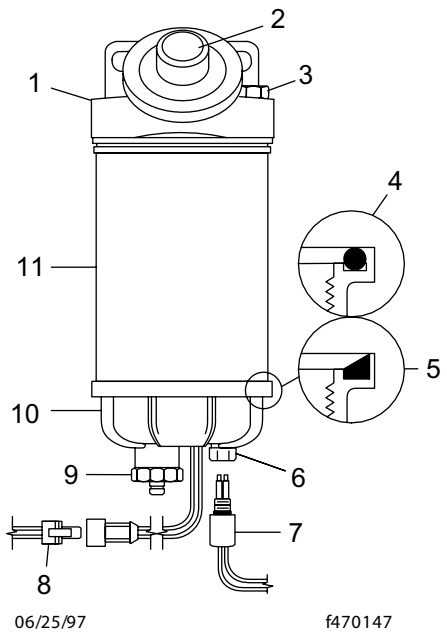

1. Beige Mounting Head
2. Fuel Primer Pump
3. Metal Vent Plug
4. Bowl O-ring
5. Bowl Bevel-Cut Gasket
6. Bowl Probe Plug
7. Water Sensor Probe, 9/16" SAE
8. Heater Connector
9. Drain Plug
10. Sight Bowl
11. Filter Element

Fig 1. Alliance or Racor Fuel/Water Separator

8.2 Close vent plug.

8.3 Start engine and check for fuel leaks.

8.4 Correct any fuel leaks with engine shut down.

9. Start the engine and check for fuel leaks.
10. Shut down engine and correct any fuel leaks.

https://truckmanualshub.com/

47–03 Fuel Tank Band-Nut Tightening

Hold each fuel tank band retention nut with a wrench while backing off its jam nut. Then tighten retention nuts 30 to 35 lbf-ft (41 to 46 Nm). After the retention nuts have been tightened, hold each retention nut with a wrench while tightening its jam nut 30 lbf-ft (41 Nm).

CAUTION

Do not overtighten. This can cause damage to fuel tank bands.

https://truckmanualshub.com/

Index

Title of Maintenance Operation (MOP)	MOP Number
Exhaust System Inspection (Noise Emission Control)	49–01
2007 EPA Exhaust Emissions	49–02

https://truckmanualshub.com/

This page intentionally left blank.

https://truckmanualshub.com/

49–01 Exhaust System Inspection (Noise Emission Control)

1. On all vehicles, check condition of muffler body, top stack, and heat shield (**Fig. 1**). Check inlet/outlet tubes for leakage, dents, and corrosion, and check for holes in muffler. Replace parts as required. Use new parts, equivalent to parts originally installed on the vehicle. See **Group 49** of the *Condor® Workshop Manual* for replacement procedures.
2. Inspect exhaust flex hose (**Fig. 2**) for leakage, wear, or damage. Replace with new parts if replacement is needed.
3. Check for leakage V-band coupling, which attaches exhaust pipe to turbocharger exhaust outlet. See **Fig. 2**.

   If leakage exists, use torque wrench to tighten nut on V-band coupling 10 lbf-ft (14 Nm). If leakage persists, install a new V-band coupling.
4. Inspect the turbo outlet pipe, and replace it as needed.
5. Check U-bolt clamps for tightness, and tighten as needed.
6. Check for leakage at all wide-band exhaust clamps. See **Fig. 3**, **Fig. 4**,or **Fig. 5**.

   If leakage exists, use torque wrench to tighten nuts 40 to 60 lbf-ft (54 to 81Nm). If leakage persists, install a new wide-band exhaust clamp. Do not re-use Sealclamps.

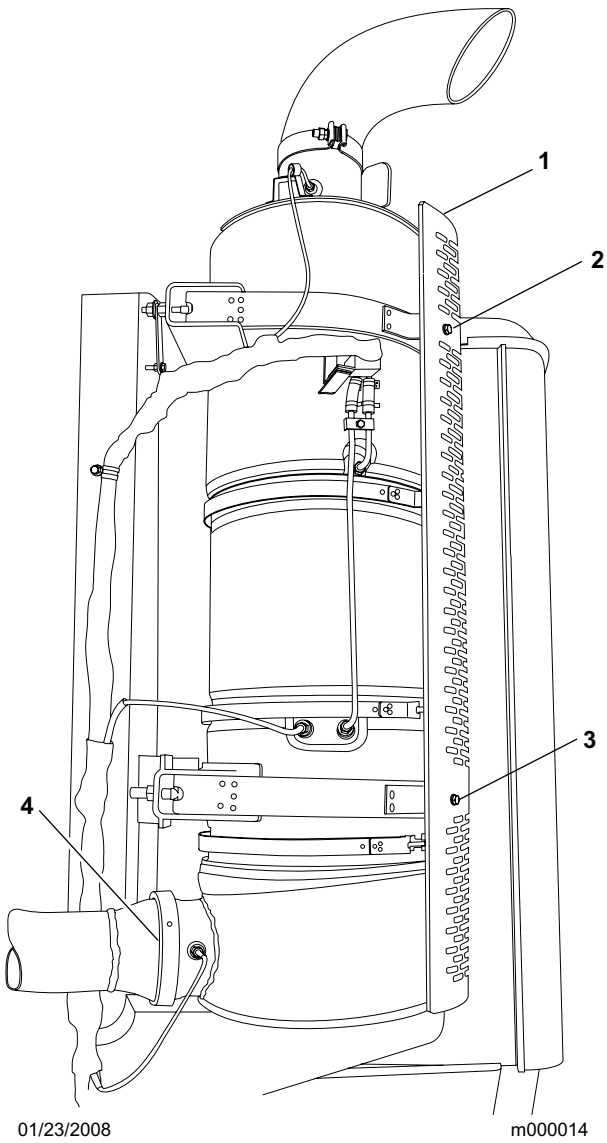

1. Heat Shield
2. Upper Heat Shield Fastener
3. Lower Heat Shield Fastener
4. Exhaust Clamp

Fig. 1. Vertical Exhaust Stack and Heat Shield

https://truckmanualshub.com/

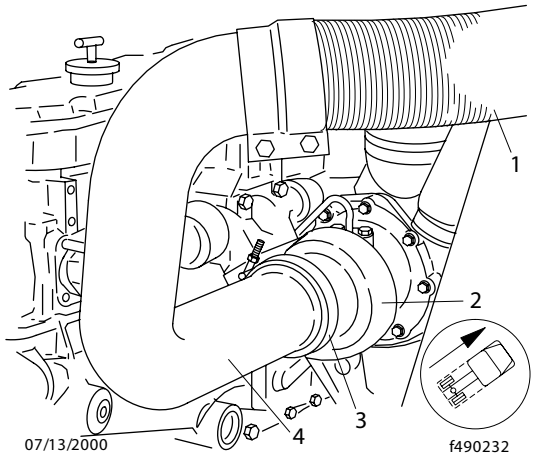

1. Flex Hose
2. Turbocharger Exhaust Outlet
3. V-Band Coupling
4. Exhaust Pipe

Fig. 2. V-Band Coupling and Flex Hose

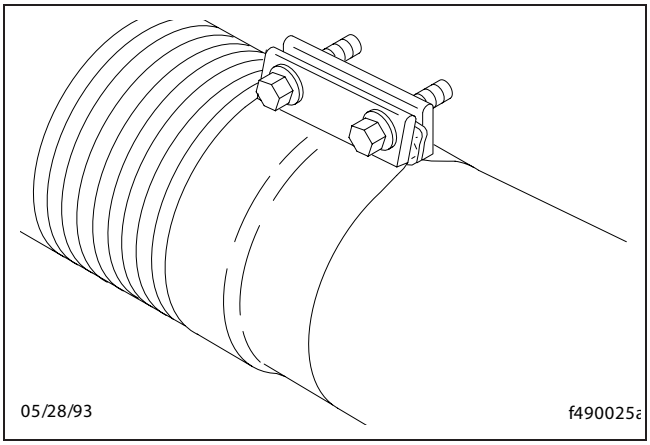

Fig. 3. Donaldson Sealclamp Wide-Band Exhaust Clamp

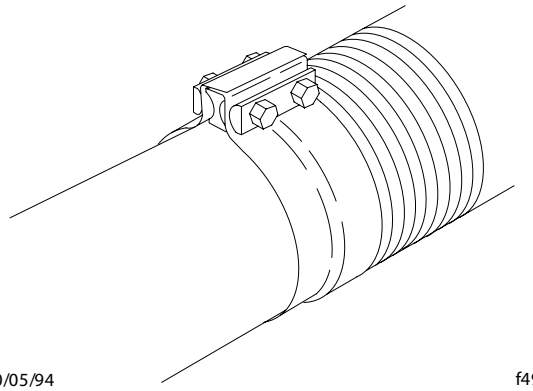

Fig. 4. Torca Torctite Wide-Band Exhaust Clamp

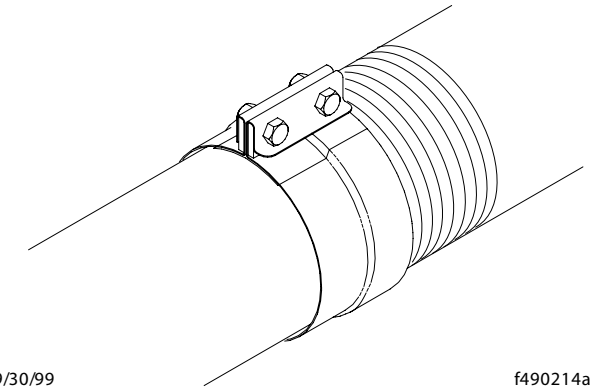

Fig. 5. Gemi Wide-Band Exhaust Clamp

49–02 2007 EPA Exhaust Emissions

Effective January 01, 2007, The Federal Environmental Protection Agency (EPA) implemented new emissions regulations for reduced emissions of nitrogen oxides (NOx) and particulate matter for all on-road diesel engines manufactured for use in the United States.

In order to comply with EPA regulations, diesel engines had to use ultralow-sulfur diesel (ULSD) fuel along with low ash engine oil.

https://truckmanualshub.com/

- ULSD fuel must have a sulfur content below 15 ppm when tested using ASTM-D2622 procedures.
- Fuels used in all 2007 and later diesel engines must NEVER be mixed with used engine oil.
- Engine oil used in all 2007 and later diesel engines is designated as CJ-4 and is produced with a low sulfated ash content.

Exhaust Aftertreatment System

Exhaust systems in compliance with 2007 EPA standards are equipped with an aftertreatment system incorporating and exhaust system filter to collect particulate emissions. Periodically the collected particulate matter is burned and reduced to ash through a process known as regeneration.

Regeneration can be completed automatically through normal engine combustion systems using a pre-set process. This automatic aftertreatment is not possible during all vehicle operating conditions. Factors such as vehicle low load operation, usage of short trips, and frequent acceleration and deacceleration, such as stop and go city traffic, may reduce vehicle's ability to perform regeneration effectively. Circumstances such as those previously mentioned may make it necessary to use manual regeneration.

Exhaust Aftertreatment System Switches and Indicators

A *Check Engine* light is located on Instrument Pod (above the steering wheel). See **Fig. 8**.

Two indicators, *DPF Indicator* and *High Exhause Temperature Indicator* are located on Instrument Cluster and a switch is mounted under dash on primary driver's position to left of steering column.

The High Exhaust Temperature Indicator illuminates when exhaust system gases at exhaust outlet are high, regeneration is in progress and vehicle speed is low. See **Fig. 6**.

Exhaust temperatures may reach 1500º F (800º C) at exhaust outlet when this lamp is illuminated.

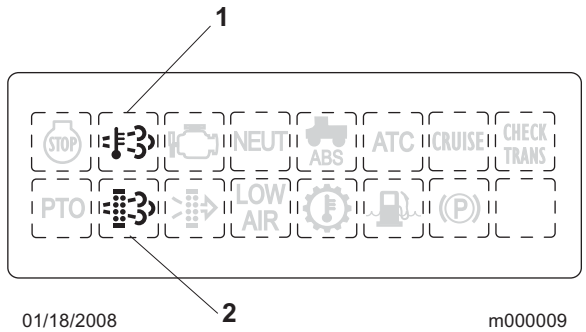

1. High Exhaust Temperature Indicator
2. DPF Status Lamp

Fig. 6. DPF Indicator and High Exhaust Temperature Indicator Lamps

CAUTION

Exhaust gas temperatures are very high. When DPF or High Exhaust Temperature Indicators are illuminated on Instrument Cluster, ensure exhaust outlet is pointed away from vehicle, personnel or combustible materials. See Fig. 10.

Diesel particulate filter (DPF) status lamp illuminates whenever manual regeneration needs scheduling or automatic regeneration is currently in progress. See **Fig. 6**.

CAUTION

Engine DPF Indicator will flash when manual regeneration is required immediately. Failure to perform a manual regeneration may result in damage to engine or engine shut down.

The CHECK ENGINE light (**Fig. 8**)will illuminate when an emissions fault has occurred. When this light is illu-

https://truckmanualshub.com/

minated, vehicle should be taken to an authorized service center for immediate servicing.

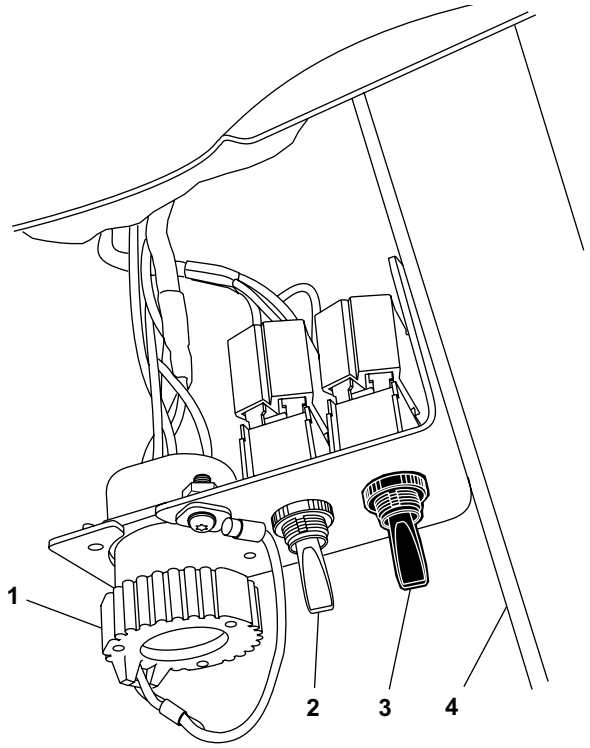

01/22/2008 m000011

1. Computer/Scan Tool Diagnostic Connector
2. ABS Diagnostic Switch (clear)
3. DPF Switch (black)
4. Steering Column

Fig. 7. DPF Regeneration Switch

The DPF Regeneration Switch is located under dash to left of steering column on primary drive side of vehicle. See **Fig. 7**. The regeneration switch is the black momentary switch next to the clear ABS diagnostic switch and computer/scan tool diagnostic connector. Activation of switch should only take place when manual regeneration is required as indicated by DPF indicator.

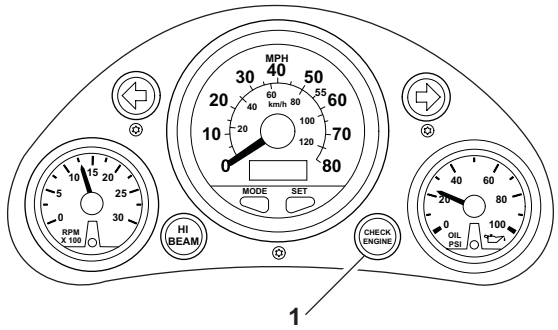

01/18/2008 m000010

1. Check Engine Light

Fig. 8. Check Engine Light

DPF Regeneration Operation and Procedures

When vehicle is operating DPF system, it is constantly trapping particulate matter in the DPF filter element. Periodically this filter requires cleaning through an active process called regeneration. Regeneration involves increasing exhaust gas temperatures to burn these particulates. Regeneration will occur automatically and may periodically require manual initiation.

This process of automatic regeneration can occur through the normal operation of the vehicle and is typically initiated above 40 MPH. When this process starts, vehicle will operate normally and the only indication the driver has is an illuminated high exhaust temperature indicator located on instrument cluster to right of steering column. When vehicle speed is reduced by approximately 5 MPH, the automatic regeneration will stop. Regeneration will resume once vehicle speed has increased back to approximately 40 MPH.

WARNING

When regeneration process is active, and for up to 10 minutes after process stops, exhaust components and gases can be extremely hot and potentially ignite nearby combustible material and cause severe burns to personnel.

https://truckmanualshub.com/

Manual regeneration may be requested of the driver by engine control module based on the amount of particulates accumulated in DPF Filter and the type of driving the vehicle has been subjected to. There are three levels of DPF filter saturation that require manual regeneration.

- **Low Saturation:** The DPF indicator on the instrument cluster will illuminate alerting the driver that a parked manual regeneration is required and should be completed in the next two to six hours of operation or a more challenging vehicle duty cycle with speeds exceeding 40 MPH be maintained for automatic regeneration.
- **Medium Saturation:** If DPF cleaning has not been completed after initial illumination of the DPF indicator, it will start flashing. This indicates that a parked manual regeneration should be completed in the next one to two hours or a more challenging vehicle duty cycle with speeds exceeding 40 MPH maintained for automatic regeneration. Additionally, the engine may operate with reduced power until regeneration has been completed.
- **High Saturation:** DPF immediately requires parked manual regeneration when DPF indicator is flashing and the CHECK ENGINE light illuminates. Engine power will be reduced until parked regeneration is completed. Failure to complete parked regeneration will result in illumination of the STOP engine lamp on the instrument cluster and eventual shut down of the engine. The vehicle will then require service at an authorized repair location.

The following procedure is performed when parked manual regeneration is needed. Vehicle should remain in primary driver's seat entire time engine is running.

1. Park vehicle in controlled location where exhaust outlets are not directed toward or are near any combustible material or personnel. See **Fig. 10**.
2. Ensure parking brake is engaged, transmission is placed in neutral (N) and power take off (PTO) is not engaged.

WARNING

Do not engage PTO or transmission when parked manual regeneration is being performed. Serious injury to personnel or damage to vehicle can occur.

3. Start engine and locate DPF switch under dash and to left of steering column. See **Fig. 8**. Activate switch for approximately 5 seconds and then release it.
4. Engine speed will increase slightly and high exhaust temperature light, on instrument cluster, will illuminate. See **Fig. 6**. This indicates the engine is in the regeneration process. The parked manual regeneration process will last approximately 35 minutes.
5. When parked manual regeneration process is completed, engine speed will return to idle and the high exhaust temperature light turns off. Normal vehicle can now be resumed.

DPF System Inspections and Maintenance

All clamps as illustrated in **Fig. 9** and hoses/clamps at DPF sensor pressure differential sensor should be checked at M1, M2 and M3 maintenance intervals in

https://truckmanualshub.com/

addition to exhaust maintenance item in 49-01 in the Condor Maintenance Manual.

1. Exhaust Temperature Sensor #3
2. Muffler Housing
3. DPF Pressure Differential Sensor
4. DPF Housing Upper Clamp
5. DPF Housing
6. DPF Housing Lower Clamp
7. Exhaust Temperature Sensor #2
8. Catalyst Housing
9. Catalyst Housing
10. DPF/Muffler Heat Shield
11. Exhaust Temperature Sensor #1

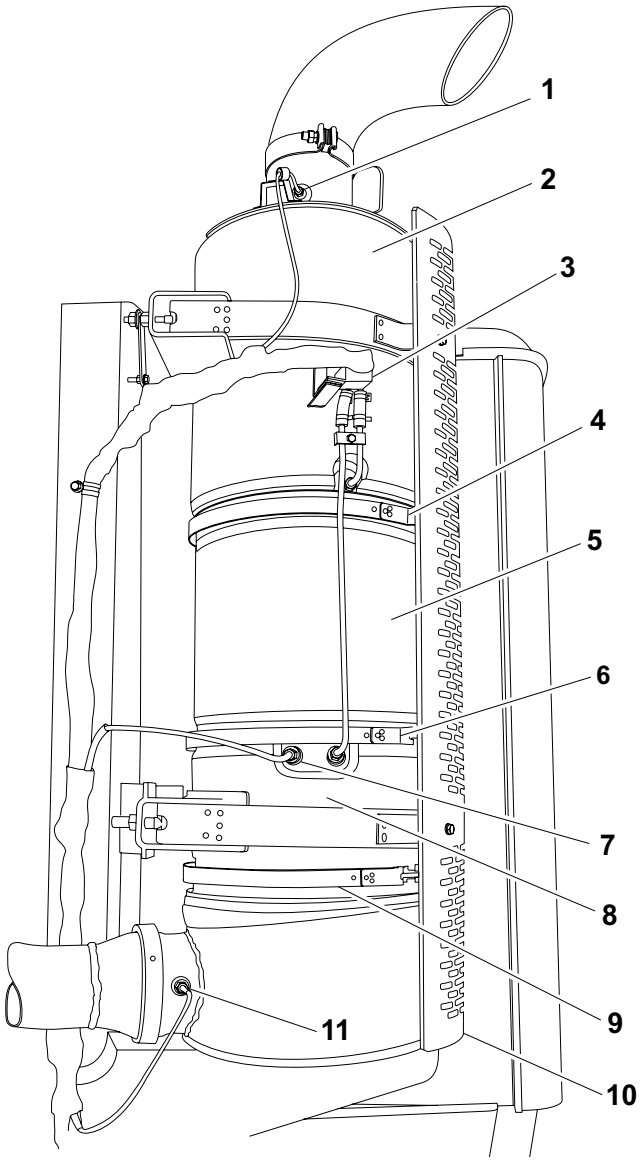

01/17/2008 m000008

Fig. 9. Typical DPF Assembly Components

https://truckmanualshub.com/

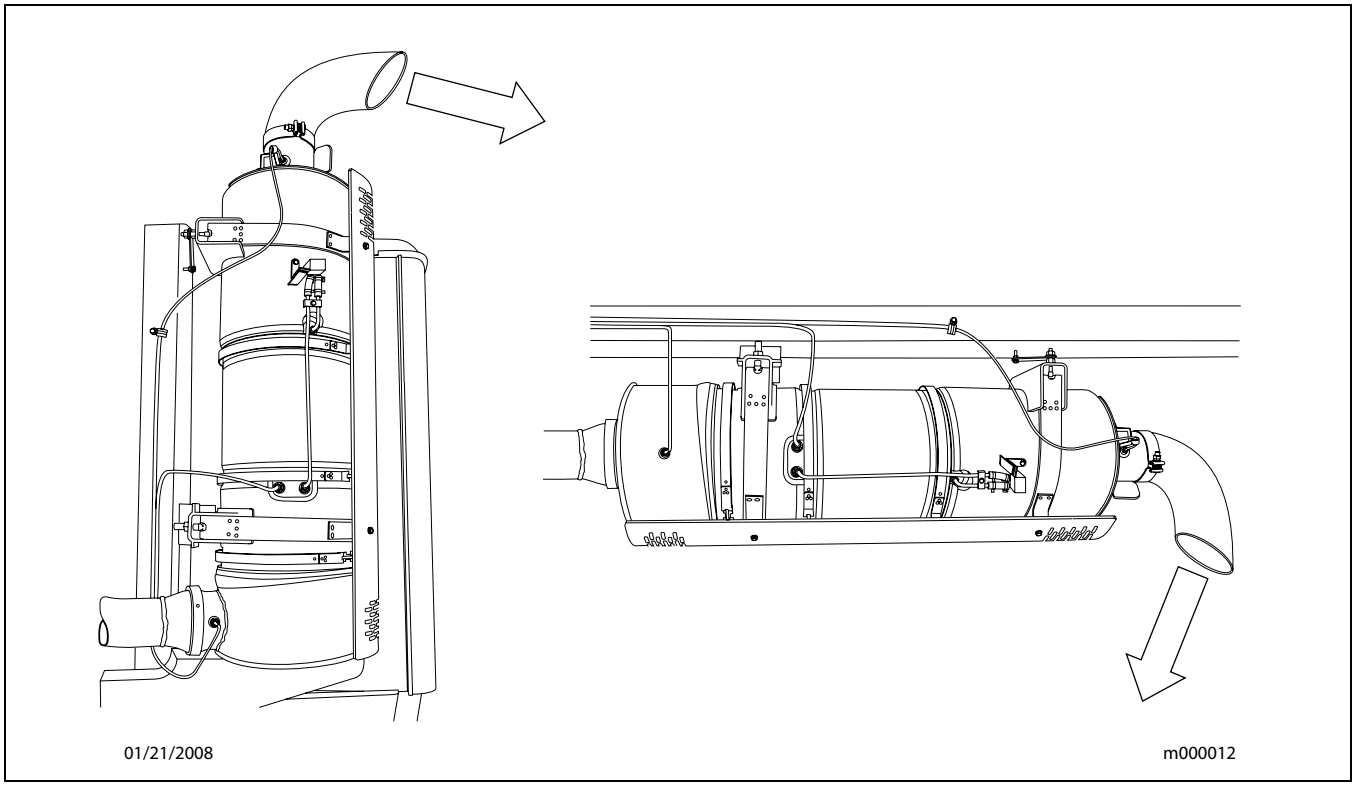

Fig. 10. Position Exhaust Nozzles Away From Vehicle During Regeneration

https://truckmanualshub.com/

This page intentionally left blank.

https://truckmanualshub.com/

Index

Title of Maintenance Operation (MOP) **MOP Number**

Cab Tilt Pump Reservoir Fluid Level and System Check 60–01

https://truckmanualshub.com/

This page intentionally left blank.

https://truckmanualshub.com/

60–01 Cab Tilt Pump Reservoir Fluid Level and System Check

Before checking hydraulic fluid level in tilt pump reservoir, cab must be in operating position, with cab latches locked and the valve lever in the *down* position. Let it remain in this position for at least five minutes before checking the reservoir. Reservoir is full when fluid level reaches threaded area of fill plug location.

If hydraulic fluid level is low, check all fittings and lines for leaks. If any fittings are loose, tighten them finger-tight, then tighten with a wrench until there is firm resistance; tighten one-sixth turn more. Replace any damaged or worn fittings or lines before adding fluid. Then bleed any air from system; see **Group 60** of *Condor® Workshop Manual* for instructions. Add MIL–5606 fluid or an equivalent oil to bring the level up to bottom of fill tube elbow.

A "spongy" feel in operation of pump indicates that air is present in hydraulic cab-tilt system. Bleed air from the system; see **Group 60** of *Condor® Workshop Manual* for instructions.

Check for wear of mounting pin on both tilt cylinders when cab is in raised position. Ensure pins are securely fastened by visually inspecting the two retaining Torx®–head screws at the top of each assembly. Check tilt pump mounting bolts for tightness; see **Group 00** in this manual for torque values for lubricated or plated-thread fasteners.

https://truckmanualshub.com/

This page intentionally left blank.

https://truckmanualshub.com/

Index

Title of Maintenance Operation (MOP) **MOP Number**

Door Seal, Door Latch, and Door Hinge Lubrication 72–01

https://truckmanualshub.com/

This page intentionally left blank.

https://truckmanualshub.com/

72–01 Door Seal, Door Latch, and Door Hinge Lubrication

Lightly coat door seals with a lubricant that is safe for rubber.

Apply a few drops of light engine oil to the door latch mechanism, to reduce noise and wear. Wipe off excess oil.

Lubricate door hinges every six months. In addition, lubricate replacement door hinges at installation. Lubricate hinges by spraying them with a light coating of silicone lubricant.

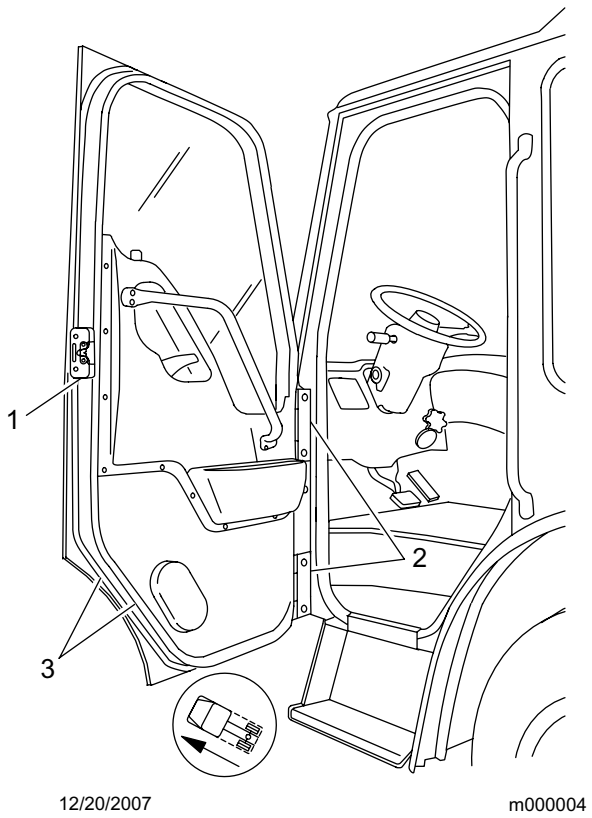

1. Door Latches
2. Door Hinges
3. Door Seals

Fig 1. Door Lubrication Points

https://truckmanualshub.com/

This page intentionally left blank.

https://truckmanualshub.com/

Index, Alphabetical

Title of Maintenance Operation (MOP) **MOP Number**

Air Conditioner Inspection 83–01

https://truckmanualshub.com/

This page intentionally left blank.

https://truckmanualshub.com/

83–01 Air Conditioner Inspection

WARNING

Wear eye protection, gloves, and protective clothing when working on air conditioning system. Leaking refrigerant from a damaged hose or line can cause blindness and serious skin burns.

Preliminary Checks

1. Park vehicle on a level surface, apply the parking brakes, and chock tires.
2. Check appearance of air conditioner compressor pulley assembly. If friction surface of pulley shows signs of excessive grooving due to belt slippage, replace both pulley and drive plate. Visually inspect refrigerant compressor drive belt for damage, and ensure belt is set at proper tension. Also, check tightness of compressor mounting fasteners. For instructions and torque values, see **Group 01** of the *Condor® Workshop Manual*.
3. Inspect drive plate. If friction surface of drive plate shows visible signs of damage due to excessive heat, replace drive plate and pulley assembly. See **Group 83** of *Condor® Workshop Manual* for removal and installation procedures.
4. On a Sanden A/C compressor, use a feeler gauge to ensure drive plate clutch clearance is 0.016 to 0.030 inch (0.4 to 0.8 mm). See **Fig. 1**. If drive plate clutch requires adjustment, see **Group 83** of the *Condor® Workshop Manual*.
5. Inspect compressor clutch coil wire. Ensure connector is not damaged or loose. Replace wire if it is damaged.
6. Check overall condition of air conditioning hoses. Look for cracks, cuts, and abrasions on hoses. Replace damaged hoses. See **Group 83** of *Condor® Workshop Manual* for replacement instructions. Also, check for loose fittings on all of air conditioning components.
7. Check for a build-up of road debris on condenser fins. See **Group 83** of *Condor® Workshop Manual* for cleaning instructions.

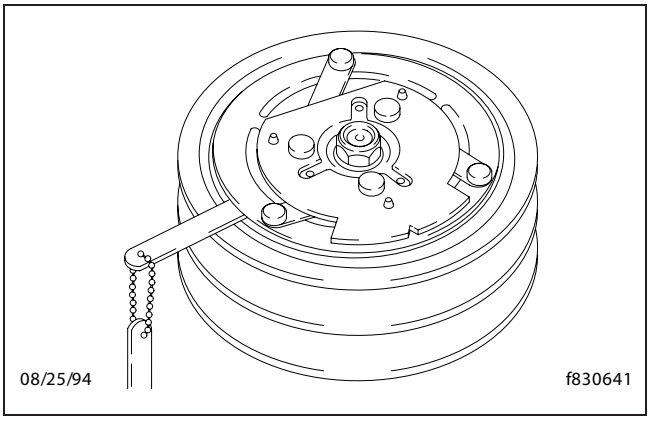

Fig 1. Drive Plate Clearance Inspection

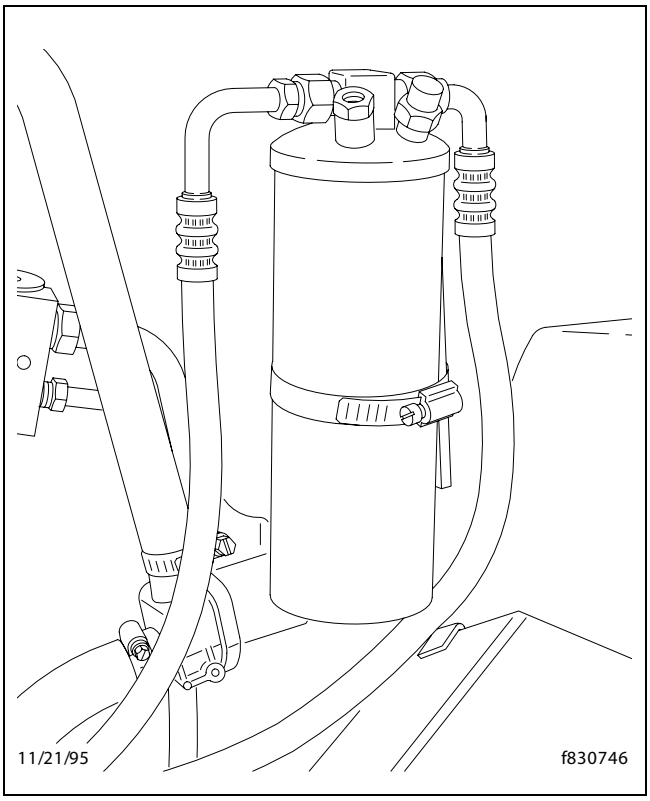

Fig 2. Receiver-Drier

Cab Air Filter Cleaning or Replacement

The cab HVAC (heating, ventilation, and air conditioning) air filter must be cleaned or replaced once a year to permit proper operation of HVAC system. The filter can be cleaned a maximum of three times before replacement is needed.

https://truckmanualshub.com/

IMPORTANT: When replacing air filter, use only American LaFrance, LLC approved air filters. Use of unapproved air filters could decrease flow of air into cab.

1. Park vehicle on a level surface, apply parking brake, shut down engine, and chock rear tires.
2. Remove 10 screws from plastic trim cover over HVAC unit on roof inside cab of vehicle. See **Fig. 2.**
3. Slowly lower cover down and disconnect all electrical harnesses to controls.
4. Set cover aside.
5. Remove 10 screws from rear pan on bottom of HVAC unit.
6. Set bottom pan aside.
7. Pull air filter straight down out of HVAC unit.
8. Clean air filter.
   8.1. Wash filter with soapy water, and rinse with clear water.
   8.2. Allow the filter to air dry. Then, using a spray bottle, apply a light coating of filter wetting agent (Elixaire P/N 6201) to the inlet side of filter.

NOTE: Applying wetting agent to filters will enhance filter performance.

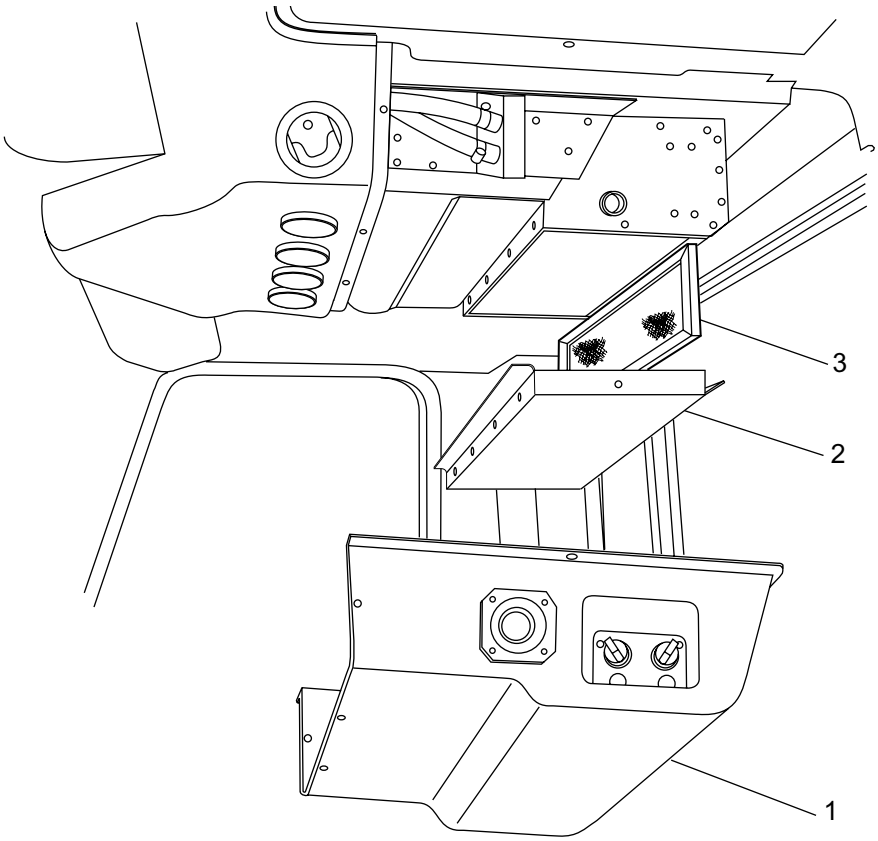

1. HVAC Inside Trim Cover
2. HVAC Unit Bottom Cover Pan
3. HVAC Air Filter

Fig 3. Removing HVAC Air Filter

https://truckmanualshub.com/

NOTE: If air filter has already reached a maximum three cleanings, or if there is any visible damage to air filter, a replacement should be installed.

9. Install air filter.
   - 9.1. Slide air filter upward into HVAC housing.
   - 9.2. Install bottom cover pan with 10 screws. Tighten screws securely.
10. Install HVAC plastic trim cover.
   - 10.1. Connect control wiring harnesses.
   - 10.1. Install trim cover with 10 screws. Tighten screws securely.
11. Remove chocks from tires.

https://truckmanualshub.com/

This page intentionally left blank.