https://truckmanualshub.com/

MODELS 317B/318/319
TRAILER
OPERATOR'S MANUAL

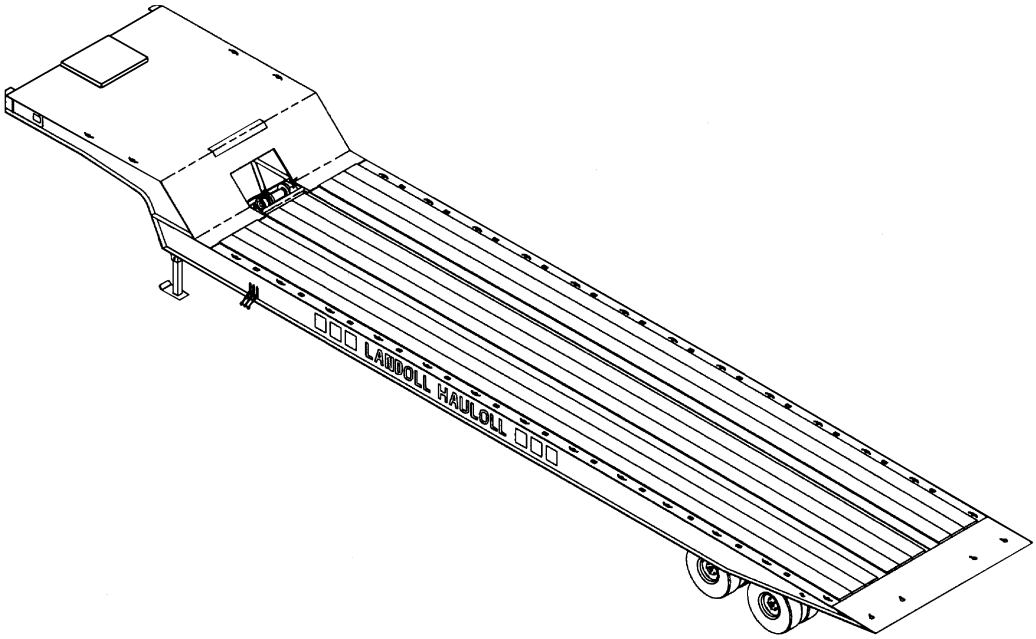

1900 North Street
Marysville, KS 66508
(785)562-5381

F-264-398 **3/98**

https://truckmanualshub.com/

WARRANTY

MANUFACTURER'S GUARANTEE POLICY

LANDOLL CORPORATION WARRANTY

LANDOLL warrants each new and unused LANDOLL machine, when properly assembled, adjusted, and operated, to be free of defects in material and workmanship, in normal use and when properly serviced, for a period of twelve (12) months after date of delivery by the Dealer to the original retail purchaser. LANDOLL shall repair or replace, at its option, freight on board (f.o.b.) at its factory or designated DEALER location, any part or parts of such new and unused machine which shall have been reported in writing to LANDOLL within thirty (30) days from date of failure thereof and which LANDOLL inspection shall disclose to have been defective. Defective parts must be returned to the LANDOLL factory, freight prepaid. LANDOLL will not be liable for labor, transportation, or any other charges resulting from replacement of a defective part. This warranty is void if any part not supplied by LANDOLL is used in assembly or repair, or if the machine has been altered, abused, or neglected. LANDOLL repair parts are warranted for ninety (90) days from date of replacement or for the unexpired warranty period of the applicable LANDOLL machine, whichever period is longer. LANDOLL makes no warranty, whatsoever, as to purchased component parts and other trade accessories, except to the extent that such items are warranted by the manufacturer thereof. THIS WARRANTY IS EXCLUSIVE AND IN LIEU OF ALL OTHER WARRANTIES, WHETHER EXPRESSED, IMPLIED, OR STATUTORY (INCLUDING WARRANTIES OF MERCHANTABILITY AND FITNESS FOR PURPOSE), AND LANDOLL SHALL NOT BE LIABLE FOR SPECIAL OR CONSEQUENTIAL DAMAGES OF ANY KIND ON ACCOUNT OF ANY LANDOLL PRODUCT.

NO EMPLOYEE OR REPRESENTATIVE IS AUTHORIZED TO CHANGE THIS WARRANTY, VERBALLY OR IN WRITING, OR GRANT ANY OTHER WARRANTY.

LANDOLL CORPORATION, WHOSE POLICY IS ONE OF CONTINUOUS IMPROVEMENT, RESERVES THE RIGHT TO MAKE CHANGES WITHOUT OBLIGATION TO MODIFY PREVIOUSLY PRODUCED EQUIPMENT.

https://truckmanualshub.com/

MODELS 317B/318/319
TRAILER
OPERATOR'S MANUAL

PURCHASED FROM: _____ **DATE** ____ / ____ / ____

ADDRESS: _____

_____

_____

PHONE NO.: _____ **SERIAL NO.:** _____

https://truckmanualshub.com/

REPORTING SAFETY DEFECTS

If you believe that your vehicle has a defect which could cause a crash or could cause injury or death, you should immediately inform the National Highway Traffic Safety Administration (NHTSA) in addition to notifying Landoll Manufacturing.

If NHTSA receives similar complaints, it may open an investigation, and if it finds that a safety defect exists in a group of vehicles, it may order a recall and remedy campaign. However, NHTSA cannot become involved in individual problems between you, your dealer, or Landoll Manufacturing.

To contact NHTSA, you may either call the Auto Safety Hotline toll-free at 1-800-424-9393 (or 366-0123 in Washington, D.C. area) or write to: NHTSA, U.S. Department of Transportation, Washington, D.C. 20590. You can also obtain other information about motor vehicle safety from the Hotline.

In the event of a defect or problem with your LANDOLL equipment, please notify LANDOLL CORPORATION:

LANDOLL CORPORATION
SALES AND SERVICE
1900 NORTH STREET
MARYSVILLE, KANSAS 66508

OR PHONE:
(785)562-5381
1-800-HAULOLL
(1-800-428-5655)
FAX NO.: (785) 562-4893

https://truckmanualshub.com/

TABLE OF CONTENTS

SECTION	DESCRIPTION	PAGE NO.
1	INTRODUCTION	1-1
2	STANDARD SPECIFICATIONS	2-1
3	OPERATING INSTRUCTIONS	3-1
3-1	GENERAL	3-1
3-2	PRE-COUPLING OF SEMITRAILER AND TRACTOR	3-3
3-3	COUPLING OF THE TRACTOR TO THE SEMITRAILER	3-4
3-4	CONNECTING TRACTOR SERVICES TO THE SEMITRAILER	3-5
3-5	TRACTOR AND SEMITRAILER CHECK-OUT	3-5
3-6	TOWING THE SEMITRAILER	3-7
3-7	PARKING THE TRAILER	3-8
3-8	UNCOUPLING TOWING VEHICLE FROM SEMITRAILER	3-9
3-9	TRAILER TILT LEVER	3-9
3-10	AXLE CONTROL LEVER	3-9
3-11	LOADING PROCEDURE	3-10
3-12	UNLOADING PROCEDURE	3-13
3-13	WINCH CONTROLS	3-15
3-14	REMOTE CONTROL (OPTION)	3-17
3-15	DOCK LEVELER CONTROL OPERATION	3-19
3-16	HYDRAULIC POWER SUPPLY ENGINE OPERATION	3-20
3-17	AIR RIDE OPERATION	3-23
3-18	FRONT EXTENSION/BULKHEADS	3-23
3-19	REAR IMPACT GUARD SYSTEM	3-25
3-20	ANTI-LOCK BRAKE SYSTEM (ABS)	3-25
3-21	COLD WEATHER OPERATION	3-26
3-22	HOT WEATHER OPERATION	3-26
4	MAINTENANCE AND LUBRICATION	4-1
4-1	MAINTENANCE SCHEDULE	4-1
4-2	MAINTENANCE PROCEDURES	4-3
4-3	GOOSENECK, FRAME, AND DECK	4-6
4-4	HYDRAULIC SYSTEM	4-6
4-5	ELECTRICAL SYSTEM	4-10
4-6	SUSPENSION MAINTENANCE	4-10
4-7	ALIGNMENT	4-12
4-8	BRAKE SYSTEM MAINTENANCE	4-15
4-9	HUB AND DRUM MAINTENANCE	4-22
4-10	WHEEL BEARING LUBRICATION AND ADJUSTMENT	4-26
4-11	TIRE MAINTENANCE	4-27
4-12	WINCHES	4-30
4-13	HYDRAULIC ENGINE PACKAGE	4-30
4-14	DOCK LEVELERS	4-30
5	TROUBLESHOOTING	5-1

https://truckmanualshub.com/

SAFETY PRECAUTIONS

THIS IS THE SAFETY ALERT SYMBOL. IT IS USED TO ALERT YOU TO POTENTIAL INJURY HAZARDS. OBEY ALL SAFETY MESSAGES THAT FOLLOW THIS SYMBOL TO AVOID POSSIBLE INJURY OR DEATH.

⚠DANGER — **DANGER INDICATES AN IMMINENTLY HAZARDOUS SITUATION WHICH, IF NOT AVOIDED, WILL RESULT IN DEATH OR SERIOUS INJURY.**

⚠WARNING — **WARNING INDICATES A POTENTIALLY HAZARDOUS SITUATION WHICH, IF NOT AVOIDED, COULD RESULT IN DEATH OR SERIOUS INJURY.**

⚠CAUTION — **CAUTION INDICATES A POTENTIALLY HAZARDOUS SITUATION WHICH, IF NOT AVOIDED, MAY RESULT IN MINOR OR MODERATE INJURY.**

CAUTION — **CAUTION USED WITHOUT THE SAFETY ALERT SYMBOL INDICATES A POTENTIALLY HAZARDOUS SITUATION WHICH, IF NOT AVOIDED, MAY RESULT IN PROPERTY DAMAGE.**

https://truckmanualshub.com/

INTRODUCTION 1

This manual provides operating, servicing, and maintenance instructions, for Model 317B trailer, manufactured by Landoll Corporation, Marysville, Kansas 66508.

SECTION 1 **gives basic instructions on the use of this manual.**

SECTION 2 **gives specifications for the trailer, including measurements and component specifications. A Standard Bolt Torque Table is provided to give guidelines for bolt torques to be used when servicing this product.**

SECTION 3 **gives instructions for the proper operation of the equipment.**

SECTION 4 **gives general maintenance procedures, a maintenance schedule, and a lubrication schedule. Improper maintenance will void your warranty.**

IF YOU HAVE ANY QUESTIONS CONTACT:

LANDOLL CORPORATION
1900 NORTH STREET
MARYSVILLE, KANSAS 66508
or phone:
(785) 562-5381 or
(800) 428-5655
or FAX:
(785) 562-4893

SECTION 5 **is a troubleshooting guide to aid in diagnosing and solving problems with the trailer.**

PARTS LIST **is a separate manual showing the various assemblies, subassemblies, and systems. Refer to that manual when ordering Landoll replacement parts. Order parts from your Landoll dealer.**

WARRANTY **The Warranty Registration form is located with the product documents. Fill it out and mail it within 15 days of purchase. The Warranty is printed inside the front cover.**

NOTE: IMPROPER ASSEMBLY, MODIFICATION, OR MAINTENANCE OF YOUR LANDOLL MACHINE CAN VOID YOUR WARRANTY.

COMMENTS **Address comments or questions regarding this publication to:**

LANDOLL CORPORATION
1900 NORTH STREET
MARYSVILLE, KANSAS 66508
ATTENTION: PUBLICATIONS - DEPT. 55

https://truckmanualshub.com/

https://truckmanualshub.com/

STANDARD SPECIFICATIONS 2

CAPACITY*:

MODEL 317B . . . . . 60,000 LB. DISTRIBUTED
STANDARD FRAME DESIGN . . . . . 40,000 LB. CONCENTRATED IN 10’
OPTIONAL FORKLIFT PACKAGE . . . . . 50,000 LB. CONCENTRATED IN 10’
MODEL 318 . . . . . 80,000 LB. DISTRIBUTED
STANDARD FRAME DESIGN . . . . . 70,000 LB CONCENTRATED IN 10’
MODEL 319. . . . . 60,000 LB DISTRIBUTED
STANDARD FRAME DESIGN . . . . . 40,000 LB. CONCENTRATED IN 10’

GOOSENECK:. . . . . HYDRAULIC TILT

KING PIN SETTING:

MODEL 317B . . . . . 18" OR 24" (Standard is 24")
MODELS 318/319 . . . . . 24" OR 30" (Standard is 30")

UNDERCARRIAGE TRAVEL:

LOW LOAD ANGLE . . . . . 14’-0"

GROUND LOAD ANGLE:

LOW LOAD ANGLE: . . . . . 8.5°
MAX TILT ANGLE:. . . . . 13.3°

DOCK LEVELER CAPACITY:

MODEL 317B. . . . . 40,000 LB.
. . . . . 60,000 LB.
. . . . . DOCK LEVELER NOT AVAILABLE WITH 17.5 LOW PROFILE TIRES
MODEL 318. . . . . 60,000 LB.
. . . . . 80,000 LB.
. . . . . 120,000 LB.
. . . . . DOCK LEVELER NOT AVAILABLE WITH 17.5 LOW PROFILE TIRES
MODEL 319. . . . . NOT AVAILABLE

HYDRAULIC HOOKUP:

QUICK COUPLERS . . . . . 3/4"
MAXIMUM OPERATING PRESSURE . . . . . 2500 PSI
OPERATING FLOW . . . . . 17 GPM

ELECTRICAL HOOKUP: . . . . . 7-WAY CONNECTOR

AIR HOOK UP: . . . . . COLOR CODED GLAD HANDS

https://truckmanualshub.com/

SPECIFIC BOLT TORQUES

AIR RIDE SUSPENSION:

EQUALIZER BEAM PIVOT AND ADAPTER BOLTS	800 FT.-LBS.
SHOCK ABSORBER MOUNTING	150 FT.-LBS.
AIR SPRING MOUNTING: 1/2"	35 FT.-LBS.
3/4"	35 FT.-LBS.

FOUR SPRING SUSPENSION:

AXLE CLAMP U-BOLTS	300 FT.-LBS.
EQUALIZER BEAM PIVOT BOLT	480-500 FT.-LBS.
TORQUE ARM BOLT	250 FT.-LBS.
TORQUE ARM CLAMP NUTS	60 FT.-LBS.

WHEEL FASTENERS - ALL MODELS:

OUTER SPINDLE NUTS	250-400 FT.-LBS.
PILOT WHEEL NUTS	450-500 FT.-LBS.
DISK WHEEL INNER WHEEL NUTS	450-500 FT.-LBS.
DISK WHEEL OUTER WHEEL NUTS	450-500 FT.-LBS.
SPOKE WHEEL NUTS	200-250 FT.-LBS.

*** CAPACITY RATINGS ARE FRAME CAPACITIES ONLY. ACTUAL LOAD CAPACITIES MAY BE RESTRICTED BY FACTORS SUCH AS GROSS AXLE WEIGHT RATINGS (GAWR) OR STATE AND FEDERAL REGULATIONS. TIRE, BRAKE, AXLE, OR WHEEL SELECTION MAY ALSO LIMIT CAPACITY.**

https://truckmanualshub.com/

LANDOLL CORPORATION
GENERAL TORQUE SPECIFICATIONS (REV. 4/97)

THIS CHART PROVIDES TIGHTENING TORQUES FOR GENERAL PURPOSE APPLICATIONS WHEN SPECIAL TORQUES ARE NOT SPECIFIED ON PROCESS OR DRAWING.
ASSEMBLY TORQUES APPLY TO PLATED NUTS AND CAPSCREWS ASSEMBLED WITHOUT SUPPLEMENTAL LUBRICATION (AS RECEIVED CONDITION). THEY DO NOT APPLY IF SPECIAL GRAPHITE MOLY-DISULFIDE OR OTHER EXTREME PRESSURE LUBRICANTS ARE USED.
WHEN FASTENERS ARE DRY (SOLVENT CLEANED), ADD 33% TO AS RECEIVED CONDITION TORQUE.
BOLT HEAD IDENTIFICATION MARKS INDICATE GRADE AND MAY VARY FROM MANUFACTURER TO MANUFACTURER.
THICK NUTS MUST BE USED ON GRADE 8 CAPSCREWS.
USE VALUE IN [ ] IF USING PREVAILING TORQUE NUTS.

TORQUE IS SPECIFIED IN FOOT POUNDS

UNC Size	SAE Grade 2		SAE Grade 5		SAE Grade 8		UNF Size	SAE Grade 2		SAE Grade 5		SAE Grade 8	
1/4-20	4	[5]	6	[7]	9	[11]	1/4-28	5	[6]	7	[9]	10	[12]
5/16-18	8	[10]	13	[16]	18	[22]	5/16-24	9	[11]	14	[17]	20	[25]
3/8-16	15	[19]	23	[29]	35	[43]	3/8-24	17	[21]	25	[31]	35	[44]
7/16-14	24	[30]	35	[43]	55	[62]	7/16-20	27	[34]	40	[50]	60	[75]
1/2-13	35	[43]	55	[62]	80	[100]	1/2-20	40	[50]	65	[81]	90	[112]
9/16-12	55	[62]	80	[100]	110	[137]	9/16-18	60	[75]	90	[112]	130	[162]
5/8-11	75	[94]	110	[137]	170	[212]	5/8-18	85	[106]	130	[162]	180	[225]
3/4-10	130	[162]	200	[250]	280	[350]	3/4-16	150	[188]	220	[275]	320	[400]
7/8-9	125	[156]	320	[400]	460	[575]	7/8-14	140	[175]	360	[450]	500	[625]
1-8	190	[237]	408	[506]	680	[850]	1-14	210	[263]	540	[675]	760	[950]
1-1/8-7	270	[337]	600	[750]	960	[1200]	1-1/8-12	300	[375]	660	[825]	1080	[1350]
1-1/4-7	380	[475]	840	[1050]	1426	[1782]	1-1/4-12	420	[525]	920	[1150]	1500	[1875]
1-3/8-6	490	[612]	110	[1375]	1780	[2225]	1-3/8-12	560	[700]	1260	[1575]	2010	[2512]
1/1-2-6	650	[812]	1460	[1825]	2360	[2950]	1/1-2-12	730	[912]	1640	[2050]	2660	[3325]

METRIC

COARSE THREAD METRIC CLASS 10.9 FASTENERS AND CLASS 10.0 NUTS AND THROUGH HARDENED FLAT WASHERS, PHOSPHATE COATED, ROCKWELL "C" 38-45.
USE VALUE IN [ ] IF USING PREVAILING TORQUE NUTS.

Nominal Thread Diameter mm	Standard Torque				Nominal Thread Diameter mm	Standard Torque			
	Newton-Meters		Foot-Pounds			Newton-Meters		Foot-Pounds	
6	10	[14]	7	[10]	20	385	[450]	290	[335]
7	16	[22]	12	[16]	24	670	[775]	500	[625]
8	23	[32]	17	[24]	27	980	[1105]	730	[825]
10	46	[60]	34	[47]	30	1330	[1470]	990	[1090]
12	80	[101]	60	[75]	33	1790	[1950]	1340	[1450]
14	125	[155]	90	[115]	36	2325	[2515]	1730	[1870]
16	200	[240]	150	[180]	39	3010	[3210]	2240	[2380]
18	275	[330]	205	[245]					

Table 2-1 General Torque Specifications

https://truckmanualshub.com/

LANDOLL CORPORATION
HYDRAULIC FITTING TORQUE SPECIFICATIONS
37° JIC, ORS, & ORB (REV. 10/97)

THIS CHART PROVIDES TIGHTENING TORQUES FOR HYDRAULIC FITTING APPLICATIONS WHEN SPECIAL TORQUES ARE NOT SPECIFIED ON PROCESS OR DRAWING.
ASSEMBLY TORQUES APPLY TO PLATED CARBON STEEL AND STAINLESS STEEL FITTINGS ASSEMBLED WITHOUT SUPPLEMENTAL LUBRICATION (AS RECEIVED CONDITION). THEY DO NOT APPLY IF SPECIAL GRAPHITE MOLY-DISULFIDE OR OTHER EXTREME PRESSURE LUBRICANTS ARE USED.
BRASS FITTINGS AND ADAPTERS - 65% OF THE TORQUE VALUE FOR STEEL. STAINLESS STEEL, ALUMINUM AND MONEL - THREADS ARE TO BE LUBRICATED.
TORQUE IS SPECIFIED IN FOOT POUNDS

PARKER BRAND FITTINGS

Dash Size	37 Degree JIC	O-Ring (ORS)	O-Ring Boss (ORB)
-4	11-13	15-17	13-15
-5	14-16	—	21-23
-6	20-22	34-36	25-29
-8	43-47	58-62	40-44
-10	55-65	100-110	57.5-62.5
-12	80-90	134-146	75-85
-16	115-125	202-218	109-121
-20	160-180	248-272	213-237
-24	185-215	303-327	238-262
-32	250-290	—	310-340

LANDOLL CORPORATION
HYDRAULIC FITTING TORQUE SPECIFICATIONS
37° JIC, ORS & ORB (REV. 10/97)

THIS CHART PROVIDES TIGHTENING TORQUES FOR HYDRAULIC FITTING APPLICATIONS WHEN SPECIAL TORQUES ARE NOT SPECIFIED ON PROCESS OR DRAWING.
ASSEMBLY TORQUES APPLY TO PLATED CARBON STEEL AND STAINLESS STEEL FITTINGS ASSEMBLED WITHOUT SUPPLEMENTAL LUBRICATION (AS RECEIVED CONDITION). THEY DO NOT APPLY IF SPECIAL GRAPHITE MOLY-DISULFIDE OR OTHER EXTREME PRESSURE LUBRICANTS ARE USED.
BRASS FITTINGS AND ADAPTERS - 65% OF THE TORQUE VALUE FOR STEEL.
TORQUE IS SPECIFIED IN FOOT POUNDS.

AEROQUIP BRAND FITTINGS

Dash Size	37 Degree JIC	O-Ring (ORS)	O-Ring Boss (ORB)
-4	11-12	10-12	14-16
-5	15-16	—	18-20
-6	18-20	18-20	24-26
-8	38-42	32-35	50-60
-10	57-62	46-50	72-80
-12	79-87	65-70	125-135
-14	—	—	160-180
-16	108-113	92-100	200-220
-20	127-133	125-140	210-280
-24	158-167	150-165	270-360
-32	245-258	—	—

Table 2-2 Hydraulic Fitting Torque Specifications

https://truckmanualshub.com/

OPERATING INSTRUCTIONS 3

3-1 GENERAL

This section supplies information for operation of the semitrailer. It describes and locates controls and gives general operation procedures. Read all instructions, warnings, cautions, and danger notes before attempting to operate the semitrailer. Operators must have proper training before operating the semitrailer.

⚠ WARNING

DO NOT OPERATE THE SEMITRAILER WITH ANY KNOWN FAULT THAT MIGHT ENDANGER THE OCCUPANTS, NEARBY WORKERS, OTHER TRAFFIC, THE LOAD, OR THE EQUIPMENT.

⚠ WARNING

DO NOT OPERATE THE SEMITRAILER UNTIL YOU HAVE READ THE OPERATOR'S MANUAL AND COMPLETELY UNDERSTAND THE PROPER USE AND FUNCTION OF ALL CONTROLS. IMPROPER USE CAN CAUSE PERSONAL INJURY, DAMAGE TO YOUR SEMITRAILER AND CARGO, AND CAUSE TIME-CONSUMING BREAKDOWNS.

3-1.1 Landing Gear

The landing gear consists of two legs with a tube telescoping within another tube. Pin drop style is standard. Crank or hydraulically operated are optional.

3-1.2 Parking Brake

The parking brakes are automatically applied by spring pressure with the air actuators of the braking system when air pressure in the emergency line drops below 50 psi. This may be done within the truck using the trailer parking/emergency valve or be disconnecting the emergency gladhand.

3-1.3 Air Brake System

The air brake system of the semitrailer is operated from the towing vehicle after coupling. The towing vehicle's air system must be coupled to the semitrailer and charged to 90 psi minimum before the brakes can adequately function.

3-1.4 Anti-Lock Brake System (ABS)

The Anti-lock Brake System of the semitrailer is constant powered by the auxiliary (blue) circuit of the seven way electrical connector, with backup power from the stop lamp (red) circuit, and ground through the white wire. It is necessary that the blue circuit is hot when the tractor key switch is on. The blue circuit on the trailer may also not be used to power any additional auxiliary devices while the semitrailer is moving forward. If a fault exists in the ABS, normal braking will occur, but the wheels may lock. Service the ABS as soon as possible.

⚠ CAUTION

THE AUXILIARY (BLUE) CIRCUIT IS FOR POWERING THE SEMITRAILER ABS. THIS CIRCUIT MUST BE HOT WHEN THE TRACTOR KEY SWITCH IS ON. NO OTHER ELECTRICAL DEVICES MAY BE POWERED BY THIS CIRCUIT WHILE THE SEMITRAILER IS MOVING FORWARD.

⚠ CAUTION

IF A FAULT EXISTS IN THE SEMITRAILER ABS, NORMAL BRAKING WILL OCCUR, BUT WHEELS MAY LOCK. SERVICE THE ABS AS SOON AS POSSIBLE.

https://truckmanualshub.com/

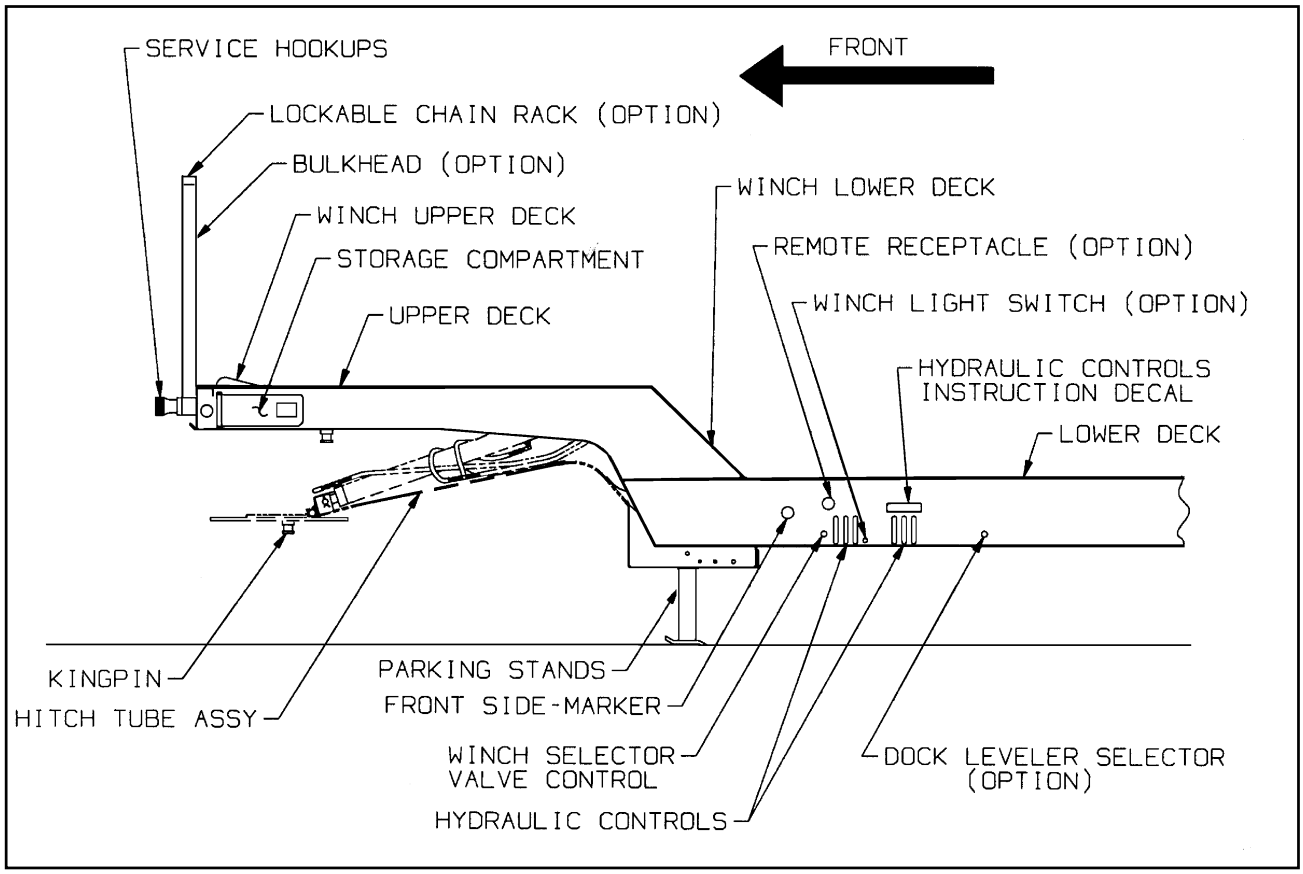

Figure 3-1 Front Trailer Terminology

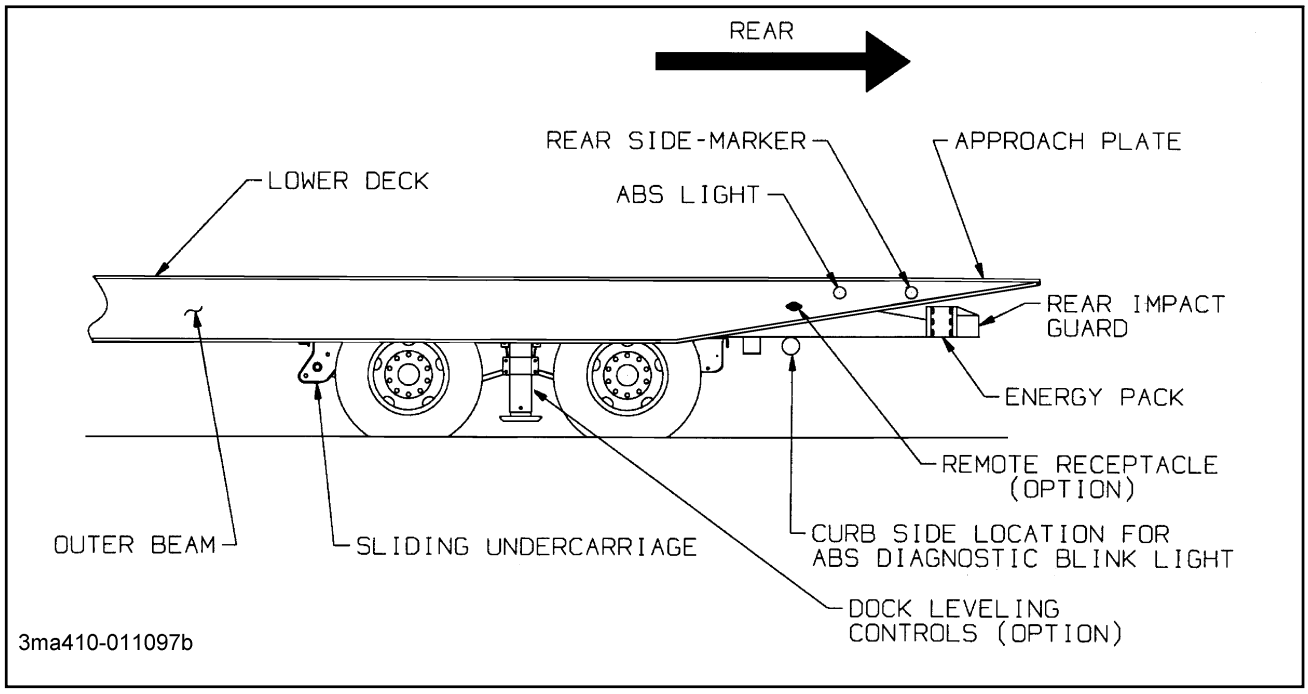

Figure 3-2 Rear Trailer Terminology

https://truckmanualshub.com/

3-1.5 Electrical

The only electrical operation required of the operator is interconnection of the towing vehicle electrical cable plug with the semitrailer electrical receptacle.

It is necessary that the tractor blue wire is connected to the appropriate electrical source on the tractor.

3-1.6 Hydraulic

Most controls are located on the driver's side of the trailer. A hydraulic pump must be coupled to the trailer hydraulic system, or the optional hydraulic engine package started, before any hydraulic controls can function. The hydraulic system is designed to operate at 2500 psi maximum pressure and approximately 17 gpm flow capacity.

3-2 PRE-COUPLING OF SEMITRAILER AND TRACTOR

3-2.1 Slowly back the tractor/truck (towing vehicle) up to the front end of the semitrailer so the kingpin of the semitrailer is centered between the tractor fifth wheel jaws.. Stop the towing vehicle just inches ahead of the semitrailer. Set tractor parking brake.

3-2.2 Check the semitrailer king pin plate height. The king pin plate should be the same height, to slightly lower, than the latch area of the fifth wheel plate of the towing vehicle. If necessary, connect the tractor hydraulic lines, or start the semitrailer hydraulic power engine. Use the **TRAILER TILT** lever **(For operating instructions of the TRAILER TILT** lever**, see Figure 3-9)** to raise or lower the kingpin plate sufficiently to allow proper coupling. Drain all air and moisture from the towing vehicle air brake system following towing vehicle manufacturer's instructions.

3-2.3 Connect the service and emergency air hoses of the towing vehicle to their respective gladhand on the front of the semitrailer; red emergency line to the gladhand with the **"EMERGENCY"** tag, and the blue service line to the gladhand with the **"SERVICE"** tag **(See Figure 3-3).** Chock the semitrailer wheels before activating the semitrailer air supply valve in the towing vehicle. Set the parking brakes.

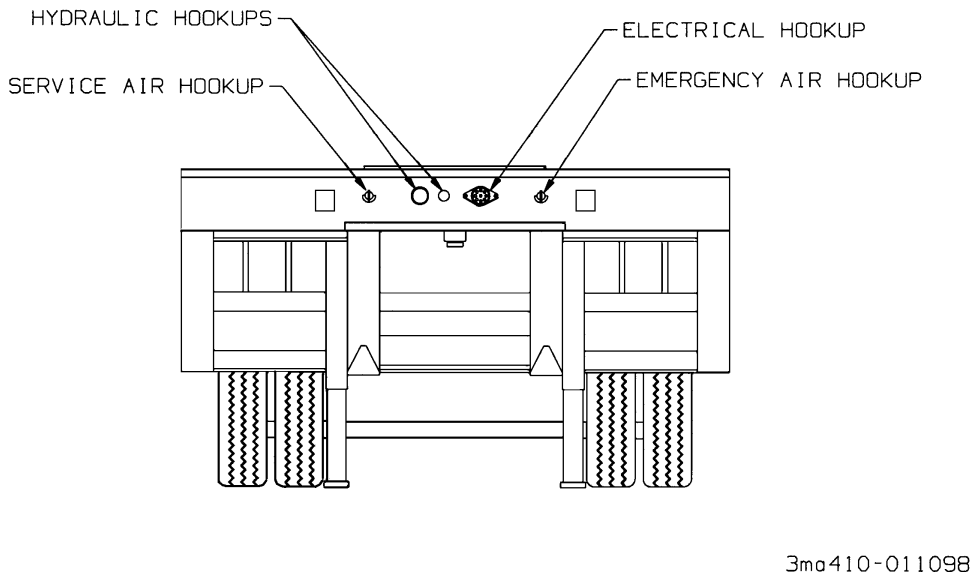

Figure 3-3 Service Hookups

https://truckmanualshub.com/

⚠ WARNING

FAILURE TO CHOCK SEMITRAILER WHEELS COULD ALLOW MOVEMENT OF THE SEMITRAILER RESULTING IN SERIOUS PERSONAL INJURY, DEATH,OR DAMAGE TO PROPERTY IN ITS PATH.

3-2.4 Check the air brake operations of the semitrailer as follows:

a. Apply brakes and inspect brake action on all wheels for prompt application.

b. Release brakes. All brakes should release immediately. Air pressure should discharge quickly from the relay emergency valve.

c. Disconnect the emergency air line from the semitrailer gladhand. Trailer brakes should promptly set.

d. Re-connect the emergency air line to the semitrailer and activate the semitrailer air supply valve. The semitrailer brakes should set.

3-3 COUPLING OF THE TRACTOR TO THE SEMITRAILER

⚠ DANGER

KEEP ALL PERSONNEL CLEAR OF FRONT, REAR, AND SIDES OF TOWING VEHICLE AND SEMITRAILER DURING COUPLING, COMPONENT OPERATIONS, AND UNCOUPLING. FAILURE TO STAY CLEAR CAN RESULT IN SERIOUS PERSONAL INJURY OR DEATH.

3-3.1 Verify the semitrailer wheels are chocked and brakes function properly.

3-3.2 Make certain the coupler of the towing vehicle's fifth wheel is open by pulling the latch handle.

3-3.3 Slowly back the towing vehicle so its fifth wheel contacts the front of the king pin plate on the semitrailer and slips under it. Continue backing until the fifth wheel coupler locks onto the semitrailer kingpin.

⚠ CAUTION

PUSHING THE SEMITRAILER BACKWARDS CAN DAMAGE PARKING STANDS.

3-3.4 Verify the vehicle coupling is secure by attempting to pull the tractor forward a few inches. If the tractor disconnects from the semitrailer, locate source of coupling failure; repair before continuing; and repeat **Section 3-3.3 and 3-3.4.**

3-3.5 Check that the towing vehicle couples securely to the semitrailer before setting towing vehicle and semitrailer parking brakes.

IMPORTANT

KEEP BRAKES ENGAGED FOR REMAINDER OF HOOKUP, CHECKOUT PROCEDURES, AND PARKING.

https://truckmanualshub.com/

3-4 CONNECTING TRACTOR SERVICES TO THE SEMITRAILER

3-4.1 Connect the towing vehicle 7-pole electrical plug to the electrical receptacle on the front of the semitrailer **(See Figure 3-3).**

IMPORTANT

THE KEY ON THE PLUG AND THE KEYWAY IN THE SOCKET MUST BE PROPERLY ALIGNED BEFORE INSERTING THE PLUG INTO THE SEMITRAILER SOCKET.

3-4.2 If you have not already done so, connect the tractor hydraulic lines to the semitrailer unless your semitrailer is equipped with the self-contained hydraulic power engine package.

⚠ CAUTION

OPERATING PRESSURES GREATER THAN 2500 PSI CAN CAUSE DAMAGE TO THE TRAILER.

IMPORTANT

SOME OIL MAY NEED TO BE REMOVED FROM THE TRACTOR RESERVOIR TO ALLOW ROOM FOR 12 GALLONS OF ADDITIONAL OIL DISPLACED FROM THE TRAILER HYDRAULIC SYSTEM.

3-4.3 Air Lines: **See Section 3-2.**

3-5 TRACTOR AND SEMITRAILER CHECK-OUT

⚠ WARNING

FAILURE TO PROPERLY SET AND CHECK PARKING BRAKE, AND CHOCK WHEELS WHEN PARKING AND DURING STORAGE, COULD ALLOW MOVEMENT OF THE TRUCK/SEMITRAILER RIG RESULTING IN SERIOUS PERSONAL INJURY, DEATH, OR DAMAGE TO PROPERTY IN ITS PATH.

3-5.1 With hydraulic power operating, raise landing gear:

a. For pin drop landing gear, activate the **TRAILER TILT** lever "UP" **(See Figure 3-4)** until weight is off the landing gear. Raise landing gear. **(See Section 3-9 for operation of TRAILER TILT lever.)** Secure each leg with a park stand retaining pin in the full "up" position before transporting.

⚠ CAUTION

ALWAYS GRIP CRANK HANDLE SECURELY WITH BOTH HANDS. NEVER SHIFT LANDING GEAR UNDER LOAD, LEAVE THE GEARS IN NEUTRAL OR LEAVE THE CRANK UNSECURED.

b. For crank landing gear, retract landing gear by turning hand crank on control panel counterclockwise. Use low gear until the load is off the landing gear. Then shift to high gear and continue cranking until fully retracted. Leave the landing gear in high gear.

c. For hydraulic landing gear, remove the pin from each landing gear leg. Retract landing gear using lever **(See Section 3-5.2)** on engine control panel **(See Figure 3-11)**. Secure each leg with a pin in fully retracted position.

3-5.2 The **LANDING GEAR lever** is located on the left side of the Engine Control Panel. It has three positions:

RETRACT In this position, the landing gear are pulled up off the ground.

CENTER This is neutral position.

EXTEND In this position, the landing gear are lowered to the ground.

https://truckmanualshub.com/

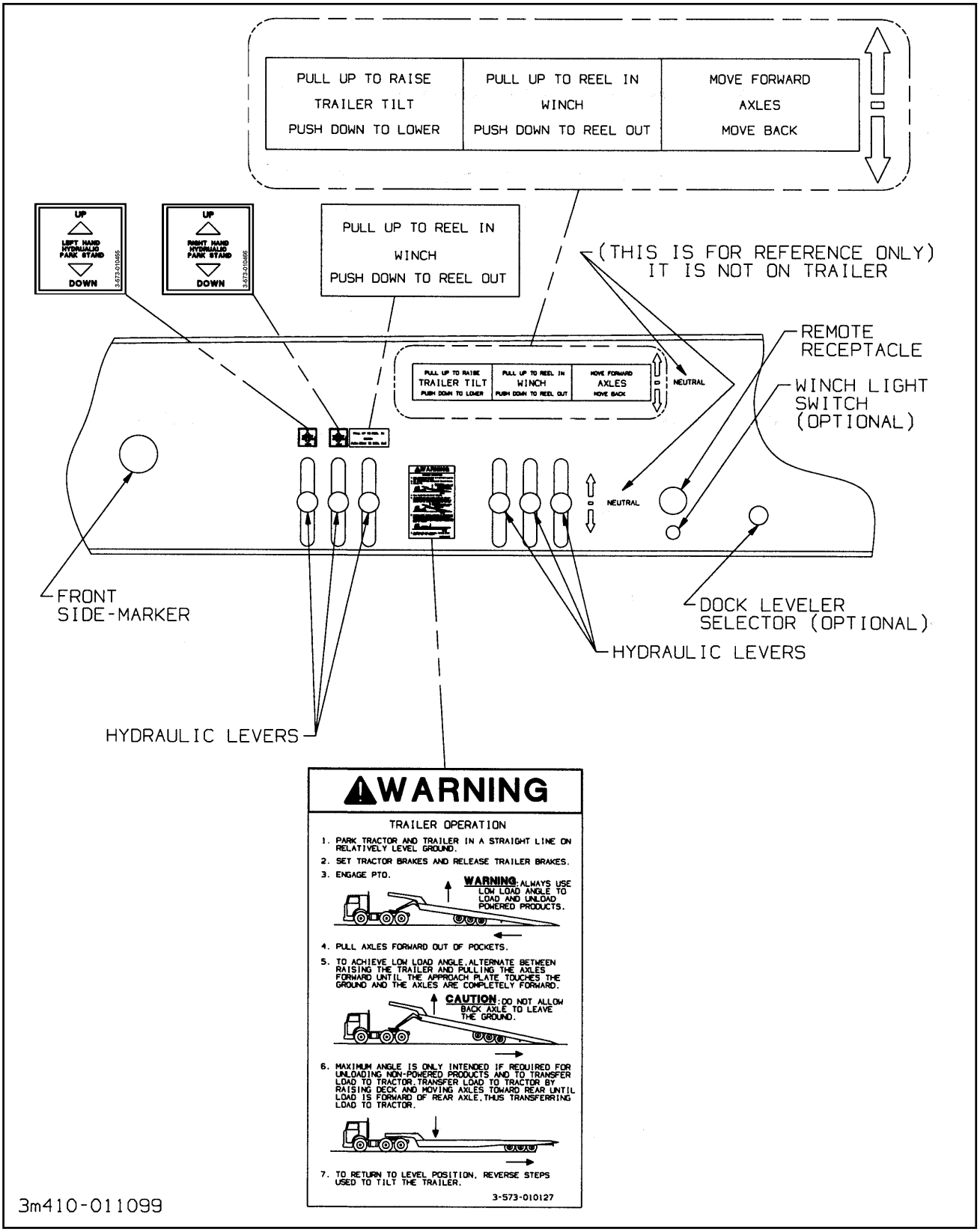

Figure 3-4 Hydraulic Controls

https://truckmanualshub.com/

WARNING

1. LANDING GEAR LEGS MUST BE FULLY RETRACTED AND SECURED WITH PINS BEFORE OPERATING OR MOVING SEMITRAILER.
2. IF SEMITRAILER IS LOADED WHEN OPERATING LANDING GEAR, LOAD MUST BE CENTERED ON THE TRAILER.
3. DO NOT TILT SEMITRAILER WITH HYDRAULIC LANDING GEAR ON GROUND.

3-5.3 Activate the **TRAILER TILT lever (See Section 3-9)** "DOWN" until the semitrailer is fully lowered. Hold semitrailer tilt lever in the down position until hydraulic system works against the bottomed out Hydraulic Tilt Cylinders.

3-5.4 Determine that the traveling undercarriage is completely slid back to transport position. Hold **AXLE CONTROL lever (See Section 3-10)** in the transport position until hydraulic system works against the fully extended hydraulic telescopic axle cylinder. Shut off hydraulic power.

3-5.5 Check the operation of all lights and signals on the semitrailer for proper response to switch positions (stop, right turn, left turn, and clearance). Check operation of remote function if present.

3-5.6 Check tire inflation, adjust as needed to the pressure listed on the semitrailer VIN plate, located on the front of the semitrailer.

3-5.7 Check tractor/semitrailer rig for air leaks. If air leakage is found, repair the defect before transporting.

3-5.8 Check the oil in each hub for proper level and freedom from contamination. If hubs are contaminated with water, dirt or some other foreign material, clean before transporting.

3-5.9 Check tractor air pressure. Pressure must not fall below 90 psi, even after activating brakes a couple of times. Set parking brake and carefully remove all wheel chocks. Set emergency brake and try pulling forward. The semitrailer wheels must not rotate. If semitrailer brakes do not apply, **DO NOT** transport until defect, or defects, are repaired.

3-6 TOWING THE SEMITRAILER

Driving the towing vehicle with the semitrailer coupled behind requires constant attention to the overall length of the combination. The "hinged-in-the-middle" configuration of the tractor and semitrailer, load, and weight effect performance. Turning, passing, acceleration, braking, stopping, and backup require special considerations. When executing steep grades or turning tight curves, the semitrailer must not be allowed to push the towing vehicle, or jack knifing the semitrailer with the towing vehicle may result. Application of the semitrailer brakes to keep the semitrailer in tow will help prevent this pushing. Braking should begin before descending a hill or attempting a curve, to assure control.

⚠ WARNING

ALWAYS CHECK BEHIND AND UNDER THE TRUCK AND SEMITRAILER FOR PERSONS OR OBJECTS BEFORE MOVING. FAILURE TO CHECK CAN LEAD TO SERIOUS PERSONAL INJURY OR DEATH TO OTHERS, OR DAMAGE TO PROPERTY.

https://truckmanualshub.com/

3-6.1 Make a moving test of the semitrailer brakes at low, and medium speeds before traveling at highway speed.

a. The Anti-Lock Brake System (ABS) warning lamp mounted at left rear side of the semitrailer should come on when power is supplied to the ABS by turning the tractor keyswitch on. The warning lamp should go off once the semitrailer exceeds 4 mph. If the warning lamp does not go off, a fault exists in the semitrailer ABS. Once the vehicle speed exceeds 4 mph, the light should remain off unless a fault occurs or the keyswitch is turned off, then on again.

⚠ CAUTION

IF A FAULT EXISTS IN THE SEMITRAILER ABS, NORMAL BRAKING WILL OCCUR, BUT WHEELS MAY LOCK. SERVICE THE ABS AS SOON AS POSSIBLE.

3-6.2 Monitor the air pressure gauge on the dash of the towing vehicle. Pressure should not fall below 80 psi at any time.

3-6.3 The semitrailer wheels track to the inside of the towing vehicle during turns. Thus, turning corners requires a wide swing to prevent “curb hopping”, and to allow the semitrailer wheels to clear any obstacle on the inside of the corner.

3-6.4 To stop, use a gradual and smooth application of brakes. If grabbing occurs, apply less pressure - grabbing brakes are not efficient.

3-6.5 Backing should be done with care. Tail overhang, semitrailer length, and allowable space must be taken into consideration when backing the semitrailer.

3-7 PARKING THE TRAILER

3-7.1 Position truck/semitrailer rig on a level, solid surface.

3-7.2 Set the **PARKING BRAKE**, **not the semitrailer hand brake**, and check for proper brake holding.

3-7.3 Chock wheels of semitrailer.

3-7.4 Check for any air leaks in lines, relay valve, brake pods, or any other air system component.

⚠ WARNING

WHEN LEAVING THE SEMITRAILER UNATTENDED, POSITION ALL HYDRAULIC CONTROLS TO THE NEUTRAL OR “OFF” POSITION AND SHUT OFF THE HYDRAULIC ENGINE POWER SUPPLY, OR DISCONNECT THE TRACTOR HYDRAULIC HOOK-UP.

https://truckmanualshub.com/

3-8 UNCOUPLING TOWING VEHICLE FROM SEMITRAILER

3-8.1 Park the semitrailer according to instructions in **Section 3-7.**

3-8.2 Lower the park stands to the ground. Hydraulically raise front end of semitrailer until next hole in park stand is available. Pin through both inner and outer legs of stand. Hydraulically lower semitrailer onto legs.

3-8.3 Disconnect the emergency and service air lines and attach them to the tractor gladhand holders.

3-8.4 Disconnect the 7-pole cable and hydraulic lines from the semitrailer and store with the tractor.

3-8.5 Pull the tractor fifth wheel plate latch release lever.

3-8.6 Attempt to pull the tractor forward. If the tractor uncouples, verify all service lines are disconnected and semitrailer wheels are chocked. If tractor does not disconnect, repeat **Section 3-8.5 and 3-8.6.**

3-8.7 Pull the tractor away from the semitrailer.

⚠ WARNING

ALWAYS CHECK BEHIND AND UNDER THE TRUCK AND SEMITRAILER FOR PERSONS OR OBJECTS BEFORE MOVING. FAILURE TO CHECK CAN LEAD TO SERIOUS PERSONAL INJURY OR DEATH TO OTHERS, OR DAMAGE TO PROPERTY.

⚠ WARNING

SECURE EACH LEG WITH PIN BEFORE LEAVING SEMITRAILER UNATTENDED.

3-9 TRAILER TILT LEVER

The **TRAILER TILT** lever is located on the drivers side of the semitrailer under the outer frame beam. **(See Figures 3-1 and 3-4)** It has three positions:

UP In this position, the front end of the semitrailer rises to the load position.

CENTER This is the neutral position. The semitrailer stays in its current position.

DOWN In this position, the front end of the semitrailer lowers to the transport position.

3-10 AXLE CONTROL LEVER

The **AXLE CONTROL** lever **(See Figures 3-1 and 3-4)** is the control on the rear with three positions:

UP In this position, the undercarriage slides forward for loading.

CENTER This is the neutral position.

DOWN In this position, the undercarriage slides to the rear. The undercarriage must be in the rear-most position for transport.

https://truckmanualshub.com/

3-11 LOADING PROCEDURE

⚠ DANGER

1. DO NOT GO NEAR UNDERCARRIAGE WHEN CAM ROLLERS ARE PARTIALLY OUT OF POCKETS. CHECK THAT CAM ROLLERS ARE COMPLETELY IN, OR COMPLETELY OUT OF POCKETS. IF A HYDRAULIC HOSE IS DISCONNECTED FROM THE SYSTEM, THE UNDERCARRIAGE COULD SLIDE ABRUPTLY INTO THE POCKETS.
2. THE CENTER OF GRAVITY OF THE LOAD MUST BE IN FRONT OF THE CENTER OF THE UNDERCARRIAGE WHENEVER THE APPROACH PLATE IS NOT SUPPORTED BY THE GROUND. FAILURE TO DO THIS CAN CAUSE THE SEMITRAILER TO TILT BACK AND CAN RESULT IN INJURY OR DEATH.
3. KEEP ALL PERSONS CLEAR WHILE TILTING TRAILER TO AVOID SERIOUS INJURY OR DEATH BY BEING PINCHED IN TRAILER BED.

⚠ CAUTION

1. DO NOT ALLOW THE BACK TRAILER AXLE TO LEAVE THE GROUND. THIS CAN RESULT IN DAMAGE TO SEMITRAILER.
2. TILTING THE SEMITRAILER DECK WILL INCREASE TENSION ON THE WINCH CABLE, WHICH CAN CAUSE THE LOAD TO BE PULLED FORWARD. DO NOT HOOK THE CABLE TO THE LOWER DECK WHEN TILTING.

3-11.1 Practice all standard industrial safety standards. Do not load any payload that will overload any component of the trailer or cause an unsafe condition.

3-11.2 Park the tractor/semitrailer in a straight line on level even surface. Set the tractor brakes and release the semitrailer brakes **(See Figure 3-5).**

3-11.3 Start operation of hydraulic power system. If the hydraulic engine package is installed, start and warm up engine following engine operating instructions in **Section 3-16. (Read engine operator's manual.)**

3-11.4 Move undercarriage forward (out of pockets) five to eight feet using the **AXLE CONTROL** lever **(See Section 3-10)**. To insure that the trailer does not rock back, keep undercarriage behind the trailer center of gravity.

3-11.5 Using the **TRAILER TILT** lever **(See Section 3-9)** tilt the front of the bed up until approach plate touches the ground or is to full tilt position.

3-11.6 If the approach plate has not touched the ground, move undercarriage forward until approach plate just touches the ground.

3-11.7 Alternate between lowering bed tilt angle and moving undercarriage fully forward so weight of the trailer bed rests partly on approach plate and partly on undercarriage as undercarriage is moved forward. The object is to have the approach plate resting on the ground whenever the center of gravity of the trailer and load is behind the center of the undercarriage. In loading or unloading position, the approach plate should be resting on the ground and the undercarriage fully forward.

⚠ CAUTION

DO NOT ALLOW THE BACK SEMITRAILER AXLE TO LEAVE THE GROUND. THIS CAN RESULT IN DAMAGE TO THE SEMITRAILER.

⚠ WARNING

IN LOADING OR UNLOADING POSITION, THE APPROACH PLATE SHOULD BE RESTING ON THE GROUND AND THE UNDERCARRIAGE FULLY FORWARD.

https://truckmanualshub.com/

⚠ WARNING

ALWAYS USE LOW LOAD ANGLE TO LOAD AND UNLOAD POWERED PRODUCTS.

IMPORTANT

MAXIMUM ANGLE IS ONLY INTENDED IF REQUIRED FOR UNLOADING NON-POWERED PRODUCTS AND TO TRANSFER LOAD TO TRACTOR. TRANSFER LOAD TO TRACTOR BY RAISING DECK AND MOVING AXLES TOWARD REAR UNTIL LOAD IS FORWARD OF REAR AXLE, THUS APPLYING LOAD TO TRACTOR.

3-11.8 Winch or drive the load onto the semitrailer. Insure that the load is steering straight up onto the semitrailer and does not maneuver off the side of the semitrailer. Continue until load center of gravity is just ahead of the axles, if possible. The load should never place more weight on the kingpin than on the rear axles during loading and unloading.

⚠ CAUTION

MAXIMUM CONCENTRATED LOAD IN A 10FT. AREA FOR A STANDARD FRAME SEMITRAILER IS 40,000 LBS. AND 50,000 LBS. WITH THE OPTIONAL FORKLIFT PACKAGE.

⚠ WARNING

1. THE SEMITRAILER MUST BE COUPLED TO A TRACTOR AND THE LANDING GEAR RAISED OFF THE GROUND BEFORE OPERATING.
2. DO NOT EXCEED THE GROSS AXLE WEIGHT RATINGS FOR ANY AXLE ON YOUR VEHICLE. THE COMBINED WEIGHT OF THE SEMITRAILER AND CARGO MUST NOT EXCEED THE GROSS VEHICLE WEIGHT RATING (GVWR) OF THE TRAILER.

⚠ WARNING

THE CENTER OF GRAVITY OF THE LOAD MUST BE IN FRONT OF THE CENTER OF THE UNDERCARRIAGE WHENEVER THE APPROACH PLATE IS NOT SUPPORTED BY THE GROUND. FAILURE TO DO THIS CAN CAUSE THE SEMITRAILER TO TILT BACK RESULTING IN INJURY OR DEATH.

3-11.9 Securely tie down the load and attach the winch cable to the front of the load, if it is not already attached. Reel in winch cable until it becomes tight. (Winch cable serves as a safety tiedown in case load tiedown fails but is not to replace tie downs.)

3-11.10 To adjust trailer to a transport position, alternate between tilting the front of the bed up toward full tilt position and moving the undercarriage toward the rear, until the center of gravity of the trailer load is in front of the center of the undercarriage. Keep part of the load on the wheels and part on the approach plate. Never move the undercarriage so far to the rear that the approach plate is lifted off the ground.

3-11.11 When the center of gravity of the trailer and load is in front of the undercarriage or when the trailer is in full tilt and the undercarriage as far back as possible without lifting the approach plate off the ground, fully lower the tilt angle.

3-11.12 After bed tilt angle is fully lowered, move the undercarriage to the rear until it is in transport position. The trailer deck will lower as the undercarriage rollers go into pockets. Hold **TRAILER TILT** lever in the down position until hydraulic system works against the bottomed out Hydraulic Tilt Cylinders (Approximately 2-5 seconds). Hold **AXLE CONTROL** lever in the transport position until hydraulic system works against the fully extended Hydraulic Axle Cylinder (Approximately 15-30 seconds).

3-11.13 Recheck that load is properly secured. If necessary, unsecure the load, move load slightly forward or rearward on the load bed to get correct weight distribution on kingpin and the trailer axles, and resecure the load with the tiedowns and winch cable.

3-11.14 Shut down hydraulic power system. If hydraulic engine package is installed, shut down the auxiliary hydraulic power engine following operating instructions in **Section 3-16.** Assure maintenance schedule is up-to-date and semitrailer is ready to be pulled.

https://truckmanualshub.com/

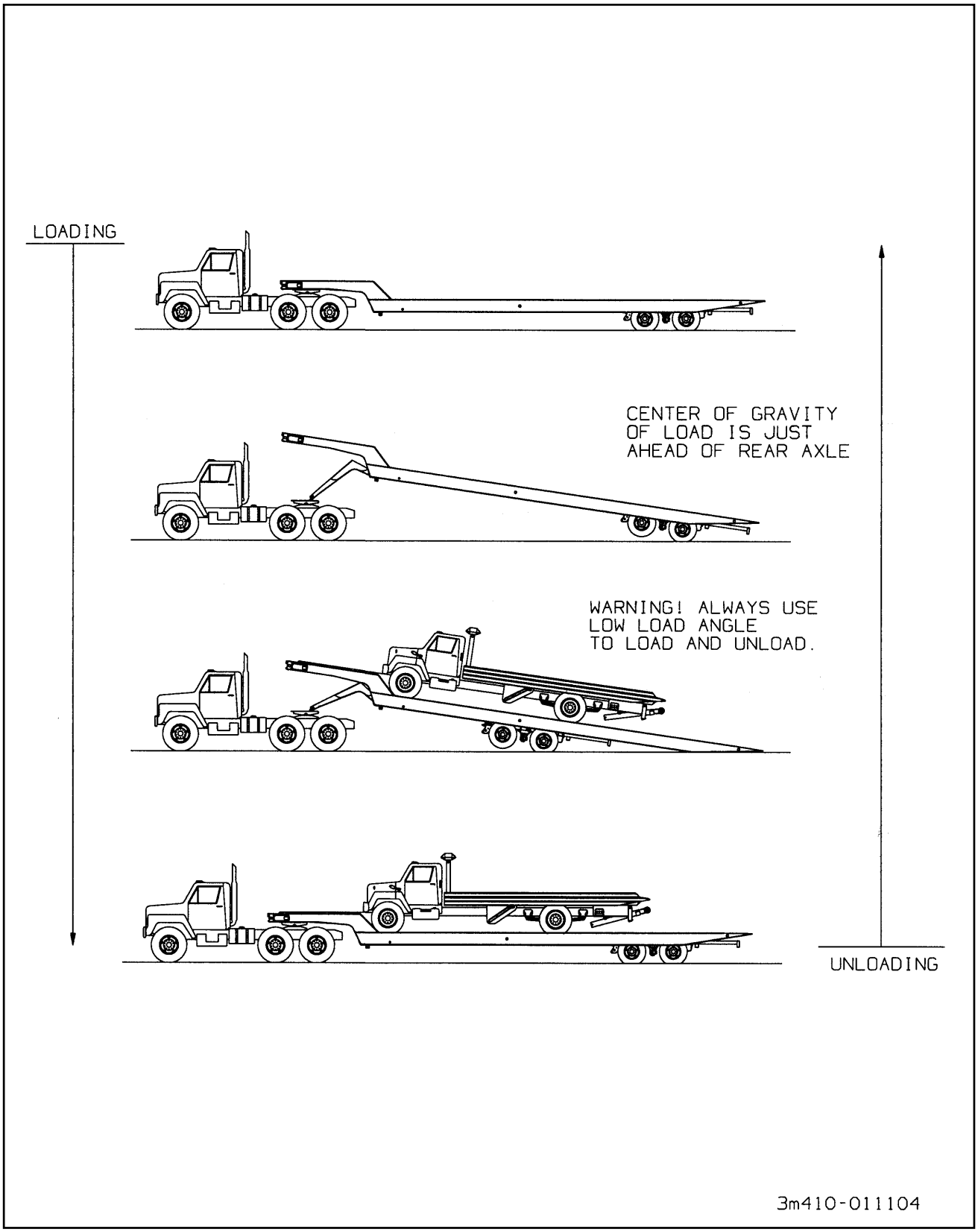

Figure 3-5 Steps for Loading and Unloading

https://truckmanualshub.com/

3-12 UNLOADING PROCEDURE

3-12.1 Practice all standard industrial safety standards.

3-12.2 Park the tractor/semitrailer in a straight line on a level even surface **(See Figure 3-5).** Set the tractor brakes and release the semitrailer brakes.

3-12.3 Start operation of hydraulic power system. If the hydraulic engine package is installed, start and warm up the auxiliary hydraulic power engine following engine operating instructions in **Section 3-16.**

3-12.4 Move load as far forward as is practical on the trailer and secure with appropriate load tiedowns.

3-12.5 Using the **AXLE CONTROL** lever **(See Section 3-10)**, move undercarriage forward (out of pockets) five to eight feet, or just behind the center of gravity of the loaded semitrailer. This is to insure that the trailer does not rock back. Actual center of gravity will relocate to the rear as the trailer is tilted up.

⚠ CAUTION

DO NOT ALLOW THE BACK SEMITRAILER AXLE TO LEAVE THE GROUND. THIS CAN RESULT IN DAMAGE TO THE SEMITRAILER.

3-12.6 Using the **TRAILER TILT** lever **(See Section),** raise the front of bed up to full tilt position.

3-12.7 If the approach plate has not touched the ground, move the undercarriage forward until the approach plate touches the ground and starts supporting the trailer. Then alternate between moving the undercarriage forward while lowering the tilt angle and reeling in the winch cable. The object is to keep a part of the weight on the approach plate, and part of the weight on the wheels while lowering the tilt angle and keeping slight tension on the winch cable. Always use low load angle to unload powered products. To achieve low load angle, the undercarriage has to be all the way forward. The maximum load angle is only intended, if required, for unloading non-powered products and to transfer load to tractor. Transfer load to tractor by raising deck and moving axles toward rear until load is forward of rear axle, thus transferring load to tractor.

⚠ WARNING

ALWAYS USE LOW LOAD ANGLE TO LOAD AND UNLOAD POWERED PRODUCTS.

IMPORTANT

MAXIMUM ANGLE IS ONLY INTENDED IF REQUIRED FOR UNLOADING NON-POWERED PRODUCTS AND TO TRANSFER LOAD TO TRACTOR. TRANSFER LOAD TO TRACTOR BY RAISING DECK AND MOVING AXLES TOWARD REAR UNTIL LOAD IS FORWARD OF REAR AXLE, THUS APPLYING LOAD TO TRACTOR.

3-12.8 If load is non-powered, insure that the winch cable is firmly attached to the load and tension is on the cable. Tilt trailer according to **Sections 3-12.5 through 3-12.7**, adjusting tension on winch cable as required. With winch cable firmly attached to load and sufficient tension on the cable so load securing devices can be safely removed, remove other load securing devices. Use the winch to assist the load down to end of approach plate. With end of load resting on ground, block load from rolling or sliding, if necessary. Disconnect the winch and move the trailer from under the load, allowing the load to move off trailer to the ground.

3-12.9 If powered load is secured to lower deck only, tilt semitrailer according to **Section 3-12.7**. Make sure the trailer is tilted to the low load angle. Check that powered equipment parking brakes are set and winch cable hooked to powered equipment with sufficient tension so load securing devices can be removed. Remove safety secure devices. Take tension off winch cable and remove winch cable. Power load off the trailer.

⚠ WARNING

WHEN REMOVING LOAD, INSURE THAT THE LOAD IS STEERING STRAIGHT SO IT DOES NOT MANEUVER OFF THE SIDE OF THE SEMITRAILER. FAILURE TO DO SO COULD RESULT IN DAMAGE TO EQUIPMENT, INJURY, OR DEATH.

https://truckmanualshub.com/

3-12.10 If powered load is secured to both upper and lower deck, attention is required before tilting the trailer. Adjust load securing devices to allow semitrailer to tilt and sufficiently secure load from movement while semitrailer is tilted to low load angle before tilting the semitrailer.

3-12.11 Before returning the semitrailer to transport position insure that there is sufficient distance between the load and the rear of the semitrailer so that the semitrailer does not hit the load when being lowered back to transport position.

⚠ CAUTION

BEFORE RETURNING THE SEMITRAILER TO TRANSPORT POSITION, INSURE THAT THERE IS SUFFICIENT DISTANCE BETWEEN THE LOAD AND THE REAR OF THE SEMITRAILER. FAILURE TO DO SO MAY RESULT IN DAMAGE TO THE SEMITRAILER AND/OR LOAD.

3-12.12 Using the **TRAILER TILT** lever **(See Section 3-9 and AXLE CONTROL** lever **(See Section 3-10),** alternate between tilting the front of the bed up to full tilt position and moving undercarriage to the rear as trailer wheels become unloaded. Keep part of the load on the wheels and part on the approach plate. Never move undercarriage so far to the rear that the approach plate is lifted off the ground when center of gravity of semitrailer and load is behind center of undercarriage. Never allow wheels to leave the ground while the trailer is tilted.

3-12.13 After the trailer is fully tilted and the undercarriage is as far back as possible without lifting the approach plate off the ground, fully lower bed tilt angle.

3-12.14 With bed tilt angle fully lowered, move undercarriage rearward to transport position. Hold **TRAILER TILT** lever in the down position until hydraulic system works against the bottomed out Hydraulic Tilt Cylinders (Approximately 2-5 seconds). Hold **AXLE CONTROL** lever in the transport position until hydraulic system works against the fully extended Hydraulic Axle Cylinder (Approximately 15-30 seconds).

3-12.15 Reel in winch cable and secure hook on deck.

3-12.16 Shut down hydraulic power system. If hydraulic engine package is installed, shut down the auxiliary hydraulic power engine following operating instructions in **Section 3-16.**

https://truckmanualshub.com/

3-13 WINCH CONTROLS

⚠ DANGER

1. THE WINCH IS NOT DESIGNED OR INTENDED TO BE USED FOR LIFTING OR MOVING PEOPLE. USING IT THIS WAY CAN CAUSE SERIOUS INJURY OR DEATH.
2. NEVER ATTEMPT TO DISENGAGE THE WINCH CABLE SPOOL WHEN THE CABLE IS UNDER TENSION. THE LOAD CAN ROLL AWAY. SERIOUS INJURY OR DEATH CAN RESULT IF PEOPLE ARE IN THE PATH OF THE ROLLING LOAD.
3. FAILURE TO LEAVE AT LEAST FIVE WINCH CABLE WRAPS ON THE WINCH CABLE SPOOL COULD ALLOW THE CABLE TO COME OFF THE SPOOL, RESULTING IN SERIOUS PERSONAL INJURY OR DEATH.

3-13.1 The **WINCH HYDRAULIC** lever **(See Figures 3-1 and 3-4)** is located on the front, lower deck driver's side frame member. It is the center lever and has three positions:

UP This position will cause the winch to reel cable onto the winch spool when the winch clutch handle is engaged.

CENTER This is the neutral position. This position will not operate the winch.

DOWN This position will cause the winch to reel cable off of the winch spool when the winch is engaged.

⚠ WARNING

1. DO NOT HANDLE THE WINCH CABLE WHEN THE WINCH IS IN THE ENGAGE POSITION. HANDS OR CLOTHING COULD GET CAUGHT IN THE CABLE AND BE PULLED INTO THE SPOOL CAUSING SERIOUS PERSONAL INJURY.

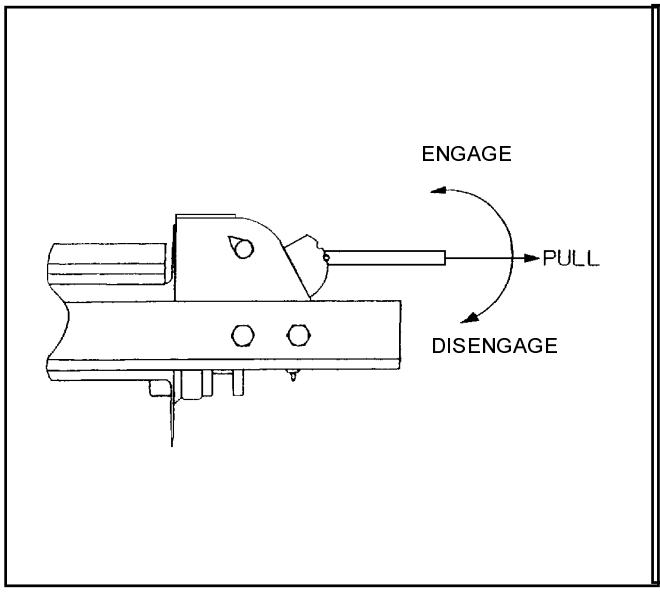

Figure 3-6 12,000# Winch Clutch

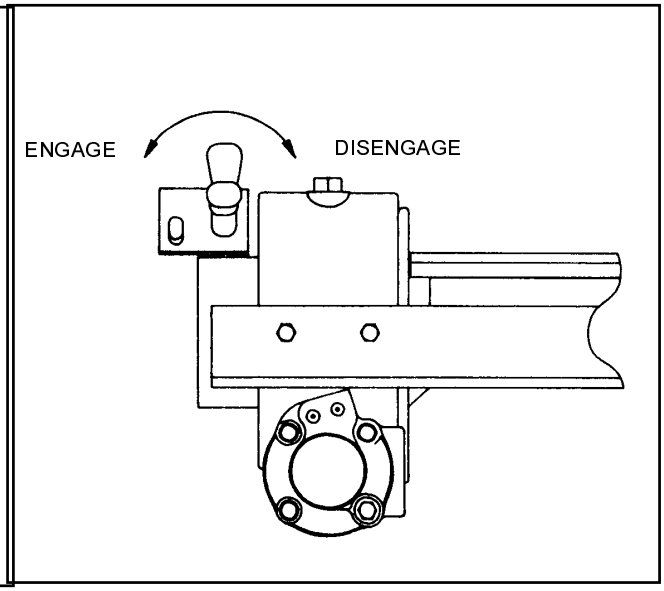

Figure 3-7 20,000# Winch Clutch

https://truckmanualshub.com/

3-13.2 The **WINCH CLUTCH HANDLE (See Figures 3-6 and 3-7)** is located on the right or curb-side end of the winch assembly. The function of the Winch clutch handle is to engage or disengage the winch, allowing it to respond to the Winch Hydraulic lever.

⚠ CAUTION

A MINIMUM OF 5 WRAPS OF CABLE MUST BE LEFT ON THE WINCH DRUM.

a. The **12,000 lb. WINCH CLUTCH HANDLE** has two positions: **(See Figure 3-6)**

DISENGAGE When the handle is placed is this position, the winch is disengaged. This allows the spool to “free-wheel” and the winch is not affected by use of the Winch Hydraulic lever.

ENGAGE When the handle is placed in this position, the winch is engaged and cable may be spooled on or off the winch spool. The winch can now be controlled through the use of the Winch Hydraulic lever.

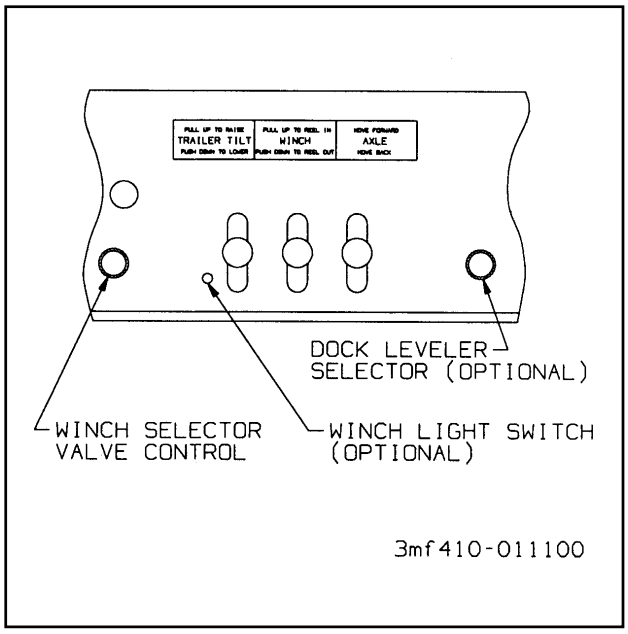

Figure 3-8 Winch Selector Valve Control

b. The **20,000 lb WINCH CLUTCH HANDLE has two positions. (See Figure 3-7).**

DISENGAGE When the handle is placed in this position, the winch is disengaged. This allows the spool to “free-wheel” and the winch is not affected by use of the Winch In/Out lever.

LEFT When the handle is placed in this position, the winch is engaged and cable may be spooled on or off the winch spool. The winch can now be controlled through the use of the Winch In/Out lever.

c. If your semitrailer is equipped with two winches, the upper deck winch is normally operated with the first lever of an additional three spool valve mounted to the left of the first three spool valve. Winch operation is the same as described in **Section 3-13.**

d. Instead of an additional three spool valve, a **WINCH SELECTOR VALVE CONTROL (See Figure 3-8)** may be used to operate two winches, one at a time. The winch selector valve control is located just to the left of the standard controls. It has two positions:

PUSH When this control is pushed in, the lower deck winch is activated.

PULL When this control is pulled out, the upper deck winch is activated.

e. Once the winch is selected, winch operation is the same as described in **Section 3-13.**

IMPORTANT

ELECTRIC REMOTE OPERATION IS DESCRIBED IN SECTION 3-14.

https://truckmanualshub.com/

3-14 REMOTE CONTROL (OPTION)

3-14.1 The wired remote control plugs into an electrical receptacle usually located on the Hydraulic Control Panel. Optional receptacle locations are on the rear street side or both rear street and rear curb sides. The wired remote is available as a single, dual, or triple function.

3-14.2 A wireless radio remote control is also available a dual, triple, or quadruple function **(See Figure 3-9).**

3-14.3 The single function wired remote operates like the winch hydraulic lever **(See Section 3-13.1).**

3-14.4 The dual function wired remote operates the winch and either the tilt, axle, or winch tension; or the tilt and axle.

a. The selector switch at the top of the remote box selects the function to be operated (winch, tilt, axle, or winch tension).

b. The two buttons will function like the control levers for the the winch **(See Section 3-13.1),** tilt **(See Section 3-9),** axle **(See Section 3-10),** or winch tension **(See Section 3-13.2).**

3-14.5 The triple function wired remote operates the winch, tilt, and either the axle or winch tension.

a. There are three switches which function like the control levers for the winch **(See Section 3-13.1),** tilt **(See Section 3-9),** axle **(See Section 3-10),** or winch tension **(See Section 3-13.2).**

3-14.6 The wireless radio remote has two, three, or four switches which function like the control levers for the winch **(See Section 3-13.1),** tilt **(See Section 3-9),** axle **(See Section 3-10),** or winch tension **(See Section 3-13.2).** The power switch on the remote must be turned on for any of the switches to function.

IMPORTANT

ON WINCHES WITH THE AIR TENSION OPTION, THE WINCH TENSION IS ENGAGED AUTOMATICALLY WHEN THE SWITCH IS TURNED TO WINCH. THE WINCH TENSION SWITCH ON EITHER THE REMOTE OR THE CONTROL PANEL MUST BE USED TO DISENGAGE THE

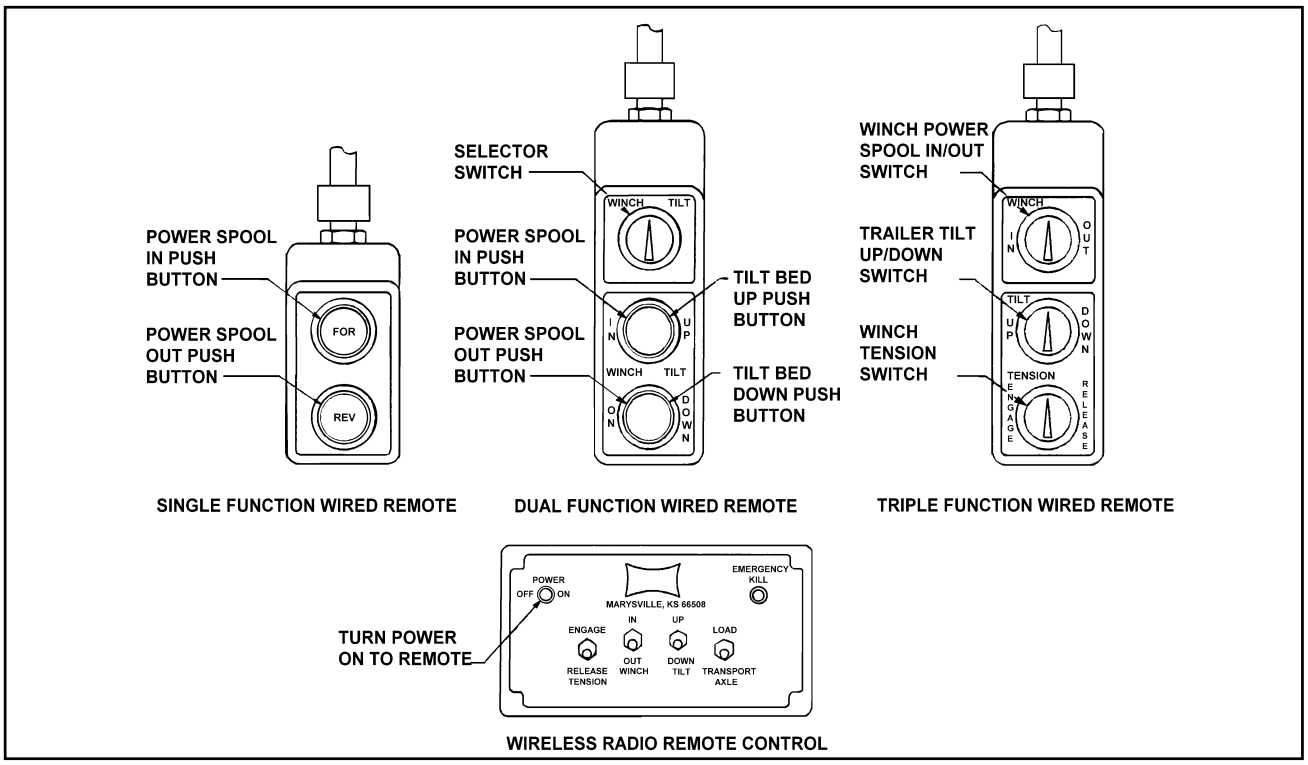

Figure 3-9 Examples of Remote Options

https://truckmanualshub.com/

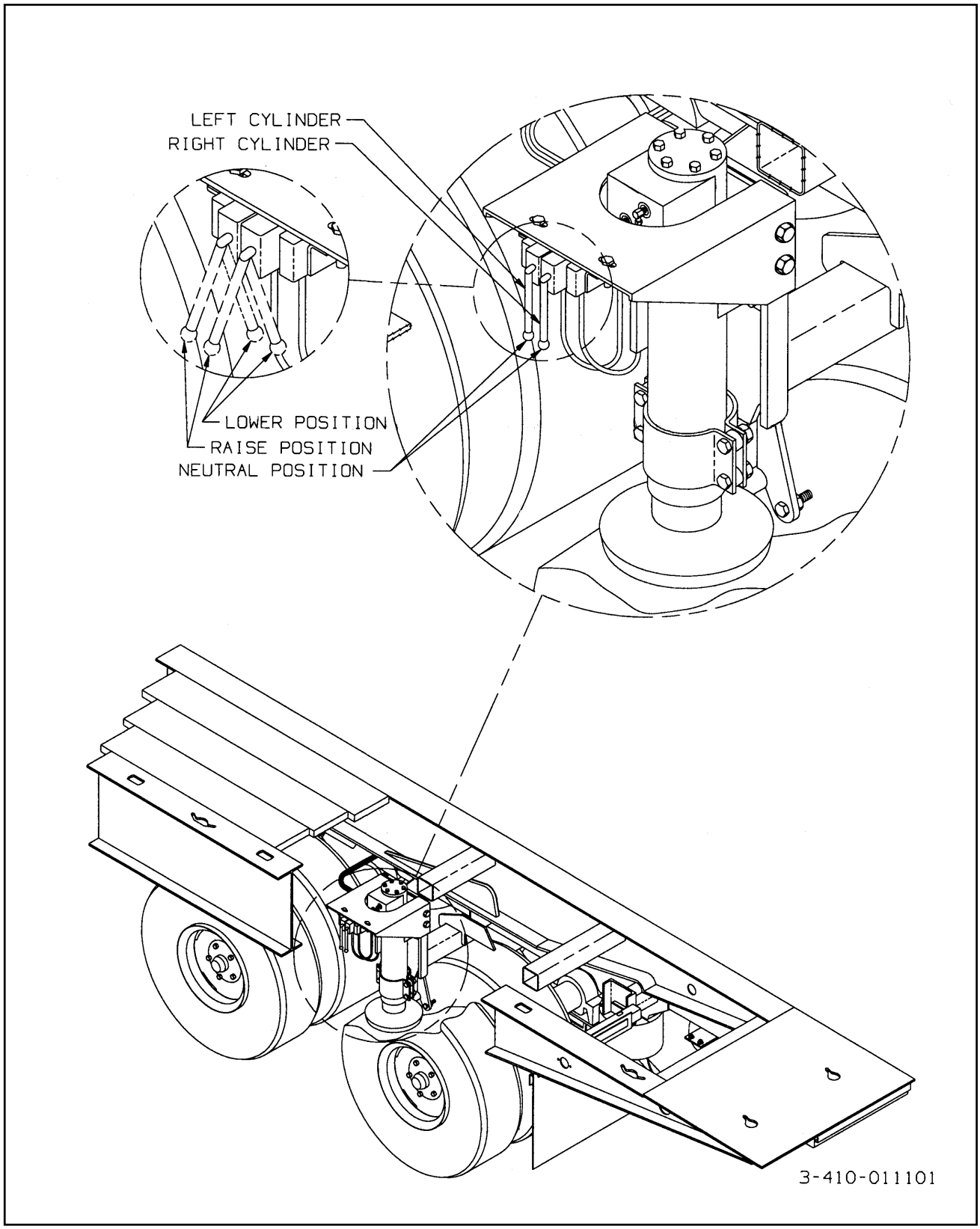

Figure 3-10 Dock Leveler Operation

https://truckmanualshub.com/

WINCH.

3-15 DOCK LEVELER CONTROL OPERATION

⚠ DANGER

1. WHEN USING DOCK LEVELERS, THE SEMITRAILER MUST BE KEPT LEVEL AT ALL TIMES. DO NOT LOWER THE PARKING STANDS. LOADS BEING PLACED ON THE SEMITRAILER MUST BE KEPT CENTERED ON THE SEMITRAILER. AN UNLEVEL SEMITRAILER MAY ALLOW A LOAD TO SLIDE, CAUSING INJURY OR DEATH TO ANYONE NEAR THE LOAD!
2. DO NOT OPERATE DOCK LEVELERS WITH INSUFFICIENT SPACE ON BOTH SIDES OF THE SEMITRAILER. SEMITRAILER WILL LEAN TOWARD THE SIDE WITH THE SHORTEST CYLINDER. PERSONS OR EQUIPMENT CAN BE CRUSHED BETWEEN SEMITRAILER SIDE AND RIGID OBJECTS.

⚠ CAUTION

BE SURE TO CHECK THAT THE DOCK LEVELERS ARE FULLY RETRACTED BEFORE MOVING THE SEMITRAILER. FAILURE TO RETRACT THE DOCK LEVELERS BEFORE OPERATING CAN CAUSE SEVERE DAMAGE TO THE SEMITRAILER.

The **DOCK LEVELER CONTROLS** are located under the deck on the driver's side, between the axles **(See Figure 3-10).** There are two controls which adjust the height of the dock leveler cylinders. The front-most control adjusts the cylinder on the driver's or street side of the semitrailer. The rear-most control adjusts the cylinder on the curbside of the semitrailer. Both controls have three positions.

IN When the control for either cylinder is pushed in, toward the center of the semitrailer, the corresponding dock leveler cylinder is lowered.

CENTER This position is neutral for either control. When either control is in this position, there is no effect on either cylinder.

OUT When the control for either cylinder is pulled out, away from the center of the semitrailer, the corresponding dock leveler cylinder is raised.

3-15.1 If your semitrailer is equipped with optional dock leveler hydraulics, these may be used to level the rear of the semitrailer to a loading dock.

3-15.2 Park the semitrailer in front of the dock according to instructions in **Section 3-7.**

3-15.3 Push in the Dock Leveler Selector so hydraulic power is available to the Dock Leveler circuit. Use the dock leveler controls located between the axles on the driver's or street side of the semitrailer to raise the rear corners of the semitrailer as needed. Operate both controls at the same time. Pull the dock leveler controls to raise the semitrailer deck (to extend the dock leveler legs). Push the dock leveler controls to lower the semitrailer deck (to retract the semitrailer legs). Use one control to level adjust the semitrailer bed.

IMPORTANT

Be sure to lower the dock levelers when finished. Push the dock leveler controls in - at the same time - to retract the dock leveler legs and lower the semitrailer bed.

3-15.4 Pull out dock leveler selector to return semitrailer hydraulics to normal operation. Shut off the hydraulic power.

https://truckmanualshub.com/

3-16 HYDRAULIC POWER SUPPLY ENGINE OPERATION

3-16.1 The Hydraulic Power Supply Engine system is used to power the hydraulic functions, should the tractor not be equipped with hydraulic hookups.

IMPORTANT

1. CHECK THE FOLLOWING FLUID LEVELS BEFORE STARTING THE ENGINE PACKAGE: ENGINE OIL, FUEL SUPPLY, HYDRAULIC OIL. (CHECK OIL LEVEL WHILE SEMITRAILER IS NOT TILTED AS TILTING WILL CHANGE THE OIL LEVEL IN THE TANK.)

2. IF THE ENGINE DOES NOT CRANK, CHECK THE FOLLOWING ON THE BATTERY: CHARGE, FLUID, TERMINALS, AND CABLES. TAKE CORRECTIVE ACTIONS AS NEEDED.

⚠ CAUTION

IF THE HYDRAULIC FLUID LEVEL IS LOW DURING OPERATION, THE SEMITRAILER MAY NOT OPERATE CORRECTLY, RESULTING IN DAMAGE TO THE SEMITRAILER.

3-16.2 The **ENGINE IGNITION SWITCH** is located below the hydraulic controls, and ahead of them on the driver's side of the semitrailer. Use the key to start and stop the Hydraulic Power Supply Engine. **(See Figure 3-11).** This switch has three positions:

OFF In this position, the power package engine does not run. The key can only be inserted or removed from this position.

RUN In this position, the engine runs without using the starter.

START In this position, the starter cranks the power package engine, letting it start. After the engine is started, release the key to the RUN position.

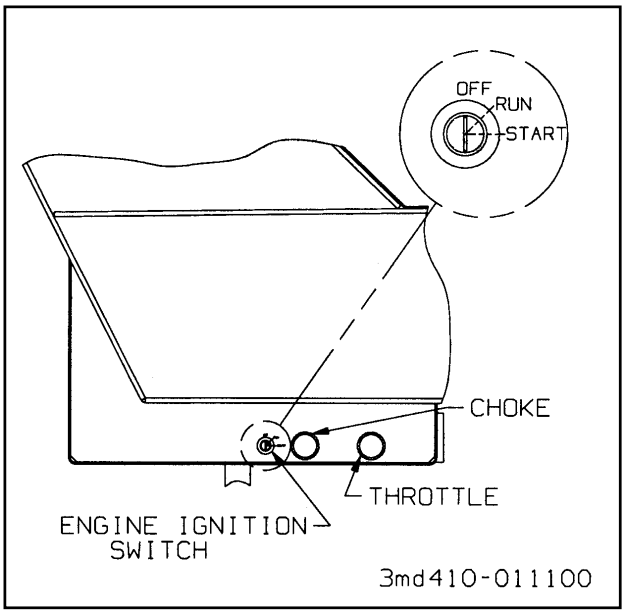

Figure 3-11 Engine Ignition Switch

3-16.3 The **HYDRAULIC POWER SUPPLY ENGINE CHOKE (See Figure 3-11)** is located to the right of the Engine Ignition Switch on the driver's side of the semitrailer. The purpose of the Choke is to aid the starting procedure.

IN This is normal operating position.

OUT Set the choke in this position as an aid to start the engine. Once the engine is started, push in the choke fully.

https://truckmanualshub.com/

3-16.4 The **HYDRAULIC POWER SUPPLY ENGINE THROTTLE** is located to the right of the choke on the driver's side of the semi-trailer. The Engine Throttle controls the speed at which the engine operates **(See Figure 3-11).** It is a variable position control:

FULL OUT In this position, the engine throttle is fully open, letting it run at full speed.

FULL IN In this position, the engine throttle is closed, letting the engine run at a slow idle.

3-16.5 To start pull the choke completely out and set the throttle to the LOW position.

3-16.6 Turn the ignition key to the START position. The engine should crank and then start.

⚠ CAUTION

DO NOT CRANK ENGINE FOR MORE THAN 30 SECONDS. IF ENGINE DOES NOT START, CONSULT THE OWNER'S MANUAL SUPPLIED WITH THE ENGINE.

3-16.7 When the engine starts, release the key. Gradually push the choke lever in until the engine runs smoothly.

IMPORTANT

BLACK SMOKE FROM THE EXHAUST AND A ROUGH RUNNING ENGINE USUALLY INDICATE OVER-CHOKING.

3-16.8 To adjust the speed, turn the throttle control in or out, as needed, until the engine runs smoothly at a speed capable of withstanding use of the hydraulic controls. The hydraulic controls should now be functional.

3-16.9 Before shutting it off, allow the engine to cool down by running at a slow idle for one to two minutes. Then turn the ignition switch to the off position.

3-16.10 Once the engine is cool, turn or push the throttle and choke control completely in and turn the key to the OFF position.

https://truckmanualshub.com/

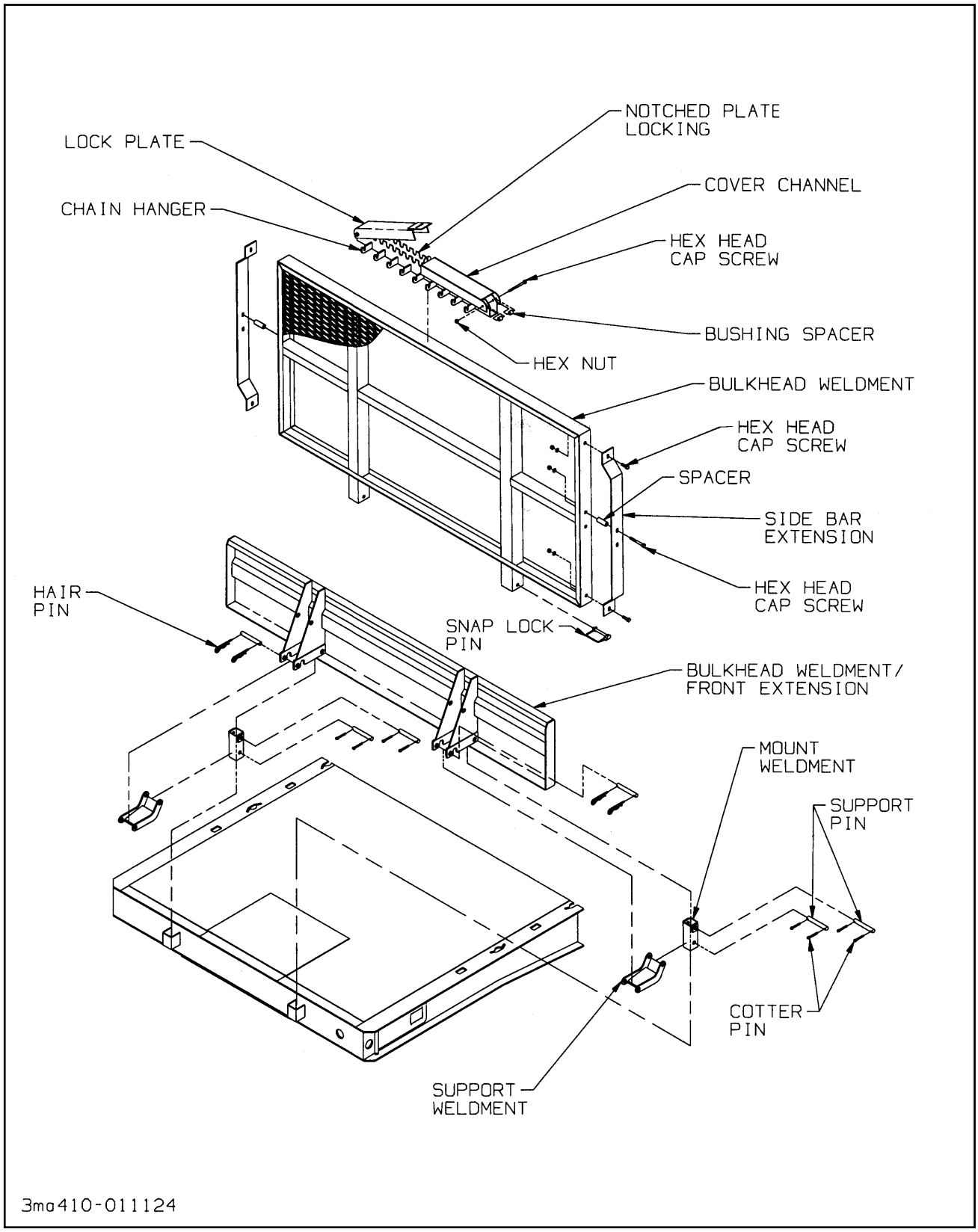

Figure 3-12 Front Extension/Bulkhead

https://truckmanualshub.com/

3-17 AIR RIDE OPERATION

3-17.1 Trailer air pressure must be maintained above 65 PSI before operating. This enables the 'PROTECTION VALVE" to maintain safe air brake pressure during suspension system air loss.

⚠ CAUTION

IF SUSPENSION AIR LOSS SHOULD OCCUR, COMPLETELY DEFLATE SUSPENSION AND TEMPORARILY OPERATE ON THE AIR SPRINGS INTERNAL RUBBER BUMPERS. CAREFULLY PROCEED TO THE NEAREST SEMI-TRAILER SERVICE FACILITY. TO DEFLATE THE AIR SUSPENSION, DISCONNECT THE LOWER CONNECTION ON THE LINKAGE OF THE AUTOMATIC AIR VALVES. ROTATE THE VALVE CONTROL ARMS DOWN ABOUT 45° TO EXHAUST THE AIR. TO RESTORE TO NORMAL OPERATION, SIMPLY REVERSE THE PROCEDURE.

3-18 FRONT EXTENSION/BULKHEADS

3-18.1 Optional bulkheads may come with or without chain racks. To remove a bulkhead, simply remove the support pins holding the bulkhead into the pockets on the semitrailer front and lift the bulkhead off.

3-18.2 To use the front extension as an extension, remove the front-most pin from the bracket. Lower the extension to a horizontal position. Replace the front-most pin in its new position. To use the extension as a bulkhead, simply return the extension to its original position. **(See Figure 3-12)**

3-18.3 In all cases, be sure to secure the support pins with the pins provided.

https://truckmanualshub.com/

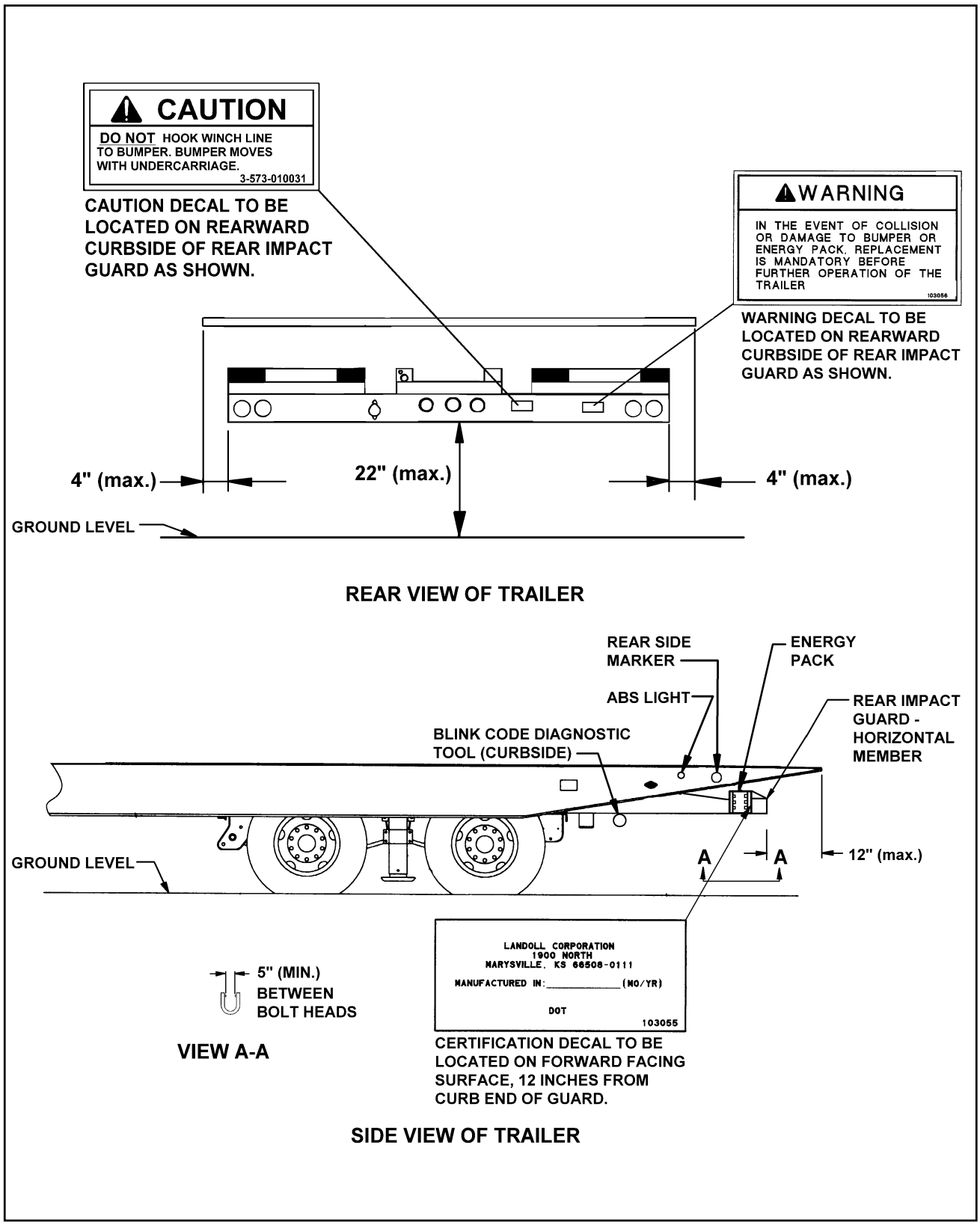

Figure 3-13 Rear Impact Guard and Antilock Brake System

https://truckmanualshub.com/

3-19 REAR IMPACT GUARD SYSTEM

Vehicle standards FMVSS No. 224, Rear Impact Protection, requires all trailers manufactured after January 26, 1998 shall be equipped with a rear impact guard certified by the manufacturer as meeting FMVSS No. 223, Rear Impact Guards. The guard, or bumper, **(See Figure 3-13)** meets the following requirements:

- **a minimum of 4 inches vertical height**
- **extend laterally to within 4 inches of the sides of the trailer**
- **a ground clearance of no more than 22 inches**
- **placed no more than 12 inches from the rear of the trailer.**
- **capable to deflect 5 inches.**

The standard also specifies minimum force and energy absorption requirements for the guard. A DOT decal certifies that the guard meets FMVSS No. 223 and 224 standards. The decal is placed **and must remain at all times** on the forward facing surface of the guard, 12 inches inboard of the curb side and of the guard. **See Figure 3-13** for location of decals.

Replace any component that does not allow the above minimum requirements to be met. Any hardware that holds the rear impact guard and becomes damaged or becomes loose shall be removed and replaced. The 3/4" grade 8 screws that hold the bumper energy pack shall be loctited and torqued to 280 ft.-lbs.

⚠ DANGER

ALWAYS CHECK THE CONDITION OF THE REAR IMPACT GUARD SYSTEM. IF GUARD SYSTEM HAS BEEN DAMAGED, IT MUST BE REPLACED. FAILURE TO MAINTAIN GUARD SYSTEM MAY RESULT IN INJURY OR DEATH TO OTHERS.

3-20 ANTI-LOCK BRAKE SYSTEM (ABS)

Vehicle standards FMVSS No. 121, anti-lock brake system requires all trailers with air brake systems to have ABS after March 1, 1998. Each trailer (including a trailer converter dolly) shall be equipped with an anti-lock brake system that controls the wheels of at least one axle of the trailer. Wheels on other axles of the trailer may be indirectly controlled by the anti-lock brake system.

NHTSA Docket 92-29; notice 11 published September 23, 1996 specifies the ABS warning light be mounted near the rear of the left side of the trailer **(See Figure 3-13)**.

- **Decal or lens marking with ABS to identify the lamp.**
- **The lamp must illuminate one time whenever power is supplied to the ABS. At any time the light remains on when power is supplied there is a malfunction to the system.**

The ABS used on the semitrailer is a Rockwell Wabco unit. Single axle trailers use a two sensor, one modulator system. Tandem and triple axle semitrailers use a four sensor, two modulator system. Sensors are located at each hub of the front and rear axles, and each modulator controls one side of the trailer.

The ABS is constant powered by the auxiliary (blue) circuit, center pin on the semitrailer seven way electrical connector. This circuit must be hot whenever the tractor keyswitch is on. This circuit must also not be used to power any additional electrical devices while the semitrailer is moving forward. However, additional devices such as remote controls may be powered from the auxiliary circuit while the semitrailer is stationary. Back up power to the ABS is supplied through the stop lamp (red) circuit, No. 4 pin on the seven way connector, and ground is supplied by the white wire, No. 1 pin.

https://truckmanualshub.com/

⚠ CAUTION

THE AUXILIARY (BLUE) CIRCUIT IS FOR POWERING THE SEMITRAILER ABS. THIS CIRCUIT MUST BE HOT WHEN THE TRACTOR KEY SWITCH IS ON. NO OTHER ELECTRICAL DEVICES MAY BE POWERED BY THIS CIRCUIT WHILE THE SEMITRAILER IS MOVING FORWARD.

Malfunction in the ABS is signaled by illumination of the ABS warning lamp located at the left rear side of the semitrailer. The warning lamp will come on and stay on while power is supplied to the ABS on a moving vehicle, if there is a fault. If a fault in the ABS exists, normal braking will still occur, but wheels may lock. The semitrailer is still operable, but the system should be serviced as soon as possible.

⚠ CAUTION

IF A FAULT EXISTS IN THE SEMI-TRAILER ABS, NORMAL BRAKING WILL OCCUR, BUT WHEELS MAY LOCK. SERVICE THE ABS AS SOON AS POSSIBLE.

The ABS is also equipped with a Blink Code Diagnostic Tool mounted at the right rear corner of the undercarriage or at the very rear of the trailer. This tool is used to identify faults that may occur in the ABS so that they may be repaired.

Refer to ABS maintenance manual supplied with the semitrailer to answer basic questions for the anti-lock brake system, obtain outline procedures on how to adjust, test, remove, and install ABS components, as well as how to test for faults in the system by using “Blink Code Diagnostics”; and illustrates ABS components, wiring, and plumbing installation diagrams.

3-21 COLD WEATHER OPERATION

3-21.1 Cold weather causes lubricants to congeal, insulation and rubber parts to become hard, which may lead to problems found in bearings, electrical systems, and air systems. Moisture attracted by warm parts can condense, collect and freeze to immobilize equipment. The truck/semitrailer operator must always be alert for indicators of cold weather malfunctions.

3-21.2 During any extended stop period, neither the service nor parking brake should be used as they can freeze up. Use wheel chocks to secure the vehicle from moving.

3-21.3 Check all structural fasteners, air system fittings, gaskets, seals and bearings for looseness that can develop due to contraction with cold. Do not over-tighten.

3-21.4 Check tire inflation. Tire inflation decreases when the temperature decreases.

3-21.5 Periodically check drain holes in the bottom of the relay valve (for trailers with air brakes) and storage compartments. They must be open at all times to avoid moisture entrapment.

3-22 HOT WEATHER OPERATION

3-22.1 Hot weather operation can create certain problems which must be checked. Expansion of parts result in tightening of bearings, fasteners, and moving parts. Failure of gaskets or seals can occur.

3-22.2 The semitrailer should be parked in the shade if possible. Long exposure to the sun will shorten service life of rubber components (i.e., tires, light and hose grommets, hoses, etc.) and paint life.

3-22.3 Check tire pressure early in the day before beginning operations while the tire is cool. Replace all valve stem caps after checking.

3-22.4 If the area is extremely humid, protect electrical terminals with ignition insulation spray. Coat paint and bare metal surfaces with an appropriate protective sealer.

3-22.5 The use of a filter-lubricator in the towing vehicle’s air delivery system is recommended.

https://truckmanualshub.com/

MAINTENANCE AND LUBRICATION 4

This section contains instructions necessary for proper maintenance of the semitrailer. The 317B semitrailer is designed for years of service with minimal maintenance. However, proper maintenance is important for durability and safe operation and is an owner/user responsibility.

4-1 MAINTENANCE SCHEDULE

Trailer maintenance includes periodic inspection and lubrication. **Table 4-2, Maintenance Schedule**, lists the recommended maintenance and lubrication tasks by time interval and by accumulated mileage (use whichever occurs first). **Table 4-3, Hydraulic Engine Maintenance Schedule**, lists the recommended maintenance tasks for the hydraulic engine package.

⚠ DANGER

OPERATING THE TRACTOR OR TRAILER WITH DEFECTIVE, BROKEN OR MISSING PARTS MAY RESULT IN SERIOUS INJURY OR DEATH, DAMAGE TO THE TRACTOR/TRAILER, ITS CARGO, OR PROPERTY IN ITS PATH.

4-1.1 Inspection

a. Inspect the tractor, the trailer, and trailer parts periodically for damage or signs of pending failure. Damaged or broken parts must be repaired or replaced at once. Determine the cause of any binding or hydraulic leakage at once. Correct the problem before using the tractor or trailer.

b. Use the troubleshooting section, **Chapter 5** to check for “SYMPTOMS” and “PROBLEMS” of any trailer system not functioning correctly, or where wear, distortion, or breakage are found. Administer “REMEDY” according to the right-hand column of the troubleshooting section.

4-1.2 Lubrication

Figure 4-1 and Table 4-1 detail lubrication points and intervals, method of application, and lubricant required, and illustrate the location of each part to be lubricated. During inspections of the trailer, if lubricants are found to be fouled with dirt or sand, those parts should be cleaned with paint thinner, dried, and relubricated immediately. Dirt in a lubricant forms an abrasive compound that will wear parts rapidly.

⚠ WARNING

PAINT THINNER AND OTHER SOLVENTS ARE FLAMMABLE AND TOXIC TO EYES, THE SKIN, AND RESPIRATORY TRACT. AVOID SKIN AND EYE CONTACT. GOOD GENERAL VENTILATION IS NORMALLY ADEQUATE. KEEP AWAY FROM OPEN FLAMES OR OTHER COMBUSTIBLE ITEMS.

https://truckmanualshub.com/

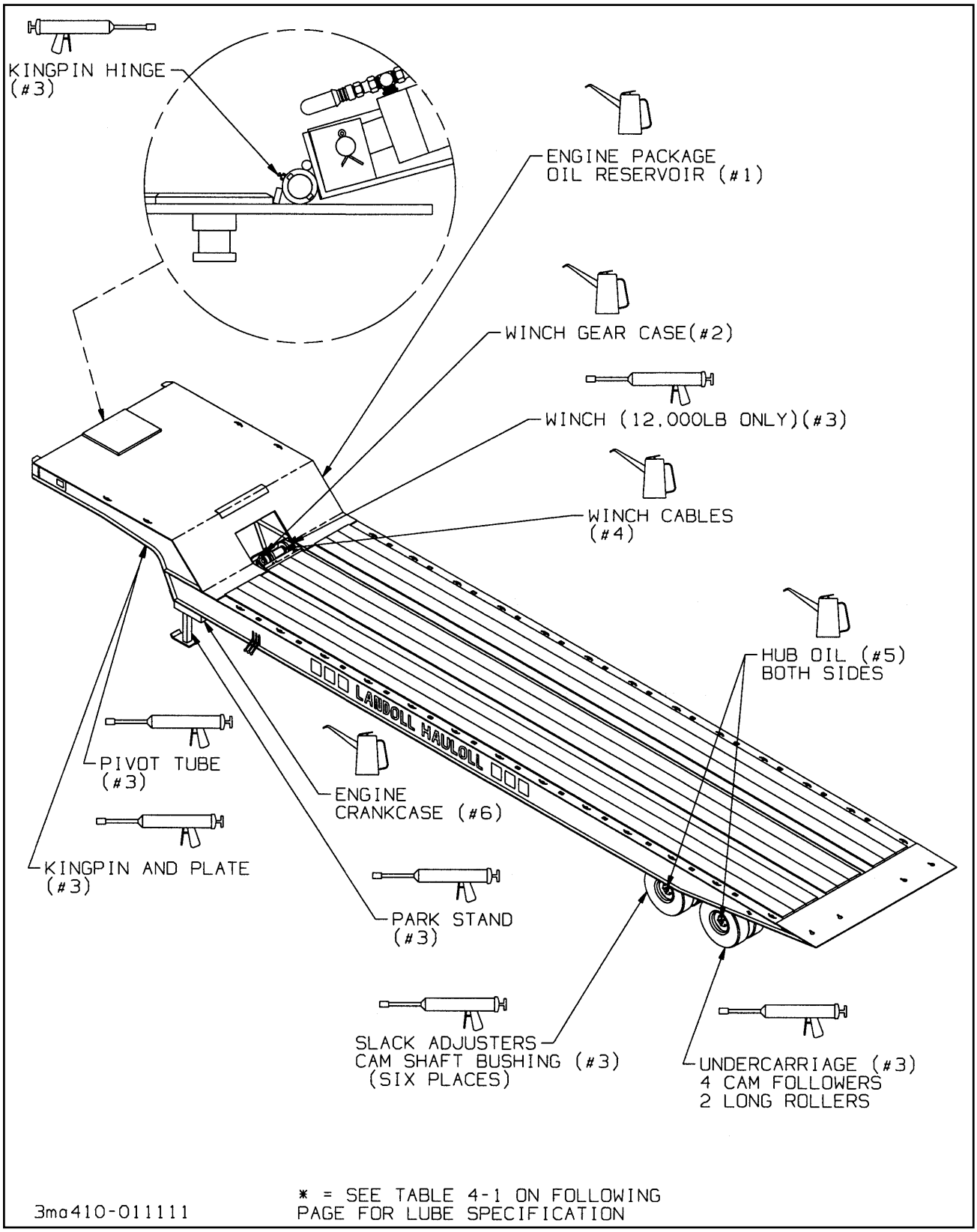

Figure 4-1 Lubrication Points

https://truckmanualshub.com/

LUBE	SEASON	BRAND AND PRODUCT (WEIGHT AND/OR TYPE)			
		AMOCO	EXXON	PHILLIPS	TEXACO
1	ALL YEAR	Rycon MV	HDX Plus 10W	Mangus Oil A KV 5W-20	Rando HD-AZ
2	SUMMER	Permagear EP 460 SAE 140	Spartan 460 SAE 140	Phil Gear Lube 460 SAE 140	Meropa 460 SAE 140
	WINTER	Permagear EP 220 SAE 90	Spartan 220 SAE 90	Phil Gear Lube 220 SAE 90	Meropa 220 SAE 90
3	ALL YEAR	Lit-Multi-purpose Grease	Ronex Multi-purpose Grease	Phil Lube M.W. Grease	MarFax All Purpose
4	ALL YEAR	Industrial Oil 32	Estic 32	Condor 32 or Magnus 32	Regal Oil R&O 32
5	ALL YEAR	Gear Lube SAE 80W-90	Gear Oil GX SAE 80W-90	Superior MP Gear Oil SAE 80W-90	Multi-gear EP SAE 80W-90
6	ABOVE 0° F	Ultimate Gold 10W-30, 10W-40	SuperFlow 10W-30, 10W-40	Tropartic 10W-30, 10W-40	Havoline 10W-30, 10W-40
	BELOW 32° F	Ultimate Gold 5W-20, 5W-30	SuperFlow 5W-20, 5W-30	Tropartic 5W-20, 5W-30	Havoline 5W-20, 5W-30

Table 4-1 Lubrication Specifications

4-2 MAINTENANCE PROCEDURES

4-2.1 Repair Parts

Repair parts are illustrated and listed in a separate parts manual. Replacement of parts due to wear is determined by examination and measurement in the Maintenance Procedures of this section.

4-2.2 Tools and Equipment

Tools, equipment, and personnel normally found in a facility capable of making truck repairs will be adequate for maintenance of the semitrailer. No other special tools or equipment should be necessary.

4-2.3 Torque Values

Tables 2-1 and 2-2 list torque values for standard hardware and hydraulic fittings. They are intended as a guide for average applications involving typical stresses and mechanical surfaces. Values are based on the physical limitations of clean, plated, and lubricated hardware. In all cases, when an individual torque value is specified, it takes priority over values given in this table. Replace original fasteners with hardware of equal grade.

4-2.4 Cleaning

a. Wash semitrailer to remove all accumulated dirt and grime.

b. Use any mineral spirits paint thinner (or its equivalent) to remove grease and oil from all parts of the trailer. Rinse degreasing solution off with cold water.

c. Inspect semitrailer for cause of any reported troubles.

⚠ WARNING

PAINT THINNER AND OTHER SOLVENTS ARE FLAMMABLE AND TOXIC TO EYES, SKIN, AND RESPIRATORY TRACT. AVOID SKIN AND EYE CONTACT. GOOD GENERAL VENTILATION IS NORMALLY ADEQUATE. KEEP AWAY FROM OPEN FLAMES OR OTHER COMBUSTIBLE ITEMS.

https://truckmanualshub.com/

NORMAL OPERATING SERVICE INTERVALS [a]								
SERVICE INTERVAL : ITEM	TIMES	1st 5 Hrs	Weekly	Monthly	6 Months	Yearly	LUBE #	NOTES
	MILES	50	500	2,000	12,000	25,000		
LIGHTS		I	I					
WIRING & CONNECTIONS		I		I				
FASTENERS		I, T		I				b
KING PIN AND PLATE		I		C,I,L			3	c
BRAKE AIR SYSTEM		I	I	I				
RELAY VALVES						I, C		
BRAKE ADJ & WEAR		I		I, T				d
SLACK ADJUSTERS		I	I		L		3	c
CAMSHAFT ASSYS		I	I			L	3	c
HUB OIL		I	I, L			R	6	c
WHEEL BEARINGS		I			I, T		6	c,e
TIRE INFLATION & WEAR		I	I					f
WHEEL LUG NUTS		I, T	I	I, T				b
SUSPENSION ALIGNMENT		I		I				
UNDERCARRIAGE ROLLERS				L			3	c
HYDRAULIC OIL		I	I			R	1	c
HYDRAULIC FILTER		R			R			
HOSES (Inspect & Replace as needed)		I		I		I,R		
WINCH GEAR CASE		I		I			2	c

I – Inspect, R – Replace, T– Tighten/ Adjust Torque, L – Lubricate, C – Clean

NOTES:

a. Perform at the time shown. Shorten service intervals when operating in severe or dirty conditions.
b. See **Tables 2-1 and 2-2 (General and Hydraulic Fitting Torque Charts)** for correct torque.
c. See **Table 4-1 (Lube Specification Chart)** for recommended lubricant.
d. See **Section 4-8** for procedures.
e. See **Section 4-10** for procedures.
f. See Serial Number Plate on the front of the semitrailer for proper inflation requirements.

Table 4-2 317B Maintenance Schedule

https://truckmanualshub.com/

PERIODIC HYDRAULIC ENGINE MAINTENANCE SCHEDULE							
SERVICE ITEMS	**AFTER EACH CYCLE OF INDICATED HOURS**						
	8	**25**	**50**	**100**	**200**	**500**	**1000**
INSPECT ENGINE GENERALLY	X[1]						
CHECK OIL LEVEL	X						
SERVICE AIR CLEANER ELEMENT AND ELEMENT WRAPPER		X[2]					
SERVICE CRANKCASE OIL (all engines without filter)		X[2]					
CHANGE CRANKCASE OIL (standard base with filter)		X[3]	X[2]				
CHANGE CRANKCASE OIL (high capacity base with filter)		X[3]		X[2]			
REPLACE OIL FILTER		X[3]		X[2]			
CHECK BATTERY ELECTROLYTE LEVEL			X				
CLEAN COOLING FINS			X[2]				
REPLACE AIR CLEANER ELEMENT					X[2]		
REPLACE FUEL FILTER					X		
CHECK OR REPLACE SPARK PLUGS						X	
CHECK VALVE CLEARANCE (standard engines)					X[4]		
CHECK VALVE CLEARANCE (LP and natural gas conversion engines)						X[4]	
CHECK VALVE CLEARANCE (P224 only)						X[4]	
CHECK VALVE CLEARANCE (extended service life engines)							X[4]
CLEAN CARBON AND LEAD DEPOSITS (cylinder head)							X[5]

NOTES:

1. Check for fuel leaks. With engine running, visually and audibly check exhaust system for leaks.
2. Perform more often when running under severe operating conditions.
3. Required for initial break-in only.
4. For detailed maintenance, contact an Onan Service Center or refer to the SERVICE MANUAL.
5. Clean carbon more frequently when running under continuous light load and/or on leaded fuel. Use of Onan 4C carburetor and combustion cleaner is recommended every 200 hours to help reduce carbon buildup.

⚠ WARNING

BREATHING EXHAUST GASES CAN RESULT IN SEVERE PERSONAL INJURY OR DEATH. DO NOT USE AIR CLEANER, EXHAUST ELBOW, OR CONNECTING PARTS AS A SUPPORTING STEP. DAMAGE TO THESE AND CONNECTING PARTS CAN CAUSE AN EXHAUST LEAK.

Table 4-3 Hydraulic Engine Maintenance Schedule

https://truckmanualshub.com/

d. Scrape, sand, prime, and repaint areas where finish is missing or where there is evidence of corrosion.

e. Replace any missing or illegible decals. Replace any missing or damaged reflective tape.

f. After disassembling any components, thoroughly clean dirt and old lubricant from all parts. Do not use a wire brush on any bearing parts or surfaces — use a stiff bristle brush. Do not use compressed air, or spin bearing parts when cleaning. These practices can throw solvents, dirt, or metal particles into your eyes. Dry clean parts with lint free, clean, soft, absorbent, cloth or paper. Wash and dry hands.

g. Inspect seals, seal wiping surfaces, bearing caps, and bearing cones for wear, pitting, chipping, or other damage.

4-3 GOOSENECK, FRAME, AND DECK

4-3.1 Repairing Structural Defects

If any structural defect is found, the fault must be corrected before further use of the vehicle. To continue usage could endanger the trailer, its load, personnel, traffic, and properties. If any cracks or breaks are found, contact the Landoll factory for repairs. Inspect the deck daily for broken or missing planks or missing attachments. Replace any defective parts promptly.

4-4 HYDRAULIC SYSTEM

4-4.1 General

a. Check the oil level of the tractor wet kit or hydraulic engine power hydraulic tank weekly, or after any leakage. See **Table 4-1** for proper hydraulic oil. Check the hydraulic oil level with hydraulic cylinders in the retracted position and the hydraulic pump disengaged.

b. Overfilling can cause hydraulic fluid overflow during operation.

c. Dock leveler flow bypass regulator must provide 2.2 to 2.8 gallon per minute to dock leveler valve.

d. Hydraulic system pressure relief valves should be set at 2500 psi.

⚠ WARNING

IF MORE OIL THAN SPECIFIED IS SENT TO DOCK LEVELER VALVE, DAMAGE TO DOCK LEVELERS AND PERSONAL INJURY CAN OCCUR. IT LESS OIL THAN SPECIFIED IS SENT TO DOCK LEVELER, THEY WILL NOT OPERATE OR OPERATION WILL BE ERRATIC.

https://truckmanualshub.com/

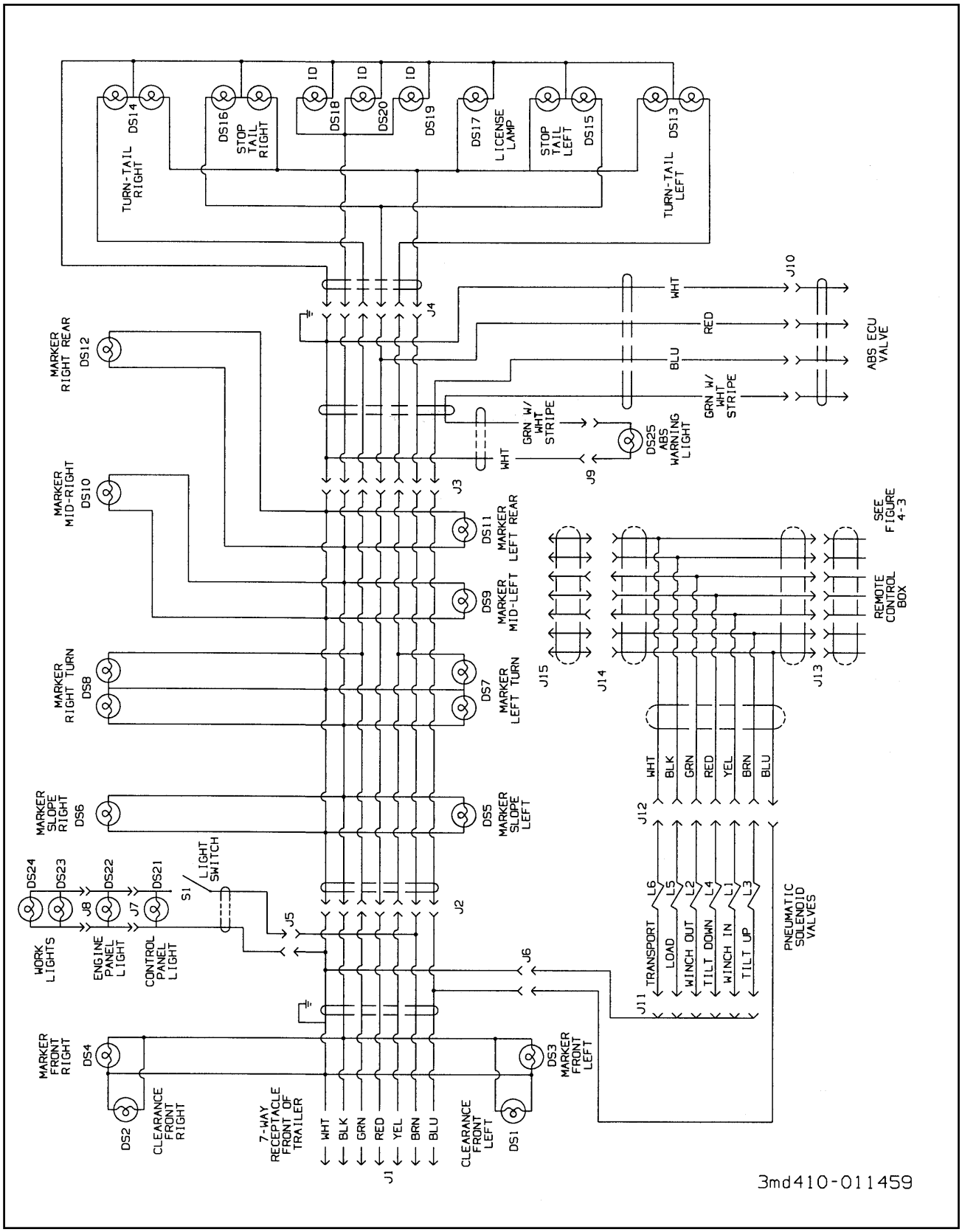

Figure 4-2 317B/318/319 Wiring Diagram

https://truckmanualshub.com/

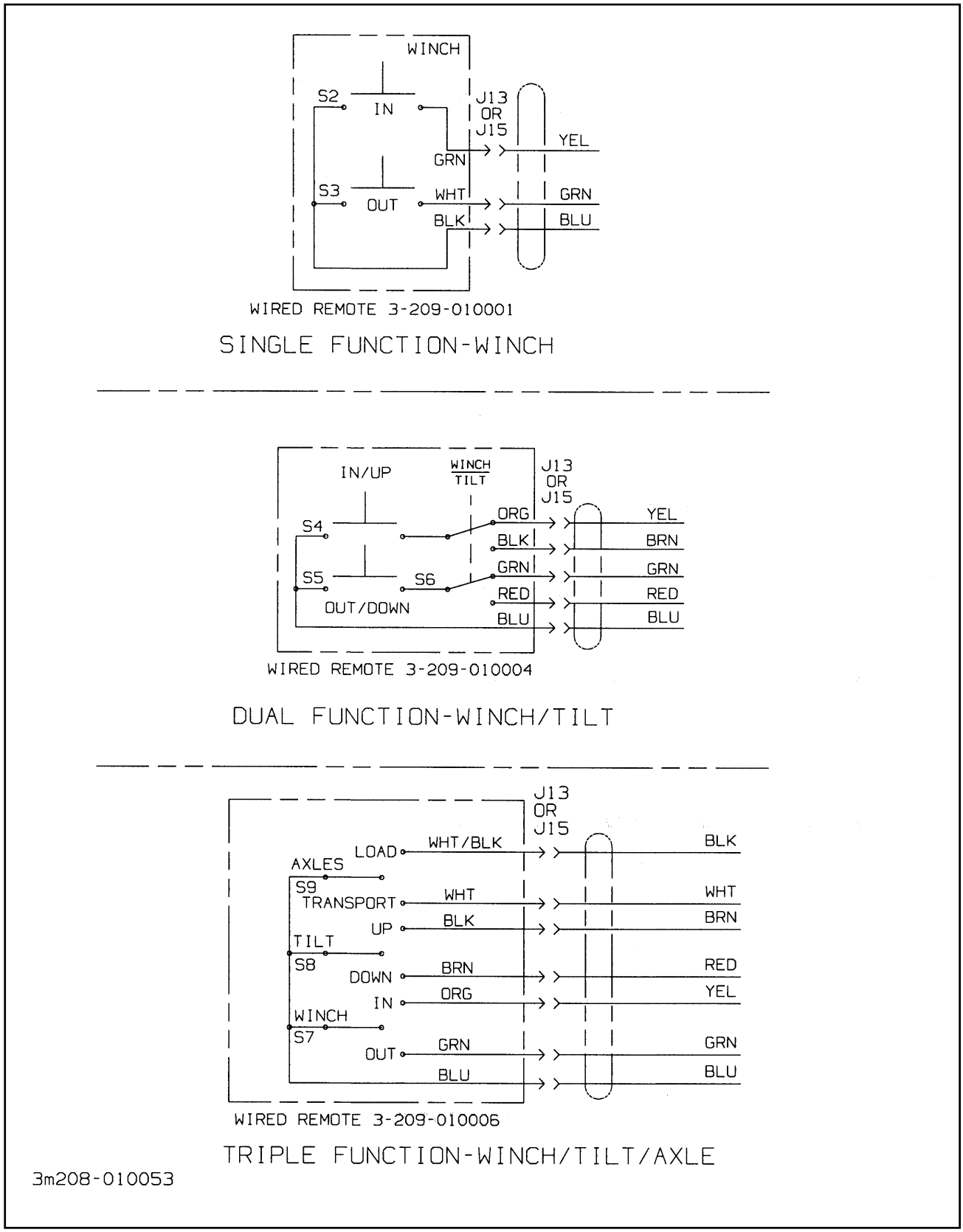

Figure 4-3 Remote Wiring Diagram

https://truckmanualshub.com/

317B WIRING PARTS LIST		317B WIRING PARTS LIST	
REF. DES.	FUNCTION	REF. DES.	FUNCTION
DS1	FRONT LEFT CLEARANCE, YELLOW	J4	BUMPER CONNECTOR
DS2	FRONT RIGHT CLEARANCE, YELLOW	J5	AUX. LIGHTS PWR/GRND CONN
DS3	FRONT LEFT MARKER, YELLOW	J6	REMOTE CONTR.PWR/GRND CONN
DS4	FRONT RIGHT MARKER, YELLOW	J7	ENGINE PANEL LIGHT
DS5	LEFT SLOPE MARKER, YELLOW	J8	WORK LIGHTS
DS6	RIGHT SLOPE MARKER, YELLOW	J9	ABS LAMP CONNECTOR
DS7	LEFT SIDE MARKER/TURN, YELLOW	J10	ABS ECU VALVE CONNECTOR
DS8	RIGHT SIDE MARKER/TURN, YELLOW	J11	GRND CONN TO SOLENOID VLVS.
DS9	MID-LEFT SIDE MARKER, YELLOW	J12	PWR & FUNCTION CONNECTION TO SOLENOID VALVES
DS10	MID-RIGHT SIDE MARKER, YELLOW		
DS11	LEFT REAR SIDE MARKER, RED	J13	REMOTE, STREET REAR
DS12	RIGHT REAR SIDE MARKER, RED	J14	CURBSIDE REMOTE CONN
DS13	LEFT TURN/TAIL, RED	J15	REMOTE, CURB REAR
DS14	RIGHT TURN/TAIL, RED	L1	WINCH IN
DS15	LEFT STOP/TAIL, RED	L2	WINCH OUT
DS16	RIGHT STOP/TAIL, RED	L3	TILT UP
DS17	LICENSE PLATE LIGHT	L4	TILT DOWN
DS18	IDENTIFICATION RIGHT, RED	L5	AXLE LOAD
DS19	IDENTIFICATION LEFT, RED	L6	AXLE TRANSPORT
DS20	IDENTIFICATION CENTER, RED	S1	WORK LIGHT
DS21	CONTROL PANEL, LH	S2	WINCH IN
DS22	CONTROL PANEL, RH	S3	WINCH OUT
DS23	FIRST WINCH LIGHT	S4	WINCH IN/ TILT UP
DS24	FIRST WINCH LIGHT	S5	WINCH OUT/ TILT DOWN
DS25	ABS MALFUNCTION INDICATOR, YEL-LOW	S6	SELECTOR SWITCH
		S7	WINCH IN/OUT
J1	FRONT MAIN CONNECTOR	S8	TILT UP/DOWN
J2	LOWER DECK CONNECTOR	S9	AXLES LOAD/TRANSPORT
J3	U/C CONNECTOR		

Table 4-4 317B Wiring Parts List

https://truckmanualshub.com/

4-5 ELECTRICAL SYSTEM

4-5.1 Maintenance of the electrical system consists of inspection and minor servicing. Any wire, connection or electrical component showing signs of corrosion, wear, breakage or unraveling must be repaired or replaced. **(See Figure 4-2 for electrical wiring diagram)**

4-5.2 Frayed or unraveling wire must have the defective section removed and replaced with wire of the same color and gauge. Seal all connections and insulate.

4-5.3 Corroded terminals must have the corrosion removed, source of corrosion neutralized and the terminals resealed, protected, and insulated.

4-5.4 Fuse or circuit breaker burn-out or blow-out usually indicates an electrical short-circuit, although a fuse can occasionally fail from vibration. Insert a second fuse or reset the breaker. If this fuse immediately burns out or the breaker trips, locate the cause of the electrical short and repair.

4-5.5 A light that repeatedly burns-out usually indicates a loose connection, poor system ground, or a malfunctioning voltage regulator. Locate the source of the problem and repair. System grounds must be grounded to bare metal surfaces. Paint, grease, wax, and other coatings act as insulators. Replacement lamps must be equivalent to the factory installed lamp.

4-6 SUSPENSION MAINTENANCE

4-6.1 Spring Suspension

a. Make certain that all springs are properly located on the wear pads. Twisted springs or cocked hangers will cause uneven spring contact with wear pad and will result in excessive wear on the spring suspension. Check the shocks for excessive wear.

b. Replacing the equalizer bushings and the torque arm bushings on the spring suspension is a complex operation and should be left to trained service personnel. If the bushings need to be replaced contact a Landoll authorized service center or the Landoll factory for servicing.

4-6.2 Air Ride Suspension

a. Physically check all nuts, bolts, and air line fittings for proper torque (see torque chart below).

AIR SUSPENSION TORQUE CHART				
Size	1-1/8”-7	1/2”-13	*3/4-16	3/4”-10
Torque in Ft. Lbs.	800	35	35	150
* Air Spring Connections Only.				

b. Check all other suspension components for any sign of damage, looseness, wear or cracks.

c. With trailer on level surface and air pressure in excess of 65 psi, all air springs should be of equal firmness. The height control valve on right side of front axle controls all air springs on tandem axle suspensions.

d. The height control valve on right side of center axle controls ride height for all air springs on triple axle suspension.

4-6.3 Air Ride Height Adjustment. **(See Figure 4-4** for parts identification)**.**

a. Before adjusting, the vehicle must be empty with the kingpin at operating height and have air supplied to the trailer.

b. Disconnect linkage at the control arm and raise control arm to the “up” position, raising the trailer until a block can be placed between axle tube and undercarriage frame **(See Figure 4-4).**

c. Position the wood block between the axle tube and frame according to table below. Block height is dependent upon suspension ride height and/or axle brake size.

https://truckmanualshub.com/

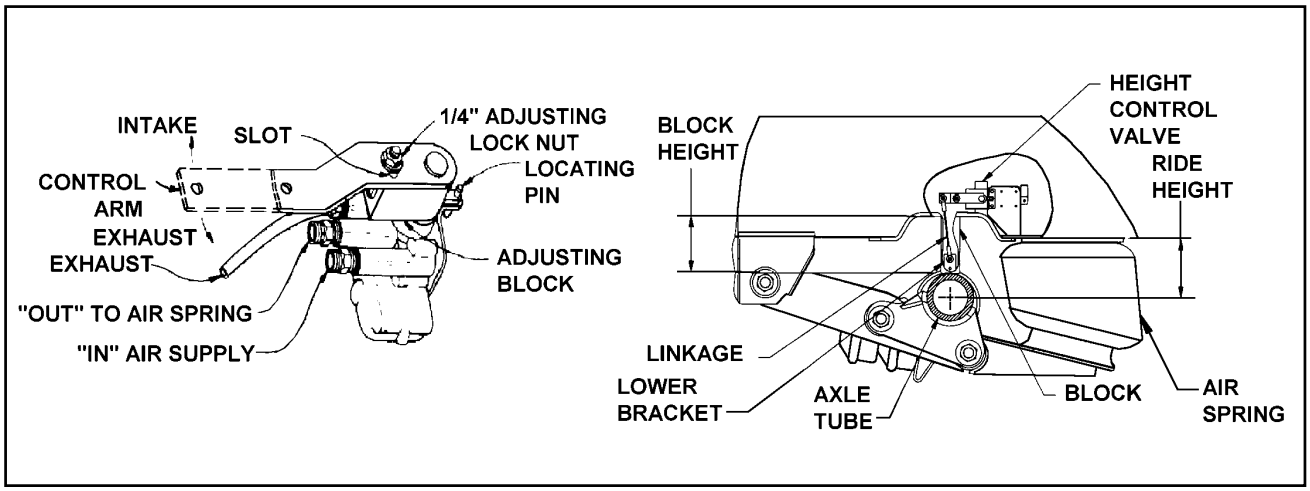

Figure 4-4 Air Ride Height Adjustment

AIR SUSPENSION RIDE HEIGHT AND BLOCK		
Brake Size	Ride Height	Block Height
12-1/4" Dia.	3.5"	3"
16-1/2" Dia.	5.5"	5"

d. Lower the trailer by exhausting air from the air springs by moving the control arm to the “down” position (about 45°) until the axle tube is resting on the block.

e. Check the ride height to make sure it is correct. Consult Landoll Service Center if correct height cannot be obtained.

f. Loosen the 1/4" adjusting lock nut located on the adjusting block, allowing the control arm to move approximately 1 inch. Move the adjusting block until holes align, then insert locating pin. **(See Figure 4-4)**.

g. Align the control arm linkage to the control arm lower bracket and re-tighten the 1/4" adjusting lock nut to 2-4 ft.lbs. The ride height valve should now be correctly adjusted.

h. Remove the locating pin.

i. The block can now be removed by using the height control valve as an improvised jack by disconnecting the control arm at the lower bracket and pushing the control arm to an “up” position.

j. Remove the block and reconnect the linkage. This allows the Automatic Height Control Valve to resume normal operation.

k. Check the air ride height. If necessary, go through the adjustment procedure again until the proper air ride height is achieved.

l. Check the air ride height periodically and adjust as needed.

⚠ CAUTION

INSURE SUSPENSION AIR CYLINDERS ARE INFLATED ON ALL AXLES. FAILURE TO DO SO CAN CAUSE EXCESSIVE TIRE WEAR.

m. Should the front and rear axle suspension air spring (E) not be inflated or feel soft by the time the undercarriage has reached transport position, adjust front and rear axle height control valves as follows:

1. Adjust front axle control valve linkage to position (pin) control valve arm at center position of valve when front axle is approximately 1/2 inch from full down travel.
2. Adjust rear axle control valve linkage to position (pin) control valve arm at center position of valve when rear axle is approximately 1/2 inch from full up travel.

n. These adjustments may vary with different tractor fifth wheel heights.

https://truckmanualshub.com/

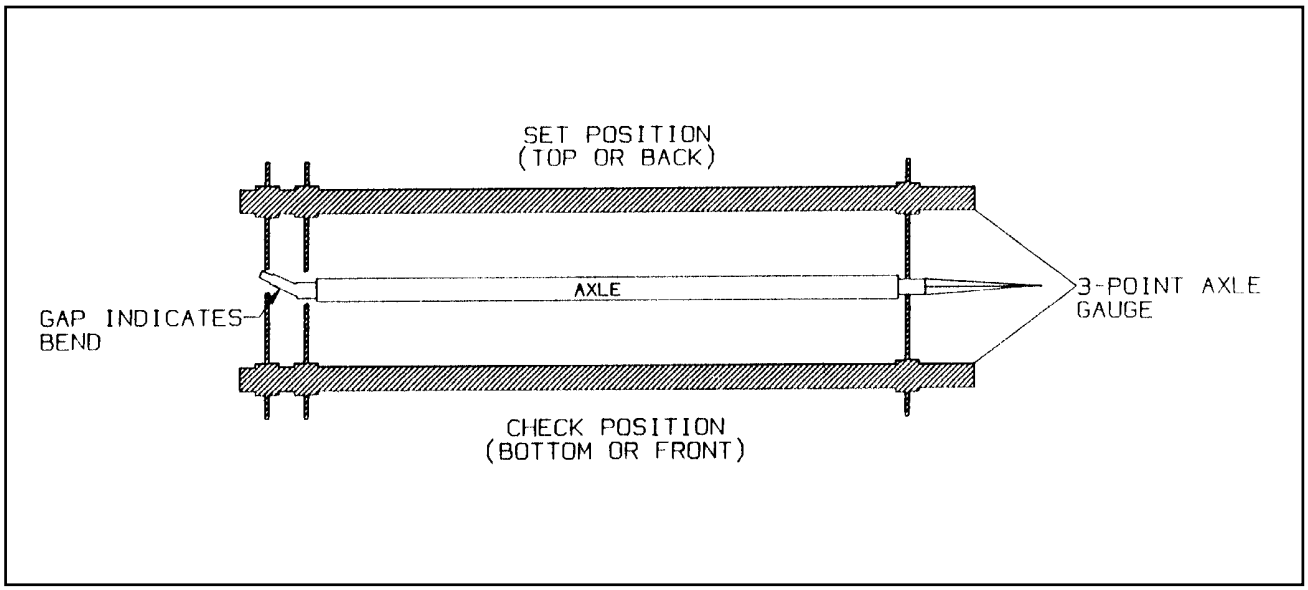

Figure 4-5 Checking Axle for Bend

4-7 ALIGNMENT

4-7.1 Wheel Alignment

⚠ DANGER

TO PREVENT A LIFE THREATENING ACCIDENT:

1. SUPPORT TRAILER AND UNDERCARRIAGE SO TIRES ARE OFF THE GROUND.

2. SUPPORT THE TRAILER AND UNDERCARRIAGE ON JACK STANDS WITH SUFFICIENT CAPACITY TO SUPPORT THE TOTAL WEIGHT OF THE TRAILER AND ANY LOAD WHICH IT MAY BE CARRYING.

When trailer tires show signs of scuffing, feather-edging or uneven wear, examine the trailer for damaged suspension (frame, shocks, linkage, etc.), axle, wheel bearings and wheels. Proper wheel alignment and wheel bearing adjustment is essential for proper tire wear. The simplest form of checking wheel alignment “toe” is by running the trailer over a “SCUFF GAUGE”. A scuff gauge reading of 16 feet or less per mile is considered satisfactory. If a scuff gauge is not readily available, or edge wear on one side of a tire is occurring signifying positive or negative camber, alignment can be checked as follows:

a. Remove wheel, hub and bearing assemblies.

b. Place a 3-point axle gauge against the front side of the axle, and adjust each axle gauge point to the axle. (Double point end against the inner and outer wheel bearing surfaces of the spindle being checked and the other point on the inner bearing surface on the other spindle.)**(See Figure 4-5).**

c. Move the axle gauge and place against the back side of the axle. If either of the points of double point end fails to touch the axle surface, a bent spindle is evident. A point gap of .015" or more is considered excessive tire “toe” and the axle must be replaced **(See Figure 4-5)**.

https://truckmanualshub.com/

d. Follow the same procedures as in **Section 4-7.1 b. and c.,** except place the axle gauge above and below the axle. If gauge point gap is found, the axle has positive or negative camber. The trailer axle has no camber from the factory. If it is found to have positive or negative camber, axle replacement is necessary **(See Figure 4-7** for examples of camber).

4-7.2 Axle Alignment

Proper axle to king pin alignment is necessary to obtain straight tracking. If axle alignment is off, “dog-tracking” occurs. Check alignment manually or by using a semitrailer alignment machine. In either case, a thorough inspection of the complete suspension must be performed and all defects corrected before aligning.

a. Manual Alignment Procedure

1. Position semitrailer on a firm and level surface. Insure that the undercarriage is in the rear most position. Eliminate any suspension binding due to sharp turns or unusual maneuvers.
2. Detach tractor from the semitrailer and jack the trailer up sufficiently to permit measuring from the underside of the trailer.
3. Suspend a plumb bob at axle height from the center of the king pin.
4. Measure (D) from the plumb bob to the center point on one end of the axle. Record this measurement **(See Figure 4-6**).
5. Measure (D1) to the other end of the axle in the same manner as in **Step 4.**. Record this measurement **(See Figure 4-6).**
6. Set D about 1/8" shorter than D1 to insure proper trailer tracking on slope of road.
7. The suspensions must be in good repair with no binding or other restrictions before aligning. All defective parts of the suspension or axles must be replaced immediately.

b. Air Ride Suspension Axles

The air ride suspension is aligned and adjusted at the factory and it should not be necessary to align the axles. If, however it does become necessary to align the axles, the procedure is as follows:

1. To align air ride suspension axles, locate the front axle equalizer beam pivot bolt in front hanger at front end of lock nut. Rotate the head of the pivot bolt. For axle alignment forward, rotate bolt head clockwise. For axle alignment rearward, rotate the bolt head counter-clockwise. Loosen the suspension pivot bolt lock nut.
2. Align the front axle using the method outlined in **Section 4-7.2 a.c.**
3. After proper alignment has been obtained, tighten the suspension pivot bolt nut to the torque listed in the table in **Section 4-6.2 a.**
4. Align the rear axle to the front axle. Locate the rear axle equalizer beam pivot bolt in hanger at front end of driver’s side rear axle equalizer beam. Loosen the suspension pivot bolt lock nut. Rotate the head of the pivot bolt. For axle alignment forward, rotate bolt head clockwise. For axle alignment rearward, rotate the bolt head counter-clockwise. The rear axle should be parallel with the front axle, with the dimensions Y and Y1 being the same.
5. Tighten the suspension pivot bolt nut to the torque listed in the table in **Section 4-6.2 a.**

https://truckmanualshub.com/

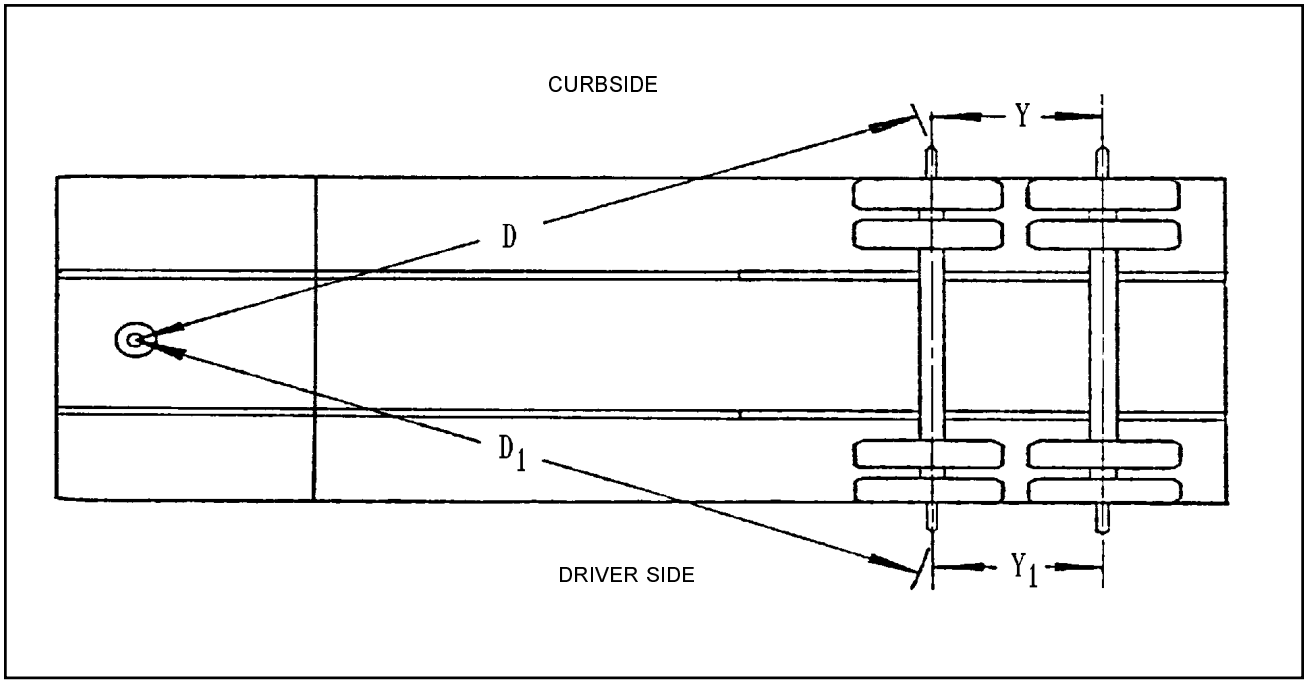

Figure 4-6 Checking Axle Alignment

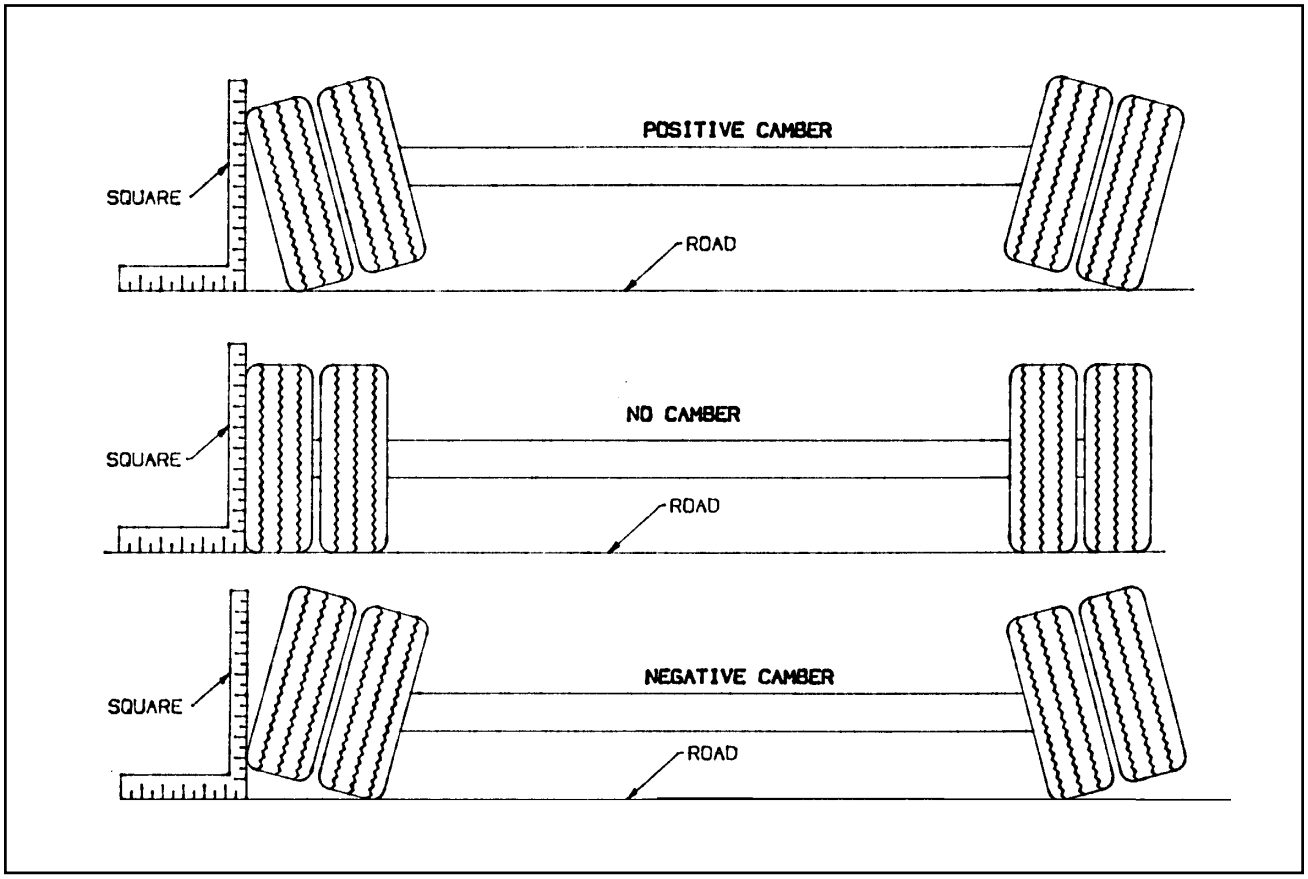

Figure 4-7 Examples of Camber

https://truckmanualshub.com/

c. Spring Suspension Axles

SPRING SUSPENSION TORQUE CHART				
Size	1"	7/8"	7/8" U-bolt	1/2"
Torque in Ft.Lbs.	480-500	250	300	55-60

1. Loosen the torque arm clamp bolts on the adjustable torque arms and loosen the axle U-bolts.
2. Turn the adjustable torque arm on the front axle until the proper alignment has been achieved using the procedure outlined in **Section 4-7.2 a.c.**
3. Tighten the axle U-bolts to the torques listed in the above table.
4. Tighten the front axle torque arm clamp bolts to the torque listed in the above table.
5. Align the rear axle to the front axle in the same manner using the torque arm for adjusting. The rear axle should be parallel with the front axle, with the dimensions Y and Y1 being the same.
6. Tighten the rear axle U-bolts to the torque values listed in the above table.
7. Tighten the rear axle torque arm clamp bolts to the torque listed in the above table.

4-8 BRAKE SYSTEM MAINTENANCE

⚠ WARNING

1. WHEN CRAWLING UNDER THE SEMITRAILER IS NECESSARY, CHOCK ALL WHEELS OF THE TRAILER AND TRACTOR. WHEN JACKING IS NECESSARY, CHOCK ALL WHEELS AND SUPPORT THE SEMI-TRAILER UNDERCARRIAGE WITH JACK STANDS SUFFICIENT TO WITHSTAND THE WEIGHT OF THE SEMI-TRAILER AND LOAD. FAILURE TO TAKE ADEQUATE SAFETY MEASURES MAY RESULT IN SERIOUS PERSONAL INJURY OR DEATH.
2. USE GREAT CARE IF WHEELS OR BRAKE DRUMS MUST BE HANDLED. THEY MAY BE VERY HOT AND CAN CAUSE SERIOUS BURNS.

4-8.1 General.

A daily general inspection will reveal the most common problems found in the spring brake system. This inspection should include the following:

a. Check air hoses for chafing, bends, kinks, or damaged fittings. Replace defective hoses.
b. Check the brake system for loose, missing, deformed, or corroded fasteners. Replace and tighten defective hardware.
c. Check brake linings for excessive wear or distortion.
d. Drain air reservoir daily. A drain cock on the bottom of each air reservoir vents the tank to drain collected water and oil. If held open, air pressure in the tanks is relieved, causing the emergency or parking brakes to be applied **(See Figure 4-8).**

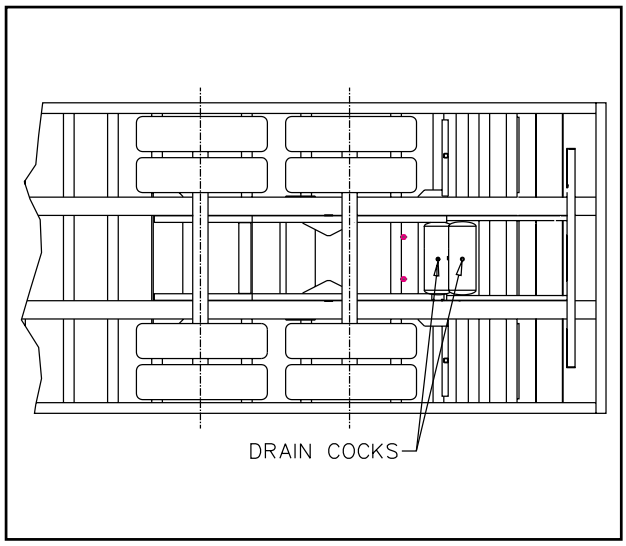

Figure 4-8 Drain Cock Locations

https://truckmanualshub.com/

4-8.2 Spring Air Brake Chambers (30/30)

Check for faulty units. Check the condensation holes on the underside of the brake chambers to make sure they are open. The spring brake has two brake chambers, a service chamber and an emergency chamber or spring chamber. Service brake chambers should be disassembled and cleaned at 50,000 miles or yearly. The diaphragm and any marginal parts should be replaced. When replacing the service diaphragm, replace the corresponding parts for the other chamber on the same axle (to aid in even brake application and release). Examine yoke pin for wear and replace as necessary. The spring chamber should not be serviced. Replace entire unit (both service and spring chamber) if spring chamber becomes faulty.

⚠ WARNING

THE SPRING BRAKE CHAMBER EMPLOYS A SPRING WITH HIGH FORCES. SERVICE SHOULD NOT BE ATTEMPTED. SERIOUS INJURY OR DEATH MAY RESULT.

a. Caging the Power Spring

1. Chock the trailer wheels.
2. Remove dust cap from spring brake chamber.
3. Remove the release bolt from it's holding brackets and insert it into the spring brake chamber. DO NOT USE AN IMPACT WRENCH TO CAGE THE SPRING BRAKE.
4. Turn the bolt until the spring brake is caged. This should be 2-1/4 to 2-1/2 inches of release bolt extension.
5. The brakes should now be totally released. Do not operate loaded trailer with brake manually released.
6. To reset the spring brake, turn the release bolt until the spring is released. Remove the release bolt and store it in its brackets.
7. Snap the dust cap back in place on the chamber.

b. Removal

1. Chock all tractor and trailer wheels and drain the air system.
2. Mark the brake chamber for proper air line port alignment for reassembly.
3. CAGE THE POWER SPRING following the steps outlined in **Section 4-8.2a.**
4. Disconnect the slack adjuster from the connecting rod by removing the clevis pin **(See Figure 4-10)**.
5. Mark all air service lines for proper reinstallation and disconnect from the brake chamber.
6. Remove the brake chamber from the axle brackets.

c. Installation

1. CAGE THE POWER SPRING following the steps outlined in **Section 4-8.2a.**
2. Position the inlet ports by loosening the service chamber clamp bands and rotating center housing such that ports are located according to alignment marks made during disassembly, then retighten the clamp bands.
3. Position the breather hole in the downward facing position by loosening the clamp bands on the spring brake chamber and rotating the chamber housing until the breather hold faces downward. Retighten the clamp bands.
4. Remount the brake chamber on the axle brackets and reconnect the air service hoses and the slack adjuster connecting rod **(See Figure 4-10).**

IMPORTANT

BE SURE THE SERVICE LINE IS ON THE SERVICE CHAMBER PORT AND THE EMERGENCY LINE IS ON THE SPRING BRAKE PORT.

5. Check for leakage by charging the air system to a minimum of 90 psi and applying soap suds to the brake chamber and connections. If a growing bubble is detected or bubbles are blown away, locate the source of the leak and repair.
6. Insure that the clamp band is properly seated and tight **before** uncaging the power spring.

https://truckmanualshub.com/

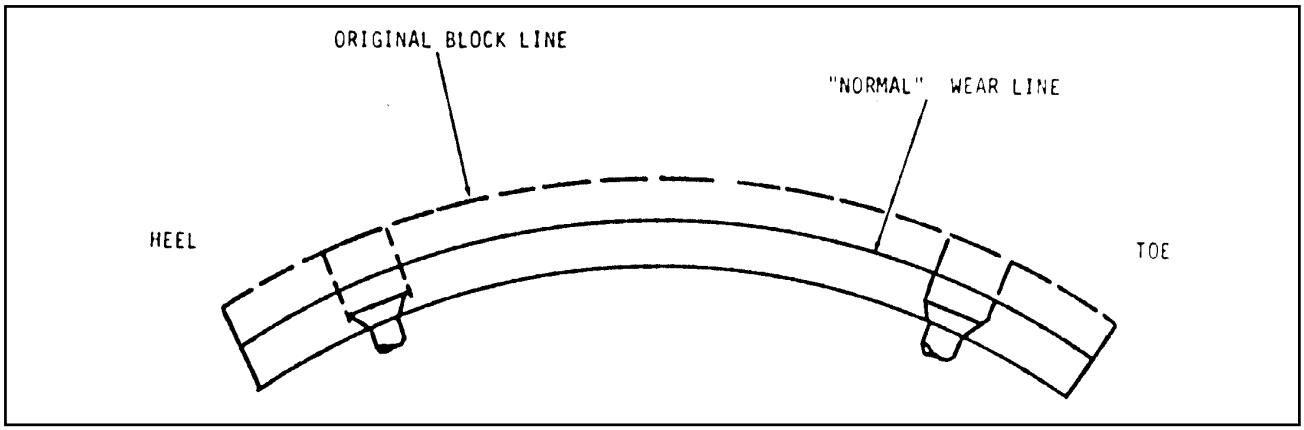

Figure 4-9 Brake Lining Wear

4-8.3 Air Brake Chambers (Type 30)

⚠ DANGER

DO NOT USE THIS PROCEDURE FOR TRAILERS WITH SPRING BRAKES. THE FORCE RELEASED BY DISMANTLING SPRING BRAKE CHAMBERS CAN CAUSE A REACTION THAT CAN RESULT IN SERIOUS INJURY OR DEATH.

⚠ DANGER

COMPLETELY DRAINING THE AIR RESERVOIR WILL RELEASE THE TRAILER BRAKES. ALWAYS CHOCK WHEELS BEFORE RELEASING BRAKES. FAILURE TO CHOCK WHEELS PRIOR TO RELEASING TRAILER BRAKES CAN RESULT IN SERIOUS PERSONAL INJURY OR DEATH.

The air brake chamber may be serviced while still on the semitrailer. The following steps describe the procedure for servicing the air brake chamber.

a. Chock semitrailer wheels.

b. Drain the semitrailer air system of all air and moisture. **(See Figure 4-8).**

IMPORTANT

DRAINING THE AIR SYSTEM WILL ALLOW THE TRAILER TO ROLL IF THE WHEELS ARE NOT PROPERLY CHOCKED.

c. Mark the chamber for proper reassembly alignment, loosen the clamp bands around chamber, and remove the chamber head.

d. Remove and replace diaphragm. Check all fasteners for defects. If defects are found, the defective part must be replaced.

e. Replace the chamber head and tighten the clamp band.

⚠ WARNING

REPAIR OR REPLACEMENT OF THE RELAY/EMERGENCY VALVE IS A COMPLEX OPERATION AND SHOULD BE PERFORMED BY TRAINED SERVICE PERSONNEL. IF THE RELAY OR EMERGENCY VALVE NEEDS REPAIR, CONTACT A LANDOLL AUTHORIZED SERVICE CENTER FOR SERVICING.

f. Recharge the semitrailer air system and check the air chamber for leaks by applying soap suds to the chamber. A growing bubble or suds being blown away indicates a leak. Locate the source of the leak and repair before using the semitrailer.

https://truckmanualshub.com/

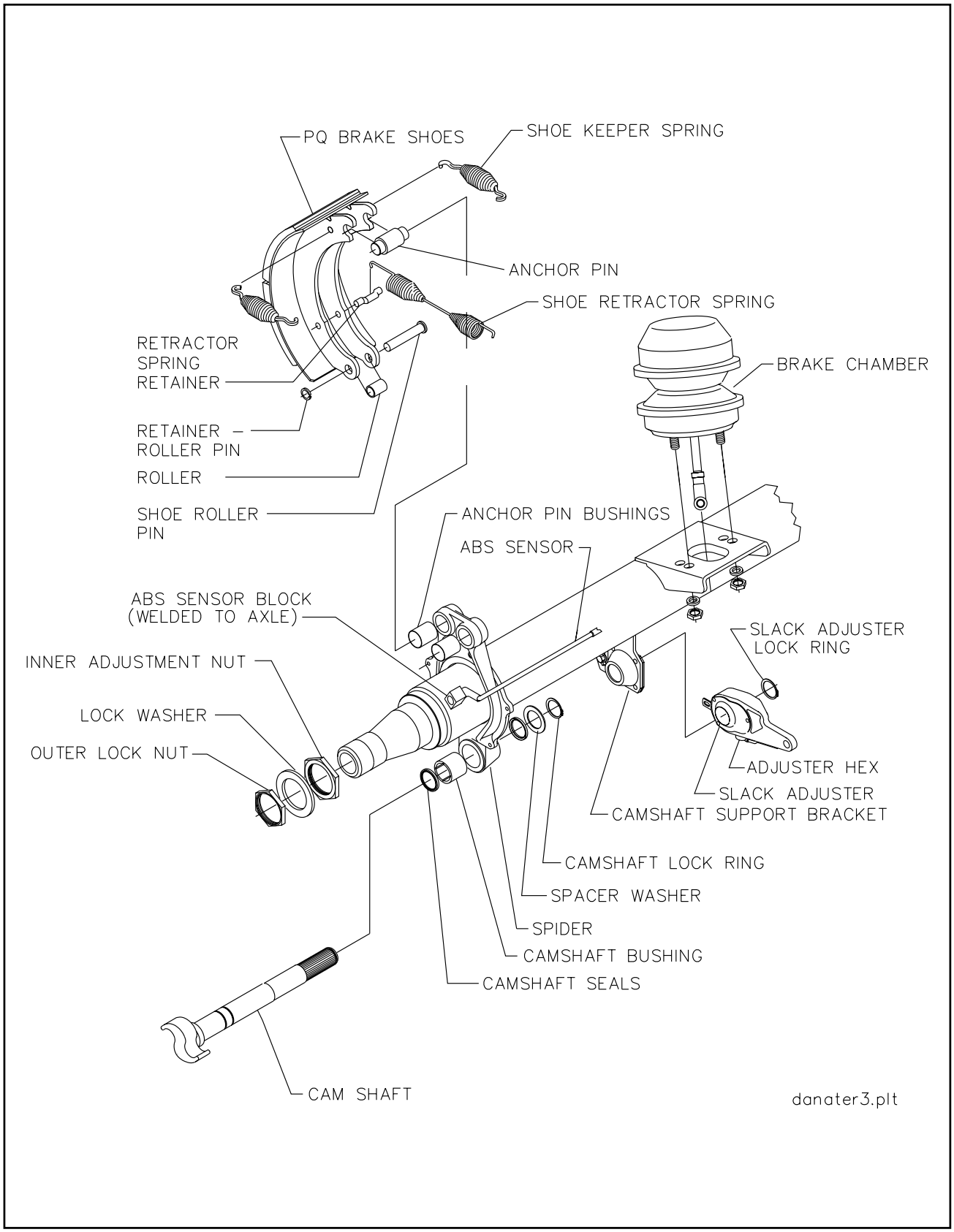

Figure 4-10 Axle and Brake Assembly

https://truckmanualshub.com/

4-8.4 Tandem Relay Valve Maintenance

Every 3600 operating hours, 100,000 miles, or yearly, the Relay Emergency Valve should be disassembled, cleaned, and lubricated by a trained technician.

⚠ WARNING

REPAIR OR REPLACEMENT OF THE RELAY/EMERGENCY VALVE IS A COMPLEX OPERATION AND SHOULD BE PERFORMED BY TRAINED SERVICE PERSONNEL. CONTACT A LANDOLL AUTHORIZED SERVICE CENTER FOR SERVICING.

4-8.5 Brake Assembly Maintenance

The brake assemblies should be inspected and adjusted every 2,000 miles or monthly. Examine the brake linings visually to locate the lining showing the greatest amount of wear. The wheel and drum should be removed and the linings replaced if the thinnest portion of the lining is 3/8 in. (9.5 mm) or less. Do not allow the linings to wear thin enough that the lining rivet contacts the drum. **(See Figure 4-9)**. Lubricate brake assembly per **Figure 4-1, Lubrication Points** and **Table 4-2, Maintenance Schedule.**

⚠ WARNING

DO NOT ALLOW GREASE TO CONTACT BRAKE LININGS AS THIS COULD RESULT IN REDUCED BRAKING PERFORMANCE.

a. Brake Adjustment

This semitrailer is equipped with automatic slack adjusters which compensate for brake lining wear and keep brakes adjusted. Brakes should not be adjusted manually except when relining brakes.

b. Disassembly for 12-1/4" X 7-1/2" Brakes (See Figure 4-10)

1. Release brakes and back off slack adjuster.
2. Remove slack adjuster lock ring and slack adjuster.
3. Remove drum assembly **(See Figure 4-10).**
4. Remove anchor pin retainers, washers, and bushings.
5. Remove anchor pins and brake shoes.
6. Remove brake return springs.
7. Remove camshaft lock ring, spacer washer and camshaft
8. Remove roller pin retainers.
9. Remove roller pins and rollers from shoes.
10. Remove camshaft bushings and seals from spider.
11. After removing the shoes, completely inspect all brake components, servicing as necessary.

c. Reassembly for 12-1/4" X 7-1/2" Brakes (See Figure 4-10)

1. Install new camshaft bushing and seals into the spider.

IMPORTANT

WHEN INSTALLING CAMSHAFT SEALS, THE SEAL ON THE SLACK ADJUSTER SIDE IS INSTALLED FACING INTO SPIDER. THIS ALLOWS GREASE TO PURGE OUTSIDE THE BRAKE ASSEMBLY WHEN GREASING THE CAMSHAFT BUSHING.

2. Install cam roller assemblies onto the brake shoes.
3. Install “D” shaped camshaft washer onto the camshaft.
4. Install the camshaft into the spider. Install spacer washer and lock ring retainer on camshaft before sliding the camshaft through the camshaft support bracket. Install the slack adjuster, washer and lock ring retainer.
5. Install shoes, anchor pin bushings, anchor pins, and spacers onto spider. Install anchor lock rings.

IMPORTANT

ALWAYS USE ALL NEW SPRINGS WHEN SERVICING BRAKES.

6. Install brake return spring.
7. Connect slack adjuster to brake chamber pushrod.
8. Adjust automatic slack adjuster as outlined in **Section 4-8.6b.**

https://truckmanualshub.com/

d. Disassembly for 16-1/2" x 7" Brakes (See Figure 4-10).

1. Release brakes and back off slack adjuster.
2. Remove slack adjuster lock ring and slack adjuster.
3. Remove drum assembly **(See Figure 4-10).**
4. Disengage the roller retainers from the rollers.
5. Press down on the bottom brake shoe and remove the lower cam roller. Lift the top shoe and take out the top cam roller.
6. Lift out the shoe retractor spring, which is now free of tension.
7. Swing the lower shoe back approximately 180° to relieve the tension on the shoe keeper springs. Remove the springs and slip the shoes off the anchor pins.
8. Remove camshaft lock ring, spacer washer(s) and camshaft.
9. After removing the shoes, completely inspect all brake components, servicing as necessary.

e. Reassembly for 16-1/2 x 7" Brakes (See Figure 4-10).

1. Install new anchor pin bushings, camshaft bushing and camshaft seals into the spider.

IMPORTANT

When installing camshaft seals, the seal on the slack adjuster side is installed facing into spider. This allows grease to purge outside the brake assembly when greasing the camshaft bushing.

2. Install cam roller, retainer clip and retractor spring retainers onto the camshaft.
3. Install 1/8" thick camshaft washer onto the camshaft.
4. Install the camshaft into the spider. Install spacer washer and lock ring retainer on camshaft before sliding the camshaft through the camshaft support bracket. Install the slack adjuster, washer and lock ring retainer.
5. Install the brake keeper onto the shoes. Install shoes onto the spider by placing shoes in place on the anchor pins, then “wrap” the two shoes into place about the spider.
6. Install the shoe retractor spring onto the shoes.
7. Connect slack adjuster to brake chamber pushrod.
8. Adjust automatic slack adjuster as outlined in **Section 4-8.6b.**

4-8.6 Automatic Slack Adjusters

The semitrailer automatic slack adjusters provide the means for routine brake adjustment to compensate for lining wear. Inspect slack adjusters every 2,000 miles to assure correct operation.

a. Operational Check (See Figure 4-11)

1. Block wheels to prevent vehicle from rolling.
2. Check that the push rod is fully retracted, apply air to release spring brake.
3. Turn adjustment hex counterclockwise to create an excessive clearance condition. (A ratcheting sound will occur.)
4. Make a full service brake application. On release, allow sufficient time for brake to fully retract. During the brake release, observe rotation of the adjustment hex (attach a wrench on the hex to make this movement easier to see). This rotation indicates that an excessive clearance condition has been determined by the slack adjuster, and it is making an adjustment to compensate. On each subsequent brake release the amount of adjustment and push rod travel will be reduced until the desired clearance is achieved
5. The push rod stroke should be 1 1/2" to 2" with an 100 to 105 PSI service brake application.
6. Measure the movement of the push rod from the completely released position to the applied position by marking the push rod where it exits the air chamber before and after application.
7. If the brakes have been running tight, the control arm location should be checked.

⚠ WARNING

IF THE ADJUSTER APPEARS NOT TO BE OPERATING, CHECK THE OTHER BRAKE COMPONENTS FOR PROPER FUNCTION AND ELIMINATE ANY BINDING. RECHECK THE AUTOMATIC SLACK ADJUSTER. IF THE ADJUSTER IS NOT FUNCTIONING, THE UNIT MUST BE REPLACED BECAUSE FAILURE OF PROPER ADJUSTMENT FUNCTION WILL RESULT IN LOSS OF BRAKES.

https://truckmanualshub.com/

b. Replacing Slack Adjuster (See Figure 4-11)

1. Chock wheels to prevent vehicle from rolling. Release spring and service brake. Air chamber push rod must be **fully released.**
2. To maintain a fully released parking brake, a minimum of 105 psi reservoir pressure must be maintained. If air pressure is not available the spring brake must be manually caged.
3. Remove the existing slack adjuster and clevis - DO NOT REMOVE EXISTING JAM NUT.
4. Install the new clevis (with 1/2" pin) onto the push rod up to the jam nut -DO NOT TIGHTEN JAM NUT.

⚠ CAUTION

THE INSTALLATION GUIDE MUST BE USED WHEN INSTALLING OR REINSTALLING AUTOMATIC SLACK ADJUSTER. FAILURE TO DO SO MAY RESULT IN IMPROPERLY ADJUSTED BRAKES WHICH MAY CAUSE BRAKE DAMAGE OR LEAD TO BRAKE FAILURE.

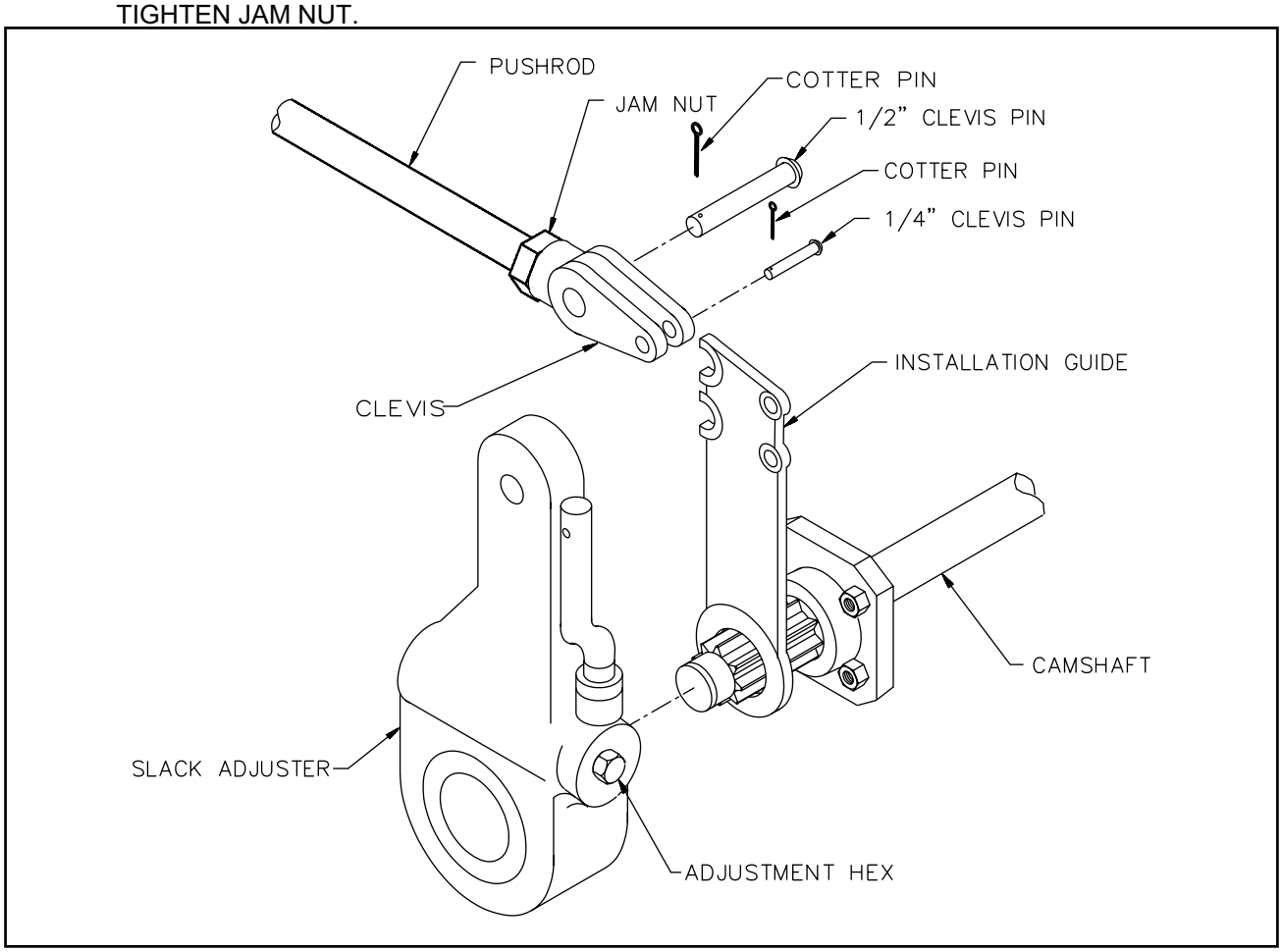

Figure 4-11 Slack Adjuster

https://truckmanualshub.com/

5. Fit the installation guide over the cam splines so the 1/2" pin slots face the air chamber.
6. Swing the guide into the clevis until the appropriate slot totally engages 1/2" pin.
7. Observe the guide pointer arrow:
   If the guide pointer is above the clevis pointer, adjust clevis CCW for alignment.
   If the guide pointer is below the clevis pointer, adjust clevis CW for alignment.
8. Reposition clevis until the guide pointer aligns with the clevis pointer.
9. Verify by engaging 1/4" pin through the clevis and guide.
10. Tighten jam nut to 50 ft.-lbs. torque min.
11. Remove the guide from cam shaft.
12. If the push rod threads extend through the clevis more than 1/16", remove clevis and cut rod to length.
13. If the push rod is not fully engaged in clevis body, install a new push rod - cut to length.
14. Install the slack adjuster on the cam shaft.
15. Rotate the manual adjuster shaft CW until the slack adjuster arm holes align with the clevis. Install 1/2" and 1/4" pins and cotter pins.

c. Adjusting Slack Adjuster

1. Rotate the manual adjuster clockwise until brake shoes contact drum.
2. Back off manual adjuster 1/2 turn. (counterclockwise)
3. Manually uncage the spring brake.
4. Build up vehicle air pressure.
5. Fully apply and release the brakes several times to check for adequate clearance to all adjacent components.
6. Measure the distance from air chamber to 1/2" pin. Apply brakes with 100-105 psi air pressure and remeasure distance to 1/2" pins.
7. The stroke (difference of these two measurements) must be less than 2 inches.

4-9 HUB AND DRUM MAINTENANCE

4-9.1 Clean and inspect the brake drums whenever relining the brakes. To be suitable for further service, the brake drum should pass the following checks.

a. The brake surface should be free of scoring, excessive heat checks and cracks.

b. The brake surface diameter should be within the maximum diameter cast or stamped on the drum.

c. The mounting holes and pilot must be round and true.

d. The mounting surface must be clean and flat.

⚠ WARNING

FAILURE TO REPLACE FAULTY BRAKE DRUMS WILL RESULT IN AN UNRELIABLE BRAKING SYSTEM, AND MAY LEAD TO AN ACCIDENT.

4-9.2 It may be necessary to turn or resurface the braking surface to remove small heat checks or other surface defects resulting from normal use.

a. The maximum diameter cast into the back plate portion of the brake drum is the maximum diameter or discard diameter to which the brake drum may be turned or worn and still be usable. If any portion of the brake surface exceeds the maximum diameter it must be discarded. The maximum is .120 over the nominal new diameter unless stated otherwise on the casting. The maximum diameter cast into the brake drum supersedes all published information.

b. When resurfacing a drum, allow at least 0.040 inches under the maximum diameter for additional wear.

https://truckmanualshub.com/

⚠ WARNING

TURNING A BRAKE DRUM BEYOND 0.040 INCHES UNDER THE MAXIMUM DIAMETER WILL RESULT IN A WEAKER BRAKE DRUM AND MAY RESULT IN AN ACCIDENT.

4-9.3 Replacement of the brake drum is required if any of the following conditions exist:

a. The brake drum is cracked.

b. The brake surface is heat checked, grooved or worn beyond the rebore limit or the maximum diameter.

c. The back plate is cracked.

d. The bolt holes are elongated.

e. The brake drum has been severely overheated.

f. The brake drum is out-of-round.

⚠ CAUTION

REPLACE BRAKE DRUMS IN PAIRS TO ACHIEVE THE SAME BRAKING POWER ON BOTH WHEELS AND MAINTAIN AN EVEN BRAKING LOAD ON THE AXLE. FAILURE TO DO THIS MAY SIGNIFICANTLY REDUCE THE PERFORMANCE, SERVICE LIFE, AND/OR SAFETY OF YOUR VEHICLE.

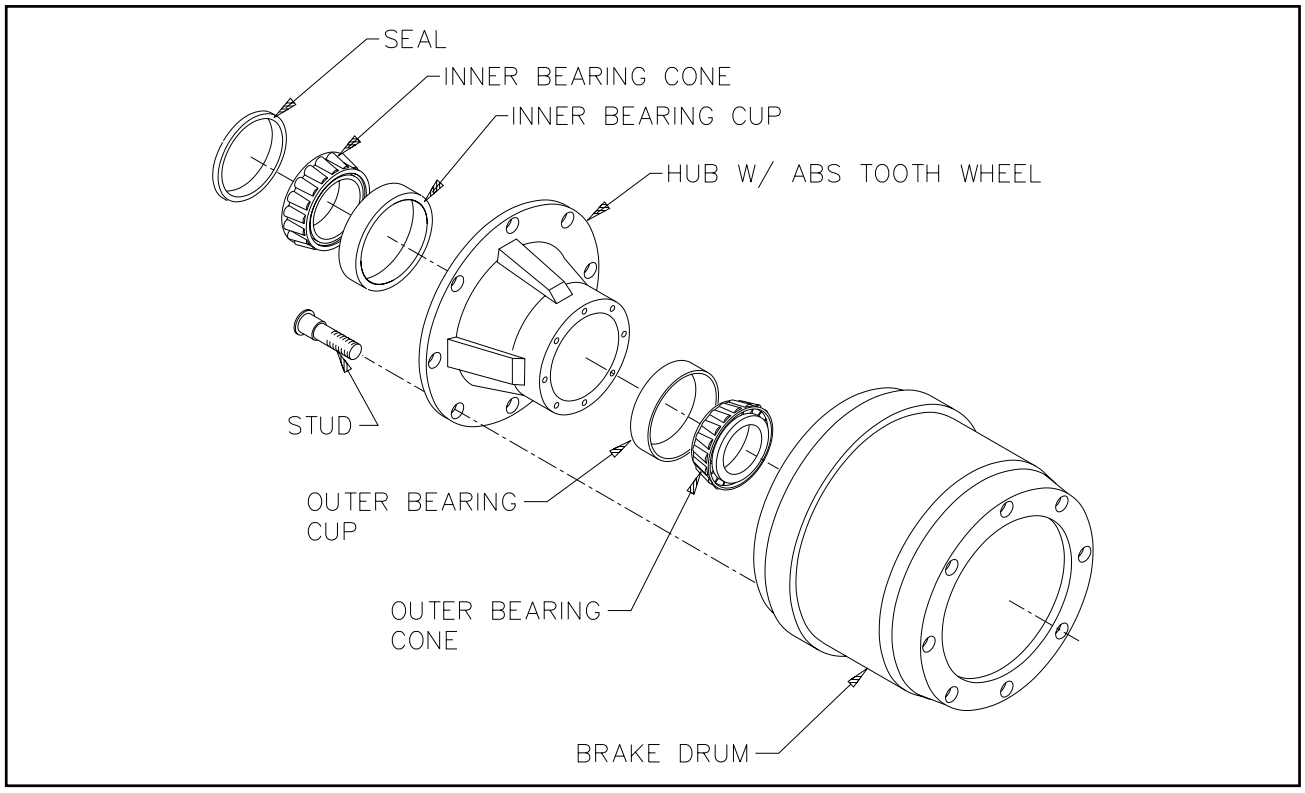

Figure 4-12 Outboard Mount Hub and Drum

https://truckmanualshub.com/

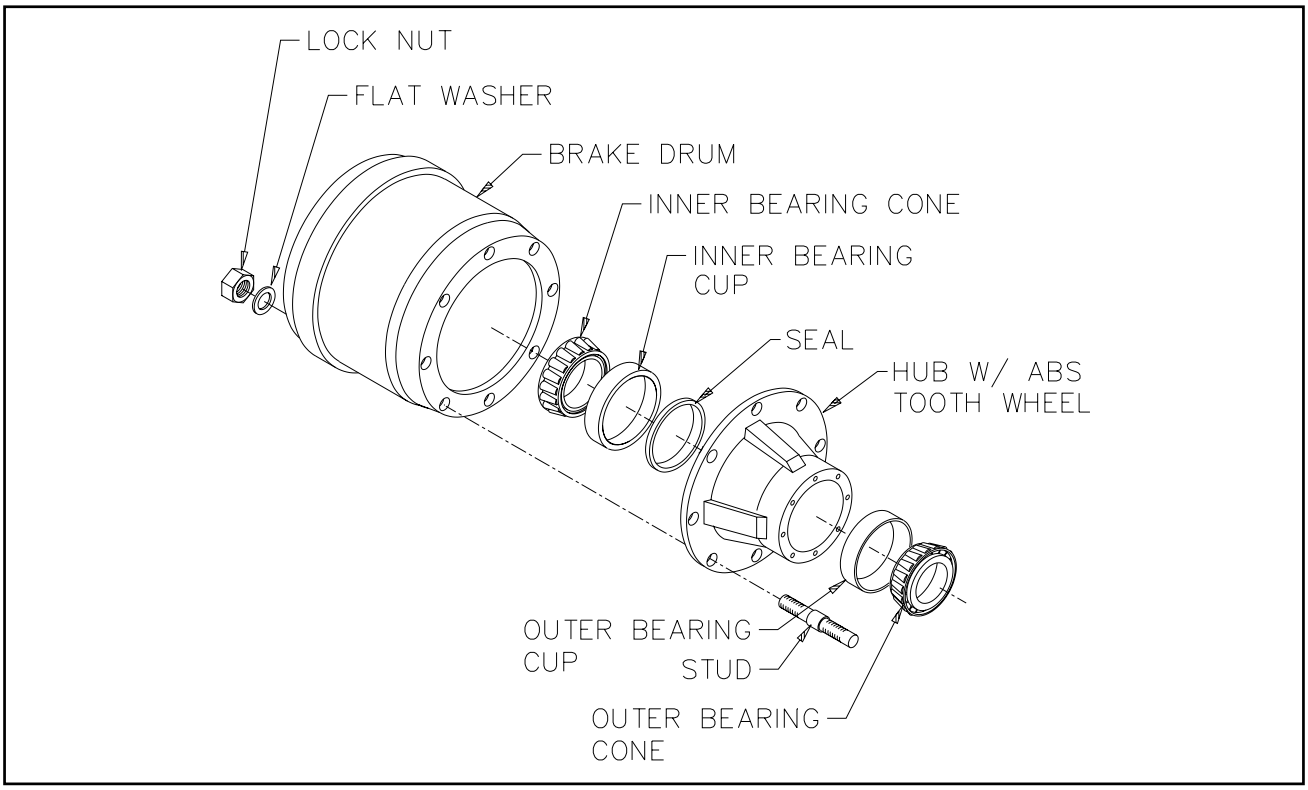

Figure 4-13 Inboard Mount Hub and Drum

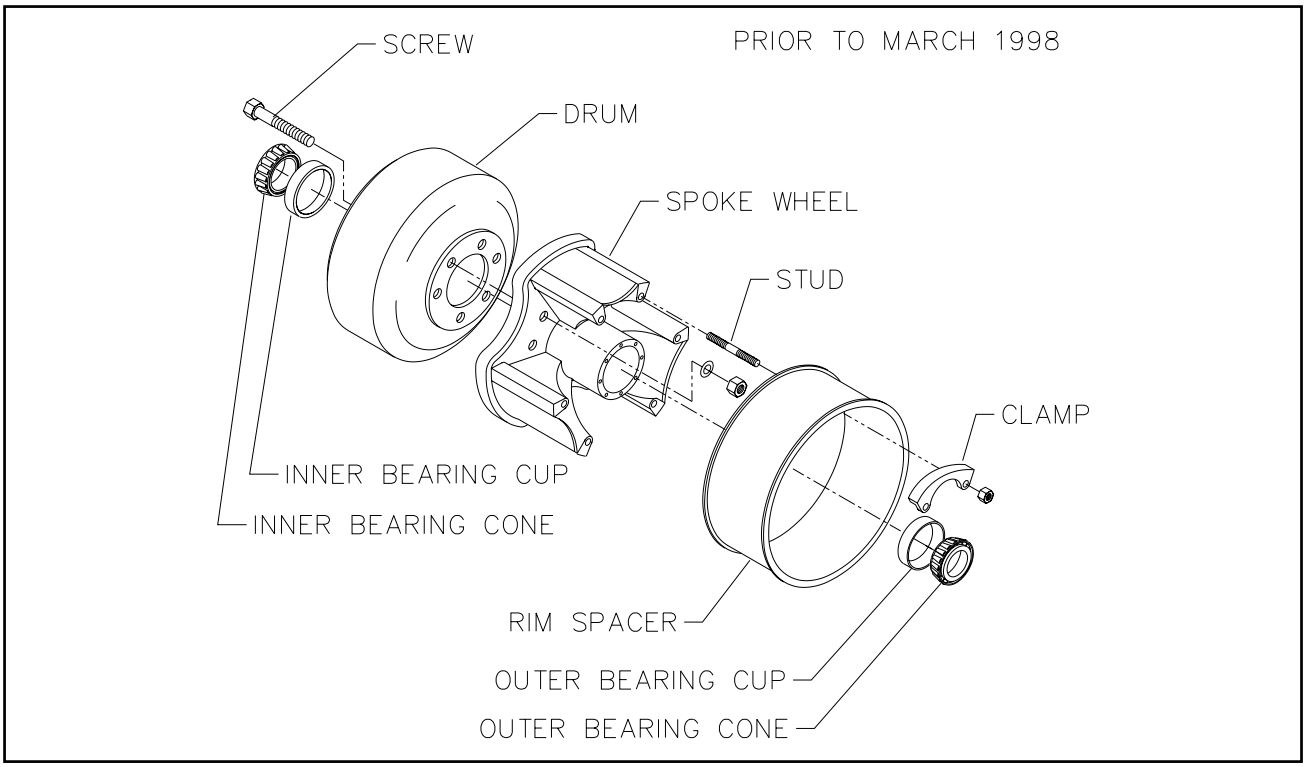

Figure 4-14 Three Spoke Wheel and Drum

https://truckmanualshub.com/

4-9.4 Replace the hub and drum as follows **(See Figures 4-12, 4-13, and 4-14):**

a. For outboard mount hub and drum remove the brake drum **(See Figure 4-12)**. It may be necessary to release the slack adjuster. For inboard mount **(See Figure 4-13)** and spoke wheel (**See Figure 4-14)** remove drum after hub.

b. Remove hub cap and catch lubricant in a pan.

c. Remove outer spindle nut, spindle locking washer, inner spindle nut, and bearing. Remove hub from axle.

d. Using an appropriate driver, remove inner bearing cone, and seal.

e. Using an appropriate driver, remove bearing cups from hub.

f. Check that the hub cavity is clean. If the hub is to be reused, clean it thoroughly.

g. Insert bearing cups into the hub.

h. Install the drum to the hub or wheel unless the drum is outboard mount.

i. Clean the mounting surfaces with a good grade commercial cleaner and soft rag. Dry all component parts with a clean, absorbent cloth or paper. Lubricant will not adhere to surfaces wet with solvent.

j. For hub and drum, make sure the drum seats flat against the hub flange and mates properly with the hub pilot. There should be no interference between the brake drum pilot chamfer and the corner radius on the hub.

k. For spoke wheels, there should be clearance between the spoke and the brake drum or the brake drum will not function properly.

l. Install inner bearing, cone, and seal.

IMPORTANT

DO NOT MIX NEW CUPS WITH OLD CONES OR NEW CONES WITH OLD CUPS.

m. If studs are marked “R” or “L”, right hand (R) hubs should be installed on the curbside of the vehicle, left hand (L) hubs should be installed on the driver side.

⚠ CAUTION

FAILURE TO USE THE CORRECT STUD ON THE CORRECT SIDE MAY CAUSE LOOSENING OF THE HUB STUDS DURING OPERATION, RESULTING IN LOSS OF A WHEEL.

n. Place the hub or wheel over the axle spindle being careful to align the hub bore with the axle. Do not damage the seal. Support the hub assembly until the outer bearing cone and spindle nut are installed, to avoid damaging the seal.

o. Install the outer bearing cone and inner spindle nut, tightening the nut until it is snug against the outer bearing cone. Remove the hub support allowing the hub to rest on the bearings.

p. Install and adjust bearings **(See Section 4-10, Wheel Bearing Lubrication and Adjustment).**

q. Install the hub cap with the proper gasket. Tighten the cap screws of the hub cap to 15 to 20 ft-lbs. of torque.

r. Remove the filler plug and fill the hub cavity to the recommended level with a gear type oil.

s. For Outboard Mounted Brake Drum **(See Figure 4-12)** place the drum over the hub and brake shoes being careful not to damage the threads on the studs. Make sure the drum seats flat against the hub flange and mates properly with the hub pilot. There should be no interference between the brake drum pilot chamfer and the corner radius on the hub. If interference exists, the hub will not be able to function properly.

https://truckmanualshub.com/

4-10 WHEEL BEARING LUBRICATION AND ADJUSTMENT

With semitrailer sitting level, the oil level must be checked daily and maintained between the “ADD” and “FULL” lines on the hub cap window. Check for cracked windows, missing filler plugs, and oil leaks. Add hub oil through the “POP-IN” filler plug located in the center of the hub windows. Re-install the “POP-IN” plugs after filling each hub. Adjust wheel bearings and change oil every 50,000 miles or with each brake lining replacement, which ever occurs first.

4-10.1 Adjustment

a. With a drain pan under the hub cap, remove the hub cap assembly allowing oil to drain.

b. Lift the wheel off of the ground.

c. Adjust slack adjuster to eliminate brake drag during tire/wheel rotation.

d. Remove outer lock nut and inner nut and lock washer.

e. Tighten the inner adjustment nut to a minimum of 75 ft.-lbs., while rotating wheel to insure proper seating of the bearings and cups in the wheel hub.

f. Loosen the inner adjustment nut so that the wheel will turn freely.

g. Retighten the inner adjustment nut to 50 ft.-lbs. while rotating the wheel, to properly position the bearings for the final adjustment.

h. Loosen the inner adjustment nut 1/3 turn.

i. Install the spindle nut lock washer so that the dowel on the inner nut will align with a hole in the lock washer and the washer tang fits in the spindle keyway.

j. Install the outer lock nut and tighten to 250-300 ft.-lbs. End-play of .001" to .010" must be present in the adjusted wheel bearing assembly.

⚠ DANGER

FAILURE TO TORQUE THE OUTER LOCK NUT PROPERLY COULD CAUSE THE WHEEL TO COME OFF DURING VEHICLE OPERATION RESULTING IN PROPERTY DAMAGE OR LOSS OF LIFE.

k. Install the hub cap with a new gasket and fill with oil to the full mark. **See Table 4-1.**

l. Adjust brakes according to **Section 4-9.5 c.**

m. Check hub oil level after the wheel has set level in one position for a few minutes to allow the oil to work into the bearings.

https://truckmanualshub.com/

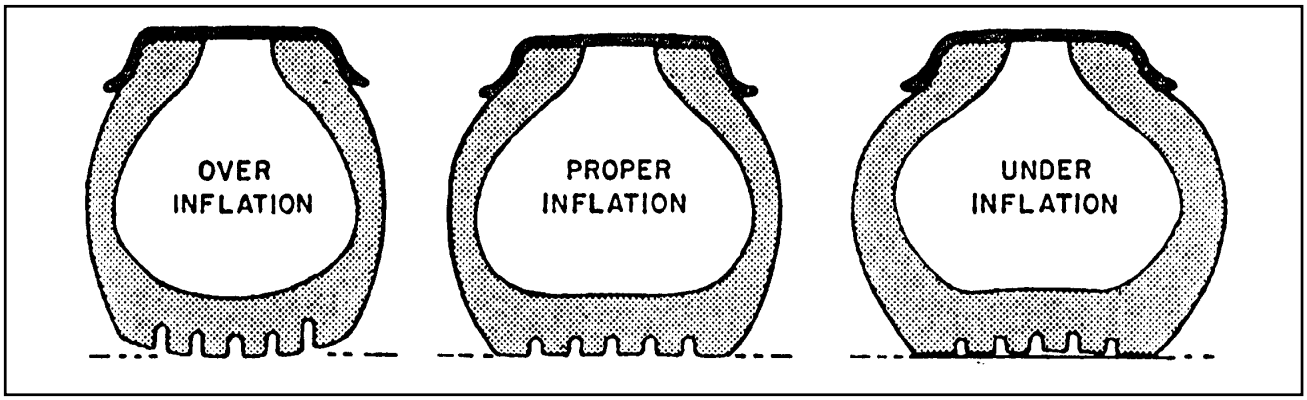

Figure 4-15 Tire Inflation Examples

4-11 TIRE MAINTENANCE

4-11.1 Tire Inflation. Tire inflation will cause tire to ground contact characteristics as shown in **Figure 4-15**. Tire inflation should be checked daily while the tire is cold, and during road stops. Checking the tire pressures while tires are hot will give a faulty increased pressure reading. Adjusting tire air pressure to the specified amount while tires are hot will produce improper tire to road contact and thus abnormal wear. Do not exceed cold inflation pressure listed on the semitrailer VIN plate located on the front of the trailer. Exceeding cold inflation pressure will result in damaged tire bodies, rims, and wheels. Replace all valve stem caps when pressure checking/adjusting has been completed. Remove any foreign objects from between duals.

4-11.2 Tire Matching. Both tires on the same spindle must be the same size in order to properly distribute the load and braking forces between them. The tire must be mounted on a rim and properly inflated before measuring. If there is an allowable difference in size the smaller tire should be mounted to the inside position of the duals.

a. Tape Measuring Method: Measure around each tire on the tread surface. A maximum difference of 3/4" is allowed between the two mating tires of a dual **(See Figure 4-16).**

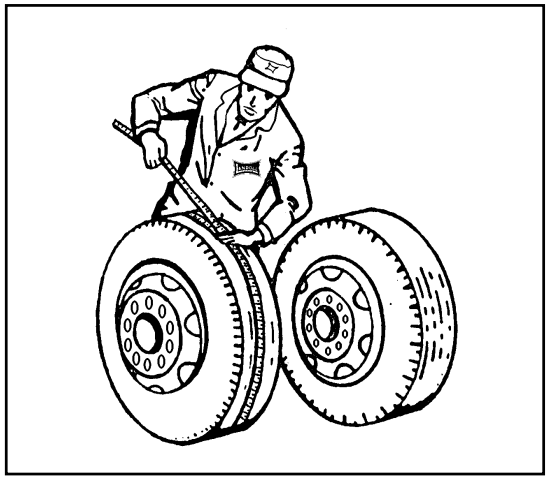

Figure 4-16 Measuring Tape Method

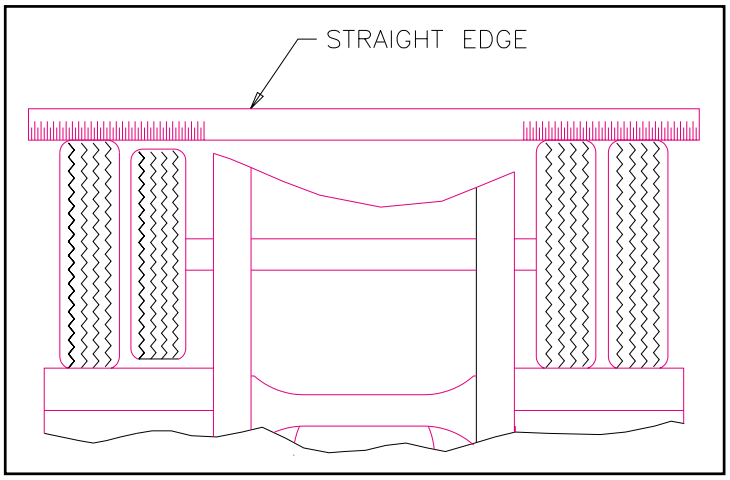

Figure 4-17 Straight Edge Method

https://truckmanualshub.com/

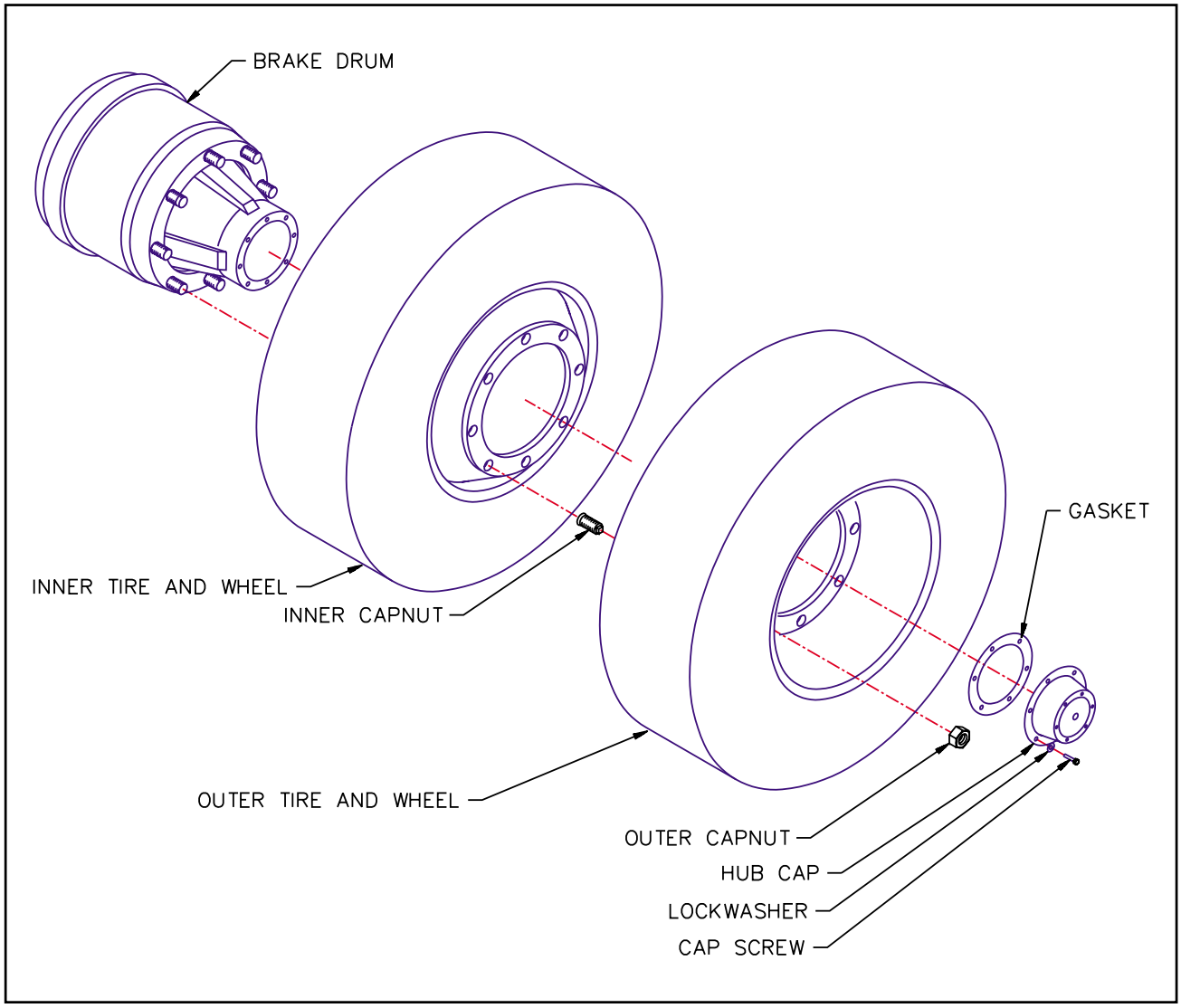

Figure 4-18 Mounting Tires and Wheels

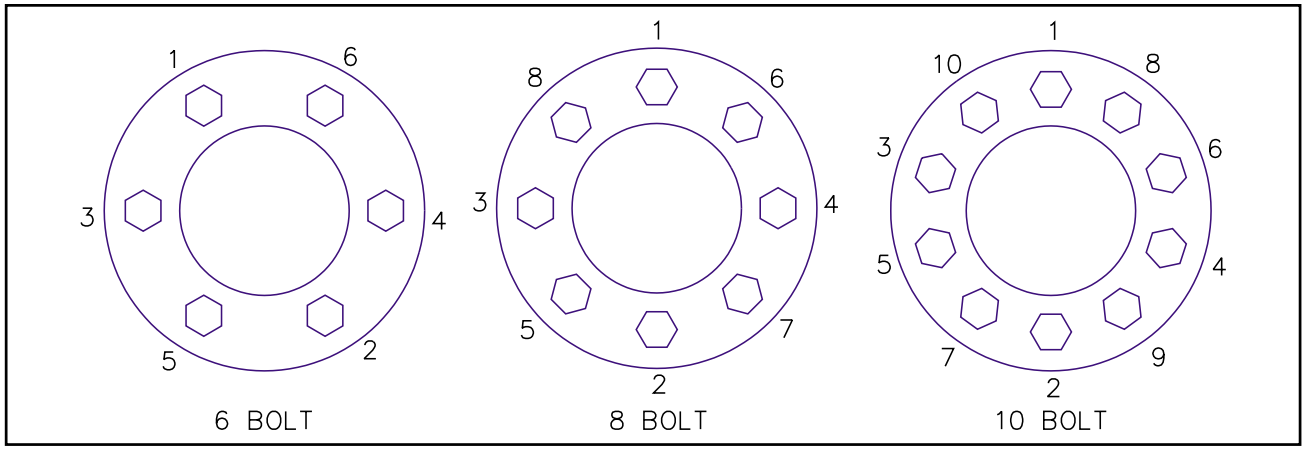

Figure 4-19 Stud Tightening Sequence

https://truckmanualshub.com/

b. Straight Edge or String Method: (This method cannot be used if tire and wheel assemblies are not mounted on the axle.) Jack trailer up until the wheels are off of the ground. Hold a straight edge against the tires of both ends of an axle. A gap at one tire indicates a smaller tire. A maximum of 1/8" gap is allowed **(See Figure 4-17)**.

4-11.3 Mounting Tire and Wheel (Hub Type)

a. Make sure that all mounting surfaces are clean and free of rust, dirt or paint. A wire brush may be used to clean these surfaces **(See Figure 4-18)**.

b. Position the inner disc wheel over the studs, being careful not to damage the stud threads. Make sure that the disc wheel is flat against the mounting surface and that there is clearance between the disc wheel taper and brake drum.

c. For ball seat mounted wheels only, install the inner capnuts on the studs and tighten to fifty foot-pounds using the sequence illustrated in **Figure 4-19**. Make certain that the left-handed threads are installed on the driver side of the vehicle and the right-handed threads are installed on the curbside of the vehicle.

d. Tighten the inner capnuts to full torque of 450 to 500 foot-pounds using the sequence shown in **Figure 4-19**.

e. For pilot mounted wheels, skip **steps c and d**.

f. Position the outer disc wheel over the capnuts being careful not to damage the inner capnut threads. Be sure the valve stems for both the inner and outer tire are accessible.

g. Install the outer capnuts (ball seat) or flange nut (pilot mount) and tighten to 50 foot-pounds using the sequence in **Figure 4-19.** Then tighten to full torque of 450 to 500 foot-pounds for ball seat and 500 to 550 foot-pounds for pilot mount, using the same sequence**.**

h. Torque will drop after the first 50 to 100 miles of operation. Check the capnuts for proper torque after this interval and retighten them. Loosen the outer capnuts and retighten the inner and outer capnuts per **steps d to g**.

⚠ WARNING

USE A TORQUE WRENCH TO ASSURE PROPER TORQUE. INSUFFICIENT TORQUE CAN CAUSE STUD BREAKAGE AND DAMAGE WHEEL PILOTS. OVERTORQUE CAN OVERSTRESS THE STUDS AND STRIP THE THREADS.

4-11.4 Mounting Tire and Rim (Spoke Type)

a. Slide the inside rim over the wheel so the 28° mounting surfaces mate. Be sure the valve stem is pointing out and is centered between two spokes.

b. Slide the rim spacer over the wheel and against the inner rim. If the spacer is damaged, replace with a new spacer.

c. Slide the outer rim over the wheel. Be sure the valve stem is pointing in and is centered between the same spokes as the inner valve stem.

d. Install the rim clamp and nuts. Lightly tighten the rim nuts until they are properly seated.

e. After they are properly seated, tighten the rim nuts one-quarter turn at a time, in the order illustrated in **Figure 4-19** to a torque of 200 to 250 foot-pounds.

f. Check your rim alignment by placing a block of wood or other object on the floor and rotating the wheel. If the variation exceeds 1/16" for the front wheels or 1/8" for the rear wheels, the rim is not properly mounted. To correct the problem, loosen the nut on the side with the greatest deviation and tighten the nuts opposite to this nut. Recheck the torque.

g. Check space between dual wheels. Side walls should not be in contact.

h. Torque will drop after the first 50 to 100 miles of operation. Check the capnuts or flange nuts for proper torque after this interval and retighten them.

https://truckmanualshub.com/

4-12 WINCHES

Inspect the winch cable before and after **every** usage. If frayed wires, nicks, kinks, worn spots, breaks or any other sign of deterioration or damage is found, immediate replacement is mandatory before further usage. If the semitrailer is going to be out in the weather for any length of time, it is advisable to oil the winch cable to prevent untimely rusting and deterioration of the cable. See **Table 4-1** for lubrication specifications.

Inspect the winch mechanism thoroughly each week to insure safe, efficient operation.

⚠ WARNING

DO NOT HANDLE THE WINCH CABLE WHEN THE WINCH IS IN THE ENGAGE POSITION. HANDS OR CLOTHING COULD GET CAUGHT IN THE CABLE AND BE PULLED INTO THE SPOOL CAUSING SERIOUS PERSONAL INJURY.

4-13 HYDRAULIC ENGINE PACKAGE

The hydraulic engine package should be inspected weekly to insure continued proper operation. The inspection should include:

4-13.1 Check the hydraulic oil level weekly, or after any leakage. See **Table 4-1** for proper hydraulic oil. With all hydraulic cylinders in the retracted position and with the engine stopped, check the hydraulic oil level.

4-13.2 Check hoses weekly for cracks or leaks. If a valve or line leaks, it should be replaced immediately.

4-13.3 Check the engine oil each time before using. Oil level should be maintained between the “ADD” and “FULL” marks on the oil dip stick. For further maintenance procedures and proper lubrication specifications, please refer to the engine owner’s manual that was supplied with the hydraulic engine package.

4-13.4 Replace hydraulic filter with new filter at least every 6 months or more often under adverse conditions.

4-13.5 Use the fuel recommended for the engine package installed on you trailer.

4-14 DOCK LEVELERS

4-14.1 Perform the following service procedure on a yearly basis:

- **a.** Change oil with legs fully extended.
- **b.** After oil change, operate the dock leveler at least three full cycles (complete leg strokes) to bleed air from system.
- **c.** Fully extend legs. Clean extended legs. Coat lightly with clean grease and grease alemite fitting on each leg and check valve.
- **d.** Check all hydraulic lines and fittings for leaks and worn spots. Replace any defective lines and fittings.
- **e.** Check for loose bolts and nuts.

4-14.2 Disassembly/Assembly Procedure

When disassembling and reassembling the leg, care should be taken to keep all parts clean and to prevent parts from being damaged. All seals should be coated lightly with grease before reassembling the leg.

4-14.3 Lock Valve (See Figure 4-20)

- **a.** Remove retaining plug.
- **b.** Remove o-ring plug opposite retaining plug on rectangular block.
- **c.** Using a drift small enough to fit through the port opened in the previous step, tap out the lock valve cartridges.

https://truckmanualshub.com/

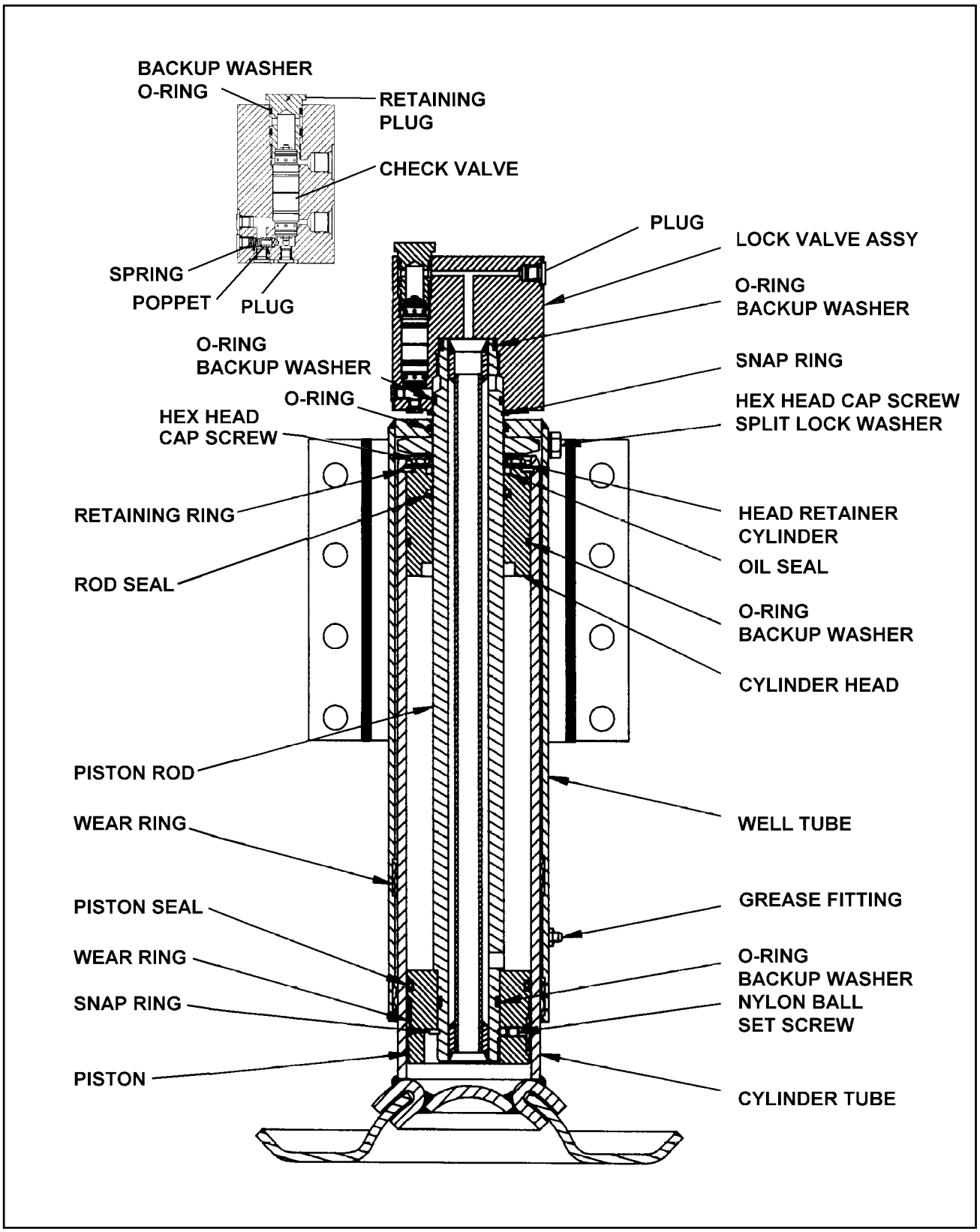

Figure 4-20 Dock Leveler Leg Assembly

https://truckmanualshub.com/

d. Install new lock valve cartridges back to back (as illustrated). Grease o-rings.

e. Install two new o-rings and two back-up washers on retaining plug.

f. Thread retaining plug into body (tap gently to engage threads). Torque plug to 15 ft.lbs.

g. Install new o-ring on plug, opposite retaining plug. Thread plug into body. Torque to 70 in.lbs.

h. Replace spring and poppet. Replace the o-ring on plug and reinstall.

i. Install new o-rings and back-up washers on top of piston rod.

j. Thread lock valve on piston rod until firmly seated. If the ports need to be relocated, loosen the screw at the top of the well tube and turn lock valve clockwise until ports are at the desired location. Retighten the set screw.

4-14.4 Leg (See Figure 4-20)

a. To remove leg from trailer, disconnect the air supply at the gladhand. Bleed off any pressure existing in the system by cycling the master valve back and forth until air is no longer exhausted from the master cylinder.

b. Disconnect the hoses from the leg.

c. To disassemble leg, first remove the check valve assembly. Remove o-rings and back-up washer. Using a snap ring pliers, remove snap ring. Loosen hex screw.

d. Lift well tube off lower leg assembly. Lift piston rod to gain access to top of cylinder.

e. Remove four hex screws. Lift cylinder head retainer. A wire or rubber band may be used to hold to sprocket screwdriver, carefully remove spiral retaining ring. Lift piston rod assembly out of cylinder tube. Using a large snap ring pliers, remove heavy duty snap ring. Pull off piston, cylinder head, retaining ring and cylinder head retainer.

f. Before reassembling leg, remove all seals and wear rings. Clean all parts. Inspect all bearing surfaces and sealing surfaces for scratches, nicks or other defects, replace if necessary. Replace all wear rings and lightly lubricate all seals before reassembly. Carefully reassemble the leg reversing the order described above.

g. Return leg to trailer and reconnect all hoses. Apply grease to grease fitting and cycle legs fully several times to bleed air from system. Check oil level.

https://truckmanualshub.com/

TROUBLESHOOTING 5

Troubleshooting should be performed by a trained and competent technician. Landoll Corporation is not responsible for equipment that is improperly maintained. Contact an authorized Landoll Service center for servicing.

5-1 ELECTRICAL

Most electrical system problems show up as a burned out light or fuse, or inoperative electrical component. Wiring, grounds, or components may be at fault. Locate the symptom in this section that best identifies your electrical problem. Check out each possible problem under that symptom. If the problem cannot be located, see an automotive electrical specialist. For maintenance procedures see **Section 4-5.**

SYMPTOM	PROBLEM: REMEDY
NO LIGHTS	**Fuse blown:** replace fuse. **Connection at plug-in:** tighten connection. **Broken or corroded wires:** replace wire. **Ground wire loose:** clean and tighten ground.
LIGHTS FLICKERING	**Wires shorted or loose:** locate, insulate, replace, or tighten. **Grounding through fifth wheel:** locate broken ground wire (tractor or semitrailer).
LIGHTS DIM	**Voltage difference between semitrailer & tractor:** match bulbs with tractor voltage. **Grounding through fifth wheel:** locate broken ground wire (tractor or semitrailer).
LIGHTS BRIGHT & BURN OUT	**Voltage difference between semitrailer & tractor:** match bulbs with tractor voltage.
FUSE BLOW-OUT OR CIRCUIT BREAKER TRIPPING	**Vibration:** locate source of vibration and repair. **Short circuit:** replace fuse and try all accessories. If fuse blows right away, locate short and repair.
LAMP BULB BURN OUT	**Vibration:** locate source of vibration and repair. **Short circuit:** replace fuse and try all accessories. If fuse blows right away, locate short and repair. **Loose connection:** check lamp sockets and ground connections. **Intermittent short:** locate short and repair. **Improper voltage:** check voltage regulator output.

https://truckmanualshub.com/

5-2 TIRES - WHEELS - SUSPENSION

Most tire, wheel, and suspension related problems are due to excessive loads, extreme conditions, and improper maintenance. Tire, wheel, and suspension problems can be easily detected and solved by checking the following guide. For maintenance procedures see **Sections 4-4, 4-6, 4-7, 4-9, 4-10, 4-11 .**

SYMPTOM	PROBLEM: REMEDY
VIBRATIONS WHILE DRIVING	**Improper tire inflation:** inflate to proper pressure. **Tires cupped or have flat spots:** replace tires. **Wheels bent or loose:** replace or tighten. **Tires incorrectly mounted:** remount. **Mud in wheels:** clean wheels. **Tire(s) out of balance:** balance tires. **Brakes dragging:** locate cause and repair. **Object(s) stuck between duals:** remove object(s).
RAPID TIRE WEAR/DETERIORATION:	
CENTER TREAD WEAR	**Over inflation:** deflate to correct inflation.
SHOULDER TREAD WEAR - BOTH SHOULDERS	**Under inflation:** increase inflation to correct PSI. Check axle alignment. **Outerload:** loads are above rated tire capacity. DO NOT load above rated tire capacity.
SHOULDER TREAD WEAR - ONE SHOULDER	**Axle damage:** straighten or replace axle. **Axles not parallel:** check axle alignment.
OVERALL TREAD WEAR	**Overloading:** check tire load rating. **High speeds:** adjust speed according to road and load conditions. **Incorrect dual matching:** properly match dual tires.
TIRE FLAT SPOTS	**Quick stops:** adjust braking practices. **Grabbing brakes:** adjust brakes properly. **Worn or loose wheel bearings:** adjust or replace as needed. **Out of balance wheels and tire:** balance wheels and tires. Check ABS system function.
UNEVEN WEAR	**Suspension bushings worn:** replace bushings. **Worn or loose wheel bearings:** adjust or replace as needed. **Out of balance wheels and tires:** balance wheels and tires.
RIM FAILURE*:	
CRACKING	**Overinflated tires:** deflate tire to proper PSI. **High speeds:** adjust speed according to road and load conditions. **High speed cornering:** adjust cornering practices. **Over loading:** check rim load rating.

***IN ALL INSTANCES OF RIM FAILURE, REPLACE THE RIM IMMEDIATELY!**

https://truckmanualshub.com/

TIRES - WHEELS - SUSPENSION (CONTINUED)

SYMPTOMS	PROBLEM: REMEDY
BENDING OR WARPING	**Curb-hopping or potholes:** adjust turning practices and adjust speed accordingly with road conditions. **Improper tightening sequence:** follow proper tightening sequence. (**See Figure 4-19.)**
BROKEN STUDS*	**Over tightening:** use correct torque when mounting.

*REPLACE BROKEN STUDS BEFORE USING THE SEMITRAILER!

SEMITRAILER TRACKING PROBLEMS:

TRACKS TO ONE SIDE	**Axle alignment:** re-align axle.
TRACKS TO EITHER SIDE	**Broken or bent springs or equalizers:** replace defective parts. **Axles not parallel**: realign axles

AIR RIDE HEIGHT PROBLEMS:

TOO HIGH	**Axle to control valve linkage:** readjust linkage. **Height Control Valve internal leak:** repair or replace valve.
TOO LOW	**Axle to control valve linkage:** readjust linkage. **Height Control Valve filter plugged:** clean or replace valve. **Pressure Protection Valve filter plugged:** clean or replace valve. **System air pressure low (65 PSI minimum required):** troubleshoot air supply.
UNEVEN FROM SIDE TO SIDE	**Linkage adjustment:** readjust linkage. **Exhaust port plugged:** clean or replace valve(s). **Height control valve internal leak:** repair or replace valve. **Supply line to one height control valve pinched, restricted, or plugged:** repair or replace line.

5-3 BRAKES

For maintenance procedures, see **Sections 4-8.**

SYMPTOM	PROBLEM: REMEDY
NO BRAKES OR BRAKES ARE INTERMITTENT	**Brake air system improperly connected:** reconnect hand valves properly. **Relay/Emergency valve plugged:** clean valve. **Defective tractor protection valve:** repair or replace. **Restricted tubing or hose line:** locate and eliminate restriction. **Broken line:** locate break and repair. **Tractor air system failure:** troubleshoot tractor air system and repair. Check ABS system function.

https://truckmanualshub.com/

BRAKES (CONTINUED)

SYMPTOM	PROBLEM: REMEDY
SINGLE BRAKE DRAGGING OR LOCKED	**Broken internal brake component:** locate and replace broken part. **Flat spot on cam roller or cam shaft:** replace and lubricate. **Improper adjustment:** adjust slack adjusters. **Spider bushing or cam bracket bushing binding:** lubricate or replace bushing. **Improper lubrication:** lubricate per **Figure 4-1.** **Worn brake shoe bushing:** replace bushing. **Brake drum distortion:** replace drum. **Broken brake chamber spring:** replace spring. **Brake chamber pushrod binding:** re-align brake chamber bracket. **Air brake line loose or broken:** tighten or repair.
UNEVEN BRAKES	**See "SINGLE BRAKE DRAGGING OR LOCKED"** **Restriction in hose:** locate restriction and remove. **Worn brake linings:** reline brakes. **Grease on linings:** reline brakes. **Broken slack adjuster:** replace slack adjuster. **Leaking brake chamber diaphragm:** replace diaphragm.
BRAKES APPLY TOO SLOWLY	**Brakes need adjusting or lubrication:** adjust or lubricate as needed. **Low air pressure in brake system (below 105 PSI):** check tractor air system. **Restricted tubing or hose:** locate restriction and remove. **Defective relay valve:** clean or replace. **Call Factory or see qualified Trailer/Brake Technician**
BRAKES RELEASE TOO SLOWLY	**Brakes need adjusting or lubrication:** adjust or lubricate as needed. **Brake rigging binding:** align brakes or replace bent parts. **Exhaust port of relay valve restricted or plugged:** clean valve. **Tractor pressure too low:** Adjust to provide 105 psi min.
ALL BRAKES DO NOT RELEASE	**Air system improperly connected to tractor:** tighten or adjust connections. **Brake valve on tractor is applied:** release brake. **Relay emergency valve in emergency position:** check line pressure and check valve. **Restricted tubing or line:** locate restriction and remove. **Defective tractor protection valve:** troubleshoot tractor air system. **Parking brakes locked:** troubleshoot air system. **Moisture in air system:** Check air system **Tractor pressure too low:** Adjust to provide 105 psi min.

https://truckmanualshub.com/

BRAKES (CONTINUED)

SYMPTOM	PROBLEM: REMEDY
INSUFFICIENT BRAKES	**Brakes need adjusting:** adjust brakes. **Brakes need lubricating:** lubricate brakes. **Brakes need relining:** reline brakes. **Low air pressure:** troubleshoot air system. **Defective relay emergency valve:** repair or replace. **Brakes overheated:** stop and allow brakes to cool, locate cause of overheating.
BRAKES GRABBING	**Grease on brake linings:** reline brakes. **Brake rigging binding:** align brakes or replace bent parts. **Defective brake valve on tractor:** repair or replace valve. **Defective relay emergency valve:** repair or replace valve.
EXCESSIVE LEAKAGE WITH BRAKES RELEASED	**Relay emergency valve leaking:** repair or replace valve. **Leaking tubing or hose:** replace defective part.
EXCESSIVE LEAKAGE WITH BRAKES APPLIED	**Relay emergency valve leaking:** repair or replace valve. **Leaking brake chamber diaphragm:** replace diaphragm. **Call Factory or see qualified Trailer/Brake Technician** **Leaking tubing or hose:** replace defective part.
EXCESSIVE LEAKAGE WITH EMERGENCY SYSTEM ONLY APPLIED - NO LEAKAGE WITH NORMAL BRAKING	**Defective relay emergency valve:** repair or replace valve.
EXCESSIVE WATER PRESENT IN BRAKE SYSTEM	**Reservoir not drained often enough:** drain reservoir daily.
EXCESSIVE OIL PRESENT IN BRAKE SYSTEM	**Compressor on tractor passing excessive oil:** repair compressor.
BRAKE WILL NOT APPLY PROPERLY	**Flat spot on cam roller or camshaft:** replace and lubricate.
BRAKES WILL NOT APPLY WHEN EMERGENCY LINE IS DISCONNECTED	**Initial air pressure too low:** allow air system to build up to minimum 90 PSI and stabilize. **Defective relay valve:** repair or replace valve. **Air line leak:** locate leak and repair. **Brake chamber leak:** locate leak and repair or replace.
ABS WARNING LIGHT STAYS ON	**Refer to Rockwell WABCO ABS maintenance manual supplied with semitrailer, for system function and use of blink code diagnostics.**

https://truckmanualshub.com/

5-4 BRAKE DRUMS

For maintenance procedures see **See Sections 4-6 - 4-10.**

SYMPTOM	PROBLEM: REMEDY
EXCESSIVE LOSS OF BRAKES OR FADING	**Overheated brake drums:** check for defective or misadjusted brake linings, distorted or over-machined drums. Also check for operating conditions or loads that create severe or excessive brake applications.
BRAKES PULL TO EITHER SIDE	**Drums of different diameters:** replace with drums of same diameter. **Foreign matter in drums:** clean drums out.
ROUGH OR NOISY BRAKING ACTION	**Defective drums:** pull drums and inspect for any of the following; Heat spotted drums, grease spotting, blue drums, scored drums, excessive wear at rivet holes or edges, polished drums, out of round drums, unbalanced drums, worn/damaged brake components, foreign matter in drums. Correct situation or replace defective part(s).
VIBRATION IN RIDE	**Defective drums or out-of-round:** replace drums. **Out-of-balance drums:** balance drums.

5-5 HYDRAULIC SYSTEM

Most hydraulic system failures follow the same pattern: a gradual or sudden loss of pressure or flow with a resulting loss of cylinder or motor power. Any one of the system's components may be at fault. By following step-by-step procedures, the trouble can be located in a short time.

SYMPTOM	PROBLEM: REMEDY
SEMITRAILER LOCKED IN TILTED POSITION	**Velocity fuse activated:** raise the trailer slightly (to reset the velocity fuse), then lower the trailer slowly.
SYSTEM INOPERATIVE	**Not enough oil in system:** fill, check for leaks. **Wrong oil in system:** change oil, see specifications. **Filter dirty or clogged:** drain oil and replace filter. **Hydraulic lines dirty or collapsed:** clean or replace as necessary. **Air leaks in pump suction line:** repair or replace as necessary. **Worn or dirty pump: clean, repair or replace.** Check for contaminated oil. Drain and flush. **Badly worn components:** examine for internal leakage. Replace faulty components. Check for cause of wear. **Leakage:** check all components, and relief valve for proper settings. **Excessive load:** check unit specifications for load limits. **Slipping or broken pump drive:** repair or replace couplings. Check for alignment.

https://truckmanualshub.com/

HYDRAULIC SYSTEM (CONTINUED)

SYMPTOM	PROBLEM: REMEDY
SYSTEM OPERATES ERRATICALLY	**Air in the system:** check suction side of system for leaks. Repair leaks. **Cold oil:** allow ample warm-up time. Use proper weight oil for operating temperature. **Dirty or damaged components:** clean or repair as needed. **Restriction in filters or lines:** clean and/or replace filter or lines. **Not enough oil in system:** fill and check for leaks.
SYSTEM OPERATES SLOWLY	**Oil viscosity too high, or "cold oil".** Allow oil to warm up before operating. **Low pump drive speed:** increase engine speed (check pump owners manual for specifications). **Low oil level:** check reservoir and add oil as necessary. **Air in system:** check suction side for leaks. Repair leaks. **Badly worn pump, valves, cylinders, etc.:** repair or replace faulty component(s) as necessary. **Restrictions in lines or filter:** clean and/or replace filter or lines. **Improper adjustments:** check orifices, relief valves, etc. Adjust as necessary. **Oil leaks:** tighten fittings. Replace seals, gaskets and damaged lines.
SYSTEM OPERATES TOO FAST	**Wrong size or incorrectly adjusted restrictor:** replace or adjust as necessary. **Engine running too fast:** reduce engine speed.
OVER HEATING OF OIL IN SYSTEM	**Oil passing through relief valve for excessive time:** return control valve to neutral when not in use. **Incorrect, low, dirty oil:** use recommended oil. Fill reservoir with clean oil. Replace filter. **Engine running too fast:** reduce engine speed. **Excessive component internal leakage:** repair or replace component as necessary. **Restriction in filters or lines:** clean and/or replace filter or lines. **Insufficient heat radiation:** clean dirt and mud from reservoir and components. **Malfunctioning component:** repair or replace. **Excess oil going to dock level circuit:** adjust flow divider for 2.5 to 3.1 GPM flow.

https://truckmanualshub.com/

HYDRAULIC SYSTEM (CONTINUED)

SYMPTOM	PROBLEM: REMEDY
FOAMING OF OIL	**Incorrect, low, or dirty oil:** replace, clean or add oil as needed. **Water in oil:** replace oil **Air leaks:** check suction line and component seals for suction leaks. Replace defective parts.
NOISY PUMP	**Low, incorrect, foamy oil:** replace, clean, or add oil as needed. **Suction line plugged:** clean out obstruction or replace line. Flush system, replace filter. **Pump damaged:** repair or place.
LEAKY PUMP	**Damaged or worn shaft seal:** Replace seal and/or shaft and check for misalignment. **Loose or broken parts:** Tighten or replace.
CYLINDERS MOVE WITH CONTROL VALVE IN NEUTRAL POSITION	**Leaking cylinder seals or fittings:** Replace worn seals or fittings. **Control valve not centering when released:** Check linkage for binding and repair. **Valve damaged:** Repair or replace.
CONTROL VALVE LEAKS	**Seals damaged or worn:** Replace.
CYLINDER LEAKS	**Seals worn or damaged:** Replace. **Rod damaged:** Replace. **Barrel damaged:** Replace.
CYLINDERS DO NOT FUNCTION, OR CREEP WITH PTO DISENGAGED	**Leaking fittings or cylinder seals:** Tighten loose fittings. Replace worn seals or fittings. **Piloted check valve or O-ring leak:** Replace defective component.

5-6 HYDRAULIC POWER SUPPLY ENGINE PACKAGE

To troubleshoot the engine in the hydraulic engine package, please refer to the owners manual that was provided with the engine package.

https://truckmanualshub.com/

5-7 REMOTE CONTROL

SYMPTOM	PROBLEM: REMEDY
DOES NOT FUNCTION	**No power:** Check center pin of 7-way connector with voltmeter (+12VDC). Correct wiring per Tractor Repair manual. **Check remote plugged in:** Self-explanatory. **No current to solenoid:** Check wire harness connection to tractor. **No air supply to solenoid:** Check hydraulics connections.

5-8 DOCK LEVELER HYDRAULICS

SYMPTOM	PROBLEM: REMEDY
FAILS TO LIFT SEMITRAILER	**Insufficient hydraulic supply pressure:** adjust relief valve for 2400-2500 psi. **Worn hydraulic pump:** service or replace. **Insufficient volume to dock level circuit:** adjust flow divider to provide 2.5 to 3.1 GPM. **Too heavy a load:** reduce load on cylinders.
LOWERS UNEVENLY OR ERRATICALLY	**Insufficient volume to dock level circuit:** clean system and new oil and filter. **Dirty oil in check valves:** use same procedure as above.

https://truckmanualshub.com/

NOTES: