https://truckmanualshub.com/

4160162-Rev B

JACOBSEN
A Textron Company

Engine Parts Manual

Kubota Diesel Engine

D1105-E3B-TXRN-1 – Jacobsen SLF 1880

D1105-E3B-TXRN-2 – Cushman Truckster / Haulster / Spraytek

D1105-E3B-TXN-3 – Jacobsen LF510 /
Jacobsen Turfcat (69180 S/N 1620~1650)

D1105-E3B-RNUK-3 – Jacobsen TR-3

D1105-T-E3B-TXRN-1 – Jacobsen SLF 1880 Turbo

D1105-T-E3B-RNUK-3 – Jacobsen AR-3

⚠ WARNING

Warning: If incorrectly used, this machine can cause severe injury. Those who use and maintain this machine should be trained in its proper use, warned of its dangers, and must read the entire manual before attempting to set up, operate, adjust, or service the machine.

GB

https://truckmanualshub.com/

FOREWORD

This manual contains a parts list for your Kubota Engine.

The Engine Serial Number for the Kubota engine is on a plate located on the valve cover.

Record the Engine Serial Number below for easy reference.

Engine Serial Number: _____

If additional information is needed, contact your Jacobsen Dealer.

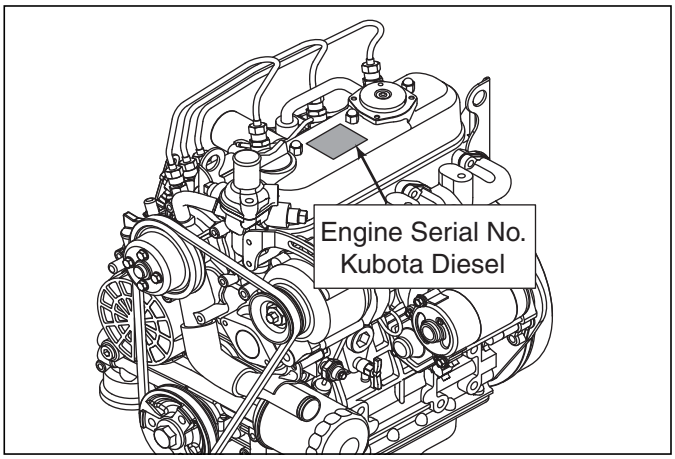

Suggested Stocking Guide

To Keep your Equipment fully operational and productive, Jacobsen suggests you maintain a stock of the more commonly used maintenance items. We have included part numbers for additional support materials and training aids.

To order any of the following material:

1. Write your full name and complete address on your order form.
2. Explain where and how to make shipment:
   - ❑ UPS
   - ❑ Regular Mail
   - ❑ Overnight
   - ❑ 2nd Day
3. Order by the quantity desired, the part number, and the description of the part.
4. Send or bring the order to your authorized Jacobsen Dealer.

Service Parts

Qty.	Part No.	Description	Qty.	Part No.	Description
	4183636	Upper Gasket Kit		4183637	Lower Gasket Kit
	4177262	Oil Filter Cartridge (Engines A C D E F)		4113986	Oil Filter Cartridge (Engine B)
	550489	Fuel Filter Element (Engines A B D F)		5000809	Fuel Filter Element (Engines C E)
	5001284	V-Belt (Engines A D F)		4176550	V-Belt (Engines C E)

Proposition 65 Warning

This product contains or emits chemicals known to State of California to cause cancer and birth defects or other reproductive harm.

© 2008, Jacobsen, a Textron Company/Textron Innovations Inc.
"All rights reserved, including the right to reproduce this material or portions thereof in any form."

LITHO IN U.S.A. 9-2014

https://truckmanualshub.com/

Table of Contents

1.1 ..... Gasket Kits 4
2.1 ..... Crankcase 6
3.1 ..... Oil Pan 8
4.1 ..... Cylinder Head 10
5.1 ..... Gearcase 12
6.1 ..... Gearcase 14
7.1 ..... Gearcase 16
8.1 ..... Head Cover 18
9.1 ..... Oil Filter 20
10.1 ..... Dipstick and Guide 22
11.1 ..... Main Bearing Case 24
12.1 ..... Piston and Crankshaft 26
13.1 ..... Flywheel 28
14.1 ..... Camshaft and Idle Gear 30
15.1 ..... Fuel Camshaft and Governor 32
16.1 ..... Idle Apparatus 34
17.1 ..... Injection Pump 36
18.1 ..... Governor 38
19.1 ..... Speed Control Plate 40
20.1 ..... Nozzle Holder and Glow Plug 42
21.1 ..... Fuel Filter and Pump 44
22.1 ..... Alternator and Pulleys 46
23.1 ..... Alternator 48
24.1 ..... Starter 50
25.1 ..... Water Flange and Thermostat 52
26.1 ..... Water Pump 54
27.1 ..... Valve and Rocker Arm 56
28.1 ..... Intake and Exhaust Manifolds 58
29.1 ..... Turbo Charger 60
30.1 ..... Turbo Charger Oil Pipes 62
31.1 ..... Turbo Engine Oil Cooler 64
32.1 ..... Miscellaneous 66

https://truckmanualshub.com/

1.1 Gasket Kits

Serial No. All

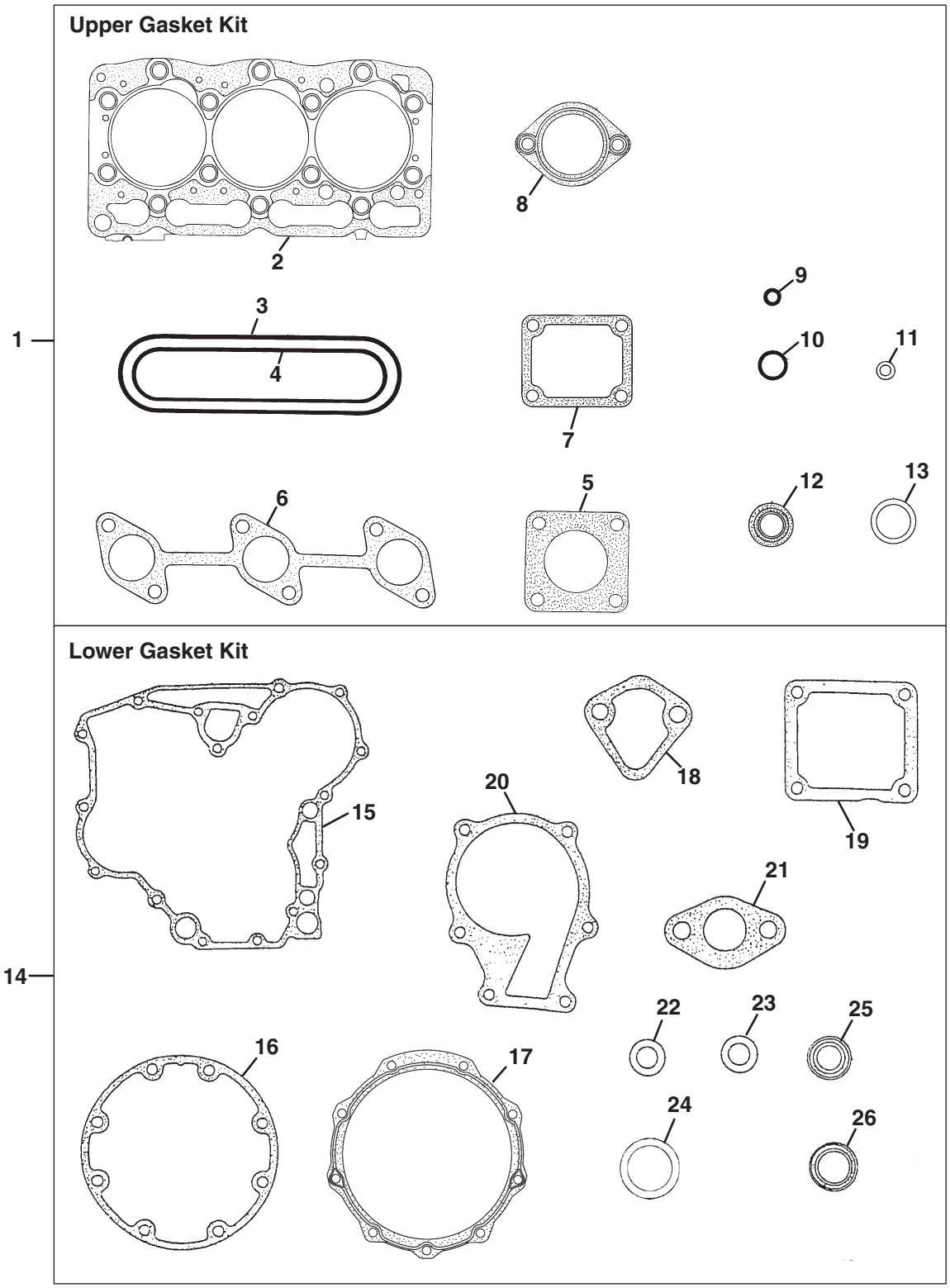

https://truckmanualshub.com/

Engine	Item	Part No.	Qty.	Description	Serial Numbers/Notes
●	1	4183636	1	Upper Gasket Kit	
●	2	4183581	1	• Gasket, Cylinder Head	
●	3	2500856	1	• Gasket, Head Cover	
ABCF	4	2500854	1	• Gasket, Intake Manifold	
BCDE	5	553020	1	• Gasket, Muffler NA	
●	6	5001262	1	• Gasket, Exhaust Manifold	
●	7	5001273	1	• Gasket, Water Flange	
●	8	4134370	1	• Gasket, Thermostat	
●	9	557352	3	• Seal, Heat	
●	10	2809955	1	• O Ring, Oil Cap	
●	11	550839	3	• Gasket, Head Cover Nut	
●	12	2500923	6	• Seal, Valve Stem	
●	13	554051	3	• Gasket, Nozzle Holder	
●	14	4183637	1	Lower Gasket Kit	
●	15	5001269	1	• Gasket, Gear Case	
●	16	2500824	1	• Gasket, Bearing Case	
●	17	5001270	1	• Gasket, Bearing Case Cover	
●	18	5001922	1	• Gasket, Fuel Pump Cover	
●	19	5001272	1	• Gasket, Speed Control Plate	
ABDF	20	557867	1	• Gasket, Water Pump	
●	21	2500845	1	• Gasket, Governor	
●	22	553143	6	• Gasket	
●	23	2500811	1	• Oil Plug Gasket	
CE	24	4183640	1	• Oil Plug Gasket	
●	25	2500902	1	• Seal, Gear Case Oil	
●	26	2500825	1	• Seal, Rear Crankshaft Oil	
The following parts are not included in the standard Kubota Gasket Kits and will need to be ordered separately.					
DE	4	5003603	1	Gasket, Intake Manifold	
AF	5	5003476	1	Gasket, Muffler NA	
CE	20	4183698	1	Gasket, Water Pump	

A - SLF 1880 (D1105-E3B-TXRN-1)
B - Truckster / Haulster / Spraytek (D1105-E3B-TXRN-2)
C - TR-3 (D1105-E3B-RNUK-3)
D - SLF 1880 Turbo (D1105-T-E3B-TXRN-1)
E - AR-3 (D1105-E3B-RNUK-3)
F - LF510 / Turfcat (69180 S/N 1620~1650) (D1105-E3B-TXN-3)
● - Used on All Engines

> Change from previous revision

https://truckmanualshub.com/

2.1 Crankcase

Serial No. All

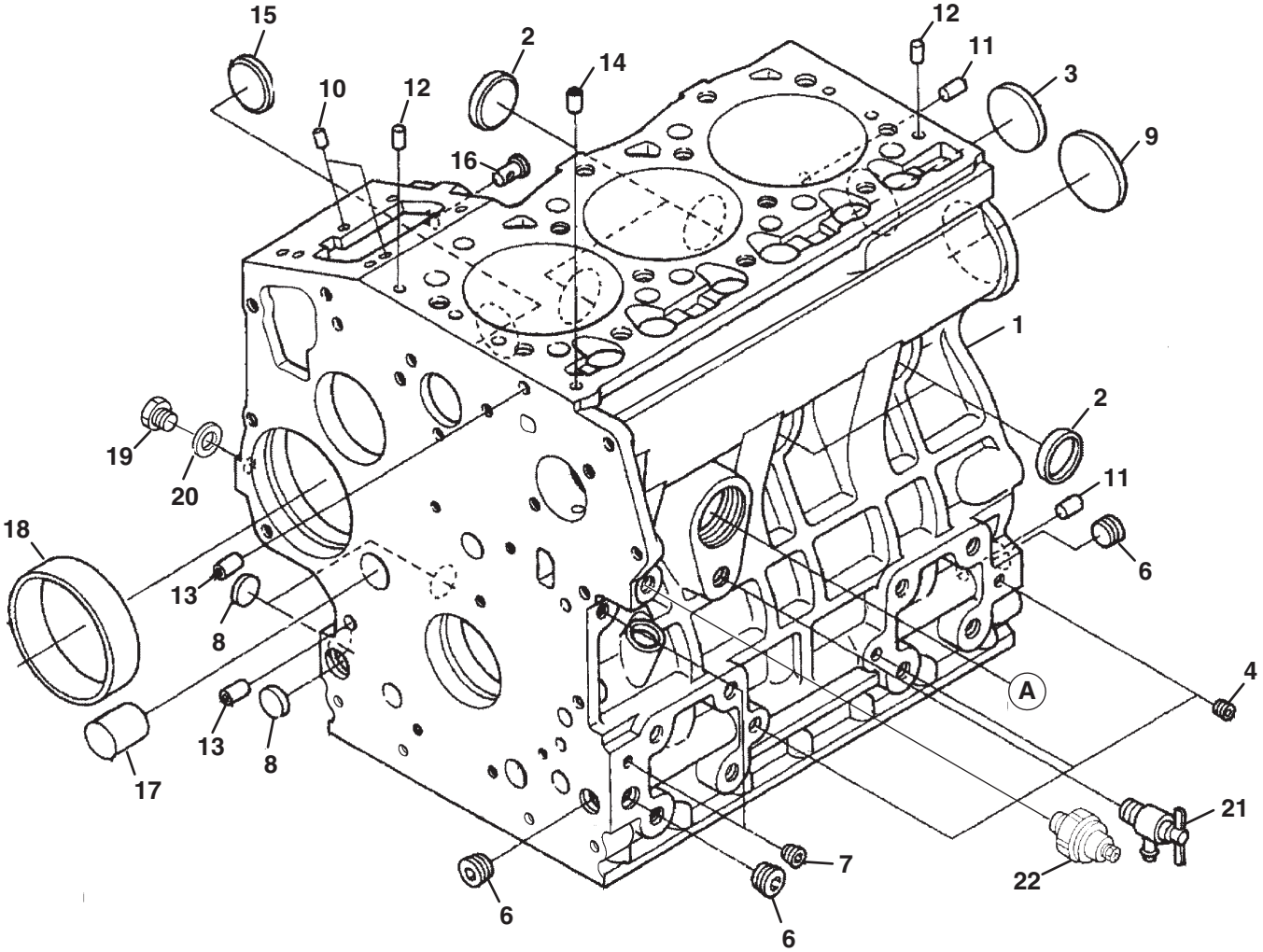

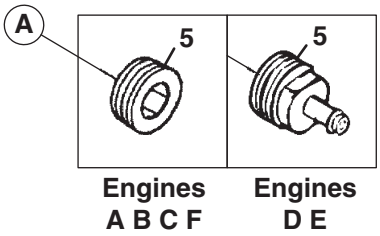

https://truckmanualshub.com/

Engine	Item	Part No.	Qty.	Description	Serial Numbers/Notes
ABCF	1	4145910	1	Comp. Crankcase	
DE	1	4183593	1	• Comp. Crankcase	
●	2	553911	4	• Cap, Sealing	
●	3	552977	1	• Cap, Sealing	
●	4	552978	3	• Plug	
ABCF	5	2500874	1	• Plug	
DE	5	5002800	1	• Joint, Drain Pipe	
●	6	2500875	3	• Plug	
●	7	552950	2	• Plug	
●	8	5001308	3	• Plug, Expansion	
●	9	2500877	1	• Plug, Expansion	
●	10	553857	2	• Pin, Straight	
●	11	550424	2	• Pin, Straight	
●	12	2500878	2	• Pin, Straight	
●	13	550543	2	• Pin, Pipe	
●	14	2500879	1	• Pin, Pipe	
●	15	2500880	1	• Plug	
●	16	2500881	1	• Pin, Start Spring	
●	17	2500882	1	• Plug	
●	18	2500883	1	• Bush, Governor Gear	
●	19	552957	1	• Plug	
●	20	552958	1	• Gasket	
●	21	554084	1	Assy Cock, Drain	
●	22	554018	1	Switch, Oil	

A - SLF 1880 (D1105-E3B-TXRN-1)
B - Truckster / Haulster / Spraytek (D1105-E3B-TXRN-2)
C - TR-3 (D1105-E3B-RNUK-3)
D - SLF 1880 Turbo (D1105-T-E3B-TXRN-1)
E - AR-3 (D1105-E3B-RNUK-3)
F - LF510 / Turfcat (69180 S/N 1620~1650) (D1105-E3B-TXN-3)
● - Used on All Engines

> Change from previous revision

https://truckmanualshub.com/

3.1 Oil Pan

Serial No. All

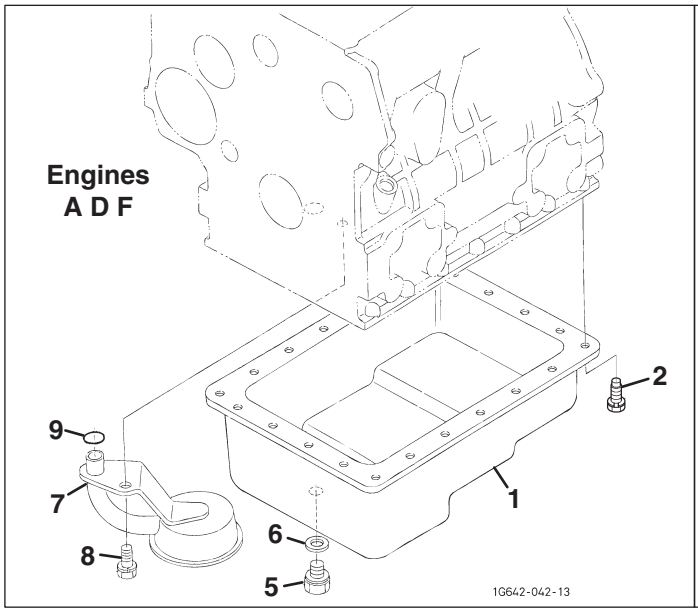

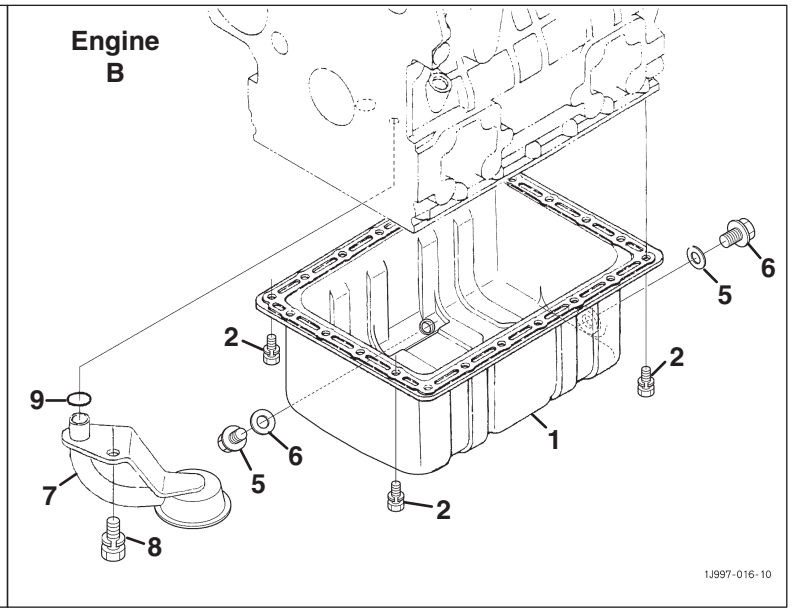

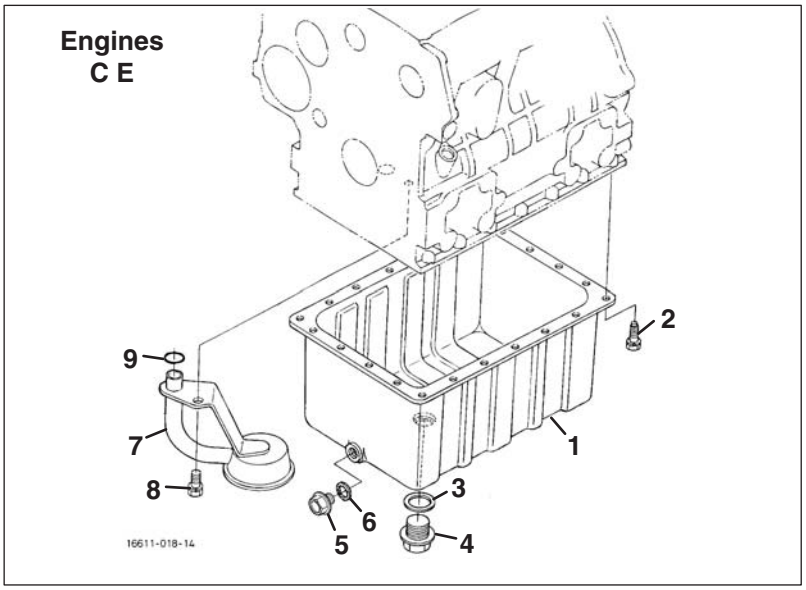

https://truckmanualshub.com/

Engine	Item	Part No.	Qty.	Description	Serial Numbers/Notes
ADF	1	2500822	1	Comp. Oil Pan	
B	1	4183605	1	Comp. Oil Pan	
CE	1	4183638	1	Comp. Oil Pan	
ACDEF	2	4165443	22	Bolt	
B	2	550361	22	Bolt	
CE	3	4134176	1	Plug, Drain	
CE	4	4183640	1	Gasket	
ACDEF	5	4177260	1	Plug, Drain	
B	5	4177260	2	Plug, Drain	
ACDEF	6	2500811	1	Gasket	
B	6	2500811	2	Gasket	
ADF	7	5001303	1	Filter, Oil	
B	7	2500859	1	Filter, Oil	
CE	7	2811988	1	Filter, Oil	
●	8	550376	1	Bolt	
●	9	553855	1	O Ring	

A - SLF 1880 (D1105-E3B-TXRN-1)
B - Truckster / Haulster / Spraytek (D1105-E3B-TXRN-2)
C - TR-3 (D1105-E3B-RNUK-3)
D - SLF 1880 Turbo (D1105-T-E3B-TXRN-1)
E - AR-3 (D1105-E3B-RNUK-3)
F - LF510 / Turfcat (69180 S/N 1620~1650) (D1105-E3B-TXN-3)
● - Used on All Engines

> Change from previous revision

https://truckmanualshub.com/

4.1 Cylinder Head

Serial No. All

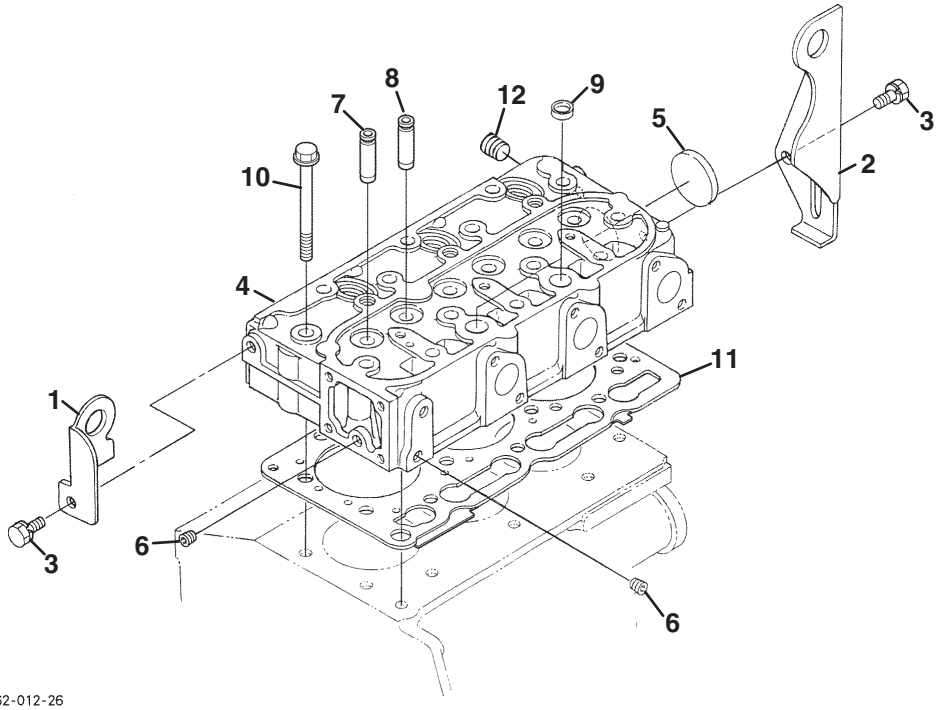

https://truckmanualshub.com/

Engine	Item	Part No.	Qty.	Description	Serial Numbers/Notes
●	1	2500886	1	Hook, Engine	
●	2	2500887	1	Hook, Engine	
●	3	594330	2	Bolt	
ABCF	4	4183580	1	Comp. Cylinder Head	
D	4	4183594	1	Comp. Cylinder Head	
E	4	4183723	1	Comp. Cylinder Head	
●	5	550673	1	• Cap, Sealing	
●	6	552978	2	• Plug	
●	7	4145830	3	• Guide, Inlet Valve	
●	8	4145831	3	• Guide, Exhaust Valve	
●	9	2500888	2	• Cap, Sealing	
●	10	2500889	14	Bolt, Cylinder Head	
●	11	4183581	1	Gasket, Cylinder Head	
●	12	554115	1	Plug	

A - SLF 1880 (D1105-E3B-TXRN-1)
B - Truckster / Haulster / Spraytek (D1105-E3B-TXRN-2)
C - TR-3 (D1105-E3B-RNUK-3)
D - SLF 1880 Turbo (D1105-T-E3B-TXRN-1)
E - AR-3 (D1105-E3B-RNUK-3)
F - LF510 / Turfcat (69180 S/N 1620~1650) (D1105-E3B-TXN-3)
● - Used on All Engines

> Change from previous revision

https://truckmanualshub.com/

5.1 Gearcase

Serial No. All

LF510, SLF 1880 and SLF 1880 Turbo Engines

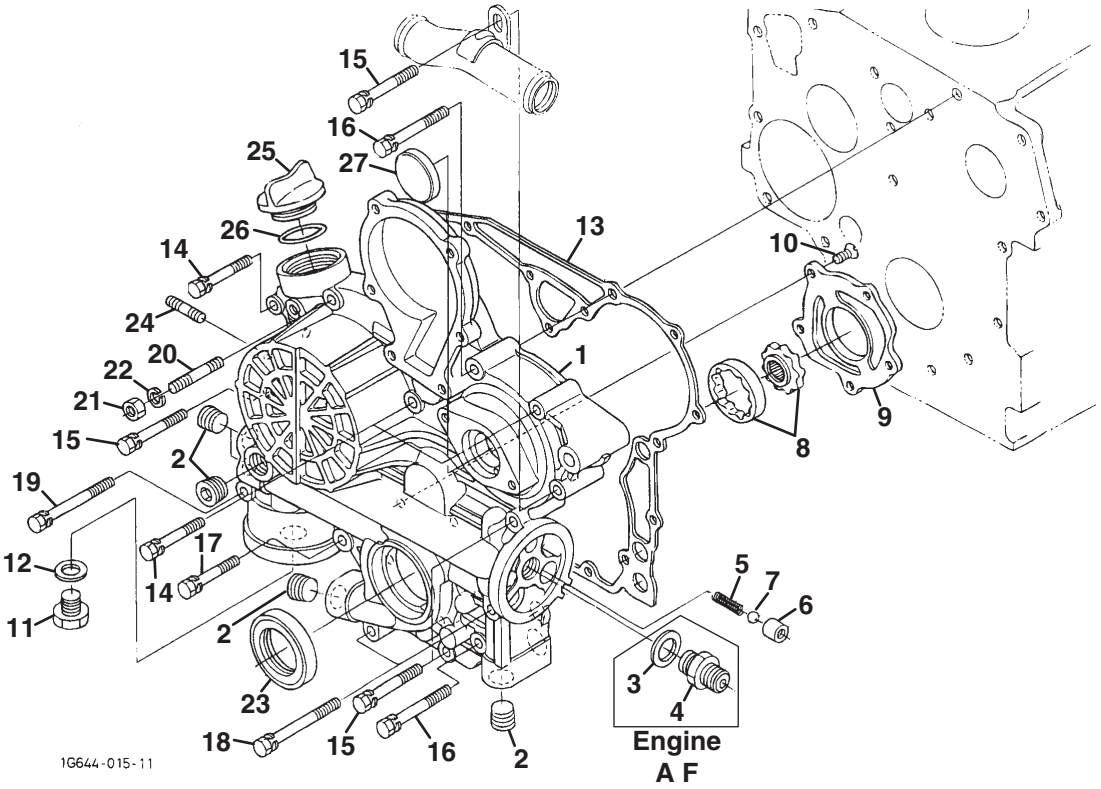

https://truckmanualshub.com/

Engine	Item	Part No.	Qty.	Description	Serial Numbers/Notes
AF	1	557856	1	Comp. Case,gear	
D	1	4177230	1	Comp. Case,gear	
ADF	2	5001255	5	• Plug	
AF	3	594351	1	• Washer, Plain	
AF	4	2500892	1	• Joint, Pipe	
ADF	5	2500893	1	• Spring	
ADF	6	2500894	1	• Seat, Valve	
ADF	7	2500895	1	• Ball	
ADF	8	2500896	1	• Assy Rotor, Oil Pump	
ADF	9	5001256	1	• Cover, Oil Pump	
ADF	10	2500898	5	• Screw, Csk-hd	
ADF	11	557859	1	Plug	
ADF	12	557960	1	Packing, Plug	
ADF	13	5001269	1	Gasket, Gear Case	
ADF	14	553481	3	Bolt	
ADF	15	5001875	4	Bolt	
ADF	16	2500899	2	Bolt	
ADF	17	554097	1	Bolt	
ADF	18	2500900	2	Bolt	
ADF	19	557891	1	Bolt	
ADF	20	2500901	1	Stud	
ADF	21	550395	1	Nut	
ADF	22	5001160	1	Washer, Spring	
ADF	23	2500902	1	Seal, Oil	
ADF	24	550386	2	Stud	
ADF	25	4145944	1	Plug, Oil Filler	
ADF	26	2809955	1	O Ring	
AD	27	5001276	1	Cover, Gear Case	

A - SLF 1880 (D1105-E3B-TXRN-1)
B - Truckster / Haulster / Spraytek (D1105-E3B-TXRN-2)
C - TR-3 (D1105-E3B-RNUK-3)
D - SLF 1880 Turbo (D1105-T-E3B-TXRN-1)
E - AR-3 (D1105-E3B-RNUK-3)
F - LF510 / Turfcat (69180 S/N 1620~1650) (D1105-E3B-TXN-3)
● - Used on All Engines

> Change from previous revision

https://truckmanualshub.com/

6.1 Gearcase

Truckster, Haulster and Spraytek Engines

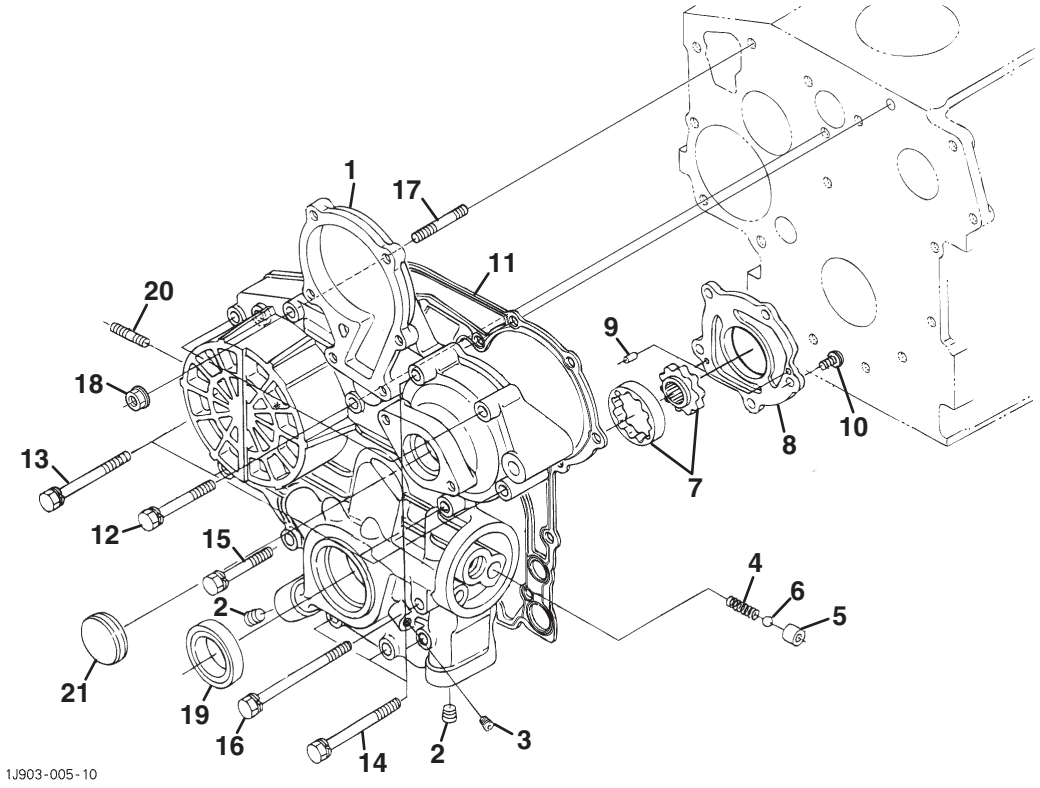

https://truckmanualshub.com/

Engine	Item	Part No.	Qty.	Description	Serial Numbers/Notes
B	1	4183607	1	Comp. Case,gear	
B	2	5001255	2	• Plug	
B	3	552950	1	• Plug	
B	4	2500893	1	• Spring	
B	5	2500894	1	• Seat, Valve	
B	6	2500895	1	• Ball	
B	7	2500896	1	• Assy Rotor, Oil Pump	
B	8	4183608	1	• Cover, Oil Pump	
B	9	4183609	2	• Pin, Straight	
B	10	4183610	5	• Screw, Binding	
B	11	5001269	1	Gasket, Gear Case	
B	12	553481	3	Bolt	
B	13	5001875	4	Bolt	
B	14	2500899	4	Bolt	
B	15	4183611	1	Bolt	
B	16	2500900	2	Bolt	
B	17	2500901	1	Stud	
B	18	2810647	1	Nut, Flange	
B	19	2500902	1	Seal, Oil	
B	20	550386	2	Stud	
B	21	5001276	1	Cover, Gear Case	

A - SLF 1880 (D1105-E3B-TXRN-1)
B - Truckster / Haulster / Spraytek (D1105-E3B-TXRN-2)
C - TR-3 (D1105-E3B-RNUK-3)
D - SLF 1880 Turbo (D1105-T-E3B-TXRN-1)
E - AR-3 (D1105-E3B-RNUK-3)
F - LF510 / Turfcat (69180 S/N 1620~1650) (D1105-E3B-TXN-3)
● - Used on All Engines

> Change from previous revision

https://truckmanualshub.com/

7.1 Gearcase

TR-3 and AR-3 Engines

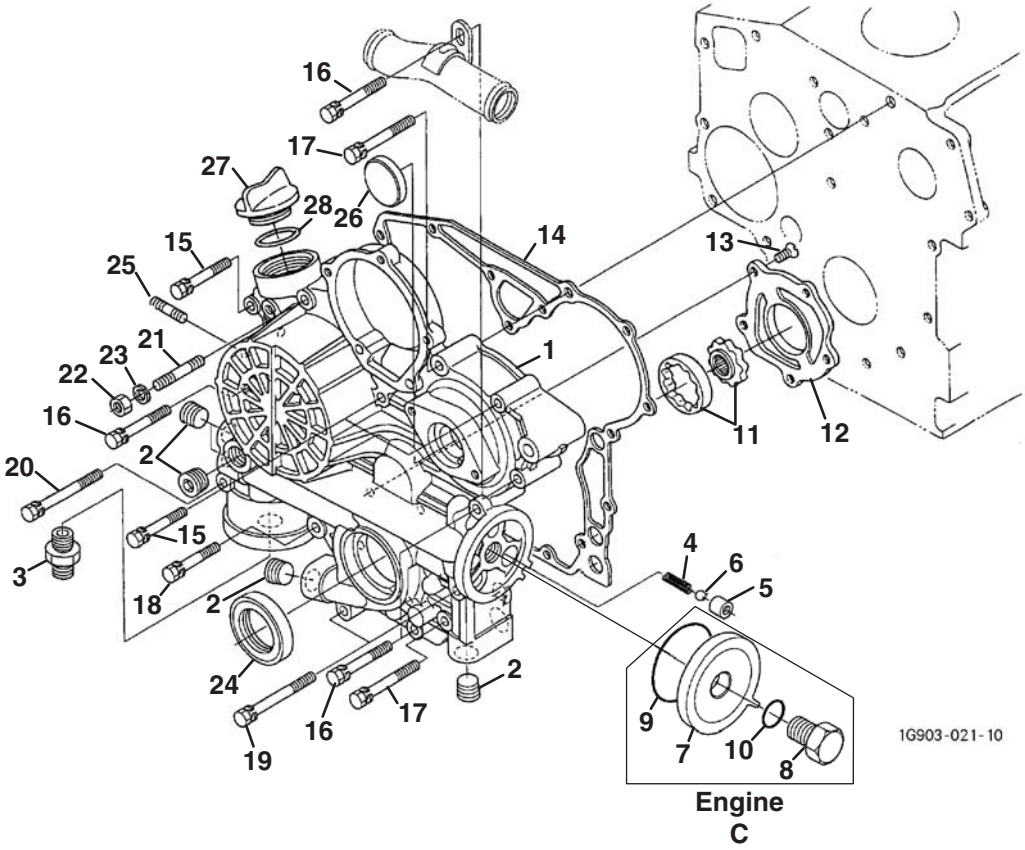

https://truckmanualshub.com/

Engine	Item	Part No.	Qty.	Description	Serial Numbers/Notes
C	1	4183681	1	Comp. Case,gear	
E	1	4183700	1	Comp. Case,gear	
CE	2	5001255	5	• Plug	
CE	3	2500892	1	• Joint, Pipe	
CE	4	2500893	1	• Spring	
CE	5	2500894	1	• Seat, Valve	
CE	6	2500895	1	• Ball	
C	7	4183683	1	• Cover	
C	8	4183684	1	• Bolt	
C	9	5002751	1	• O Ring	
C	10	2809954	1	• O Ring	
CE	11	2500896	1	• Assy Rotor, Oil Pump	
CE	12	5001256	1	• Cover, Oil Pump	
CE	13	2500898	5	• Screw, Csk-hd	
CE	14	5001269	1	Gasket, Gear Case	
CE	15	553481	3	Bolt	
CE	16	5001875	4	Bolt	
CE	17	2500899	2	Bolt	
CE	18	554097	1	Bolt	
CE	19	2500900	2	Bolt	
CE	20	557891	1	Bolt	
CE	21	2500901	1	Stud	
CE	22	550395	1	Nut	
CE	23	5001160	1	Washer, Spring	
CE	24	2500902	1	Seal, Oil	
CE	25	550386	2	Stud	
CE	26	5001276	1	Cover, Gear Case	
CE	27	4145944	1	Plug, Oil Filler	
CE	28	2809955	1	O Ring	

A - SLF 1880 (D1105-E3B-TXRN-1)
B - Truckster / Haulster / Spraytek (D1105-E3B-TXRN-2)
C - TR-3 (D1105-E3B-RNUK-3)
D - SLF 1880 Turbo (D1105-T-E3B-TXRN-1)
E - AR-3 (D1105-E3B-RNUK-3)
F - LF510 / Turfcat (69180 S/N 1620~1650) (D1105-E3B-TXN-3)
● - Used on All Engines

> Change from previous revision

https://truckmanualshub.com/

8.1 Head Cover

Serial No. All

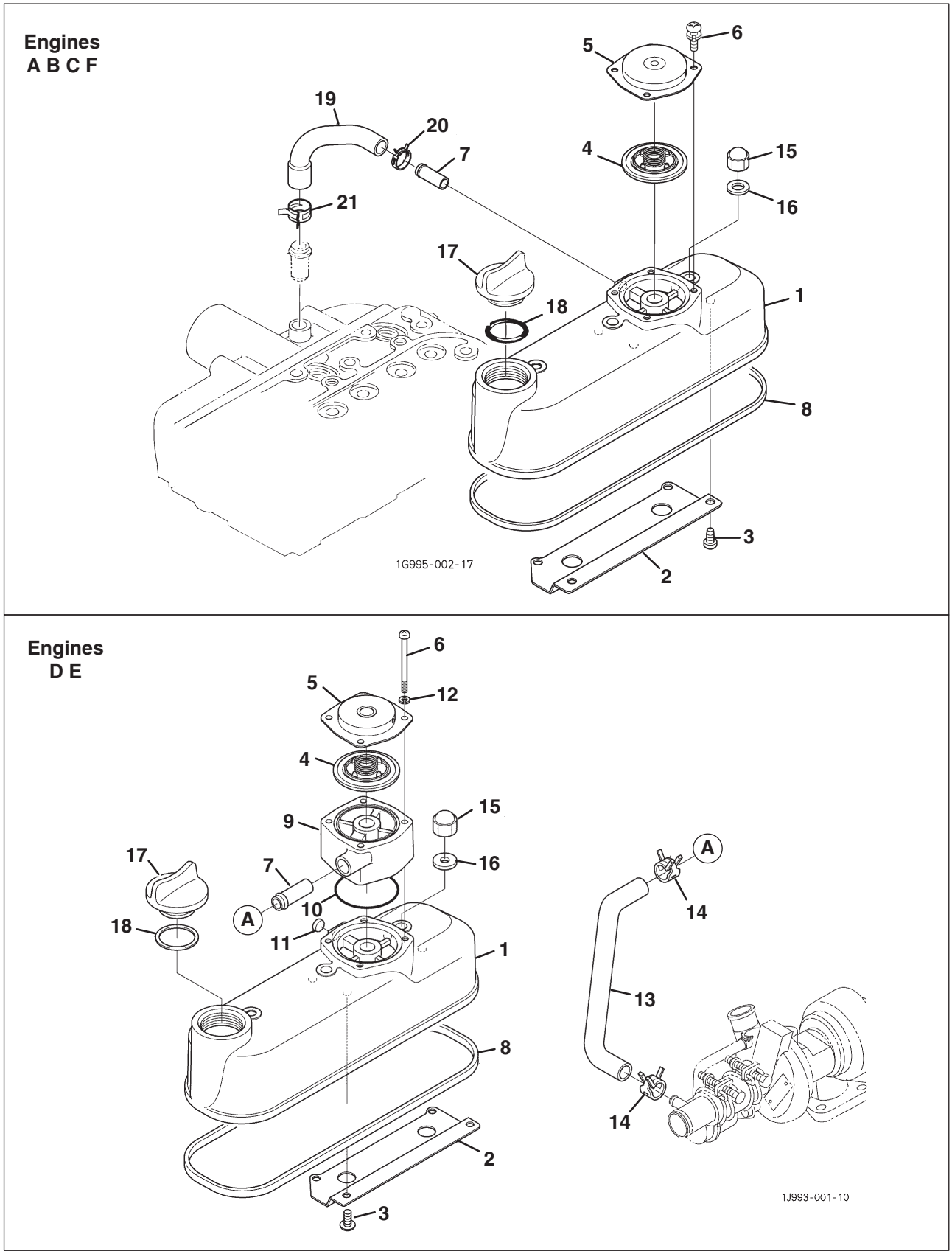

https://truckmanualshub.com/

Engine	Item	Part No.	Qty.	Description	Serial Numbers/Notes
ABCF	1	4165656	1	Assy Cover, Cyl.head	
DE	1	4183597	1	Assy Cover, Cyl.head	
●	2	NS	1	Shield, Breather	
●	3	NS	4	Bolt	
●	4	4145912	1	Comp. Valve,breather	
●	5	4145911	1	Cover, Breather	
ABCF	6	4165421	4	Screw, with Washer	
DE	6	4177234	4	Screw, Pan Head	
●	7	4134204	1	Pipe, Water Return	
●	8	2500856	1	Gasket, Head Cover	
DE	9	4177233	1	Spacer, Breather	
DE	10	4177232	1	O Ring, Breather	
DE	11	553912	1	Cap, Sealing	
DE	12	4145652	4	Washer, Spring	
DE	13	4183596	1	Tube, Breather Turbo	
DE	14	4165526	2	Clamp, Hose	
●	15	550838	3	Nut	
●	16	550839	3	Gasket	
●	17	4145944	1	Plug, Oil Filler	
●	18	2809955	1	O Ring	
ABCF	19	4165655	1	Tube, Breather	
ABCF	20	4134199	1	Clamp, Hose	
ABCF	21	4165526	1	Clamp, Hose	

A - SLF 1880 (D1105-E3B-TXRN-1)
B - Truckster / Haulster / Spraytek (D1105-E3B-TXRN-2)
C - TR-3 (D1105-E3B-RNUK-3)
D - SLF 1880 Turbo (D1105-T-E3B-TXRN-1)
E - AR-3 (D1105-E3B-RNUK-3)
F - LF510 / Turfcat (69180 S/N 1620~1650) (D1105-E3B-TXN-3)
● - Used on All Engines

> Change from previous revision

https://truckmanualshub.com/

9.1 Oil Filter

Serial No. All

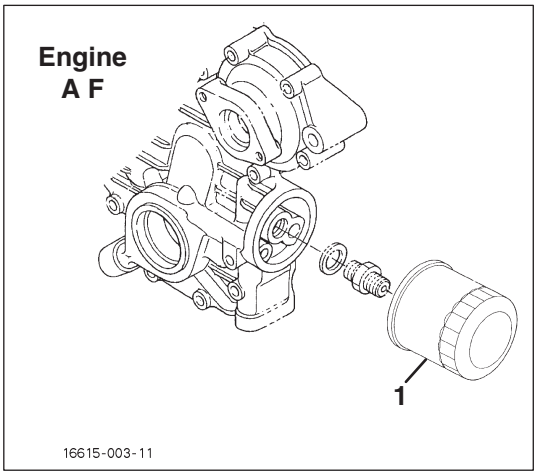

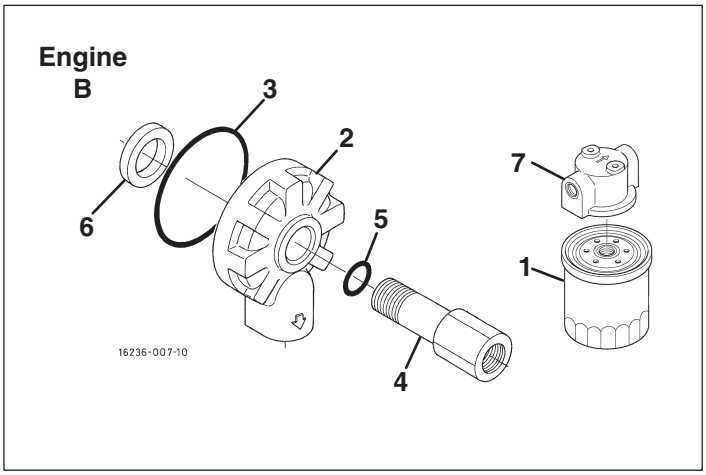

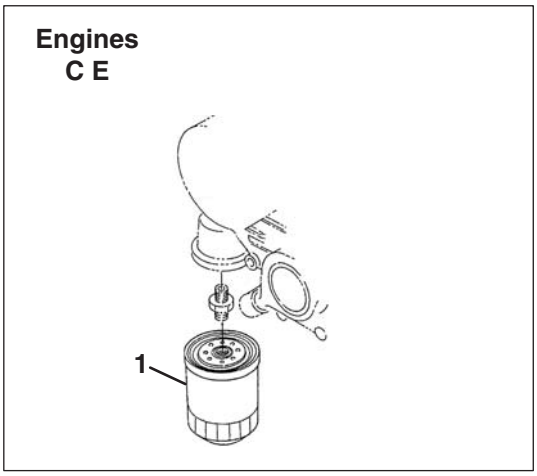

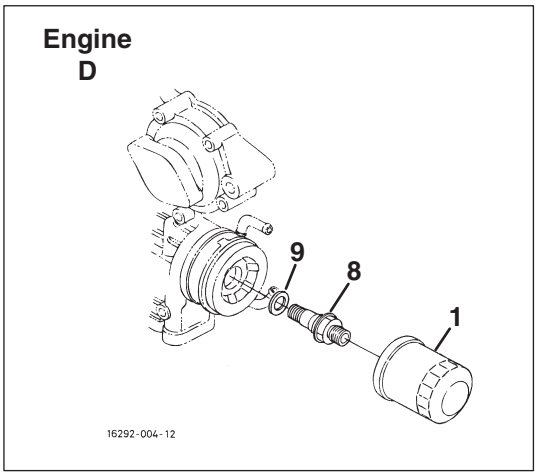

https://truckmanualshub.com/

Engine	Item	Part No.	Qty.	Description	Serial Numbers/Notes
ACDEF	1	4177262	1	Oil Filter	
B	1	4113986	1	Oil Filter	
B	2	4183612	1	Base, Oil Filter	
B	3	5002751	1	O Ring	
B	4	4183613	1	Joint, Pipe	
B	5	2809954	1	O Ring	
B	6	4183614	1	Collar	
B	7	4183634	1	Base, Oil Filter	
D	8	5003615	1	Connector	
D	9	5003616	1	Collar	

A - SLF 1880 (D1105-E3B-TXRN-1)
B - Truckster / Haulster / Spraytek (D1105-E3B-TXRN-2)
C - TR-3 (D1105-E3B-RNUK-3)
D - SLF 1880 Turbo (D1105-T-E3B-TXRN-1)
E - AR-3 (D1105-E3B-RNUK-3)
F - LF510 / Turfcat (69180 S/N 1620~1650) (D1105-E3B-TXN-3)
● - Used on All Engines

> Change from previous revision

https://truckmanualshub.com/

10.1 Dipstick and Guide

Serial No. All

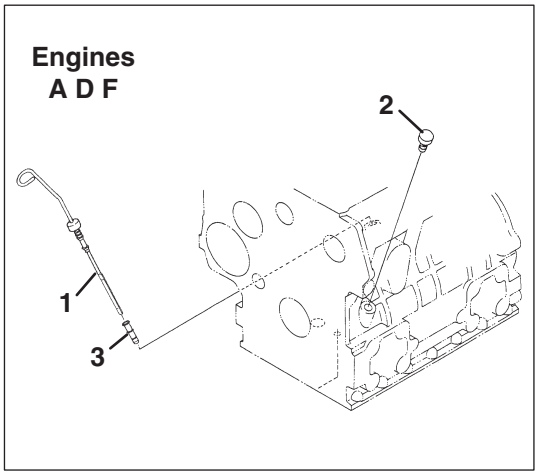

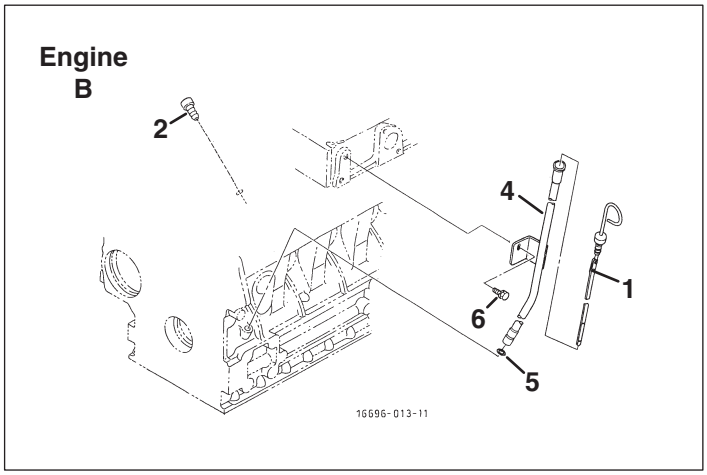

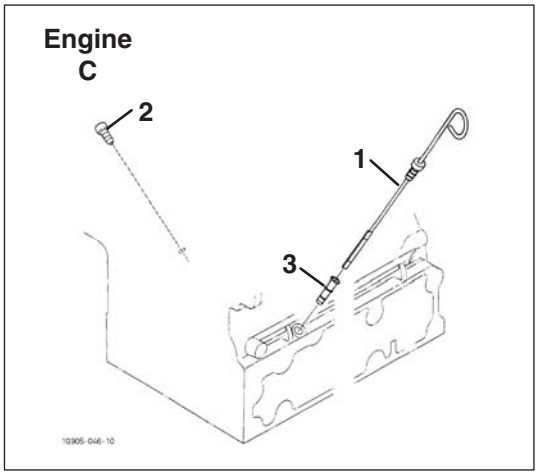

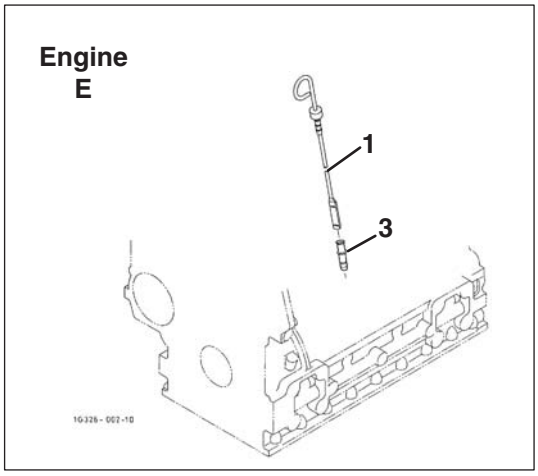

https://truckmanualshub.com/

Engine	Item	Part No.	Qty.	Description	Serial Numbers/Notes
ADF	1	4111661	1	Gauge, Oil	
B	1	5002955	1	Gauge, Oil	
CE	1	4184020	1	Gauge, Oil	
ABCF	2	2812014	1	Plug, Oil Gauge	
ACDEF	3	4111662	1	Guide, Oil Gauge	
B	4	2810877	1	Assembly Guide, Oil Gauge	
B	5	5002033	1	O Ring	
B	6	5001138	1	Bolt	

A - SLF 1880 (D1105-E3B-TXRN-1)
B - Truckster / Haulster / Spraytek (D1105-E3B-TXRN-2)
C - TR-3 (D1105-E3B-RNUK-3)
D - SLF 1880 Turbo (D1105-T-E3B-TXRN-1)
E - AR-3 (D1105-E3B-RNUK-3)
F - LF510 / Turfcat (69180 S/N 1620~1650) (D1105-E3B-TXN-3)
● - Used on All Engines

> Change from previous revision

https://truckmanualshub.com/

11.1 Main Bearing Case

Serial No. All

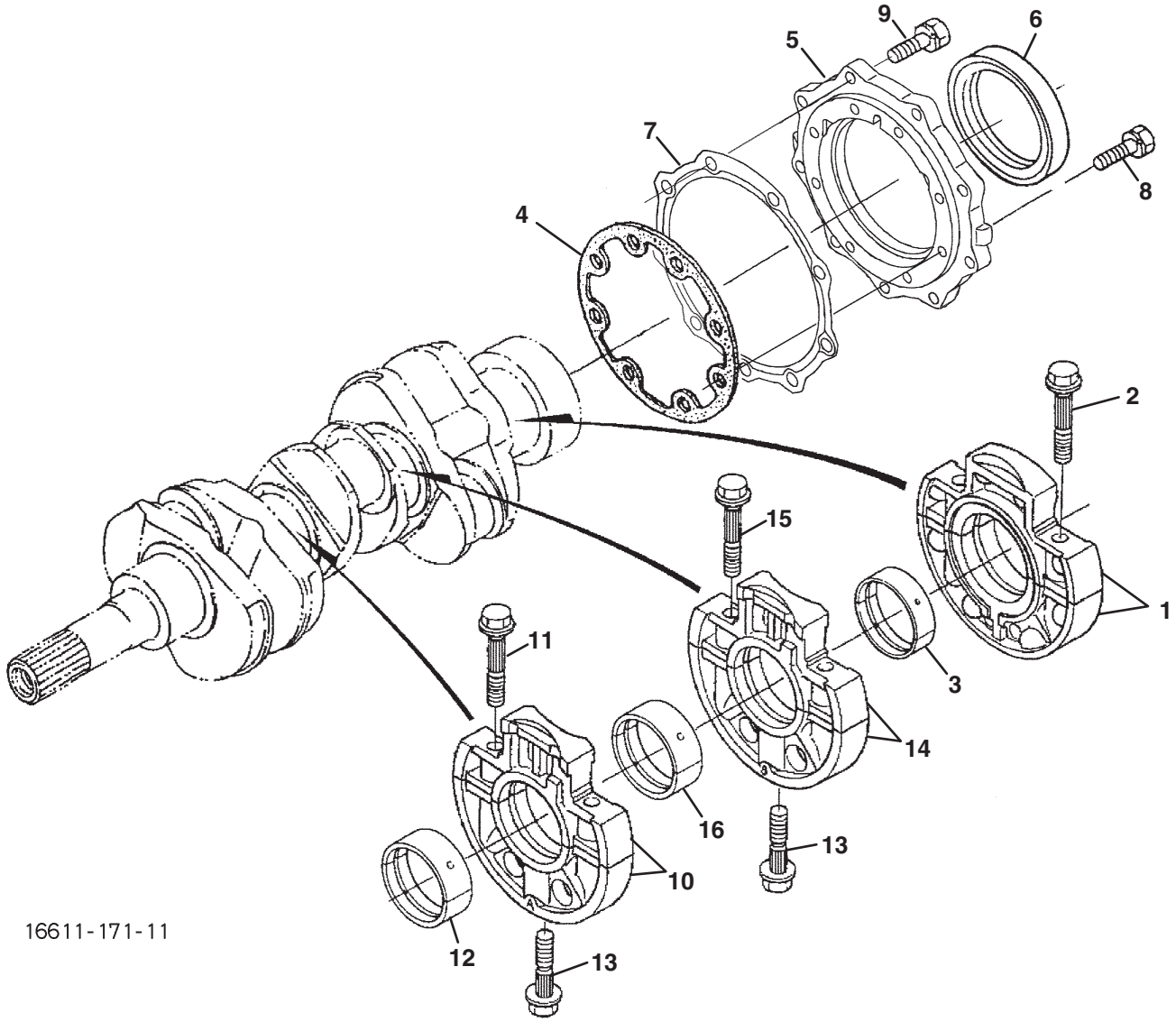

https://truckmanualshub.com/

	Engine	Item	Part No.	Qty.	Description	Serial Numbers/Notes
	●	1	4177263	1	Assy Brg. Case, Wheel	
	●	2	2500905	2	• Bolt, Bearing Case	
▼	●	3	2500838	1	• Metal, Crankshaft	STD Set
■	●	3	2500839	1	Metal, Crankshaft	-0.20 mm Set
◆	●	3	2500840	1	Metal, Crankshaft	-0.40 mm Set
	●	4	2500824	1	Gasket, Brg. Case	
	●	5	5001241	1	Cover, Bearing Case	
	●	6	2500825	1	Seal, Oil	
	●	7	5001270	1	Gasket, Case Cover	
	●	8	550365	8	Bolt	
	●	9	550364	9	Bolt	
	ABCF	10	4177223	1	Assy Brg. Case, Main	
	DE	10	4177237	1	Assy Brg. Case, Main	
	●	11	2500905	2	• Bolt, Bearing Case	
▲	**ABCF**	12	2500837	1	• Metal, Crankshaft	STD Set
	DE	12	2809968	1	• Metal, Crankshaft	STD Set
■	**ABCF**	12	2500843	1	Metal, Crankshaft	-0.20 mm Set
	DE	12	2809969	1	Metal, Crankshaft	-0.20 mm Set
◆	**ABCF**	12	2500844	1	Metal, Crankshaft	-0.40 mm Set
	DE	12	2809970	1	Metal, Crankshaft	-0.40 mm Set
	●	13	2500908	2	Bolt, Bearing Case	
	ABCF	14	4177224	1	Assy Brg. Case, Main	
	DE	14	4177238	1	Assy Brg. Case, Main	
	●	15	2500905	2	• Bolt,bearing Case	
▲	**ABCF**	16	2500837	1	• Metal, Crankshaft	STD Set
	DE	16	2809968	1	• Metal, Crankshaft	STD Set
■	**ABCF**	16	2500843	1	Metal, Crankshaft	-0.20 mm Set
	DE	16	2809969	1	Metal, Crankshaft	-0.20 mm Set
◆	**ABCF**	16	2500844	1	Metal, Crankshaft	-0.40 mm Set
	DE	16	2809970	1	Metal, Crankshaft	-0.40 mm Set

▲	Included in STD Engine Metal Kit, See 12.1
■	Included in -0.20 mm Engine Metal Kit, See 12.1
◆	Included in -0.40 mm Engine Metal Kit, See 12.1

A - SLF 1880 (D1105-E3B-TXRN-1)
B - Truckster / Haulster / Spraytek (D1105-E3B-TXRN-2)
C - TR-3 (D1105-E3B-RNUK-3)
D - SLF 1880 Turbo (D1105-T-E3B-TXRN-1)
E - AR-3 (D1105-E3B-RNUK-3)
F - LF510 / Turfcat (69180 S/N 1620~1650) (D1105-E3B-TXN-3)
● - Used on All Engines

> Change from previous revision

https://truckmanualshub.com/

12.1 Piston and Crankshaft

Serial No. All

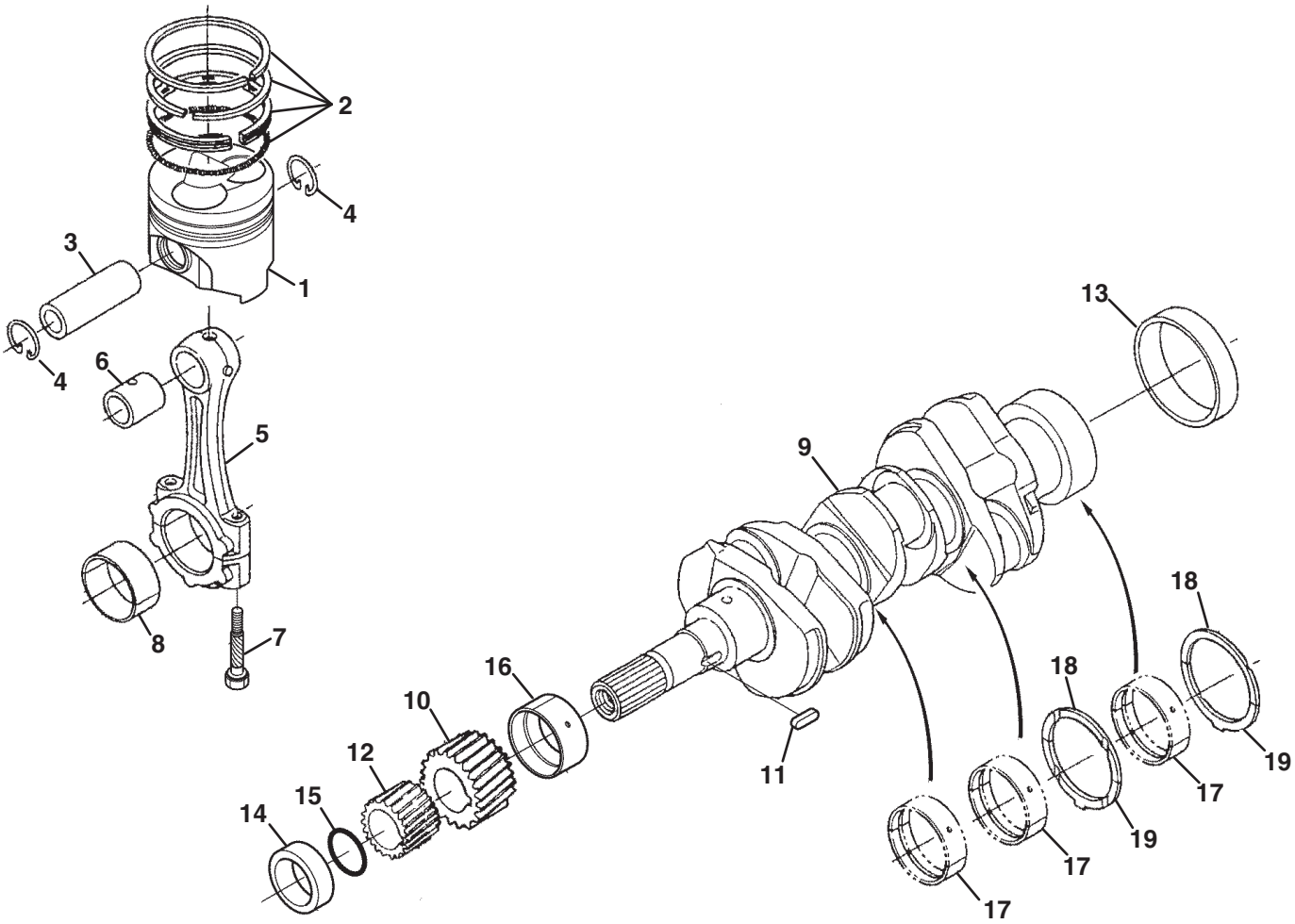

https://truckmanualshub.com/

	Engine	Item	Part No.	Qty.	Description	Serial Numbers/Notes
❖	ABCF	1	5000892	3	Piston	STD
	DE	1	5002740	3	Piston	STD
★	ABCF	1	557883	3	Piston	+0.50 mm
	DE	1	2809959	3	Piston	+0.50 mm
❖	●	2	5002741	3	Assy Piston Ring	STD
★	●	2	2809960	3	Assy Piston Ring	+0.50 mm
❖ ★	●	3	2500831	3	Pin, Piston	
❖ ★	●	4	2500832	6	Cir Clip, Piston Pin	
	ABCF	5	4177226	3	Assy Rod, Connecting	
	DE	5	5002742	3	Assy Rod, Connecting	
❖ ★	●	6	2500949	3	Bush, Piston Pin	
	●	7	2500950	6	Bolt, Connecting Rod	
▲	ABCF	8	2500834	3	Metal, Crankpin	STD Set
	DE	8	2809961	3	Metal, Crankpin	STD Set
■	ABCF	8	2500951	3	Metal, Crankpin	-0.20 mm Set
	DE	8	2809962	3	Metal, Crankpin	-0.20 mm Set
◆	ABCF	8	2500825	3	Metal, Crankpin	-0.40 mm Set
	DE	8	2809963	3	Metal, Crankpin	-0.40 mm Set
	●	9	5001278	1	Comp. Crankshaft	
	●	10	2500954	1	Gear, Crank	
	●	11	2500955	1	Key	
	●	12	2500953	1	Gear, Oil Pump Drive	
	●	13	555567	1	Sleeve, Crankshaft	
	●	14	2500957	1	Collar, Crankshaft	
	●	15	2809964	1	Ring	
▲	ABCF	16	2500836	1	Metal, Crankshaft	STD Set
	DE	16	2809965	1	Metal, Crankshaft	STD Set
■	ABCF	16	2500841	1	Metal, Crankshaft	-0.20 mm Set
	DE	16	2809966	1	Metal, Crankshaft	-0.20 mm Set
◆	ABCF	16	2500842	1	Metal, Crankshaft	-0.40 mm Set
	DE	16	2809967	1	Metal, Crankshaft	-0.40 mm Set
	●	17	REF	3	Metal, Crankshaft	See 11.1
▲	●	18	553093	2	Metal, Side	STD Set
■	●	18	2500812	2	Metal, Side	-0.20 mm Set
◆	●	18	2500813	2	Metal, Side	-0.40 mm Set
▲	●	19	553094	2	Metal, Side	STD Set
■	●	19	2500868	2	Metal, Side	-0.20 mm Set
◆	●	19	2500869	2	Metal, Side	-0.40 mm Set
❖	ABCF		4183615	1	Kit, Piston-Ring	STD
★	ABCF		4183616	1	Kit, Piston-Ring	+0.50 mm
▲	ABCF		4183617	1	Kit, Engine Metal	STD Set
■	ABCF		4183620	1	Kit, Engine Metal	-0.20 mm Set
◆	ABCF		4183621	1	Kit, Engine Metal	-0.40 mm Set

A - SLF 1880 (D1105-E3B-TXRN-1)
B - Truckster / Haulster / Spraytek (D1105-E3B-TXRN-2)
C - TR-3 (D1105-E3B-RNUK-3)
D - SLF 1880 Turbo (D1105-T-E3B-TXRN-1)
E - AR-3 (D1105-E3B-RNUK-3)
F - LF510 / Turfcat (69180 S/N 1620~1650) (D1105-E3B-TXN-3)
● - Used on All Engines

> Change from previous revision

https://truckmanualshub.com/

13.1 Flywheel

Serial No. All

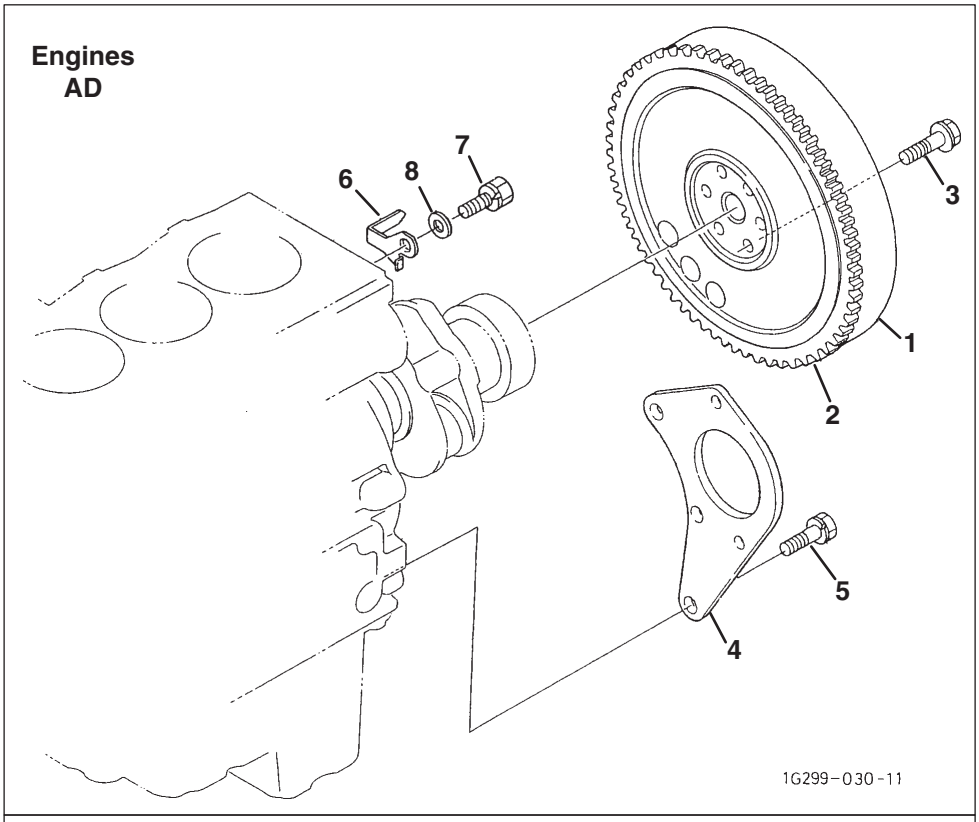

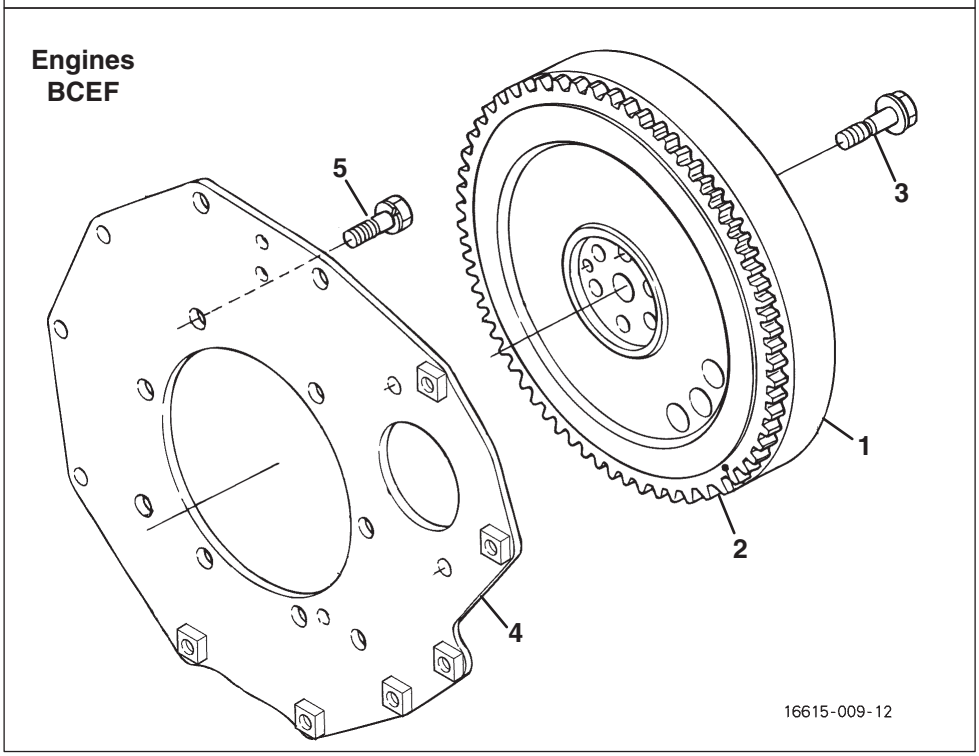

https://truckmanualshub.com/

Engine	Item	Part No.	Qty.	Description	Serial Numbers/Notes
●	1	5001302	1	Comp. Flywheel	
●	2	4177268	1	Gear, Ring	
●	3	555571	6	Bolt, Flywheel	
AD	4	5003470	1	Plate, Rear End	
BCEF	4	2500958	1	Plate, Rear End	
AD	5	2500959	3	Bolt	
BCEF	5	2500959	8	Bolt	
ADF	6	5003472	1	Plate, Timing	
ADF	7	5003473	1	Bolt	
ADF	8	4165422	1	Washer, Plain	

A - SLF 1880 (D1105-E3B-TXRN-1)
B - Truckster / Haulster / Spraytek (D1105-E3B-TXRN-2)
C - TR-3 (D1105-E3B-RNUK-3)
D - SLF 1880 Turbo (D1105-T-E3B-TXRN-1)
E - AR-3 (D1105-E3B-RNUK-3)
F - LF510 / Turfcat (69180 S/N 1620~1650) (D1105-E3B-TXN-3)
● - Used on All Engines

> Change from previous revision

https://truckmanualshub.com/

14.1 Camshaft and Idle Gear

Serial No. All

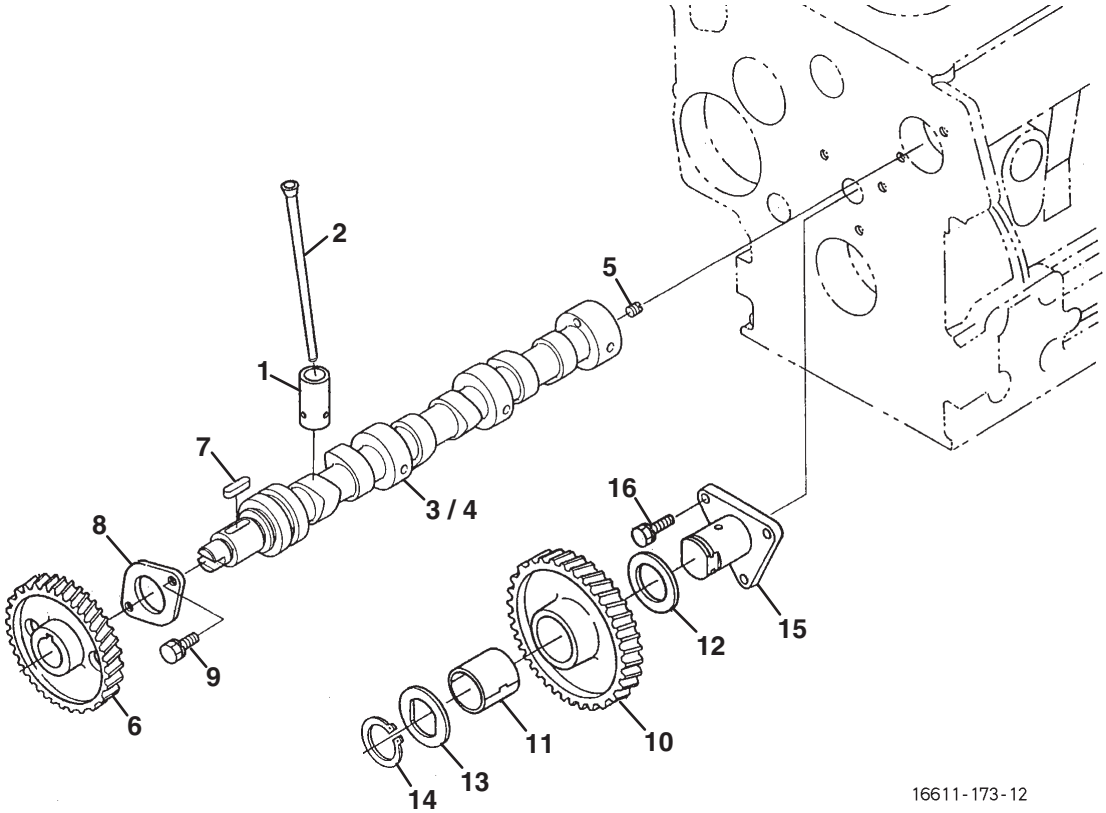

https://truckmanualshub.com/

Engine	Item	Part No.	Qty.	Description	Serial Numbers/Notes
●	1	4177265	6	Tappet	
●	2	2500939	6	Push Rod	
ABCF	3	4183582	1	Assy Camshaft	
DE	3	4183598	1	Assy Camshaft	
DE	4	4183599	1	• Camshaft	
●	5	553067	1	• Screw, Set	
●	6	2500940	1	• Gear, Cam	
●	7	553860	1	• Key, Feather	
●	8	2500941	1	• Stopper, Camshaft	
●	9	550362	2	• Bolt	
●	10	2500942	1	Comp Gear, Idle	
●	11	2500943	1	• Bush, Idle Gear	
●	12	2500944	1	Collar, Idle Gear	
●	13	2500945	1	Collar, Idle Gear	
●	14	2500946	1	Cir Clip, Idle Gear	
●	15	2500947	1	Shaft, Idle Gear	
●	16	550362	3	Bolt	

A - SLF 1880 (D1105-E3B-TXRN-1)
B - Truckster / Haulster / Spraytek (D1105-E3B-TXRN-2)
C - TR-3 (D1105-E3B-RNUK-3)
D - SLF 1880 Turbo (D1105-T-E3B-TXRN-1)
E - AR-3 (D1105-E3B-RNUK-3)
F - LF510 / Turfcat (69180 S/N 1620~1650) (D1105-E3B-TXN-3)
● - Used on All Engines

> Change from previous revision

https://truckmanualshub.com/

15.1 Fuel Camshaft and Governor

Serial No. All

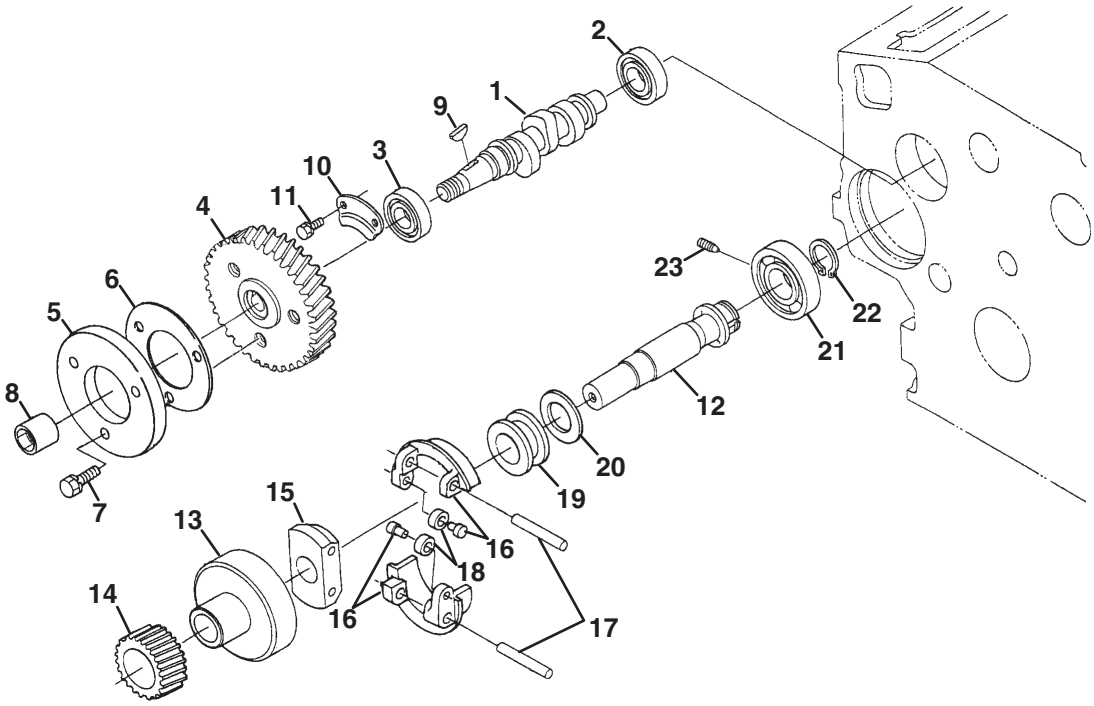

16221-019-13

https://truckmanualshub.com/

Engine	Item	Part No.	Qty.	Description	Serial Numbers/Notes
●	1	5000897	1	Camshaft, Fuel	
●	2	4165622	1	Bearing, Ball	
●	3	4165623	1	Bearing, Ball	
●	4	2500968	1	Gear, Injection Pump	
D	5	2500965	1	Cam, Fuel	
D	6	5001244	1	Washer	
D	7	550363	3	Bolt	
●	8	2500966	1	Nut	
●	9	2500967	1	Key, Woodruff	
●	10	2500969	1	Stopper, Fuel.c/shaft	
●	11	550362	2	Bolt	
●	12	5001279	1	Assy Shaft, Governor	
●	13	5001247	1	Holder, Governor Gear	
●	14	2500972	1	Gear, Governor	
●	15	2500973	1	Holder, Gov. Weight	
●	16	5001246	2	Comp. Weight, Governor	
●	17	2500975	2	Shaft, Gov. Weight	
●	18	5001314	2	Roller	
●	19	2500976	1	Sleeve, Governor	
●	20	5001147	1	Washer, Thrust	
●	21	4165624	1	Bearing, Ball	
●	22	2500979	1	Cir Clip, Gov. Shaft	
●	23	2500980	1	Screw, Set	

A - SLF 1880 (D1105-E3B-TXRN-1)
B - Truckster / Haulster / Spraytek (D1105-E3B-TXRN-2)
C - TR-3 (D1105-E3B-RNUK-3)
D - SLF 1880 Turbo (D1105-T-E3B-TXRN-1)
E - AR-3 (D1105-E3B-RNUK-3)
F - LF510 / Turfcat (69180 S/N 1620~1650) (D1105-E3B-TXN-3)
● - Used on All Engines

> Change from previous revision

https://truckmanualshub.com/

16.1 Idle Apparatus

Serial No. All

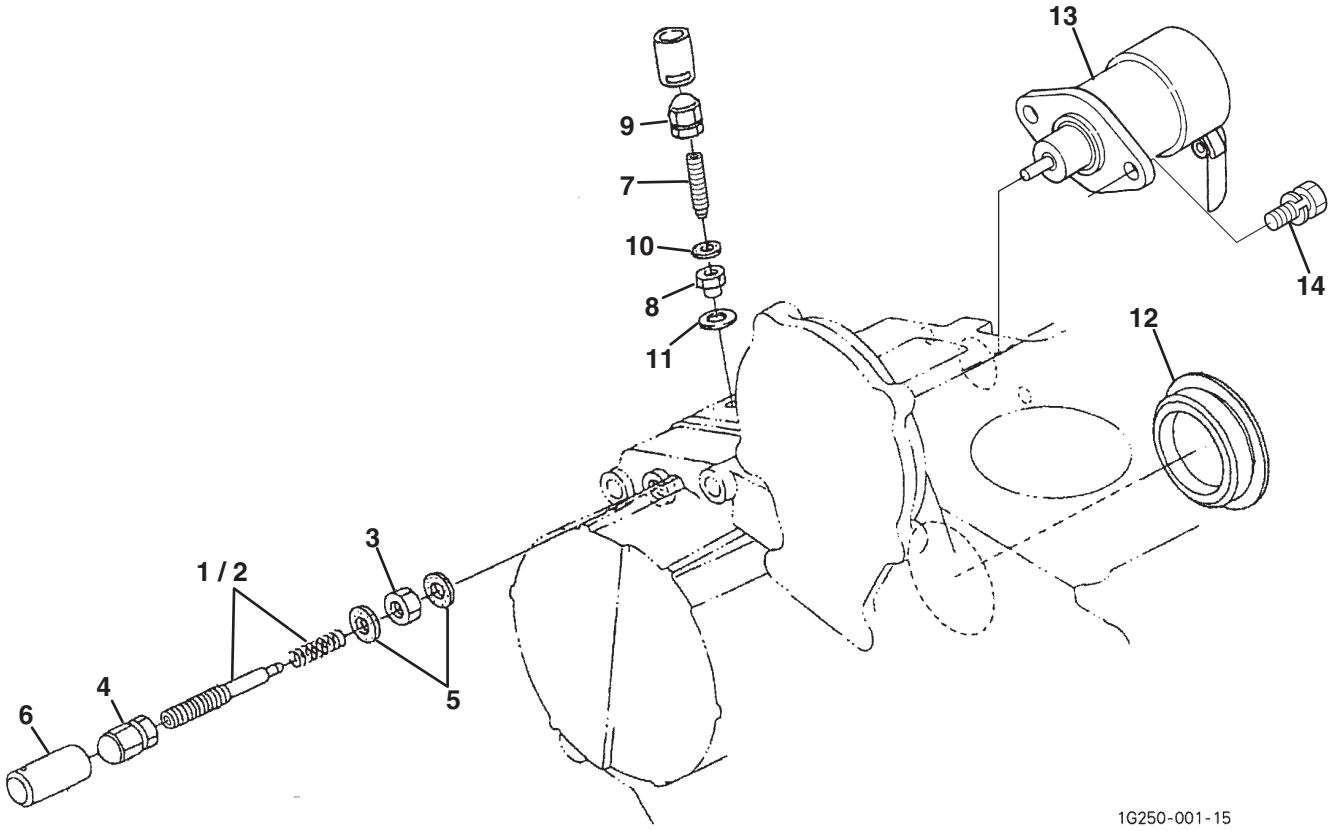

https://truckmanualshub.com/

Engine	Item	Part No.	Qty.	Description	Serial Numbers/Notes
●	1	557934	1	Apparatus, Idling	
●	2	5001257	1	Assy Bolt, Adjustment	
●	3	5002018	1	Nut	
●	4	4177269	1	Nut	
●	5	553143	2	Gasket	
●	6	4165442	1	Cap	
●	7	2500987	1	Bolt, Adjusting	
●	8	4177270	1	Nut, Lock	
●	9	4177271	1	Nut	
●	10	553143	1	Gasket	
●	11	4145906	1	Gasket	
●	12	5001275	1	Cover, Hydraulic Pump	
●	13	2811021	1	Assy Solenoid, Stop	
●	14	550361	2	Bolt	

A - SLF 1880 (D1105-E3B-TXRN-1)
B - Truckster / Haulster / Spraytek (D1105-E3B-TXRN-2)
C - TR-3 (D1105-E3B-RNUK-3)
D - SLF 1880 Turbo (D1105-T-E3B-TXRN-1)
E - AR-3 (D1105-E3B-RNUK-3)
F - LF510 / Turfcat (69180 S/N 1620~1650) (D1105-E3B-TXN-3)
● - Used on All Engines

> Change from previous revision

https://truckmanualshub.com/

17.1 Injection Pump

Serial No. All

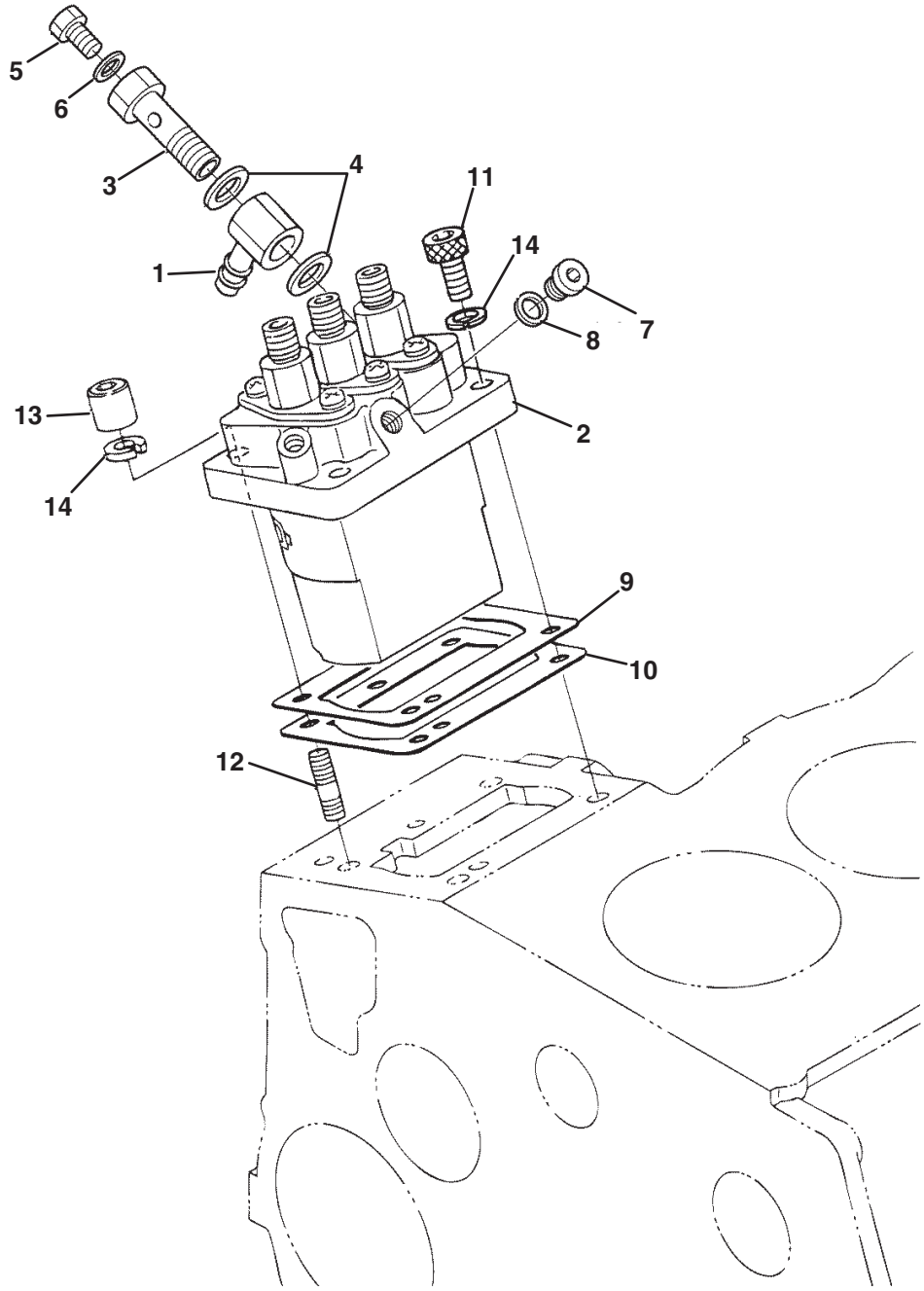

1G682-016-12

https://truckmanualshub.com/

Engine	Item	Part No.	Qty.	Description	Serial Numbers/Notes
●	1	2500961	1	Joint, Eye	
●	2	5000894	1	Assy Pump, Injection	
●	3	5001215	1	• Bolt, Joint	
●	4	554116	2	• Gasket	
●	5	554036	1	• Screw	
●	6	554117	1	• Gasket	
●	7	5001217	1	• Plug	
●	8	557584	1	• Gasket	
●	9	4183583	1	Shim, Injection Pump	0.175 mm
●	9	554202	1	Shim, Injection Pump	0.200 mm
●	9	5000886	1	Shim, Injection Pump	0.250 mm
●	10	5001118	1	Shim, Injection Pump	0.300 mm
●	10	4183584	1	Shim, Injection Pump	0.350 mm
●	11	553848	2	Bolt, Hex-soc-hd	
●	12	554099	2	Stud	
●	13	554104	2	Nut	
●	14	5001160	4	Washer, Spring	

A - SLF 1880 (D1105-E3B-TXRN-1)
B - Truckster / Haulster / Spraytek (D1105-E3B-TXRN-2)
C - TR-3 (D1105-E3B-RNUK-3)
D - SLF 1880 Turbo (D1105-T-E3B-TXRN-1)
E - AR-3 (D1105-E3B-RNUK-3)
F - LF510 / Turfcat (69180 S/N 1620~1650) (D1105-E3B-TXN-3)
● - Used on All Engines

> Change from previous revision

https://truckmanualshub.com/

18.1 Governor

Serial No. All

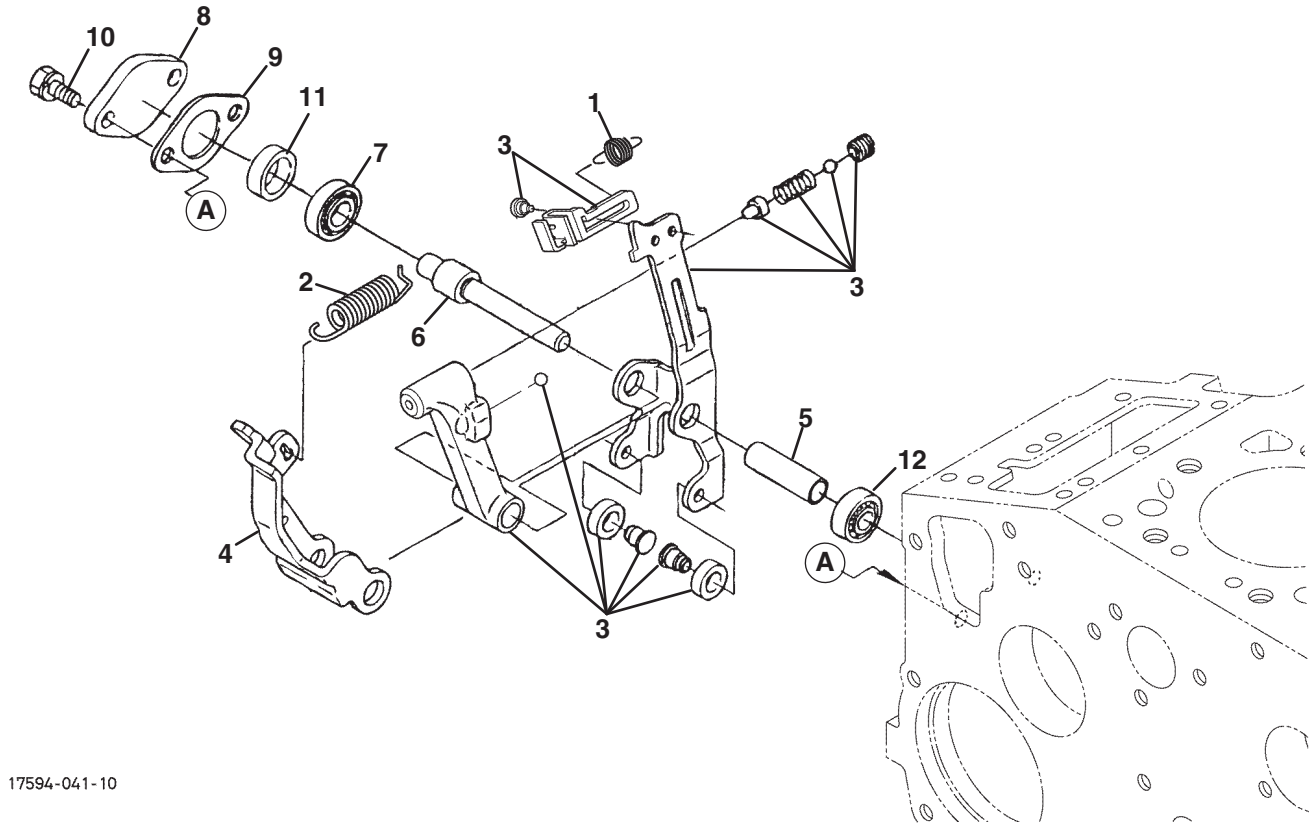

https://truckmanualshub.com/

Engine	Item	Part No.	Qty.	Description	Serial Numbers/Notes
ADEF	1	2500990	1	Spring, Start	
BC	1	4183622	1	Spring, Start	
●	2	5001287	1	Spring, Governor	
ABCF	3	4183585	1	Assy Lever, Fork	
DE	3	4164661	1	Assy Lever, Fork	
●	4	4177278	1	• Lever, Fork	
●	5	4177279	1	• Shaft, Fork Lever	
●	6	4177280	1	• Shaft, Fork Lever	
●	7	2500995	1	• Bearing, Miniaturize	
●	8	2500997	1	Cover, Fork Lev. Shaft	
●	9	2500845	1	Gasket	
●	10	550360	2	Bolt	
●	11	2500998	1	Collar	
●	12	2500999	1	Bearing, Miniaturize	

A - SLF 1880 (D1105-E3B-TXRN-1)
B - Truckster / Haulster / Spraytek (D1105-E3B-TXRN-2)
C - TR-3 (D1105-E3B-RNUK-3)
D - SLF 1880 Turbo (D1105-T-E3B-TXRN-1)
E - AR-3 (D1105-E3B-RNUK-3)
F - LF510 / Turfcat (69180 S/N 1620~1650) (D1105-E3B-TXN-3)
● - Used on All Engines

> Change from previous revision

https://truckmanualshub.com/

19.1 Speed Control Plate

Serial No. All

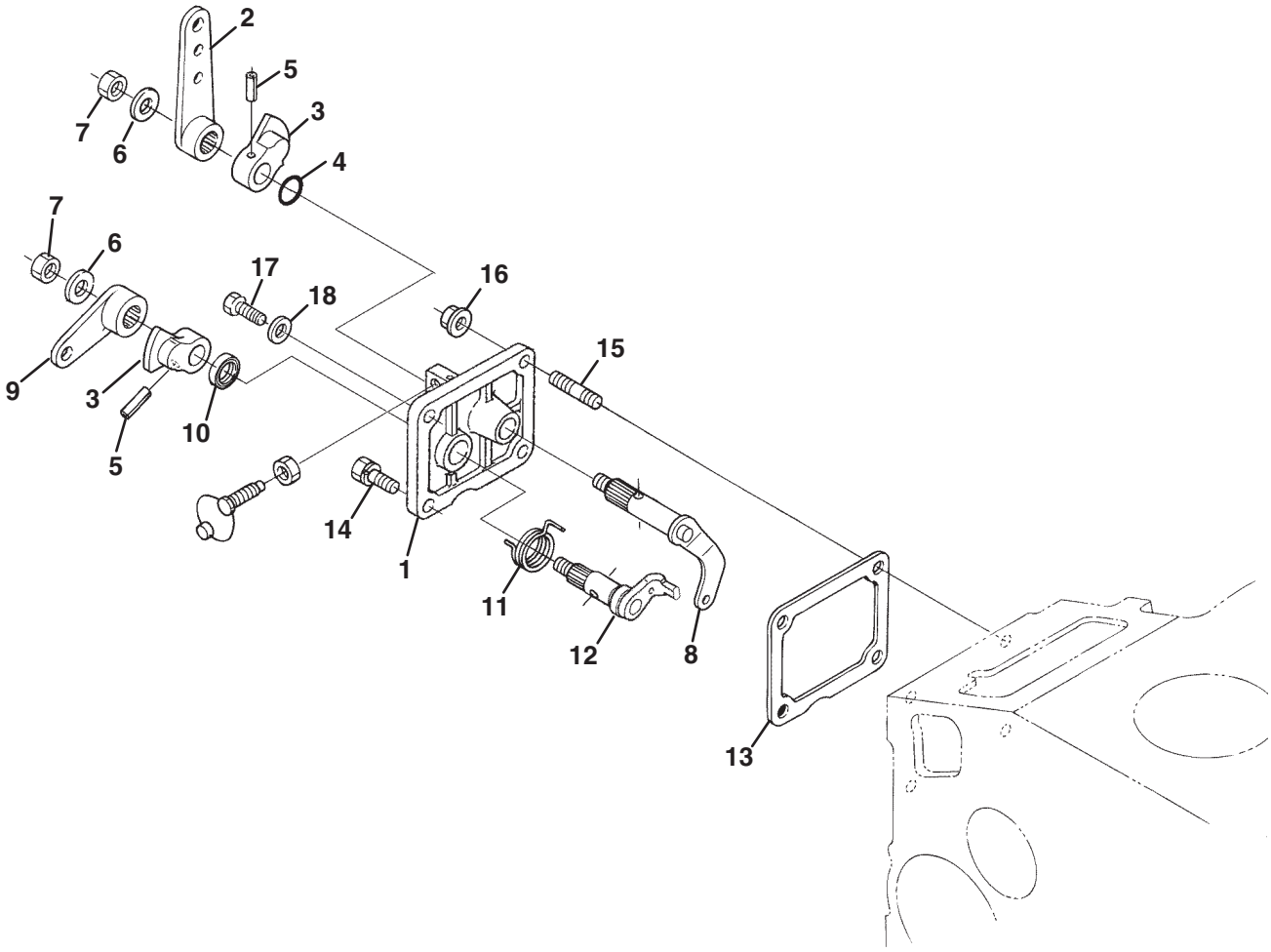

16614-016-24

https://truckmanualshub.com/

Engine	Item	Part No.	Qty.	Description	Serial Numbers/Notes
ABDF	1	4165630	1	Assy Plate, Control	
CE	1	2809973	1	Assy Plate, Control	
●	2	2501000	1	• Lever, Speed Control	
●	3	2501001	2	• Lever, Speed Control	
●	4	2809974	1	• O Ring	
●	5	550425	2	• Pin, Spring	
●	6	2501002	2	• Washer, Plain	
●	7	2501003	2	• Nut	
●	8	2501004	1	• Comp. Lever,g Overnor	
●	9	2501005	1	• Lever, Engine Stop	
●	10	2501006	1	• Seal, Oil	
●	11	2501007	1	• Spring, Return	
●	12	2501008	1	• Shaft, Stop Lever	
●	13	5001272	1	Gasket	
●	14	550362	1	Bolt	
●	15	550386	2	Stud	
●	16	2810647	2	Nut	
●	17	553846	1	Bolt	
●	18	553143	1	Gasket	

A - SLF 1880 (D1105-E3B-TXRN-1)
B - Truckster / Haulster / Spraytek (D1105-E3B-TXRN-2)
C - TR-3 (D1105-E3B-RNUK-3)
D - SLF 1880 Turbo (D1105-T-E3B-TXRN-1)
E - AR-3 (D1105-E3B-RNUK-3)
F - LF510 / Turfcat (69180 S/N 1620~1650) (D1105-E3B-TXN-3)
● - Used on All Engines

> Change from previous revision

https://truckmanualshub.com/

20.1 Nozzle Holder and Glow Plug

Serial No. All

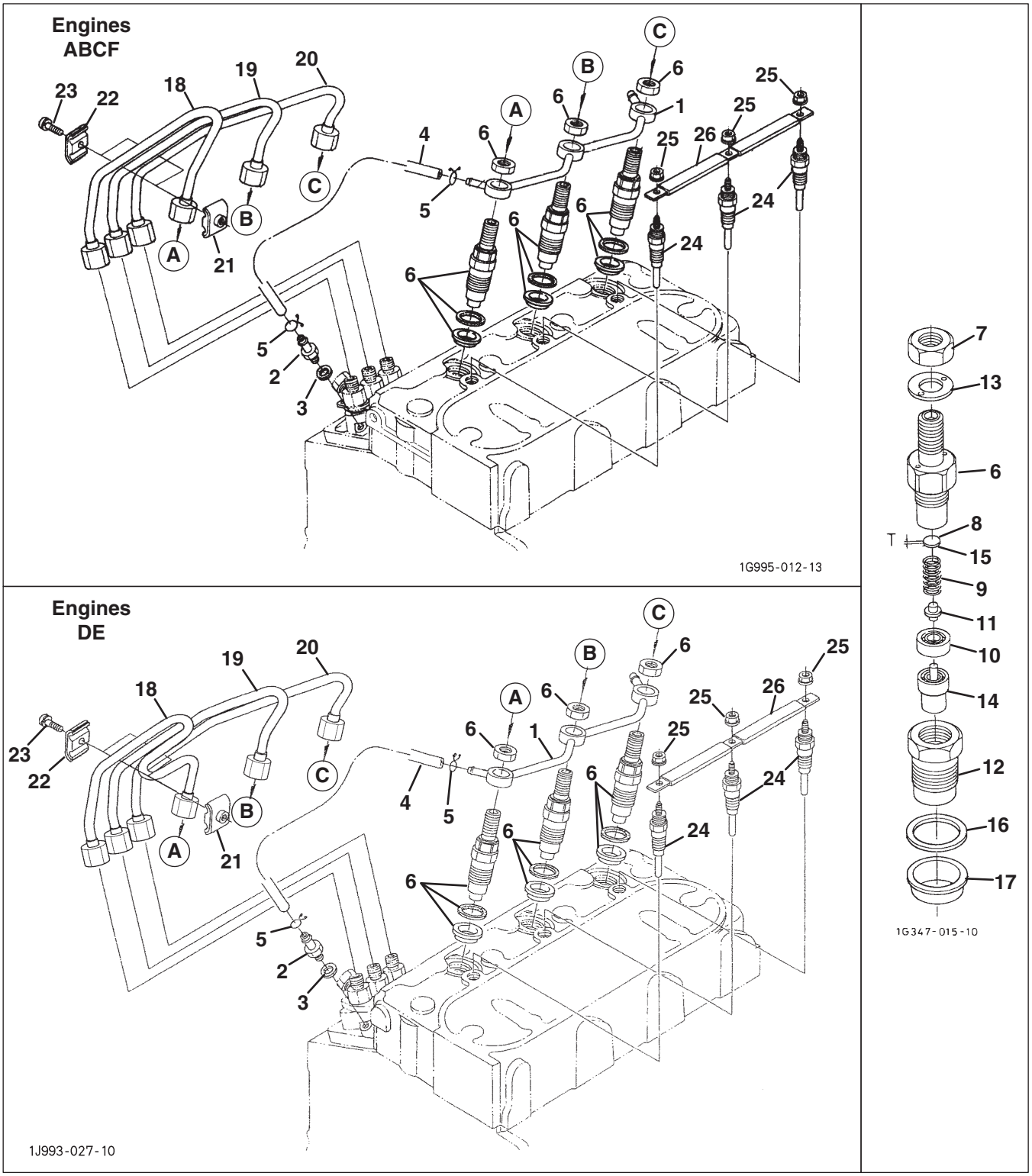

https://truckmanualshub.com/

Engine	Item	Part No.	Qty.	Description	Serial Numbers/Notes
ABCF	1	5001265	1	Assy Pipe, Over Flow	
DE	1	4183600	1	Assy Pipe, Over Flow	
●	2	554037	1	Screw, Air Bleeder	
●	3	553143	1	Gasket	
ABCF	4	554022	1	Assy Pipe, Over Flow	
DE	4	4183595	1	Assy Pipe, Over Flow	
ABCF		4177275	1	• Pipe, Fuel Over Flow	
●	5	553105	2	• Clip,pipe	
ABCEF	6	4183586	3	Kit Holder, Nozzle	
D	6	4177276	3	Kit Holder, Nozzle	
●	7	5001224	1	• Nut	
●	8	5001220	1	• Washer, Adjusting	
●	9	5001219	1	• Spring, Nozzle	
●	10	5001222	1	• Spacer, Distance	
●	11	5001218	1	• Push Rod	
●	12	5001221	1	• Nut, Nozzle	
●	13	5001225	1	• Washer, Plain	
ABCEF	14	4165659	1	• Piece, Nozzle	
D	14	4177277	1	• Piece, Nozzle	
●		5001226	1	• Assy Washer, Adjust	
●	15	5001227	1	• • Washer, Adjusting	0.10 mm
●	15	5001228	1	• • Washer, Adjusting	0.20 mm
●	15	5001229	1	• • Washer, Adjusting	0.30 mm
●	15	5001230	1	• • Washer, Adjusting	0.40 mm
●	15	5001231	1	• • Washer, Adjusting	0.50 mm
●	15	5001232	1	• • Washer, Adjusting	0.52 mm
●	15	5001233	1	• • Washer, Adjusting	0.54 mm
●	15	5001234	1	• • Washer, Adjusting	0.56 mm
●	15	5001235	1	• • Washer, Adjusting	0.58 mm
●	15	5001236	1	• • Washer, Adjusting	0.80 mm
●	16	554051	1	• Gasket	
●	17	557352	1	• Seal,heat	
ABCF	18	5000901	1	Pipe, Injection	
DE	18	2809975	1	Pipe, Injection	
●	19	5000902	1	Pipe, Injection	
●	20	5000903	1	Pipe, Injection	
●	21	554054	2	Clamp, Pipe	
●	22	554055	2	Clamp, Pipe	
●	23	550401	2	Screw, With Washer	
ABCF	24	4177227	3	Glow Plug	
DE	24	5002743	3	Glow Plug	
●	25	5001152	3	• Nut, Flange	
●	26	5001266	1	Cord, Glow Plug	

A - SLF 1880 (D1105-E3B-TXRN-1)
B - Truckster / Haulster / Spraytek (D1105-E3B-TXRN-2)
C - TR-3 (D1105-E3B-RNUK-3)
D - SLF 1880 Turbo (D1105-T-E3B-TXRN-1)
E - AR-3 (D1105-E3B-RNUK-3)
F - LF510 / Turfcat (69180 S/N 1620~1650) (D1105-E3B-TXN-3)
● - Used on All Engines

> Change from previous revision

https://truckmanualshub.com/

21.1 Fuel Filter and Pump

Serial No. All

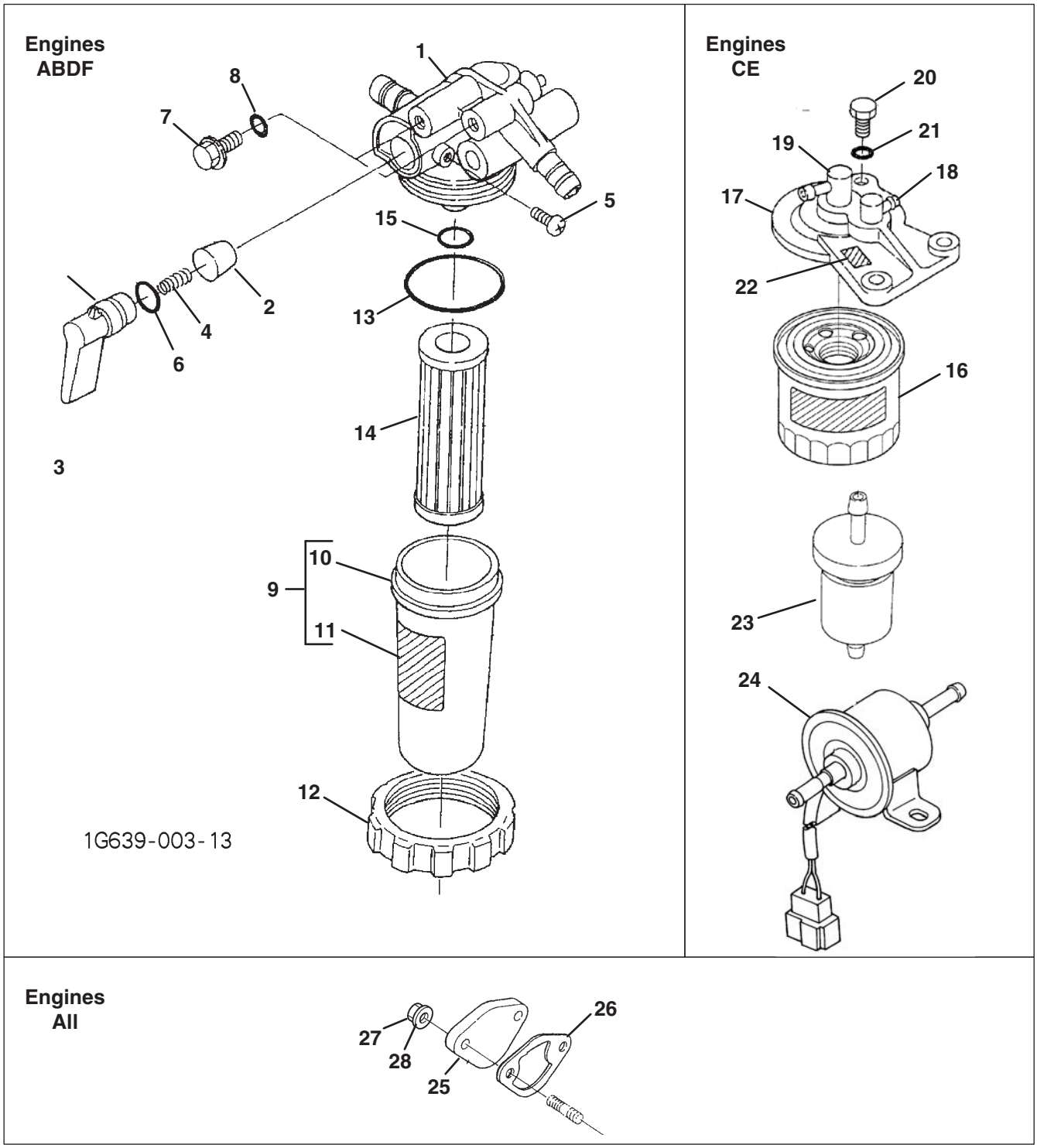

https://truckmanualshub.com/

Engine	Item	Part No.	Qty.	Description	Serial Numbers/Notes
ABDF	1	5001947	1	Assy Filter, Fuel	
ABDF	2	NS	1	• Stopper	
ABDF	3	550396	1	• Lever, Cock	
ABDF	4	550464	1	• Spring, Valve	
ABDF	5	4145702	1	• Screw, Set	
ABDF	6	4145703	1	• O Ring, Lever	
ABDF	7	4145892	2	• Screw, Air Bleeder	
ABDF	8	4145666	2	• O Ring	
ABDF	9	5001309	1	• Assy Cup, Filter	
ABDF	10	4183588	1	• • Cup, Filter	
ABDF	11	5001301	1	• • Label, Fuel	
ABDF	12	4183589	1	• Ring, Retaining	
ABDF	13	550463	1	• O Ring, Filter Cup	
ABDF	14	550489	1	• Assy Element	
ABDF	15	2810640	1	• O Ring, Filter	
CE		5001189	1	Assy Filter, Fuel	
CE	16	2500809	1	• Element, FIlter	
CE	17	2501023	1	• Assy Cover, Filter	
CE	18	557357	1	• • Joint, Pipe	
CE	19	557358	1	• • Joint, Pipe	
CE	20	2501024	1	• Plug, Filter Breather	
CE	21	2501025	1	• O Ring	
CE	22	2501026	1	• Mark, Form	
CE	23	5001182	1	Assy Filter, Fuel	
CE	24	5001948	1	Assy Pump, Fuel	
●	25	2500962	1	Cover	
●	26	5001922	1	Gasket, Fuel Pump	
●	27	550395	2	Nut	
●	28	5001160	2	Washer, Spring	

A - SLF 1880 (D1105-E3B-TXRN-1)
B - Truckster / Haulster / Spraytek (D1105-E3B-TXRN-2)
C - TR-3 (D1105-E3B-RNUK-3)
D - SLF 1880 Turbo (D1105-T-E3B-TXRN-1)
E - AR-3 (D1105-E3B-RNUK-3)
F - LF510 / Turfcat (69180 S/N 1620~1650) (D1105-E3B-TXN-3)
● - Used on All Engines

> Change from previous revision

https://truckmanualshub.com/

22.1 Alternator and Pulleys

Serial No. All

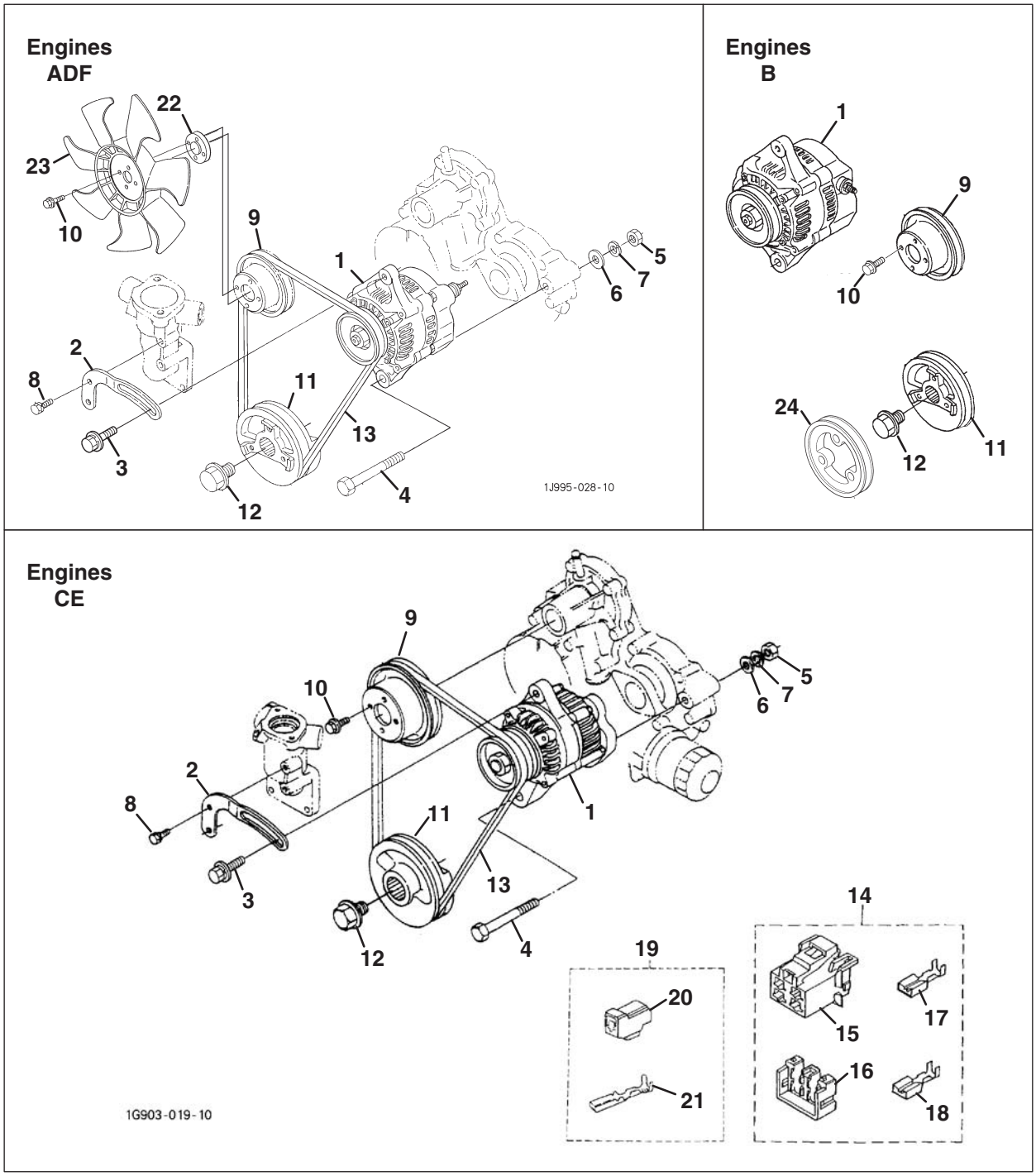

https://truckmanualshub.com/

Engine	Item	Part No.	Qty.	Description	Serial Numbers/Notes
ACDEF	1	2810354	1	Assy Alternator	
B	1	4183623	1	Assy Alternator	
ACDEF	2	557941	1	Stay, Dynamo	
ACDEF	3	4134321	1	Bolt	
ACDEF	4	557942	1	Bolt	
ACDEF	5	594348	1	Nut	
ACDEF	6	594350	1	Washer, Plain	
ACDEF	7	5001160	1	Washer, Spring	
ACDEF	8	550362	1	Bolt	
●	9	2501014	1	Pulley, Fan	
●	10	5003269	4	Bolt, Flange	
ABDF	11	5001239	1	Pulley, Fan Drive	
DE	11	2501016	1	Pulley, Fan Drive	
●	12	2501017	1	Bolt, Fan Drive	
ADF	13	5001284	1	V Belt	
CE	13	4176550	1	V Belt	
CE	14	4183686	1	Assy Connector	
CE	15	4183687	1	• Connector	
CE	16	4183688	1	• Stopper	
CE	17	4183689	2	• Terminal	
CE	18	4183690	2	• Terminal	
CE	19	4134324	1	Assy Coupler	
CE	20	4134325	1	• Connector	
CE	21	4134326	2	• Terminal	
AD	22	5003480	1	Collar, Fan	
AD	23	5003478	1	Fan	
F	23	5002776	1	Fan	
B	24	4183624	1	Pulley, Drive	

A - SLF 1880 (D1105-E3B-TXRN-1)
B - Truckster / Haulster / Spraytek (D1105-E3B-TXRN-2)
C - TR-3 (D1105-E3B-RNUK-3)
D - SLF 1880 Turbo (D1105-T-E3B-TXRN-1)
E - AR-3 (D1105-E3B-RNUK-3)
F - LF510 / Turfcat (69180 S/N 1620~1650) (D1105-E3B-TXN-3)
● - Used on All Engines

> Change from previous revision

https://truckmanualshub.com/

23.1 Alternator

Serial No. All

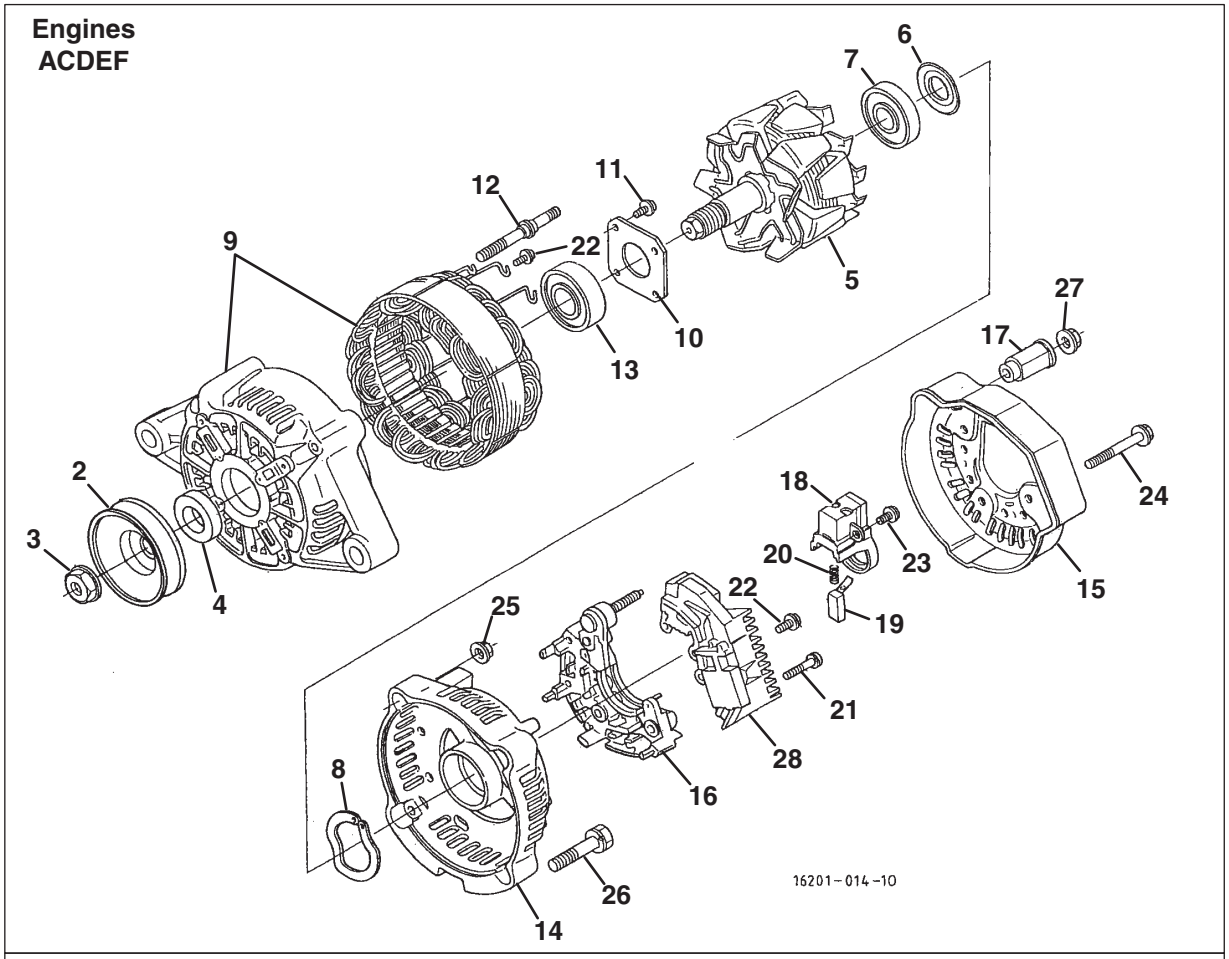

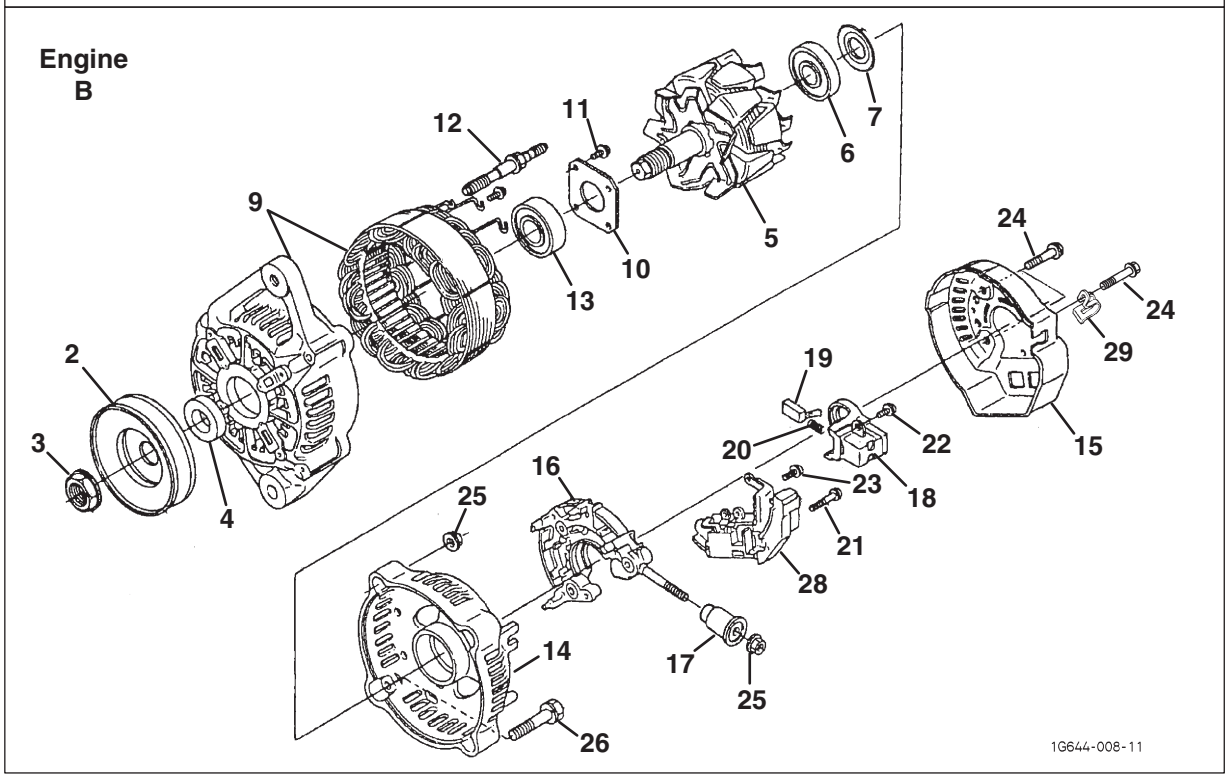

https://truckmanualshub.com/

Engine	Item	Part No.	Qty.	Description	Serial Numbers/Notes
ACDEF	1	2810354	1	Assy Alternator	
B	1	4183623	1	Assy Alternator	
●	2	557947	1	• Pulley, Dynamo	
●	3	557948	1	• Nut	
●	4	557949	1	• Collar	
ACDEF	5	4145943	1	• Rotor	
B	5	4183627	1	• Rotor	
●	6	557951	1	• • Cover, Bearing	
●	7	4145838	1	• • Bearing, Ball	
ACDEF	8	557953	1	• Washer, Thrust	
ACDEF	9	4145942	1	• Frame, Drive End	
B	9	4183626	1	• Frame, Drive End	
●	10	5001210	1	• • Plate, Retainer	
●	11	557956	4	• • Screw, Round Head	
●	12	557957	2	• • Bolt, Through	
●	13	4135839	1	• • Bearing, Ball	
ACDEF	14	4145828	1	• Frame, End	
B	14	4183628	1	• Frame, End	
ACDEF	15	4145829	1	• Cover, End	
B	15	4183631	1	• Cover, End	
ACDEF	16	557961	1	• Assy Rectifier	
B	16	4183629	1	• Holder	
●	17	557962	1	• Bush, Insulation	
●	18	4145837	1	• Holder, Brush	
●	19	557964	2	• • Brush	
●	20	557965	2	• • Spring, Brush	
●	21	557966	2	• Screw, Round Head	
●	22	557967	6	• Screw, Round Head	
●	23	557968	1	• Screw, Round Head	
●	24	557969	3	• Bolt	
●	25	557970	2	• Nut	
●	26	557971	2	• Bolt	
ACDEF	27	557972	1	• Nut	
ACDEF	28	2810355	1	• Assy Regulator	
B	28	4183630	1	• Assy Regulator	
B	29	4134341	1	• Clamp, Cord	

A - SLF 1880 (D1105-E3B-TXRN-1)
B - Truckster / Haulster / Spraytek (D1105-E3B-TXRN-2)
C - TR-3 (D1105-E3B-RNUK-3)
D - SLF 1880 Turbo (D1105-T-E3B-TXRN-1)
E - AR-3 (D1105-E3B-RNUK-3)
F - LF510 / Turfcat (69180 S/N 1620~1650) (D1105-E3B-TXN-3)
● - Used on All Engines

> Change from previous revision

https://truckmanualshub.com/

24.1 Starter

Serial No. All

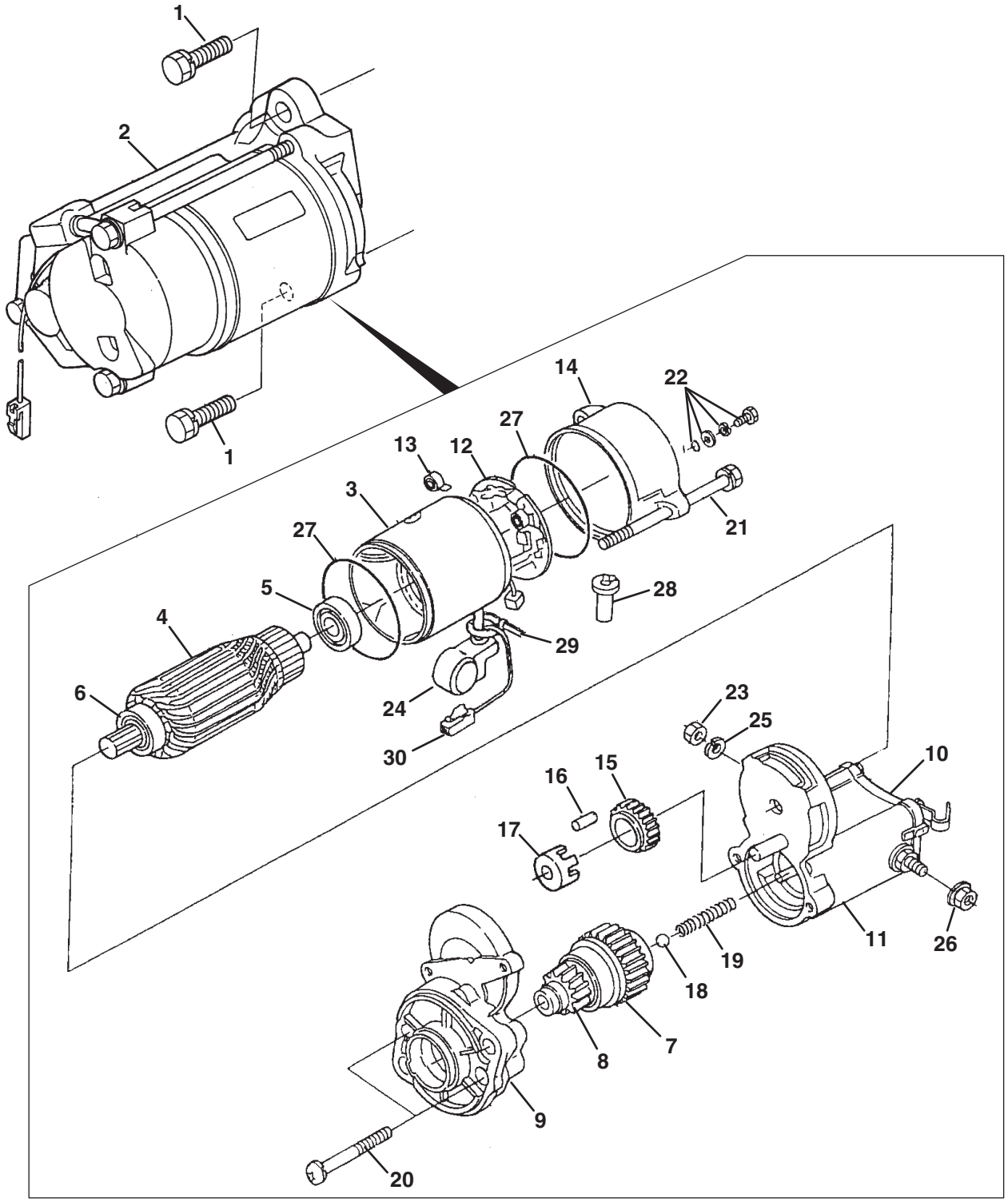

https://truckmanualshub.com/

Engine	Item	Part No.	Qty.	Description	Serial Numbers/Notes
●	1	2500960	2	Bolt	
ABDF	2	557888	1	Assy Starter	
CE	2	4183691	1	Assy Starter	
ABDF	3	557890	1	• Yoke	
CE	3	2810746	1	• Yoke	
ABDF	4	557891	1	• Armature	
CE	4	2810745	1	• Armature	
●	5	557893	1	• Bearing	
●	6	557892	1	• Bearing	
ABDF	7	557894	1	• Assy Clutch	
CE	7	4183692	1	• Assy Clutch	
ABDF	8	557895	1	• Pinion, Bevel	
ABDF	9	557896	1	• Assy Housing	
CE	9	4183693	1	• Assy Housing	
●	10	557897	1	• Assy Switch, Magnetic	
●	11	4145832	1	• Assy Cover	
ABDF	12	557898	1	• Assy Holder, Brush	
CE	12	2810748	1	• Assy Holder, Brush	
ABDF	13	557899	4	• Spring, Brush	
CE	13	553277	4	• Spring, Brush	
ABDF	14	557900	1	• Assy Frame, End	
CE	14	2810940	1	• Assy Frame, End	
●	15	2810751	1	• Gear	
●	16	557902	5	• Roller	
●	17	557903	1	• Retainer	
●	18	557904	1	• Ball	
●	19	557905	1	• Spring	
●	20	557906	2	• Bolt	
ABDF	21	557907	2	• Bolt, Through	
CE	21	2810747	2	• Bolt, Through	
●	22	557908	2	• Assy Bolt	
●	23	557912	1	• Nut, Hexagon	
●	24	557910	1	• Cover	
ABDF	25	557911	1	• Washer, Spring	
ABDF	26	557909	1	• Nut, Hexagon	
CE	26	557912	1	• Nut, Hexagon	
●	27	5001244	2	• O Ring	
●	28	5003301	1	• Pipe,drain	
●	29	557913	1	• Cord, Stop Solenoid	
●	30	5001292	1	• Band, Cover	

A - SLF 1880 (D1105-E3B-TXRN-1)
B - Truckster / Haulster / Spraytek (D1105-E3B-TXRN-2)
C - TR-3 (D1105-E3B-RNUK-3)
D - SLF 1880 Turbo (D1105-T-E3B-TXRN-1)
E - AR-3 (D1105-E3B-RNUK-3)
F - LF510 / Turfcat (69180 S/N 1620~1650) (D1105-E3B-TXN-3)
● - Used on All Engines

> Change from previous revision

https://truckmanualshub.com/

25.1 Water Flange and Thermostat

Serial No. All

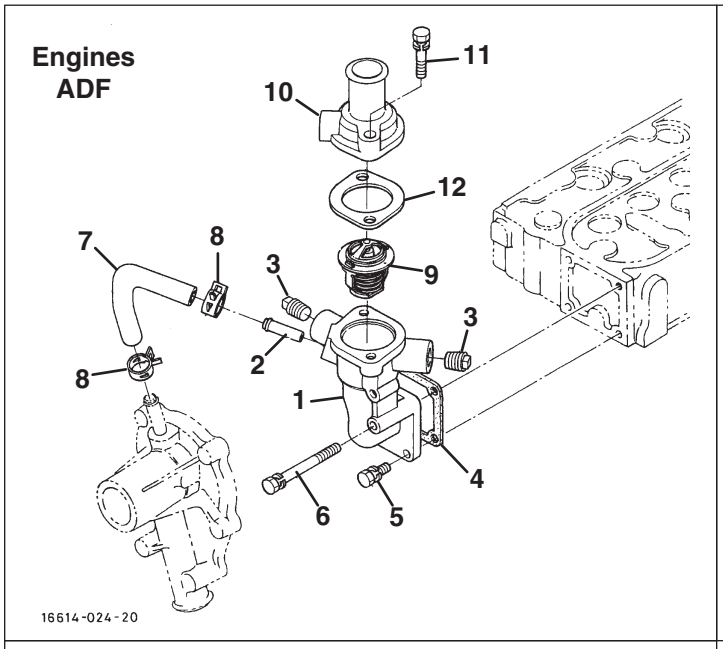

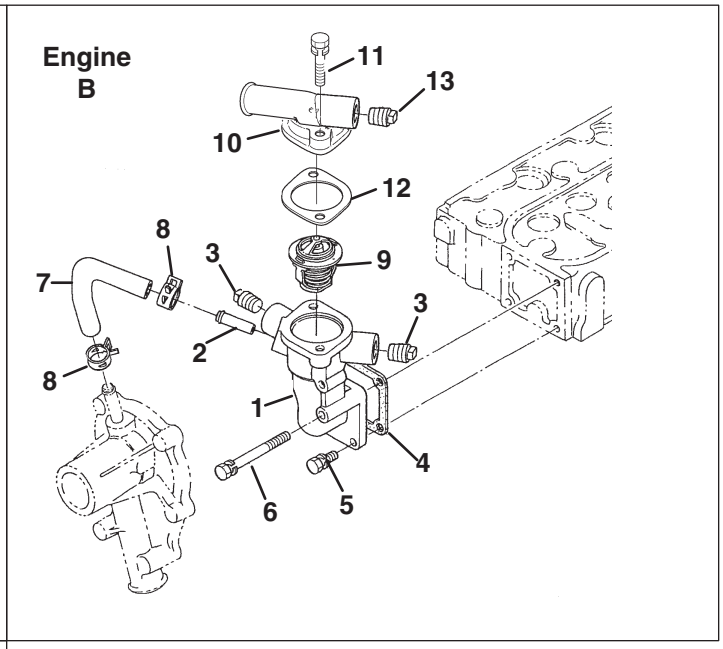

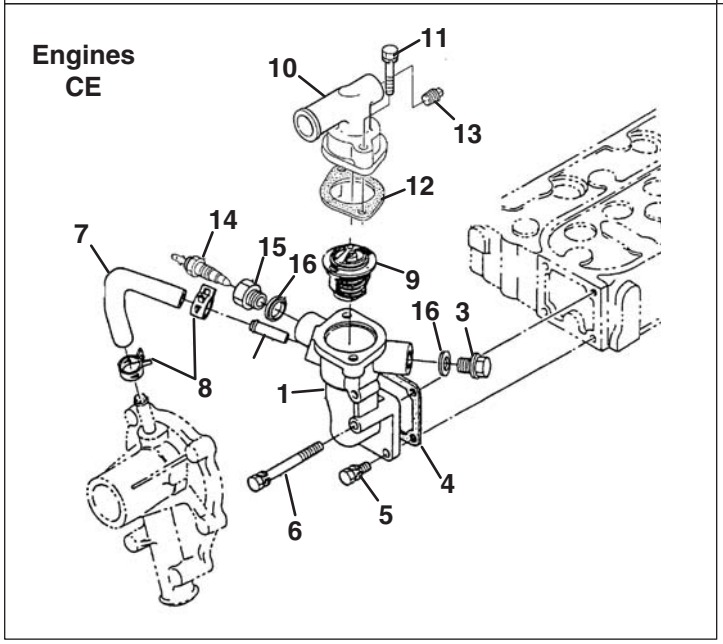

https://truckmanualshub.com/

Engine	Item	Part No.	Qty.	Description	Serial Numbers/Notes
ABDF	1	5001297	1	Comp. Flange, Water	
CE	1	4183694	1	Comp. Flange, Water	
●	2	557975	1	Pipe, Water Return	
ABDF	3	4134361	2	Plug	
CE	3	4137778	1	Plug	
●	4	5001273	1	Gasket, Water Flange	
●	5	550362	3	Bolt	
ACDEF	6	2500899	1	Bolt	
B	6	5001135	1	Bolt	
ABDF	7	5001254	1	Pipe, Water Return	
CE	7	4183695	1	Pipe, Water Return	
●	8	2501011	2	Band, Pipe	
●	9	556412	1	Assy Thermostat	
ADF	10	5003479	1	Cover, Thermostat	
BCE	10	4183632	1	Cover, Thermostat	
●	11	4134370	1	Gasket, Thermostat	
●	12	594334	2	Bolt	
B	13	4134361	1	Plug	
CE	13	557227	1	Plug	
CE	14	2810959	1	Assy Thermoswitch	
CE	15	4184260	1	Adapter	
CE	16	2500862	2	Gasket	

A - SLF 1880 (D1105-E3B-TXRN-1)
B - Truckster / Haulster / Spraytek (D1105-E3B-TXRN-2)
C - TR-3 (D1105-E3B-RNUK-3)
D - SLF 1880 Turbo (D1105-T-E3B-TXRN-1)
E - AR-3 (D1105-E3B-RNUK-3)
F - LF510 / Turfcat (69180 S/N 1620~1650) (D1105-E3B-TXN-3)
● - Used on All Engines

> Change from previous revision

https://truckmanualshub.com/

26.1 Water Pump

Serial No. All

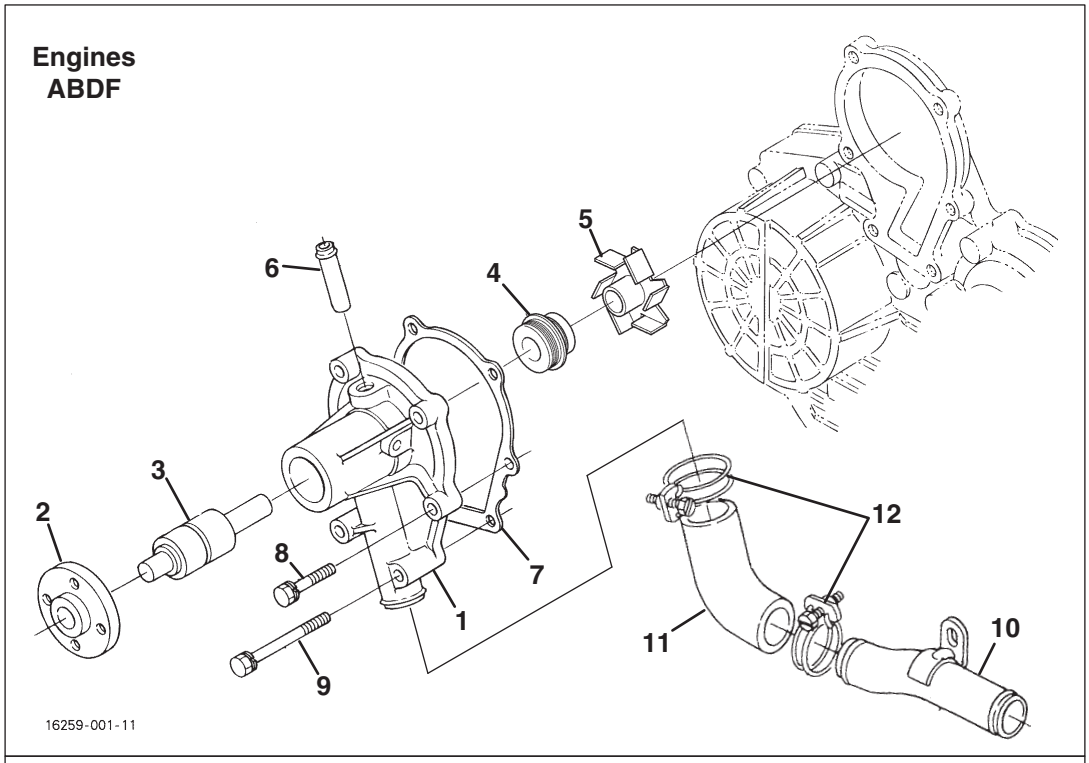

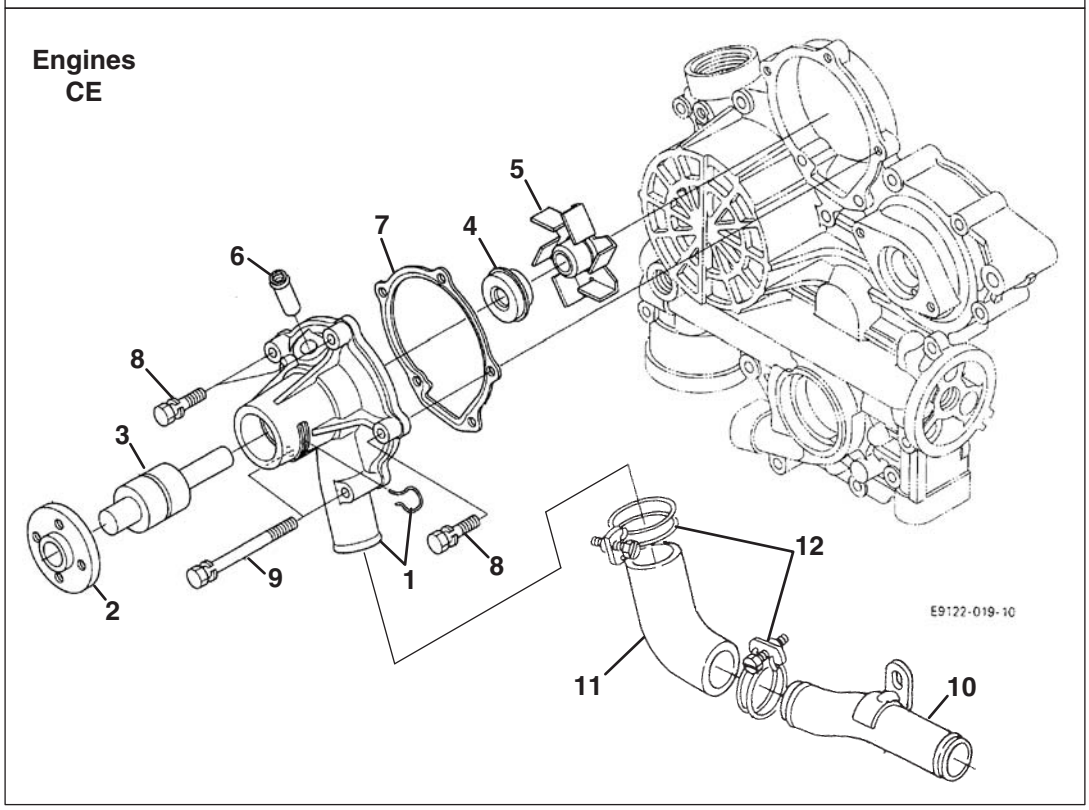

https://truckmanualshub.com/

Engine	Item	Part No.	Qty.	Description	Serial Numbers/Notes
ABDF	1	4165525	1	Assy Pump, Water	
CE	1	4183697	1	Assy Pump, Water	
●	2	557866	1	Flange, Water Pump	
●	3	557863	1	Bearing	
●	4	4155662	1	Assy Seal, Mechanical	
●	5	557865	1	Impeller, Water Pump	
●	6	557571	1	Pipe, Water Return	
ABDF	7	557867	1	Gasket, Water Pump	
CE	7	4183698	1	Gasket, Water Pump	
●	8	2500917	4	Bolt	
ACDEF	9	2501021	2	Bolt	
B	9	4183633	2	Bolt	
ABCF	10	557980	1	Pipe, Water	
D	10	4183601	1	Pipe, Water	
E	10	554748	1	Pipe, Water	
●	11	4165647	1	Pipe, Water	
●	12	2501013	2	Clamp	

A - SLF 1880 (D1105-E3B-TXRN-1)
B - Truckster / Haulster / Spraytek (D1105-E3B-TXRN-2)
C - TR-3 (D1105-E3B-RNUK-3)
D - SLF 1880 Turbo (D1105-T-E3B-TXRN-1)
E - AR-3 (D1105-E3B-RNUK-3)
F - LF510 / Turfcat (69180 S/N 1620~1650) (D1105-E3B-TXN-3)
● - Used on All Engines

> Change from previous revision

https://truckmanualshub.com/

27.1 Valve and Rocker Arm

Serial No. All

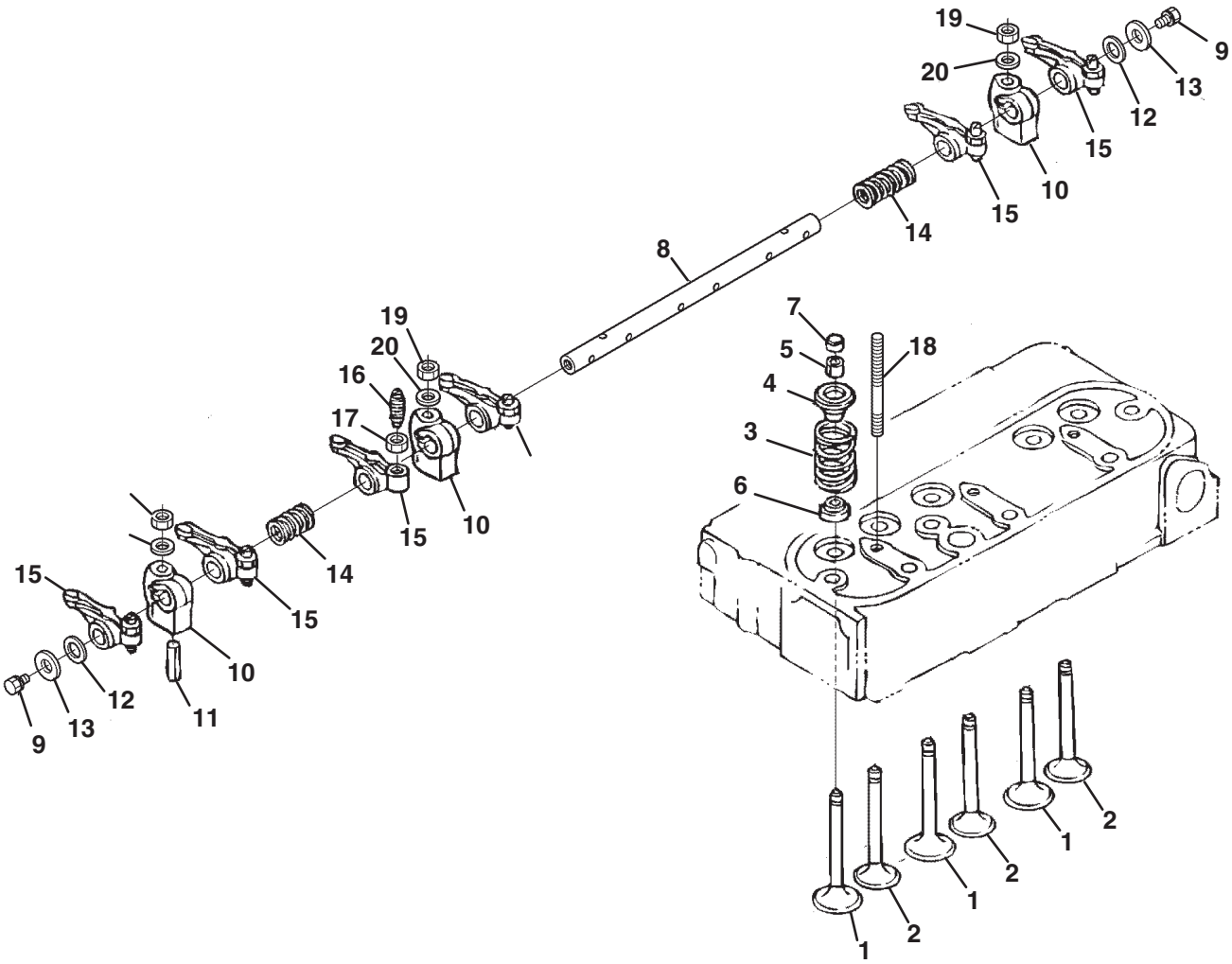

16224-007-15

https://truckmanualshub.com/

Engine	Item	Part No.	Qty.	Description	Serial Numbers/Notes
●	1	2500827	3	Valve, Inlet	
ABCF	2	2500828	3	Valve, Exhaust	
DE	2	2809956	3	Valve, Exhaust	
ABCF	3	2500920	6	Spring, Valve	
DE	3	550580	6	Spring, Valve	
●	4	4165620	6	Retainer, Spring	
●	5	2500922	6	Collet, Valve Spring	
●	6	2500923	6	Seal, Valve Stem	
●	7	2500924	6	Cap, Valve	
●	8	4183592	1	Shaft, Rocker Arm	
●	9	553839	2	Bolt	
●	10	2500926	3	Bracket, Rocker Arm	
●	11	2809978	1	Pin, Spring	
●	12	2500928	2	Washer, R-arm.shaft	
●	13	554108	2	Washer, Plain	
●	14	2500930	2	Spring, Rocker Arm	
●	15	2500932	6	Assy Rocker Arm	
●	16	2500933	6	• Screw, Adjusting	
●	17	2500915	6	• Nut	
●	18	2500935	3	Stud	
●	19	2500936	3	Nut	
●	20	2500937	3	Washer, Plain	

A - SLF 1880 (D1105-E3B-TXRN-1)
B - Truckster / Haulster / Spraytek (D1105-E3B-TXRN-2)
C - TR-3 (D1105-E3B-RNUK-3)
D - SLF 1880 Turbo (D1105-T-E3B-TXRN-1)
E - AR-3 (D1105-E3B-RNUK-3)
F - LF510 / Turfcat (69180 S/N 1620~1650) (D1105-E3B-TXN-3)
● - Used on All Engines

> Change from previous revision

https://truckmanualshub.com/

28.1 Intake and Exhaust Manifolds

Serial No. All

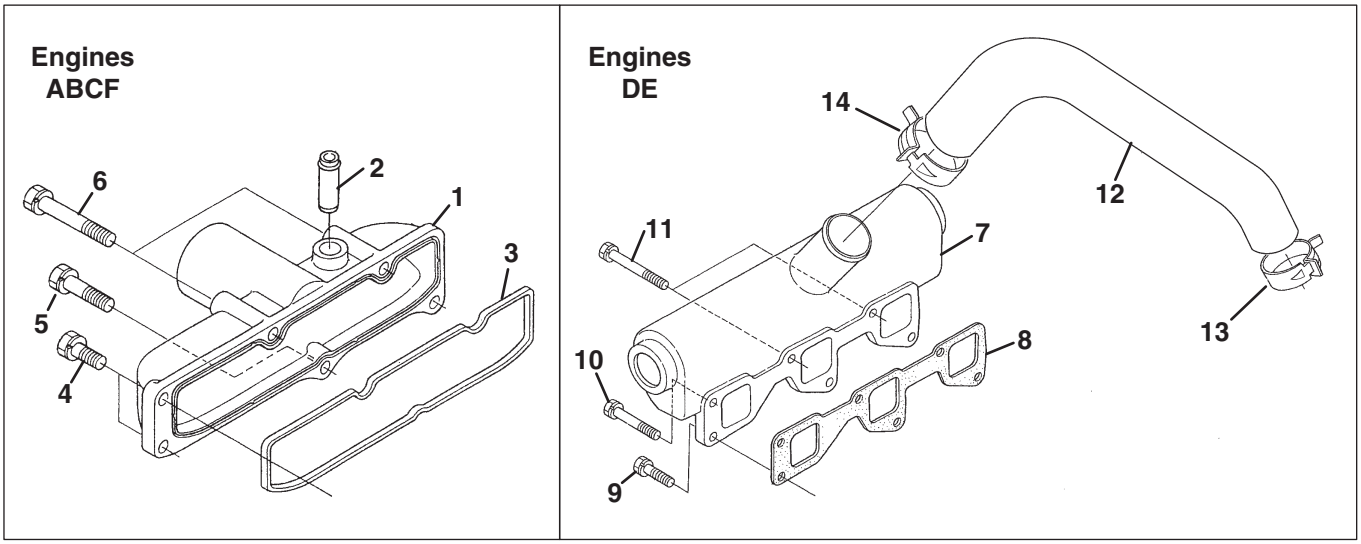

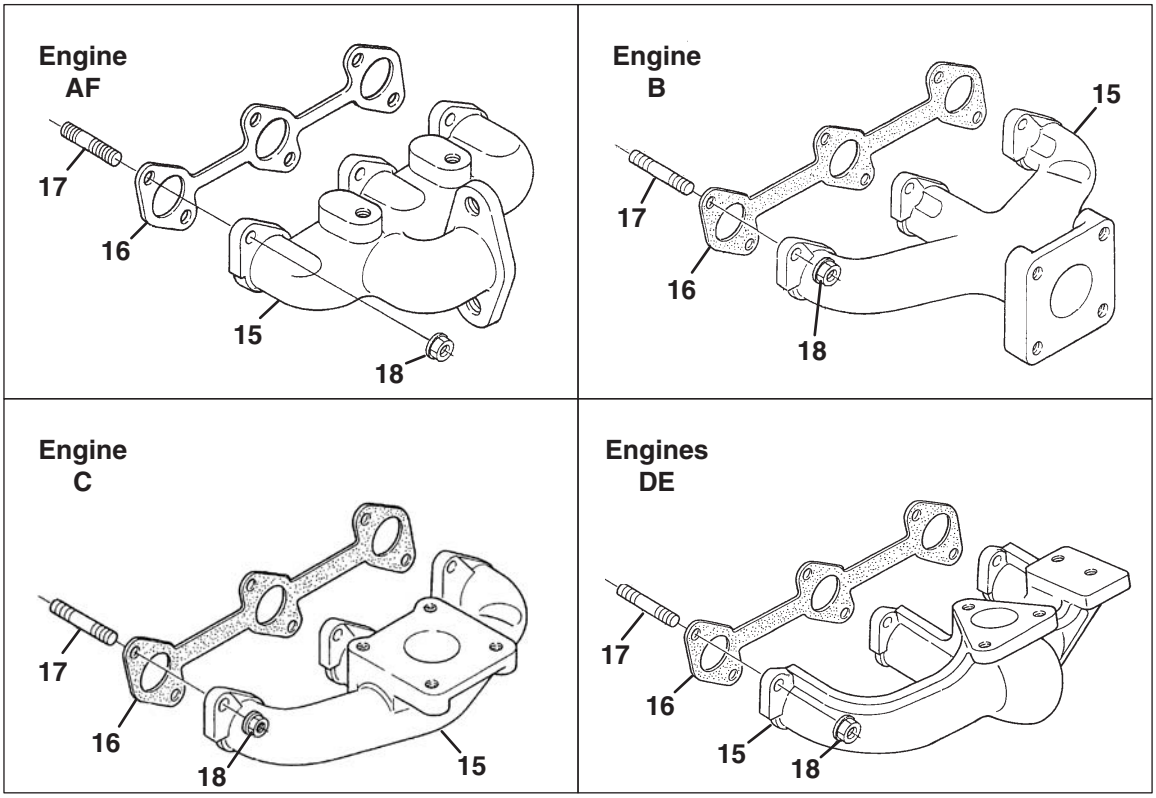

https://truckmanualshub.com/

Engine	Item	Part No.	Qty.	Description	Serial Numbers/Notes
ABCF	1	4165648	1	Assy Manifold, Inlet	
ABCF	2	2500911	1	• Joint, Breather Pipe	
ABCF	3	2500854	1	• Gasket, In-manifold	
ABCF	4	550363	3	Bolt	
ABCF	5	2500917	1	Bolt	
ABCF	6	5001135	2	Bolt	
DE	7	4159670	1	Manifold, Inlet	
DE	8	5003603	1	Gasket, Intake Manifold	
DE	9	550364	3	Bolt	
DE	10	553841	1	Bolt	
DE	11	5003604	2	Bolt	
DE	12	4183602	1	Hose, Inlet	
DE	13	4177244	1	Clamp, Hose	
DE	14	4177243	1	Clamp, Hose	
AF	15	5003475	1	Manifold, Exhaust	
B	15	5001306	1	Manifold, Exhaust	
C	15	4184261	1	Manifold, Exhaust	
D	15	5003608	1	Manifold, Exhaust	
E	15	4183701	1	Manifold, Exhaust	
●	16	5001262	1	Gasket, Ex-manifold	
●	17	2500918	6	Stud	
●	18	2500919	6	Nut	

A - SLF 1880 (D1105-E3B-TXRN-1)
B - Truckster / Haulster / Spraytek (D1105-E3B-TXRN-2)
C - TR-3 (D1105-E3B-RNUK-3)
D - SLF 1880 Turbo (D1105-T-E3B-TXRN-1)
E - AR-3 (D1105-E3B-RNUK-3)
F - LF510 / Turfcat (69180 S/N 1620~1650) (D1105-E3B-TXN-3)
● - Used on All Engines

> Change from previous revision

https://truckmanualshub.com/

29.1 Turbo Charger

Serial No. All

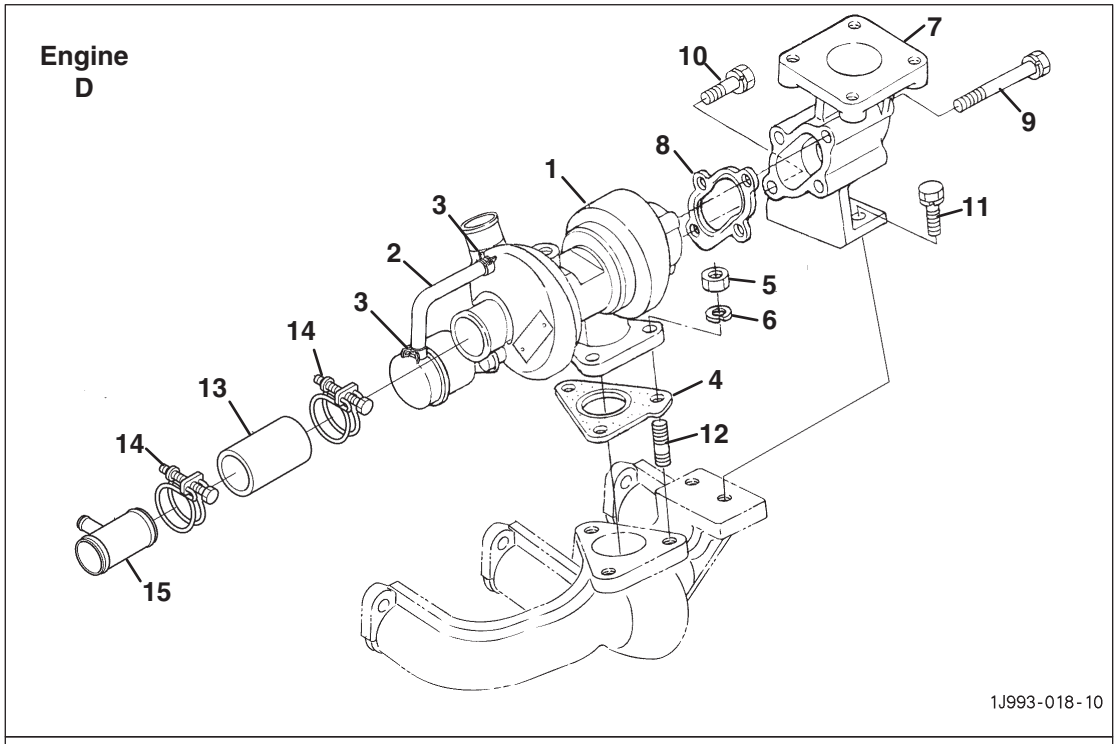

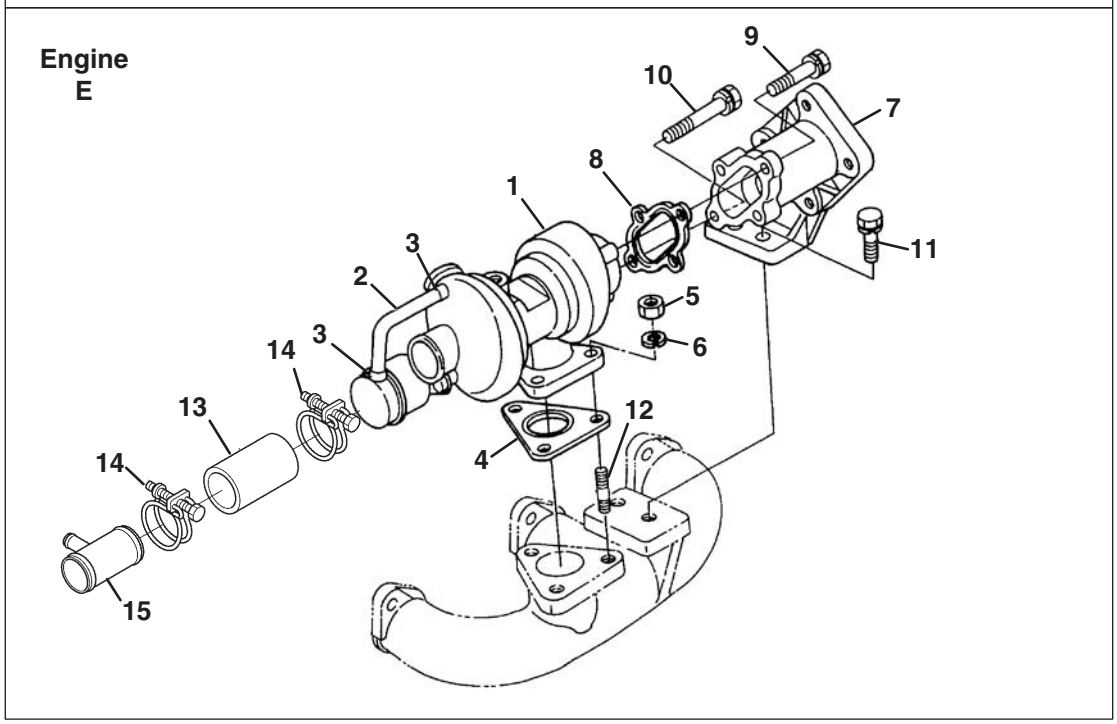

https://truckmanualshub.com/

Engine	Item	Part No.	Qty.	Description	Serial Numbers/Notes
D	1	4177245	1	Assy Turbo Charger	
E	1	4183702	1	Assy Turbo Charger	
DE	2	4177246	1	• Assy Hose	
DE	3	4177247	2	• • Clamp, Hose	
DE	4	5002750	1	Gasket	
DE	5	550398	3	Nut	
DE	6	550409	3	Washer, Spring	
D	7	2810896	1	Flange, Muffler	
E	7	4183703	1	Flange, Muffler	
DE	8	5002749	1	Gasket	
D	9	5003482	3	Bolt	
E	9	2500960	3	Bolt	
DE	10	5003283	1	Bolt	
DE	11	550379	2	Bolt	
DE	12	4134402	3	Stud	
DE	13	4177248	1	Tube, Inlet Turbo	
DE	14	4177249	2	Band	
DE	15	4177250	1	Pipe, Inlet Breather	

A - SLF 1880 (D1105-E3B-TXRN-1)
B - Truckster / Haulster / Spraytek (D1105-E3B-TXRN-2)
C - TR-3 (D1105-E3B-RNUK-3)
D - SLF 1880 Turbo (D1105-T-E3B-TXRN-1)
E - AR-3 (D1105-E3B-RNUK-3)
F - LF510 / Turfcat (69180 S/N 1620~1650) (D1105-E3B-TXN-3)
● - Used on All Engines

> Change from previous revision

https://truckmanualshub.com/

30.1 Turbo Charger Oil Pipes

Serial No. All

Turbo Engines

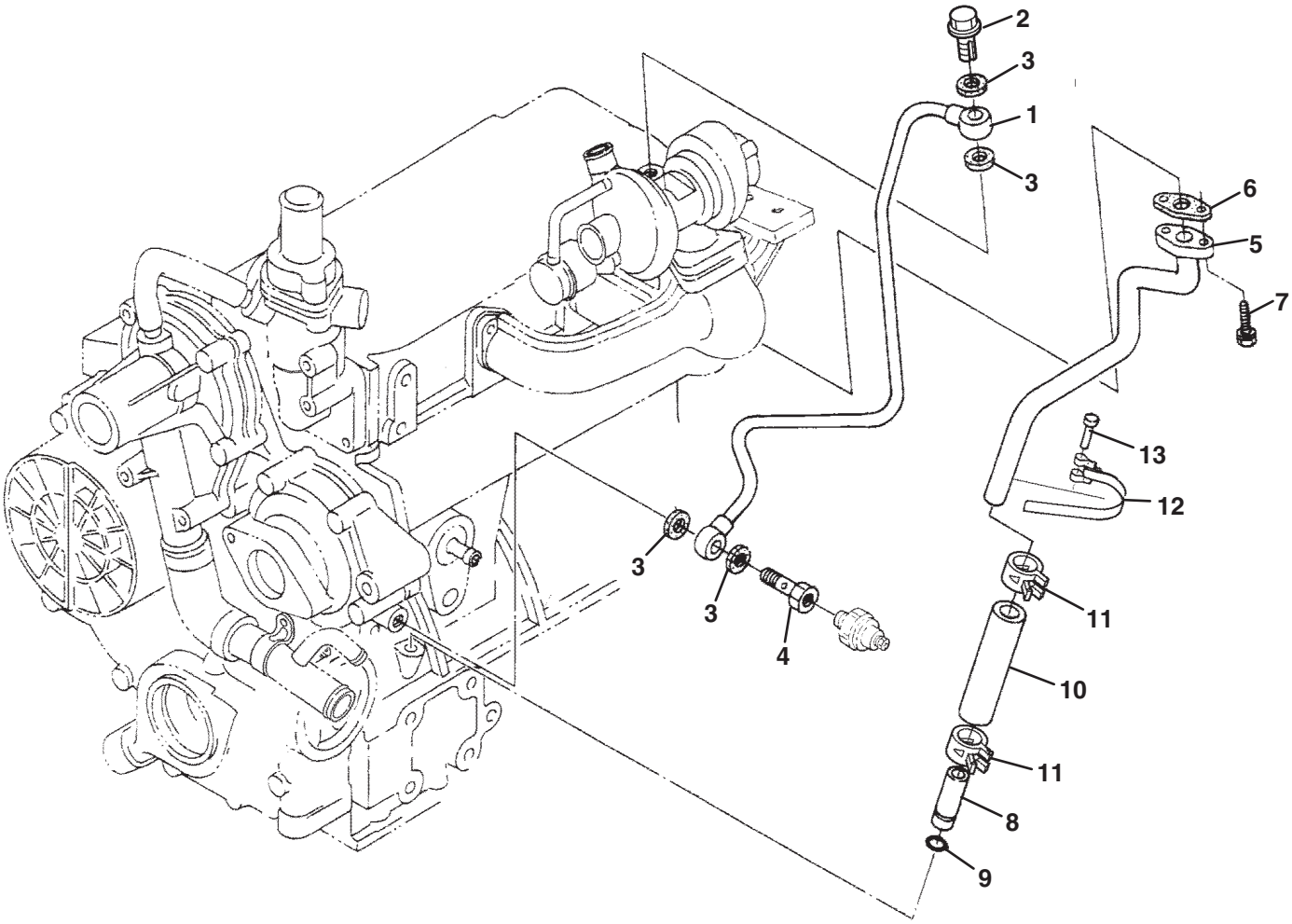

https://truckmanualshub.com/

Engine	Item	Part No.	Qty.	Description	Serial Numbers/Notes
DE	1	4183603	1	Comp. Pipe, Oil	
DE	2	4134414	1	Bolt, Eye Joint	
DE	3	2810775	4	Gasket	
DE	4	2810825	1	Bolt, Eye Joint	
DE	5	5003611	1	Comp. Pipe, Oil	
DE	6	4138248	1	Gasket	
DE	7	550363	2	Bolt	
DE	8	4183604	1	Assy Pipe, Oil	
DE	9	5002033	1	O Ring	
DE	10	2810824	1	Pipe, Oil	
DE	11	5003612	2	Clamp, Hose	
DE	12	5003613	1	Clamp, Pipe	
DE	13	4138252	1	Pin, Band	

A - SLF 1880 (D1105-E3B-TXRN-1)
B - Truckster / Haulster / Spraytek (D1105-E3B-TXRN-2)
C - TR-3 (D1105-E3B-RNUK-3)
D - SLF 1880 Turbo (D1105-T-E3B-TXRN-1)
E - AR-3 (D1105-E3B-RNUK-3)
F - LF510 / Turfcat (69180 S/N 1620~1650) (D1105-E3B-TXN-3)
● - Used on All Engines

> Change from previous revision

https://truckmanualshub.com/

31.1 Turbo Engine Oil Cooler

Serial No. All

Turbo Engines Only

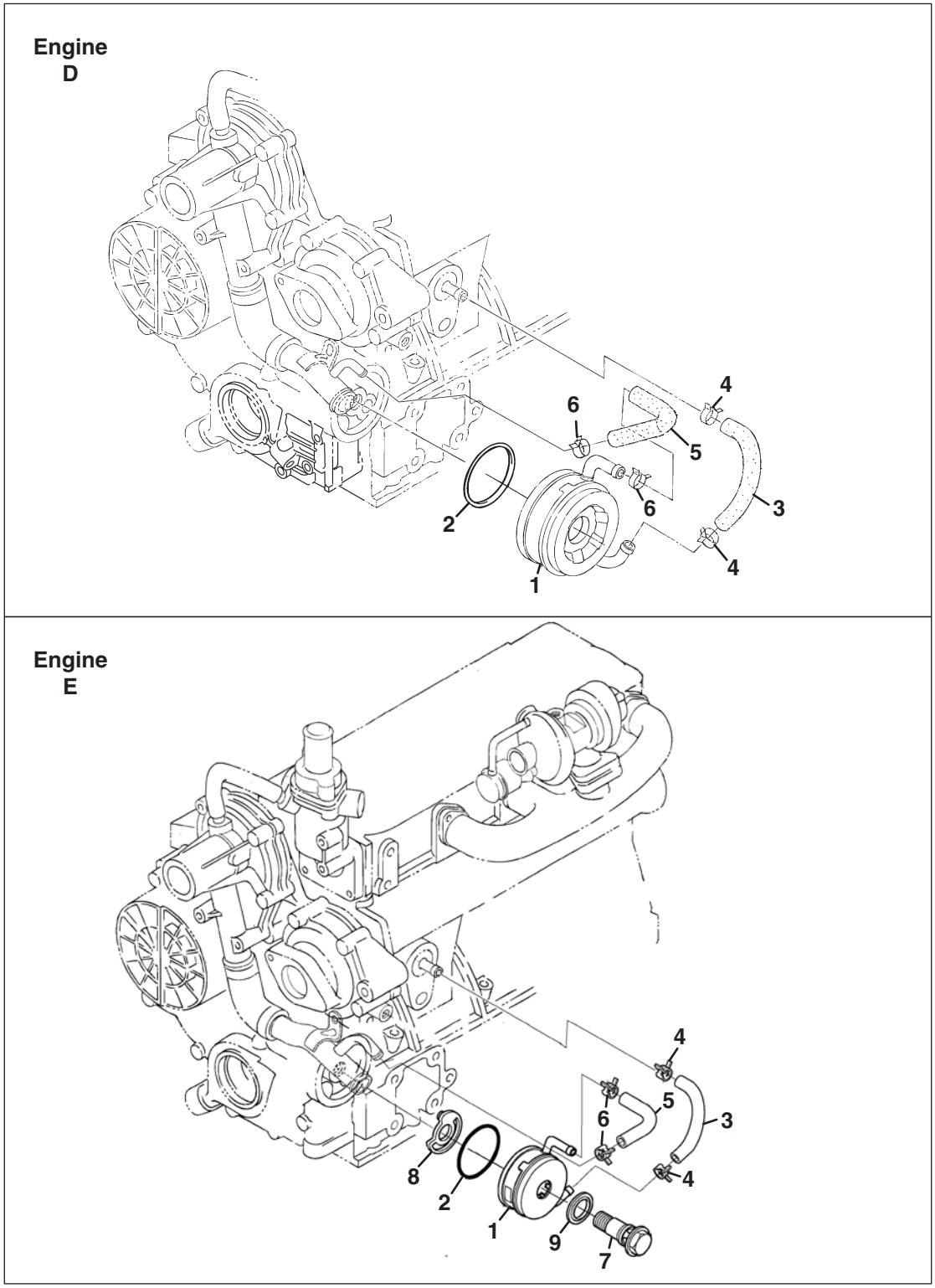

https://truckmanualshub.com/

Engine	Item	Part No.	Qty.	Description	Serial Numbers/Notes
D	1	4177251	1	Assy Cooler, Oil	
E	1	4183704	1	Assy Cooler, Oil	
DE	2	4177252	1	• O RIng	
DE	3	5002757	1	Pipe Cooler, Oil	
DE	4	2501011	2	Band, Pipe	
DE	5	5001254	1	Pipe, Water Return	
DE	6	2501011	2	Band, Pipe	
E	7	4183705	1	Connector	
E	8	4183706	1	Collar	
E	9	4183707	1	Washer, with Rubber	

A - SLF 1880 (D1105-E3B-TXRN-1)
B - Truckster / Haulster / Spraytek (D1105-E3B-TXRN-2)
C - TR-3 (D1105-E3B-RNUK-3)
D - SLF 1880 Turbo (D1105-T-E3B-TXRN-1)
E - AR-3 (D1105-E3B-RNUK-3)
F - LF510 / Turfcat (69180 S/N 1620~1650) (D1105-E3B-TXN-3)
● - Used on All Engines

> Change from previous revision

https://truckmanualshub.com/

32.1 Miscellaneous

Serial No. All

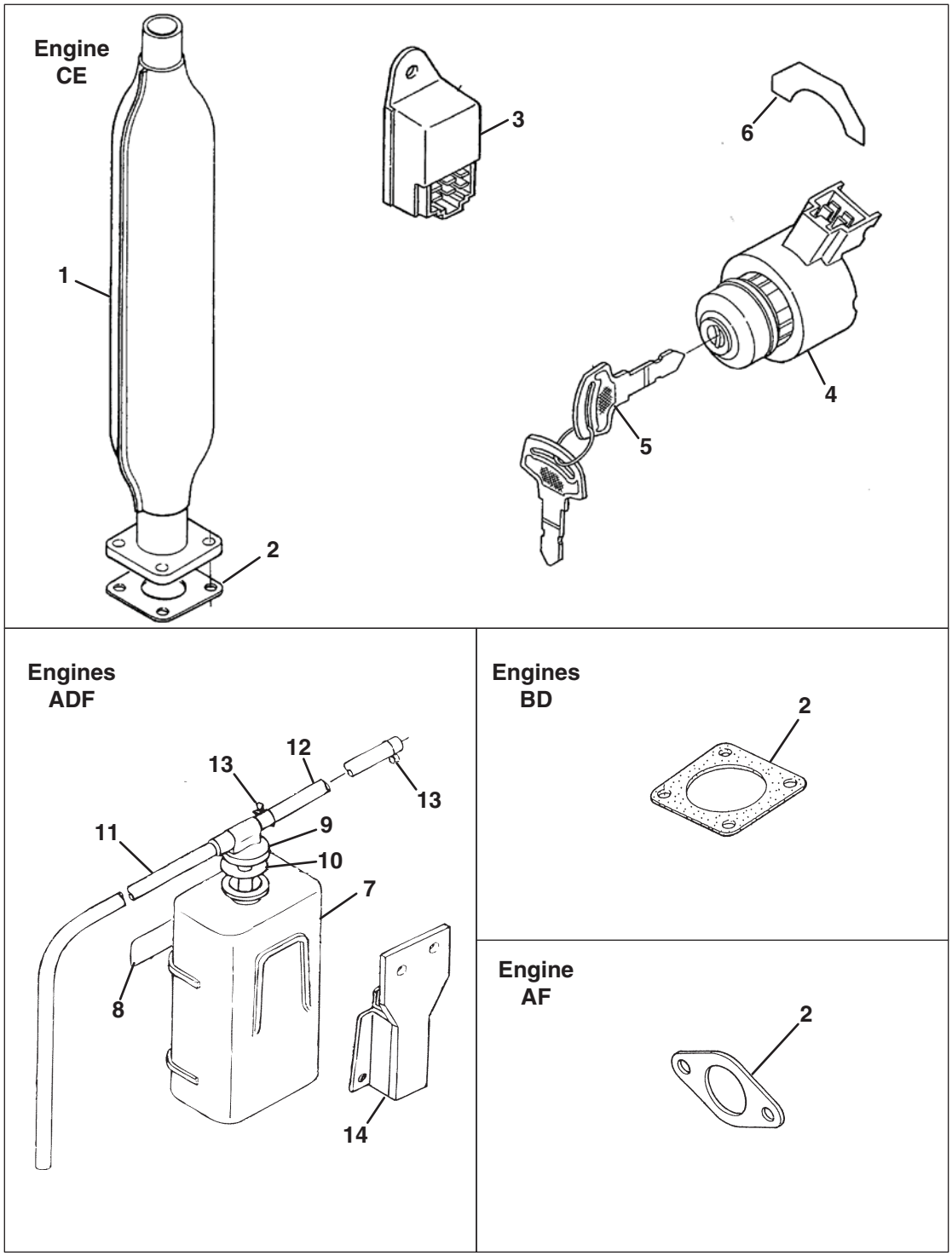

https://truckmanualshub.com/

Engine	Item	Part No.	Qty.	Description	Serial Numbers/Notes
CE	1	4176549	1	Muffler	
BCDE	2	553020	1	Gasket, Muffler Na	
AF	2	5003476	1	Gasket, Muffler Na	
CE	3	839406	1	Timer, Glow Lamp	
CE	4	2810269	1	Assy Switch, Starter	
CE	5	2811020	1	Assy Key	
CE	6	2810750	1	Label, Starter Switch	
ADF	7	553926	1	Assy Tank, Reserve	
ADF		5001207	1	• Body, Tank	
ADF	8	4145735	1	• Label, Caution	
ADF	9	2500814	1	• Cap	
ADF	10	2500815	1	• Gasket	
ADF	11	553913	1	• Pipe, Water Over Flow	
ADF	12	2811915	1	• Pipe, Water Over Flow	
ADF	13	553914	2	• Clip, Pipe	
ADF	14	554231	1	Comp Support, Tank	

A - SLF 1880 (D1105-E3B-TXRN-1)
B - Truckster / Haulster / Spraytek (D1105-E3B-TXRN-2)
C - TR-3 (D1105-E3B-RNUK-3)
D - SLF 1880 Turbo (D1105-T-E3B-TXRN-1)
E - AR-3 (D1105-E3B-RNUK-3)
F - LF510 / Turfcat (69180 S/N 1620~1650) (D1105-E3B-TXN-3)
● - Used on All Engines

> Change from previous revision

https://truckmanualshub.com/

2500809 45
2500811 ..... 5, 9
2500812 27
2500813 27
2500814 67
2500815 67
2500822 9
2500824 ..... 5, 25
2500825 ..... 5, 25, 27
2500827 57
2500828 57
2500831 27
2500832 27
2500834 27
2500836 27
2500837 25
2500838 25
2500839 25
2500840 25
2500841 27
2500842 27
2500843 25
2500844 25
2500845 ..... 5, 39
2500854 ..... 5, 59
2500856 ..... 5, 19
2500859 9
2500862 53
2500868 27
2500869 27
2500874 7
2500875 7
2500877 7
2500878 7
2500879 7
2500880 7
2500881 7
2500882 7
2500883 7
2500886 11
2500887 11
2500888 11
2500889 11
2500892 ..... 13, 17
2500893 ..... 13, 15, 17
2500894 ..... 13, 15, 17
2500895 ..... 13, 15, 17
2500896 ..... 13, 15, 17
2500898 ..... 13, 17
2500899 ..... 13, 15, 17, 53
2500900 ..... 13, 15, 17
2500901 ..... 13, 15, 17
2500902 ..... 5, 13, 15, 17
2500905 25
2500908 25
2500911 59
2500915 57
2500917 ..... 55, 59
2500918 59
2500919 59
2500920 57
2500922 57
2500923 ..... 5, 57
2500924 57
2500926 57
2500928 57
2500930 57
2500932 57
2500933 57
2500935 57
2500936 57
2500937 57
2500939 31
2500940 31
2500941 31
2500942 31
2500943 31
2500944 31
2500945 31
2500946 31
2500947 31
2500949 27
2500950 27
2500951 27
2500953 27
2500954 27
2500955 27
2500957 27
2500958 29
2500959 29
2500960 ..... 51, 61
2500961 37
2500962 45
2500965 33
2500966 33
2500967 33
2500968 33
2500969 33
2500972 33
2500973 33
2500975 33
2500976 33
2500979 33
2500980 33
2500987 35
2500990 39
2500995 39
2500997 39
2500998 39
2500999 39
2501000 41
2501001 41
2501002 41
2501003 41
2501004 41
2501005 41
2501006 41
2501007 41
2501008 41
2501011 ..... 53, 65
2501013 55
2501014 47
2501016 47
2501017 47
2501021 55
2501023 45
2501024 45
2501025 45
2501026 45
2809954 ..... 17, 21
2809955 ..... 5, 13, 17, 19
2809956 57
2809959 27
2809960 27
2809961 27
2809962 27
2809963 27
2809964 27
2809965 27
2809966 27
2809967 27
2809968 25
2809969 25
2809970 25
2809973 41
2809974 41
2809975 43
2809978 57
2810269 67
2810354 ..... 47, 49
2810355 49
2810640 45
2810647 ..... 15, 41
2810745 51
2810746 51
2810747 51
2810748 51
2810750 67
2810751 51
2810775 63
2810824 63
2810825 63
2810877 23
2810896 61
2810940 51
2810959 53
2811020 67
2811021 35
2811915 67
2811988 9
2812014 23
4111661 23
4111662 23
4134176 9
4134199 19
4134204 19
4134321 47
4134324 47
4134325 47
4134326 47
4134341 49
4134361 53
4134370 ..... 5, 53
4134402 61
4134414 63
4135839 49
4137778 53
4138248 63
4138252 63
4145652 19
4145666 45
4145702 45
4145703 45
4145735 67
4145828 49
4145829 49
4145830 11
4145831 11
4145832 51
4145837 49
4145838 49
4145892 45
4145906 35
4145910 7
4145911 19
4145912 19
4145942 49
4145943 49
4145944 ..... 13, 17, 19
4155662 55
4159670 59
4164661 39
4165421 19
4165422 29
4165442 35
4165443 9
4165525 55
4165526 19
4165620 57
4165622 33
4165623 33
4165624 33
4165630 41
4165647 55

https://truckmanualshub.com/

INDEX

4165648 59
4165655 19
4165656 19
4165659 43
4176549 67
4176550 47
4177223 25
4177224 25
4177226 27
4177227 43
4177230 13
4177232 19
4177233 19
4177234 19
4177237 25
4177238 25
4177243 59
4177244 59
4177245 61
4177246 61
4177247 61
4177248 61
4177249 61
4177250 61
4177251 65
4177252 65
4177260 9
4177262 21
4177263 25
4177265 31
4177268 29
4177269 35
4177270 35
4177271 35
4177275 43
4177276 43
4177277 43
4177278 39
4177279 39
4177280 39
4183580 11
4183581 ..... 5, 11
4183582 31
4183583 37
4183584 37
4183585 39
4183586 43
4183588 45
4183589 45
4183592 57
4183593 7
4183594 11
4183595 43
4183596 19
4183597 19
4183598 31
4183599 31
4183600 43
4183601 55
4183602 59
4183603 63
4183604 63
4183605 9
4183607 15
4183608 15
4183609 15
4183610 15
4183611 15
4183612 21
4183613 21
4183614 21
4183615 27
4183616 27
4183617 27
4183620 27
4183621 27
4183622 39
4183623 ..... 47, 49
4183624 47
4183626 49
4183627 49
4183628 49
4183629 49
4183630 49
4183631 49
4183632 53
4183633 55
4183634 21
4183636 5
4183637 5
4183638 9
4183640 ..... 5, 9
4183681 17
4183683 17
4183684 17
4183686 47
4183687 47
4183688 47
4183689 47
4183690 47
4183691 51
4183692 51
4183693 51
4183694 53
4183695 53
4183697 55
4183698 ..... 5, 55
4183700 17
4183701 59
4183702 61
4183703 61
4183704 65
4183705 65
4183706 65
4183707 65
4183723 11
4184020 23
4184260 53
4184261 59
5000886 37
5000892 27
5000894 37
5000897 33
5000901 43
5000902 43
5000903 43
5001118 37
5001135 ..... 53, 59
5001138 23
5001147 33
5001152 43
5001160 .. 13, 17, 37, 45, 47
5001182 45
5001189 45
5001207 67
5001210 49
5001215 37
5001217 37
5001218 43
5001219 43
5001220 43
5001221 43
5001222 43
5001224 43
5001225 43
5001226 43
5001227 43
5001228 43
5001229 43
5001230 43
5001231 43
5001232 43
5001233 43
5001234 43
5001235 43
5001236 43
5001239 47
5001241 25
5001244 ..... 33, 51
5001246 33
5001247 33
5001254 ..... 53, 65
5001255 ..... 13, 15, 17
5001256 ..... 13, 17
5001257 35
5001262 ..... 5, 59
5001265 43
5001266 43
5001269 ..... 5, 13, 15, 17
5001270 ..... 5, 25
5001272 ..... 5, 41
5001273 ..... 5, 53
5001275 35
5001276 ..... 13, 15, 17
5001278 27
5001279 33
5001284 47
5001287 39
5001292 51
5001297 53
5001301 45
5001302 29
5001303 9
5001306 59
5001308 7
5001309 45
5001314 33
5001875 ..... 13, 15, 17
5001922 ..... 5, 45
5001947 45
5001948 45
5002018 35
5002033 ..... 23, 63
5002740 27
5002741 27
5002742 27
5002743 43
5002749 61
5002750 61
5002751 ..... 17, 21
5002757 65
5002800 7
5002955 23
5003269 47
5003283 61
5003301 51
5003470 29
5003472 29
5003473 29
5003475 59
5003476 ..... 5, 67
5003478 47
5003479 53
5003480 47
5003482 61
5003603 ..... 5, 59
5003604 59
5003608 59
5003611 63
5003612 63
5003613 63
5003615 21
5003616 21

https://truckmanualshub.com/

550360 39
550361 ..... 9, 35
550362 31, 33, 41, 47, 53
550363 ..... 33, 59, 63
550364 ..... 25, 59
550365 25
550376 9
550379 61
550386 ..... 13, 15, 17, 41
550395 ..... 13, 17, 45
550396 45
550398 61
550401 43
550409 61
550424 7
550425 41
550463 45
550464 45
550489 45
550543 7
550580 57
550673 11
550838 19
550839 ..... 5, 19
552950 ..... 7, 15
552957 7
552958 7
552977 7
552978 ..... 7, 11
553020 ..... 5, 67
553067 31
553093 27
553094 27
553105 43
553143 ..... 5, 35, 41, 43
553277 51
553481 ..... 13, 15, 17
553839 57
553841 59
553846 41
553848 37
553855 9
553857 7
553860 31
553911 7
553912 19
553913 67
553914 67
553926 67
554018 7
554022 43
554036 37
554037 43
554051 ..... 5, 43
554054 43
554055 43
554084 7
554097 ..... 13, 17
554099 37
554104 37
554108 57
554115 11
554116 37
554117 37
554202 37
554231 67
554748 55
555567 27
555571 29
556412 53
557227 53
557352 ..... 5, 43
557357 45
557358 45
557571 55
557584 37
557856 13
557859 13
557863 55
557865 55
557866 55
557867 ..... 5, 55
557883 27
557888 51
557890 51
557891 ..... 13, 17, 51
557892 51
557893 51
557894 51
557895 51
557896 51
557897 51
557898 51
557899 51
557900 51
557902 51
557903 51
557904 51
557905 51
557906 51
557907 51
557908 51
557909 51
557910 51
557911 51
557912 51
557913 51
557934 35
557941 47
557942 47
557947 49
557948 49
557949 49
557951 49
557953 49
557956 49
557957 49
557960 13
557961 49
557962 49
557964 49
557965 49
557966 49
557967 49
557968 49
557969 49
557970 49
557971 49
557972 49
557975 53
557980 55
594330 11
594334 53
594348 47
594350 47
594351 13
839406 67

https://truckmanualshub.com/

https://truckmanualshub.com/

World Class Quality, Performance And Support

Equipment from Jacobsen is built to exacting standards ensured by ISO 9001 and ISO 14001 registration at all of our manufacturing locations.

A worldwide dealer network and factory trained technicians backed by Genuine Jacobsen Parts provide reliable, high-quality product support.

JACOBSEN®
A Textron Company

When Performance Matters.™

CUSHMAN JACOBSEN RANSOMES

Jacobsen, A Textron Company
11108 uality Drive, Charlotte, NC 28273
www.Jacobsen.com
800-848-1636