https://truckmanualshub.com/

YANMAR

OPERATION MANUAL

Pleasure craft power

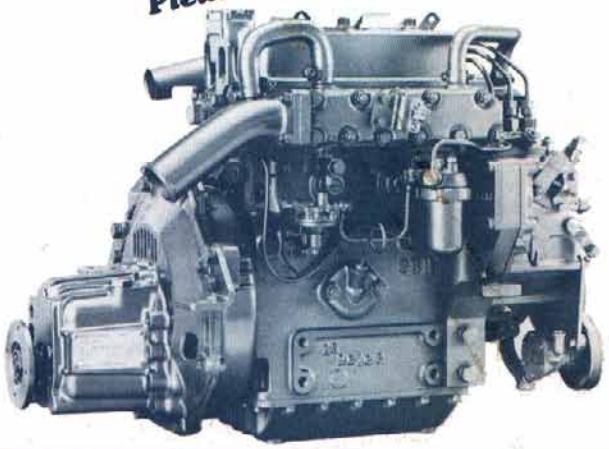

1GM
2GM
3GMD
3HM

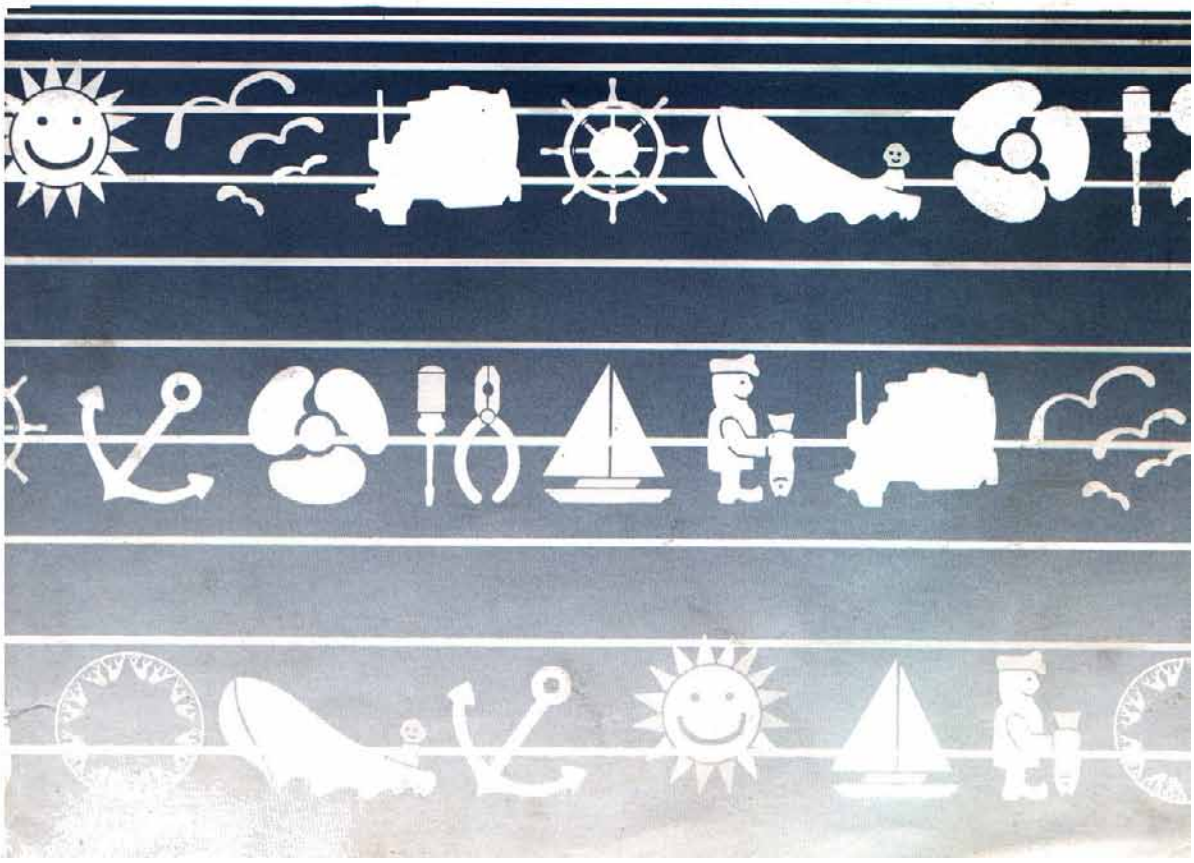

https://truckmanualshub.com/

Thank you for purchasing the YANMAR Diesel Engine

This manual describes the various engine parts and prescribes simple checks for normal engine maintenance.

Before starting up your new engine, we recommend that you throughly read this manual to insure proper handling and use. If any sections are unclear or if you have any problems, please consult your nearest dealer or sales outlet.

In view of our continuing efforts to improve quality and performance, engine parts may sometimes be changed. This may result in some discrepancies in the contents of this manual.

This manual is concerned with the 2 cylinder model. Although the 1GM, 3GMD and 3HM seem to be different on the outside, their handling is the same.

Caution

This safety alert symbol indicates important safety messages in this manual. When you see this symbol, be alert to
the possibility of personal injury and carefully read the message that follows.

Important

This stop symbol indicates important proper operation messages in this manual. When you see this symbol, carefully read the message that follows.

In order to deliver correct parts to you, we need accurate data on the engine you purchased. The information needed is described in the illustrations below. For ready reference, please record the information in the spaces provided under the illustrations.

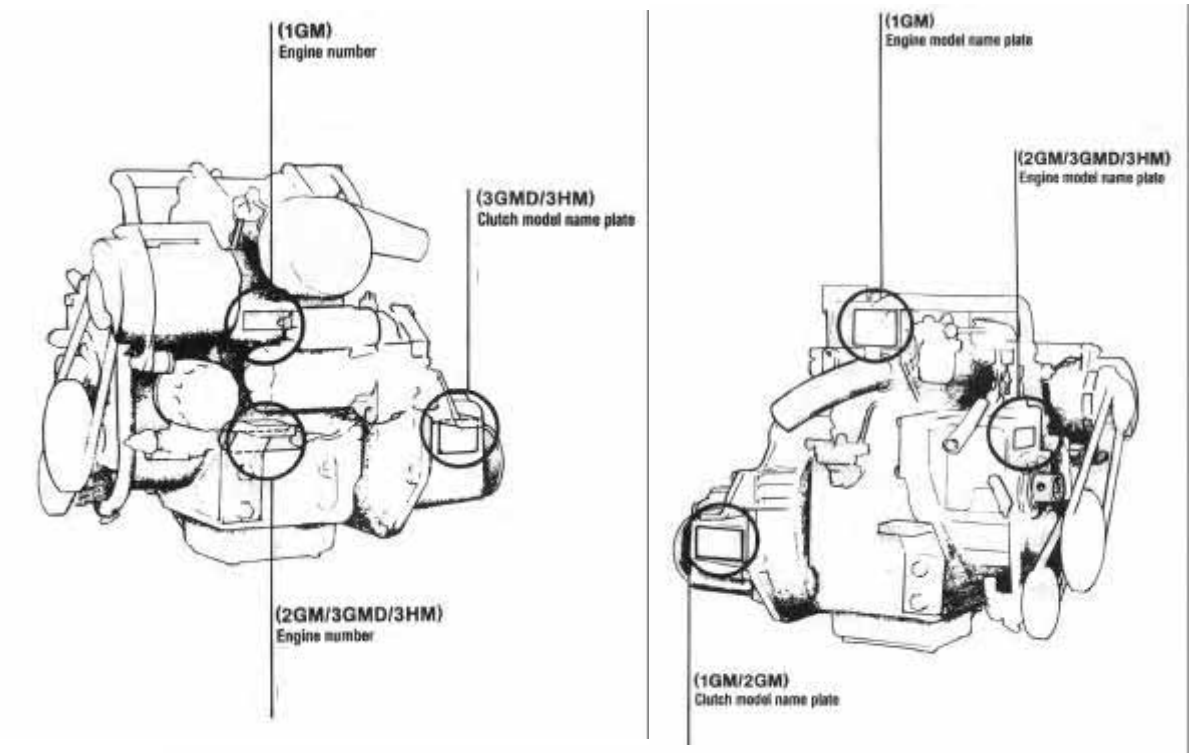

Engine model name plate

Your engine model

Your engine number

Clutch model name plate

Your clutch model

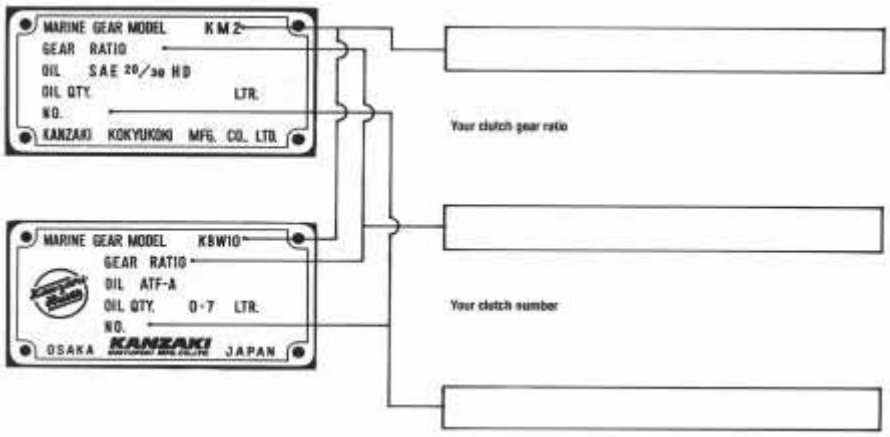

Your clutch gear ratio

Your clutch number

https://truckmanualshub.com/

2GM

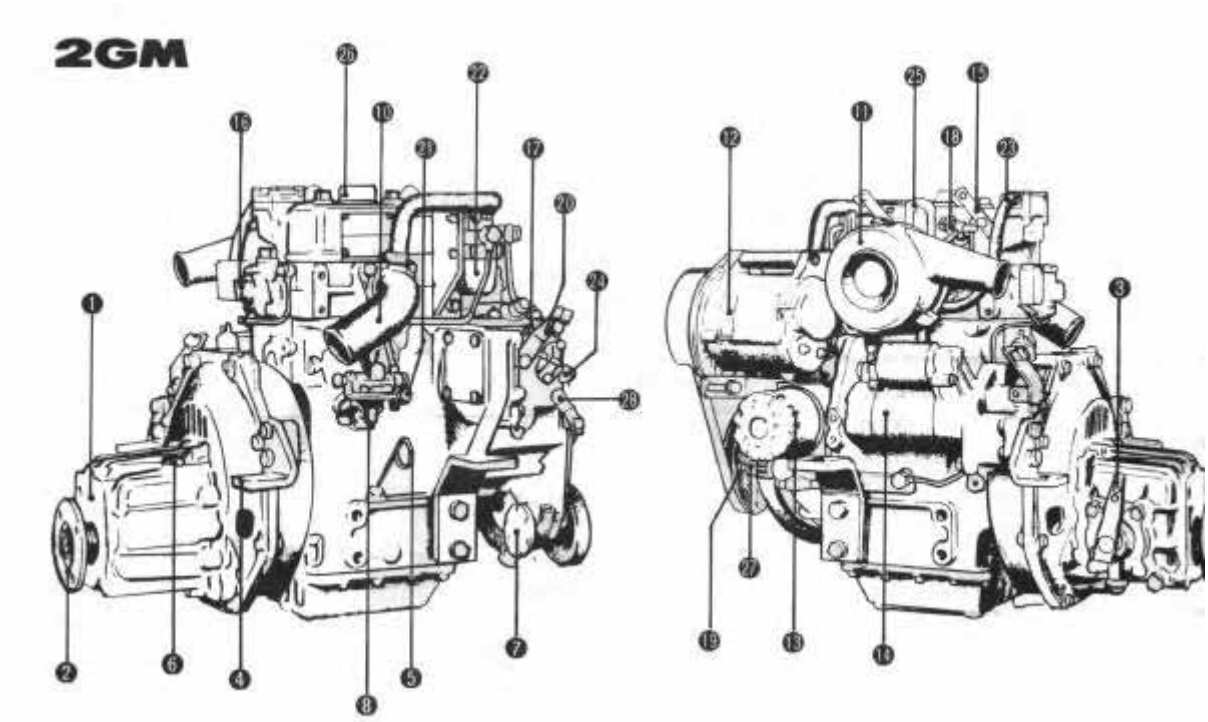

3HM

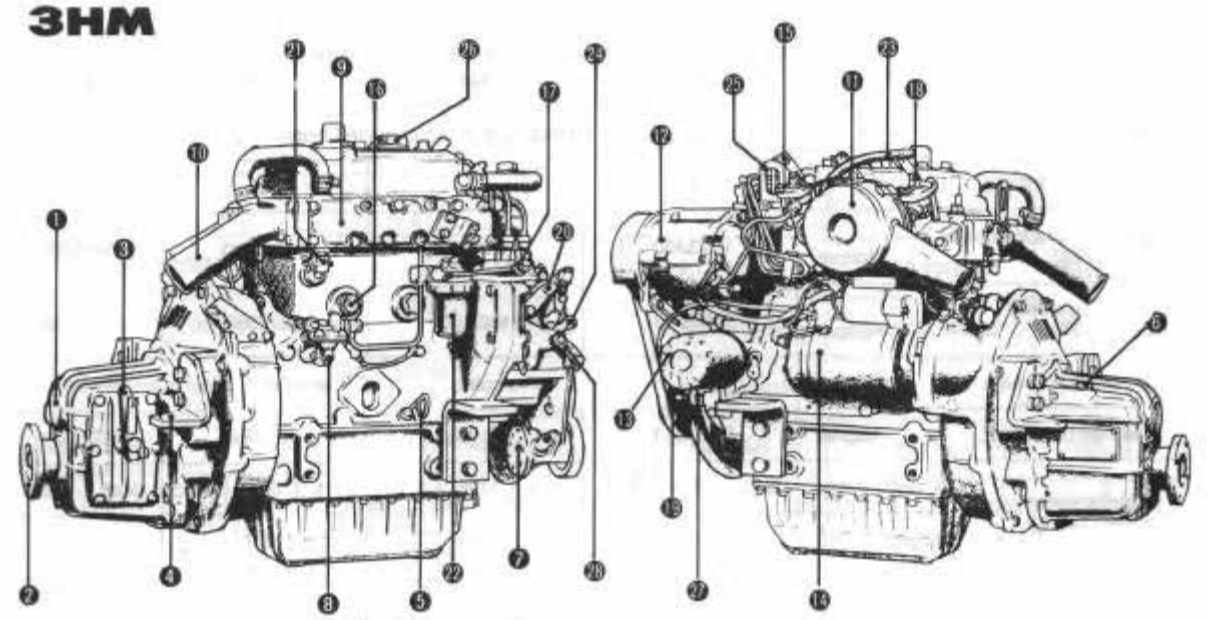

I. Name of parts

1 Reduction and reversing gear
2 Output shaft coupling
3 Clutch control lever
4 Installation foot
5 Engine tube oil dipstick
6 Clutch tube oil dipstick/Supply port
7 Cooling water pump
8 Fuel feed pump
9 Exhaust manifold
10 Mixing elbow
11 Air intake silencer
12 Alternator
13 Lube oil filter
14 Starter motor
15 Decompression lever
16 Anticorrosion zinc
17 Fuel injection pump
18 Fuel injection valve
19 Crankshaft V-pulley
20 Speed control lever
21 Cooling water drain cock (Cylinder block/Exhaust manifold)
22 Fuel filter
23 Breather pipe
24 Fuel injection limiter
25 Engine lift plate
26 Lube oil supply port
27 Oil pressure sender
28 Engine stop device

https://truckmanualshub.com/

II. Engine specifications

Model		1GM			2GM			3GMD			3HM	
Type		Vertical 4-cycle water-cooled diesel engine										
No. of cylinders		1			2			3			3	
Continuous rating output (DIN 6270A)	Hp/rpm	6.5/3400			13/3400			20/3400			27/3200	
1-hr rating output (DIN 6270B)	Hp/rpm	7.5/3600			15/3600			22.5/3600			30/3400	
Combustion system		Pre-combustion chamber type										
Fuel injection timing	degree	FID 15±1			FID 15±1			FID 18±1			FID 21±1	
Propeller speed (at cont. rating)	Ahead rpm	1540	1298	1055	1540	1298	1055	1441	1303	1063	1498	1129
	Astern rpm	1113			1113			1077			1280	
Reduction and reversing gear	Type	Constant mesh gear with servo cone clutch									Constant mesh gear with multiple friction disc clutch	
	Model	KM2-A						KM3-A			KBW10-E	
Reduction ratio	Ahead	2.21	2.62	3.22	2.21	2.62	3.22	2.30	2.61	3.20	2.14	2.83
	Astern	3.06			3.06			3.16			2.50	
Direction of rotation	Crankshaft	Counter-clockwise viewed from flywheel										
	Propeller shaft	Clockwise viewed from stern										
Lubricating system	Engine	Forced lubrication										
	Reduction and reversing gear	Splash method										
Lube oil capacity	Crank case	1.3ℓ			2.0ℓ			2.7ℓ			5.5ℓ	
	Reduction and reversing gear	0.25ℓ						0.3ℓ			0.7ℓ	
Cooling system		Direct seawater cooling by rotary rubber impeller pump										
Starting system		Electric manual combination									Electric	
Electrical equipment	Starting motor	12V—1.0kW made by Hitachi									12V—1.8kW made by Hitachi	
	Alternator	12V—35A made by Hitachi										
Dry weight	kg (lbs)	70 (154.4)			100 (220.5)			130 (286.7)			158 (348)	

III. Engine installation

[3-1.1 Inspection after unpacking

During unpacking be careful not to break the engine base. Check the following points:

1) Have any nuts or bolts become loose or fallen off?
2) Have any parts become rusty?
3) Is there any water inside the engine?
4) Has any part of the engine been broken, chipped, or crushed?
5) Are any of the accessory parts/ items broken or defective?

[3-2.1 Preparation of the engine foundation plate

The installation angle will differ with the vessel configuration and installation location of the engine. The most suitable installation angle is 8 degrees and the maximum installation angle is 15 degrees. If it is greater than this, horsepower loss will increase and vessel speed will drop. In addition, abnormal wear of parts will occur and engine performance will be adversely affected.

[3-3.1 Engine installation

1) For the engine installation, be sure to use the flexible rubber mount.
Yanmar prepared the flexible mounts which match the respective engine characteristics as a standard accessory.

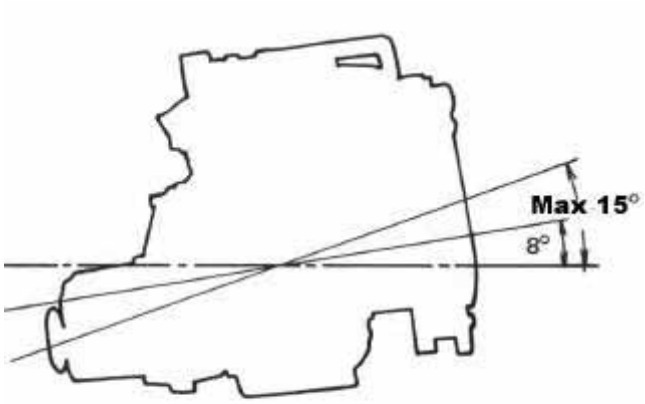

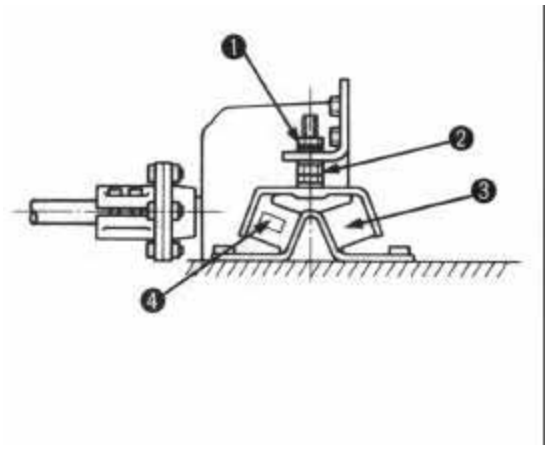

Yanmar made flexible mount

1. Lock Nut
2. Jack Nut
3. Rubber Mount
4. Indication No. (50, 70, 75, 100)

Note

Avoid splashing the flexible mount with water, oil etc.

Engine model	Indication #		Installation distance (unit: mm)	
	Front	Rear	A	B
1GM	70	50	209	370
2GM	100	75	275	370
3GMD	100	75	355	370
3HM	100	100	432	400

It is convenient for installation to make the GUIDE PLATE as illustrated.

2) Be sure the propeller shaft lines up with and matches both shaft joints. If necessary adjust the height of the engine with a jack nut to line up the propeller shaft and the engine. Fit the propeller shaft and the intermediate shaft if there is one-to the engine.
With a gap gauge, measure the gap of the connection at the top, bottom, right, and left. The maximum tolerance should be less than 0.2mm. Lock nut should be as low as possible.

3) Tighten the installation bolts firmly and evenly. Do not force the bolts in if the propeller shaft does not line up.

Important

After 50 hours operation, check that the propeller shaft lines up again, and re-adjust if necessary.

View From Top

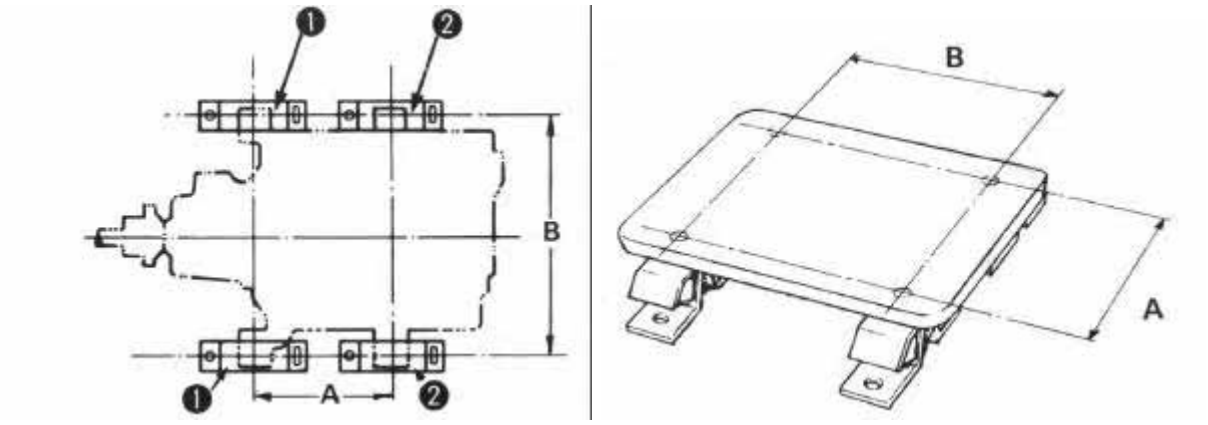

1 - Rear 2 - Front

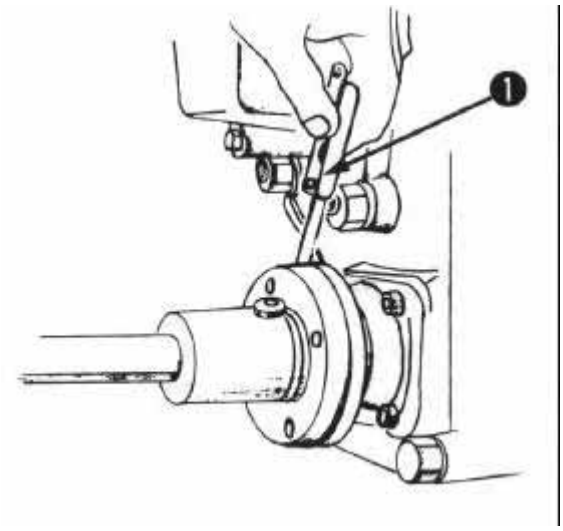

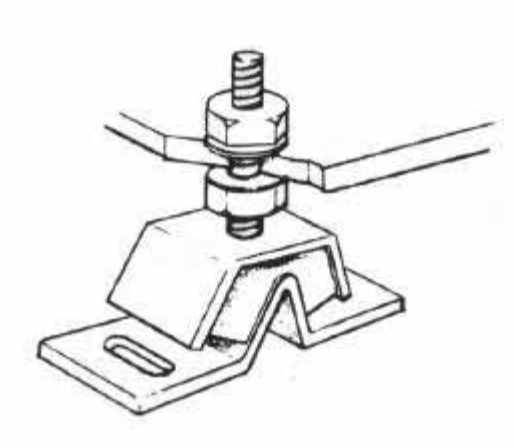

1. Gap gauges

[3-4.1 Propeller, propeller shaft

1) Select a propeller which is suitable for the size and shape of the vessel, as well as for its intended usage. An extremely small or large propeller will reduce the speed of the vessel and overload the engine, which may lead **to engine break down.** It is recommended that a propeller be selected in consultation with a reputable dealer. However, the best way to make sure the propeller fits the vessel is to conduct a test run after installation.

2) It is effective to use a proper flexible stern tube to reduce vibration.

[3-5.1 Cooling water supply device

1) The engine should be operated only after checking the cooling water piping is completed.

Important
If the Cooling water pump is operated without water, the rubber impeller inside the pump will be broken.

2) Kingston cock installation. Install the canvas on the outside of the hull, and the canvas or rubber packing on the inside of the hull; tighten the kingston cock. Installation directions are given in the figure at the right. Install the kingston cock cover as shown.

3) Piping
For the cooling water pipe, use a rubber hose with an inside diameter of 13mm. Piping should be kept as straight and short as possible. If the pipe is too long, it will be difficult to draw water up.

4) Connect the rubber hoses to the kingston cock, cooling water pump inlet, and engine cooling water outlet, and secure with hose clamps.

Piping Diagram

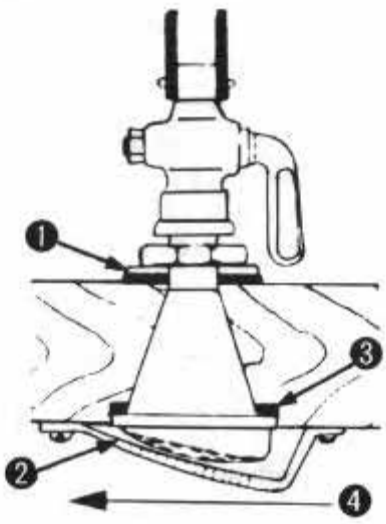

1. Inside Packing
2. Kingston cock cover
3. Outside Packing
4. Direction of vessel movement

5) Seawater strainer
The seawater pump will be damaged if foreign matter is allowed to get into it. Therefore, attach a seawater strainer between the seawater pump inlet and the seawater cock when the sea water cock is not already equipped with a strainer.

6) Exhaust pipe layout
Be sure to use the water-lock. Installation of piping should be done as shown in the following diagram.

6-a)
In case the water outlet of the engine side (A) is above water line.

6-b)
In case the water outlet of the engine side (A) is below water line.

7) Air ventilation and Intake pipe
If the engine is operated at below normal output, incomplete combustion can occur as a result of an overheated engine room. Therefore, the engine room should be adequately ventilated.

Important

During piping works be sure to cover the intake opening to prevent the entry of foreign matter.

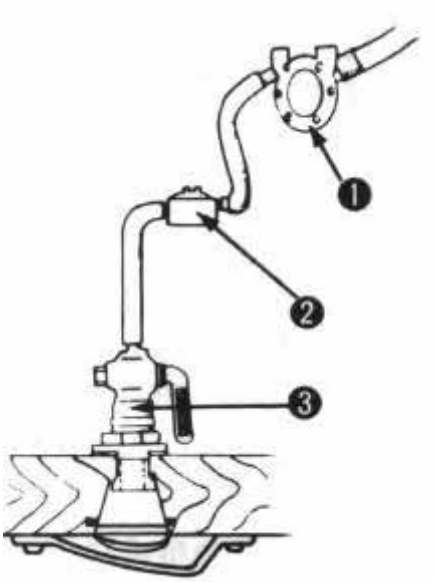

1. Seawater pump
2. Seawater strainer
3. Kingston cock

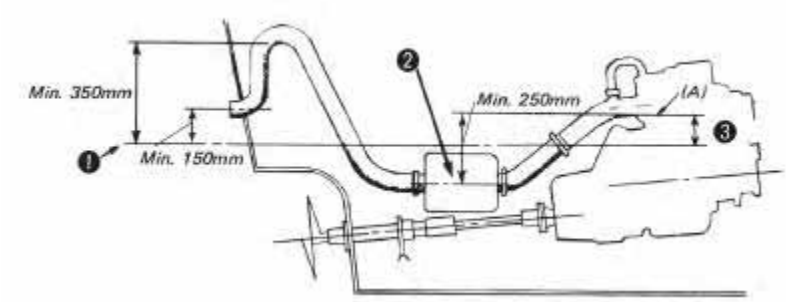

1. W.L.
2. Waterlock
3. Above seawater line

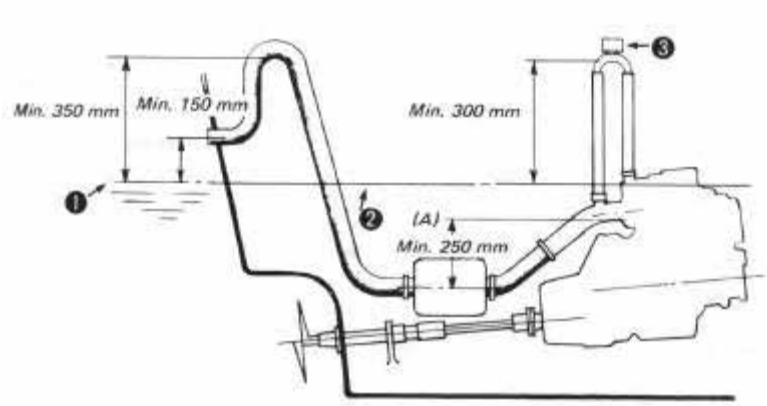

1. W.L.
2. Waterlock
3. Vacuum valve

I3-6.] Remote control

1) Control cable Use only the single lever remote control device with 1GM 2GM, 3GM and 3HM engines.

Note

The dual lever remote control device cannot be used.

Recommended Cable	Control Cable	Cable Clamp	Connecting metal fittings
Speed Control	Morse 33-C	Yanmar Standard	Yanmar Standard
Clutch Control	Morse 33-C	Yanmar Standard	Yanmar Standard
Engine Stop (option)	Yanmar made Morse		

2) Speed control

2-a) A spring is attached to the connector to absorb shock when operating the speed control lever. Make the wiring so that the spring works when the throttle is "idling" as illustrated.

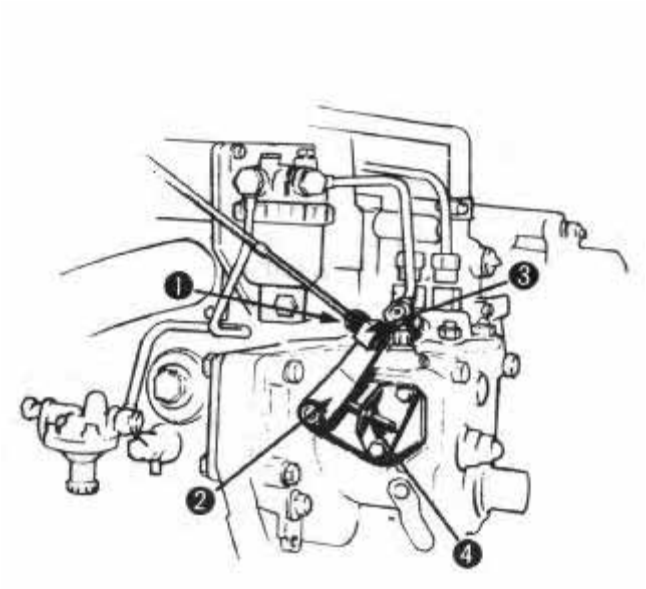

1. Spring
2. Speed Control Lever
3. Connector
4. Idle adjusting bolt

Note

1) Fix the wire to the cable clamp of the F.O. filter side.

2) Cable connector has M5 thread.

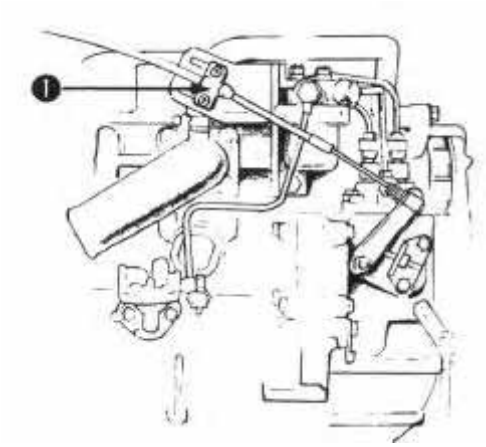

1. Cable clamp

2-b)
After completing of wiring, check the following points:

2-b)-1.
That the remote control lever and speed control lever can be moved smoothly through the whole stroke.

2-b)-2
That the idle speed adjuster regulates the speed to 850-900 rpm, after all preparations for starting the engine have been completed.

3) Clutch Control

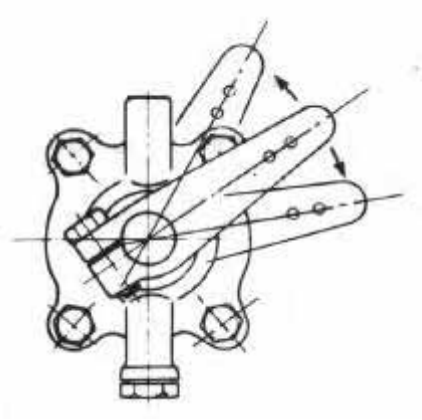

3-a)
Cone Clutch (for 1GM, 2GM, 3GMD)

3-a)-1.
Remove the spring joint from the operation lever.

3-a)-2.
With the spring joint disconnected from the operation lever, move the operation lever forward and reverse, to make sure that the strokes from the neutral position are the same.

3-a)-3.
Attach the spring joint to the operation lever 60mm from the shaft lever center.
The stroke from the neutral position moves through a distance of 24.4 to 35.Ohm. When the spring joint is attached to the hole 52mm from the center of the shift lever, these strokes must be 21.1-30.Ohm.

Note

The operation lever may not move smoothly when there is no lubrication oil in the clutch case.

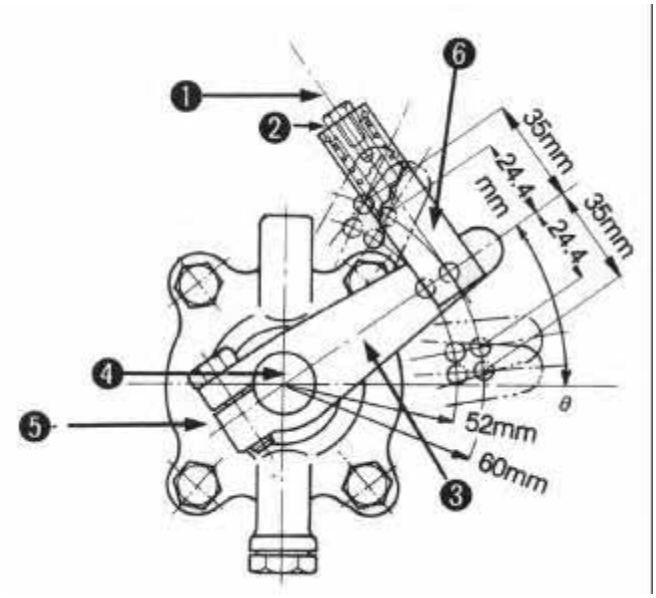

1. Remote Control Cable
2. M5 Thread
3. Operation Lever
4. Shaft
5. Clutch Case side cover
6. Spring joint

3-a)-4
Move the remote control lever to the forward position, and make sure that the M5 thread of the spring joint reaches to the inside of the joint.
In this position, the output shaft (propeller shaft) of the clutch should rotate clockwise as viewed from the stern.

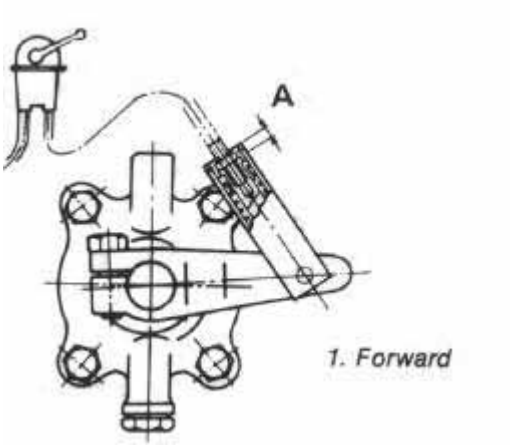

3-a)-5.
Move the remote control lever to the reverse position, and make sure that the M5 thread of the spring joint reaches the outside of the joint. In this position, the output shaft (propeller shaft) of the clutch should rotate counter-clockwise as viewed from the stern.

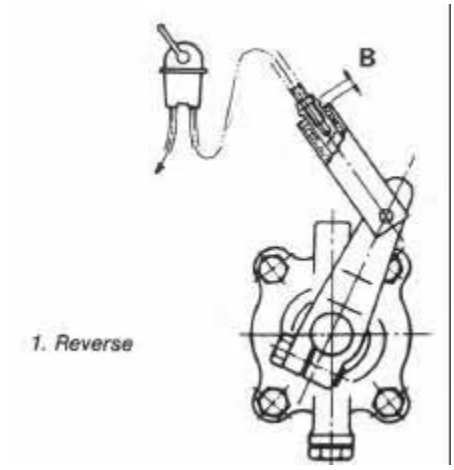

3-a)-6.
Adjust the M5 thread depth so that the value of A, and 16 are nearly the same.

3-a)-7.
Make sure that the angle made between the spring joint and the clutch control lever forms 90 degrees.

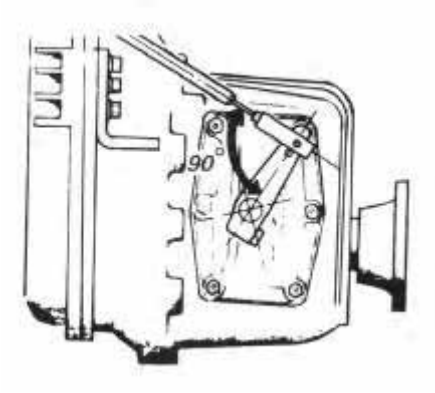

3-b)
Kanzaki-Hurth clutch (for 3GMD and 3HM)
To connect the cable, the operating cable must be positioned at right angles to the shift lever when the shift lever is in the neutral position. The shift play, measured at the pivot point of the shift lever, must be at least 35mm to each side (reverse and forward) from the neutral position. A greater shift play has no adverse effect on the marine gearbox. After connecting the linkage, confirm that the remote control and the shift lever on the marine gearbox work properly. A typical linkage arrangement is illustrated in the figure below.

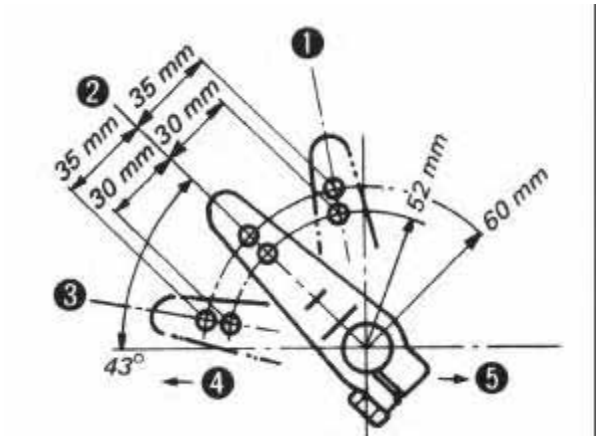

1. Astern
2. Neutral
3. Ahead
4. Propeller side
5. Engine Side

Note

Since the cable stroke may be insufficient, two holes are drilled in the shift lever.
When the cable is attached to the hole 60mm from the center of the rotation of the shift lever, the strokes from the center to the forward and reverse sides must be 35mm. When the cable is attached to the hole 52mm from the rotation of the shift lever, these strokes must be 30mm.

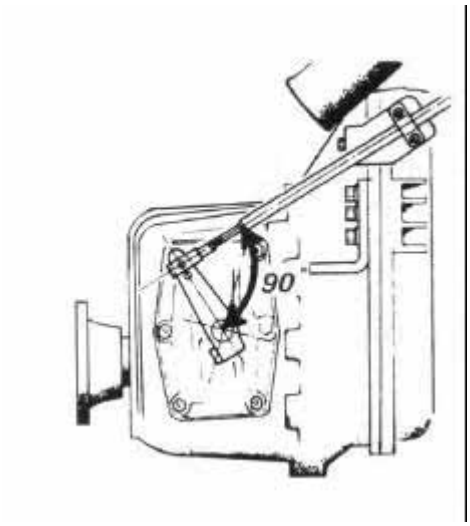

4) Engine stop remote control Connect the engine stop remote control cable **as in the illustration, after completing** the wiring check that the engine stop lever can be moved smoothly through the whole stroke.

https://truckmanualshub.com/

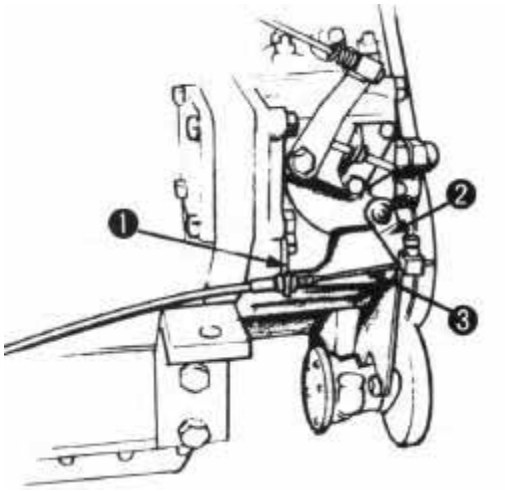

1. Clamp
2. Engine Stop lever
3. Engine stop remote control cable

[3-7.] Recommended battery capacity

Use sufficient capacity of battery.

1GM, 2GM, 3GMD	-	12V - 70AH (Mini)
3HM	-	12V - 100AH (Mini)

Ⅳ. **After launching**

1) Check for water or air intake around the gland part of the stern tube and the kingston cock fitting.

2) Make sure that the engine installation bolts and shaft joints are firmly secured.

3) Release compression with the decompression lever and slowly run the engine with the engine starting handle. Relative compression can be determined by comparing the weight (resistance when turning) of the clutch handle when placed in the neutral, ahead, and astern positions. When there is little weight difference among the three positions, decompression is complete. If the clutch is heavier when engaged than when disengaged, this indicates that the shaft is not in the correct position. If the engine is operated under this condition, a broken propeller shaft may result. Check the alignment of the propeller shaft and the engine.

V. Fuel and lubricating oil

[5-1.] Selection and handling of fuel oil

1) Choice of fuel oil Fuel oils available in countries other than those listed above which are to equipment specification may be used. Use the chart at below to determine correct grade of fuel.

United States	ASTM/D975	No.1-D or No.2-D diesel oil
United Kingdom	BS2869	Class A 1 or Class A 2

Air temperature	Diesel/fuel (ASTM/D975)
Below 5°C (40°F)	1-D
Above 5°C (40°F)	2-D

1-a)
As further insurance of satisfactory operation, use fuel having less than 0.5% sulphur.

1-b)
For maximum filter life, sediment and water should not exceed 0.1 %.

1-c)
To maintain proper fuel delivery during cold weather operation, use grade No.1-D diesel fuel as defined in ASTM Designation D975 with a pour point at least 5.6°C (10°F) below the lowest outside air temperature.

1-d)
The cetane number should be 40 minimum.
Low atmospheric temperature, as well as high altitude operation, may require use of a fuel with a higher cetane number.

2) Storing fuel Proper fuel storage is vitally important. Keep all dirt, water and other contaminants out of fuel. Avoid storing fuel over long periods of time. Store fuel in a convenient place away from buildings.

Important

Presence of water or dust in the fuel may cause failure of the engine and early wear of the fuel injection equipment. Water and dust in the fuel tank should be removed and clean fuel used.

3) After each day's operation.
Fill fuel tank at the end of each day's operation. This prevents condensation in fuel tank as moist air cools.

[5-2.] Selection of lubricating oil

1) Choice of lube oil
The selection of lube oil is very important to a diesel engine. If an unsuitable oil is used, or oil change is neglected, it may result in damage, and a shorter engine life.
When selecting the lube oil, it must be one of the following.

2) Kinds of lube oil
Choose a lube oil with a rating higher than SAE class CC.

3) Lube oil viscosity
The viscosity of the lube oil greatly influences engine starting and running performance. The lube oil weight number chosen should vary with the season and temperature.

4) Recommended brands of lube oil for crankcase:

			SAE NO.	**SAE NO.**	**SAE NO.**
SUPPLIER	**BRAND**	**TEMP.**	**TEMP.**	**TEMP.**	**TEMP.**
		Below 10C	**10-20C**	**20-35C**	**Over 35C**
Shell	Rotella	10W,20(W)	20(W)	30, 40	50
	Talona	10W	20	30, 40	50
	Rimula	20(W)	20(W)	30, 40	-
Caltex	Marine	10W	20	30,40	50
	Multi-purpose	20(W), 10(W)	20	30	50
Mobile	Delvac Special	10W	20	30	-
	Delvac 20W-40	20W-40	20W-40	-	-
	Delvac 1100 Series	10W, 20(W)	20(W)	30, 40	50
	Delvac 1200 Series	10W, 20(W)	20(W)	30, 40	50
Esso	Estor HD	10W	20	30, 40	50
	Lube HD	-	20	30, 40	50
	Standard	10W	20	30, 40	50
BP	Energol	20W	20W	40	50

V1. **Starting the new engine for the first time**

Important !
Before starting the engine for the first time check carefully the following preparations.

[6-1.] Supply of fuel oil

1) Fill fuel into the fuel tank. When you feed fuel from storage tank, put the inlet of the syphon at the middle of the storage tank. Take care not to draw unwanted materials floating on the fuel surface or depositing in the bottom.

2) Draining the fuel tank. Be sure to equip the fuel tank with a precipitation tank, as shown in the figure, and install a drain cock to remove any dirt and water that accumulate. Before starting the engine. open the drain cock to remove any precipitation and dirt.

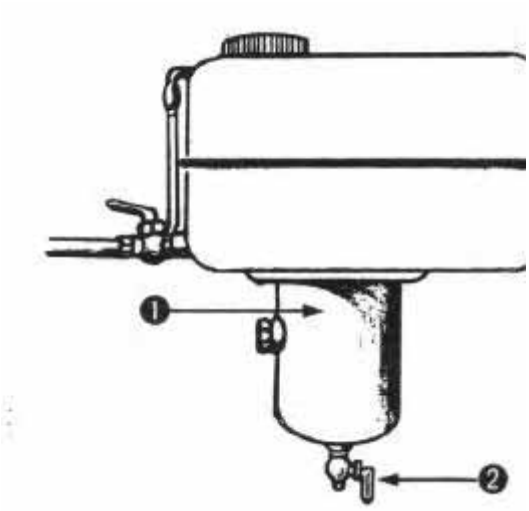

1. Precipitation Tank
2. Drain Cock

[6-2.] Supply of lubricating oil
1) Lube oil to the crankcase

1-a)
Remove the lube oil supply port (yellow cap) and supply approved lube oil.

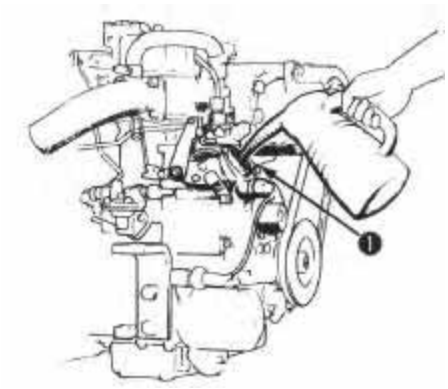

FOR 1GM
1. Oil Supply Port

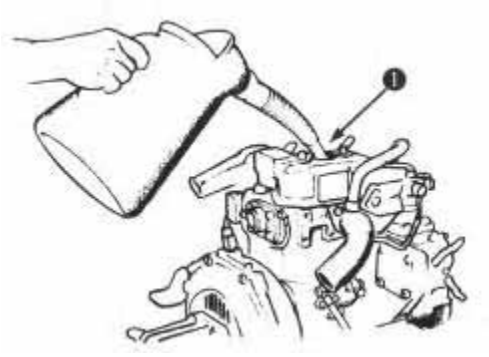

FOR 2GM, 3GMD, 3HM
1. Oil Supply Port

1-b)
Check the amount of lobe oil by inserting the dipstick as far as possible. The oil level should correspond to the upper mark on the dipstick.

Volume of the tube oil corresponding to the upper mark on the dipstick (with an installation angle of 8°)

Engine crankcase

1GM	**2GM**	**3GMD**	**3HM**
1.3 L	2.0 L	2.7 L	5.5 L

Note.

When running the engine for the first time, the tube oil flows to the piping thus reducing the amount of oil in the crankcase. After running the engine for several minutes, stop it for 2-3 minutes.
Recheck the oil level.

2) Lube oil to the reduction and reversing gear case
For the checking of the amount of tube oil to the reduction and reversing gear case, check with screwing the dipstick.

Volume of tube oil corresponding to the upper mark on the dipstick (with an installation angle of 8°)

Important!

The tube oil for reduction and reversing gear is different from engine tube oil for 3GMD and 3HM. Supply correct tube oil.

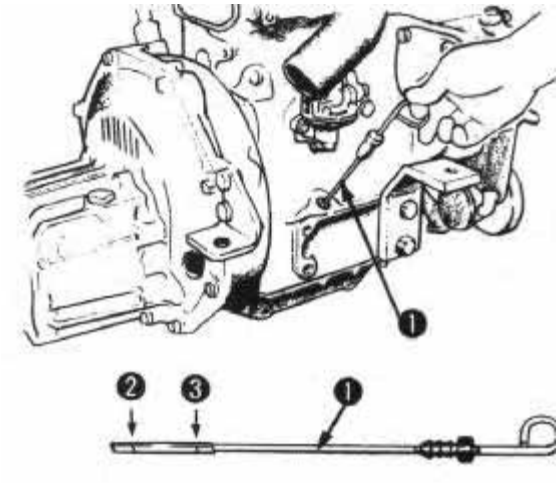

1. Dipstick
2. Empty
3. Full

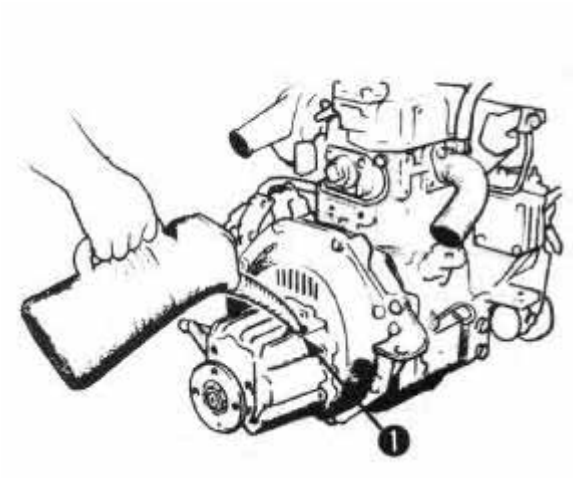

1. Oil Supply Port

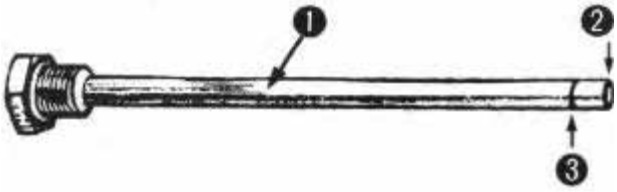

1. Oil Gauge Rod
2. Lower Limit
3. Upper Limit

[6-3.] Air bleeding in the fuel system

See section [9.1] Fuel oil system - 2) Air bleeding in the fuel system.

[6-4.] External Inspection

1) Thoroughly check for loose nuts and bolts.

2) Check the area around the revolving parts and the upper part of the engine where jigs and other tools may have been placed and forgotten. In general, be sure the engine room is always kept shipshape.

[6-5.] Remote control device check

1) Pull out the engine warm up knob, change the control lever from the "speed decrease" position to the "speed increase" position. Check the slippage of the position on the bridge and in the engine room, and adjust as necessary.

Note
The knob for engine warm up can only be operated when the control lever is placed in the "Neutral" position.

2) Push the engine warm up knob back in, move the control lever through "Ahead", "Neutral", and "Astern", check the position of slip page in the engine room, and make adjustments as necessary.
See [9.7] Remote control cable adjustment section for the adjustment procedure.

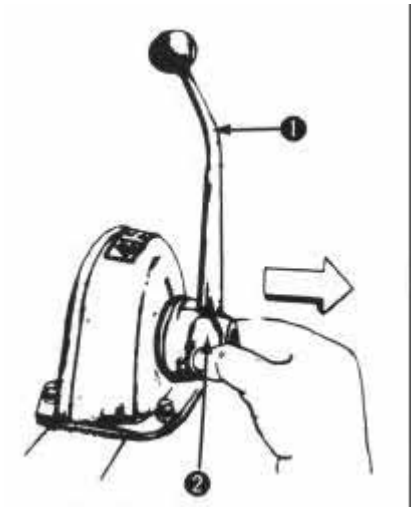

1. Control lever
2. Engine warm-up knob

[6-6.] Check of instrument panel alarm system

Turn on the battery switch. Then place the key in the "ON" position and check the condition of the lamps on the panel (with the engine stopped).

1) Lube oil warning lamp. Should be lit.

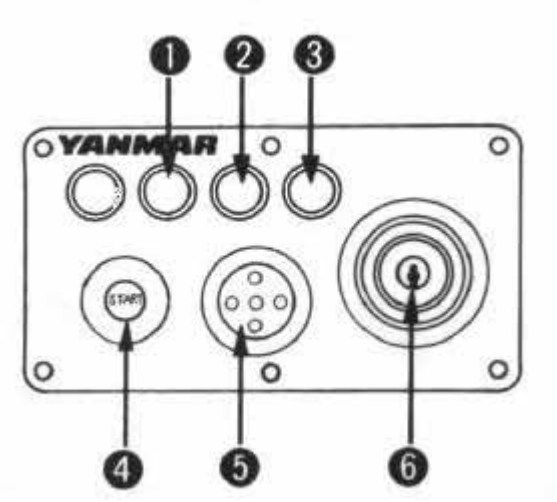

A-TYPE

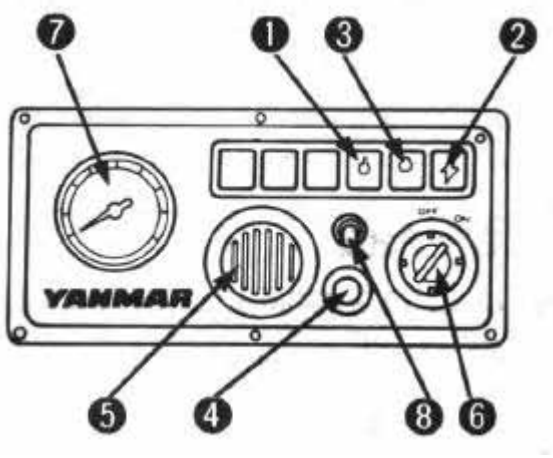

B-TYPE

1. C.W. Temp
2. Charge
3. L.O. Press
4. Push Button
5. Warning buzzer
6. Key switch

2) Cooling water temperature warning lamp. Should be out. (for small type panel; A-type only) For the large type panel (B-type), raise the CHECK switch "ON" to see if the cooling water temperature warning lamp lights.

3) Charging warning lamp. Should be lit.

4) The warning buzzer. Should sound.

Note
All the above alarm signs will continue until pushing the starting button or turning the key off.

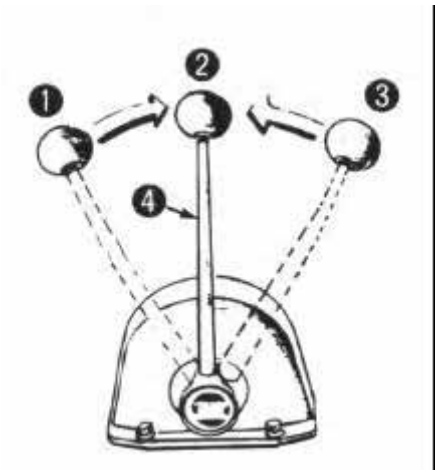

1, Astern
2. Neutral
3. Ahead
4. Control Handle

[6-7.] Tuning

To allow the lube oil to reach all parts, turn in the following sequence.

1) Place the control lever in "NEUTRAL".

2) Raise the decompression lever and leave it in the "no compression" position.

3) Open the kingston cock.

4) Turn on the battery switch, insert the key into the switch, and turn it to "ON".

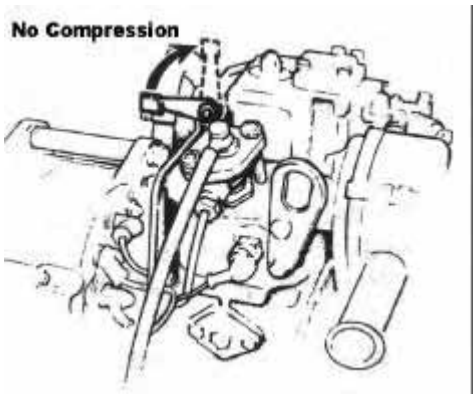

FOR 1GM

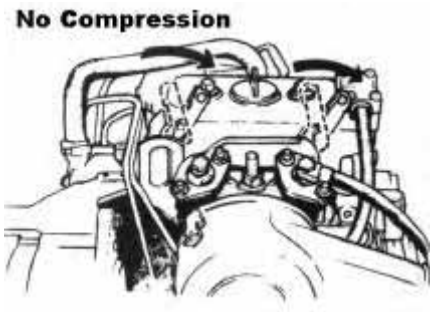

FOR 2GM/3GMD/3HM

5) Push the starter button and simultaneously pull the "STOP" wire; turn the engine over 5-10 times and make sure there are no abnormal sounds.

Important

When turning by hand, turn to the left (counter clockwise) when viewed from the front. If turned in the wrong direction, the impeller of the cooling water pump may be damaged.

https://truckmanualshub.com/

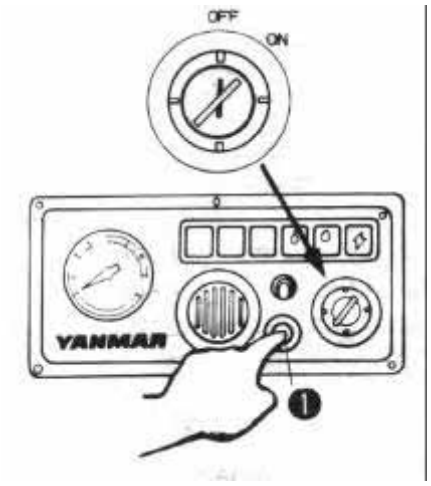

1. Push Button

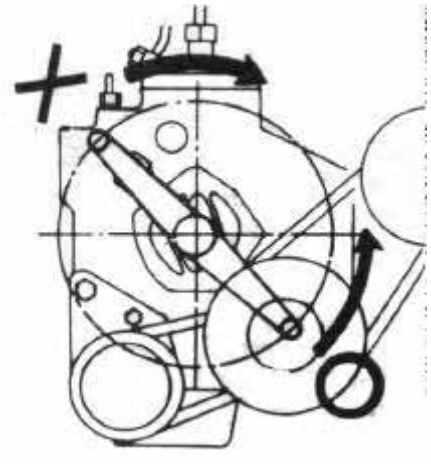

DIRECTION OF ROTATION

https://truckmanualshub.com/

V II. Method of operation

Caution

Before starting the engine reconfirm that there are no tools, etc. left in the engine area, especially areas where there are revolving parts.

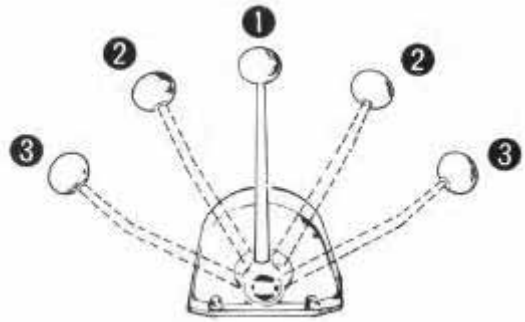

3. Full Speed 1. Neutral 2. Slow Speed

(7-1.) Starting

1) Electric starting

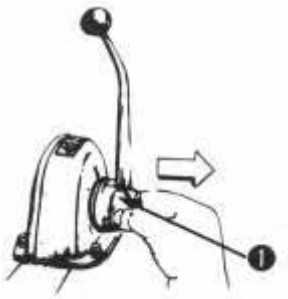

1. Warm up knob

1-a)
Pull out the engine warm up knob and place the control lever in the "FULL SPEED" position.

1-b)
Place the decompression handle down to the "COMPRESSION" position.

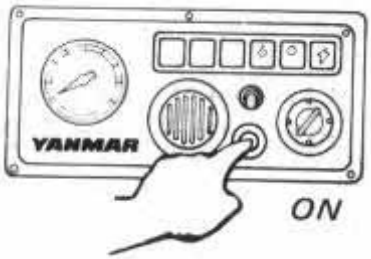

Within 15 seconds

1-c)
Place the starter key in the "ON" position.

1-d)
Press the starter button to start the engine.

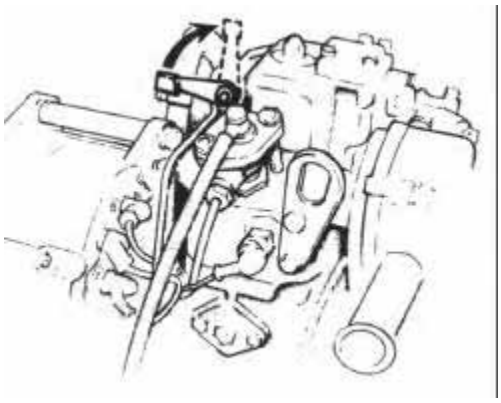

For IGM

Important

(1) RELEASE the push button when engine starts.
If the push button is released before engine starts, wait until starter motor and engine stop running before trying again.

(2) Do not operate starter motor more than 15 seconds at a time. If engine does not start, wait at least one minute before trying again.

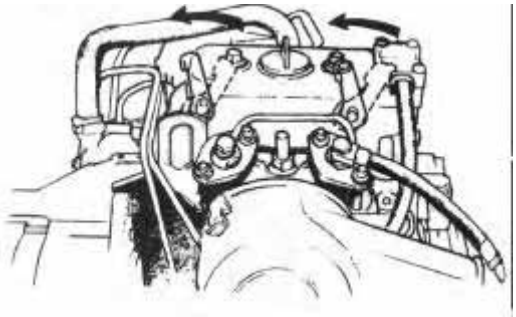

For 2GM/3GM/3HM

Note
In cold weather.
When starting is difficult in cold weather, raise the decompression handle to the "no compression" position and turn the starter motor over. After the engine gains momentum, return the decompression lever to the "compression" position. The amount of electricity needed will be less, and engine starting will be facilitated.

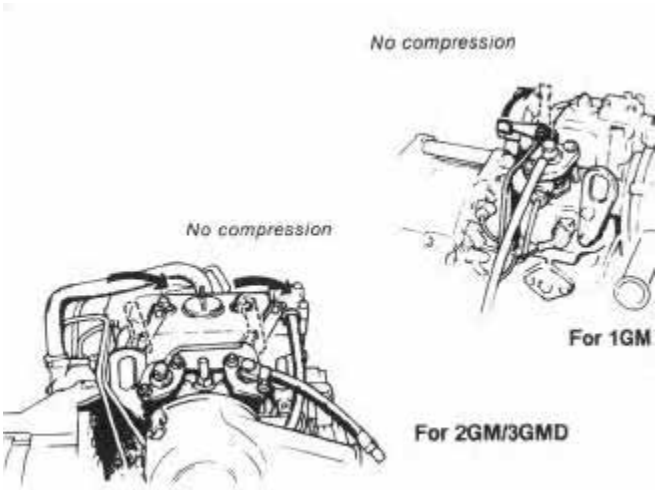

2) Emergency start
1GM, 2GM, 3GMD model can be started in an emergency by manual starting.

2-a)
Pull out the engine warm up knob and place the control lever in the "FULL SPEED" position. And also place the starter key in the "ON" position in order to charge the battery after engine starts.

2-b)
Raise the decompression handle to the "NO COMPRESSION" position.

2-c)
Attach the starter handle with priming shaft as the angle shown in the figure and turn the starting handle hard, 5-6 times, and if the flywheel gains momentum...

2-d)
Pull the decompression lever down to the compression position. Turn two or three times without stopping, and the engine will start.

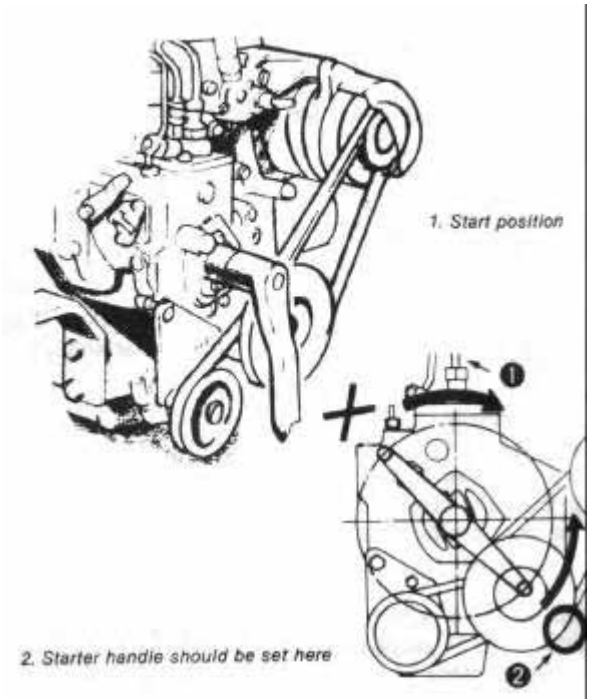

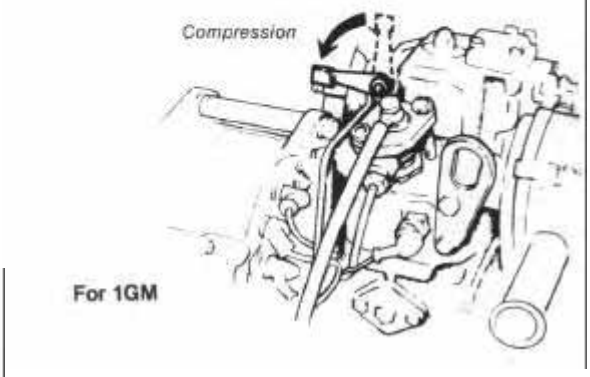

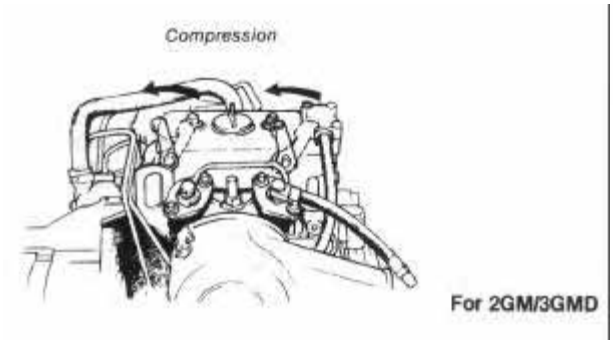

2-e)
After starting return control lever from "FULL SPEED" to "SLOW SPEED"

[7-2.] **Cautions after starting the engine.**

1) Warm up the engine for more than 5 minutes. Because lube oil does not reach all the moving parts as soon as the engine is started.
Operate the engine at around 850-900 rpm for at least five minutes.

Important

1) When running the engine for the first time after launching, run it for 15-20 minutes at about 1000 rpm.

2) Be sure to break-in the new engine. When the engine is new engine parts are tight. Therefore, engine life can be seriously shortened if too heavy load is placed on the engine before it is break-in Keep the following in mind during the break-in period.

Do not run the engine hard for the first 5 hours after installation.
Be sure to operate below 3000 rpm.

With the control lever in "NEUTRAL" check the following. Be sure that water is coming out of the cooling water outlet pipe after the engine starts up.

2) Check the instrument panel warning lamp.

	Normal condition		Abnormal condition
	Key switch ON (with the engine stopped)		Engine start (over 1000 rpm)
Lube oil lamp	ON	OFF	ON (Pressure down)
Cooling water lamp	OFF	OFF	ON (Temp. rise)
Charge lamp	ON	OFF	ON (No-charge)
Warning buzzer	BUZZ	OFF	BUZZ (Above trouble Except no-charge

If any of the warning lamps do not go off above 1000 rpms, they are malfunctioning. Stop the engine immediately and contact the nearest Yanmar dealer.

[7-3.] Cautions during operation.

The following should be checked once or twice a day.

1) Fuel
Check and refill the fuel oil if needed. If air is allowed to enter the fuel injection device, it will cause the engine to stop, and also necessitate the bleeding of the fuel lines.

2) Lube oil
If the warning lamp is on while the engine is running, it is an indication that there is some abnormality.
First of all, check the amount.

3) Cooling water
Make sure the cooling water is flowing from the outlet pipe and that the cooling temperature lamp is out. In the event water comes out intermittently, or when the amount is small, check the following.

3-a)
If air is being taken into the cooling water system.

3-b)
Damage of the cooling water pump.

3-c)
If dirt has plugged up the cooling water pipe or the kingston cock.

4) Charge
Make sure that the charge lamp is off. If the charge lamp does not go off, even when the engine rpms are raised to more than 850 charging is not taking place because of some malfunction in the charge system.
Consult a dealer.

5) Temperature of parts
Under full power, the surface temperature of each engine part will be about 50-60°C, or slightly hot if touched with the hand. If the temperature is too high, there is some abnormality. These may include a shortage of oil or improper alignment of the propeller shaft. Consult your nearest dealer if the temperature of the engine parts is too high.

6) Exhaust smoke
The emission of black exhaust smoke indicates that the engine is being overworked. If so operated, the life of the intake and exhaust valves, piston rings, cylinder liners, and fuel injection valve will be shortened.

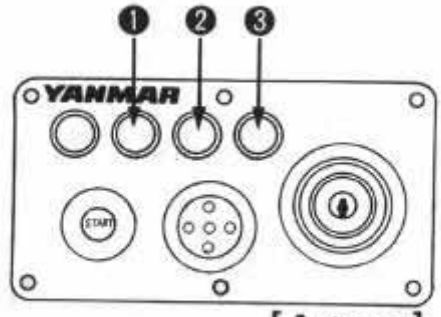

[A-type]

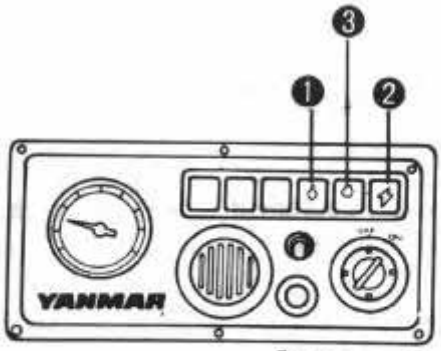

[B-type]

1. C.W. Temp
2. Charge
3. L.O. Press

7) Water/oil leaks
Check for any water or oil leaks, gas leakage, loose bolts, abnormal sounds, excessive generation of heat, and vibration. If there is anything wrong, consult your nearest Yanmar dealer.

8) Engine resonance
A sudden, large vibration of the vessel may be caused when the vibrations (resonance) of the engine and the vibrations of the hull occur at the same time.
When this happens you should either increase or decrease engine speed.

9) Clutch operation
Clutch operation must be performed at a low speed of less than 900 rpm.

Important
Clutch life will be significantly shortened if engaged suddenly at high speeds, or if used in a partially engaged condition.

10) Abnormal sounds during operation
If abnormal sounds are detected, or the warning buzzer sounds during operation, you should promptly stop the engine and consult the nearest dealer.

[7-4.] Stopping

1) Stopping procedure

1a) Place the clutch handle in the "neutral" position and idle the engine for about 5 minutes.

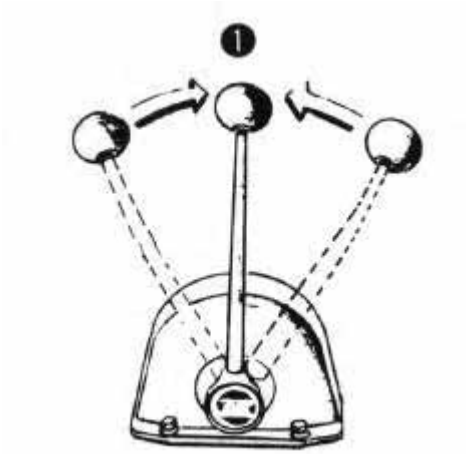

Important
If the engine is stopped suddenly while at a high temperature, the temperature of various parts will increase. This may result in engine trouble.

1-b)
After five minutes' idling, place the speed control lever in the "full" position and raise the rpms to about 3600 to blow out any burnt gas in the cylinder.

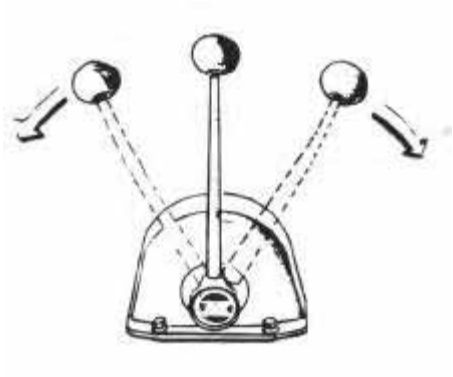

1-c)
Set the engine to the lowest speed (about 850-900 rpm), cut the fuel, and stop the engine.

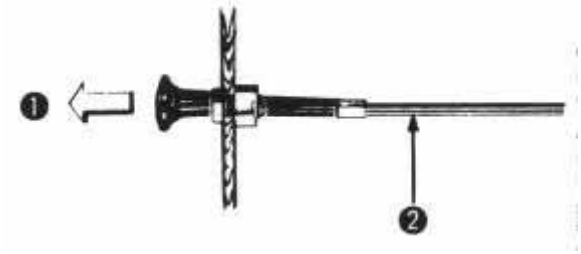

1. Engine stops if knob is pulled
2. Engine stop cable

Important

Do not stop the engine with the decompression lever. If the decompression lever used to stop the engine, fuel will spray out and accumulate on top of the pistons. This will create the danger of an explosion the next time the engine is started.

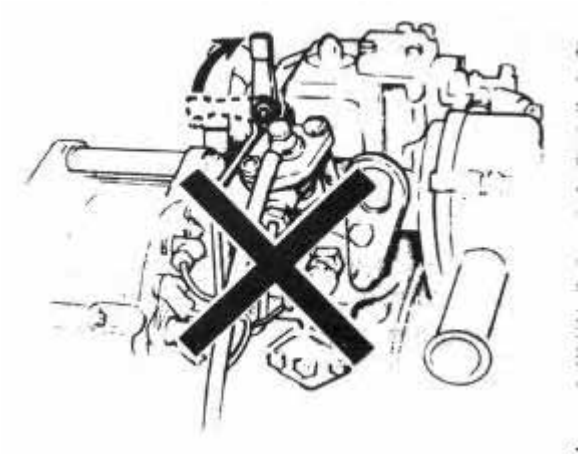

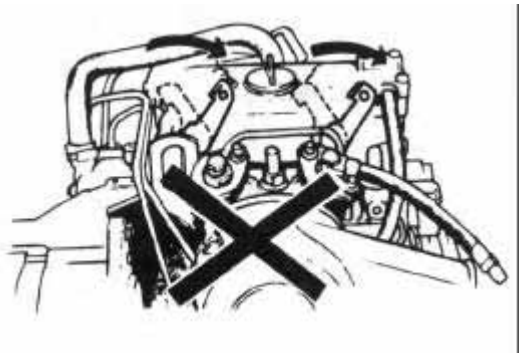

2) Be sure to close the kingston cock after stopping.

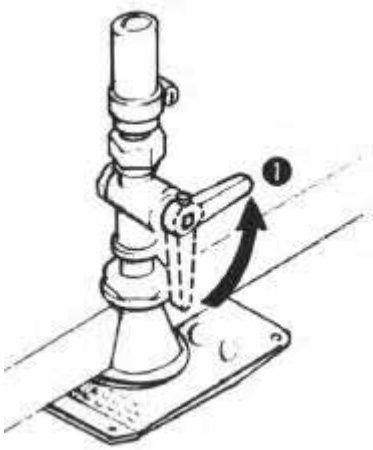

3) Drain out the cooling water. In winter and in periods of col d weather when there is the possibility that the cooling water may freeze, the cooling water should be drained out after use.

3-a)
Open up the cylinder body side cock located below the intake silencer and drain out the water in the cylinder.

3-b)
Open up the cock in the lower part of the exhaust manifold and drain the water from the manifold. (for 3GMD, 3HM)

3-c)
Turn the crankshaft 2-3 times by starter motor to remove any water remaining in the cooling pump.

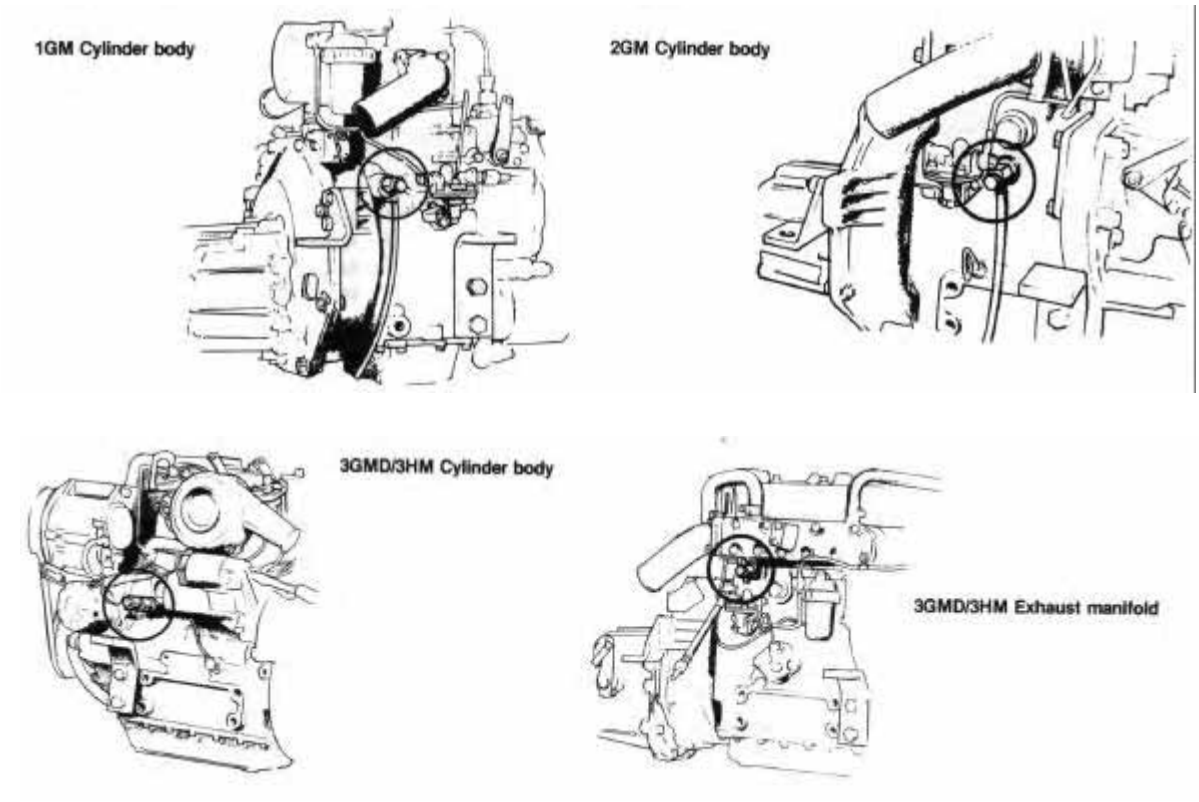

4) While the engine is still warm, wipe off any dirt and grime that has accumulated.

5) Turn off the battery switch.

Note
When stopping the engine with the starter switch "ON", the tube oil pressure warning buzzer will sound. This does not indicate engine trouble.

V III. Storage

[8-1.] Storing

Whenever the engine will not be used for several months, use the following procedure to properly store it.
This minimizes corrosion and deterioration.

1) Drain fuel completely from fuel tank, otherwise moisture from the fuel system will mix with the fuel.

2) Wash the cooling system with clean tap water and drain out the cooling water from the engine completely.

2-a)
Cylinder body

2-b) Exhaust manifold.

2-c)
Cooling water pump Remove the cover of the cooling water pump and drain out the water inside of the cooling water pump.

3) Apply an anti-rust oil to any parts which rust easily.

4) Since the battery will automatically discharge itself if left, disconnect when fully charged, wash the exterior and store in a dry, well-aired place.
Re-charge once a month during storage.

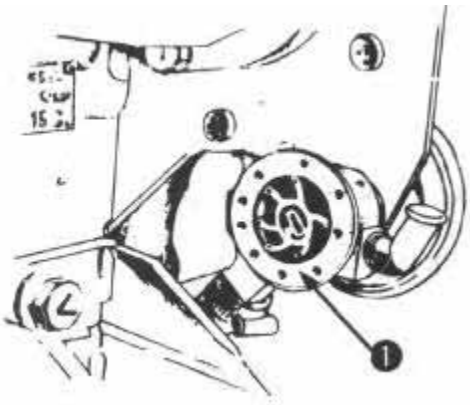

1. Cooling water pump

5) Tape to seal air inlet, exhaust pipe, and fuel tank cap.

6) Clean the engine throughly. Touch up any painted surfaces that are scratched or chipped.

7) If boat must be stored outside, cover it with waterproof material.

[82.] Removing engine from storage

1) Wipe off anti-rust oil and check that the remote control system move smoothly.

2) Wiring the battery.

2-a) Rewire as shown in the wiring diagram.

2-b) Make sure wires are connected to the correct terminals.

https://truckmanualshub.com/

Important

If wires are wrongly connected the A.C. generator may break.

2-c) Terminals must be covered and protected.

3) Unseal all openings sealed in step 1-5).

4) Also, observe points in section IV. Starting the new engine for the first time. For an ever better service, ask advice from a Yanmar dealer.

https://truckmanualshub.com/

IX. Periodical inspection and maintenance

		Before Starting	After 50 hrs or One month	Every 100 hrs	Every 250 hrs	Every 500 hrs	Every 1000 hrs
FUEL SYSTEM							
Check the oil level		•					
Fill fuel		•					
Drain the fuel tank			•		•		
Clean and replace the fuel filter element			• (clean)		• Replace		
Check the injection timing						•	
Check the injection spray condition						•	
LUBRICATING SYSTEM							
Check the oil level	crankcase	•					
	marine gear case	•					
Replace the oil	crankcase		• (First)	•			
	marine gear case		• (First)		•		
Check the oil pressure warning lamp function		•					
Replace the lube oil filter element					•		
COOLING SYSTEM							
Seawater outlet		During operation					
Adjust the tension of cooling water pump driving belt			•		•		
Check the impeller of the cooling water pump							• (Replace)
Check the anticorrosion zinc						•	
Check the thermostat function						•	
AIR CLEANER, Etc.							
Clean the intake silencer element					•		
Clean the exhaust/water mixing elbow					•		
Clean the breather pipe				•			
Check the exhaust gas condition		During Operation					
ELECTRICAL SYSTEM							
Check the charge lamp function		•					
Check the electrolyte level in the battery		•					
Adjust the tension of the alternator driving belt			•		•		
Check the wiring connectors			•				
CYLINDER HEAD, Etc.							
Check the leakage of water and oil		•	•				
Retighten all major nuts and bolts			•		•		
Retighten the cylinder head bolts			•				•
Adjust intake/exhaust valve clearance			•			•	
REMOTE CONTROL SYSTEM, Etc.							
Check the remote control operation			•			•	
Adjust the propeller shaft alignment			•			•	

https://truckmanualshub.com/

Maintenance standard

FUEL SYSTEM

Fuel injection pressure	1GM, 2GM, 3GMD	170kg/cm²
	3HM	160kg/cm²
Fuel injection timing	1GM, 2GM	15°bTDC
	3GMD	18°bTDC
	3HM	21°bTDC

LUBRICATING SYSTEM

Crankcase lube oil amount (With an installation angle of 8°)	1GM	1.3ℓ
	2GM	2.0ℓ
	3GMD	2.7ℓ
	3HM	5.5ℓ
Marine gear case lube. oil amount (With an installation angle of 8°)	1GM, 2GM	0.25ℓ
	3GMD	0.3ℓ
	3HM	0.7ℓ

COOLING SYSTEM

Thermostat open	Begin to open	42°C
	Full open	52°C
Cooling water pump belt tension (With 10kg thumb force)		5—7mm

ELECTRICAL SYSTEM

Alternator belt tension (With 10kg thumb force)	10mm

CYLINDER HEAD, Etc.

Cylinder head tightening torque	1GM	Main (M10)	7.5kg-m
	2GM, 3GMD	Main (M12)	10kg-m
		Sub (M8)	2.5kg-m
	3HM	Main (M12)	13kg-m
		Sub (M8)	3kg-m
Intake/exhaust valve clearance			0.2mm

[9-1.] Fuel oil system

1) Fuel tank and fuel supply.

1-a) Fill the tank up.

1-b)
Drain the fuel tank every 250 hours of operation.
Open the fuel tank drain cock to drain out any foreign matter which may have accumulated in the bottom of the tank.
When you start the new engine for the first time or after long storage drain after 50 hours of operation.

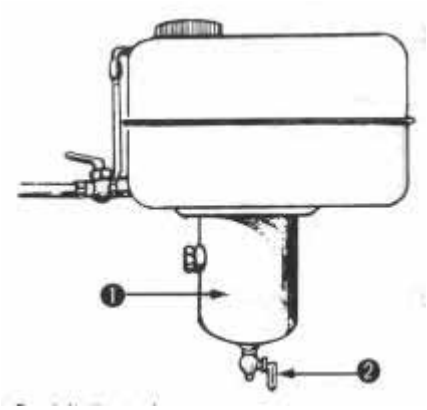

1. Precipitation tank
2. Drain cock

1-c)
If the vent in the fuel tank cap is obstructed, fuel will not flow. Clean the fuel tank cap and blow dry periodically.

2) Air bleeding in the fuel system
If air enters any part of the system, with the exception of the fuel tank, fuel will not be injected into the cylinders. Check the fuel injection "sound" in the following manner.

2-a)
Pull out the engine warm up knob and place the control lever in the "half speed" position.

2-b)
Open the delivery cock of the fuel tank.

2-c)
Loosen the fuel strainer air-bleed bolt.

2-d)
Move the priming lever of the fuel feed pump up and down. All the air has been bled out of the fuel line when only fuel flows out. After bleeding retighten the bolt.

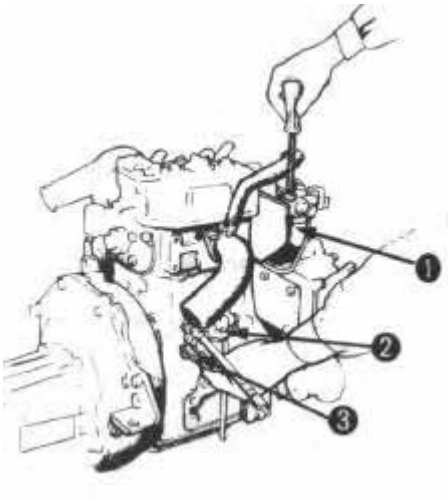

1. Fuel Filter
2. Fuel feed pump
3. Priming lever

2-e)

Loosen the high pressure pipe from the fuel pump. Turn the engine with the starter motor, and at the same time tighten the cap nut of the high pressure pipe if fuel comes out. Perform the same operation for each cylinder.

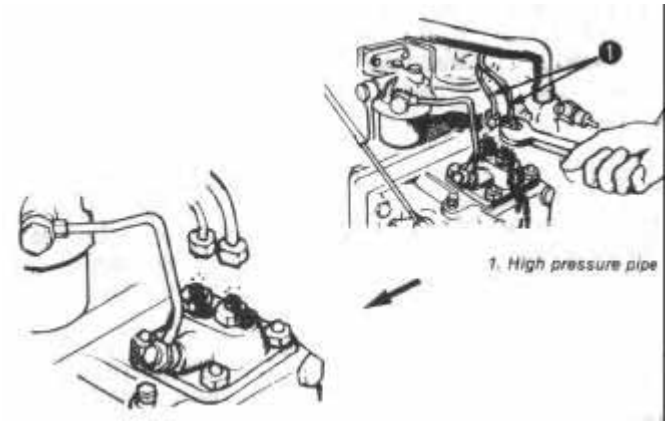

2-f)

After bleeding air from all of the cylinders, turn the engine by the starter motor and make sure that the injection sound of the fuel is a strong high pitched "hiss". Be sure each cylinder emits this hissing sound.

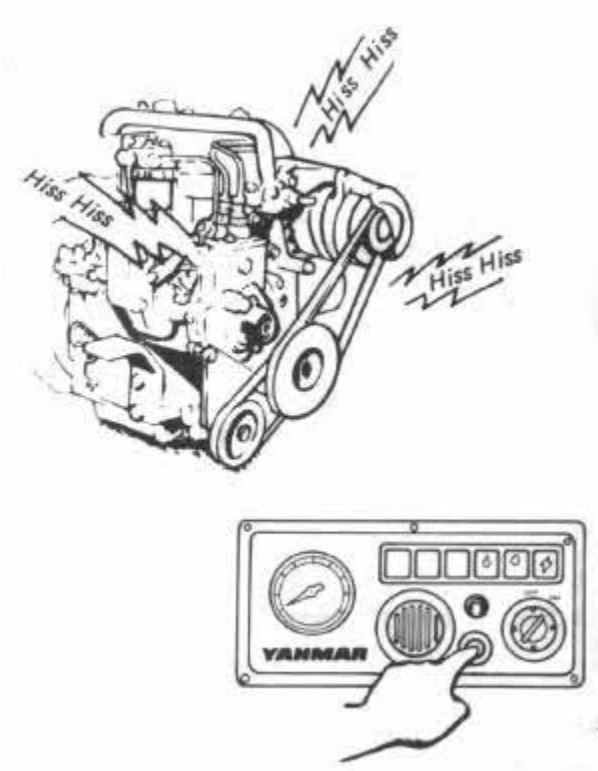

3) Fuel injection timing and spray condition

Caution

Diesel fuel escaping under pressure can have sufficient force to penetrate the skin, causing serious personal injury. Before disconnecting lines, be sure to relieve all pressure in the system, be sure no connections are damaged. Fluid escaping from a very small hole can be almost invisible. Use a piece of cardboard or wood, rather than hands, to search for suspected leaks. If injured by escaping fluid, see a doctor at once. There can be serious infection or injury if proper medical treatment is not administered immediately.

Important

Modification or alteration of the injection pump, the injection pump timing, or the fuel injection valves in ways not recommended by the manufacturer will terminate the warranty obligation to the purchaser.

Check the fuel injection equipment in the following procedure.

3-a)
Remove the starter motor to check the fuel injection timing mark.

Note
"IT" shows No. 1 cylinder which is the cylinder on the flywheel side and not the timing gear case side.

3-b)
Remove the high pressure pipe from the fuel injection pump.

3-c)
Pull the engine warm up knob out and place the control lever in the "half speed" position.

3-d)
Rotate the engine to check the fuel injection timing. At the same time the arrow timing mark on the cylinder block and flywheel should line-up, and fuel should bubble out of the delivery valve of the fuel injection pump.

High Pressure Pipe

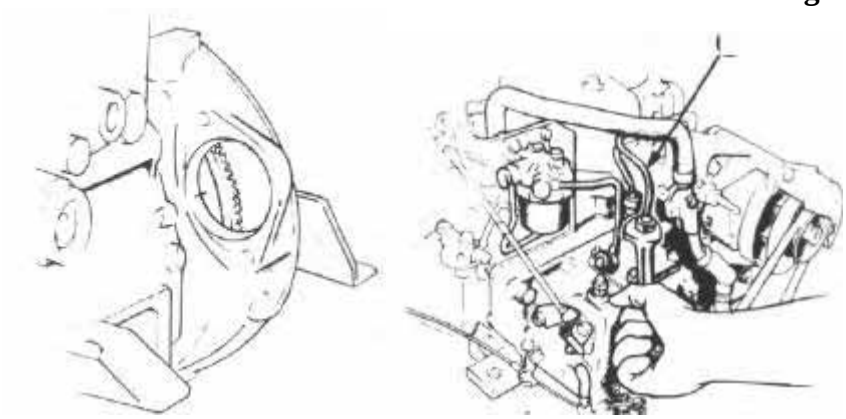

Note

Cranking for 3HM model, attach two M8 bolts at the crankshaft pulley as the figure below.

3-e)
Check the fuel injection timing for all of the cylinders.

Proper injection timing

Degree (BTDC)	1GM	2GM	3GMD	3HM
	15±1		18±1	21±1

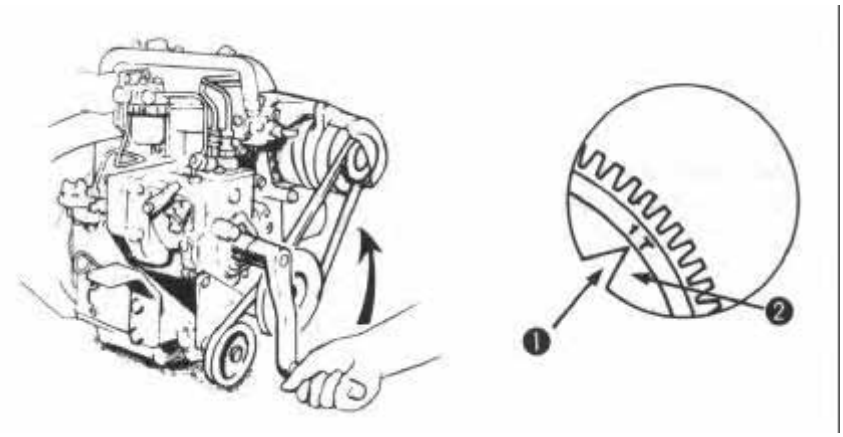

For 1GM/2GM/3GMD

Injection timing mark on flywheel (1T, 2T. 3T)

1. Cylinder block side timing mark
2. Flywheel

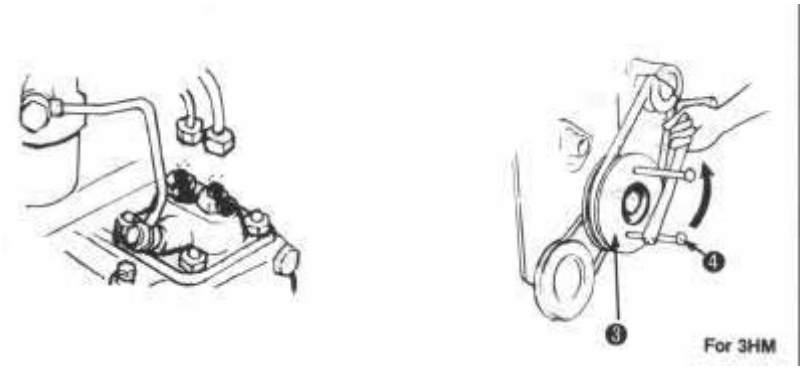

3. Crankshaft pulley
4. M8 bolt

3-f)
Remove the fuel injection nozzle and check the injection spray condition. Cone-shaped condition is proper.

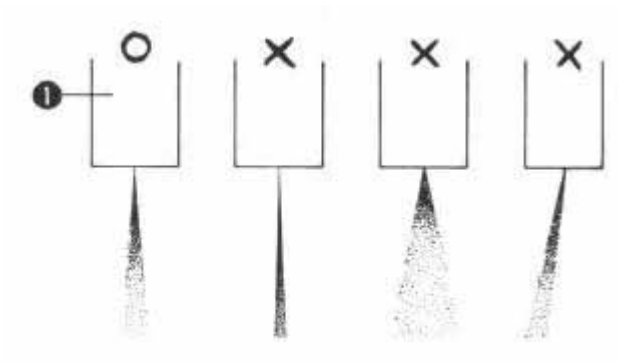

If the spray is not cone-shaped, check the following point.

3-f)-1.
The injection pressure may be low;

3-f)-2. The fuel may be bad;

Important

For the disassembly, adjustment and inspection of the fuel injection pump and fuel injection valve, consult the nearest Yanmar dealer.

Note
It is convenient to check simultaneously the exhaust/intake value clearance when removing the starter motor.

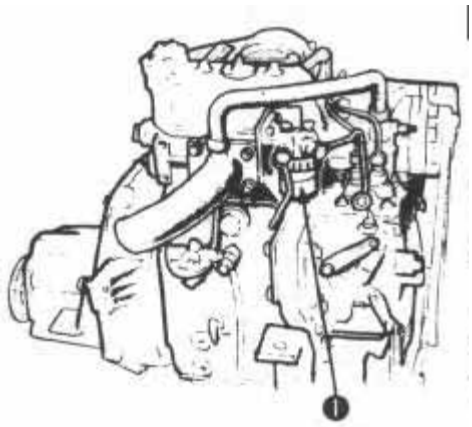

1. Fuel Filter

4) Washing and replacement of the fuel filter element.

Remove the lower cover of the fuel filter and wash or replace the element.

The proper method to remove the element is shown in the figure below. When you start the new engine for the first time or after long storage, clean the filter element after 50 hours of operation. After that replace the element every 250 hours of operation.

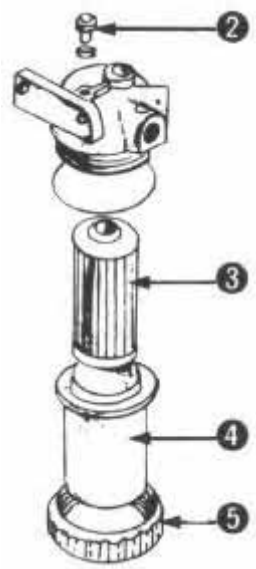

2. Air breathing bolt
3. Filter element
4. Filter bowl
5. Tightening screws

[9-2.] Lubricating oil system

1) Engine lube oil

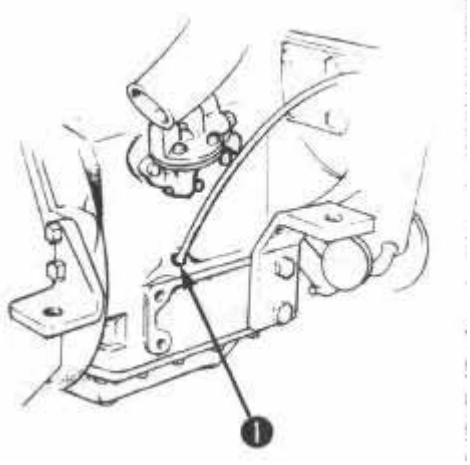

1. Engine oil evacuation port

1-a)
Check the oil level before every operation.

1-b)
Replace the oil after 50 hours of operation (for the first time, after long storage) and every 100 hours of operation.
Lube oil changes can be performed most effectively while the engine is still warm. The oil will flow easily and can be thoroughly drained.
The oil should be drained from the crankcase by moving the handle of the oil evacuation pump forward and backward.

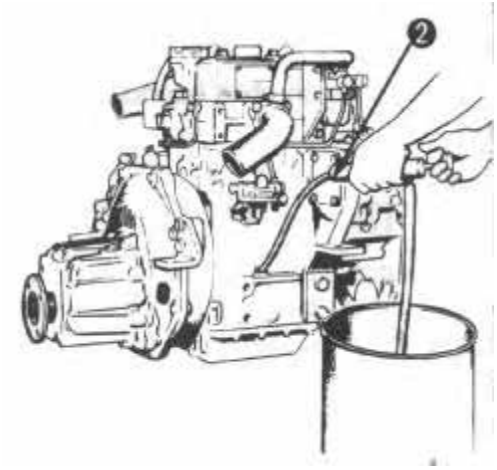

2. Oil Evacuation pump (optional)

1-c) Replace the lube oil filter Replace the lube oil filter every 300 hours of operation.

1-c)-1. Unscrew canister by hand or filter replacer tool.

1-c)-2. Check that threaded adaptor is secure in headcasting.

1-c)-3. Discard used canister.

1-c)-4. Coat the top of the seal of the new canister with new lube oil.

1-c)-5. Screw new canister on to filter headcasting until canister seal just touches headcasting and then tighten by hand a further half turn.

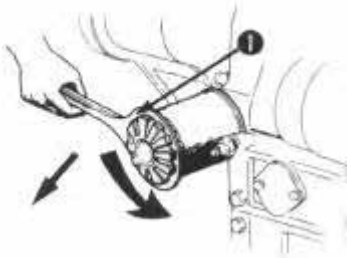

1. Used Cannister

Important

If the canister is overtightened, difficulty may be experienced in its removal and the filter may be damaged.

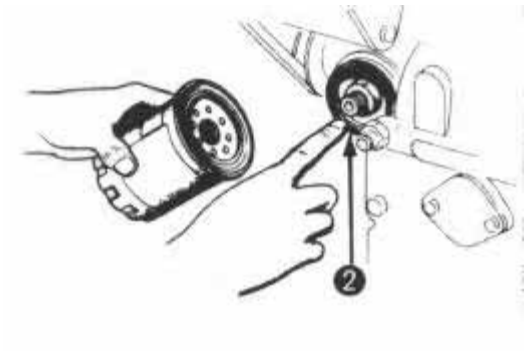

2. New Lub. Oil

1-c)-6. Start engine and check for leaks. Check oil level after running the engine for several minutes and fill up when necessary.

2) Reduction/reversing gear case oil.

2-a) Check the oil level before every operation.

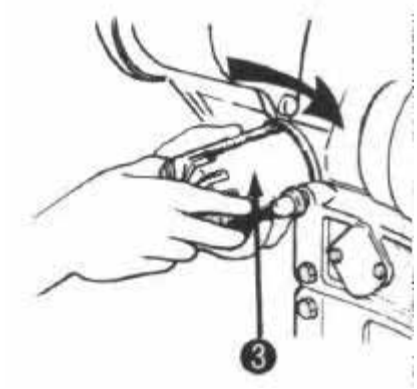

3. New Cannister

2-b) Replace the oil. Replace the oil periodically same procedure as engine lube oil.

Important
Reduction/reversing gear case oil for 3GMD and 3HM is different from engine lube oil.

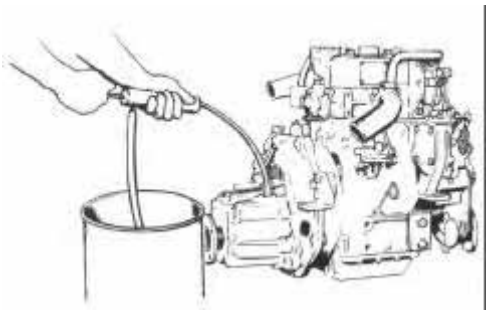

[9-3.] Cooling water system

1) Make sure that water is coming out of the cooling water outlet pipe during operation.

2) Inspection and replacement of anticorrosion zinc.
Replace the anticorrosion zinc after every 500 hours of use to prevent electrolytic corrosion by the cooling water.
Although it depends on the quality of the raw water and the operating conditions, remove the scum(dross) adhering to the surface of the anticorrosion zinc.
If less than 1/2 of the anticorrosion zinc is left, it should be replaced with a new one.

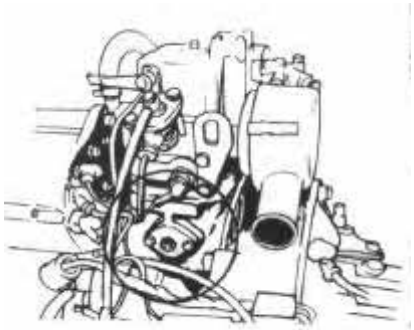

For 1GM cylinder body

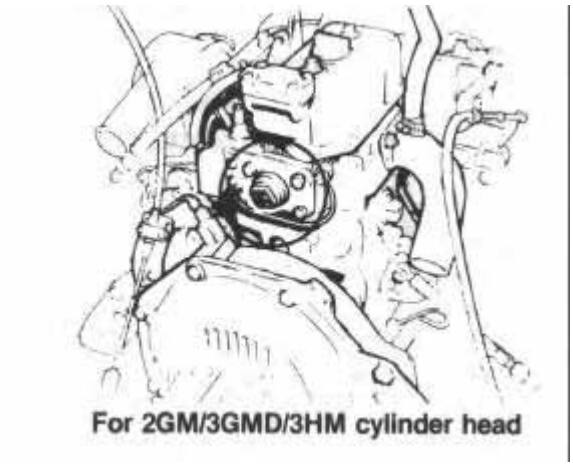

For 2GM/3GMD/3HM cylinder head

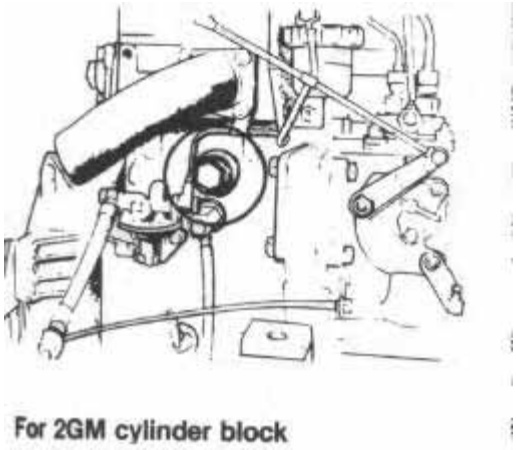

For 2GM cylinder block

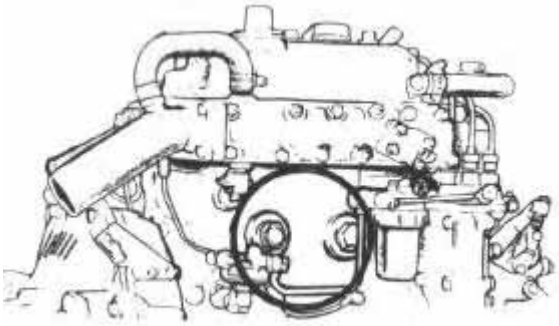

For 3GMD/3HM cylinder block

Location of anticorrosion zinc	Number of Pieces			
	1GM	2GM	3GMD	3HM
Cylinder Head	–	1	1	1
Cylinder Body	1	1	2	2

3) Inspection and replacement of cooling water pump.

3-a) Impeller of the cooling water pump.

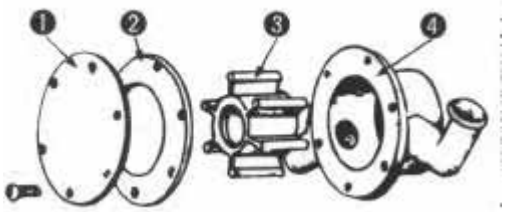

3-a)-1.
Remove the cooling water pump cover, take out the impeller, and check for damage to the impeller and mechanical seal parts. If damaged, replace with a new one.

1. Cover
2. Packing
3. Impeller
4. Cooling Water Pump

3-a)-2.
When reassembling the pump, coat the fittings of the pump shaft and impeller, both sides of the impeller, and the vane tips with grease.

Important
When installing the impeller, make sure the direction of the impeller corresponds to that indicated in the figure.

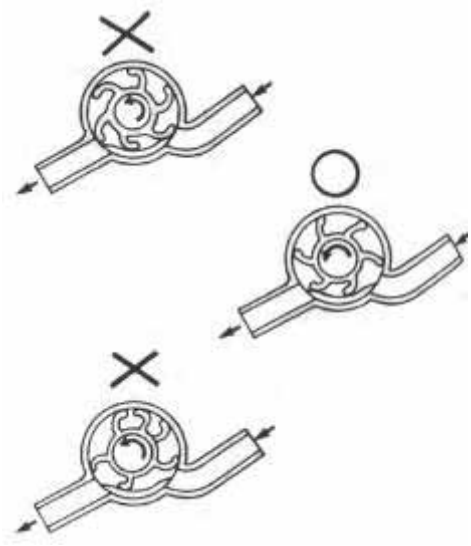

3-b)
Adjust the V-belt tension. Check the tension of the cooling water pump drive belt. If there is too much tension premature damage to the V-belt will occur. On the other hand of the V-belt pulley is loose it will slip and cooling water flow will be insufficient. Loosen the cooling water pump V-belt tension bolt to adjust the tension.
Replace the belt if it is worn or cracked.

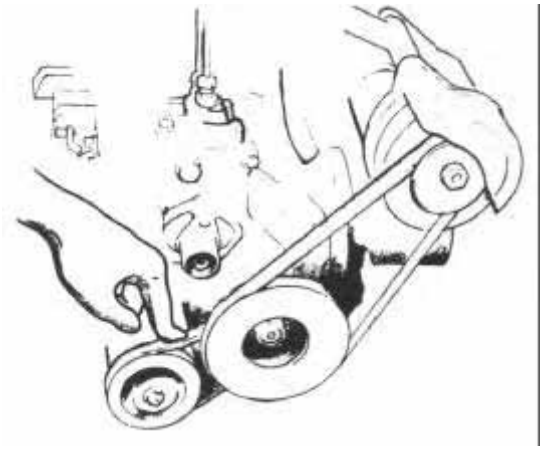

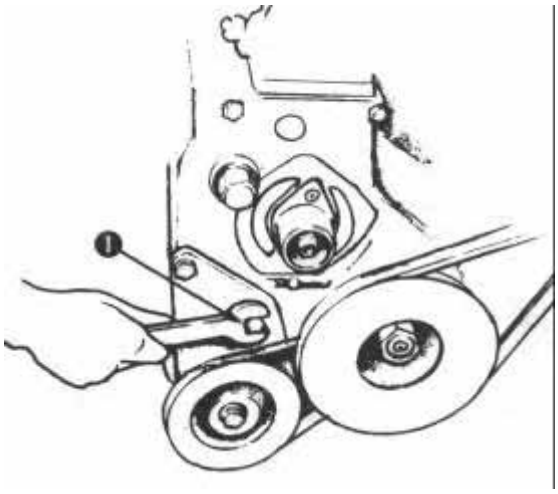

Adjustment Standard – 5 - 7 mm (with 10 kg thumb force)

[9-4.] Inspection of engine body

1) Retightening cylinder head nuts Retighten each nut with a torque wrench before starting a new engine and after 50 hours of operation. Sequence for tightening the nuts is shown in the figure.

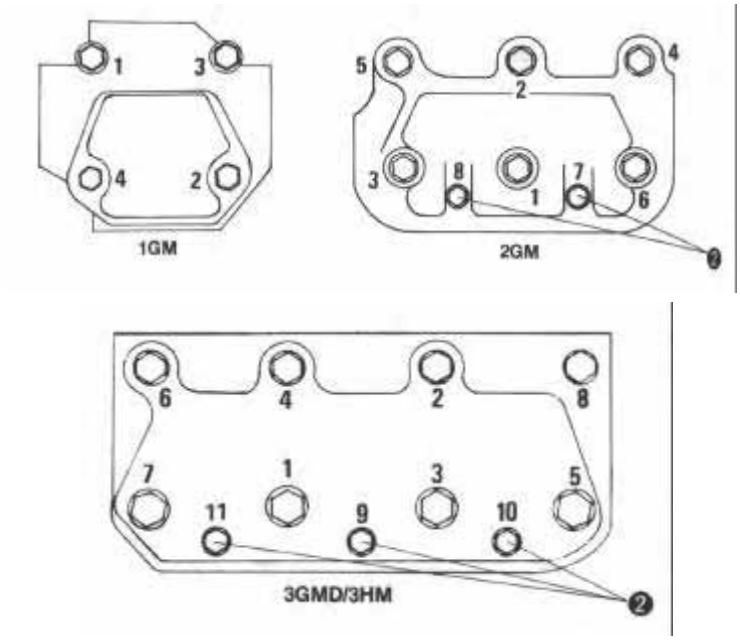

1. For 1GM M10 bolts are used for main
2. Sub
3. Number shows tightening order

CYLINDER HEAD TIGHTENING TORQUE

1GM	MAIN (M10)	7.5 kg-m
2GM, 3GMD	MAIN (M12)	10 kg-m
	SUB (M8)	2.5 kg-m
3HM	MAIN (M12)	13 kg-m
	SUB (M8)	3 kg-m

2) Exhaust/intake valve head clearance adjustment
The clearance of the valve will affect the overall performance of the engine, so it is important that it be correctly adjusted. Check the clearance before starting a new engine, whenever assembling or disassembling and after 500 hours of operation. Adjustment shall be done while the engine is cold.

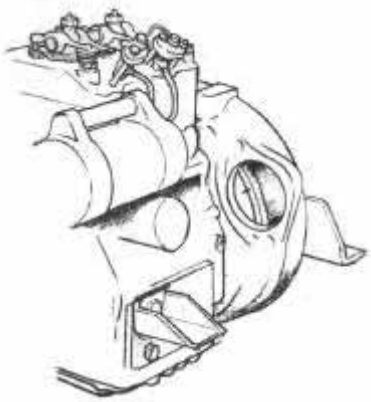

2-a)
Remove the valve rocker arm cover and starter motor.

2-b) Crank the engine and set the No. 1 (flywheel side) piston to top dead center (TDC) on the compression stroke.

Note
Set the position at which the valve rocker arm shaft does not move even when the crankshaft is turned to the left and right, centered around the T mark. C.

Maintenance standard (for all models)

Intake/exhaust valves	0.20mm

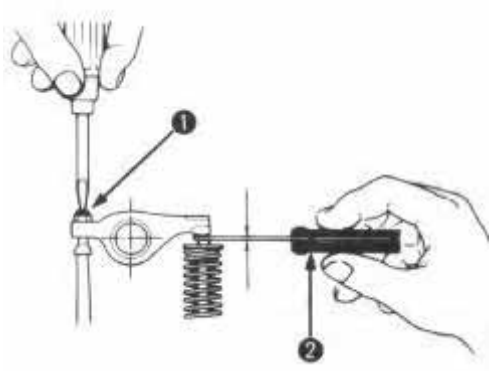

1. Valve clearance adjusting screw
2. Thickness gauge

2-c)
Check and adjust the intake and exhaust valve head clearances of the No. 1 cylinder. Loosen the valve clearance adjusting screw lock nut, adjust the clearance to the maintenance standard with a thickness gauge, and retighten the lock nut. In the case of 2 cylinder model, adjust the valve head clearance of the No. 2 cylinder in the same manner after turning the crankshaft 180°.

Note
If you adust the valve head clearance of the No. 2 cylinder first, turn the crankshaft 540°. Adjust the clearance of the No. 1 cylinder in the same manner.

In the case of 3 cylinder model, adjust the valve head clearance of the No. 3 cylinder in the same manner after turn the crankshaft 240° and then adjust it of the No. 2 cylinder after turn the crankshaft 240° more.

[9-5.] Washing the air intake silencer element

Wash the element inside the air intake silencer with a neutral detergent every 250 hours of operation.

1. Air filter element

[9-6.] Electrical equipment

1) Checking of the warning lamps on the instrument panel. Check the "ON" and "OFF" function of the warning lamps before every operation.

2) Checking and maintenance of the battery.
Proper battery maintenance is vital for dependable service.

2-a)
Keep battery clean by wiping it with a damp cloth.
Keep all connections clean and tight. Remove any corrosion, and wash terminals with a solution of baking soda and water.

2-b)
Keep battery fully charged, especially during cold weather. If a battery charger is needed, charge it after disconnecting battery cables from battery.

2-c)
Check level of electrolyte in each cell at least every 200 hours. If low, fill to bottom of filler neck with distilled water.

2-d)
To check battery condition, use a battery hydrometer. Check specific gravity of electrolyte in each cell. Charge battery if reading is below 1.215.

Caution
Keep all sparks and flames away from batteries, to avoid sparks, connect earth cable last and disconnect it first.

Important
Do not add distilled water in freezing weather unless engine is run at least 30 minutes to ensure thorough mixing.

3) Checking and adjustment of the alternator (electric generator) V-belt tension.
If the tension for the V-belt is too tight the V-belt may be easily damaged. On the other hand, if the tension is too loose, slippage results and makes it hard to generate electricity.

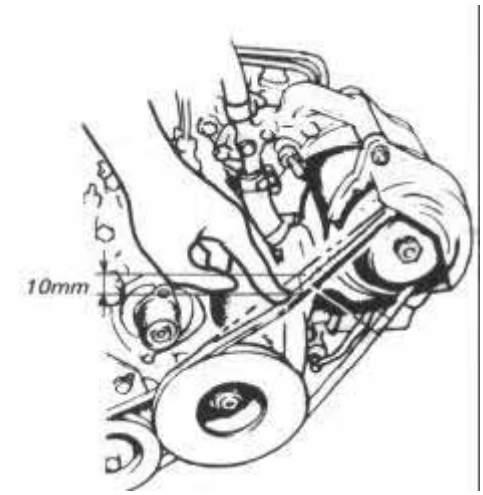

3-a)
Checking the tension.
With the engine stopped, press belt midway between pulleys and measure the "give".
Belt should give 10 mm with about 10 kg force.

3-b)
If the belt needs adjustment, loosen adjusting bolt.
Pry away from charging generator (alternator).
While holding alternator in position, tighten adjusting bolt. A well worn or cracked belt should be replaced.

Important
Make sure there is no oil on the belt. If the belt is oily it will slip. Immediately wipe off any oil that spills or splashes on the belt.

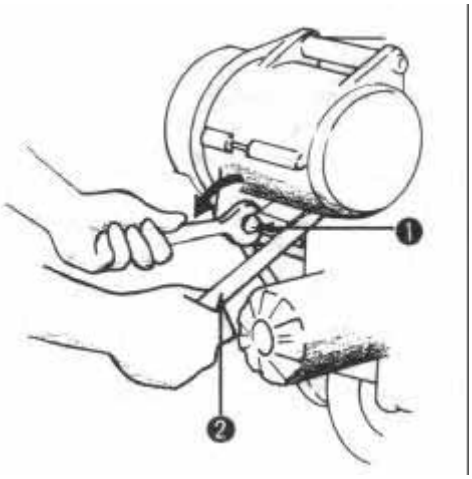

1. Adjusting bolt
2. Hammer

[9-7.] Remote control cable adjustment

1) Speed control

1-a) Checking the control cable fitting. Check that the control cable is fixed at the clamp. Do not loosen nor tighten cable too much.

Adjustment of idling engine speed
The idling sped is generally set at 850-900 rpm. In case the idling speed is too low, adjust the following way;
Loosen the lock nut and turn the diling adjustor bolt clockwise, the engine speed will increase.
On the other hand, in case the idling speed is too high, turn the adjustor bolt counterclockwise and lower engine speed.

After a suitable engine speed has been obtained, tighten the idling adjustor bolt with the lock nut.
After resetting the idling engine speed, be sure to adjust the speed control cable so that the speed control lever touches the idling adjustor bolt, when the remote control lever is in the neutral position.

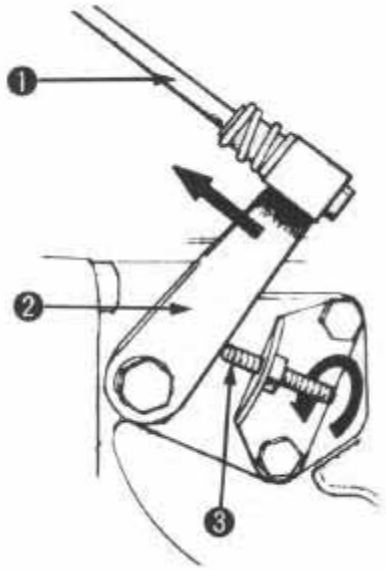

1. Speed Control bolt
2. Speed Control lever
3. Idling Speed adjusting bolt

2) Clutch control

2-a)
Checking the operation lever stroke. Move the operation lever up and down (Ahead and Astern) by disconnecting the remote control cable. Check that the strokes between Neutral to Forward (A) and Neutral to Reverse (B) are nearly same.
If the strokes are not the same, see your nearest Yanmer dealer.

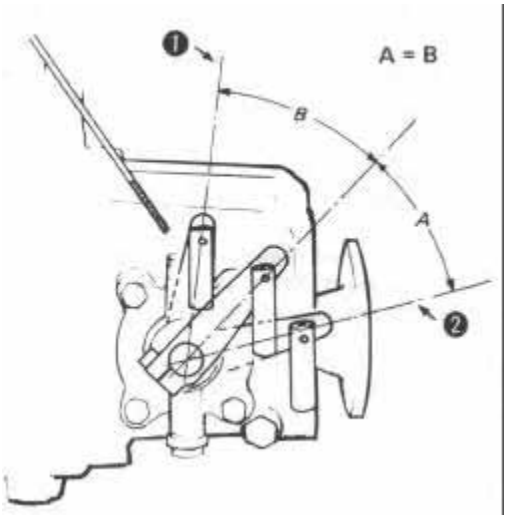

1. Astern
2. Ahead

2-b)
Checking the spring joint condition.
With connecting the spring joint to the control cable, check the function of the spring of the spring joint.
If the M5 thread does not move even when you shift the control handle, the cone inside of the clutch might be damaged. See your Yanmar dealer.

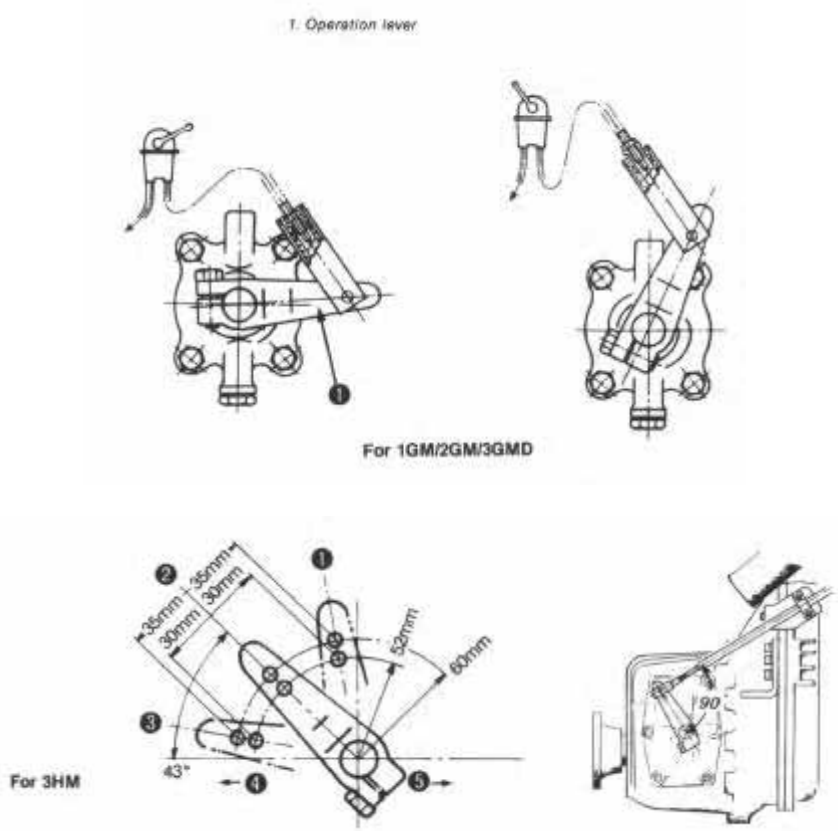

https://truckmanualshub.com/

2-c)
Tighten all nuts and bolts After inspection and maintenance, retighten all nuts and bolts securely.

Caution
1) Always stop the engine when inspect and maintain the control cable.

2) Be carefully when conduct inspection and maintenance imi.-;ediately after stopping the engine. Lube oil might be high temperature in several reason.

https://truckmanualshub.com/

X. Trouble shooting

Problem	Possible cause	Possible Remedy
1) Engine * Engine hard to start or will not start	1) Incorrect speed control position	* Set remote control lever in the high idle speed position.
	2) No fuel	* Check fuel tank.
	3) Fuel shut off valve closed	* Open shut off valve
	4) Defective fuel feed pump	* Replace fuel feed pump
	5) Clogged fuel filter	* Replace filter element
	6) Air in fuel system	* Bleed air
	7) Water, dirt in fuel system	* Drain, flush, fuel system
	8) Dirty of faulty injectors	
	9) Inproper compression	
	10) Improper type of fuel	* Use proper type of fuel consult fuel supplier
	11) Improper type of crankcase lube oil.	* Use proper lube oil.
* Engine knocks	1) Improper type of fuel	* Use proper type of fuel. Consult fuel supplier
	2) Incorrect fuel injection timing	* Check injection timing
	3) Idle speed too slow	* Adjust idling speed
	4) Improper cylinder top clearance	
	5) Defective piston or piston ring	
	6) Defective crankshaft bearing or piston pin bearing	
	7) Improper valve clearance	* Adjust proper valve clearance
* Engine runs irregularly or stalls frequently	1) Vent in fuel tank cap obstructed	* Clean cap in solvent. Blow dry
	2) Clogged fuel filter	* Replace fuel filter element
	3) Water, dirt, or air in fuel system	* Drain, flush, fill and bleed air in the system
	4) Dirty or faulty injectors	
	5) Faulty governor linkage	
	6) Defective fuel feed pump	* Replace fuel feed pump
	7) Improper valve clearance	* Adjust proper valve clearance
	8) Defective valve spring	* Replace valve spring
	9) Improper compression	
* Lack of engine power	1) Engine overloaded	* Reduce load (check, propeller matching)
	2) Air intake restriction	* Service air cleaner
	3) Clogged fuel filter	* Replace filter element
	4) Improper type of fuel	* Use proper fuel
	5) Improper valve clearance	* Adjust proper valve clearance
	6) Dirty of faulty injectors	
	7) Incorrect fuel injection	* Check the fuel injection timing
	8) Improper engine compression	
	9) Vent in fuel tank cap obstructed	* Clean cap in solvent. Blow dry
* Engine overheat	1) Engine overloaded	* Reduce load
	2) Defective cooling water	* Check cooling water pump
	3) Loose or defective cooling water pump drive belt	* Adjust belt tension or replace belt
	4) Cooling system needs flushing	* Flush cooling system
	5) Defective thermostat	* Replace thermostat
	6) Defective temperature lamp or sender	* Check bulb, fuse and wiring
	7) Cooling water leaks from water passage	* Check water passage
* Engine emits black or gray exhaust smoke	1) Improper type of fuel	* Use proper fuel
	2) Clogged or dirty air cleaner	* Service air cleaner element
	3) Defective injection pump	* Have your dealer check for fuel injection pump
	4) Faulty injectors	* Have your dealer check for injectors
	5) Incorrect fuel injection timing	* Check the injection timing
	6) Improper valve clearance	* Adjust valve clearance
	7) Lube oil level too high	* Drain out surplus
	8) Improper lube oil	* Use proper viscosity oil

https://truckmanualshub.com/

XI. Fuel oil, lubricating oil and cooling water piping diagram

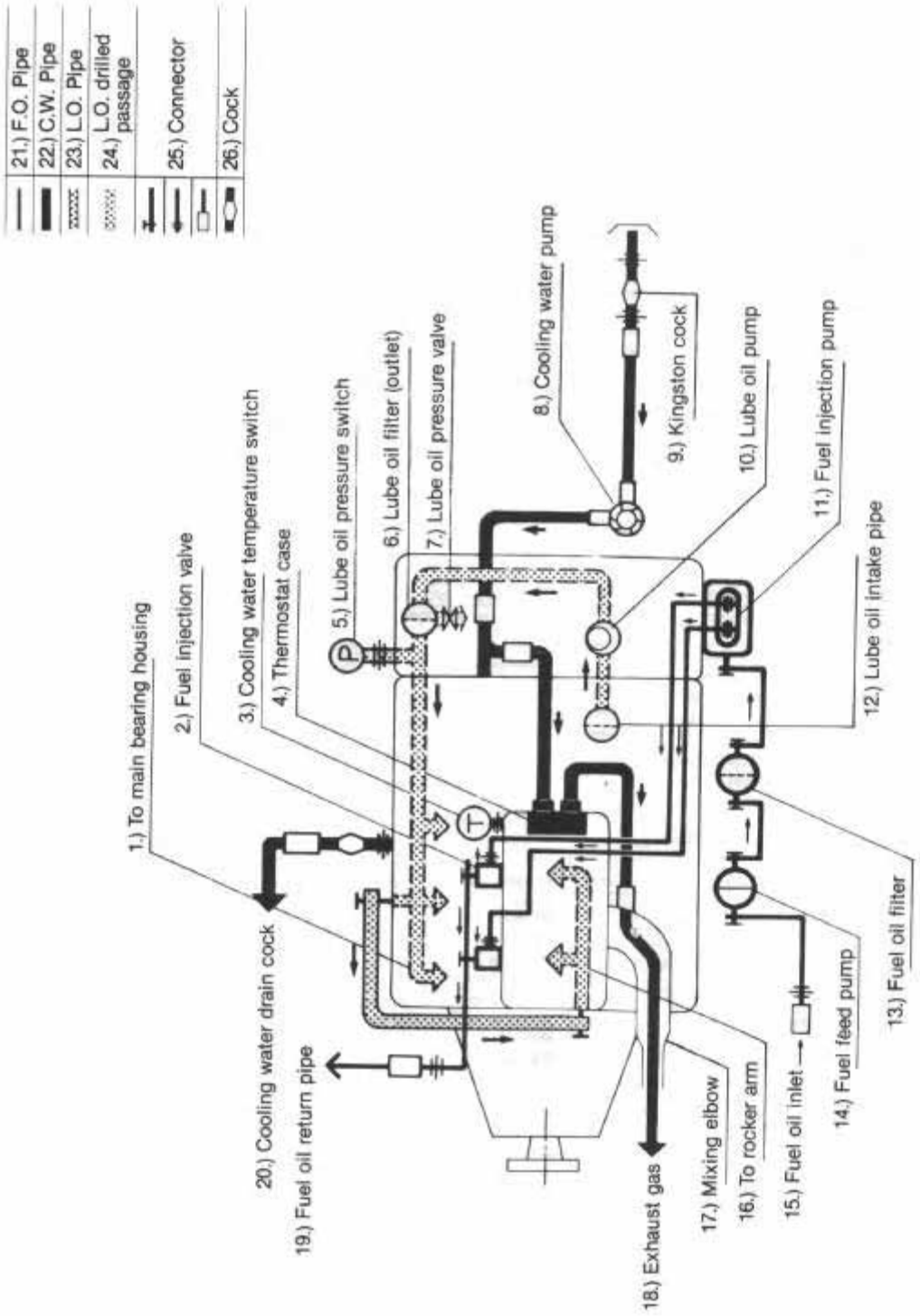

https://truckmanualshub.com/

XII. Electrical wiring diagram

1) A-type

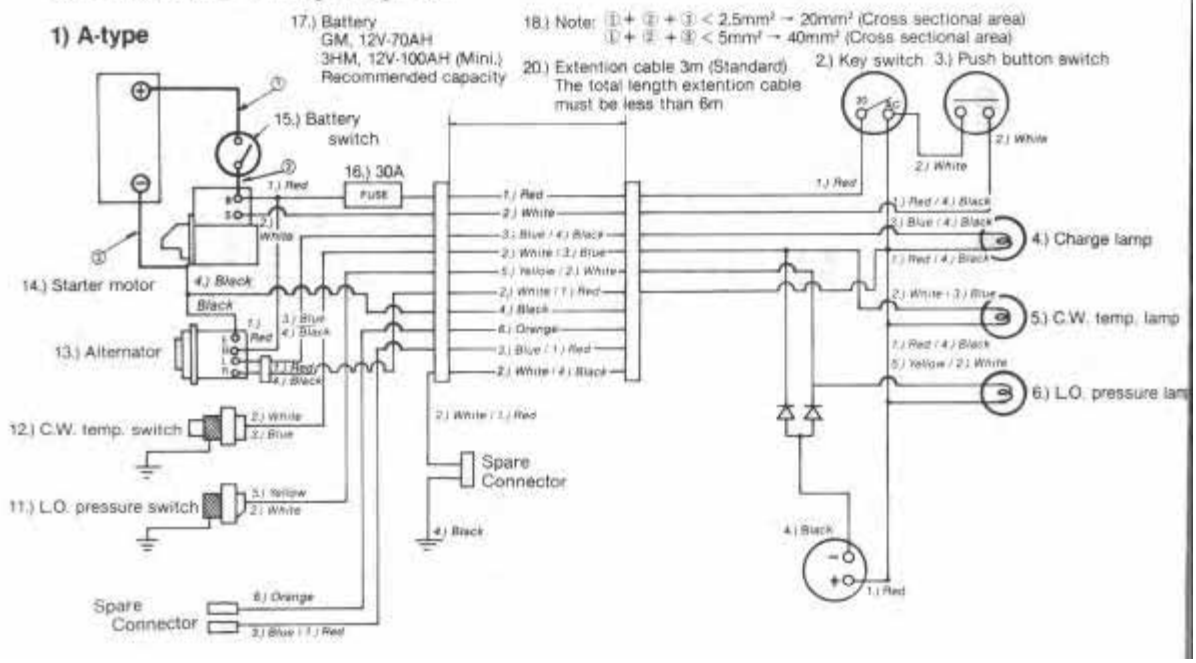
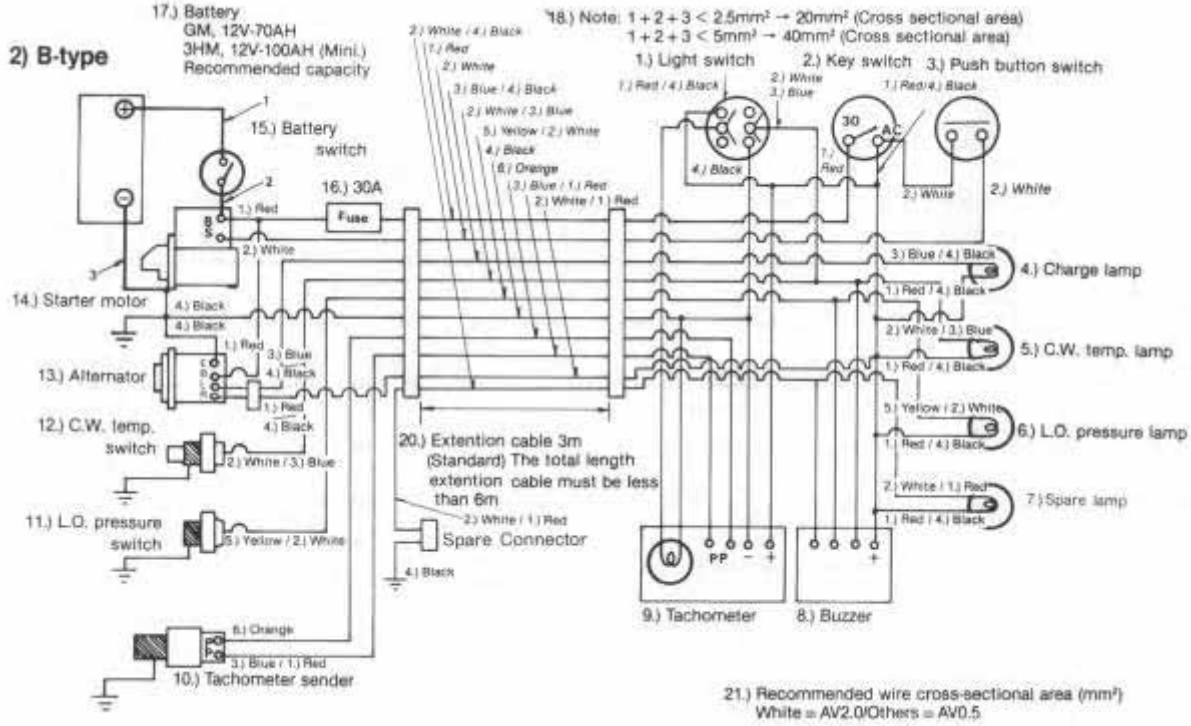
2) B-type