https://truckmanualshub.com/

* This publication supersedes M44A2 series data published in TM 9-2320-209-20-1; TM 9-2320-209-20-2-1; TM 9-2320-209-20-2-2; TM 9-2320-209-20-3-1; TM 9-2320-209-20-3-2; TM 9-2320-209-20-3-3; TM 9-2320-209-20-3-4, 27 May 1981. Retain all TM 9-2320-209-20 publications for reference pertaining to M44 and M44A1 series trucks.

TECHNICAL MANUAL

UNIT MAINTENANCE

FOR

2-1/2-TON, 6X6, M44A2 SERIES TRUCKS (MULTIFUEL)

Model		NSN Without Winch	NSN With Winch
Truck, Cargo	M35A2	2320-00-077-1616	2320-00-077-1617
	M35A2C	2320-00-926-0873	2320-00-926-0875
	M36A2	2320-00-077-1618	2320-00-077-1619
Truck, Tank, Fuel	M49A2C	2320-00-077-1631	2320-00-077-1632
Truck, Tank, Water	M50A2	2320-00-077-1633	2320-00-077-1634
	M50A3	2320-00-937-4036	2320-00-937-5264
Truck, Van, Shop	M109A3	2320-00-077-1636	2320-00-077-1637
Truck, Instrument Repair Shop	M185A3	4940-00-077-1638	4940-00-077-1639
Truck, Tractor	M275A2	2320-00-077-1640	2320-00-077-1641
Truck, Dump	M342A2	2320-00-077-1643	2320-00-077-1644
Truck, Maintenance, Pipeline Construction	M756A2		2320-00-904-3277
Truck, Maintenance, Earth Boring and Polesetting	M764		2320-00-937-5980

HOW TO USE THIS MANUAL v
INTRODUCTION 1-1
SERVICE AND TROUBLESHOOTING INSTRUCTIONS 2-1
ENGINE AND CLUTCH SYSTEMS MAINTENANCE 3-1
ELECTRICAL SYSTEM MAINTENANCE 4-1
TRANSMISSION MAINTENANCE 5-1
TRANSFER CASE MAINTENANCE 6-1
PROPELLER SHAFTS, AXLES, AND SUSPENSION SYSTEM MAINTENANCE 7-1
PARKING BRAKE, COMPRESSED AIR, AND SERVICE BRAKE SYSTEM MAINTENANCE 8-1
WHEEL, HUB, DRUM, AND STEERING SYSTEM MAINTENANCE 9-1
FRAME MAINTENANCE 10-1
BODY, CAB, AND ACCESSORIES MAINTENANCE 11-1
SPECIAL PURPOSE BODIES MAINTENANCE 12-1
WINCH AND POWER TAKEOFF MAINTENANCE 13-1
SPECIAL PURPOSE KITS MAINTENANCE 14-1
SHIPMENT AND LIMITED STORAGE 15-1

DISTRIBUTION STATEMENT A. Approved for public release; distribution is unlimited.

HEADQUARTERS, DEPARTMENT OF THE ARMY OCTOBER 1991

https://truckmanualshub.com/

https://truckmanualshub.com/

WARNING

EXHAUST GASES CAN KILL

1. DO NOT operate your vehicle engine in enclosed area.
2. DO NOT idle vehicle engine with cab windows closed.
3. DO NOT drive vehicle with inspection plates or cover plates removed.
4. BE ALERT at all times for exhaust odors.
5. BE ALERT for exhaust poisoning symptoms. They are:

   Ž Headache

   Ž Dizziness

   Ž Sleepiness

   • Loss of muscular control

6. If YOU SEE another person with exhaust poisoning symptoms:

   • Remove person from area

   • Expose to open air

   • Keep person warm

   • Do not permit person to move

   • Administer artificial respiration, if necessary*

   * For artificial respiration, refer to FM 21-11.

WARNING SUMMARY

- **Drycleaning solvent is flammable and will not be used near open flame. Use only in well-ventilated places. Failure to do so may result in injury to personnel.**
- **Wear leather gloves when handling cable. Do not let cable run through hands. Broken or rusty wires can cause injury to personnel.**
- **Ensure new, longer front hydraulic brake lines, currently used on 5-ton trucks, are installed on all 2-1/2-ton trucks. Old, shorter front hydraulic brake lines are subject to failure during full steering travel and must be replaced with new, longer front hydraulic brake lines. Failure to do this will result in injury or death to personnel.**
- **Compressed air source will not exceed 30 psi (207 kPa). When cleaning with compressed air, eyeshields must be worn. Failure to wear eyeshields may result in injury to personnel.**
- **Do not use a dry brush or compressed air to clean brakeshoes. There may be asbestos dust on brakeshoes which can be dangerous to your health if you breathe it. (Brakeshoe must be wet, and a soft bristle brush must be used.)**
- **Do not perform testing near fuel tank with fill cap or sending unit removed. Fuel may ignite causing injury to personnel.**
- **Diesel fuel is flammable. Do not perform troubleshooting checks near open flame, sparks, or electricity. Injury to personnel may result**

https://truckmanualshub.com/

WARNING SUMMARY (Contd)

- Eye protection is required when performing fuel system troubleshooting checks. Failure to wear eye protection may result in injury to personnel.
- Ignition switch must remain OFF during fuel system troubleshooting checks. Failure to verify that ignition system is turned off may result in injury to personnel.
- Eyeshields must be worn when working with compressed air system. Failure to wear eyeshields may result in injury to personnel.
- Diesel fuel is flammable. Do not perform fuel system procedures near open flame. Injury or death to personnel may result.
- Use caution when removing radiator filler cap. Steam or hot coolant under pressure may cause injury to personnel.
- Remove all jewelry such as rings, dog tags, bracelets, etc. If jewelry or disconnected battery ground cable contacts positive battery post, a direct short can result, causing damage to equipment or severe injury to personnel.
- Completely deflate tires before removing from axles if there is obvious damage to wheel components. Injury or death to personnel may result from exploding wheel components.
- Support cab body while in raised position for mount replacement. Failure to do so may result in injury to personnel.
- Do not perform this procedure while smoking or within 50 feet of sparks or open flame. Fuel is flammable and can explode easily, causing injury or death to personnel and damage to equipment.
- Air compressor becomes hot during operation. Allow compressor to cool before handling, or injury to personnel may result.
- Before performing fuel system procedures, allow engine to cool. Failure to do so may result in injury to personnel.
- Fuel pressure is sufficient to penetrate skin. Wear hand protection at all times when removing injector tubes. Failure to do so may result in injury to personnel.
- Use caution when testing thermostat, hot water may cause injury to personnel.
- Ensure vehicle is firmly supported while spring seat is removed. Failure to do so may result in injury to personnel.
- Do not disconnect air couplings before draining air reservoirs. Small parts under pressure may shoot out with high velocity, causing injury to personnel.
- All personnel must stand clear during removal of cargo body dropside. Cargo body dropside will swing free when pins are removed and injury to personnel may result.
- Leaves and plates of assembled spring are under tension. Restrain all leaves and plates while removing center bolt. Release tension slowly. Failure to do so may result in injury to personnel.
- Alternator must be supported during installation. Failure to support alternator may cause injury to personnel or damage to equipment.
- Do not smoke, have open flame, or make sparks when performing battery maintenance. Batteries may explode causing severe injury to personnel.
- If NBC exposure is suspected, all air filter media should be handled by personnel wearing protective equipment, Consult your unit NBC officer or NBC NCO for appropriate handling or disposal instructions.

https://truckmanualshub.com/

WARNING SUMMARY (Contd)

- NBC contaminated filters must be handled using adequate precautions (FM 21-40) and must be disposed of by trained personnel.
- Do not put fingers between frame and engine supports. Jack failure may result in injury to personnel.
- Do not drain oil when engine is hot. Hot oil may cause injury to personnel.
- Battery acid (electrolyte) is extremely harmful. Always wear safety goggles and rubber gloves when performing battery maintenance. Severe injury will result if acid contacts eyes or skin.
- When removing battery cables, disconnect ground cable first. Do not allow tools to come in contact with vehicle when disconnecting cable clamps. A direct short can result, causing instant heating of tools, tool damage, battery damage, or battery explosion, and severe injury to personnel.
- Eye protection is required when using wire brush for cleaning. Failure to do so may result in injury to personnel.
- Never remove tire lockring without first deflating tire. Lockring may explode off, causing injury or death to personnel.
- When assembling plates and leaves with C-clamp, the plates and leaves will be under tension. Use care not to disturb the assembly until center bolt and nut are tightened. Failure to do so may result in injury to personnel.
- Some vehicles have two seperate wires and connectors. Mark wires for installation. Connecting wires on wrong terminals may cause fuel to ignite, resulting in injury to personnel.
- Do not touch hot exhaust system components with bare hands; injury to personnel will result.
- Do not remove radiator cap if engine is hot. Steam or hot coolant under pressure may cause injury to personnel.
- Do not disconnect air lines before draining air reservoirs. Small parts under pressure may shoot out with high velocity, causing injury to personnel.
- Lockring must be properly seated around wheel when installed. If lockring is not correctly installed, it may explode off when tire is inflated, causing injury or death to personnel.
- Never attempt to correct seating of lockring by hammering, striking, or forcing while tire is inflated. Lockring may explode off causing injury or death to personnel.
- Never inflate a tire without a tire inflation cage. Injury or death to personnel may result from exploding wheel components.
- Always use tire inflation equipment specified in TM 9-2610-200-24. Warn personnel to stand 10 ft (3.1m) clear of tire inflation cage while inflating tire. Injury or death may result from exploding wheel components.
- Never rest or lean against tire inflation cage while tire is being inflated or injury or death to personnel may result.
- Keep fingers clear of hood and cowling when replacing hinge. Failure to do so may result in injury to personnel.
- All personnel must stand clear during lifting operations. A snapped chain, shifting or swinging load may result in injury to personnel.
- Tailgate is heavy. Ensure tailgate is supported prior to removing pins. Failure to do so may cause injury to personnel.

https://truckmanualshub.com/

WARNING SUMMARY (Contd)

- Always use hand throttle to control engine speed when operating winch. Avoid sudden changes in speed. Rough, jerky operation may cause broken shearpins and snapped cables. Injury to personnel or damage to equipment may result.
- Never stand between test vehicles. Assistant must remain in secondary vehicle to engage service brake if cable snaps or automatic brake fails. Failure to do this may result in injury to personnel.
- Vehicle will become charged with electricity if A-frame contacts or breaks high voltage line. Do not attempt to leave vehicle while high voltage line is in contact with A-frame or vehicle. Leaving the vehicle may result in injury to personnel.
- Do not remove slave receptacle before disconnecting battery ground cables. If energized battery cables contact cab, a direct short will result and may cause injury to personnel.
- Short, front flexible hydraulic brake lines are subject to failure during full steering travel and must be replaced with new, longer flexible hydraulic brake lines P/N 7409330. Failure to do so may cause injury or death to personnel. Refer to para. 8-16 for replacement.
- Place support under radiator before removing support plates. Failure to do so may result in injury to personnel and damage to equipment.
- Stay clear of moving parts. Failure to do so may result in injury or death to personnel.
- Improper cleaning methods and use of unauthorized cleaning solvents may injure personnel and damage equipment. Refer to TM 9-247 for correct information.
- Do not use compressed air or a dry brush for cleaning when working in areas of vehicle where asbestos brake lining dust may accumulate. Remove asbestos dust and other residue from these areas using a soft bristle brush or cloth soaked with water. Breathing asbestos dust may cause injury to personnel.
- Ensure fuel shutoff valve is OFF and remove throttle cable before cranking engine. Failure to do so may result in injury to personnel.
- Do not place fingers between frame and crossmember while replacing mount. Doing so may result in injury to personnel.
- Bracket posts must be held in position before removing U-bolts. Failure to do so may result in injury to personnel

https://truckmanualshub.com/

*ARMY TM 9-2320-361-20
AIR FORCE TO 36A12-1B-1094-2

TECHNICAL MANUAL
NO. 9-2320-361-20

TECHNICAL ORDER
NO. 36A12-1B-1094-2

HEADQUARTERS
DEPARTMENT OF THE ARMY
Washington D. C., *25 October 1991*

TECHNICAL MANUAL
FOR
UNIT MAINTENANCE
2-1/2-Ton, 6X6, M44A2 SERIES TRUCKS
(MULTIFUEL)

Model		NSN Without Winch	NSN With Winch
Truck, Cargo	M35A2	2320-00-077-1616	2320-00-077-1617
	M35A2C	2320-00-926-0873	2320-00-926-0875
	M36A2	2320-00-077-1618	2320-00-077-1619
Truck, Tank, Fuel	M49A2C	2320-00-077-1631	2320-00-077-1632
Truck, Tank, Water	M50A2	2320-00-077-1633	2320-00-077-1634
	M50A3	2320-00-937-4036	2320-00-937-5264
Truck, Van, Shop	M109A3	2320-00-077-1636	2320-00-077-1637
Truck, Instrument Repair Shop	M185A3	4940-00-077-1638	4940-00-077-1639
Truck, Tractor	M275A2	2320-00-077-1640	2320-00-077-1641
Truck, Dump	M342A2	2320-00-077-1643	2320-00-077-1644
Truck, Maintenance, Pipeline Construction	M756A2		2320-00-904-3277
Truck, Maintenance, Earth Boring and Polesetting	M764		2320-00-937-5980

* This publication supersedes M44A2 series vehicle data published in TM 9-2320-209-20-1; TM 9-2320-209-20-2-1; TM 9-2320-209-20-2-2; TM 9-2320-209-20-3-1; TM 9-2320-209-20-3-2; TM 9-2320-209-20-3-3; TM 9-2320-209-20-3-4, 27 May 1981. Retain all TM 9-2320-209-20 publications for reference pertaining to M44 and M44A1 series trucks.

DISTRIBUTION STATEMENT A. Approved for public release; distribution is unlimited.

https://truckmanualshub.com/

REPORTING OF ERRORS

You can help improve this manual. If you find any mistakes or if you know of a way to improve the procedures, please let us know. Mail your letter, DA Form 2028 (Recommended Changes to Publications and Blank Forms), or DA Form 2028-2 located in back of this manual direct to: Commander, U.S. Army Tank-Automotive Command, ATTN: AMSTA-MB, Warren, Michigan 48397-5000. A reply will be furnished to you.

		Page
	HOW TO USE THIS MANUAL	v
CHAPTER 1	INTRODUCTION	1-1
Section I.	General Information	1-1
II.	Equipment Description and Data	1-3
III.	Principles of Operation	1-37
CHAPTER 2	SERVICE AND TROUBLESHOOTING INSTRUCTIONS	2-1
Section I.	Repair Parts, Special Tools, TMDE, and Support Equipment	2-1
II.	Service Upon Receipt	2-1
III.	Preventive Maintenance Checks and Services (PMCS)	2-2
IV.	Mechanical Systems Troubleshooting	2-24
V.	Compressed Air and Brake System Troubleshooting	2-52
VI.	Electrical Systems Troubleshooting	2-74
VII.	STE/ICE Troubleshooting (Simplified Test Equipment for Internal Combustion Engines)	2-148
CHAPTER 3	ENGINE AND CLUTCH SYSTEMS MAINTENANCE	3-1
Section I	Engine Maintenance	3-1
II.	Engine Lubrication System Maintenance	3-6
III.	Clutch System Maintenance	3-14
IV.	Air Intake System Maintenance	3-20
V.	Turbocharger Maintenance	3-28
VI.	Fuel System Maintenance	3-31
VII.	Accelerator System Maintenance	3-70
VIII.	Exhaust System Maintenance	3-82
IX.	Cooling System Maintenance	3-92

https://truckmanualshub.com/

CHAPTER 4 **ELECTRICAL SYSTEM MAINTENANCE** 4-1

Section I. Charging System Maintenance 4-1
II. Starting System Maintenance 4-10
III. Instruments, Sending Units, Switches, and Horn Maintenance 4-15
IV. Lighting System Maintenance 4-57
V. Battery and Battery Box Maintenance 4-72
VI. Wiring Harness Maintenance 4-79

CHAPTER 5 **TRANSMISSION MAINTENANCE** 5-1

CHAPTER 6 **TRANSFER CASE MAINTENANCE** 6-1

CHAPTER 7 **PROPELLER SHAFTS, AXLES, AND SUSPENSION SYSTEM MAINTENANCE** 7-1

Section I. Propeller Shafts Maintenance 7-1
II. Front and Rear Axle Maintenance. 7-15
III. Front and Rear Suspension Maintenance 7-28

CHAPTER 8 **PARKING BRAKE, COMPRESSED AIR, AND SERVICE BRAKE SYSTEM MAINTENANCE** 8-1

Section I. Parking Brake Maintenance 8-1
II. Service Brake and Hydraulic Systems Maintenance 8-18
III. Compressed Air System Maintenance 8-45

CHAPTER 9 **WHEEL, HUB, DRUM, AND STEERING SYSTEM MAINTENANCE** 9-1

Section I. Wheel, Hub, and Drum Maintenance 9-1
II. Steering System Maintenance 9-12

CHAPTER 10 **FRAME MAINTENANCE** 10-1

CHAPTER 11 **BODY,CAB AND ACCESSORIES MAINTENANCE** 11-1

Section I. Body and Cab Maintenance 11-1
II. Accessories Maintenance 11-56

CHAPTER 12 **SPECIAL PURPOSE BODIES MAINTENANCE** 12-1

Section I. Cargo Body Maintenance 12-1
II. Dump Body Maintenance 12-16
III. Tank Body Maintenance 12-29
IV. Van Body Maintenance 12-94
V. Earth Boring and Polesetting Truck Body Maintenance 12-132
VI. Pipeline Construction Body Maintenance 12-165
VII. Tractor Maintenance 12-177

https://truckmanualshub.com/

CHAPTER 13 WINCH AND POWER TAKEOFF MAINTENANCE 13-1
Section I. Winch Maintenance 13-1
II. Power Takeoff Controls and Linkage Maintenance 13-34

CHAPTER 14 SPECIAL PURPOSE KITS MAINTENANCE 14-1
Section I. Winterization Kits Maintenance 14-1
II. Van Body Primary and Secondary Heater Kit Maintenance 14-36
III. Deepwater Fording Kit Maintenance 14-60
IV. A-Frame Kit Maintenance 14-66
V. Mounting Kit Maintenance 14-70
VI. 100-Amp Alternator Kit Maintenance 14-85
VII. Troop Seat Mounting Kit and Seatbelt Kits Maintenance 14-92

CHAPTER 15 SHIPMENT AND LIMITED STORAGE 15-1
Section I. General Preparation of Truck for Shipment 15-1
II. Loading and Movement 15-2
III. Limited Storage 15-2
APPENDIX A REFERENCES A-1
APPENDIX B MAINTENANCE ALLOCATION CHART B-1
APPENDIX C EXPENDABLE/DURABLE SUPPLIES AND MATERIALS LIST C-1
APPENDIX D TORQUE LIMITS D-1
APPENDIX E SCHEMATIC AND WIRING DIAGRAMS E-1
INDEX . . . . . Index 1

https://truckmanualshub.com/

HOW TO USE THIS MANUAL

ABOUT YOUR MANUAL

Spend some time looking through this manual. You'll find that it has a new look, different than most of the TM's you've been using.

New features added to improve the convenience of this manual and increase your efficiency are:

a. **Accessing Information** – These include features such as the bleed-to-edge locators on the cover and edge of the manual. Extensive troubleshooting guides for specific systems lead directly to step-by-step directions for problem solving and maintenance tasks.

b. **Illustrations** – A variety of methods are used to make locating and fixing components much easier. Locator illustrations with keyed text, exploded views, and cut-away diagrams make the information in this manual easier to understand and follow.

c. **Modification or Special Purpose Kits** – M44A2 series vehicles can be updated with modification kits or equipped with special purpose kits. They allow the vehicle to operate more efficiently or perform a special function. Sometimes the vehicle being worked on doesn't exactly match the maintenance procedure in this manual because the proper kit has not been installed. Refer to troubleshooting sections in chapter 2 to find troubleshooting instructions or a reference to kit installation instructions.

d. **Keying Text With Illustrations** - Illustration and text are located on facing pages that show the specific task you are working on. In some cases, the task steps and illustrations are located side by side. Continue reading for an example of modular text and illustrations.

e. **General Features** - Your TM is the best source available for providing information and data critical to vehicle operation and maintenance:

- Safety summary (warning pages a, b, c, and d)
- General information, equipment description, and data (chapter 1, sections I and II)
- Principles of operation (chapter 1, section III)
- Preventive Maintenance Checks and Services - PMCS (chapter 2, section III)
- Systems Troubleshooting (chapter 2, sections IV, V, VI, and VII)
- Detailed maintenance procedures (chapters 3 through 14)
- Shipment and limited storage (chapter 15, sections I, II, and III)
- References (appendix A)
- Maintenance Allocation Chart – MAC (appendix B)
- Expendable/durable supplies and materials list (appendix C)
- Torque limits (appendix D)
- Schematic and Wiring Diagrams (appendix E)

A typical example of how to use this manual is provided on the following pages.

https://truckmanualshub.com/

USING YOUR MANUAL: AN EXAMPLE

TASK: The operator of an M44A2 series vehicle, model number M35A2C, has complained of excessive exhaust noise and exhaust fumes entering the cab of his vehicle. The vehicle has been assigned to you for repair.

TROUBLESHOOTING STEPS:

1. Look at the cover of this manual. You'll see chapter/section titles listed from top to bottom on the right-hand side.
2. Look at the right-edge of the manual. On some of the pages you'll see edge indicators (black bars) that are alined with the chapter/section bars on the cover. These are the locations of the chapters/sections in the text.
3. Look for "SERVICE AND TROUBLE-SHOOTING INSTRUCTIONS" in the chapter list on the cover. This is where the troubleshooting information is located.
4. Turn to those pages with the edge indicator matching the black bar for service and troubleshooting instructions. Page numbers are also listed next to chapter/section titles.
5. Chapter 2 is divided into seven sections:
   - Section I - Repair Parts, Special Tools, TMDE, and Support Equipment
   - Section II - Service Upon Receipt
   - Section III - Preventive Maintenance Checks and Services (PMCS)
   - Section IV - Mechanical Systems Troubleshooting
   - Section V - Compressed Air and Brake System Troubleshooting
   - Section VI - Electrical Systems Troubleshooting
   - Section VII - STE/ICE Troubleshooting
6. Turn to section IV, "MECHANICAL SYSTEMS TROUBLESHOOTING" (page 2-24). This troubleshooting section is system-oriented and is broken down into 25 major vehicle systems.
7. One of the first pages of this section is the "MECHANICAL TROUBLESHOOTING SYMPTOM INDEX" (turn to page 2-25).
8. Look down the list until you find "EXHAUST SYSTEM." Beneath that heading you will find the symptoms noted by the vehicle operator: "Excessive exhaust noise" and "Exhaust fumes in cab."
9. Turn to the page indicated: 2-33.

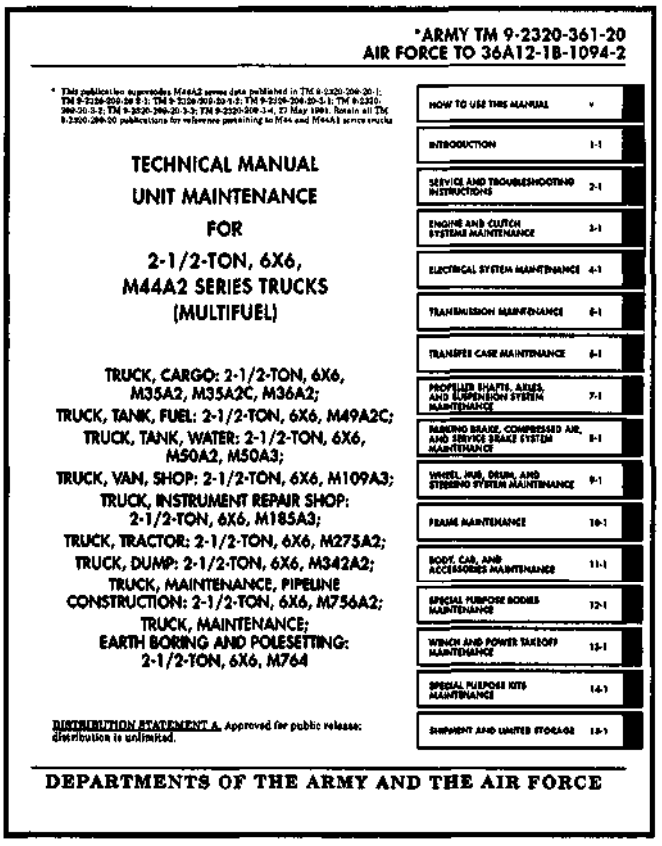

*ARMY TM 9-2320-361-20
AIR FORCE TO 36A12-1B-1094-2

TECHNICAL MANUAL
UNIT MAINTENANCE
FOR
2-1/2-TON, 6X6,
M44A2 SERIES TRUCKS
(MULTIFUEL)

TRUCK, CARGO: 2-1/2-TON, 6X6, M35A2, M35A2C, M36A2;
TRUCK, TANK, FUEL: 2-1/2-TON, 6X6, M49A2C;
TRUCK, TANK, WATER: 2-1/2-TON, 6X6, M50A2, M50A3;
TRUCK, VAN, SHOP: 2-1/2-TON, 6X6, M109A3;
TRUCK, INSTRUMENT REPAIR SHOP: 2-1/2-TON, 6X6, M185A3;
TRUCK, TRACTOR: 2-1/2-TON, 6X6, M275A2;
TRUCK, DUMP: 2-1/2-TON, 6X6, M342A2;
TRUCK, MAINTENANCE, PIPELINE CONSTRUCTION: 2-1/2-TON, 6X6, M756A2;
TRUCK, MAINTENANCE; EARTH BORING AND POLESETTING: 2-1/2-TON, 6X6, M764

DISTRIBUTION STATEMENT A. Approved for public release; distribution is unlimited.

HOW TO USE THIS MANUAL	v
INTRODUCTION	1-1
SERVICE AND TROUBLESHOOTING INSTRUCTIONS	2-1
ENGINE AND CLUTCH SYSTEMS MAINTENANCE	3-1
ELECTRICAL SYSTEM MAINTENANCE	4-1
TRANSMISSION MAINTENANCE	5-1
TRANSFER CASE MAINTENANCE	6-1
PROPELLER SHAFTS, AXLES, AND SUSPENSION SYSTEM MAINTENANCE	7-1
PARKING BRAKE, COMPRESSED AIR, AND SERVICE BRAKE SYSTEM MAINTENANCE	8-1
WHEEL, HUB, DRUM, AND STEERING SYSTEM MAINTENANCE	9-1
FRAME MAINTENANCE	10-1
BODY, CAB, AND ACCESSORIES MAINTENANCE	11-1
SPECIAL PURPOSE BODIES MAINTENANCE	12-1
WINCH AND POWER TAKEOFF MAINTENANCE	13-1
SPECIAL PURPOSE KITS MAINTENANCE	14-1
SHIPMENT AND LIMITED STORAGE	15-1

DEPARTMENTS OF THE ARMY AND THE AIR FORCE

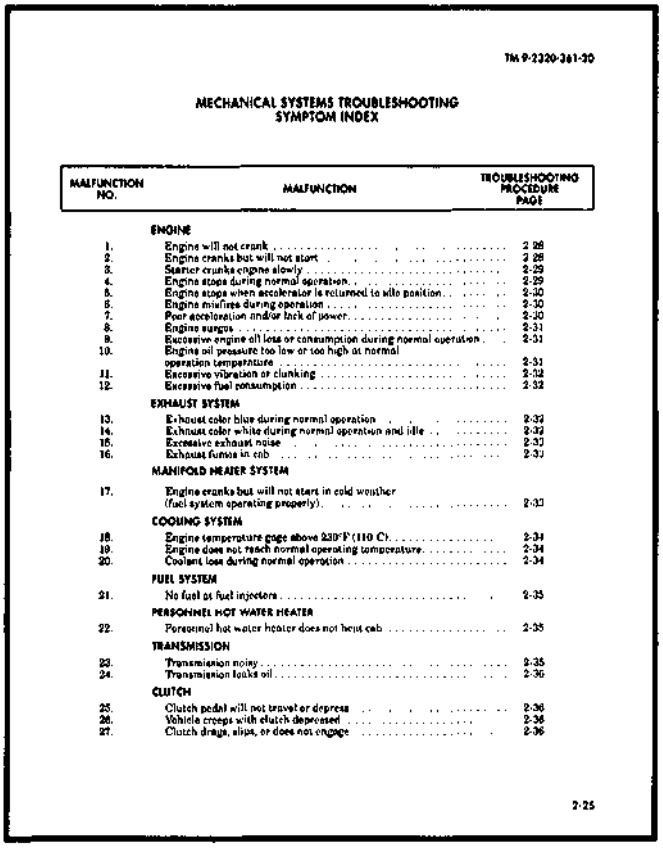

TM 9-2320-361-20

MECHANICAL SYSTEMS TROUBLESHOOTING
SYMPTOM INDEX

MALFUNCTION NO.	MALFUNCTION	TROUBLESHOOTING PROCEDURE PAGE
	ENGINE	
1.	Engine will not crank	2-28
2.	Engine cranks but will not start	2-28
3.	Starter cranks engine slowly	2-29
4.	Engine stops during normal operation	2-29
5.	Engine stops when accelerator is returned to idle position	2-30
6.	Engine misfires during operation	2-30
7.	Poor acceleration and/or lack of power	2-30
8.	Engine surges	2-31
9.	Excessive engine oil loss or consumption during normal operation	2-31
10.	Engine oil pressure too low or too high at normal operation temperature	2-31
11.	Excessive vibration or clunking	2-32
12.	Excessive fuel consumption	2-32
	EXHAUST SYSTEM	
13.	Exhaust color blue during normal operation	2-32
14.	Exhaust color white during normal operation and idle	2-32
15.	Excessive exhaust noise	2-33
16.	Exhaust fumes in cab	2-33
	MANIFOLD HEATER SYSTEM	
17.	Engine cranks but will not start in cold weather (fuel system operating properly)	2-33
	COOLING SYSTEM	
18.	Engine temperature gage above 230°F (110 C)	2-34
19.	Engine does not reach normal operating temperature	2-34
20.	Coolant loss during normal operation	2-34
	FUEL SYSTEM	
21.	No fuel at fuel injectors	2-35
	PERSONNEL HOT WATER HEATER	
22.	Personnel hot water heater does not heat cab	2-35
	TRANSMISSION	
23.	Transmission noisy	2-35
24.	Transmission leaks oil	2-36
	CLUTCH	
25.	Clutch pedal will not travel or depress	2-36
26.	Vehicle creeps with clutch depressed	2-36
27.	Clutch drags, slips, or does not engage	2-36

2-25

https://truckmanualshub.com/

10. On page 2-33, step/test relating to resolving the problem of “Excessive exhaust noise” is listed:

    Step 1. During your inspection, you discover that an exhaust pipe is cracked and rusted. The part must be replaced. Chapter 3, section VIII is referenced.

11. Turn to the “TABLE OF CONTENTS” and find the chapter dealing with the engine. You find it as “CHAPTER 3, ENGINE AND CLUTCH SYSTEMS MAINTENANCE.” Furthermore, you note that the chapter is divided into nine sections; you are interested in “Section VIII. Exhaust System Maintenance.”

NOTE: Before attempting to repair or replace the exhaust system, as a Unit mechanic, you must:

a. Determine the maintenance responsibility of repair or replacement of the component.

b. If the task is at your echelon of maintenance responsibility, you must identify the tools needed and the replacement parts required.

Refer to the Maintenance Allocation Chart - MAC (appendix B) to determine not only the maintenance responsibility of the item, but also to obtain an estimate of the time required to perform the task, tools needed, and any special notes/requirements necessary.

Refer to TM 9-2320-361-20P, Unit Maintenance Repair Parts and Special Tools List for M44A2 Series Vehicles, for requisition data concerning replacement parts for this task.

12. Turn to chapter 3, section VIII, which covers “EXHAUST SYSTEM MAINTENANCE.” In the maintenance index we find that there are two paragraphs listed, para. 3-37 and 3-38.

13. Paragraph 3-38 is a task for replacing the exhaust system used only on model M50A2 and M50A3 vehicles. All other M44A2 series vehicles will follow para. 3-37 for replacement of the exhaust system. Notice that, in this case, it starts on the same page, 3-82.

14. The first two pages shown have procedures and illustrations for performing the removal steps for components of the exhaust system.

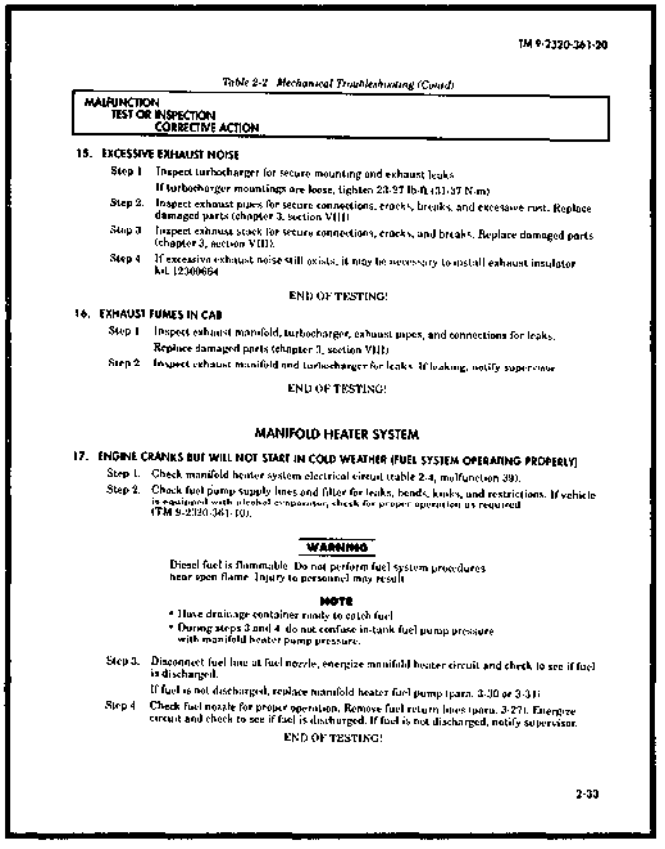

TM 9-2320-361-20

Table 2-2 Mechanical Troubleshooting (Cont'd)

MALFUNCTION TEST OR INSPECTION CORRECTIVE ACTION

15. EXCESSIVE EXHAUST NOISE

Step 1 Inspect turbocharger for secure mounting and exhaust leaks.
If turbocharger mountings are loose, tighten 23-27 lb-ft (31-37 N-m)

Step 2. Inspect exhaust pipes for secure connections, cracks, breaks, and excessive rust. Replace damaged parts (chapter 3, section VIII).

Step 3 Inspect exhaust stack for secure connections, cracks, and breaks. Replace damaged parts (chapter 3, section VIII).

Step 4 If excessive exhaust noise still exists, it may be necessary to install exhaust insulator kit 12300664

END OF TESTING!

16. EXHAUST FUMES IN CAB

Step 1 Inspect exhaust manifold, turbocharger, exhaust pipes, and connections for leaks.
Replace damaged parts (chapter 3, section VIII)

Step 2 Inspect exhaust manifold and turbocharger for leaks. If leaking, notify supervisor

END OF TESTING!

MANIFOLD HEATER SYSTEM

17. ENGINE CRANKS BUT WILL NOT START IN COLD WEATHER (FUEL SYSTEM OPERATING PROPERLY)

Step 1. Check manifold heater system electrical circuit (table 2-4, malfunction 39).

Step 2. Check fuel pump supply lines and filter for leaks, bends, kinks, and restrictions. If vehicle is equipped with alcohol compressor, check for proper operation as required (TM 9-2320-361-10).

WARNING

Diesel fuel is flammable. Do not perform fuel system procedures near open flame. Injury to personnel may result

NOTE

- Have drainage container ready to catch fuel
- During steps 3 and 4 do not confuse in-tank fuel pump pressure with manifold heater pump pressure.

Step 3. Disconnect fuel line at fuel nozzle, energize manifold heater circuit and check to see if fuel is discharged.
If fuel is not discharged, replace manifold heater fuel pump (para. 3-10 or 3-11)

Step 4 Check fuel nozzle for proper operation. Remove fuel return lines (para. 3-27). Energize circuit and check to see if fuel is discharged. If fuel is not discharged, notify supervisor.

END OF TESTING!

2-33

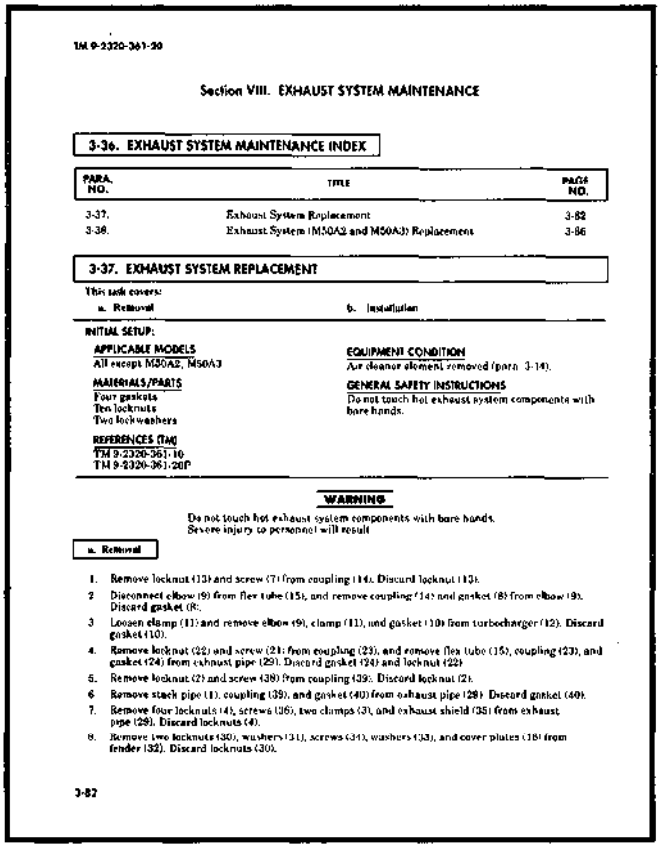

TM 9-2320-361-20

Section VIII. EXHAUST SYSTEM MAINTENANCE

3-36. EXHAUST SYSTEM MAINTENANCE INDEX

PARA. NO.	TITLE	PAGE NO.
3-37.	Exhaust System Replacement	3-82
3-38.	Exhaust System (M50A2 and M50A3) Replacement	3-86

3-37. EXHAUST SYSTEM REPLACEMENT

This task covers:
a. Removal b. Installation

INITIAL SETUP:

APPLICABLE MODELS
All except M50A2, M50A3

MATERIALS/PARTS
Four gaskets
Ten locknuts
Two lockwashers

REFERENCES (TM)
TM 9-2320-361-10
TM 9-2320-361-20P

EQUIPMENT CONDITION
Air cleaner element removed (para. 3-14).

GENERAL SAFETY INSTRUCTIONS
Do not touch hot exhaust system components with bare hands.

WARNING

Do not touch hot exhaust system components with bare hands. Severe injury to personnel will result

a. Removal

1. Remove locknut (13) and screw (7) from coupling (14). Discard locknut (13).
2. Disconnect elbow (9) from flex tube (15), and remove coupling (14) and gasket (8) from elbow (9). Discard gasket (8).
3. Loosen clamp (11) and remove elbow (9), clamp (11), and gasket (10) from turbocharger (12). Discard gasket (10).
4. Remove locknut (22) and screw (21) from coupling (23), and remove flex tube (15), coupling (23), and gasket (24) from exhaust pipe (29). Discard gasket (24) and locknut (22)
5. Remove locknut (2) and screw (38) from coupling (39). Discard locknut (2).
6. Remove stack pipe (1), coupling (39), and gasket (40) from exhaust pipe (29). Discard gasket (40).
7. Remove four locknuts (4), screws (36), two clamps (3), and exhaust shield (35) from exhaust pipe (29). Discard locknuts (4).
8. Remove two locknuts (30), washers (31), screws (34), washers (33), and cover plates (38) from fender (32). Discard locknuts (30).

3-82

https://truckmanualshub.com/

DETAILED MAINTENANCE PROCEDURES:

15. Detailed procedures: Include everything you must do to accomplish a basic maintenance task.

    a. Before beginning the maintenance task, look through the procedure. You must familiarize yourself with the entire maintenance procedure before beginning the maintenance task. The entire procedure of paragraph 3-37: "EXHAUST SYSTEM REPLACEMENT" includes: a. Removal and b. Installation.

    b. The eight basic headings listed under "INITIAL SETUP" outline special tools, materials, personnel requirements, and special conditions. Headings will not be listed if there are no entries. The headings are:

    - **APPLICABLE MODELS** Any models that require that particular maintenance task.
    - **TEST EQUIPMENT** Test equipment needed to complete a task.
    - **SPECIAL TOOLS** Those special tools needed to complete a task. Common tools are not listed.
    - **MATERIALS/PARTS** All parts or materials needed to complete a task.
    - **PERSONNEL REQUIRED** The number of personnel needed to perform a task. If only one mechanic is needed, this heading will not be used. If you think that you need more help to correctly or safely complete a task (perhaps as the result of unusual conditions, etc.), alert your supervisor and ask for help.
    - **REFERENCES (TM)** Those additional manuals needed to complete a task.
    - **EQUIPMENT CONDITION** Notes the conditions that must exist before starting the task. For exhaust system replacement, the vehicle must have the parking brake set and the air cleaner element removed.
    - **GENERAL SAFETY INSTRUCTIONS** Summarizes all safety warnings for the maintenance task.

    c. A step-by-step maintenance procedure follows the "INITIAL SETUP" and gives detailed instructions for the procedure. These instructions give part name and action performed. The numbers in parentheses correspond to the part's callout number in the accompanying illustration. Warnings, cautions, and notes give additional information.

    - **WARNINGS** - Indicate conditions, practices, or procedures which must be observed to avoid personnel injury, loss of life, or long-term health hazard.
    - **CAUTIONS** - Indicate conditions, practices, or procedures which must be observed to avoid damage to equipment or destruction of equipment.
    - **NOTES** - Include essential information of special importance, interest, or aid in job performance.

    d. At the end of a procedure, "FOLLOW-ON TASKS" will list those additional tasks that must be performed to complete the procedure.

16. You can also use the Table of Contents (page ii) to find more information about the vehicle. For example: Principles of Operation in chapter 1.

17. Unit PMCS are presented in table 2-1 starting on page 2-4.

18. Chapter 2, section VII, STE/ICE Troubleshooting, can be used if STE/ICE is available for troubleshooting or PMCS.

19. Refer to TM 9-2320-361-20P, Unit Maintenance Repair Parts and Special Tools List for Truck, 2-1/2-Ton, 6x6, M44A2 Series, when requisitioning parts, special tools, and equipment for unit maintenance.

20. Your manual is easier to use once you understand its design. We hope it will encourage you to use it more often as an aid to maintenance support for M44A2 series vehicles.

https://truckmanualshub.com/

CHAPTER 1
INTRODUCTION

Section I. General Information (page 1-1)
Section II. Equipment Description and Data (page 1-3)
Section III. Principles of Operation (page 1-37)

Section I. GENERAL INFORMATION

1-1. SCOPE

a. This technical manual contains instructions for unit maintenance of 2-1/2-ton, 6x6, multifuel, M44A2 series vehicles.

b. The vehicle model numbers and equipment names are:

(1) M35A2 Cargo Truck, WO/W and W/W
(2) M35A2C Cargo Truck With Dropsides, WO/W and W/W
(3) M36A2 Cargo Truck With Extra Long Wheelbase, WO/W and W/W
(4) M49A2C Fuel Tank Truck, WO/W and W/W
(5) M50A2 Water Tank Truck (400- and 600-Gallon Tanks), WO/W and W/W
(6) M50A3 Water Tank Truck (Two 500-Gallon Tanks), WO/W and W/W
(7) M109A3 Shop Van Truck, WO/W and W/W
(8) M185A3 Instrument Repair Shop Truck, WO/W and W/W
(9) M275A2 Tractor Truck, WO/W and W/W
(10) M342A2 Dump Truck, WO/W and W/W
(11) M756A2 Pipeline Construction Maintenance Truck, W/W
(12) M764 Earth Boring and Polesetting Maintenance Truck, W/W

1-2. MAINTENANCE FORMS, RECORDS, AND REPORTS

Department of the Army forms and procedures used for equipment maintenance will be those prescribed by DA Pam 738-750, The Army Maintenance Management System (TAMMS).

1-3. DESTRUCTION OF ARMY MATERIEL TO PREVENT ENEMY USE

Procedures for destruction of Army materiel to prevent enemy use can be found in TM 750-244-6.

1-4. PREPARATION FOR STORAGE OR SHIPMENT

Storage and shipment instructions are in Chapter 15, Shipment and Limited Storage, of this manual and TM 746-10, Marking, Packaging and Shipment of Supplies and Equipment: General Packaging Instructions for Field Use.

1-5. REPORTING QUALITY DEFICIENCIES, IDEAS, AND EQUIPMENT IMPROVEMENT RECOMMENDATIONS

If your 2-1/2-ton, M44A2 series vehicle needs improvement, let us know. Send us an EIR. You, the user, are the only one who can tell us what you don't like about your equipment. Let us know why you don't like the design. Put it on an SF 368 (Quality Deficiency Report). Mail in accordance with DA PAM 738-750.

https://truckmanualshub.com/

1-6. EQUIPMENT IMPROVEMENT REPORT AND MAINTENANCE DIGEST (EIR MD)

The quarterly Equipment Improvement Report and Maintenance Digest, TB 43-0001-39 series, contains valuable field information on the equipment covered in this manual. The information in the TB 43-0001-39 series is compiled from some of the Equipment Improvement Reports that you prepared on the vehicles covered in this manual. Many of these articles resulted from comments, suggestions, and improvement recommendations that you submitted to the EIR program. The TB 43-0001-39 series contains information on equipment improvements minor alterations, proposed Modification Work Orders (MWO's), warranties (if applicable), actions taken on some of your DA Form 2028's (Recommended Changes to Publications), and advance information on proposed changes that may affect this manual. The information will help you in doing your job better and will help in keeping you advised of the latest changes to this manual. Also refer to DA Pam 25-30, Consolidated Index of Army Publications and Blank Forms, and Appendix A of this manual.

1-7. WARRANTY INFORMATION

The transfer, transmission, transmission shaft, front axle assembly, rear axle assembly, differential carrier, air hydraulic cylinder, steering gear, cargo body, winch, power takeoff assembly, and delivery pump are warranted in accordance with TB 9-2320-209-14 for the M35A2 and M35A2C cargo trucks, M49A2C fuel tank truck, M50A3 water tank truck, and M275A2 tractor truck. The warranty starts on the date found in block 23, DA Form 2408-9, in the logbook. Report all defects in material or workmanship to your supervisor, who will take appropriate action.

https://truckmanualshub.com/

Section II. EQUIPMENT DESCRIPTION AND DATA

1-8. GENERAL

M44A2 series, 6x6, 2-1/2-ton vehicles are highly mobile tactical vehicles capable of traveling over most terrain types under severe weather conditions. The vehicles of this series utilize common cab, body, engine, drivetrain, electrical, brake, and chassis components that accommodate a variety of configurations to accomplish multiple combat support and service roles. All M44A2 series vehicles have a pintle hook for towing. Tiedowns and lifting shackles are used for air, rail, or sea shipment. All vehicles described in this section may be equipped with a front winch for recovery operations.

1-9. EQUIPMENT DESCRIPTION AND DATA INDEX

PARA. NO.	TITLE	PAGE NO.
1-10.	Equipment Characteristics, Capabilities, and Features	1-4
1-11.	Location and Description of Major External Components	1-10
1-12.	Location and Description of Major Internal Components	1-12
1-13.	Location and Contents of Warning, Caution, and Data Plates	1-14
1-14.	Differences Between Models	1-30
1-15.	Equipment Data	1-31

https://truckmanualshub.com/

1-10. EQUIPMENT CHARACTERISTICS, CAPABILITIES, AND FEATURES

a. M35A2 Cargo Truck, WO/W and W/W.

PURPOSE: This model is used to transport cargo and troops. The M35A2 has permanent steel-welded sides, making it a preferred vehicle when transporting bulky or shifting loads. Side racks have built-in troop seats which may be positioned for troop transport operations. A bow and tarpaulin kit is available.

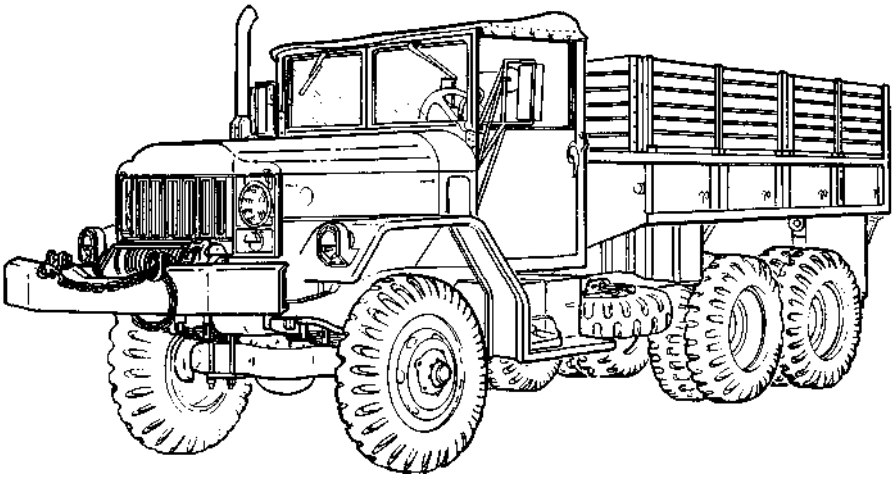

M35A2 CARGO TRUCK W/W

b. M35A2C Cargo Truck With Dropsides, WO/W and W/W.

PURPOSE: M35A2C cargo trucks are used to transport cargo and troops. The hinged steel sides can be folded down or removed for easy side loading and unloading operations. Side racks have built-in troop seats which may be positioned for troop transport operations. A bow and tarpaulin kit is available.

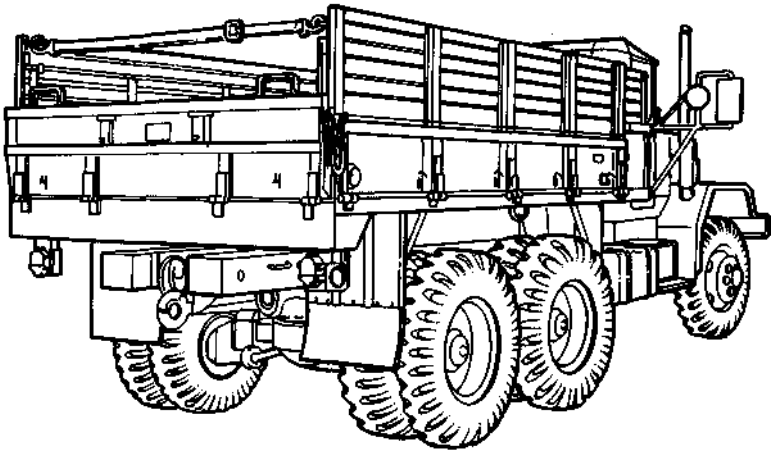

M35A2C CARGO TRUCK WITH DROPSIDES

https://truckmanualshub.com/

1-10. EQUIPMENT CHARACTERISTICS, CAPABILITIES, AND FEATURES (Contd)

c. M36A2 Cargo Truck With Extra Long Wheelbase (XLWB), WO/W and W/W.

PURPOSE: M36A2 cargo trucks have the same load capacities as M35A2 and M35A2C. However, the M36A2 truck bed is 63 inches (160 centimeters) longer. This provides each vehicle with an additional 140 cubic feet (3.9 cubic meters) of cargo space. Only the hinged right side can be folded down or removed for easy side loading and unloading operations. No troop seats are available for this model. A bow and tarpaulin kit with end flaps is available.

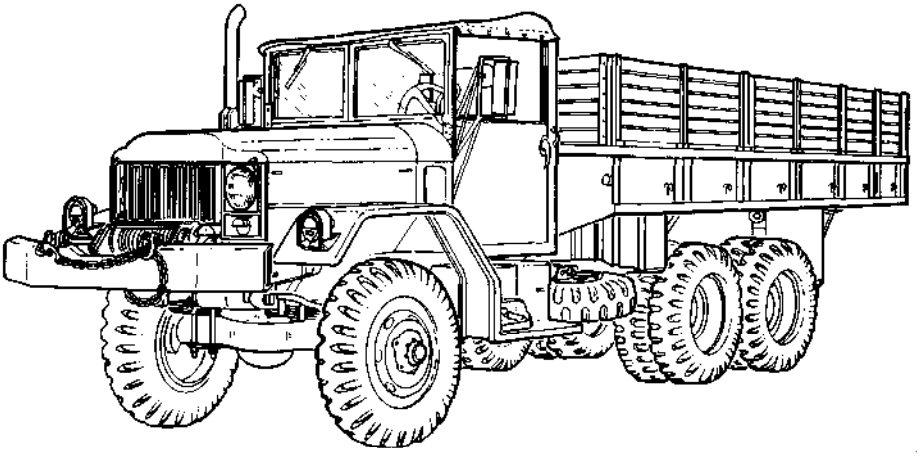

M36A2 CARGO TRUCK WITH EXTRA LONG WHEELBASE W/W

d. M49A2C Fuel Tank Truck, WO/W and W/W.

PURPOSE: M49A2C fuel tank trucks are used to transport and discharge fuel. The two 600-gallon (2271 L) tanks can be filled or emptied with or without the use of a delivery pump located in the rear body compartment. The pump can also be used to transfer fuel from one container to another. Only the 600-gallon (2271 L) tank located over the rear axle maybe filled for cross-country operations.

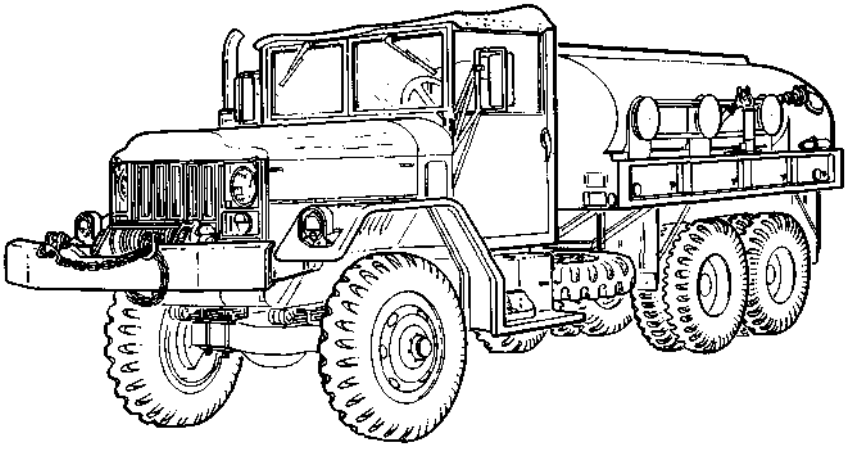

M49A2C FUEL TANK TRUCK W/W

https://truckmanualshub.com/

1-10. EQUIPMENT CHARACTERISTICS, CAPABILITIES, AND FEATURES (Contd)

e. M50A2, M50A3 Water Tank Truck, WO/W and W/W.

PURPOSE: M50A2 and M50A3 water tank trucks are used to transport and discharge water. Filling, emptying, and transferring water is done the same way fuel is filled, emptied, and transferred on the M49A2C fuel tank truck. The M50A2 has a 400-gallon (1514 L) tank in front and a 600-gallon (2271 L) tank located over the rear axles. The M50A3 has two 500-gallon (1893 L) tanks. Only the tank located over the rear axle may be filled for cross-country operations.

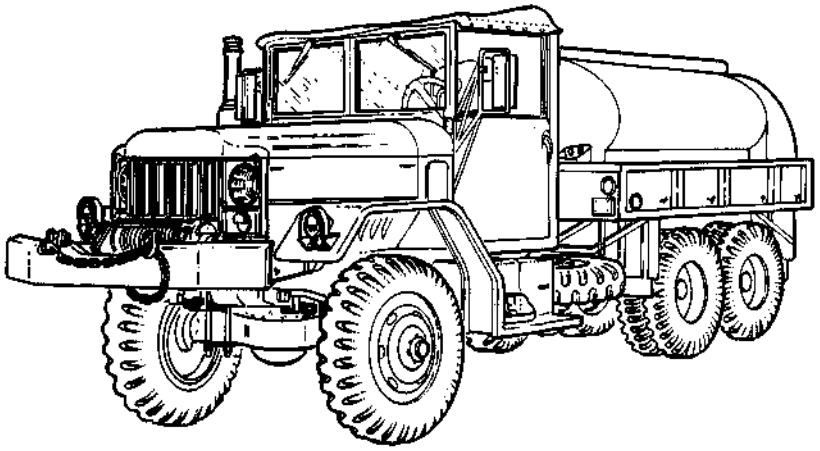

M50A2, M50A3 WATER TANK TRUCK W/W

f. M109A3 Shop Van Truck, WO/W and W/W.

PURPOSE: M109A3 shop van truck is used as a mobile repair shop. It may be used to transport special equipment that must be kept free of dirt, dust, and moisture. This vehicle is not reducible in height.

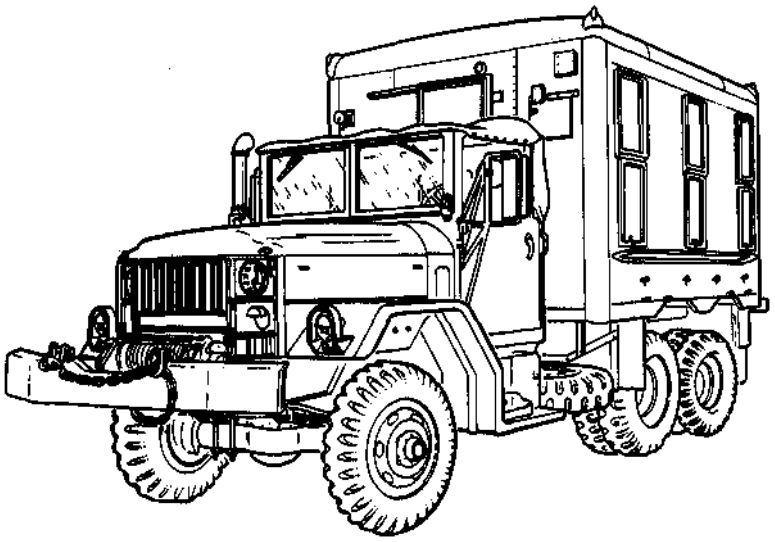

M109A3 SHOP VAN TRUCK W/W

https://truckmanualshub.com/

1-10. EQUIPMENT CHARACTERISTICS, CAPABILITIES, AND FEATURES (Contd)

g. M185A3 Instrument Repair Shop Truck, WO/W and W/W.

PURPOSE: M185A3 has special equipment (grinder with wire wheel, vise, drill sets, etc.) included with the vehicle to allow for more extensive field repairs. This vehicle is not reducible in height.

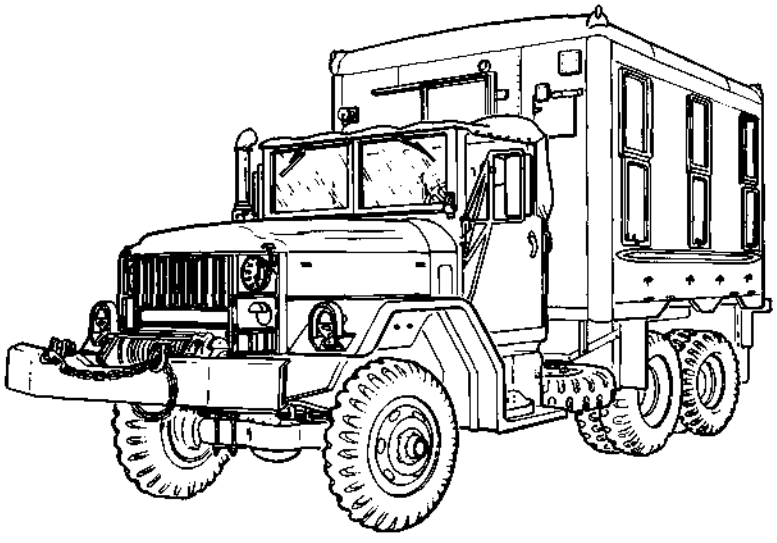

M185A3 INSTRUMENT REPAIR SHOP TRUCK W/W

h. M275A2 Tractor Truck, WO/W and W/W.

PURPOSE: M275A2 tractor truck is equipped with a fifth wheel used to transport a semitrailer. The M275A2, when attached to a semitrailer, has limited cross-country applications.

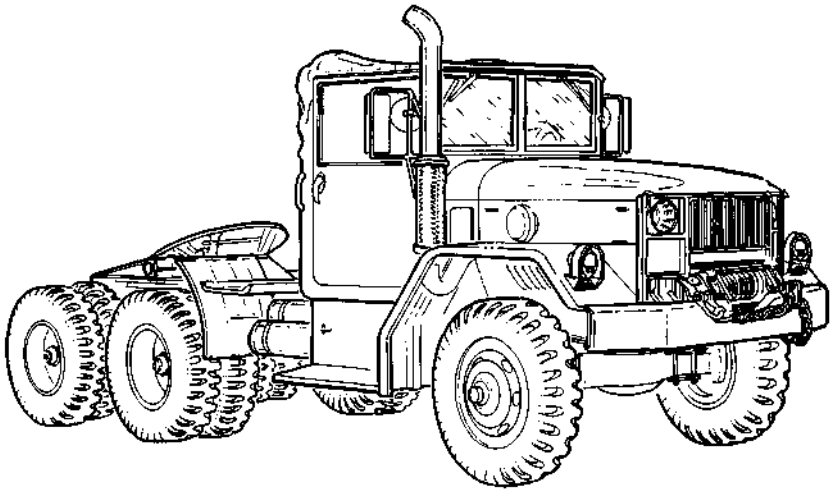

M275A2 TRACTOR TRUCK

https://truckmanualshub.com/

1-10. EQUIPMENT CHARACTERISTICS, CAPABILITIES, AND FEATURES (Contd)

i. M342A2 Dump Truck, WO/W and W/W.

PURPOSE: M342A2 dump truck is used to transport materials such as sand, gravel, and stone. The forward end of the welded steel body extends up and over the vehicle cab to protect it from damage during loading operations. A troop seat kit with covering may be installed for troop transport operations.

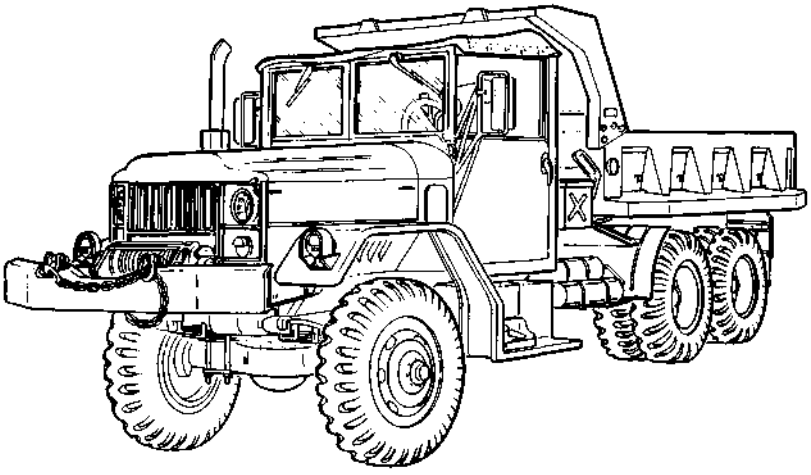

M342A2 DUMP TRUCK W/W

j. M756A2 Pipeline Construction Maintenance Truck, W/W.

PURPOSE: The M756A2 pipeline construction maintenance truck is used to load, unload, and transport pipe and pipeline construction equipment. An A-frame, side racks, bows, and tarpaulin are included with the vehicle. Side racks have built-in troop seats for transporting pipeline construction personnel. Both side panels may be removed for side mounting of A-frame. All vehicles have a winch mounted behind the cab for lifting pipes and a second winch mounted on the front of vehicle for recovery operations.

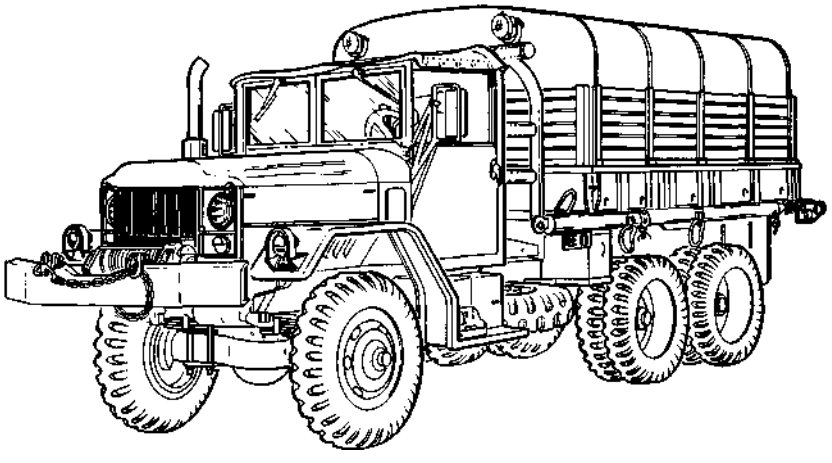

M756A2 PIPELINE CONSTRUCTION MAINTENANCE TRUCK W/W

https://truckmanualshub.com/

1-10. EQUIPMENT CHARACTERISTICS, CAPABILITIES, AND FEATURES (Contd)

k. M764 Earth Boring and Polesetting Maintenance Truck, W/W.

PURPOSE: M764 earth boring and polesetting maintenance truck uses an auger to bore holes and a derrick and rear winch to set and pull poles. A collapsible cable reel is used to lay wire and light cable. Hydraulically-operated outriggers are used to steady vehicle for earth boring and polesetting operations.

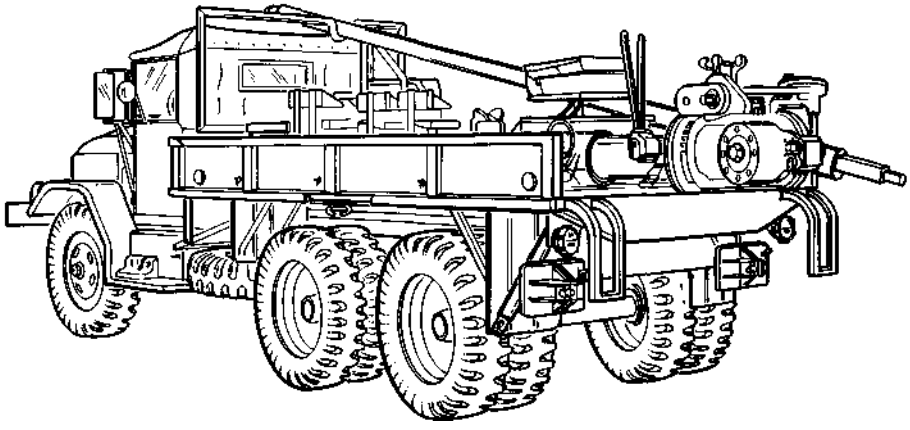

M764 EARTH BORING AND POLESETTING MAINTENANCE TRUCK W/W

https://truckmanualshub.com/

1-11. LOCATION AND DESCRIPTION OF MAJOR EXTERNAL COMPONENTS

The exterior components described below are common to most of the vehicles covered in this manual. Special differences can be found in TM 9-2320-361-10 or table 1-1 of this manual.

(A) **ENGINE** - Provides power for the vehicle.

(B) **LIFTING TIEDOWN SHACKLES** - Used for lifting the vehicle in ship-to-shore operations and for tiedown attachments when transporting vehicle.

(C) **FRONT WINCH** - Used for recovery operations, powered by a propeller shaft extending from transmission power takeoff.

(D) **PRIMARY FUEL FILTER** - Filters contaminants from fuel.

(E) **AIR CLEANER** - Filters air before it enters the intake manifold.

(F) **TRANSMISSION** - Transmits engine power to transfer case.

(G) **FRONT PROPELLER SHAFT** - Transmits engine power from transfer case to front differential.

(H) **FUEL TANK** - Stores fuel.

(I) **REAR PROPELLER SHAFT(S)** - Transmits engine power from transmission to transfer case and then to rear differentials.

(J) **REAR BOGIE** - Suspension system that supports rear vehicle weight.

(K) **TOWING PINTLE HOOK-** Permits towing of vehicles or equipment.

(L) **REAR DIFFERENTIALS** - Transmits power from propeller shaft to axles.

(M) **AIR RESERVOIRS** - Storage tank(s) for compressed air.

(N) **SPARE TIRE CARRIER** - Stores spare tire.

(O) **TRANSFER POWER TAKEOFF** - Supplies power to drive pump for water and fuel tank vehicles, earth boring auger, and rear winch.

(P) **TRANSFER CASE** - The two-speed transfer case along with five forward speed transmission provides 10 speed ranges to front and rear differentials.

(Q) **AIR-HYDRAULIC CYLINDER** - Air-hydraulic cylinder increases fluid pressure to the wheel cylinders. The wheel cylinders expand and press the brakeshoes against the drum to slow or stop the vehicle.

(R) **MASTER CYLINDER** - Stores brake fluid in reservoir and supplies hydraulic pressure to displace fluid into the brake system. The master cylinder also compensates for seepage from the system.

(S) **TRANSMISSION POWER TAKEOFF** - Supplies power to drive front winch on all vehicles. Dump vehicles have a double-ended unit on left side of transmission. The forward output shaft is used to drive front winch. The rear accessory drive shaft drives the hydraulic pump for the dump vehicle.

(T) **SECONDARY AND FINAL FUEL FILTERS** - Filters fuel from primary fuel filter before fuel enters fuel injection pump.

https://truckmanualshub.com/

1-11. LOCATION AND DESCRIPTION OF MAJOR EXTERNAL COMPONENTS (Contd)

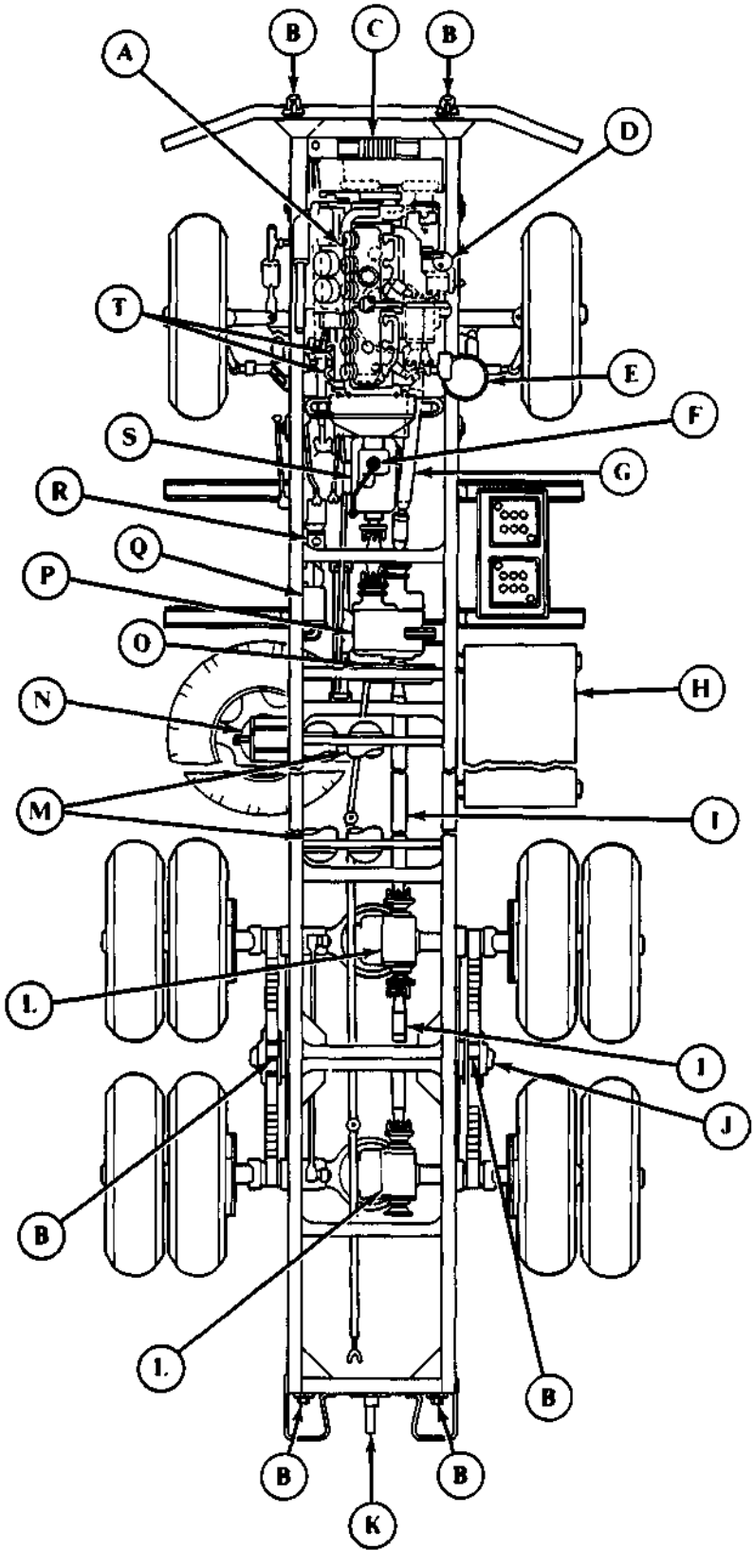

https://truckmanualshub.com/

1-12. LOCATION AND DESCRIPTION OF MAJOR INTERNAL COMPONENTS

The major interior components shown below are common to one or more models covered by this manual. Components not covered here are found in TM 9-2320-361-10 or the applicable maintenance chapters of this manual.

(A) **STEERING WHEEL** - Manual control for turning vehicle.

(B) **TRANSMISSION GEARSHIFT LEVER** - Is used to shift transmission into 1 through 5, neutral, or reverse driving gears. Vehicle must be fully stopped before shifting from 2nd to 1st gear or into reverse. First and reverse have no synchronizing gears.

(C) **COWL VENTILATION** - When open, allows air flow into the driver's compartment.

(D) **POWER DIVIDER CONTROL LEVER** - Used on earth boring and polesetting vehicles for driving either the earth auger or rear winch on the polesetter. The rear winch direction is reversed with this lever. Driving power is provided by transfer case power takeoff (PTO). The transfer case shift lever must be in neutral and transmission gearshift in drive (1 through 3 or reverse).

(E) **TRANSFER CASE SHIFT LEVER** - Used on all vehicles to change ratio of driving power to axles and wheels. Lever is pulled up for HIGH range (greater speed and lower power) or down for LOW range (lower speed and higher power). This shift lever is placed in neutral to allow the transfer PTO lever to be engaged while preventing drive power to axles and wheels.

(F) **DRIVER'S SEAT** - One crewmember adjustable seat.

(G) **TRANSFER POWER TAKEOFF LEVER** - Place in UP position to provide driving power to earth boring auger or rear winch. The transfer case shift lever must be in neutral to prevent driving power to axles and wheels before this lever can be engaged.

(H) **PARKING BRAKE LEVER** - Pulled up to apply parking brake. The knob at the top of the handle is turned clockwise to increase brake cable tension.

(I) **HINGE LOCK** - Locks transmission PTO lever in neutral (N) position.

(J) **TRANSMISSION POWER TAKEOFF LEVER** - Provides two-speed and reverse driving power to front winch. Neutral positions are used between each drive and reverse positions. Input power is available to the transmission PTO when clutch is engaged and engine is running. Transmission is normally placed in neutral (N) when driving power is applied to the front winch.

(K) **REAR WINCH HINGE LOCK** - Locks rear winch lever in up (disengaged) position.

(L) **REAR WINCH CONTROL LEVER** - A two-position lever to engage or disengage drive to rear winch. The transfer case shift lever must be in neutral and transmission gearshift in drive (1 through 3 or reverse).

(M) **ACCELERATOR PEDAL** - Foot control for determining engine speed.

(N) **CLUTCH PEDAL** - Is depressed to disengage engine from transmission and allows shifting to different gear ratio. When clutch pedal is released, engine engages transmission.

(O) **SERVICE BRAKE PEDAL** - Foot control for stopping vehicle.

(P) **HYDRAULIC HOIST LEVER** - Control lever for raising and lowering dump body. Driving power to the hydraulic pump is supplied by the transmission PTO.

(Q) **INSTRUMENT CLUSTER** - Contains indicators to show engine performance.

https://truckmanualshub.com/

1-12. LOCATION AND DESCRIPTION OF MAJOR INTERNAL COMPONENTS (Contd)

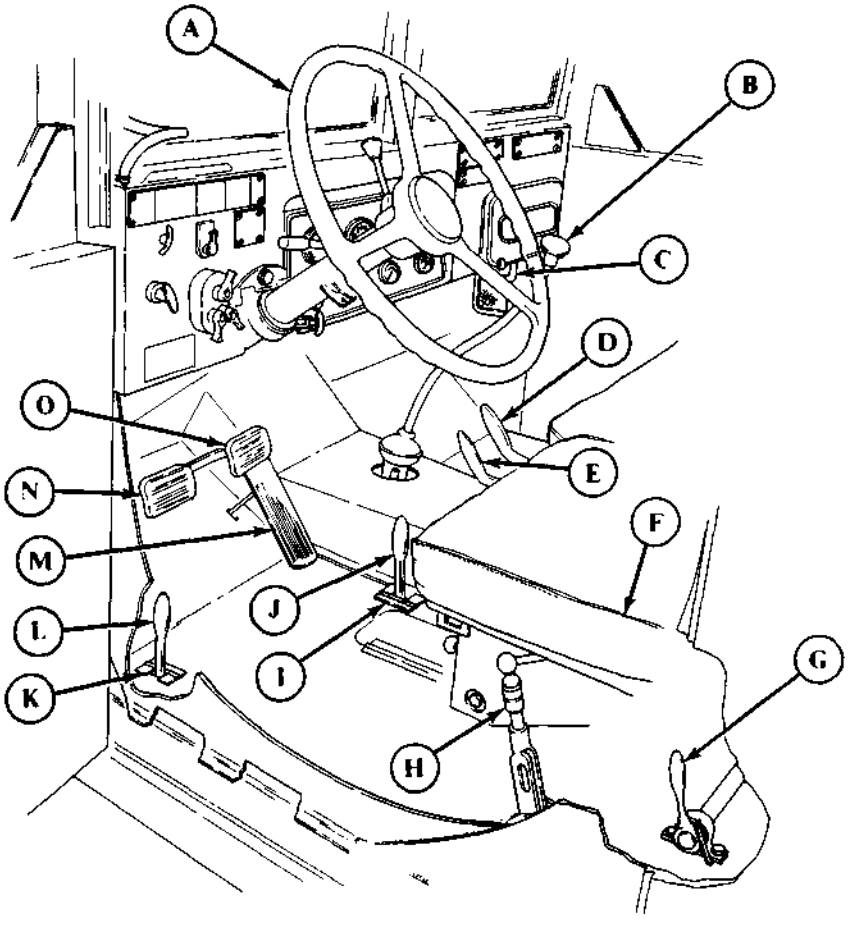

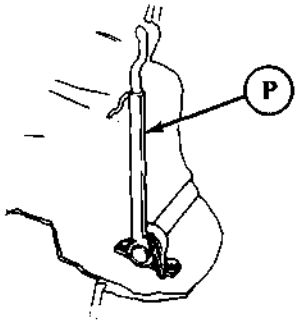

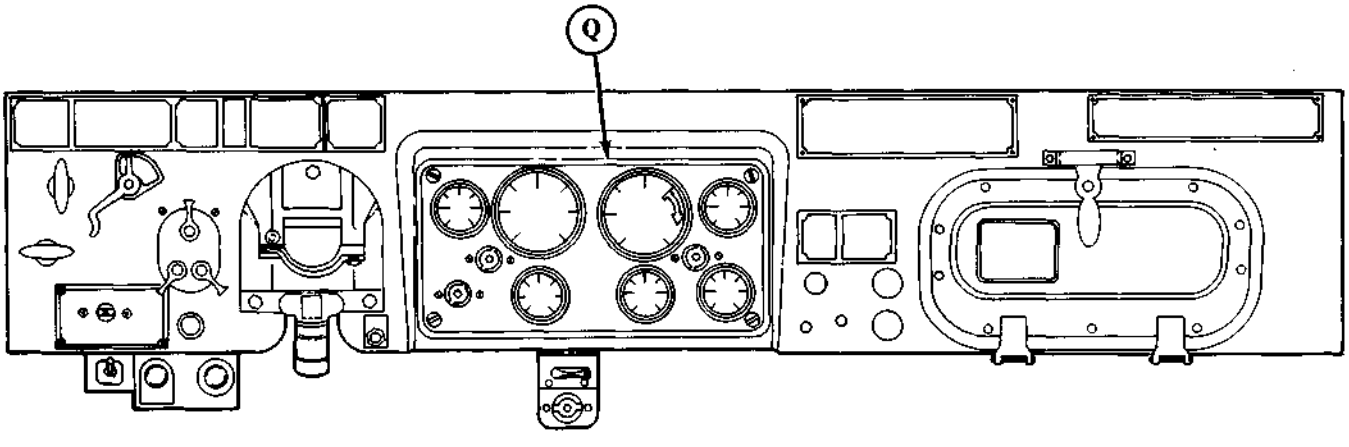

https://truckmanualshub.com/

1-13. LOCATION AND CONTENTS OF WARNING, CAUTION, AND DATA PLATES

a. The location and contents of warning, caution, and data plates are provided in this paragraph. A complete list and location of all warning, caution, and data plates is in TM 9-2320-361-20P. If any of these plates are worn, broken, painted over, missing, or unreadable, they must be replaced.

b. Below are those plates that are located inside the cab. These plates are common to one or more models covered in this manual.

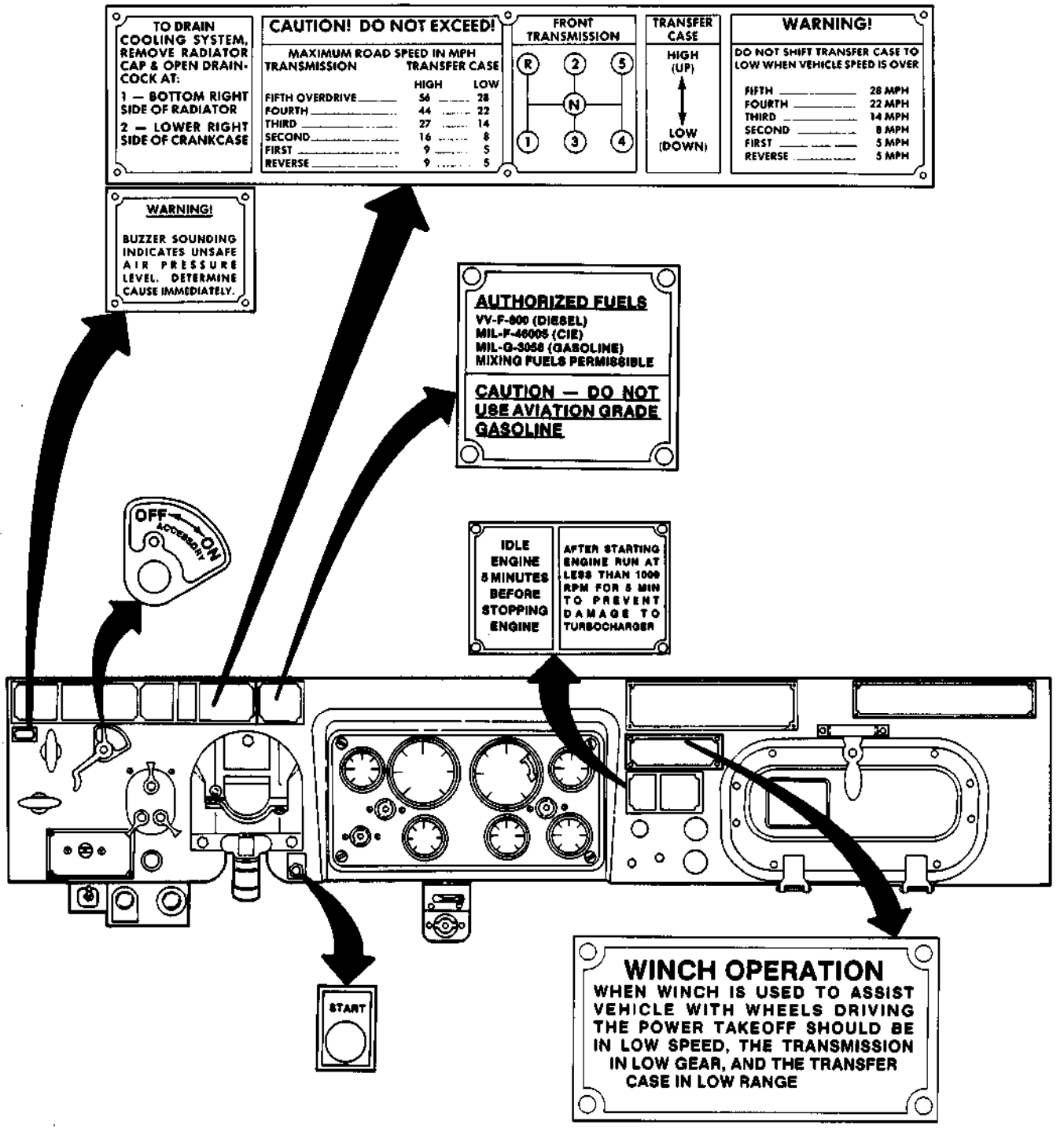

https://truckmanualshub.com/

1-13. LOCATION AND CONTENTS OF WARNING, CAUTION, AND DATA PLATES (Contd)

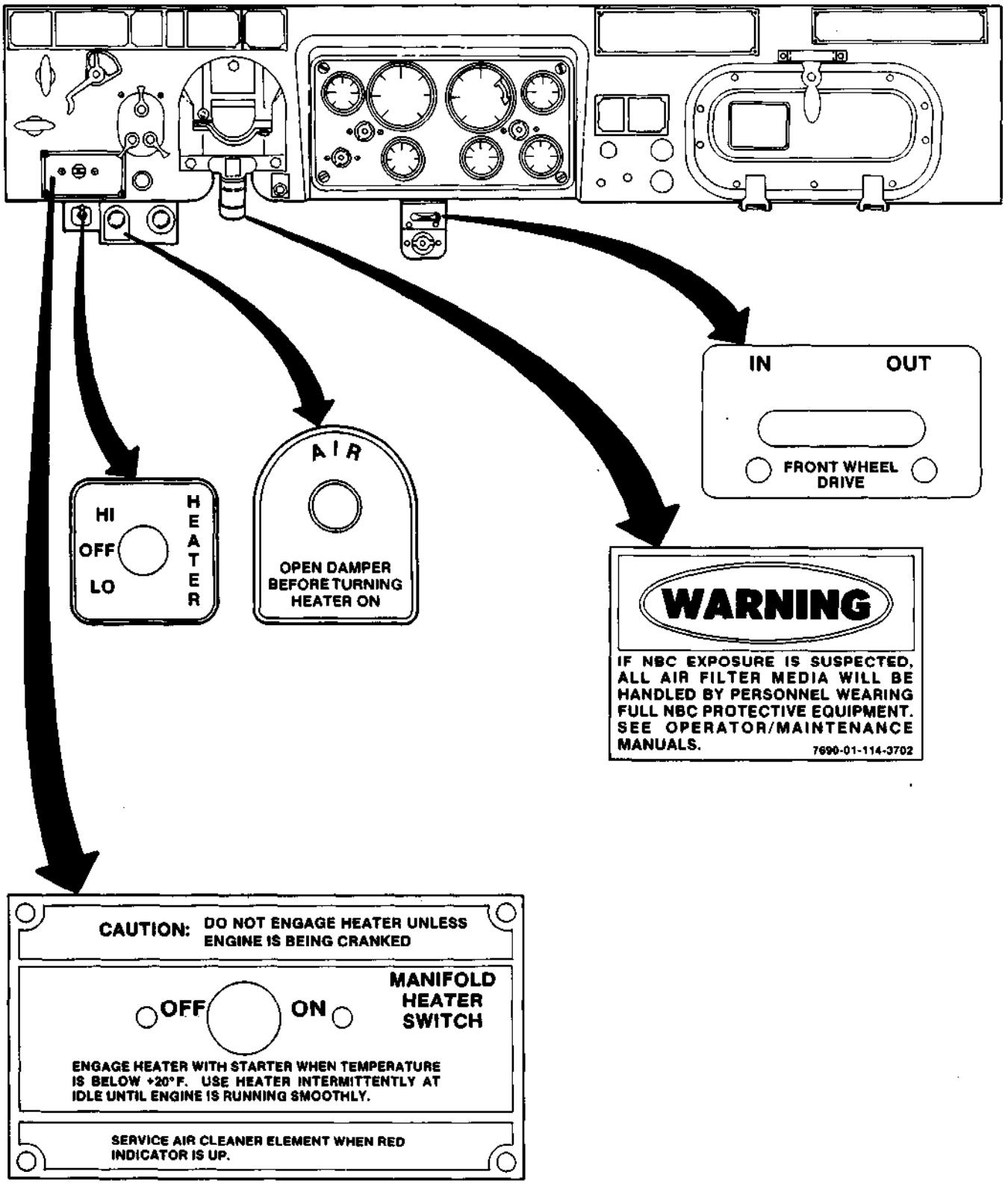

https://truckmanualshub.com/

1-13. LOCATION AND CONTENTS OF WARNING, CAUTION, AND DATA PLATES (Contd)

TRUCK, CARGO, DROP SIDE: 2-1/2 TON, 6X6, M35A2C W/W

WEIGHT & DIMENSION DATA

C.G. LOCATION BASED ON 5,000 LBS. PAYLOAD W/O CREW

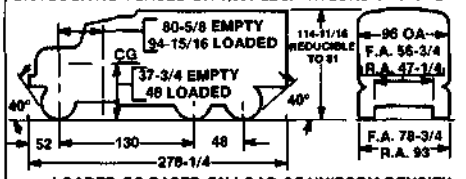

LOADED CG BASED ON LOAD OF UNIFORM DENSITY COMPLETELY FILLING BODY

WEIGHTS W/O CREW	EMPTY	CROSS CNTRY	HIGH-WAY
PAYLOAD		5,000	10,000
FRONT AXLE	6,450	6,646	6,842
INTER AXLE	3,540	5,942	8,344
REAR AXLE	3,540	5,942	8,344
TOTAL LBS	13,530	18,530	23,530
MAX TOWED LOAD LBS		6,000	10,000

SHIPPING CUBAGE 1,252 CU. FT.

IDENTIFICATION DATA

STOCK NO. 2320-926-0875

IDENTIFICATION NO.

MFD. BY

CONTRACT NO.

U.S. PROPERTY

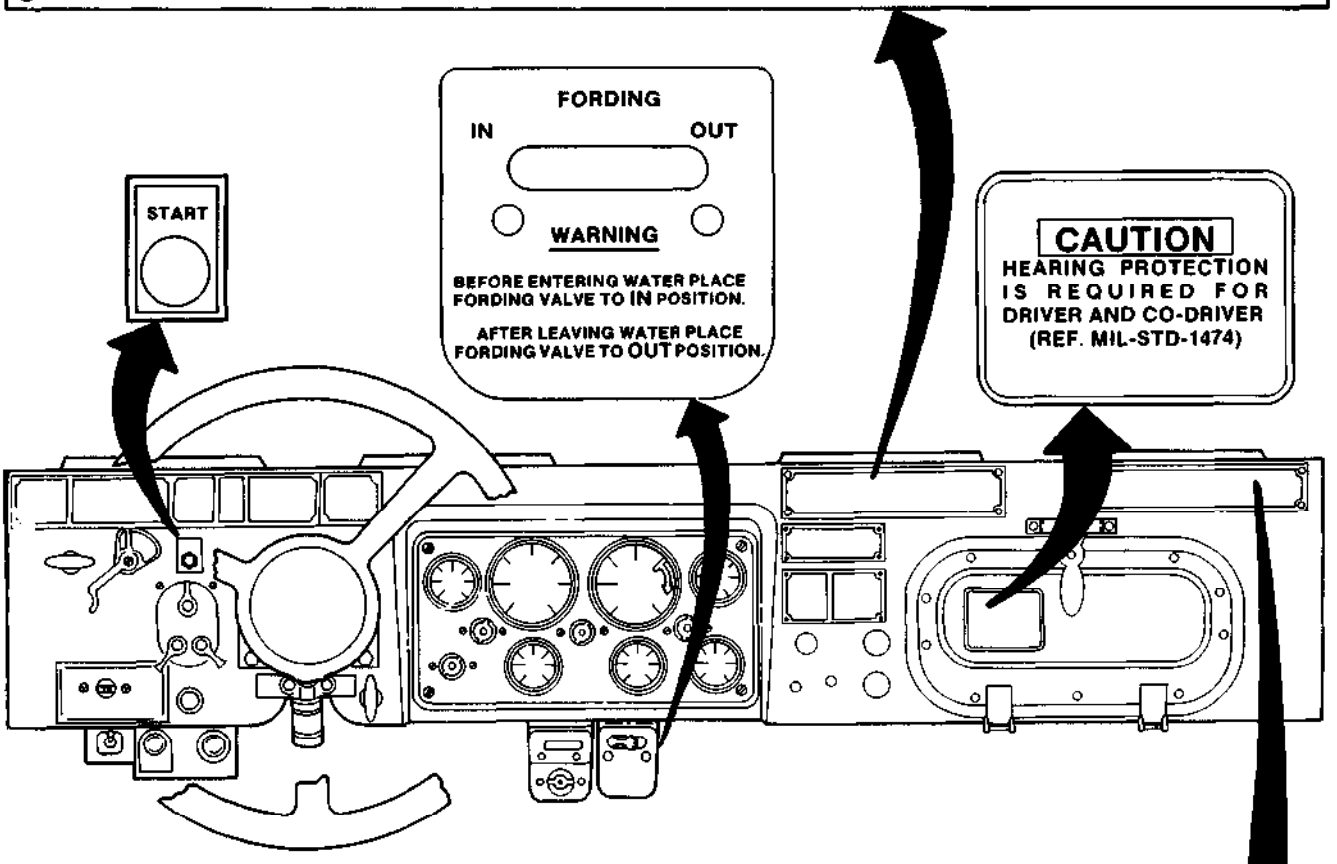

NOTE

TM 9-2320-209 publications, listed on data plate, apply only to M44 and M44A1 vehicles. TM 9-2320-361 publications supersede TM 9-2320-209 publications for M44A2 vehicles only.

SERVICING DATA

ELECTRICAL SYSTEM 24V

CRANKCASE CAPACITY	22 QTS.
COOLING SYSTEM CAPACITY	32 QTS.
FUEL TANK CAPACITY	50 GAL.

TRUCK, 2-1/2 TON 6 X 6

TIRE INFLATION PRESSURES	11:00 SINGLE — TIRES — 9:00 DUALS			
	2-1/2 TON—5-TON		PAYLOAD	2-1/2 TON—5-TON
HIGHWAY	50 LBS.	50 LBS.		50 LBS. 50 LBS.
CROSS COUNTRY	35 LBS.			35 LBS.
MUD, SAND, SNOW	15 LBS.			15 LBS.

TEMPERATURE	ENGINE OIL	GEAR OIL	GREASE
ABOVE 32°F	OE GRADE S.A.E. 30	GO GRADE 90	SEE LUBRICATION ORDER
40°F TO -10°F	OE GRADE S.A.E. 10	GO GRADE 90	NO. LO 9-2320-209-12
0°F TO -65°F	SEE LUBRICATION ORDER NO. LO 9-2320-209-12		

PUBLICATIONS APPLYING TO THIS VEHICLE

OPERATOR'S MANUAL — TM 9-2320-209-10
LUBRICATION ORDER — LO 9-2320-209-12
MAINTENANCE MANUAL — TM 9-2320-209-20
PARTS LIST — TM 9-2320-209-20P

https://truckmanualshub.com/

1-13. LOCATION AND CONTENTS OF WARNING, CAUTION, AND DATA PLATES (Contd)

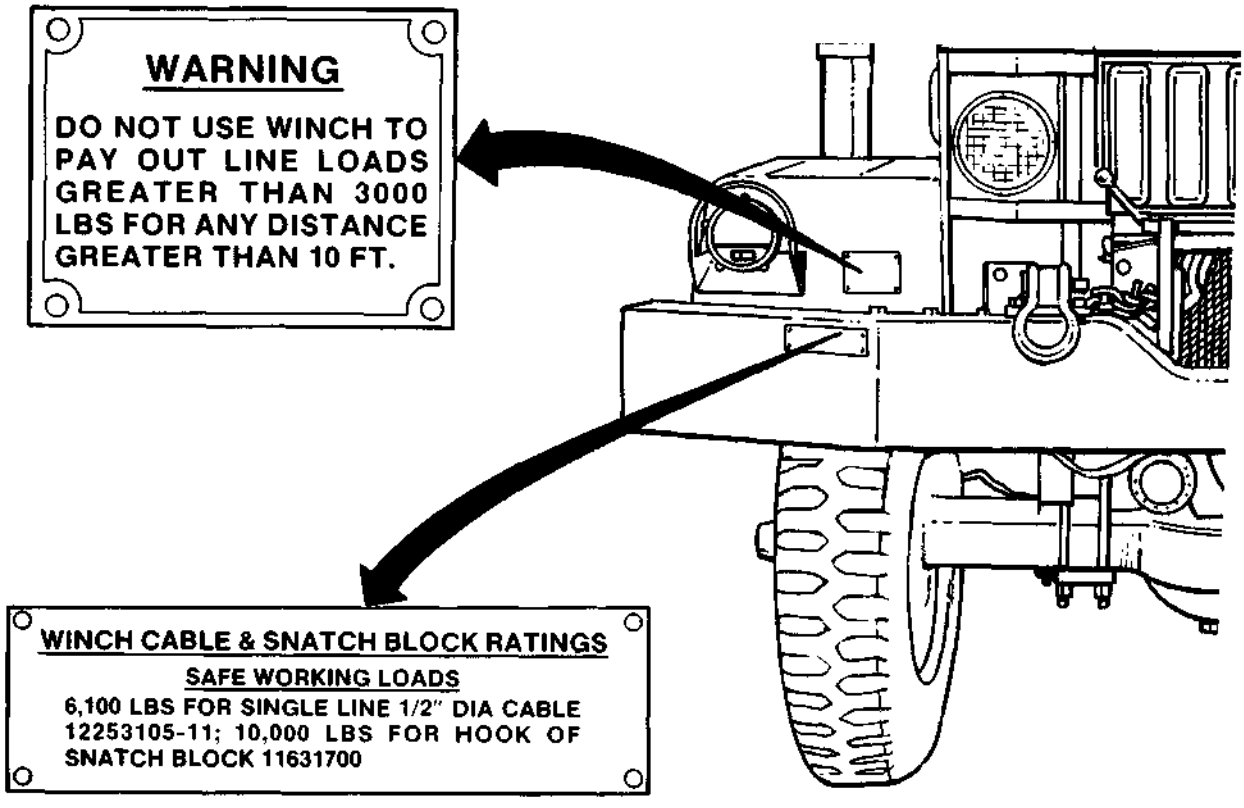

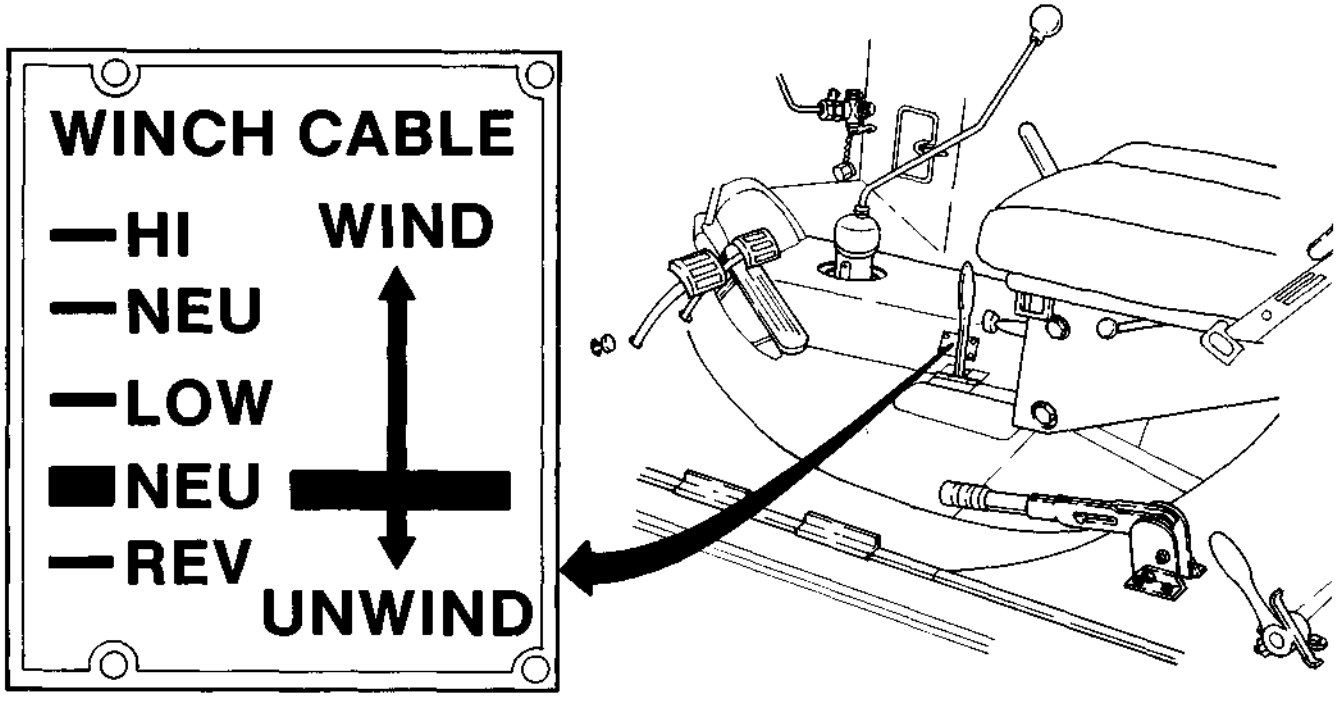

https://truckmanualshub.com/

1-13. LOCATION AND CONTENTS OF WARNING, CAUTION, AND DATA PLATES (Contd)

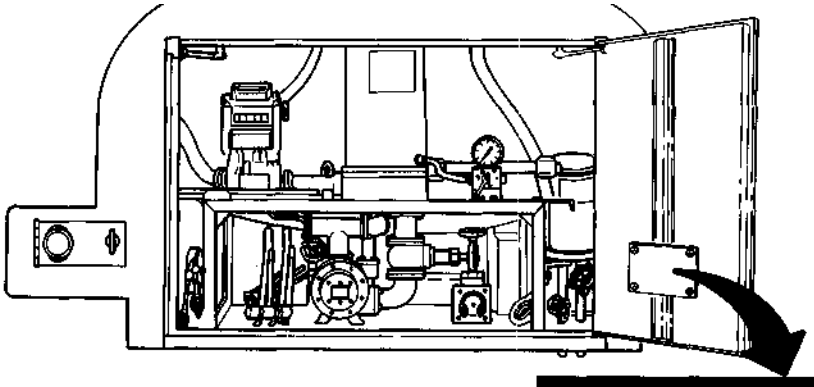

FOR PARTS REQUISITION IDENTIFICATION

MFG'S. SERIAL NO.

GOV. CONTRACT NO.

NOMINAL TANK LENGTH 152" WIDTH 96"

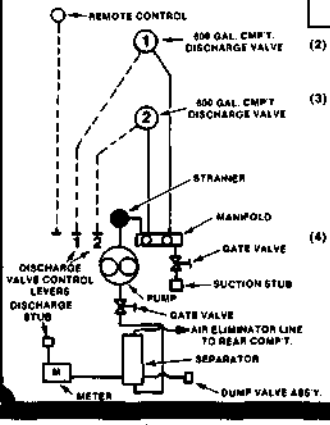

OPERATING INSTRUCTIONS

EACH OPERATION BEGINS WITH ALL VALVES CLOSED

CAUTION PRIOR TO FUEL TRANSFER

(1) STATIC DISCHARGE

(A) CLIP WIRE FROM STATIC DISCHARGE REEL ON SERVICING TRUCK TO GROUND ROD (TRUCK TO GROUND).
(B) ENSURE UNIT REQUIRING SERVICE IS GROUNDED (UNIT OR AIRCRAFT TO GROUND)
(C) GROUND SERVICING TRUCK TO UNIT OR AIRCRAFT REQUIRING SERVICE.
(D) GROUND REFUELING NOZZLE TO UNIT OR AIRCRAFT

STEPS (A) THROUGH (D) ABOVE MUST BE ACCOMPLISHED BEFORE REMOVAL OF FILLER CAPS ON UNIT OR AIRCRAFT TO BE SERVICED

(2) DO NOT CARRY MORE THAN ONE TYPE OF FUEL AT ONE TIME

SEE APPLICABLE TECHNICAL ORDER FOR CHANGING FROM ONE TYPE OF FUEL TO ANOTHER TYPE FOR SERVICING PURPOSES.

(3) TO DISCHARGE FROM TANK THRU PUMP

(SEE GROUNDING PROCEDURE ABOVE)
(A) START ENGINE. POSITION TRANSMISSION IN SECOND GEAR. PLACE TRANSFER IN NEUTRAL. ENGAGE POWER TAKEOFF. PULL OUT THROTTLE CONTROL SLOWLY TO EXTREME POSITION. SPEED CONTROL UNIT WILL CONTROL ENGINE AT 1150 RPM
(B) OPEN DESIRED TANK COMPARTMENT DISCHARGE VALVE BY MOVING CORRESPONDING CONTROL LEVER TO OPEN POSITION.
(C) TURN DELIVERY LINE GATE VALVE TO OPEN POSITION.
(D) DISCHARGE THRU HOSE BY OPENING NOZZLE

(4) TO FILL TANK OR TRANSFER LIQUID FROM ONE SOURCE TO ANOTHER THRU PUMP

(SEE GROUNDING PROCEDURE ABOVE)
(A) ATTACH SUCTION HOSE (ONE OR BOTH 15 FOOT SECTIONS) TO ADAPTER AT SUCTION LINE GATE VALVE
(B) REPEAT (3)(A) ABOVE
(C) PLACE END OF SUCTION HOSE INTO SOURCE.
(D) TURN SUCTION AND DELIVERY LINE GATE VALVES TO OPEN POSITION
(E) DISCHARGE THRU HOSE INTO TANK TO BE FILLED. BY OPENING NOZZLE.

NOTE PERFORM DIFFERENTIAL PRESSURE CHECK DURING FUELING OPERATION

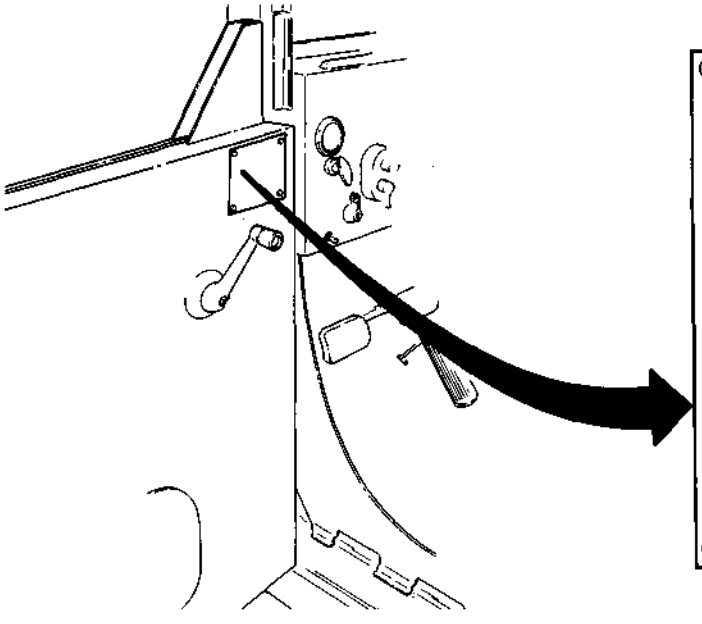

CAUTION

TO DIRECT HEAT TO WATER TANK

1. CLOSE FRONT EXHAUST STACK SHUTOFF CAP.
2. OPEN WATER TANK EXHAUST SHUTOFF (TURN HANDLE COUNTERCLOCKWISE TO OPEN).

TANK EXHAUST HEATER MUST NOT BE OPERATED WITH LESS THAN 10 INCHES OF WATER IN EITHER TANK COMPARTMENT AND VEHICLE MUST NOT BE OPERATED WITH BOTH EXHAUST SHUTOFFS CLOSED.

SERIOUS DAMAGE MAY RESULT IF THESE WARNINGS ARE NOT OBSERVED.

https://truckmanualshub.com/

1-13. LOCATION AND CONTENTS OF WARNING, CAUTION, AND DATA PLATES (Contd)

—OPERATING INSTRUCTIONS—

ORDNANCE NO. 10937246
AUTOMATIC WATER DRAIN
THIS UNIT WILL AUTOMATICALLY COLLECT AND DISCHARGE WATER WHICH HAS BEEN REMOVED FROM THE FUEL BY THE COMBINATION FUEL MONITOR FILTER WATER SEPARATOR.

AN INTERNAL FLOAT VALVE ASSEMBLY ARMY NO. 10947552 AUTOMATICALLY DISCHARGES WATER THROUGH THE 1" VALVE LOCATED ON THE BOTTOM OF THIS UNIT. THIS 1" VALVE SHOULD BE OPEN DURING FUELING OPERATIONS.

THE 1/2" VALVE (MANUAL DRAIN VALVE) SHOULD BE OPENED PERIODICALLY TO DRAIN THE SUMP ASSEMBLY.

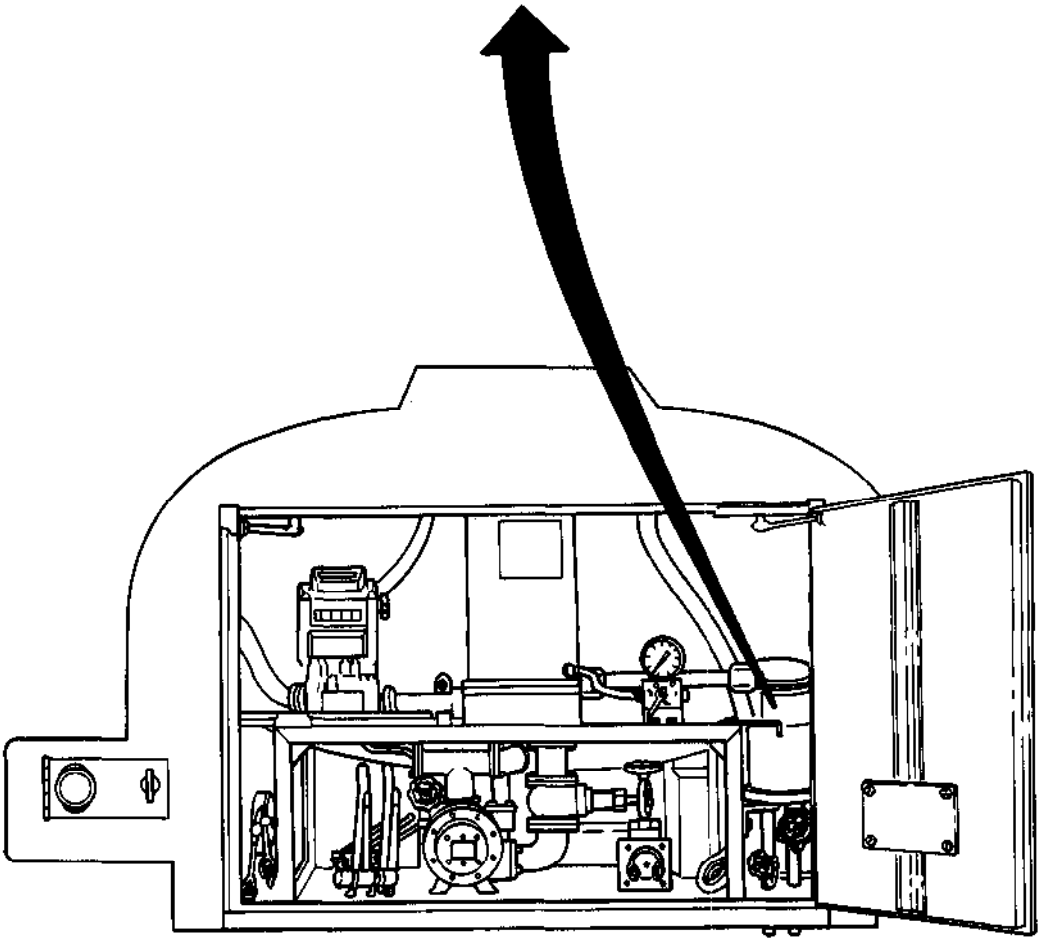

https://truckmanualshub.com/

1-13. LOCATION AND CONTENTS OF WARNING, CAUTION, AND DATA PLATES (Contd)

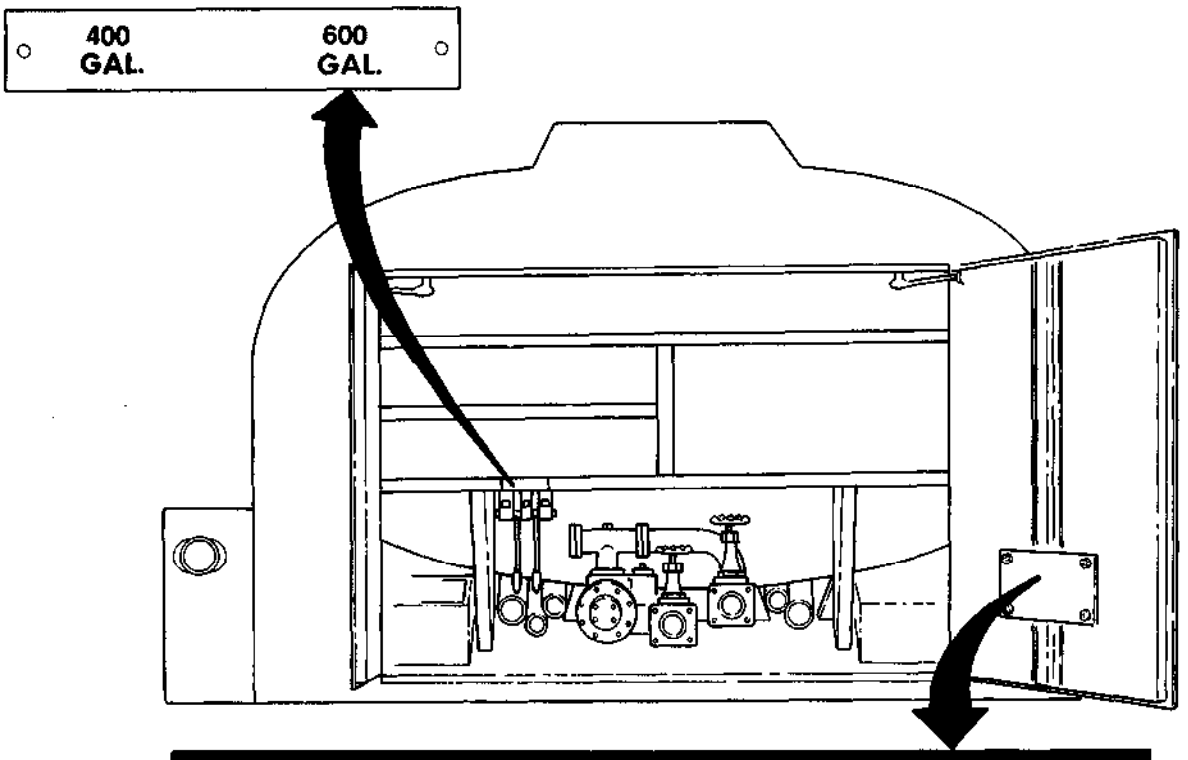

FOR PARTS REQUISITION IDENTIFICATION

MFG'S. SERIAL NO.

GOV. CONTRACT NO.

NOMINAL TANK LENGTH 148" WIDTH 96"

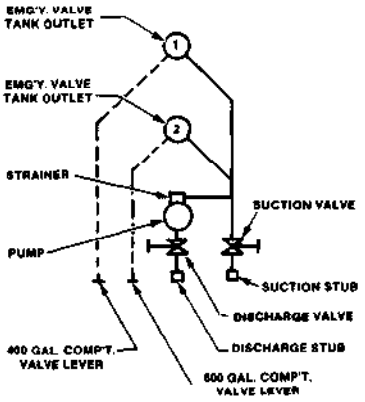

OPERATING INSTRUCTIONS

EACH OPERATION BEGINS WITH ALL VALVES CLOSED

(1) TO DISCHARGE FROM TANK BY GRAVITY

(A) ATTACH 2" X 1-1/2" BUSHING TO SUCTION STUB.
(B) ATTACH 1-1/2" DISCHARGE HOSE W/ OR W/O NOZZLE AS DESIRED
(C) OPEN TANK OUTLET VALVE LEVER AND SUCTION VALVE.
(D) DISCHARGE THROUGH HOSE BY OPENING NOZZLE IF ATTACHED.

(2) TO DISCHARGE FROM TANK THROUGH PUMP

(A) ATTACH 2" X 1-1/2" BUSHING TO DISCHARGE STUB.
(B) ATTACH 1-1/2" DISCHARGE HOSE W/ OR W/O NOZZLE AS DESIRED.
(C) OPEN TANK OUTLET LEVER AND DISCHARGE VALVE.
(D) START ENGINE, POSITION TRANSMISSION IN FOURTH GEAR, POSITION TRANSFER IN NEUTRAL, ENGAGE POWER TAKEOFF, PULL OUT THROTTLE CONTROL SLOWLY TO EXTREME POSITION. SPEED CONTROL UNIT WILL CONTROL ENGINE AT 1100 RPM.

(3) TO FILL TANK FROM OUTSIDE SOURCE OR TRANSFER LIQUID FROM ONE SOURCE TO ANOTHER

(A) ATTACH 2" SOCKET HOSE TO SUCTION STUB.
(B) PLACE END OF SUCTION HOSE W/STRAINER ATTACHED INTO SOURCE.
(C) ATTACH 2" X 1-1/2" BUSHING TO DISCHARGE STUB.
(D) ATTACH 1-1/2" DISCHARGE HOSE W/ OR W/O NOZZLE AS DESIRED.
(E) PLACE END OF DISCHARGE HOSE INTO TANK TO BE FILLED.
(F) OPEN SUCTION AND DISCHARGE VALVES.
(G) REPEAT PROCEDURE (2D) AS NOTED ABOVE.

(4) TO FILL TANK FROM HYDRANT

(A) ATTACH 2-1/2" X 1-1/2" BUSHING TO HYDRANT.
(B) ATTACH 1-1/2" DISCHARGE HOSE W/ OR W/O NOZZLE AS DESIRED.
(C) PLACE END OF DISCHARGE HOSE INTO TANK.
(D) OPEN HYDRANT VALVE WITH WRENCH PROVIDED.
(E) DISCHARGE THROUGH HOSE BY OPENING NOZZLE IF ATTACHED.

(5) TO OPERATE TWO DISCHARGE LINES

(A) ATTACH SIAMESE FITTING OR ONE END OF LENGTH OF HOSE WITH SIAMESE FITTING ON OTHER END TO DISCHARGE STUB AND COUPLE ADDITIONAL LENGTH OF HOSE TO SIAMESE FITTING.

CAUTION

(6) PARKING TANK DURING FREEZING

(A) CLOSE TANK VALVE LEVERS, OPEN SUCTION AND DISCHARGE VALVES, PROTECTOR CAPS TO BE LEFT OFF
(B) RUN PUMP 60 SECONDS TO DRAIN PIPES DRY

(7) CHECK WATER LEVEL BEFORE LIGHTING HEATER

(A) WHEN IMMERSION HEATER IS REQUIRED AS PART OF OPERATION, CHECK WATER LEVEL WITH GAGE STICK
(B) IF WATER LEVEL IS BELOW CAUTION MARK ON GAGE STICK, OR LESS THAN 8-3/16" FROM BOTTOM, DO NOT LIGHT HTR.

https://truckmanualshub.com/

1-13. LOCATION AND CONTENTS OF WARNING, CAUTION, AND DATA PLATES (Contd)

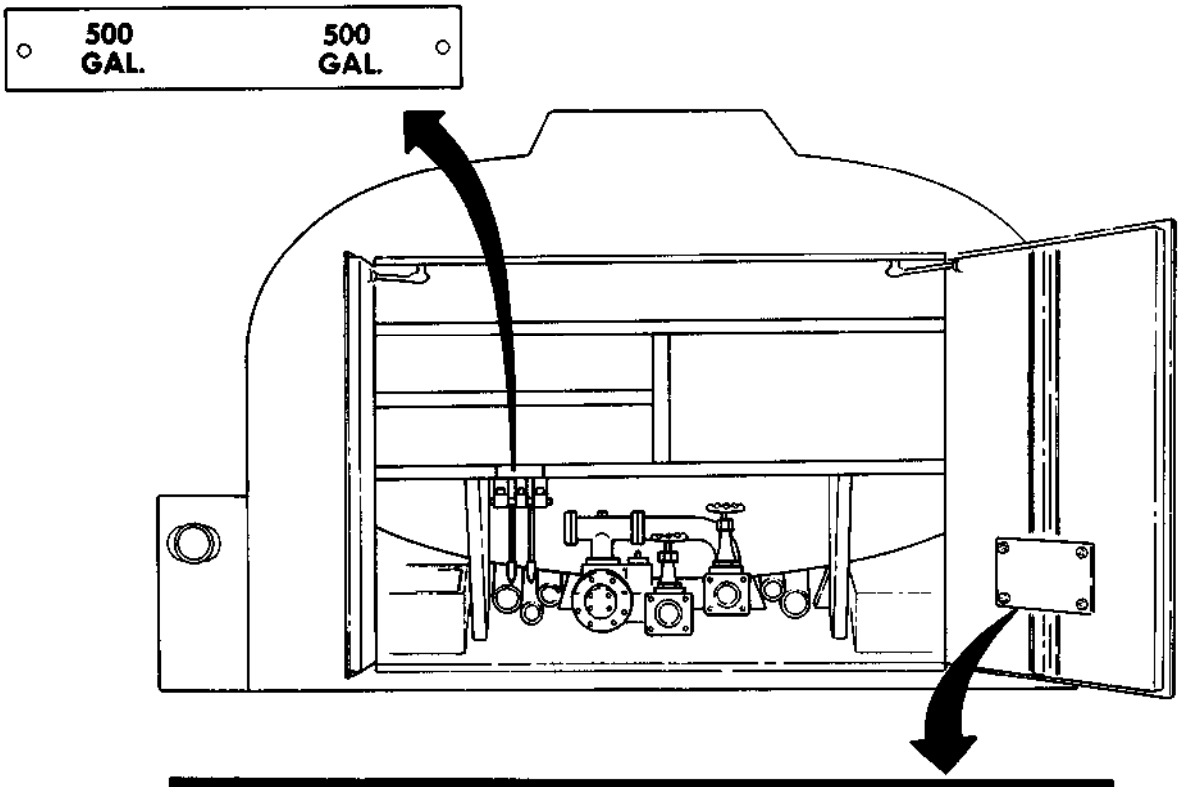

FOR PARTS REQUISITION IDENTIFICATION

MFG'S. SERIAL NO.

GOV. CONTRACT NO.

NOMINAL TANK LENGTH 148 WIDTH 96

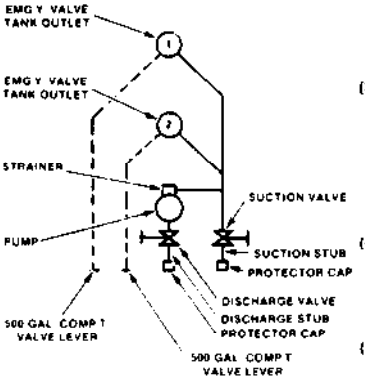

OPERATING INSTRUCTIONS

EACH OPERATION BEGINS WITH ALL VALVES CLOSED

(1) TO DISCHARGE FROM TANK BY GRAVITY

(A) ATTACH 2 X 1-1 2 BUSHING TO SUCTION STUB
(B) ATTACH 1-1 2 DISCHARGE HOSE W OR W O NOZZLE AS DESIRED.
(C) OPEN TANK OUTLET VALVE LEVER AND SUCTION VALVE.
(D) DISCHARGE THROUGH HOSE BY OPENING NOZZLE IF ATTACHED

(2) TO DISCHARGE FROM TANK THROUGH PUMP

(A) ATTACH 2 X 1-1 2 BUSHING TO DISCHARGE STUB.
(B) ATTACH 1-1 2 DISCHARGE HOSE W OR W O NOZZLE AS DESIRED
(C) OPEN TANK OUTLET LEVER AND DISCHARGE VALVE
(D) START ENGINE. POSITION TRANSMISSION IN FOURTH GEAR. POSITION TRANSFER IN NEUTRAL. ENGAGE POWER TAKEOFF. PULL OUT THROTTLE CONTROL SLOWLY TO EXTREME POSITION. SPEED CONTROL UNIT WILL CONTROL ENGINE AT 1100 RPM

(3) TO FILL TANK FROM OUTSIDE SOURCE OR TRANSFER LIQUID FROM ONE SOURCE TO ANOTHER

(A) ATTACH 2 SOCKET HOSE TO SUCTION STUB.
(B) PLACE END OF SUCTION HOSE W STRAINER ATTACHED INTO SOURCE
(C) ATTACH 2 X 1-1 2 BUSHING TO DISCHARGE STUB
(D) ATTACH 1-1 2 DISCHARGE HOSE W OR W O NOZZLE AS DESIRED.
(E) PLACE END OF DISCHARGE HOSE INTO TANK TO BE FILLED
(F) OPEN SUCTION AND DISCHARGE VALVES
(G) REPEAT PROCEDURE (2D)

(4) TO FILL TANK FROM HYDRANT

(A) ATTACH 2 1 2 X 1-1 2 BUSHING TO HYDRANT
(B) ATTACH 1-1 2 DISCHARGE HOSE W OR W O NOZZLE AS DESIRED
(C) PLACE END OF DISCHARGE HOSE INTO TANK
(D) OPEN HYDRANT VALVE WITH WRENCH PROVIDED
(E) DISCHARGE THROUGH HOSE BY OPENING NOZZLE IF ATTACHED

(5) TO OPERATE TWO DISCHARGE LINES

(A) ATTACH SIAMESE FITTING OR ONE END OF LENGTH OF HOSE WITH SIAMESE FITTING ON OTHER END TO DISCHARGE STUB AND COUPLE ADDITIONAL LENGTH OF HOSE TO SIAMESE FITTING

CAUTION

(6) PARKING TANK DURING FREEZING

(A) CLOSE TANK VALVE LEVERS OPEN SUCTION AND DISCHARGE VALVES PROTECTOR CAPS TO BE LEFT OFF
(B) RUN PUMP 60 SECONDS TO DRAIN PIPES DRY

(7) CHECK WATER LEVEL BEFORE LIGHTING HEATER

(A) WHEN IMMERSION HEATER IS REQUIRED AS PART OF OPERATION CHECK WATER LEVEL WITH GAGE STICK
(B) IF WATER LEVEL IS BELOW CAUTION MARK ON GAGE STICK OR LESS THAN 9-3 16 FROM BOTTOM DO NOT LIGHT HTR

https://truckmanualshub.com/

1-13. LOCATION AND CONTENTS OF WARNING, CAUTION, AND DATA PLATES (Contd)

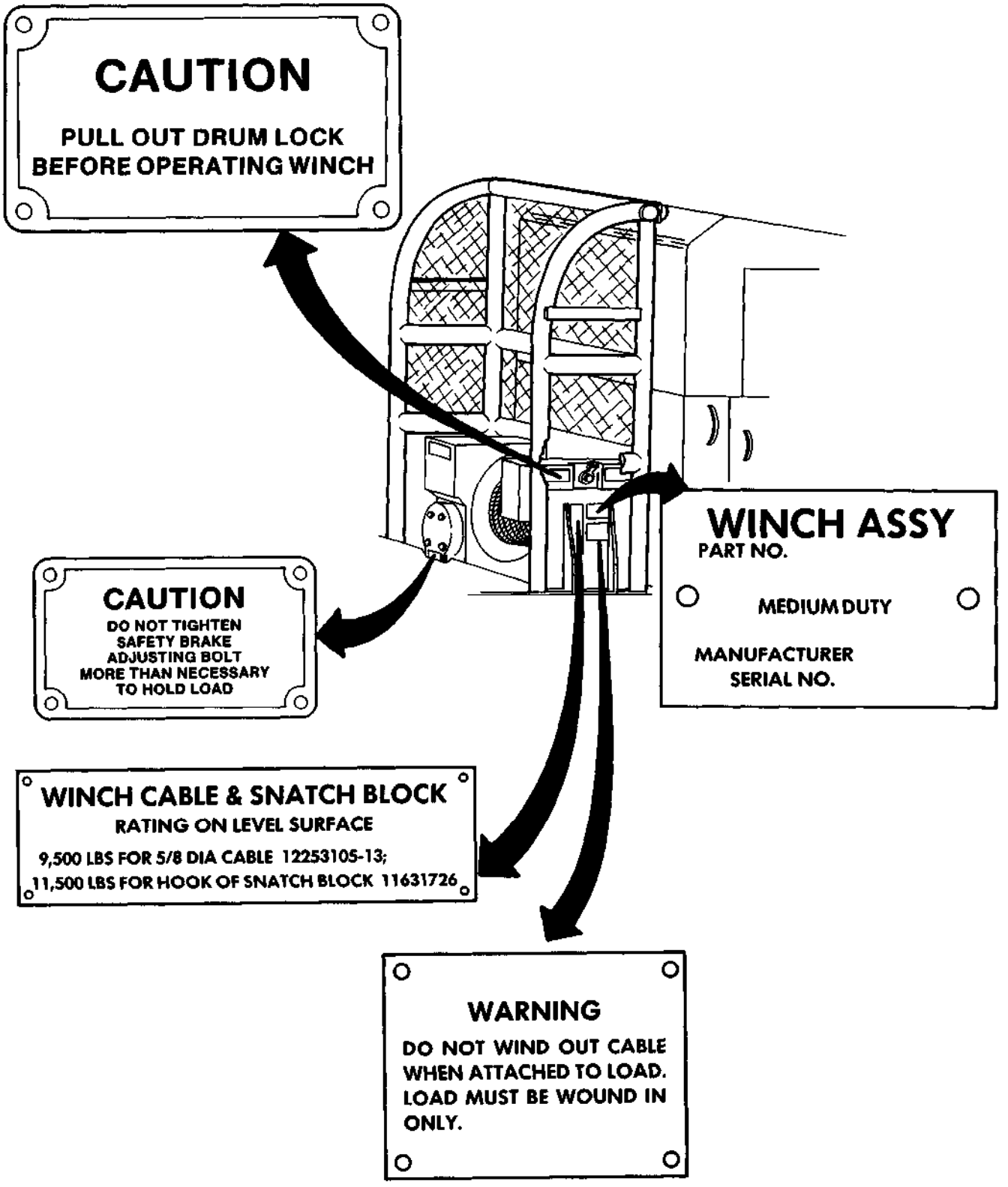

https://truckmanualshub.com/

1-13. LOCATION AND CONTENTS OF WARNING, CAUTION, AND DATA PLATES (Contd)

WARNING

1. NO UNAUTHORIZED PERSONNEL ALLOWED IN REAR OF VEHICLE DURING OPERATION OF WINCH.
2. AVOID CABLE WHEN OPERATING WINCH UNDER HEAVY LOAD.

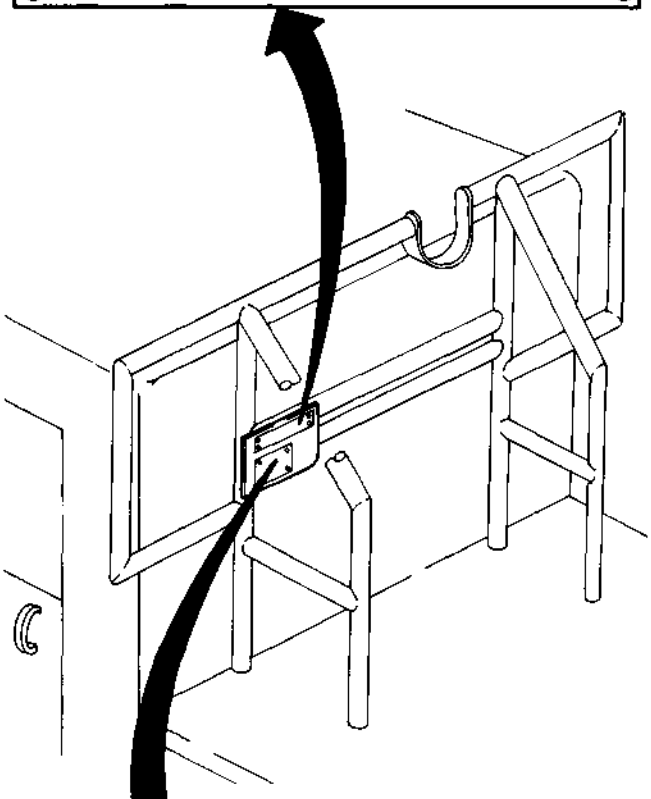

REAR WINCH SHEAR PIN REPLACEMENT

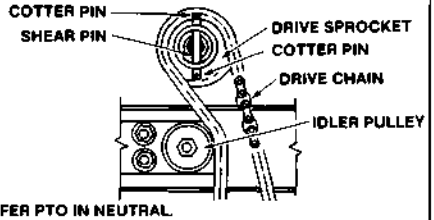

1. PLACE TRANSFER PTO IN NEUTRAL.
2. ROTATE DRIVE SPROCKET UNTIL SHEAR PIN HOLES ARE IN LINE.
3. REMOVE FAILED SHEAR PIN.
4. INSTALL NEW ALUMINUM SHEAR PIN (11609886) AND INSERT COTTER PINS IN EACH END OF SHEAR PIN.

CAUTION

BEFORE REPLACING SHEAR PIN RELIEVE CABLE TENSION IF POSSIBLE. IF LOAD IS SUSPENDED OBSERVE EXTREME CAUTION WHEN REPLACING SHEAR PIN.

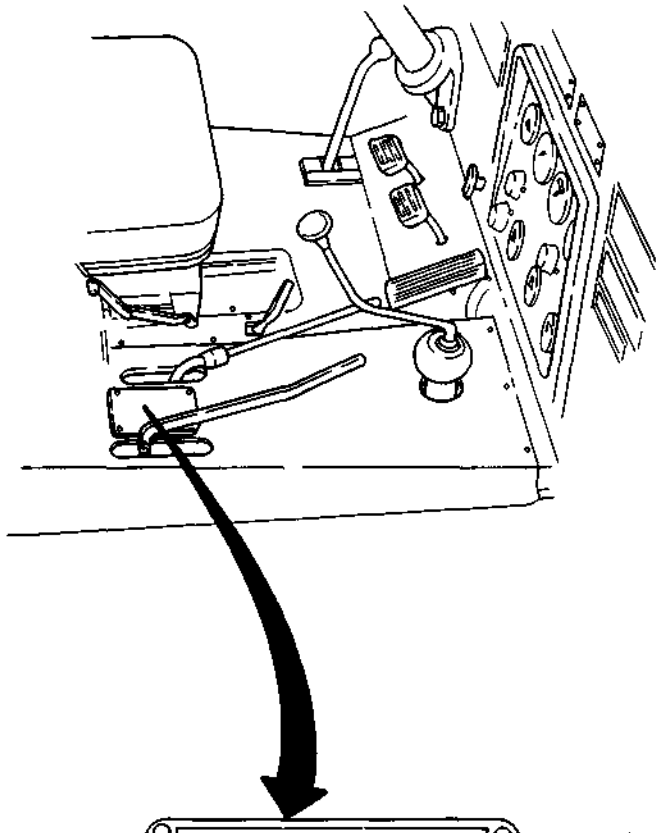

POWER DIVIDER

REAR WINCH FWD

REAR WINCH REV.

NEUTRAL

EARTH AUGER

https://truckmanualshub.com/

1-13. LOCATION AND CONTENTS OF WARNING, CAUTION, AND DATA PLATES (Contd)

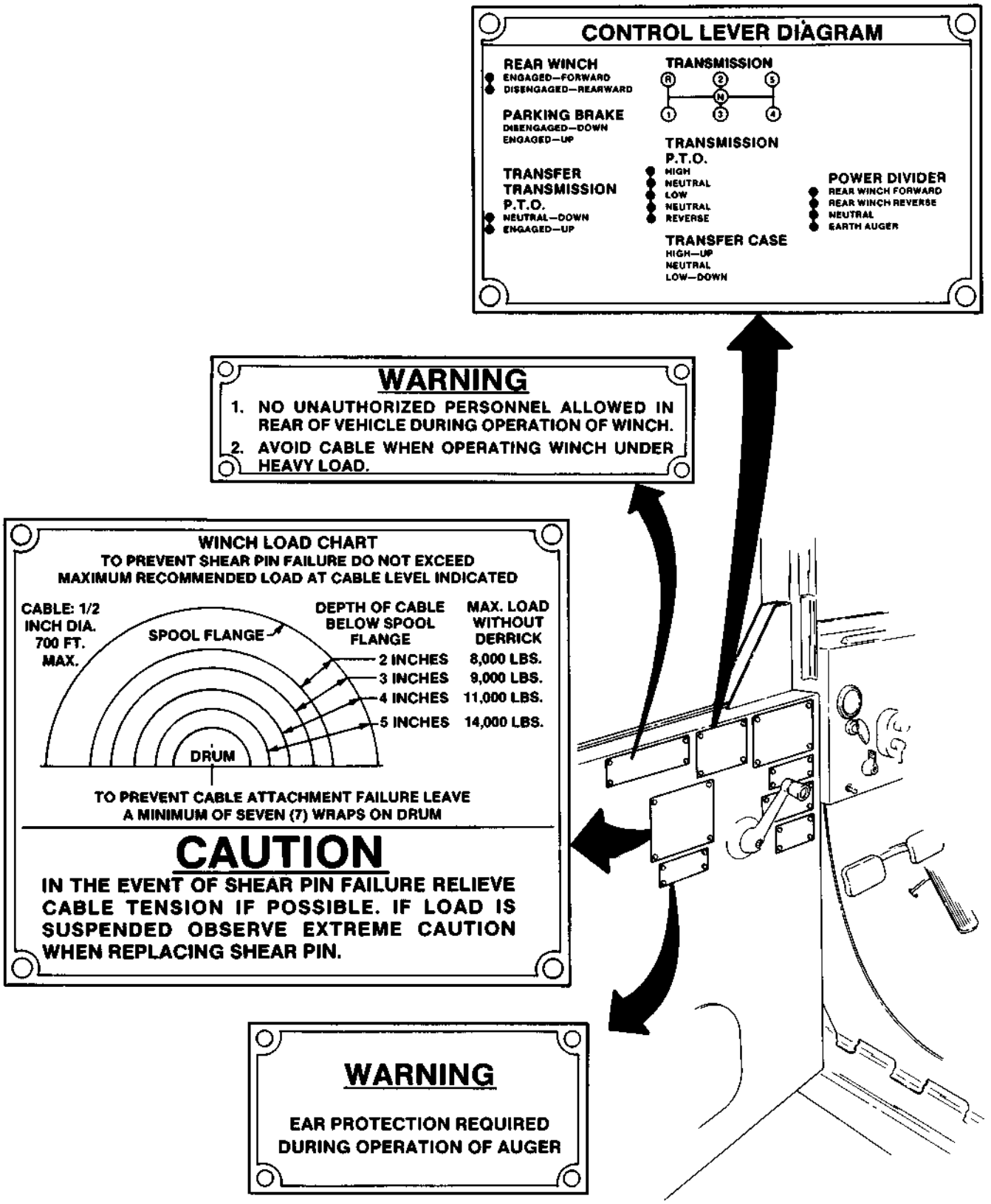

https://truckmanualshub.com/

1-13. LOCATION AND CONTENTS OF WARNING, CAUTION, AND DATA PLATES (Contd)

OPERATING PROCEDURE

EARTH AUGER

STEP 1. ENGAGE PARKING BRAKE.
STEP 2. DISENGAGE VEHICLE CLUTCH.
STEP 3. TRANSFER CASE — NEUTRAL.
STEP 4. TRANSMISSION
AVERAGE SOIL — 3RD GEAR
HARD OR FROZEN SOIL — 2ND GEAR
DISINTEGRATED SHALE — 1ST GEAR
STEP 5. ENGAGE TRANSFER P.T.O.
STEP 6. POWER DIVIDER — EARTH AUGER
STEP 7. ENGAGE VEHICLE CLUTCH SLOWLY.

MAXIMUM ENGINE SPEED

AVERAGE SOIL —2,600 RPM
HARD OR FROZEN SOIL — 2,400 RPM
DISINTEGRATED SHALE — 1,800 RPM

COLLAPSIBLE REEL CAPACITY

3,000 LBS.
DO NOT EXCEED.

REAR WINCH

STEP 1. ENGAGE PARKING BRAKE.
STEP 2. DISENGAGE VEHICLE CLUTCH.
STEP 3. TRANSFER CASE — NEUTRAL.
STEP 4. ENGAGE TRANSFER P.T.O.
STEP 5. TRANSMISSION
LOADS EXCEEDING 1,000 LS. OR AWKWARD LOADS — 1ST GEAR
LIGHT LOADS — 1ST, 2ND, OR 3RD GEAR
STEP 6. ENGAGE REAR WINCH.
STEP 7. POWER DIVIDER
TO PLAY OUT CABLE — REVERSE
TO TAKE UP CABLE — FORWARD
STEP 8. ENGAGE VEHICLE CLUTCH.

REAR WINCH CAPACITY

SEE WINCH LOAD CHART AND DERRICK LOAD CHART FOR MAXIMUM LINE PULL. REFER TO THE WINCH LOAD CHART WHEN THE DERRICK IS NOT USED DURING WINCH OPERATION.

COLLAPSIBLE REEL

SAME AS REAR WINCH OPERATION EXCEPT STEP 7, REAR WINCH IS DISENGAGED.

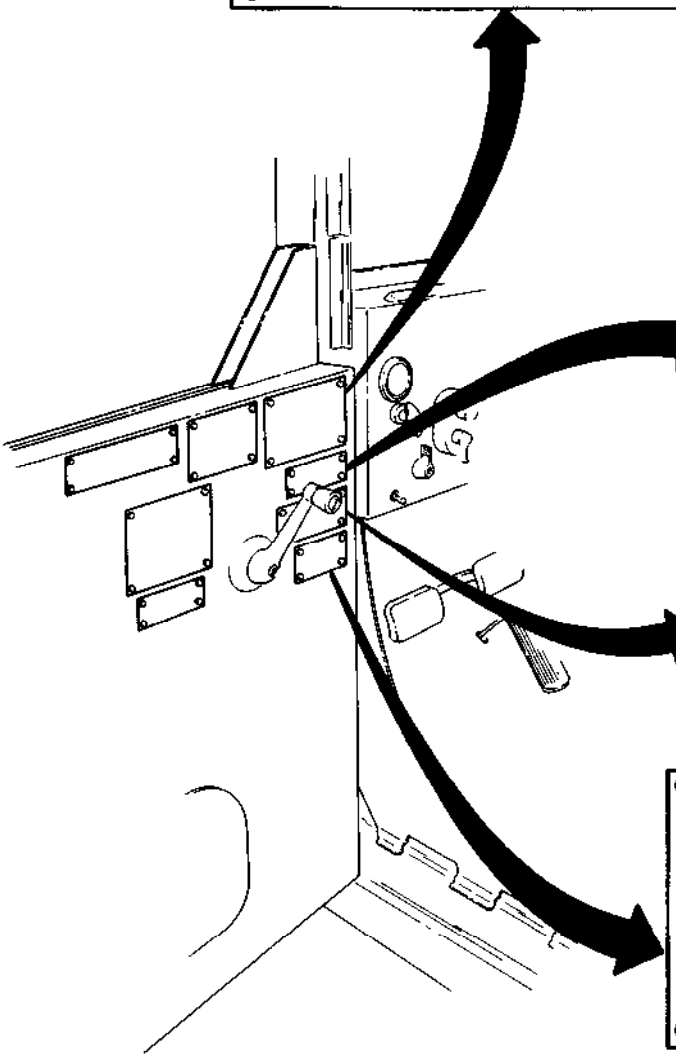

CAUTION

DO NOT OPERATE TRANSFER P.T.O. WITH TRANSMISSION IN 4TH OR 5TH GEAR.

WARNING

TO STOP WINCH WITH LOAD ON CABLE DISENGAGE VEHICLE CLUTCH AND MOVE THE POWER DIVIDER CONTROL LEVER TO NEUTRAL POSITION.

DO NOT DISENGAGE THE REAR WINCH.

CAUTION

1. LOWER OUTRIGGERS PRIOR TO BORING OR WINCH OPERATIONS.
2. RAISE OUTRIGGERS PRIOR TO MOVING VEHICLE.
3. REMOVE AND STOW OUTRIGGER FEET BEFORE MOVING VEHICLE.
4. LOCK OUTRIGGERS DURING TRAVEL.

https://truckmanualshub.com/

1-13. LOCATION AND CONTENTS OF WARNING, CAUTION, AND DATA PLATES (Contd)

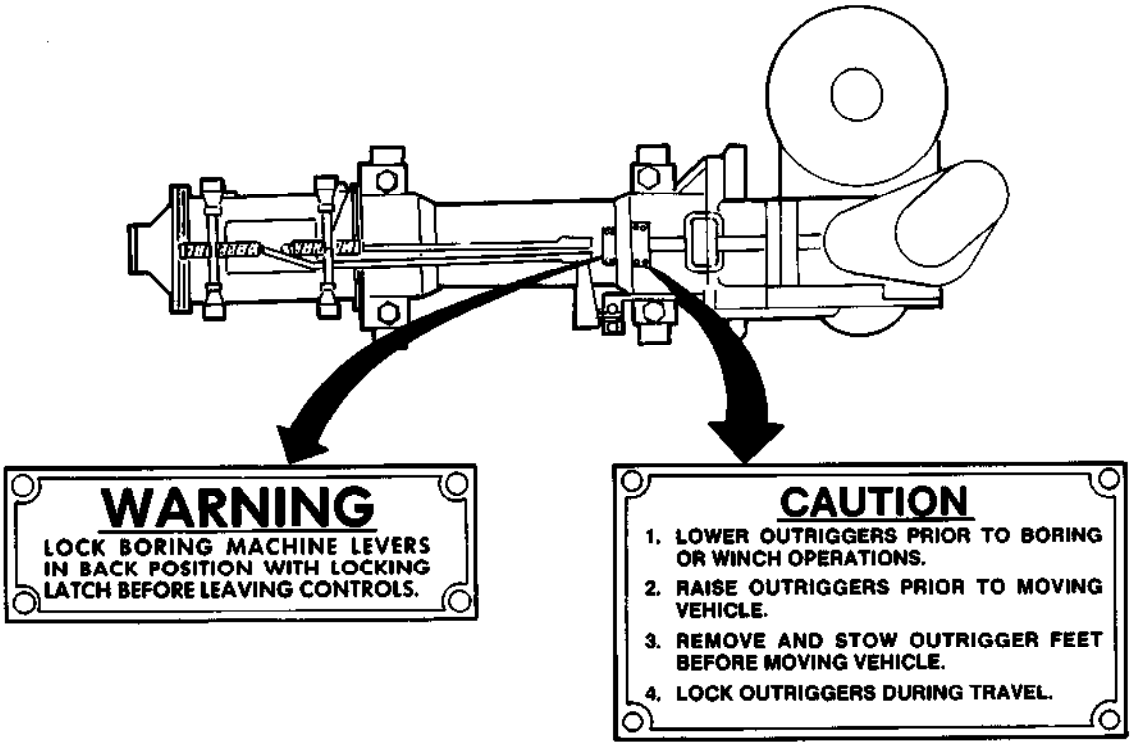

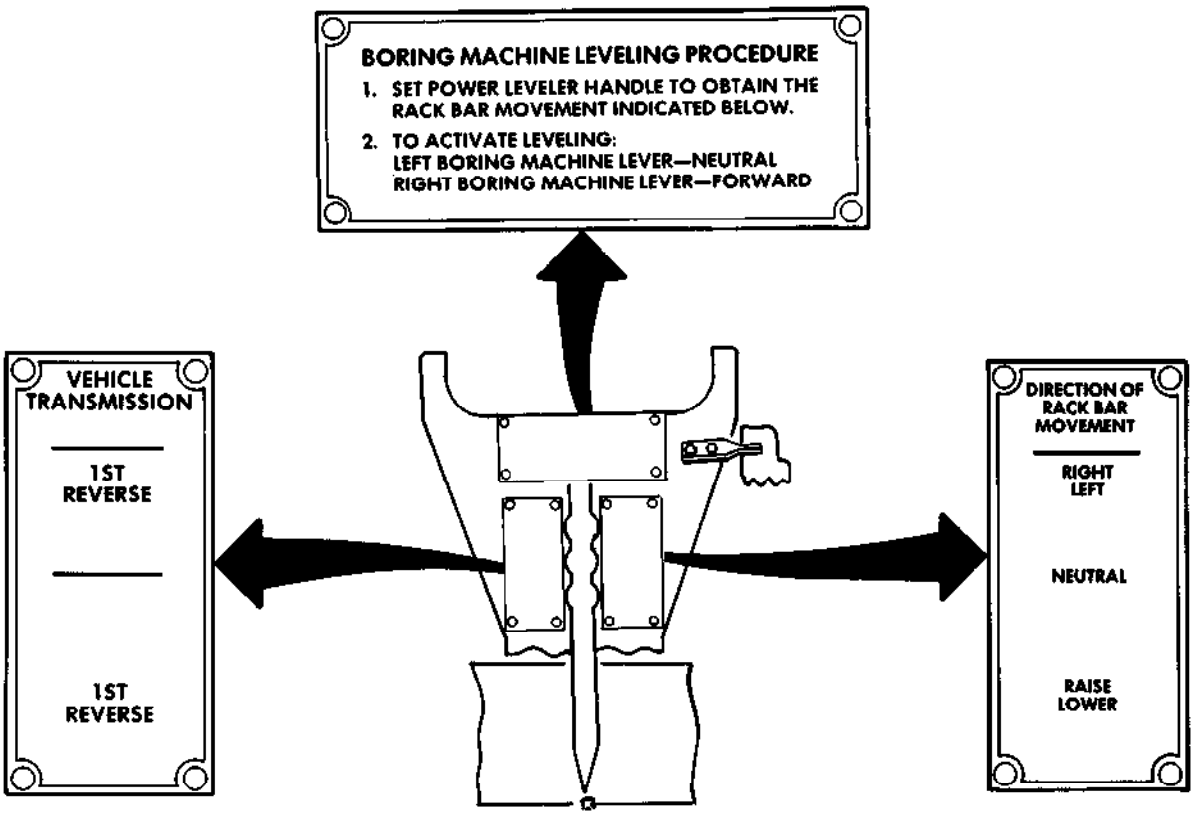

https://truckmanualshub.com/

1-13. LOCATION AND CONTENTS OF WARNING, CAUTION, AND DATA PLATES (Contd)

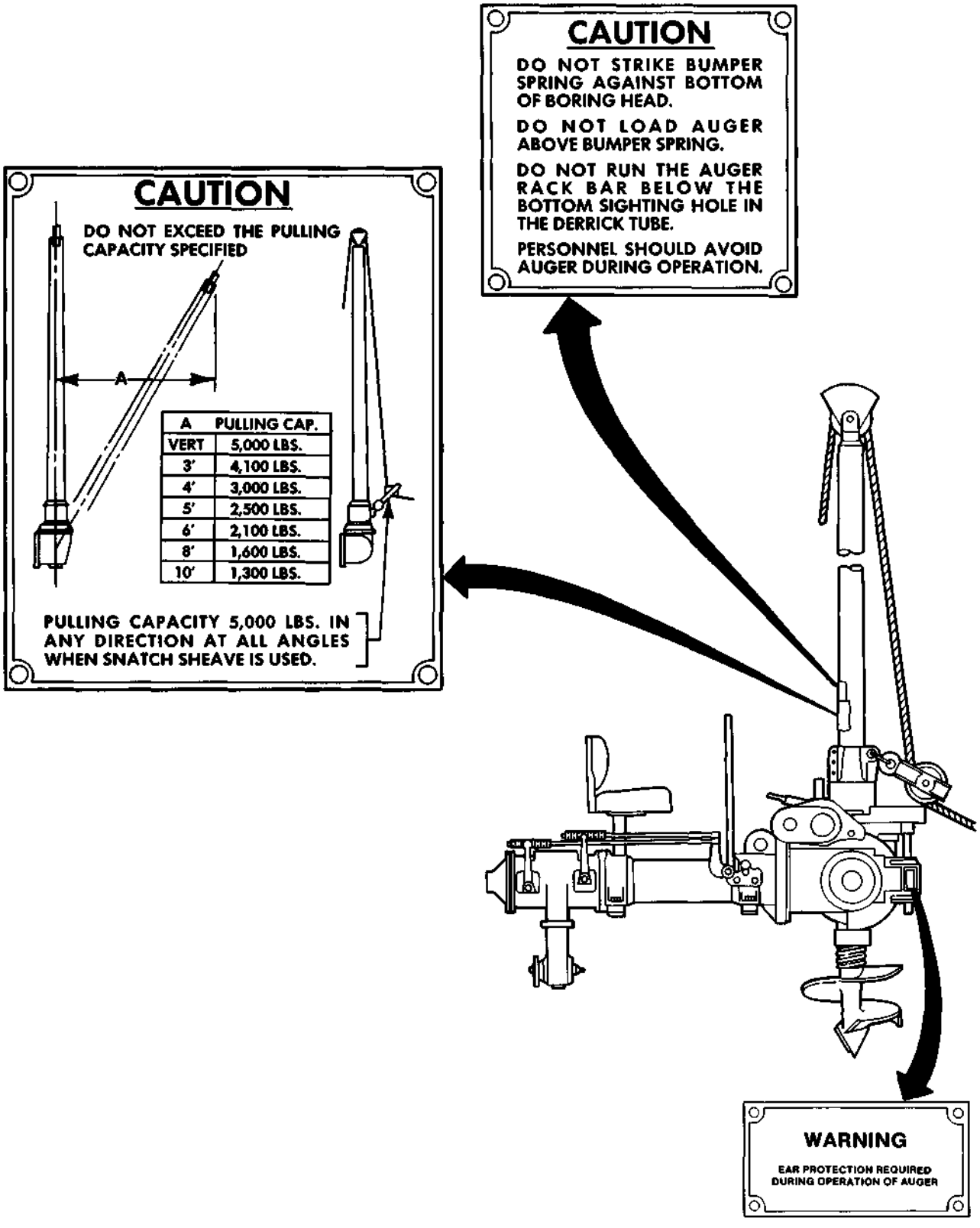

https://truckmanualshub.com/

1-13. LOCATION AND CONTENTS OF WARNING, CAUTION, AND DATA PLATES (Contd)

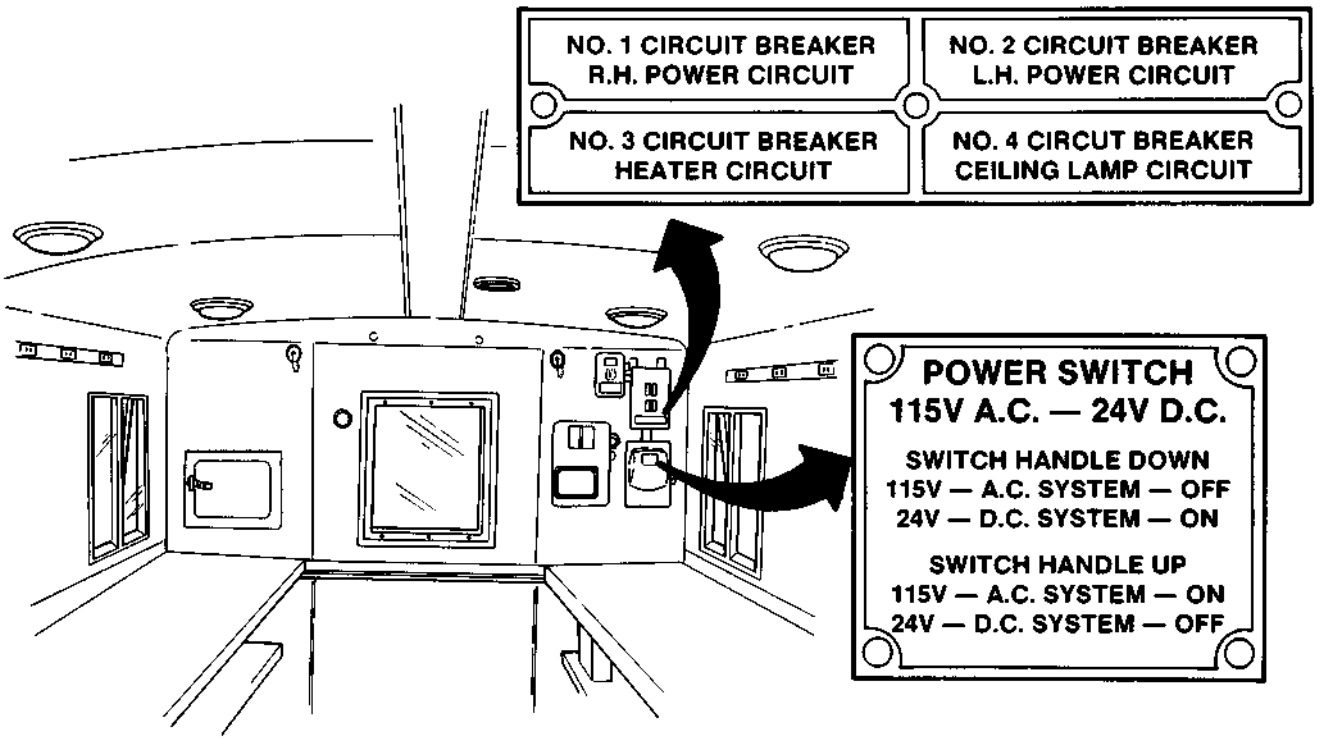

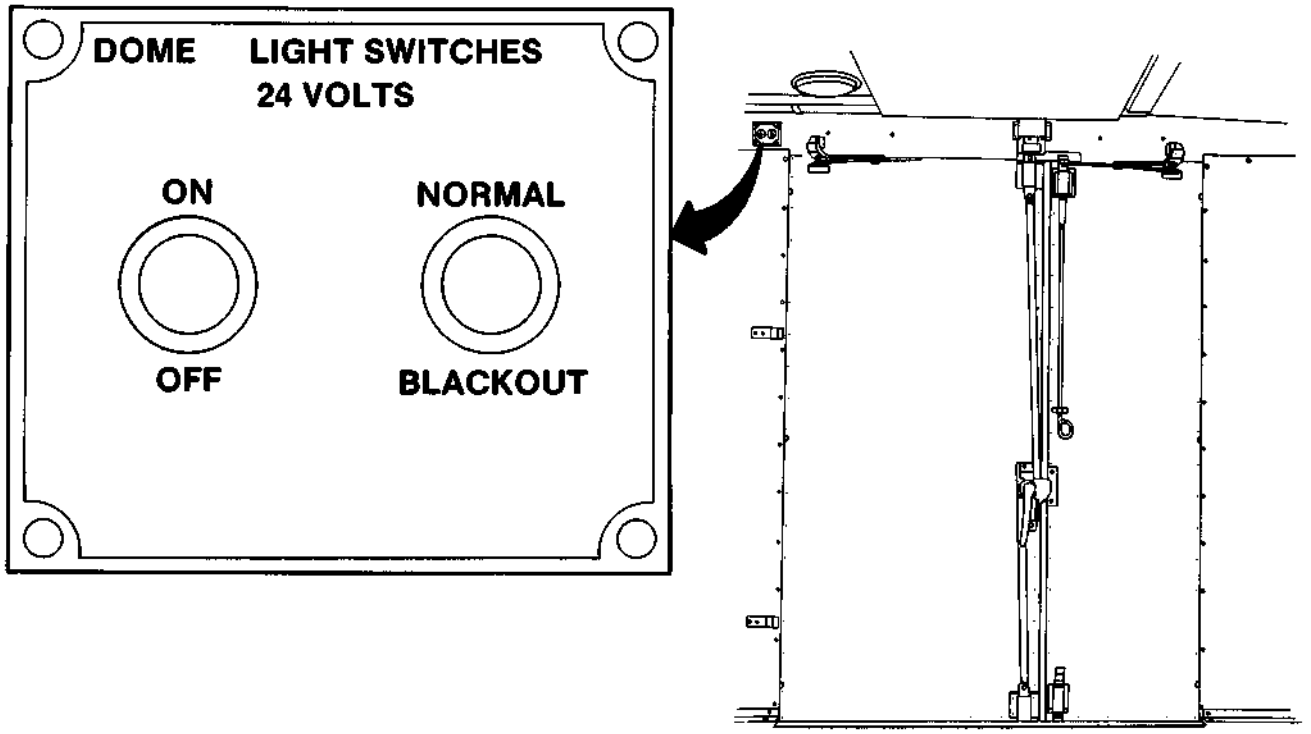

https://truckmanualshub.com/

1-13. LOCATION AND CONTENTS OF WARNING, CAUTION, AND DATA PLATES (Contd)

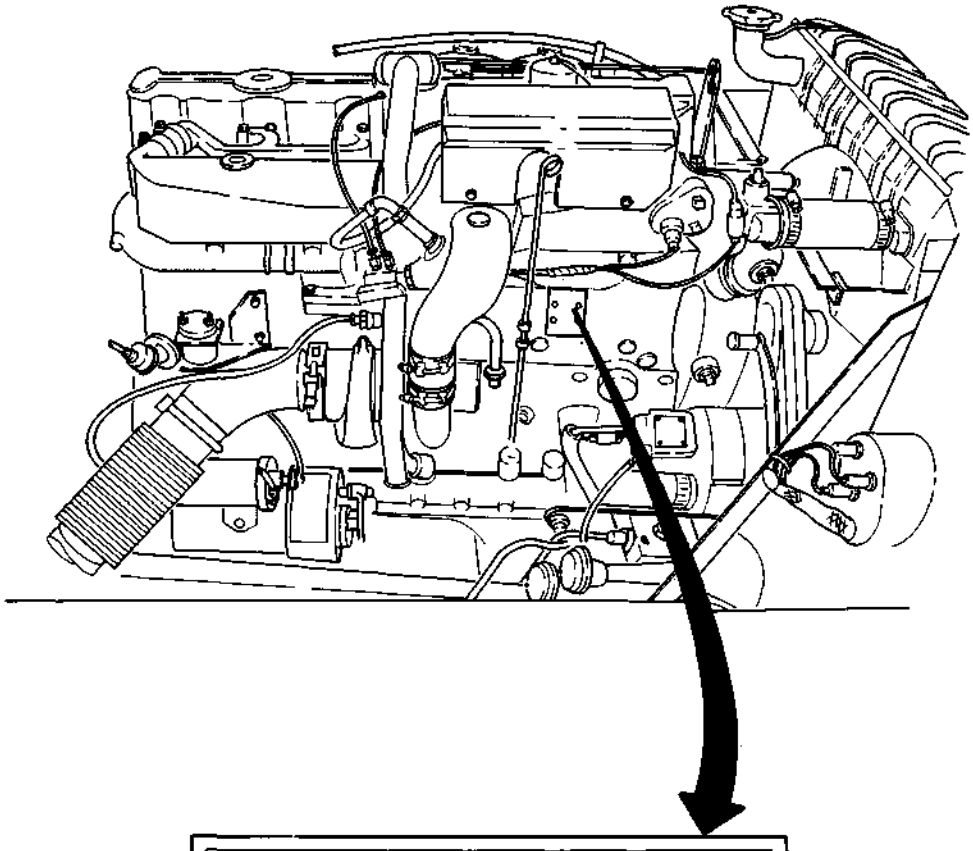

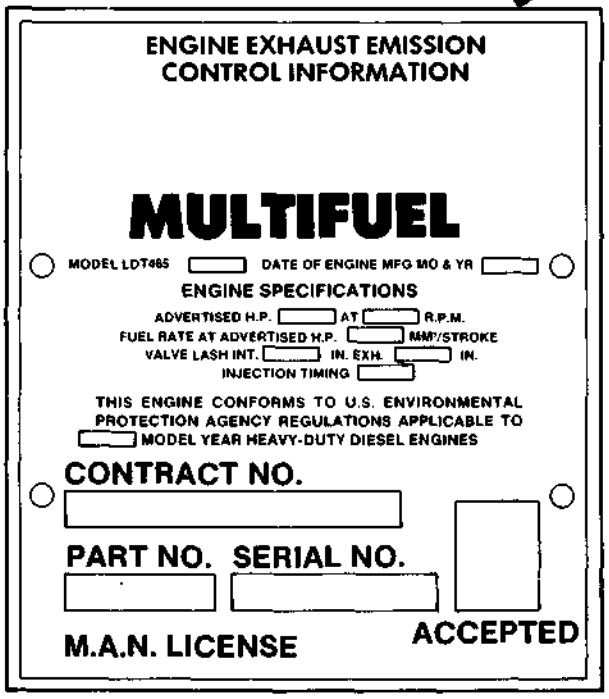

https://truckmanualshub.com/

1-14. DIFFERENCES BETWEEN MODELS

Table 1-1. Differences Between Models.

EQUIPMENT/FUNCTION	M35A2	M35A2C	M36A2	M49A2C	M50A2	M50A3	M109A3	M185A3	M275A2	M342A2	M756A2	M764
Cargo Transport	X	X	X							X		
Personnel Transport	X	X								X	X	
Fuel Servicing				X								
Water Servicing					X	X						
Shop Van							X					
Instrument Repair Shop								X				
Fifth Wheel Operations									X			
Dump Operations										X		
Pipeline Construction											X	
Earth Boring												X
Cab Protector										X	X	X
Floodlights											X	
Front Winch (10,000 lb capacity)	X	X	X	X	X	X	X	X	X	X	X	X
Rear Winch (20,000 lb capacity)											X	
Rear Winch (14,000 lb capacity)												X
Cargo:												
Permanent Sides	X		X				X	X		X		X
Removable Sides		X	X								X	
Tires/Tubes (9:00 x 20) 8 ply	X	X	X	X	X	X	X	X	X	X	X	X

https://truckmanualshub.com/

1-15. EQUIPMENT DATA

Equipment performance data for the M44A2 series vehicles is listed in table 1-2. This information includes only that data applicable to unit maintenance. Information not covered can be found in TM 9-2320-361-10 or LO 9-2320-209-12-1.

Table 1-2. Equipment Data.

NOTE

Standard and metric measurements will be used in this table. A list of their abbreviations is provided below.

TABULATED DATA ABBREVIATIONS

MEASUREMENT	ABBREVIATION	MEASUREMENT	ABBREVIATION
Ampere	A	KiloWatt	kW
Ampere Per Hour	A/h	Liters	L
Celsius	C	Maximum	max.
Centimeter	cm	Miles Per Hour	mph
Cubic Feet Per Minute	cfm	Miles Per Gallon	mpg
Cubic Meters Per Minute	cm/m	Millimeter	mm
Fahrenheit	F	Minimum	min
Gallons	gal.	Newton Meter	N·m
Horsepower	hp	Pint	pt
Inch	in.	Pound	lb
Kilograms	kg	Pound-Feet	lb-ft
Kilometers Per Hour	km/h	Pound Per Square Inch	psi
Kilometers Per Liter	km/L	Quart	qt
KiloPascal	kPa	Revolutions Per Minute	rpm

	STANDARD	METRIC
1. MAXIMUM PAYLOAD PER VEHICLE		
M35A2, M35A2C, M36A2, M109A3, M185A3, M342A2, M756A2	5,000 lb	2,270 kg
M49A2C	1,200 gal.	4,542 L
M50A2	1,000 gal.	3,785 L
M50A3	1,000 gal.	3,785 L
M275A2	7,000 lb	3,178 kg
M764	500 lb	227 kg
2. CAPACITIES		
Cooling system	32 qt	30.3 L
Engine:		
Crankcase Only	20 qt	18.9 L
Crankcase and Filter	22qt	20.8 L
Differential (front or rear)	6 qt each	5.7 L
Fuel Tank (all vehicles)	50 gal.	189.3 L

https://truckmanualshub.com/

Table 1-2. Equipment Data (Contd).

	STANDARD	METRIC
Transmission:		
(without PTO)	4.25 qt	4.0 L
(with PTO)	525 qt	4.97 L
Transfer Case (with or without PTO)	7 qt	6.6 L
Windshield Washer Reservoir	3 qt	2.8 L
Dump Body Hydraulic Oil Reservoir	18 qt	17 L
Front Winch:		
Housing, Clutch End	1 pt	0.47 L
Worm Gear Housing	1.50 pt	0.71 L
Rear Winch (M756A2 only):		
Housing, Clutch End	1.75 pt	0.83 L
Worm Gear Housing	2.6 pt	1.2 L
Rear Winch (M764 only):		
Worm Gear Housing	7 pt	3.3 L
Speed Reducer	1.75 pt	.83 L
Power Divider	3.5 qt	3.3 L
Earth Boring Machine and Outriggers (M764):		
Boring Case	10 qt	9.5 L
Intermediate Gearcase	10 pt	4.7 L
Clutch and Brake	5 qt	4.7 L
Hydraulic Outriggers	8 qt	7.6 L

3. ENGINE

Manufacturer	Hercules Engines, Inc.	
Model	LD-465-1, LD-465-1C	
Type	Liquid-Cooled, Multifuel, Six Cylinders, In-Line	
Model	LDT-465-1C, LDT-465-1D	
Type	Turbocharged, Liquid-Cooled, Multifuel, Six Cylinders, In-Line	
Weight	1,650 lb	749 kg
Idle Speed:		
Early Models (LD-465-1, LD-465-1C) (engine idle speed stamped on fuel pump ID plate)	650-700 rpm	
Late Models (LDT-465-1C, LDT-465-1D) (engine idle speed stamped on fuel pump ID plate)	800-850 rpm	
Operating Speed:		
Full Load (governed)	1200-2650 rpm	
No Load (governed)	1200-2900 rpm	
Brake Horsepower:		
Gross (fan belt removed; air compressor turning but unloaded	130 hp (min) @ 2600 rpm	96.98 kW @ 2600 rpm
Net (fan belt installed; alternator and air compressor turning but unloaded)	118 hp @ 2600 rpm	88.0 kW @ 2600 rpm
Torque:		
Gross	305 lb-ft @ 1500 rpm	414 N·m @ 1500 rpm
Net	297 lb-ft @ 1500 rpm	403 N·m @ 1500 rpm

https://truckmanualshub.com/

Table 1-2. Equipment Data (Contd).

	STANDARD	METRIC
Oil Pressure:		
Idle (with OE/HDO @ 200°F)	10 psi min	68.95 kPa
Full Load @ 2600 rpm	40 psi min	275.8 kPa
	75 psi max	517.13 kPa
Air Flow @ 2600 rpm	405 cfm	11.34 cm/m
Compression Ratio	22:1	
Firing Order	1, 5, 3, 6, 2, 4	
Fuel Consumption (approx.)	5-6 mpg	2.13-2.55 km/L
Manifold Heater (for cold weather starting):		
Type	Flame Type, Spark Ignition	
Spark Ignition Gap	0.088-0.093 in.	2.23-2.36 mm
Fuel Pump	Electric	
Fuel	(Multifuel) Same as Engine	
4. FUEL SYSTEM		
Fuel Pump Locations:		
Electrical	In Tank	
Mechanical	On Fuel Injection	
Mechanical	Fuel Injection Pump	
Fuel Filter (primary, secondary, final):		
Manufacturer	Bendix or Purolator	
Air Cleaner:		
Type	Dry Element	
Air Flow	410 cfm max	11 cm/m
5. COOLING SYSTEM		
Radiatar Filler Cap Pressure	6.5 to 8 psi	44.8 to 55.2 kPa
Thermostat:		
Starts to Open	180°F	82°C
Fully Open	200°F	93°C
Radiator	Vertical Flow Type	
6. ELECTRICAL SYSTEM		
Batteries:		
Model	6TN	
Voltage	12 Volts	
Plates Per Cell	23	
Number of Batteries	2	
Temp When Fully Charged	80°F	26.6°C
Rating	100 A/h	
Alternator		
Manufacturer	Prestolite Co.	
Model	AMA 5102UT	
Voltage Output	28 Vmax	
Current Output	60 A max	
Voltage Regulator	Mounted Internally	
Starter:		
Voltage	24 Volts	
Specification	MS53011-2	
Mounting Plate to Pinion Housing Rotation	285°	
Capacity (peak)	9.5 hp	7.1 kW

https://truckmanualshub.com/

Table 1-2. Equipment Data (Contd).

	STANDARD	METRIC
7. TRANSMISSION		
Manufacturer	Spicer Div-Dana Corp.	
Model	3053A	
Type	Syncromesh	
Speeds	5 Forward, 1 Reverse	
Gear Ratios:		
First Speed (No Synchronizing Gear)	5.02 to 1	
Second Speed	2.78 to 1	
Third Speed	1.62 to 1	
Fourth Speed	1.00 to 1.00	
Fifth Speed (Override)	0.79 to 1	
Reverse (No Synchronizing Gear)	4.90 to 1	
Oil Type	GO 80/90	
8. TRANSMISSION POWER TAKEOFF (ALL EXCEPT M342A2)		
Manufacturer	Spicer Div-Dana Corp.	
Model	WN-7-28	
Type	Heavy-Duty	
Speeds	2 Forward, 1 Reverse	
Input Drive	Transmission	
Horsepower Delivered:		
100 rpm	2.7	
500 rpm	13	
1000 rpm	27	
Output Shaft (Front)	1-1/4in. Dia.; 5/16in. Keyway	
Use	Front Winch Drive	
Location	left Side of Transmission	
Oil Type	Lubricated from Transmission	
9. TRANSMISSION POWER TAKEOFF (M342A2)		
Manufacturer	Spicer Div-Dana Corp.	
Model	WND-7-28	
Type	Heavy-Duty	
Speeds	2 Forward, 1 Reverse	
Input Drive	Transmission	
Horsepower Delivered:		
100 rpm	2.7	
500 rpm	13	
1000 rpm	27	
Output Shaft (Front)	1-1/4 in., Dia.; 5/16 in. Keyway	
Output Shaft (Rear)	7/8in. Dia.; 5/16 in. Keyway	
Use:		
Output Shaft (Front)	Front Winch Drive	
Output Shaft (Rear)	Dump Body Hydraulic Pump Drive	
Location	Left Side of Transmission	
Oil Type	Lubricated from Transmission	

https://truckmanualshub.com/

Table 1-2. Equipment Data (Contd).

	STANDARD	METRIC
10. TRANSFER CASE		
Manufacturer	Rockwell Int.	
Model	T-136-27	
Type	Two-Speed Syncromesh	
Front Axle Engagement	Air Actuated	
Transmission Driven Input Shaft to Output Shaft for Rear Axles:		
Drive Ratio:		
Low Range (High Load)	1.980 to 1.000	
High Range (Low Load)	1.010 to 1.000	
Transmission Driven Input Shaft to Front Output Shaft for Front Axle:		
Drive Ratio:		
Low Range (High Load)	2.137 to 1.000	
High Range (Low Load)	1.078 to 1.000	
Oil Type	GO 80/90	
11. TRANSFER CASE POWER TAKEOFF		
Manufacturer	Rockwell Int.	
Model	P-136-C	
Speed	One (Variable with Engine RPM and Transmission Gear Selection)	
Input Drive	Transfer	
Output Shaft	Tapered 1-1/2 in. to 1 in.	
Horsepower Delivered	Same as Engine HP	
Location	Top Rear of Transfer Case	
Use	Rear Winch Drive, Fuel Tanker Pump, Water Tanker Pump, or Earth Auger	
12. FRONT WINCH		
Specification	MS51352	
Manufacturer	Spicer or Beekin	
Type	PTO Shaft Driven	
Winch Capacity	10,000 lb max	4,536 kg
Cable Capacity (l/2 in. dia. test load)	10,432 lb max	4,732 kg
Operating Capacity with 1/2 in. Dia. Cable 200 ft Long:		
Maximum line load at any time not to exceed	6,100 lb	2,769 kg
Snatch block to be used when load is less than 100 ft from vehicle.		
Maximum snatch below load, unless stated on block, for any arrangement not to exceed	10,000 lb	4,536 kg
Winch protected with aluminum shear pin.		

https://truckmanualshub.com/

Table 1-2. Equipment Data (Contd)

	STANDARD	METRIC
13. REAR WINCH (M756A2 ONLY)		
Manufacturer	Spicer or Beekin	
Type	PTO Shaft Driven	
Winch Capacity	20,000 lb max	9,072 kg
Cable Capacity (5/8 in. dia. test load)	16,283 lb max	7,386 kg
Operating Capacity with 5/8 in. Dia. Cable 200 ft Long:		
Maximum line load at any time not to exceed	9,500 lb	4,309 kg
Snatch block to be used when load is less than 100 ft from vehicle.		
Maximum snatch block load, unless stamped on block, for any arrangement not to exceed	11,500 lb	5,216 kg
Winch protected with aluminum shear pin.		
14. REAR WINCH (M764 ONLY)		
Manufacturer	Highway Trailer Ind.	
Model	W-3780-D	
Type	PTO Shaft Driven	
Winch Capacity	14,000 lb max	6,350 kg
Cable Capacity (1/2 in. dia. test load)	10,300 lb max	4,672 kg
Operating Capacity with 1/2 in. Dia. Cable, 700 ft Long:		
Maximum line load with derrick in vertical position only and without snatch block	5,000 lb	2,268 kg
Maximum line load with top of derrick 10 ft from vertical position and without snatch block	1,300 lb	590 kg
Maximum line load with derrick in any position and at all angles with snatch block	5,000 lb	2,268 kg
Maximum line load with snatch block and without derrick	8,000 lb	3,629 kg
Winch protected with aluminum shear pin.		
15. TIRES		
Tire Size	9:00 x 20, 8 ply	

https://truckmanualshub.com/

Section III. PRINCIPLES OF OPERATION

1-16. GENERAL

This section explains how components of the 2-1/2-ton, M44A2 series vehicles work together. A functional description of these components and their related parts will be covered in the following paragraphs. Electrical wiring schematics shown are for reference only and are not to be used for troubleshooting. To find the operation of a specific system or component, see the principles of operation reference index below.

1-17. PRINCIPLES OF OPERATION REFERENCE INDEX

PARA. NO.	TITLE	PAGE NO.
1-18.	Control Systems Operation	1-38
1-19.	Power Systems Operation	1-46
1-20.	Electrical Systems Operation	1-56
1-21.	Compressed Air and Brake System Operation	1-60
1-22.	Special Purpose Bodies Systems Operation	1-64

https://truckmanualshub.com/

1-18. CONTROL SYSTEMS OPERATION

The control systems include those controls and their related parts that are essential to the operation of the vehicle. These controls are common to all vehicles with the exception of transfer case power takeoff controls. Each part will be described as part of the following systems:

a. Starting System Operation (page 1-38).
b. Manifold Heater System Operation (page 1-40).
c. Accelerator Controls System Operation (page 1-41).
d. Parking Brake System Operation (page 1-42).
e. Steering System Operation (page 1-43).
f. Clutch Control System Operation (page 1-44).
g. Transfer Case Control System Operation (page 1-45).

a. Starting System Operation.

The starting system will start the engine in all types of weather and has built-in protection that prevents starter engagement once the engine has started. Major components of the starting system are:

(A) **ACCESSORY POWER SWITCH** - Activates all electrical circuits except arctic heaters.

(B) **STARTER SWITCH** - When pressed, provides battery power to starter relay.

(C) **FUEL PRESSURE SWITCH** - Prevents reengagement of starter motor once engine is running.

(D) **STARTER RELAY** - Transfers amperage through starter cables from battery to starter solenoid.

(E) **BATTERIES** - Provide 24-volt battery power to energize starter motor.

(F) **STARTER SOLENOID** - Actuates starter motor gear to crank vehicle engine.

(G) **STARTER MOTOR** - When energized, converts electrical energy to mechanical power as it engages the flywheel to crank engine.

https://truckmanualshub.com/

1-18. CONTROL SYSTEMS OPERATION (Contd)

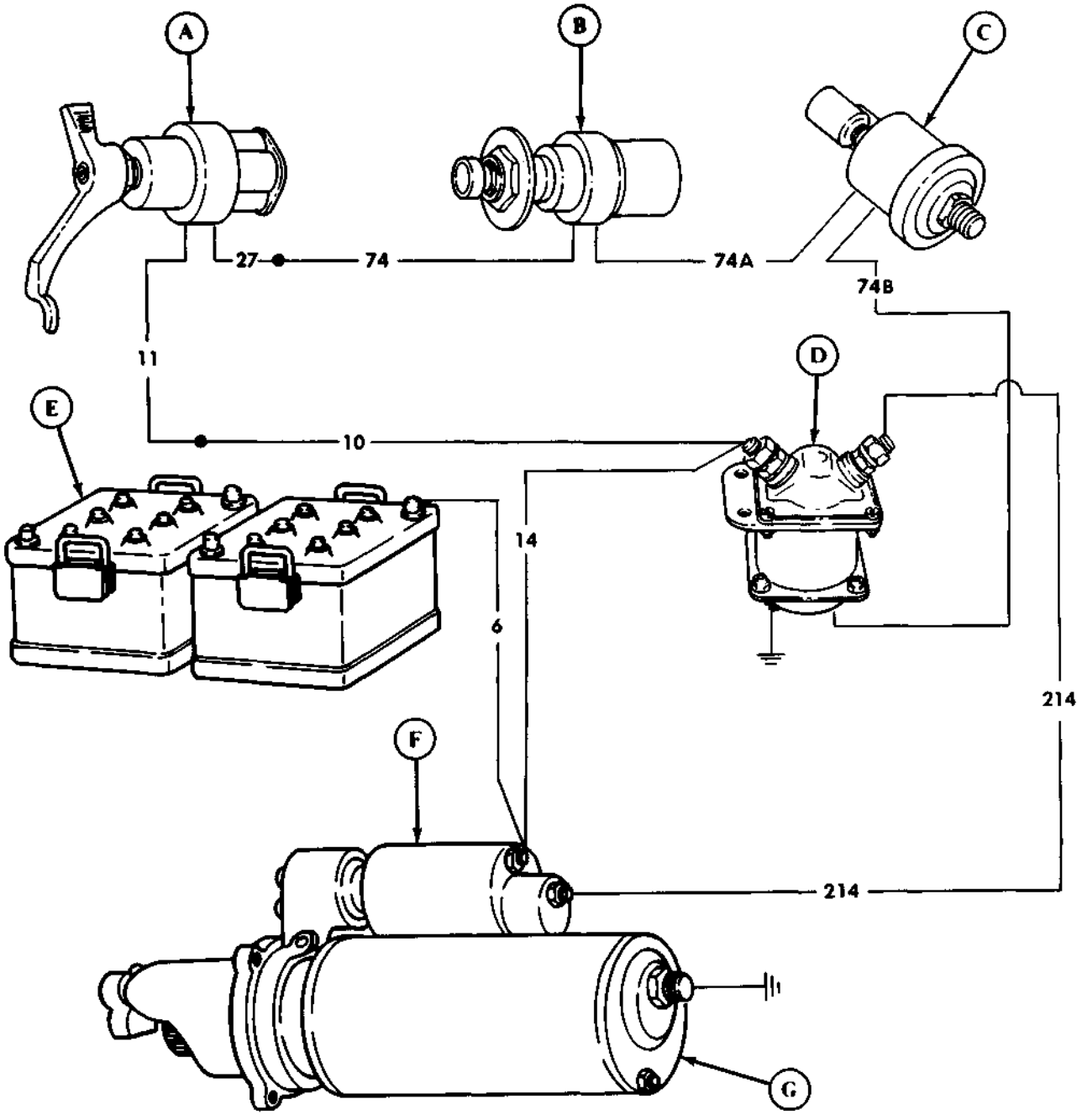

https://truckmanualshub.com/

1-18. CONTROL SYSTEMS OPERATION (Contd)

b. Manifold Heater System Operation.

The manifold heater system warms air entering the intake manifold to allow engine to start in cold weather conditions. Major components of the manifold heater system are:

(A) **MANIFOLD HEATER SWITCH** - When pressed, the circuit to the heater fuel pump is activated. The spray nozzle valve is opened and the spark plug is energized by the ignition unit.

(B) **HEATER FUEL FILTER** - Cleans fuel before fuel enters fuel pump.

(C) **HEATER FUEL PUMP** - Supplies fuel to spray nozzle when activated.

(D) **HEATER SPRAY NOZZLE** - Distributes vaporized fuel into intake manifold.

(E) **HEATER IGNITION UNIT** - Energizes spark plug.

(F) **HEATER SPARK PLUG** - Ignites vaporized fuel distributed into intake manifold.

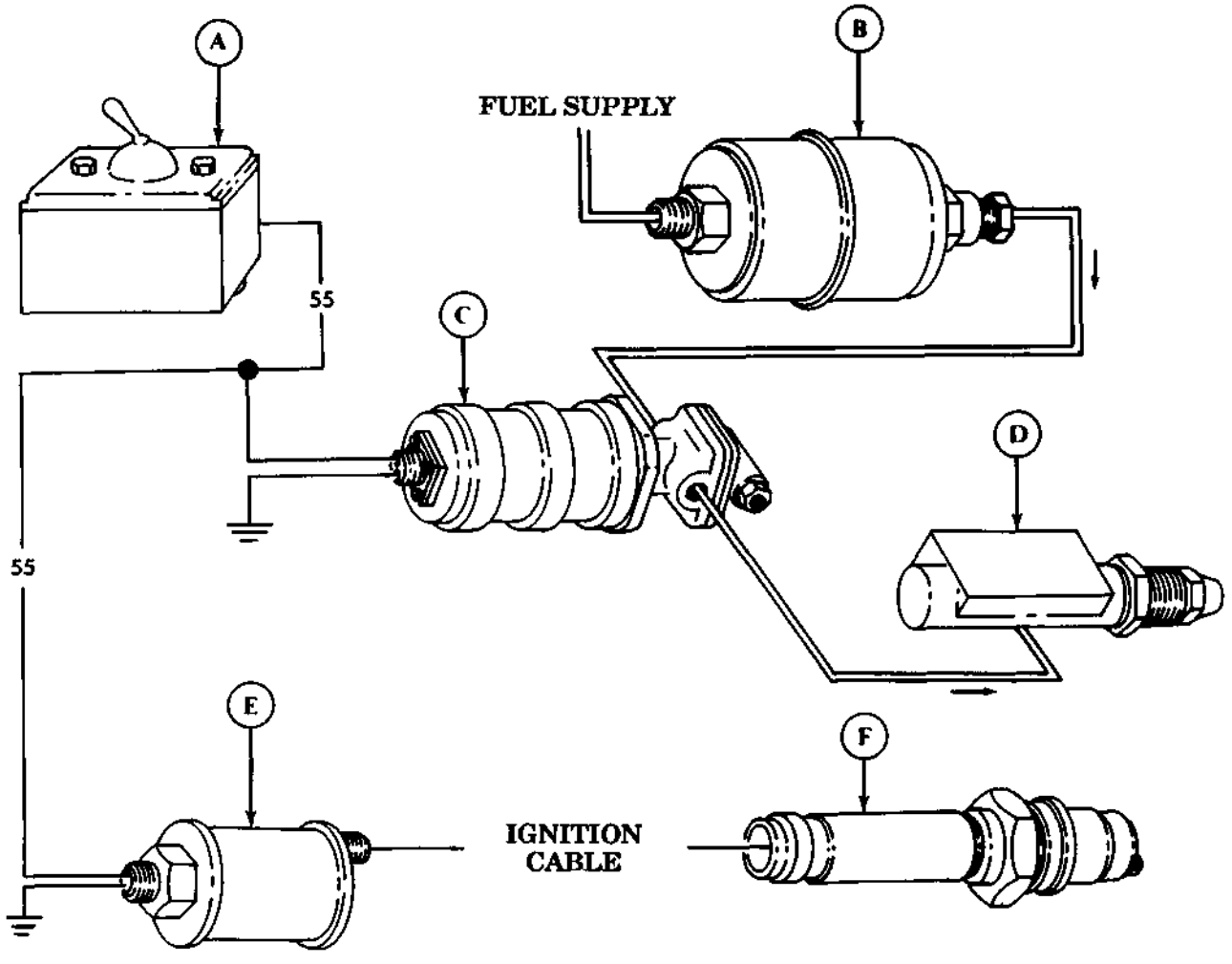

https://truckmanualshub.com/

1-18. CONTROL SYSTEMS OPERATION (Contd)

c. Accelerator Controls System Operation.

The accelerator controls system permits the operator to control vehicle speed and engine power. Major components of the accelerator controls system are:

(A) **ENGINE STOP CONTROL** - Cuts off fuel supply to engine when pulled.

(B) **HAND THROTTLE CONTROL** - Sets engine speed at desired rpm without operator maintaining pressure on accelerator pedal.

(C) **ACCELERATOR PEDAL** - Controls engine speed.

(D) **ACCELERATOR LINKAGE** - Links accelerator pedal and throttle control to fuel pump.

1. Injection Pump Lever
2. Accelerator Rod
3. Return Spring
4. Pivot Lever

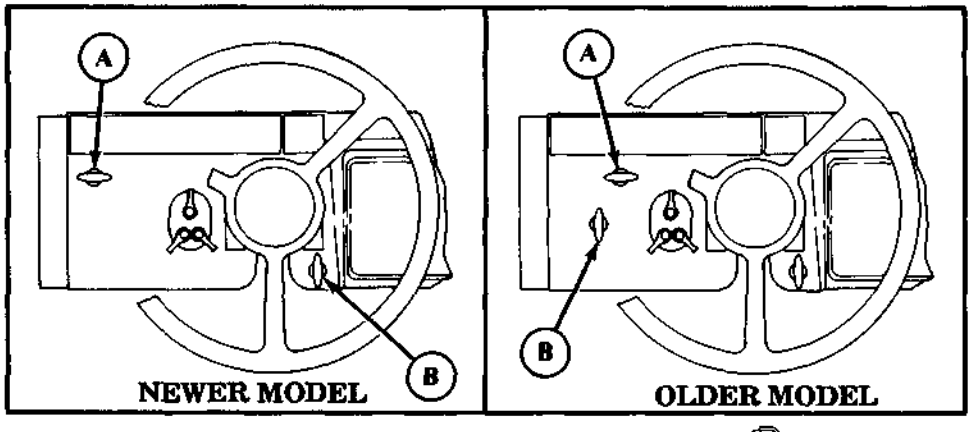

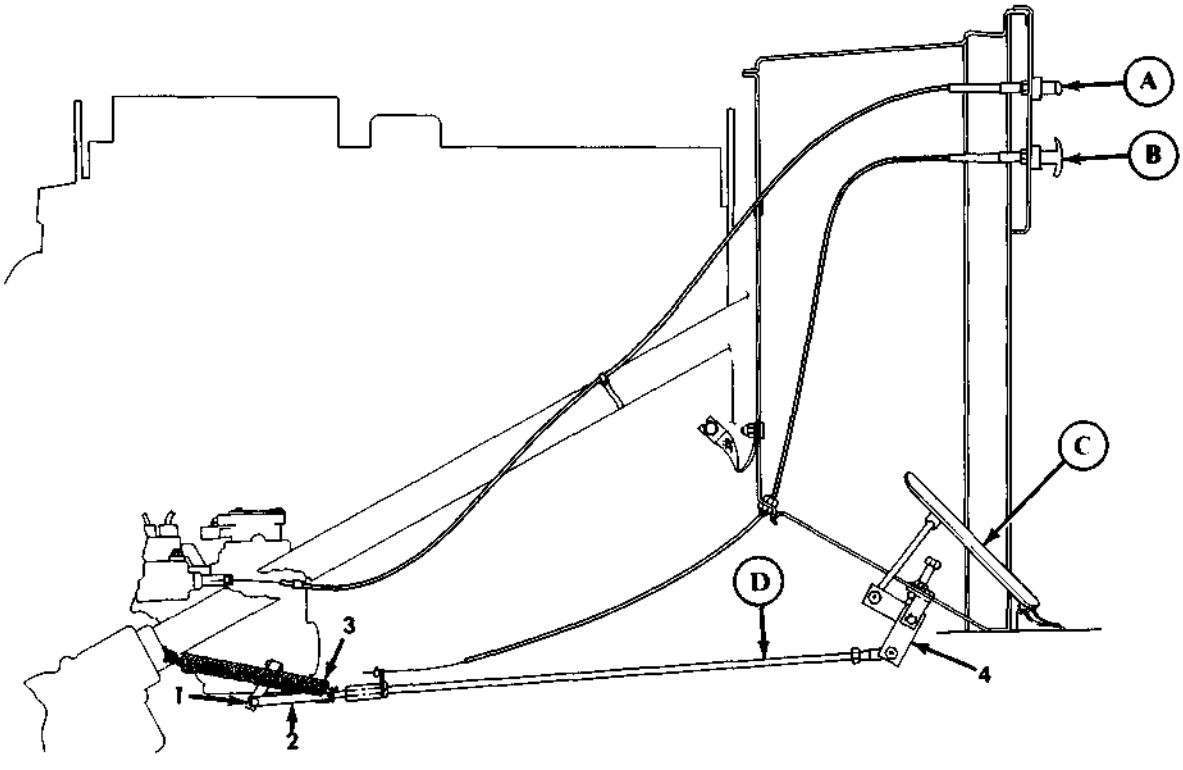

https://truckmanualshub.com/

1-18. CONTROL SYSTEMS OPERATION (Contd)

d. Parking Brake System Operation.

The parking brake system is a manually-operated system that provides a means of keeping the vehicle motionless when it is stopped. Major components of the parking brake system are:

(A) **PARKING BRAKE CONTROL LEVER** - Applies parking brake when pulled to raised position. When lowered, parking brake is released.

(B) **ADJUSTING KNOB** - Permits operator to make minor tension adjustment in parking brake cable.

(C) **PARKING BRAKE CABLE** - Links parking brake lever to actuating lever.

(D) **BRAKEDRUM** - Provides surface for brakeshoes to press against when parking brake is applied.

(E) **ACTUATING LEVER** - Forces inner and outer brakeshoes against brakedrum when parking brake control lever is raised.

(F) **PARKING BRAKE ADJUSTING SCREW** - Used to ensure full contact of brakeshoes with brakedrum.

(G) **BRAKESHOES** - Apply friction to brakedrum when parking brake control lever is raised.

(H) **ECCENTRIC PIN** - Equalizes distance between brakeshoes and brakedrum.

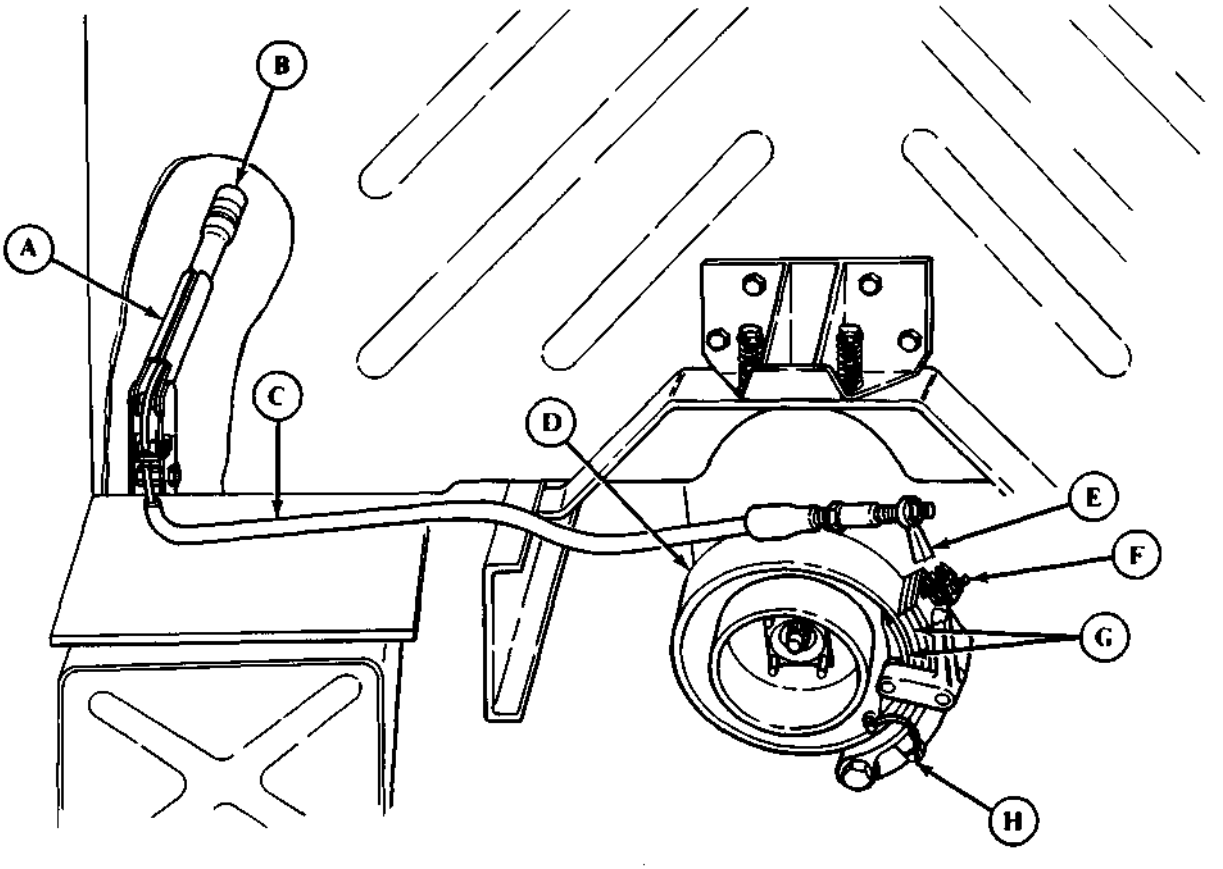

https://truckmanualshub.com/

1-18. CONTROL SYSTEMS OPERATION (Contd)

e. Steering System Operation.

Major components of the steering system are:

(A) **STEERING COLUMN** - Supports steering shaft through instrument panel and firewall to steering gear.

(B) **STEERING WHEEL** - Used by operator to control direction of vehicle travel.

(C) **STEERING ARM** - Connects drag link to steering knuckle.

(D) **TIE ROD** - Connects steering knuckles so both front wheels will pivot when steering wheel is turned.

(E) **DRAG LINK** - Transmits movement from pitman arm to the steering arm.

(F) **STEERING KNUCKLE** - Serves as a pivot point and link for the front wheel from the tie rod.

(G) **PITMAN ARM** - Transmits steering torque from steering gear to drag link.

(H) **STEERING GEAR** - Transmits mechanical power from the steering wheel to the pitman arm.

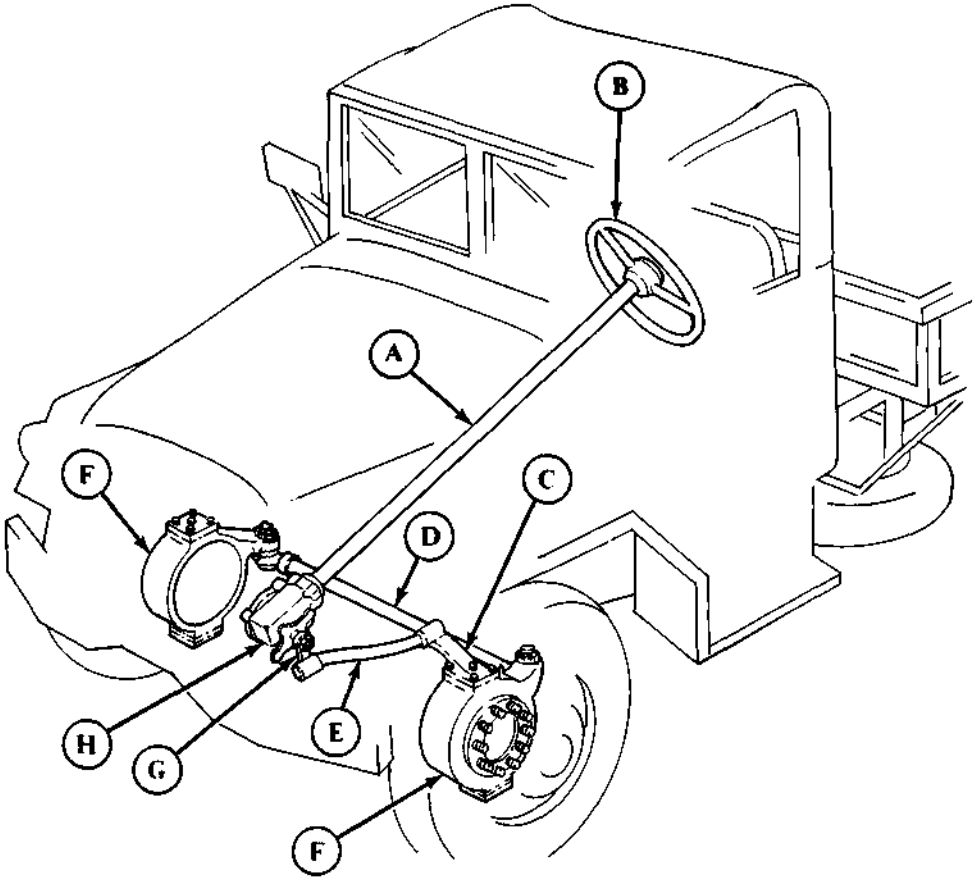

https://truckmanualshub.com/

1-18. CONTROL SYSTEMS OPERATION (Contd)

f. Clutch Control System Operation.

The clutch control system permits engagement or disengagement of transmission and transmission power takeoff (PTO). Major components of the clutch control system are:

(A) **CLUTCH PEDAL** - When pressed down, it disengages transmission from engine. When released, engine and transmission are engaged.

(B) **REMOTE CONTROL LEVER** - Transmits movement of clutch rod to actuate clutch.

(C) **CLUTCH ROD** - Transmits movement from clutch pivot assembly to remote control lever and shaft, and is used to adjust clutch pedal free travel.

(D) **CLUTCH PIVOT ASSEMBLY** - Transfers torque from clutch lever to clutch rod.

(E) **CLUTCH LEVER** - Transmits movement from clutch pedal to clutch pivot assembly.

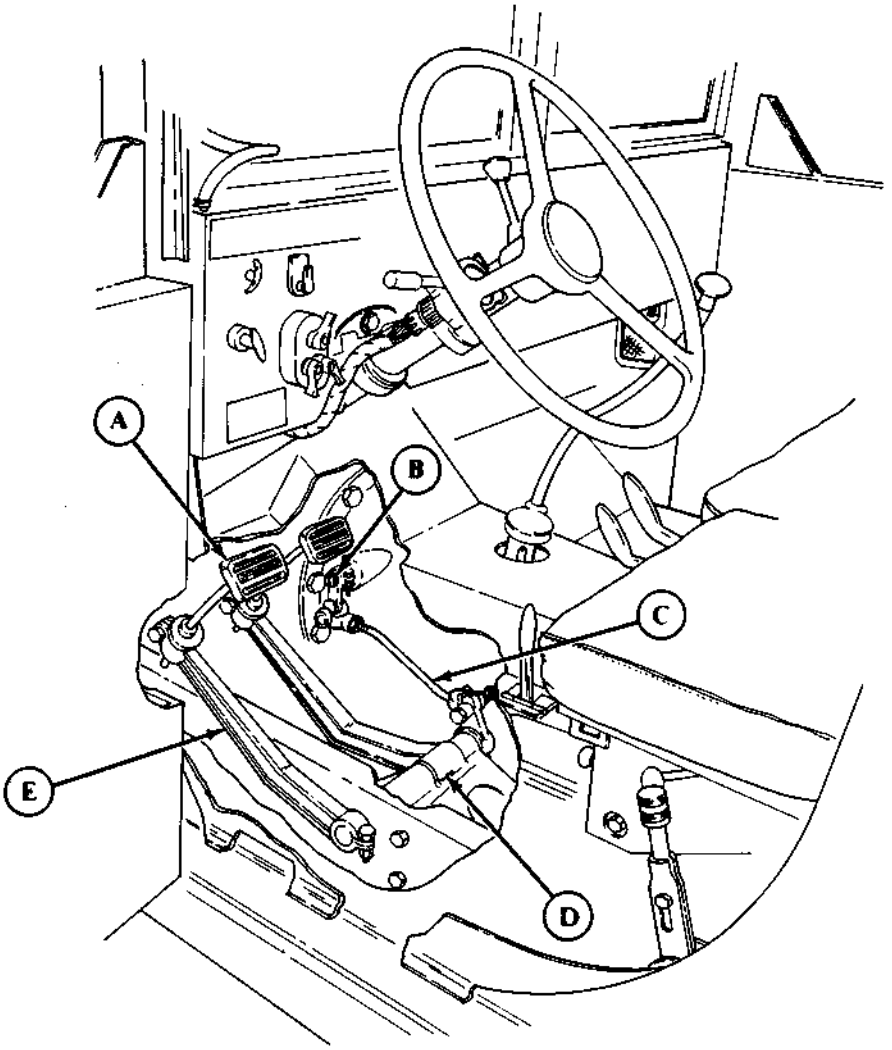

https://truckmanualshub.com/

1-18. CONTROL SYSTEMS OPERATION (Contd)

g. Transfer Case Control System Operation.

The transfer case control system converts four-wheel driving power into six-wheel driving power and provides source of power to operate auxiliary equipment through a power takeoff (PTO). Major components of transfer case control system are:

(A) **TRANSFER CASE SHIFT LEVER** - Is pulled up to HIGH for light load operations or pushed down to LOW for heavy load operations.

(B) **TRANSFER CASE SHIFT LEVER LINK** - Transmits movement of transfer case shift lever to shift shaft.

(C) **TRANSFER CASE LOCKOUT ROD** - Actuates and adjusts the movement of transfer case lockout.

(D) **TRANSFER CASE PTO CONTROL LEVER LINK** - Transmits movement of transfer case PTO control lever assembly to transfer case PTO lever.

(E) **TRANSFER CASE PTO CONTROL LEVER ASSEMBLY** - Manual control for engaging power takeoff.

(F) **TRANSFER CASE LOCKOUT** - Locks transfer case in NEUTRAL position to prevent vehicle movement when transfer case PTO is engaged.

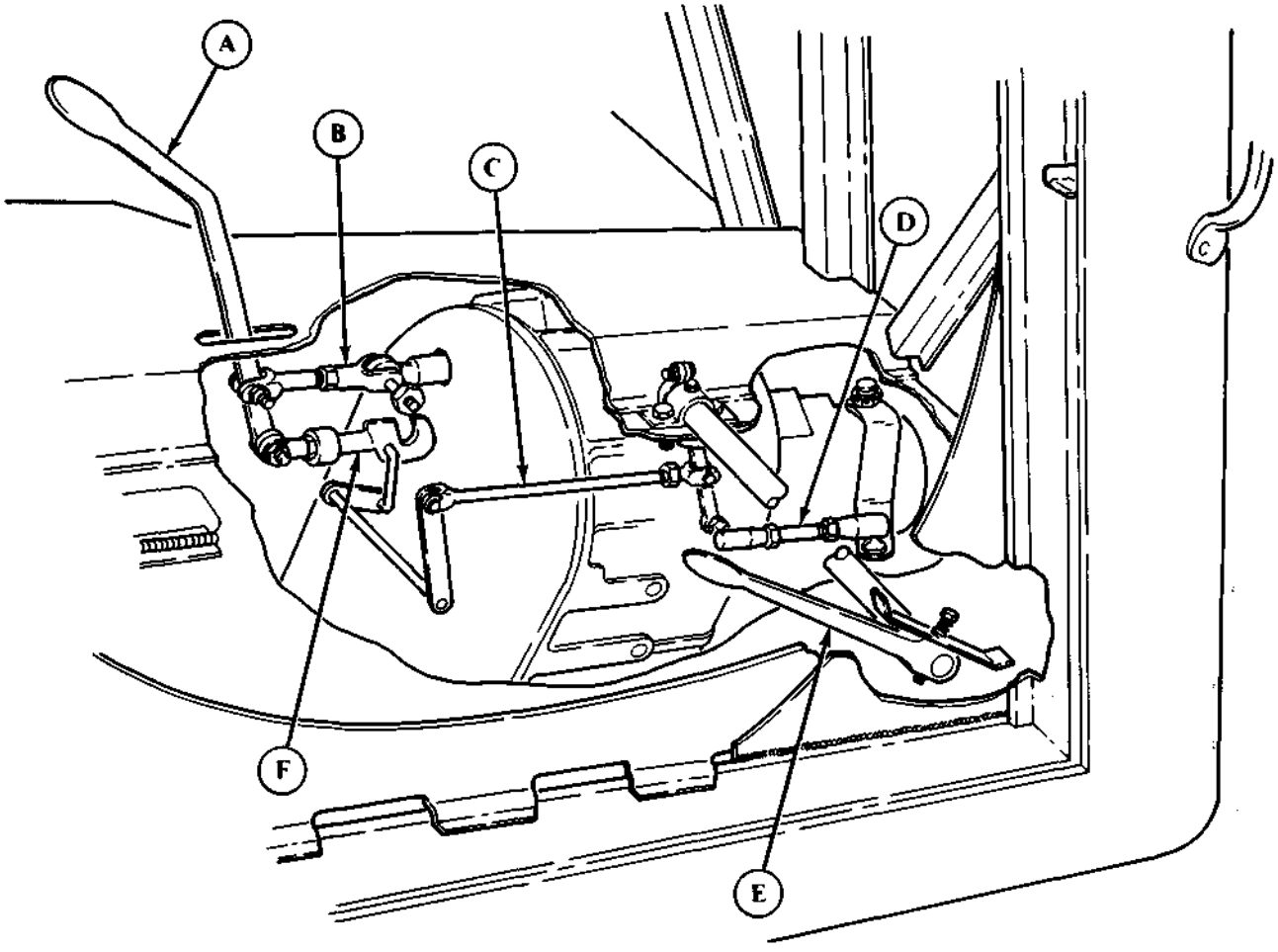

https://truckmanualshub.com/

1-19. POWER SYSTEMS OPERATION

The power system includes those components that give all vehicles covered in this manual the power to move. Each of these components will be described as part of the following subsystems:

a. **Powertrain System Operation (page 1-46).**
b. **Engine Oil System Operation (page 1-48).**
c. **Fuel System Operation (page 1-50).**
d. **Air Intake System Operation (page 1-52).**
e. **Exhaust System Operation (page 1-53).**
f. **Cooling System Operation (page 1-54).**

a. Powertrain System Operation.

The powertrain system is the same on all models covered in this manual with the exception of the long wheel base models which have an additional propeller shaft and center bearing. The powertrain transmits engine power throughout the vehicle to put it in motion. Major components of the powertrain are:

(A) **ENGINE** - Provides mechanical power for powertrain component operation.

(B) **TRANSMISSION** - Transfers engine power to meet different speeds and power requirements.

(C) **TRANSFER CASE** - Distributes power to front and rear axles.

(D) **UNIVERSAL JOINTS** - Permit power to be transmitted at slight angles between transmission and transfer case and between transfer case and differentials.

(E) **DIFFERENTIALS** - Distribute power to left and right axle shafts independently.

(F) **AXLES** - Transmit power from differentials to wheels.

(G) **PROPELLER SHAFTS** - Drive shafts that transmit power from the transmission to the transfer case, to the differentials.

1. Front differential to transfer case propeller shaft
2. Transmission to transfer case propeller shaft
3. Transfer case to forward-rear differential propeller shaft
4. Forward-rear differential to rear-rear differential propeller shaft

https://truckmanualshub.com/

1-19. POWER SYSTEMS OPERATION (Contd)

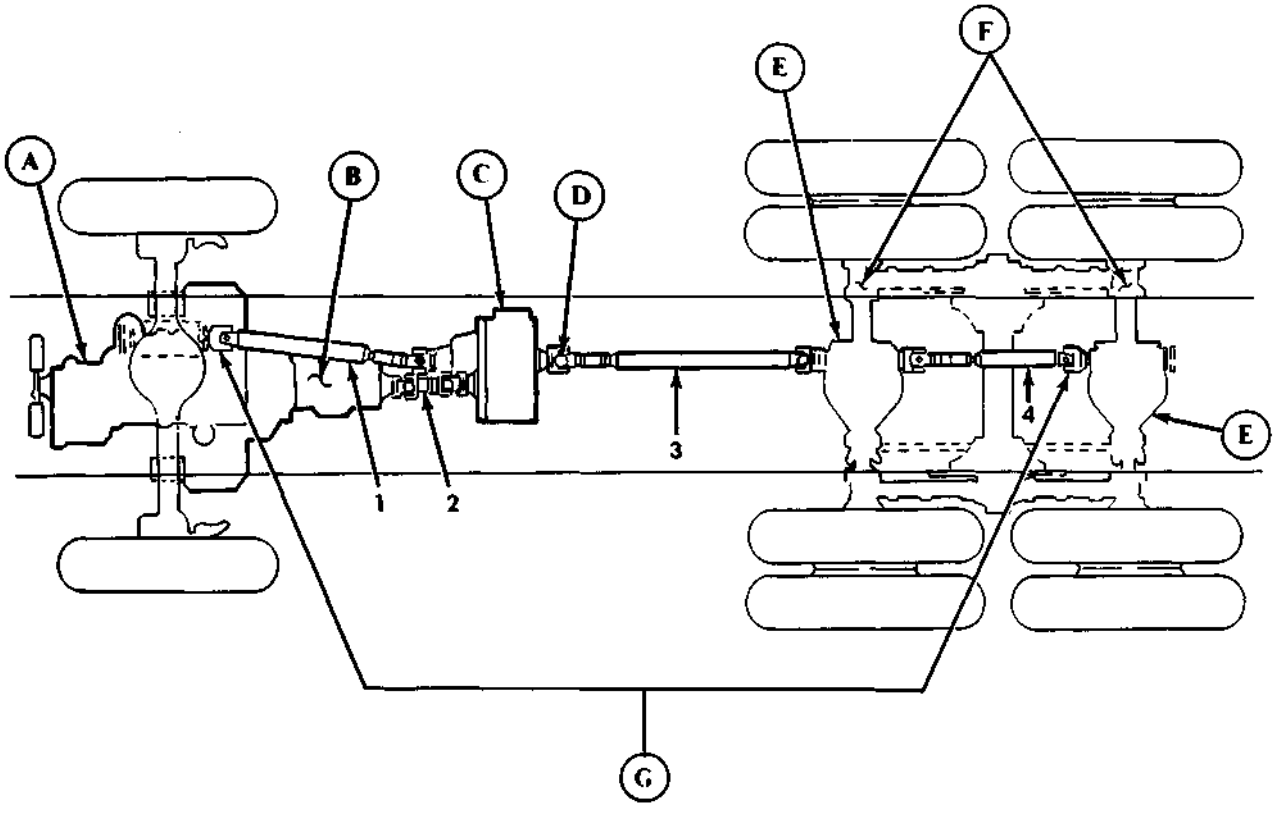

https://truckmanualshub.com/

1-19. POWER SYSTEMS OPERATION (Contd)

b. Engine Oil System Operation.

The engine oil system provides lubricating oil for internal engine parts. Major components of the engine oil system are:

(A) **CRANKCASE BREATHER** - Vents engine crankcase.

(B) **OIL FILLER CAP** - Covers engine oil fill opening.

(C) **OIL DIPSTICK** - Indicates engine oil level.

(D) **OIL PRESSURE TRANSMITTER** - Sends an electrical signal indicating engine oil pressure to the oil pressure gage on instrument panel.

(E) **OIL FILTERS** - Filters oil of dirt and other foreign material to help ensure flow of uncontaminated oil to engine.

(F) **ENGINE OIL COOLER** - Removes excess heat from engine oil as coolant circulates through internal tubes of oil cooler.

(G) **ENGINE OIL PAN** - Reservoir for engine oil.

(H) **ENGINE OIL PAN DRAINPLUG** - When removed, allows lubricating oil to be drained from engine.

https://truckmanualshub.com/

1-19. POWER SYSTEMS OPERATION (Contd)

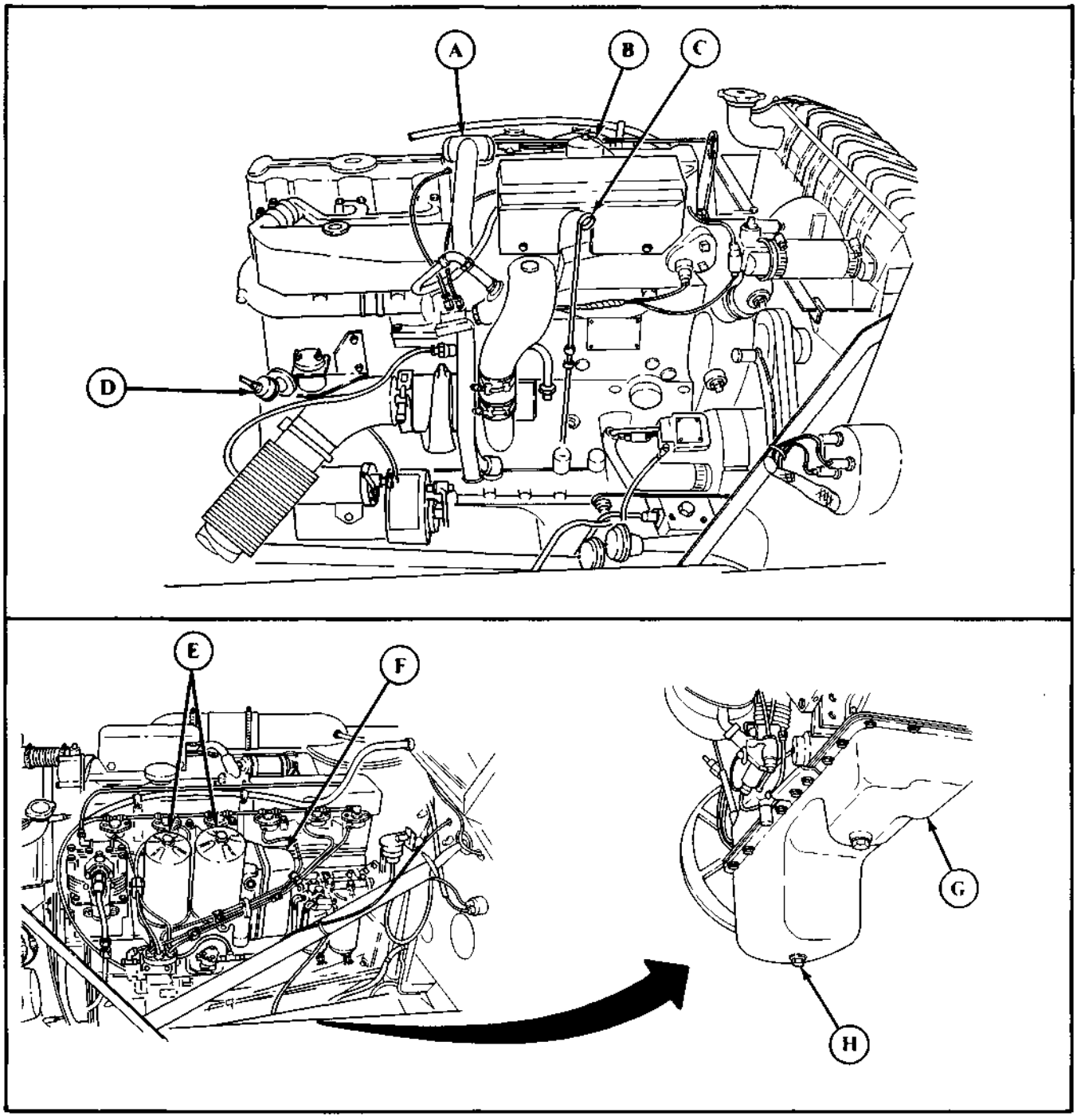

https://truckmanualshub.com/

1-19. POWER SYSTEMS OPERATION (Contd)

c. Fuel System Operation.

The fuel system stores, cleans, and supplies fuel to the fuel injectors where it is mixed with air for combustion in engine cylinders. Major components of the fuel system are:

(A) **PRIMARY FUEL FILTER** - First filter to remove water and dirt from fuel.

(B) **FUEL SUPPLY LINE** - Directs fuel from fuel pump in fuel tank to primary fuel filter, to fuel transfer pump, to secondary and final fuel filters, to fuel injector pump, and then to fuel injectors.

(C) **FUEL TANK FILLER CAP** - Covers fuel fill opening.

(D) **FUEL LEVEL SENDING UNIT** - Detects fuel level in fuel tank and sends an electrical signal to fuel gage on instrument panel.

(E) **FUEL PUMP** - Draws fuel from fuel tank and pumps it through fuel supply line.

(F) **FUEL TANK** - Stores fuel for vehicle use.

(G) **FUEL RETURN LINE** - Directs unused fuel back to fuel tank.

(H) **VENT LINE** - Allows clean air to enter fuel tank as fuel supply is used up.

(I) **FUEL INJECTORS** - Spray a fine mist of fuel into combustion chambers.

(J) **FINAL FUEL FILTER** - Removes additional dirt from fuel.

(K) **SECONDARY FUEL FILTER** - Removes additional dirt from fuel.

(L) **FUEL TRANSFER PUMP** - Forces flow of fuel through secondary and final fuel filters to the fuel injector pump.

(M) **FUEL INJECTOR PUMP** - Furnishes pressurized fuel to the fuel injectors.

https://truckmanualshub.com/

1-19. POWER SYSTEMS OPERATION (Contd)

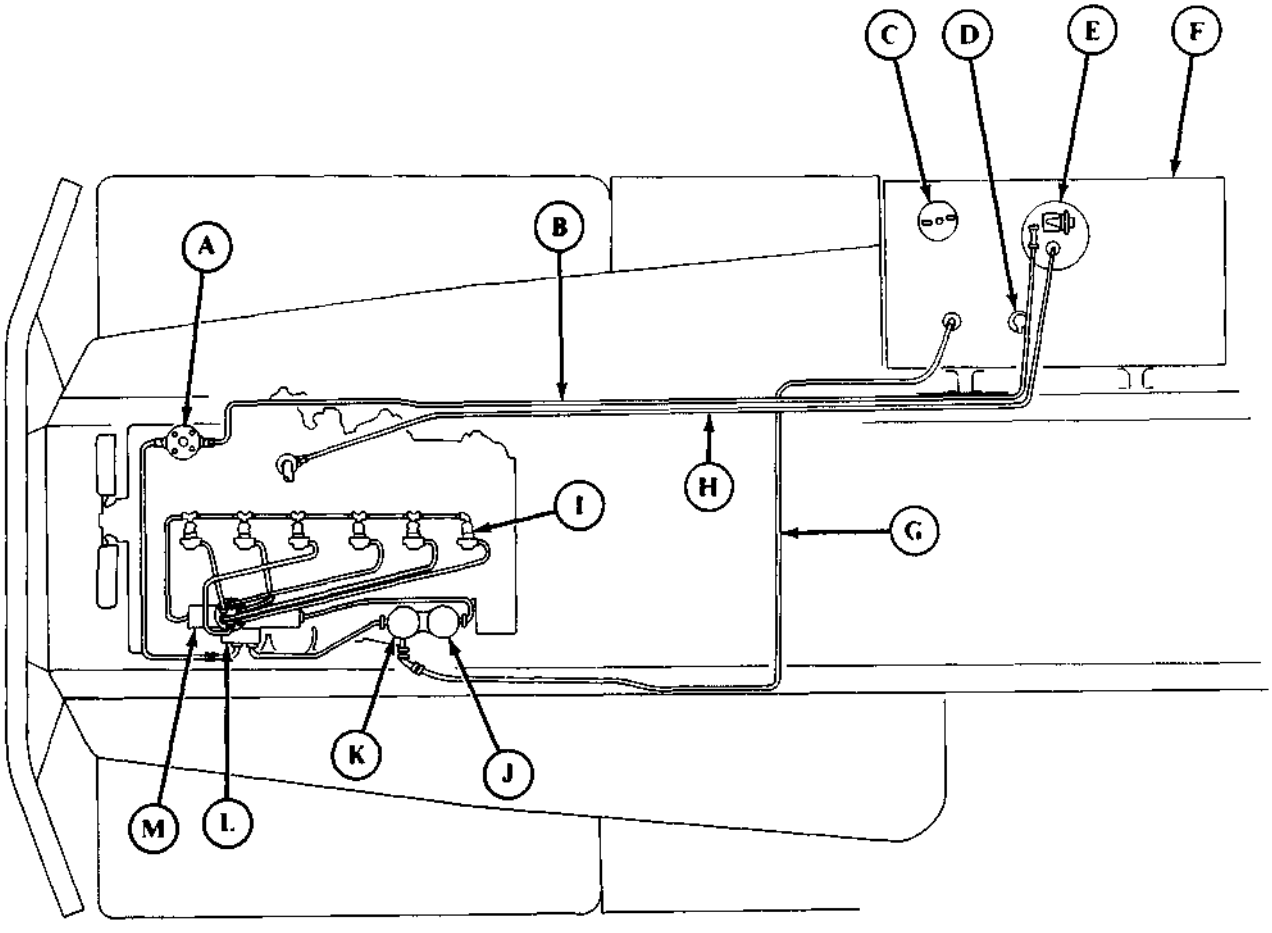

https://truckmanualshub.com/

1-19. POWER SYSTEMS OPERATION (Contd)

d. Air Intake System Operation.

The air intake system cleans air going to the combustion chambers where it mixes with fuel from the injectors to provide power for the engine. Major components of the air intake system are:

(A) **AIR CLEANER** - Directs outside air through filter element.

(B) **FILTER ELEMENT** - Removes dirt and dust from the air.

(C) **AIR CLEANER OUTLET** - Directs air from air cleaner to turbocharger.

(D) **AIR CLEANER INDICATOR** - Shows red when filter element needs servicing.

(E) **AIR CLEANER HOOD** - Prevents rain and large objects from entering air intake system.

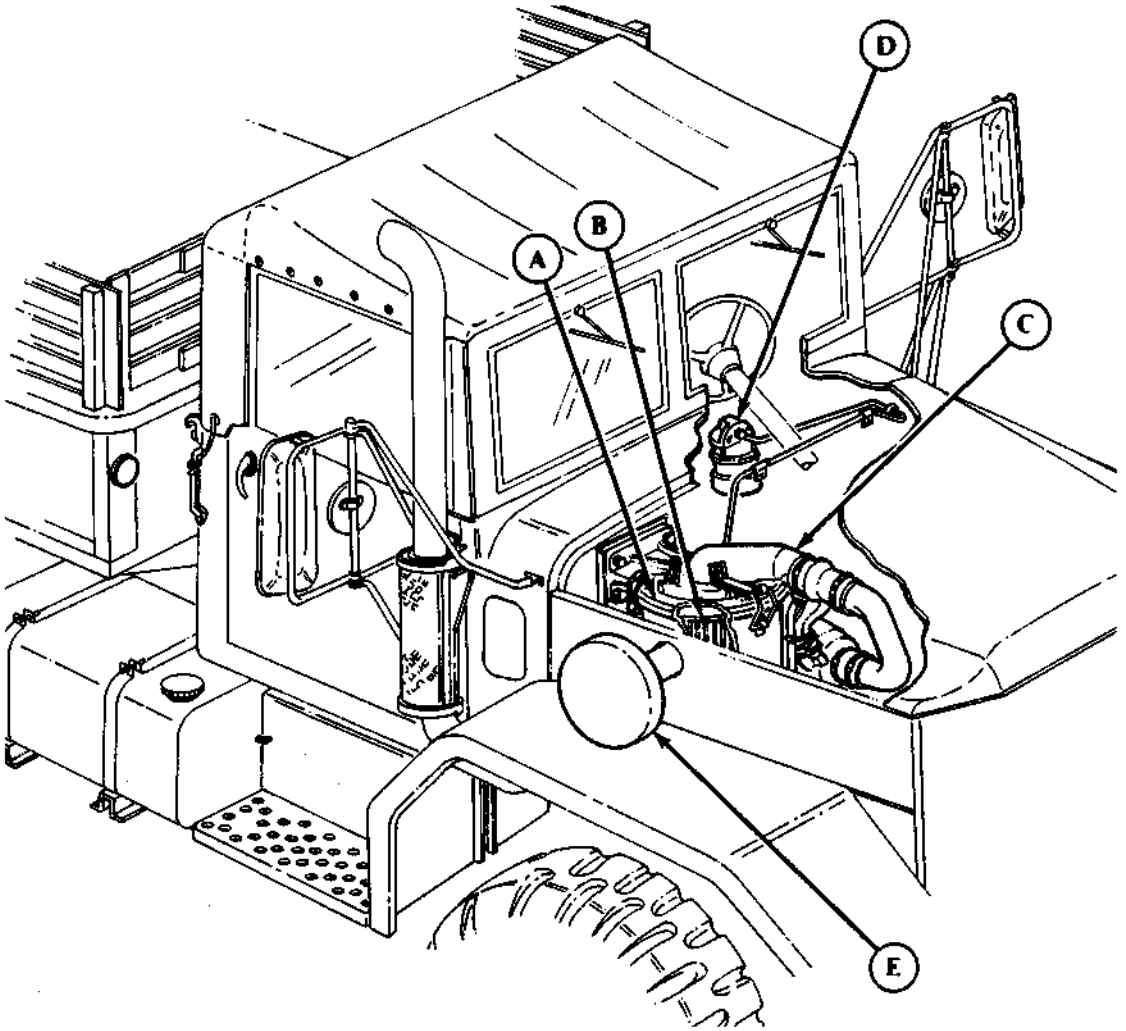

https://truckmanualshub.com/

1-19. POWER SYSTEMS OPERATION (Contd)

e. Exhaust System Operation.

The exhaust system directs exhaust gases away from the vehicle and crew compartment. The exhaust configuration is identical for all models covered in this manual with the exception of the M50A2 and M50A3 models which have an exhaust pipe cap. Both configurations are covered here:

(A) **EXHAUST PIPES** - Direct exhaust gases away from vehicle and crew compartment.

(B) **EXHAUST PIPE SHIELD** - Protects personnel from hot exhaust pipes.

(C) **EXHAUST PIPE CAP** (M50A2 and M50A3 only) - Used in cold weather to prevent exhaust gases from escaping from exhaust pipe. This forces gases through the exhaust pipes beneath the water tank keeping the water from freezing. Gases then exit through rear of vehicle.

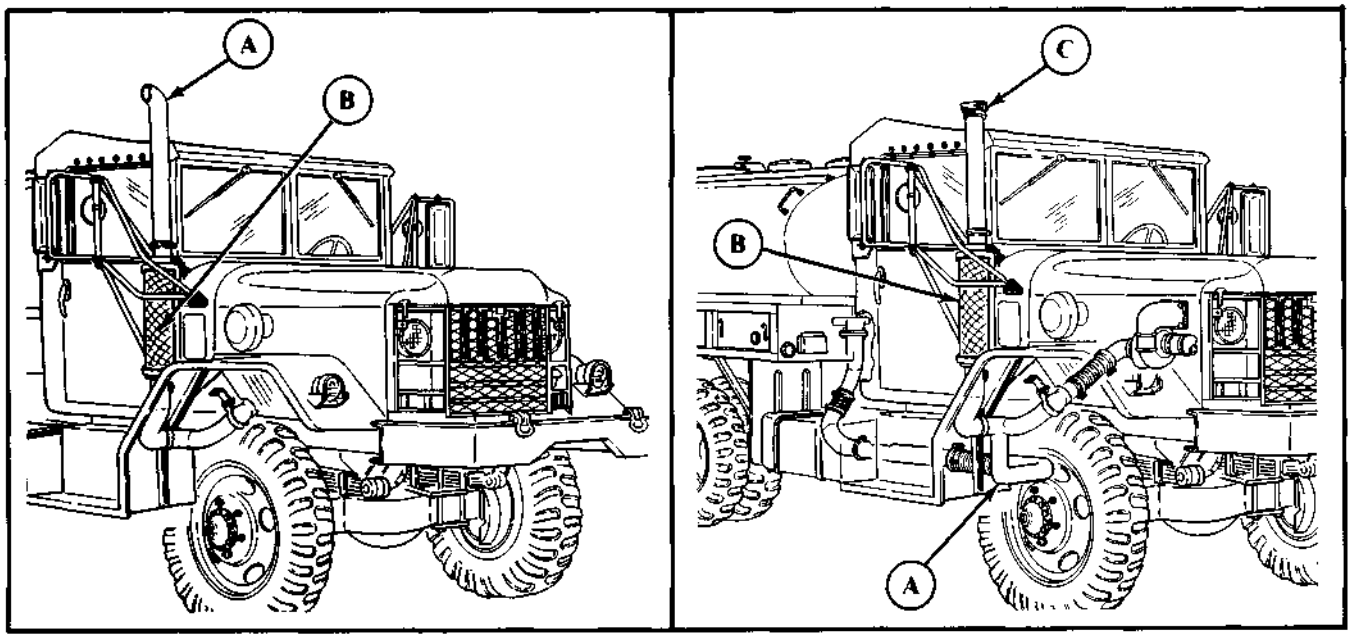

https://truckmanualshub.com/

1-19. POWER SYSTEMS OPERATION (Contd)

f. Cooling System Operation.

The cooling system removes excess heat from the engine. Major components of the cooling system are:

(A) **ENGINE OIL COOLER** - Removes excess heat from engine oil.

(B) **TEMPERATURE GAGE SENDING UNIT** - Detects temperature of engine coolant and sends an electrical signal to temperature gage on instrument panel.

(C) **THERMOSTAT** - Shuts off coolant flow to radiator until temperature reaches 180°F (82°C). Coolant is then allowed to flow to the radiator through the upper radiator hose.

(D) **RADIATOR FILLER CAP** - When removed, filler neck serves as filling point for cooling system. When installed, cap allows cooling system to pressurize.

(E) **RADIATOR** - Directs coolant through a series of fins or baffles so outside air can remove excess heat from coolant.

(F) **UPPER RADIATOR HOSE** - Directs coolant from engine block to radiator when thermostat opens.

(G) **FAN** - Pulls outside air through radiator to remove excess heat from coolant.

(H) **WATER PUMP** - Circulates coolant through cooling system.

(I) **LOWER RADIATOR HOSE** - Directs coolant from radiator back to engine block.

https://truckmanualshub.com/

1-19. POWER SYSTEMS OPERATION (Contd)

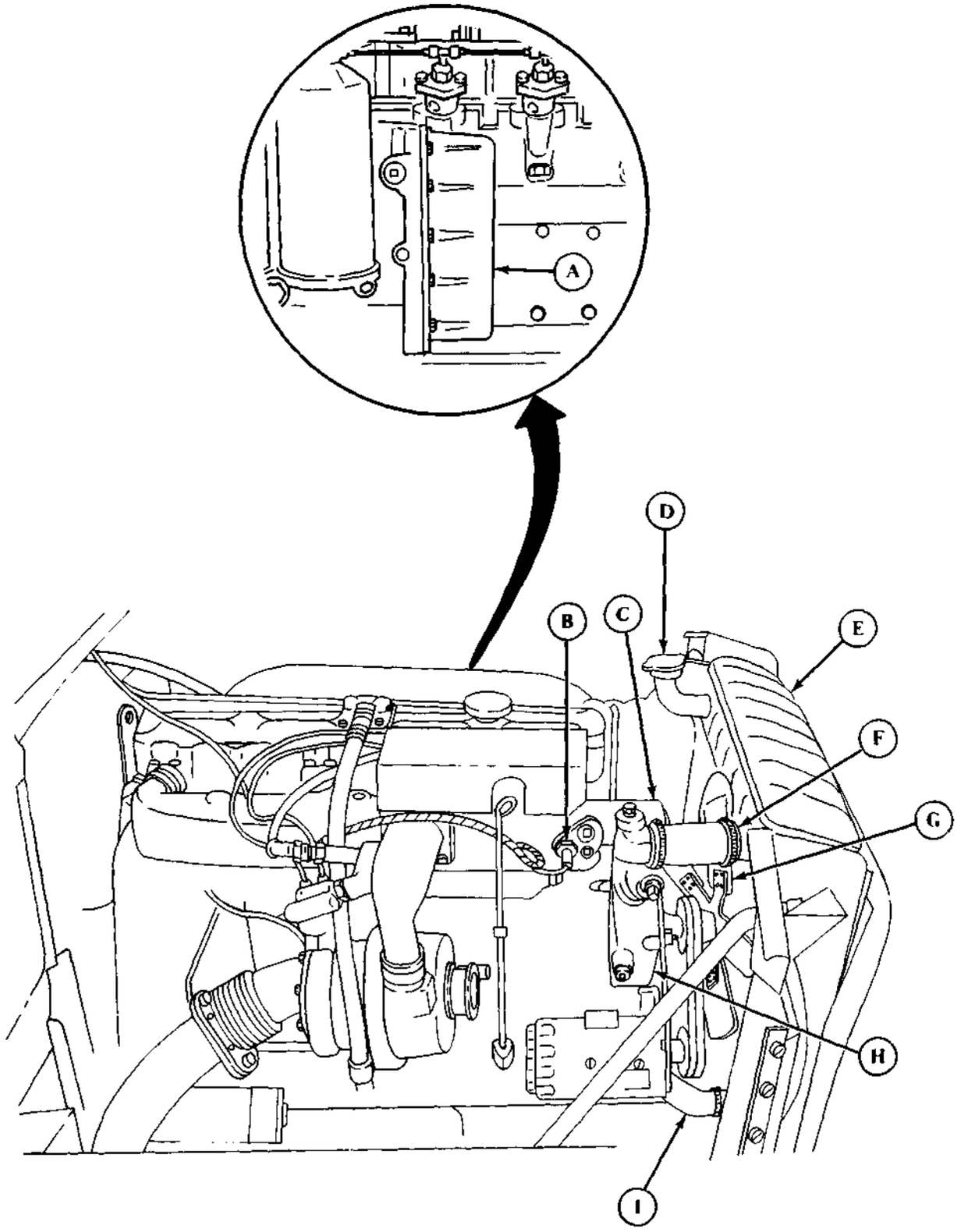

https://truckmanualshub.com/

1-20. ELECTRICAL SYSTEMS OPERATION

Wires with circuit numbers are shown here for reference only and are NOT to be used for troubleshooting procedures.

The electrical systems include those components that either provide or are powered by electricity. Each of these components will be described as part of the following subsystems:

a. Battery System Operation (page 1-56).
b. Starting System Operation (page 1-57).
c. Generating System Operation (page 1-58).
d. Heating System Operation (page 1-58).
e. Gage and Warning System Operation (page 1-59).

a. Battery System Operation.

(A) **BATTERIES** - Two type 6TN batteries store and supply electrical energy. They provide 24-volts DC for the starting system and electrical accessories.

(B) **SLAVE RECEPTACLE** - Provides a convenient place to plug in an external power source to assist in cranking the engine. Used when vehicle batteries are not sufficiently charged.

(C) **ACCESSORY POWER SWITCH** - Connects or disconnects the batteries from the vehicle electrical

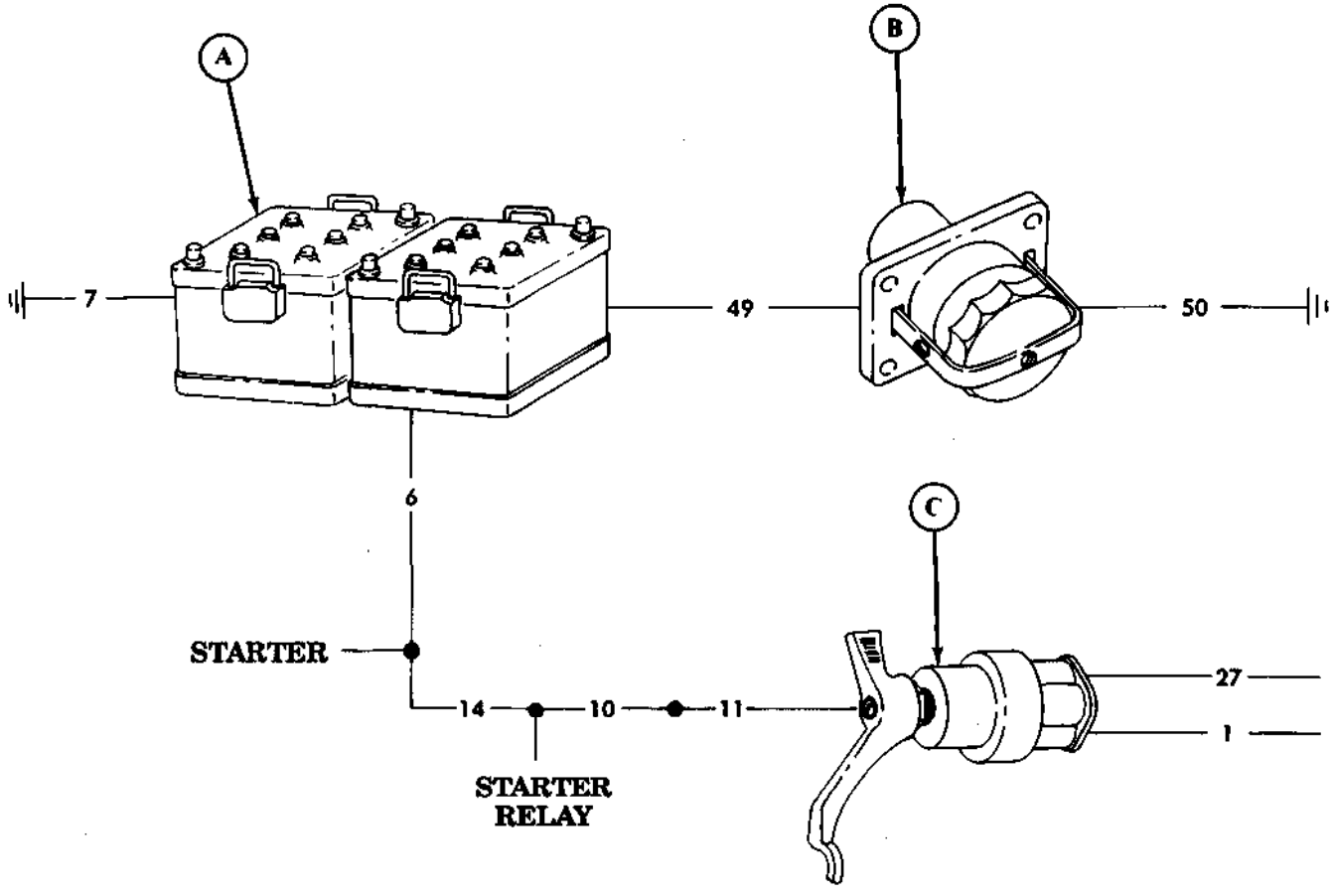

https://truckmanualshub.com/

1-20. ELECTRICAL SYSTEMS OPERATION (Contd)

b. Starting System Operation.

(A) **STARTER SWITCH** - Connects 24-volt battery power to starter motor when pressed.

(B) **STARTER RELAY** - A magnetic switch, actuated by starter switch that allows 24-volt battery power to flow to starter motor.

(C) **STARTER SOLENOID** - Actuates starter motor gear to crank vehicle engine.

(D) **STARTER MOTOR** - Cranks vehicle engine for starting when supplied with 24-volt battery power.

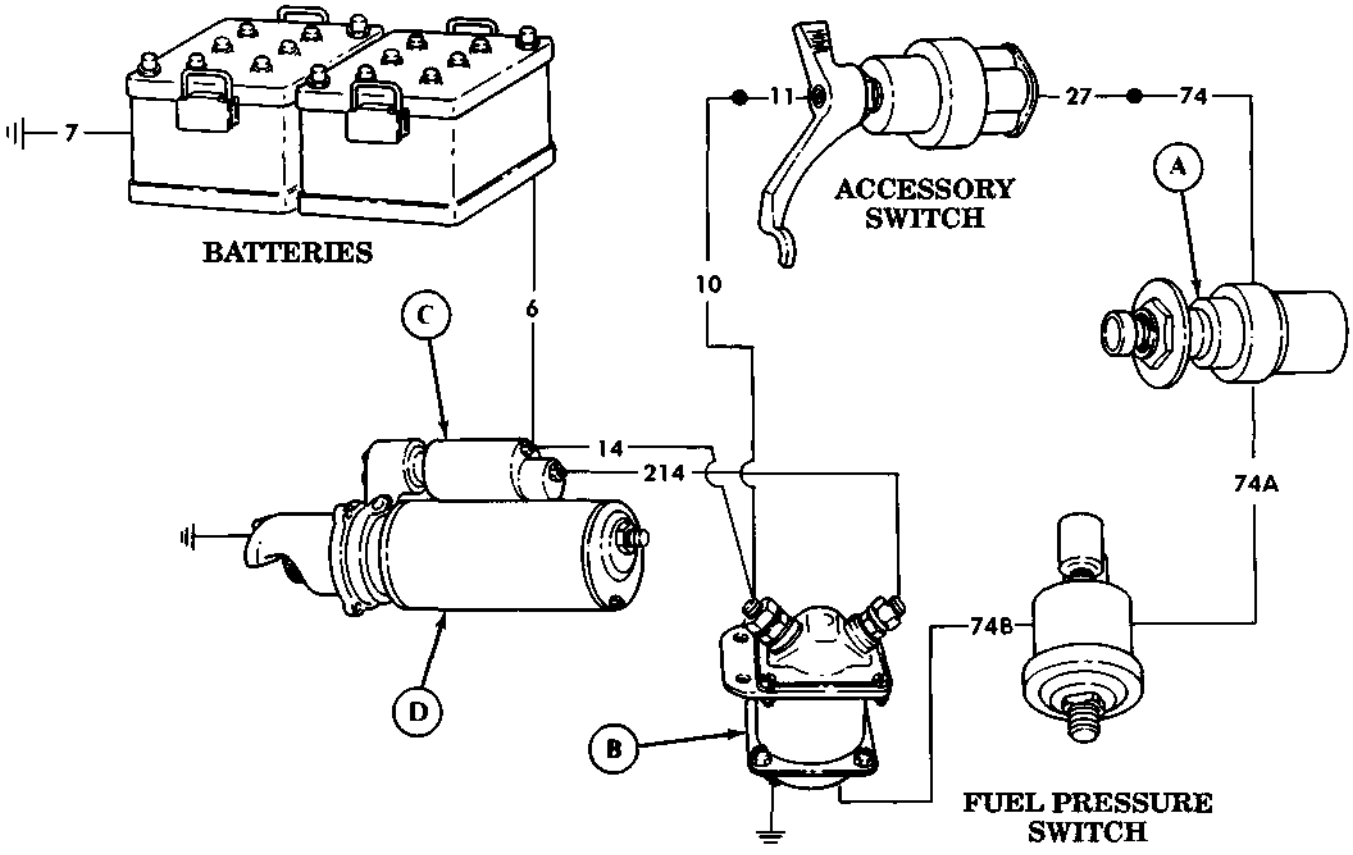

https://truckmanualshub.com/

1-20. ELECTRICAL SYSTEMS OPERATION (Contd)

c. Generating System Operation.

ALTERNATOR - Supplies electrical power to operate all electrical accessories and keeps batteries charged when vehicle engine is operating.

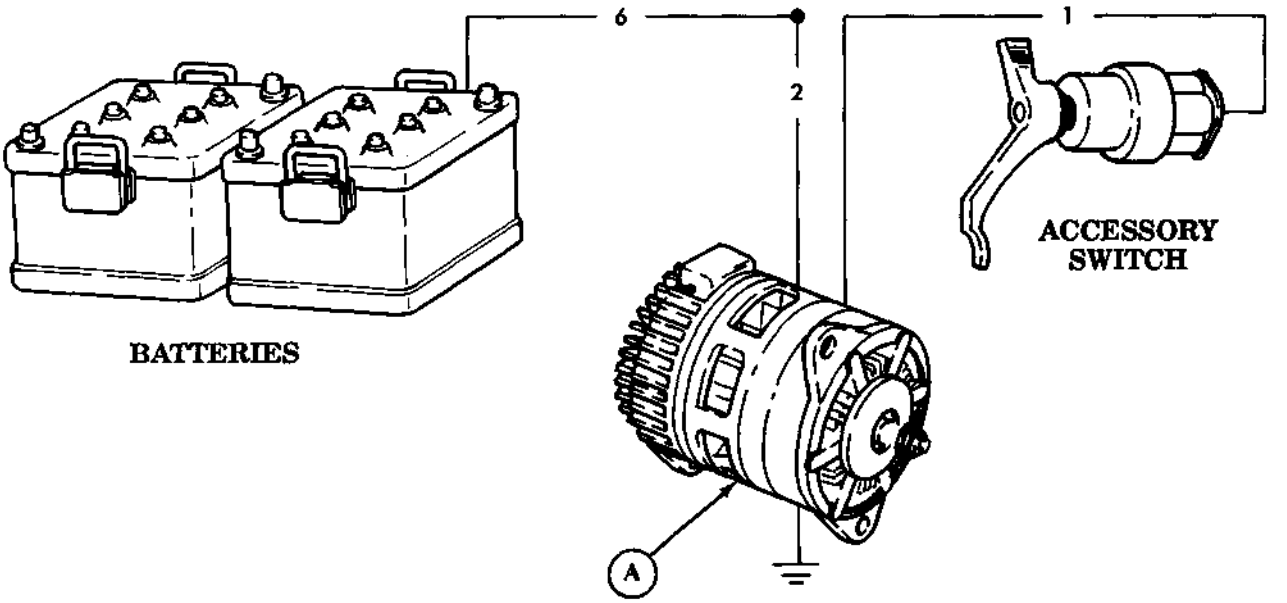

d. Heating System Operation.

HOT WATER PERSONNEL HEATER - Warms interior of vehicle cab in cold weather. Hot engine coolant circulating through heater is utilized to warm air flowing through heater core. An electric motor, with two speeds, powers a fan to force outside air through heater and into cab.

PERSONNEL HEATER SWITCH - Allows heater fan to be operated at two speeds to ensure comfort of personnel in cab.

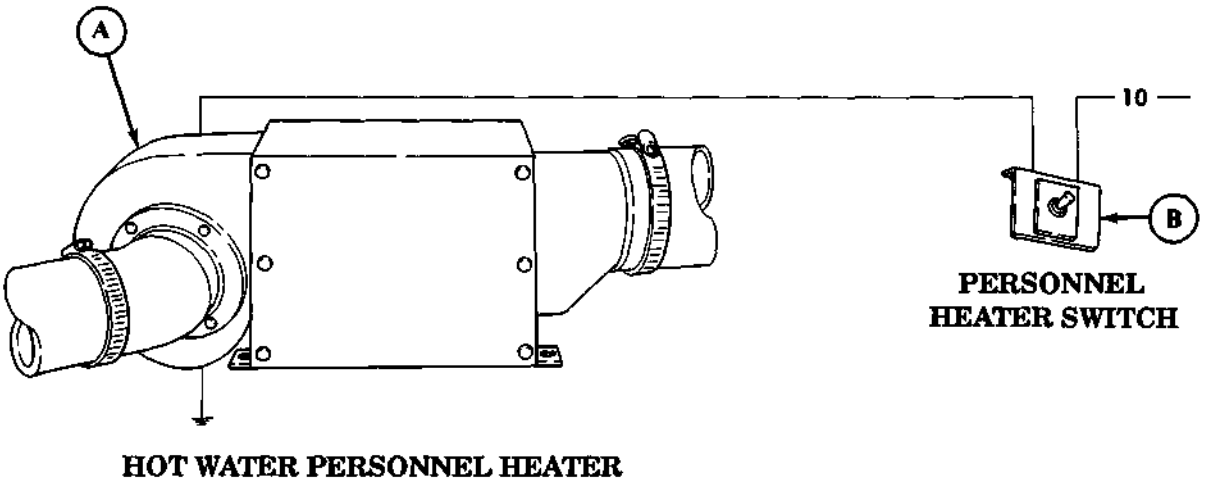

https://truckmanualshub.com/

1-20. ELECTRICAL SYSTEMS OPERATION (Contd)

e. Gage and Warning System Operation.

(A) **OIL PRESSURE GAGE -** Indicates pressure of oil circulating through vehicle engine. Receives electrical current from oil pressure sending unit located on engine block.

(B) **ENGINE TEMPERATURE GAGE -** Indicates temperature of engine coolant circulating through engine. Receives electrical current from engine temperature sending unit located on engine block.

(C) **WARNING BUZZER -** Produces a loud sound to warn vehicle operator that the low air pressure switch has been activated.

(D) **LOW AIR PRESSURE SWITCH -** Activates warning buzzer to sound when pressure in compressed air system is not high enough to safely operate vehicle.

(E) **BATTERY/GENERATOR GAGE -** Indicates amount of voltage in electrical system provided by batteries and alternator.

(F) **FUEL GAGE -** Indicates amount of fuel in fuel tank. Receives electrical current from fuel tank sending unit located in fuel tank.

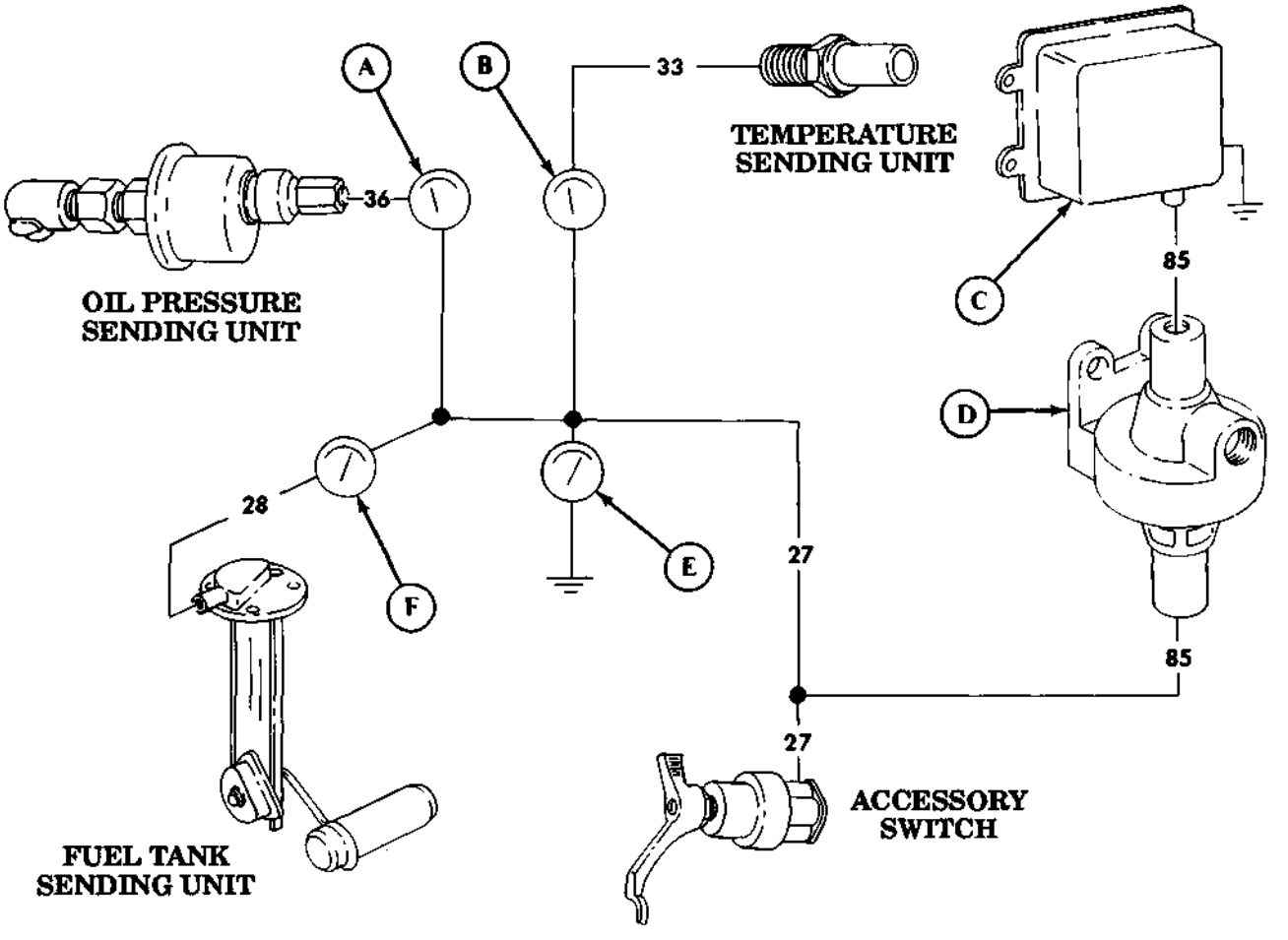

https://truckmanualshub.com/

1-21. COMPRESSED AIR AND BRAKE SYSTEM OPERATION

The compressed air and brake system takes filtered air, compresses it, and supplies it to various components that enable the operator to slow down or stop the vehicle. This system also supplies compressed air to air-actuated accessories throughout the vehicle such as air horn and windshield wipers. These components and accessories will be described as part of the following systems:

a. Compressed Air System Operation (page 1-60).
b. Brake System Operation (page 1-62).

a. Compressed Air System Operation.

(A) **AIR COMPRESSOR** - Draws in air, filters it, pressurizes it, and forces it into air reservoirs for storage.

(B) **AIR HORN** - Receives air from the compressed air system in order to operate.

(C) **GOVERNOR** - Automatically opens or closes a valve inside air compressor to ensure a sufficient quantity of compressed air is available for air system.

(D) **WINDSHIELD WIPER MOTOR** - Receives air from the compressed air system to actuate windshield wipers.

(E) **PRESSURE GAGE** - Indicates amount of pressurized air available in the air system. Normal pressure is 85-120 psi (586-827 kPa).

(F) **SAFETY VALVE** - Prevents excessive pressure to build up in air system by releasing air when necessary.

(G) **AIR RESERVOIRS** - Store pressurized air for use in air system and traps water to protect air-operated accessories from corrosion and freezing.

https://truckmanualshub.com/

1-21. COMPRESSED AIR AND BRAKE SYSTEM OPERATION (Contd)

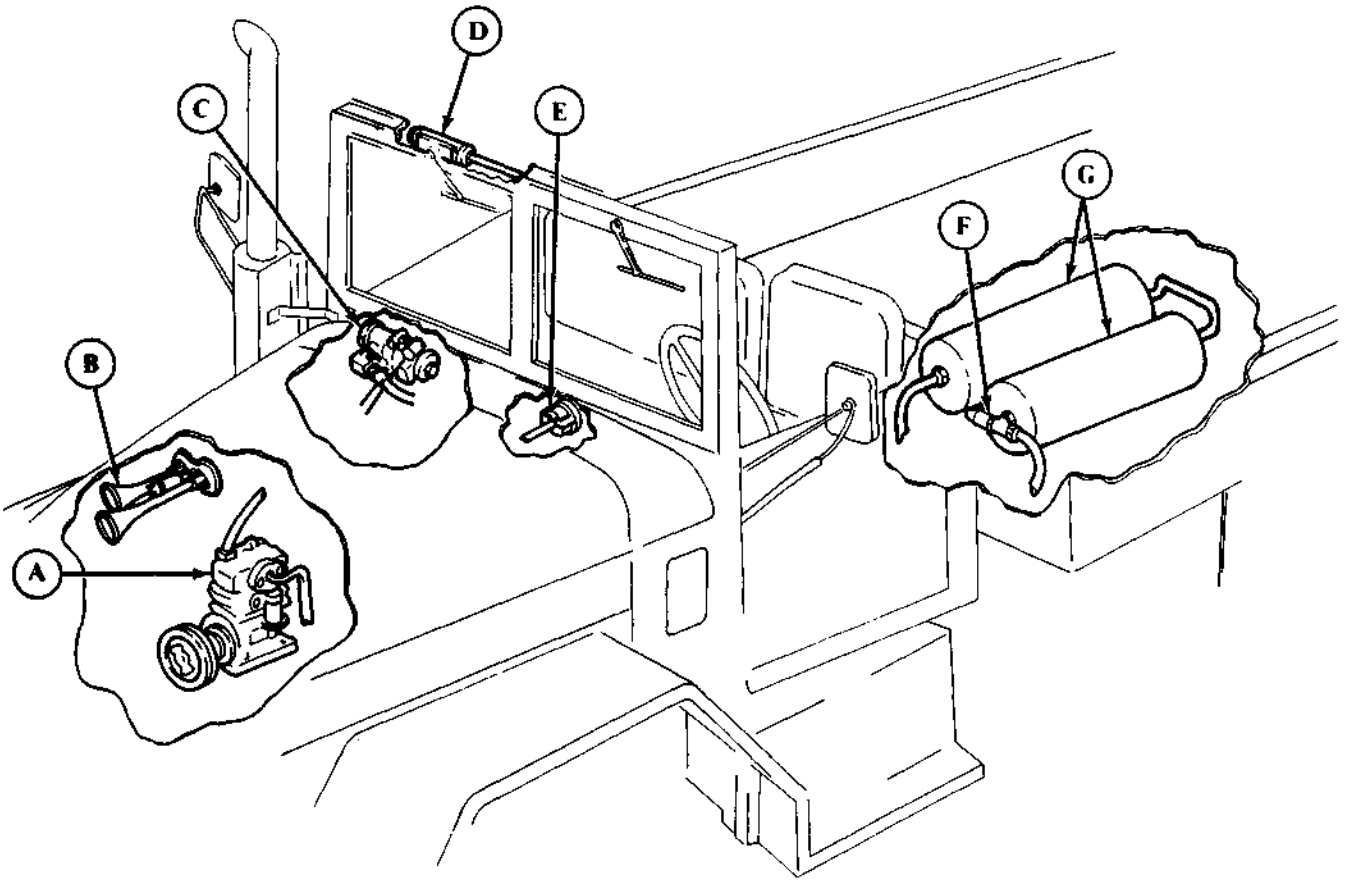

https://truckmanualshub.com/

1-21. COMPRESSED AIR AND BRAKE SYSTEM OPERATION (Contd)

b. Brake System Operation.

(A) **HYDRAULIC BRAKE LINES** - Directs brake fluid under hydraulic pressure to all six wheel cylinders.

(B) **BRAKE PEDAL** - Operator control for slowing or stopping vehicle. Applies force through brake linkage to master cylinder to actuate vehicle brakes.

(C) **BRAKE LINKAGE** - Transmits brake pedal force to master cylinder.

(D) **HAND CONTROL VALVE** (M275A2 only) - Controls semi-trailer brake system. Allows brakes to be applied and released manually.

(E) **MASTER CYLINDER** - Stores brake fluid and is the filling location for addition of brake fluid. Converts force from brake linkage into hydraulic pressure.

(F) **AIR-HYDRAULIC UNIT** - Combines hydraulic pressure from master cylinder and air pressure from compressed air system to supply increased hydraulic pressure to the vehicle brakes.

(G) **WHEEL CYLINDER** - Converts hydraulic pressure into mechanical force to press brakeshoes against surface of brakedrum.

(H) **BRAKEDRUM** - Encloses wheel cylinder and brakeshoes, and provides surface for brakeshoes to press against.

(I) **BRAKESHOE** - Applies friction to brakedrum to slow or stop rotation of wheels.

https://truckmanualshub.com/

1-21. COMPRESSED AIR AND BRAKE SYSTEM OPERATION (Contd)

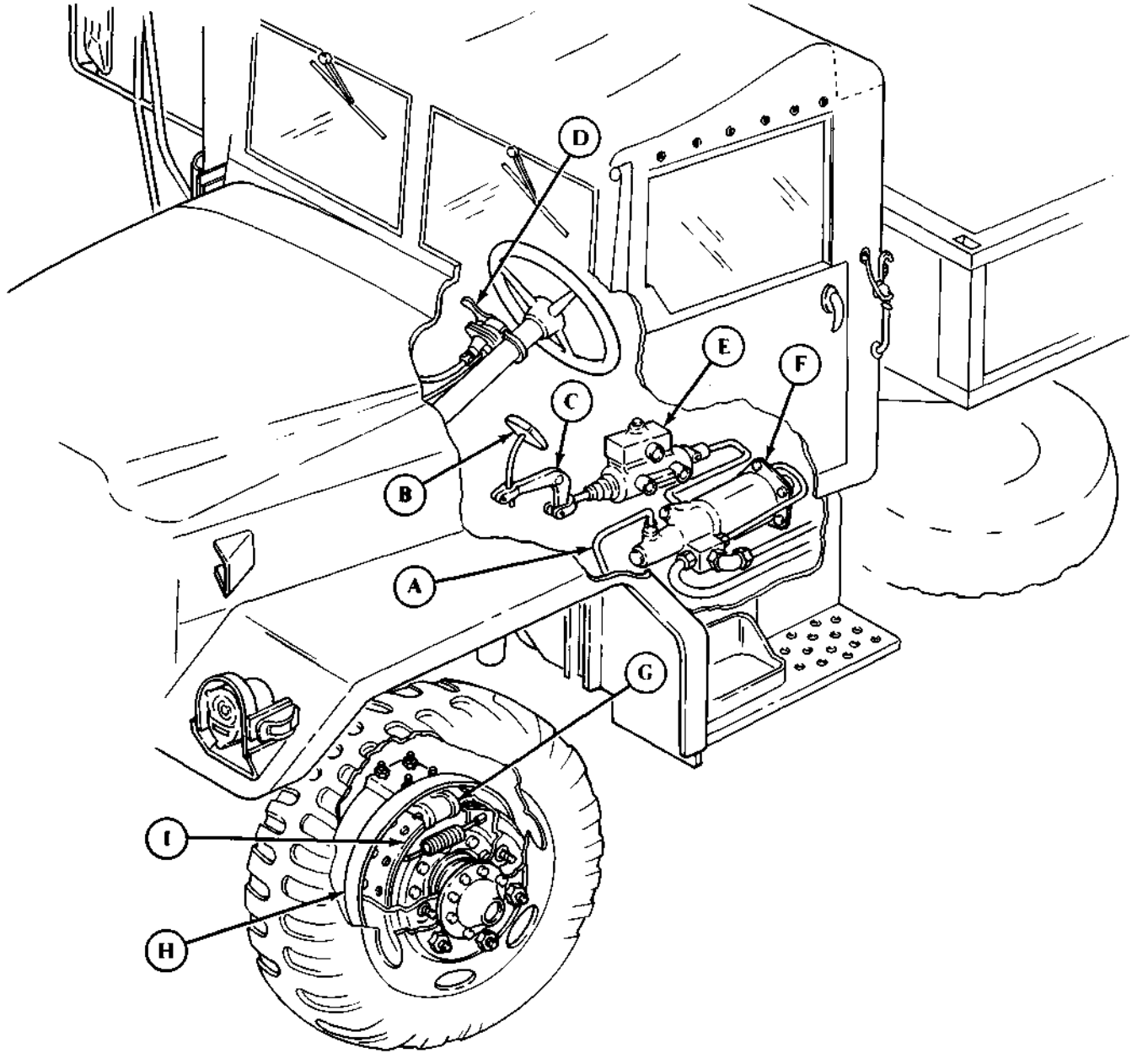

https://truckmanualshub.com/

1-22. SPECIAL PURPOSE BODIES SYSTEMS OPERATION

The special purpose bodies include controls, hydraulics, and their related equipment that are required to perform specific tasks for outside construction. Each of these parts will be described as part of the following system:

a. **Dump Body Hydraulic System Operation (M342A2) (page 1-64).**
b. **Earth Boring, Polesetting, and Rear Winch Systems Operation (M764) (page 1-66).**
c. **Outrigger Hydraulic System Operation (M764) (page 1-68).**
d. **Water Tank System Operation (M50A2, M50A3) (page 1-70).**
e. **Fuel Tank System Operation (M49A2C) (page 1-70).**
f. **Rear Winch and Pipeline Systems Operation (M756A2) (page 1-72).**

a. Dump Body Hydraulic System Operation (M342A2).

The dump body is used on M342A2 vehicles. These models are used to transport and deposit cargo. Dump body hydraulic system converts mechanical power from transmission PTO into fluid power through use of hydraulic pump. Pump draws oil from oil reservoir and then forces it into control valve. This hydrualic pressure raises and lowers dump body. Major components of dump body hydrualic system are:

(A) **DUMP BODY CONTROL LEVER LOCK** - Prevents operation of dump body control lever.

(B) **DUMP BODY CONTROL LEVER** - Permits operation of dump body in four positions. It is pushed forward to lowest position to raise dump body, raised to second lowest position to lock dump body, and raised to third position to lower dump body. When control lever is fully raised to vertical position, dump body is locked in position by use of a hydraulic safety latch.

(C) **HYDRAULIC RESERVOIR** - Storage tank for hydraulic oil.

(D) **CONTROL VALVE** - Four-port valve accepts pressurized oil from hydraulic pump and directs oil to cylinder assembly.

(E) **HYDRAULIC SAFETY LATCH** - Hydraulically-operated in conjunction with dump body control lever. Safety latch locks dump body in the lowered position and releases it when control lever is pushed forward.

(F) **CYLINDER ASSEMBLY** - Consists of two hydraulic cylinders which raise and lower dump body using hydraulic oil pressure.

(G) **CONTROL BOX** - Transmits motion of control rod to actuate control valve.

(H) **HYDRAULIC PUMP** - Driven by PTO propeller shaft, it draws oil from oil reservoir, then pressurizes and directs it to control valve.

(I) **DUMP BODY CONTROL ROD** - Connects control lever to control box.

(J) **TRANSMISSION POWER TAKEOFF PROPELLER SHAFT** - Transmits power from transmission PTO to hydraulic pump.

(K) **DUMP BODY CONTROL LINK** - Connects control valve to transmission PTO.

(L) **TRANSMISSION POWER TAKEOFF** - Attached to side of transmission to provide power for hydraulic pump.

https://truckmanualshub.com/

1-22. SPECIAL PURPOSE BODIES SYSTEMS OPERATION (Contd)

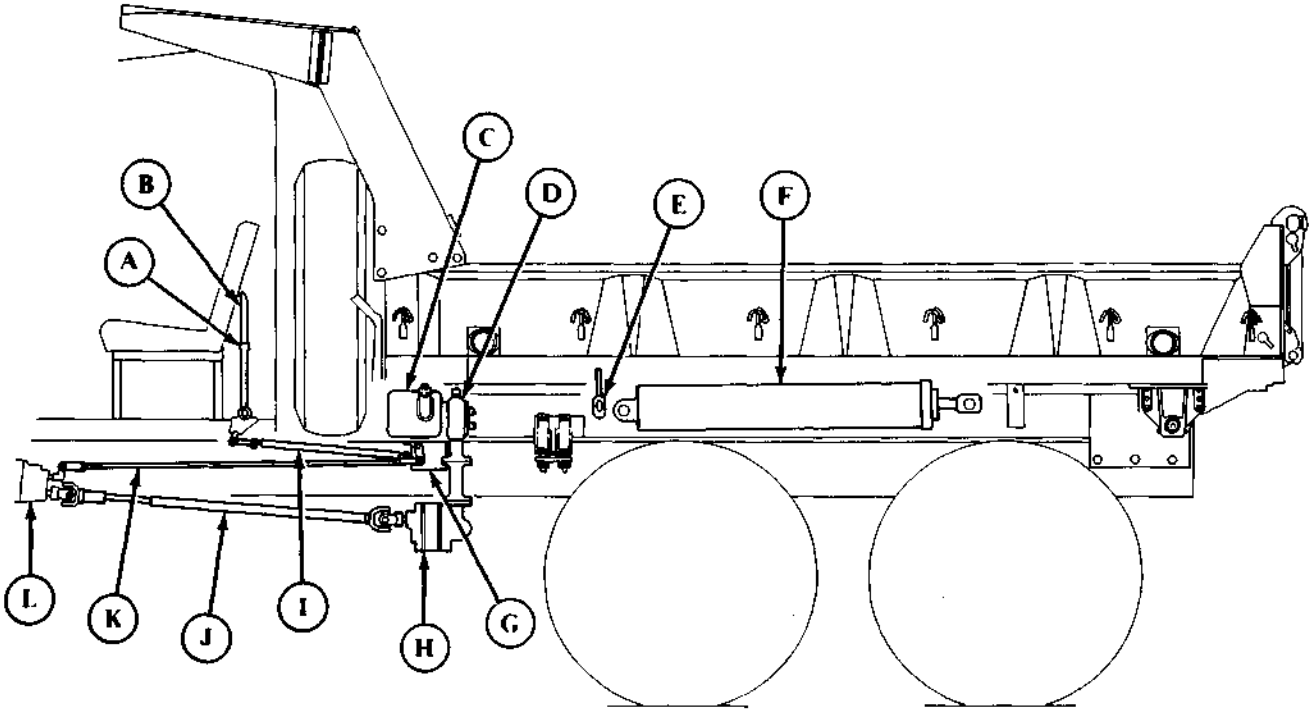

https://truckmanualshub.com/

1-22. SPECIAL PURPOSE BODIES SYSTEMS OPERATION (Contd)

b. Earth Boring, Polesetting, and Rear Winch Systems Operation (M764).

The rear winch and earth boring machine are mechanically driven from the engine and operate individually through a power divider. Rear winch is used primarily with polesetting derrick to position and install poles. The earth boring machine is used to drill select size holes to mount poles. Major components of earth boring machine, polesetting derrick, and rear winch are:

(A) **REAR WINCH CONTROL ROD** - Connects rear winch to power divider.

(B) **REAR WINCH CONTROL** - A manually-operated control lever located inside the cab that permits engagement and disengagement of the rear winch.

(C) **POWER-DIVIDER CONTROL LEVER** - A manually-operated control lever located inside the cab that permits engagement and disengagement of earth boring machine and permits forward and reverse operation of rear winch.

(D) **EARTH BORING AND REAR WINCH CONTROL ROD** - Connects earth boring machine and rear winch control to power divider.

(E) **REAR WINCH** - Reels in or pays out cable for polesetting operations.

(F) **REAR WINCH DRIVE CHAIN** - Transmits mechanical power from power divider to rear winch.

(G) **EARTH BORING CLUTCH** - Allows smooth transfer of power and control for all operations of earth boring machine.

(H) **EARTH BORING CLUTCH CONTROLS** - Operate drive clutch and feed clutch.

(I) **POWER LEVELER** - Positions earth boring machine and polesetting derrick using mechanical power.

(J) **POLESETTING DERRICK** - Raises, positions, and installs poles.

(K) **EARTH BORING MACHINE** - Houses auger bit drive and polesetting derrick.

(L) **MAIN SUPPORT TUBE** - Supports operator's seat and earth boring clutch controls.

(M) **EARTH BORING PROPELLER SHAFT** - Transmits power from power divider to earth boring machine.

(N) **POWER DIVIDER** - Uses mechanical power of the transfer case power takeoff to drive rear winch, earth boring machine, and outriggers.

https://truckmanualshub.com/

1-22. SPECIAL PURPOSE BODIES SYSTEMS OPERATION (Contd)

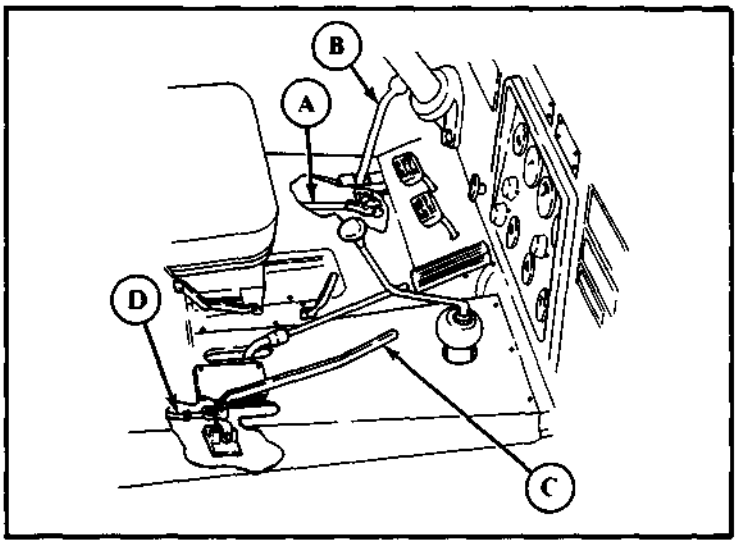

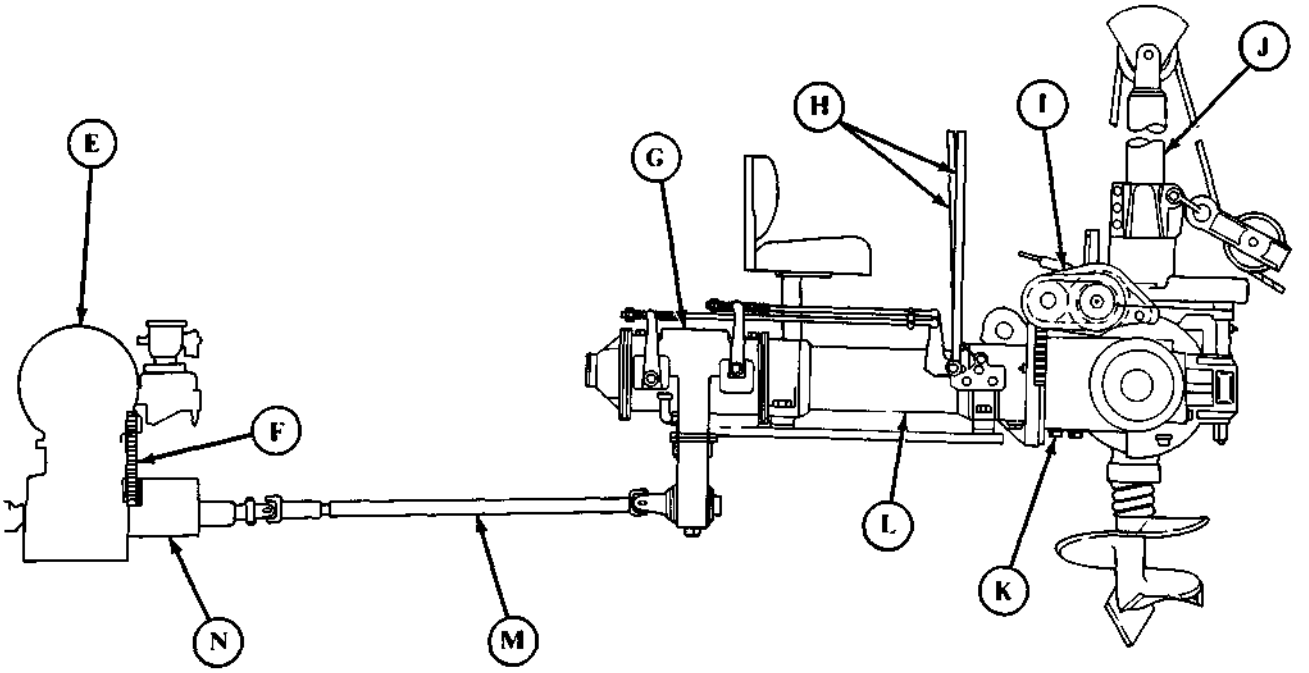

https://truckmanualshub.com/

1-22. SPECIAL PURPOSE BODIES SYSTEMS OPERATION (Contd)

c. Outrigger Hydraulic System Operation (M764).

The outrigger hydraulic system converts power of engine into fluid power by use of hydraulic pump. At this pump, oil pressure is supplied to left and right outrigger control valves, which direct fluid pressure to outrigger legs. Outrigger legs stabilize the vehicle for earth boring and polesetting operations. The major components of the outrigger hydraulic system are:

A **OUTRIGGER CONTROL VALVE -** Consists of two two-way valves that are located directly under the control levers. Valves direct hydraulic oil from hydraulic pump to hydraulic outriggers and back to hydraulic reservoir.

B **OUTRIGGER CONTROL LEVERS -** Manual controls attached to the control valve that regulate hydraulic oil flow for raising and lowering outriggers.

C **HYDRAULIC OIL RESERVOIR -** Storage tank for hydraulic oil.

D **HYDRAULIC PUMP -** Draws oil from hydraulic oil reservoir and directs it to outrigger control valve.

E **OUTRIGGER LATCH -** Used to support outrigger in upward position when not in use.

F **OUTRIGGER CYLINDER -** A hydraulically-driven piston that extends when control lever is pushed to DOWN position and retracts when control lever is pushed to UP position. This cylinder is contained in the upper portion of the outrigger leg.

G **OUTRIGGER LEG -** Two hydraulically-actuated support legs mounted on body at rear of vehicle. Each leg consists of an upper leg, lower leg, and outrigger shoe.

https://truckmanualshub.com/

1-22. SPECIAL PURPOSE BODIES SYSTEMS OPERATION (Contd)

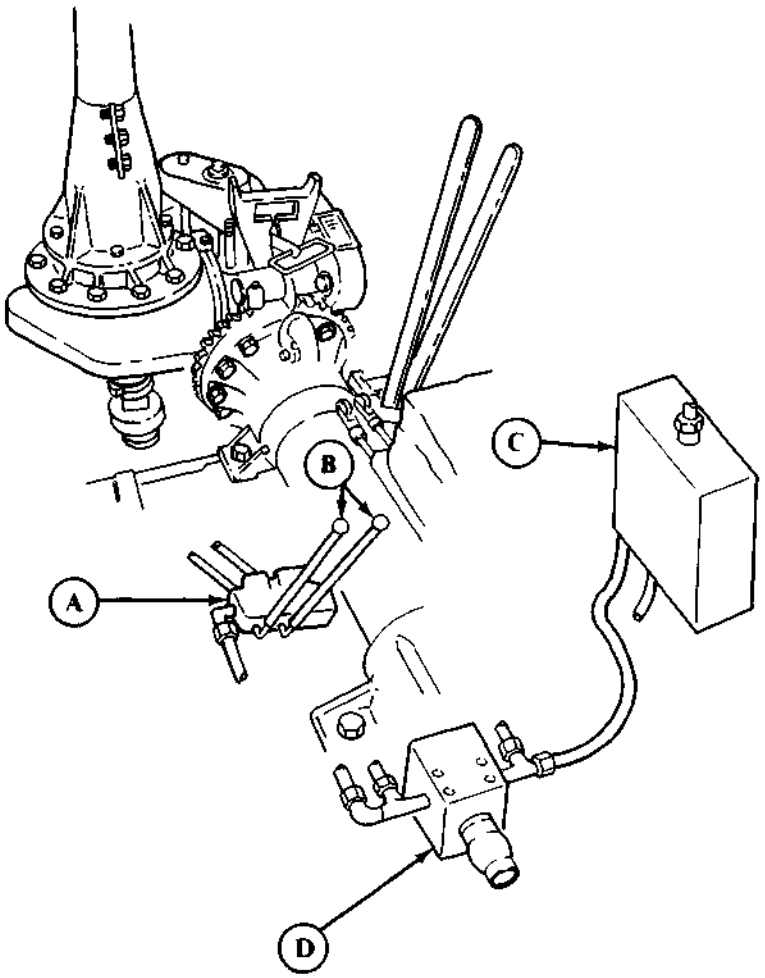

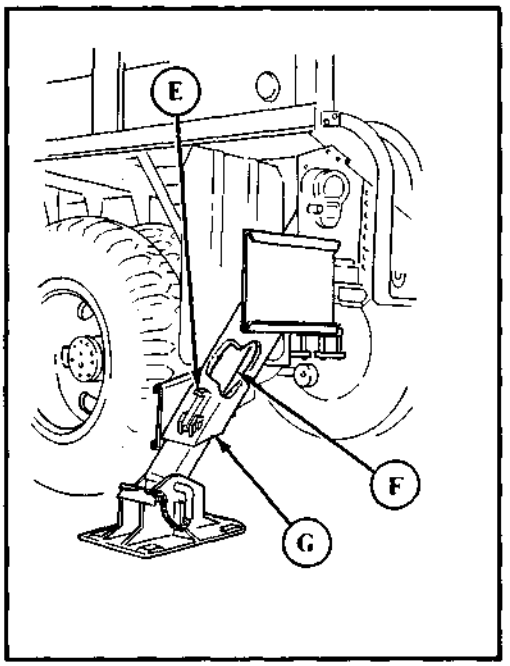

https://truckmanualshub.com/

1-22. SPECIAL PURPOSE BODIES SYSTEMS OPERATION (Contd)

d. Water Tank System Operation (M50A2, M50A3).

Water tanks M50A2 and M50A3 are used for transferring quantities of water. They can operate in cold weather using the exhaust pipe cap which causes engine exhaust to be diverted under the water tank. This warms the water to prevent it from freezing in temperatures below 32°F (0°C). The water tank system differs in operation compared to the fuel tank system operation. Refer to para. 1-22e for description of major water tank components and para. 1-19e for exhaust components.

e. Fuel Tank System Operation (M49A2C).

The fuel tank is used to transport and dispense quantities of fuel. Fuel is dispensed with the use of a pump driven by engine power through the transfer case PTO. Major components of fuel tank system are:

(A) **DISCHARGE VALVE CONTROL LEVERS** - Two manual control levers that allow fuel to be discharged from either front or rear compartment of tank body.

(B) **METER** - Indicates quantity of fuel dispensed.

(C) **FUEL FILTER/WATER SEPARATOR** - Separates water from fuel and removes contaminates from fuel before distribution.

(D) **PRESSURE GAGE** - Checks condition of filter elements by indicating difference in pressure between inlet and outlet side of filter.

(E) **SUMP-** Collects water from separator and drains through the manual drain valve.

(F) **GATE VALVES** - Provide a means of turning on or shutting off flow of fuel.

(G) **MANIFOLD DRAIN** - Accepts fuel from discharge pipes and transfers it to pump.

(H) **PUMP-** Draws fuel from tank and discharges it under pressure.

(I) **EMERGENCY CONTROL LEVER RELEASE** - When actuated, it allows discharge valve control levers to return to OFF position which stops flow of fuel.

(J) **STATIC REAR AND GROUNDING WIRES** - Transmits any static electricity produced by fuel flowing through the piping harmlessly to the ground. The grounding wires are pulled out from static reel and attached to ground and vehicle to be fueled.

(K) **MANUAL DRAIN VALVE** - Provides a means to periodically drain water from sump.

(L) **DUMP VALVE** - When opened, water collected by fuel filter/water separator is automatically allowed to drain out.

(M) **FUEL DISCHARGE PIPE** - Receives fuel from tank body compartments and directs it to fuel filter/water separator.

(N) **DISCHARGE VALVE** - Operates by cables and is used to drain front and rear tank compartments.

(O) **FRONT AND REAR DISCHARGE VALVE CABLES** - Connect discharge valve control levers to the two discharge valves.

https://truckmanualshub.com/

1-22. SPECIAL PURPOSE BODIES SYSTEMS OPERATION (Contd)

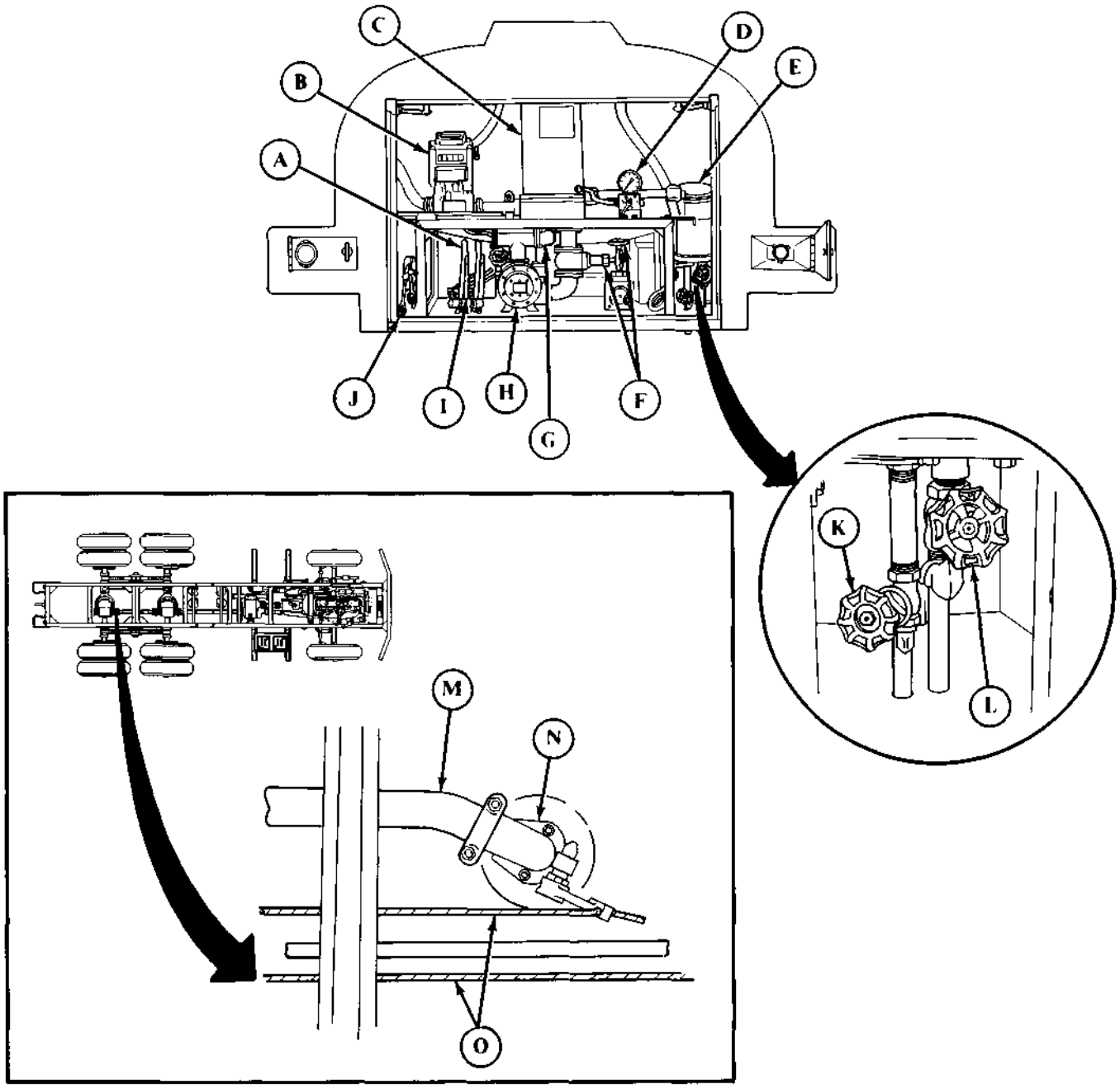

https://truckmanualshub.com/

1-22. SPECIAL PURPOSE BODIES SYSTEMS OPERATION (Contd)

f. Rear Winch and Pipeline Systems Operation (M756A2).

A rear winch is installed on the M756A2 pipeline construction vehicle. Rear winch is used with A-frame to position, assemble, and install pipe. A-frame can be used at rear or either side of vehicle. Major components of the rear winch and pipeline systems are:

(A) **REAR WINCH** - Reels in or pays out winch cable for pipe installation operations.

(B) **TRANSFER CASE POWER TAKEOFF** - Receives power from vehicle engine through the transfer case to provide power directly to rear winch.

(C) **WINCH DRIVE CHAIN** - Transfers power from PTO to winch.

(D) **A-FRAME** - Provides different routing positions for winch cable.

(E) **WINCH CABLE** - Used to hoist, move, and install pipe.

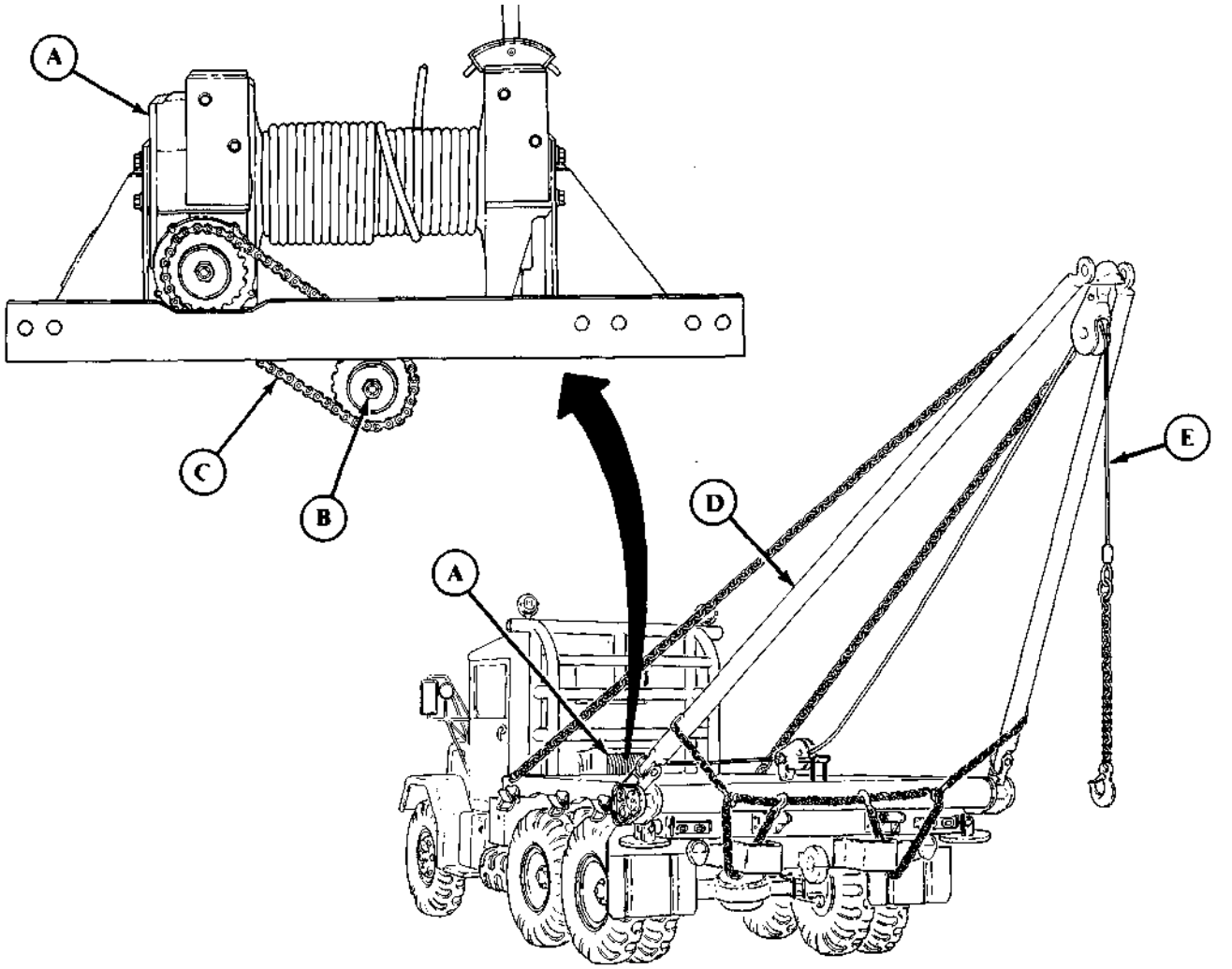

https://truckmanualshub.com/

CHAPTER 2

SERVICE AND TROUBLESHOOTING INSTRUCTIONS

Section I. Repair Parts, Special Tools, TMDE, and Support Equipment (page 2-1)
Section II. Service Upon Receipt (page 2-1)
Section III. Preventive Maintenance Checks and Services (PMCS) (page 2-2)
Section IV. Mechanical Systems Troubleshooting (page 2-24)
Section V. Compressed Air and Brake System Troubleshooting (page 2-52)
Section VI. Electrical Systems Troubleshooting (page 2-74)
Section VII. STE/ICE Troubleshooting (page 2-148)

Section I. REPAIR PARTS, SPECIAL TOOLS, TMDE, AND SUPPORT EQUIPMENT

2-1. COMMON TOOLS AND EQUIPMENT

For authorized common tools and equipment, refer to the Modified Table of Organization and Equipment (MTOE) applicable to your unit.

2-2. SPECIAL TOOLS, TMDE, AND SUPPORT EQUIPMENT

Special Tools, Special Test, Measurement, and Diagnostic Equipment (TMDE), and Support Equipment used to maintain the vehicles covered in this manual can be found in TM 9-2320-361-20P.

2-3. REPAIR PARTS

Repair parts covering unit maintenance are listed and illustrated in the Repair Parts and Special Tools List (TM 9-2320-361-20P).

Section II. SERVICE UPON RECEIPT

2-4. GENERAL

a. Upon receipt of a new, used, or reconditioned vehicle, you must determine if the vehicle has been properly prepared for service. The following steps should be performed:

(1) Inspect all assemblies, subassemblies, and accessories to be sure they are in proper working order.

(2) Secure, clean, lubricate, or adjust as needed.

(3) Check all Basic Issue Items (TM 9-2320-361-10) to be sure every item is present, in good condition, and properly mounted or stowed.

(4) Follow general procedures for all service and inspections given in TM 9-2320-361-10.

b. The operator will assist when performing service upon receipt inspections.

c. Refer to TM 9-2320-361-10 when testing equipment for proper operation.

2-5. GENERAL INSPECTION AND SERVICING INSTRUCTIONS

The following steps should be taken while performing general inspection and services:

(1) Use TM 9-2320-361-10 and LO 9-2320-209-12-1, as well as other sections of this manual, when servicing and inspecting equipment.

https://truckmanualshub.com/

2-5. GENERAL INSPECTION AND SERVICING INSTRUCTIONS (Contd)

WARNING

Drycleaning solvent is flammable and will not be used near open flame. Use only in well-ventilated places. Failure to do so may result in injury to personnel.

(2) Clean all exterior surfaces coated with rust-preventive compounds with drycleaning solvent.

(3) Read "Processing and Deprocessing Record of Shipping, Storage, and Issue of Vehicles and Spare Engines," tag (DD Form 1397) and follow all precautions listed. This tag should be attached to steering wheel, shift column, or battery switch.

NOTE

If vehicle has been driven to using organization, all of the above work should have been completed.

2-6. SPECIFIC INSPECTION AND SERVICING INSTRUCTIONS

The following steps should be taken while performing specific inspections and services:

(1) Perform the semiannual (S), six months, or 6,000 miles (9,654 kilometers), preventive maintenance checks and services listed in section III of this chapter.

(2) Lubricate the vehicle according to LO 9-2320-209-12-1. Do not lubricate gearcases or engine unless processing tag states that the oil is unsuitable for 500 miles (805 kilometers) of operation. If oil is suitable, just check level.

(3) Schedule semiannual service on DD Form 314 (Preventive Maintenance Schedule and Record Card).

(4) If vehicle is delivered with a dry charged battery, activate it according to TM 9-6140-200-14.

(5) Check vehicle coolant level and determine if solution is proper for climate. (Refer to TB 750-651 for preparation of antifreeze solutions.)

Section III. PREVENTIVE MAINTENANCE CHECKS AND SERVICES (PMCS)

2-7. GENERAL

The best way to maintain vehicles covered by this manual is to inspect them on a regular basis so minor faults can be discovered and corrected before they result in serious damage or failure of vehicle and equipment or injury to personnel. This section contains systematic instructions for inspection, adjustment, and correction of vehicle components to avoid costly repairs or major breakdowns. This is referred to as Preventive Maintenance Checks and Services (PMCS).

2-8. INTERVALS

NOTE

Designated intervals are performed under usual operating conditions. PMCS intervals must be performed more frequently when operating under unusual conditions.

a. Unit maintenance, assisted by operator/crew will perform the checks and services contained in table 2-1 at the following intervals:

(1) Semiannually (S). Every 6 months or 6,000 miles (9,654 kilometers), whichever comes first.

(2) Annually (A). Every 12 months or 12,000 miles (19,308 kilometers), whichever comes first.

(3) Biennially (B). Every 24 months or 24,000 miles (38,616 kilometers), whichever comes first.

b. Perform all (S) inspections in addition to (A) inspections at the time of the annual inspection. Perform all (A) and (S) inspections in addition to (B) inspections at the time of the biennial inspection.

https://truckmanualshub.com/

2-9. REPORTING REPAIRS

All uncorrected defects will be recorded on Equipment Inspection and Maintenance Worksheet, DA Form 2404, in accordance with DA Pam 738-750.

2-10. GENERAL SERVICE AND INSPECTION PROCEDURES

a. While performing specific PMCS procedures, make sure items are correctly assembled, secure, serviceable, not worn, not leaking, and adequately lubricated as defined below:

(1) An item is CORRECTLY ASSEMBLED when it is in proper position and all parts are present.

(2) When wires, nuts, washers, hoses, or attaching hardware cannot be moved by hand, wrench, or prybar, they are secure.

(3) An item is UNSERVICEABLE if it is worn beyond established wear limits or is likely to fail before the next scheduled inspection.

(4) An item is WORN if there is play between joining parts, or warning and caution plates are not readable.

(5) LEAKS. TM 9-2320-361-10 contains definitions of class I, II, and III leaks and their effect on vehicle operation.

(6) If an item meets the requirements specified by lubrication order, LO 9-2320-209-12-1, then it is ADEQUATELY LUBRICATED.

b. Where the instruction "Tighten" appears in a procedure, you must tighten with a wrench to the given torque value even when the item appears to be secure.

WARNING

Drycleaning solvent is flammable and will not be used near open flame. Use only in well-ventilated places. Failure to do so may result in injury to personnel.

c. Where the instruction "clean" appears in a procedure, you must use drycleaning solvent, specification P-D 680, to clean grease or oil from metal parts. After the item is cleaned, rinsed, and dried, apply a light grade of oil to unprotected surfaces to prevent rusting. To clean rubber and plastic materials, use soap and water.

2-11. SPECIFIC PMCS PROCEDURES

a. The preventive maintenance checks and services for which you are responsible are provided in table 2-1. The checks and services listed are arranged in logical order requiring minimal time and effort on your part.

b. The following columns read across on the PMCS schedule:

Item Number. Provides logical order for PMCS performance and is used as a source number for DA Form 2404, on which your PMCS results will be recorded.

(2) Interval. Shows a bullet(•) opposite each item number to indicate when that check is to be performed. The bullet will be repeated when consecutive item numbers are to be inspected during the same interval. Interval columns include:

(a) Semiannually (S). Every 6 months or 6,000 miles (9,654 kilometers), whichever comes first.

(b) Annually (A). Every 12 months or 12,000 miles (19,308 kilometers), whichever comes first.

(c) Biennially (B). Every 24 months or 24,000 miles (38,616 kilometers), whichever comes first.

(3) Item To Be Inspected. Lists the system, common name, or location of the item to be inspected.

(4) Procedures. Provides instructions for servicing, inspection, replacement, or adjustment, and in some cases, having an item repaired at a higher level. If a defect is found, repair, fill, replace, or adjust as needed.

https://truckmanualshub.com/

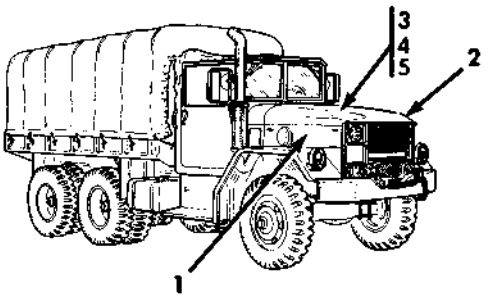

Table 2-1. Preventive Maintenance Checks and Services.

S-Semiannually A-Annually B-Biennially

Item No.	Interval S	Interval A	Interval B	Item to be Inspected	Procedures
					PRIOR TO ROAD TEST
					Perform all Before Operation checks listed in TM 9-2320-361-10, "Preventive Maintenance Checks and Services".
1	•			Starter	Start engine (TM 9-2320-361-10). While starting engine, listen for unusual noises and difficult cranking.
2	•			Engine and engine compartment	**a.** Observe response to accelerator pedal (4). Listen for unusual noises. Observe for hesitation, varying idle speed, and sticking or binding of accelerator pedal.
					b. Be alert for excessive vibration and the smell of fuel, oil, coolant, and exhaust.
3	•			Throttle control	Check travel and free movement of throttle control (1) by watching accelerator pedal (4). When throttle control (1) is pulled out all the way, accelerator pedal (4) will be down against stop screw. Check that throttle control (1) does not bind or stick in any position.
					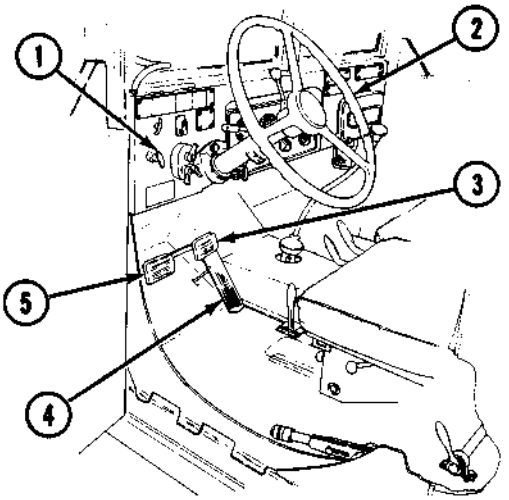
					ROAD TEST
					Perform all During Operation checks listed in TM 9-2320-361-10 in addition to those that follow. Drive the vehicle at least 5 miles (8 kilometers) over varied terrain both on and off road. This will provide ample time to check reported malfunctions and to locate unreported malfunctions.

https://truckmanualshub.com/

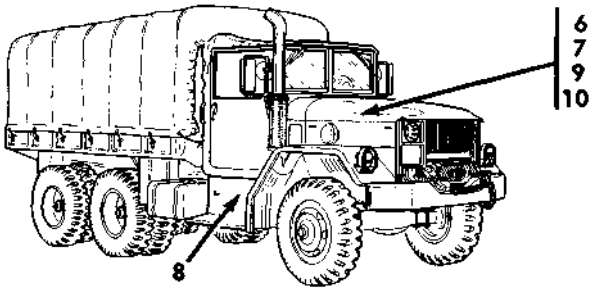

Table 2-1. Preventive Maintenance Checks and Services (Contd).

S-Semiannually **A-Annually** **B-Biennially**

Item No.	Interval S	Interval A	Interval B	Item to be Inspected	Procedures
4	•			Clutch	Check clutch pedal (5) for 1.5-2.0 in. (3.8-5.0 cm) free travel. If not within limits, adjust clutch pedal (para. 3-10).
5	•			Brakes	**a.** Check brake pedal (3) to make sure it stops no less than 2.0 in. (5.0 cm) above floor. If brake pedal (3) stops less than 2 in. (5.0 cm) above floor, check brakeshoe adjustment (para. 8-8).
	•				**b.** Check brake pedal (3) for 0.2-0.5 in. (.06-1.25 cm) free travel. If brake pedal adjustment is required (para. 8-14).
6	•			Steering system	**a.** Check steering wheel (2) and make sure it does not exceed more than 1 in. (2.5 cm) free play.
	•				**b.** Turn steering wheel (2) through full range and check for binding or excessive steering.
7	•			Engine stop control	Stop engine (TM 9-2320-361-10).
					AFTER ROAD TEST Perform all after-operation weekly and monthly checks in TM 9-2320-361-10 PMCS. Then make the following inspections in the order given, including kit items on vehicles so equipped. **WARNING** • Do not smoke, have open flame, or make sparks when performing battery maintenance. Batteries may explode causing severe injury to personnel. • Remove all jewelry such as rings, dog tags, bracelets, etc. If jewelry or disconnected battery ground cable contacts battery post, a direct short can result, causing damage to equipment or severe injury to personnel.
8	Ž			Batteries	Check and record specific gravity of each cell. Check electrolyte level. If low, add distilled water. Inspect battery cables for frays, splits, corrosion, and security. Clean top of batteries and lightly coat terminals with grease (TM 9-6140-200-14).
9	Ž			Air cleaner indicator	Test air cleaner indicator for proper operation (para. 3-16).
10			•	Data, caution, and warning plates	Inspect for completeness, security, and readability. Replace if necessary.

https://truckmanualshub.com/

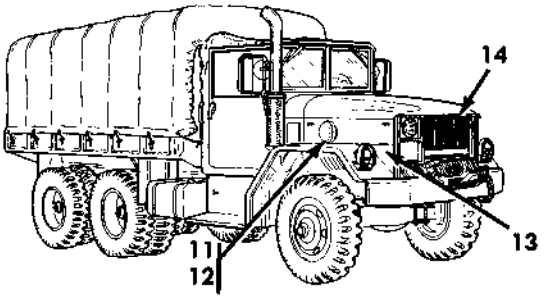

Table 2-1. Preventive Maintenance Checks and Services (Contd).

S-Semiannually A-Annually B-Biennially

Item No.	Interval S	Interval A	Interval B	Item to be Inspected	Procedures
					ENGINE COMPARTMENT **WARNING** If NBC exposure is suspected, all air filter media should be handled by personnel wearing protective equipment. Consult your unit NBC officer or NBC NCO for appropriate handling or disposal instructions. **NOTE** Open hood and secure with retaining latch (TM 9-2320-361-10).
11	•			Air intake system	**a.** Inspect air cleaner (4) and air intake tubes (2) for security or damage.
	•				**b.** Check air cleaner indicator tube (1) for kinks or bends.
	•				**c.** Inspect air cleaner element (3) for tears or presence of dirt and oil. Clean or replace as necessary (para. 3-14).
					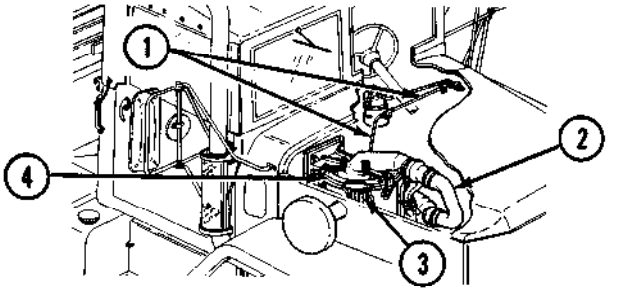
12		•		Starter and starter wiring	**a.** Inspect starter (5) mounting nuts for security. If loose, tighten nuts 70-80 lb-ft (95-108 N·m).
	•				**b.** Inspect starter (5) wiring for loose and corroded connections. If corrosion is present, clean. If loose, tighten.
13	•			Alternator and alternator wiring	**a.** Inspect alternator (9) for secure mounting.
					b. Inspect alternator (9) wiring for burned or frayed wires and loose or broken terminal connections. If loose, tighten. If burned, frayed, or broken, replace or repair wiring (para. 4-50).
14	•			Cooling system	**a.** Inspect radiator (6) for clogged or bent fins and protruding objects. Clean radiator and straighten bent fins.

https://truckmanualshub.com/

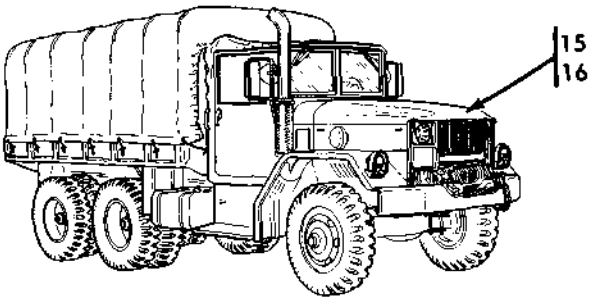

Table 2-1. Preventive Maintenance Checks and Services (Contd).

S-Semiannually A-Annually B-Biennially

Item No.	Interval S	Interval A	Interval B	Item to be Inspected	Procedures
	•				**b.** Test coolant freeze point.
	•				**c.** Inspect radiator (6) for corrosion. If excessive corrosion is found, flush radiator. Flush radiator and cylinder block every four years (para. 3-41).
	•				**d.** Inspect fan (7) for cracks and missing or loose rivets and screws. Replace fan (7) if defective (para. 3-40).
	•				**e.** Inspect radiator mounts for cracks, breaks, and loose conditions. If loose, tighten. If broken or cracked, replace (para. 3-42).
	•				**f.** Inspect water pump (8) for cracks, leaks, and loose conditions. If loose, tighten. If broken or cracked, replace (para. 3-47). 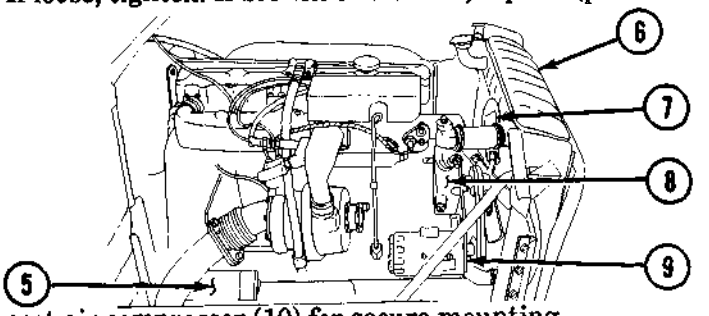
15	•			Air compressor	Inspect air compressor (10) for secure mounting.
16	•			Engine lubrication	**a.** Check oil dipstick for metal particles at end of dipstick. If metal particles are present, notify your supervisor.
	•				**b.** Check rocker arm cover (11) and oil pan areas for leaks. If leaking, notify your supervisor.
	•				**c.** Inspect oil filter (12) for leaks. If leaking, tighten center bolt 60 lb-ft (81 N·m). 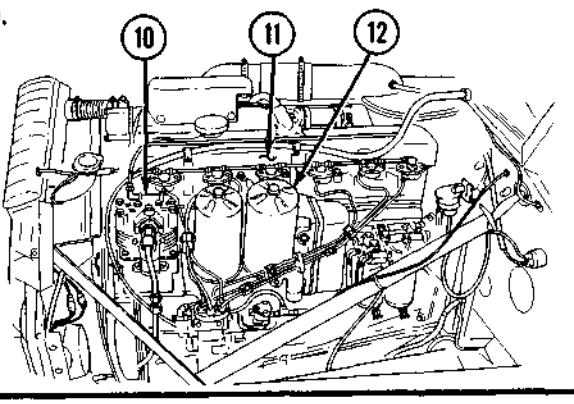

https://truckmanualshub.com/

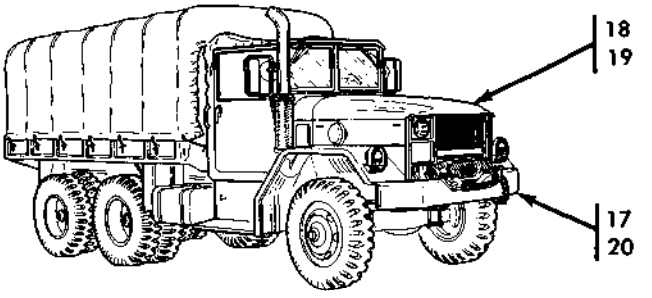

Table 2-1. Preventive Maintenance Checks and Services (Contd).

S-Semiannually A-Annually B-Biennially

Item No.	Interval S	Interval A	Interval B	Item to be Inspected	Procedures
17	•			Vibration damper	**a.** Make sure inner member and outer member alinement marks (1) are alined. If not, notify your supervisor. **WARNING** Stay clear of moving parts. Failure to do so may result in injury or death to personnel. **b.** With engine started and at idle (TM 9-2320-361-10), visually inspect vibration damper (2) for wobble and runout. If wobble or runout exist, notify your supervisor. 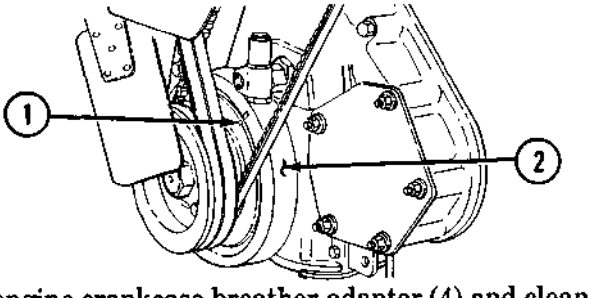
	•				
18	•			Engine crankcase breather adapter	Remove engine crankcase breather adapter (4) and clean (para. 3-7).
19	•			Manifold heater	Inspect tubing (3) and wiring (5) for loose connections and leaks. If leaking or loose, tighten.
20	•			Engine pads and mounts	Inspect front engine mounts for loose screws, broken, split, or missing rubber pads (6). If loose, tighten 65-70 lb-ft (88-95 N·m). If pads (6) are defective, replace (para. 3-2). 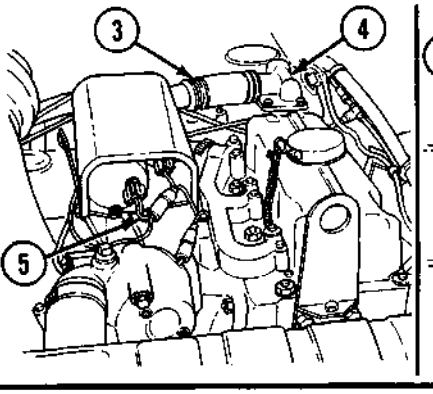 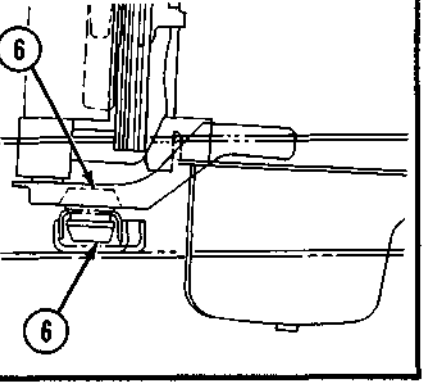

https://truckmanualshub.com/

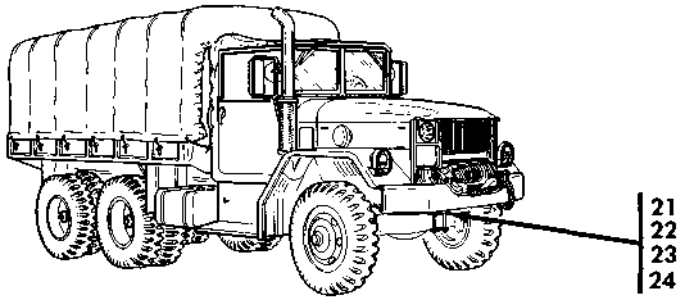

Table 2-1. Preventive Maintenance Checks and Services (Contd).

S-Semiannually A-Annually B-Biennially

Item No.	Interval S	Interval A	Interval B	Item to be Inspected	Procedures
21		•		Steering gear	Inspect steering gear (13) for security. If loose, tighten mounting screws 62-68 lb-ft (84-92 N·m).
					UNDERSIDE OF VEHICLE
22	•			Steering system	**a.** Inspect steering knuckles (7), tie rod (9), steering arm (10), drag link (11), and pitman arm (12) for breaks, cracks, and loose conditions. If loose, tighten. If broken or cracked, notify your supervisor.
	•				**b.** Inspect wheel bearing for loose conditions. If loose, adjust (para. 9-5).
	•				**c.** Inspect steering stops (8) for bends and breaks. If bent or broken, notify your supervisor.
23	•			Front end alinement	Check front end alinement. Correct toe-in is 13 ± .06 in. (3.2 ± 1.6 cm). Adjust toe-in if incorrect (para. 9-7). 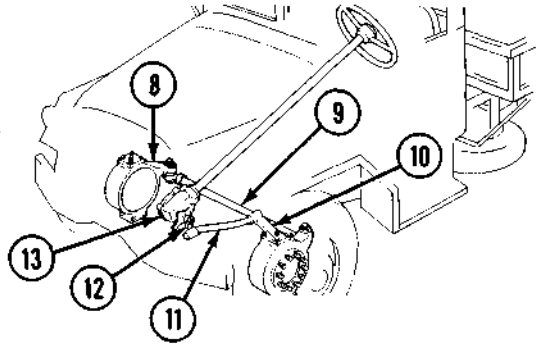
24	•			Front axle flange	**a.** Inspect front axle flanges (14) for leaks and loose mounting screws (15). If loose or leaking, tighten screws (15) 60-80 lb-ft (81-108 N·m). 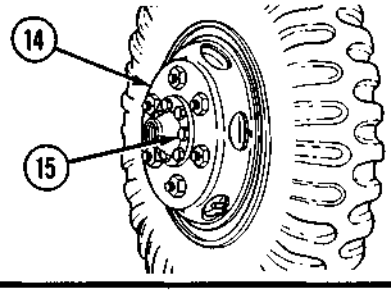

https://truckmanualshub.com/

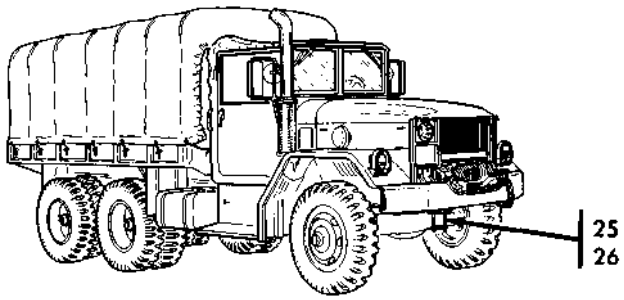

Table 2-1. Preventive Maintenance Checks and Services (Contd).

S-Semiannually A-Annually B-Biennially

Item No.	Interval S	Interval A	Interval B	Item to be Inspected	Procedures
		•			**b.** Inspect axle housing (4) for cracks that may cause leaks. If axle housing is cracked, notify your supervisor.
	•				**c.** Remove breather from front axle and clean (para. 7-8).
25	•			Front suspension	**a.** Inspect springs (1) and shackles (2) for cracks, breaks, and security. If spring U-bolts are loose, tighten 190-230 lb-ft (258-312 N·m). If cracked or broken, replace (para. 7-13).
		•			**b.** Inspect shock absorbers (3) and mounting brackets for looseness, wear, cracks, and leaks. Replace leaking shock absorbers (3) if more than a class I leak is found (LO 9-2320-209-12-1). If worn or cracked, replace (para. 7-20).
		•			**c.** Check front axle drainplug for leaks. If loose, tighten (LO 9-2320-209-12-1).
26		•		Brake system	**a.** Check brakeshoe (5) condition. If brakeshoes (5) are worn beyond .331 in. (8.4 mm), replace (para. 8-7).
	•				**b.** Inspect master cylinder (6) and wheel cylinders (10) to make sure they are not loose, leaking, or damaged. If loose, tighten. If damaged, replace (paras. 8-9 and 8-10).
	•				**c.** Inspect air-hydraulic cylinder (7) to make sure it is not loose, leaking, or damaged. If loose, tighten. If damaged, replace (para. 8-11).
					WARNING Ensure new, longer front hydraulic brake lines, currently used on 5-ton trucks, are installed on all 2-1/2-ton trucks. Old, shorter front hydraulic brake lines are subject to failure during full steering travel and must be replaced with new, longer front hydraulic brake lines. Failure to do this will result in injury or death to personnel.

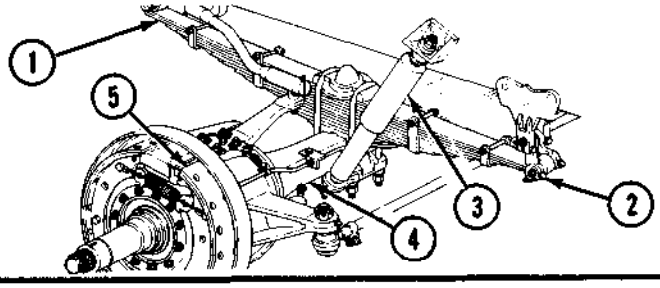

https://truckmanualshub.com/

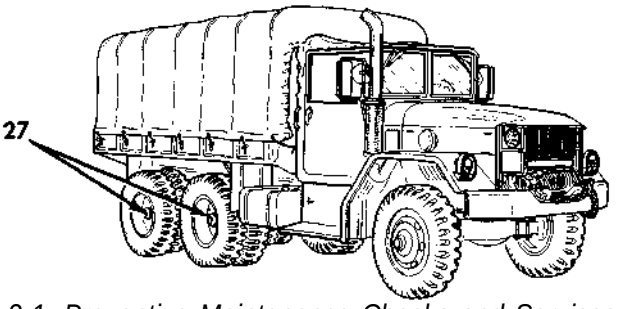

Table 2-1. Preventive Maintenance Checks and Services (Contd).

S-Semiannually A-Annually B-Biennially

Item No.	Interval S	Interval A	Interval B	Item to be Inspected	Procedures
	•				**d.** Inspect all flexible hydraulic brake hoses for bulges, pinches, cracks, crimping, chafing, abrasions, or leaks. If any of these conditions exist, replace or reposition to prevent failure. Check front brake hoses (11) for loose or missing fittings, and make sure they are long enough to allow full steering travel. If brake hose (11) is too short it must be replaced with new longer hose (paras. 8-15 and 8-16).
	•				**e.** Inspect parking brakeshoes for wear. Replace both brakeshoes if lining thickness is 0.188 in. (4.76 mm) or less (para. 8-3).
	•				**f.** Inspect parking brake cable, lever, and brakeshoe assembly for binding and loose or missing components. Tighten components if loose or replace if missing or damaged (chapter 8, section I).
	•				**g.** Check parking brakeshoe clearance to parking brakedrum (A and B). If clearance is not 0.015 in. (0.381 mm), adjust (para. 8-3). 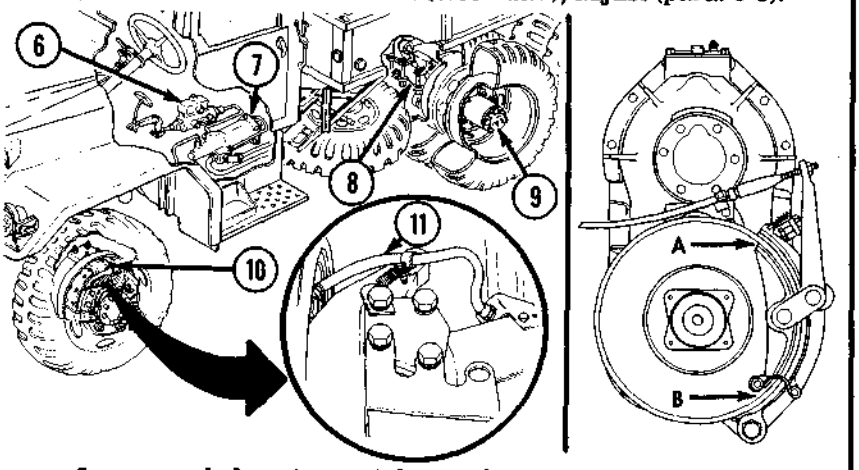
27			•	Forward-rear axle and rear-rear axle	**a.** Inspect axle housings (8) for cracks that may cause leaks. If axle housing is cracked, notify your supervisor.
	•				**b.** Check fittings and plugs for leaks. If loose, tighten (LO 9-2320-209-12-1).
		•			**c.** Remove breather valves and clean (para. 7-7).
	•				**d.** Inspect axle housings (8) for leaks at differential housing and pinion seal. If leaking, notify your supervisor.
		•			**e.** Inspect axle flange (9) for leaks. If leaking, tighten loose screws 60-80 lb-ft (81-108 N·m).

https://truckmanualshub.com/

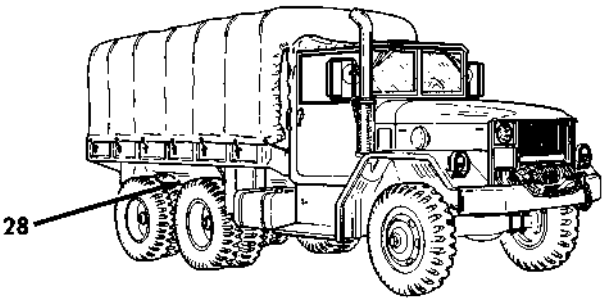

Table 2-1. Preventive Maintenance Checks and Services (Contd).

S-Semiannually A-Annually B-Biennially

Item No.	Interval			Item to be Inspected	Procedures
	S	A	B		
28	•			Rear suspension	**a.** Inspect torque rods (1) for looseness or damage. If loose, notify your supervisor. **(1)** Place flat end of crowbar or pinch bar between torque rod (1) and mounting bracket (2). **(2)** Push on end of bar until hook end moves 4 - 6 in. (101.6-152.4 mm). **(3)** Release pressure on bar: If torque rod does not return to original position, replace (para. 7-22). 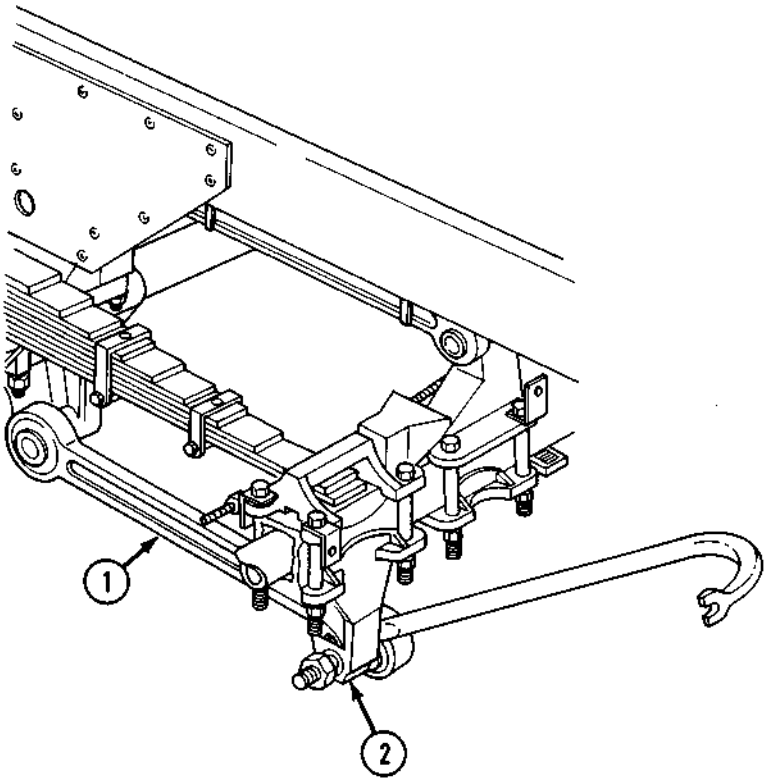

https://truckmanualshub.com/

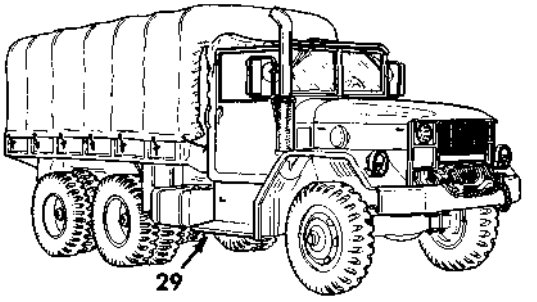

Table 2-1. Preventive Maintenance Checks and Services (Contd).

S-Semiannually A-Annually B-Biennially

Item No.	Interval S	Interval A	Interval B	Item to be Inspected	Procedures
	•				**b.** Inspect springs (3) for cracks, breaks, and security. If spring U-bolts are loose, tighten 190-220 lb-ft (258-298 N·m). If cracked or broken, replace (para. 7-17).
	•				**c.** Inspect front and rear spring wear pads (7) for wear. Replace wear pads (7) if spring (3) is rubbing against spring bracket (6) (para. 7-21).
		•			**d.** Test spring seat bushing by placing jack under torque rods (1) and raise vehicle until springs (3) are raised off wear pad (7) but not touching spring bracket (6). Position prybar between U-bolt saddle (4) and lifting pin (5). Pull up on prybar. If there is play, inspect bushings for damage or adjust as necessary. 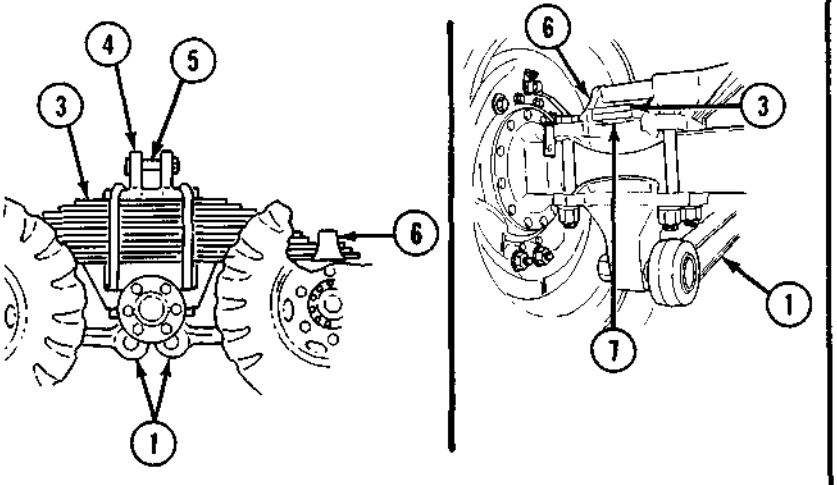
29	•			Frame and cross-members	**a.** Squirt oil on suspected loose rivet(s). Clean excess oil and tap rivet with hammer. A loose rivet will squirt oil from underside. If loose or broken rivets are found, notify your supervisor.
		•			**b.** Check spare tire carrier for security, completeness of assembly, and proper operation.

https://truckmanualshub.com/

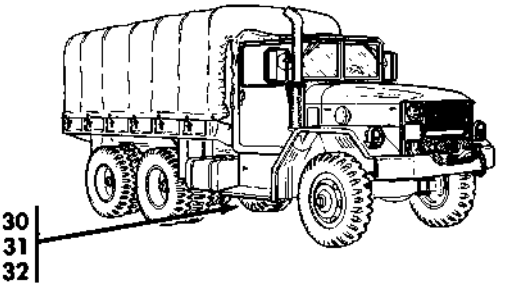

Table 2-1. Preventive Maintenance Checks and Services (Contd).

S-Semiannually A-Annually B-Biennially

Item No.	Interval S	Interval A	Interval B	Item to be Inspected	Procedures
		•			c. Check operation of towing pintle hook (4). Inspect pintle and bracket for cracks and breaks. If cracked or broken, replace (para. 10-4).
30	•			Propeller shafts	a. Check all propeller shafts (1) for bends, cracks, and loose conditions. If loose, tighten mounting screws 90-120 lb-ft (122-163 N·m). If cracked or broken, replace (para. 7-2).
	•				b. Inspect universal joints (2) to make sure there is no play, broken retaining clips and bearing cups, or missing lubrication fittings (para. 7-4).
31	•			Transmission	a. Inspect transmission (5) for loose screws and plugs that may cause leaks. If loose, tighten.
	•				b. Inspect transmission (5) for missing or loose mounting screws. If loose, tighten 23-26 lb-ft (31-35 N·m). If missing, notify your supervisor.
	•				c. Remove transmission breather valve and clean (para. 5-2).
32	•			Transfer case	a. Inspect transfer case (3) for oil leaks, cracks, and loose screws that may cause leaks.
	•				b. Inspect transfer case (3) for loose mounting screws and nuts. If transfer case stud nuts are loose, tighten 125-135 lb-ft (169-183 N·m). If transfer case support bracket screws and nuts are loose, tighten 65-70 lb-ft (88-95 N·m).
	•				c. Remove transfer case breather valve and clean (para. 6-4). 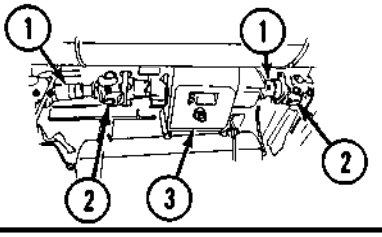 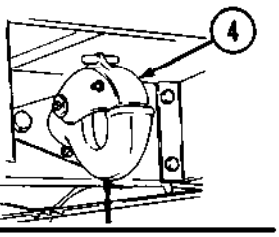 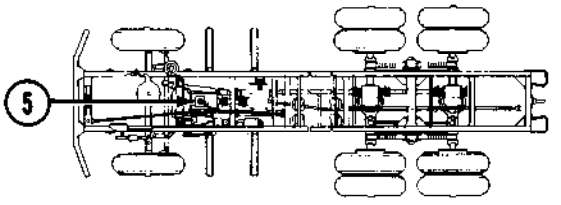

https://truckmanualshub.com/

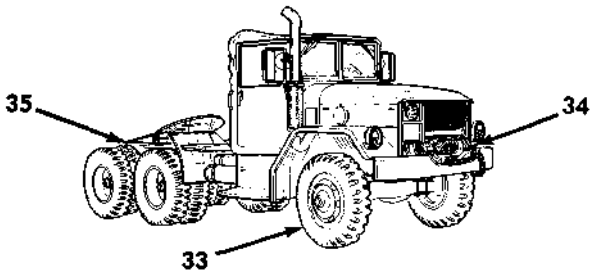

Table 2-1. Preventive Maintenance Checks and Services (Contd).

S-Semiannually **A-Annually** **B-Biennially**

Item No.	Interval S	Interval A	Interval B	Item to be Inspected	Procedures
33	•			Wheel and tire assemblies	Check each tire for wear using tire tread depth gage. Tread depth should not be less than 0.13 in. (3.18 mm) as indicated on tire tread depth gage (TM 9-2610-201-14). Refer to TM 9-2610-200-14 and TM 9-2610-201-14 for specific instructions for matching tires and tire rotation.
					SPECIAL PURPOSE BODIES AND EQUIPMENT
34		•		Front winch	a. Inspect front winch for secure mounting and broken or missing parts. If loose, tighten (para. 13-5). b. Perform drag brake and automatic brake test (paras. 13-2 and 13-4).
35		•		Rear winch	a. Inspect rear winch for secure mounting and broken or missing parts. If loose, tighten (para. 13-18). b. Perform drag brake and automatic brake test (paras. 13-2 and 13-4).

https://truckmanualshub.com/

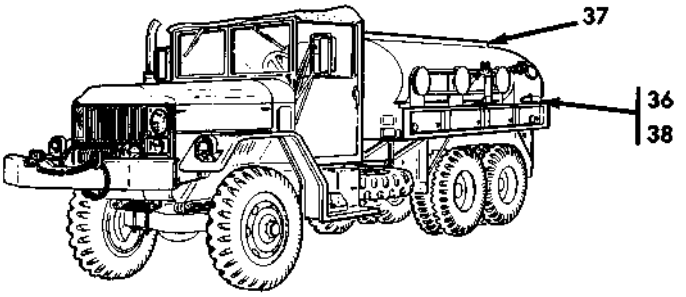

Table 2-1. Preventive Maintenance Checks and Services (Contd).

S-Semiannually A-Annually B-Biennially

Item No.	Interval S	Interval A	Interval B	Item to be Inspected	Procedures
					M49A2C FUEL TANK TRUCK
36	•			Fuel pump system and gravity discharge system	**a.** Check all pipes (1), caps (2), and couplings (3) to make sure they are not loose or leaking.
					NOTE Refer to TM 9-2320-361-10 for operating procedures when doing the following checks:
	•				**b.** Pump enough fuel from one compartment to another to make sure fuel system works properly and there are no unusual noises, vibrations, or leaks.
	•				**c.** Gravity discharge fuel from one compartment to a clean container. Empty enough fuel to make sure gravity discharge system works properly and does not leak.
					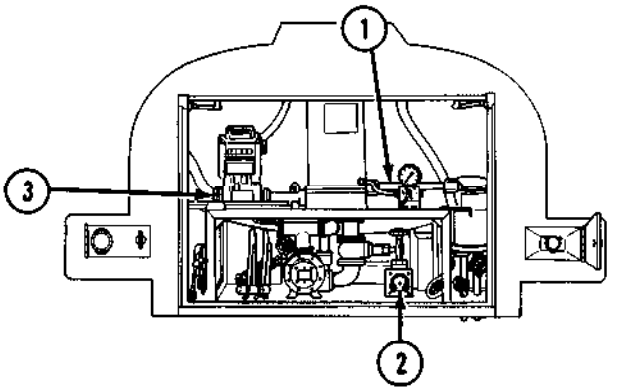
37	•			Tank body	**a.** Inspect manhole covers (4) and filler caps (6) to make sure they seal properly and are not damaged.
	•				**b.** Inspect chains (7) and locks (5) to make sure they are not missing or damaged.

https://truckmanualshub.com/

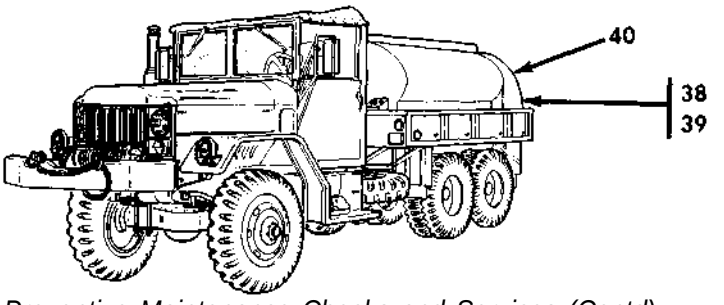

Table 2-1. Preventive Maintenance Checks and Services (Contd).

S-Semiannually A-Annually B-Biennially

Item No.	Interval S	Interval A	Interval B	Item to be Inspected	
					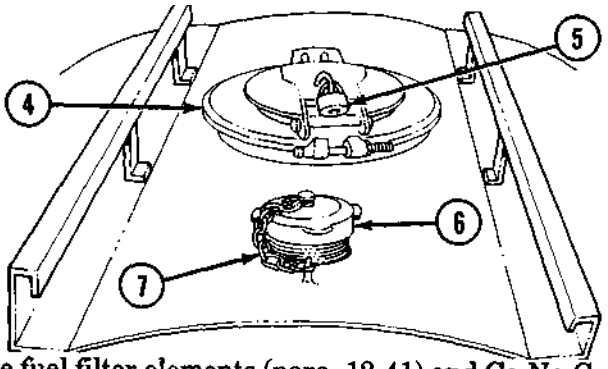
38	•			Water separator filter	Replace fuel filter elements (para. 12-41) and Go-No-Go fuses (para. 12-21).
					M50A2 AND M50A3 WATER TANK TRUCKS NOTE Refer to TM 9-2320-361-10 for operating procedures when doing the following checks:
39	•			Water pump system and gravity discharge system	**a.** Pump enough water from one compartment to another to make sure water pump system works properly, and there are no unusual noises, vibrations, or leaks.
	Ž				**b.** Gravity discharge water from one compartment to a clean container. Empty enough water to ensure gravity discharge system works properly and does not leak.
40	•			Tank body	Inspect manhole covers (4) and filler caps (6) to ensure they seal properly and are not damaged.

https://truckmanualshub.com/

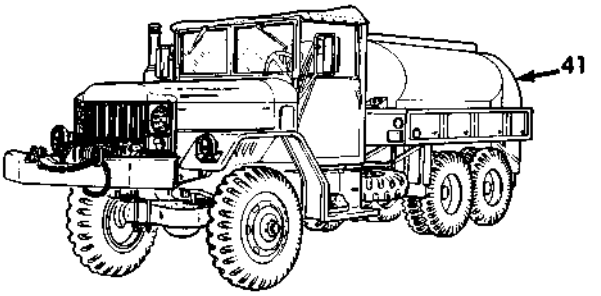

Table 2-1. Preventive Maintenance Checks and Services (Contd).

S-Semiannually A-Annually B-Biennially

Item No.	Interval S	Interval A	Interval B	Item to be Inspected	Procedures
41	•			Exhaust bypass system	**CAUTION** Exhaust bypass system will overheat tank body if there is less than 10 in. (25.0 cm) of water in either compartment. Make sure level is above 10 in. (25.0 cm) before checking exhaust bypass system. Check exhaust bypass system for proper operation as follows: **WARNING** Do not touch hot exhaust system components with bare hands. Injury to personnel may result. **a.** Close and latch front exhaust shutoff valve (1). **b.** Open rear exhaust shutoff valve (2). **c.** Start engine (TM 9-2320-361-10). **d.** Check to make sure exhaust gases are coming out of rear exhaust. **e.** Stop engine (TM 9-2320-361-10). **f.** Open front exhaust shutoff valve (1). **g.** Close rear exhaust shutoff valve (2). 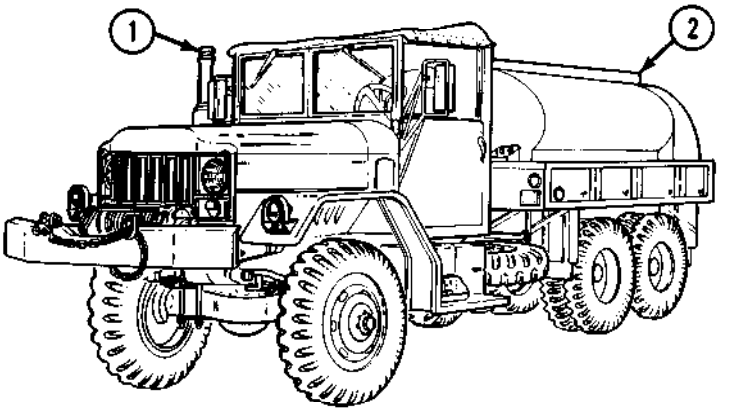

https://truckmanualshub.com/

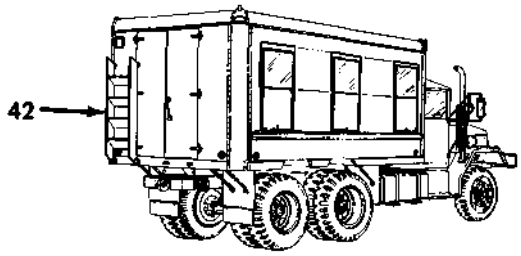

Table 2-1. Preventive Maintenance Checks and Services (Contd).

S-Semiannually A-Annually B-Biennially

Item No.	Interval S	Interval A	Interval B	Item to be Inspected	Procedures
					M109A3 AND M185A3 SHOP VAN TRUCKS
42	•			Van body hardware	**a.** Inspect access ladder (4) and mounting hardware (3) for breaks, bends, or damage.
	•				**b.** Inspect heater fuel pump (5) and fuel lines (6) for leaks or damage. 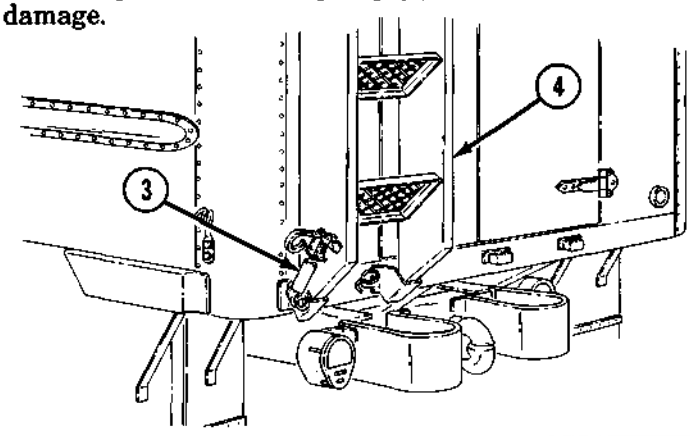 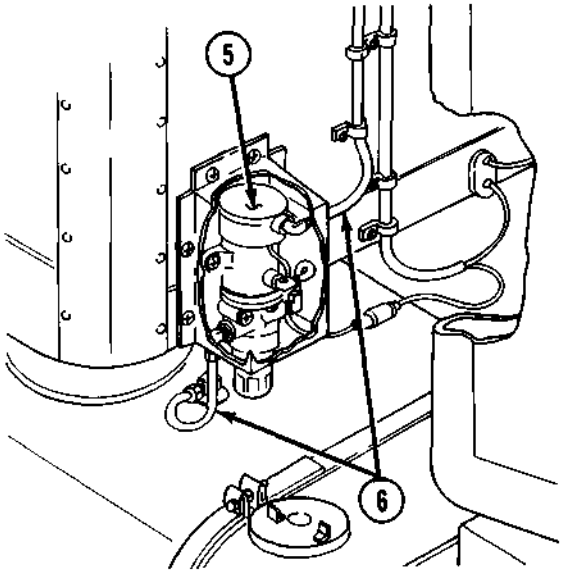

https://truckmanualshub.com/

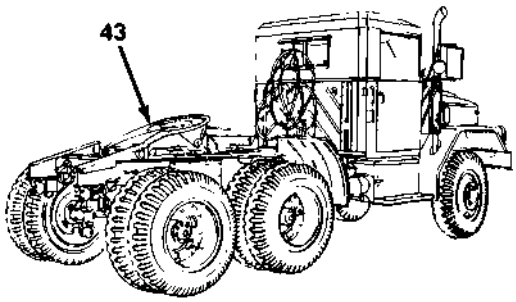

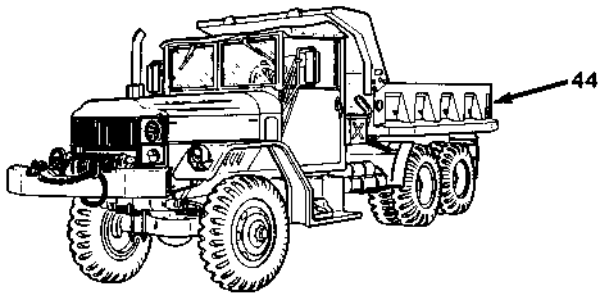

Table 2-1. Preventive Maintenance Checks and Services (Contd).

S-Semiannually A-Annually B-Biennially

Item No.	Interval S	Interval A	Interval B	Item to be Inspected	Procedures
					M275A2 TRACTOR TRUCK
43	●			Fifth wheel	**a.** Inspect face of fifth wheel (1) for cracks, breaks, or damage. If damaged, replace (para. 12-113).
	●				**b.** Inspect pivot pins (2) and ensure fifth wheel (1) moves without binding. 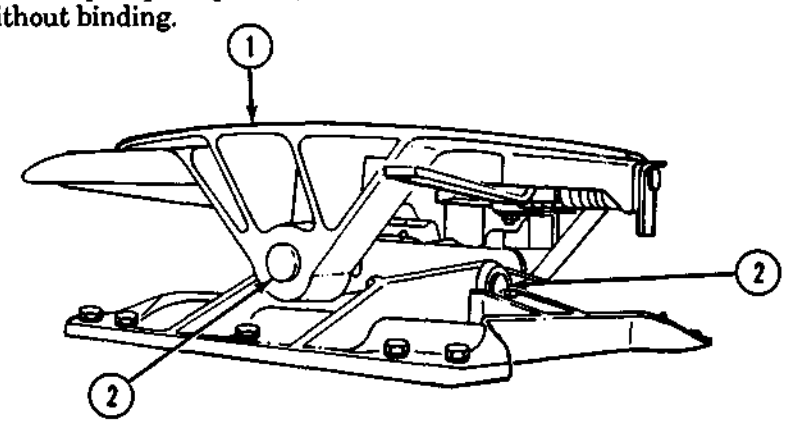
					M342A2 DUMP TRUCK
44	●			Dump body	**a.** Inspect dump body (3) to ensure it alines with frame.
	●				**b.** Inspect dump body (3) for loose or missing mounting screws. 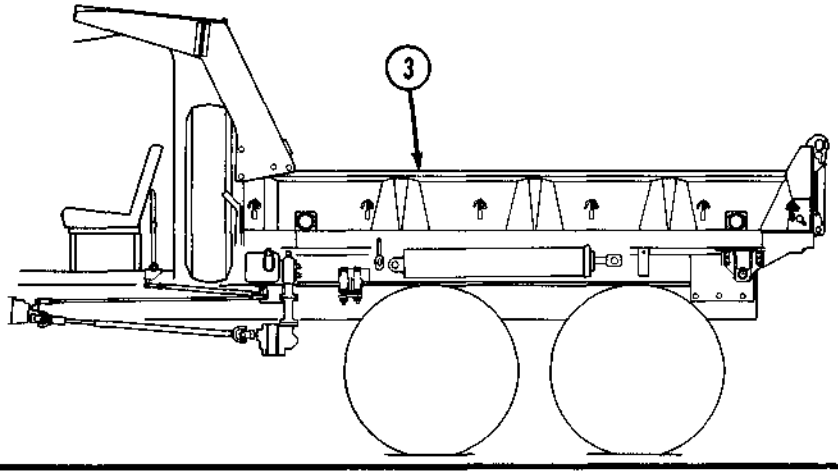

https://truckmanualshub.com/

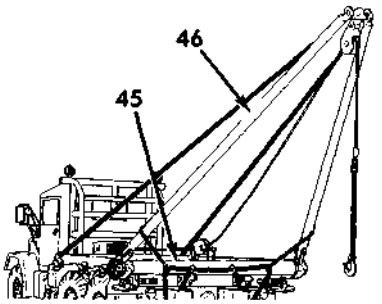

Table 2-1. Preventive Maintenance Checks and Services (Contd).

S-Semiannually A-Annually B-Biennially

Item No.	Interval S	Interval A	Interval B	Item to be Inspected	Procedures
					M756A2 PIPELINE CONSTRUCTION TRUCK
45	•			Tailboard roller	**a.** Check tailboard roller (5) to ensure it does not bind by turning it two or three turns.
	•				**b.** Check tailboard roller (5) end play (movement from side to side). If end play is less than .030 in. (.76 mm), adjust (para. 12-102).
	•				**c.** Check clearance between tailboard roller (5) and auxiliary rollers (4). Clearance should be .020 in. (.51 mm). 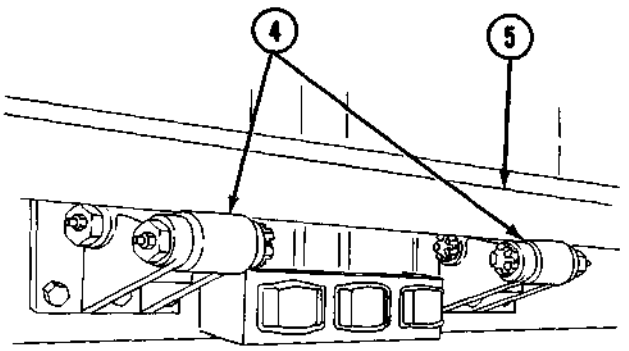
46	•			A-frame	Put ginpoles (7) in position and take out trunnion (6). Inspect ginpoles (7) for bends or if they overlap more than 6 in. (15 cm). 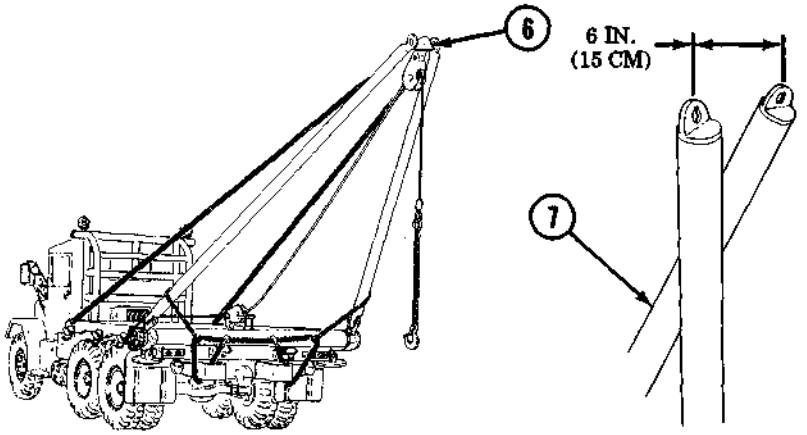

https://truckmanualshub.com/

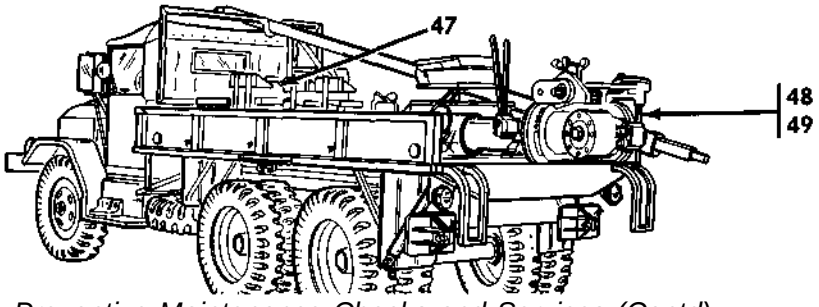

Table 2-1. Preventive Maintenance Checks and Services (Contd).

S-Semiannually A-Annually B-Biennially

Item No.	Interval S	Interval A	Interval B	Item to be Inspected	Procedures
					M764 EARTH BORING AND POLESETTING TRUCK
47	•			Rear winch level wind	Check tension on cable level wind drive chains as follows: **a.** Remove level wind drive chain covers (paras. 13-14 and 13-15). **b.** Reduction drive chains (1) and (3) should have no more than 0.5 in. (12.69 mm) slack. **c.** Carriage cross chain (2) should have no slack. **d.** Install level wind drive chain covers (paras. 13-14 and 13-15). 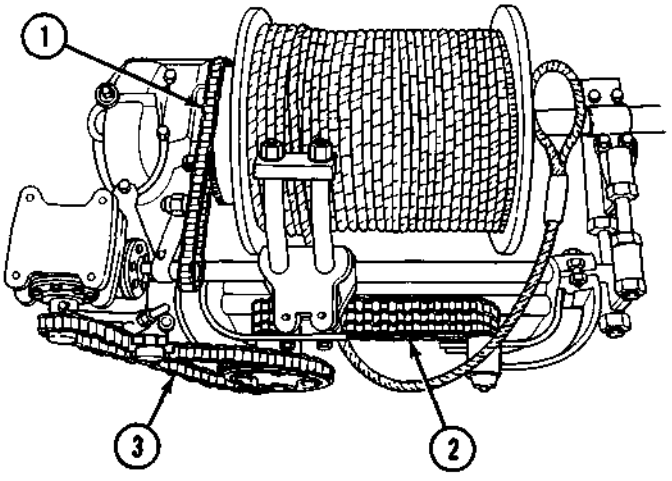
48	•			Earth boring machine	Check tension on horizontal and vertical drive chains as follows: **a.** Remove drive chain covers (para. 12-87). **b.** Horizontal drive chains (5) and vertical drive chains (4) should have no more than .125 in. (3.17 mm) slack. **c.** Install drive chain covers (para. 12-87).
49	•			Rack thrust plates	To check rack thrust plates and adjustments on leveling worms and clutch assembly, notify your supervisor.

https://truckmanualshub.com/

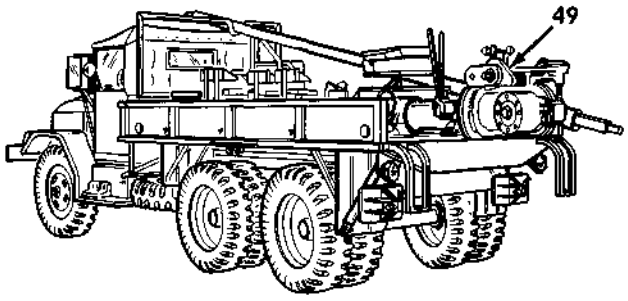

Table 2-1. Preventive Maintenance Checks and Services (Contd).

S-Semiannually A-Annually B-Biennially

Item No.	Interval S	Interval A	Interval B	Item to be Inspected	Procedures
					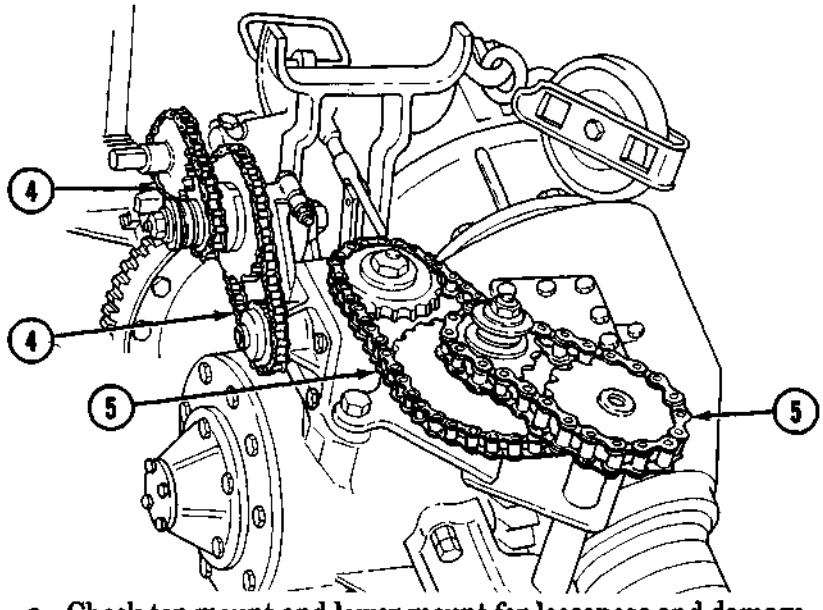
50	•			Rifle mounting kit	a. Check top mount and lower mount for looseness and damage. If loose, tighten. If damaged, replace (para. 14-44).
	•				b. Check handle for excessive looseness, binding, and damage.
51				Machine gun mount	Perform preventive maintenance checks and serivces (TM 9-1005-245-14).
52				M-8 chemical alarm	Perform preventive maintenance checks and services (TM 3-6665-225-12).
53				M-11 decontamination unit	Perform preventive maintenance checks and services (TM 3-4230-204-12&P).
54				Vehicle lubrication	Lubricate vehicle (LO 9-2320-209-12-1).
					FINAL ROAD TEST
					After all services and inspections have been completed, take vehicle on a short road test to ensure all corrections have been implemented. Correct any defects or malfunctions that may occur during this test.

https://truckmanualshub.com/

Section IV. MECHANICAL SYSTEMS TROUBLESHOOTING

2-12. GENERAL

NOTE

If malfunction corrective action does not correct malfunction, notify your supervisor.

a. This section provides information to diagnose and correct malfunctions of mechanical systems. Because of its complexity, Mechanical Systems Troubleshooting is divided into the following functional systems:

- Engine (page 2-28)
- Exhaust System (page 2-32)
- Manifold Heater System (page 2-33)
- Cooling System (page 2-34)
- Fuel System (page 2-35)
- Personnel Hot Water Heater (page 2-35)
- Transmission (page 2-35)
- Clutch (page 2-36)
- Transfer Case (page 2-36)
- Propeller Shafts (page 2-37)
- Differentials (page 2-37)
- Wheels and Tires (page 2-38)
- Steering (page 2-39)
- Frame and Brackets (page 2-41)
- Suspension (page 2-42)
- Winch (page 2-42)
- Power Takeoff (page 2-43)
- Nonelectrical Gages (page 2-44)
- Fifth Wheel (page 2-45)
- Dump Body (M342A2) (page 2-45)
- Earth Boring and Polesetting (M764) (page 2-46)
- Outriggers (M764) (page 2-47)
- Fuel Tank (M49A2C) (page 2-47)
- Water Tank (M50A2 and M50A3) (page 2-49)
- Personnel Fuel Burning Heater/Power Plant Heater (page 2-50)

b. Each malfunction symptom given for an individual component or system is followed by step(s) to determine the cause and corrective action you must take to remedy the problem.

c. Before taking any action to correct a possible malfunction, the following rules should be followed:

(1) Question operator to obtain any information that might help you to determine the cause of the problem.

(2) Never overlook the chance that the problem could be of simple origin. The problem could be corrected with minor adjustment.

(3) Use all senses to observe and locate troubles.

(4) Use test instruments or gages to help you to determine and isolate problems.

(5) Always isolate the system where the malfunction occurs and then locate the defective component.

(6) Use standard automotive theories and principles when troubleshooting the vehicles covered in this manual.

d. Omissions. This manual cannot list all mechanical malfunctions that may occur. If a malfunction occurs that is not listed in table 2-2, notify your supervisor.

https://truckmanualshub.com/

MECHANICAL SYSTEMS TROUBLESHOOTING SYMPTOM INDEX

MALFUNCTION NO.	MALFUNCTION	TROUBLESHOOTING PROCEDURE PAGE
	ENGINE	
1.	Engine will not crank	2-28
2.	Engine cranks but will not start	2-28
3.	Starter cranks engine slowly	2-29
4.	Engine stops during normal operation	2-29
5.	Engine stops when accelerator is returned to idle position	2-30
6.	Engine misfires during operation	2-30
7.	Poor acceleration and/or lack of power	2-30
8.	Engine surges	2-31
9.	Excessive engine oil loss or consumption during normal operation	2-31
10.	Engine oil pressure too low or too high at normal operation temperature	2-31
11.	Excessive vibration or clunking	2-32
12.	Excessive fuel consumption	2-32
	EXHAUST SYSTEM	
13.	Exhaust color blue during normal operation	2-32
14.	Exhaust color white during normal operation and idle	2-32
15.	Excessive exhaust noise	2-33
16.	Exhaust fumes in cab	2-33
	MANIFOLD HEATER SYSTEM	
17.	Engine cranks but will not start in cold weather (fuel system operating properly)	2-33
	COOLING SYSTEM	
18.	Engine temperature gage above 230°F (110°C)	2-34
19.	Engine does not reach normal operating temperature	2-34
20.	Coolant loss during normal operation	2-34
	FUEL SYSTEM	
21.	No fuel at fuel injectors	2-35
	PERSONNEL HOT WATER HEATER	
22.	Personnel hot water heater does not heat cab	2-35
	TRANSMISSION	
23.	Transmission noisy	2-35
24.	Transmission leaks oil	2-36
	CLUTCH	
25.	Clutch pedal will not travel or depress	2-36
26.	Vehicle creeps with clutch depressed	2-36
27.	Clutch drags, slips, or does not engage	2-36

https://truckmanualshub.com/

MECHANICAL SYSTEMS TROUBLESHOOTING SYMPTOM INDEX (Contd)

MALFUNCTION NO.	MALFUNCTION	TROUBLESHOOTING PROCEDURE PAGE
	TRANSFER CASE	
28.	Burning odor evident with clutch engaged	2-36
29.	Transfer case difficult to shift	2-37
30.	Transfer case grinds or pops out of gear during normal vehicle operation	2-37
31.	Transfer case noisy	2-37
	PROPELLER SHAFTS	
32.	Propeller shaft vibration	2-37
	DIFFERENTIALS	
33.	Differential noisy	2-37
34.	Differential clunks during turns or initial takeoff	2-38
35.	Differential vibrates	2-38
36.	Differential leaks oil	2-38
	WHEELS AND TIRES	
37.	Uneven tire wear	2-38
38.	Vehicle shimmy, wobble, or vibration	2-39
	STEERING	
39.	Excessive play in steering	2-39
40.	Steering wheel hard to turn	2-40
41.	Vehicle wanders or pulls to one side	2-40
	FRAME AND BRACKETS	
42.	Towing pintle does not latch or lock	2-41
43.	Pintle hook does not turn	2-41
44.	Excessively loose lifting shackle	2-41
45.	Loose spare tire carrier	2-41
	SUSPENSION	
46.	Noisy suspension	2-42
47.	Continuous wandering or swaying (poor control)	2-42
48.	Vehicle sags	2-42
	WINCH	
49.	Winch inoperative	2-42
50.	Winch operates in one direction only	2-43
51.	Operates at one speed only	2-43
52.	Drag brake does not operate	2-43
53.	Winch does not hold load when power released	2-43
54.	Automatic brake overheats	2-43
55.	Vehicle rolls while operating rear winch	2-43
	POWER TAKEOFF	
56.	Power takeoff noisy	2-43
57.	Power takeoff difficult to shift	2-44
58.	(Transmission-driven) power takeoff inoperative	2-44
59.	(Transfer-driven) power takeoff inoperative	2-44

https://truckmanualshub.com/

MECHANICAL SYSTEMS TROUBLESHOOTING SYMPTOM INDEX (Contd)

MALFUNCTION No.	MALFUNCTION	TROUBLESHOOTING PROCEDURE PAGE
	NON ELECTRICAL GAGES	
60.	Speedometer or tachometer bounces, noisy, or inoperative	2-44
61.	Air pressure gage inoperative	2-44
	FIFTH WHEEL	
62.	Trailer will not hitch to fifth wheel	2-45
	DUMP BODY (M342A2)	
63.	Dump body will not raise	2-45
64.	Dump body does not lower	2-45
65.	Dump body does not hold in raised position	2-45
66.	Hydraulic pump noisy	2-46
67.	Tailgate does not open	2-46
	EARTH BORING AND POLESETTING (M764)	
68.	Earth boring machine will not operate	2-46
69.	Earth boring machine cannot be moved vertically	2-46
70.	Earth boring machine cannot be moved horizontally	2-46
	OUTRIGGERS (M764)	
71.	Outriggers inoperative	2-47
72.	Outriggers operate slowly	2-47
	FUEL TANK (M49A2C)	
73.	Fuel does not pump from compartments, or pumps slowly	2-47
74.	Delivery pump dispenses fuel slowly from both tanks	2-47
75.	Fuel does not pump or pumps fuel slowly from selected tank, and fuel drains slowly from selected tank using gravity procedures	2-48
76.	Fuel tank compartments cannot be suction filled	2-48
	WATER TANK (M50A2 AND M50A3)	
77.	Water cannot be pumped from both tanks	2-49
78.	Water cannot be pumped or pumps slowly from selected tank, and water drains slowly from selected tank using gravity procedures	2-49
79.	Water pumps out of both tanks slower than normal	2-49
80.	Water tank compartments cannot be suction filled	2-50
	PERSONNEL FUEL BURNING HEATER/POWER PLANT HEATER KIT	
81.	Heater will not operate in high or low position	2-50
82.	Heater will not operate	2-50

https://truckmanualshub.com/

Table 2-2. Mechanical Troubleshooting.

MALFUNCTION TEST OR INSPECTION CORRECTIVE ACTION

ENGINE

1. ENGINE WILL NOT CRANK

Step 1. Check starting system (table 2-4, electrical troubleshooting, malfunction 2).

Step 2. Remove starter and visually check starter drive, ring gear, and flywheel for broken and missing teeth.

a. If starter teeth are damaged, replace starter (para. 4-7).

b. If ring gear is damaged, notify your supervisor.

WARNING

Ensure fuel shutoff valve is OFF and remove throttle cable before cranking engine. Failure to do so may result in injury to personnel.

Step 3. Check for seized engine or fluid-locked pistons. Remove radiator and rotate engine at vibration damper bolt two full revolutions with starter removed.

If engine is seized, notify your supervisor.

Step 4. Check belt-driven engine accessories and water pump for seizure. Remove all belts (para. 4-2 and 8-28).

Manually turn drive pulley of each accessory and water pump.

a. If water pump drive pulley will not turn, replace water pump (para. 3-47).

b. If any drive pulley accessory will not turn, replace accessory (paras. 3-47, 4-3, and 8-26). If fuel pump needs replacement, notify your supervisor.

Step 5. Check air induction system for presence of water.

Remove air cleaner cover (para. 3-14).

a. If air cleaner cover is contaminated with water, replace element (para. 3-14).

b. If water is present within air cleaner, notify your supervisor.

Step 6. Check vertical exhaust system and turbocharger for presence of water. Remove exhaust elbow from turbocharger (para. 3-37).

a. If water is present in exhaust elbow, disassemble and drain exhaust system (para. 3-37).

b. If water is present in turbocharger housing, identified by water on turbocharger fins or hub, notify your supervisor.

END OF TESTING!

2. ENGINE CRANKS BUT WILL NOT START

Step 1. Refer to table 2-4, electrical troubleshooting, malfunction 3.

Step 2. Check air cleaner indicator (TM 9-2320-361-10).

a. If red appears at indicator window, inspect air intake head for restrictions. If restrictions are not present, replace air cleaner element (para. 3-14).

b. Reset air cleaner indicator (TM 9-2320-361-10).

WARNING

- Diesel fuel is flammable. Do not perform fuel system procedures near open flame. Injury or death to personnel may result.
- Compressed air source will not exceed 30 psi (207 kPa). When cleaning with compressed air, eyeshields must be worn. Failure to wear eyeshields may result in injury to personnel.

https://truckmanualshub.com/

Table 2-2. Mechanical Troubleshooting (Contd)

MALFUNCTION TEST OR INSPECTION CORRECTIVE ACTION

Step 3. Turn accessory switch to ON position and drain 1/2 pint (0.25 liter) of fuel from primary fuel filter, secondary fuel filter, and final fuel filter. Check for contaminated fuel.

If water or contamination are present, remove fuel tank (chapter 3, section VI). Clean and flush entire fuel system. Dry system with compressed air.

Step 4. Check for white exhaust smoke during cranking.

a. If white smoke can be seen, air maybe in fuel system. Bleed fuel system (para. 3-29).

b. If white smoke can be seen, coolant maybe inside combustion chambers. If coolant is present on dipstick, notify your supervisor.

Step 5. Check in-tank pump pressure (para. 3-26). If pressure is below 4 psi (27.58 kPa), replace in-tank fuel pump (para. 3-26).

Step 6. Turn accessory switch to ON position and check pressure at secondary and final fuel filters (para. 3-29).

a. If pressure is below 2 psi (14.00 kPa), remove and replace primary fuel filter (para. 3-28) and recheck pressure at secondary and final fuel filters. If pressure is still below 2 psi (14.00 kpa), replace secondary and final fuel filters (para. 3-29).

b. If filters are clean and pressure is still below 2 psi (14.00 kPa) at secondary and final fuel filter, inspect fuel lines for kinks, bends, breaks, loose connections, restrictions, and leaks. Repair fuel lines if damaged.

END OF TESTING!

3. STARTER CRANKS ENGINE SLOWLY

Step 1. Check starting system circuits (table 2-4, malfunction 3).

Step 2. In cold weather, make sure proper engine oil is being used and /or replace oil (LO 9-2320-209-12-1).

Step 3. Check water pump and belt driven accessories for seizing (malfunction 1, step 4).

END OF TESTING!

4. ENGINE STOPS DURING NORMAL OPERATION

Step 1. Check air cleaner for restrictions (malfunction 2, step 2).

Step 2. Check fuel system for contamination and restrictions (malfunction 2, step 3 and malfunction 21).

Step 3. Check for restrictions in exhaust system. Ensure exhaust is not bent, restricted, or damaged.

If exhaust system is damaged or restricted, replace damaged parts (para. 3-37).

Step 4. Check air induction system for major restrictions.

If air induction system is restricted, clean or replace defective components (Chapter 3, section IV).

Step 5. Check governor idle speed (para. 8-29).

If governor idle speed is set below specifications, adjust (para. 8-29).

END OF TESTING!

https://truckmanualshub.com/

Table 2-2. Mechanical Troubleshooting (Contd).

MALFUNCTION TEST OR INSPECTION CORRECTIVE ACTION

5. ENGINE STOPS WHEN ACCELERATOR IS RETURNED TO IDLE POSITION

Step 1. Check air induction system for restrictions.

If air induction system is restricted, clean or replace defective components (Chapter 3, section IV).

Step 2. Check governor idle speed (para. 8-29).

If governor idle speed is set below specifications, adjust (para. 8-29).

Step 3. Perform malfunction 27.

END OF TESTING!

6. ENGINE MISFIRES DURING OPERATION

Step 1. Check air cleaner for restrictions (malfunction 2, step 2).

Step 2. Check for air or water in fuel system (malfunction 2, steps 3 and 4).

END OF TESTING!

7. POOR ACCELERATION AND/OR LACK OF POWER

Step 1. Check air cleaner for restrictions (malfunction 2, step 2).

Step 2. Check air induction system for restrictions. If air induction system is restricted, clean or replace defective components (Chapter 3, section IV).

Step 3. Check fuel system for contamination and restrictions (malfunction 2, steps 3 and 4).

Step 4. Check exhaust system for restrictions.

Replace restricted or damaged parts (para. 3-37).

Step 5. Inspect accelerator pedal and throttle lever for full travel.

Adjust throttle lever travel (para. 3-33).

Step 6. Check vehicle for dragging brakes, low tire inflation, or cargo overload limit (TM 9-2320-361-10).

a. If defects are evident during check, adjust or replace components (para. 8-8 or TM 9-2320-361-10).

b. Correct overload condition (TM 9-2320-361-10).

Step 7. Check throttle linkage for binding and sticking.

If linkage is binding or sticking, replace throttle linkage (para. 3-33).

Step 8. Check maximum engine governed speed set within specifications (para. 8-29). If maximum engine governed speed setting is incorrect, adjust (para. 8-29). Perform malfunction 27.

Step 9. Check turbocharger hoses and intake manifold elbow for leaks.

a. Tighten base screws and clamps. Replace any missing screws or clamps (para. 3-13).

b. If no improvement during test run, turbocharger malfunction is indicated; notify your supervisor.

END OF TESTING!

https://truckmanualshub.com/

Table 2-2. Mechanical Troubleshooting (Contd).

MALFUNCTION TEST OR INSPECTION CORRECTIVE ACTION

8. ENGINE SURGES

Step 1. Check fuel system for contamination and restrictions.

Refer to malfunction 2, steps 3 and 4.

Step 2. Inspect throttle linkage for proper operation and adjustment

If linkage does not operate properly, adjust or replace as necessary (para. 3-33).

Step 3. Check in-tank fuel pump operation (para. 3-26).

If fuel pressure is uneven or below specifications, replace (para. 3-26).

END OF TESTING!

9. EXCESSIVE OIL LOSS OR CONSUMPTION DURING NORMAL OPERATION

Step 1. Check oil for overfilling. Check oil level (TM 9-2320-361-10).

If oil level is too high, drain crankcase to safe operating level (LO 9-2320-209-12-1).

Step 2. Check for external oil leaks at oil pan, drainplug, oil filter, oil filter housing, oil cooler, oil dipstick tube, rocker arm cover, and oil feed lines.

Tighten any loose connections or loose screws that may cause leaks.

Step 3. Check maximum engine governed speed set within specifications (para. 8-29).

If maximum engine governed speed is incorrect, adjust (para. 8-29).

Step 4. Complete troubleshooting malfunction 10, step 4.

Step 5. If oil leaks still exist, or engine still burns oil, notify your supervisor.

END OF TESTING!

10. ENGINE OIL PRESSURE TOO LOW OR TOO HIGH AT NORMAL OPERATION TEMPERATURE

CAUTION

Do not operate engine except during testing. When condition of no oil pressure is evident, continued operations may damage engine internally.

Step 1. Check engine oil level (LO 9-2320-209-12-1).

If level is low, check for external oil leaks at oil pan, drainplug, oil filter, oil filter housing, oil cooler, oil dipstick tube, and rocker arm cover.

Tighten any loose connections or loose screws that may cause leaks.

Step 2. Check engine for excessive engine operating temperature (TM 9-2320-361-10).

Step 3. Check that engine oil grade is correct for vehicle use and climate conditions (LO 9-2320-209-12-1).

If engine oil grade is incorrect, replace oil (LO 9-2320-209-12-1).

Step 4. Check oil pressure gage for proper operation.

a. Check operation of oil pressure gage (table 2-4, malfunction 32).

b. Check oil pressure. Oil pressure should be 40-75 psi at 2,600 rpm.

If oil pressure gage has a maximum reading of 60 psi and needle peaks at 60 psi, replace with new oil pressure gage (range 0-120 psi) (para. 4-12).

c. If oil pressure is still too high or too low, notify your supervisor.

Step 5. Check all external oil fuel lines for leakage or restrictions. Clear restrictions or repair leaks.

END OF TESTING!

https://truckmanualshub.com/

Table 2-2. Mechanical Troubleshooting (Contd).

MALFUNCTION TEST OR INSPECTION CORRECTIVE ACTION

11. EXCESSIVE VIBRATION OR CLUNKING

Check engine mounts and pads for looseness or damage.

If engine mounts or pads are damaged, replace (paras. 3-2 and 3-3).

END OF TESTING!

12. EXCESSIVE FUEL CONSUMPTION

Step 1. Check for air cleaner restrictions (malfunction 2, step 2).

Step 2. Inspect fuel lines, hoses, and connections for leaks and damage.

a. Tighten any loose connections.

b. If fuel lines, hoses, or connections are leaking or damaged, notify your supervisor.

END OF TESTING!

EXHAUST SYSTEM

13. EXHAUST COLOR BLUE DURING NORMAL OPERATION

NOTE

Blue exhaust indicates presence of excess engine oil in cylinder combustion space.

Step 1. Check that engine oil grade is correct for vehicle use and climatic conditions (LO 9-2320-209-12-1).

If oil grade is incorrect, replace oil (LO 9-2320-209-12-1) and oil filters (para. 3-8).

Step 2. Check that engine fuel grade is correct for vehicle use and climatic conditions (TM 9-2320-361-10).

a. If fuel grade is incorrect, drain complete fuel system and replace with correct grade of fuel (TM 9-2320-361-10).

b. If problem persists, notify your supervisor.

END OF TESTING!

14. EXHAUST COLOR WHITE DURING NORMAL OPERATION AND IDLE

CAUTION

Thick white smoke indicates coolant is present in engine combustion chambers during operation. When this condition is evident, shut engine down immediately and determine cause. Continued engine operations may result in permanent engine damage.

Step 1. Check engine temperature. Ensure engine temperature is at specified level (TM 9-2320-361-10).

If engine temperature is above operating level, perform malfunction 18.

Step 2. If problem persists, notify your supervisor.

END OF TESTING!

https://truckmanualshub.com/

Table 2-2. Mechanical Troubleshooting (Contd).

MALFUNCTION TEST OR INSPECTION CORRECTIVE ACTION

15. EXCESSIVE EXHAUST NOISE

Step 1. Inspect turbocharger for secure mounting and exhaust leaks.

If turbocharger mountings are loose, tighten 23-27 lb-ft (31-37 N·m).

Step 2. Inspect exhaust pipes for secure connections, cracks, breaks, and excessive rust. Replace damaged parts (chapter 3, section VIII).

Step 3. Inspect exhaust stack for secure connections, cracks, and breaks. Replace damaged parts (chapter 3, section VIII).

Step 4. If excessive exhaust noise still exists, it may be necessary to install exhaust insulator kit 12300664.

END OF TESTING!

16. EXHAUST FUMES IN CAB

Step 1. Inspect exhaust manifold, turbocharger, exhaust pipes, and connections for leaks.

Replace damaged parts (chapter 3, section VIII).

Step 2. Inspect exhaust manifold and turbocharger for leaks. If leaking, notify your supervisor.

END OF TESTING!

MANIFOLD HEATER SYSTEM

17. ENGINE CRANKS BUT WILL NOT START IN COLD WEATHER (FUEL SYSTEM OPERATING PROPERLY

Step 1. Check manifold heater system electrical circuit (table 2-4, malfunction 39).

Step 2. Check fuel pump supply lines and filter for leaks, bends, kinks, and restrictions. If vehicle is equipped with alcohol evaporator, check for proper operation as required (TM 9-2320-361-10).

WARNING

Diesel fuel is flammable. Do not perform fuel system procedures near open flame. Injury or death to personnel may result.

NOTE

- Have drainage container ready to catch fuel.
- During steps 3 and 4, do not confuse in-tank fuel pump pressure with manifold heater pump pressure.

Step 3. Disconnect fuel line at fuel nozzle, energize manifold heater circuit and check to see if fuel is discharged.

If fuel is not discharged, replace manifold heater fuel pump (para. 3-30 or 3-31).

Step 4. Check fuel nozzle for proper operation. Remove fuel return lines (para. 3-27). Energize circuit and check to see if fuel is discharged. If fuel is not discharged, notify your supervisor.

END OF TESTING!

https://truckmanualshub.com/

Table 2-2. Mechanical Troubleshooting (Contd).

MALFUNCTION TEST OR INSPECTION CORRECTIVE ACTION

COOLING SYSTEM

18. ENGINE TEMPERATURE GAGE ABOVE 230°F (110°C)

WARNING

Use caution when removing radiator filler cap. Steam or hot coolant under pressure may cause injury to personnel.

Step 1. Ensure engine fuel supply grade is correct for vehicle use and climatic conditions (TM 9-2320-361-10).
If fuel grade is incorrect, completely drain fuel system and replace fuel with correct grade (TM 9-2320-361-10).

Step 2. Check coolant protection level with antifreeze tester.
If coolant is not within safe range, service cooling system (para. 3-41).

Step 3. Check engine temperature gage and engine temperature sending unit (table 2-4, malfunction 30).
If engine temperature gage is defective, replace (para. 4-12).
If engine temperature sending unit is defective, replace (para. 4-24).

Step 4. Inspect drivebelts and pulleys for damage and check belt tension. Replace any damaged parts and adjust drivebelts (para. 4-2).

Step 5. Inspect fan for broken or missing blades.
If blades are broken or missing, replace fan (para. 3-40).

Step 6. Inspect radiator for bent fins.
Straighten bent fins, or replace radiator (para. 3-42).

Step 7. Start engine. Remove radiator cap and visually check coolant for proper circulation. Stop engine if coolant is not circulating properly, remove thermostat, and test or replace (para. 3-46).

Step 8. Check for clogged or broken radiator (TM 750-254). For cleaning and flushing instructions refer to TB 750-651.

Step 9. Check operation of temperature gage (table 2-4, malfunction 30).

END OF TESTING!

19. ENGINE DOES NOT REACH NORMAL OPERATING TEMPERATURE

Step 1. Start engine. Remove radiator cap and visually check coolant for proper circulation. Stop engine. If coolant is circulating below 100°F, remove thermostat and test or replace (para. 3-46).

Step 2. Test coolant temperature gage, sending unit, and electrical circuits (table 2-4, malfunction 30).

END OF TESTING!

20. COOLANT LOSS DURING NORMAL OPERATION

Step 1. Pressurize cooling system and check for leaks.
a. Tighten loose clamps, fasteners, or fittings.
b. Replace leaking hoses and/or water pump (para. 3-43 or 3-47).

Step 2. Check radiator cap for proper relief pressure (TM 750-254). Relief pressure should be 15 psi (103 kPa). Replace radiator cap if defective.

Step 3. Check for coolant in oil.
If coolant is found in oil, notify your supervisor.

END OF TESTING!

https://truckmanualshub.com/

Table 2-2. Mechanical Troubleshooting (Contd).

MALFUNCTION TEST OR INSPECTION CORRECTIVE ACTION

FUEL SYSTEM

WARNING

- Diesel fuel is flammable. Do not perform troubleshooting checks near open flame, sparks, or electricity. Injury to personnel may result.
- Eye protection is required when performing fuel system troubleshooting checks. Failure to wear eye protection may result in injury to personnel.
- Ignition switch must remain OFF during fuel system troubleshooting checks. Failure to verify that ingition system is turned off may result in injury to personnel.

21. NO FUEL AT FUEL INJECTORS

Step 1. Check final fuel filter for restrictions (para. 3-29).

a. If final fuel filters are restricted or defective, replace (para. 3-29).

b. If final fuel filters are not restricted and problem persists, notify your supervisor.

END OF TESTING!

PERSONNEL HOT WATER HEATER

22. PERSONNEL HOT WATER HEATER DOES NOT HEAT CAB

Step 1. Engine does not reach normal operating temperature.

Refer to malfunction 19.

Step 2. Check personnel hot water heater for clogged, broken, or leaking inlet/outlet hoses.

If personnel hot water heater hoses are leaking or collapsed, replace (para. 3-44).

Step 3. Check for proper personnel hot water heater control cable operation of heater, defroster, and heater diverter vents and doors.

If control cables are bent or broken, replace (para. 11-41).

Step 4. Check heater blower motor and fan for proper operation (TM 9-2320-361-10).

If damaged, replace personnel hot water heater (para. 11-42).

END OF TESTING!

TRANSMISSION

23. TRANSMISSION NOISY

Step 1. Check propeller shafts condition. Remove propeller shafts and inspect (para. 7-2).

If propeller shafts assemblies are worn or defective, repair or replace (para. 7-2).

Step 2. Check clutch for proper adjustment.

Adjust clutch linkage as necessary (para. 3-10).

Step 3. Check transmission fluid level (LO 9-2320-209-12-1).

Step 4. Drain transmission fluid and check for signs of broken gears, metal shavings, and contamination (LO 9-2320-209-12-1).

If broken gears or metal shavings are found, notify your supervisor.

END OF TESTING!

https://truckmanualshub.com/

Table 2-2. Mechanical Troubleshooting (Contd).

MALFUNCTION TEST OR INSPECTION CORRECTIVE ACTION

24. TRANSMISSION LEAKS OIL

Step 1. Check transmission fluid level (LO 9-2320-209-12-1). If fluid level is too high, drain to proper level (LO 9-2320-209-12-1).

Step 2. Check drainplug for leaks.
If drainplug is leaking, tighten.

Step 3. Check breather for restrictions.
If breather is restricted, refer to para. 5-2.

END OF TESTING!

25. CLUTCH PEDAL WILL NOT TRAVEL OR DEPRESS

Step 1. Check transmission fluid level (LO 9-2320-209-12-1).
If fluid level is low, add fluid (LO 9-2320-209-12-1).

Step 2. Check clutch linkage to ensure it is connected and properly adjusted (para. 3-10).

END OF TESTING!

CLUTCH

26. VEHICLE CREEPS WITH CLUTCH DEPRESSED

Step 1. Check clutch pedal free travel. Clutch pedal should have 1.5 - 2 in. (3.8 - 5 cm) free travel.
If clutch requires adjustment, refer to para. 3-10.

Step 2. If free travel will not adjust, notify your supervisor.

END OF TESTING!

27. CLUTCH DRAGS, SLIPS, OR DOES NOT ENGAGE

Step 1. Check clutch linkage for binding.
If linkage binds, check for bent or broken parts. Replace damaged parts (para. 3-10).

Step 2. Check linkage for proper lubrication (LO 9-2320-209-12-1).

Step 3. Check clutch linkage for proper adjustment.
Adjust clutch linkage as necessary (para. 3-10).

Step 4. Inspect torque rods.
a. Place flat end of crowbar or pinch bar between torque rod and mounting bracket.
b. Push on end of bar until hook end moves 4-6 in. (10.2-15.2 cm).
c. Release pressure on bar.
If torque rod does not return to original position, replace (para. 7-22).

Step 5. Check clutch for proper adjustment.
If clutch is not adjusted properly, notify your supervisor.

END OF TESTING!

TRANSFER CASE

28. BURNING ODOR EVIDENT WITH CLUTCH ENGAGED

Check clutch linkage and adjustment (para. 3-10).
a. If clutch is not adjusted correctly, adjust (para. 3-10).
b. If problem persists, notify your supervisor.

END OF TESTING!

https://truckmanualshub.com/

Table 2-2. Mechanical Troubleshooting (Contd).

MALFUNCTION TEST OR INSPECTION CORRECTIVE ACTION

29. TRANSFER CASE DIFFICULT TO SHIFT

Step 1. Check transfer case fluid level (LO 9-2320-209-12-1).
Fill or drain to proper level (LO 9-2320-209-12-1).

Step 2. Inspect shift linkage for bends, breaks, or missing parts.
Replace any broken, bent, or missing parts (para. 6-2 or 6-3).

Step 3. If internal problems in transfer case exist, notify your supervisor.

END OF TESTING!

30. TRANSFER CASE GRINDS OR POPS OUT OF GEAR DURING NORMAL VEHICLE OPERATION

Step 1. Check condition and adjustment of external transfer case linkages. If linkages are damaged, repair, replace, or adjust (para. 6-2 or 6-3).

Step 2. If internal problems in transfer case exist, notify your supervisor.

END OF TESTING!

31. TRANSFER CASE NOISY

Step 1. Check transfer case fluid level (LO 9-2320-209-12-1).
If low, fill to proper level (LO 9-2320-209-12-1).

Step 2. Drain transfer case fluid (LO 9-2320-209-12-1) and check for signs of broken gears, metal shavings and contamination.
If broken gears, metal shavings, or contamination are found in transfer case or on magnetic drainplug, notify your supervisor.

END OF TESTING!

PROPELLER SHAFTS

32. PROPELLER SHAFT VIBRATION

Step 1. Inspect propeller shaft for foreign material or damage.
Clean foreign material from propeller shaft, or replace if damaged (para. 7-2).

Step 2. Inspect propeller shaft for loose screws.
If any screws are loose, tighten.

Step 3. Check universal joints for play or looseness.
If rust is visible around U-joint, disassemble and inspect.
Replace U-joint, disassemble and inspect. Replace U-joint if damaged (para. 7-4).

END OF TESTING!

DIFFERENTIALS

33. DIFFERENTIAL NOISY

Step 1. Check to see if front wheel drive is engaged.
Disengage front wheel drive when traveling on hard flat surfaces.

Step 2. Check lubrication level in axle housing differential (LO 9-2320-209-12-1). If low, fill to proper oil level (LO 9-2320-209-12-1).

Step 3. Check for loose inner wheel adapter nuts or loose lugnuts.
a. If inner wheel adapter nuts are loose, tighten 400-425 lb-ft (542-576 N·m).
b. If lugnuts are loose, tighten 325-355 lb-ft (441-481 N·m).

https://truckmanualshub.com/

Table 2-2. Mechanical Troubleshooting (Contd).

MALFUNCTION TEST OR INSPECTION CORRECTIVE ACTION

Step 4. Check for loose or damaged wheel bearings. Raise wheel off ground. Use prybar to check for excessive play.

a. Adjust wheel bearings (para. 9-5).

b. If damaged, replace wheel bearings (para. 9-3 or 9-4).

Step 5. Check differential operation. Remove differential propeller shaft(s) (para. 7-2). Raise wheels (TM 9-2320-361-10) and manually turn wheels and observe differential operation.

a. If tires will not rotate, check brakeshoe condition and operation (para. 8-7).

b. Remove brakedrums (para. 8-2). If brake system components are defective, repair or replace (paras. 8-7 through 8-16, as necessary, or notify your supervisor).

c. If tires still will not rotate, notify your supervisor.

d. If tire rotation drags at some points during full rotation, remove and inspect axle shafts (para. 7-6 or 7-10).

e. If axle shafts are defective, replace (para. 7-6 or 7-10).

END OF TESTING!

34. DIFFERENTIAL CLUNKS DURING TURNS OR INITIAL TAKE OFF

Step 1. Check differential propeller shaft(s) and universal joint(s) condition (para. 7-2).

Repair or replace defective components (para. 7-2).

Step 2. Check front axle shafts and universal joints for defects (para. 7-6).

Repair or replace defective components (para. 7-6).

Step 3. If internal problems in differential exist, notify your supervisor.

END OF TESTING!

35. DIFFERENTIAL VIBRATES

Step 1. Check tires and rims condition. Repair or replace defective components (para. 9-2).

Step 2. Complete troubleshooting malfunction 34, steps 1 and 2.

Step 3. If internal problems in differential exist, notify your supervisor.

END OF TESTING!

36. DIFFERENTIAL LEAKS OIL

Check axle seals condition. Inspect drum for presence of gear oil.

If gear oil is present in or around drums, replace axle seals (para. 7-7).

END OF TESTING!

WHEEL AND TIRES

37. UNEVEN TIRE WEAR

Step 1. Check vehicle for overload (TM 9-2320-361-10). If vehicle load is excessive, adjust to capacity limit.

Step 2. Check for loose inner wheel adapter nuts or loose lugnuts (malfunction 33, step 3).

a. If inner wheel adapter nuts are loose, tighten 400-425 lb-ft (542-576 N·m).

b. If lugnuts are loose, tighten 325-355 lb-ft (441-481 N·m).

https://truckmanualshub.com/

Table 2-2. Mechanical Troubleshooting (Contd).

MALFUNCTION TEST OR INSPECTION CORRECTIVE ACTION

Step 3. Check for correct tire pressure (TM 9-2320-361-10).

Adjust tire pressure if necessary (TM 9-2320-361-10).

Step 4. Check shock absorbers for class II or class III leakages.

Replace any defective shocks (para. 7-20).

Step 5. Check for improper toe-in adjustment.

If tire problem is on front wheels, adjust toe-in (para. 9-7).

Step 6. Check wheel bearings for proper adjustment and damage. Raise wheel off ground. Use prybar to check for excessive play.

a. Adjust wheel bearings (para. 9-5).

b. If damaged, replace wheel bearings (para. 9-3 or para. 9-4).

Step 7. Check drag link for defects (para. 9-11).

a. If linkage parts are defective, replace (para. 9-11).

b. Perform steering gear adjustment (para. 9-9).

Step 8. Check to make sure tires have been properly rotated (TM 9-2610-200-14 and TM 9-2610-201-14) for specific instructions.

END OF TESTING!

38. VEHICLE SHIMMY, WOBBLE, OR VIBRATION

Step 1. Check for loose inner wheel adapter nuts or loose lugnuts (malfunction 33, step 3).

Step 2. Check for dirt or mud buildup on wheel.

Clean dirt and mud from wheel.

Step 3. Inspect wheels for bends and damage.

If bent or damaged, replace wheel (para. 9-2).

Step 4. Inspect wheel bearings for proper adjustment and damage. Raise wheel off ground. Use prybar to check for excessive play.

a. Adjust wheel bearings (para. 9-5).

b. If damaged, replace wheel bearings (para. 9-3).

Step 5. Inspect steering knuckles for loose conditions.

If steering knuckles are loose and/or damaged, notify your supervisor.

Step 6. Perform malfunction 37, step 7.

END OF TESTING!

STEERING

39. EXCESSIVE PLAY IN STEERING

Step 1. Check for correct tire pressure (TM 9-2320-361-10).

Adjust tire pressure, if necessary.

Step 2. Check steering gear for secure mounting.

If loose, tighten mounting screws 62-68 lb-ft (84-92 N·m).

https://truckmanualshub.com/

Table 2-2. Mechanical Troubleshooting (Contd).

MALFUNCTION TEST OR INSPECTION CORRECTIVE ACTION

Step 3. Inspect pitman arm, drag link, steering arm, steering knuckles, and tie-rod ends for looseness or damage.

a. Replace loose or damaged parts (paras. 9-8, 9-9, 9-10, and 9-11). If steering arm or knuckle is damaged, notify your supervisor.

b. Reset correct toe-in (para. 9-7).

Step 4. Inspect wheel bearings for proper adjustment and damage (malfunction 38, step 4). Raise wheel off ground. Use prybar to check for excessive play.

a. Adjust wheel bearings (para. 9-5).

b. If damaged, replace wheel bearings (para. 9-3).

Step 5. To adjust steering gear, refer to para. 9-9.

If play in steering continues, notify your supervisor.

END OF TESTING!

40. STEERING WHEEL HARD TO TURN

Step 1. Inspect pitman arm, drag link, steering, and tie-rod ends for binding, damage, or lack of lubrication.

a. If bent or damaged, replace (paras. 9-8, 9-9, 9-10, and 9-11). If steering arm is damaged, notify your supervisor.

b. If binding, lubricate (LO 9-2320-209-12-1).

Step 2. Inspect steering knuckles for binding. Raise front wheels off ground. Disconnect drag link at pitman arm (paras. 9-8 and 9-11). Turn wheels to determine binding. If steering knuckles are binding, notify your supervisor.

Step 3. Inspect springs for looseness.

If loose, tighten U-bolts 190-230 lb-ft (258-312 N·m).

Step 4. Check front tires for proper inflation.

Adjust tire pressure as necessary (TM 9-2320-361-10).

Step 5. Check for improper toe-in adjustment.

Adjust toe-in if necessary (para. 9-7).

END OF TESTING!

41. VEHICLE WANDERS OR PULLS TO ONE SIDE

Step 1. Check front tires for proper inflation.

Adjust tire pressure as necessary (TM 9-2320-361-10).

Step 2. Check front tires for uneven tire wear. If tire wear is evident, check toe-in.

Adjust toe-in if necessary (para. 9-7).

Step 3. Check for dragging brakes. Raise front wheels off ground. Spin wheels by hand, wheels should turn with slight drag when properly adjusted.

If brakes require adjustment, refer to para. 8-8.

Step 4. Check wheel bearings for proper adjustment and damage (malfunction 38). Raise wheel off ground. Use pry bar to check for excessive play.

a. Adjust wheel bearings (para. 9-5).

b. If damaged, replace wheel bearings (para. 9-3 or 9-4).

Step 5. Check steering gear for loose mounting screws.

If mounting screws are loose, tighten 62-68 lb-ft (84-92 N·m).

https://truckmanualshub.com/

Table 2-2. Mechanical Troubleshooting (Contd).

MALFUNCTION TEST OR INSPECTION CORRECTIVE ACTION

Step 6. Inspect pitman arm, drag link, steering arm, and tie-rod ends for looseness or damage.

a. Replace loose or damaged parts, and reset correct toe-in (paras. 9-7, 9-8, 9-9, 9-10, and 9-11).

b. If steering arm is damaged, notify your supervisor.

Step 7. Inspect steering knuckles for binding or looseness (malfunction 40, step 2).

If binding or looseness is found, notify your supervisor.

Step 8. Inspect front springs and shackles for looseness.

Replace worn shackles (para. 7-13) or tighten loose spring U-bolts 190-230 lb-ft (258-312 N·m).

END OF TESTING!

FRAME AND BRACKETS

42. TOWING PINTLE DOES NOT LATCH OR LOCK

Step 1. Inspect pintle hook for lubrication.

Lubricate pintle hook as required (LO 9-2320-209-12-1).

Step 2. Check pintle hook for proper operation.

If pintle hook if broken, bent, or parts are missing, disassemble and repair or replace (para. 10-4).

END OF TESTING!

43. PINTLE HOOK DOES NOT TURN

Step 1. Check pintle hook for lubrication.

Lubricate pintle hook as required (LO 9-2320-209-12-1).

Step 2. Inspect pintle hook for bends.

If pintle hook is bent, replace (para. 10-4).

END OF TESTING!

44. EXCESSIVELY LOOSE LIFTING SHACKLE

Inspect shackle pin for breaks, cracks, and bends.

If shackle pin is broken, cracked, or bent, replace (para. 10-2, 10-3, or 10-5).

END OF TESTING!

45. LOOSE SPARE TIRE CARRIER

Step 1. Check for missing or broken mounting screws.

If mounting screws are broken or missing, replace (para. 10-7 or 12-16).

Step 2. Check spare tire carrier for bent, broken, or missing crank, crank gear, shaft, or bracket. If any spare tire carrier part is damaged, replace (para. 10-7 or 12-16).

END OF TESTING!

https://truckmanualshub.com/

Table 2-2. Mechanical Troubleshooting (Contd).

MALFUNCTION TEST OR INSPECTION CORRECTIVE ACTION

SUSPENSION

46. NOISY SUSPENSION

Step 1. Inspect leaf springs for damage.

If damaged, replace (para. 7-12 or 7-16).

Step 2. Check front spring shackles and steering linkage for lack of lubrication. If lubrication is required, refer to LO 9-2320-209-12-1.

Step 3. Check rear spring seat pads for wear.

If springs are rubbing against spring seat bracket, replace spring seat pads (para. 7-21).

END OF TESTING!

47. CONTINUOUS WANDERING OR SWAYING (POOR CONTROL)

Step 1. Inspect front leaf springs for breaks.

Replace any broken spring leafs (para. 7-13).

Step 2. Inspect shock absorbers for class II or class III leaks and damage.

Replace broken or leaking shocks (para. 7-20).

Step 3. Inspect spring U-bolts for looseness or damage.

a. If U-bolts are loose, tighten 190-230 lb-ft (260-312 N·m).

b. If U-bolts are damaged, replace (para. 7-12).

Step 4. Check steering system (malfunction 39).

END OF TESTING!

48. VEHICLE SAGS

Step 1. Inspect leaf springs for breaks or damage.

Replace any leaf springs that may cause the vehicle to sag (para. 7-12 or 7-16).

Step 2. Inspect front leaf spring shackles for breaks or worn bushings.

Replace any broken or worn shackles (para. 7-13).

END OF TESTING!

WINCH

49. WINCH INOPERATIVE

Step 1. Check transmission power takeoff linkage when front winch is inoperative and/or power divider linkage when rear winch (M764) is inoperative for bends, breaks, or improper adjustment.

a. If PTO linkage is bent, broken, or out of adjustment, replace or adjust (para. 13-20).

b. If power divider linkage is bent, broken, or out of adjustment, replace or adjust (para. 13-23).

Step 2. Check front winch driveshaft for broken or missing shearpin. If shearpin is broken or missing, refer to TM 9-2320-361-10.

Step 3. Check front winch propeller shaft for breaks.

If propeller shaft is broken, replace (para. 13-6).

Step 4. Check front winch cable for bends and kinks.

If winch cable is broken or kinked, replace (para. 13-3).

END OF TESTING!

https://truckmanualshub.com/

Table 2-2. Mechanical Troubleshooting (Contd).

MALFUNCTION TEST OR INSPECTION CORRECTIVE ACTION

50. WINCH OPERATES IN ONE DIRECTION ONLY

Step 1. Check winch control linkage for bends or kinks.

If winch control linkage is bent or kinked, replace (para. 13-8).

Step 2. Check transmission PTO linkage for bends or improper adjustment.

If PTO linkage is bent or out of adjustment, replace or adjust (para. 13-20).

END OF TESTING!

51. OPERATES AT ONE SPEED ONLY

Check throttle control linkage for damage.

If throttle control linkage is damaged, replace (para. 3-35).

END OF TESTING!

52. DRAG BRAKE DOES NOT OPERATE

Check drag brake adjustment.

a. Adjust drag brake as necessary (para. 13-2).

b. If adjustment will not correct drag brake operation, replace winch (para. 13-5 or 13-18).

END OF TESTING!

53. WINCH DOES NOT HOLD LOAD WHEN POWER RELEASED

Check automatic brake adjustment.

Adjust automatic brake as necessary (para. 13-4).

END OF TESTING!

54. AUTOMATIC BRAKE OVERHEATS

Step 1. Check weight limits of winch and adjust size of load or use snatch block.

Step 2. Check automatic brake adjustment.

Adjust if necessary (para. 13-4).

END OF TESTING!

55. VEHICLE ROLLS WHILE OPERATING REAR WINCH

Check parking brake for proper adjustment.

Adjust parking brake (para. 8-3).

END OF TESTING!

POWER TAKEOFF

56. POWER TAKEOFF NOISY

Step 1. Inspect PTO propeller shaft for proper lubrication.

Lubricate propeller shaft if required (LO 9-2320-209-12-1).

Step 2. Inspect PTO propeller shaft for bends. If propeller shaft is bent, replace (para. 13-21).

END OF TESTING!

https://truckmanualshub.com/

Table 2-2. Mechanical Troubleshooting (Contd).

MALFUNCTION TEST OR INSPECTION CORRECTIVE ACTION

57. POWER TAKEOFF DIFFICULT TO SHIFT

Step 1. Inspect PTO shift linkage for improper lubrication.

Lubricate PTO shift linkage if necessary (LO 9-2320-209-12-1).

Step 2. Inspect PTO shift linkage for bends and cracks.

If PTO shift linkage is bent or cracked, replace (para. 13-20).

END OF TESTING!

58. (TRANSMISSION-DRIVEN) POWER TAKEOFF INOPERATIVE

Check power takeoff. Engage power takeoff and visually confirm output propeller shaft rotation.

a. If propeller shaft is noisy, inspect propeller shaft and universal joints. If propeller shaft is bent or universal joints have play, repair or replace (para. 13-6).

b. If propeller shaft is not rotating, inspect control linkage.

Adjust control linkage and replace defective parts (para. 13-20).

c. If internal problem exists, notify your supervisor.

END OF TESTING!

59. (TRANSFER-DRIVEN) POWER TAKEOFF INOPERATIVE

Check power takeoff. Engage and visually confirm output propeller shaft rotation.

a, If propeller shaft is noisy, inspect propeller shaft and universal joints.

If propeller shaft is bent or universal joints have play, repair or replace (para. 7-2).

b. If propeller shaft is not rotating, inspect control linkage.

Adjust control linkage and replace defective parts (para. 6-2 or 6-3).

c. If internal problem exists, notify your supervisor.

END OF TESTING!

NONELECTRICAL GAGES

60. SPEEDOMETER OR TACHOMETER BOUNCES, NOISY, OR INOPERATIVE

Step 1. Inspect speedometer or tachometer drive shaft for binding and kinks.

If drive shaft is bent or kinked, replace (para. 4-14, 4-15, or 4-16).

Step 2. Remove speedometer or tachometer (para. 4-13) and check speedometer or tachometer cable operation.

If cable is operating properly, replace speedometer or tachometer (para. 4-13).

END OF TESTING!

61. AIR PRESSURE GAGE INOPERATIVE

Check operation of air pressure gage with known good air pressure gage.

If test gage works properly, replace air pressure gage (para. 4-11).

END OF TESTING!

https://truckmanualshub.com/

Table 2-2. Mechanical Troubleshooting (Contd).

MALFUNCTION TEST OR INSPECTION CORRECTIVE ACTION

FIFTH WHEEL

62. TRAILER WILL NOT HITCH TO FIFTH WHEEL

Inspect coupling jaws for bends and breaks.

If coupling jaws are broken or bent, replace fifth wheel (para. 12-113).

END OF TESTING!

DUMP BODY (M342A2)

WARNING

All personnel must stand clear during lifting operations. A snapped chain, swinging or shifting load result in cause injury or death to personnel.

63. DUMP BODY WILL NOT RAISE

Step 1. Check transmission PTO linkage for bends, breaks, or improper adjustment.

If transmission PTO linkage is bent, broken, or out of adjustment, replace or adjust (para. 13-20).

Step 2. Check all hydraulic lines for leaks, cracks, and breaks.

a. Tighten any loose fittings or loose hose connections.

b. If hoses are cracked or leaking, notify your supervisor.

Step 3. Visually check control valve for leaks and damage.

If leaking or damaged, notify your supervisor.

Step 4. Inspect pump housing for leaks and overheating with PTO engaged.

If pump is defective, notify your supervisor.

Step 5. Check control box, linkage, and lock operation. Move main control levers in cab and observe control box levers movement.

If control box lever, tailgate linkage, and lock will not operate, repair or replace (para. 12-11 or 12-12).

Step 6. Check hydraulic system for leaks.

If hydraulic hose fittings are leaking, notify your supervisor.

END OF TESTING!

64. DUMP BODY DOES NOT LOWER

Step 1. Check to ensure braces are not in raised position under dump body.

Lower and stow braces (TM 9-2320-361-10).

Step 2. Check control valve movement in and out.

If shaft will not move, notify your supervisor.

END OF TESTING!

65. DUMP BODY DOES NOT HOLD IN RAISED POSITION

Step 1. Check all hydraulic lines for leaks and cracks.

Tighten any loose connections.

If hoses are damaged, notify your supervisor.

Step 2. Check control valve for leaks.

If leaking, notify your supervisor.

https://truckmanualshub.com/

Table 2-2. Mechanical Troubleshooting (Contd).

MALFUNCTION TEST OR INSPECTION CORRECTIVE ACTION

Step 3. Check hoist cylinder hoses for restrictions. If hydraulic hoses are restricted, notify your supervisor.

Step 4. Check control valve lever travel and adjustment.

a. If control valve lever travel and adjustment is incorrect, notify your supervisor.

b. If control valve shaft will not operate when control box is operated, notify your supervisor.

END OF TESTING!

66. HYDRAULIC PUMP NOISY

Check oil level in reservoir (LO 9-2320-209-12-1).

a. If fluid level is low, fill to proper level (LO 9-2320-209-12-1).

b. If hydraulic pump is still noisy, notify your supervisor.

END OF TESTING!

67. TAILGATE DOES NOT OPEN

Check for bent or broken linkage.

If linkage is bent or broken, notify your supervisor.

END OF TESTING!

EARTH BORING AND POLESETTING (M764)

68. EARTH BORING MACHINE WILL NOT OPERATE

Step 1. Check power divider control linkage for bends, breaks, or improper adjustment.

If power divider controls are bent, broken, or out of adjustment, refer to para. 13-23.

Step 2. Check power divider and earth boring propeller shafts and universal joints for breaks. If propeller shafts or universal joints are broken, refer to para. 13-21.

END OF TESTING!

69. EARTH BORING MACHINE CANNOT BE MOVED VERTICALLY

Check vertical drivechains for breaks or improper adjustment.

a. If vertical drivechains are broken, refer to para. 12-84.

b. If vertical drivechains are out of adjustment, notify your supervisor.

END OF TESTING!

70. EARTH BORING MACHINE CANNOT BE MOVED HORIZONTALLY

Check horizontal drivechains for breaks or improper adjustment.

a. If horizontal drivechains are broken, refer to para. 12-83.

b. If horizontal drivechains are out of adjustment, notify your supervisor.

END OF TESTING!

https://truckmanualshub.com/

Table 2-2. Mechanical Troubleshooting (Contd).

MALFUNCTION TEST OR INSPECTION CORRECTIVE ACTION

OUTRIGGERS (M764)

71. OUTRIGGERS INOPERATIVE

Step 1. Check hydraulic lines, valve, and pump for leaks.

a. Tighten loose connections.

b. If hoses, valve, or pump are damaged, notify your supervisor.

Step 2. Check outrigger pump propeller shaft for breaks.

If broken, replace propeller shaft (para. 12-87).

END OF TESTING!

72. OUTRIGGERS OPERATE SLOWLY

Check for cracked, broken, or loose hydraulic hoses.

a. Tighten loose connections.

b. If hoses are cracked or broken, notify your supervisor.

END OF TESTING!

FUEL TANK (M49A2C)

WARNING

Diesel fuel is flammable. Do not perform fuel system procedures near open flame. Injury or death to personnel may result.

73. FUEL DOES NOT PUMP FROM COMPARTMENTS, OR PUMPS SLOWLY

Step 1. Inspect transfer PTO for proper operation.

If transfer PTO is inoperative, check PTO linkage for proper adjustment (para. 6-2).

Step 2. Check fusible link to make sure it is mounted to pin, and check fusible link for breaks.

If fusible link is broken or not mounted properly, replace or reinstall (para. 12-21).

Step 3. Check delivery pump propeller shaft for breaks and damaged universal joints.

If propeller shaft is broken or universal joints need replacement, replace (paras. 12-49 through 12-52).

Step 4. Perform fuel filter separator check (TM 9-2320-361-10).

If fuel filter separator is restricted, replace filter (para. 12-39).

Step 5. Check delivery pump strainer for restrictions.

a. If restricted, clean or replace delivery strainer (para. 12-40).

b. If fuel filter separator is not restricted and fuel pressure is low, replace delivery pump (para. 12-33).

END OF TESTING!

74. DELIVERY PUMP DISPENSES FUEL SLOWLY FROM BOTH TANKS

Step 1. Perform fuel filter seperator check (TM 9-2320-361-10).

If fuel filter seperator is restricted, replace filter (para. 12-39).

https://truckmanualshub.com/

Table 2-2. Mechanical Troubleshooting (Contd).

MALFUNCTION TEST OR INSPECTION CORRECTIVE ACTION

Step 2. Check delivery pump strainer for restrictions.

a. If restricted, clean or replace delivery pump strainer (para. 12-40).

NOTE

If no. 2 diesel fuel is being used and ambient air temperature is 32°F (0°C), the outlet pressure could be as low as 5 psi (34.5 kPa) (TM 9-2320-361-10 for fuel filter separator inlet and outlet pressure differences).

b. If fuel system is clean and pressure is low, replace delivery pump (para. 12-33).

Step 3. Check PTO speed control linkage for proper operation and adjustment (para. 13-20).

Step 4. Check discharge valve control levers operation.

a. If control levers operation is defective, remove and inspect (para. 12-20).

b. If control lever assembly components are defective, replace (para. 12-20).

Step 5. Check transfer case power takeoff operation,

If transfer case power takeoff is not operating, perform malfunction 59.

END OF TESTING!

75. FUEL DOES NOT PUMP OR PUMPS FUEL SLOWLY FROM SELECTED TANK, AND FUEL DRAINS SLOWLY FROM SELECTED TANK USING GRAVITY PROCEDURES

Step 1. Check discharge control cables for proper lubrication (LO 9-2320-209-12-1).

Step 2. Check discharge control cable for breaks or kinks.

If discharge control cable is broken or kinked, replace (para. 12-20).

Step 3. Check discharge control cable for proper adjustment.

If control cable needs adjustment, remove slack in cable (para. 12-20).

Step 4. Inspect discharge valve tubes for bent, crushed, broken, or leaking tubes.

Replace discharge valve tubes if bent, crushed, broken, or leaking (para. 12-21).

Step 5. Inspect discharge valves for proper operation.

If discharge valves are broken or inoperative, replace (para. 12-18 or 12-19).

END OF TESTING!

76. FUEL TANK COMPARTMENTS CANNOT BE SUCTION FILLED

Step 1. Check delivery pump propeller shaft for broken universal joints or broken shaft.

a. If shaft is broken, replace (para. 12-49 or 12-51).

b. If universal joints are broken, replace (para. 7-4).

Step 2. Perform fuel filter separator check (TM 9-2320-361-10).

If fuel filter separator is restricted, replace (para. 12-39).

Step 3. Check delivery pump strainer for restrictions.

a. If strainer is restricted, clean or replace (para. 12-40).

NOTE

If no. 2 diesel fuel is being used and ambient air temperature is 32°F (0°C), the outlet pressure could be as low as 5 psi (34.5 kPa) (TM 9-2320-361-10 for fuel filter separator inlet and outlet pressure differences).

b. If fuel system is clean and pressure is low, replace delivery pump (para. 12-33).

https://truckmanualshub.com/

Table 2-2. Mechanical Troubleshooting (Contd).

MALFUNCTION TEST OR INSPECTION CORRECTIVE ACTION

WATER TANK (M50A2 AND M50A3)

77. WATER CANNOT BE PUMPED FROM BOTH TANKS

Step 1. Check delivery pump driveshaft and universal joints for breaks.

a. If driveshaft is broken, replace (para. 12-49, 12-50, 12-51, or 12-52).

b. If universal joints are broken, replace (para. 7-4).

Step 2. Check delivery pump drivechain and sprocket for breaks.

If delivery pump drivechain or sprocket is broken, replace (para. 12-33).

Step 3. Check transfer PTO for proper operation.

a. If transfer PTO is inoperative, check PTO linkage for proper operation and adjustment (paras. 6-2 and 6-3).

b. If transfer PTO linkage is operating properly and transfer PTO is defective, notify your supervisor.

Step 4. Check delivery pump strainer for contamination or restrictions.

a. If delivery pump strainer is restricted, clean or replace strainer (para. 12-40).

b. If water system is clean and delivery pump propeller is operating at correct speed, replace delivery pump (para. 12-33).

END OF TESTING!

78. WATER CANNOT BE PUMPED OR PUMPS SLOWLY FROM SELECTED TANK, AND WATER DRAINS SLOWLY FROM SELECTED TANK USING GRAVITY PROCEDURES

Step 1. Check discharge control cables for proper lubrication (LO 9-2320-209-12-1).

Step 2. Check discharge control cables for breaks, bends, or kinks.

If discharge control cable is broken, bent, or kinked, replace (paras. 12-44 through 12-46).

Step 3. Check discharge control cable for improper adjustment.

If cable requires adjustment, remove slack in cable (para. 12-47).

Step 4. Inspect discharge valve tubes for bent, crushed, broken, or leaking tube.

If discharge valve tubes are bent, crushed, broken, or leaking, replace (para. 12-44 or 12-45).

Step 5. Inspect discharge valves for proper operation.

If discharge valves are broken or inoperative, replace (paras. 12-46).

END OF TESTING!

79. WATER PUMPS OUT OF BOTH TANKS SLOWER THAN NORMAL

Step 1. Check transfer PTO speed control linkage for proper operation and adjustment (para. 12-53).

Step 2. Remove suction strainer from suction hose and check for restrictions (para. 12-40).

If suction strainer is restricted, clean or replace (para. 12-40).

Step 3. Check delivery pump strainer for restrictions.

a. If delivery pump strainer is restricted, clean or replace (para. 12-40).

b. If water system is clean and water still pumps slowly, replace delivery pump (para. 12-33).

END OF TESTING!

https://truckmanualshub.com/

Table 2-2. Mechanical Troubleshooting (Contd).

MALFUNCTION TEST OR INSPECTION CORRECTIVE ACTION

80. WATER TANK COMPARTMENTS CANNOT BE SUCTION FILLED

Step 1. Check delivery pump propeller shafts for broken universal joints or broken shaft.

a. If shaft is broken, replace (para. 12-49, 12-50, 12-51, or 12-52).

b. If universal joints are broken, replace (para. 7-4).

Step 2. Remove suction strainer from suction hose and check for restrictions (para. 12-40).

If suction strainer is restricted, clean or replace (para. 12-40).

Step 3. Check transfer PTO for proper operation.

a. If transfer PTO is inoperative, check transfer PTO linkage for proper operation and adjustment (para. 6-2 and 6-3).

b. If transfer PTO linkage is operating properly and transfer PTO is inoperative, notify your supervisor.

Step 4. Check delivery pump strainer for restrictions.

a. If delivery pump strainer is restricted, clean or replace (para. 12-40).

b. If water system is clean and delivery pump driveshaft is operating at correct speed, replace delivery pump (para. 12-33).

END OF TESTING!

PERSONNEL FUEL BURNING HEATER/POWER PLANT HEATER KIT

81. HEATER WILL NOT OPERATE IN HIGH OR LOW POSITION

Refer to electrical troubleshooting table 2-4, malfunction 41.

82. HEATER WILL NOT OPERATE

WARNING

- Diesel fuel is flammable. Do not perform fuel system procedures near open flame. Injury or death to personnel may result.
- Compressed air source will not exceed 30 psi (207 kPa). When cleaning with compressed air, eyeshields must be worn. Failure to wear eyeshields may result in injury to personnel.

Step 1. Refer to electrical troubleshooting table 2-4, malfunction 41.

Perform electrical wire continuity tests. If defective, repair wires and connectors (table 2-4, malfunction 41).

Step 2. Check fuel shutoff valve and make sure it is in full ON position.

If fuel shutoff valve is damaged (or stuck in OFF or partial ON position), notify your supervisor.

Step 3. Check heater fuel filter for contamination (para. 14-5).

If water or contamination is present, clean and flush entire fuel system. Dry with compressed air.

Step 4. Check fuel lines for breaks, bends, kinks, or leaking joints.

If broken, kinked, or leaky joints are found, notify your supervisor.

https://truckmanualshub.com/

Table 2-2. Mechanical Troubleshooting (Contd).

MALFUNCTION TEST OR INSPECTION CORRECTIVE ACTION

Step 5. Check fuel pump discharge.

a. Remove fuel line from fuel pump output (para. 14-4).

b. Use clean container for fuel discharge recovery.

c. Position heater control box to RUN position.

d. If fuel pump fails to pump adequate amount of fuel, 1/2-pint (0.24 liter) in 30 seconds, replace (para. 14-4).

Step 6. Inspect exhaust system for restrictions.

If exhaust pipe is restricted or damaged, repair or replace (para. 14-6).

Step 7. If fuel burning heater still fails to operate, replace fuel burning heater (para. 14-2).

Step 8. Check for proper operation of defroster and heat diverter control cables (TM 9-2320-361-10).

If control cables or vent are broken, replace (paras. 11-40 and 11-41).

END OF TESTING!

https://truckmanualshub.com/

Section V. COMPRESSED AIR AND BRAKE SYSTEM TROUBLESHOOTING

2-13. GENERAL

a This section provides information to diagnose and correct malfunctions of the compressed air and brake system. Because of its complexity, the compressed air and brake system is divided into the following functional components:

- Parking Brake (page 2-54)
- Service Brakes (page 2-56)
- Compressed Air (page 2-62)
- Air-Operated Accessories (page 2-71)

b. The air and brake system schematic (Appendix E) shows interrelationship of these systems, and should be used as a reference when performing compressed air and brake system troubleshooting.

c. Each malfunction symptom given for an individual component or system is followed by step(s) you should take to determine the cause and corrective action you must take to remedy the problem.

d. Before taking any action to correct a possible malfunction, the following rules should be followed:

(1) Question operator to obtain any information that might help you to determine the cause of the problem.

(2) Never overlook the chance that the problem could be of simple origin. The problem could be corrected with minor adjustment.

(3) Use all senses to observe and locate troubles.

(4) Use test instruments or gages to help you to determine and isolate problems.

(5) Always isolate the system where the malfunction occurs and then locate the defective component.

(6) Use standard automotive theories and principles when troubleshooting the vehicles covered in this manual.

WARNING

Do not disconnect air lines before draining air reservoirs. Small parts under pressure may shoot out with high velocity, causing injury to personnel.

https://truckmanualshub.com/

TROUBLESHOOTING SYMPTOM INDEX

MALFUNCTION NO.	MALFUNCTION	TROUBLESHOOTING PROCEDURE PAGE
	PARKING BRAKE	
1.	Parking brake will not hold vehicle	2-54
2.	Parking brake drags	2-54
	SERVICE BRAKES	
3.	Brake pedal low, soft, or goes to floorboard (weak or no braking)	2-56
4.	Excessive pedal pressure required to stop vehicle (brake pedal stops two inches or more above floorboard); no apparent air system failure	2-58
5.	Vehicle pulls to right or left when applying brakes	2-60
6.	Brakes drag	2-61
7.	Brakes squeal	2-62
	COMPRESSED AIR	
8.	Excessive pedal pressure required to stop vehicle when towing a trailer M275A2)	2-62
9.	No air pressure or compressed air reads below 60 psi (low air pressure warning buzzer sounding indicating air pressure not building up to normal operating range as indicated by gage)	2-66
10.	Air pressure does not build up to normal operating pressure (above 85 psi) according to gage	2-68
11.	Air pressure exceeds maximum (gage reads over 120 psi) and safety valve opens to release pressure	2-68
12.	Low, or no reading on air pressure gage and warning buzzer shuts off	2-70
13.	Warning buzzer fails to sound on low pressure (below 60 psi)	2-70
	AIR-OPERATED ACCESSORIES	
14.	Windshield wipers inoperative or operate slowly (gage at normal operating pressure)	2-71
15.	Front wheel drive does not engage (front wheel drive lock-in switch engaged)	2-72
16.	Air horn does not work	2-73

https://truckmanualshub.com/

Table 2-3. Compressed Air and Brake System Troubleshooting.

MALFUNCTION TEST OR INSPECTION CORRECTIVE ACTION

WARNING

ASBESTOS DUST

Do not use a dry brush or compressed air to clean brakeshoes. There may be asbestos dust on brakeshoes which can be dangerous to your health if you breath it. (Brakeshoe must be wet, and a soft bristle brush must be used.)

PARKING BRAKE

1. PARKING BRAKE WILL NOT HOLD VEHICLE

Step 1. Check parking brake cable (1) for breaks, bends, or improper adjustment.

a. Replace parking brake cable (1) if broken or bent (para. 8-4).

b. Adjust parking brake cable (1) if out of adjustment (TM 9-2320-361-10).

Step 2. Inspect parking brakeshoes (5) for wear.

If parking brakeshoe (5) linings are worn more than 0.188 in. (4.78 mm), replace (para. 8-3).

Step 3. If parking brakeshoe (5) linings and drum (4) are oily, replace parking brakeshoes (para. 8-3) and clean drum (4).

Step 4. Check parking brakeshoe (5) clearance adjustment (para. 8-3).

If parking brakeshoe (5) clearance is out of adjustment, adjust (para. 8-3).

END OF TESTING!

2. PARKING BRAKE DRAGS

Step 1. Check brakeshoe retracting spring (2) and lever retracting spring (3) for breaks, bends, missing, or disconnected conditions.

a. Reconnect brakeshoe retracting spring (2) or lever retracting spring (3) if disconnected.

b. If brakeshoe retracting spring (2) or lever retracting spring (3) is broken, bent, or missing, replace (para. 8-3).

Step 2. Check parking brake cable (1) for binding or improper adjustment.

If parking brake cable (1) is binding or out of adjustment, replace (para. 8-4) or adjust (TM 9-2320-361-10).

Step 3. Perform step 4 of malfunction 1.

https://truckmanualshub.com/

Table 2-3. Compressed Air and Brake System Troubleshooting (Contd).

MALFUNCTION TEST OR INSPECTION CORRECTIVE ACTION

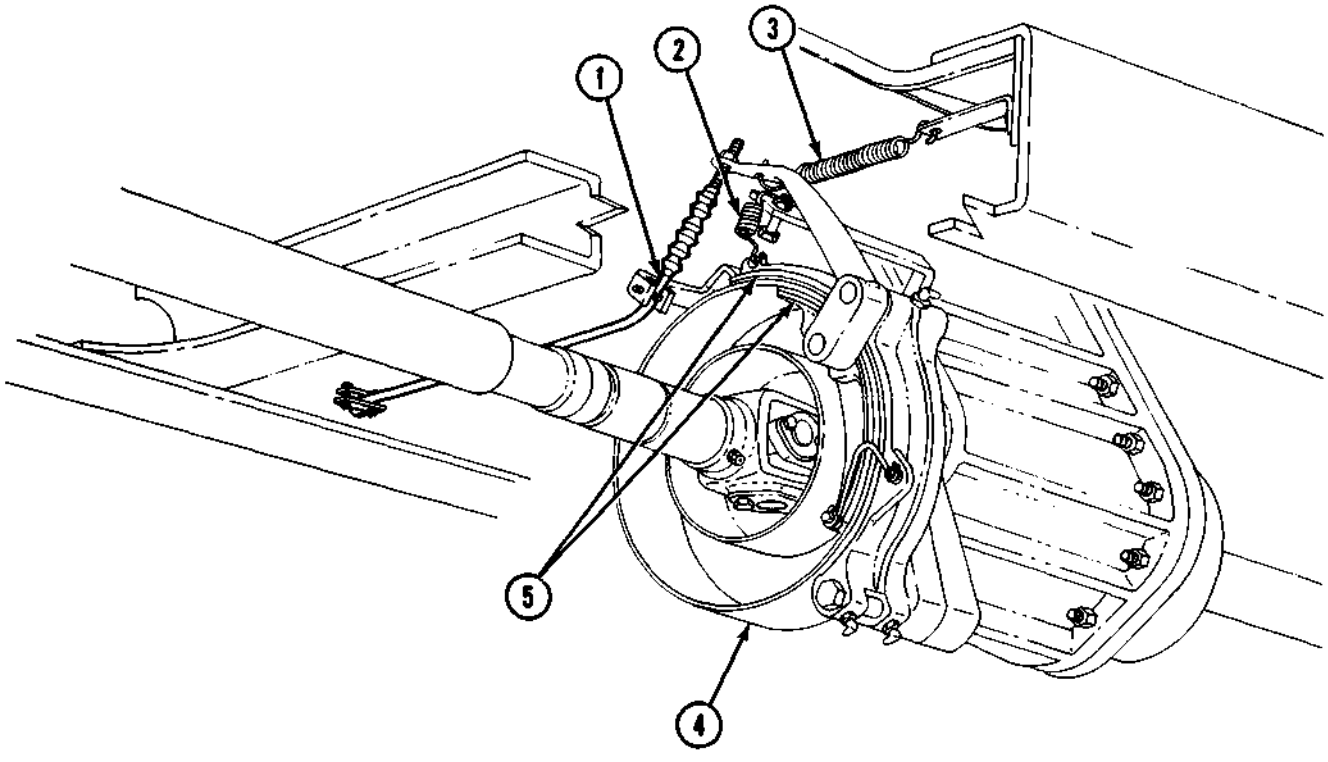

END OF TESTING!

https://truckmanualshub.com/

Table 2-3. Compressed Air and Brake System Troubleshooting (Contd).

MALFUNCTION TEST OR INSPECTION CORRECTIVE ACTION

SERVICE BRAKES

WARNING

Ensure new longer front brake hoses, currently used on 5-ton trucks, are installed on all 2-1/2-ton trucks. Old shorter front brake hoses are subject to failure during full steering travel and must be replaced with new longer front brake hose. Failure to do this may result in injury or death to personnel.

NOTE

Old shorter front brake hoses should be replaced with new longer front brake hoses (para. 8-16).

3. BRAKE PEDAL LOW, SOFT, OR GOES TO FLOORBOARD (WEAK OR NO BRAKING)

Step 1. Check master cylinder fluid level.

If fluid level is low, fill to proper level (LO 9-2320-209-12-1).

Step 2. Check wheel cylinders (2), hydraulic brake lines (1), and hoses for leaks, cracks, breaks, or loose connections.

a. If hydraulic brake lines (1) or hoses are loose, tighten.

b. If hydraulic brake lines (1) or hoses are broken, cracked, or leaking, replace (para. 8-15, 8-16, or TM 9-243).

c. If wheel cylinders (2) are leaking, replace (para. 8-9).

Step 3. Check for air in service brake system.

Bleed service brake system (para. 8-12).

Step 4. Check service brake hydraulic fluid for contamination.

If fluid is contaminated, flush entire brake system (para. 8-12).

Step 5. Check service brakeshoes (3) for proper adjustment and check service brakeshoe (3) linings for wear.

a. Adjust service brakeshoes (3) if necessary (para. 8-8).

b. If service brakeshoe (3) linings are worn more than 0.328 in. (8.33 mm), replace (para. 8-7).

Step 6. Remove two screws (6) and shield (7) from air-hydraulic cylinder (4).

Step 7. Inspect master cylinder (5) for leaks.

If master cylinder (5) is leaking, replace (para. 8-10).

Step 8. Inspect air-hydraulic cylinder (4) for brake fluid leaks.

If air-hydraulic cylinder (4) is leaking brake fluid, replace (para. 8-11).

Step 9. Perform master cylinder (5) internal leakage test (para. 8-10).

a. If master cylinder (5) is leaking internally, replace (para. 8-10).

b. If master cylinder (5) is good, and malfunction still exists, replace air-hydraulic cylinder (4) (para. 8-11).

https://truckmanualshub.com/

MALFUNCTION TEST OR INSPECTION CORRECTIVE ACTION

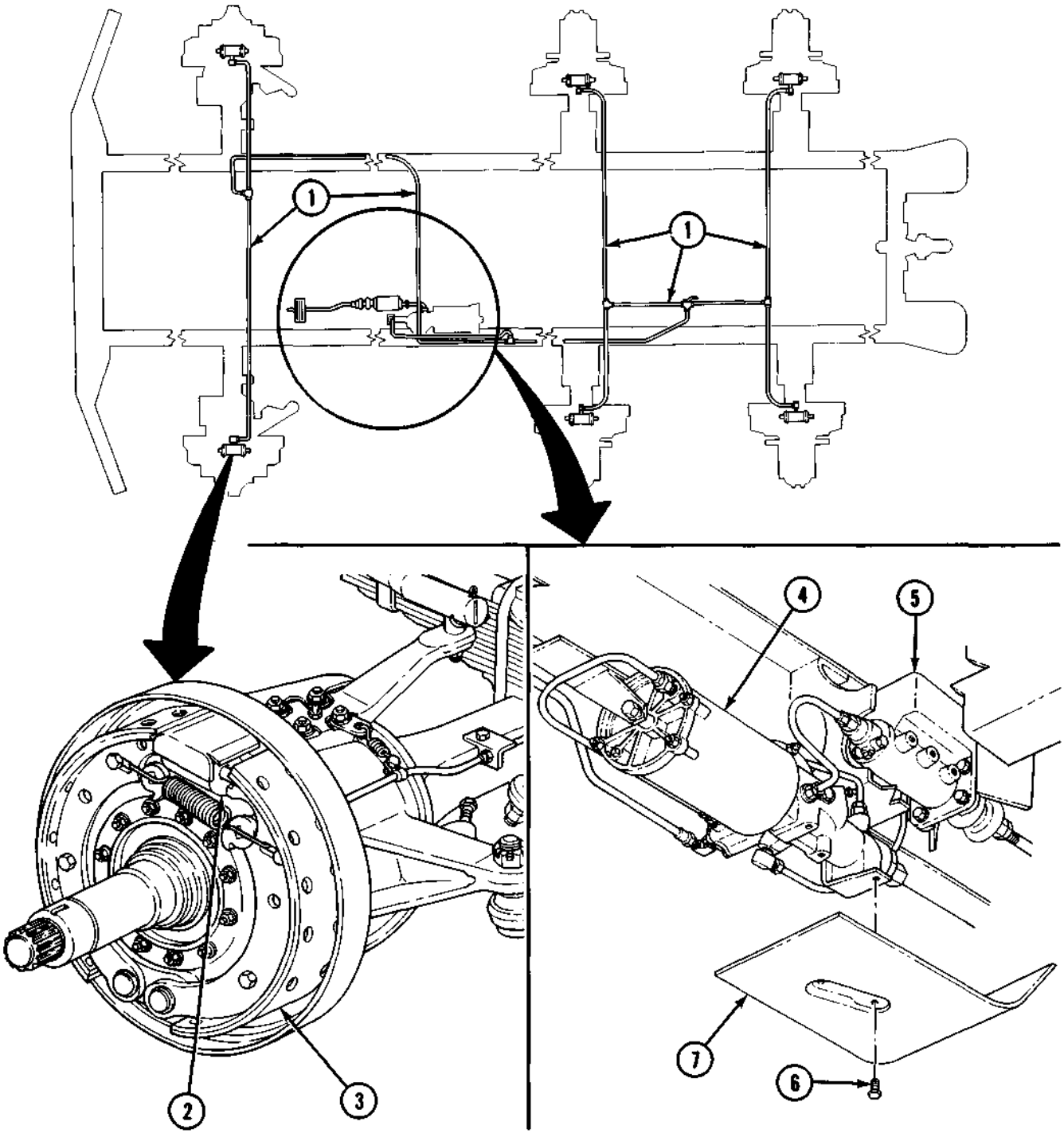

END OF TESTING!

https://truckmanualshub.com/

Table 2-3. Compressed Air and Brake System Troubleshooting (Contd).

MALFUNCTION TEST OR INSPECTION CORRECTIVE ACTION

4. EXCESSIVE PEDAL PRESSURE REQUIRED TO STOP VEHICLE (BRAKE PEDAL STOPS TWO INCHES OR MORE ABOVE FLOORBOARD); NO APPARENT AIR SYSTEM FAILURE

Step 1. Check service brakeshoe (1) linings for oil or grease contamination.

If service brakeshoe (1) linings are saturated with oil or grease, repair oil or grease leak and replace brakeshoes (para. 8-7).

Step 2. Direct assistant to apply service brakes and listen for evidence of air escaping at air-hydraulic cylinder (2) and at vent (5).

a. If escaping air is present, replace air-hydraulic cylinder (para. 8-11).

b. If no air is escaping, proceed to test 1.

Test 1. Check air-hydraulic cylinder (2) for proper delivery line (7) supply pressure.

Step 1. Stop engine and open all draincocks (TM 9-2320-361-10) until brake system air pressure is vented.

Step 2. Remove two screws (3) and shield (4) from air-hydraulic cylinder (2).

Step 3. Disconnect delivery line (7) from elbow (6).

Step 4. Remove elbow (6) from air-hydraulic cylinder (2).

Step 5. Install tee (9) on air-hydraulic cylinder (2).

Step 6. Connect test gage (8) to tee (9) and connect delivery line (7) to tee (9).

Step 7. Direct assistant to start engine (TM 9-2320-361-10) and allow air pressure to build to normal operating pressure.

Step 8. Check test gage (8) reading and compare with reading on instrument panel air pressure gage.

NOTE

Air pressure gage in instrument panel has a maximum pressure scale of 120 psi. If old governor has been replaced with new governor, air pressure may exceed maximum pressure reading on instrument panel gage.

a. If reading on test gage (8) is same as instrument panel air pressure gage, replace air-hydraulic cylinder (2) (para. 8-11).

b. If reading on test gage (8) is less than instrument panel air pressure gage, check delivery line (7) for restrictions. If delivery line (7) is damaged or restricted, replace (para. 8-15).

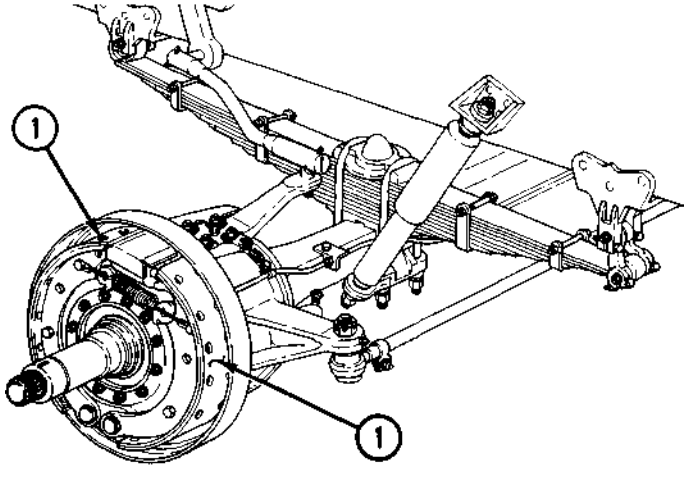

https://truckmanualshub.com/

Table 2-3. Compressed Air and Brake System Troubleshooting (Contd).

MALFUNCTION TEST OR INSPECTION CORRECTIVE ACTION

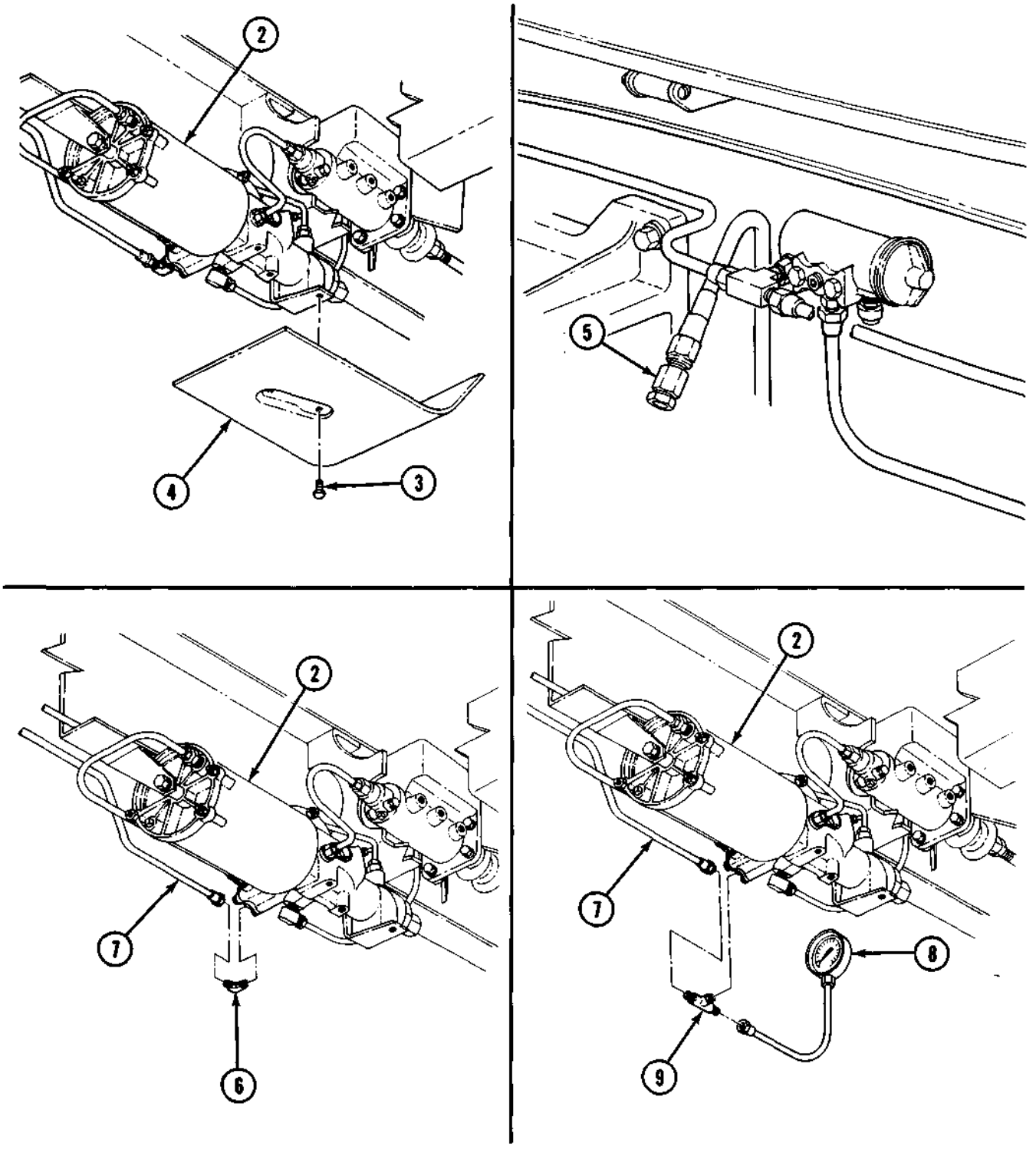

END OF TESTING!

https://truckmanualshub.com/

Table 2-3. Compressed Air and Brake System Troubleshooting (Contd).

MALFUNCTION TEST OR INSPECTION CORRECTIVE ACTION

5. VEHICLE PULLS TO RIGHT OR LEFT WHEN APPLYING BRAKES

Step 1. Check clearances on each set of service brakeshoes (1). If service brakeshoes (1) are out of adjustment, adjust clearance (para. 8-8).

Step 2. Check service brakeshoe (1) linings for wear.

If service brakeshoe (1) linings are worn more than 0.328 in. (8.33 mm), replace service brakeshoes (1) (para. 8-7).

Step 3. Check hydraulic brake lines (2) for bent or crushed conditions.

Replace if hydraulic brake lines (2) are bent or crushed. Refer to TM 9-243 for instructions to double flare hydraulic brake lines (2).

Step 4. Check hydraulic hoses (3) for pinches or cracks.

If damaged, replace (para. 8-15).

Step 5. Check brakeshoe return spring (4) for damage.

If brakeshoe return spring (4) is broken or stretched, replace (para. 8-7).

Step 6. Check wheel cylinders (5) to make sure wheel cylinder pistons move freely and are not frozen.

If wheel cylinder pistons are frozen, replace wheel cylinders (5) (para. 8-9).

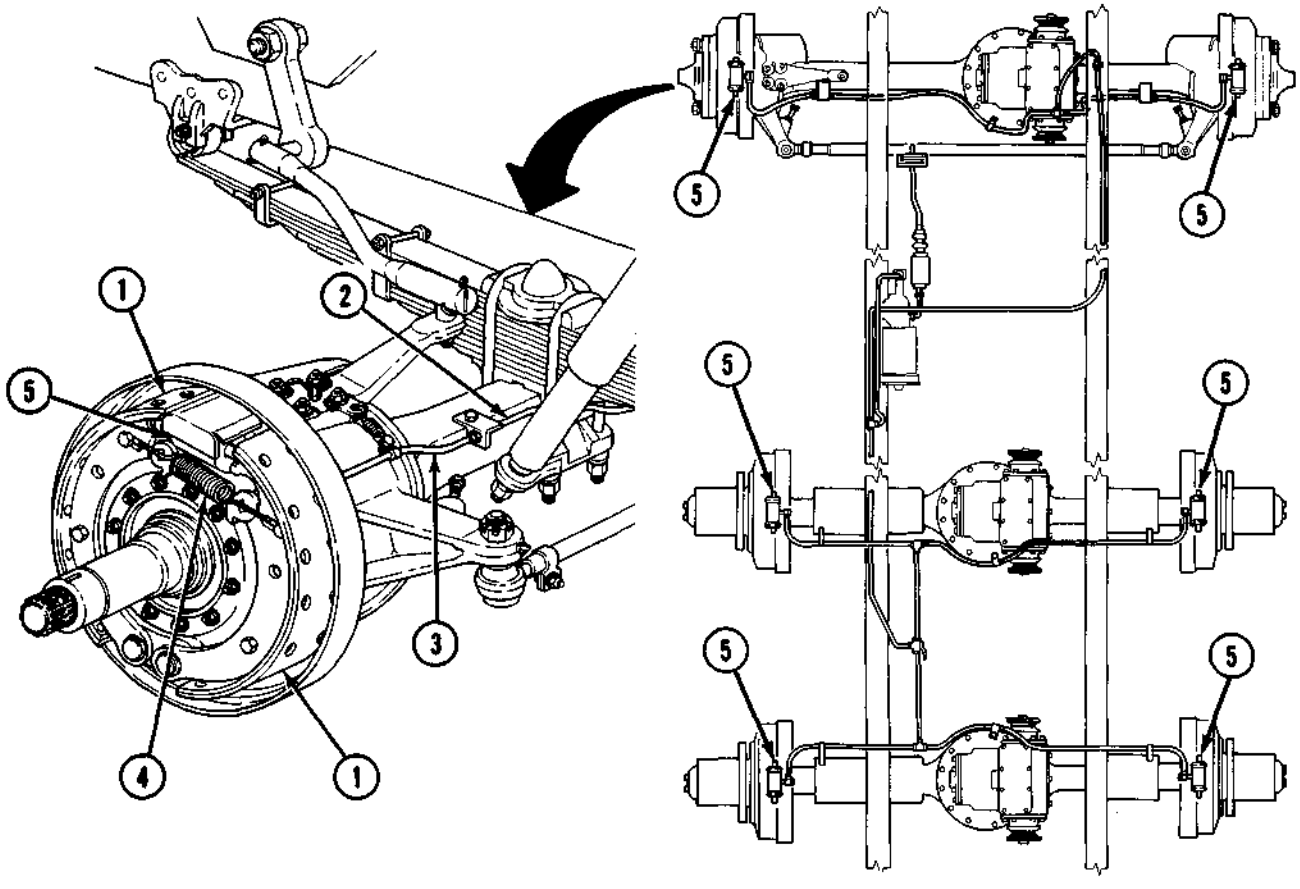

END OF TESTING!

https://truckmanualshub.com/

Table 2-3. Compressed Air and Brake System Troubleshooting (Contd).

MALFUNCTION TEST OR INSPECTION CORRECTIVE ACTION

6. BRAKES DRAG

Step 1. Check brake pedal (6) free travel. Free travel should be 0.25-0.5 in. (6.35-12.7 mm).

Adjust brake pedal (6) free travel (para. 8-14).

Step 2. Check hydraulic brake lines (2) for bends, kinks, or restrictions.

Replace if hydraulic brake lines (2) are bent, kinked, or restricted. Refer to TM 9-243 for instructions to double flare hydraulic brake lines (2).

Step 3. Check service brakeshoes (1) adjustment (para. 8-8).

Step 4. Check service brake hydraulic fluid for contamination.

If fluid is contaminated, flush entire brake system (para. 8-12).

Step 5. Perform master cylinder (7) internal leakage test (para. 8-10).

a. If master cylinder (7) is leaking internally, replace (para. 8-10).

b. If master cylinder (7) is good, and malfunction still exists, replace air-hydraulic cylinder (8) (para. 8-11).

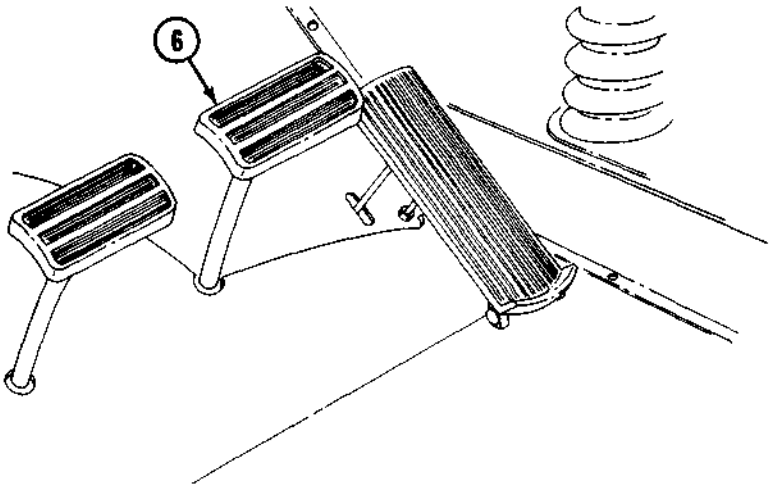

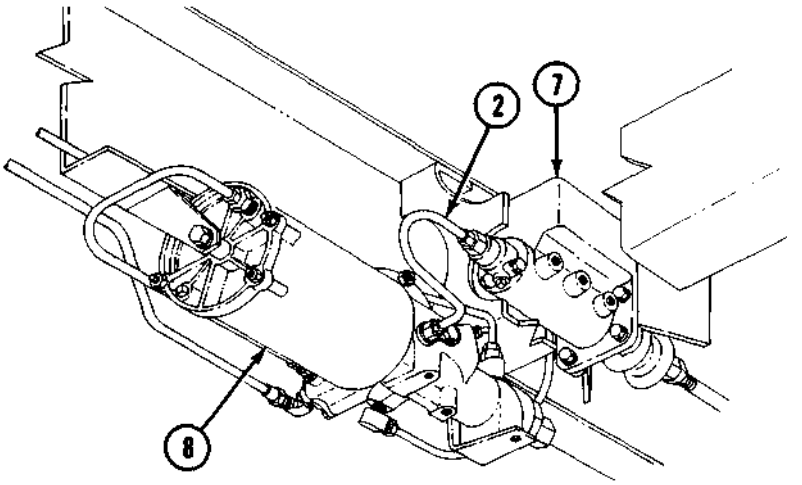

END OF TESTING!

https://truckmanualshub.com/

Table 2-3. Compressed Air and Brake System Troubleshooting (Contd).

MALFUNCTION TEST OR INSPECTION CORRECTIVE ACTION

7. BRAKES SQUEAL

Step 1. Check service brakeshoes (1) for proper installation, glazing, distortion, or excessive wear.

a. If service brakeshoes (1) are improperly installed, replace (para. 8-7).

b. If service brakeshoes (1) are glazed, distorted, or worn more than 0.328 in. (8.33 mm), replace (para. 8-7).

Step 2. Check brakedrums (2) for heat spotting or heavy scoring.

If brakedrums (2) are heat-spotted or scored more than 0.03 in. (0.76 mm), replace (paras. 9-3 and 9-4).

Step 3. Check brakedrum (2) and hub (4) for proper assembly.

If brakedrum (2) and hub (4) are not properly assembled, or if any screws (3) are missing, replace (para. 9-3 or 9-4).

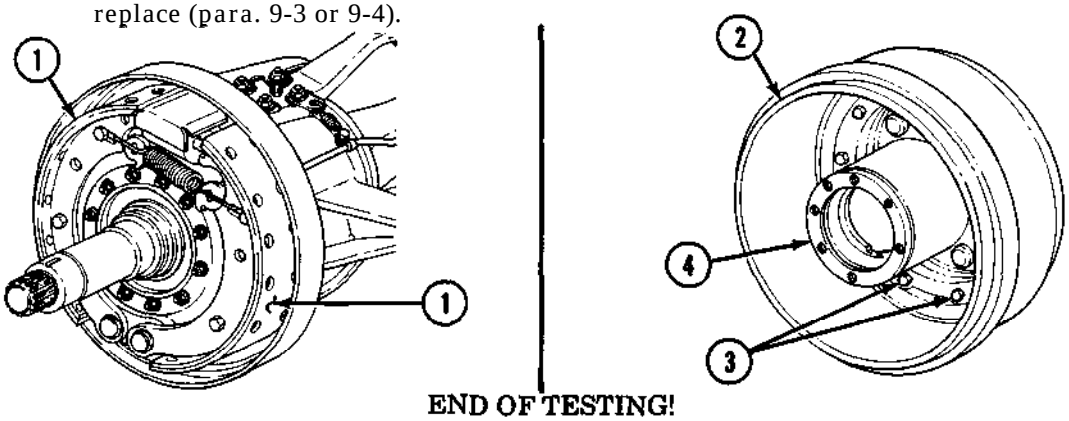

END OF TESTING!

COMPRESSED AIR

WARNING

Do not disconnect air lines before draining air reservoirs. Small parts under pressure may shoot out with high velocity, causing injury to personnel.

8. EXCESSIVE PEDAL PRESSURE REQUIRED TO STOP VEHICLE WHEN TOWING A TRAILER (M275A2)

Step 1. Start engine (TM 9-2320-361-10) and allow air pressure to build to normal operating pressure with trailer air lines disconnected from trailer and connected to dummy coupling and airbrake valves open.

Step 2. Check lines, hoses, and rubber gaskets (10) for leaks.

Step 3. Direct assistant to fully apply service brakes or pull down on trailer airbrake hand control.

a. If air leaks are found, repair as required.

b. If no air leaks are found, perform test 1.

NOTE

Perform test 1 on both trailer brake supply hoses.

Test 1. Check trailer brake supply hose (6) for proper pressure.

Step 1. Stop engine and open all draincocks (TM 9-2320-361-10) until brake system air pressure is vented.

Step 2. Remove quick-disconnect coupling (5) from trailer brake supply hose (6).

https://truckmanualshub.com/

Table 2-3. Compressed Air and Brake System Troubleshooting (Contd).

MALFUNCTION TEST OR INSPECTION CORRECTIVE ACTION

Step 3. Install adapter (7) in trailer brake supply hose (6).

Step 4. Connect test gage (8) to adapter (7).

Step 5. Direct assistant to start engine (TM 9-2320-361-10) and allow air supply to build to normal operating pressure.

NOTE

- Service brake air pressure and airbrake hand control air pressure must not be checked at the same time.
- Air pressure must be held and maintained for pressure to equalize in air-hydraulic cylinder with air system pressure.

Step 6. Direct assistant to fully apply and hold service brakes or pull down on trailer airbrake hand control (TM 9-2320-361-10).

Step 7. Check test gage (8) reading and compare with reading on instrument panel gage.

NOTE

Air pressure gage on instrument panel has a maximum pressure scale of 120 psi. If old governor has been replaced with new governor, air pressure may exceed maximum pressure reading on instrument panel gage.

a. If reading is lower than instrument panel gage reading, perform test 2.

b. If reading compares with instrument panel gage, check trailer brake system for proper operation (TM 9-2320-213-14).

Step 8. Reinstall quick-disconnect coupling (5).

a. Disconnect test gage (8) from adapter (7).

b. Remove adapter (7) from trailer brake supply hose (6).

c. Install quick-disconnect coupling (5) to trailer brake supply hose (6).

d. Close all airbrake valves (TM 9-2320-361-10).

e. Start engine (TM 9-2320-361-10) and ensure airbrake system pressurizes to normal operating pressure

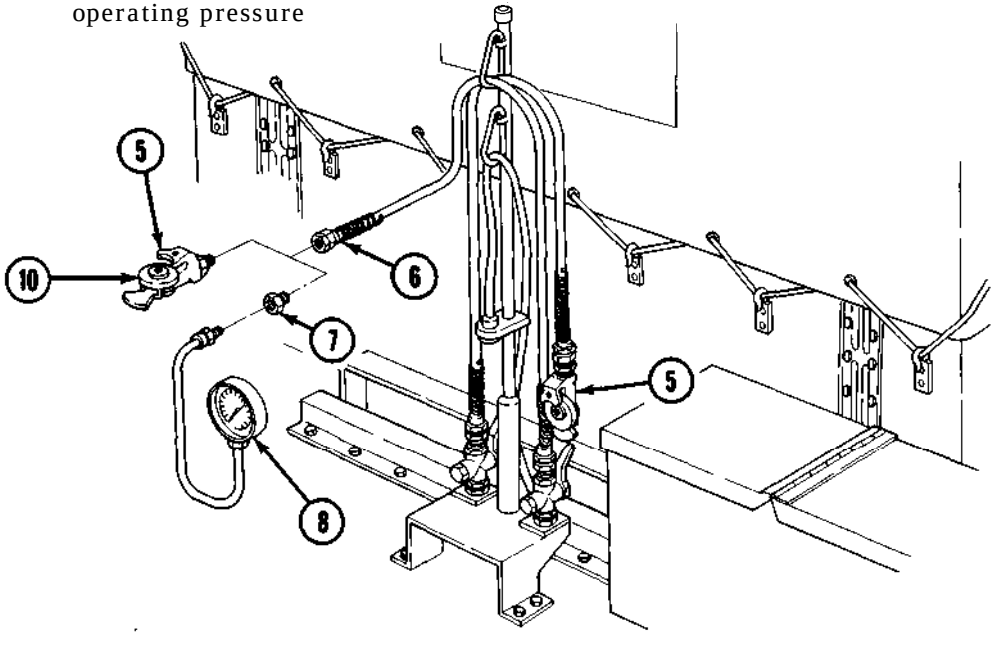

https://truckmanualshub.com/

Table 2-3. Compressed Air and Brake System Troubleshooting (Contd).

MALFUNCTION TEST OR INSPECTION CORRECTIVE ACTION

Test 2. Check air pressure supply in protection valve (2).

Step 1. Stop engine and open all draincocks (TM 9-2320-361-10) until brake system air pressure is vented.

Step 2. Disconnect air brake supply hose (4) from safety protection valve elbow (3).

Step 3. Remove elbow (3) from safety protection valve (2).

Step 4. Install tee (6) in safety protection valve (2).

Step 5. Connect air brake supply hose (4) to tee (6) and connect test gage (5) to tee (6).

NOTE

- Service brake air pressure and airbrake hand control air pressure must not be checked at the same time.
- Air pressure must be held and maintained for pressure to equalize in air hydraulic cylinder with air system pressure.

Step 6. Direct assistant to fully apply and hold service brakes or pull down on airbrake hand control.

Step 7. Check test gage (5) reading.

a. If readings are very low or build up very slowly, check all lines for bends, kinks, or restrictions. Repair or replace damaged lines (TM 9-243).

b. If test gage (5) reads zero when service brakes are applied, replace air-hydraulic cylinder (1) (para. 8-11).

c. If test gage (5) reads zero when airbrake hand control is applied, replace airbrake hand control (para. 8-21).

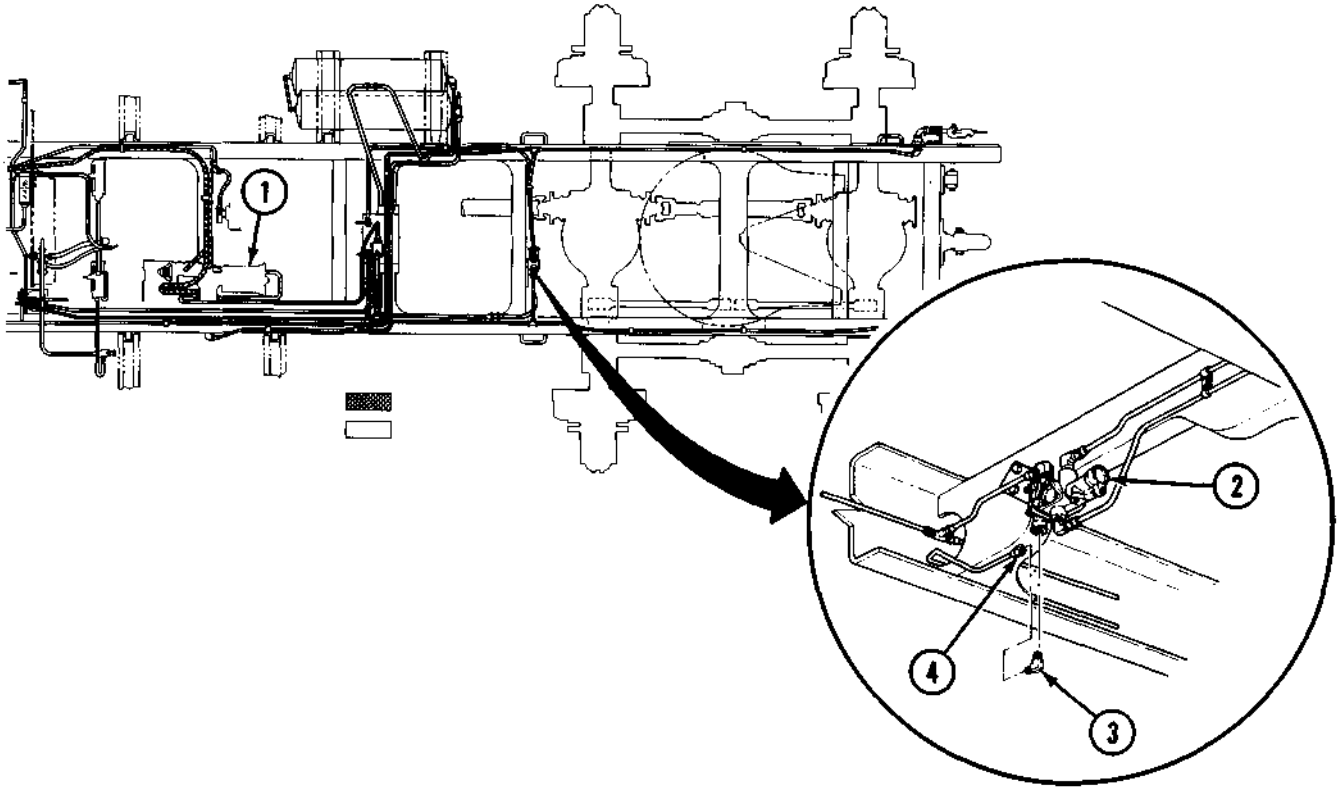

https://truckmanualshub.com/

Table 2-3. Compressed Air and Brake System Troubleshooting (Contd).

MALFUNCTION TEST OR INSPECTION CORRECTIVE ACTION

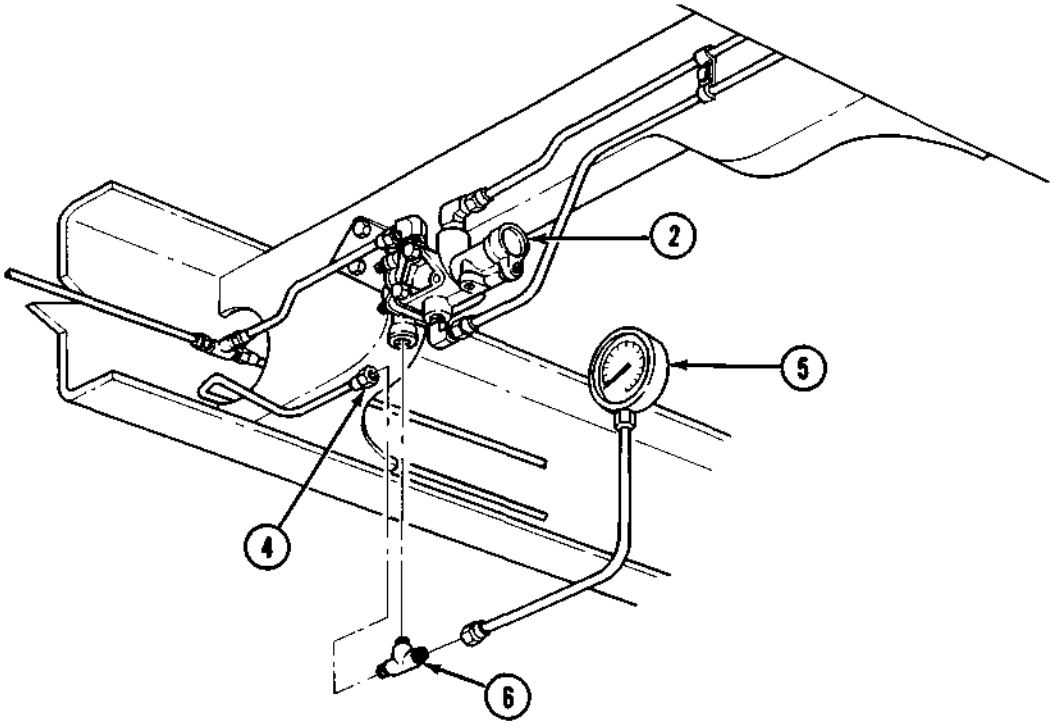

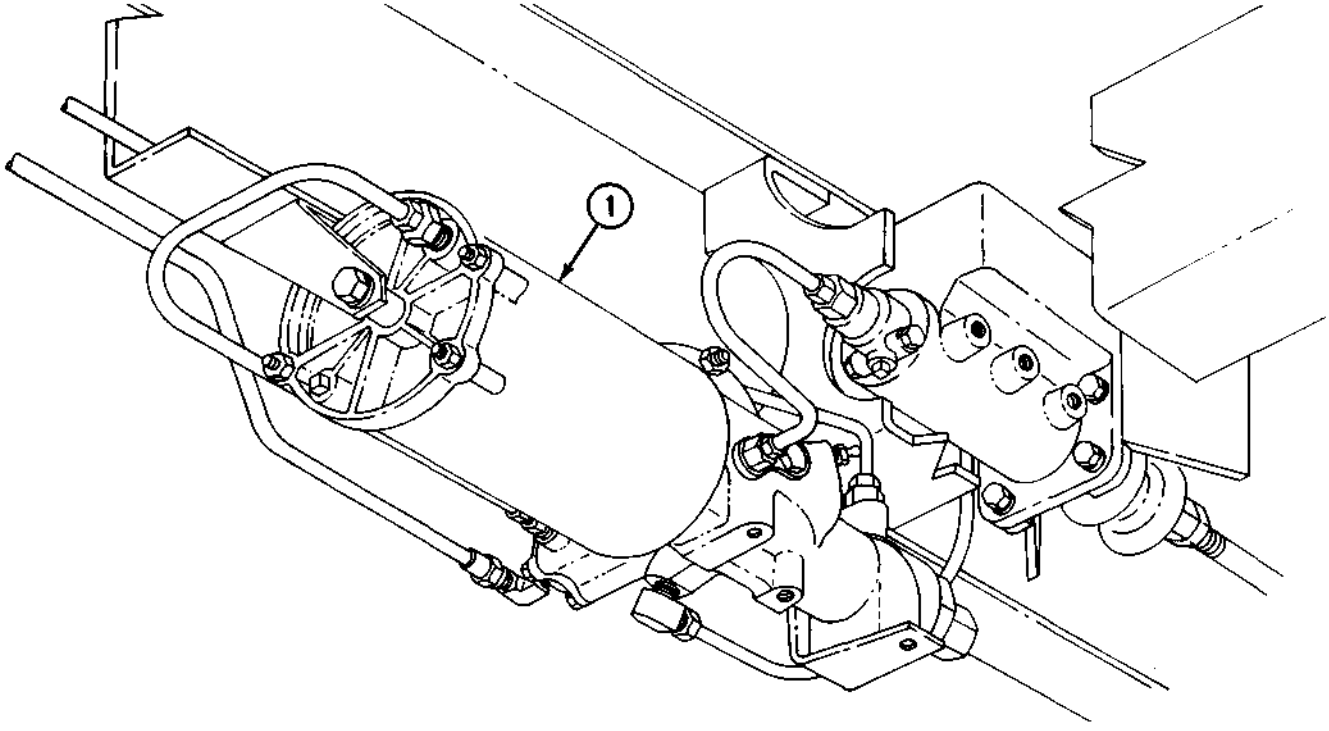

https://truckmanualshub.com/

Table 2-3. Compressed Air and Brake System Troubleshooting (Contd).

MALFUNCTION TEST OR INSPECTION CORRECTIVE ACTION

9. NO AIR PRESSURE OR COMPRESSED AIR READS BELOW 60 PSI (LOW AIR PRESSURE WARNING BUZZER SOUNDING, INDICATING AIR PRESSURE NOT BUILDING UP TO NORMAL OPERATING RANGE AS INDICATED BY GAGE)

Step 1. Check for missing or loose air compressor drivebelt (3).

If air compressor drivebelt (3) is missing or loose, replace or adjust drivebelt (3) (para. 8-28).

Step 2. Check for leaking compressed air lines and fittings.

If leakage is found, repair or replace compressed air lines or fittings (TM 9-243).

Step 3. Start engine (TM 9-2320-361-10) and feel compressor outlet line (5).

a. If compressor outlet line (5) is hot, proceed to test 1.

b. If compressor outlet line (5) is cool or warm, proceed to test 2.

Test 1. Check air reservoirs (1) for air pressure.

WARNING

Eyeshields must be worn when working with compressed air system. Failure to wear eyeshields may result in injury to personnel.

Step 1. Start engine (TM 9-2320-361-10) and allow air pressure to build to normal operating pressure.

Step 2. Loosen air reservoir draincocks (2).

a. If a low volume of air pressure is released, perform step 3.

b. If a high volume of air pressure is released, proceed to test 2.

Step 3. Check compressor outlet line (5) for restrictions.

a. If compressor outlet line (5) is restricted, repair or replace (TM 9-243).

b. If compressor outlet line (5) is not restricted, proceed to test 2.

Test 2. Check for air pressure at air horn supply line (7).

Step 1. Stop engine and open all draincocks (2) (TM 9-2320-361-10) until brake system air pressure is vented.

Step 2. Disconnect air horn supply line (7) from air horn elbow (9).

Step 3. Connect air horn supply line (7) to test gage (8).

Step 4. Direct assistant to start engine (TM 9-2320-361-10) and allow sufficient time for pressure to build.

Step 5. Compare test gage (8) reading with gage reading on instrument panel.

NOTE

Air pressure gage on instrument panel has a maximum pressure scale of 120 psi. If old governor has been replaced with new governor, air pressure may exceed maximum pressure reading on instrument panel gage.

a. If low or no air pressure is indicated on test gage (8), check air horn supply line (7) for restrictions or leaks. Repair or replace damaged compressed air lines (TM 9-243).

b. If air compressor (4) is continuously unloading, not allowing air compressor to build air pressure, adjust air governor (6) (para. 8-29).

c. If air governor (6) adjustment will not increase pressure and/or compressor outlet line (5) is warm or cool, replace air compressor (para. 8-26).

https://truckmanualshub.com/

Table 2-3. Compressed Air and Brake System Troubleshooting (Contd).

MALFUNCTION TEST OR INSPECTION CORRECTIVE ACTION

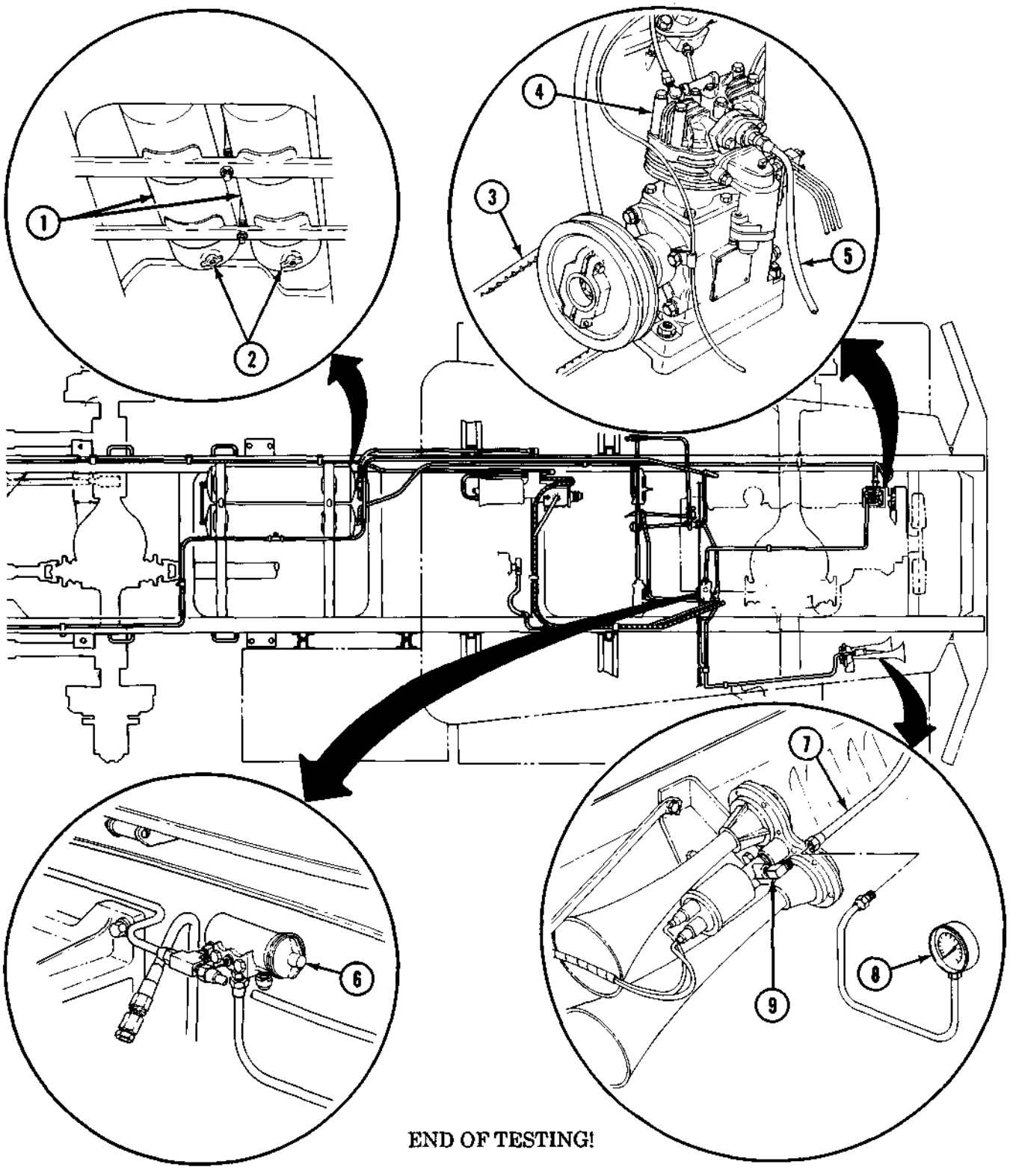

END OF TESTING!

https://truckmanualshub.com/

Table 2-3. Compressed Air and Brake System Troubleshooting (Contd).

MALFUNCTION TEST OR INSPECTION CORRECTIVE ACTION

10. AIR PRESSURE DOES NOT BUILD UP TO NORMAL OPERATING PRESSURE (ABOVE 85 PSI) ACCORDING TO GAGE

Step 1. Check for compressed air leaks.

If leakage is found, repair or replace compressed air lines or fittings (TM 9-243).

Step 2. Adjust air governor (para. 8-29).

Step 3. Perform test 2 of malfunction 9.

END OF TESTING!

NOTE

Air pressure gage on instrument panel has a maximum pressure scale of 120 psi. If old governor has been replaced with new governor, air pressure may exceed maximum pressure reading on instrument panel gage.

11. AIR PRESSURE EXCEEDS MAXIMUM (GAGE READS OVER 120 PSI) AND SAFETY VALVE OPENS TO RELEASE PRESSURE

Step 1. Check for air loss through accessories (refer to malfunctions 14, 15, and 16).

NOTE

Step 2 applies to M275A2 only.

Step 2. Check for excessive air pressure as indicated by instrument panel gage.

If air pressure exceeds maximum and safety valve opens to release pressure, replace air governor (para. 8-29.

Step 3. Check governor signal line (4) for crimps, bends, or leaks.

a. If governor signal line (4) is crimped, bent, or leaking, repair or replace governor signal line (4) (para. 8-15).

b. If no restrictions are apparent, proceed to test 1.

Test 1. Check governor signal line (4) pressure.

Step 1. Stop engine and open all draincocks (TM 9-2320-361-10) until brake system air pressure is vented.

Step 2. Disconnect governor signal line (4) from adapter (3).

Step 3. Remove adapter (3) from air governor (2).

Step 4. Install tee (5) on air governor (2).

Step 5. Connect test gage (1) to tee (5) and governor signal line (4) to tee (5).

Step 6. Direct assistant to start engine (TM 9-2320-361-10) and allow air supply to built to normal operating pressure.

https://truckmanualshub.com/

Table 2-3. Compressed Air and Brake System Troubleshooting (Contd).

MALFUNCTION TEST OR INSPECTION CORRECTIVE ACTION

Step 7. Compare air pressure reading indicated on test gage (1) to air pressure indicated on instrument panel gage.

NOTE

Step 7a applies to M275A2 only.

a. If test gage (1) air pressure reading is the same as gage reading on instrument panel (exceeds maximum) and pressure protection valve continues to release pressure, replace air compressor (para. 8-26).

b. If test gage (1) reading is below 85 psi (586 kPa), adjust governor (para. 8-29).

c. If governor adjustment will not increase governor signal line (4) pressure above 85 psi (586 kpa) on test gage (1), replace air governor (para. 8-29).

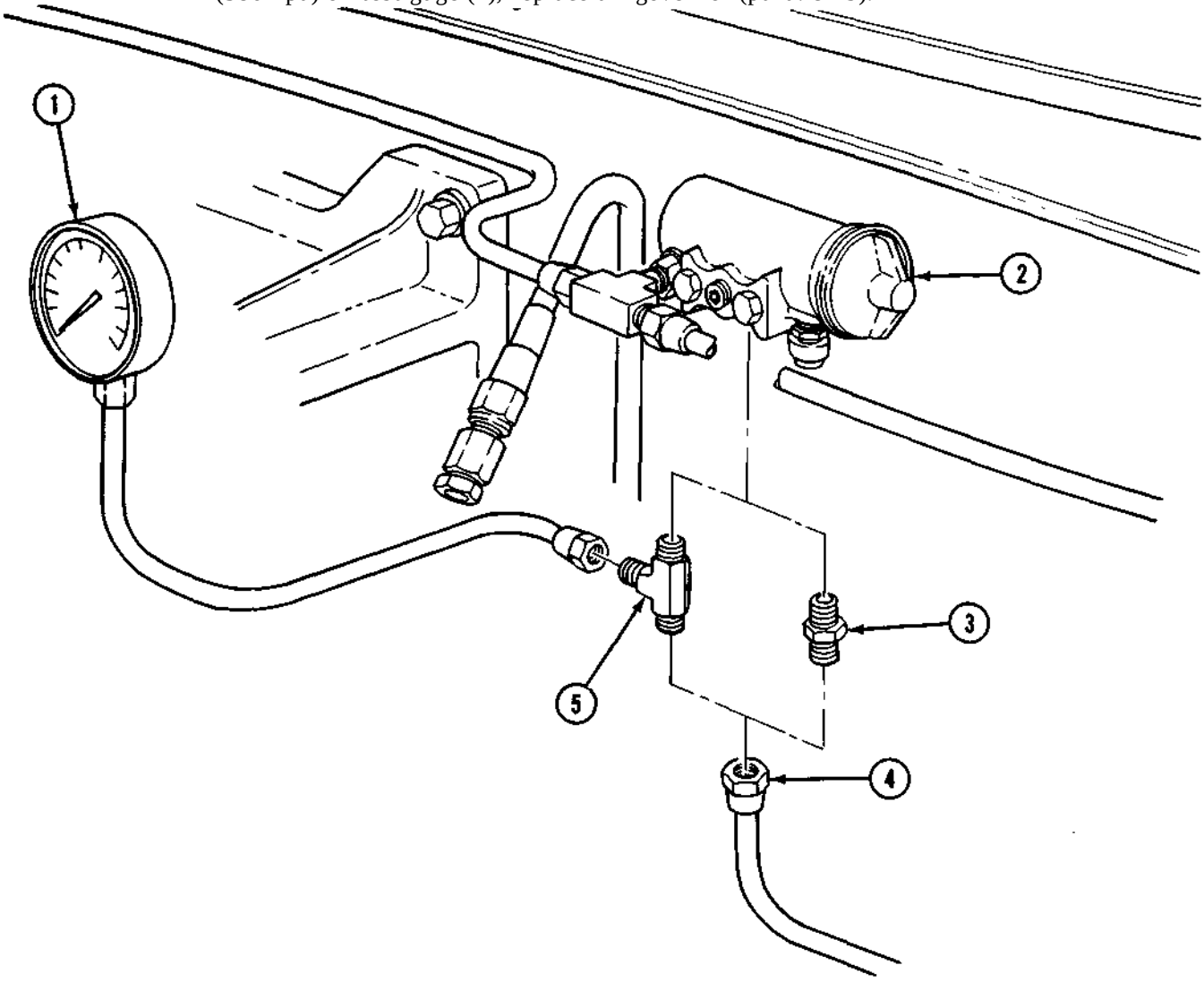

END OF TESTING!

https://truckmanualshub.com/

Table 2-3. Compressed Air and Brake System Troubleshooting (Contd).

MALFUNCTION TEST OR INSPECTION CORRECTIVE ACTION

12. LOW OR NO READING ON AIR PRESSURE GAGE AND WARNING BUZZER SHUTS OFF

Test 1. Check air supply pressure to air pressure gage (1).

Step 1. Stop engine and open all draincocks (TM 9-2320-361-10) until brake system air pressure is vented.

Step 2. Disconnect air supply line (2) from air pressure gage adapter (3).

Step 3. Connect air supply line (2) to test gage (4).

Step 4. Start engine (TM 9-2320-361-10) and allow air pressure to build to normal operating pressure.

Step 5. Check test gage (4) reading.

a. If reading is low or zero, check air supply line (2) for bends, kinks, or leaks. Repair or replace air supply line if bent, kinked, or leaking (para. 8-15).

NOTE

Air pressure gage on instrument panel has a maximum pressure scale of 120 psi. If old governor has been replaced with new governor, air pressure may exceed maximum pressure reading on instrument panel gage.

b. If reading is above 85 psi (586 kPa) on test gage (4), replace air pressure gage (1) (para. 4-11).

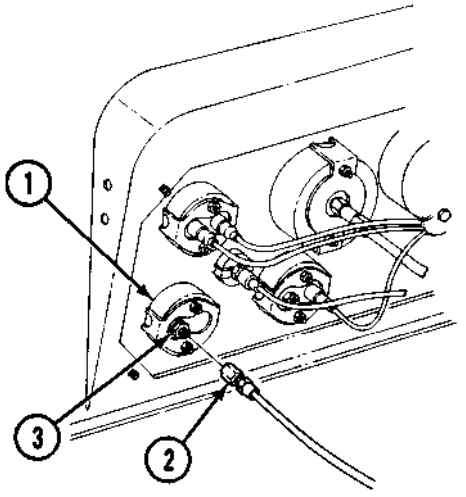

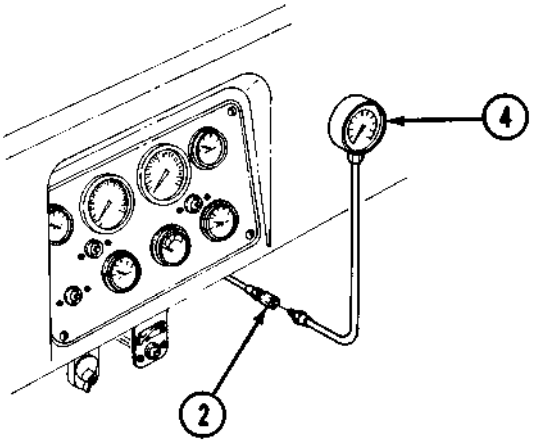

END OF TESTING!

13. WARNING BUZZER FAILS TO SOUND ON LOW PRESSURE (BELOW 60 PSI)

Refer to electrical troubleshooting table 2-4.

https://truckmanualshub.com/

Table 2-3. Compressed Air and Brake System Troubleshooting (Contd).

MALFUNCTION TEST OR INSPECTION CORRECTIVE ACTION

AIR-OPERATED ACCESSORIES

14. WINDSHIELD WIPERS INOPERATIVE OR OPERATE SLOWLY (GAGE AT NORMAL OPERATING PRESSURE)

Step 1. Start engine (TM 9-2320-361-10) and allow air pressure to build to normal operating pressure.

Step 2. Operate windshield wipers and inspect lines and hoses for leaks.

a. If air leaks are found, repair as required.

b. If no air leaks are found, perform test 1.

Test 1. Check windshield wiper motor supply line (9) pressure.

Step 1. Compress clamp (8) and disconnect windshield wiper supply line (9) from tee (7).

Step 2. Install adapter (6) on test gage (5).

Step 3. Connect adapter (6) to windshield wiper supply line (9) with clamp (8).

Step 4. Start engine (TM 9-2320-361-10) and allow air pressure to build to normal operating pressure.

Step 5. Operate windshield wipers to full on position (TM 9-2320-361-10).

Step 6. Check reading on test gage (5).

a. If reading is lower than 55 psi (379 kPa), replace windshield wiper valve (para. 8-19).

b. If reading is 55 psi (379 kpa), perform test 2.

Test 2. Check windshield wiper motor (2) for clogs.

Step 1. Remove clamp (4) and hose (3) from windshield wiper motor (2).

Step 2. Using wire, clean orifice (1) on windshield wiper motor (2).

Step 3. Install hose (3) and clamp (4) on windshield wiper motor (2).

Step 4. Start engine (TM 9-2320-361-10) and allow air pressure to buildup to normal operating pressure.

Step 5. Operate windshield wipers (TM 9-2320-361-10), if windshield wipers are still inoperative, replace defective windshield wiper motor(s) (2) (para. 8-19).

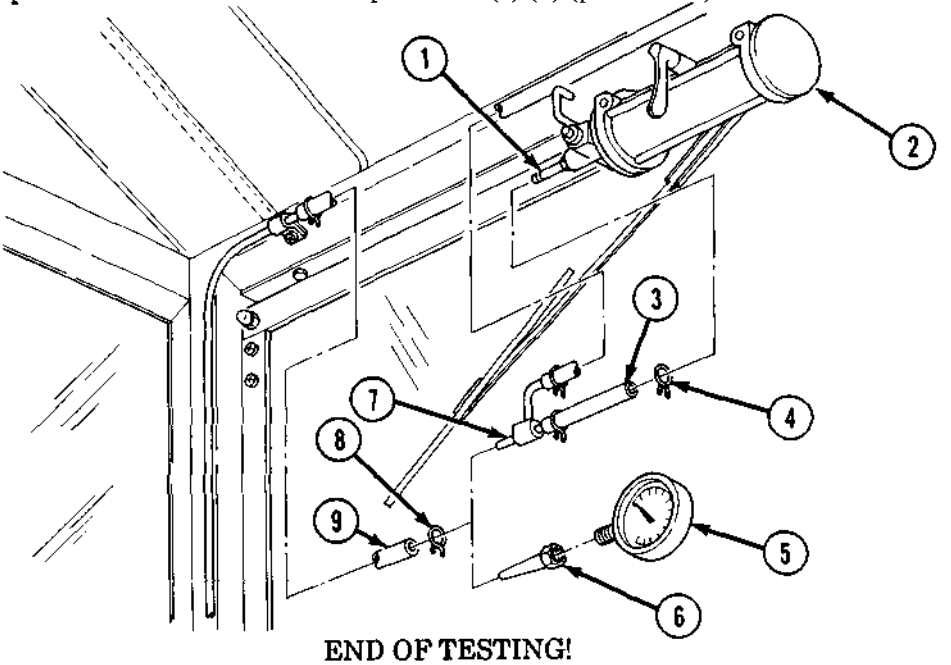

END OF TESTING!

https://truckmanualshub.com/

Table 2-3. Compressed Air and Brake System Troubleshooting (Contd).

MALFUNCTION TEST OR INSPECTION CORRECTIVE ACTION

15. FRONT WHEEL DRIVE DOES NOT ENGAGE (FRONT WHEEL DRIVE LOCK-IN SWITCH ENGAGED)

Step 1. Start engine (TM 9-2320-361-10) and allow air pressure to build to normal operating pressure.

Step 2. Inspect lines and hoses for air leaks.

a. If air leaks are found, repair as required (para. 8-15).

b. If no leaks are found, perform test 1.

Test 1. Check front axle engagement air cylinder supply line (1) pressure.

Step 1. Stop engine and open all draincocks (TM 9-2320-361-10) until brake system air pressure is vented.

Step 2. Disconnect supply line (1) from air cylinder elbow (3).

Step 3. Remove elbow (3) from air cylinder (2).

Step 4. Install tee (5) on air cylinder (2).

Step 5. Connect test gage (4) to tee (5) and connect supply line (1) to tee (5).

Step 6. Start engine (TM 9-2320-361-10) and allow air pressure to build to normal operating pressure.

Step 7. Place front wheel drive lock-in switch in ON position.

Step 8. Check reading on test gage (4) and compare reading to instrument panel air pressure gage.

NOTE

Air pressure gage on instrument panel has a maximum pressure scale of 120 psi. If old governor has been replaced with new governor, air pressure may exceed maximum pressure reading on instrument panel gage.

a. If reading is zero, replace front wheel drive lock-in switch (para. 6-4).

b. If reading is lower than instrument panel gage, and air can be heard escaping from transfer case vent, notify your supervisor.

Step 9. If air system is operating properly, notify your supervisor.

https://truckmanualshub.com/

Table 2-3. Compressed Air and Brake System Troubleshooting (Contd).

MALFUNCTION TEST OR INSPECTION CORRECTIVE ACTION

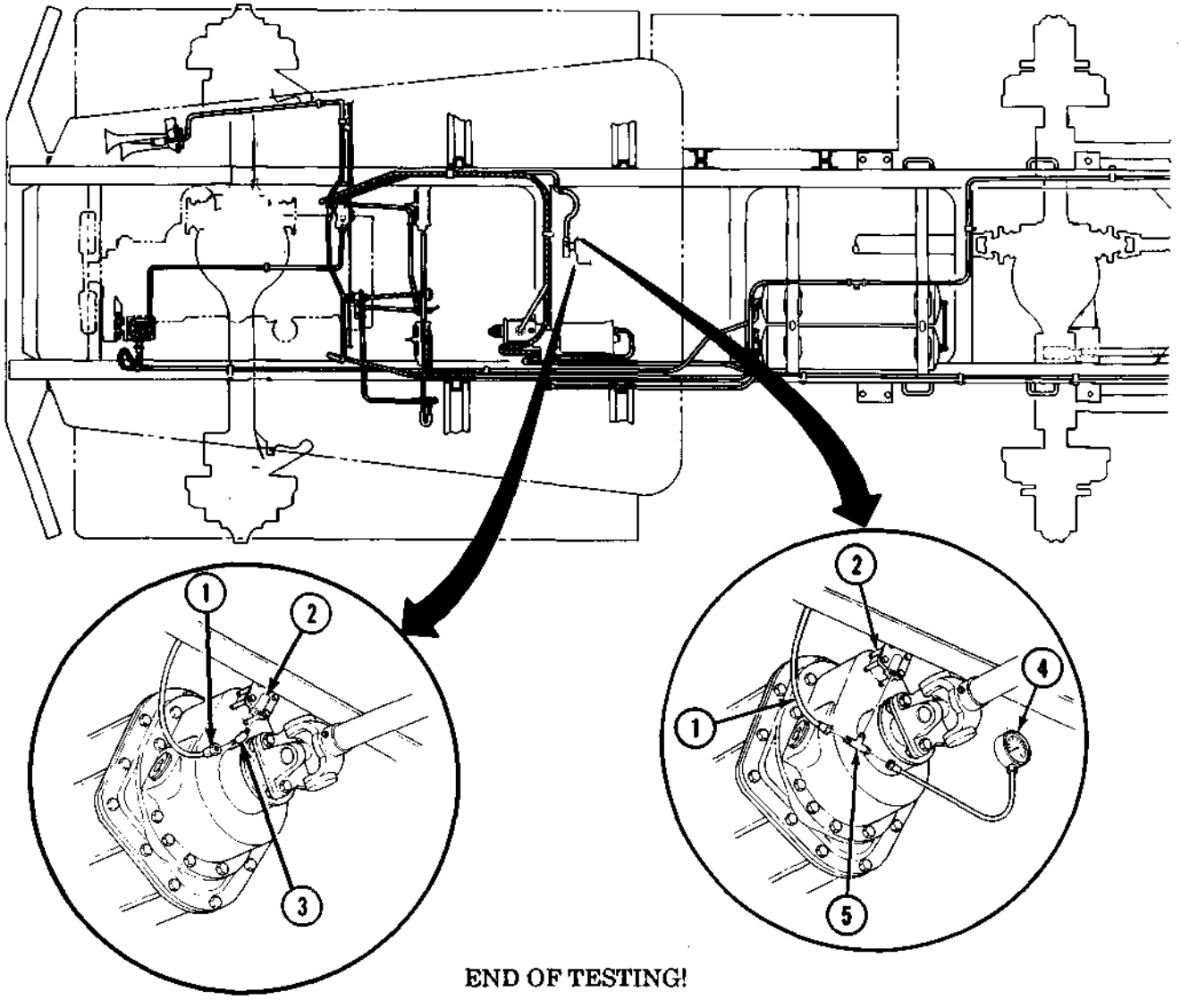

END OF TESTING!

16. AIR HORN DOES NOT WORK

Step 1. Refer to electrical troubleshooting malfunction 38.

Step 2. If malfunction still exists, refer to malfunction 9, test 2, steps 1-4.

NOTE

Air pressure gage on instrument panel has a maximum pressure scale of 120 psi. If old governor has been replaced with new governor, air pressure may exceed maximum pressure reading on instrument panel gage.

If air pressure reading of test 2 is comparable to air pressure gage on instrument panel, replace air horn (para. 4-31).

END OF TESTING!

https://truckmanualshub.com/

Section VI. ELECTRICAL SYSTEMS TROUBLESHOOTING

2-14. GENERAL

a. This section provides information to diagnose and correct malfunctions of the electrical system. Because of its complexity, the electrical system is divided into the following functional systems:

- Battery System (page 2-77)
- Starting System (page 2-79)
- Charging System (60 amp) (page 2-89)
- Charging System (100 amp) (page 2-95)
- Charging System (25 amp) (page 2-98)
- Lighting System (page 2-101)
- Indicators, Gages, and Warning System (page 2-120)
- Heating Systems (page 2-136)
- Trailer Connection System (page 2-146)

b. The wiring schematic (Appendix E) shows the interrelationship of these systems and should be used as a reference when performing electrical troubleshooting (table 2-4).

c. Each malfunction symptom given for an individual component or system is followed by step(s) you should take to determine the cause and corrective action you must take to remedy the problem.

d. Before taking any action to correct a possible malfunction, the following rules should be followed:

(1) Question operator to obtain any information that might help you to determine the cause of the problem.

(2) Never overlook the chance that the problem could be of simple origin. The problem could be corrected with minor adjustment.

(3) Use all senses to observe and locate troubles.

(4) Use test instruments or gages to help you determine and isolate problems.

(5) Always isolate the system where the malfunction occurs and then locate the defective component.

(6) Use standard automotive theories and principles when troubleshooting the vehicles covered in this manual.

e. Table 2-4 lists electrical malfunctions that may occur in individual systems of the vehicle. This table covers electrical troubleshooting only. Troubleshooting procedures for the mechanical systems can be found in table 2-2, section IV.

https://truckmanualshub.com/

2-15. TEST EQUIPMENT

In troubleshooting the electrical system, multimeters will be used to make resistance or continuity tests and voltage or low ampere current tests. Multimeters may be found in the Common No. 1 and No. 2 Unit Maintenance Automotive Shop Sets.

ELECTRICAL TROUBLESHOOTING SYMPTOM INDEX

MALFUNCTION NO.	MALFUNCTION	TROUBLESHOOTING PROCEDURE PAGE
	BATTERY SYSTEM	
1.	All vehicle electrical systems inoperative	2-77
	STARTING SYSTEM	
2.	Starter will not crank	2-79
3.	Starter motor operates, but engine cranks slowly	2-86
	CHARGING SYSTEM (60 AMP)	
4.	No alternator output (generator in left-hand red)	2-89
5.	Batteries not charging properly (generator in yellow or right-hand red)	2-94
6.	Batteries hot or boiling, corrected specific gravity of all cells is 1.280	2-94
7.	Batteries use excessive water	2-94
8.	Batteries run down in operation	2-94
	CHARGING SYSTEM (100 AMP)	
9.	No alternator output (generator in left-hand red)	2-95
10.	Batteries not charging properly (generator in yellow or right-hand red)	2-96
11.	Batteries hot or boiling, corrected specific gravity of all cells is 1.280	2-97
12.	Batteries use excessive water	2-97
13.	Batteries run down in operation	2-97
	CHARGING SYSTEM (25 AMP)	
14.	No generator output (generator in left-hand red)	2-98
15.	Batteries not charging properly (generator in yellow or right-hand red)	2-99
16.	Batteries run down in operation	2-99
	LIGHTING SYSTEM	
17.	Headlight does not operate on low or high beam, or both headlights inoperative	2-101
18.	Front marker lamp does not light	2-104
19.	Taillight or clearance lamp does not light	2-104
20.	Stoplight lamp does not light	2-105
21.	Blackout headlamp does not light	2-106
22.	Front blackout marker lamp does not light	2-107
23.	Blackout taillight lamp does not light	2-108
24.	Blackout stoplight lamp does not light	2-109
25.	Direction signal inoperative	2-110
26.	All stoplights are inoperative	2-116
27.	Both direction signals inoperative	2-118
28.	Turn signals operate incorrectly with turn signal control lever in one or more positions	2-119

https://truckmanualshub.com/

ELECTRICAL TROUBLESHOOTING SYMPTOM INDEX (Contd)

MALFUNCTION NO.	MALFUNCTION	TROUBLESHOOTING PROCEDURE PAGE
	INDICATORS, GAGES, AND WARNING SYSTEM	
29.	All gages inoperative	2-121
30.	Engine temperature gage inoperative	2-122
31.	Fuel gage inoperative	2-124
32.	Oil pressure gage inoperative	2-126
33.	Generator gage inoperative	2-128
34.	In-tank fuel pump inoperative	2-129
35.	Front wheel drive indicator light inoperative	2-131
36.	Low air pressure warning system inoperative	2-132
37.	Low air pressure warning system does not come on below 60 psi and does not go off above 66 psi	2-133
38.	Horn does not operate	2-134
	HEATING SYSTEMS	
39.	Engine manifold heater does not work	2-136
40.	Hot water personnel heater does not operate or does not operate in low position	2-142
41.	Personnel fuel burning heater inoperative	2-144
42.	Heater control box light inoperative, but heater operative	2-146
	TRAILER CONNECTION SYSTEM	
43.	One or more trailer lights inoperative	2-146

BATTERY SYSTEM

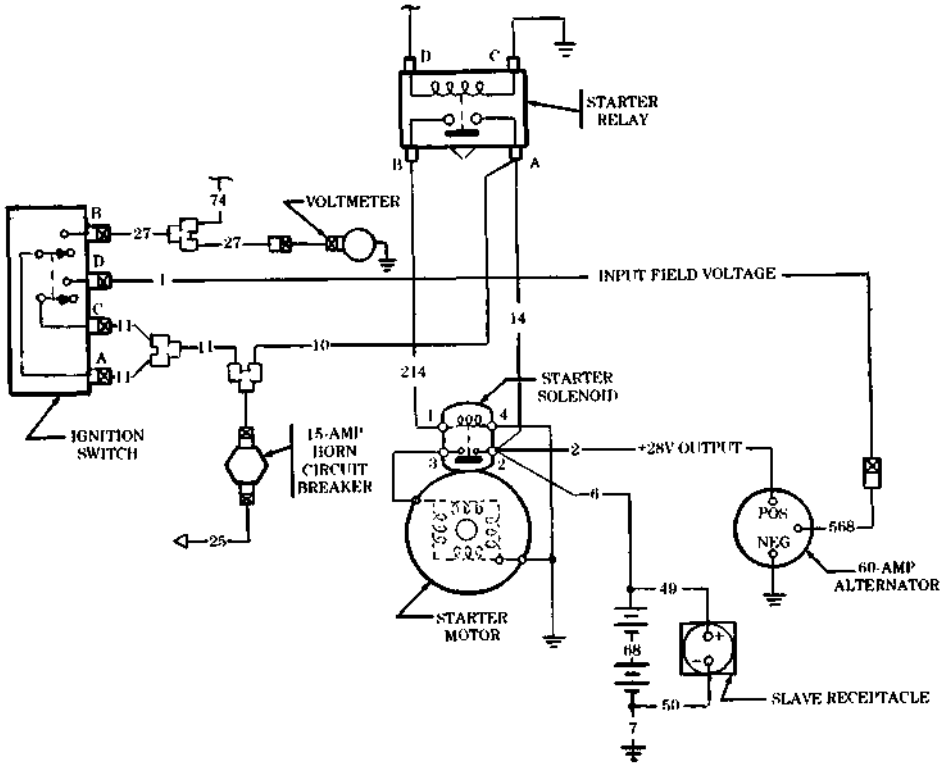

https://truckmanualshub.com/

Table 2-4. Electrical Troubleshooting.

MALFUNCTION TEST OR INSPECTION CORRECTIVE ACTION

BATTERY SYSTEM

1. ALL VEHICLE ELECTRICAL SYSTEMS INOPERATIVE

WARNING

- Battery acid (electrolyte) is extremely harmful. Always wear safety goggles and rubber gloves when performing battery maintenance. Severe injury will result if acid contacts eyes or skin.
- Do not smoke, have open flame, or make sparks when performing battery maintenance. Batteries may explode causing severe injury to personnel.
- Remove all jewelry such as rings, dog tags, bracelets, etc. If jewelry or disconnected battery ground cable contacts battery positive post, a direct short can result, causing damage to equipment or severe injury to personnel.
- When removing battery cables, disconnect ground cable first. Do not allow tools to come in contact with vehicle when disconnecting cable clamps. A direct short can result, causing instant heating of tools, tool damage, battery damage, or battery explosion, and severe injury to personnel.

CAUTION

- During installation of battery terminals, ensure positive clamps are installed on positive (+) posts and negative clamps are installed on negative (-) posts. Failure to connect clamps to correct posts will reverse polarity of circuitry and may cause damage to rectifier diodes in alternator, vehicle wiring, and radios (if equipped).
- Do not use a hammer during installation of battery terminal. Spread battery terminal open, or damage to equipment may result.

Step 1. Open door of battery compartment. Loosen two thumbscrews and slide batteries onto running board. Visually check connections of battery cables.

Ensure battery cables are correctly connected to batteries (para. 4-48).

Step 2. Visually check batteries for cracks and leaks. Check terminal posts for corrosion and breaks (TM 9-6140-200-14).

a. Replace any battery that is cracked, leaking, or has broken terminal posts (para. 4-49).

b. If terminal posts or cable clamps are corroded, use soda and water solution to neutralize battery acid. Remove battery ground cable no. 7 from negative post first. Remove cable clamps from battery posts, clean posts, and clamp mating surfaces to bright metal.

c. If battery terminals are clean and malfunction still exists, go to test 1.

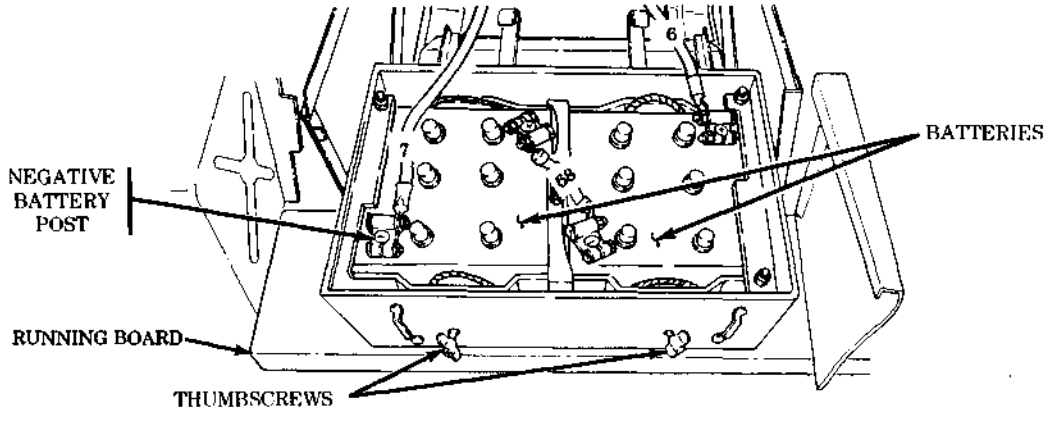

https://truckmanualshub.com/

Table 2-4. Electrical Troubleshooting (Contd).

MALFUNCTION TEST OR INSPECTION CORRECTIVE ACTION

Test 1. Check specific gravity of each cell before adding distilled water.

Step 1. Using optical battery tester, which requires no temperature compensation, check specific gravity of electrolyte in each cell (TM 9-6140-200-14).

If specific gravity of any cell is below 1.225, battery must be replaced or recharged. Add distilled water as necessary after checking battery. Charge battery as necessary (TM 9-6140-200-14).

Step 2. Check specific gravity of cells after battery has been charged (TM 9-6140-200-14).

a. If specific gravity of any cell does not increase to 1.280 (full charge) in 25 hours of charging, replace battery (para. 4-49).

b. Each cell in a battery must test within 0.025 points of each other. If specific gravity of any cell is lower than 1.255 [corrected to 80°F (27°C) if necessary] after 25 hours of charging, replace battery (para. 4-49).

Test 2. Disconnect battery ground cable (para. 4-48) and test battery cables as follows:

Step 1. Set multimeter to RX1 scale.

Step 2. Check for continuity of battery cables no. 6 and 68 and for worn or frayed insulation.

a. If resistance is greater than 1 ohm, replace or repair battery cables (para. 4-48 or 4-51).

b. If insulation is worn or frayed, replace or repair battery cables (para. 4-48 or 4-51).

Step 3. Check continuity of battery ground cable no. 7 to frame ground.

a. If resistance measures greater than 1 ohm, clean cable no, 7 connection at right-hand frame rail.

b. If continuity is still greater than 1 ohm, replace or repair battery cable (para. 4-48 or 4-51).

Step 4. Connect battery ground cable (para. 4-48) and proceed to test 3.

Test 3. Check for battery voltage at starter solenoid.

Step 1. Set multimeter to a voltage range that will measure 24 Vdc.

Step 2. Check lead no. 6 at contact 2 of starter solenoid for battery voltage.

If battery voltage is not present, clean connections of lead no. 6 at contact no. 2 of starter solenoid.

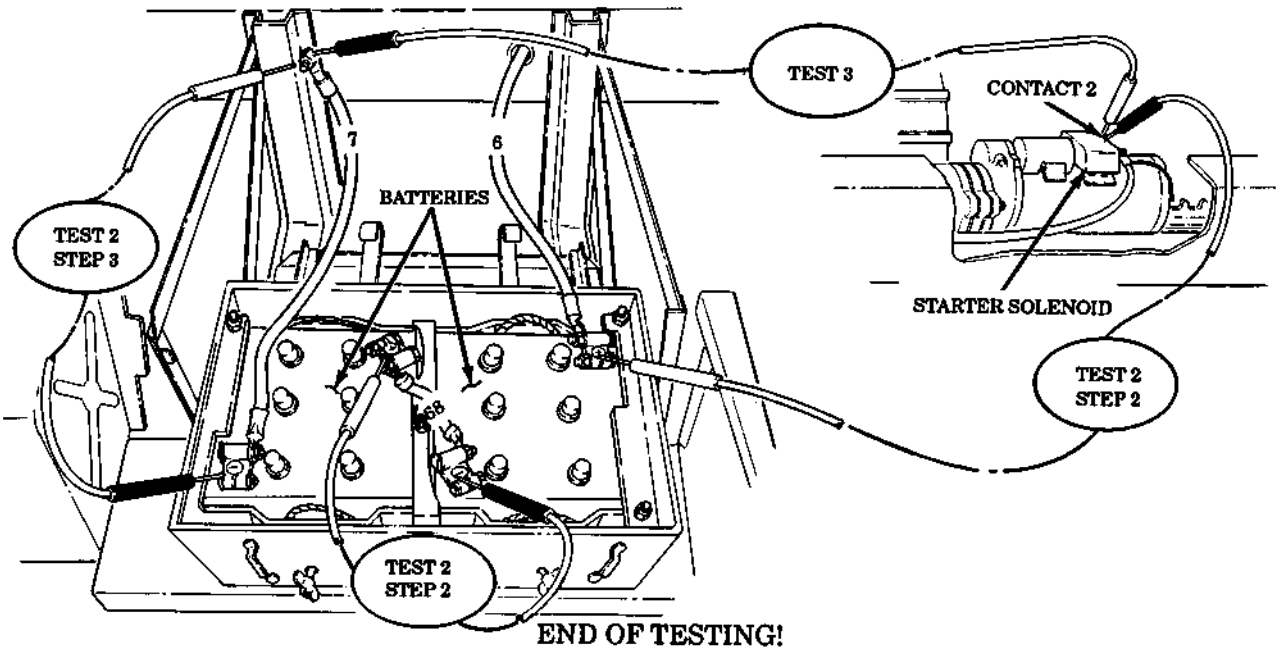

https://truckmanualshub.com/

Table 2-4. Electrical Troubleshooting (Contd).

MALFUNCTION TEST OR INSPECTION CORRECTIVE ACTION

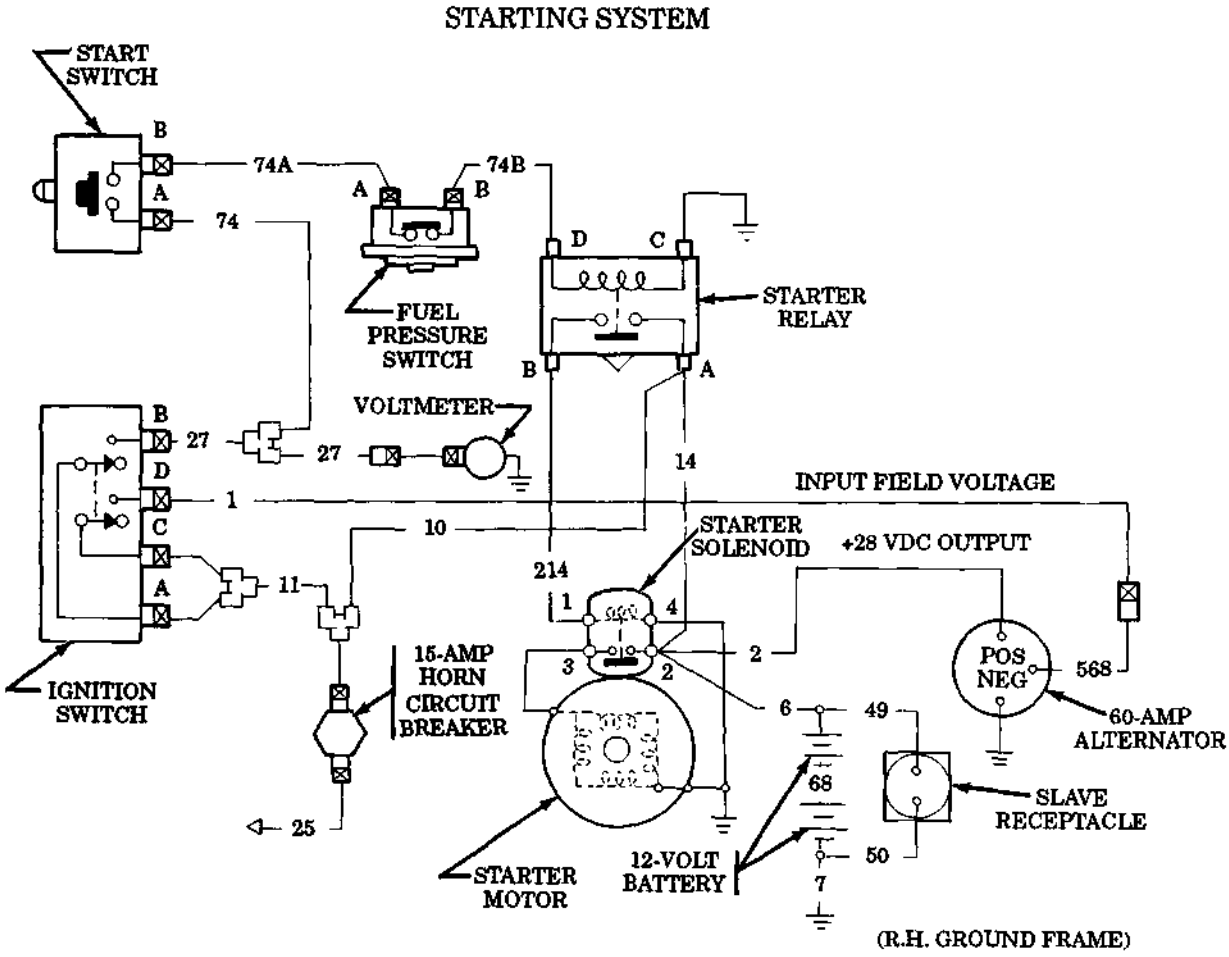

STARTING SYSTEM

2. STARTER WILL NOT CRANK

NOTE

Ensure transmission is in neutral.

Check batteries and cables (malfunction 1).

https://truckmanualshub.com/

Table 2-4. Electrical Troubleshooting (Contd).

MALFUNCTION TEST OR INSPECTION CORRECTIVE ACTION

Test 1. Test for battery voltage at pin 1 of starter solenoid with accessory/ignition switch turned to ON position.

Step 1. Push start button and listen for starter solenoid to create a “thump” sound when energized.

a. If “thump” sound is heard, go to step 2.

b. If “thump” sound is not heard, go to step 3.

Step 2. Check lead 6 at starter solenoid for battery voltage.

a. Check for seized engine. Refer to table 2-2, Mechanical Troubleshooting, malfunction 1, step 3.

b. If voltage is present but less than 19 Vdc, check for corrosion and/or loose connections.

c. If engine is not seized, replace starter motor (para. 4-7).

d. If no voltage is present and engine still fails to start, go to step 3.

Step 3. Check lead 214 for battery voltage at pin 1 of starter solenoid.

a. If voltage is not present, go to test 2.

b. If voltage is present and solenoid does not engage starter motor, proceed to step 4.

Step 4. Set multimeter to RX1 scale. Check continuity between pin 4 of starter solenoid and frame ground.

a. If continuity is greater than 1 ohm, remove starter solenoid and starter motor ground cables (para. 4-7). Replace or repair cables (para. 4-48 or 4-51) that have resistance greater than 1 ohm. Clean cable ends. Clean connections on starter motor and frame ground. Reconnect ground cables and ensure all connections are tight. Repeat test 1, step 1.

b. If continuity is greater than 1 ohm, starter solenoid is defective. Replace starter motor (para. 4-7).

Step 5. Check battery cables for voltage drop (malfunction 3, tests 4 through 7).

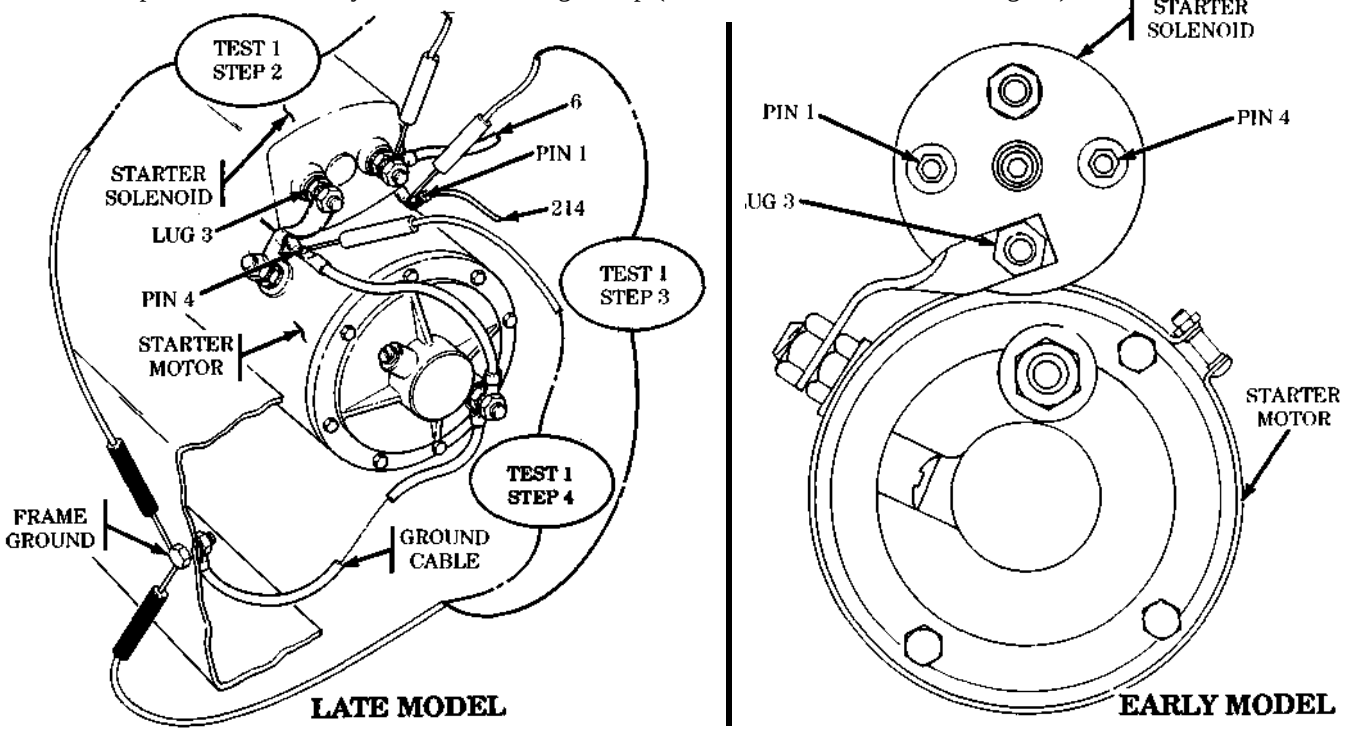

https://truckmanualshub.com/

Table 2-4. Electrical Troubleshooting (Contd).

MALFUNCTION TEST OR INSPECTION CORRECTIVE ACTION

Test 2. Test for battery voltage at lug D of magnetic starter relay.

Step 1. With accessory/ignition switch ON, push start switch and at same time check for battery voltage at lug D on starter relay.

a. If 19 Vdc are not present, go to test 4.

b. If voltage is present, go to step 2.

Step 2. Set multimeter to RX1 scale. Check continuity between lug C on starter relay and ground.

a. If continuity is 1 ohm or less, go to step 3.

b. If continuity is greater than 1 ohm, disconnect ground lead at lug C. Repair or replace ground lead (para. 4-51). Go to test 1, step 1.

Step 3. Check for battery voltage at lug B of starter relay with start switch PUSHED.

a. If voltage is present, go to step 5.

b. If voltage is not present, go to step 4.

Step 4. Check for battery voltage at lug A on starter relay. Voltage should always be present.

If voltage is not present, replace or repair lead 14 (para. 4-51). Go to test 1, step 1 and retest.

Step 5. Check continuity of lead 214 between lug B on starter relay and pin 1 on starter solenoid.

If continuity is not present, replace or repair lead 214 (para. 4-51). Clean connections before reinstalling lead. Ensure all connections are tight. Go to test 1, step 1 and retest.

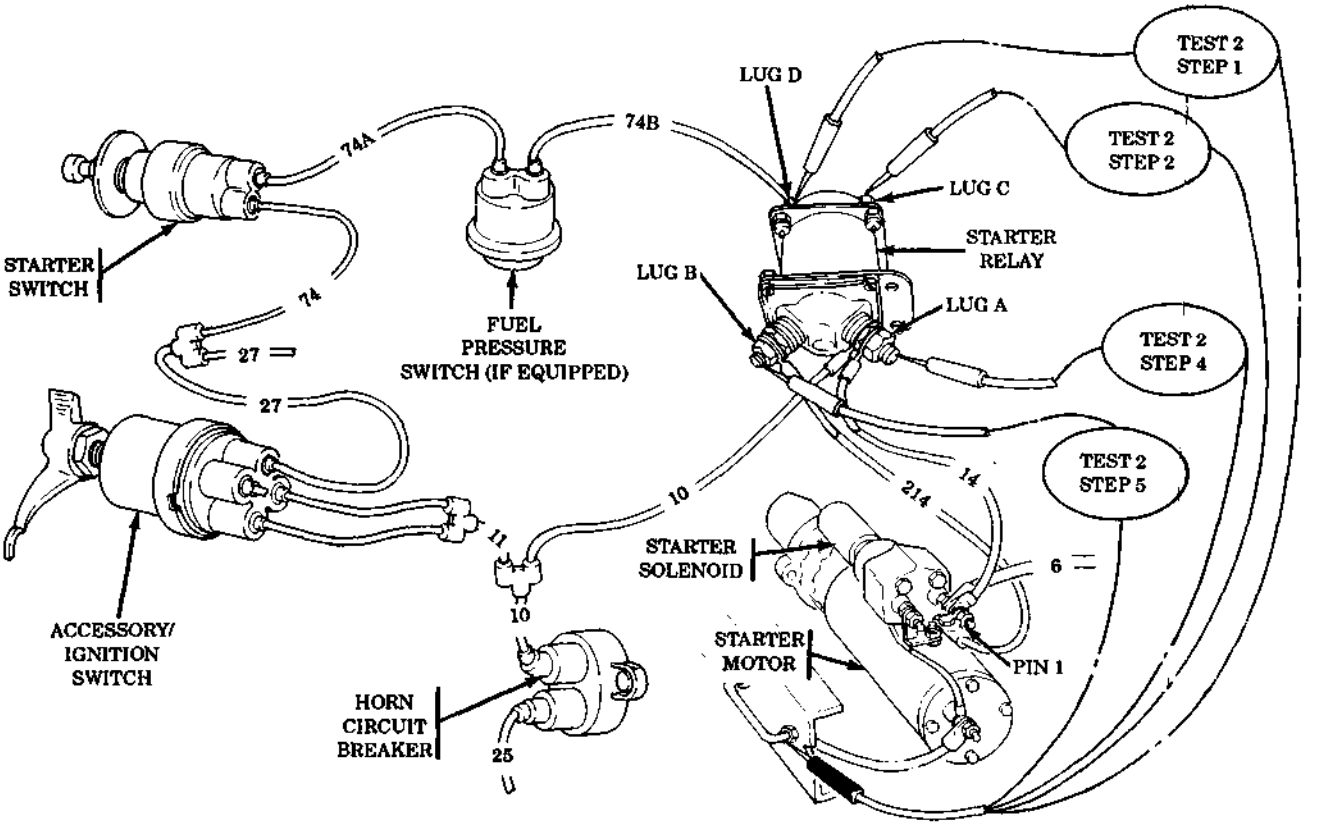

https://truckmanualshub.com/

Table 2-4. Electrical Troubleshooting (Contd).

MALFUNCTION TEST OR INSPECTION CORRECTIVE ACTION

NOTE

M44A2 series vehicles may not be equipped with fuel pressure switch. If vehicle is not equipped with fuel pressure switch, starter switch output circuit would be wired directly to starter relay.

Test 3. Test for battery voltage on fuel pressure switch with accessory/ignition switch turned ON.

Step 1. Remove lead 74A from pin A of fuel pressure switch, push start button, and check for battery voltage.

a. If voltage is not present, go to test 4.

b. If voltage is present, go to step 2.

Step 2. Disconnect battery ground cable (para. 4-48), remove lead 74B from pin B of fuel pressure switch, and check continuity from lead 74B contact end to lug D on starter relay.

a. If no continuity is present, repair or replace lead 74B (para. 4-51).

b. If continuity is present, go to step 3.

Step 3. Check continuity of fuel pressure switch. With engine stopped, fuel pressure will be off and contacts of switch will be closed. These normally closed contacts will be opened when engine is running.

If no continuity is present between pins A and B, replace fuel presure switch (para. 4-37) and go to test 1, Step 1.

Test 4. Test for battery voltage into accessory/ignition switch pins A and C.

Step 1. Remove two leads 11 from accessory/ignition switch pins A and C. Using multimeter, check for battery voltage on contact ends of leads 11.

a. If voltage is not present, go to test 5

b. If voltage is present, install both leads 11 into pins A and C and go to step 2.

Step 2. Observe voltmeter in dash for proper operation (TM 9-2320-361-10).

a. If voltmeter works, go to step 5.

b. If voltmeter does not work, go to step 3.

Step 3. Remove lead 27 from pin B of accessory/ignition switch. With accessory/ignition switch turned ON, check for battery voltage at pin B.

a. If voltage is present, go to step 5.

b. If voltage is not present, go to step 4.

Step 4. Remove leads 11 from pins A and C and lead 1 from pin D. With accessory/ignition switch in ON position, check continuity between pins A and B followed by pins C and D.

a. If continuity is not found, replace accessory/ignition switch (para. 4-21). Check continuity of new accessory/ignition switch before installation. Reinstall leads 11 in pins A and C. Reinstall lead 27 in pin B and lead 1 in pin D. Attempt to start engine (TM 9-2320-361-10).

b. If starter does not crank engine, go to step 5.

Step 5. Remove lead 74A from pin B of START switch. With accessory/ignition switch in ON position, push start switch, and check for battery voltage at pin B.

a. If voltage is not present, go to step 6.

b. If voltage is present, perform continuity check on lead 74A.

c. If no continuity is present, replace or repair lead (para. 4-51).

https://truckmanualshub.com/

Table 2-4. Electrical Troubleshooting (Contd).

MALFUNCTION TEST OR INSPECTION CORRECTIVE ACTION

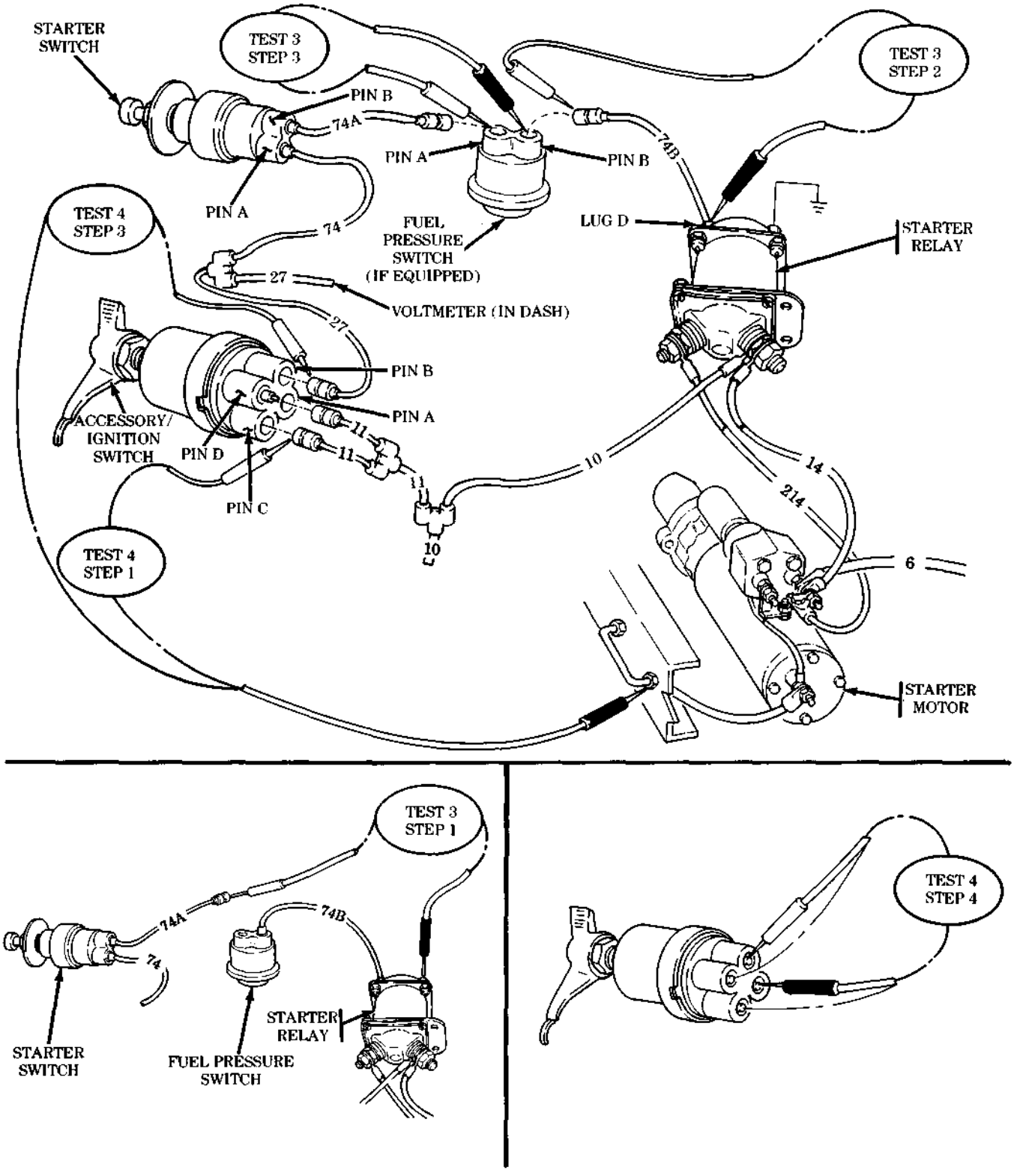

https://truckmanualshub.com/

Table 2-4. Electrical Troubleshooting (Contd).

MALFUNCTION TEST OR INSPECTION CORRECTIVE ACTION

Step 6. Remove lead 74 from pin A of start switch, turn accessory/ignition switch to ON position, and check for battery voltage on contact end of lead 74.

a. If voltage is not present, disconnect lead 27 from accessory/ignition switch and check continuity between lead 27 and its connection to lead 74.

b. If continuity is not found, replace or repair lead (para. 4-51). Reinstall lead 74 into pin A.

Step 7. Attempt to start engine (TM 9-2320-361-10).

If starter does not engage engine, go to step 8.

Step 8. Remove lead 74 from pin A and lead 74A from pin B of start switch. Push start switch and perform continuity check between pins A and B.

a. If continuity is not found, replace start switch (para. 4-8).

b. Check continuity of new switch before installation.

c. Reinstall lead 74A in pin B and lead 74 in pin A.

d. Push start switch. Starter should turn engine.

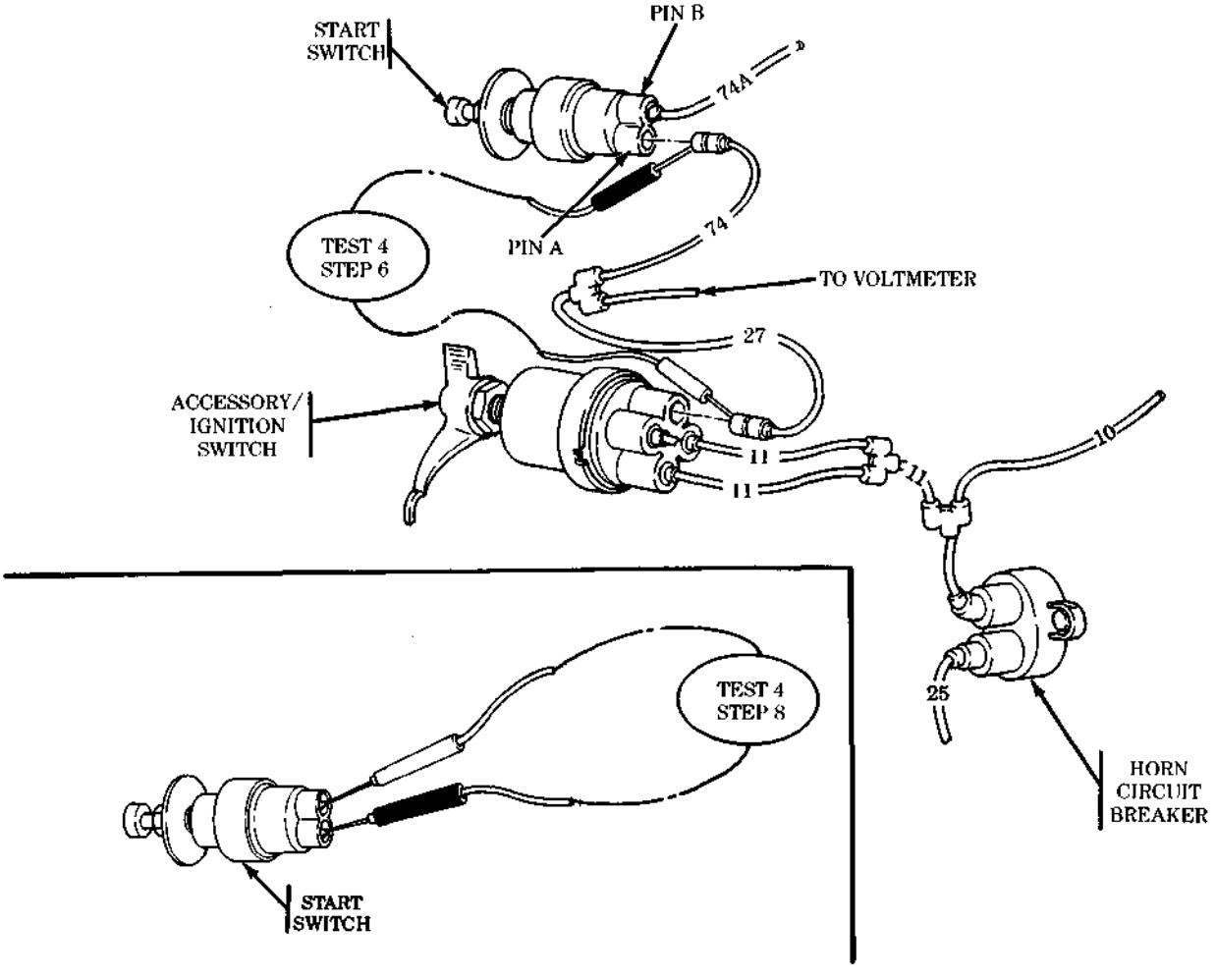

https://truckmanualshub.com/

Table 2-4. Electrical Troubleshooting (Contd).

MALFUNCTION TEST OR INSPECTION CORRECTIVE ACTION

Test 5. Check for battery voltage at horn circuit breaker.

Step 1. Remove lead 10 from horn circuit breaker and check for battery voltage on contact end.

a. If battery voltage is not present, go to step 2.

b. If battery voltage is present, go to step 3.

Step 2. Disconnect battery ground cable (para. 4-48). Disconnect two leads 11 from accessory/ignition switch and check continuity of two leads 11 and lead 10.

a. If continuity is not present, repair or replace leads 11 or lead 10 (para. 4-51).

b. If continuity is present, reconnect two leads 11, lead 10, and battery ground cable (para. 4-48). Go to step 3.

Step 3. With accessory/ignition switch ON, push start switch. Starter should engage engine flywheel and crank engine.

If starter does not engage flywheel and crank engine, return to test 4, step 2.

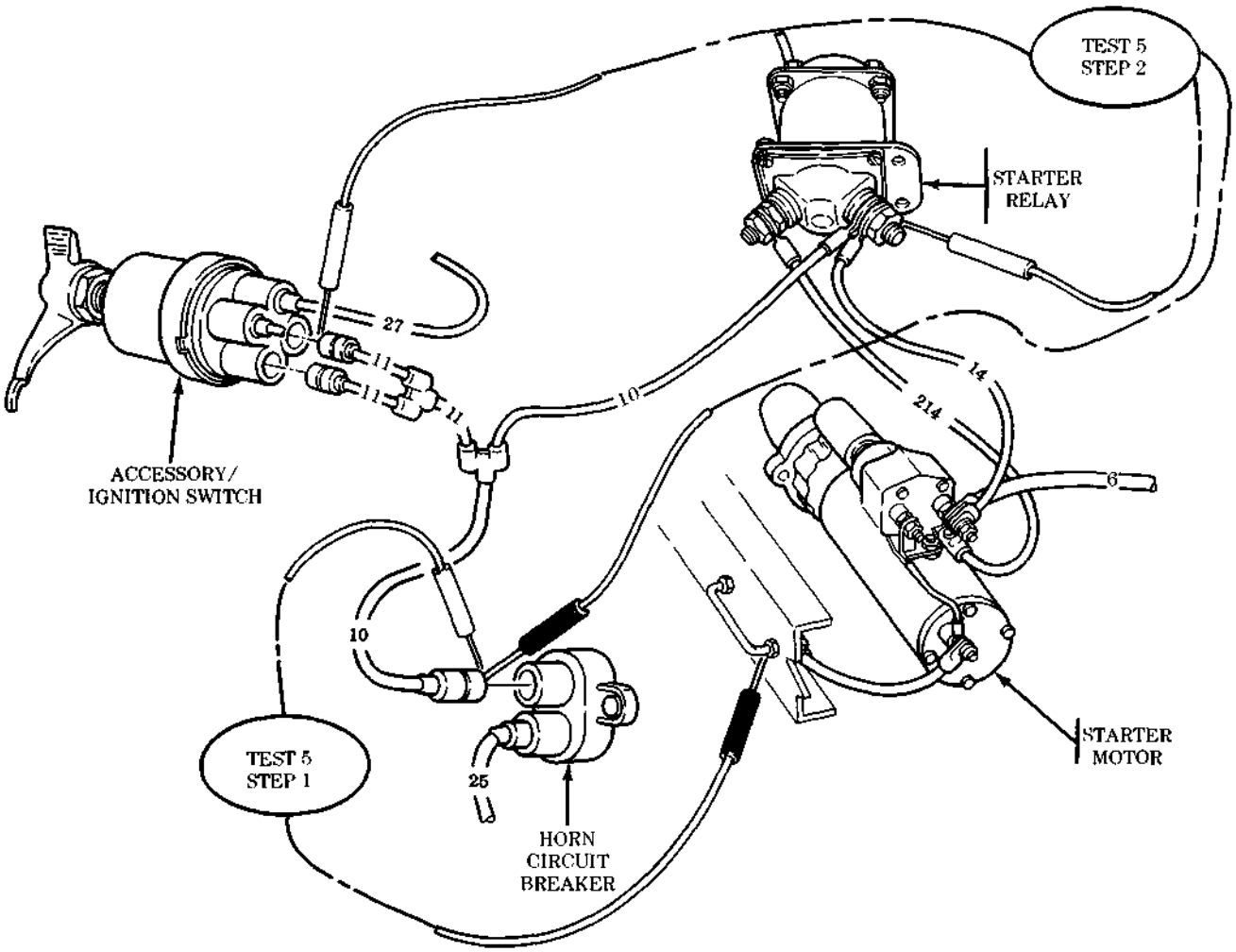

END OF TESTING!

https://truckmanualshub.com/

Table 2-4. Electrical Troubleshooting (Contd).

MALFUNCTION TEST OR INSPECTION CORRECTIVE ACTION

3. STARTER MOTOR OPERATES, BUT ENGINE CRANKS SLOWLY

NOTE

If STE/ICE is available, perform NG80 - starter circuit tests (chapter 2, section VII).

Test 1. Check batteries for overheating by cranking engine for 15 seconds and feeling battery terminal connections.

If battery terminal is hot, a loose or corroded connection is indicated.

a. Clean corroded connection to bright metal.

b. Tighten all loose connections at batteries, ground, and starter.

Test 2. Test specific gravity for each battery.

Perform a specific gravity test (TM 9-6140-200-14), Batteries must test 1.255 or greater, temperature corrected, and each cell in a battery must test within 0.025 points of the others.

a. Charge all batteries not meeting requirements (TM 9-6140-200-14) and check specific gravity again.

b. If 0.025 point variation still exists within any battery, it is defective and must be replaced (para. 4-49).

Test 3. Test starter motor voltage.

Step 1. Set multimeter to a voltage range that will measure 24 Vdc.

Step 2. Connect multimeter positive lead to positive terminal lug 6 of starter motor and negative lead to terminal lug 5 on end plate of starter motor.

Step 3. Crank engine (TM 9-2320-361-10) and observe cranking voltage on multimeter. Voltage should exceed 19 Vdc.

If voltage is less than 19 Vdc, clean and tighten starter motor connections.

Test 4. Test starter motor-to-solenoid strap voltage drop.

Step 1. Set multimeter to a voltage range that will measure tenths of a volt.

Step 2. Connect multimeter negative lead to positive terminal lug 6 of starter motor and multimeter positive lead to starter motor solenoid terminal lug 3.

Step 3. Crank engine (TM 9-2320-361-10) and observe multimeter. A voltage reading exceeding 0.2 volts indicates a bad connection at starter motor terminal lug 3 and terminal lug 6 of solenoid.

Clean and tighten connections.

Test 5. Test starter motor solenoid contact voltage drop.

Step 1. Set multimeter to a voltage range that will measure tenths of a volt.

Step 2. Connect multimeter between starter motor solenoid terminal lugs 3 and 2.

Step 3. Crank engine (TM 9-2320-361-10) and observe multimeter. A voltage reading exceeding 0.4 volts indicates a defective starter motor solenoid.

a. Replace starter motor and solenoid assembly (para. 4-7).

b. If malfunction still exists, go to tests 6, 7, and 8.

Test 6. Test negative cable 7 voltage drop from batteries to starter motor.

Step 1. Set multimeter to voltage range that will measure tenths of a volt.

Step 2. Connect multimeter positive lead to terminal stud on end plate of starter motor and negative lead to frame ground.

Step 3. Crank engine (TM 9-2320-361-10) and observe multimeter. A voltage reading exceeding 0.4 volts indicates a defective starter motor solenoid.

a. Replace starter motor and solenoid assembly (para. 4-7).

b. If malfunction still exists, go to tests 7 and 8.

https://truckmanualshub.com/

Table 2-4. Electrical Troubleshooting (Contd).

MALFUNCTION TEST OR INSPECTION CORRECTIVE ACTION

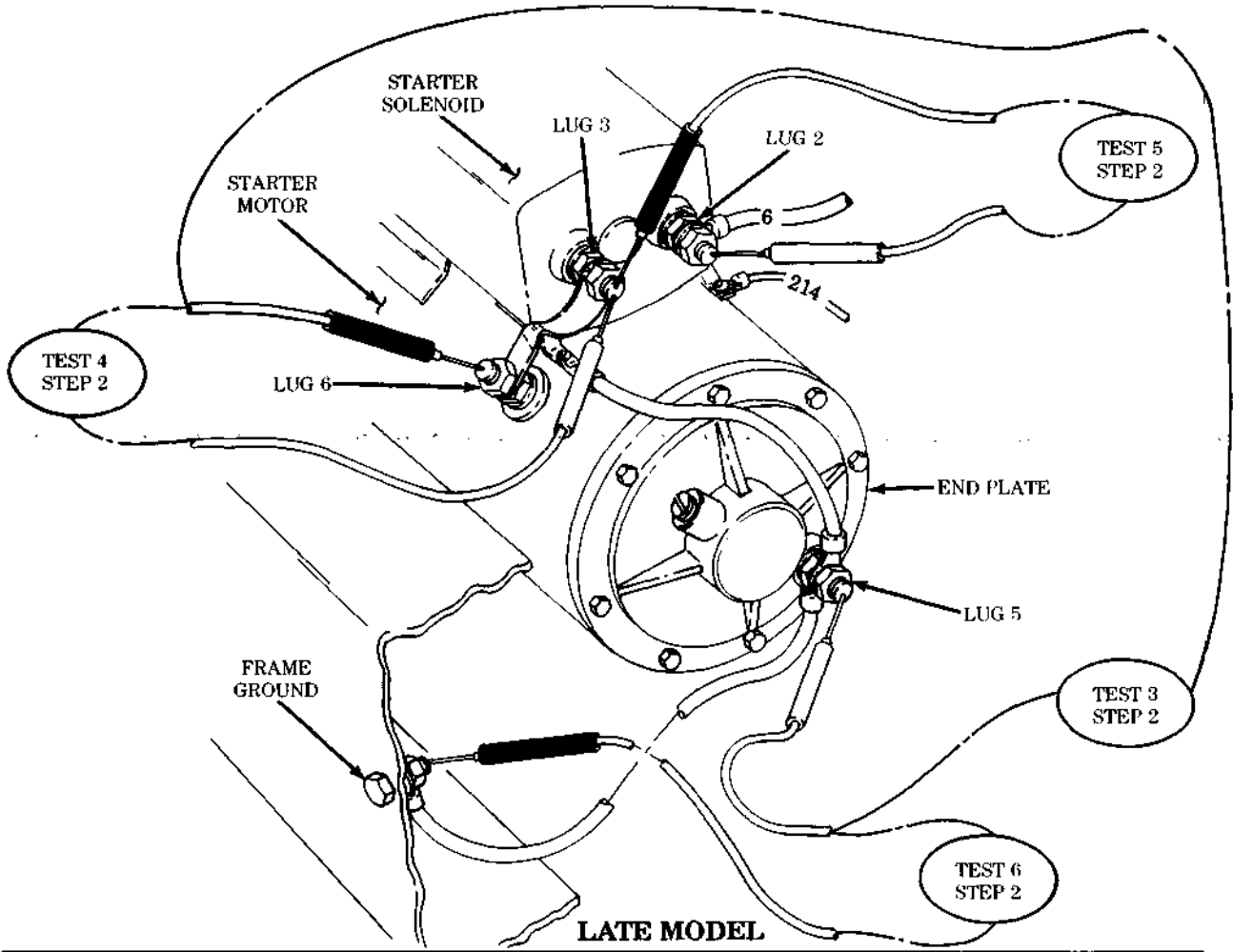

LATE MODEL

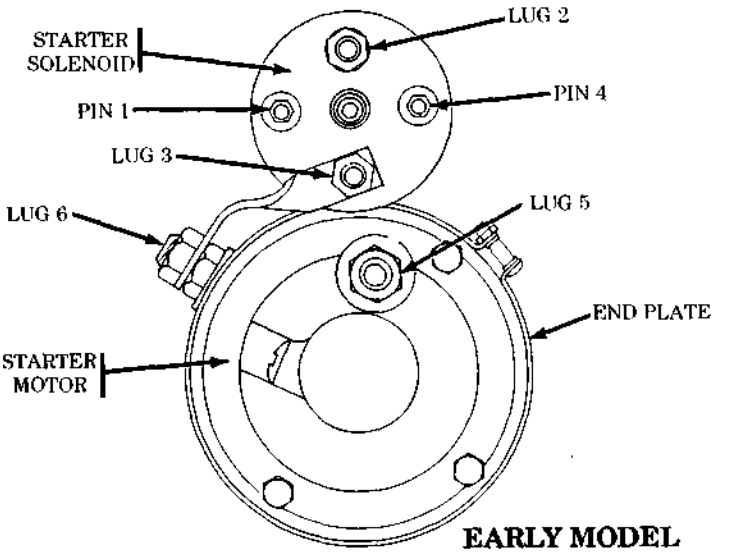

EARLY MODEL

https://truckmanualshub.com/

Table 2-4. Electrical Troubleshooting (Contd).

MALFUNCTION TEST OR INSPECTION CORRECTIVE ACTION

Test 7. Test positive cable 6 voltage drop from batteries to starter motor solenoid.

Step 1. Set multimeter to a voltage range that will measure tenths of a volt.

Step 2. Connect multimeter positive lead to positive terminal post on batteries and negative lead to lug 2 on starter motor solenoid.

Step 3. Crank engine (TM 9-2320-361-10) and observe multimeter. A voltage reading exceeding 0.4 volts indicates a loose or corroded connection.

Clean and tighten cable connections at batteries, starter, and chassis (para. 4-48).

Test 8. Test battery voltage while cranking engine.

Step 1. Set multimeter to a voltage range that will measure 24 Vdc.

Step 2. Connect multimeter directly across battery terminal posts, positive lead to positive post, and negative lead to negative post.

Step 3. With emergency engine stop handle pulled (TM 9-2320-361-10), crank engine for 30 seconds (TM 9-2320-361-10). Voltage reading should be 19 Vdc or more during cranking.

a. If battery voltage is not satisfactory, go to malfunction 1 and check battery.

b. If battery voltage is satisfactory, replace starter motor and solenoid assembly (para. 4-7).

Step 4. Disengage emergency stop handle (TM 9-2320-361-10).

If engine still cranks slowly, notify your supervisor.

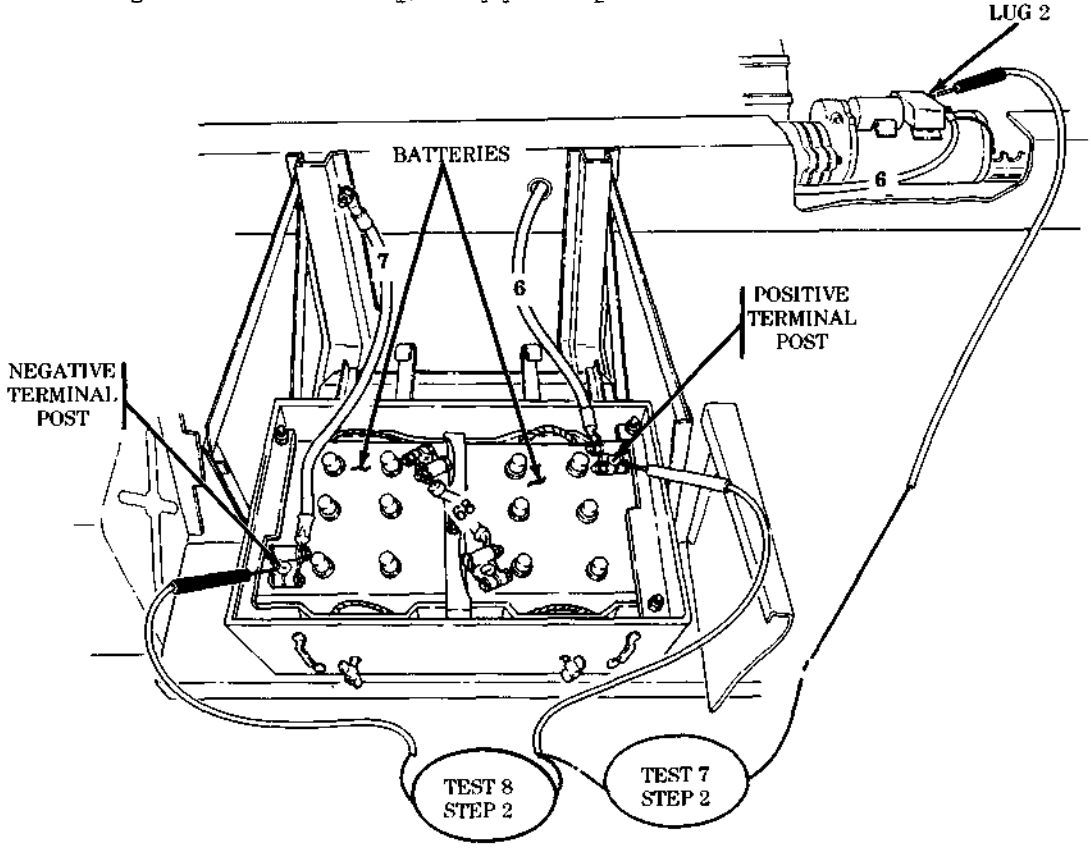

END OF TESTING!

https://truckmanualshub.com/

Table 2-4. Electrical Troubleshooting (Contd).

MALFUNCTION TEST OR INSPECTION CORRECTIVE ACTION

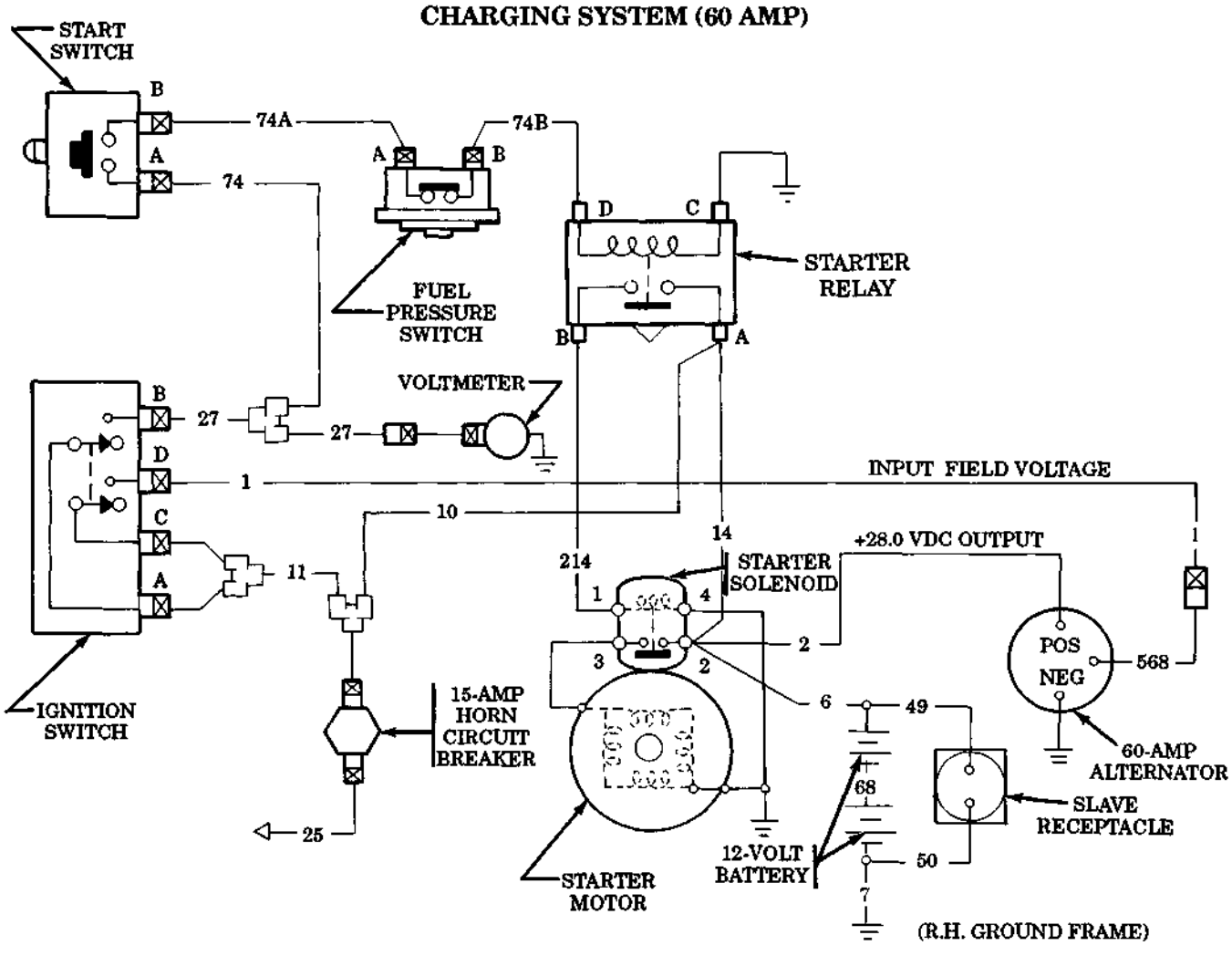

CHARGING SYSTEM (60 AMP)

4. NO ALTERNATOR OUTPUT (GENERATOR IN LEFT-HAND RED)

NOTE

- Voltage regulator is built into alternator.
- If STE/ICE is available, perform NG50 - charging circuit tests (chapter 2, section VII).

Test 1. Check for loose or missing belts.

a. Adjust loose belts (para. 4-2).

b. Replace missing belts (para. 4-2).

https://truckmanualshub.com/

Table 2-4. Electrical Troubleshooting (Contd).

MALFUNCTION TEST OR INSPECTION CORRECTIVE ACTION

Test 2. Test charging system output voltage.

Step 1. Open door of battery compartment. Loosen two thumbscrews and slide batteries onto running board.

Step 2. Use multimeter to check battery voltage.

NOTE

If vehicle is equipped with a slave receptacle, check voltage at receptacle.

Step 3. Start engine (TM 9-2320-361-10).

Step 4. Set engine speed at 1200 rpm.

Step 5. Turn vehicle headlights and accessories to ON position.

Step 6. Use multimeter to check battery voltage. Charging voltage on batteries should be 28.0 ± 0.2 Vdc.

a. If battery voltage measures 24.0 Vdc, alternator has no output. Go to test 3 and check input voltage.

b. If battery voltage is between 24.0 and 26.0 Vdc, alternator output is weak. Go to test 3 and check input voltage.

c. If battery voltage measures 28.0 ± 0.2 Vdc and battery generator on instrument panel shows no voltage, an electrical problem exists between generator and accessory/ignition switch. Go to malfunction 2, test 4, step 3.

d. If battery voltage measures between 26.0 and 30.0 Vdc, adjust voltage regulator (para. 4-3) in alternator until voltage across batteries is 28.0 ± 0.2 Vdc. Go to step 7 and check regulator stability.

e. If regulator voltage across batteries cannot be adjusted to 28.0 ± 0.2 Vdc, replace alternator (para. 4-3).

f. If battery voltage is greater than 30.0 Vdc, first try to adjust voltage regulator in alternator down to 28.0 Vdc. If voltage regulator voltage cannot be adjusted to 28.0 Vdc, replace alternator (para. 4-3).

Step 7. Check voltage regulator stability as follows:

a. Decrease engine speed to 1000 rpm with headlights in ON position. Regulated battery voltage should remain at 28.0 ± 0.2 Vdc.

b. If battery voltage drops below 27.5 Vdc, replace alternator (para. 4-3).

c. Increase engine speed to 2000 rpm. Regulated battery voltage should remain at 28.0 ± 0.2 Vdc.

d. If battery voltage increases above 28.5 Vdc, replace alternator (para. 4-3).

e. Return engine speed to 1200 rpm.

f. Turn headlights OFF and ON and observe change of battery voltage.

g. If battery voltage changes more than ± 0.5 Vdc and does not return quickly to 28.0 ± 0.2 Vdc, replace alternator (para. 4-3).

https://truckmanualshub.com/

Table 2-4. Electrical Troubleshooting (Contd).

MALFUNCTION TEST OR INSPECTION

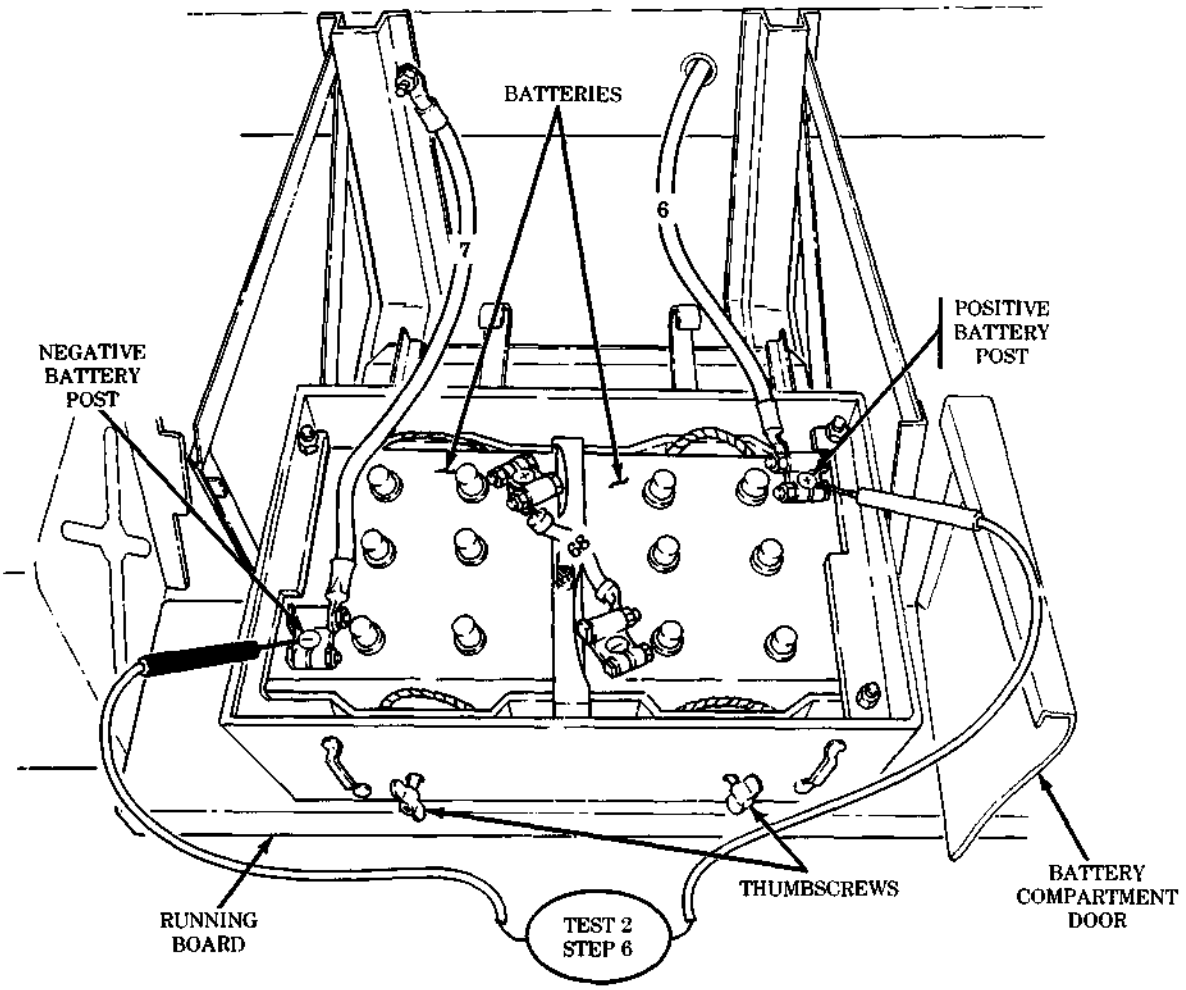

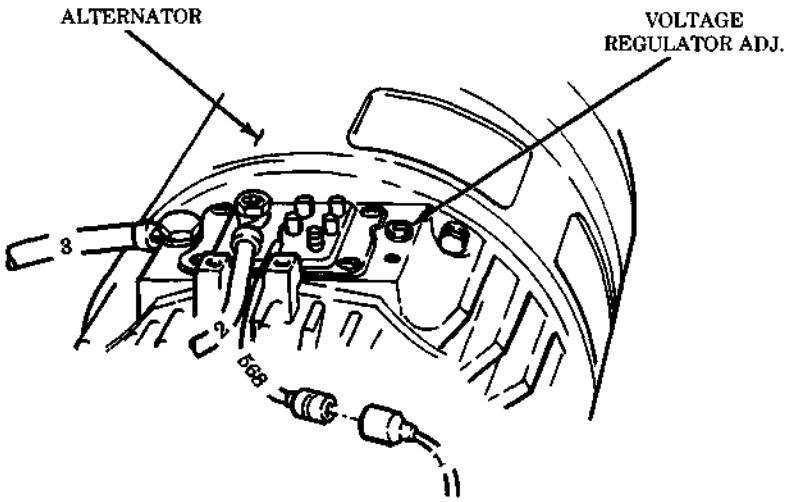

https://truckmanualshub.com/

Table 2-4. Electrical Troubleshooting (Contd).

MALFUNCTION TEST OR INSPECTION CORRECTIVE ACTION

Test 3. Test input voltage to alternator.

Step 1. Turn headlights to OFF position. Stop engine.

Step 2. Disconnect lead 1 from lead 568 at alternator.

Step 3. Turn accessory/ignition switch to ON position.

Step 4. Check for battery voltage at contact end of lead 1. Voltage should be 24.0 Vdc.

a. If voltage is not present, an open lead or bad connection exists in input circuit. Go to test 6.

b. If voltage is 24.0 Vdc (normal), remove access cover on top of alternator to expose output terminals.

c. Reconnect lead 1 to lead 568. Go to step 5.

Step 5. Measure voltage at terminal end of lead 568.

a. If battery voltage is present (normal), the alternator is believed to be defective. Go to test 4 and check positive output of alternator.

b. If voltage is not present, an open lead or bad contact exists in lead 568. Repair or replace lead (para. 4-51), return to test 2.

Test 4. Test positive output of alternator.

NOTE

- Access cover has been removed in test 3.
- IA decrease in input voltage normally causes an increase in alternator output voltage.

Step 1. Start engine (TM 9-2320-361-10).

Step 2. Set engine speed at 1200 rpm.

Step 3. Turn headlights and accessories to ON position.

Step 4. Use multimeter and measure alternator output voltage at positive terminal (lead 2).

a. If output voltage is between 24.0 and 26.0 Vdc, replace alternator (para. 4-3).

b. If output voltage is more than 28.5 Vdc, go to test 5 and check voltage drop on lead 2.

Test 5. Test voltage drop on lead 2.

Step 1. Place multimeter positive lead on alternator positive output. Place multimeter negative lead on starter solenoid lug 2.

Step 2. If voltage drop on lead 2 is greater than 0.4 volts, replace or repair lead (para. 4-51). Go to test 2.

Step 3. If voltage drop on lead 2 is less than 0.4 volts (normal), voltage regulator output is too high. Replace alternator (para. 4-3).

Test 6. Test battery voltage into accessory/ignition switch (malfunction 2, test 4).

Step 1. Disconnect lead 1 from pin D of accessory/ignition switch.

Step 2. Turn accessory/ignition switch to ON position.

Step 3. Check voltage at pin D of accessory/ignition switch. Battery voltage should be present.

a. If battery voltage is present, go to step 4 and check continuity of lead 1.

b. If voltage is not present, perform malfunction 2, test 4, step 4, to test continuity of accessory/ignition switch.

c. If continuity is present in accessory ignition switch, go to step 4.

https://truckmanualshub.com/

Table 2-4. Electrical Troubleshooting (Contd).

MALFUNCTION TEST OR INSPECTION CORRECTIVE ACTION

Step 4. With both ends of lead 1 disconnected, check continuity.

a. If continuity is present, reconnect lead 1 to pin D of accessory/ignition switch. With accessory/ignition switch in ON position, battery voltage should be present at lead 1.

b. If continuity is not present, replace or repair lead 1 (para. 4-51).

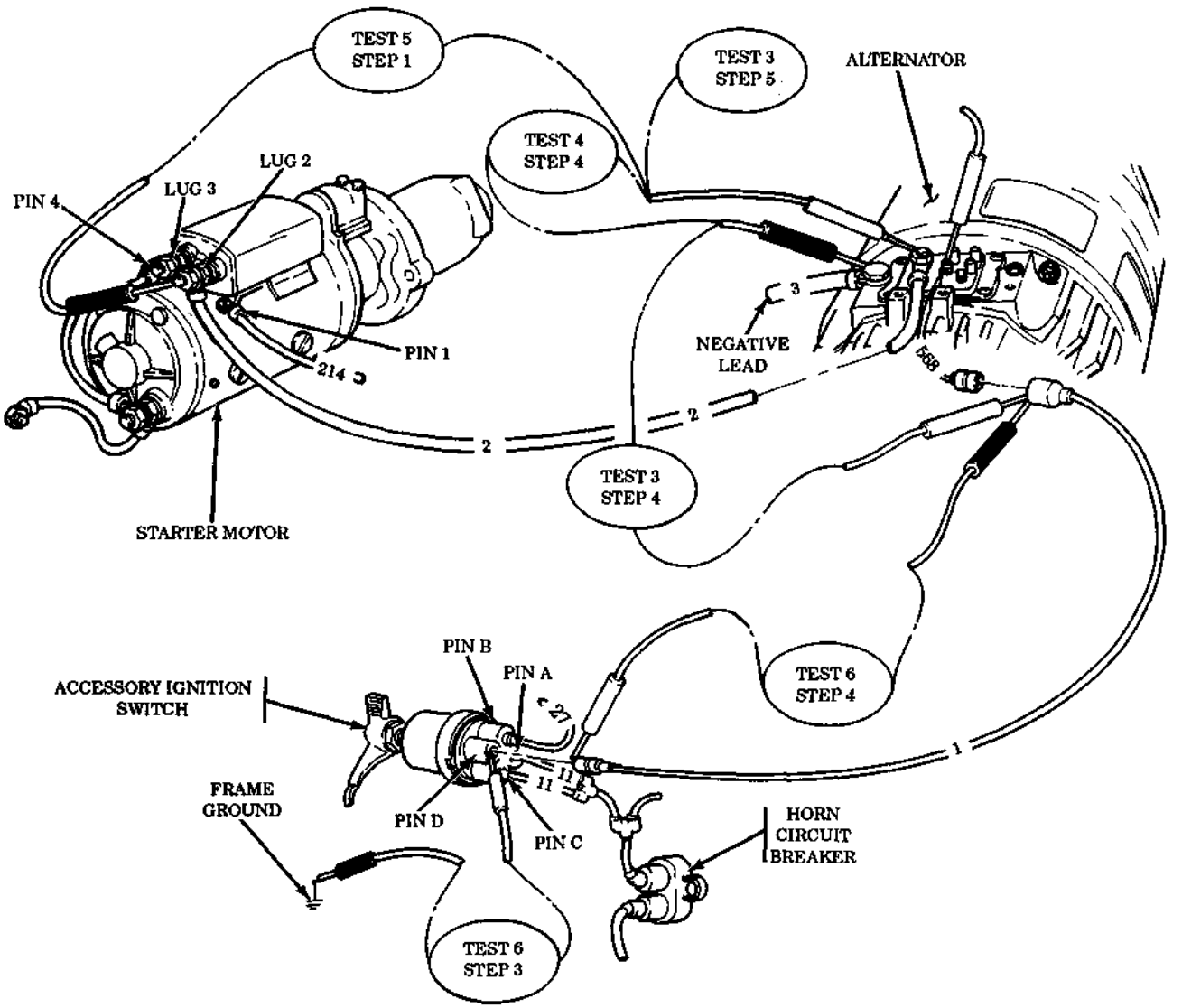

END OF TESTING!

https://truckmanualshub.com/

Table 2-4. Electrical Troubleshooting (Contd).

MALFUNCTION TEST OR INSPECTION CORRECTIVE ACTION

5. BATTERIES NOT CHARGING PROPERLY (GENERATOR IN YELLOW OR RIGHT-HAND RED)

NOTE

If STE/ICE is available, perform NG50 - charging circuit tests (chapter 2, section VII).

Test 1. Check for loose or missing alternator belts.

a. Adjust loose belts (para. 4-2).

b. Replace broken or missing belts (para. 4-2).

Test 2. Test battery voltage.

NOTE

Battery voltmeter located on instrument panel is not always accurate and should not be used to adjust voltage. Indicator needle in voltmeter located on instrument panel should cover the white dot at edge of green area when battery voltage is 28.0 ± 0.2 Vdc.

If voltage across batteries cannot be adjusted to 28.0 ± 0.2 Vdc, go to malfunction 4, test 3 and check voltage.

END OF TESTING!

6. BATTERIES HOT OR BOILING, CORRECTED SPECIFIC GRAVITY OF ALL CELLS IS 1.280

NOTE

If STE/ICE is available, perform NG50 - charging circuit tests (chapter 2, section VII).

Test charging voltage (malfunction 4, test 2).

END OF TESTING!

7. BATTERIES USE EXCESSIVE WATER

NOTE

If STE/ICE is available, perform NG81 - battery tests or NG50 - charging circuit tests (chapter 2, section VII).

Test charging voltage (malfunction 4, test 2).

END OF TESTING!

8. BATTERIES RUN DOWN IN OPERATION

NOTE

If STE/ICE is available, perform NG50 - charging circuit tests (chapter 2, section VII).

Test 1. Check for loose or missing alternator belts.

a. Adjust loose belts (para. 4-2).

b. Replace missing belts (para. 4-2).

Test 2. Test charging voltage (malfunction 4, test 2).

NOTE

If proper voltage is indicated, problem is not in charging system. Refer to battery system troubleshooting (malfunction 1).

END OF TESTING!

https://truckmanualshub.com/

Table 2-4. Electrical Troubleshooting (Contd).

MALFUNCTION TEST OR INSPECTION CORRECTIVE ACTION

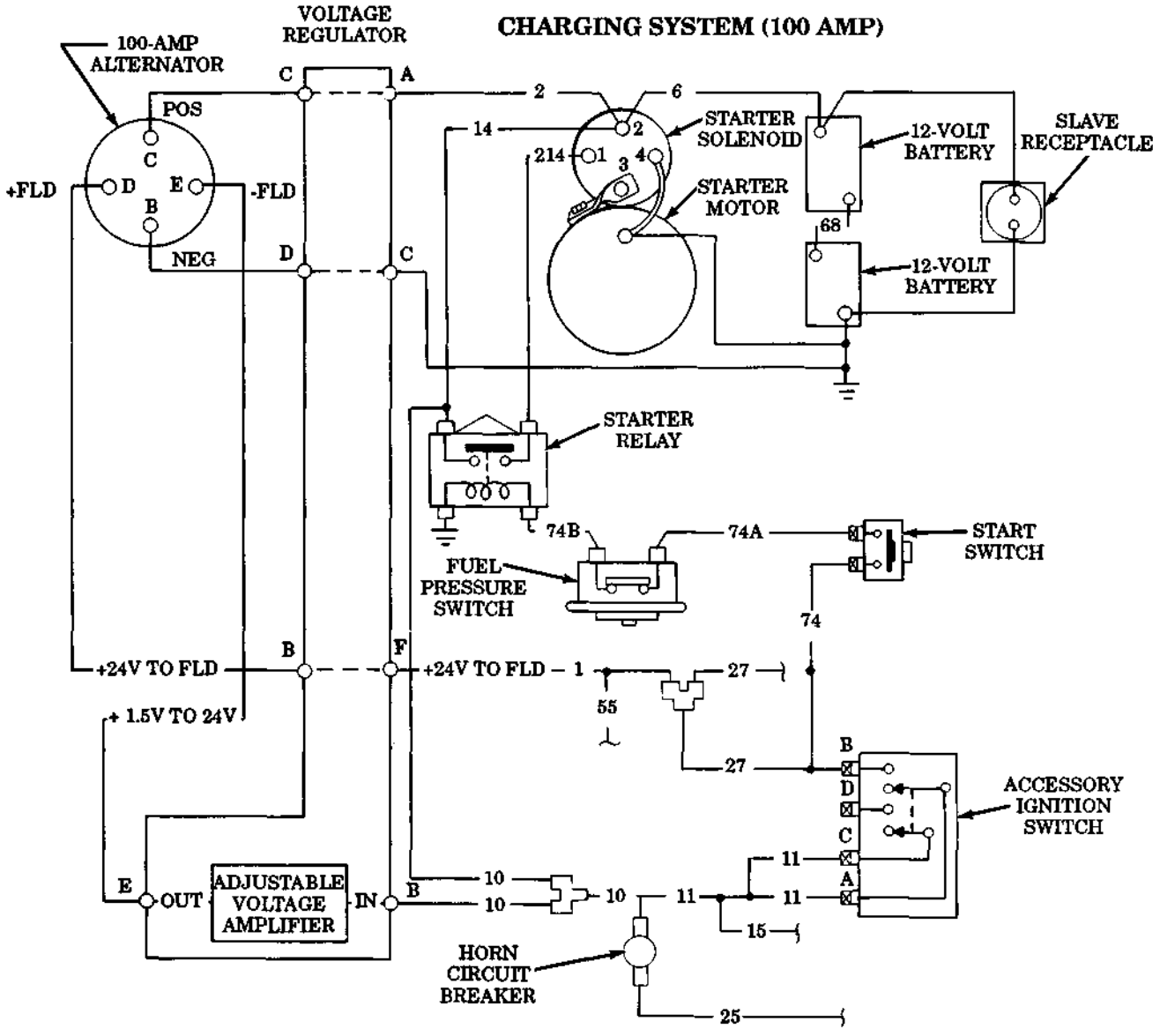

CHARGING SYSTEM (100 AMP)

9. NO ALTERNATOR OUTPUT (GENERATOR IN LEFT-HAND RED)

NOTE

If STE/ICE is available, perform NG50 - charging circuit test (chapter 2, section VII).

Test 1. Check for loose or missing belts.

a. Adjust loose belts (para. 4-2).

b. Replace missing belts (para. 4-2).

https://truckmanualshub.com/

Table 2-4. Electrical Troubleshooting (Contd).

MALFUNCTION TEST OR INSPECTION CORRECTIVE ACTION

Test 2. Test charging system output voltage.

NOTE

- Voltage regulators in both the 100 amp and 60 amp charging systems regulate battery voltage to 28.0 ± 0.2 Vdc.
- The 100 amp voltage regulator is separate from the 100 amp alternator.
- Battery voltage fluctuations are not to go above 28.5 Vdc or less than 27.5 Vdc as headlights are turned ON, OFF, and ON with engine running at 1200 rpm.
- For test purposes only, charging voltage across batteries can be varied between 26.0 to 30.0 Vdc with engine running at 1200 rpm and headlights off.

Step 1. Turn off engine.

Step 2. Open door of battery compartment. Loosen two thumbscrews and slide batteries onto running board.

Step 3. Use multimeter to check battery for voltage.

Step 4. Start engine (TM 9-2320-361-10).

Step 5. Set engine speed at 1200 rpm.

Step 6. Turn ON vehicle headlights and accessories.

Step 7. Use multimeter to check battery voltage. Normal charging voltage on batteries is 28.0 ± 0.2 Vdc.

CAUTION

Do not puncture waterproof covering on cable between alternator and voltage regulator to make voltage checks. The cable will be unserviceable.

a. If battery voltage measures between 24.0 and 26.0 Vdc and alternator has no or very weak output. Replace alternator (para. 14-50).

b. If battery voltage measures between 26.0 to 30.0 Vdc. adjust voltage regulator (if equipped with adjustment screw). If charging voltage across batteries cannot be adjusted to 28.0 ± 0.2 Vdc, replace voltage regulator (para. 14-52). If charging voltage across batteries can be adjusted to 28.0 ± 0.2 Vdc, go to step 8.

Step 8. Check voltage regulator stability.

Go to malfunction 4, test 2, step 7.

END OF TESTING!

10. BATTERIES NOT CHARGING PROPERLY (GENERATOR IN YELLOW OR RIGHT-HAND RED)

NOTE

If STE/ICE is available, perform NG50 - charging circuit tests (chapter 2, section VII).

Test 1. Check for loose or missing alternator belts.

a. Adjust loose belts (para. 4-2).

b. Replace broken or missing belts (para. 4-2).

https://truckmanualshub.com/

Table 2-4. Electrical Troubleshooting (Contd).

MALFUNCTION TEST OR INSPECTION CORRECTIVE ACTION

Test 2. Test battery voltage.

Go to malfunction 9, test 2.

END OF TESTING!

11. BATTERIES HOT OR BOILING, CORRECTED SPECIFIC GRAVITY OF ALL CELLS IS 1.280

NOTE

If STE/ICE is available, perform NG50 - charging circuit tests (chapter 2, section VII).

Test charging voltage (malfunction 9, test 2).

END OF TESTING!

12. BATTERIES USE EXCESSIVE WATER

NOTE

If STE/ICE is available, perform NG50 - charging circuit tests (chapter 2, section VII).

Test charging voltage (malfunction 9, test 2).

END OF TESTING!

13. BATTERIES RUN DOWN IN OPERATION

NOTE

If STE/ICE is available, perform NG50 - charging circuit tests (chapter 2, section VII).

Test 1. Check for loose or missing alternator belts.

a. Adjust loose belts (para. 4-2).

b. Replace missing belts (para. 4-2).

Test 2. Test charging voltage (malfunction 9, test 2).

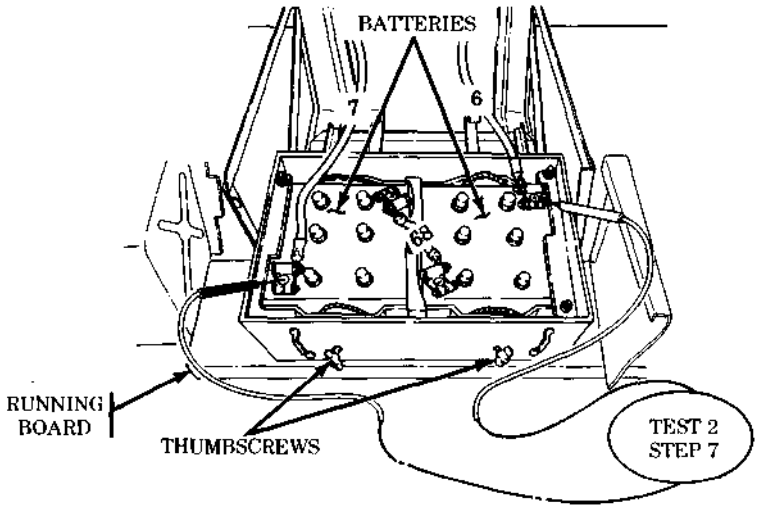

END OF TESTING!

https://truckmanualshub.com/

Table 2-4. Electrical Troubleshooting (Contd).

MALFUNCTION TEST OR INSPECTION CORRECTIVE ACTION

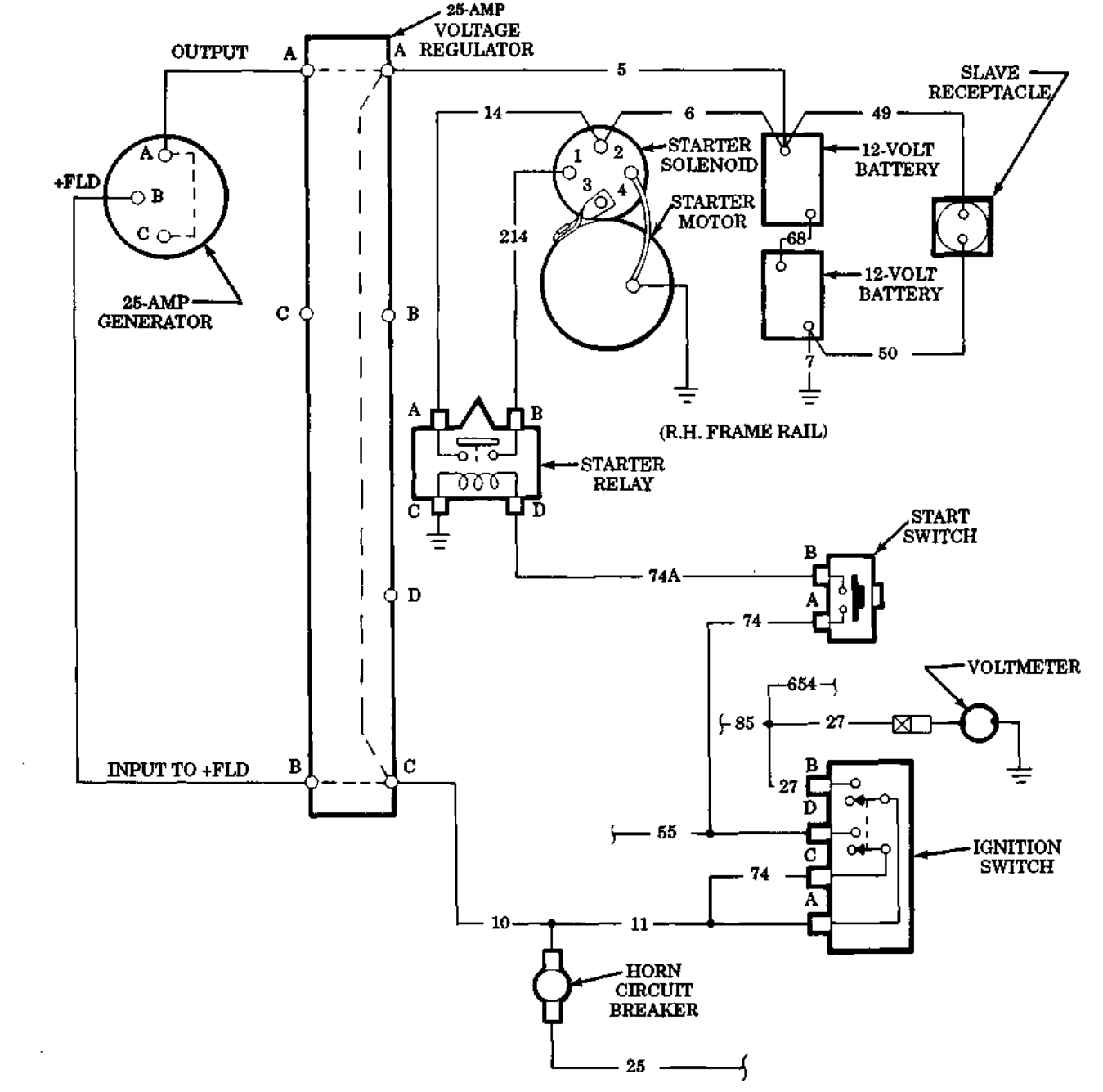

CHARGING SYSTEM (25 AMP)

14. NO GENERATOR OUTPUT (GENERATOR IN LEFT-HAND RED)

Test 25 amp charging system (malfunction 16, tests 1 and 2).

END OF TESTING!

https://truckmanualshub.com/

Table 2-4. Electrical Troubleshooting (Contd).

MALFUNCTION TEST OR INSPECTION CORRECTIVE ACTION

15. BATTERIES NOT CHARGING PROPERLY (GENERATOR IN YELLOW OR RIGHT-HAND RED)

Test 25 amp charging system (malfunction 16, tests 1 and 2).

END OF TESTING!

16. BATTERIES RUN DOWN IN OPERATION

NOTE

If STE/ICE is available, perform NG50 - charging circuit tests (chapter 2, section VII).

Test 1. Check for loose or missing alternator belts.

a. Adjust loose belts (para. 4-2).

b. Replace missing belts (para. 4-2).

Test 2. Test charging voltage across batteries.

Step 1. Open door of battery compartment. Loosen two thumbscrews and slide batteries onto running board.

Step 2. Use multimeter to check for battery voltage.

Step 3. Start engine (TM 9-2320-361-10).

Step 4. Set engine speed at 1200 rpm.

Step 5. Turn vehicle headlights and accessories to ON position.

Step 6. Use multimeter to check battery voltage. Charging voltage on batteries should be 28.0 ± 0.2 Vdc.

a. If charging voltage is between 24.0 to 26.0 Vdc, 25 amp charging system is not to be repaired. Replace 25 amp charging system with 60 amp alternator conversion kit 11647745 (para. 4-3).

b. If charging voltage is between 26.0 to 30.0 Vdc, remove plug from top or side of regulator. Turn voltage adjusting reostat until charging voltage across battery is 28.0 ± 0.2 Vdc.

c. If voltage cannot be adjusted, replace 25 amp charging system with 60 amp conversion kit 11647745 (para. 4-3).

d. If charging voltage can be adjusted to 28.0 ± 0.2 Vdc, go to step 7.

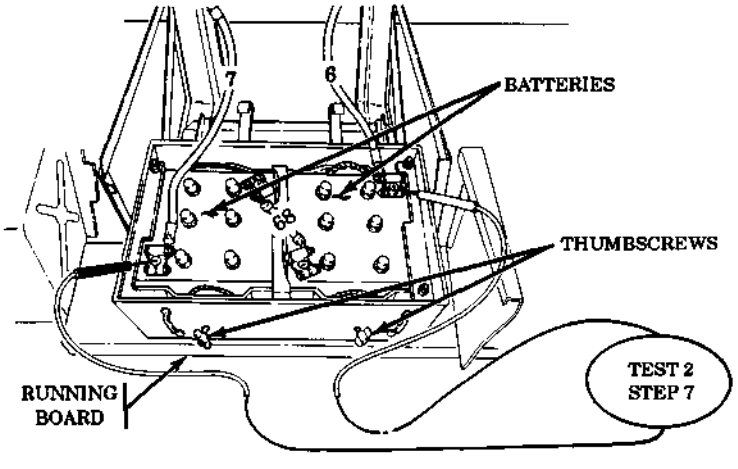

https://truckmanualshub.com/

Table 2-4. Electrical Troubleshooting (Contd).

MALFUNCTION TEST OR INSPECTION CORRECTIVE ACTION

Step 7. Check voltage regulator stability by varying engine speed.

a. Decrease engine speed to 1000 rpm with headlights on. Regulated battery voltage should remain at 28.0 ± 0.2 Vdc.

b. If battery voltage drops below 27.5 Vdc, do not repair 25 amp charging system. Replace with 60 amp alternator conversion kit 11647745 (para. 4-3).

c. Increase engine speed to 2000 rpm with headlights on. Regulated voltage should remain at 28.0 ± 0.2 Vdc.

d. If battery voltage increases above 28.5 Vdc, replace 25 amp charging system with 60 amp alternator conversion kit 11647745 (para. 4-3).

e. Return engine speed to 1200 rpm.

f. Turn headlights OFF and ON and observe change in battery voltage.

g. If battery voltage changes more than ± 0.5 Vdc and does not return quickly to 28.0 ± 0.2 Vdc, replace 25 amp charging system with 60 amp alternator conversion kit 11647745 (para. 4-3).

END OF TESTING!

SERVICE DRIVE AND STOPLIGHT SYSTEM

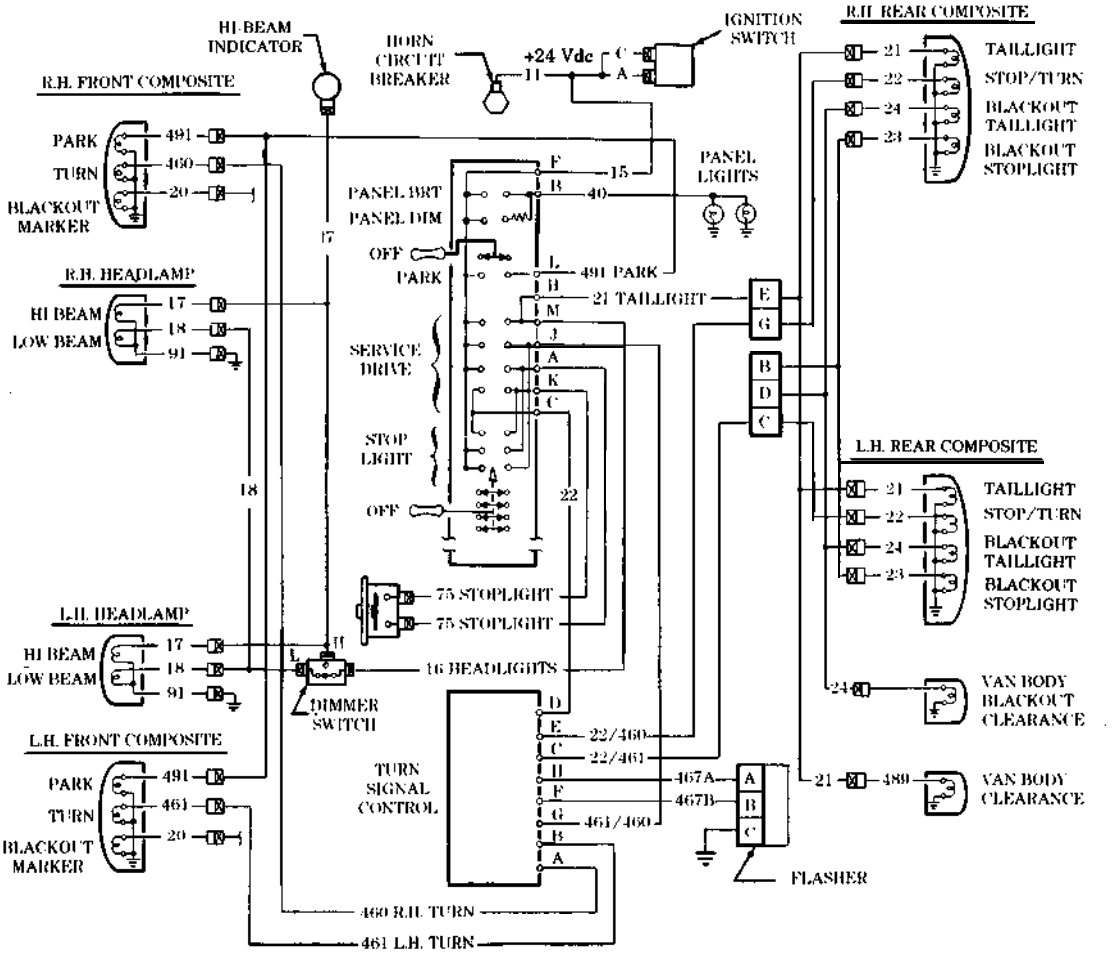

https://truckmanualshub.com/

Table 2-4. Electrical Troubleshooting (Contd).

MALFUNCTION TEST OR INSPECTION CORRECTIVE ACTION

LIGHTING SYSTEM

17. HEADLIGHT DOES NOT OPERATE ON LOW OR HIGH BEAM, OR BOTH HEADLIGHTS INOPERATIVE

Test 1. Test headlamp connection voltage.

Step 1. Check for loose connections at headlamp and wiring harness and for broken headlamp.

Step 2. Turn main light switch to OFF position.

Step 3. Disconnect leads 17 (high beam), 18 (low beam), and 91 (ground) behind headlamp.

Step 4. Turn main light switch lever to SERVICE DRIVE position.

Step 5. Check low beam and high beam voltage.

a. Push dimmer switch to LOW position. Check for battery voltage between lead 18 and lead 91.

b. If voltage is present, go to step 6. If voltage is not present, go to test 2.

c. Push dimmer switch to HIGH position. Check for battery voltage between lead 17 and lead 91.

d. If voltage is present, go to step 6.

Step 6. Check continuity of LOW-beam filament.

a. Place multimeter leads between headlamp connectors 18 and 91 at rear of headlamp.

b. If continuity is not present, replace sealed beam headlamp (para. 4-39).

Step 7. Check continuity of HIGH-beam filament.

a. Place multimeter leads between headlamp connectors 17 and 91 at rear of headlamp.

b. If continuity is not present, replace sealed beam headlamp (para. 4-39).

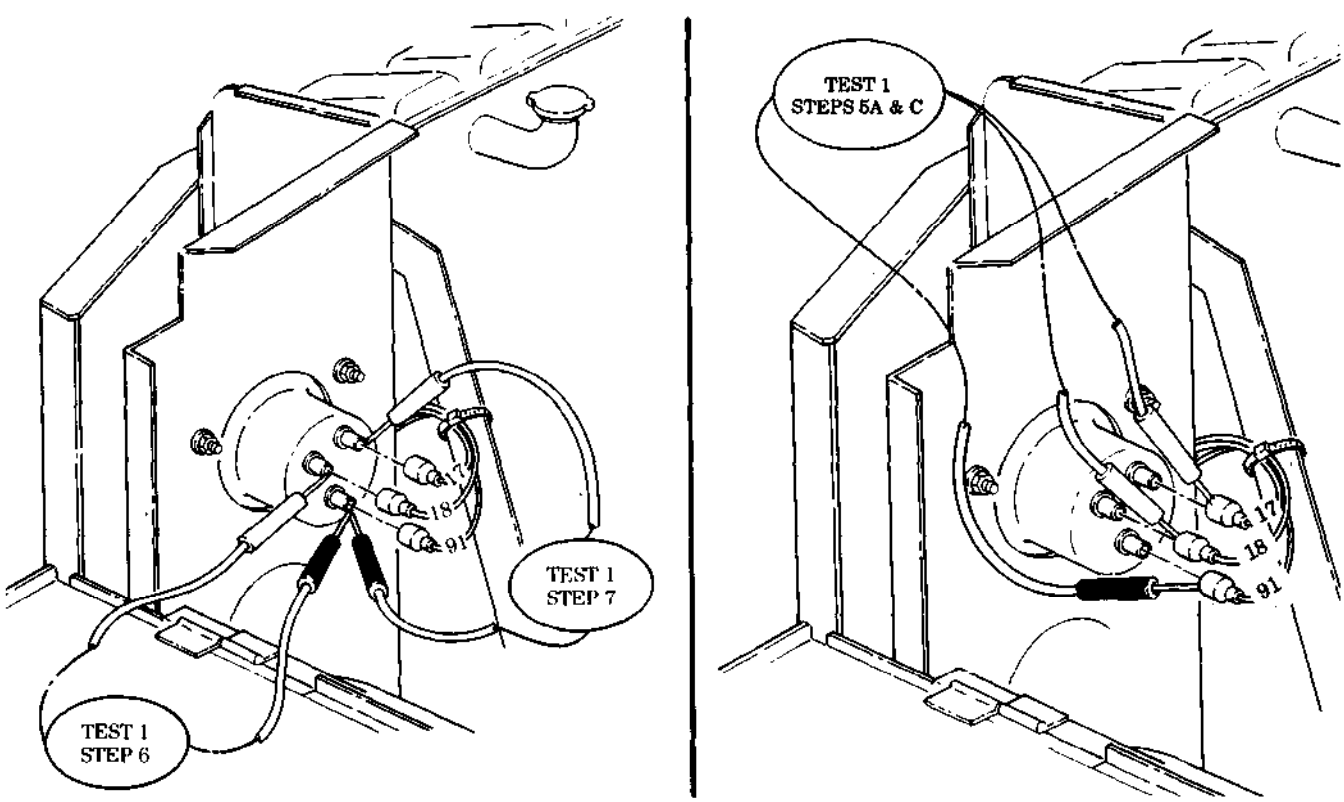

https://truckmanualshub.com/

Table 2-4. Electrical Troubleshooting (Contd).

MALFUNCTION TEST OR INSPECTION CORRECTIVE ACTION

Test 2. Test dimmer switch.

Step 1. Check dimmer switch input voltage.

a. Remove lead 16 from dimmer switch.

b. Check lead 16 contact end for battery voltage.

c. If voltage is present, go to step 2.

d. If voltage is not present, go to step 3.

Step 2. Check dimmer switch continuity.

a. Remove lead 17 from dimmer switch pin L. Remove lead 18 from dimmer switch pin H.

b. Set multimeter to RX1 scale. Check continuity between input pin and pin L.

c. If continuity is not found, push dimmer switch to change from HIGH to LOW. Recheck continuity.

d. If no continuity is present, replace dimmer switch (para. 4-28).

e. If continuity was present, check continuity between pin H and input pin.

f. If continuity is present, push dimmer switch to ON position to change from LOW to HIGH.

g. If no continuity is present, replace dimmer switch (para. 4-28).

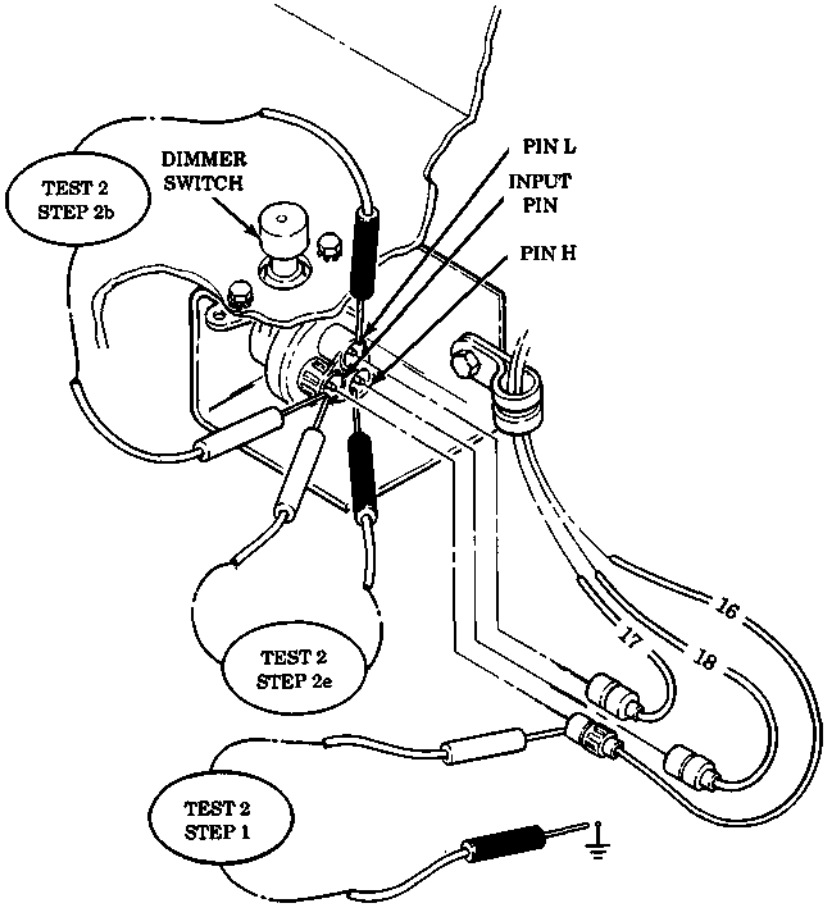

https://truckmanualshub.com/

Table 2-4. Electrical Troubleshooting (Contd).

MALFUNCTION TEST OR INSPECTION CORRECTIVE ACTION

Test 3. Test lighting system harness connector voltage.

Step 1. Turn main light switch lever to OFF position.

Step 2. Remove light switch assembly from instrument panel (para. 4-18).

Step 3. Disconnect harness connector from light switch assembly (para. 4-18).

Step 4. Check for battery voltage in harness connector at pin F.

CAUTION

Voltage at pin F is tied directly to battery without fuse protection. Insert jumper wire in pin of faulty circuit being tested first to prevent energized jumper wire from touching ground and damaging wiring harness.

a. If battery voltage is indicated at pin F, connect a jumper wire from pin F to socket pin of faulty circuit.

b. If lamps light with jumper wire connected, replace main light switch (para. 4-18).

c. If battery voltage is not indicated, go to step 5.

Step 5. Check circuit 15 for loose connections or broken wire.

Repair broken wire. If wiring cannot be repaired, notify your supervisor.

Step 6. Reconnect front wiring harness connector to light switch and reinstall light switch (para. 4-18).

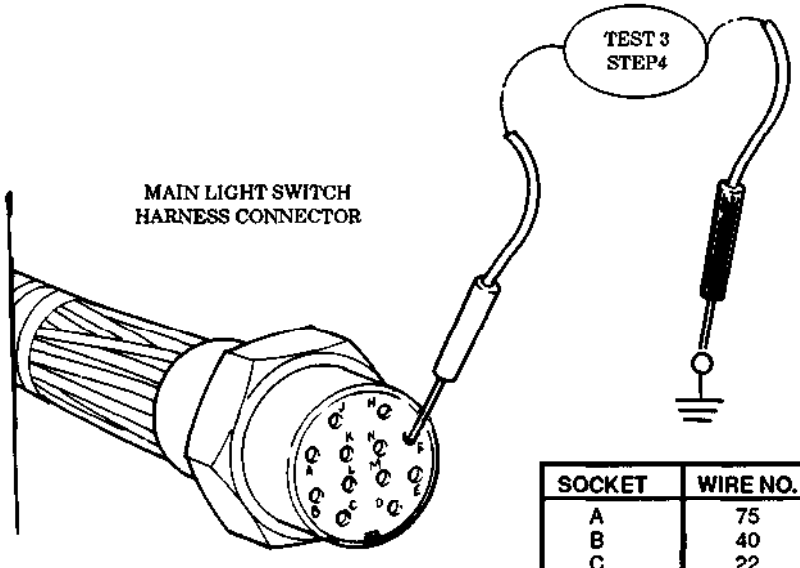

SOCKET	WIRE NO.	CIRCUIT
A	75	STOPLIGHT SWITCH
B	40	PANEL LIGHTS
C	22	DIRECTIONAL CONTROL
D	19	B.O. DRIVING LIGHT
E	20-24	B.O. MARKER LIGHTS
F	15	BATTERY POS. 24 VOLTS
H	21	SERVICE REAR LIGHTS
J	460-461	DIRECTIONAL INDICATOR
K	75	STOPLIGHT SWITCH
L	491	SERVICE PARKING LIGHTS
M	16	SERVICE HEADLIGHTS
N	23	B.O. STOPLIGHT

END OF TESTING!

https://truckmanualshub.com/

Table 2-4. Electrical Troubleshooting (Contd).

MALFUNCTION TEST OR INSPECTION CORRECTIVE ACTION

18. FRONT MARKER LAMP DOES NOT LIGHT

Test 1. Test battery voltage at front composite light.

Step 1. Turn auxiliary light switch lever to OFF position.

Step 2. Disconnect lead 491 at rear of front composite light with lamp failure.

Step 3. Turn auxiliary light switch to PARK position.

Step 4. Check for battery voltage on contact end of lead 491.

a. If battery voltage is present, go to test 2.

b. If battery voltage is not present, go to malfunction 17, test 3, and test lighting system harness connector pin L.

Test 2. Test continuity of filament in front marker lamp.

Set multimeter to RX1 scale. Check continuity between frame ground and lead 491 connected to front composite light.

a. If continuity is not present, replace marker lamp (para. 4-45).

b. If continuity is present, check for corroded contacts at lamp and lead 491 connection to front wiring harness. Reconnect lead 491.

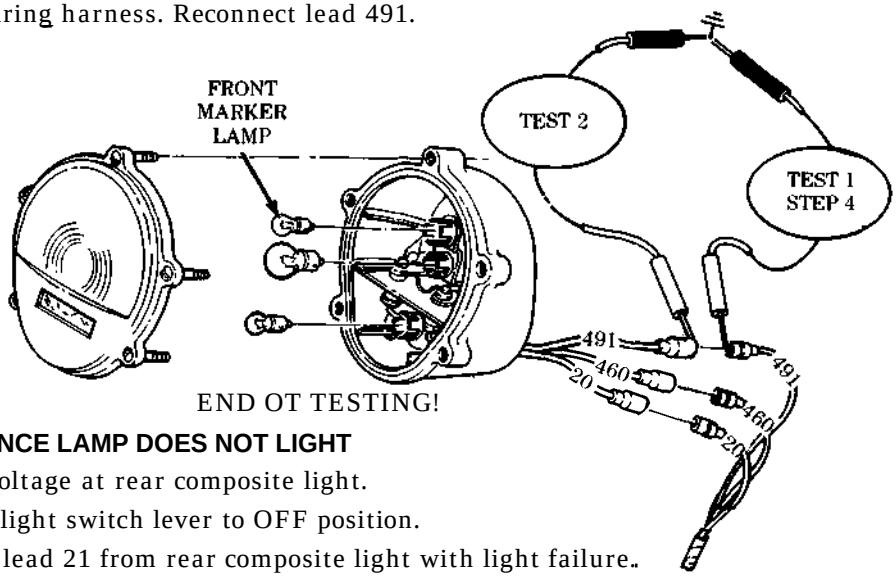

END OT TESTING!

19. TAILLIGHT OR CLEARANCE LAMP DOES NOT LIGHT

Test 1. Test battery voltage at rear composite light.

Step 1. Turn main light switch lever to OFF position.

Step 2. Disconnect lead 21 from rear composite light with light failure..

Step 3. Turn main light switch lever to SERVICE DRIVE position.

Step 4. Check for battery voltage on contact end of lead 21.

a. If battery voltage is present, go to test 2 and check lamp filaments (para. 4-46).

b. If voltage is not present, go to malfunction 17, test 3, and check front wiring harness pin H.

Test 2. Test continuity of filament in taillight lamp.

Set multimeter to RX1 scale. Check continuity between lead 21 connected to rear composite light and frame ground.

a. If continuity is not present, replace taillight lamp (para. 4-46).

b. If continuity is present, check for corroded contacts at lamp and lead 21 connection to rear wiring harness. Reconnect lead 21.

END OF TESTING!

https://truckmanualshub.com/

Table 2-4. Electrical Troubleshooting (Contd).

MALFUNCTION TEST OR INSPECTION CORRECTIVE ACTION

20. STOPLIGHT LAMP DOES NOT LIGHT

Test 1. Test battery voltage at rear composite light.

Step 1. Turn main light switch to OFF position.

Step 2. Disconnect lead 22/460 or lead 22/461 from rear composite light on side of vehicle where stoplight has failed.

NOTE

Ensure turn indicator is in NEUTRAL position.

Step 3. Check for battery voltage on contact end of lead 22/460 or 22/461.

a. Depress brake pedal to activate stoplight switch.

b. If voltage is present, go to test 2 and check lamp filament.

c. If battery voltage is not present, go to malfunction 17, test 3, and test lighting system harness connector pin C.

Test 2. Test continuity of filament in stoplight lamp.

Check continuity between frame grounds and lead 22/460 or 22/461 connected to rear composite light.

If continuity is present, check for corroded contacts at lamp and leads 22/460 or 22/461 connection to rear wiring harness. Reconnect lead 22/461 or 22/460.

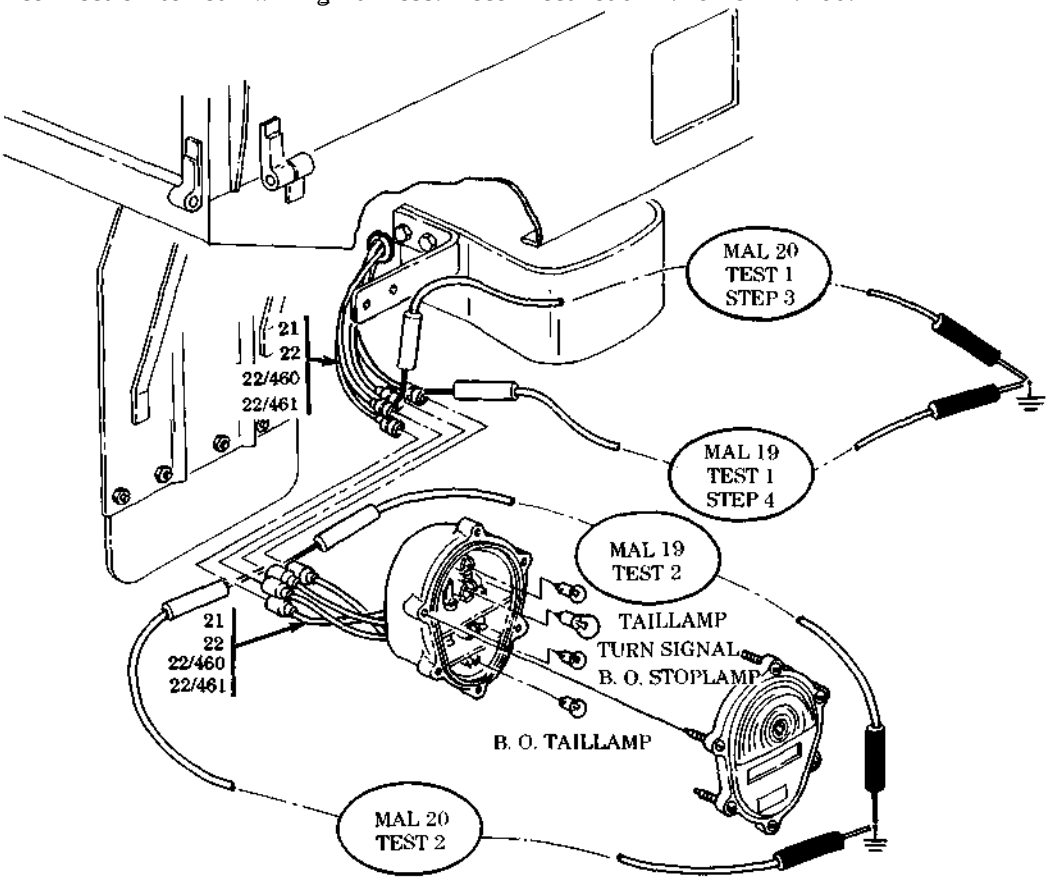

END OF TESTING!

https://truckmanualshub.com/

Table 2-4. Electrical Troubleshooting (Contd).

MALFUNCTION TEST OR INSPECTION CORRECTIVE ACTION

BLACKOUT LIGHTS

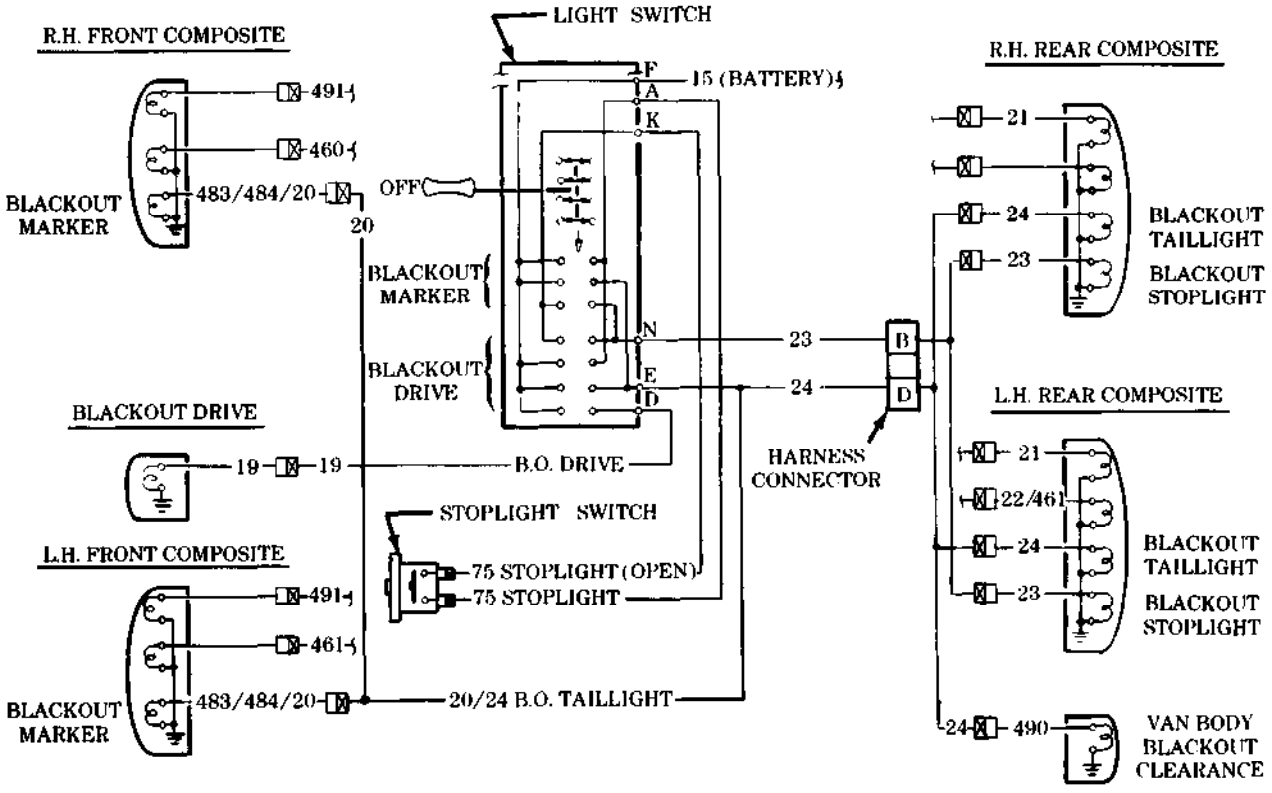

21. BLACKOUT HEADLAMP DOES NOT LIGHT

Test 1. Test battery voltage at blackout drive light.

Step 1. Turn main light switch lever to OFF position.

Step 2. Disconnect lead 19 from blackout drive light.

Step 3. Turn main light switch to BLACKOUT DRIVE position.

Step 4. Check for battery voltage on contact end of lead 19.

a. If battery voltage is present, go to test 2.

b. If battery voltage is not present, go to malfunction 17, test 3, and check front wiring harness pin D.

Test 2. Test continuity of filament in blackout drive light.

Set multimeter to RX1 scale. Check continuity between frame ground and lead 19 attached to rear of blackout drive light.

a. If continuity is not present, replace blackout drive lamp (para. 4-42).

b. If continuity is present, check for corroded contacts at lamp and at lead 19 connection to front wiring harness. Reconnect lead 19.

END OF TESTING!

https://truckmanualshub.com/

Table 2-4. Electrical Troubleshooting (Contd).

MALFUNCTION TEST OR INSPECTION CORRECTIVE ACTION

22. FRONT BLACKOUT MARKER LAMP DOES NOT LIGHT

Test 1. Test battery voltage at front marker light.

Step 1. Turn main light switch to OFF position.

Step 2. Disconnect lead 20 at rear of front composite light on side of vehicle where light does not light.

Step 3. Turn main light switch lever to BLACKOUT MARKER or BLACKOUT DRIVE position.

Step 4. Check for battery voltage at contact end of lead 20.

a. If battery voltage is present, go to test 2.

b. If battery voltage is not present, go to malfunction 17, test 3, and check front wiring harness pin E.

Test 2. Test continuity of filament in blackout marker lamp.

Step 1. Set multimeter to RX1 scale. Check continuity between frame ground and lead 20 attached to rear of blackout marker lamp.

Step 2. If continuity is not present:

a. Replace blackout marker lamp (para. 4-46).

b. If continuity is present, check for corroded contacts at lamp and at lead 20 connection to front wiring harness. Reconnect lead 20.

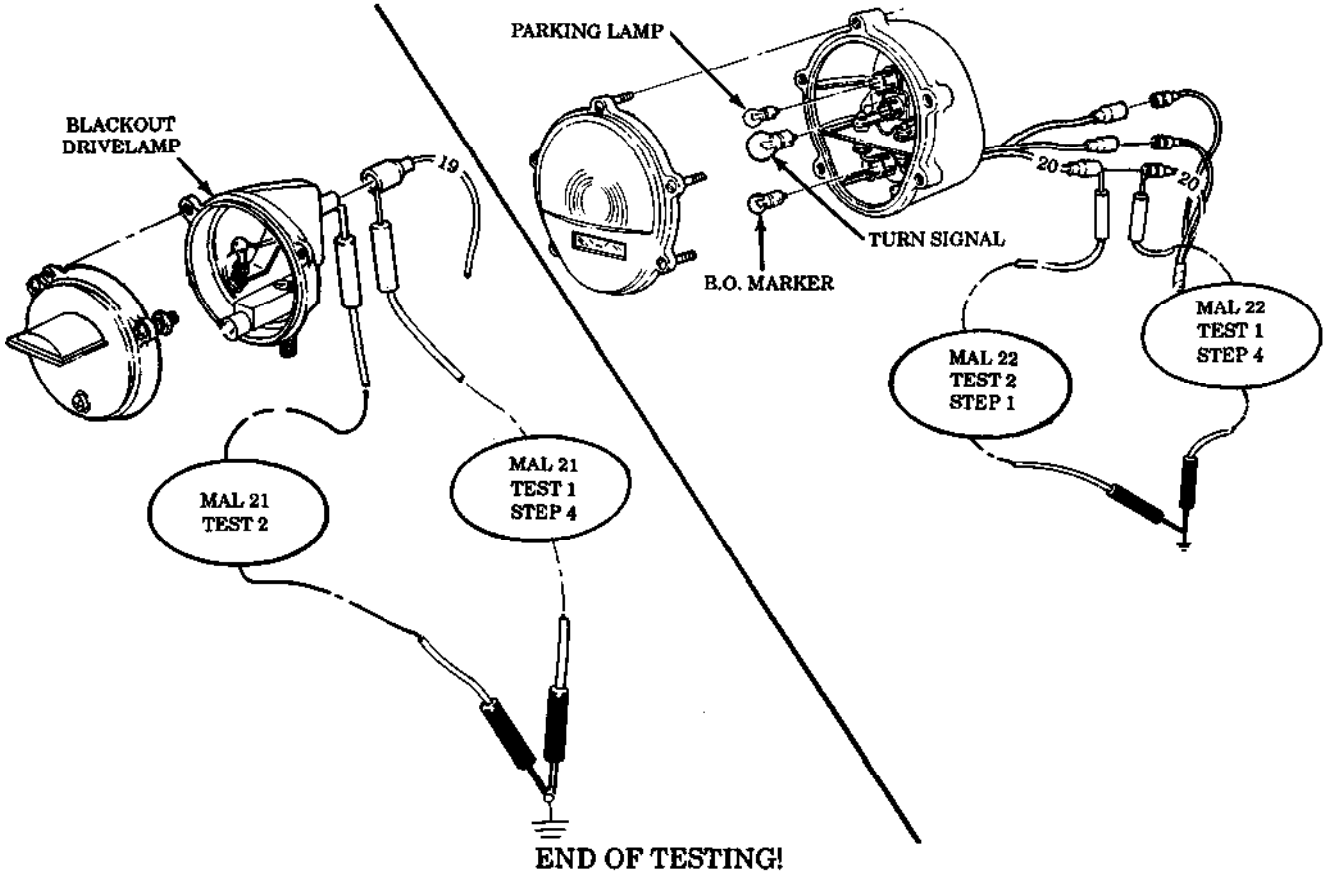

https://truckmanualshub.com/

Table 2-4. Electrical Troubleshooting (Contd).

MALFUNCTION TEST OR INSPECTION CORRECTIVE ACTION

23. BLACKOUT TAILLIGHT LAMP DOES NOT LIGHT

Test 1. Test battery voltage at rear composite light.

Step 1. Turn main light switch to OFF position.

Step 2. Disconnect lead 24 at rear composite light on side of vehicle where blackout taillight has failed.

Step 3. Turn main light switch to BLACKOUT MARKER or BLACKOUT DRIVE positions.

Step 4. Check for battery voltage at contact end of lead 24.

a. If battery voltage is present, go to test 2.

b. If battery voltage is not present, go to malfunction 17, test 3, and check front wiring harness pin E.

Test 2. Test continuity of filament in blackout taillight lamp.

Check continuity between lead 24 attached to rear composite light and frame ground.

a. If continuity is not present, replace blackout taillight lamp (para. 4-46).

b. If continuity is present, check for corroded contacts at lamp and on lead 24 connection to rear wiring harness. Reconnect lead 24.

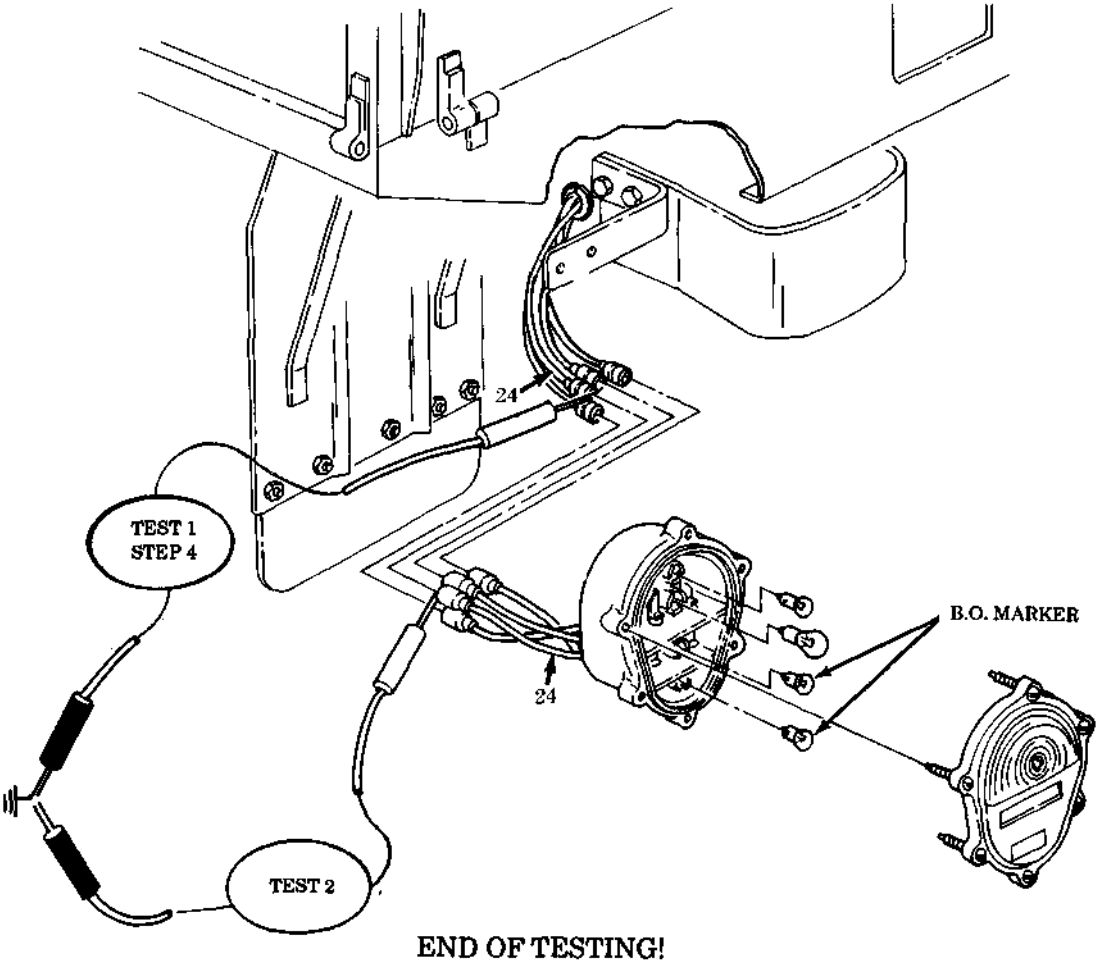

END OF TESTING!

https://truckmanualshub.com/

Table 2-4. Electrical Troubleshooting (Contd).

MALFUNCTION TEST OR INSPECTION CORRECTIVE ACTION

24. BLACKOUT STOPLIGHT LAMP DOES NOT LIGHT

Test 1. Test for battery voltage at rear composite light.

Step 1. Turn main light switch to OFF position.

Step 2. Disconnect lead 23 at rear composite light on side of vehicle where blackout stoplight has failed.

Step 3. Turn main light switch to BLACKOUT MARKER or BLACKOUT DRIVE positions.

Step 4. Depress brake pedal and check for battery voltage on contact end of lead 23.

a. If battery voltage is present, go to test 2.

b. If battery voltage is not present, go to malfunction 17, test 3, and check front wiring harness, pin N.

Test 2. Test continuity of filament in blackout stoplight lamp.

Check continuity between lead 23 attached to rear composite light and frame ground.

a. If continuity is not present, replace blackout taillight lamp (para. 4-46).

b. If continuity is present, check for corroded contacts at lamp and on lead 23 connection to rear wiring harness. Reconnect lead 23.

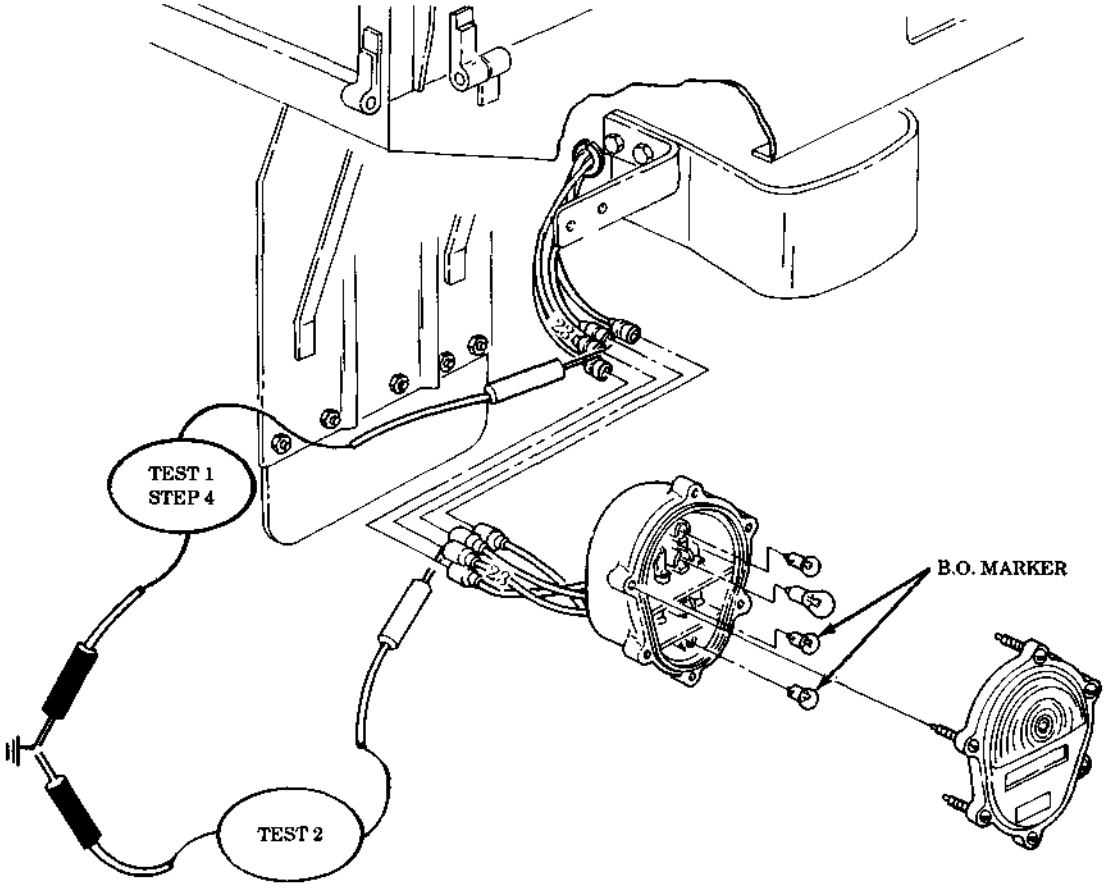

END OF TESTING!

https://truckmanualshub.com/

Table 2-4. Electrical Troubleshooting (Contd).

MALFUNCTION TEST OR INSPECTION CORRECTIVE ACTION

DIRECTIONAL SIGNAL SYSTEM

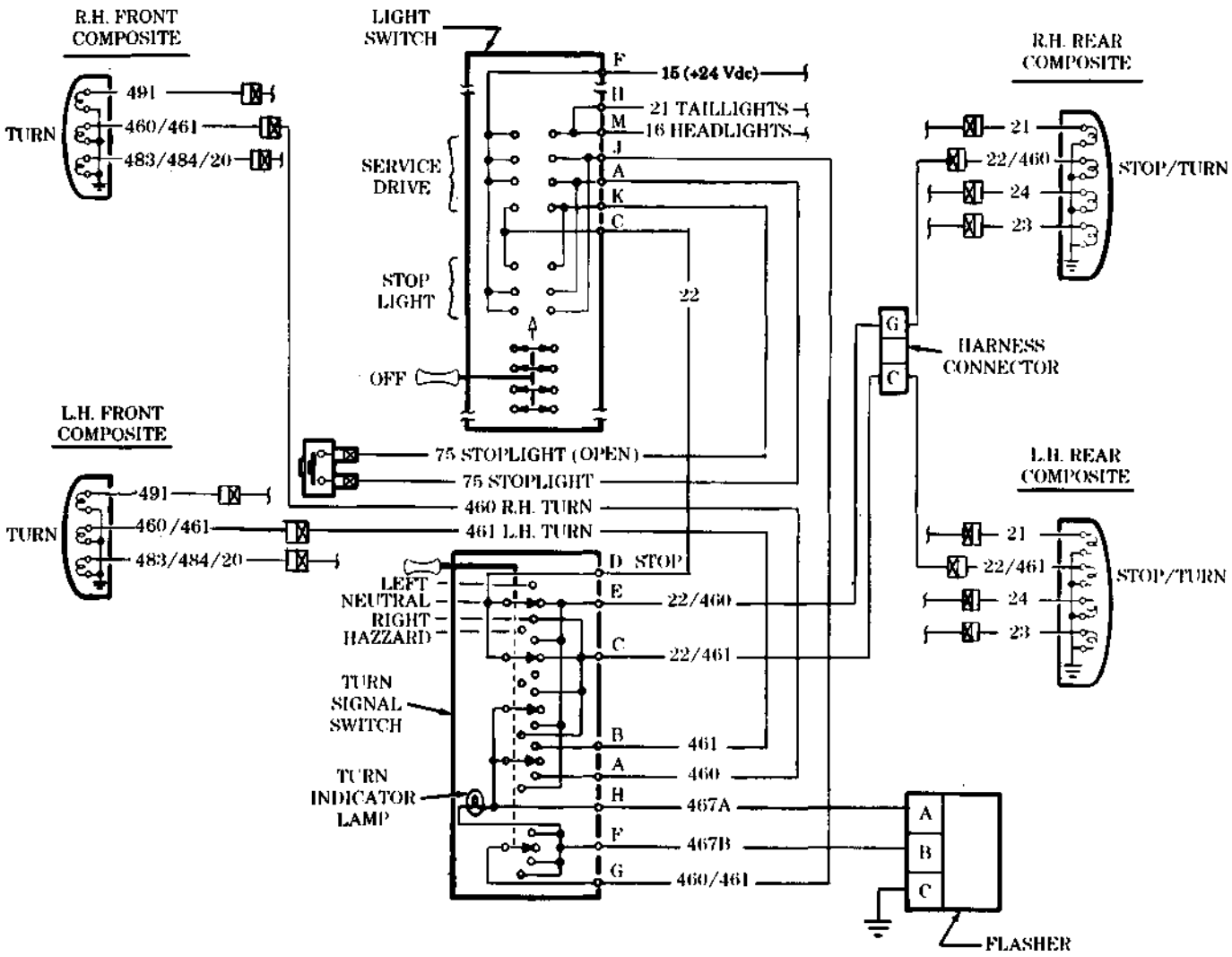

25. DIRECTION SIGNAL INOPERATIVE

Test 1. Test turn signal lamps.

Step 1. Turn main light switch to SERVICE DRIVE.

Step 2. Place turn signal in left or right position, turn signal should flash on both sides.

a. If turn signal on left or right operates, go to test 2.

b. If turn signal on left or right operates, but does not flash, go to test 3.

https://truckmanualshub.com/

Table 2-4. Electrical Troubleshooting (Contd).

MALFUNCTION TEST OR INSPECTION CORRECTIVE ACTION

NOTE

Testing procedures for left and right turn signal leads 461 and 460 are performed the same using tests 1 through 8. This test covers left side 461 turn signal circuit.

Test 2. Test for voltage at front composite lights.

Step 1. Disconnect lead 461 at left front composite light.

Step 2. Place turn signal lever to LEFT position.

Step 3. Set multimeter to a range that will measure 24 volts.

Step 4. Touch multimeter negative lead to frame ground.

Step 5. Touch multimeter positive lead to contact end of lead 461 (left). Voltage should fluctuate at a rate of 1 or 2 cycles per second.

a. If voltage does fluctuate, go to test 3.

b. If voltage does not fluctuate, go to test 4.

Test 3. Test continuity of filament and socket for turn signal lamp. Check continuity between lead 460/461 attached to front composite light and frame ground.

a. If continuity is present, reconnect leads 460/461 and check turn signal operation. If turn signal operates but does not flash, go to tests 6 and 7.

b. If continuity is not present, replace turn signal lamp (para. 4-19).

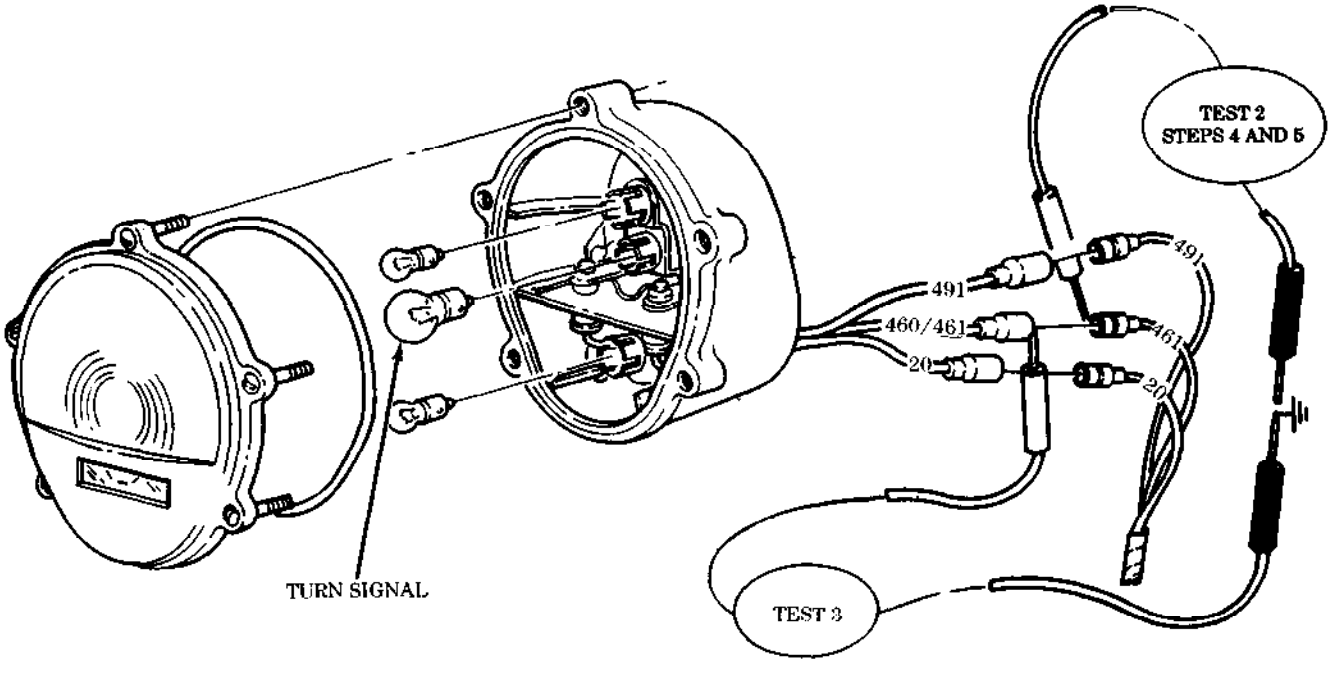

https://truckmanualshub.com/

Table 2-4. Electrical Troubleshooting (Contd).

MALFUNCTION TEST OR INSPECTION CORRECTIVE ACTION

Test 4. Test continuity of front composite light wiring harness.

Step 1. Disconnect lead 461 from front composite light.

Step 2. Disconnect cable connector at turn signal switch.

Step 3. Set multimeter to RX1 scale.

Step 4. Touch multimeter negative lead to pin B at cable connector.

Step 5. Touch multimeter positive lead to contact end of lead 461 at front composite light.

a. Continuity should be present.

b. If continuity is not present, replace or repair lead 461 (para 4-51).

c. Perform test 4 again. If lamp fails to flash, go to test 5.

Test 5. Test continuity of turn signal switch.

Step 1. Disconnect cable connector at turn signal switch.

Step 2. Place turn signal switch to LEFT position.

Step 3. Touch multimeter negative lead to pin G of turn signal switch.

Step 4. Touch multimeter positive lead to pin B 461 (front left) and pin C 22/461 (left rear) of turn signal switch.

a. Continuity should be present.

b. If continuity is not present, replace turn signal switch (para. 4-19).

Step 5. Place turn signal lever to RIGHT position.

Step 6. Touch multimeter positive lead to pin A 460 (right front) and pin E 22/460 (right rear) at turn signal switch.

a. Continuity should be present.

b. If continuity is not present, replace turn signal switch (para. 4-19).

Step 7. Touch multimeter positive lead to pin Fat turn signal switch.

a. Continuity should be present.

b. If continuity is not present, replace turn signal switch (para. 4-19).

https://truckmanualshub.com/

Table 2-4. Electrical Troubleshooting (Contd).

MALFUNCTION	TEST OR INSPECTION	CORRECTIVE ACTION

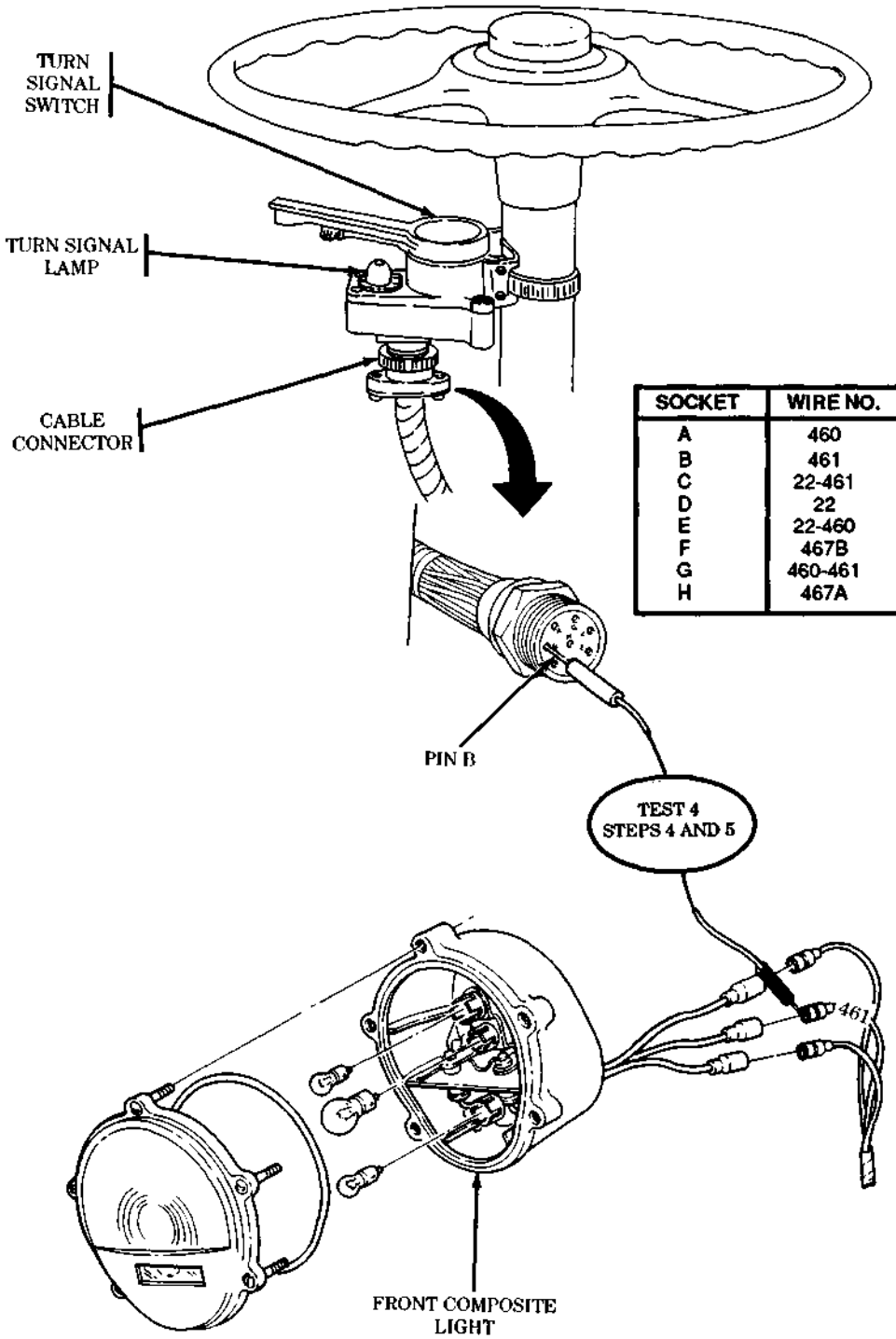

SOCKET	WIRE NO.	CIRCUIT
A	460	R.H. FRONT TURN SIGNALS
B	461	L.H. FRONT TURN SIGNALS
C	22-461	L.H. REAR TURN SIGNALS
D	22	STOPLIGHT INPUT
E	22-460	R.H. REAR TURN SIGNALS
F	467B	EMERGENCY FLASHER
G	460-461	FRONT TURN INPUT
H	467A	EMERGENCY FLASHER OUTPUT

https://truckmanualshub.com/

Table 2-4. Electrical Troubleshooting (Contd).

MALFUNCTION TEST OR INSPECTION CORRECTIVE ACTION

Test 6. Test for voltage at rear composite light.

Step 1. Disconnect lead 22/461 at left-rear composite light.

Step 2. Turn main light switch to SERVICE DRIVE position.

Step 3. Place turn signal switch to LEFT position.

Step 4. Set multimeter to a voltage range that will measure 24 Vdc.

Step 5. Touch multimeter negative lead to frame ground.

Step 6. Touch multimeter positive lead to contact end of lead 22/461. Voltage should fluctuate at a rate of 1 or 2 cycles per second.

a. If voltage does fluctuate, go to test 7.

b. If voltage does not fluctuate, go to test 8.

Test 7. Test continuity of filament and socket for turn signal lamp.

Check continuity between lead 22/460/461 attached to rear composite light and frame ground.

a. If continuity is present, reconnect leads 22/460/461 and check turn signal operation.

b. If continuity is not present, replace turn signal lamp (para. 4-19).

Test 8. Test continuity of lead 22/461 from turn signal switch to rear harness connector.

Step 1. Set multimeter to RX1 scale.

Step 2. Disconnect cable connector at turn signal switch.

Step 3. Disconnect lead 22/461 from rear composite light.

Step 4. Touch multimeter negative lead to contact end of 22/461.

Step 5. Touch multimeter positive lead to contact end of lead 22/461 at turn signal cable connector (pin C).

a. Continuity should be present.

b. If continuity is not present, replace or repair lead 22/461 (para. 4-51).

https://truckmanualshub.com/

Table 2-4. Electrical Troubleshooting (Contd).

MALFUNCTION TEST OR INSPECTION CORRECTIVE ACTION

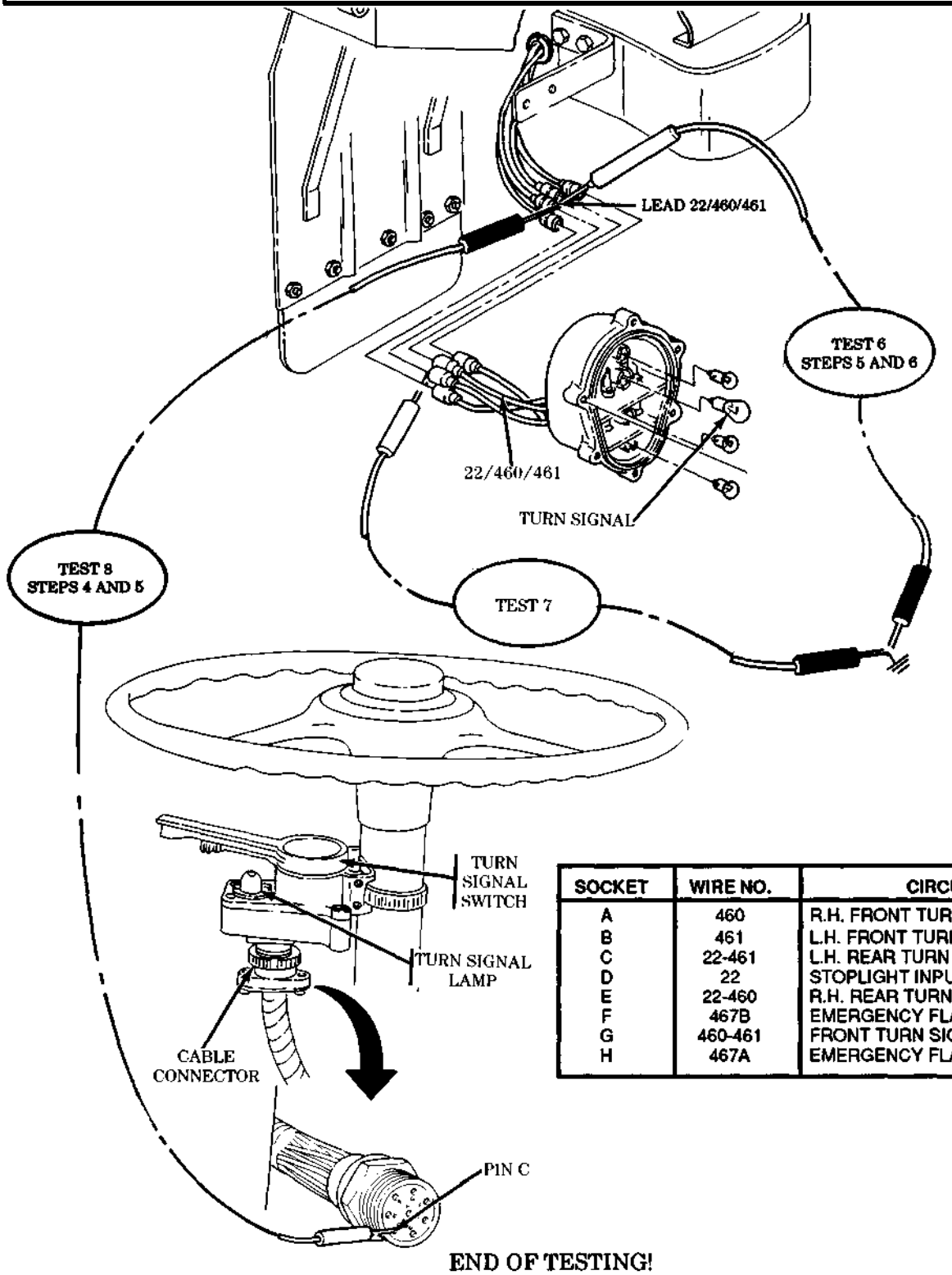

SOCKET	WIRE NO.	CIRCUIT
A	460	R.H. FRONT TURN SIGNALS
B	461	L.H. FRONT TURN SIGNALS
C	22-461	L.H. REAR TURN SIGNALS
D	22	STOPLIGHT INPUT
E	22-460	R.H. REAR TURN SIGNALS
F	467B	EMERGENCY FLASHER
G	460-461	FRONT TURN SIGNALS
H	467A	EMERGENCY FLASHER

END OF TESTING!

https://truckmanualshub.com/

Table 2-4. Electrical Troubleshooting (Contd).

MALFUNCTION TEST OR INSPECTION CORRECTIVE ACTION

26. ALL STOPLIGHTS ARE INOPERATIVE

Test 1. Check stoplight switch for input voltage.

Step 1. Turn main light switch to SERVICE DRIVE position.

Step 2. Set multimeter to a voltage range that will measure 24 Vdc.

Step 3. Disconnect lead 75 input voltage from stoplight switch.

Step 4. Touch positive lead of multimeter to contact end of lead 75.

Step 5. Touch negative lead of multimeter to frame ground.

a. Voltage should be present. If voltage is present, go to test 2.

b. If voltage is not present, go to malfunction 17, test 3, depress brake pedal, and check pin A.

Test 2. Check stoplight switch for output voltage.

Step 1. Set multimeter to a voltage range that will measure 24 Vdc.

Step 2. Disconnect output lead 75 from stoplight switch.

Step 3. Touch positive lead of multimeter to contact end of stoplight switch.

Step 4. Touch negative lead of multimeter to frame ground.

Step 5. Depress brake pedal.

NOTE

If vehicle is equipped with hydraulic stoplight switch and switch is defective, replace with air-activated stoplight switch conversion kit, part number 12255668.

If voltage is not present, replace stoplight switch (para. 4-29).

https://truckmanualshub.com/

Table 2-4. Electrical Troubleshooting (Contd).

MALFUNCTION TEST OR INSPECTION CORRECTIVE ACTION

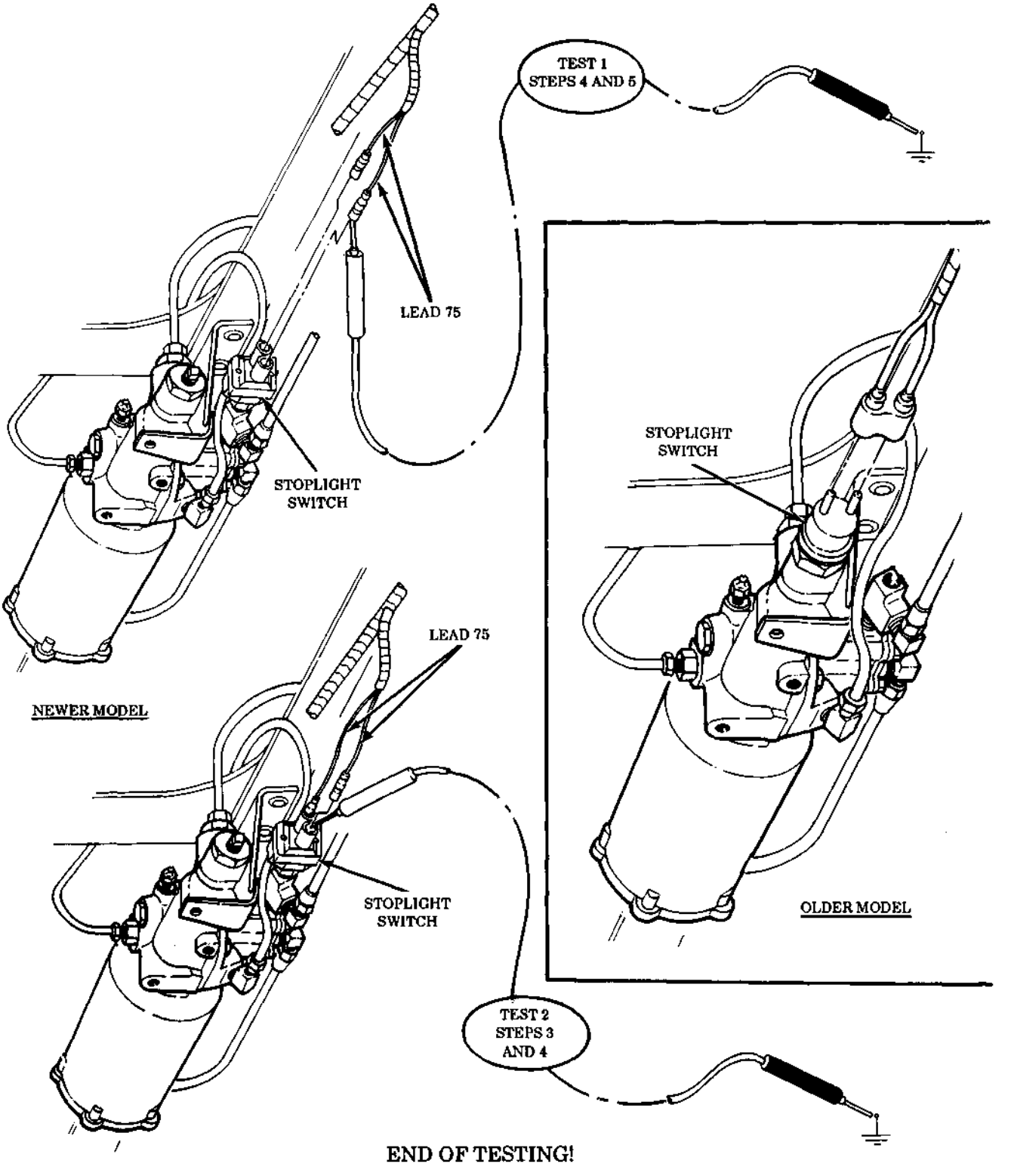

END OF TESTING!

https://truckmanualshub.com/

Table 2-4. Electrical Troubleshooting (Contd).

MALFUNCTION TEST OR INSPECTION CORRECTIVE ACTION

27. BOTH DIRECTION SIGNALS INOPERATIVE

Test 1. Test left and right flashers.

Step 1. Turn main light switch to SERVICE DRIVE position.

Step 2. Position turn signal lever to LEFT position.

Step 3. Position turn signal lever to RIGHT position.

a. Both left and right turn signals should flash.

b. If turn signals fail to flash, go to test 2.

Test 2. Test solid state flasher.

Step 1. Disconnect leads 467A and 467B from solid state flasher pins A and B.

Step 2. Connect jumper wire from leads 467A to 467B.

Step 3. Place turn signal lever to LEFT position.

Step 4. Place turn signal lever to RIGHT position.

a. Left and right turn signals should work but will not flash. If turn signals work, replace turn signal flasher (para. 4-20).

b. If voltage is not present, go to malfunction 25 and perform tests 1 through 8.

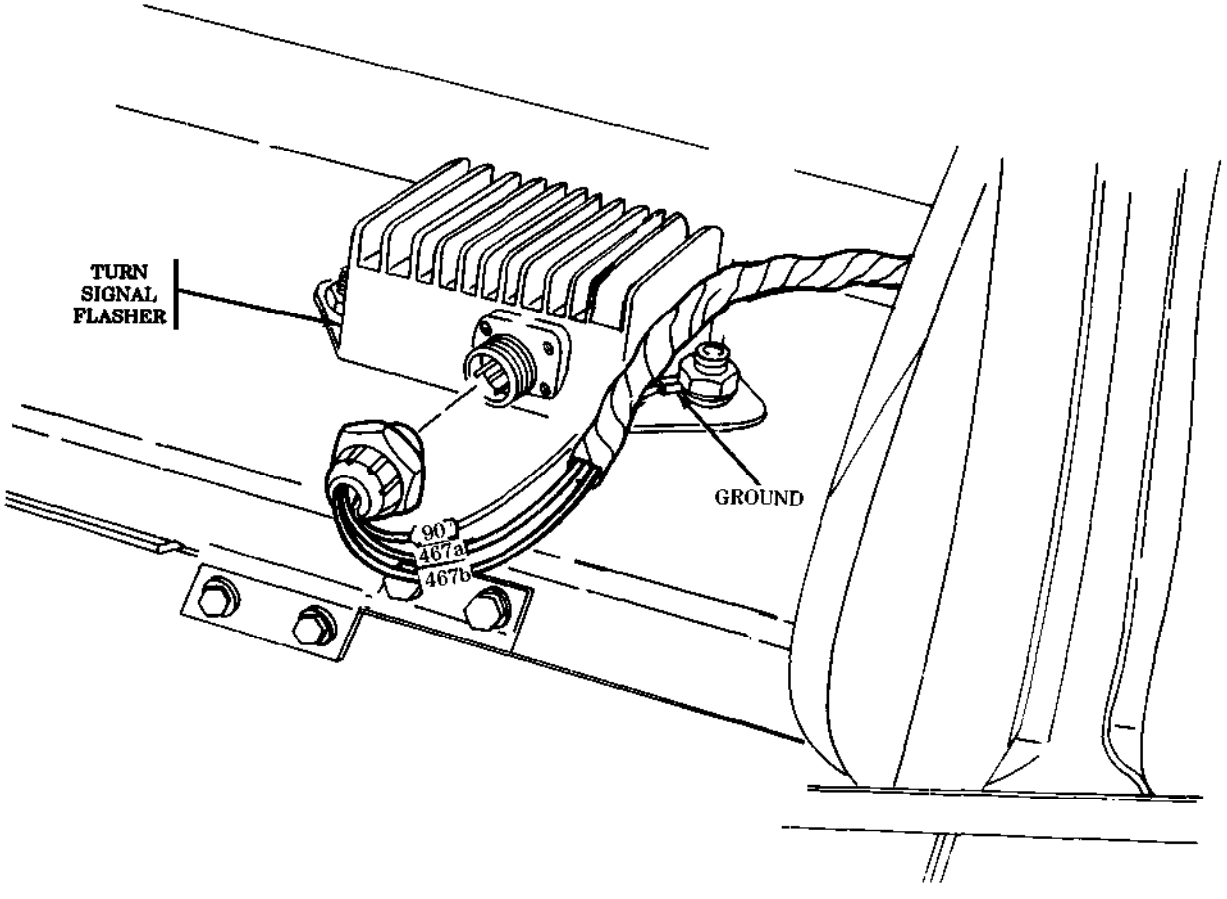

END OF TESTING!

https://truckmanualshub.com/

Table 2-4. Electrical Troubleshooting (Contd).

MALFUNCTION TEST OR INSPECTION CORRECTIVE ACTION

28. TURN SIGNALS OPERATE INCORRECTLY WITH TURN SIGNAL CONTROL LEVER IN ONE OR MORE POSITIONS

Test turn signal control unit continuity.

Step 1. Place battery switch to OFF position.

Step 2. Remove harness connector from turn signal switch.

Step 3. Remove indicator lamp from turn signal switch (para. 4-19).

Step 4. Set multimeter to RX1 scale.

Step 5. If any circuit does not test as shown in chart 1 below, replace turn signal switch (para. 4-19).

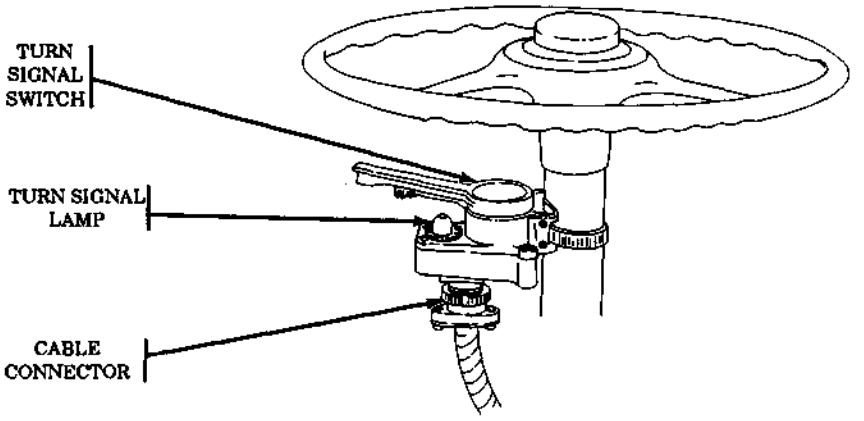

CONTROL UNIT TEST CHART

A. DIRECTIONAL SIGNAL CONTROL LEVER IN "NEUTRAL" POSITION

FROM PIN	TO PIN	CONTINUITY INDICATION
H	A	OPEN
H	B	OPEN
H	C	OPEN
H	E	OPEN
D	C	SHORTED
D	E	SHORTED
F	G	OPEN

B. DIRECTIONAL SIGNAL CONTROL LEVER IN "LEFT TURN" POSITION

FROM PIN	TO PIN	CONTINUITY INDICATION
H	B	SHORTED
H	C	SHORTED
H	A	OPEN
H	E	OPEN
F	G	SHORTED
D	E	SHORTED
D	C	OPEN

C. DIRECTIONAL SIGNAL CONTROL LEVER IN "RIGHT TURN" POSITION

FROM PIN	TO PIN	CONTINUITY INDICATION
F	G	SHORTED
H	A	SHORTED
H	E	SHORTED
H	B	OPEN
H	C	OPEN
D	C	SHORTED
D	E	OPEN

D. DIRECTIONAL SIGNAL CONTROL LEVER IN "HAZARD WARNING" POSITION

FROM PIN	TO PIN	CONTINUITY INDICATION
H	A	SHORTED
H	B	SHORTED
H	C	SHORTED
H	E	SHORTED
D	E	OPEN
D	C	OPEN
F	G	SHORTED

END OF TESTING!

https://truckmanualshub.com/

Table 2-4. Electrical Troubleshooting (Contd).

MALFUNCTION TEST OR INSPECTION CORRECTIVE ACTION

INDICATORS, GAGES, AND WARNING SYSTEM

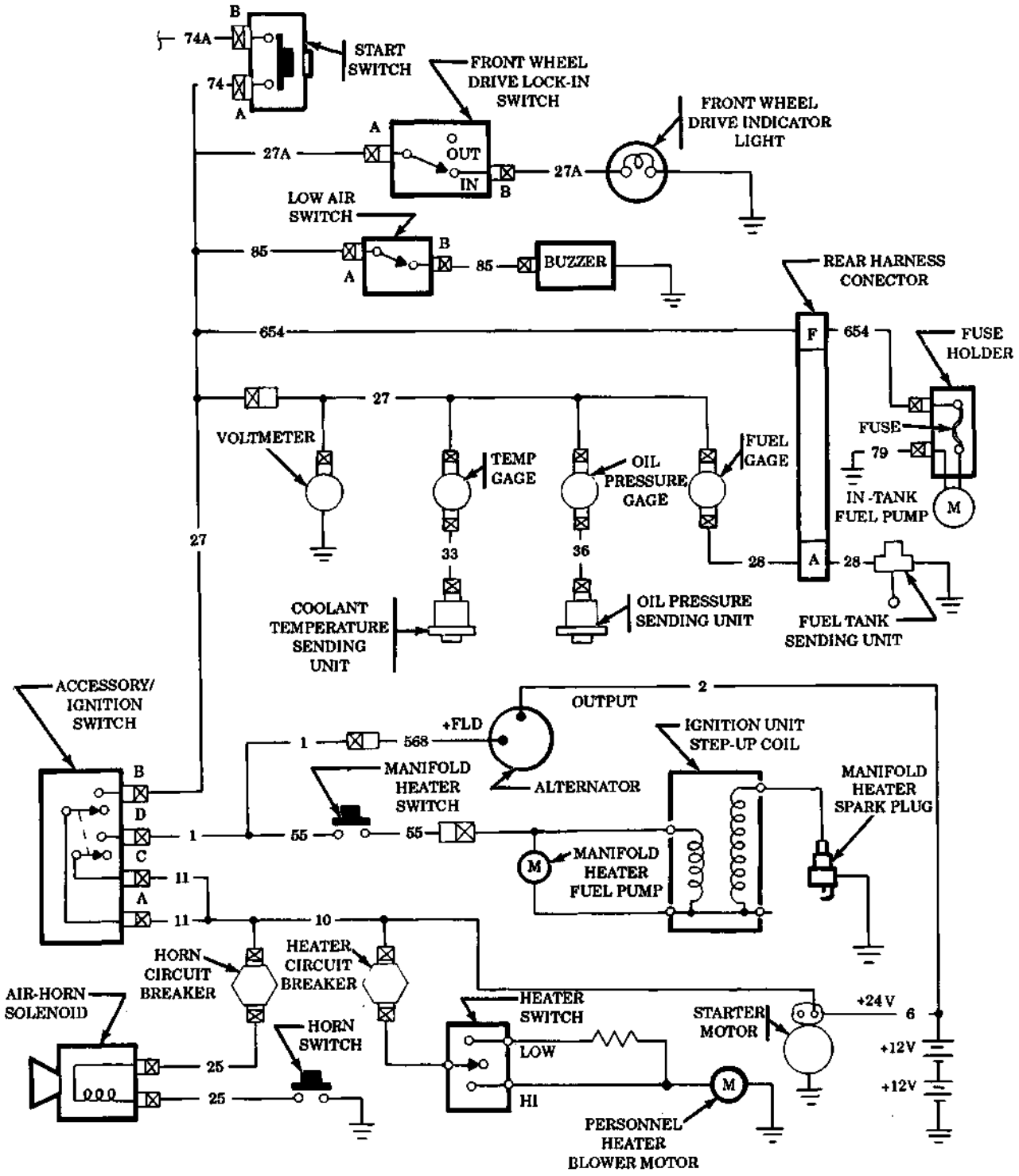

https://truckmanualshub.com/

Table 2-4. Electrical Troubleshooting (Contd).

MALFUNCTION TEST OR INSPECTION CORRECTIVE ACTION

INDICATORS, GAGES, AND WARNING SYSTEM

29. ALL GAGES INOPERATIVE

NOTE

If STE/ICE is available, perform NG31 - gage test (chapter 2, section VII).

Test 1. Test starter for proper operation.

Step 1. Turn accessory/ignition switch to ON position.

Step 2. Push start button.

a. If starter cranks engine, go to test 2.

b. If starter does not crank engine, go to malfunction 2 and troubleshoot starter circuit.

Test 2. If problem is still present, test instrument cluster voltage.

Step 1. Turn accessory/ignition switch to OFF position.

Step 2. Remove instrument cluster panel (para. 4-10).

Step 3. Connect battery ground cable (para. 4-48).

Step 4. Connect jumper wire from instrument panel to a good frame ground.

Step 5. Disconnect lead 27 from the temperature gage.

Step 6. Use multimeter or 24-volt test lamp to check voltage on contact end of lead 27 at gage.

a. Place positive lead on contact end of lead 27.

b. Place negative lead on frame ground.

c. If battery voltage is present, go to malfunction 30 for temperature gage.

Step 7. Set multimeter to RX1.

Step 8. Check continuity of lead 27.

a. Disconnect lead 27 from front wiring harness.

b. If continuity is not present, replace or repair lead 27 (para. 4-51).

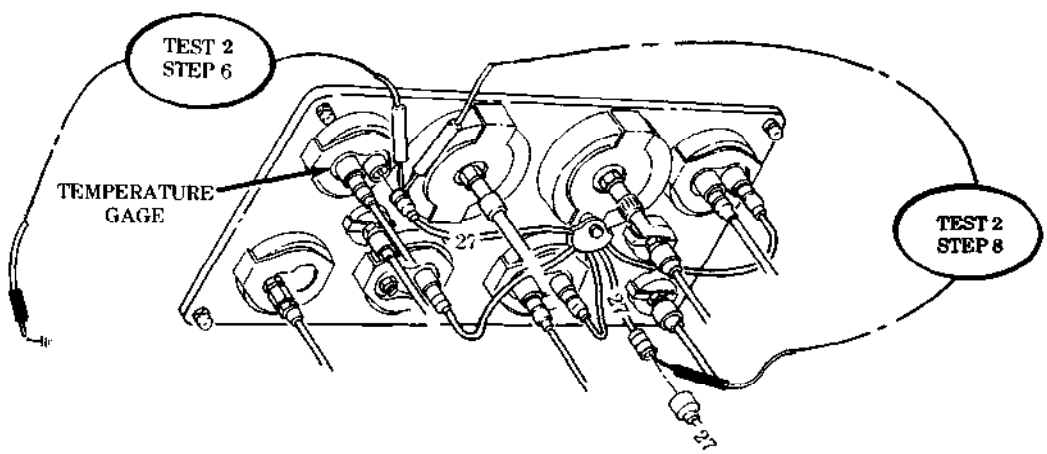

END OF TESTING!

https://truckmanualshub.com/

Table 2-4. Electrical Troubleshooting (Contd).

MALFUNCTION TEST OR INSPECTION CORRECTIVE ACTION

30. ENGINE TEMPERATURE GAGE INOPERATIVE

NOTE

If STE/ICE is available, perform NG31 - gage test (chapter 2, section VII).

Test 1. Test coolant temperature gage operation.

Step 1. Disconnect lead 33 from coolant temperature sending unit.

Step 2. Turn accessory/ignition switch to ON position.

Step 3. Coolant temperature gage should read minimum temperature.

Step 4. Touch contact end of lead 33 to frame ground. Coolant temperature gage should read maximum temperature.

Step 5. If coolant temperature gage operates properly go to test 3 and check sending unit.

Step 6. If coolant temperature gage does not operate properly, go to test 2.

Test 2. Test for battery voltage into temperature gage, go to malfunction 29, test 2.

Test 3. Test temperature sending unit.

Step 1. Allow coolant to cool.

Step 2. Set multimeter to RX1 scale.

Step 3. Start engine (TM 9-2320-361-10).

Step 4. Connect multimeter negative lead to engine ground and positive lead to sending unit. Multimeter reading should decrease as engine coolant temperature increases.

a. If resistance does not show any decrease as temperature increases, replace temperature sending unit (para. 4-24).

b. If resistance does show a decrease as temperature increases, go to test 4.

Test 4. Check continuity of lead 33.

Step 1. Disconnect lead 33 from temperature gage.

Step 2. Set multimeter to RX1 scale.

Step 3. Touch negative lead of multimeter to contact end of lead 33 at sending unit.

Step 4. Touch positive lead of multimeter to other end of lead 33.

a. If continuity is not present, replace or repair lead 33 (para. 4-51).

b. If continuity is present, replace temperature gage (para. 4-12).

END OF TESTING!

https://truckmanualshub.com/

Table 2-4. Electrical Troubleshooting (Contd).

MALFUNCTION TEST OR INSPECTION CORRECTIVE ACTION

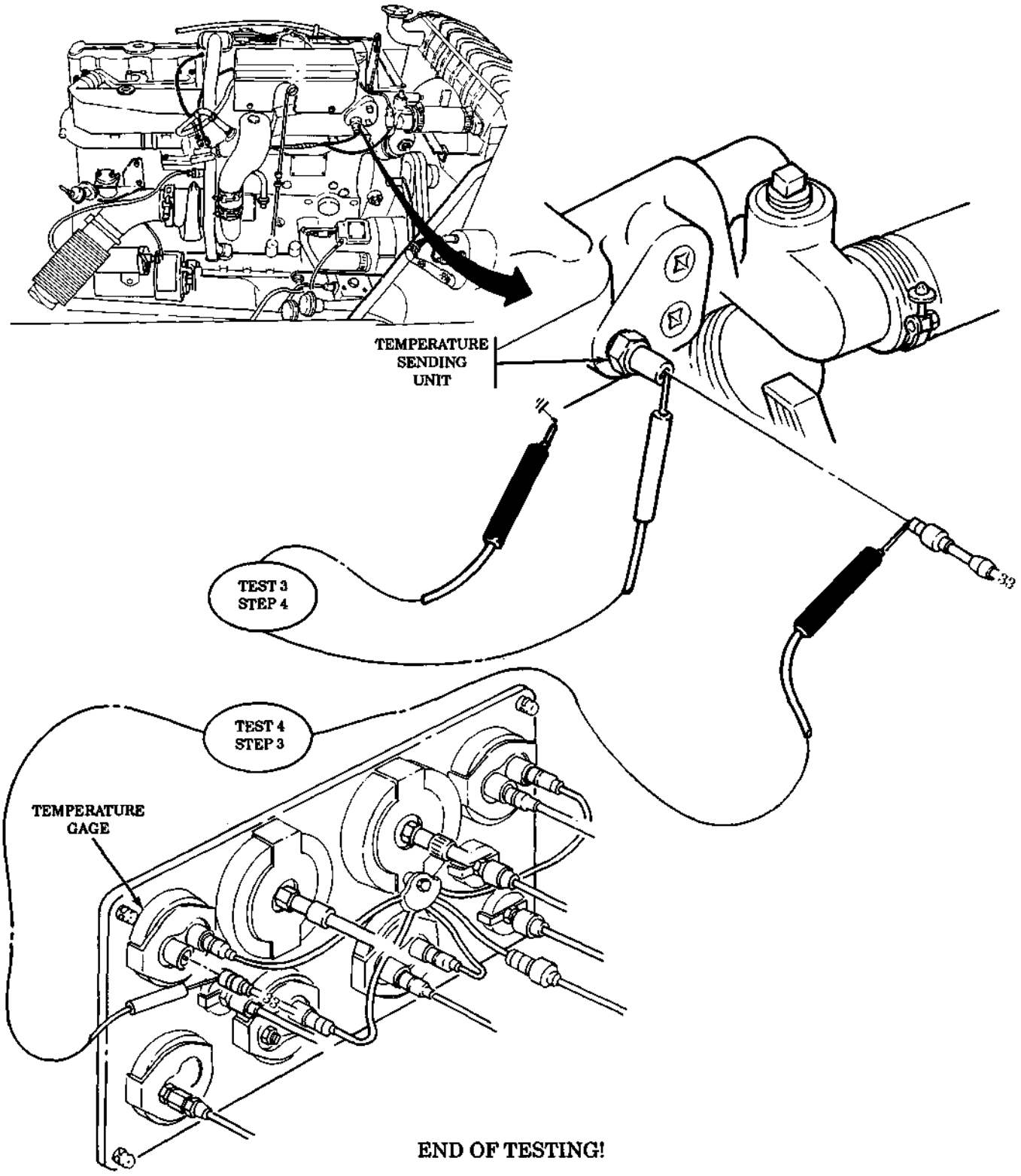

https://truckmanualshub.com/

Table 2-4. Electrical Troubleshooting (Contd).

MALFUNCTION TEST OR INSPECTION CORRECTIVE ACTION

31. FUEL GAGE INOPERATIVE

WARNING

Do not perform testing near fuel tank with fill cap or sending unit removed. Fuel may ignite causing injury to personnel.

NOTE

- Ensure fuel tank is not empty before proceeding to test 1.
- If STE/ICE is available, perform NG31 - gage test (chapter 2, section VII).

Test 1. Test for battery voltage to fuel level sending unit.

Step 1. Disconnect lead 28 from fuel level sending unit.

Step 2. Set multimeter to a voltage range that will measure 24 Vdc.

Step 3. Connect negative lead to frame ground and touch positive lead to contact end of lead 28.

a. If battery voltage is present, go to test 2.

b. If battery voltage is not present, go to test 3.

Test 2. Test fuel gage operation.

Step 1. Turn accessory/ignition switch to OFF position.

Step 2. With lead 28 already disconnected from sending unit, touch contact end to frame ground.

Step 3. Turn accessory/ignition switch to ON position.

Step 4. Fuel gage should read “EMPTY.”

a. If fuel gage shows “EMPTY,” go to step 5.

b. If fuel gage does not show “EMPTY”, replace fuel gage (para. 4-12).

Step 5. Lift lead 28 from frame ground. Fuel gage should now read “FULL.”

a. If fuel gage shows FULL, it is operational. Remove fuel level sending unit (para. 4-26) and go to test 5.

b. If fuel gage does not show FULL, replace fuel gage (para. 4-12).

Test 3. Test fuel gage voltage.

Go to malfunction 29, test 2, and check battery voltage into fuel gage.

Test 4. Test continuity of lead 28.

Step 1. Turn accessory/ignition switch to OFF position.

Step 2. Disconnect lead 28 from fuel gage and from fuel level sending unit.

Step 3. Connect jumper wire from fuel level sending unit end of lead 28 to frame ground.

Step 4 Set multimeter to RX1 scale.

Step 5. Connect negative lead of multimeter to frame ground and touch positive lead of multimeter to contact end of lead 28.

a. If continuity is present, reconnect lead 28 and recheck fuel gage operation.

b. If continuity is not present, replace or repair wiring (para. 4-51).

https://truckmanualshub.com/

Table 2-4. Electrical Troubleshooting (Contd).

MALFUNCTION TEST OR INSPECTION CORRECTIVE ACTION

Test 5. Test continuity of fuel level sending unit.

Step 1. Set multimeter to RX1 scale.

Step 2. Connect multimeter leads to fuel level sending unit.

Step 3. Position float in empty position.

a. If resistance is between 0.00 and 0.50 ohms, go to step 4.

b. If resistance is not between 0.00 and 0.50 ohms, replace fuel level sending unit (para. 4-26).

Step 4. Set multimeter to RX10 scale.

Step 5. Position float in full position.

a. If resistance is between 29.50 and 31.50 ohms, reinstall fuel level sending unit (para. 4-26) and recheck gage operation.

b. If resistance is not between 29.50 and 31.50 ohms. replace fuel level sending unit (para. 4-26).

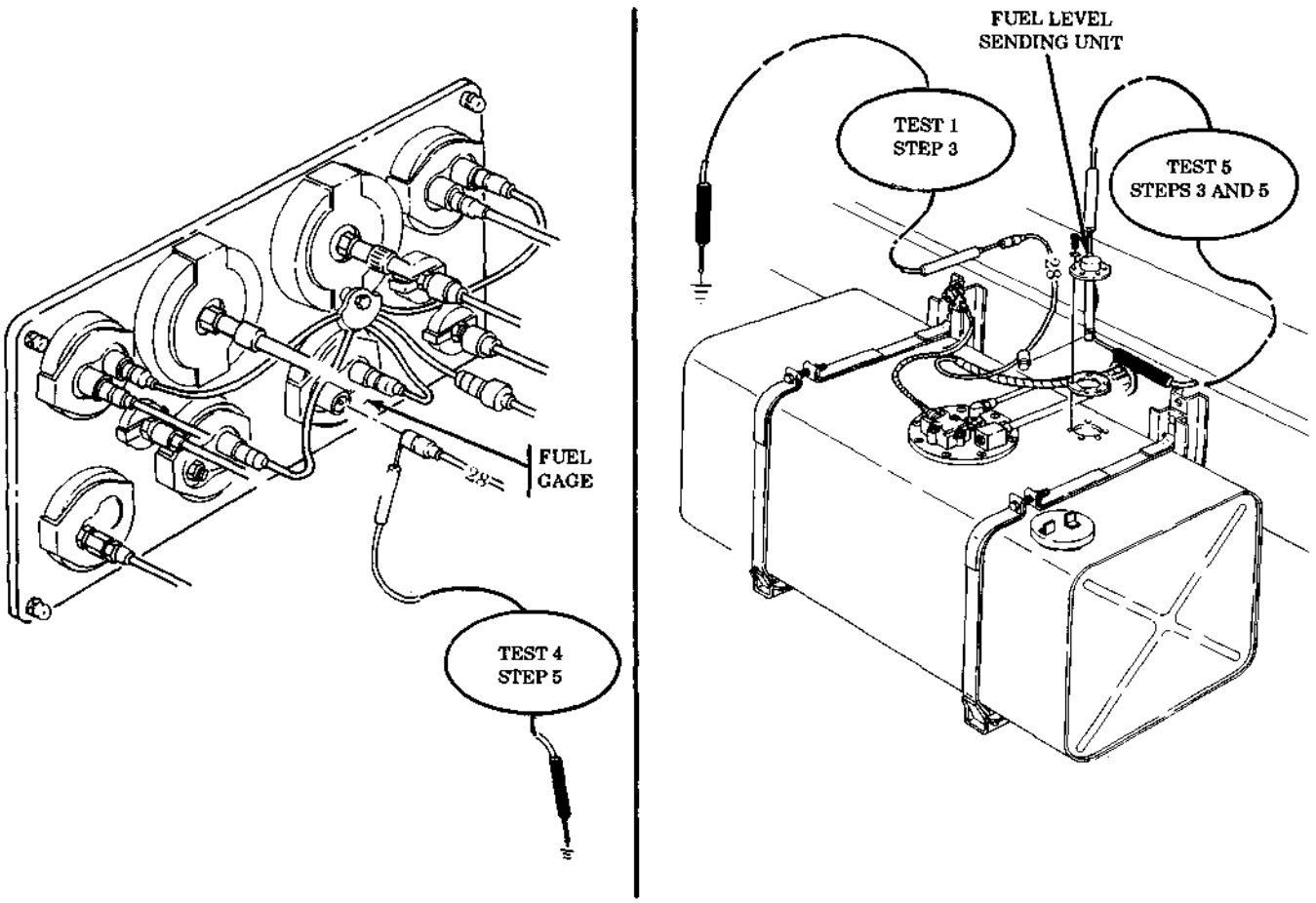

END OF TESTING!

https://truckmanualshub.com/

Table 2-4. Electrical Troubleshooting (Contd).

MALFUNCTION TEST OR INSPECTION CORRECTIVE ACTION

32. OIL PRESSURE GAGE INOPERATIVE

NOTE

If STE/ICE is available, perform NG31 - gage test (chapter 2, section VII).

Test 1. Test oil pressure gage operation.

Step 1. Disconnect lead 36 at oil pressure sending unit.

Step 2. Turn accessory/ignition switch to ON position.

Step 3. Oil pressure gage should show MINIMUM pressure.

Step 4. Touch contact end of lead 36 to frame ground. Oil pressure gage should show MAXIMUM pressure.

a. If oil pressure gage operates properly, go to test 3.

b. If oil pressure gage does not operate properly, go to test 2.

Test 2. Test battery voltage to oil pressure gage, go to malfunction 29, test 2.

Test 3. Test oil pressure sending unit.

Step 1. Set multimeter to RX1 scale.

Step 2. Connect negative lead to frame ground on engine.

Step 3. Touch positive lead to contact of oil pressure sending unit. Resistance should measure less than 1 ohm with engine off (no oil pressure).

Step 4. If resistance is 1 ohm or more, replace oil pressure sending unit (para. 4-23).

Step 5. If resistance is less than 1 ohm, continue with step 6.

Step 6. Remove oil pressure sending unit (para. 4-23).

Step 7. Install mechanical gage.

Step 8. Start engine and check oil pressure on gage.

a. If oil pressure is 10 psi or above at idle, replace oil pressure sending unit (para. 4-23).

b. If oil pressure is less than 10 psi at idle, notify your supervisor.

Test 4. Test continuity of lead 36.

Step 1. Disconnect lead 36 from oil pressure gage (warm engine).

Step 2. Set multimeter to RX1 scale.

Step 3. Touch positive lead of multimeter to one end of lead 36 and negative lead of multimeter to other end of lead 36.

a. If continuity is not present, replace or repair lead 36 (para. 4-51).

b. If continuity is present, replace oil pressure gage (para. 4-12).

https://truckmanualshub.com/

Table 2-4. Electrical Troubleshooting (Contd).

MALFUNCTION TEST OR INSPECTION CORRECTIVE ACTION

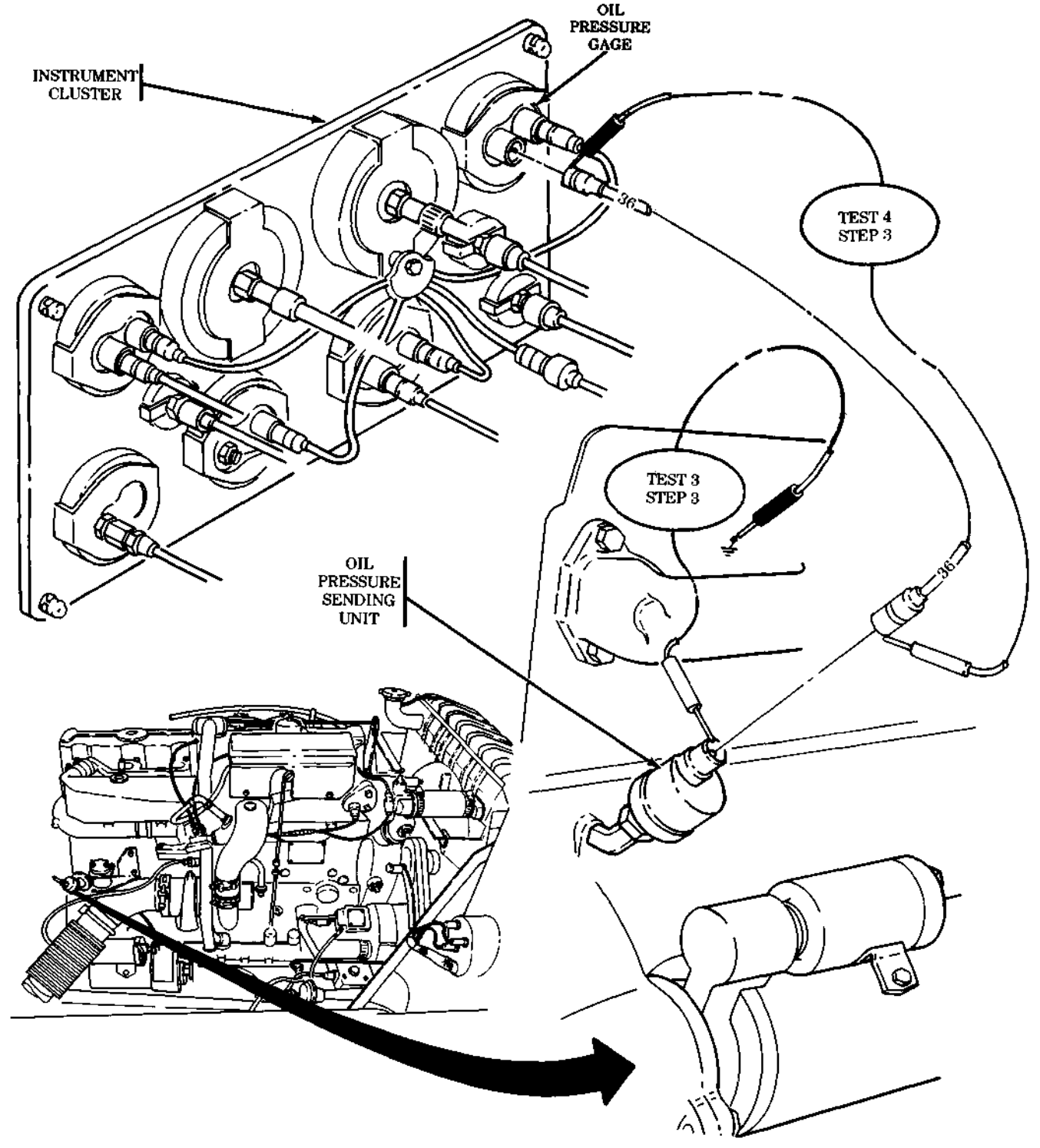

END OF TESTING!

https://truckmanualshub.com/

Table 2-4. Electrical Troubleshooting (Contd).

MALFUNCTION TEST OR INSPECTION CORRECTIVE ACTION

33. GENERATOR GAGE INOPERATIVE

NOTE

If STE/ICE is available, perform NG31 - gage test (chapter 2, section VII).

Test 1. Test generator gage.

Step 1. Turn accessory/ignition switch to ON position. Do not start engine.

Step 2. Generator indicator should rest between lower edge of GREEN area and upper edge of YELLOW area on gage (24 volts).

Step 3. Start engine (TM 9-2320-361-10) and observe generator gage on instrument cluster.

Step 4. Generator gage should rise as engine speeds up and stop over white dot in green area (approximately 28.0 Vdc).

If generator gage does not perform as specified in steps 2 and 4 above, stop engine and go to test 2.

Test 2. Test battery voltage to generator, go to malfunction 29, test 2.

Check frame ground to multimeter.

a. Set multimeter to RX1 scale.

b. Connect negative lead to panel ground on instrument cluster.

c. Touch positive lead to generator gage bracket. Continuity should be present. Ensure instrument panel is grounded.

d. If continuity is present, reinstall instrument cluster (para. 4-12) and recheck gage operation.

e. If continuity is not present, remove generator (para. 4-3 or 14-50) and check for corrosion around generator body.

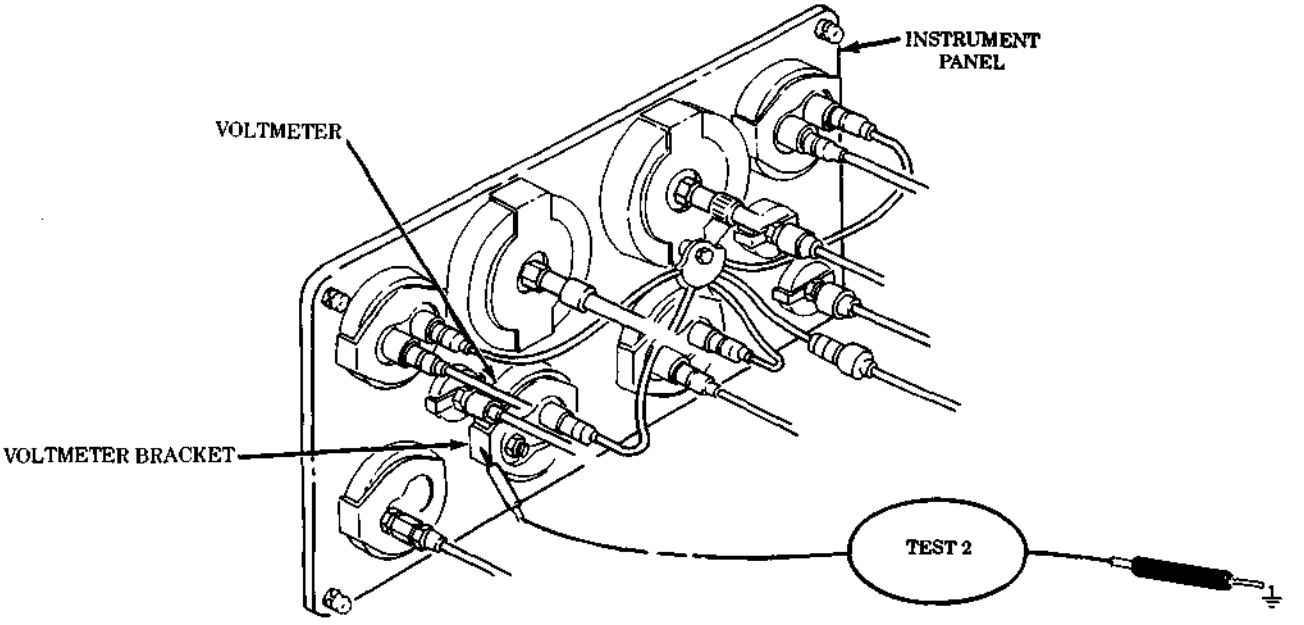

END OF TESTING!

https://truckmanualshub.com/

Table 2-4. Electrical Troubleshooting (Contd).

MALFUNCTION TEST OR INSPECTION CORRECTIVE ACTION

34. IN-TANK FUEL PUMP INOPERATIVE

Test 1. Check for fuel pump operation.

Step 1. Turn accessory/ignition switch to ON position.

Step 2. Listen or feel for fuel pump humming or vibration at top of pump.

Step 3. If vibration can be felt or heard, go to test 4.

Step 4. If no vibration can be felt or heard, go to test 2.

Test 2. Test input voltage and ground to fuel pump.

Step 1. Remove lead 654 from fuel pump.

Step 2. Set multimeter to a voltage scale that will measure 24 Vdc.

Step 3. Connect positive lead of multimeter to lead 654 and negative lead of multimeter to ground lead 79.

a. If battery voltage is not present, go to test 5.

b. If battery voltage is present, go to test 3.

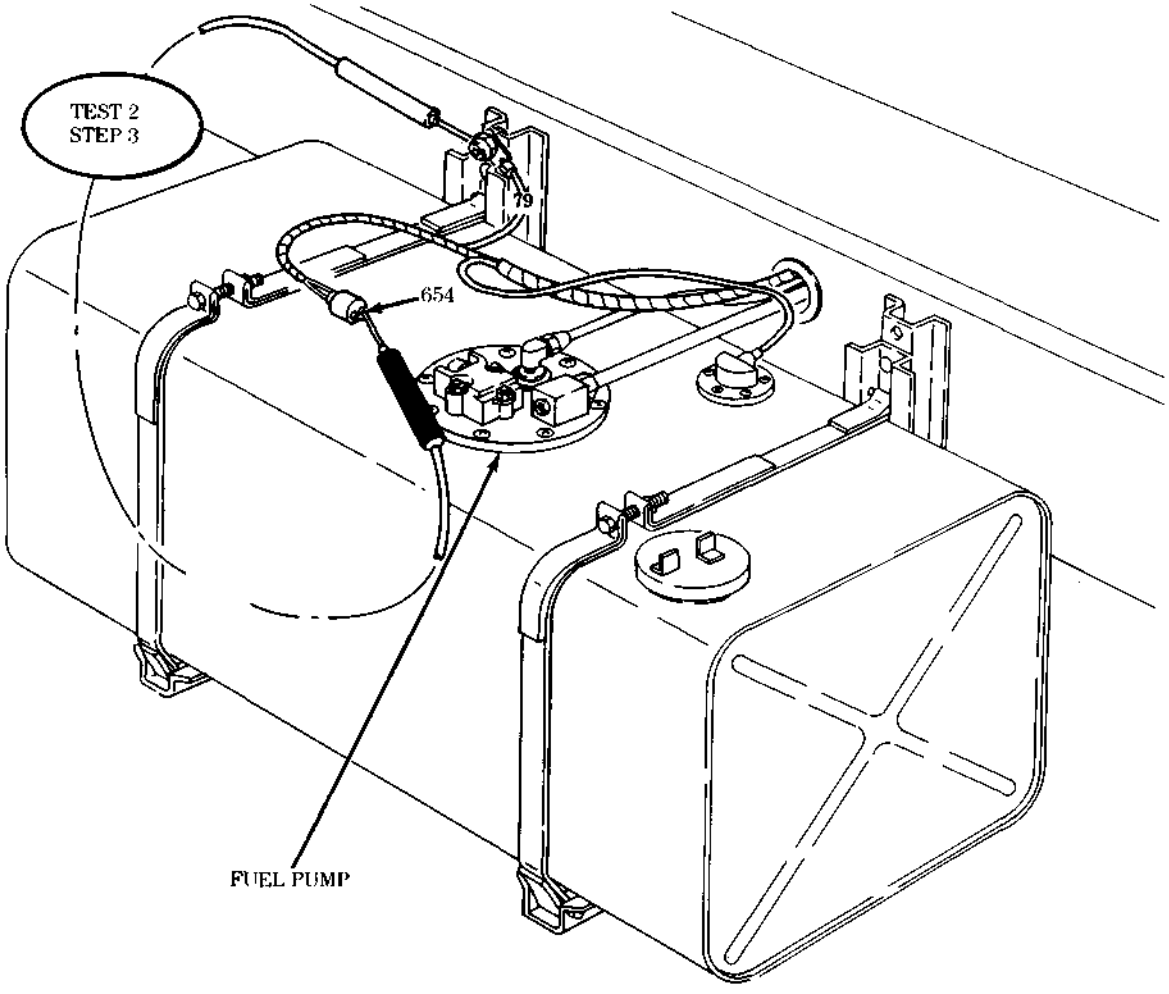

https://truckmanualshub.com/

Table 2-4. Electrical Troubleshooting (Contd).

MALFUNCTION TEST OR INSPECTION CORRECTIVE ACTION

Test 3. Test in-tank fuel pump fuse.

Step 1. Turn accessory/ignition switch to OFF position.

Step 2. Remove fuse holder (para. 3-23).

Step 3. With multimeter set to RX1 scale, check continuity of fuse. Attach negative lead to one side of fuse. Touch positive lead to other side of fuse.

a. If continuity is not found, replace fuse (para. 3-23).

b. If continuity is present in fuse, go to test 4.

Test 4. Test fuel pressure delivered by in-tank fuel pump with engine stopped.

Go to table 2-2, malfunction 2, step 5.

Test 5. Test continuity of lead 654.

Step 1. Disconnect negative battery cable (para. 4-48).

Step 2. Disconnect lead 74 from start switch and disconnect lead 654 from fuel pump.

Step 3. Set multimeter to RX1.

Step 4. Connect negative and positive leads of multimeter between lead 74 and lead 654.

a. If continuity is not present, replace or repair leads 74 and 654.

b. If continuity is present, reconnect leads 74 and 654 and recheck fuel pump for proper operation.

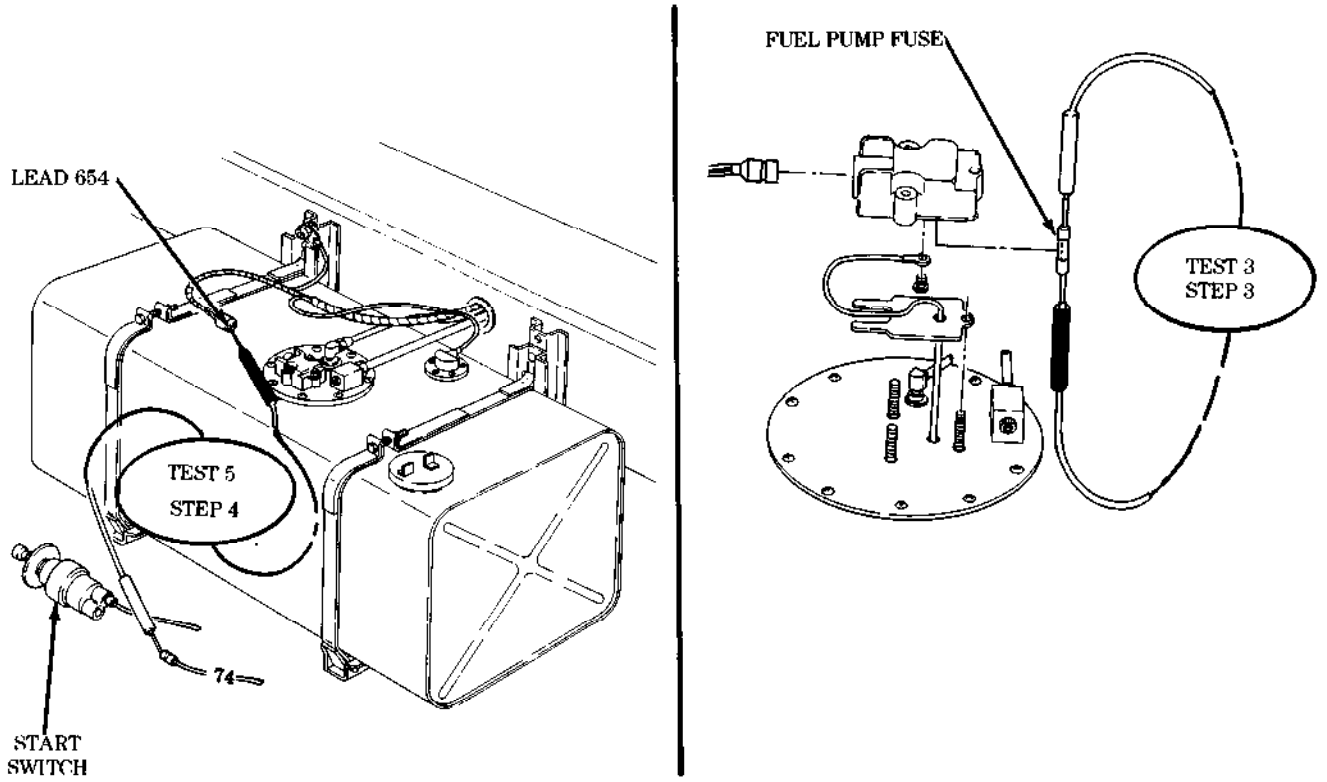

END OF TESTING!

https://truckmanualshub.com/

Table 2-4. Electrical Troubleshooting (Contd).

MALFUNCTION TEST OR INSPECTION CORRECTIVE ACTION

35. FRONT WHEEL DRIVE INDICATOR LIGHT INOPERATIVE

Test 1. Test lamp.

Step 1. Disconnect lead 27A from indicator lamp.

Step 2. Set multimeter to RX1.

Step 3. Touch positive lead of multimeter to input pin of indicator lamp and negative lead to frame ground.

a. If continuity is present, go to test 2.

b. If continuity is not present, replace indicator lamp (para. 4-36).

Test 2. Test front wheel drive indicator lamp input voltage.

Step 1. Disconnect lead 27A from indicator lamp.

Step 2. Set multimeter to a voltage range that measures 24 Vdc.

Step 3. Connect multimeter positive lead to 27A and negative lead to frame ground.

a. If voltage is present, reconnect and go to test 4.

b. If voltage is not present, go to test 3.

Test 3. Test input voltage to front wheel drive lock-in switch.

Step 1. Remove lead 27A from pin A of lock-in switch.

Step 2. Connect negative lead of multimeter to frame ground.

Step 3. Touch positive lead of multimeter to lead 27A. Voltage of 24 Vdc should be present.

a. If voltage is present, replace lock-in switch (para. 4-36).

b. If voltage is not present, replace or repair lead 27A (para. 4-51).

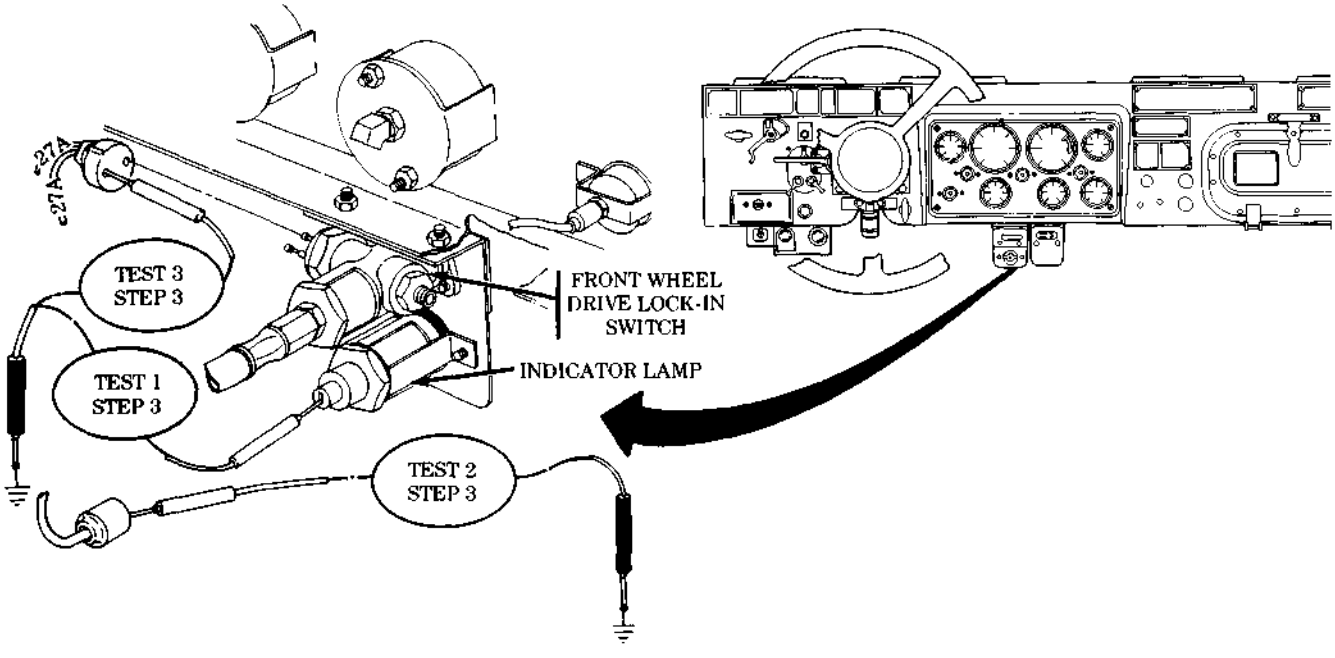

END OF TESTING!

https://truckmanualshub.com/

Table 2-4. Electrical Troubleshooting (Contd).

MALFUNCTION TEST OR INSPECTION CORRECTIVE ACTION

36. LOW AIR PRESSURE WARNING SYSTEM INOPERATIVE

Test 1. Test input voltage to buzzer.

Step 1. Turn accessory/ignition switch to OFF position.

Step 2. Disconnect lead 85 from buzzer.

Step 3. Drain air pressure from air tanks to less than 54 psi (TM 9-2320-361-10). Close petcock.

Step 4. Set multimeter to a voltage range that will measure 24 Vdc.

Step 5. Turn accessory/ignition switch to ON position.

Step 6. Connect negative lead to frame ground.

Step 7. Touch positive lead to contact end of lead 85.

a. If voltage is present, replace low air pressure buzzer (para. 4-27).

b. If voltage is not present, go to test 2.

Test 2. Test continuity of low air pressure switch.

Step 1. Turn accessory/ignition switch to OFF position.

Step 2. Disconnect lead 85 from pin B of low air pressure switch.

Step 3. Turn accessory/ignition switch to ON position.

Step 4. Connect negative lead of multimeter to frame ground. Connect positive lead of multimeter to pin B of low air switch. Battery voltage should be present.

a. If voltage is not present, go to test 3.

b. If voltage is present, check continuity of lead 85 connected between pin B of low air switch and buzzer.

Test 3. Test voltage into low air switch.

Step 1. Disconnect lead 85 at pin A of low air switch.

Step 2. Set multimeter to a voltage range that will measure 24 Vdc.

Step 3. Connect negative lead to frame ground and touch positive lead to contact end lead 85.

a. If voltage is not present, repair or replace lead 85.

b. If voltage is present, replace low air buzzer (para. 4-27).

https://truckmanualshub.com/

Table 2-4. Electrical Troubleshooting (Contd).

MALFUNCTION TEST OR INSPECTION CORRECTIVE ACTION

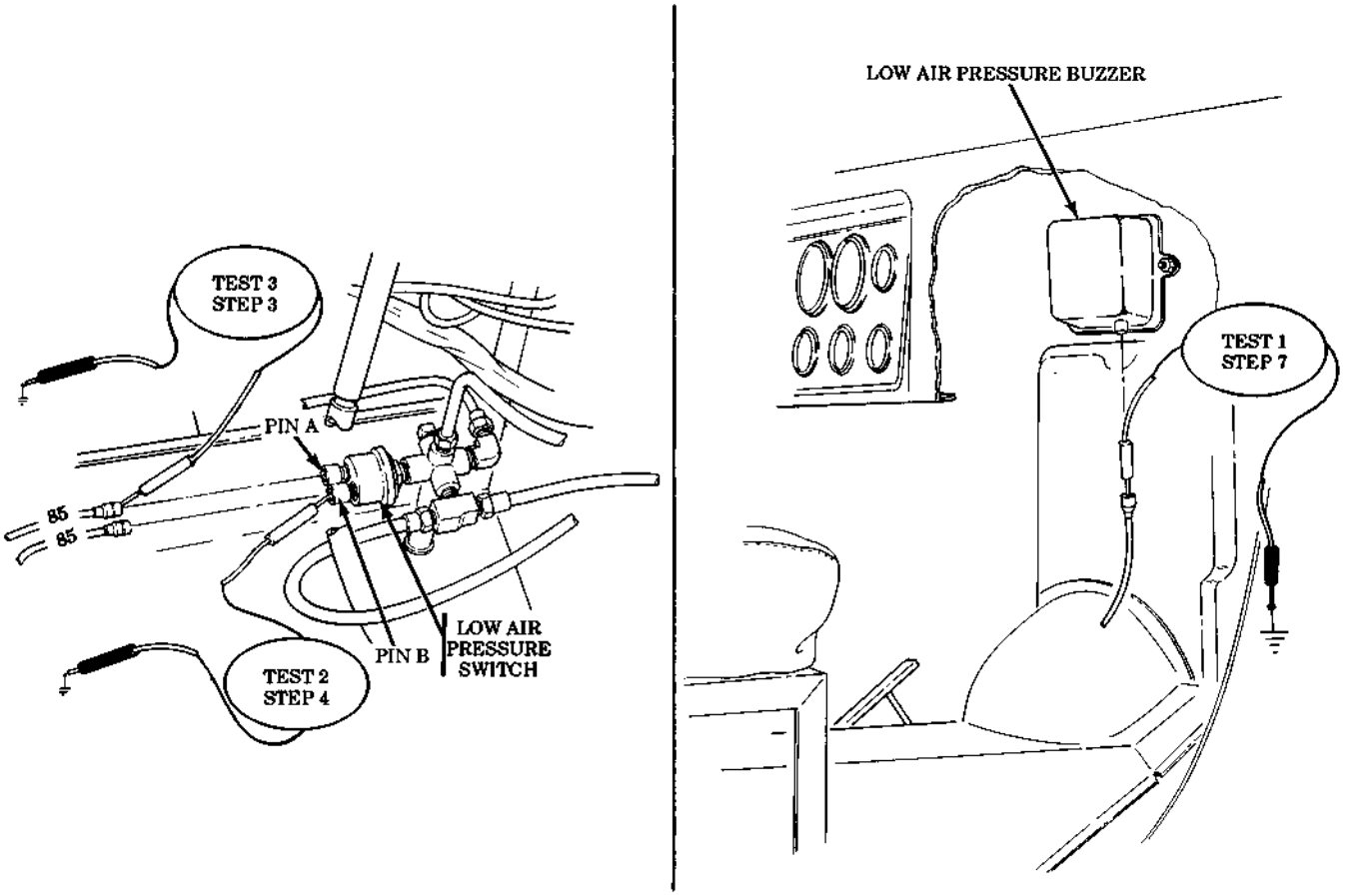

END OF TESTING!

37. LOW AIR PRESSURE WARNING SYSTEM DOES NOT COME ON BELOW 60 PSI AND DOES NOT GO OFF ABOVE 66 PSI

Test low air pressure switch operation. Air pressure switch should open and close between 54 and 66 psi.

Step 1. Turn accessory/ignition switch to OFF position.

Step 2. Turn air reservoir draincock to left and drain reservoir (TM 9-2320-361-10) to less than 54 psi. Close draincock.

Step 3. Turn accessory/ignition switch to ON position. Buzzer should operate.

Step 4. Start engine (TM 9-2320-361-10) and allow air pressure to buildup in air reservoir. Warning buzzer should turn off at 66 psi and above.

Step 5. If air pressure switch fails either test in step 3 or 4, replace air pressure switch (para. 4-25).

END OF TESTING!

https://truckmanualshub.com/

Table 2-4. Electrical Troubleshooting (Contd).

MALFUNCTION TEST OR INSPECTION CORRECTIVE ACTION

38. HORN DOES NOT OPERATE

NOTE

Electrical troubleshooting of the electric horn or air horn is the same.

Test 1. Test input voltage to horn circuit breaker.

Step 1. Turn main light switch to SERVICE DRIVE position. If headlights light, there is voltage at input of horn circuit breaker; turn headlights OFF.

Step 2. Remove lead 25 from horn circuit breaker.

Step 3. Set multimeter to a voltage range that will measure 24 Vdc.

Step 4. Connect negative lead to frame ground.

Step 5. Touch positive lead to horn circuit breaker contact.

a. If voltage is not present, replace horn circuit breaker (para. 4-33).

b. If voltage is present, go to test 2.

Test 2. Test air horn solenoid voltage.

Step 1. Remove lead 25 from pin B of air horn solenoid.

Step 2. Connect negative lead of multimeter to frame ground.

Step 3. Touch positive lead to pin B of solenoid.

a. If voltage is present, go to test 3.

b. If voltage is not present, go to step 6.

Step 4. Remove lead 25 connected to pin A of air horn solenoid. Connect negative lead to frame ground. Touch positive lead to contact end of lead 25.

a. If voltage is present, replace air horn solenoid (para. 4-31).

b. If voltage is not present, replace or repair lead 25.

Test 3. Test horn switch input voltage.

Step 1. Remove horn button (para. 4-30) until lead 25 can be seen.

Step 2. Set multimeter to a voltage range that will measure 24 Vdc.

Step 3. Connect negative lead to frame ground.

Step 4. Touch positive lead to lead 25 contact end

a. If voltage is not present, replace or repair lead 25 (para. 4-51).

b. If voltage is present, go to test 4.

Test 4. Test horn switch continuity.

Step 1. Disconnect lead 25 from air horn solenoid to protect multimeter.

Step 2. Reinstall horn button cap, spring, and contact (para. 4-30).

Step 3. Set multimeter to RX1 scale.

Step 4. Connect negative lead to a good frame ground.

Step 5. Touch positive lead to lead 25 and press down until contact touches base plate.

a. If continuity is present, reconnect lead 25 and recheck horn operation.

b. If continuity is not present, remove horn button and clean or replace horn button (para. 4-30).

https://truckmanualshub.com/

Table 2-4. Electrical Troubleshooting (Contd).

MALFUNCTION TEST OR INSPECTION CORRECTIVE ACTION

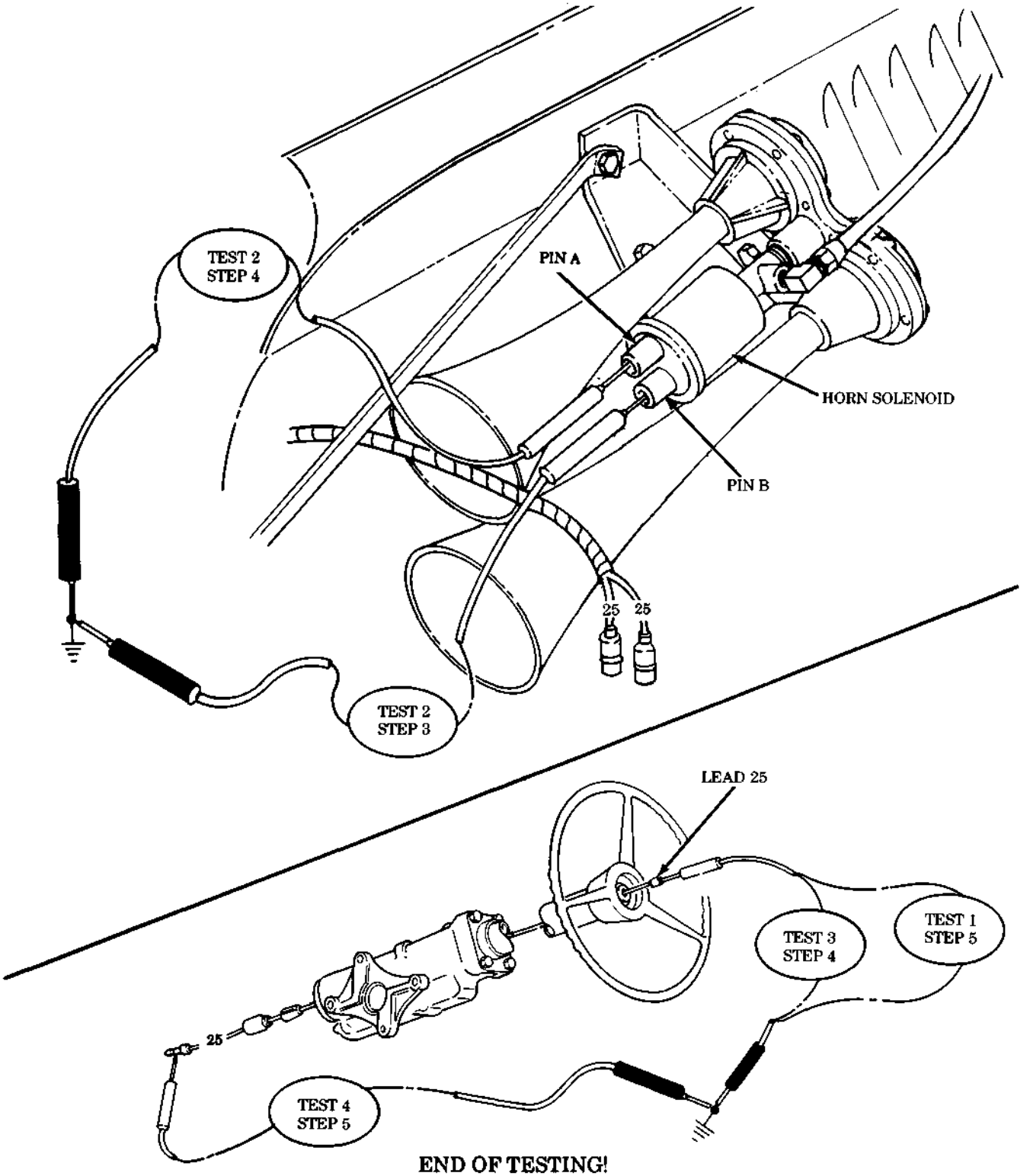

END OF TESTING!

https://truckmanualshub.com/

Table 2-4. Electrical Troubleshooting (Contd).

MALFUNCTION TEST OR INSPECTION CORRECTIVE ACTION

HEATING SYSTEMS

39. ENGINE MANIFOLD HEATER DOES NOT WORK

Test 1. Test engine manifold heater ignition circuit for battery voltage.

Step 1. Disconnect lead 55 from engine manifold heater ignition unit. Manifold heater fuel pump is now disabled.

Step 2. Set multimeter to a voltage range that will measure 24 Vdc.

Step 3. Turn accessory/ignition switch to ON position.

Step 4. Push manifold heater switch and hold.

Step 5. Touch positive lead of multimeter to contact end of lead 55 and negative lead to frame ground.

a. If battery voltage is present, go to test 4.

b. If battery voltage is not present, go to test 2.

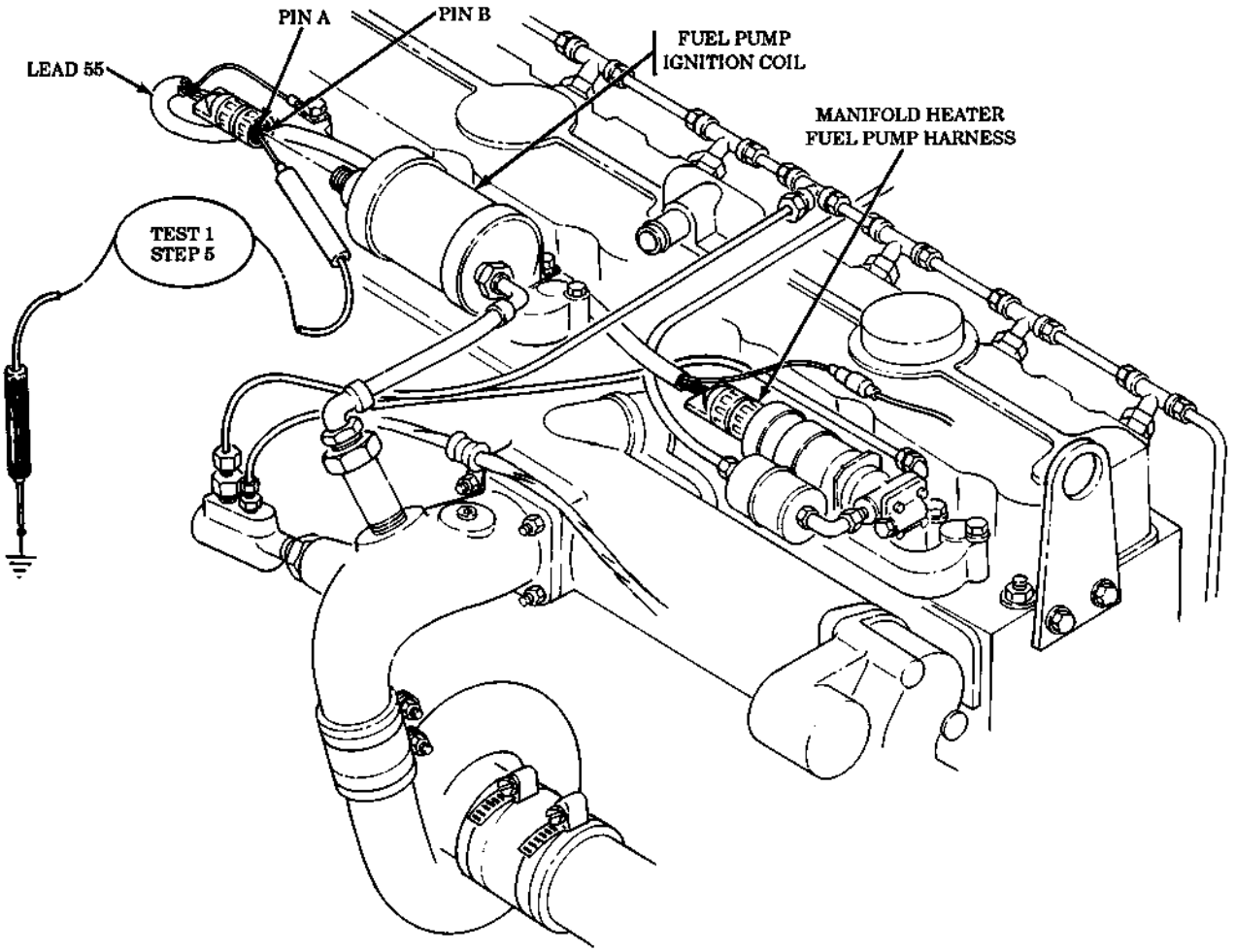

https://truckmanualshub.com/

Table 2-4. Electrical Troubleshooting (Contd).

MALFUNCTION TEST OR INSPECTION CORRECTIVE ACTION

Test 2. Test input voltage to manifold heater switch.

Step 1. Disconnect lead 55 at switch input.

Step 2. Turn accessory/ignition switch to ON position.

Step 3. Connect negative lead of multimeter to frame ground.

Step 4. Touch positive lead of multimeter to contact end of lead 55.

a. If battery voltage is present, go to test 3.

b. If battery voltage is not present, go to malfunction 4, test 6.

Test 3. Test continuity of manifold heater switch.

Step 1. Turn accessory/ignition switch to OFF position.

Step 2. Disconnect lead 55 to manifold heater switch output.

Step 3. Set multimeter to RX1 scale.

Step 4. Connect negative lead to one side of switch and touch positive lead to other side. Push manifold heater switch.

a. If continuity is not present, replace manifold heater switch (para. 4-22).

b. If continuity is present, go to test 4.

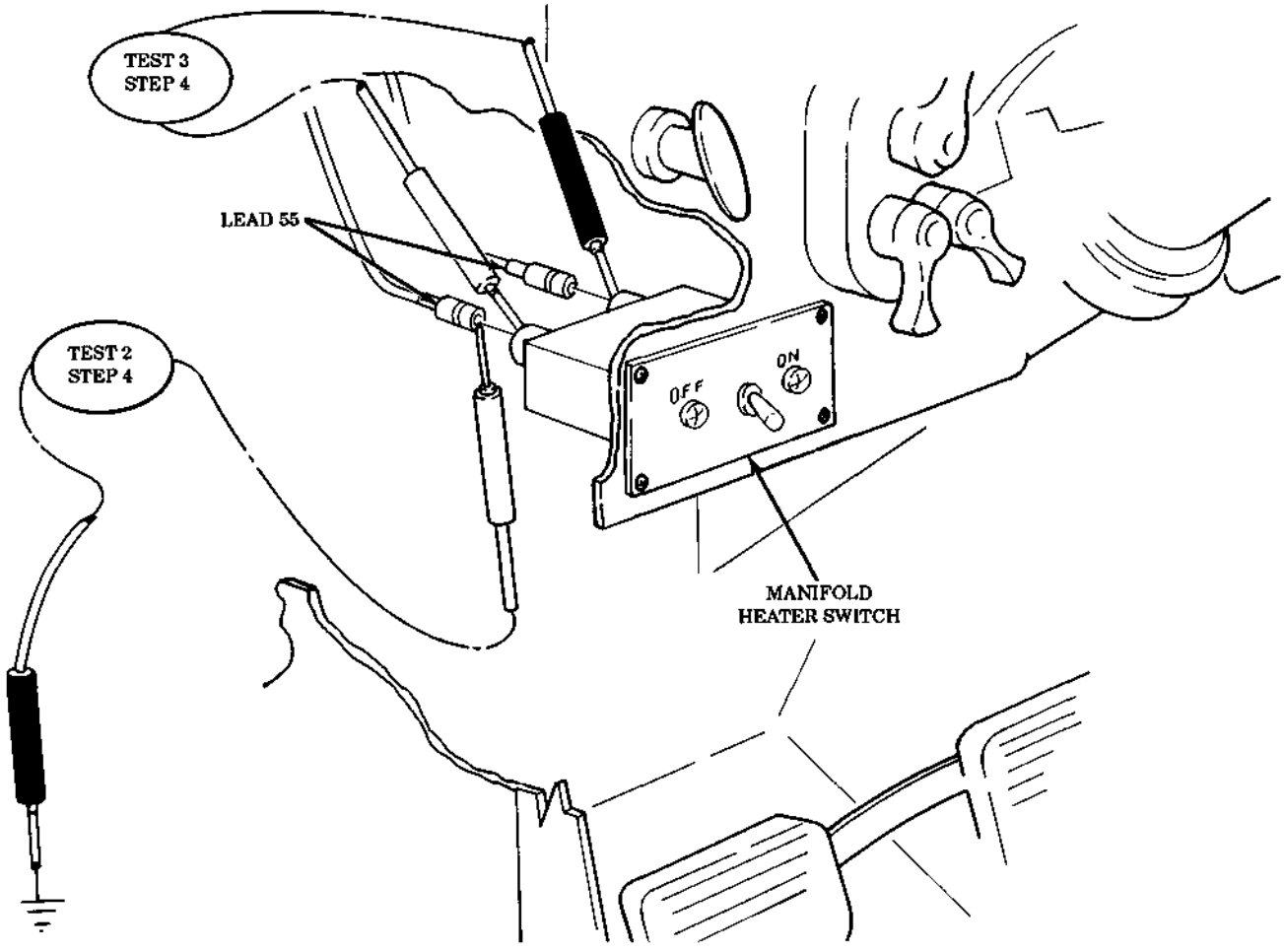

https://truckmanualshub.com/

Table 2-4. Electrical Troubleshooting (Contd).

MALFUNCTION TEST OR INSPECTION CORRECTIVE ACTION

Test 4. Test manifold heater spark plug.

Step 1. Remove manifold heater spark plug (para. 3-30 or 3-31).

Step 2. Connect jumper wire from spark plug to engine ground.

Step 3. Disconnect wiring harness from manifold heater fuel pump.

Step 4. Turn accessory/ignition switch to ON position.

Step 5. Position manifold heater switch to START.

a. If spark plug does not arc, replace spark plug (para. 3-30 or 3-31) and repeat test 4.

b. If retest of test 4 fails to produce an arc to engine ground, go to test 5.

Test 5. Test manifold spark plug cable.

Step 1. Remove cable from manifold heater spark plug (para. 3-30 or 3-31).

Step 2. Remove spark plug cable at ignition coil.

Step 3. Set multimeter to RX1000 scale.

Step 4. Touch multimeter negative lead to contact end of spark plug cable at the plug.

Step 5. Touch multimeter positive lead to opposite end of spark plug cable.

a. Continuity should be present. If continuity is present, go to test 6.

b. If continuity is not present, replace or repair spark plug cable (para. 3-30 or 3-31).

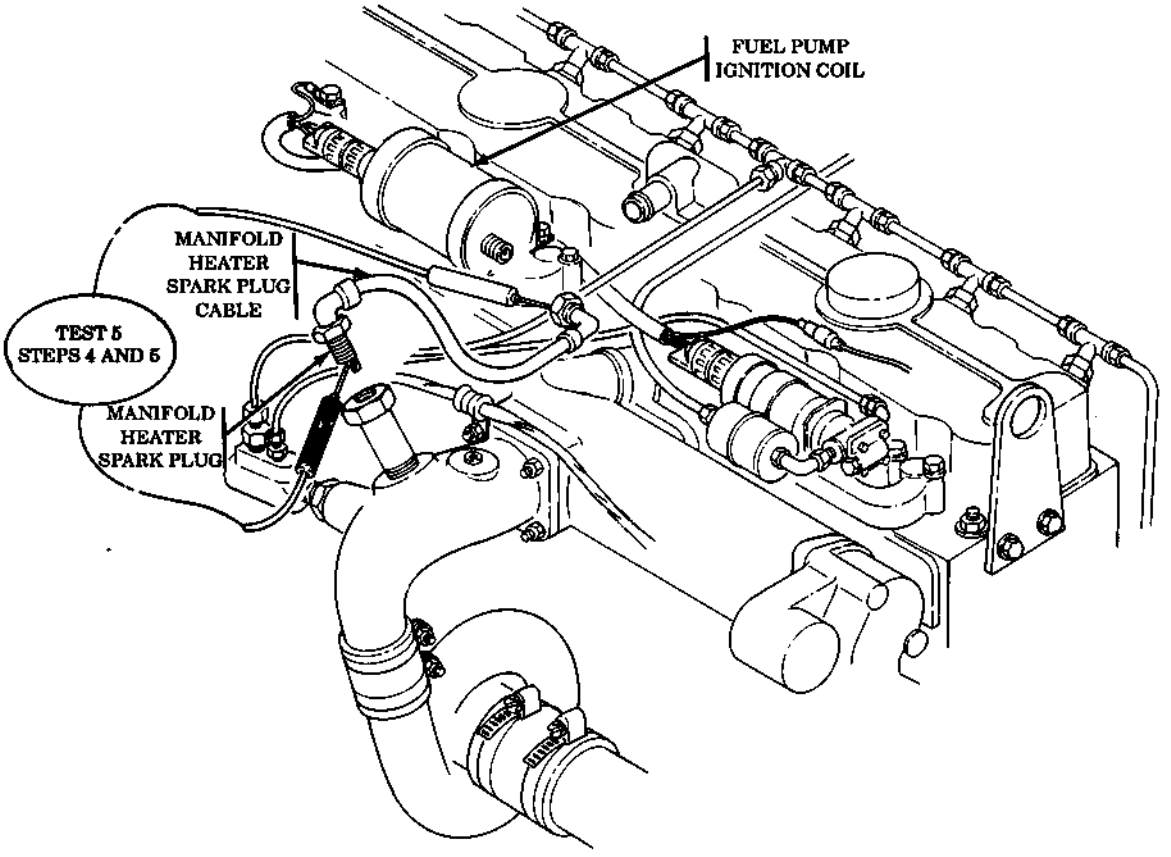

https://truckmanualshub.com/

Table 2-4. Electrical Troubleshooting (Contd).

MALFUNCTION TEST OR INSPECTION CORRECTIVE ACTION

Test 6. Test continuity of ignition coil.

Step 1. Disconnect both input and output leads of ignition coil.

Step 2. Set multimeter to RX100 scale.

Step 3. Touch multimeter negative lead to pin sB (neg) of ignition coil.

Step 4. Touch multimeter positive lead to pin A (pos) of ignition coil.

a. Continuity should be present. If continuity is present, go to step 5.

b. If continuity is not present, replace ignition coil (para. 3-30 or 3-31).

Step 5. Test continuity of ignition coil output.

Step 6. Touch multimeter negative lead to pin B (neg) of ignition coil.

Step 7. Touch multimeter positive lead to contact end at ignition coil output.

a. If continuity is present, go to test 7.

b. If continuity is not present, replace ignition coil (para. 3-30 or 3-31).

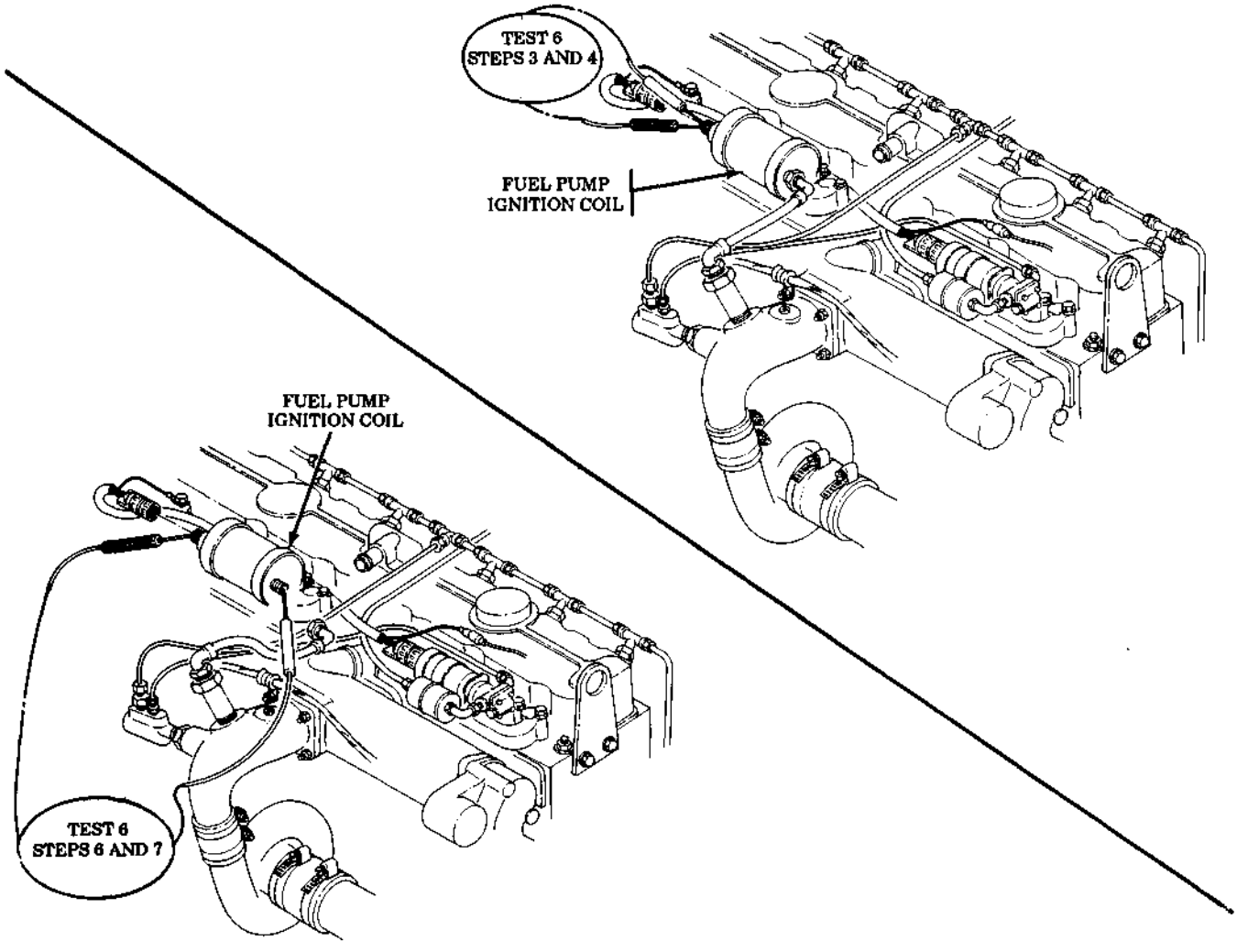

https://truckmanualshub.com/

Table 2-4. Electrical Troubleshooting (Contd).

MALFUNCTION TEST OR INSPECTION CORRECTIVE ACTION

Test 7. Test fuel pump-to-ignition coil wiring harness.

Step 1. Disconnect wiring harness input from ignition coil.

Step 2. Set multimeter to 24 Vdc scale.

Step 3. Touch multimeter negative lead to pin B (neg) of wiring harness at ignition coil.

Step 4. Touch multimeter positive lead to pin A (pos) of wiring harness at ignition coil.

a. If voltage is present, go to test 9.

b. If voltage is not present, go to test 8.

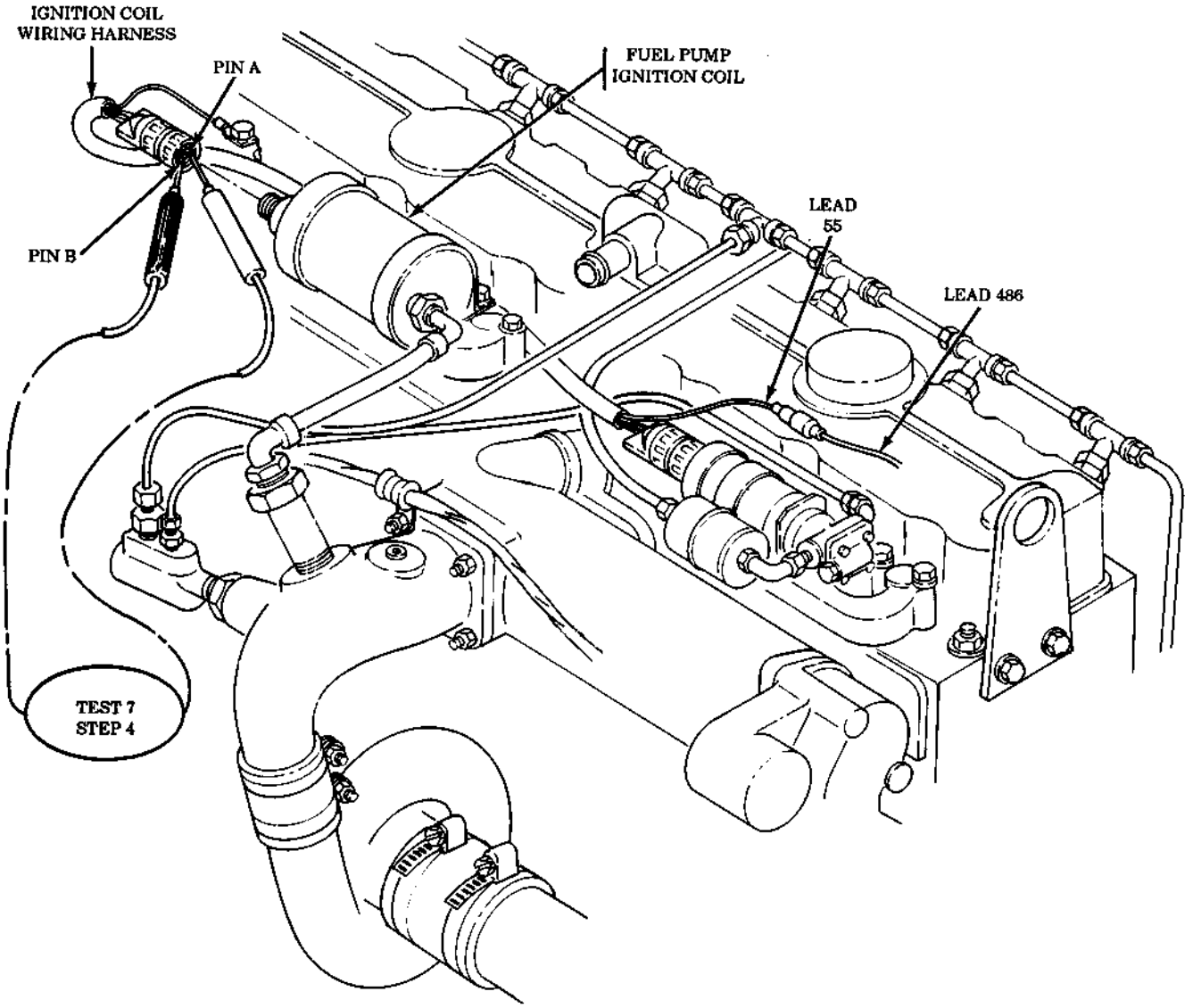

https://truckmanualshub.com/

Table 2-4. Electrical Troubleshooting (Contd).

MALFUNCTION TEST OR INSPECTION CORRECTIVE ACTION

Test 8. Check continuity of ignition coil harness.

Step 1. Disconnect ignition coil harness from fuel pump and ignition coil.

Step 2. Set multimeter to RX1.

Step 3. Connect multimeter negative lead to lead 486 and multimeter positive lead to pin A.

a. If continuity is not present, repair harness (para. 4-51).

b. If continuity is present, go to test 9.

Test 9. Test manifold heater fuel system.

Refer to table 2-2, Mechanical Troubleshooting, malfunction 17, steps 2 through 4.

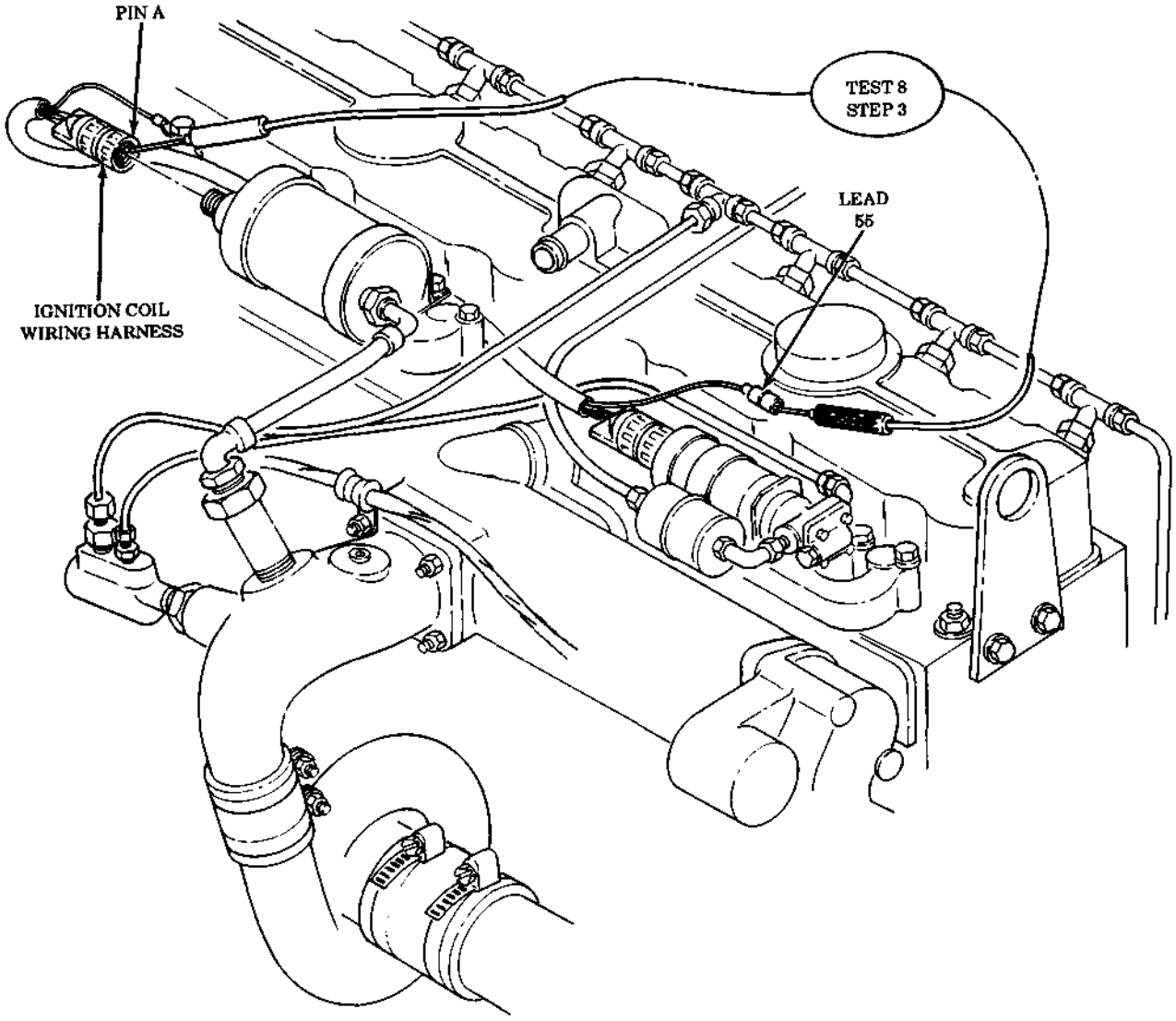

END OF TESTING!

https://truckmanualshub.com/

Table 2-4. Electrical Troubleshooting (Contd).

MALFUNCTION TEST OR INSPECTION CORRECTIVE ACTION

40. HOT WATER PERSONNEL HEATER DOES NOT OPERATE OR DOES NOT OPERATE IN LOW POSITION

Test 1. Check horn operation.

Push horn button.

a. If horn fails to operate, go to malfunction 38.

b. If horn is operational, voltage is present at input of heater circuit breaker. Go to test 2.

c. If heater high/low switch operates in high, but fails to operate in low, go to test 5.

Test 2. Check heater high/low switch for power input.

Step 1. Set multimeter to a range that will measure 24 Vdc.

Step 2. Disconnect lead 10 at rear of heater switch.

Step 3. Touch multimeter positive lead to contact end of lead 10 at heater switch.

Step 4. Touch multimeter negative lead to frame ground. Voltage should be present.

a. If voltage is present, go to test 3.

b. If voltage is not present, replace or repair lead 10 (para. 4-51).

Test 3. Test for power output at heater high/low switch,

Step 1. Set multimeter to range that will measure 24 Vdc.

Step 2. Disconnect lead 400 at rear of heater switch.

Step 3. Touch positive lead of multimeter to contact end of power output at the heater switch.

Step 4. Touch negative lead of multimeter to frame ground. Voltage should be present.

a. If voltage is present, go to test 4.

b. If voltage is not present, replace heater switch (para. 4-34).

Test 4. Test personnel heater for power input.

Step 1. Ensure heater switch is in high position.

Step 2. Set multimeter to a range that will measure 24 Vdc.

Step 3. Disconnect lead 400 from personnel heater.

Step 4. Touch multimeter positive lead to contact end of lead 400.

Step 5. Touch multimeter negative lead to frame ground. Voltage should be present.

a. If voltage is not present, replace or repair lead 400 (para. 4-51).

b. If voltage is present, and personnel heater fails to operate, replace personnel heater (para. 11-42).

Test 5. Test blower motor resistor.

Step 1. Set multimeter to RX1.

Step 2. Ensure heater switch is set to low position.

Step 3. Touch positive lead of multimeter to one lead on resistor.

Step 4. Touch negative lead of multimeter to the other lead of resistor.

a. Multimeter should measure between 4.5 and 5.5 ohms.

b. If resistance is not within tolerance of 4.5 and 5.5 ohms, replace resistor (para. 4-35).

https://truckmanualshub.com/

Table 2-4. Electrical Troubleshooting (Contd).

MALFUNCTION TEST OR INSPECTION CORRECTIVE ACTION

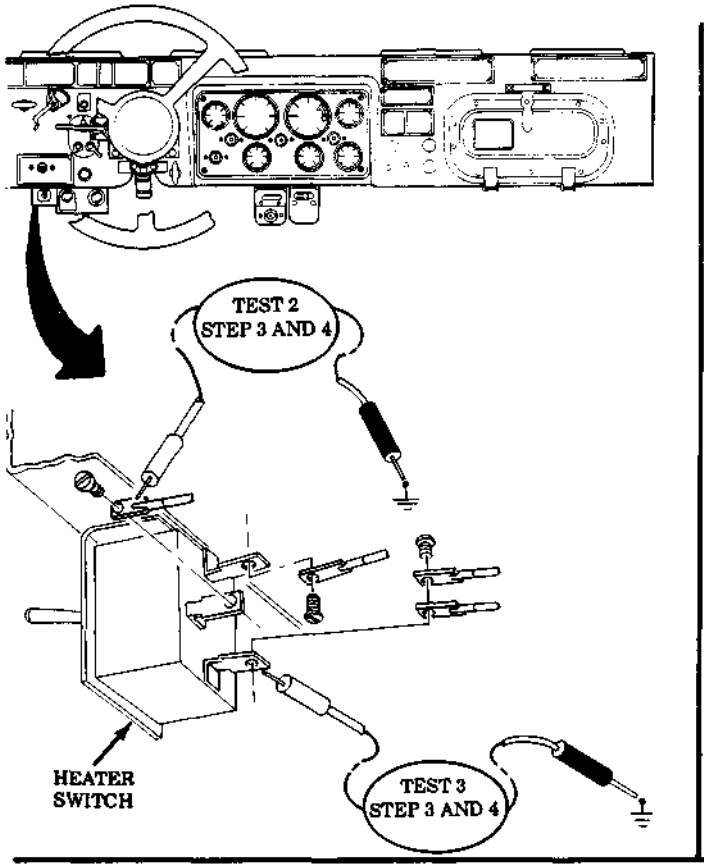

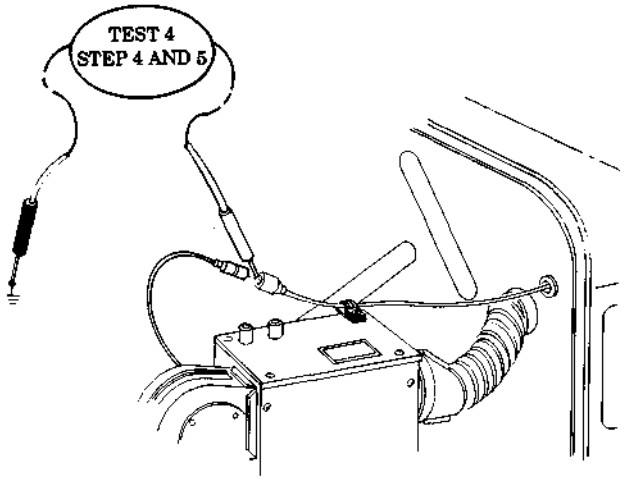

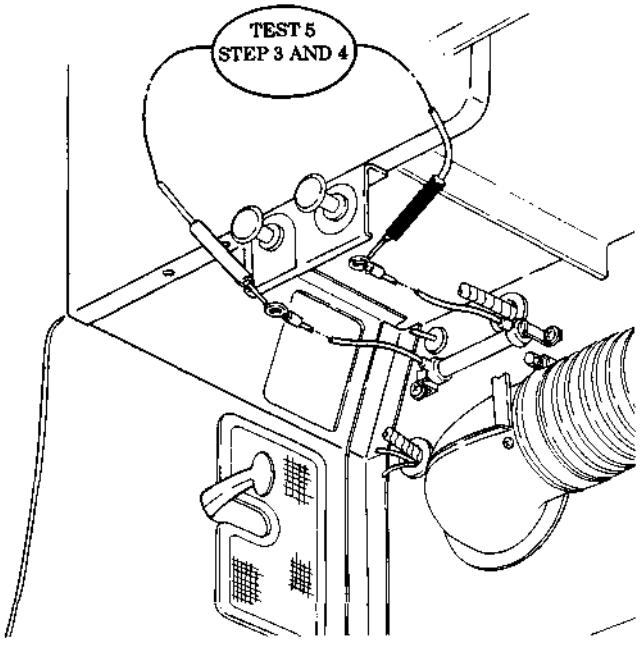

END OF TESTING!

https://truckmanualshub.com/

Table 2-4. Electrical Troubleshooting (Contd).

MALFUNCTION TEST OR INSPECTION CORRECTIVE ACTION

41. PERSONNEL FUEL BURNING HEATER INOPERATIVE

Test 1. Check horn operation.

Push horn button.

a. If horn is operational, voltage is present at input of personnel heater circuit breaker, go to test 2.

b. If horn fails to operate, go to malfunction 38.

Test 2. Test lead 10 for power input to heater control box.

Step 1. Set multimeter to a range that will measure 24 Vdc.

Step 2. Disconnect lead 10 from heater control box.

Step 3. Touch multimeter positive lead to contact end of lead 10.

Step 4. Touch negative lead of multimeter to frame ground. Voltage should be present.

a. If voltage is present, go to test 3.

b. If voltage is not present, replace or repair lead 10 (para. 4-51).

Test 3. Check heater control box for power output.

Step 1. Set multimeter to a range that will measure 24 Vdc.

Step 2. Disconnect harness connector from rear of control box.

Step 3. Set heater control switch to start and hold.

Step 4. Set heater control heat switch to high.

Step 5. Touch positive lead of multimeter to pin A

Step 6. Touch negative lead of multimeter to frame ground.

Step 7. Repeat steps 4 and 5 for pins B, C, and D. Voltage should be present.

a. If voltage is present at all pins tested, go to test 4.

b. If voltage is not present at one or more pins, replace heater control box (para. 14-3).

Test 4. Check for input power at fuel pump.

Step 1. Set multimeter to a range that will measure 24 Vdc.

Step 2. Disconnect lead 25 at fuel pump.

Step 3. Touch multimeter positive lead to contact end of lead 25.

Step 4. Touch multimeter negative lead to frame ground. Voltage should be present.

a. If voltage is present, replace personnel fuel burning heater (para. 14-2).

b. If voltage is not present, replace or repair lead 25 (para. 4-51).

Test 5. Check fuel pump for proper operation.

Refer to mechanical troubleshooting table 2-2, malfunction 82.

Test 6. Check for power input at personnel heater.

Step 1. Set multimeter to a voltage that will measure 24 Vdc.

Step 2. Disconnect harness connector at personnel heater.

Step 3. Set heater control switch to run.

Step 4. Touch multimeter positive lead to pin A of harness connector.

Step 5. Touch multimeter negative lead to frame ground.

https://truckmanualshub.com/

Table 2-4. Electrical Troubleshooting (Contd).

MALFUNCTION TEST OR INSPECTION CORRECTIVE ACTION

Step 6. Repeat steps 4 and 5 for pins B, C, and D. Voltage should be present at all pins tested.

a. If voltage is present, replace personnel heater (para. 14-2).

b. If voltage is not present at one or more pins, replace or repair harness (para. 4-51).

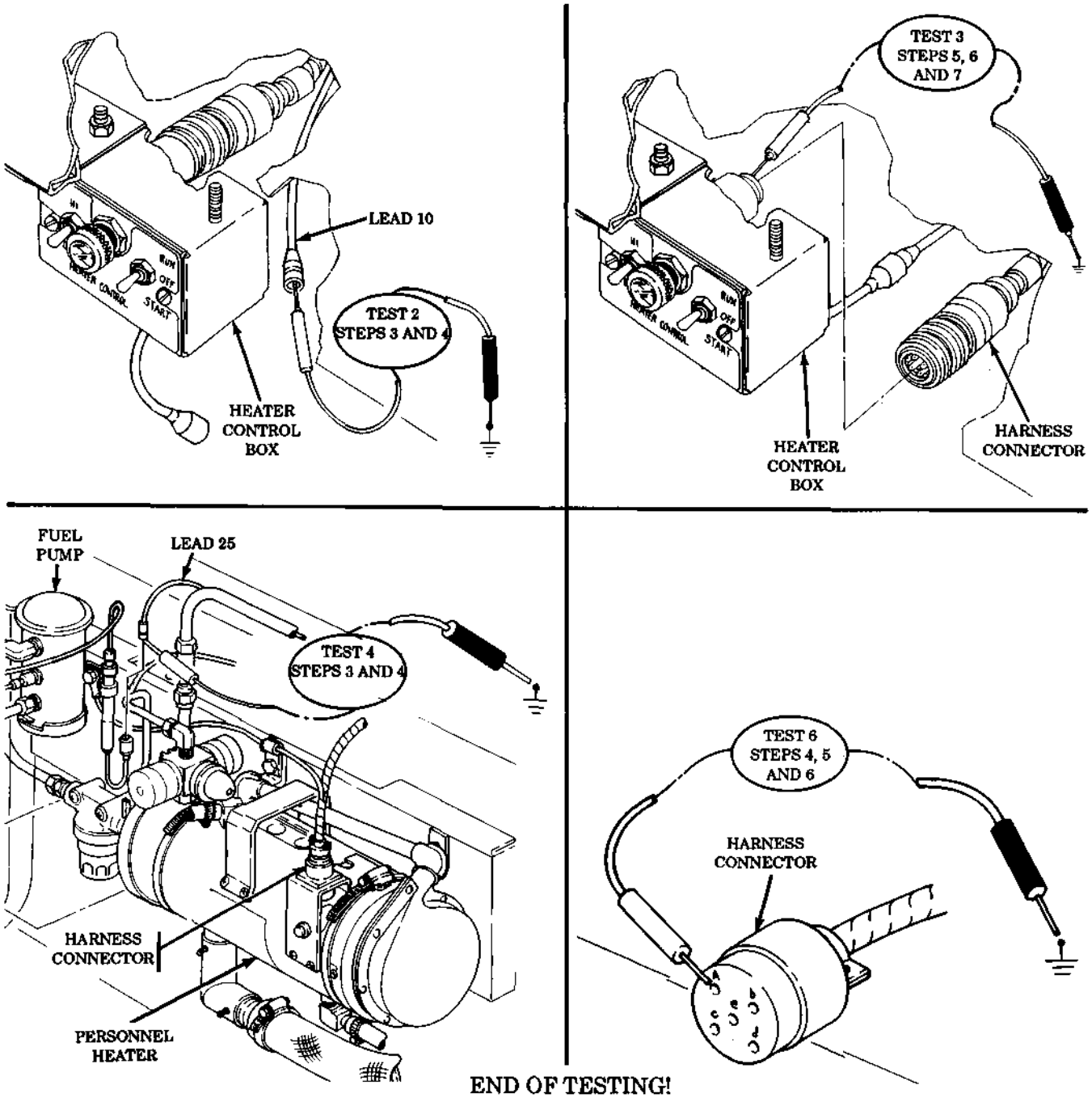

END OF TESTING!

https://truckmanualshub.com/

Table 2-4. Electrical Troubleshooting (Contd).

MALFUNCTION TEST OR INSPECTION CORRECTIVE ACTION

42. HEATER CONTROL BOX LIGHT INOPERATIVE, BUT HEATER OPERATIVE

Test 1. Check for voltage at heater control box indicator lamp.

Step 1. Set multimeter to a voltage range that will measure 24 Vdc.

Step 2. Position heater control switch to RUN.

Step 3. Position heater switch to HIGH.

Step 4. Remove heater control box indicator lamp.

Step 5. Touch positive lead of multimeter to indicator lamp socket.

Step 6. Touch negative lead of multimeter to frame ground.

a. If voltage is present, replace indicator lamp.

b. If voltage is not present, go to test 2.

Test 2. Check for voltage between personnel heater and heater control box.

Step 1. Disconnect wiring harness at personnel heater.

Step 2. Connect jumper wire from pin D to pin E at personnel heater.

a. If heater control box indicator lamp is lit, replace personnel heater (para. 14-2).

b. If indicator lamp fails to light, replace or repair wiring harness (para. 4-51).

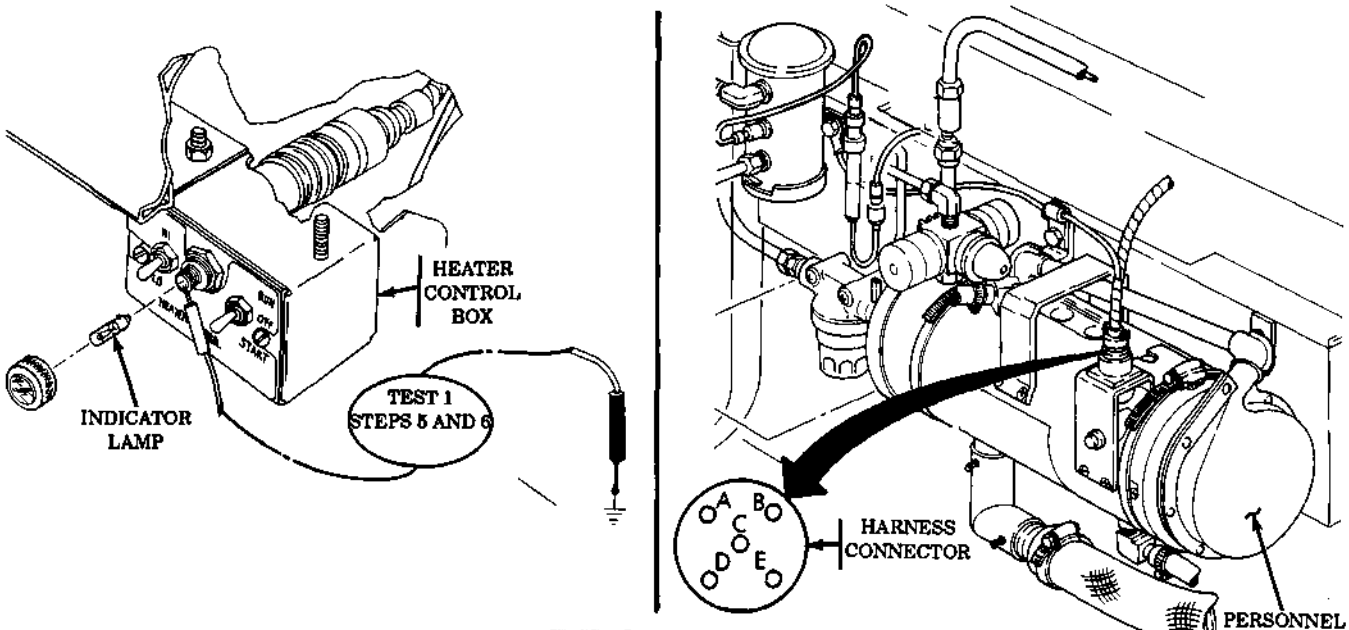

END OF TESTING!

TRAILER CONNECTION SYSTEM

43. ONE OR MORE TRAILER LIGHTS INOPERATIVE

Test 1. Test trailer receptacle voltage.

Step 1. Turn main light switch lever to position corresponding to inoperative lamp.

NOTE

For stoplight circuit test, brake pedal must be depressed and air pressure maintained.

Step 2. Set multimeter to a voltage range that will measure 24 Vdc.

https://truckmanualshub.com/

Table 2-4. Electrical Troubleshooting (Contd).

MALFUNCTION TEST OR INSPECTION CORRECTIVE ACTION

Step 3. Connect negative lead of multimeter to trailer receptacle pin D. Touch positive lead to appropriate trailer receptacle pin of circuit being tested. Light switch must be in corresponding position.

a. Battery voltage should be present at trailer receptacle being tested.

b. If battery voltage was present, disconnect and reconnect male connector to ensure positive connection. If trailer lamps still do not light, check male connection for corrosion. If trailer lamps still do not light, check trailer lighting system (TM 9-2320-213-14).

c. If battery voltage was not present at one or more of the pins being tested, continue with test 2.

Test 2. Test trailer receptacle ground.

Step 1. Set multimeter to RX1 scale.

Step 2. Connect negative lead of multimeter to frame ground. Touch positive lead to pin D of trailer receptacle.

a. Continuity should be present.

b. If continuity is not present, replace or repair lead 90 (para. 4-51).

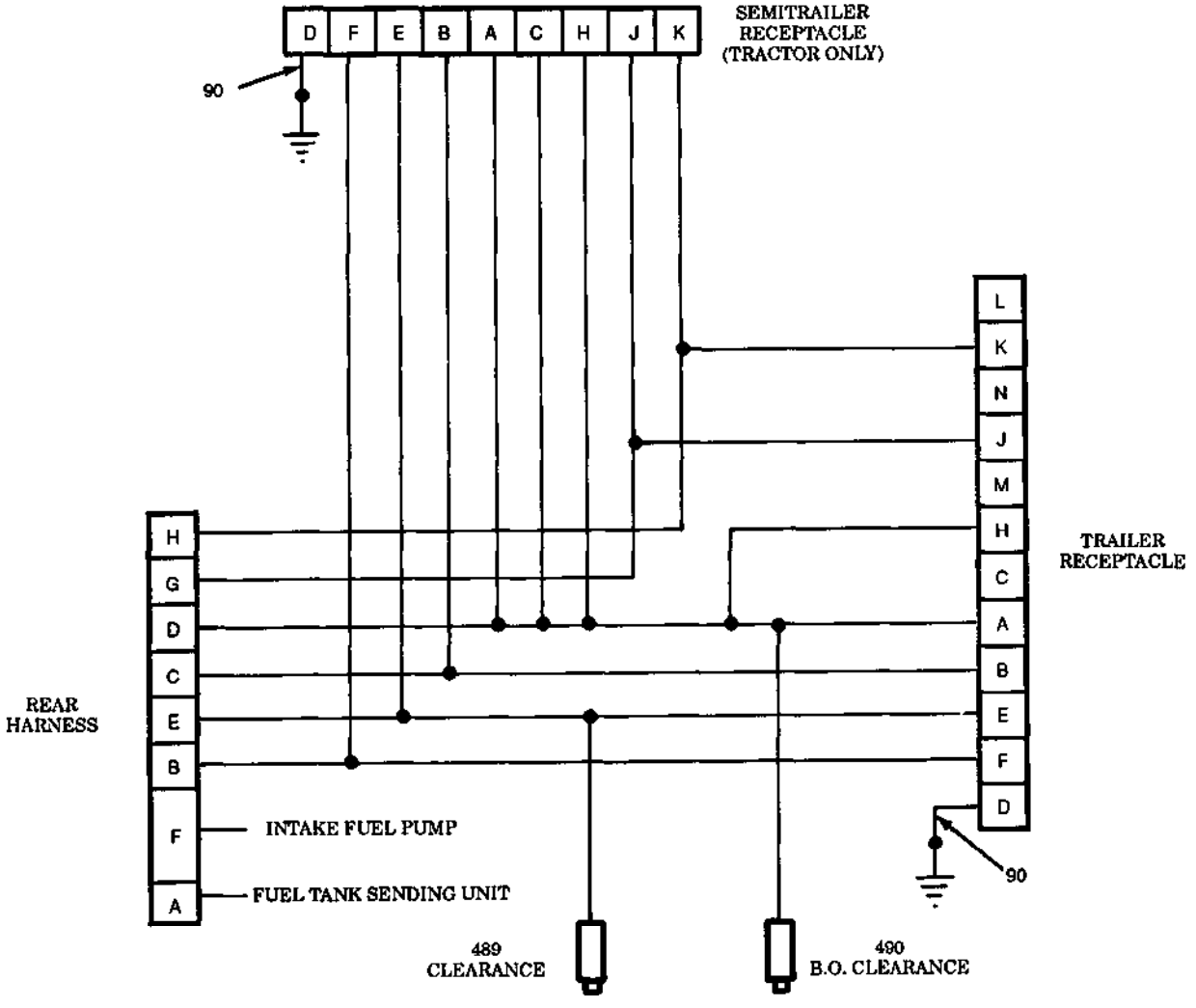

END OF TESTING!

https://truckmanualshub.com/

Section VII. STE/ICE TROUBLESHOOTING (SIMPLIFIED TEST EQUIPMENT FOR INTERNAL COMBUSTION ENGINES)

2-16. GENERAL

a. This section is applicable only if STE/ICE is available. The section contains information and tests which may be used with STE/ICE to locate malfunctions that may develop in vehicle. Tests can be used during troubleshooting, PMCS, or after replacing parts to isolate malfunctions, anticipate failures, and to ensure that proper repairs have been made.

NOTE

See tables 2-8 and 2-9 for a listing of STE/ICE tests and their related page numbers.

b. STE/ICE is used primarily with the vehicle electrical system. These tests cannot cover all possible malfunctions which may occur. If a particular malfunction is not covered, refer to Troubleshooting Index (chapter 2) and locate troubleshooting procedure for malfunction observed. To obtain maximum number of observed symptoms of the malfunction, question the operator.

2-17. STE/ICE CHAIN INDEX

Preventive Maintenance Checks and Services (table 2-1) contain a list of various malfunctions which may occur during operation or inspection of vehicle. When one of the malfunctions listed occurs, the mechanic proceeds to the associated STE/ICE Chain Index (tables 2-8 and 2-9).

2-18. VEHICLE TEST METER (VTM) TROUBLESHOOTING

The vehicle meter (VTM) troubleshooting procedures can be found in STE/ICE Go-Chain Tests (table 2-10). Additional VTM troubleshooting can be found in TM 9-4910-571-12&P, Simplified Test Equipment for Internal Combustion Engines.

2-19. STE/ICE TESTS AND SETUP PROCEDURES

a. STE/ICE Tests. The STE/ICE testing capabilities that may be applied to the M44A2 PMCS are listed in table 2-9 and are included in table 2-11. Test capabilities that may be applied to troubleshooting are specified in table 2-8.

b. STE/ICE Setup Procedure. STE/ICE setup and internal checks (test no. G01, table 2-10) must be performed prior to performing tests.

2-20. STE/ICE DESCRIPTION AND OPERATION

a. General. The following describes operation of Simplified Test Equipment/Internal Combustion Engines (STE/ICE) system and contains detailed operating procedures.

It is used to test serviceability of 2-1/2-ton vehicles and to perform primary fault detection and isolation. After technician has identified a faulty part or subsystem, he is referred to a paragraph number for replacement or repair procedures for individual parts.

https://truckmanualshub.com/

2-20. STE/ICE DESCRIPTION AND OPERATION (Contd)

b. Description and Operation. STE/ICE is a testing system that performs tests and measurements on internal combustion engines. STE/ICE measures standard voltage, current, resistance, pressure, temperature, and speed measurements. Special tests, such as compression balance tests and starter system evaluations, are performed by STE/ICE. Standard equipment functions including vacuum pressure gage, compression gage, low-current tester, and multimeter are features of STE/ICE set.

STE/ICE is portable and operates on either 12- or 24-volt vehicle batteries or equivalent power source. The STE/ICE system consists of a Vehicle Test Meter (VTM), a Transducer Kit (TK), six electrical cables, a transit case, test cards, and technical publications.

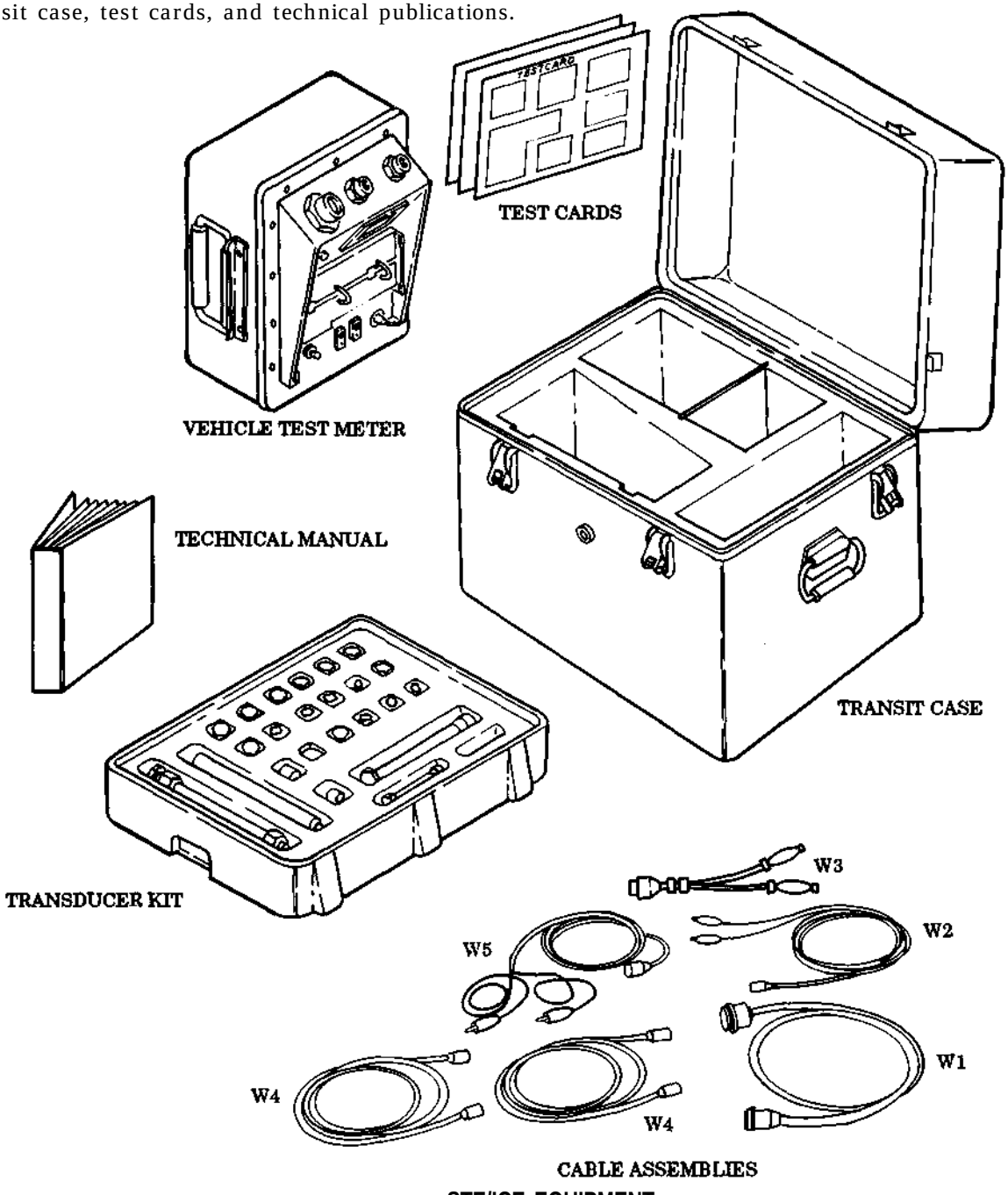

STE/ICE EQUIPMENT

https://truckmanualshub.com/

2-20. STE/ICE DESCRIPTION AND OPERATION (Contd)

c. Vehicle Test Meter.

(1) General. The VTM provides a method for technician to test vehicle electrical and mechanical components. Readings are either pass/fail indications or digital displays in units familiar to technician (psi, rpm, volts, ohms, amps, etc.). The VTM interfaces with vehicle directly with a transducer(s) from Tranducer Kit (TK). Additional tests can also be done that involve manually probing and/or connecting transducers to appropriate test points. Operating power for VTM is drawn from vehicle batteries or some equivalent power source. Power is routed to VTM through cable clamps connected to battery. The STE/ICE general purpose testing capabilities that may be applied to vehicle are: 0-1000 psig pressure, 0-45 volts DC, and 0-40k ohms resistance. The following control functions can be performed in conjunction with special tests: interleave (displays rpm with next test), display maximum value, display minimum value, and display peak-to-peak value.

(2) Controls and Indicators. The controls and readout display on VTM are illustrated. The following paragraphs describe how the controls are used, and how displays function.

(a) Power Switch (PUSH ON/PULL OFF). The power switch controls DC power to VTM. The VTM can operate from either a 12-volt or 24-volt battery system. When power switch is pushed in (PUSH ON), VTM power is on. To shut VTM off, pull out power switch (PULL OFF). The power switch contains a 4-amp circuit breaker. If a fault occurs and VTM uses more power than it should, power switch will pop out automatically. Check your hookup carefully and try again before returning VTM to support maintenance.

(b) TEST SELECT Switches. The TEST SELECT switches are used to select actual test to be performed. There are ten positions on each switch, numbered 0 through 9. The number dialed into these switches is read by VTM when you press TEST button. Changing TEST SELECT switch positions has no effect until TEST button is pushed on.

(c) TEST Button. Depressing and releasing TEST button causes test measurement to begin. Observe measured value on readout display. The reading will be in units normally used for a particular vehicle measurement. These units are listed on the flip cards. The TEST button must be pressed and immediately released. Depressing and holding TEST button down initiates an offset test. Offset tests are described in TM 9-4910-571-12&P.

(d) Readout Display. The readout display will show different types of readouts during testing up to a maximum of 4 characters (for example .8.8.8.8). Types of readouts are described in detail in paragraph (3) and are summarized as follows:

1. Status Readout. This type of readout keeps technician informed of what is happening such as power applied, failed test, etc.

2. Numerical Readout. This type of readout is the measured value in units of the measurement being made. If you are measuring 0-45 volts DC, the number 24 on display indicates 24 volts.

3. Error Readout. This type of readout indicates that wrong test number was selected, transducer is not connected, or VTM is faulty.

(e) Flip Cards. The flip cards list the 2-digit test number system for selecting various tests. The cards also summarize test and operating instructions contained herein.

(f) Transducer Cable Connector J4. Connectors J2 and J3 connect VTM to any transducer in transducer kit. Operating power is supplied to transducer, and signals from transducers ar supplied to VTM through the cable. Connectors J2 and J3 are identical and can be interchanged with each other or used in combination.

(g) Test Probe Cable Connector J4. Connector J4 connects test leads to VTM when doing manual voltage and resistance tests.

https://truckmanualshub.com/

2-20. STE/ICE DESCRIPTION AND OPERATION (Contd)

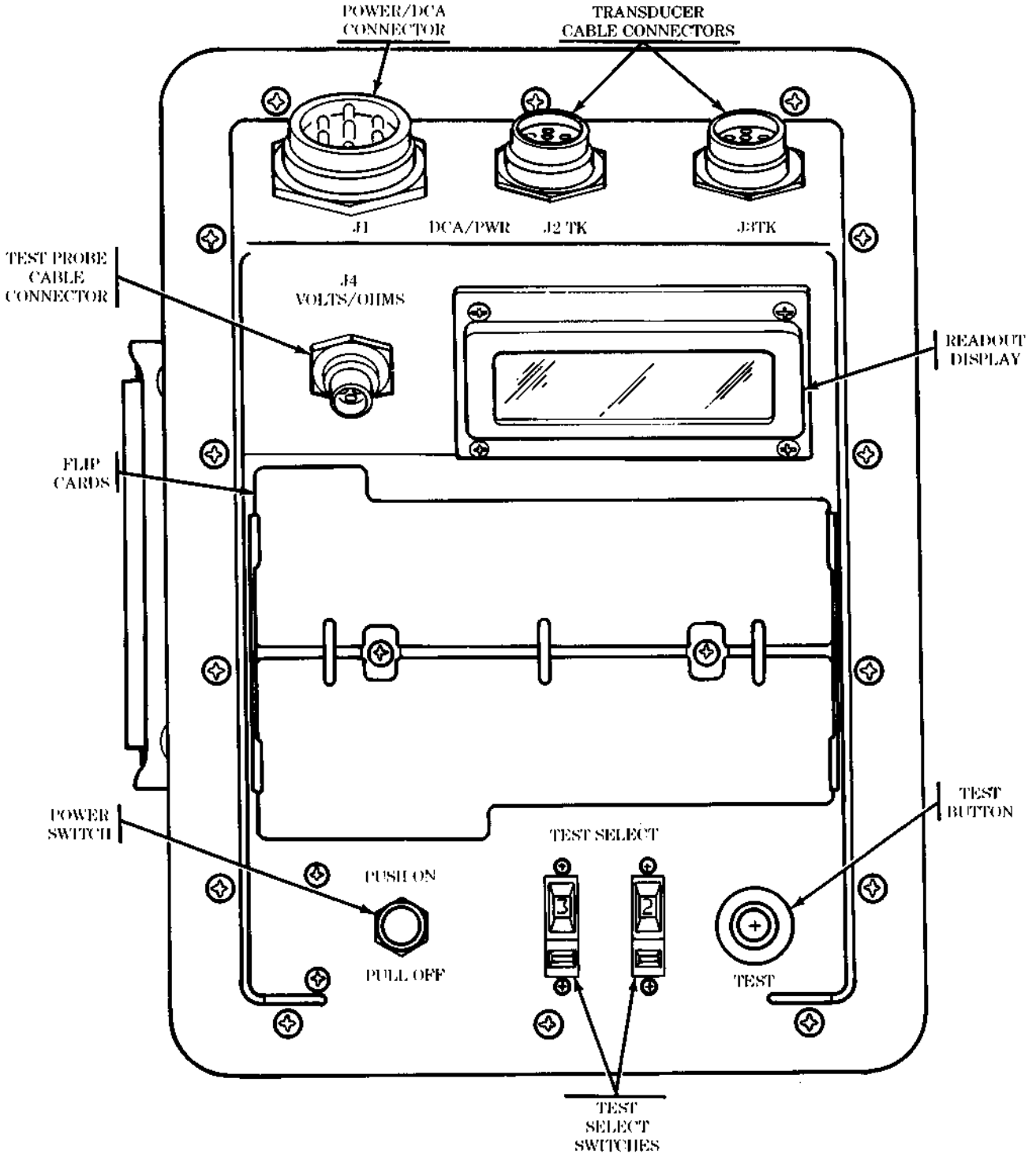

VTM CONTROLS AND READOUT DISPLAY

https://truckmanualshub.com/

2-20. STE/ICE DESCRIPTION AND OPERATION (Contd)

(3) Readouts. The following paragraphs describe different types of readouts that can occur during testing.

(a) Status Readout. A status readout keeps technician informed of what is happening. For example, .8.8.8.8 is displayed each time the power switch is pushed on. It means that power is applied, and that all elements of the display are operative. It changes to four dashes 1.5 seconds later, indicating that the VTM is ready to be used for testing. The status readout displays are described in table 2-5.

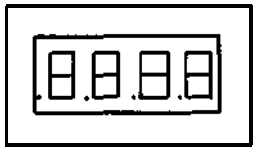

(b) Prompting Message. A prompting message is a technician action message. It is a signal for you to do something such as crank engine. For example, UEH tells you to enter the vehicle identification number into VTM. After technical action is performed, test will automatically continue. Prompting messages are listed in table 2-6.

(c) Numerical Readout. A numerical readout is the measured value in units of measurement being made. For example, if you are measuring 0-45 volts DC, 12.7 is volts DC. If you are measuring 0-25 psig pressure, 12.7 is psig. Units for each test are listed on the flip card.

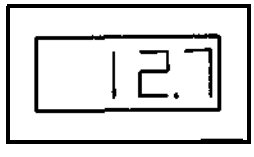

(d) Error Readout. E001 is a typical error readout. There are 17 different error readouts. All error readouts start with E. An error readout is a warning that you forgot to connect the transducer, selected a wrong test number, failed to start engine, etc. All error messages mean you must correct problem before continuing testing. Error messages are described in table 2-7. If an error message does not go away after corrective action, refer to TM 9-4910-571-12&P.

(e) Confidence Error Readouts. C004 is a typical error readout resulting from detection of a fault VTM during confidence test.

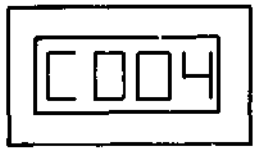

https://truckmanualshub.com/

2-20. STE/ICE DESCRIPTION AND OPERATION (Contd)

Table 2-5. Status Readouts.

VTM Readout	Interpretation
.8.8.8.8	A readout of .8.8.8.8 appears for 1 to 2 seconds each time power is applied to VTM. It means that there is power to the VTM, and all elements of readout display are operative. A readout of four dashes indicates the following (1) After power is turned on, it signifies that VTM is ready for testing. (2) During a compression unbalance test, it signifies testing is in progress. (3) During battery condition test, it signifies battery may be in discharged state.
.9.9.9.9	A readout of .9.9.9.9 indicates that VTM is reading a test value beyond the range of its measurement capability. Either (1) the wrong test number is selected for parameter being measured; (2) there is fault in vehicle; or (3) during battery condition test, it signifies bad connections, discharged, or bad batteries.
PASS FAIL	PASS or FAIL readout is the result of a test that checks the condition of a component being measured. A PASS/FAIL readout means component either passes the test or fails the test.

Table 2-6. Prompting Messages.

VTM Readout	Interpretation
UEH	Signal to technician to enter vehicle identification number (VID) on TEST SELECT switches. Vehicle ID numbers are found under TEST DATA on flip cards, on vehicle test card, and in appendix.
GO	Signal to technician to crank engine in compression balance or first peak tests. During battery condition test, indicates a weak battery in series pair of batteries being tested.
CIP	Signal to technician to apply full throttle in a C1 power test.
OFF	Signal to technician to stop cranking in compression balance test.
CAL	Signal to technician to release the TEST button during an offset test.
66	Numbers are used for prompting messages in several tests. They are as follows: in confidence, test 66 signals the technician to dial in"99", in CI acceleration/deceleration power test No. 12, the first numerical readout signals the technician to shut off fuel.

https://truckmanualshub.com/

2-20. STE/ICE DESCRIPTION AND OPERATION (Contd)

Table 2-7. Error Readouts.

VTM Readout	Interpretation
E000	Occurs if you request VTM for information it does not have. For example, if you request vehicle ID and it has not yet been entered.
E001	Indicates that a non-existent test number has been dialed into TEST SELECT switches.
E002	Indicates that required transducer is not connected.
E004	Indicates that a vehicle identification number or number of cylinders information has not been entered.
E005	Indicates that transducer offset test was not performed.
E007*	Indicates a conflict between vehicle identification number (VID) dialed in and the number of cylinders dialed in. It may occur in response to either VID entry or number-of-cylinders entry.
E008	Indicates VTM is not receiving required voltage signal for test selected. This error code is related only to starter and compression balance tests.
E009	Indicates that engine is not running at start of test.
E010*	Indicates that wrong vehicle identification number has been entered.
E011	Indicates that throttle control was operated incorrectly during power test, taking too much time to either accelerate or decelerate.
E012	Indicates that CI pulse tachometer is missing.
E013	Indicates bad data were taken for test in progress. Repeat test one (1) time.
E014*	Indicates that a wrong number of cylinders was dialed into VTM.
E015*	Indicates that number of cylinders dialed into VTM in DCA mode conflicts with number of cylinders in vehicle. Applies to SI vehicles only.
E017	Indicates that engine is not running, or that ignition adapter is broken or not properly connected.
E018	Indicates that an engine rpm or AC frequency test was terminated automatically to protect VTM. Termination is only after several minutes of no-signal operation. Most likely VTM was left on vehicle and engine stalled.

* Different STE/ICE vehicle connectors have different DCA numbers. This error message has a special meaning if you are connected to DCA number 13 and message is displayed in response to a CYL or UEH entry. In these cases, you may continue testing, but message is a warning that tests using CYL and UEH information are normally performed with VTM connected to a different connector in the vehicle. A different connector will have a different DCA number. You can find out what DCA number you are connected to by entering test 62.

https://truckmanualshub.com/

2-20. STE/ICE DESCRIPTION AND OPERATION (Contd)

d. Cable Assemblies.

(1) General. Cable assemblies are referred to by cable number and by a name which describes how cable is used. If necessary, two transducer cables (W4) can be joined with adapter supplied in the transducer kit to make one long cable.

(2) Installation. When cables are connected, the large key on cable connector mates with a keyway on transducer connector or VTM connector for proper installation. If you experience any difficulty during testing and suspect that a cable is bad, refer to TM 9-4910-571-12&P for checking cable continuity.

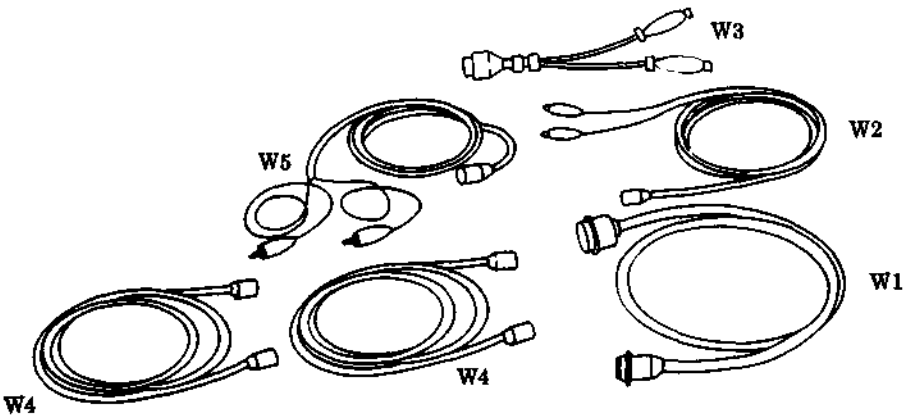

CABLE ASSEMBLIES

e. Transducer Kit (TK).

(1) General. The transducer kit contains a pulse tachometer transducer, a pressure and vacuum transducer, and necessary adapters (bushing, plugs, tees, etc.). Also included in transducer kit is a current probe for measuring current and a test probe cable for measuring voltage and resistance.

All fittings do not have part number markings. The legend will help to identify items.

Before installing any transducer kit item on vehicle, be sure to clean the mounting surfaces. This is particularly important if you are going to open fuel lines or tap into manifolds. Dirt particles entering engine can cause damage to both engine and transducer kit item.

The transducers should be kept clean, free of dirt and grease, and handled with reasonable care.

https://truckmanualshub.com/

2-20. STE/ICE DESCRIPTION AND OPERATION (Contd)

(2) Pressure Transducers. The pressure transducers have a small breather hole on the side of the housing which should be kept unplugged. Do not use high pressure shop air to clean transducers.

(3) Pulse Tachometer. Ensure that slotted hole in engine tachometer drive shaft is clear and not hard packed with lubricant before installing pulse tachometer.

(4) Threaded Adapters. Observe threaded fittings carefully to avoid engaging straight threads with pipe threads.

Each measuring device (transducer) in transducer kit has its own identification resistor. The VTM uses this identification resistor to check that correct transducer is connected for measurement being made. If the correct transducer is not connected, error code E002 will be displayed.

2-21. VEHICLE TESTING

a. General. To troubleshoot a vehicle problem, the technician can use STE/ICE (vehicle test meter and transducers) and vehicle test card.

b. Offset Tests. STE/ICE VTM performs a test by setting TEST SELECT switches to test number and pressing TEST button. For some tests, an offset test is required before test itself can be performed. This is done by selecting number of desired test and holding TEST button down for several seconds.

The offset test voids characteristic differences in VTM, test leads, and transducers. It “zeros” meter. Once offset is performed, VTM automatically corrects for offset before displaying measured values. Displayed offset value should be checked against limits on vehicle test card. If displayed value is outside these limits, either transducer or test cable is faulty and must be replaced. This is another form of self-test. The offset is performed when each transducer is connected. All tests requiring offset are identified by an asterisk (*) on flip cards and by OFFSET LIMITS on vehicle test cards. The offset test is performed with test probe cable or transducer connected to VTM. Care should be taken to see that no stimulus is applied to transducer. Test probe cable leads should be shorted together. To perform an offset test, dial test number into TEST SELECT switches. Press and hold TEST button until prompting message CAL appears on display. In a few seconds after release of TEST button, a number will appear. This is a measured offset value associated with test probe cable or transducer and cable.

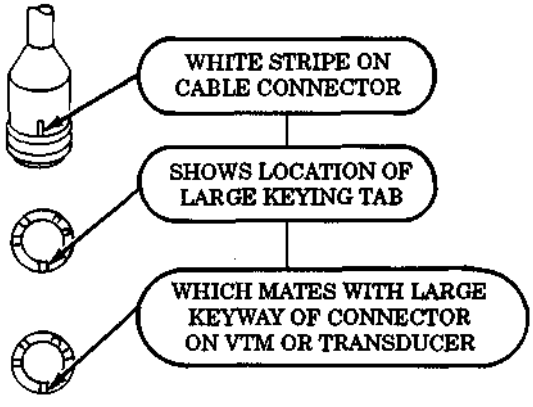

CONNECTOR KEY LOCATION

https://truckmanualshub.com/

2-21. VEHICLE TESTING (Contd)

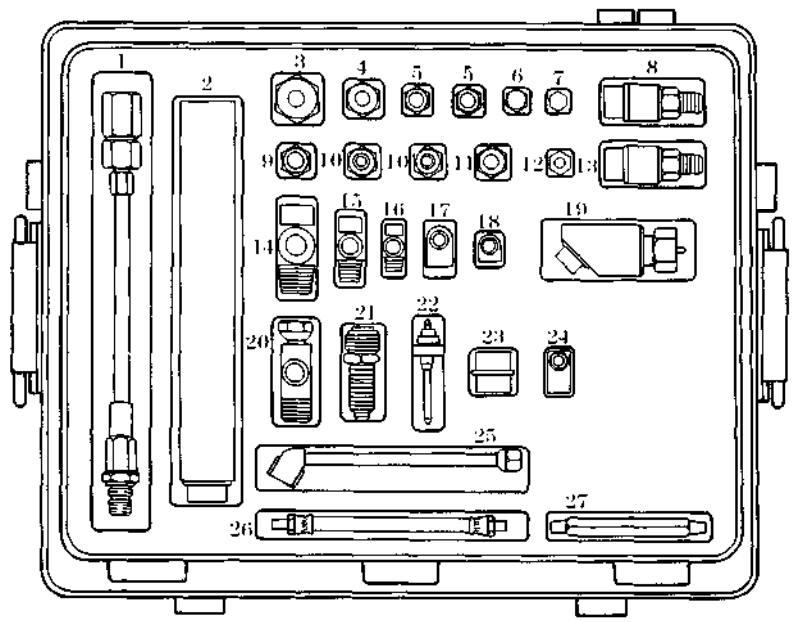

Transducer Kit.

ITEM NO.	TK NO.	PART NO.	QTY	ITEM
1	10	11669227	1	Hose and fitting assy (spark plug adapter)
2	11	12258878	1	Current probe
3	12	12258853-1	1	Pipe thread reducer, 3/4 MPT to 1/4 FPT
4	13	12258853-3	1	Pipe thread reducer, 1/2 MPT to 1/4 FPT
5	14	12258853-2	2	Pipe thread reducer, 3/8 MPT to 1/4 FPT
6	15	444620	1	Hex head plug, 1/4 MPT
7	16	5327970	1	Hex head plug, 1/8 MPT
8	17	12258876	1	Pressure transducer, 0-1000 psig
9	21	12258881	1	Snubber
10	20	3204X2	2	Adapter, 1/8 MPT to 1/4 FPT
11	19	3304X2	1	Coupling reducer, 1/8 FPT to 1/4 FPT
12	18	234X5	1	Male connector, 5/16 tube to 1/4 MPT
13	22	12258877	1	Pressure transducer, -30 in. Hg to 25 psig
14	23	444152	1	Street tee, 1/2 pipe thread
15	24	3750X4	1	Street tee, 1/4 pipe thread
16	25	547002	1	Street tee, 1/8 pipe thread
17	26	12258879-2	1	Street elbow, 1/4 pipe thread
18	27	12258879-1	1	Street elbow, 1/8 pipe thread
19	34	12258875	1	Pulse tachometer
20	32	12258880	1	Fuel line adapter
21	31	MS53099-2	1	Tachometer drive adapter
22	30	7540877	1	Ignition adapter
23	29	MS3119E14-19	1	Adapter (connector-to-connector)
24	28	12258762	1	Tee, inverted flare
25	33	8840543	1	Air chuck
26	35	11669236	1	Hose assembly, 1/8 MPT
27	36	12258852	1	Pipe nipple, 1/8 MPT

https://truckmanualshub.com/

2-21. VEHICLE TESTING (Contd)

c. Control Tests. These tests are used to change (or control) the way a vehicle test is displayed, or the way it is run. There are five (5) control tests:

01 Interleave (displays RPM with next test).
02 Display minimum value for next test.
03 Display maximum value for next test.
04 Display peak-to-peak value for next test.
05 Initiate full power simulation.

Control tests 01, 02, 03, and 04 specify action to be taken by the next test only. A subsequent test will reset the control.

(1) Interleave (Test 01). This test alternately measures engine speed and a second parameter such as fuel pressure or alternator voltage. To initiate interleave, dial 01 into TEST SELECT switches and press and release TEST button. The prompting message PASS will signal the technician to dial in second test number and again press and release TEST button.

(2) Minimum Value (Test 02). This test displays minimum value measured during a test. To initiate a minimum value display, dial 02 into TEST SELECT switches and press and release TEST button. The prompting message PASS will signal technician to dial in desired test number and again press and release TEST button. The minimum value is displayed and updated whenever a lower minimum value is measured. Entering 02 and test number again will reset process and a new minimum value will be displayed.

(3) Maximum Value (Test 03). This test displays maximum value measured during a test. To initiate a maximum value display, dial 03 into TEST SELECT switches and press and release TEST button. The prompting message PASS will signal technician to dial in desired test number and again press and release TEST button. The maximum value is displayed and updated whenever a higher maximum value is measured. Entering 03 and test number again will reset process and new maximum value will be displayed.

(4) Peak-to-Peak Value (Test 04). This test displays peak-to-peak value of dwell (test 16), alt/gen output volts (test 82), 45-volts DC (test 89), 1500 amps DC (test 90), and battery volts (test 67). Electrical peak-to-peak is for measuring dwell variation. To start peak-to-peak measurement, dial 04 into TEST SELECT switches and press TEST button. The prompting message PASS will signal operator to dial in one of five test numbers (16, 82, 89, 90, 67) and again press TEST button.

(5) Full Power Simulation (Test 05). This test lets you test SI engines under full power operating conditions. Test 05 differs from the previous four control tests in several ways. First, it must be preceded by a number-of-cylinders entry (test 58) or VID entry (test 60). After number of cylinders or VID has been entered, and engine is warm and idling, 05 is dialed into TEST SELECT switches, and TEST button is pressed. The prompting message SIP will signal operator to press accelerator to floor. The VTM will monitor engine speed during acceleration, and at approximately 3500 rpm, VTM will begin full power simulation. Simulation will continue until operator releases accelerator. PASS message is displayed when simulation starts. A measurement can now be made during power simulation by dialing desired test number and pressing TEST button. New test and control functions can be selected until accelerator is released. The 05 control feature provides a more accurate indication of engine performance than does testing under unloaded conditions.

https://truckmanualshub.com/

2-21. VEHICLE TESTING (Contd)

Table 2-8. CI Engine Go-Chain Index, TK Mode.

GO. TEST NUMBER	TEST TITLE	PAGE NUMBER	TABLE NUMBER
G01	VTM Connections and Checkout	2-160	2-10
G02	First Peak Test	2-165	2-10
G03	Pulse Tachometer Installation	2-167	2-10
G04	Engine Start - Lubrication Check	2-168	2-10
G05	Charging Circuit and Battery Voltage Test	2-171	2-10
G06	Engine Warmup/Coolant Check/Oil Pressure Test	2-173	2-10
G07	Governor Check/Power Test	2-175	2-10
G08	Idle Speed/Governor Check	2-177	2-10
G09	Compression Unbalance Test	2-178	2-10

Table 2-9. CI Engine No-Go Chain Index, TK Mode.

NO-GO. TEST NUMBER	TEST TITLE	PAGE NUMBER	TABLE NUMBER
NG05	Low Oil Pressure Check	2-180	2-11
NG20	No Crank - No Start	2-182	2-11
NG30	Engine Crank - No Start	2-183	2-11
NG31	Gage Test	2-188	2-11
NG50	Charging Circuit Tests	2-190	2-11
NG80	Starter Circuit Tests	2-199	2-11
NG81	Battery Tests	2-205	2-11
NG90	Governor/Power Test Fault Isolation	2-209	2-11
NG120	Battery Compartment - Positive Side Voltage Drop Checks	2-215	2-11
NG121	Battery Compartment - Negative Side Voltage Drop Checks	2-216	2-11
NG130	Engine Tightness Test	2-217	2-11

NOTE

Test G01, VTM connections and checkout, must be performed before running any other STE/ICE test.

https://truckmanualshub.com/

Table 2-10. STE/ICE Go-Chain Tests

NOTE

Test G01, VTM Connections and Checkout, must be performed before running any other STE/ICE test.

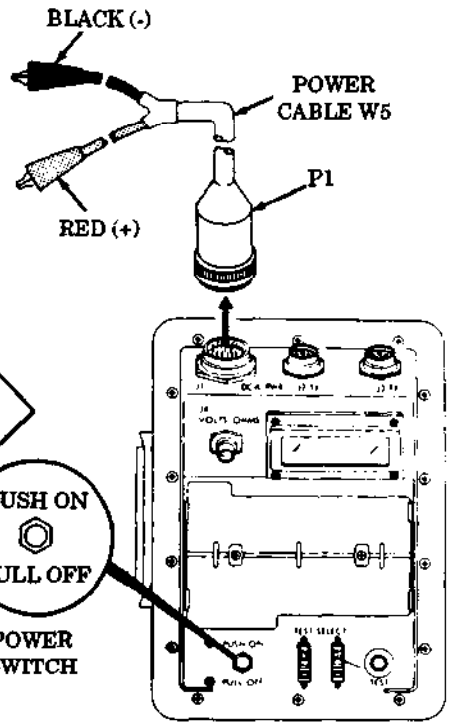

G01 VTM CONNECTIONS AND CHECKOUT

TK MODE

CAUTION

Do not connect or disconnect VTM while vehicle engine is running.

CAUTION

Connect P1 of power cable W5 to J1 on VTM before connecting clip leads to battery.

1 **CONNECT BATTERY POWER TO VTM:**

- PULL OFF the power switch on VTM.
- Connect P1 of power cable W5 to J1 on VTM.
- Connect red clip lead of cable W5 to positive terminal of vehicle battery.
- Connect black clip lead of cable W5 to negative terminal of vehicle battery.

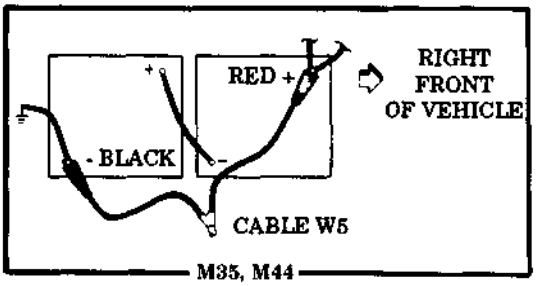

- Proceed to step 2.

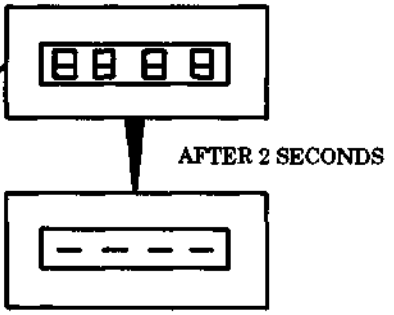

2 **POWER UP:**

- PUSH ON the power switch on VTM.
- Verifty that display indicates .8.8.8.8 for approximately 2 seconds and then changes to four dashes.

- Does VTM switch display .8.8.8.8 and then change to four dashes?

https://truckmanualshub.com/

Table 2-10. STE/ICE Go-Chain Tests (Contd).

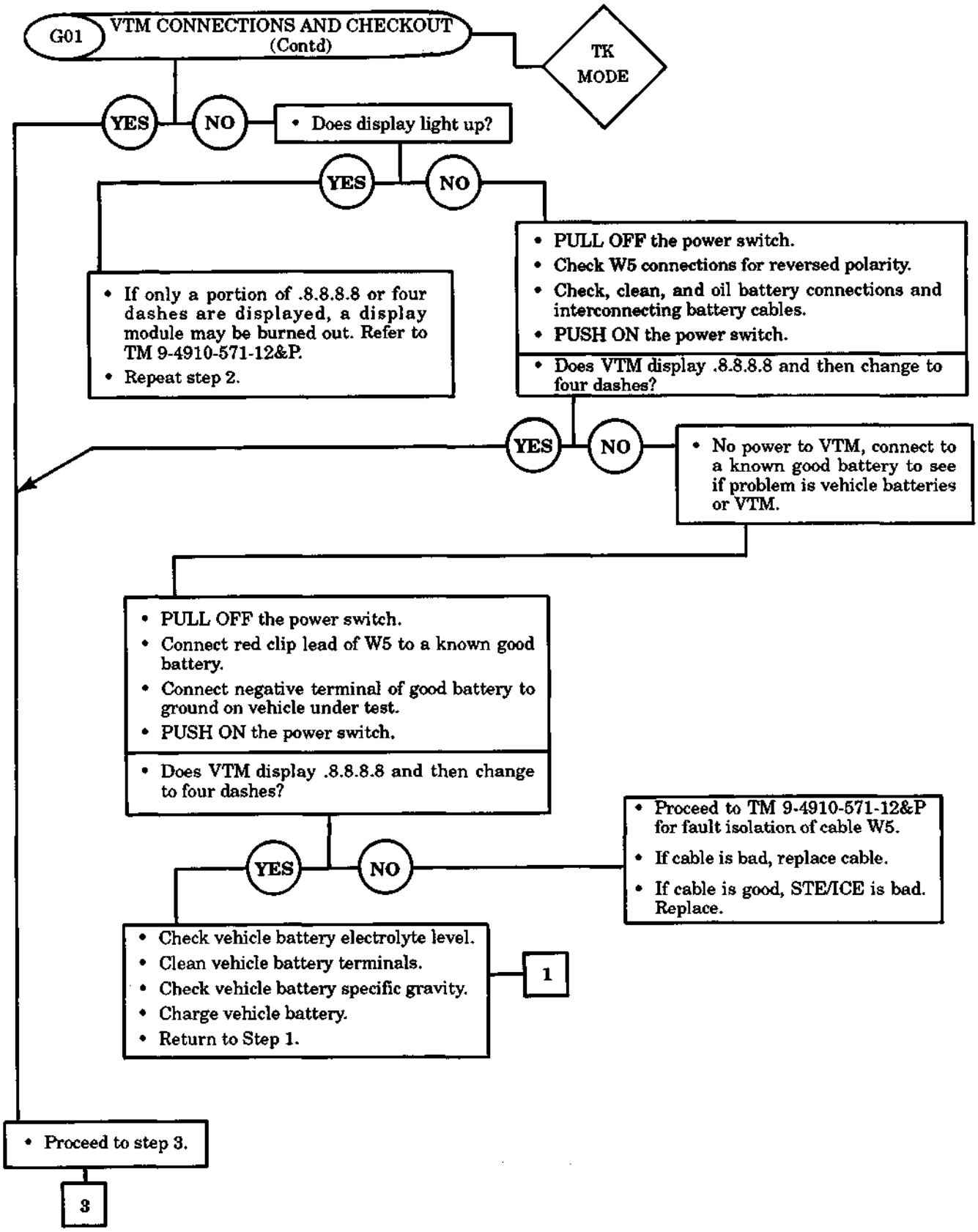

https://truckmanualshub.com/

Table 2-10. STE/ICE Go-Chain Tests (Contd).

G01 VTM CONNECTIONS AND CHECKOUT (Contd)

TK MODE

TEST NO.	TEST
66	CONFIDENCE TEST

3 RUN CONFIDENCE TEST:
- Dial 66 into TEST SELECT and press TEST.
- Wait for a readout of 66 on VTM.

- Does VTM display and hold 0066?

YES

NO

- PULL OFF power switch.
- Repeat steps 2 and 3 one time.

- Does VTM display and hold 0066?

YES

NO

- STE/ICE is bad. Replace.

- Dial 99 into TEST SELECT and press TEST.
- Look for this display:

1

2 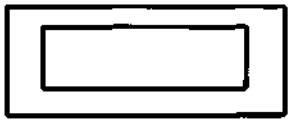 (Blank)

3

4 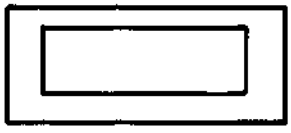 (Blank)

NOTE

At this point in test, several numbers will appear on display. What you are looking for is a display and hold of PASS.

https://truckmanualshub.com/

Table 2-10. STE/ICE Go-Chain Tests (Contd).

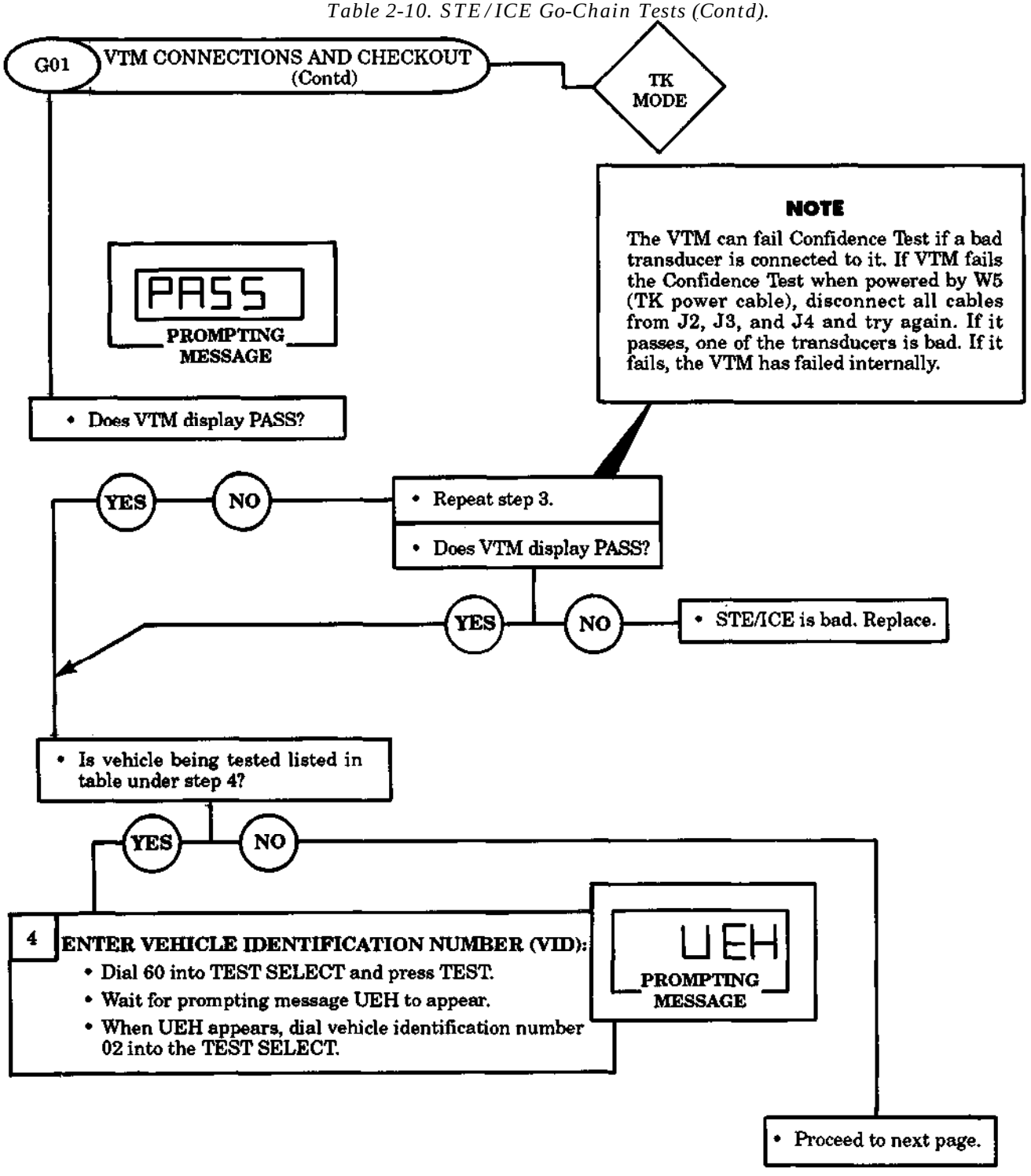

https://truckmanualshub.com/

Table 2-10. STE/ICE Go-Chain Tests (Contd).

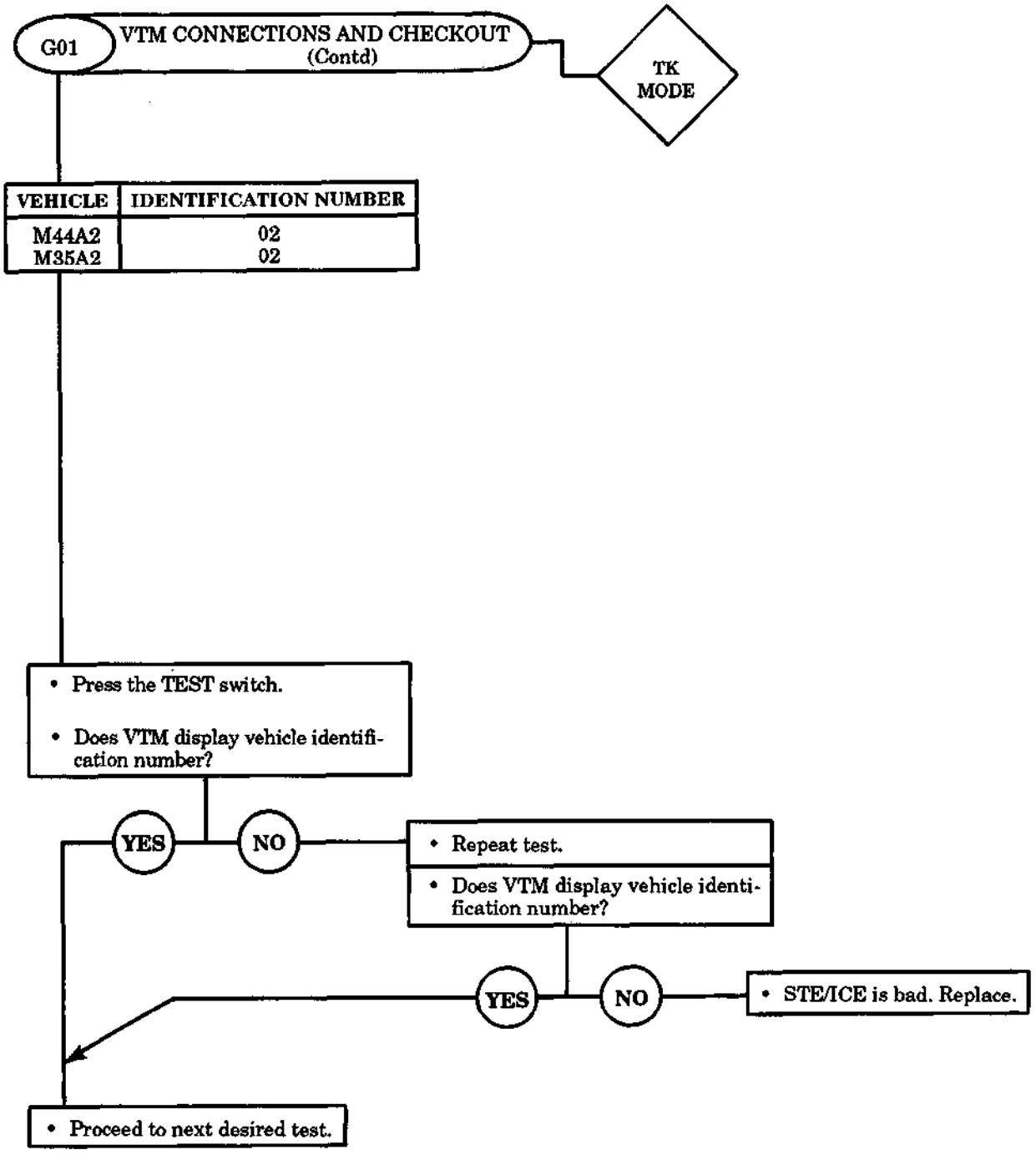

https://truckmanualshub.com/

Table 2-10. STE/ICE Go-Chain Tests (Contd).

NOTE

TEST G01, VTM Connections and Checkout, must be performed before running any other STE/ICE test.

G02 FIRST PEAK TEST — TK MODE

1 CONDITION CURRENT PROBE - DO OFFSET:

- Connect P1 of transducer cable W4 to J2 on VTM.
- Connect P2 of cable W4 to the connector on current probe.
- Clamp current probe around positive battery cable connected to starter.
- Point arrow on the probe toward starter.
- Crank engine for several cycles with fuel shut off.

NOTE

If engine does not crank, go to test NG20.

- Turn off all vehicle electrical power.
- Dial 72 into TEST SELECT.
- Press and hold TEST until CAL message appears on display.
- Release TEST.
- Wait for offset value to appear.

CAL

PROMPTING MESSAGE

- Is offset value within the limits of -225 to +225?

YES — NO

- Proceed to TM 9-4910-571-12&P offset fault isolation.

TEST NO.	TEST
72	STARTER CURRENT FIRST PEAK

2 MEASURE STARTER CURRENT - FIRST PEAK:

- Press TEST.
- Wait for prompting message GO to appear on the display.

GO

PROMPTING MESSAGE

OFF

- When GO appears, shut off fuel and depress starter switch until OFF or an error message is displayed.

NOTE

While cranking the engine with bad or discharged batteries, it is possible for the VTM to lose power and come on again after the cranking has stopped, displaying four dashes. If this ever occurs, immediately proceed to the Battery Tests, NG81.

https://truckmanualshub.com/

Table 2-10. STE/ICE Go-Chain Tests (Contd).

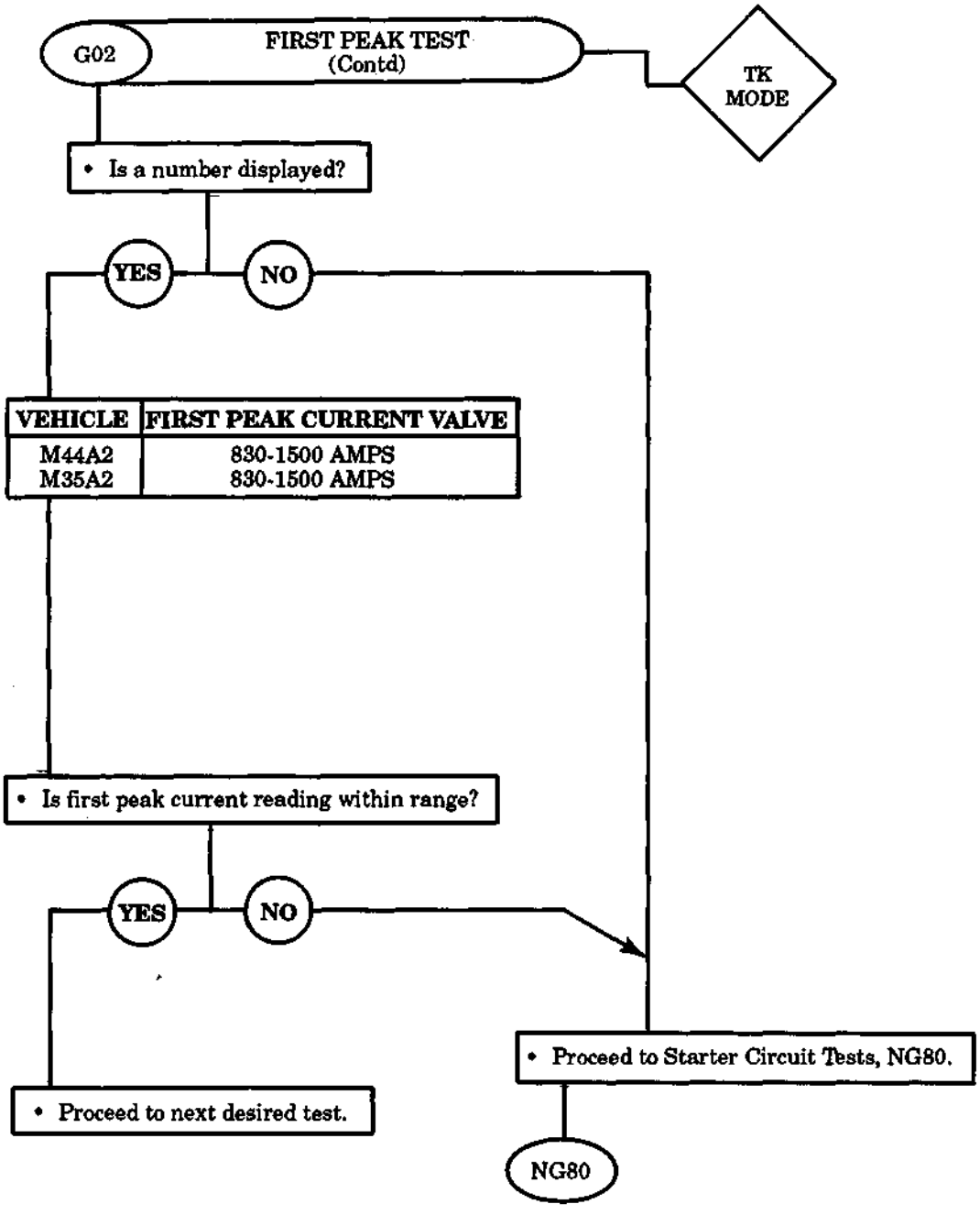

https://truckmanualshub.com/

Table 2-10. STE/ ICE Go-Chain Tests (Contd).

NOTE

Test G01, VTM Connections and Checkout, must be performed before running any other STE/ICE test.

G03 PULSE TACHOMETER INSTALLATION — TK MODE

WARNING

Turn vehicle engine off before installing pulse tachometer.

CAUTION

Clean all mounting surfaces before installing transducer to prevent entry of foreign substances that may damage engine or transducer.

1 **INSTALL PULSE TACHOMETER:**

- Disconnect tachometer cable in vehicle (para. 4-14).
- Install pulse tachometer, TK Item 34, in place of removed tachometer cable.

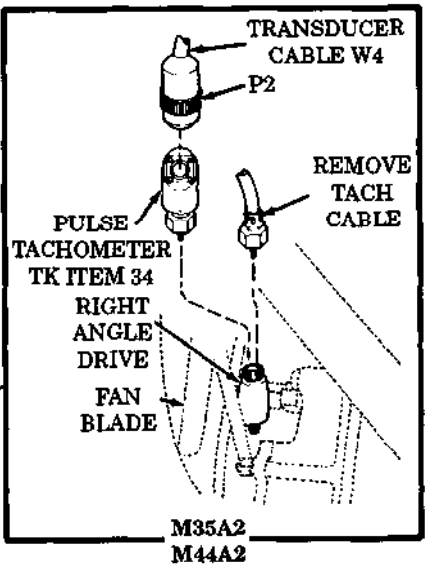

2 **MAKE CABLE CONNECTIONS:**

- Connect P1 of transducer cable W4 to J2 on the VTM.
- Connect P2 of transducer cable to connector on pulse tachometer.

CAUTION

Be sure cable W4 is clear of belts and fan blade.

- Proceed to next desired test.

https://truckmanualshub.com/

Table 2-10. STE/ICE No-Go Chain Tests (Contd).

NOTE

Test G01, VTM Connections and Checkout, must be performed before running any other STE/ICE test.

G04 ENGINE START - LUBRICATION CHECK

TK MODE

CAUTION

Check oil level before starting engine.

WARNING

Do not remove radiator cap when engine is hot. Wait until engine cools.

1 **CHECK ALL FLUID LEVELS:**

- Check oil level. Add oil if necessary.
- Remove radiator cap and check coolant level. Add coolant if necessary.
- Check battery electrolyte level. Add distilled water if necessary.

CAUTION

Ensure all hydraulic power switches are off. Disengage manual hydraulic levers if vehicle is so equipped. Damage could result to vehicle.

2 **START ENGINE:**

- Try to start engine.
- Does engine crank and start?

YES

NO

- Does engine crank?

YES

NO

- Turn off master switch.
- Proceed to No Crank - No Start Test, NG20.

NG20

- Proceed to Engine Crank - No Start Test, NG30.

NG30

3 **CHECK OIL PRESSURE GAGE:**

- Check oil pressure gage for minimum oil pressure noted in the table below.

https://truckmanualshub.com/

Table 2-10. STE/ICE Go-Chain Tests (Contd).

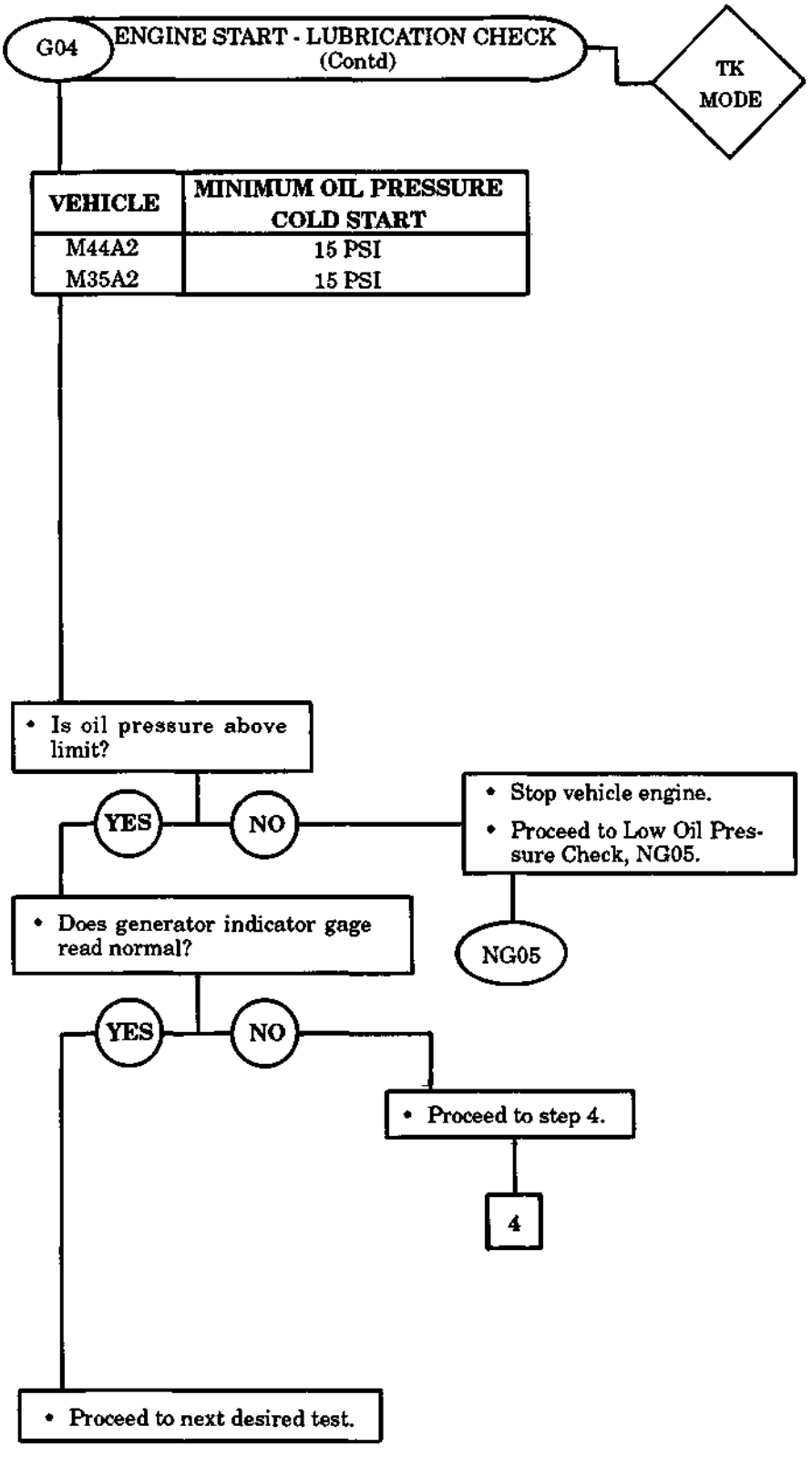

https://truckmanualshub.com/

Table 2-10. STE/ICE Go-Chain Tests (Contd).

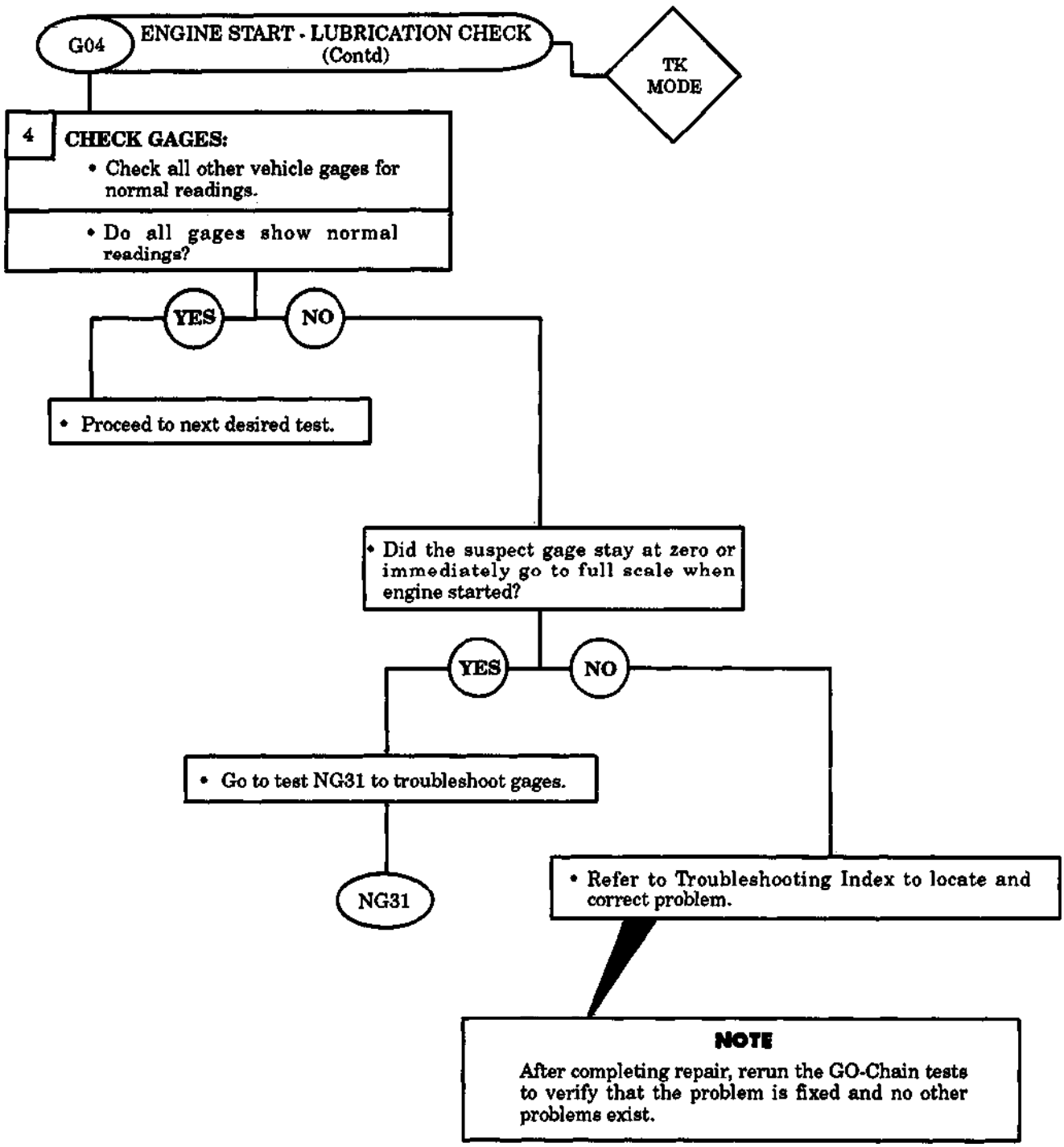

https://truckmanualshub.com/

Table 2-10. STE/ICE Go-Chain Tests (Contd).

NOTE

Test G01, VTM Connections and Checkout, must be performed before running any other STE/ICE test.

G05 CHARGING CIRCUIT AND BATTERY VOLTAGE TEST — TK MODE

1 SET ENGINE RPM:

- Run vehicle at 1000-1200 rpm.
- Turn vehicle headlights and/or accessories ON to load charging system.

TEST NO.	TEST
67	BATTERY VOLTAGE

2 MEASURE BATTERY VOLTAGE:

- Dial 67 into TEST SELECT and press TEST.
- Watch display and verify that battery voltage is within 26.5-29.5 volts.

- Is battery voltage within limits?

YES → Proceed to next page.

NO → Is battery voltage low?

YES → Battery voltage is low.

- Battery voltage is low.
- Allow vehicle to run for 5 minutes at fast idle and watch the display.
- Is the battery voltage within limits?

YES → Proceed to next page.

NO →

- Turn off headlights and accessories.
- Turn vehicle engine off.
- Proceed to Charging Circuit Test, NG50.

NG50

NO → Battery voltage is high.

- Battery voltage is high.
- Refer to Troubleshooting Index to troubleshoot regulator and wiring. If regulator is built into alternator, replace entire unit.

NOTE

After completing repair, rerun GO-Chain tests to verify that the problem is fixed and no other problems exist.

https://truckmanualshub.com/

Table 2-10. STE/ICE Go-Chain Tests (Contd).

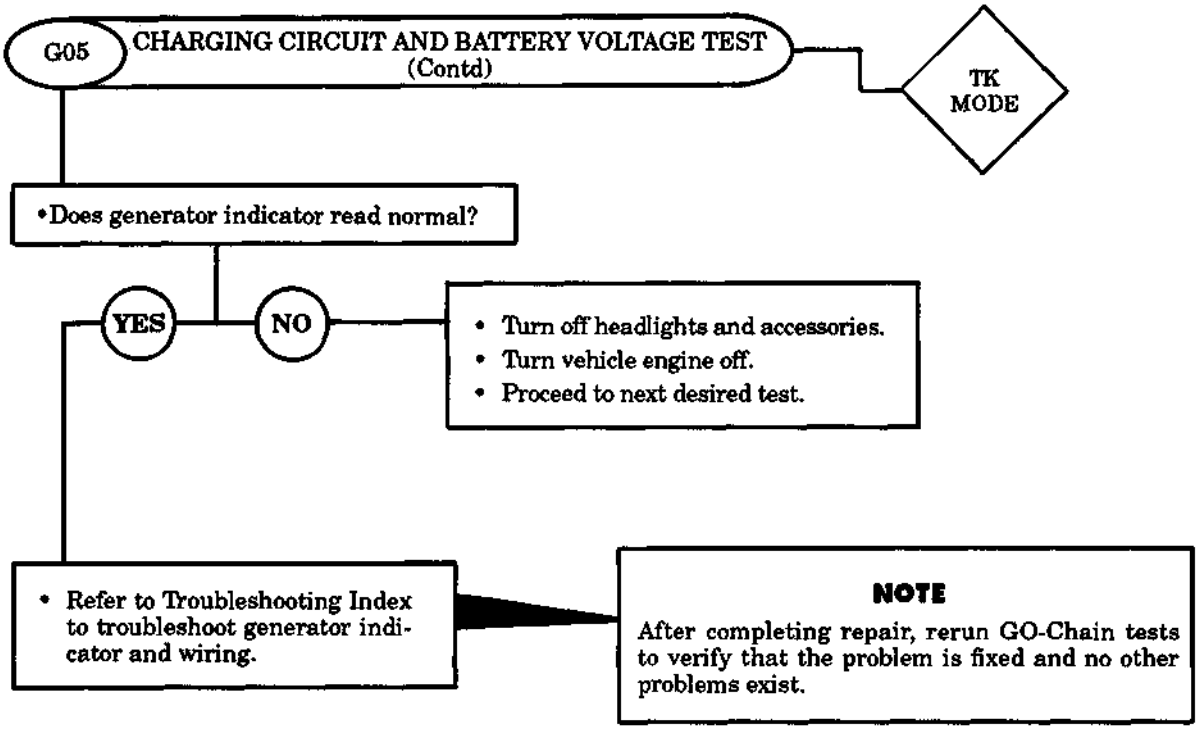

https://truckmanualshub.com/

Table 2-10. STE/ICE Go-Chain Tests (Contd).

NOTE

Test G01, VTM Connections and Checkout, must be performed before running any other STE/ICE test.

G06 ENGINE WARMUP/COOLANT CHECK/OIL PRESSURE TEST — TK MODE

1 CHECK FOR LEAKS AND COOLANT TEMPERATURE:

- Check vehicle for oil, fuel, and coolant leaks. Refer to appropriate section to repair any leaks.
- Warm up engine to normal operating temperature. Read vehicle temperature gage.

VEHICLE	NORMAL COOLANT TEMPERATURE
M44A2	140°-200°F
M35A2	140°-200°F

- Does temperature gage read within limits after a normal warmup period?

YES → Proceed to step 2. → 2

NO → Is temperature too high?

YES → Refer to Troubleshooting Index to troubleshoot engine cooling systems for high temperature. If no problems are found, go to Test NG31. → NG31

NO → Proceed to Gage Test, NG31. → NG31

NOTE

After completing repair, return to the GO-Chain tests to verify that the problem is fixed and no other problems exist.

https://truckmanualshub.com/

Table 2-10. STE/ICE Go-Chain Tests (Contd).

G06 ENGINE WARMUP/COOLANT CHECK/OIL PRESSURE TEST (Contd) — TK MODE

2 **CHECK OIL PRESSURE:**

- Dial 10 into TEST SELECT and press TEST.
- Increase engine RPM to that indicated below.
- Watch vehicle oil pressure gage.
- Verify that oil pressure is within limits in table below.

NOTE

If VTM does not display RPM, check:

Cables and connectors. Replace and check as needed.

Pulse tachometer. Replace as needed.

TEST NO.	TEST
10	ENGINE RPM

NORMAL OIL PRESSURE AND MAXIMUM RPM

50-60 PSI @ 2600 - 2850 RPM

NOTE

Speeds given are approximate. If exact speed cannot be reached, check oil pressure at closest possible speed.

- Is oil pressure within range?

YES — NO — • Proceed to Low Oil Pressure Check, test NG05. — NG05

- Proceed to next desired test.

https://truckmanualshub.com/

Table 2-10. STE/ICE Go-Chain Tests (Contd).

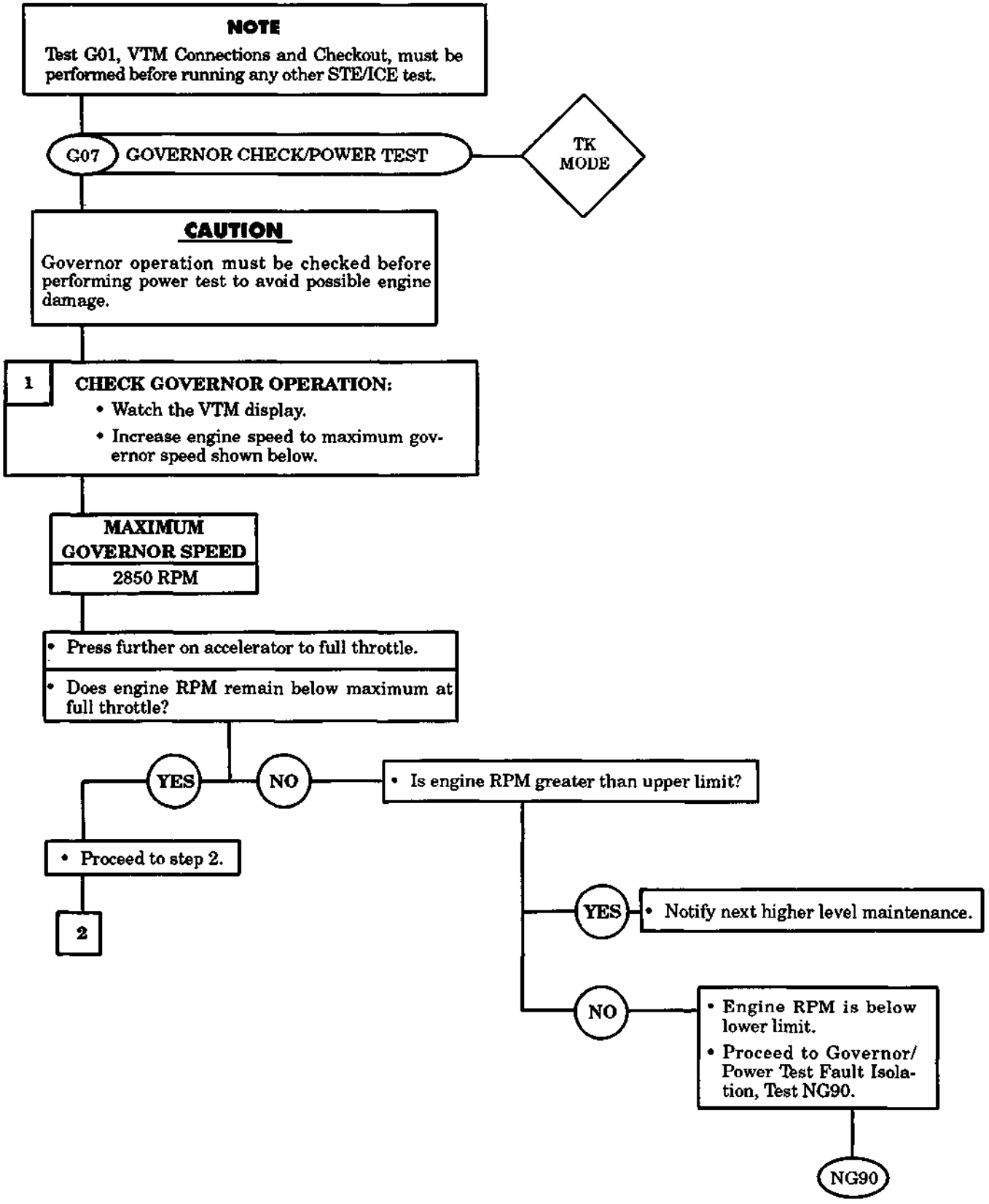

https://truckmanualshub.com/

Table 2-10. STE/ICE Go-Chain Tests (Contd).

G07 GOVERNOR CHECK/POWER TEST (Contd)

TK MODE

CAUTION

Do not perform power test if engine temperature is above normal operating temperature. However, the engine should be at operating temperature before performing the power test.

NOTE

The vehicle identification number of Test G01 must have been entered prior to the power test. This will prevent an error message (E004) and unsuccessful completion of the power test. If you do not have a vehicle ID number, but the number of cylinders was entered in G01, use Test 12 for power test instead of Test 13. When using Test 12, the first number to appear on the display is the signal to release the accelerator.

TEST NO.	TEST
12	POWER TEST (RPM/SEC)
13	POWER TEST (% POWER)

2 **PERFORM POWER TEST:**

- Dial 13 into TEST SELECT and press TEST.
- Wait for prompting message CIP to appear.
- When CIP appears, rapidly press down on accelerator and hold it to floor until VTM displays OFF.
- When OFF appears, release accelerator.
- A number representing percentage power will appear on VTM.

CIP

PROMPTING MESSAGE

OFF

- Is the percentage of power at least the minimum? (See chart below.)

% POWER - MINIMUM LIMIT FOR TEST			
VEHICLE	ALTITUDE		
	0 TO 2,000 FT.	2,000 TO 4,000 FT.	ABOVE 4,000 FT.
M35A2 (TURBO) LDT-465-1C	60%	50%	45%
ALL OTHER VEHICLES	75%	66%	60%

YES

NO

- Does vehicle have a fuel/water separator?

NO

YES

- Proceed to next desired test.

G08

- Service fuel/water separator (para. 12-39).
- Repeat power test.

NG90

- Proceed to Governor/ Power Test Fault Isolation, NG90.

- If power test still fails, proceed to Governor/Power Test Fault Isolation, NG90.

https://truckmanualshub.com/

Table 2-10. STE/ICE Go-Chain Tests (Contd).

NOTE

Test G01, VTM Connections and Checkout, must be performed before running any other STE/ICE test.

G08 IDLE SPEED/GOVERNOR CHECK — TK MODE

CHECK ENGINE AT IDLE SPEED:

- Dial 10 into TEST SELECT and press TEST.
- Start engine (TM 9-2320-361-20).
- Watch VTM readout display for about 10 seconds to verifty that idle speed remains within tolerance.

TEST NO.	TEST
10	ENGINE RPM (AVERAGE)

VEHICLE	IDLE SPEED
M44A2 M35A2	650-700 RPM 650-700 RPM
LDT-465-1C	800-850 RPM

- Is engine idle speed within limits?

YES → Proceed to next desired test.

NO → Adjust throttle control linkage (para. 3-33).

https://truckmanualshub.com/

Table 2-10. STE/ICE Go-Chain Tests (Contd).

NOTE

Test G01, VTM Connections and Checkout, must be performed before running any other STE/ICE test.

G09 COMPRESSION UNBALANCE TEST — TK MODE

CAUTION

Do not perform more than 2 compression unbalance tests in a row, or vehicle batteries may be discharged. Engine must be at normal operating temperature before performing compression unbalance test.

TEST NO.	TEST
14	COMPRESSION UNBALANCE

NOTE

The compression unbalance test takes approximately 15 seconds to run.

RUN COMPRESSION UNBALANCE TEST:

- Install pulse tachometer (TK item 34) with transducer cable W4 (see G03).
- Shut off fuel supply so that engine will not start.
- Dial 14 into TEST SELECT and press TEST.
- Wait for prompting message GO to appear.

- When GO appears, crank engine.
- Just after cranking, VTM display should change to four dashes indicating VTM is accepting data.
- Stop cranking when VTM displays OFF or E013.
- Wait for a number to be displayed.

Does VTM display a number?

GO

PROMPTING MESSAGE

OFF

YES → Proceed to next page.

NO → Does VTM display GO?

YES → Rerun compression unbalance test.
- If unbalance is still out of limits, notify next higher level maintenance.

NO → Does VTM display FAIL?

YES → Rerun compression unbalance test.
- If unbalance is still out of limits, notify next higher level maintenance.

NO → VTM displays E013. This may indicate discharged batteries or low cranking speed. Also, the operator may have stopped cranking during test. Correct problem and repeat test.

https://truckmanualshub.com/

Table 2-10. STE/ICE Go-Chain Tests (Contd).

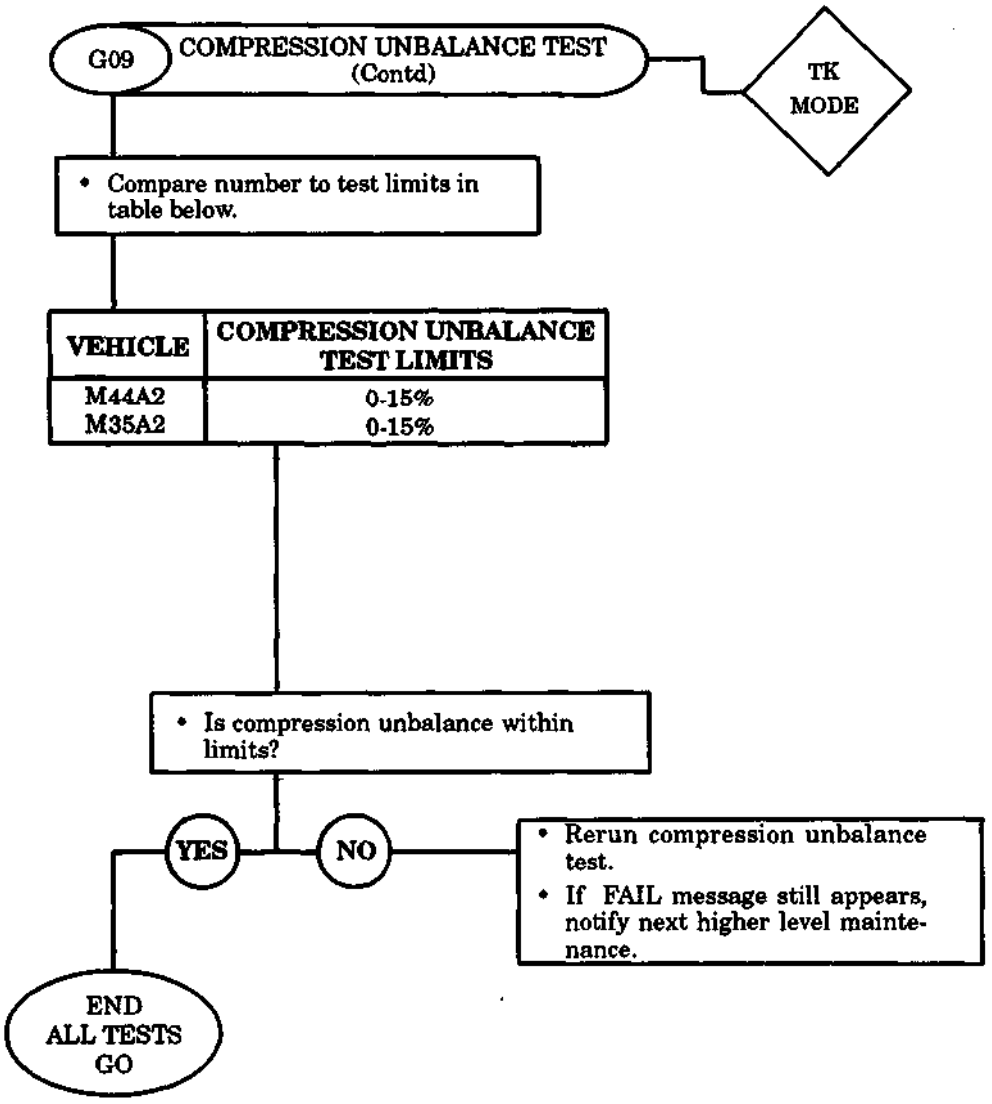

VEHICLE	COMPRESSION UNBALANCE TEST LIMITS
M44A2	0-15%
M35A2	0-15%

https://truckmanualshub.com/

Table 2-11. STE/ICE No-Go Chain Tests

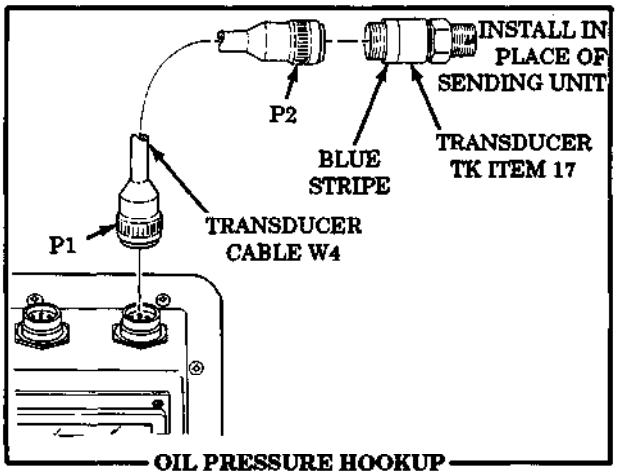

OIL PRESSURE HOOKUP

NOTE

Test G01, VTM Connections and Checkout, must be performed before running any other STE/ICE test.

NG05 LOW OIL PRESSURE CHECK — TK MODE

1 INSTALL TRANSDUCER - DO OFFSET

- Stop vehicle engine.
- Remove oil pressure sending unit (para. 4-23).
- Install pressure transducer, TK Item 17 (blue stripe), in place of sending unit on engine.
- Connect P1 of transducer cable W4 to J2 on VTM.
- Connect P2 of transducer cable to connector on pressure transducer.
- Install pulse tachometer.
- Connect P2 of W4 cable to VTM J3.
- Connect P1 of W4 cable to pulse tachometer.

TEST NO.	TEST
01	INTERLEAVE
50	0-1000 PSIG PRESSURE

- Dial 50 into TEST SELECT.
- Press and hold TEST until CAL message appears on display.
- Release TEST.
- Wait for offset value to appear on display.
- Is offset value within limits of -150 to +150?

CAL

PROMPTING MESSAGE

YES — NO

- Proceed to TM 9-4910-571-12&P for offset fault isolation.

- Proceed to step 2. — 2

https://truckmanualshub.com/

Table 2-11. STE/ICE No-Go Chain Tests (Contd).

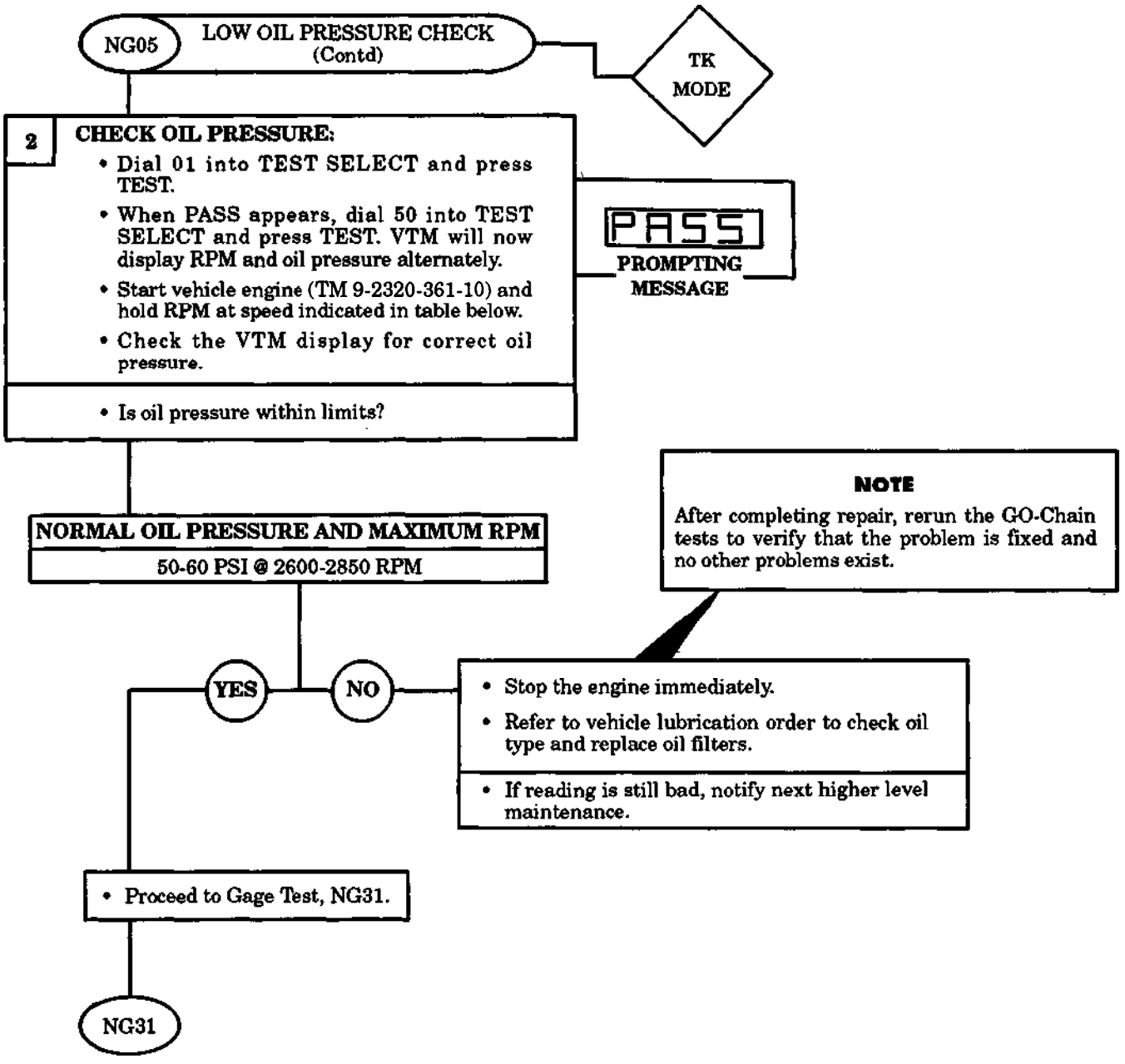

https://truckmanualshub.com/

Table 2-11. STE/ICE No-Go Chain Tests (Contd).

NOTE

Test G01, VTM Connections and Checkout, must be performed before running any other STE/ICE test.

NG20 NO CRANK - NO START

TK MODE

1 **TRY TO CRANK ENGINE:**

- Set vehicle controls to crank engine.
- Depress starter switch and listen to starter motor.

- Does starter motor sound like it is running overspeed?

YES

- Proceed to step 2.

NO

- Sound is buzz, hum, click, etc., or there is no sound. Proceed to Starter Circuit Tests, NG80.

NG80

2 **CHECK TEETH ON FLYWHEEL:**

- Remove starter motor (para. 4-7).
- Check for missing and/or damaged teeth on flywheel.

- Are all teeth good?

NO

Notify supervisor.

YES

- Replace starter motor or starter solenoid (para. 4-7).

NOTE

After completing repair, rerun GO-Chain tests to verify that the problem is fixed and no other problems exist.

https://truckmanualshub.com/

Table 2-11. STE/ICE No-Go Chain Tests (Contd).

NOTE

Test G01, VTM Connections and Checkout, must be performed before running any other STE/ICE test.

NG30 ENGINE CRANK - NO START — TK MODE

1 CHECK CRANKING SPEED:

- Shut off fuel.
- Dial 10 into TEST SELECT and press TEST.
- Crank engine and watch readout display.
- Compare result with minimum cranking speed as listed in table below.

VEHICLE	MINIMUM CRANKING SPEED
M44A2	100 RPM
M35A2	100 RPM

TEST NO.	TEST
10	ENGINE RPM (AVERAGE)

- Is cranking speed OK?

YES

- Proceed to step 2.

2

NO

- Proceed to Starter Circuit Tests, NG80.

NG80

https://truckmanualshub.com/

Table 2-11. STE/ICE No-Go Chain Tests (Contd).

NG30 ENGINE CRANK - NO START (Contd)

TK MODE

2 CHECK FUEL SUPPLY:

- Verify that there is fuel in the tank.
- If fuel filters have been changed or fuel tank has been run dry, bleed air out of fuel system as necessary (para. 3-29).
- Drain any water from primary fuel filter. Continue to drain until fuel appears.
- Check for kinked, flattened, or broken fuel lines from tank to filters and engine. If equipped with quick disconnect fittings, check for blockage in fittings.
- Check fuel shutoff solenoid and circuitry, and emergency fuel shutoff.

CAUTION

Before opening fuel line, make sure area around fuel line is clean.

CAUTION

Operation of engine with red transducer installed could damage transducer. During this test be prepared to shut off fuel immediately if engine starts. Remove transducer before attempting to start engine.

- Proceed to step 3.

3

https://truckmanualshub.com/

Table 2-11. STE/ICE No-Go Chain Tests (Contd).

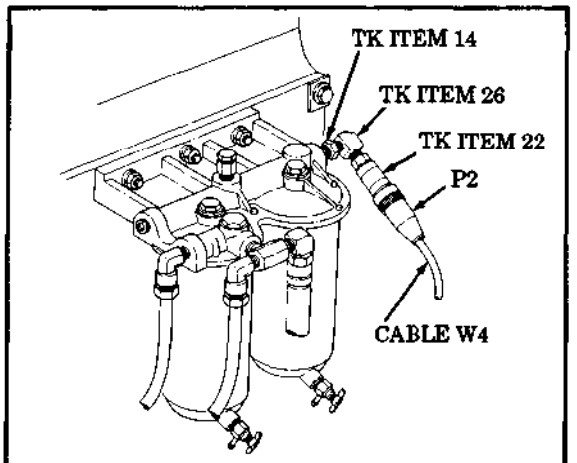

FUEL PRESSURE TRANSDUCER INSTALLATION STEP 3

NG30 ENGINE CRANK - NO START (Contd)

TK MODE

3 **INSTALL TRANSDUCER:**

- Install pressure transducer (red stripe) in outlet side of secondary fuel filter.
- Connect P1 of transducer cable W4 to J2 on VTM.
- Connect P2 of transducer cable to connector on transducer.

TEST NO.	TEST
49	0-25 PSIG PRESSURE

- Dial 49 into TEST SELECT and press TEST.
- Press and hold TEST until CAL message appears on display.
- Release TEST.
- Wait for offset value to appear on display.

CAL

PROMPTING MESSAGE

- Is offset value within range of -4 to +4?

YES — **NO**

- Proceed to TM 9-4910-571-12&P for offset fault isolation.

- Proceed to step 4.

4

https://truckmanualshub.com/

Table 2-11. STE/ICE No-Go Chain Tests (Contd).

NG30 ENGINE CRANK - NO START (Contd)

TK MODE

CAUTION

Remove transducer before attempting to start engine.

4 **MEASURE FUEL PRESSURE DURING ENGINE CRANK:**

- Turn on fuel and accessory switch.
- Press TEST.
- Fuel cutoff switch is out.
- Crank engine and watch readout display.
- Compare number on display with fuel pressure specification in table below.

NOTE

If ambient temperature is less than 40°F (4°C), fuel pressure may be less than 2 psi (13.8 kPa).

VEHICLE	MINIMUM FUEL PRESSURE
M44A2	2 PSI (13.8 kPa)
M35A2	2 PSI (13.8 kPa)

- Is fuel presssure greater than limit shown?

- Proceed to next page.

https://truckmanualshub.com/

Table 2-11. STE/ICE No-Go Chain Tests (Contd).

NG30 ENGINE CRANK - NO START (Contd)

TK MODE

YES — NO

- Remove red pressure transducer.
- Refer to Troubleshooting Index for proper operation of engine fuel pump.
- Check for restricted air intake.
- If engine does not start and weather is cold, refer to Troubleshooting Index to check cold start devices.
- If still no start, notify supervisor.

NOTE

After completing repair, rerun GO-Chain tests to verify that problem is fixed and no other problems exist.

5

- Move pressure transducer to inlet side of fuel filters.
- Turn on vehicle power and accessory switches.
- Crank engine and watch display.
- Is fuel pressure greater than limit shown in table?

YES — NO

- Refer to Troubleshooting Index to check electric fuel pump. Repair or replace as necessary.
- If operating in freezing temperatures, check fuel lines for ice blockage due to water accumulation or coagulation of fuel.
- If still not start, locate and repair blockage in fuel line (paras. 3-28 and 3-29).

- Replace fuel filters (para. 3-28 and 3-29).
- If still no start, return to Step 2.

NOTE

After completing repair, rerun GO-Chain tests to verify that problem is fixed and no other problems exist.

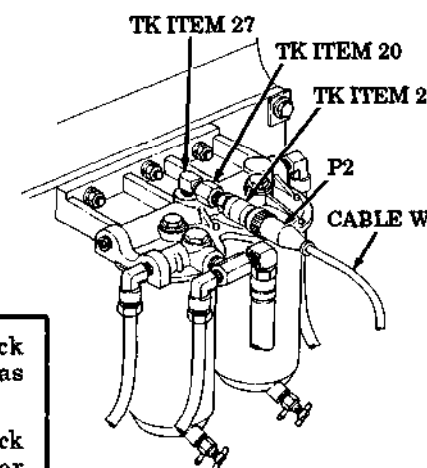

FUEL PRESSURE TRANSDUCER INSTALLATION STEP 5

https://truckmanualshub.com/

Table 2-11. STE/ICE No-Go Chain Tests (Contd).

NOTE

Test G01, VTM Connections and Checkout, must be performed before running any other STE/ICE test.

NG31 GAGE TEST — TK MODE

1 INSTALL TEST PROBE CABLE:

- Connect P1 of test probe cable W2 to J4 on VTM.
- Short red and black leads together.

2 DO TEST PROBE CABLE OFFSET:

- Dial 89 into TEST SELECT.
- Press and hold TEST until CAL message appears on display.
- Release TEST.
- Wait for offset value to appear on display.

CAL — PROMPTING MESSAGE

- Is offset value within limits of -6.8 to +6.8?

YES → • Proceed to Step 3. → 3

NO → • STE/ICE is bad. Replace.

TEST NO.	TEST
89	0-45 VOLTS DC

https://truckmanualshub.com/

Table 2-11. STE/ICE No-Go Chain Tests (Contd).

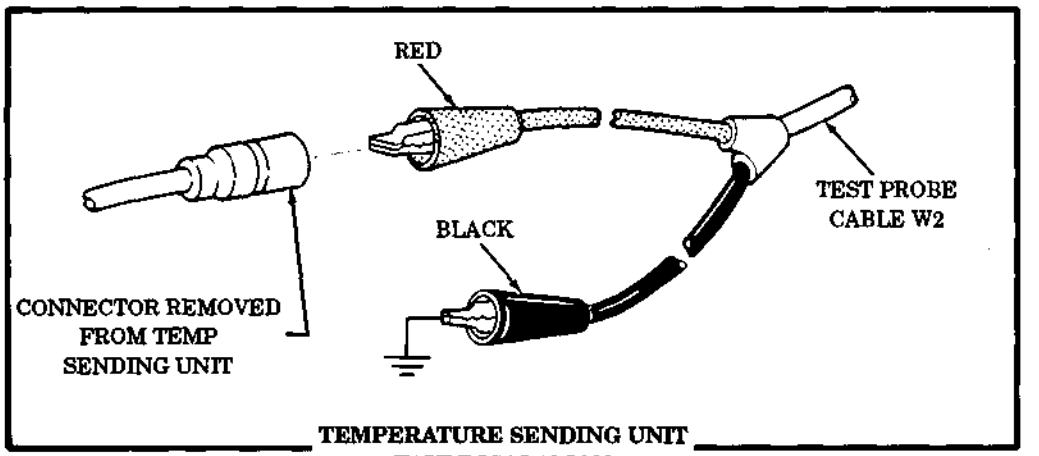

TEMPERATURE SENDING UNIT FAULT ISOLATION

NG31 — GAGE TEST (Contd) — TK MODE

3 ISOLATE FAULT TO SENDING UNIT OR GAGE:

- Remove wire from sending unit on vehicle.
- Connect red clip lead of W2 to wire removed from sending unit.
- Connect black clip lead to a good ground.
- Press TEST.
- Turn vehicle accessory switch ON.

- Does VTM indicate battery voltage?

YES

- Replace engine temperature sending unit (para. 4-24).

NO

- Refer to Troubleshooting Index to check and isolate fault to wiring harness or gage.

NOTE

After completing repair, rerun GO-Chain tests to verify that problem is fixed and no other problems exist.

https://truckmanualshub.com/

Table 2-11. STE/ICE No-Go Chain Tests (Contd).

NOTE

Test G01, VTM Connections and Checkout, must be performed before running any other STE/ICE test.

NG50 CHARGING CIRCUIT TESTS — TK MODE

WARNING

Turn vehicle engine off.

TEST NO.	TEST
03	MAX. VALUE DETECTED FOR NEXT TEST
90	0-1500 AMPS DC

1 INSTALL CURRENT PROBE:

- Install current probe around output wire on alternator/generator.
- Point arrow on probe away from alternator/generator.

NOTE

Current probe should be at least 10 inches from alternator/generator if possible.

2 DO CURRENT PROBE OFFSET:

- Turn off all vehicle electrical power.
- Dial 90 into TEST SELECT.
- Press and hold TEST until CAL message appears on display.
- Release TEST.
- Wait for offset value to appear on display.

CAL — PROMPTING MESSAGE

- Is offset value within limits of -225 to +225?

YES — NO

- Proceed to TM 9-4910-571-12&P for offset fault isolation.

- Proceed to step 3.

3

https://truckmanualshub.com/

Table 2-11. STE/ICE No-Go Chain Tests (Contd).

NG50 CHARGING CIRCUIT TESTS (Contd)

TK MODE

3 CHECK CHARGING SYSTEM OUTPUT CURRENT:

- Dial 03 into TEST SELECT and press TEST.
- When PASS is displayed, dial 90 into TEST SELECT and press TEST.
- Start vehicle engine (TM 9-2320-361-10), turn on vehicle lights and other electrical accessories.
- Set engine speed to fast idle (1200 rpm).
- Press TEST.
- Compare number on display with output current specification in table.

PASS

PROMPTING MESSAGE

VEHICLE	ALTERNATOR/GENERATOR OUTPUT CURRENT
M44A2	ALT. MIN. OF 30 AMPS/GEN. MIN. OF 15 AMPS

- Is output current low?

YES

- Shut engine and vehicle accessories off.
- Does engine have alternator/generator drive belts?
- Proceed to next page.

NO

- Output current is greater. Use current probe to locate accessory or wire drawing excessive current.
- If current is going into batteries, check electrolyte level and specific gravity.
- Refer to Troubleshooting Index to make necessary repairs.

NOTE

After completing repair, rerun Go-Chain tests to verify that problem is fixed and no other problems exist.

https://truckmanualshub.com/

Table 2-11. STE/ICE No-Go Chain Tests (Contd).

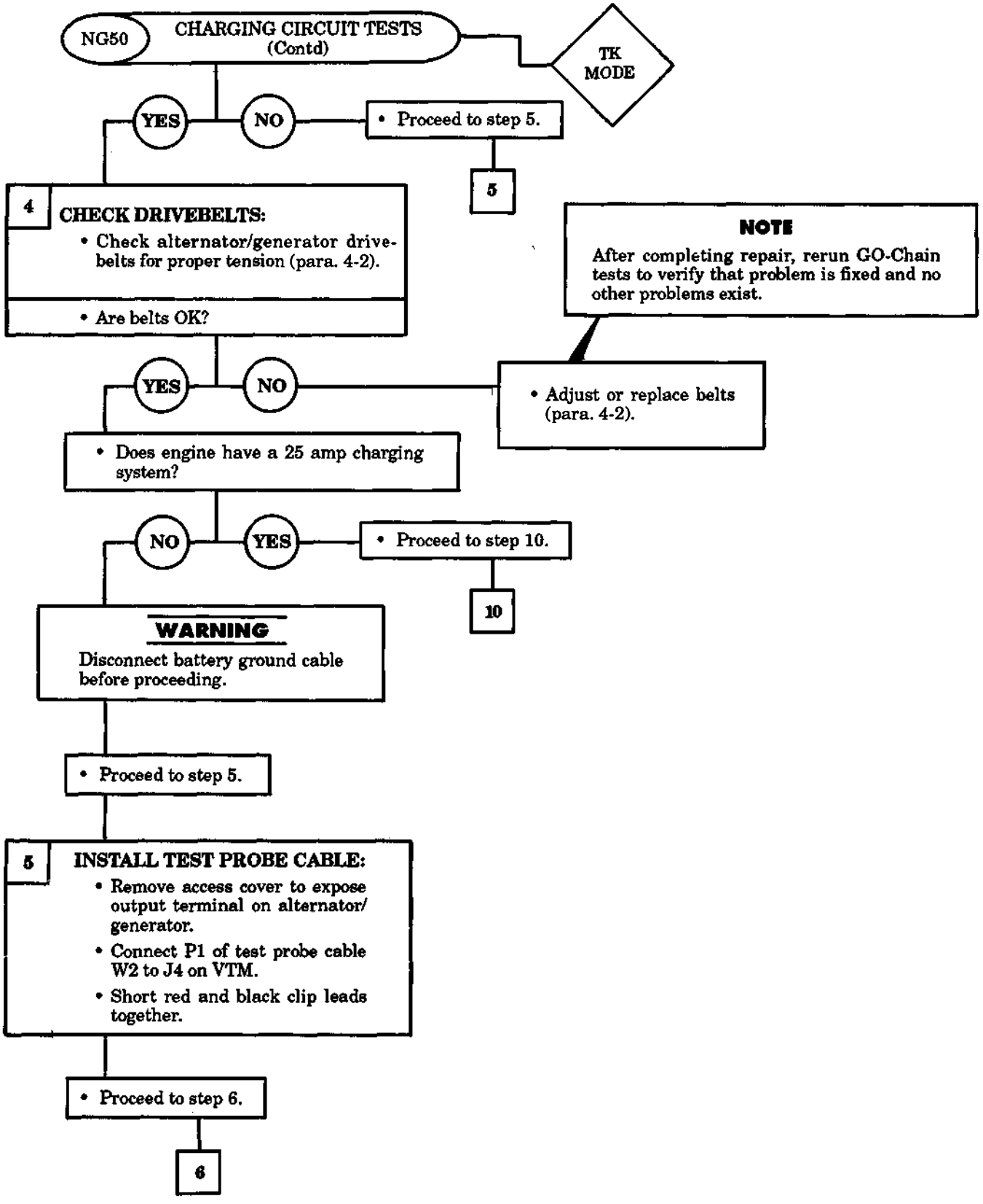

https://truckmanualshub.com/

Table 2-11. STE/ICE No-Go Chain Tests (Contd).

NG50 CHARGING CIRCUIT TESTS (Contd)

TK MODE

6 DO TEST PROBE CABLE OFFSET:

- Dial 89 into TEST SELECT.
- Press and hold TEST until CAL message appears on display.
- Release TEST.
- Wait for offset value to appear on display.

CAL

PROMPTING MESSAGE

TEST NO.	TEST
89	0-45 VOLTS DC

- Is offset value within limits of -6.8 to +6.8?

YES

NO

- STE/ICE is bad. Replace.

7 CHECK CHARGING SYSTEM OUTPUT VOLTAGE:

- Connect red clip lead of cable W2 to output terminal of alternator/generator.
- Connect black clip lead to ground.

- Reconnect battery ground cable.
- Start vehicle engine (TM 9-2320-361-10).
- Turn on vehicle lights.
- Set engine speed to fast idle (1200 rpm).

- Press TEST.
- Is output voltage between 26.5 and 29.5 volts?

NO

YES

NOTE

After completing repair, rerun GO-Chain tests to verify that problem is fixed and no other problems exist.

- Proceed to next page.

https://truckmanualshub.com/

Table 2-11. STE/ICE No-Go Chain Tests (Contd).

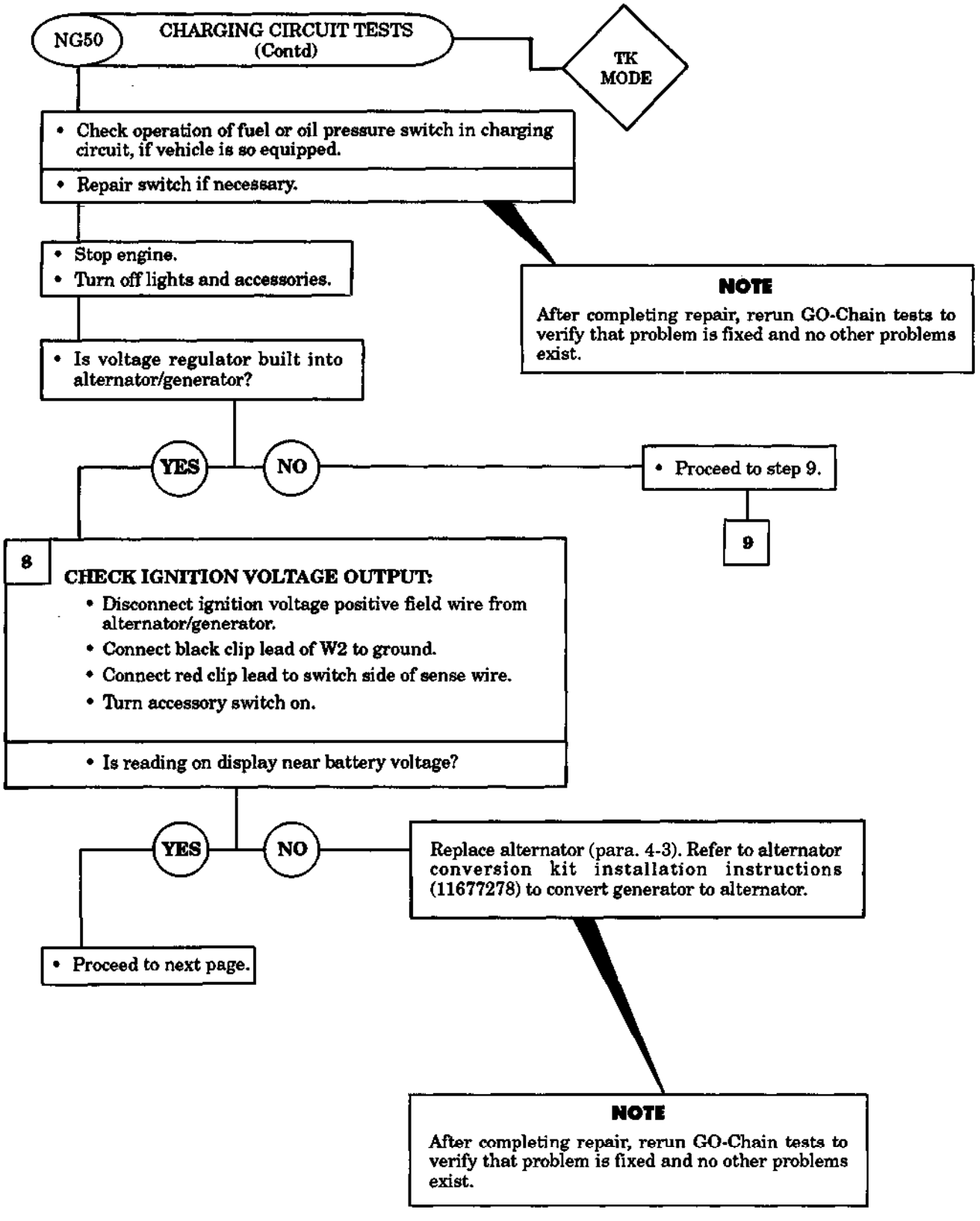

https://truckmanualshub.com/

Table 2-11. STE/ICE No-Go Chain Tests (Contd).

NG50 — CHARGING CIRCUIT TESTS (Contd)

TK MODE

9 CHECK FIELD CURRENT:

- Install current probe around wire No. 1 of generator-to-regulator cables.
- Point arrow on current probes toward alternator/generator.
- Dial 90 into TEST SELECT.
- Press and hold TEST until CAL message appears.
- Release TEST.

CAL

PROMPTING MESSAGE

NOTE

On systems with separate rectifiers, current probe may be placed around wire mounts on either the alternator-to-rectifier cable or rectifier-to-regulator cable.

- Start vehicle engine (TM 9-2320-361-10).
- Set engine speed at a fast idle (1200 rpm).
- Turn headlights and accessories ON.
- Press TEST.
- Compare number on VTM display with values given below.

VEHICLE	ALT.	FIELD CURRENT
M44A2 M35A2	100A	4-7 AMPS

NOTE

This limit is for 100A alternator models: 5300 GP, 5320 GP, 5258 GP & GS, 5504 AA & AB, 2152 AC, and 2184 AC.

- Shut off engine.

- Is current within range?

YES — Refer to Troubleshooting Index to check continuity of cables from regulator to alternator/generator using STE/ICE. If cables are OK, further check charging system with STE/ICE.

NO — Replace alternator (para. 4-3). Refer to alternator conversion kit installation for instructions (11677278) to convert generator to alternator.

NOTE

After completing repair, rerun GO-Chain tests to verify that problem is fixed and no other problems exist.

https://truckmanualshub.com/

Table 2-11. STE/ICE No-Go Chain Tests (Contd).

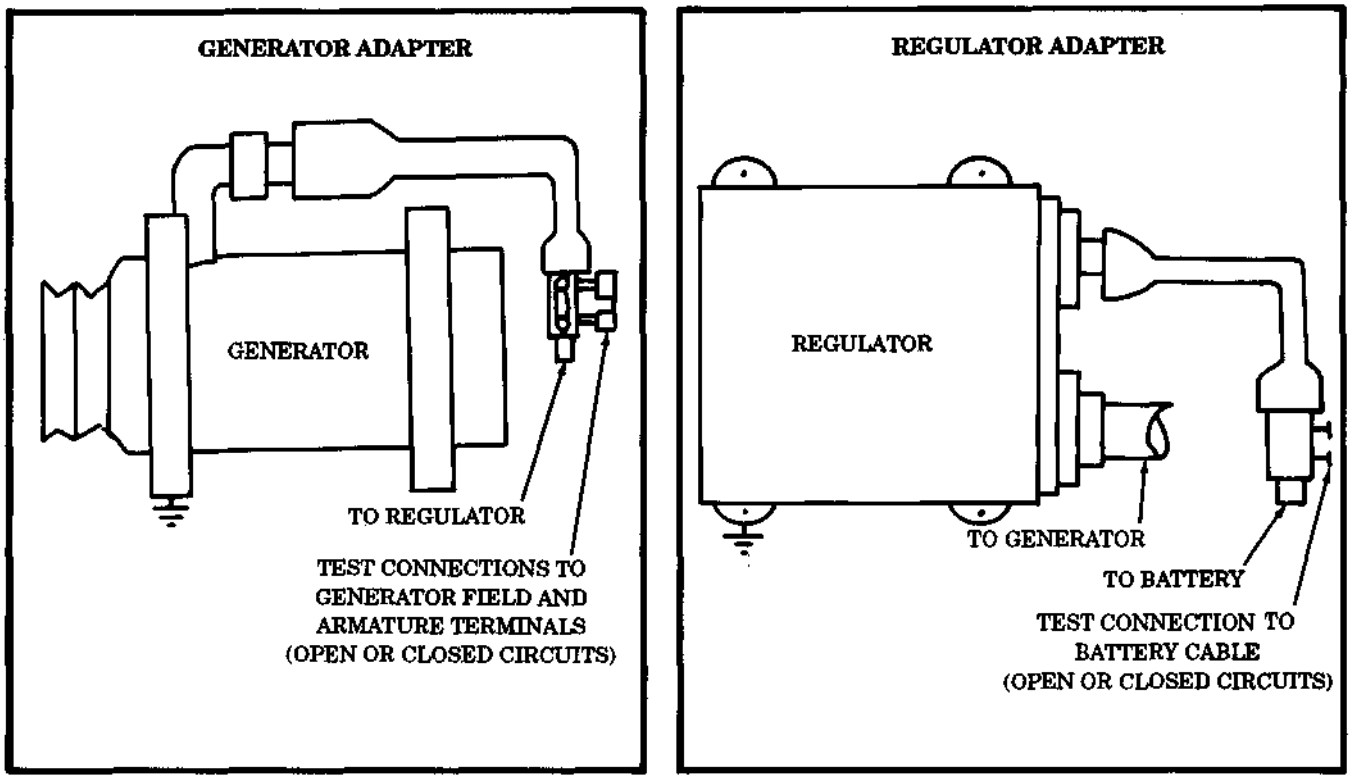

NG50 CHARGING CIRCUIT TEST (Contd) — TK MODE

10 INSTALL GENERATOR AND REGULATOR ADAPTERS:
(Part of Adapter Set, Engine Electrical, NSN 4910-00-348-7600)

- Disconnect generator cable at generator, and plug generator adapter into socket.
- Reconnect generator cable to free end of generator adapter.
- Disconnect regulator cable at regulator, and plug regulator adapter into socket.
- Reconnect regulator cable to free end of regulator adapter.

11 CONNECT TEST PROBE CABLE/DO OFFSET:

- Connect P1 of test probe cable W2 to J4 in VTM.
- Short red and black clip leads together.

• Proceed to next page.

https://truckmanualshub.com/

Table 2-11. STE/ICE No-Go Chain Tests (Contd).

NG50 CHARGING CIRCUIT TESTS (Contd)

TK MODE

- Dial 89 into TEST SELECT.
- Press and hold TEST until CAL appears in display.
- Release TEST.
- Wait for offset value to appear on display.

CAL

PROMPTING MESSAGE

TEST NO.	TEST
89	0-45 VOLTS DC

- Is offset value within limits of -6.8 to +6.8?

YES — NO

- STE/ICE is bad. Replace.

12 **CHECK VOLTAGE AT GENERATOR:**

- Attach red clip lead of W2 to field terminal of generator adapter.
- Attach black clip lead of W2 to generator frame.
- Press TEST.

- Is voltage the same or nearly the same as battery voltage measured in G05, step 2?

YES — NO

13 **CHECK VOLTAGE AT REGULATOR:**

- Attach red clip lead of W2 on regulator adapter
- Attach black clip lead of W2 on regulator frame.
- Press TEST and note voltage reading.

- Check for loose and poor connections at battery. Tighten all clamps and connections. Clean and repair as necessary.
- Check battery to regulator cable for grounds or shorts. Repair or replace as necessary (para. 4-47).

NOTE

After completing repair, rerun GO-Chain tests to verify that problem is fixed and no other problems exist.

- Is voltage reading 0?

- Proceed to next page.

https://truckmanualshub.com/

Table 2-11. STE/ICE No-Go Chain Tests (Contd).

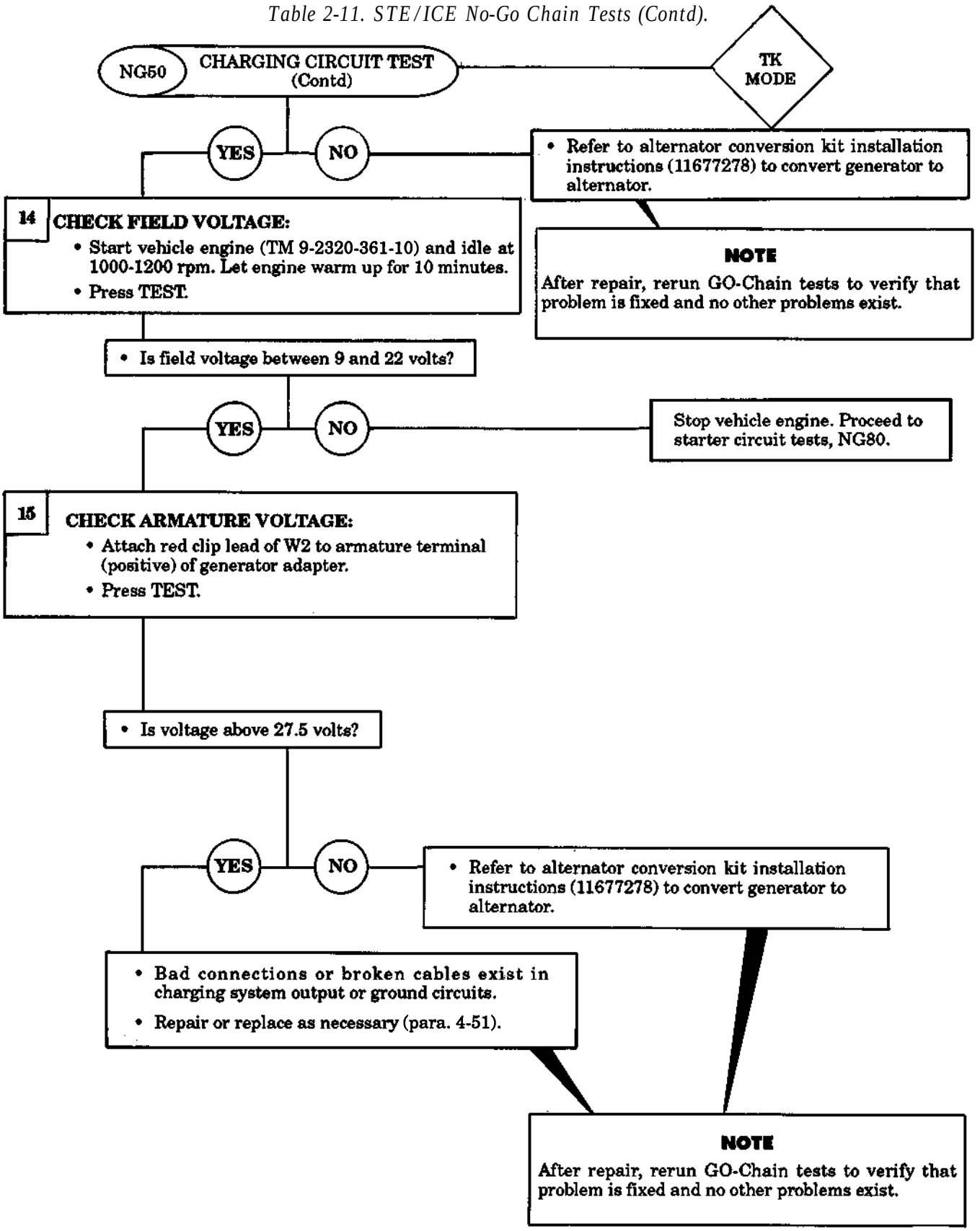

https://truckmanualshub.com/

Table 2-11. STE/ICE No-Go Chain Tests (Contd).

NOTE

Test G01, VTM Connections and Checkout, must be performed before running any other STE/ICE test.

NG80 STARTER CIRCUIT TESTS

TK MODE

NOTE

While cranking engine with bad or discharged batteries, it is possible for VTM to lose power and come on again after cranking has stopped, displaying four dashes. If this occurs, clean battery posts and clamps and try again. If VTM still loses power, connnect VTM power cable to good batteries in another vehicle and perform following tests using test probe cable W2.

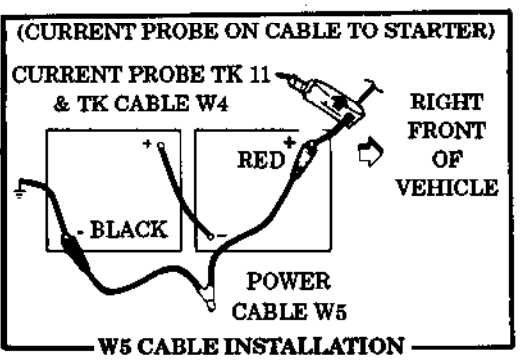

1 DO CURRENT PROBE OFFSET:

- Connect cable W5 to batteries.
- Turn off all vehicle electrical power.
- Dial 74 into TEST SELECT.
- Press and hold TEST until CAL message appears on display.
- Release TEST.
- Wait for offset value to appear.

CAL

PROMPTING MESSAGE

- Is offset value within limits of -225 to +225?

TEST NO.	TEST
74	STARTER CIRCUIT RESISTANCE

YES

NO

- Proceed to TM 9-4910-571-12&P for offset fault isolation.

2 CHECK STARTER CIRCUIT RESISTANCE:

- Shut off fuel.
- Press TEST.
- When GO appears, attempt to crank engine.
- Stop cranking engine when VTM displays OFF or an error message.

GO

OFF

PROMPTING MESSAGE

- Is a number displayed?

- Proceed to next page.

https://truckmanualshub.com/

Table 2-11. STE/ICE No-Go Chain Tests (Contd).

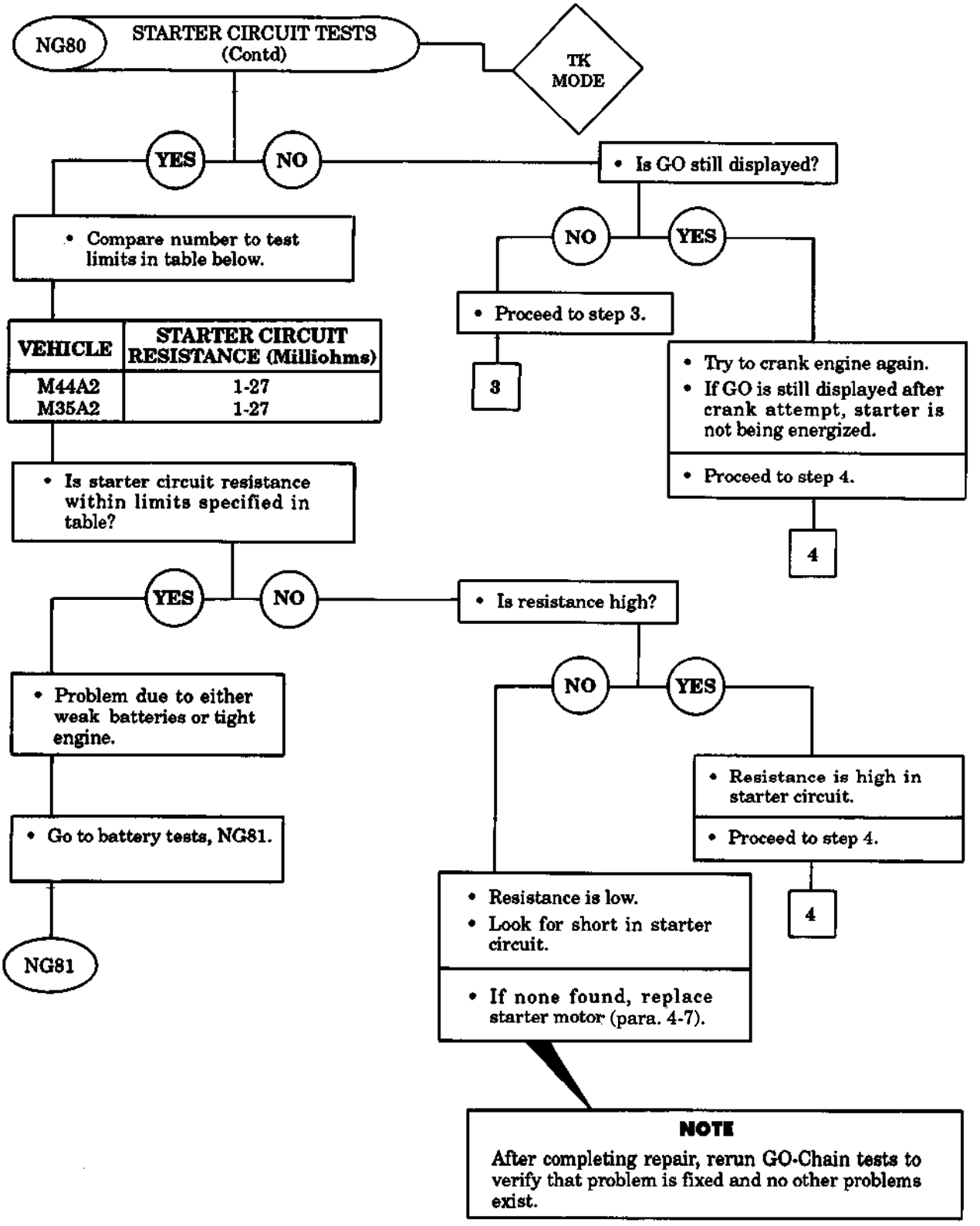

https://truckmanualshub.com/

Table 2-11. STE/ICE No-Go Chain Tests (Contd).

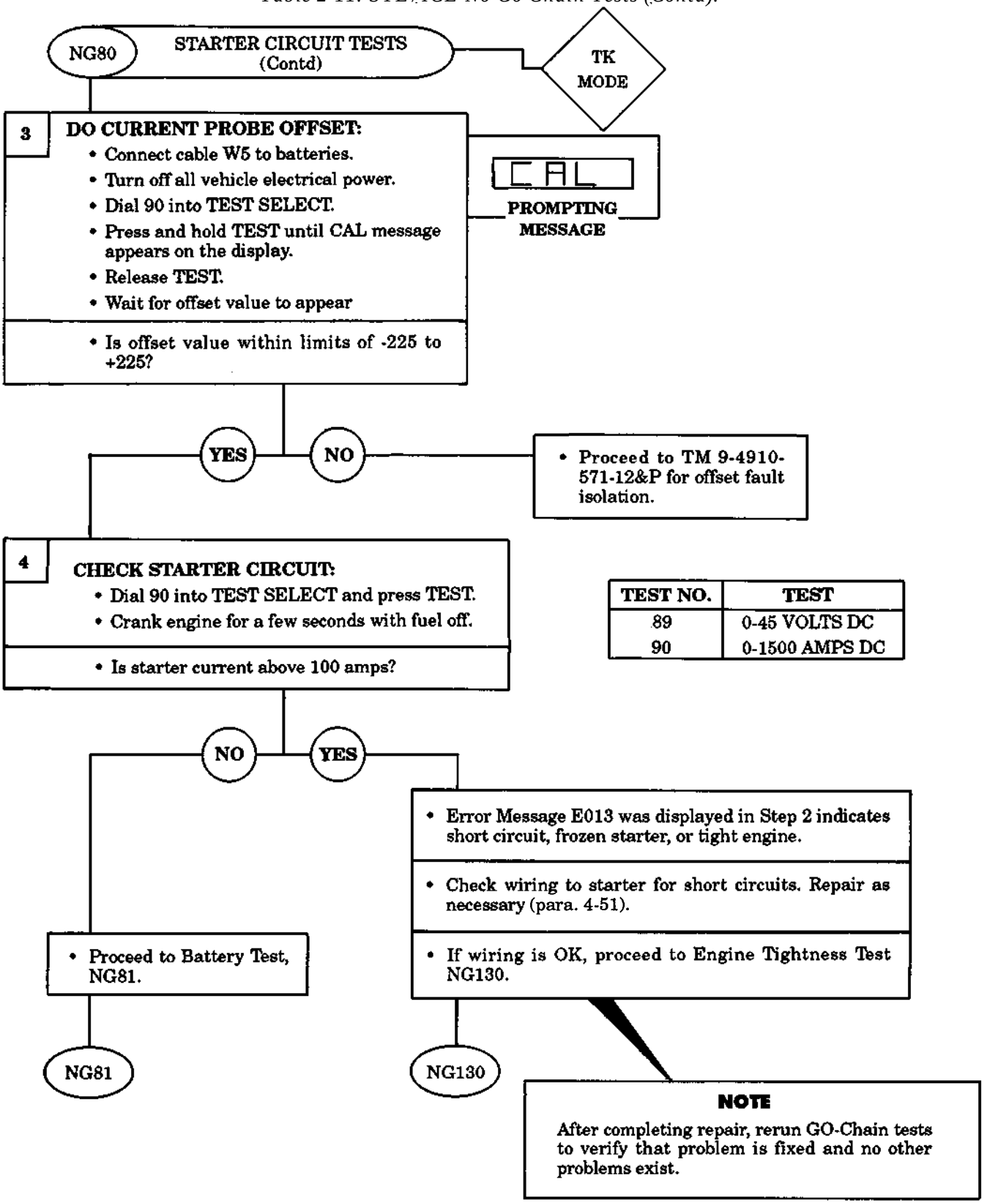

TEST NO.	TEST
89	0-45 VOLTS DC
90	0-1500 AMPS DC

https://truckmanualshub.com/

Table 2-11. STE/ICE No-Go Chain Tests (Contd).

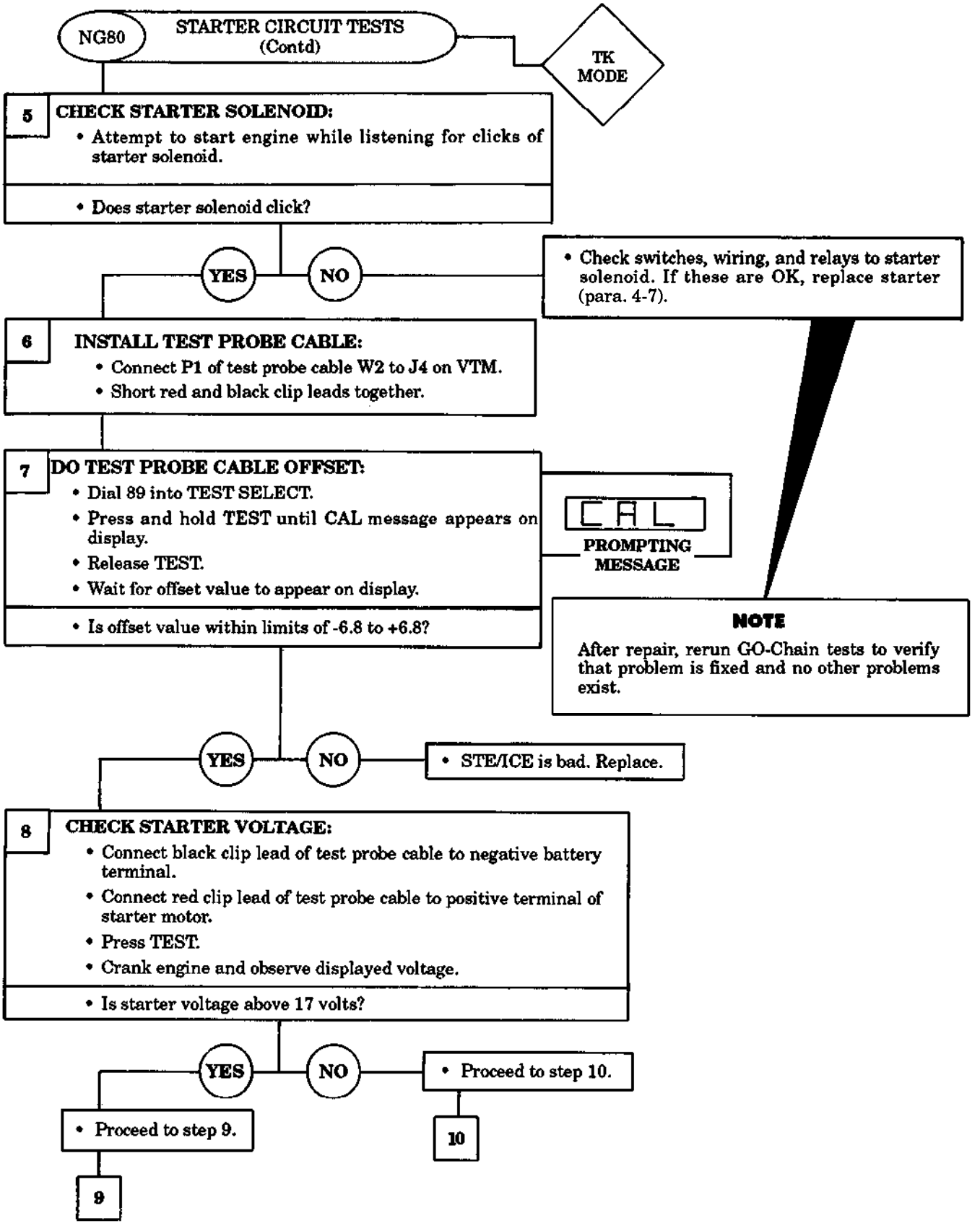

https://truckmanualshub.com/

Table 2-11. STE/ICE No-Go Chain Tests (Contd).

NG80 — STARTER CIRCUIT TESTS (Contd) — TK MODE

9 STARTER NEGATIVE VOLTAGE DROP:

- Move red clip lead of test probe cable to ground terminal of starter motor.
- Dial 89 into TEST SELECT and press TEST.
- Crank engine and observe displayed voltage.

- Is voltage drop less than 0.2 volts?

YES → Replace starter motor (para. 4-7).

NO → Proceed to Battery Compartment - Negative Side - Voltage Drop Checks, NG121. → NG121

NOTE

After completing repair, rerun GO-Chain tests to verify that problem is fixed and no other problems exist.

- Proceed to next page.

TEST NO.	TEST
67 89	BATTERY VOLTAGE 0-45 VOLTS DC

https://truckmanualshub.com/

Table 2-11. STE/ICE No-Go Chain Tests (Contd).

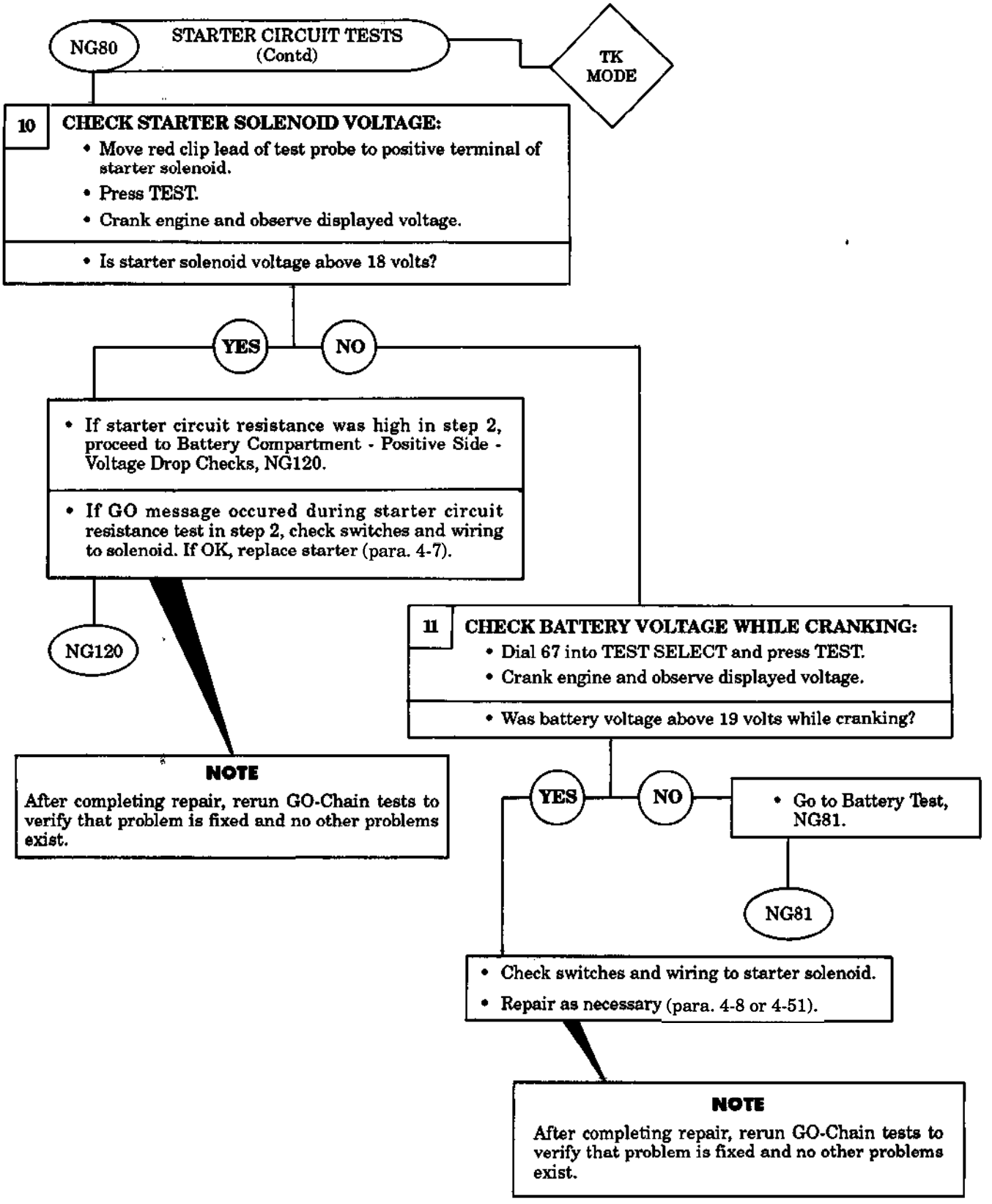

https://truckmanualshub.com/

Table 2-11. STE/ICE No-Go Chain Tests (Contd).

NOTE

Test G01, VTM Connections and Checkout, must be performed before running any other STE/ICE test.

NG81 BATTERY TESTS — TK MODE

NOTE

Each battery is best tested individually. During this test, fuel supply must be shut off to keep engine from starting.

TEST NO.	TEST
77	BATTERY RESISTANCE
79	BATTERY RESISTANCE CHANGE
89	0-45 VOLTS DC
90	0-1500 AMPS DC

1 INSTALL TEST PROBE CABLE W2/DO OFFSET TEST:

- Connect test probe cable W2 to J4 on VTM.
- Short red and black clip leads of W2 together.
- Dial 89 into TEST SELECT.
- Prss and hold TEST until CAL message appears on display.
- Release TEST.
- Wait for offset value to appear on display.

CAL — PROMPTING MESSAGE

- Is offset value within limits of -6.8 to +6.8?

YES — NO — • STE/ICE is bad. Replace.

NOTE

See following page for note and hookup diagram.

- Connect red clip lead of cable W2 to positive post of battery being tested.
- Connect black clip lead of cable W2 to negative post of battery being tested.

2 CONDITION CURRENT PROBE - DO OFFSET:

- Clamp current probe around battery cable which connects series pair of batteries containing battery to be tested.
- Point arrow on current probe toward the negative post as shown.
- Press TEST.
- Attempt to crank engine for several cycles.

- Is number displayed greater than 9.6 volts?

YES — NO

- Check battery electrolyte level.
- Clean battery terminals.
- Refer to Troubleshooting Index to check battery specific gravity.
- Charge battery, if necessary.
- Retest.
- If 9.6 volts or greater, go to step 3. If less, replace battery (para. 4-49).

- Proceed to next page.

https://truckmanualshub.com/

Table 2-11. STE/ICE No-Go Chain Tests (Contd).

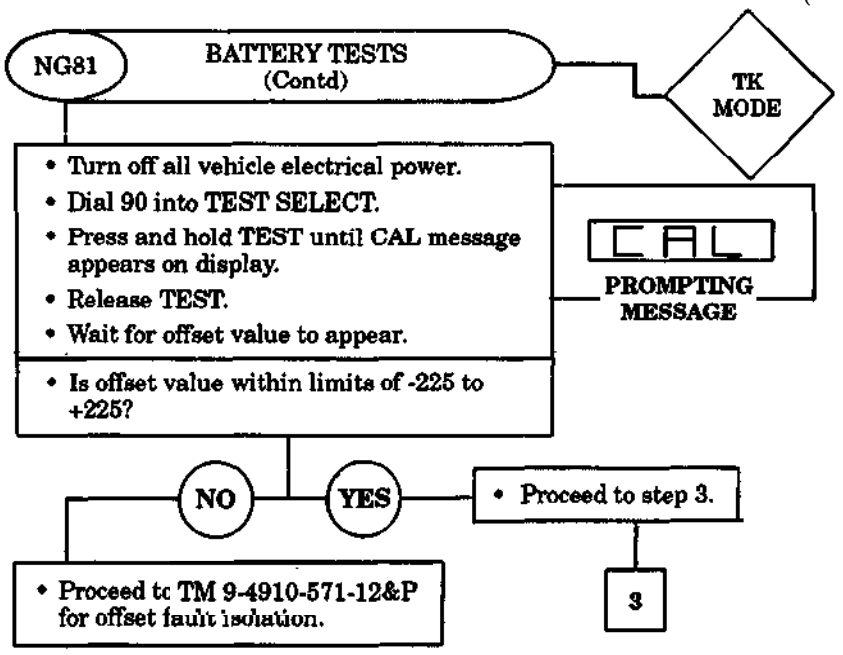

TEST PROCEDURE

1. Test each battery of a series pair, then proceed to batteries of next series pair.

2. To find series pairs of batteries, find pairs for which the negative terminal of one battery is connected by a cable to the positive terminal of another battery. This makes the two batteries a series pair. For example, in figure below, batteries A and B are a series pair, and batteries C and D are also a series pair.

3. To test battery A or B, clamp current probe around cable connecting battery A and battery B. Point arrow on current probe in direction of negative post connected to the cable.

4. The test probe cable W2 is first connected to battery A for testing battery A.

5. The test probe cable W2 is then connected to battery B for testing battery B. (Current probe in same place as for testing battery A).

6. To test battery C or D, clamp current probe around cable connecting battery C and battery D. Point arrow on current probe in direction of negative post connected to cable.

7. Connect test probe cable W2 to battery C to test battery C.

8. Connect test probe cable W2 to battery D to test battery D.

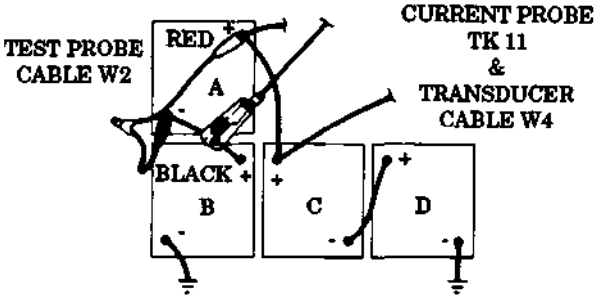

https://truckmanualshub.com/

Table 2-11. STE/ICE No-Go Chain Tests (Contd).

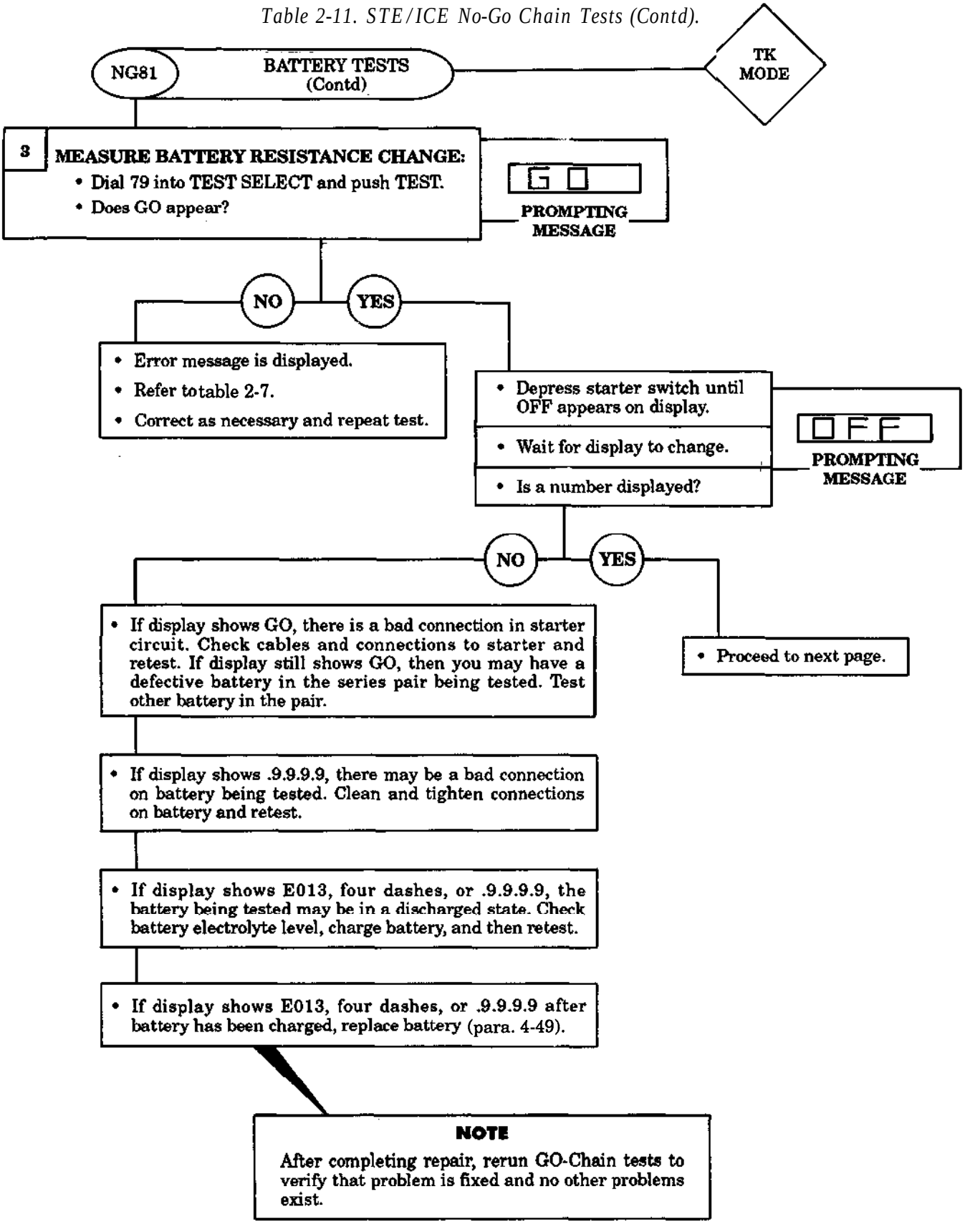

https://truckmanualshub.com/

Table 2-11. STE/ICE No-Go Chain Tests (Contd).

NG81 — **BATTERY TESTS (Contd)** — **TK MODE**

- Compare reading with resistance change given below.

VEHICLE	MAXIMUM RESISTANCE CHANGE
ALL C1 VEHICLES	25 MILLIOHMS/SECOND

- Is battery resistance less than above limit?

YES — **NO**

- Check battery electrolyte level.
- Clean battery terminals.
- Refer to Troubleshooting Index to check battery specific gravity.
- Charge battery, if necessary.
- Repeat test on this battery.

NOTE

In freezing weather, if battery fails, crank engine for 5 seconds and retest. This will warm battery slightly.

- If battery has been charged and battery resistance change is greater than the limit, replace battery (para. 4-49).

4 MEASURE BATTERY RESISTANCE:

- Dial 77 into TEST SELECT and push TEST.
- If GO appears, depress starter switch until OFF appears on VTM display.
- If error message appears, refer to TM 9-4910-571-12&P, table 2-4.

PROMPTING MESSAGE: GO / OFF

VEHICLE	MAXIMUM RESISTANCE
ALL C1 VEHICLES	13 MILLIOHMS

NOTE

After completing repair, rerun GO-Chain tests to verify that problem is fixed and no other problems exist.

- Is battery resistance charge less than above limit?

YES — **NO**

BATTERY IS OK:

- If vehicle has more than one battery, perform test on next battery.
- If engine is tight, notify supervisor.

NOTE

In freezing weather, if battery fails, crank engine for 5 seconds and retest. This will warm battery slightly.

- Check battery electrolyte level.
- Clean battery terminals.
- Refer to Troubleshooting Index to check battery specific gravity.
- Charge battery, if necessary.

https://truckmanualshub.com/

Table 2-11. STE/ICE No-Go Chain Tests (Contd).

NOTE

Test G01, VTM Connections and Checkout, must be performed before running any other STE/ICE test.

NG90 GOVERNOR/POWER TEST FAULT ISOLATION — TK MODE

NOTE

If vehicle has failed power test, start with step 1. If vehicle has failed governor checks, start with step 2 on next page.

CAUTION

Check that air inlet is clear of tools, debris, dirt, and dust before performing following test.

1 REMOVE AIR CLEANER - REPEAT POWER TEST:

- Remove air cleaner from air intake housing.
- Repeat power test - G07, step 2.

- Does engine pass power test with air cleaner out?

NO

- Reinstall air cleaner.

YES

- Install air cleaner element (para. 3-14).

NOTE

After completing repair, rerun GO-Chain tests to verify that problem is fixed and no other problems exist.

CAUTION

Do not perform more than 2 compression unbalance tests in a row to prevent discharge of vehicle batteries.

Engine must be at normal operating temperature before performing compression unbalance test.

NOTE

The compression unbalance test takes approximately 15 seconds to run.

- Proceed to next page.

https://truckmanualshub.com/

Table 2-11. STE/ICE No-Go Chain Tests (Contd).

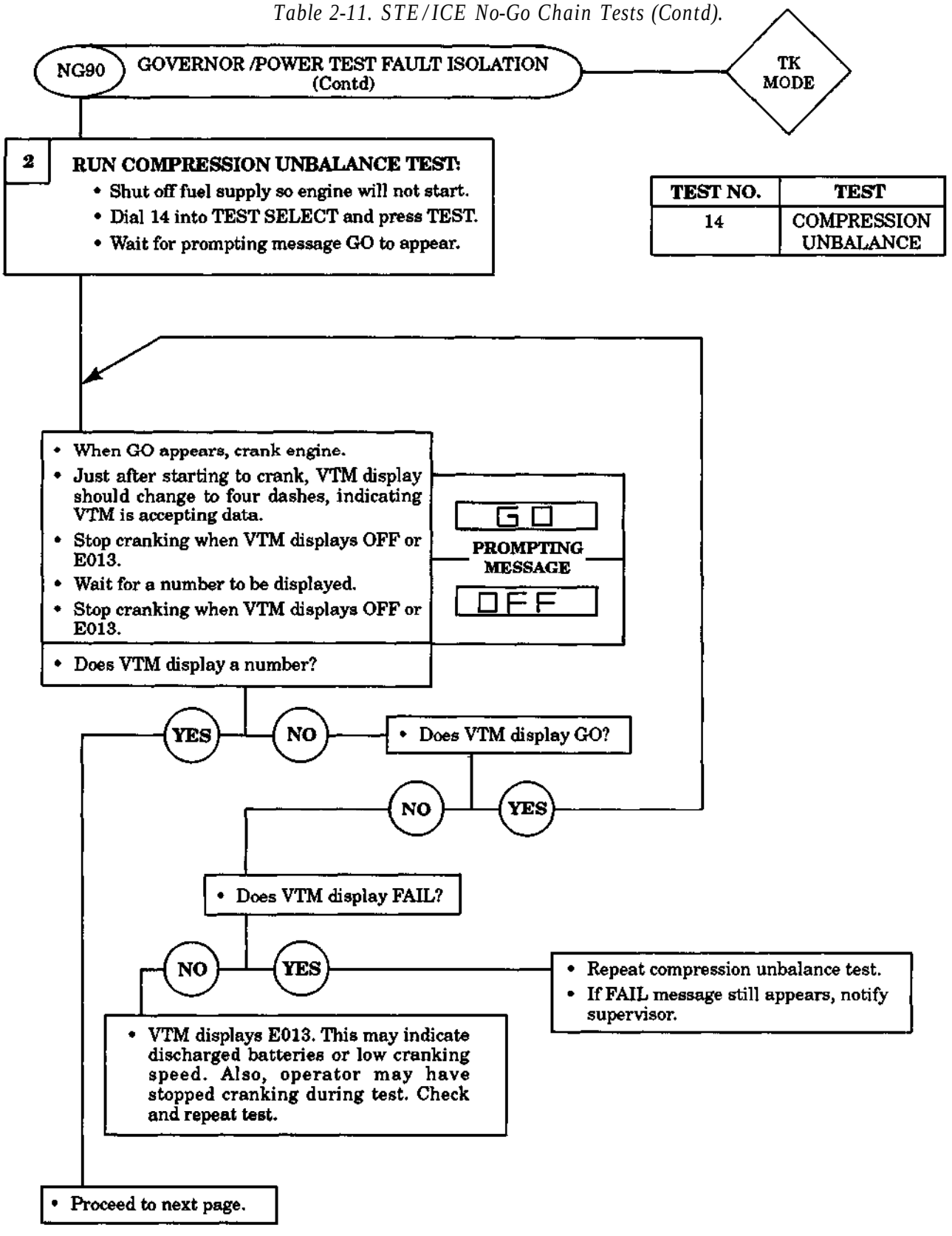

https://truckmanualshub.com/

Table 2-11. STE/ICE No-Go Chain Tests (Contd).

NG90 GOVERNOR /POWER TEST FAULT ISOLATION (Contd)

TK MODE

- Compare number to test limits in table below.

VEHICLE	COMPRESSION UNBALANCE TEST LIMITS
M44A2	0-15%
M35A2	0-15%

- Is compression unbalance within limits specified in table?

YES

- Proceed to step 3.

3

NO

- Repeat Compression Unbalance Test.
- If unbalance is still out of limits, notify supervisor.

https://truckmanualshub.com/

Table 2-11. STE/ICE No-Go Chain Tests (Contd).

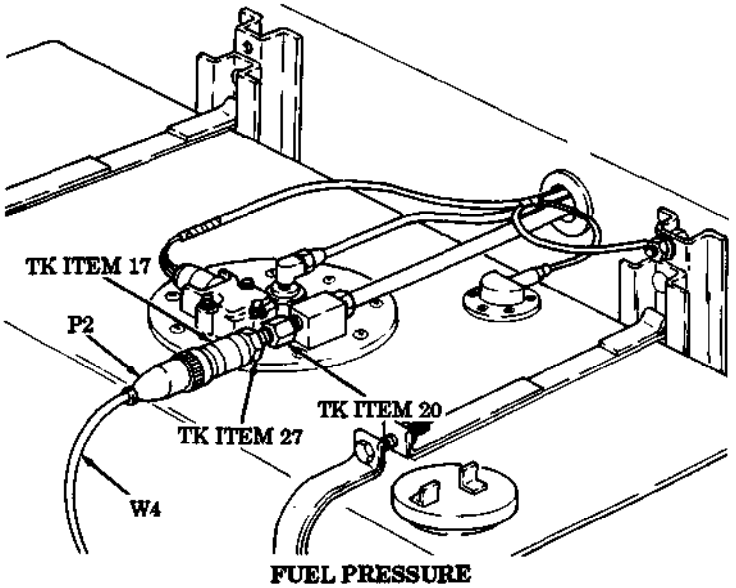

FUEL PRESSURE TRANSDUCER INSTALLATION

NG90 GOVERNOR /POWER TEST FAULT ISOLATION (Contd)

TK MODE

3 **INSTALL TRANSDUCER:**

- Install pressure transducer TK Item 17 (Blue Stripe) in outlet side of secondary fuel filter.
- Connect P1 of transducer cable W4 to J2 on VTM.
- Connect P2 of transducer cable to connector on transducer.

- Dial 50 into TEST SELECT and press TEST.
- Press and hold TEST until CAL message appears on display.
- Release TEST.
- Wait for offset value to appear on display.

CAL

PROMPTING MESSAGE

TEST NO.	TEST
50	0-1000 PSIG, PRESSURE

- Proceed to next page.

https://truckmanualshub.com/

Table 2-11. STE/ICE No-Go Chain Tests (Contd).

NG90 GOVERNOR /POWER TEST FAULT ISOLATION (Contd)

TK MODE

- Is offset value within range of -150 to +150.

YES — NO

- Proceed to TM 9-4910-571-12&P for offset fault isolation.

4 **MEASURE FUEL PRESSURE AT HIGH IDLE:**

- Press TEST.
- Start engine (TM 9-2320-361-10) and watch display.
- Accelerate engine and hold at high idle (1000-1800 rpm).
- Compare number on display with fuel pressure values in table below.

TEST NO.	TEST
50	0-1000 PSIG, PRESSURE

VEHICLE	FUEL PRESSURE
M44A2 M35A2	50 PSI - 70 PSI

- Is fuel within range?

NO — YES

- Proceed to step 5.

5

- Check for crimped or broken lines.
- Replace fuel filters (paras. 3-28 and 3-29).
- Check vehicle throttle linkage for full travel and proper adjustment. Repair if necessary (para. 3-33).

- If reading is still low, notify supervisor.

NOTE

After completing repair, rerun GO-Chain tests to verify that problem is fixed and no other problems exist.

https://truckmanualshub.com/

Table 2-11. STE/ICE No-Go Chain Tests (Contd).

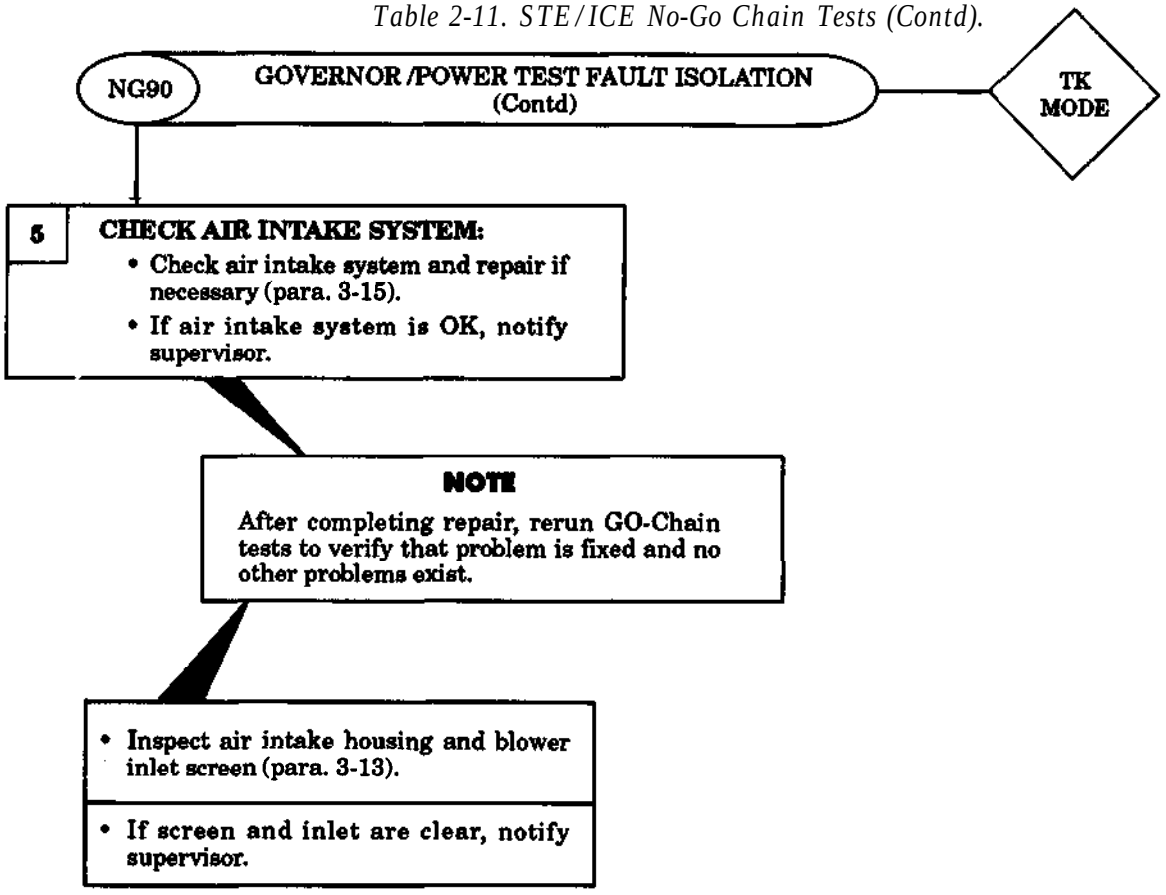

https://truckmanualshub.com/

Table 2-11. STE/ICE No-Go Chain Tests (Contd).

NOTE

Test G01, VTM Connections and Checkout, must be performed before running any other STE/ICE test.

NG 120 — BATTERY COMPARTMENT - POSITIVE SIDE VOLTAGE DROP CHECKS — TK MODE

NOTE

Check voltage drop across solenoid, and all cables/ connections in positive side of starter circuit. Use procedure outlined below for each voltage drop check.

TEST NO.	TEST
89	0-45 VOLTS DC

1 DO TEST PROBE CABLE OFFSET:

- Short clip leads of test probe cable W2 together.
- Dial 89 into TEST SELECT.
- Press and hold TEST until CAL message appears on display.
- Release TEST.
- Wait for offset value to appear on display.

CAL — PROMPTING MESSAGE

- Is offset value within limits of -6.8 to +6.8?

YES — NO — • STE/ICE is bad. Replace.

2 MEASURE VOLTAGE DROP:

- Connect clip leads of W2 across part to be measured.
- Press TEST switch. Depress starter switch.
- The drop across a connection should be less than 0.1 volt and the drop across a cable should be less than 0.2 volt.

- Repair or replace defective part.

NOTE

After completing repair, rerun GO-Chain tests to verify that problem is fixed and no other problems exist.

https://truckmanualshub.com/

Table 2-11. STE/ICE No-Go Chain Tests (Contd).

NOTE

Test G01, VTM Connections and Checkout, must be performed before running any other STE/ICE test.

NG 121 — BATTERY COMPARTMENT - POSITIVE SIDE VOLTAGE DROP CHECKS — TK MODE

NOTE

Check voltage drop across all cables/connections in negative side of starter circuit. Use procedure outlined below for each voltage drop check.

1 DO TEST PROBE CABLE OFFSET:

- Short clip leads of test probe cable W2 together.
- Dial 89 into TEST SELECT.
- Press and hold TEST until CAL message appears on display.
- Release test.
- Wait for offset value to appear on display.

CAL — PROMPTING MESSAGE

- Is offset value within limits of -6.8 to +6.8?

YES — NO — • STE/ICE is bad. Replace.

2 MEASURE VOLTAGE DROP:

- Connect clip leads of W2 across part to be measured.
- Press TEST switch. Depress starter switch.
- The drop across a connection should be less than 0.1 volt and the drop across a cable should be less than 0.2 volt.

- Repair or replace defective part.

NOTE

After completing repair, rerun GO-Chain tests to verify that problem is fixed and no other problems exist.

https://truckmanualshub.com/

Table 2-11. STE/ICE No-Go Chain Tests (Contd).

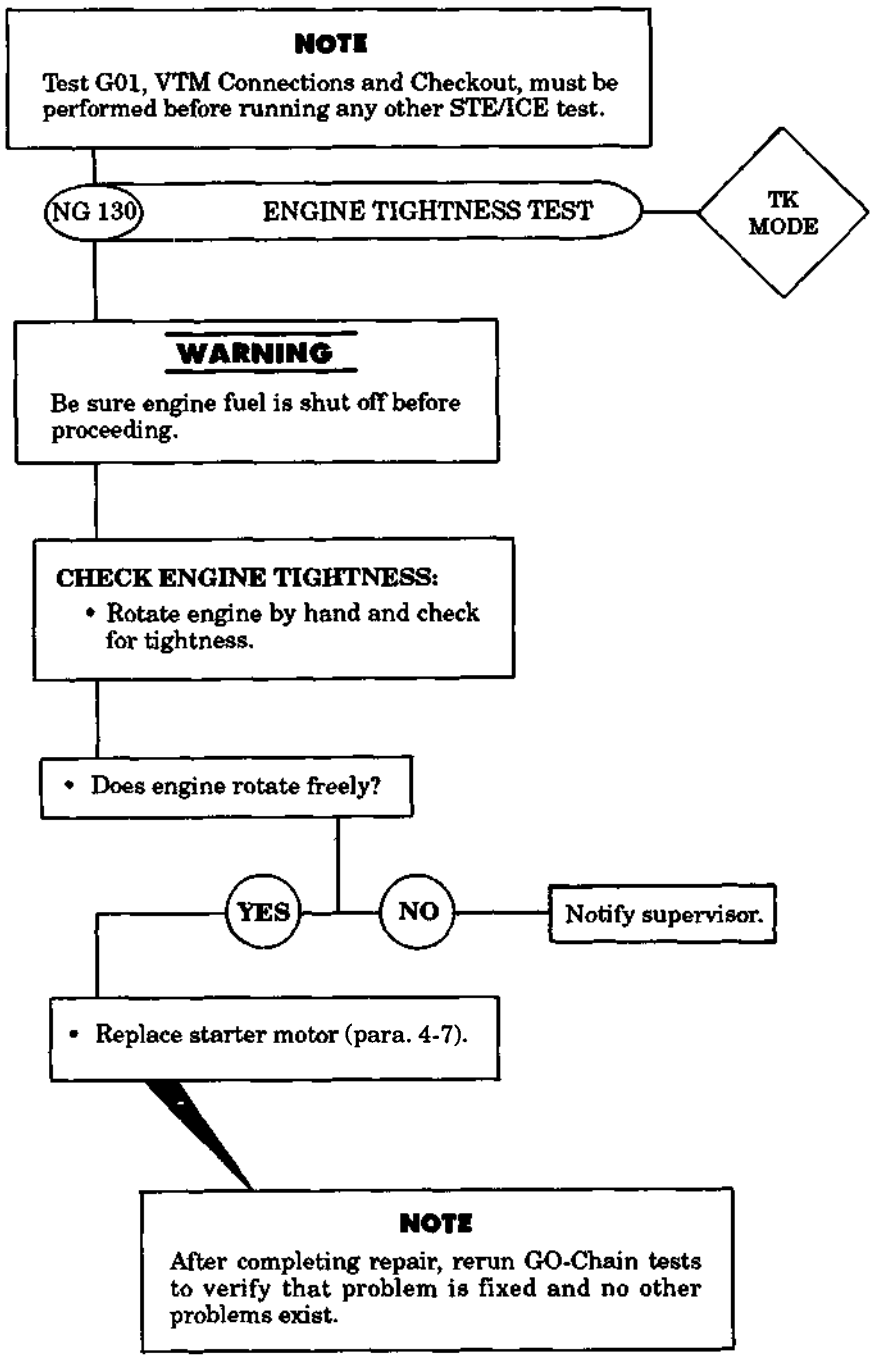

https://truckmanualshub.com/

https://truckmanualshub.com/

CHAPTER 3

ENGINE AND CLUTCH SYSTEMS MAINTENANCE

Section I. Engine Maintenance (page 3-1)
Section II. Engine Lubrication System Maintenance (page 3-6)
Section III. Clutch System Maintenance (page 3-14)
Section IV. Air Intake System Maintenance (page 3-20)
Section V. Turbocharger Maintenance (page 3-28)
Section VI. Fuel System Maintenance (page 3-31)
Section VII. Accelerator System Maintenance (page 3-70)
Section VIII. Exhaust System Maintenance (page 3-82)
Section IX. Cooling System Maintenance (page 3-92)

Section I. ENGINE MAINTENANCE

3-1. ENGINE MAINTENANCE INDEX

PARA. NO.	TITLE	PAGE NO.
3-2.	Engine Front Mount Pad Replacement	3-1
3-3.	Engine Rear Mount Pad Replacement	3-4

3-2. ENGINE FRONT MOUNT PAD REPLACEMENT

This task covers:

a. Front Mount Pad Removal
b. Support Plate Removal
c. Support Plate Installation
d. Front Mount Pad Installation

INITIAL SETUP:

APPLICABLE MODELS
All

MATERIALS/PARTS
Four locknuts
Lockwasher

REFERENCES (TM)
TM 9-2320-361-10
TM 9-2320-361-20P

EQUIPMENT CONDITION
- Parking brake set (TM 9-2320-361-10).
- Hood raised and secured (TM 9-2320-361-10).
- Brush guard removed (para. 10-8).
- Front bumper removed (paras. 10-9 and 10-10).

GENERAL SAFETY INSTRUCTIONS
- Place support under radiator before removing support plate.
- Do not put fingers between frame and engine support.

https://truckmanualshub.com/

3-2. ENGINE FRONT MOUNT PAD REPLACEMENT (Contd)

a. Front Mount Pad Removal

1. Remove two locknuts (13), washers (12), springs (11), and washers (10) from studs (2). Discard locknuts (13).
2. Remove two locknuts (16) and washers (15) from screws (8). Discard locknuts (16).
3. Remove nut (20), screw (17), lockwasher (19), washer (18), and ground strap (23) from front crossmember (6), Discard lockwasher (19).
4. Remove two nuts (4), screws (14), clamps (5), and fuel line (7) from crossmember (6).
5. Push two screws (8) up through crossmember (6), lower front pads (24), and upper front pads (25) as far as possible.

WARNING

Do not put fingers between frame and engine support. Jack failure may result in injury to personnel.

6. Carefully lift engine and radiator (3), and remove two upper front pads (25) and lower front pads (24) from crossmember (6).

b. Support Plate Removal

WARNING

- Do not put fingers between frame and engine support. Jack failure may result in injury to personnel.
- Place support under radiator before removing support plate. Failure to do so may result in injury to personnel and damage to equipment.

1. Place support under radiator (3).
2. Remove six screws (21), washers (22), and support plate (9) from two engine supports (1) and studs (2).
3. Remove two screws (8) from support plate (9).

c. Support Plate Installation

WARNING

Do not put fingers between frame and engine support. Jack failure may result in injury to personnel.

1. Install two screws (8) on support plate (9).
2. Install support plate (9) on two studs (2) and engine supports (1) with six washers (22) and screws (21). Tighten screws (21) 25-27 lb-ft (34-37 N·m) and remove support from radiator (3).

d. Front Mount Pad Installation

WARNING

Do not put fingers between frame and engine support. Jack failure may result in injury to personnel.

1. Install two lower front pads (24) and upper front pads (25) on front crossmember (6),
2. Carefully lower engine and radiator (3) guiding two screws (8) through upper and lower front pads (25) and (24) and crossmember (6).

https://truckmanualshub.com/

3-2. ENGINE FRONT MOUNT PAD REPLACEMENT (Contd)

3. Install fuel line (7) on crossmember (6) with two clamps (5), screws (14), and nuts (4).
4. Install ground strap (23) on crossmember (6) with screw (17), washer (18), new lockwasher (19), and nut (20).
5. Install two washers (15) and new locknuts (16) on screws (8). Tighten locknuts (16) 65-70 lb-ft (88-95 N·m).
6. Install two washers (10), springs (11), washers (12), and new locknuts (13) on studs (2). Do not fully compress springs (11).

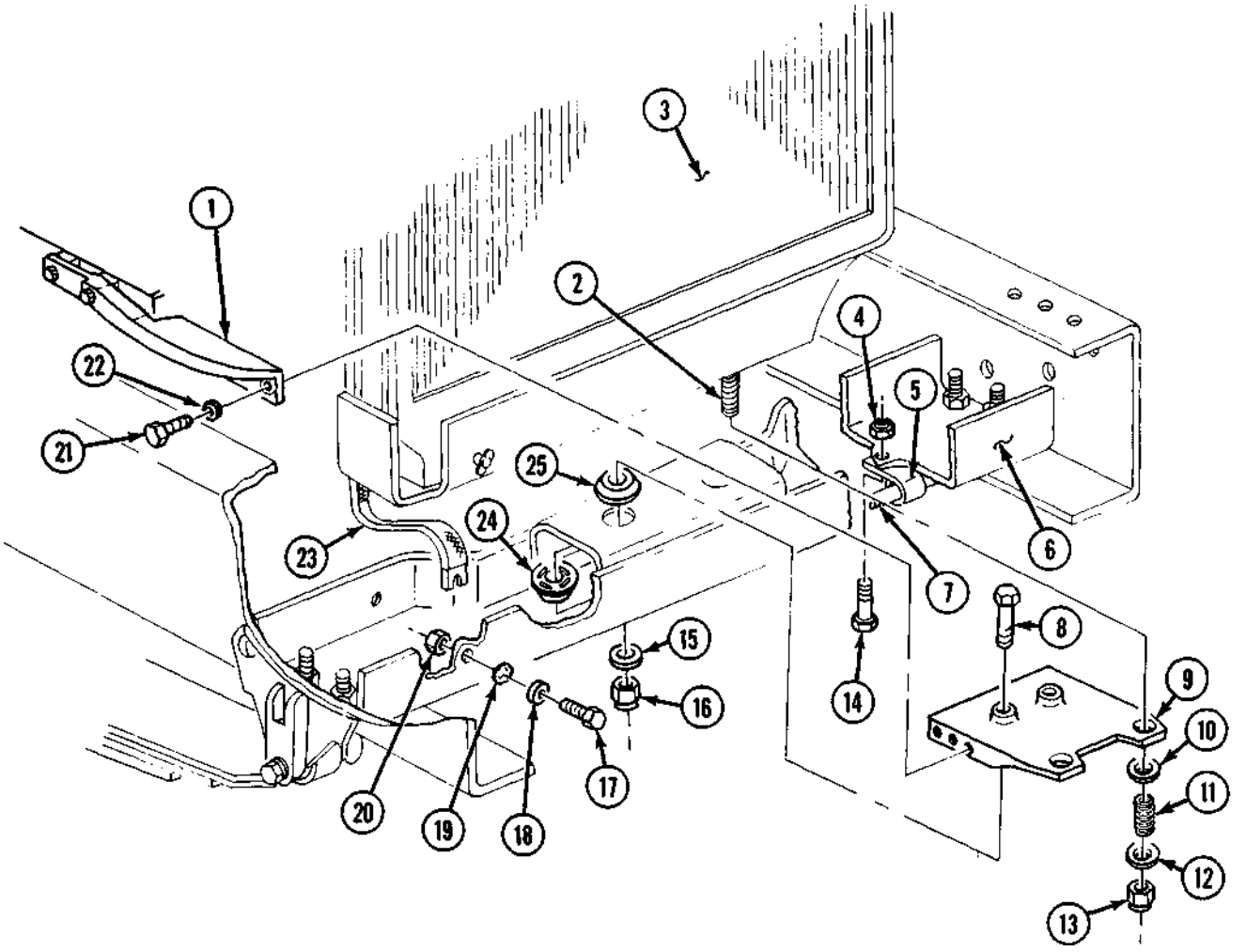

FOLLOW-ON TASKS:
- Install brush guard (para. 10-8).
- Install front bumper (paras. 10-9 and 10-10).

https://truckmanualshub.com/

3-3. ENGINE REAR MOUNT PAD REPLACEMENT

This task covers:

a. Removal **b. Installation**

INITIAL SETUP:

APPLICABLE MODELS
All

MATERIALS/PARTS
Locknut

REFERENCES (TM)
TM 9-2320-361-10
TM 9-2320-361-20P

EQUIPMENT CONDITION
Parking brake set (TM 9-2320-361-10).

GENERAL SAFETY INSTRUCTIONS
Do not put fingers between frame and engine support.

a. Removal

NOTE

Perform step 1 for engine left rear mount.

1. Remove nut (1) and accelerator linkage (3) from throttle control lever (2).

NOTE

Right and left engine rear mounts are removed the same way. This procedure covers the right engine rear mount.

2. Remove locknut (10), washer (9), and lower rear engine pad (8) from frame (7). Discard locknut (10).
3. Position hydraulic jack (13) and wood blocks (14) under transmission (12) lifting point. Raise transmission (12) just enough to take weight off upper rear engine pad (11).

WARNING

Do not put fingers between frame and engine support. Jack failure may cause injury to personnel.

4. Remove screw (4), washer (5), and upper rear engine pad (11) from frame (7) and engine support (6).

b. Installation

1. Install upper rear engine pad (11) on frame (7) with washer (5) and screw (4).
2. Lower hydraulic jack (13) and remove jack (13) and wood blocks (14) from transmission (12).
3. Install lower rear engine pad (8) on frame (7) with washer (9) and new locknut (10). Tighten locknut (10) 65-70 lb-ft (88-95 N·m).

NOTE

Perform step 4 for engine left rear mount.

4. Install accelerator linkage (3) on throttle control lever (2) with nut (1).

https://truckmanualshub.com/

3-3. ENGINE REAR MOUNT PAD REPLACEMENT (Contd)

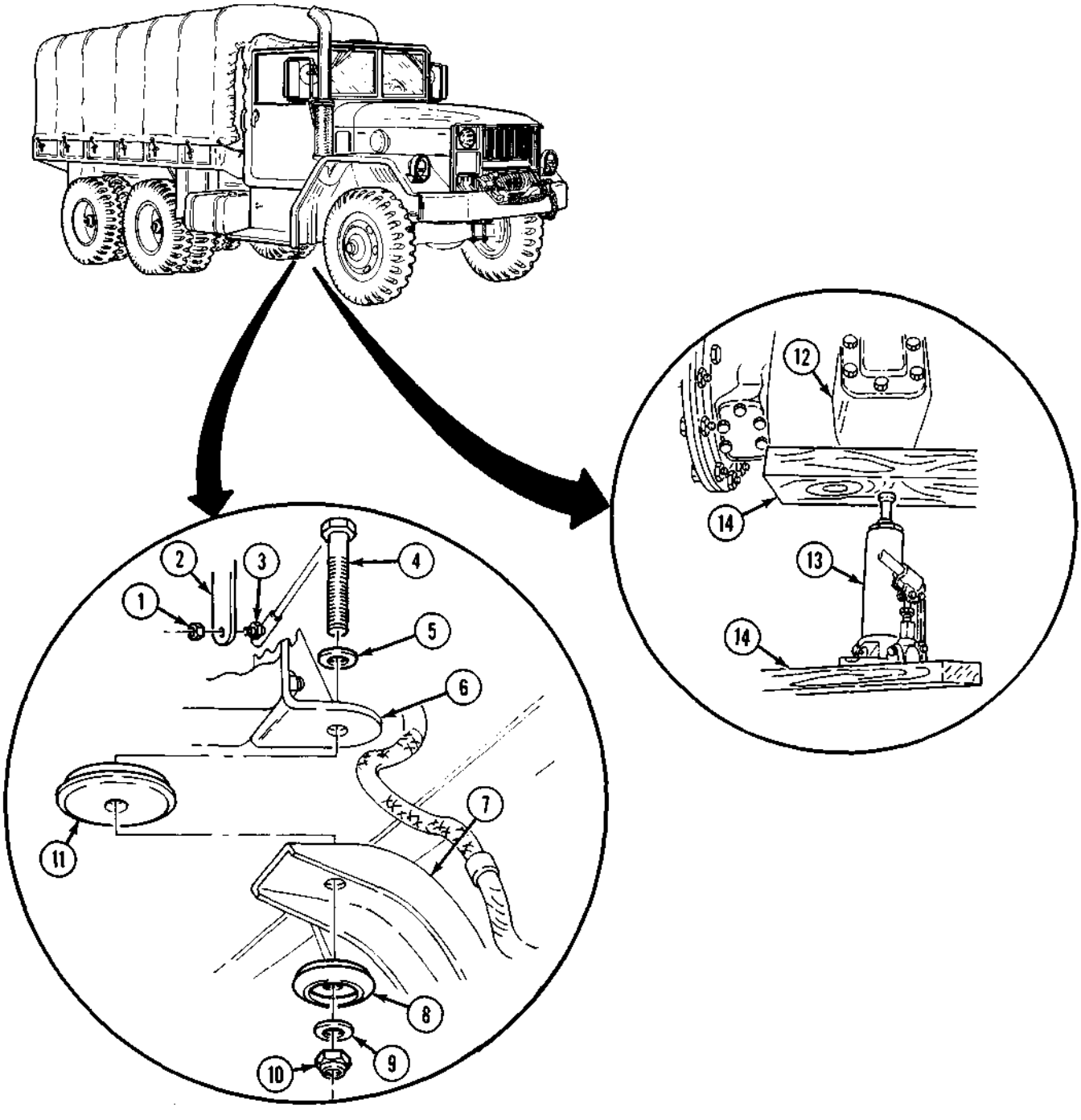

https://truckmanualshub.com/

Section II. ENGINE LUBRICATION SYSTEM MAINTENANCE

3-4. ENGINE LUBRICATION SYSTEM MAINTENANCE INDEX

PARA. NO.	TITLE	PAGE NO.
3-5.	Oil Dipstick Tube Replacement	3-6
3-6.	Crankcase Breather Tube Maintenance	3-8
3-7.	Engine Oil Filter and Body Maintenance	3-10
3-8.	Crankcase Breather Tube Adapter Replacement	3-13

3-5. OIL DIPSTICK TUBE REPLACEMENT

This task covers:

a. Removal **b. Installation**

INITIAL SETUP:

APPLICABLE MODELS
All

MATERIALS/PARTS
Lockwasher
Antiseize tape (Appendix C, Item 27)

REFERENCES (TM)
TM 9-2320-361-10
TM 9-2320-361-20P

EQUIPMENT CONDITION
- Parking brake set (TM 9-2320-361-10).
- Hood raised and secured (TM 9-2320-361-10).
- Dipstick removed (TM 9-2320-361-10).

a. Removal

1. Remove nut (1), lockwasher (7), and screw (3) from bracket (6). Discard lockwasher (7).
2. Remove dipstick tube (5) from engine (4) and bracket (6).

NOTE
Perform step 3 only if oil dipstick tube bracket needs replacement.

3. Remove two nuts (2) and bracket (6) from engine (4).

b. Installation

NOTE
- Male pipe threads must be wrapped with antiseize tape before installation.
- Perform step 1 only if oil dipstick tube bracket was removed.

1. Install bracket (6) on engine (4) with two nuts (2).
2. Insert dipstick tube (5) through bracket (6), and install dipstick tube (5) on engine (4).
3. Install screw (3), new lockwasher (7), and nut (1) on dipstick tube bracket (6).

https://truckmanualshub.com/

3-5. OIL DIPSTICK TUBE REPLACEMENT (Contd)

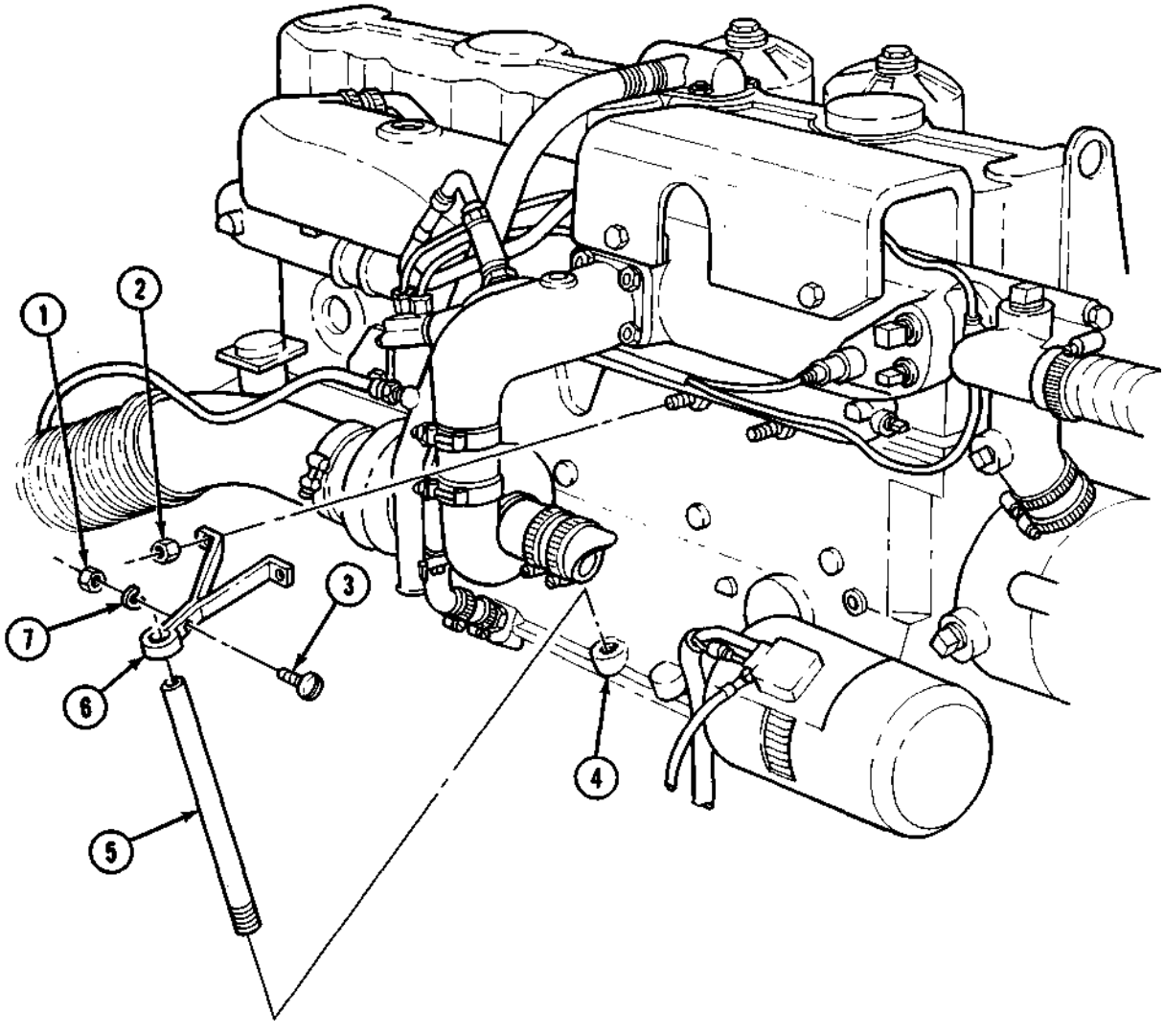

FOLLOW-ON TASK: Install dipstick (TM 9-2320-361-10).

https://truckmanualshub.com/

3-6. CRANKCASE BREATHER TUBE MAINTENANCE

This task covers:

a. Removal
b. Cleaning and Inspection
c. Installation

INITIAL SETUP:

APPLICABLE MODELS
All

MATERIALS/PARTS
Lockwasher
Drycleaning solvent (Appendix C, Item 26)

REFERENCES (TM)
TM 9-2320-361-10
TM 9-2320-361-20P

EQUIPMENT CONDITION
- Parking brake set (TM 9-2320-361-10).
- Hood raised and secured (TM 9-2320-361-10).

GENERAL SAFETY INSTRUCTIONS
- Keep fire extinguisher nearby when using drycleaning solvent.
- Compressed air source will not exceed 30 psi (207 kPa).
- Eyeshields must be worn when cleaning with compressed air.

a. Removal

1. Disconnect tube (5) and remove adapter (6) from crankcase breather tube (4).
2. Remove screw (8) and lockwasher (7) from crankcase breather tube (4) and turbocharger (9). Discard lockwasher (7).
3. Loosen two clamps (2) and remove crankcase breather tube (4), hose (3), and two clamps (2) from breather tube adapter (1) and turbocharger (9).

b. Cleaning and Inspection

WARNING

- Drycleaning solvent is flammable and will not be used near open flame. Use only in well-ventilated places. Failure to do so may result in injury to personnel.
- Compressed air source will not exceed 30 psi (207 kPa). When cleaning with compressed air, eyeshields must be worn. Failure to wear eyeshields may result in injury to personnel.

Clean crankcase breather tube (4) and hose (3) with drycleaning solvent and dry with compressed air. Remove obstructions. Replace if bent.

c. Installation

1. Install hose (3) and crankcase breather tube (4) on breather tube adapter (1) with two clamps (2).
2. Install crankcase breather tube (4) on turbocharger (9) with new lockwasher (7) and screw (8).
3. Install adapter (6) on crankcase breather tube (4), and connect tube (5) to adapter (6).

https://truckmanualshub.com/

3-6. CRANKCASE BREATHER TUBE MAINTENANCE (Contd)

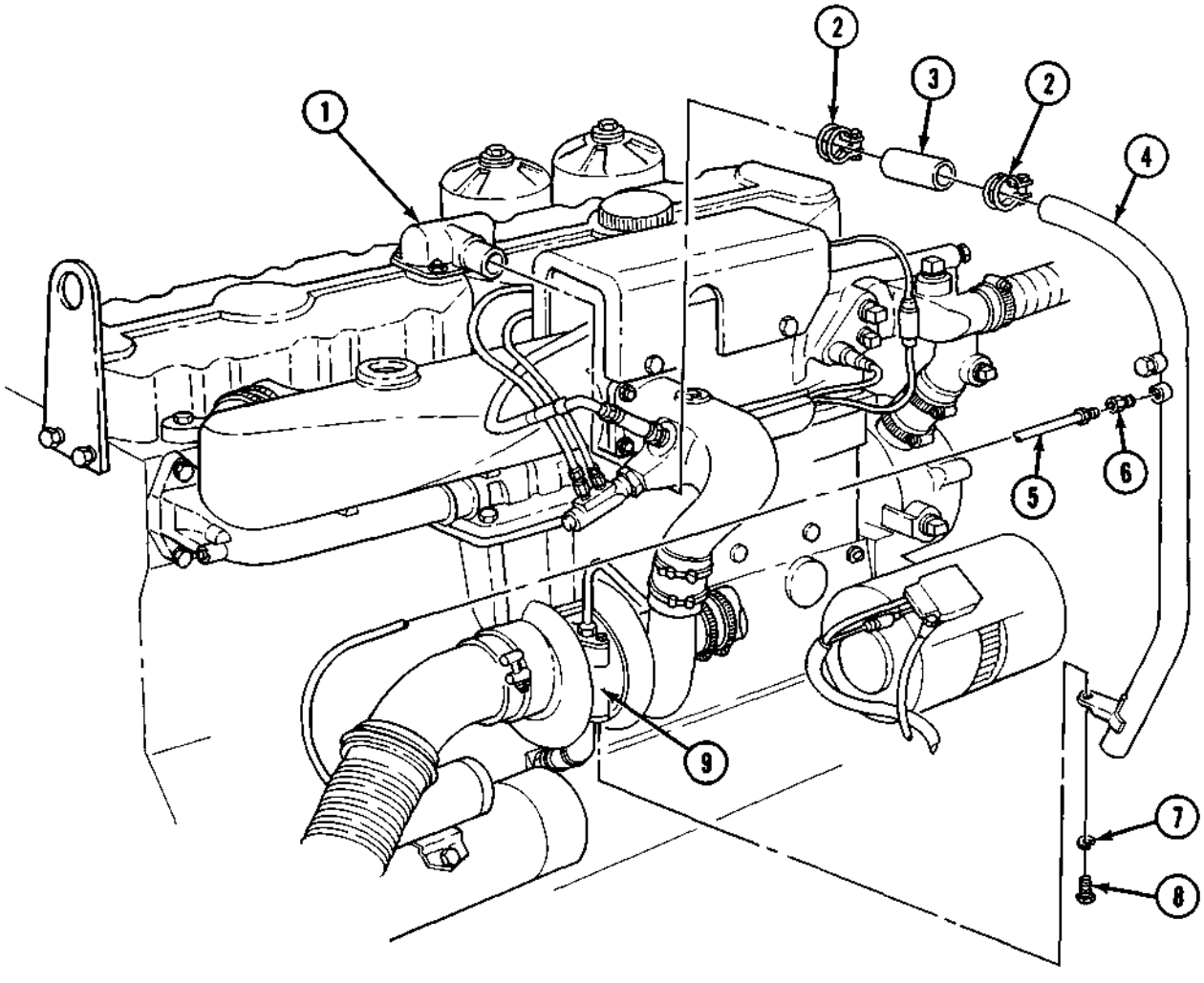

https://truckmanualshub.com/

3-7. ENGINE OIL FILTER AND BODY MAINTENANCE

This task covers:

a. Draining Oil
b. Oil Filter Removal
c. Body Disassembly
d. Cleaning and Inspection
e. Body Assembly
f. Oil Filter Installation

INITIAL SETUP:

APPLICABLE MODELS
All

MATERIALS/PARTS
Four gaskets
Two cotter pins
Two filter elements
Two spacers
Drycleaning solvent (Appendix C, Item 26)
Lubricating oil, OE/HDO 30 (Appendix C, Item 19)

REFERENCES (TM)
LO 9-2320-209-12-1
TM 9-2320-361-10
TM 9-2320-361-20P

EQUIPMENT CONDITION
- Parking brake set (TM 9-2320-361-10).
- Hood raised and secured (TM 9-2320-361-10).

GENERAL SAFETY INSTRUCTIONS
- Do not drain oil when engine is hot.
- Keep fire extinguisher nearby when using drycleaning solvent.
- Compressed air source will not exceed 30 psi (207 kPa).
- Eyeshields must be worn when cleaning with compressed air.

a. Draining Oil

WARNING

Do not drain oil when engine is hot. Hot oil may cause injury to personnel.

NOTE

Have drainage container ready to catch oil.

1. Remove two drainplugs (3) and spacers (2) from engine oil pan (1), and allow oil to completely drain. Discard spacers (2).
2. Install two new spacers (2) and drainplugs (3) on engine oil pan (1).

b. Oil Filter Removal

NOTE

Have drainage container ready to catch oil.

1. Remove pipe plug (6) from filter housing (7) and allow oil to drain,

NOTE

Both engine oil filter bodies are removed the same way.

2. Loosen center post (4) and remove body (5) and gasket (8) from filter housing (7). Discard gasket (8).
3. Install pipe plug (6) on filter housing (7).

https://truckmanualshub.com/

3-7. ENGINE OIL FILTER AND BODY MAINTENANCE (Contd)

c. Body Disassembly

NOTE

Both engine oil filter bodies are disassembled the same.

1. Remove cotter pin (10), filter element (9), cup (13), and spring (12) from center post (4) and body (5). Discard cotter pin (10) and filter element (9).
2. Remove center post (4) and gasket (11) from body (5). Discard gasket (11).

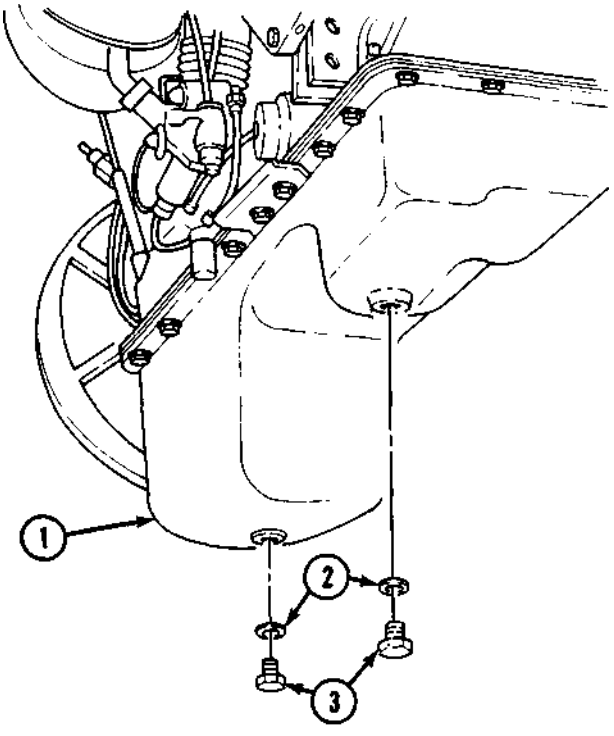

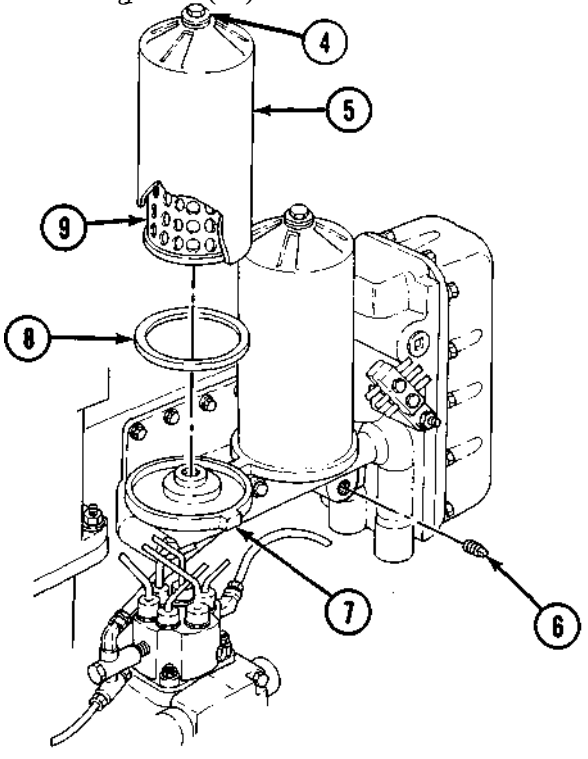

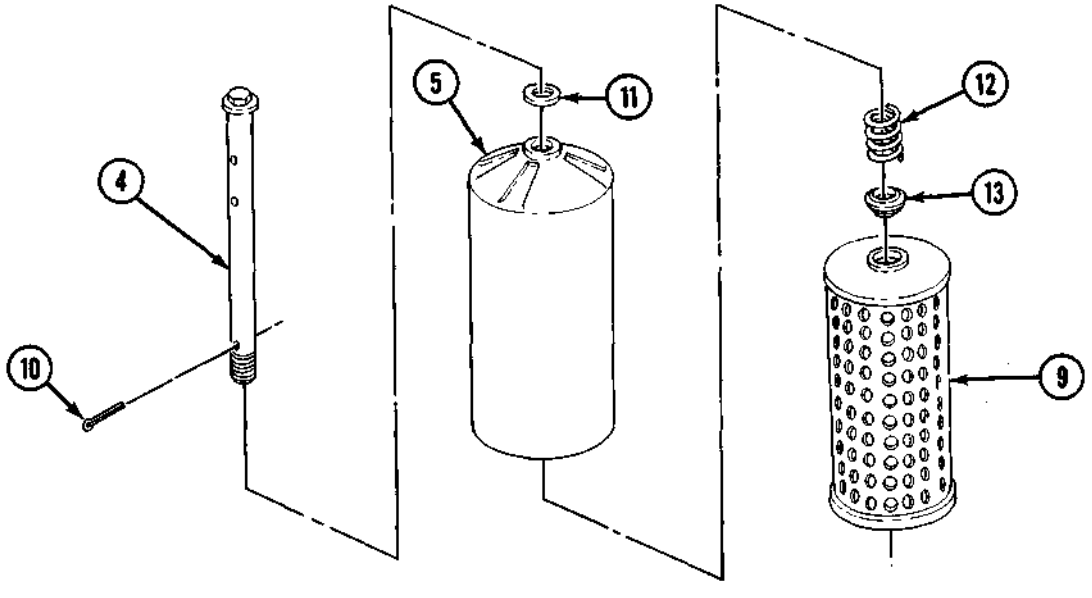

https://truckmanualshub.com/

3-7. ENGINE OIL FILTER AND BODY MAINTENANCE (Contd)

d. Cleaning and Inspection

WARNING

- Drycleaning solvent is flammable and will not be used near open flame. Use only in well-ventilated places. Failure to do so may result in injury to personnel.
- Compressed air source will not exceed 30 psi (207 kPa). When cleaning with compressed air, eyeshields must be worn. Failure to wear eyeshields may result in injury to personnel.

1. Clean center post (1) and body (2) with drycleaning solvent and dry with compressed air.
2. Inspect body (2) for cracks. Replace body (2) if cracked.
3. Inspect center post (1) for stripped threads. Replace center post (1) if threads are stripped.
4. Inspect filter housing (4) for cracks, nicks, and stripped threads. Notify your supervisor if filter housing (4) is cracked, nicked, or threads are stripped.
5. Inspect cup (8) for cracks and grooves. Replace cup (8) if cracked or grooved.
6. Inspect spring (7) for cracks and breaks. Replace spring (7) if cracked or broken.

e. Body Assembly

NOTE

Both engine oil filter bodies are assembled the same.

1. Place new gasket (6) on center post (1) and install center post (1) on filter body (2).
2. Install spring (7), cup (8), new filter element (9), and new cotter pin (5) on center post (1) and body (2).

f. Oil Filter Installation

NOTE

Both engine oil filter bodies are installed the same.

1. Coat new gasket (4) with light film of engine oil.
2. Install new gasket (4) and body (2) on filter housing (3). Tighten center post (1)60 lb-ft (81 N·m).

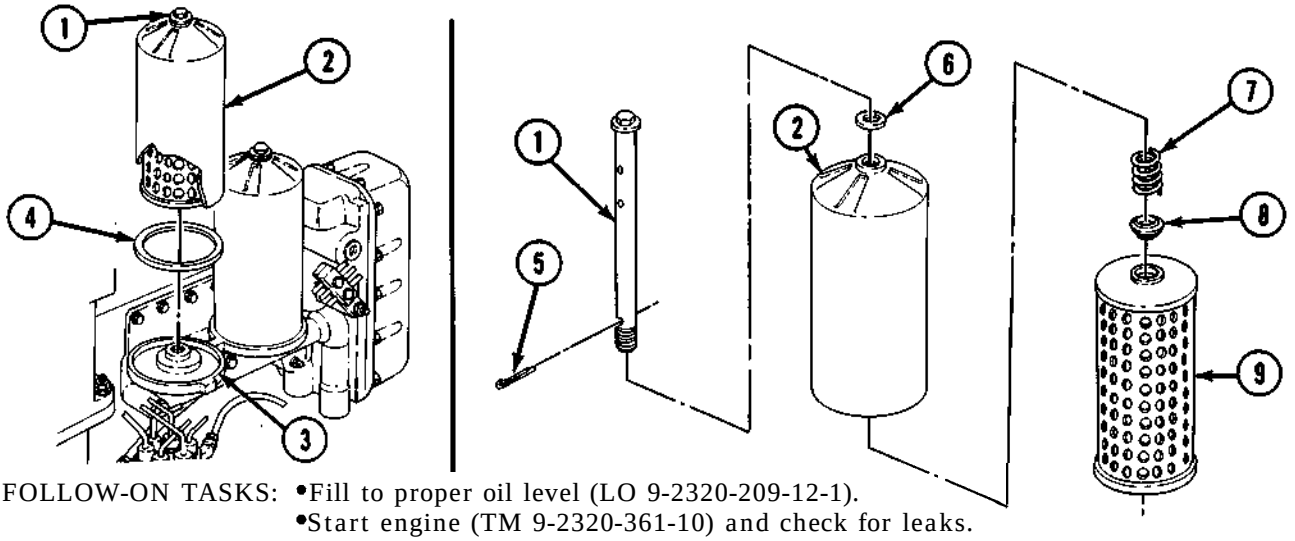

FOLLOW-ON TASKS: •Fill to proper oil level (LO 9-2320-209-12-1).
•Start engine (TM 9-2320-361-10) and check for leaks.

https://truckmanualshub.com/

3-8. CRANKCASE BREATHER TUBE ADAPTER REPLACEMENT

This task covers:

a. Removal **b. Installation**

INITIAL SETUP:

APPLICABLE MODELS
All

MATERIALS/PARTS
Four locknuts
Two gaskets

REFERENCES (TM)
TM 9-2320-361-10
TM 9-2320-361-20P

EQUIPMENT CONDITION
- Parking brake set (TM 9-2320-361-10).
- Hood raised and secured (TM 9-2320-361-10).

a. Removal

1. Loosen clamp (5) and disconnect hose (4) from crankcase breather tube adapter (3).
2. Remove four locknuts (1), washers (2), and clamp (8) from crankcase breather tube adapter (3). Discard locknuts (1).
3. Remove crankcase breather tube adapter (3) and two gaskets (7) from two rocker arm covers (6). Discard gaskets (7).

b. Installation

1. Install two new gaskets (7) and crankcase breather tube adapter (3) on two rocker arm covers (6) with clamp (8), four washers (2), and new locknuts (1). Tighten locknuts (1) 55-60 lb-in. (6-7 N·m).
2. Connect hose (4) to adapter (3) and tighten clamp (5).

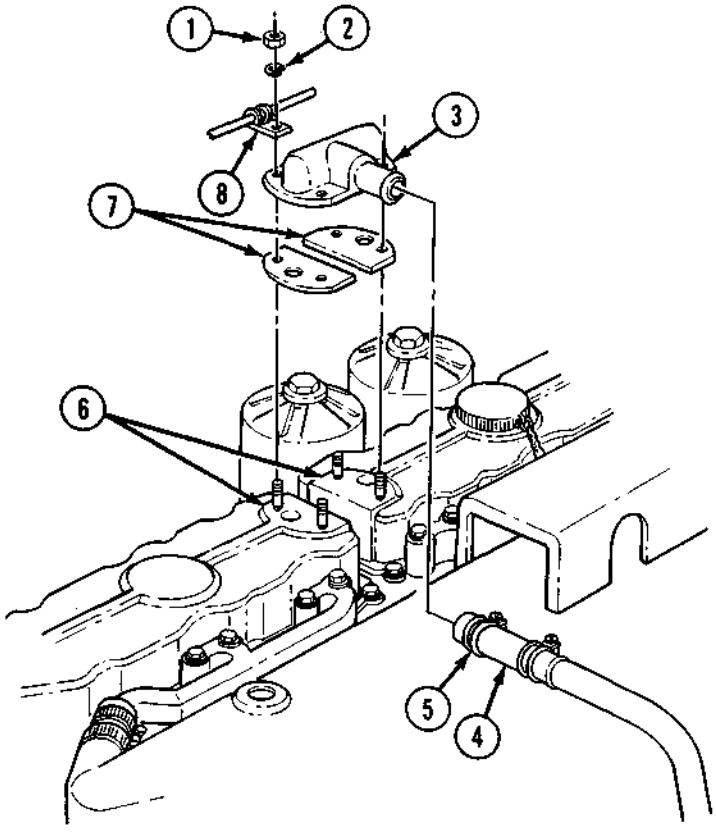

https://truckmanualshub.com/

Section III. CLUTCH SYSTEM MAINTENANCE

3-9. CLUTCH SYSTEM MAINTENANCE INDEX

PARA. NO.	TITLE	PAGE NO.
3-10.	Clutch Control Linkage Maintenance	3-14
3-11.	Pedal Shaft Support Replacement	3-19

3-10. CLUTCH CONTROL LINKAGE MAINTENANCE

This task covers:

a. Removal
b. Installation
c. Adjustment

INITIAL SETUP:

APPLICABLE MODELS
All

MATERIALS/PARTS
Four locknuts
Two woodruff keys
Chalk (Appendix C, Item 9)

REFERENCES (TM)
LO 9-2320-209-12-1
TM 9-2320-361-10
TM 9-2320-361-20P

EQUIPMENT CONDITION
- Parking brake set (TM 9-2320-361-10).
- Hood raised and secured (TM 9-2320-361-10).
- Accelerator pedal, bracket, and rod removed (para. 3-33).
- Transmission power takeoff shift linkage removed (vehicles with transmission PTO only) (para. 13-20).
- Hydraulic master cylinder removed (para. 8-10).

a. Removal

1. Remove clutch return spring (7) from clutch shaft lever (6) and frame (10).
2. Mark shaft of clutch pedal (3) with chalk next to remote control lever (14).
3. Remove screw (1), clutch pedal (3), and rubber bumper (2) from remote control lever (14).
4. Remove locknut (13), screw (4), remote control lever (14), and woodruff key (12) from pedal lever shaft (11). Discard locknut (13) and woodruff key (12).
5. Remove locknut (9), screw (5), and rod (8) from clutch shaft lever (6). Discard locknut (9).
6. Remove locknut (26), screw (21), and remote control lever (20) with rod (8) from shaft (22). Discard locknut (26).

NOTE

Do not remove spring loaded pin from clevis.

7. Pull pin (24) to one side of clevis (25) and remove remote control lever (20) from clevis (25).
8. Loosen nut (23) and remove clevis (25) and nut (23) from rod (8).
9. Remove locknut (18), screw (17), clutch shaft lever (6), and pedal lever shaft (11) from brake lever (19) and shaft support (16). Discard locknut (18).
10. Remove woodruff key (15) from shaft (11). Discard woodruff key (15).

https://truckmanualshub.com/

3-10. CLUTCH CONTROL LINKAGE MAINTENANCE (Contd)

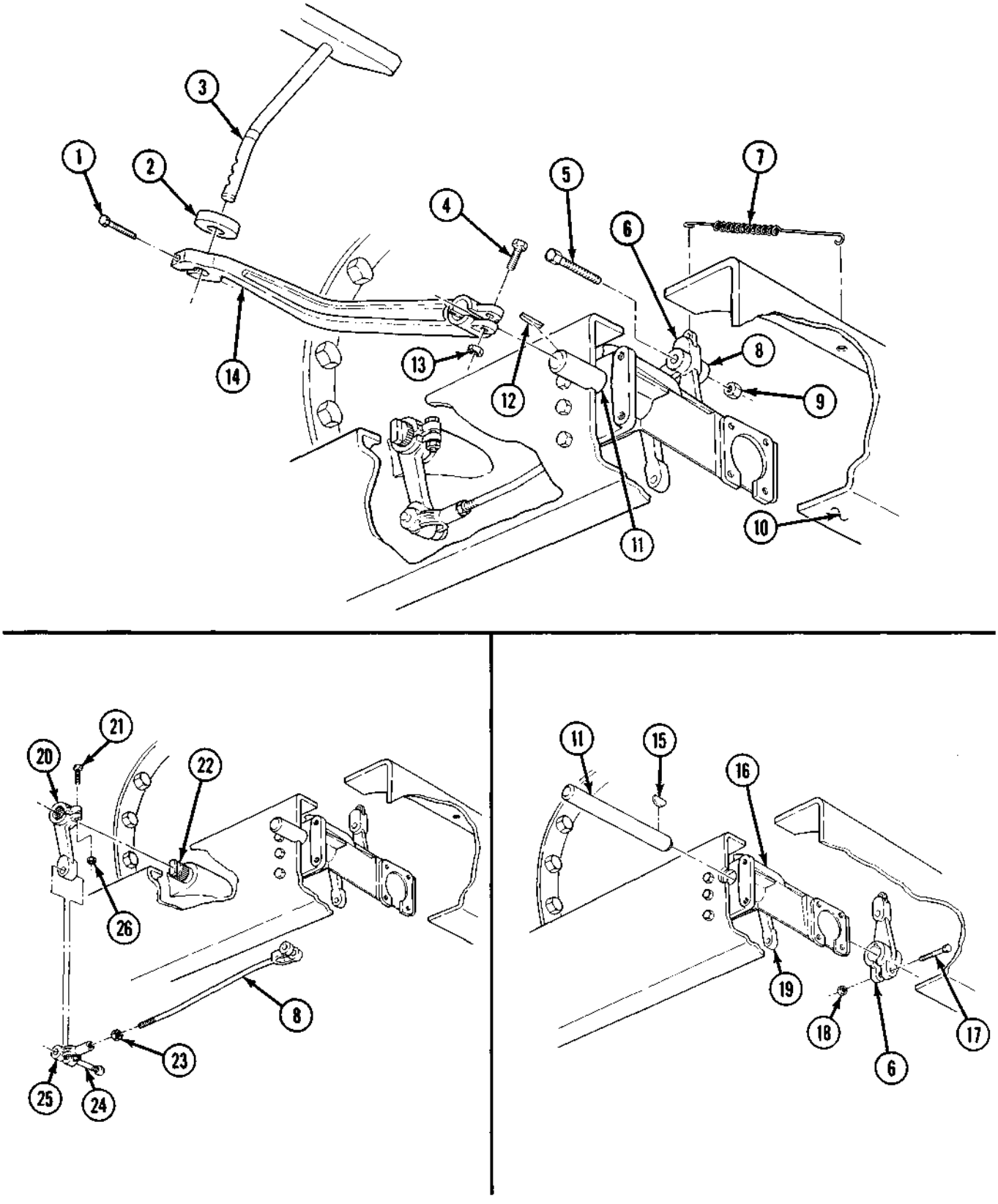

https://truckmanualshub.com/

3-10. CLUTCH CONROL LINKAGE MAINTENANCE (Contd)

b. Installation

1. Install new woodruff key (2) on pedal lever shaft (1).
2. Install clutch shaft lever (3) on pedal lever shaft (1) with screw (4) and new locknut (5). Do not tighten locknut (5).
3. Install pedal lever shaft (1) through brake lever (6) and shaft support (7).
4. Position clutch shaft lever (3) flush with end of pedal lever shaft (1) and tighten locknut (5).
5. Install remote control lever (15) on clutch shaft (9); position one spline to rear of clutch shaft (9) centerline. Install screw (8) and new locknut (14). Do not tighten.
6. Push lower end of remote control lever (15) forward until resistance is felt. Measure distance from center of bottom hole (16) to transmission flange (17).

NOTE

Measurement taken in step 6 should be approximately 3.25 in. (8.26 cm). If measurement is not approximately 3.25 in. (8.26 cm), perform step 7.

7. Remove remote control lever (15) and rotate it one spline at a time until measurement is correct.
8. Tighten locknut (14).
9. Install nut (11) and clevis (13) on rod (10).
10. Install rod (10) on clutch shaft lever (3) with screw (23) and new locknut (26). Make sure head of pin (12) is facing transmission.
11. Install rod (10) on remote control lever (15) with pin (12). Press pin (12) into clevis (13) until head of pin (12) seats against clevis (13).
12. Install clutch return spring (24) on clutch shaft lever (3) and frame (25).
13. Install new woodruff key (27) on pedal lever shaft (l).
14. Install remote control lever (21) on pedal lever shaft (1) with screw (22) and new locknut (28).
15. Install shaft of clutch pedal (20) and rubber bumper (19) on remote control lever (21) with screw (18). Aline chalk mark on shaft of clutch pedal (20) with remote control lever (21) and tighten screw (18).
16. Mark shaft of clutch pedal (20) with chalk where shaft passes through floor (30).
17. Push clutch pedal (20) down until resistance is felt and again mark shaft of clutch pedal (20) with chalk.
18. Release clutch pedal (20) and measure distance between two chalk marks (29). Distance (pedal free travel) should be 1.5-2 in. (3.8-5.1 cm).
19. If pedal free travel is not 1.5-2 in. (3.8-5.1 cm), perform clutch adjustment procedure.

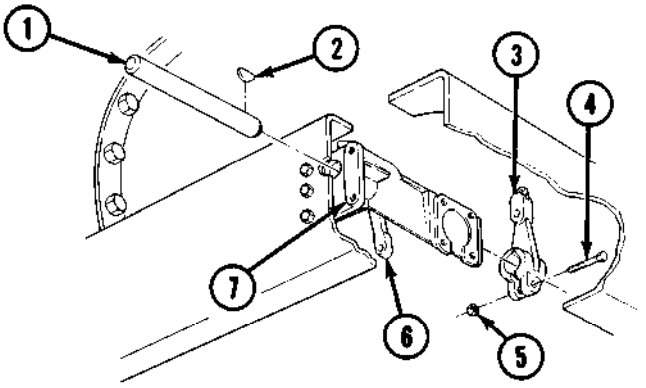

https://truckmanualshub.com/

3-10. CLUTCH CONTROL LINKAGE MAINTENANCE (Contd)

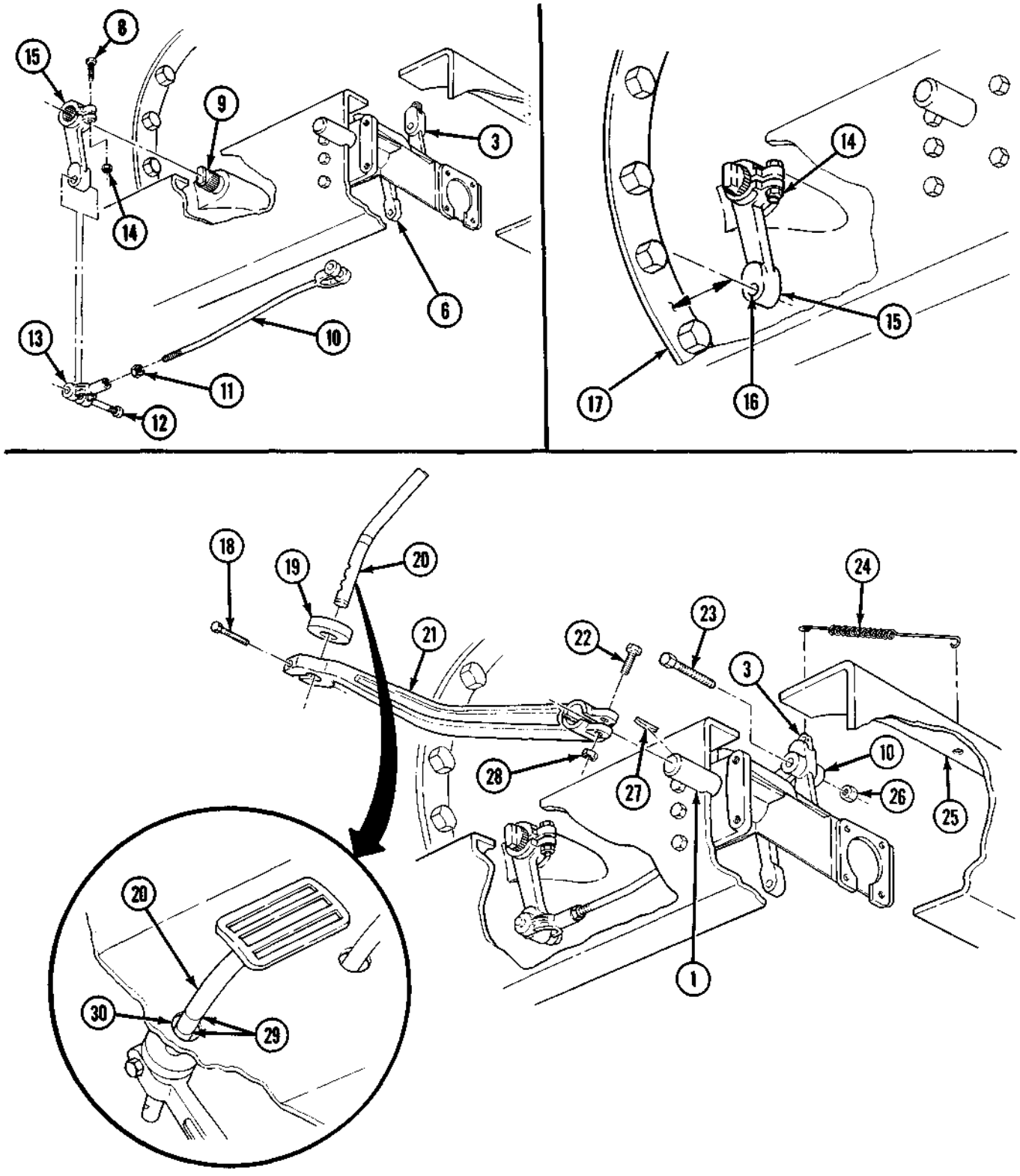

https://truckmanualshub.com/

3-10. CLUTCH CONTROL LINKAGE MAINTENANCE (Contd)

c. Adjustment

1. Loosen nut (3), pull pin (4) to one side of clevis (5), and remove clevis (5) from remote control lever (1).
2. If pedal free travel is less than 1.5 in. (3.8 cm), shorten length of rod (2) by tightening clevis (5) on rod (2).
3. If pedal free travel is more than 2 in. (5.1 cm), lengthen rod (2) by loosening clevis (5) on rod (2).
4. Install clevis (5) on remote control lever (1) with pin (4). Press pin (4) into clevis (5) until head of pin (4) seats against clevis (5).
5. Recheck pedal free travel (steps 17-18, subtask b.) and tighten nut (3).

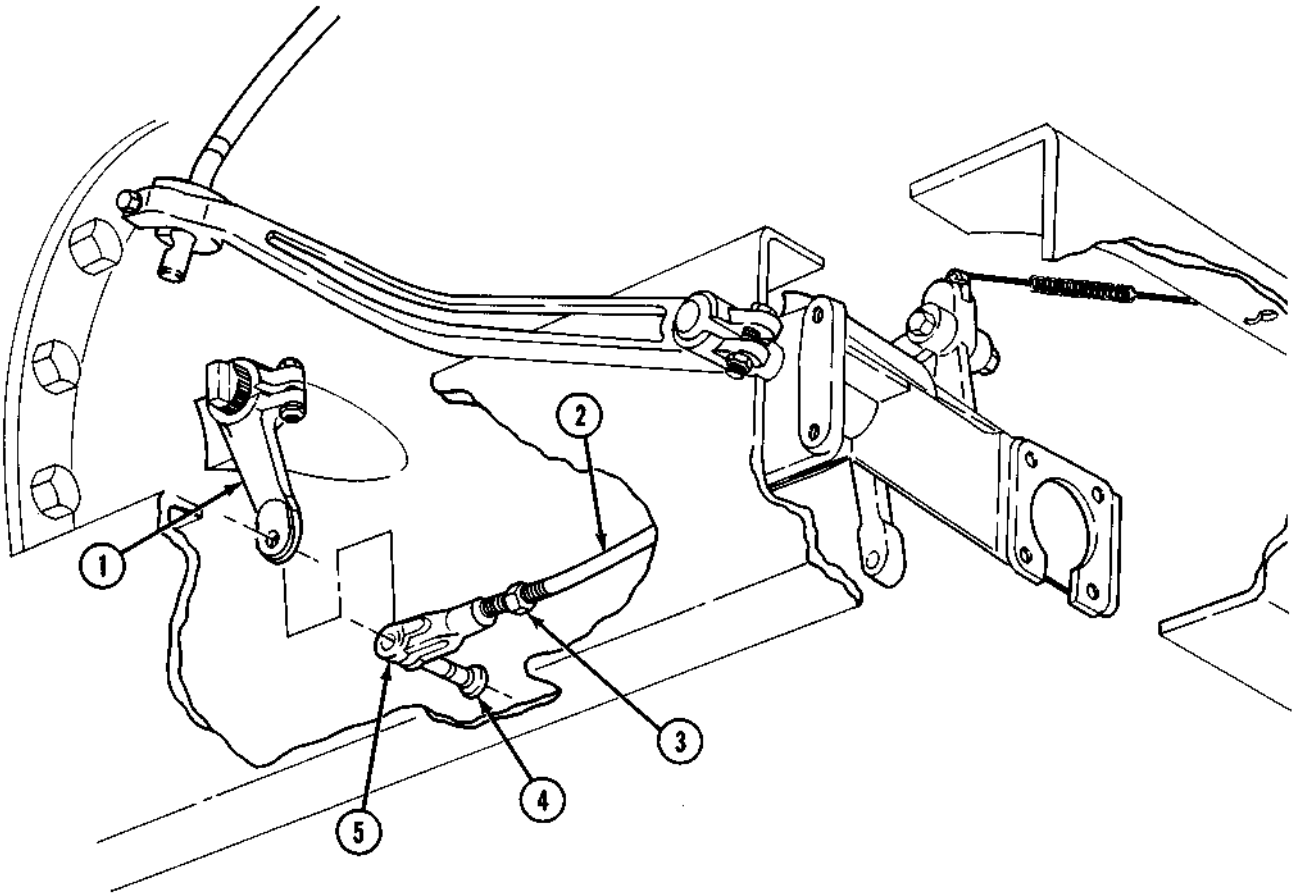

FOLLOW-ON TASKS:
- Lubricate clutch control linkage (LO 9-2320-209-12-1).
- Install hydraulic master cylinder (para 8-10).
- Install transmission power takeoff shift linkage (vehicles with transmission PTO only) (para. 13-20).
- Install accelerator pedal, bracket, and rod (para. 3-33).

https://truckmanualshub.com/

3-11. PEDAL SHAFT SUPPORT REPLACEMENT

This task covers:

a. Removal | **b. Installation**

INITIAL SETUP:

APPLICABLE MODELS
All

REFERENCES (TM)
TM 9-2320-361-20P

MATERIALS/PARTS
Five locknuts

EQUIPMENT CONDITION
Clutch control linkage removed (para. 3-10).

a. Removal

1. Remove five locknuts (4), screws (1), and pedal shaft support (3) from chassis (2). Discard locknuts (4).
2. Remove two grease fittings (5) from pedal shaft support (3).

b. Installation

1. Install two grease fittings (5) in pedal shaft support (3).
2. Install pedal shaft support (3) on chassis (2) with five screws (1) and new locknuts (4).

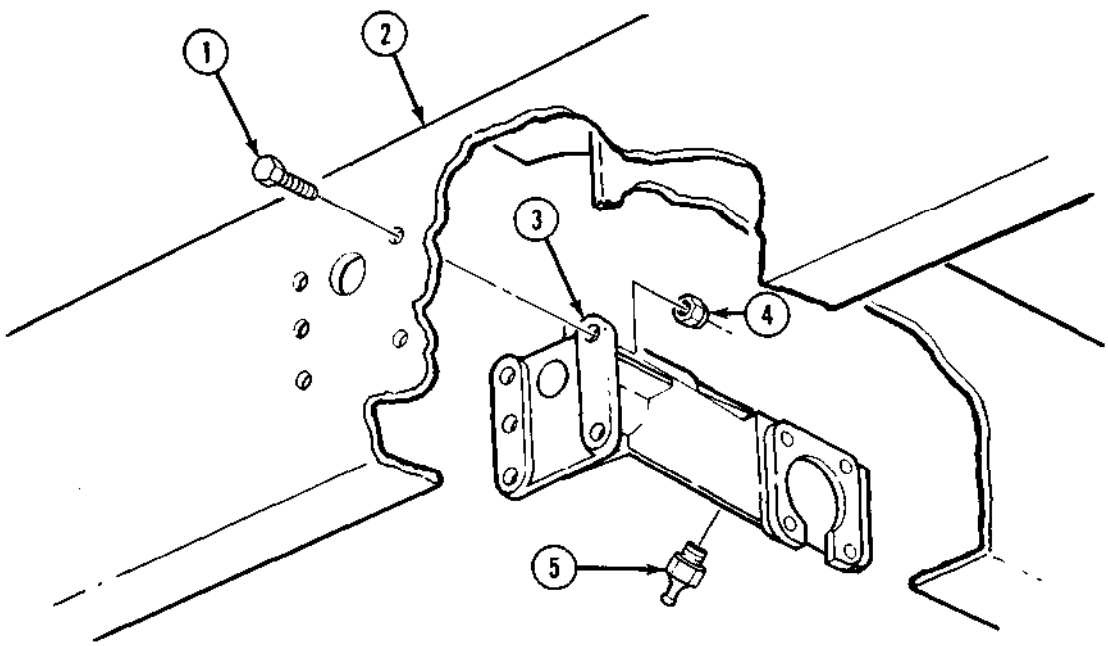

FOLLOW-ON TASK: Install clutch control linkage (para. 3-10).

https://truckmanualshub.com/

Section IV. AIR INTAKE SYSTEM MAINTENANCE

3-12. AIR INTAKE SYSTEM MAINTENANCE INDEX

PARA. NO.	TITLE	PAGE NO.
3-13.	Air Intake Tube and Cap Replacement	3-20
3-14.	Air Cleaner Cap and Element Replacement	3-22
3-15.	Air Cleaner Assembly Maintenance	3-24
3-16.	Air Cleaner Indicator and Tube Maintenance	3-25

3-13. AIR INTAKE TUBE AND CAP REPLACEMENT

This task covers:

a. Removal **b. Installation**

INITIAL SETUP:

APPLICABLE MODELS
All

REFERENCES (TM)
TM 9-2320-361-10
TM 9-2320-361-20P

EQUIPMENT CONDITION
- Parking brake set (TM 9-2320-361-10).
- Hood raised and secured (TM 9-2320-361-10).

a. Removal

1. Loosen clamp (2) and remove cap (1) from air cleaner shell (12).
2. Loosen clamps (6) and (8) and remove air intake tube (7) from hoses (5) and (9).
3. Loosen clamp (4) and remove hose (5) from air cleaner head (3).
4. Loosen clamp (10) and remove hose (9) from turbocharger (11).

b. Installation

1. Install hose (9) on turbocharger (11) with clamp (10).
2. Install hose (5) on air cleaner head (3) with clamp (4).
3. Install air intake tube (7) on hoses (5) and (9) with clamps (6) and (8).
4. Install cap (1) on air cleaner shell (12) with clamp (2).

https://truckmanualshub.com/

3-13. AIR INTAKE TUBE AND CAP REPLACEMENT (Contd)

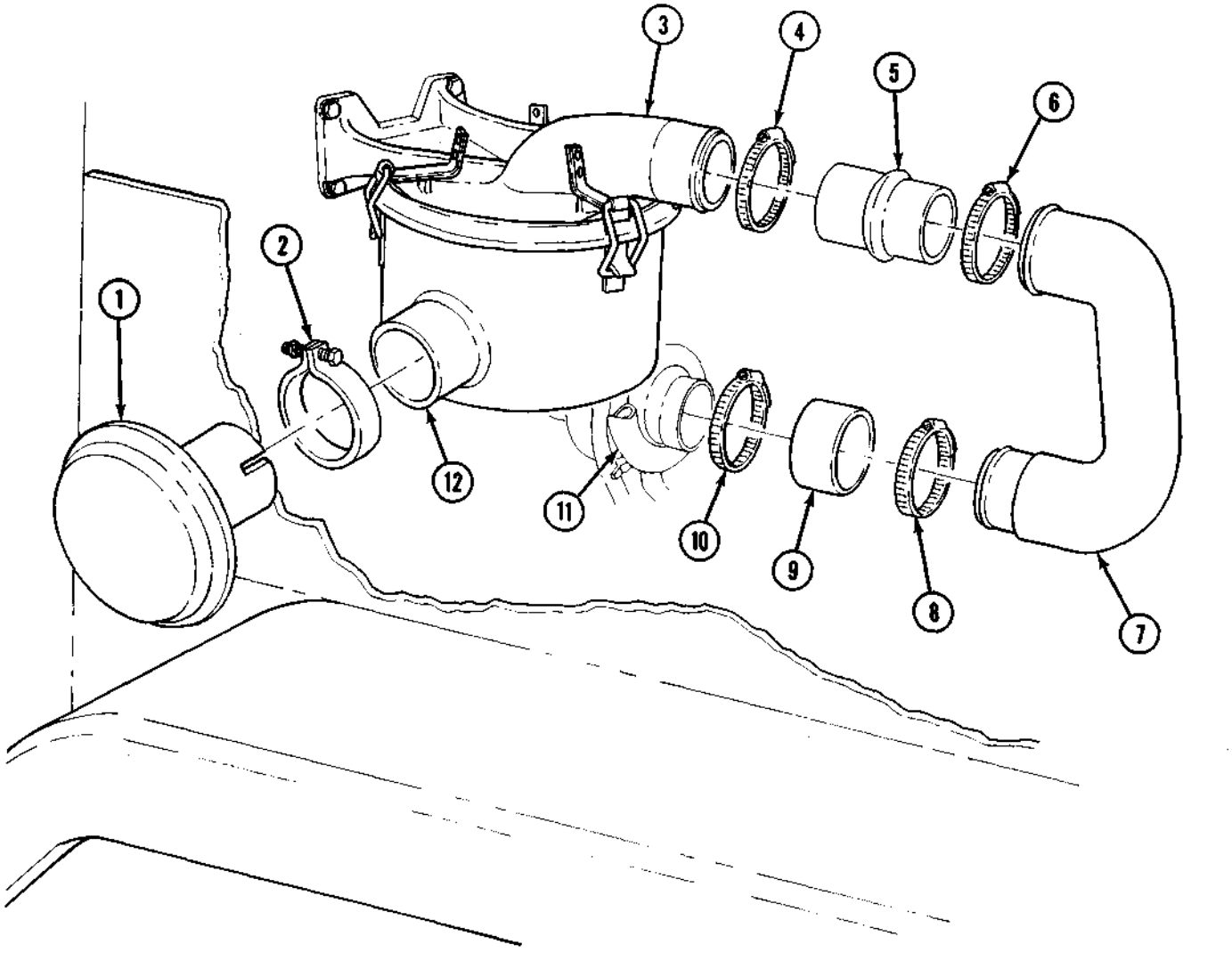

https://truckmanualshub.com/

3-14. AIR CLEANER CAP AND ELEMENT REPLACEMENT

This task covers:

a. Cap Removal
b. Element Removal
c. Element Installation
d. Cap Installation

INITIAL SETUP:

APPLICABLE MODELS
All

MATERIALS/PARTS
Filter element

REFERENCES (TM)
FM 21-40
TM 9-2320-361-10
TM 9-2320-361-20P

EQUIPMENT CONDITION
- Parking brake set (TM 9-2320-361-10).
- Hood raised and secured (TM 9-2320-361-10).

GENERAL SAFETY INSTRUCTIONS
- Observe NBC warning.
- NBC contaminated filters must be handled using adequate precautions.

WARNING

- If NBC exposure is suspected, all air filter media should be handled by personnel wearing protective equipment. Consult your unit NBC officer or NBC NCO for appropriate handling or disposal instructions.
- NBC contaminated filters must be handled using adequate precautions (FM 21-40) and must be disposed of by trained personnel.

a. Cap Removal

Loosen clamp (2), and remove cap (1) and clamp (2) from air cleaner shell (3).

b. Element Removal

1. Unlatch three clamps (5) and remove air cleaner shell (3) from air cleaner head (4).
2. Remove filter element (7) from air cleaner shell (3). Discard filter element (7).
3. Remove seal (6) from air cleaner head (4).

https://truckmanualshub.com/

3-14. AIR CLEANER ELEMENT REPLACEMENT (Contd)

c. Element Installation

1. Install seal (6) in air cleaner head (4).
2. Install new filter element (7) in air cleaner shell (3).
3. Aline air cleaner shell (3) with air cleaner head (4) and install with three clamps (5).

d. Cap Installation

Install clamp (2) and cap (1) to air cleaner shell (3) and tighten clamp (2).

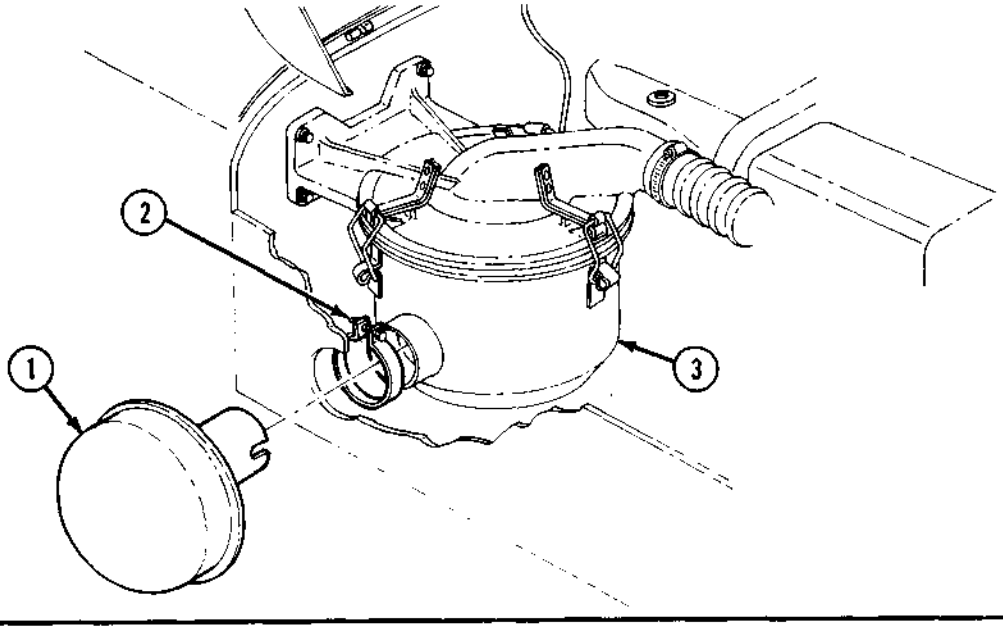

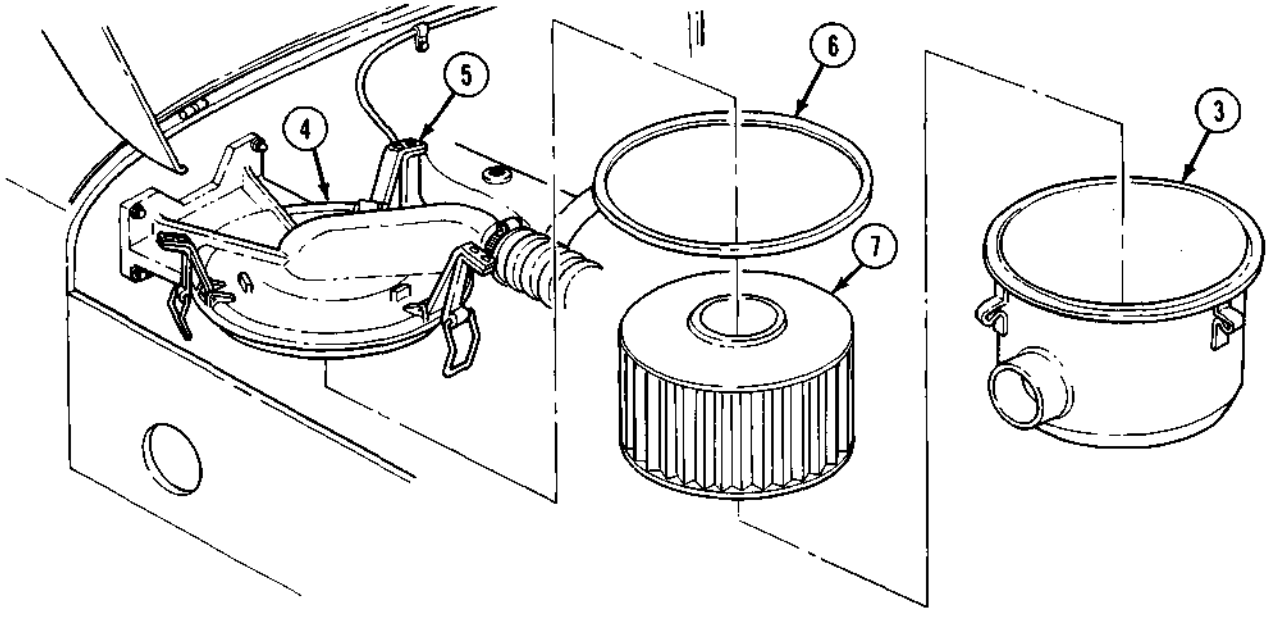

FOLLOW-ON TASK. Start engine (TM 9-2320-361-10) and make sure air filter indicator in cab indicates green (TM 9-2320-361-10).

https://truckmanualshub.com/

3-15. AIR CLEANER ASSEMBLY MAINTENANCE

This task covers:

a. Removal
b. Inspection
c. Installation

INITIAL SETUP:

APPLICABLE MODELS
All

MATERIALS/PARTS
Four lockwashers
Antiseize tape (Appendix C, Item 27)

PERSONNEL REQUIRED
Two

REFERENCES (TM)
TM 9-2320-361-10
TM 9-2320-361-20P

EQUIPMENT CONDITION
- Parking brake set (TM 9-2320-361-10).
- Hood raised and secured (TM 9-2320-361-10).
- Air intake tube and cap removed (para. 3-13).
- Air cleaner element removed (para. 3-14).

a. Removal

1. Disconnect tube (2) from connector (3), and remove connector (3) from air cleaner head (4).

NOTE
Assistant will help with step 2.

2. Remove four nuts (1), screws (6), lockwashers (5), and air cleaner head (4) from firewall (7). Discard lockwashers (5).

b. Inspection

Inspect air cleaner head (4) for cracks or damage that would allow unfiltered air to enter. Replace air cleaner head (4) if cracked or damaged.

c. Installation

NOTE
Assistant will help with step 1.

1. Install air cleaner head (4) on firewall (7) with four screws (6), new lockwashers (5), and nuts (1).

NOTE
Male pipe threads must be wrapped with antiseize tape before installation

2. Install connector (3) on air cleaner head (4).
3. Connect tube (2) to connector (3).

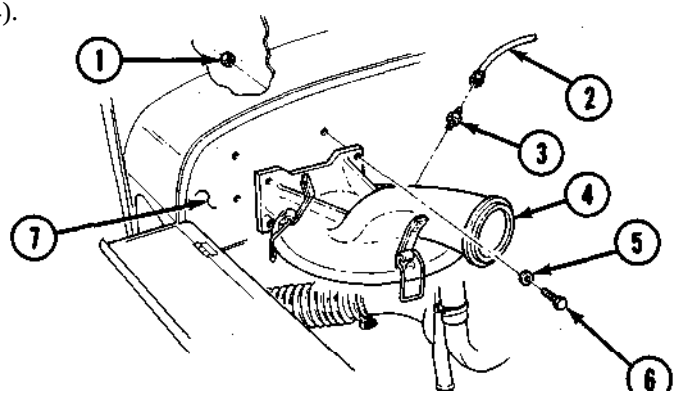

FOLLOW-ON TASKS:
- Install air cleaner element (para. 3-14).
- Install air intake tube and cap (para. 3-13).

https://truckmanualshub.com/

3-16. AIR CLEANER INDICATOR AND TUBE MAINTENANCE

This task covers:

a. Testing
b. Removal
c. Inspection and Cleaning
d. Installation

INITIAL SETUP:

APPLICABLE MODELS
All

MATERIALS/PARTS
Antiseize tape (Appendix C, Item 27)

PERSONNEL REQUIRED
Two

REFERENCES (TM)
TM 9-2320-361-10
TM 9-2320-361-20P

EQUIPMENT CONDITION
- Parking brake set (TM 9-2320-361-10).
- Hood raised and secured (TM 9-2320-361-10).

GENERAL SAFETY INSTRUCTIONS
- Compressed air source will not exceed 30 psi (207 kPa).
- Eyeshields must be worn when cleaning with compressed air.

a. Testing

1. Loosen clamp (6) and remove cap (7) and clamp (6) from air cleaner (5).
2. Start engine (TM 9-2320-361-10) and run at 1200 rpm.
3. Using piece of cardboard (4), cover approximately 90% of air cleaner assembly (5) opening.
4. Observe air cleaner indicator (2) to see if red band (3) is visible. If red band is visible, indicator works properly. If not, air cleaner indicator (2) is defective or tube (1) is obstructed. Stop engine (TM 9-2320-361-10).
5. Remove cardboard (4) and install cap (7) on air cleaner (5) with clamp (6).

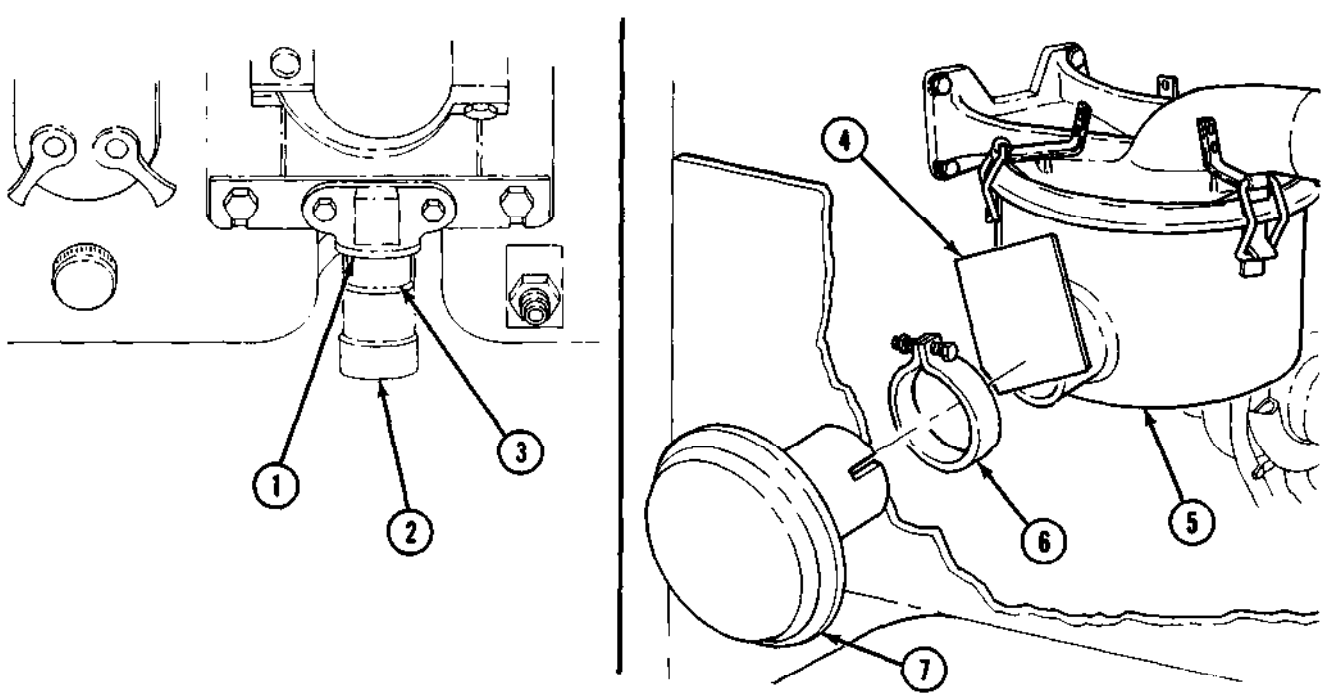

https://truckmanualshub.com/

3-16. AIR CLEANER INDICATOR AND TUBE MAINTENANCE (Contd)

b. Removal

1. Disconnect tube (6) from connector (7) and remove connector (7) from air cleaner head (8).

NOTE

Assistant will help perform step 2.

2. Remove two nuts (4), screws (1), and clamps (3) from tube (6) and firewall (5).
3. Remove two nuts (9), screws (13), and washers (12) from air cleaner indicator (11).
4. Disconnect tube (6) from adapter (10) and remove air cleaner indicator (11).
5. Remove adapter (10) from air cleaner indicator (11).
6. Remove tube (6) and grommet (2) from firewall (5),

c. Inspection and Cleaning

1. Inspect tube (6) for kinks and obstruction. Replace tube (6) if kinked or obstructed.

WARNING

Compressed air source will not exceed 30 psi (207 kPa). When cleaning with compressed air, eyeshields must be worn. Failure to wear eyeshields may result in injury to personnel.

2. Clean tube (6) by blowing through it with compressed air.
3. Inspect connector (7), adapter (10), and fittings on tube (6) for stripped threads. Replace connector (7), adapter (10), or fittings on tube (6) if threads are stripped.

d. Installation

NOTE

Male pipe threads must be wrapped with antiseize tape before installation.

1. Install grommet (2) and tube (6) through firewall (5).
2. Install adapter (10) on air cleaner indicator (11).
3. Connect air cleaner indicator (11) to tube (6).
4. Install two screws (13), washers (12), and nuts (9).

NOTE

Assistant will help perform step 5.

5. Install tube (6) on firewall (5) with two clamps (3), screws (1), and nuts (4). Do not tighten nuts (4).
6. Install connector (7) on air cleaner head (8), and connect tube (6) to adapter (7). Tighten nuts (4).

https://truckmanualshub.com/

3-16. AIR CLEANER INDICATOR AND TUBE MAINTENANCE (Contd)

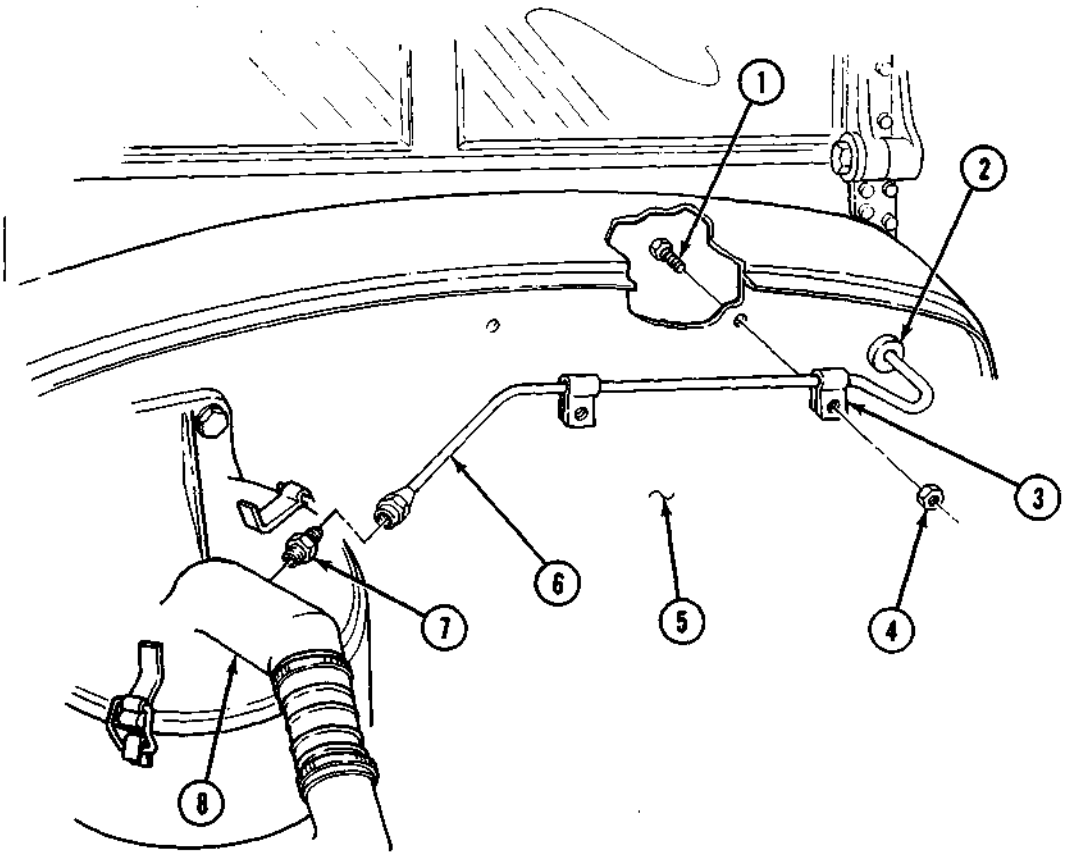

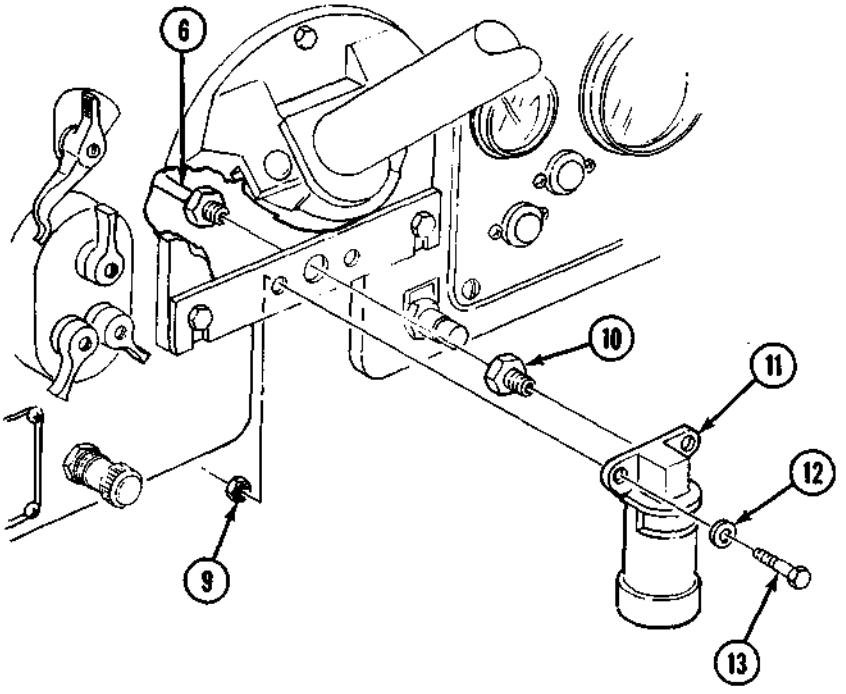

https://truckmanualshub.com/

Section V. TURBOCHARGER MAINTENANCE

3-17. TURBOCHARGER MAINTENANCE INDEX

PARA. NO.	TITLE	PAGE NO.
3-18.	Turbocharger Oil Inlet Tube and Adapter Replacement	3-28
3-19.	Turbocharger Oil Drain Tube, Hose, and Adapter Replacement	3-30

3-18. TURBOCHARGER OIL INLET TUBE AND ADAPTER REPLACEMENT

This task covers:

a. Removal **b. Installation**

INITIAL SETUP:

APPLICABLE MODELS
All

MATERIALS/PARTS
Gasket
Two lockwashers
Cap and plug set (Appendix C, Item 8)
Antiseize tape (Appendix C, Item 27)
Lubricating oil OE/HDO 30 (Appendix C, Item 19)

REFERENCES (TM)
TM 9-2320-361-10
TM 9-2320-361-20P

EQUIPMENT CONDITION
- Parking brake set (TM 9-2320-361-10).
- Hood raised and secured (TM 9-2320-361-10).

CAUTION

Cover or plug all hoses, connections, and openings immediately after disconnection or component removal to prevent contamination. Remove all plugs prior to connection.

a. Removal

1. Remove oil inlet tube (3) from elbow (5) and oil inlet adapter (8).
2. Remove elbow (5) from engine (4).
3. Remove two screws (1), lockwashers (2), oil inlet adapter (8), and gasket (7) from turbocharger (6). Discard lockwashers (2) and gasket (7).

b. Installation

1. Install new gasket (7) and oil inlet adapter (8) on turbocharger (6) with two new lockwashers (2) and screws (1).
2. Add 2 oz. (59 ml) of new engine oil into oil inlet adapter (8).
3. Install elbow (5) on engine (4).
4. Install oil inlet tube (3) on elbow (5) and oil inlet adapter (8).

https://truckmanualshub.com/

3-18. TURBOCHARGER OIL INLET TUBE AND ADAPTER REPLACEMENT (Contd)

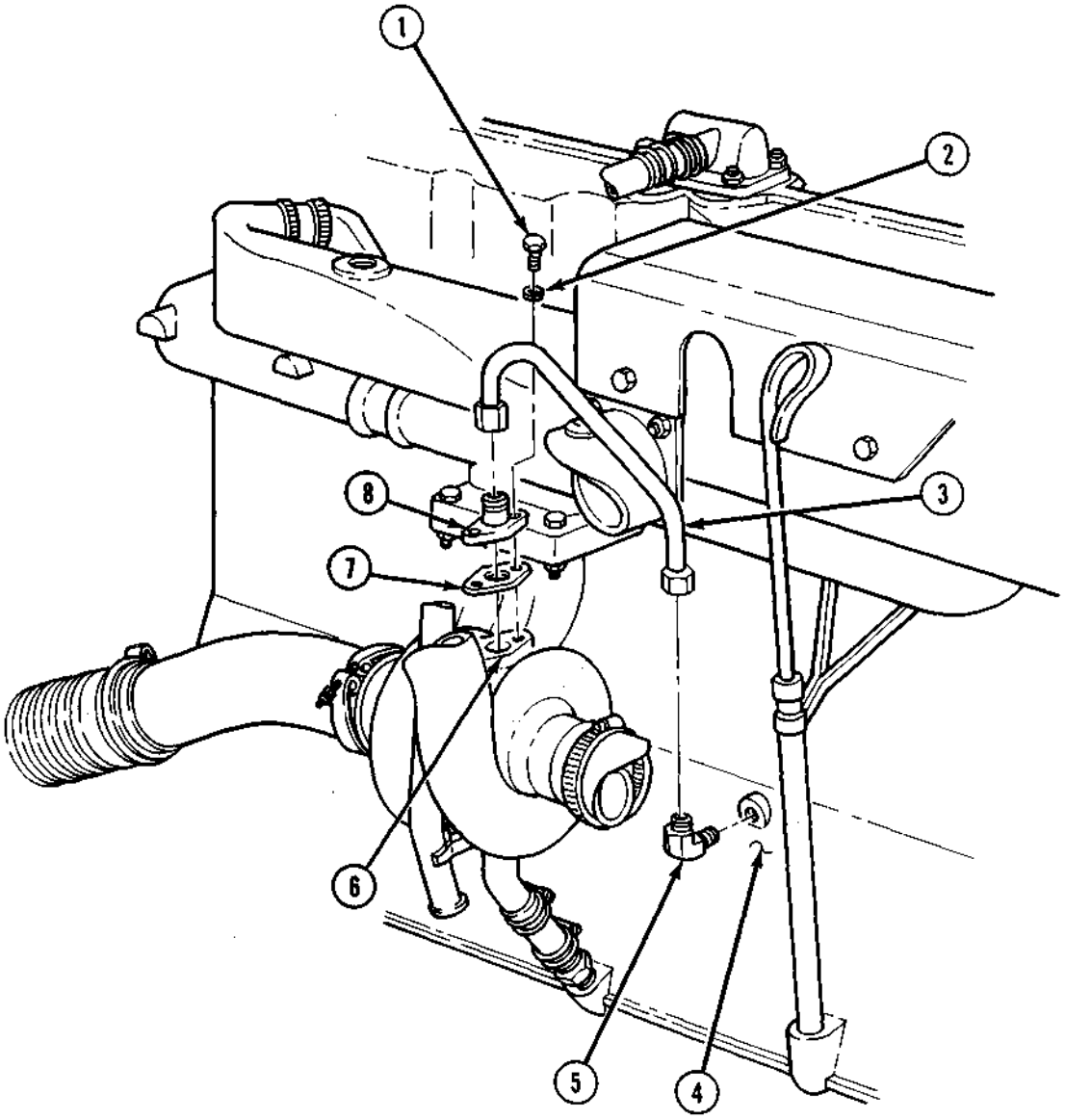

FOLLOW-ON TASK: Start engine (TM 9-2320-361-10) and check for oil leaks.

https://truckmanualshub.com/

3-19. TURBOCHARGER OIL DRAIN TUBE, HOSE, AND ADAPTER REPLACEMENT

This task covers:

a. Removal **b. Installation**

INITIAL SETUP:

APPLICABLE MODELS
All

MATERIALS/PARTS
Gasket
Two lockwashers
Antiseize tape (Appendix C, Item 27)

REFERENCES (TM)
TM 9-2320-361-10
TM 9-2320-361-20P

EQUIPMENT CONDITION
- Parking brake set (TM 9-2320-361-10).
- Hood raised and secured (TM 9-2320-361-10).

a. Removal

1. Remove two screws (7) and lockwashers (8) from breather tube (9), oil drain tube (2), and turbocharger (1). Discard lockwashers (8).
2. Loosen two clamps (6) and remove oil drain tube (2) and gasket (10) from turbocharger (1) and hose (4). Discard gasket (10).
3. Remove hose (4) and two clamps (6) from oil drain adapter (5).
4. Remove oil drain adapter (5) from engine (3).

b. Installation

NOTE

Male pipe threads must be wrapped with antiseize tape before installation.

1. Install oil drain adapter (5) on engine (3).
2. Install hose (4) and two clamps (6) on oil drain adapter (5). Do not tighten clamps (6).
3. Install oil drain tube (2) on hose (4).
4. Install new gasket (10), oil drain tube (2), and breather tube (9) on turbocharger (1) with two new lockwashers (8) and screws (7).
5. Tighten two clamps (6).

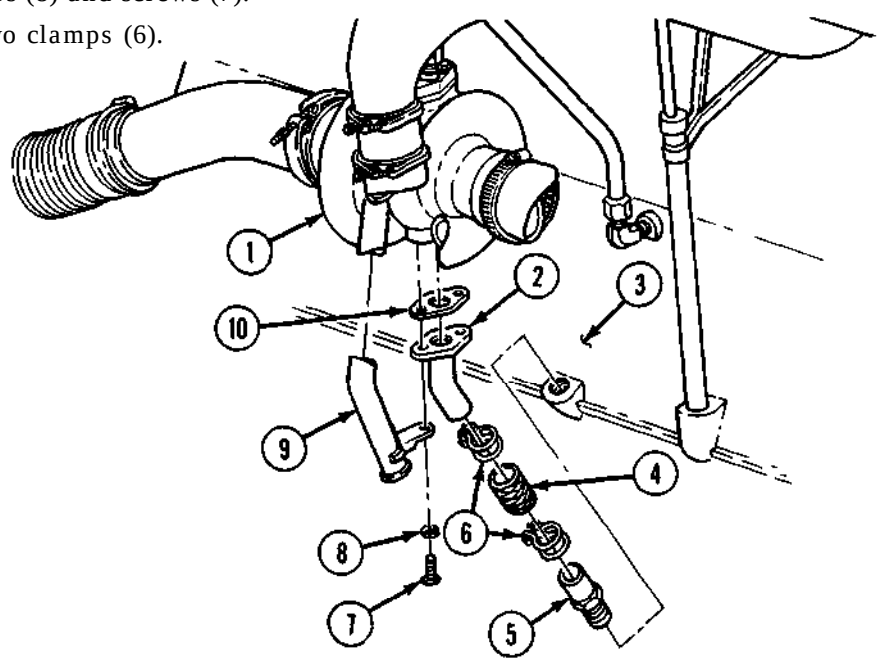

FOLLOW-ON TASK: Remove oil inlet tube and refill turbocharger (para. 3-18).

https://truckmanualshub.com/

Section VI. FUEL SYSTEM MAINTENANCE

3-20. GENERAL

For tools and methods used to fabricate fuel system lines and tubes, refer to TM 9-243.

3-21. FUEL SYSTEM MAINTENANCE INDEX

PARA. NO.	TITLE	PAGE NO.
3-22.	Fuel Tank Filler Cap and Sleeve Replacement	3-31
3-23.	Fuel Pump (In-Tank) Fuse Replacement	3-33
3-24.	Fuel Tank Replacement	3-34
3-25.	Fuel Tank Replacement (M275A2)	3-38
3-26.	Fuel Pump (In-Tank) Maintenance	3-42
3-27.	Fuel Return Tees and Tubes Replacement	3-49
3-28.	Primary Fuel Filter Maintenance	3-50
3-29.	Secondary and Final Fuel Filter Testing and Maintenance	3-54
3-30.	Manifold Heater (Covered) Replacement	3-60
3-31.	Manifold Heater (Uncovered) Replacement	3-66

3-22. FUEL TANK FILLER CAP AND SLEEVE REPLACEMENT

This task covers:

a. Removal **b. Installation**

INITIAL SETUP:

APPLICABLE MODELS
All

MATERIALS/PARTS
Gasket

REFERENCES (TM)
TM 9-2320-361-10
TM 9-2320-361-20P

EQUIPMENT CONDITION
Parking brake set (TM 9-2320-361-10).

GENERAL SAFETY INSTRUCTIONS
Diesel fuel is flammable. Do not perform this procedure near flames.

https://truckmanualshub.com/

3-22. FUEL TANK FILLER CAP AND SLEEVE REPLACEMENT (Contd)

a. Removal

WARNING

Diesel fuel is flammable. Do not perform fuel system procedures near open flame. Injury or death to personnel may result.

1. Remove fuel tank filler cap (2) from fuel tank (5) and disconnect chain (1) from sleeve (4).
2. Rotate sleeve (4) counterclockwise and remove sleeve (4) from fuel tank (5).
3. Remove gasket (3) from fuel tank filler cap (2). Discard gasket (3).

b. Installation

1. Install new gasket (3) on fuel tank filler cap (2).
2. Install sleeve (4) on fuel tank (5) by rotating clockwise.
3. Connect chain (1) to sleeve (4), and install fuel tank filler cap (2) on fuel tank (5).

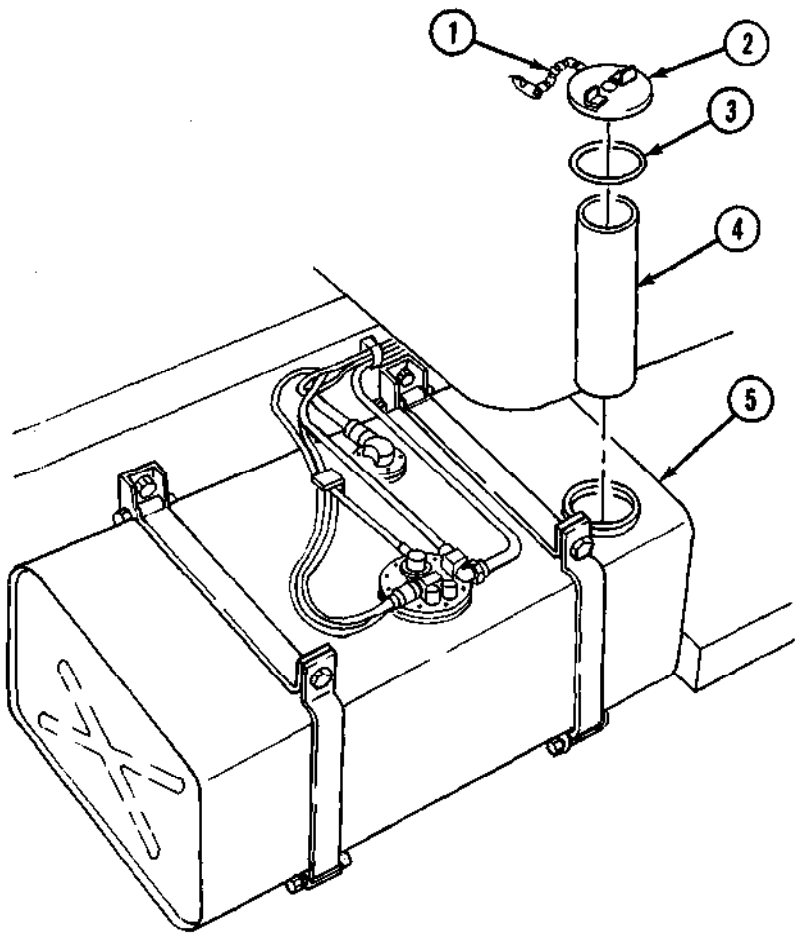

https://truckmanualshub.com/

3-23. FUEL PUMP (IN-TANK) FUSE REPLACEMENT

This task covers:

a. Removal **b. Installation**

INITIAL SETUP:

APPLICABLE MODELS
All

MATERIALS/PARTS
Three lockwashers
Gasket
Lead seal
Locktab

REFERENCES (TM)
TM 9-2320-361-10
TM 9-2320-361-20P

EQUIPMENT CONDITION
- Parking brake set (TM 9-2320-361-10).
- Battery ground cable disconnected (para. 4-48).
- Fuel tank removed (M275A2 only) (para. 3-25).

GENERAL SAFETY INSTRUCTIONS
Diesel fuel is flammable. Do not perform this task near open flame.

WARNING

Diesel fuel is flammable. Do not perform fuel system procedures near open flame. Injury or death to personnel may result.

a. Removal

1. Remove lead seal (4) from stud (8) by cutting wire (3). Discard wire (3) and lead seal (4).
2. Remove three nuts (2), lockwashers (5), locktab (6), and terminal cover (1) from fuel pump (9). Discard lockwashers (5) and locktab (6).
3. Remove screw (11) and disconnect wire (12) from terminal cover (1).
4. Remove gasket (10) from fuel pump (9). Discard gasket (10).
5. Remove fuse (7) from terminal cover (1).

b. Installation

1. Install 4-ampere fuse (7) on terminal cover (1).
2. Install gasket (10) on fuel pump (9) and connect wire (12) to terminal cover (1) with screw (11).
3. Install terminal cover (1) and new locktab (6) on fuel pump (9) with three new lockwashers (5) and nuts (2).
4. Install new seal wire (3) through one stud (8). Thread end of seal wire (3) back through lead seal (4) and fasten using lead seal press.

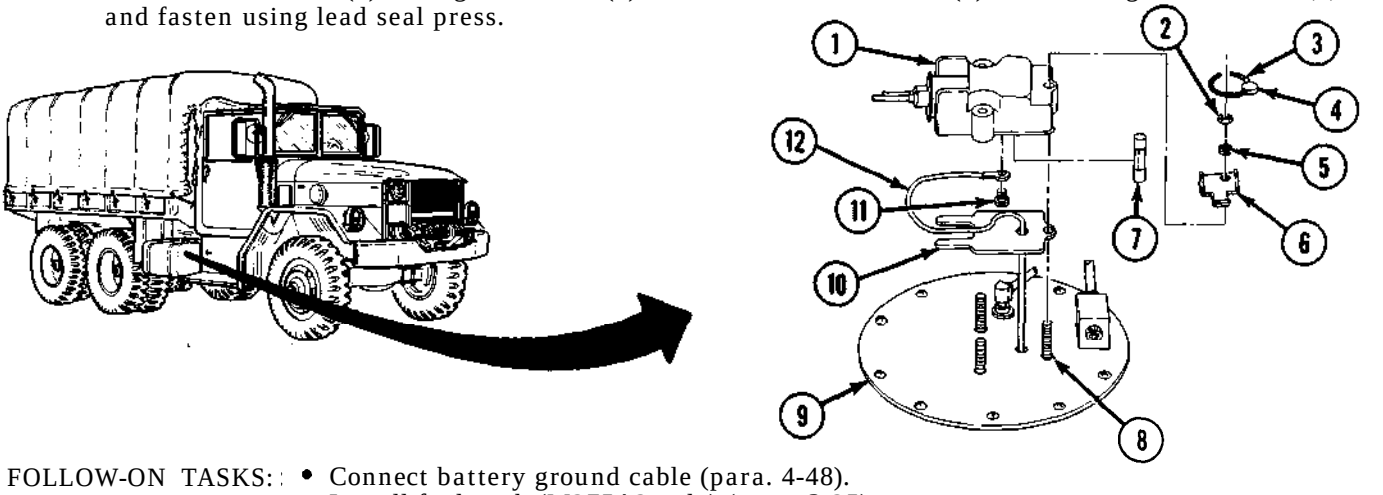

FOLLOW-ON TASKS:
- Connect battery ground cable (para. 4-48).
- Install fuel tank (M275A2 only) (para. 3-25).
- Start engine (TM 9-2320-361-10) and check fuel pump connections for leaks.

https://truckmanualshub.com/

3-24. FUEL TANK REPLACEMENT

This task covers:

a. Removal **b. Installation**

INITIAL SETUP:

APPLICABLE MODELS
All Except M275A2

MATERIALS/PARTS
Four locknuts
Antiseize tape (Appendix C, Item 27)

PERSONNEL REQUIRED
Two

REFERENCES (TM)
TM 9-2320-361-10
TM 9-2320-361-20P

EQUIPMENT CONDITION
- Battery ground cable disconnected (para. 4-48).
- Fuel tank filler cap and sleeve removed (para. 3-22).

GENERAL SAFETY INSTRUCTIONS
- Diesel fuel is flammable. Do not perform fuel system procedures near flames.
- Some vehicles have two separate wires and connectors. Connecting wires on wrong terminals may cause fuel to ignite, resulting in injury to personnel.

a. Removal

WARNING

Diesel fuel is flammable. Do not perform fuel system procedures near open flame. Injury or death to personnel may result.

NOTE

- Have drainage container ready to catch fuel.
- Fuel tanks on M342A2 vehicles have three retaining straps.

1. Drain fuel from fuel tank (4) by removing drainplug (8) from fuel tank (4).

NOTE

Male pipe threads must be wrapped with antiseize tape before installation.

2. Install drainplug (8) on fuel tank (4).
3. Disconnect fuel return tube (6) from elbow (5) and remove elbow (5) from fuel tank (4).

WARNING

Some vehicles have two separate wires and connectors. Mark wires for installation. Connecting wires on wrong terminals may cause fuel to ignite resulting in injury to personnel.

CAUTION

Perform steps 4 through 7 if removing fuel tank from M109A3, M185A3, and M756A2 series trucks.

4. Disconnect connector (16) from fuel pump (15).
5. Disconnect vent tube (18) from elbow (17) and remove elbow (17) from fuel pump (15).
6. Disconnect fuel supply tube (14) from fuel pump (15).
7. Disconnect connector (12) from sending unit (13).
8. Remove two locknuts (2) and screws (1) from two retaining straps (3) and (10). Discard locknuts (2).
9. Remove two locknuts (9), screws (11), and two retaining straps (10) from fuel tank hangers (7) and retaining straps (3). Discard locknuts (9).

https://truckmanualshub.com/

3-24. FUEL TANK REPLACEMENT (Contd)

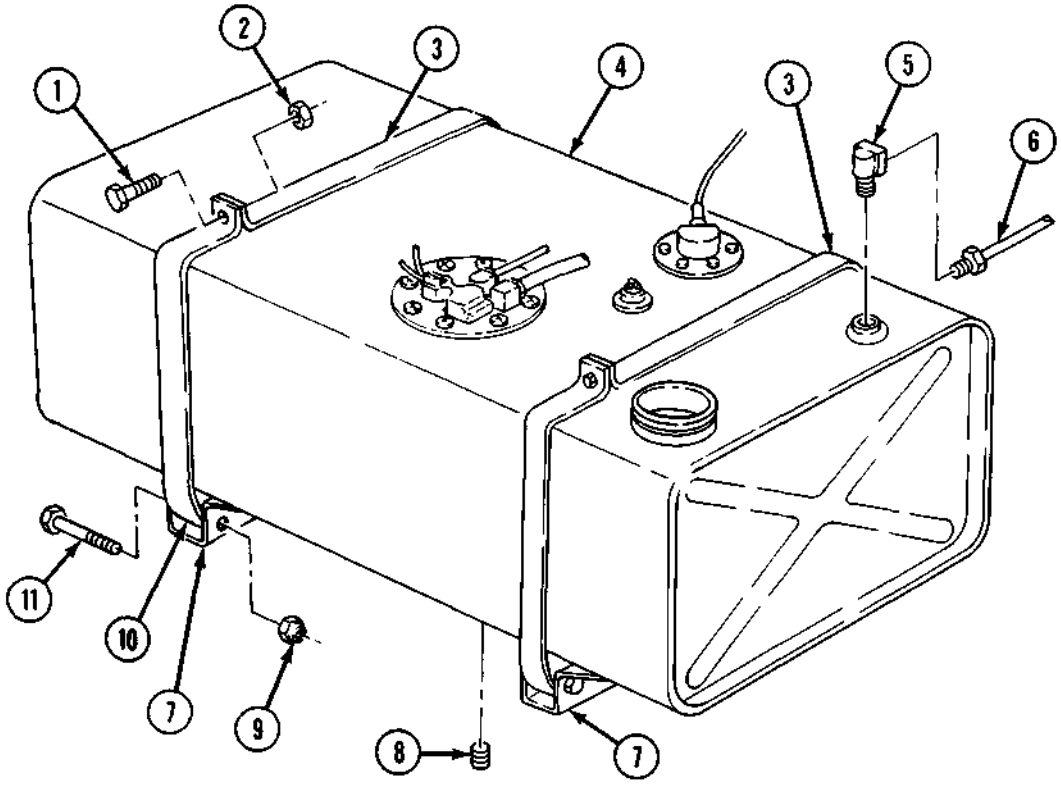

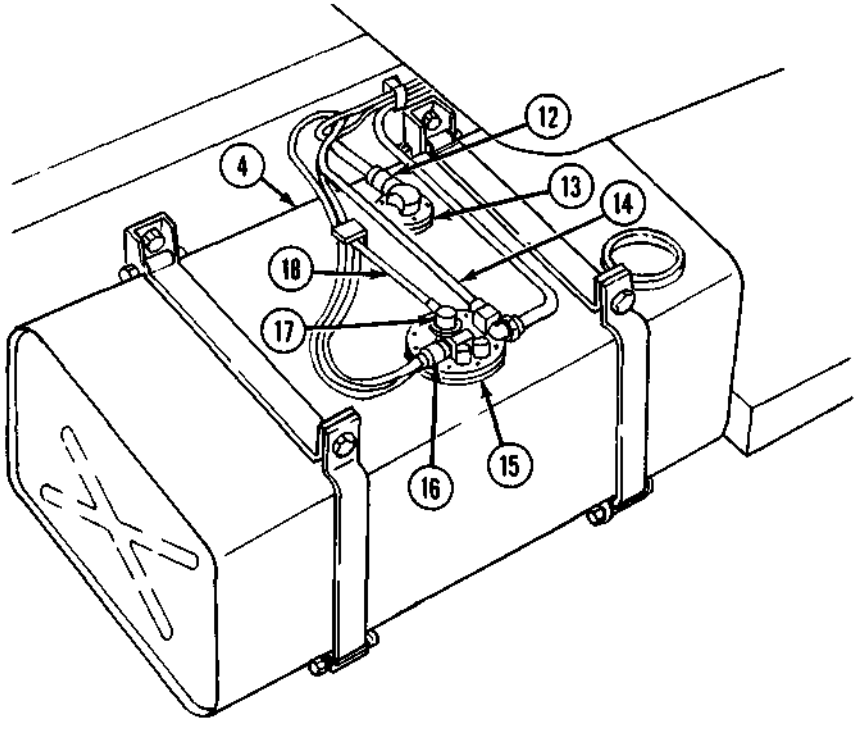

https://truckmanualshub.com/

3-24. FUEL TANK REPLACEMENT (Contd)

NOTE

- Assistant will help with step 10.
- Perform steps 11 and 12 if removing fuel tank from M109A3, M185A3, and M756A2 series trucks.

10. Remove fuel tank (4) from two fuel tank hangers (7).
11. Remove fuel pump (15) from fuel tank (4) (para. 3-26).
12. Remove sending unit (13) from fuel tank (4) (para. 4-26).

b. Installation

NOTE

Perform steps 1 and 2 prior to installing fuel tank on M109A3, M185A3, and M756A2 series trucks.

1. Install sending unit (13) on fuel tank (4) (para. 4-26).
2. Install fuel pump (15) on fuel tank (4) (para. 3-26).

NOTE

Assistant will help with step 3.

3. Install fuel tank (4) on two fuel tank hangers (7).
4. Install two retaining straps (10) on fuel tank hangers (7) with two screws (11) and new locknuts (9).
5. Install two screws (1) and new locknuts (2) on two retaining straps (10) and (3).
6. Install elbow (5) on fuel tank (4).
7. Connect fuel return tube (6) to elbow (5).
8. Connect connector (12) to sending unit (13).
9. Connect fuel supply (14) to fuel pump (15).
10. Install elbow (17) on fuel pump (14).
11. Connect vent tube (18) to elbow (17).
12. Connect connector (16) to fuel pump (15).

https://truckmanualshub.com/

3-24. FUEL TANK REPLACEMENT (Contd)

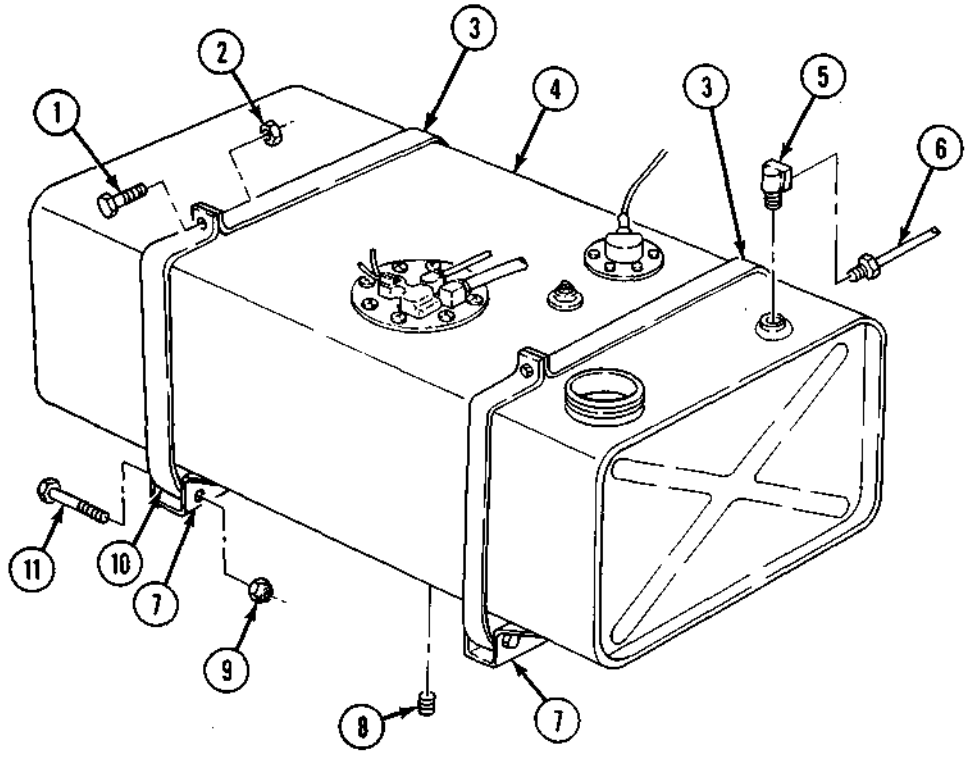

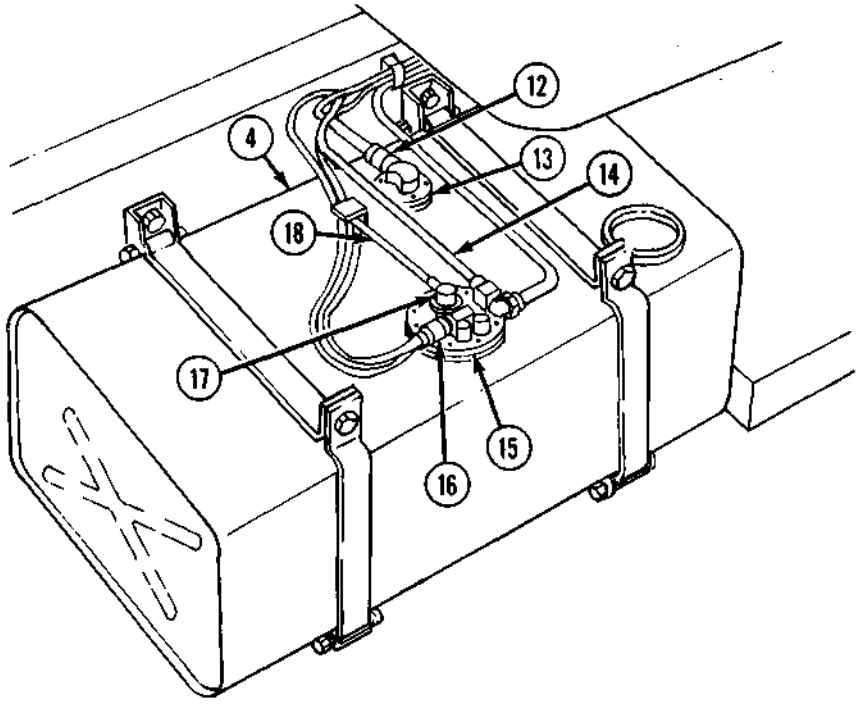

FOLLOW-ON TASKS:
- Install fuel tank filler cap and sleeve (para. 3-22).
- Connect battery ground cable (para. 4-48).
- Fill fuel tank (TM 9-2320-361-10).
- Start engine (TM 9-2320-361-10) and check for fuel leaks.

https://truckmanualshub.com/

3-25. FUEL TANK REPLACEMENT (M275A2)

This task covers:

a. Removal **b. Installation**

INITIAL SETUP:

APPLICABLE MODELS
M275A2

MATERIALS/PARTS
Six locknuts
Antiseize tape (Appendix C, Item 27)

PERSONNEL REQUIRED
Two

REFERENCES (TM)
TM 9-2320-361-10
TM 9-2320-361-20P

EQUIPMENT CONDITION
- Battery ground cable disconnected (para. 4-48).
- Wheels removed on left side of forward-rear axle (para. 9-2).
- Left front splash guard removed (para. 12-55).
- Rear cab mounts removed (para. 11-23).
- Fuel tank filler cap and sleeve removed (para. 3-22).

GENERAL SAFETY INSTRUCTIONS
- Diesel fuel is flammable. Do not perform fuel system procedures near flames.
- Some vehicles have two separate wires and connectors. Connecting wires on wrong terminals may cause fuel to ignite, resulting in injury to personnel.

a. Removal

WARNING

Diesel fuel is flammable. Do not perform fuel system procedures near open flame. Injury or death to personnel may result.

NOTE

Have drainage container ready to catch fuel.

1. Drain fuel from fuel tank (16) by removing drainplug (21) from fuel tank (16).

NOTE

Male pipe threads must be wrapped with antisiez tape before installation.

2. Install drain plug (21) on fuel tank (16).

WARNING

Some vehicles have two separate wires and connectors. Mark wires for installation. Connecting wires on wrong terminals may cause fuel to ignite, resulting in injury to personnel.

3. Disconnect connector (1) from fuel pump (19).
4. Disconnect wire (6) from fuel level sending unit (7).
5. Disconnect fuel supply tube (4) from elbow (18).
6. Disconnect vent tube (2) from elbow (3).
7. Disconnect fuel return tube (5) from elbow (17).
8. Remove three locknuts (8) and screws (10) from three side retaining straps (11), top retaining straps (9), and bracket (20). Discard locknuts (8).
9. Remove three locknuts (15), screws (12), and side retaining straps (11) from three fuel tank hangers (14). Discard locknuts (15).

https://truckmanualshub.com/

3-25. FUEL TANK REPLACEMENT (M275A2) (Contd)

NOTE

Assistant will help with step 10.

10. Remove fuel tank (16) from three fuel tank hangers (14) and top retaining straps (9).
11. Remove three insulators (13) from fuel tank (16).
12. Remove fuel pump (19) (in-tank) (para. 3-26).
13. Remove fuel level sending unit (7) (para. 4-26).
14. Remove elbow (17) from fuel tank (16).

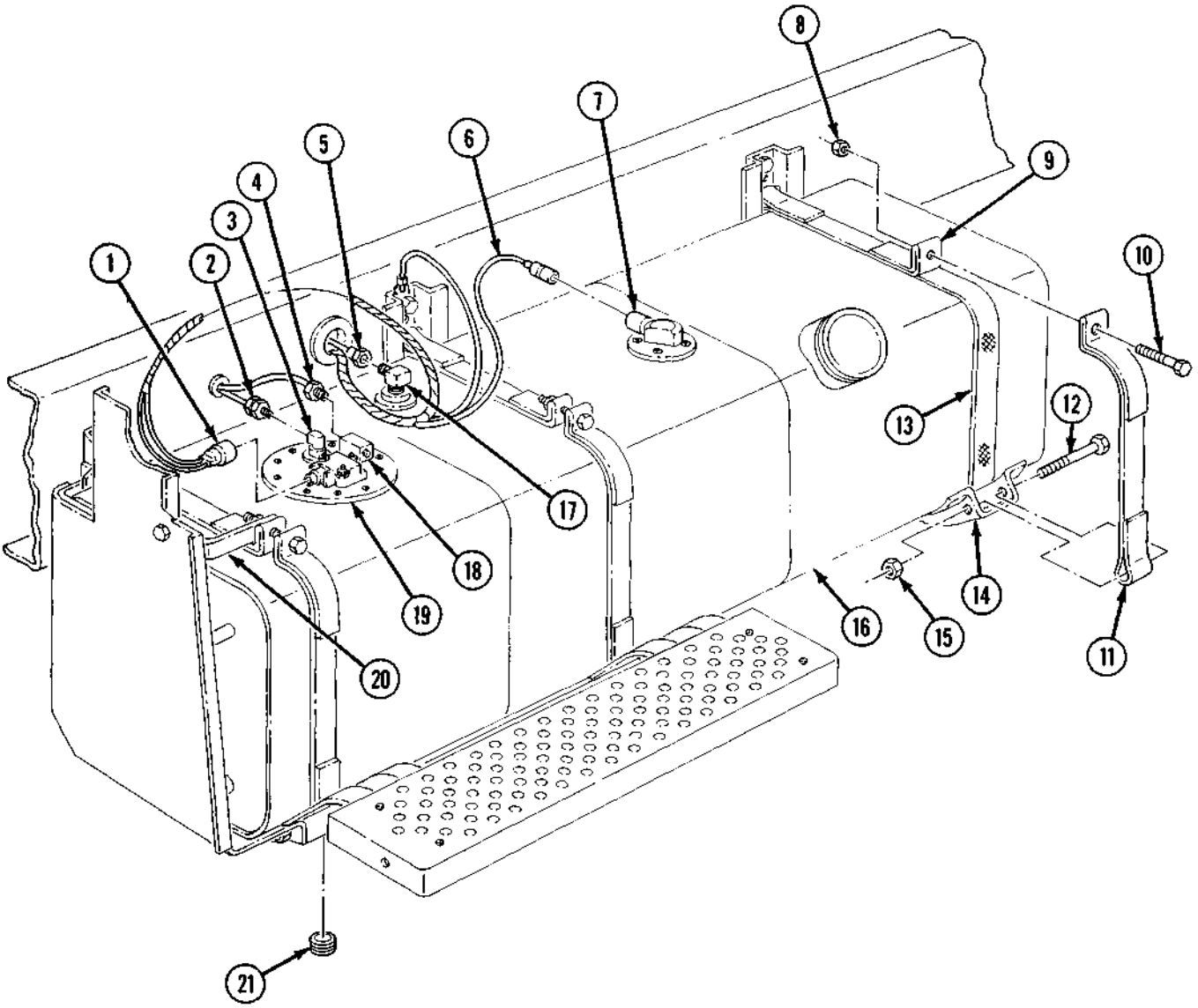

https://truckmanualshub.com/

3-25. FUEL TANK REPLACEMENT (M275A2) (Contd)

b. Installation

NOTE

Male pipe threads must be wrapped with antiseize tape before installation.

1. Install elbow (17) on fuel tank (16).
2. Install fuel level sending unit (7) (para. 4-26).
3. Install fuel pump (19) (in-tank) (para. 3-26).
4. Install three insulators (13) on fuel tank (16).

NOTE

Assistant will help with step 5.

5. Aline three insulators (13) with fuel tank hangers (14) and install fuel tank (16) on three fuel tank hangers (14).

NOTE

Ensure insulators are in place between fuel tank retaining straps and fuel tank during fuel tank installation.

6. Install three side retaining straps (11) on fuel tank hangers (14) with three screws (12) and new locknuts (15).
7. Connect three side retaining straps (11) to top retaining straps (9) and bracket (20) with three screws (10) and new locknuts (8).
8. Connect fuel return tube (5) to elbow (17).
9. Connect vent tube (2) to elbow (3).
10. Connect fuel supply tube (4) to elbow (18).
11. Connect wire (6) to fuel level sending unit (7).

WARNING

Some vehicles have two separate wires and connectors. Connecting wires on wrong terminals may cause fuel to ignite, resulting in injury to personnel.

12. Connect connector (1) to fuel pump (19).

https://truckmanualshub.com/

3-25. FUEL TANK REPLACEMENT (M275A2) (Contd)

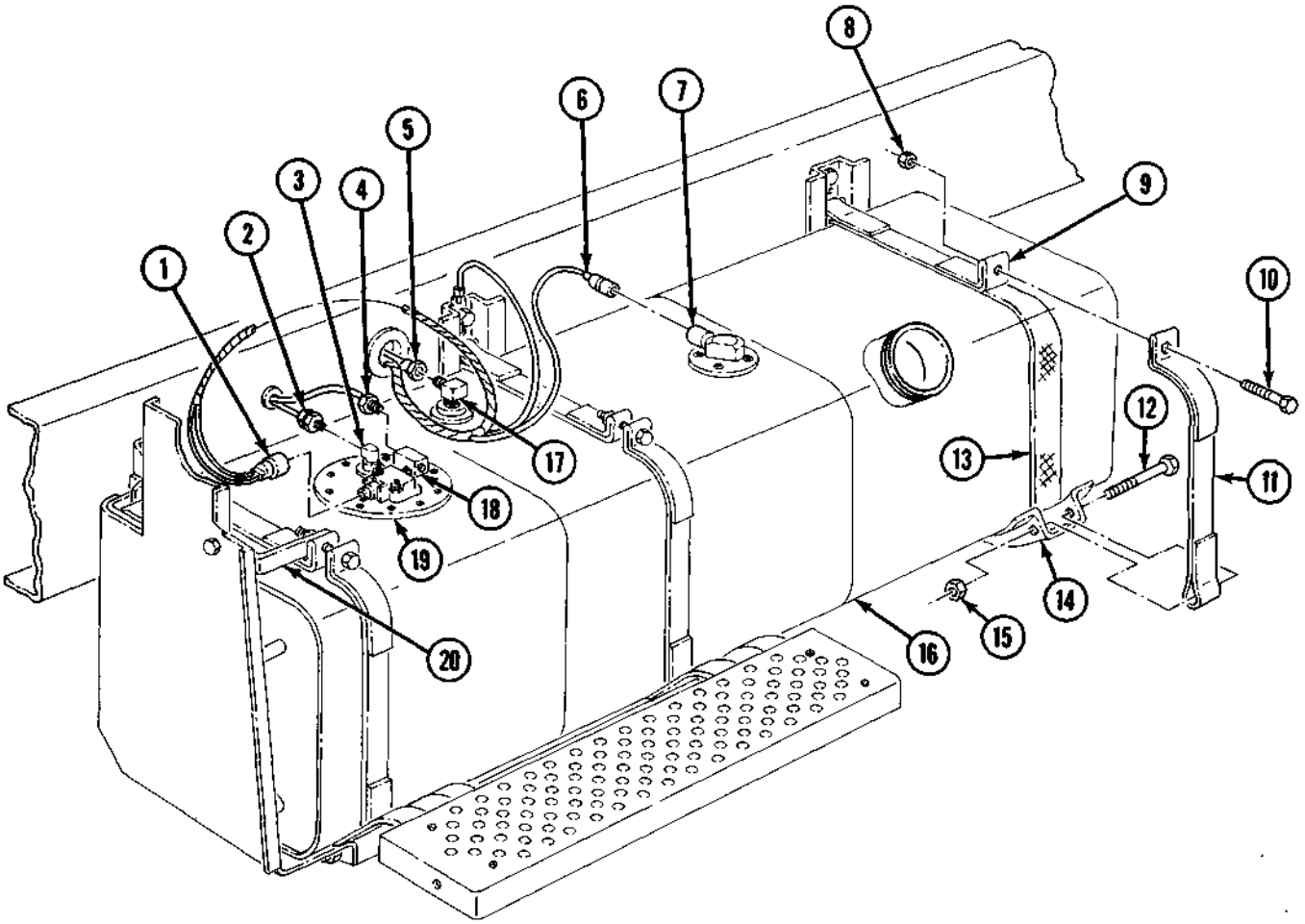

FOLLOW-ON TASKS:
- Install fuel tank filler cap and sleeve (para. 3-22).
- Install rear cab mounts (para. 11-23).
- Install left front splash guard (para. 12-55).
- Install wheels on left side of forward-rear axle (para. 9-2).
- Connect battery ground cable (para. 4-48).
- Fill fuel tank (TM 9-2320-361-10).
- Start engine (TM 9-2320-361-10) and check for fuel leaks.
- Check operation of fuel gage (TM 9-2320-361-10).

https://truckmanualshub.com/

3-26. FUEL PUMP (IN-TANK) MAINTENANCE

This task covers:

a. Testing Fuel Pump Pressure
b. Removal
c. Disassembly
d. Cleaning and Inspection
e. Assembly
f. Installation

INITIAL SETUP:

APPLICABLE MODELS
All

SPECIAL TOOLS
Fuel pressure gage, NSN 4910-00-255-8673

MATERIALS/PARTS
Nine lockwashers
Three gaskets
"O" ring
Lead seal
Locktab
Antiseize tape (Appendix C, Item 27)

REFERENCES (TM)
TM 9-2320-361-10
TM 9-2320-361-20P

EQUIPMENT CONDITION
Parking brake set (TM 9-2320-361-10).

GENERAL SAFETY INSTRUCTIONS
- Diesel fuel is flammable. Do not perform this procedure near flames.
- Some vehicles have two separate wires and connectors. Connecting wires on wrong terminals may cause fuel to ignite, resulting in injury to personnel.

a. Testing Fuel Pump Pressure

WARNING

Diesel fuel is flammable. Do not perform fuel system procedures near open flame. Injury or death to personnel may result.

1. Disconnect fuel supply tube (3) from fuel pump (4).
2. Connect adapter (1) and fuel pressure gage (2) to fuel pump (4).

CAUTION

Starting engine may damage fuel pressure gage.

3. Turn accessory switch to ON position (TM 9-2320-361-10) to start fuel pump (4).
4. Read pressure on fuel pressure gage (2). If pressure reads at least 4 psi (27.6 kPa), operation of fuel pump (4) is satisfactory. Turn accessory switch to OFF position (TM 9-2320-361-10) and remove fuel pressure gage (2) and adapter (1) from fuel pump (4).
5. If fuel pressure gage (2) reads no pressure, inspect electrical connections and, if necessary, continue with task b. to replace fuel pump (4).

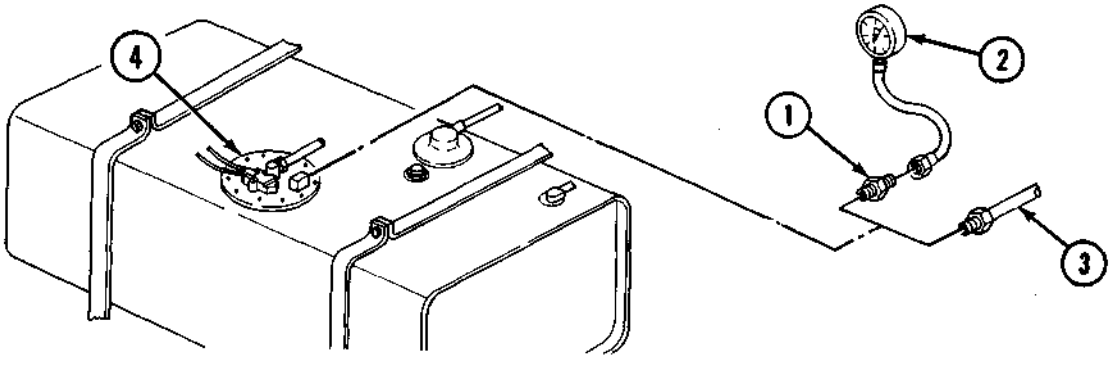

https://truckmanualshub.com/

3-26. FUEL PUMP (IN-TANK) MAINTENANCE (Contd)

b. Removal

NOTE

Remove fuel tank from vehicles M109A3, M756A2, and M1858A3 (para. 3-24); for vehicle M256A2, refer to para. 3-25.

1. Disconnect battery cable (para. 4-48).

WARNING

Some vehicles have two separate wires and connectors. Mark wires for installation. Connecting wires on wrong terminals may cause fuel to ignite, resulting in injury to personnel.

2. Disconnect connector (10) from terminal cover (11).
3. Disconnect vent tube (7) from elbow (6) and remove elbow (6) from fuel pump assembly (4).
4. Disconnect fuel supply tube (3) from fuel pump assembly (4) if not already disconnected.
5. Remove ten screws (5), fuel pump (4), and gasket (8) from fuel tank (9). Discard gasket (8).
6. Cover opening in fuel tank (9) to prevent dirt and dust from entering.

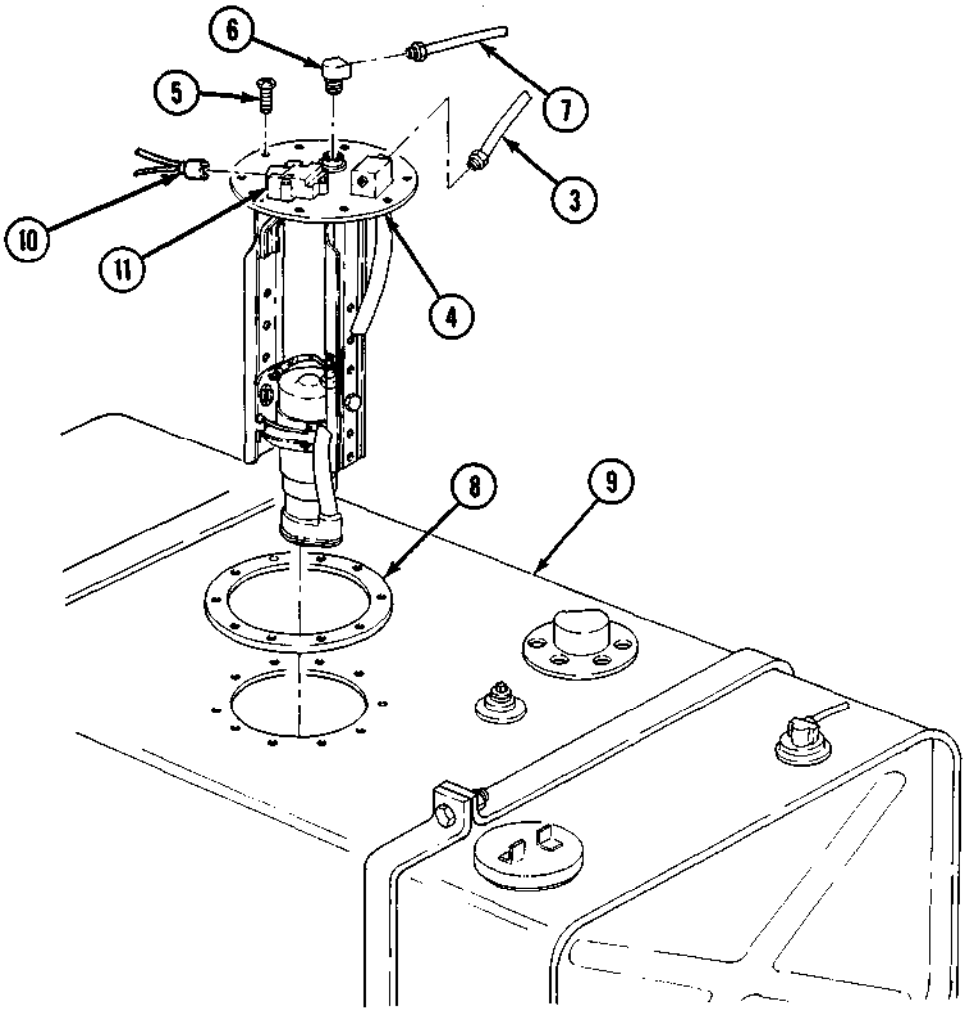

https://truckmanualshub.com/

3-26. FUEL PUMP (IN-TANK) MAINTENANCE (Contd)

c. Disassembly

1. Remove lead seal (9) from stud (33) by cutting wire. Discard lead seal (9).
2. Remove three nuts (5), lockwashers (4), locktab (10), and terminal cover (3) from plate and bracket (32). Discard locktab (10).
3. Remove screw (1) and disconnect pump wire (27) from terminal cover (3).
4. Remove fuse (2) from terminal cover (3).
5. Remove nut (6), lockwasher (7), fuel pump wire (27), wire retainer (26), and gasket (8) from plate and bracket (32). Discard lockwasher (7) and gasket (8).
6. Remove gasket (30) and recessed washer (29) from wire retainer (26). Discard gasket (30).

NOTE

Note location of mounting hardware on plate and bracket for proper installation.

7. Remove nut (15), washer (16), screw (14), and clamp (31) from wire retainer (26) and plate and bracket (32).
8. Remove pump (25) from clamp assembly (28).
9. Remove two nuts (15), washers (16), screws (14), and clamp assembly (28) from plate and bracket (32).
10. Remove two nuts (23), screws (20), four lockwashers (21), and ground strap (22) from pump (25) and clamp assembly (28). Discard lockwashers (21).
11. Remove elbow (11) from plate and bracket (32).
12. Remove hose assembly (19), nut (18), lockwasher (17), “O” ring (13), and fitting (12) from plate and bracket (32). Discard lockwasher (17) and “O” ring (13).
13. Remove clamp (24) and hose assembly (19) from pump (25).

https://truckmanualshub.com/

3-26. FUEL PUMP (IN-TANK) MAINTENANCE (Contd)

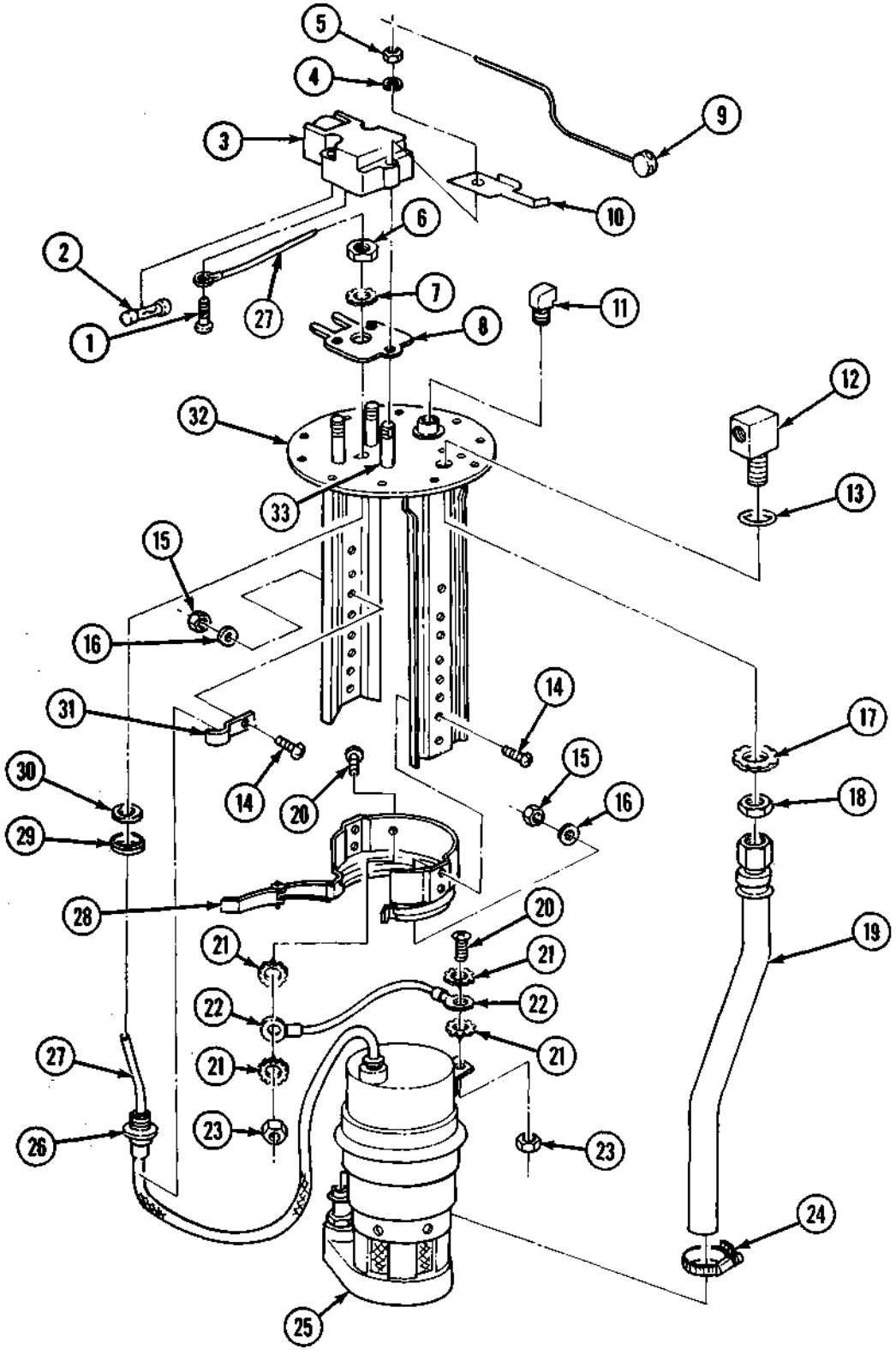

https://truckmanualshub.com/

3-26. FUEL PUMP (IN-TANK) MAINTENANCE (Contd)

d. Cleaning and Inspection

Clean and inspect all fuel pump assembly parts for cracks, holes, and stripped threads. Replace damaged parts.

e. Assembly

1. Install ground strap (22) on pump (25) and clamp assembly (28) with four new lockwashers (21), two screws (20), and nuts (23).
2. Install hose assembly (19) on pump (25) with clamp (24).
3. Install new "O" ring (13) and fitting (12) on plate and bracket (32) with new lockwasher (17) and nut (18).

NOTE

Male pipe threads must be wrapped with antiseize tape before installation.

4. Install hose assembly (19) on fitting (12).
5. Install elbow (11) on plate and bracket (32).

NOTE

Before installing pump, measurement "A" must be 14.1 in. (36 cm) for model M275A2. For all other models, measurement must be 15.1 in. (38.4 cm).

6. Install pump (25) on clamp assembly (28) and position pump (25) up or down in plate and bracket (32) to give correct measurement.
7. Remove pump (25) from clamp assembly (28) and install clamp assembly (28) on plate and bracket (32) with two screws (14), washers (16), and nuts (15).
8. Install pump (25) on clamp assembly (28).
9. Install clamp (31) on wire retainer (26) with screw (14), washer (16), and nut (15).
10. Install new gasket (8) on plate and bracket (32) and position fuel pump wire (27) through center hole in plate and bracket (32) and new gasket (8).
11. Install recessed washer (29), new gasket (30), and wire retainer (26) on plate and bracket (32) with new lockwasher (7) and nut (6).
12. Install fuse (2) on terminal cover (3).
13. Install fuel pump wire (27) on terminal cover (3) with screw (1).
14. Install terminal cover (3) and new locktab (10) on plate and bracket (32) and gasket (8) with three new lockwashers (4) and nuts (5).
15. Install new lead seal (9) on stud (33) with lead seal press.

https://truckmanualshub.com/

3-26. FUEL PUMP (IN-TANK) MAINTENANCE (Contd)

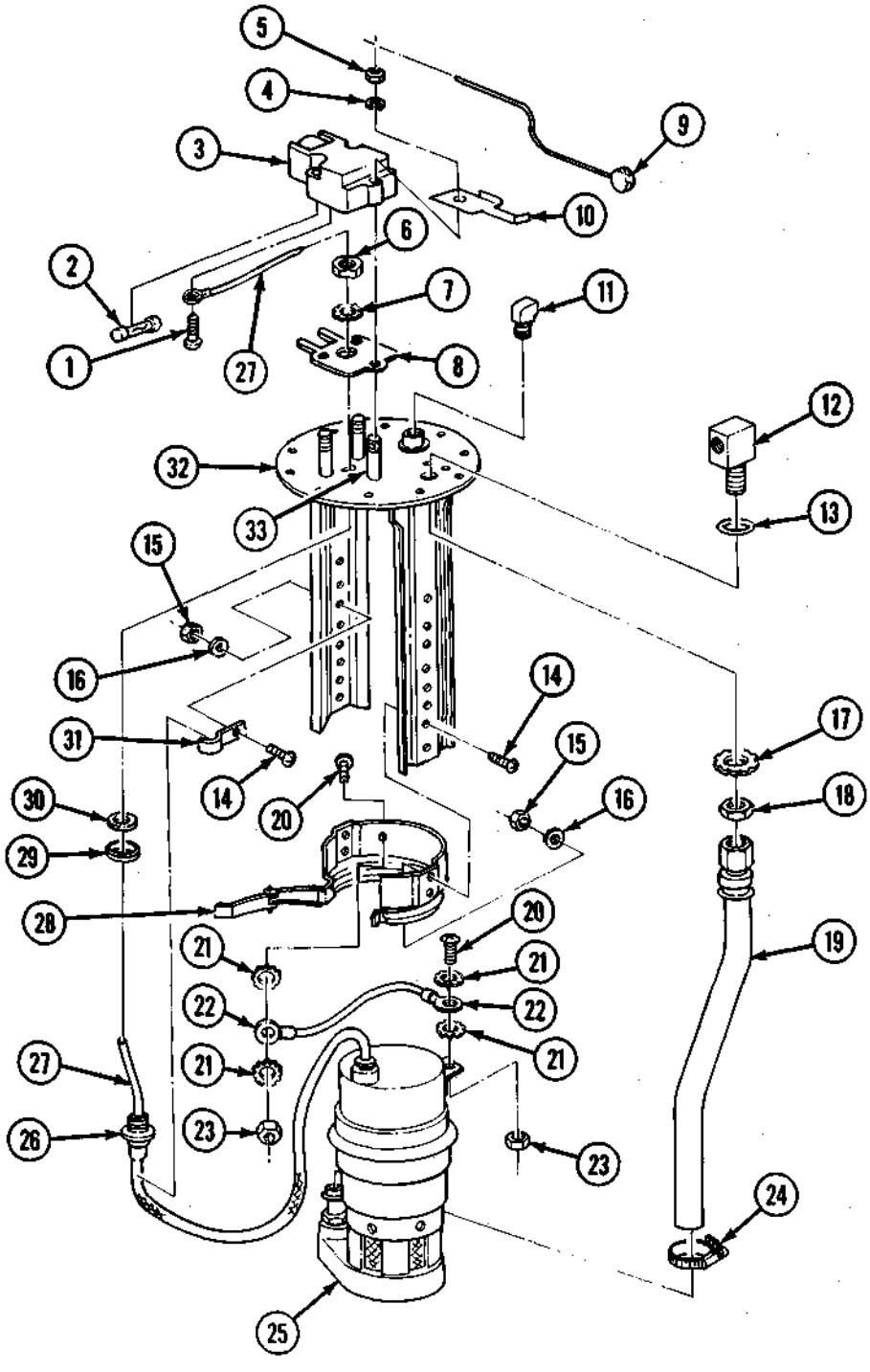

https://truckmanualshub.com/

3-26. FUEL PUMP (IN-TANK) MAINTENANCE (Contd)

f. Installation

NOTE

- If new fuel pump is to be installed, measurement "A" must be 14.1 in. (36 cm) for model M275A2. For all other models, measurement must be 15.1 in. (38.4 cm).
- If necessary to adjust fuel pump length, perform steps 1 through 5.

1. Remove pump (8) from clamp (12).
2. Remove two nuts (11), washers (10), and screws (7) from clamp (12) and fuel pump bracket (6).
3. Install pump (8) on clamp (12) and position pump (8) up or down in fuel pump bracket (6) to give correct measurement.
4. Remove pump (8) from clamp (12) and install two screws (7), washers (10), and nuts (11) on fuel pump bracket (6) and clamp (12).
5. Install pump (8) in clamp (12).
6. Install new gasket (9) and fuel pump assembly (5) on fuel tank (13) with ten screws (1).
7. Install fuel tank (para. 3-25 for M275A2 or para. 3-24 for M109A3, M185A3, or M756A2).

NOTE

Male pipe threads must be wrapped with antiseize tape before installation.

8. Connect fuel supply tube (4) to fuel pump assembly (5).
9. Install elbow (2) on fuel pump assembly (5) and connect vent tube (3) to elbow (2).
10. Connect connector (15) to terminal cover (14).

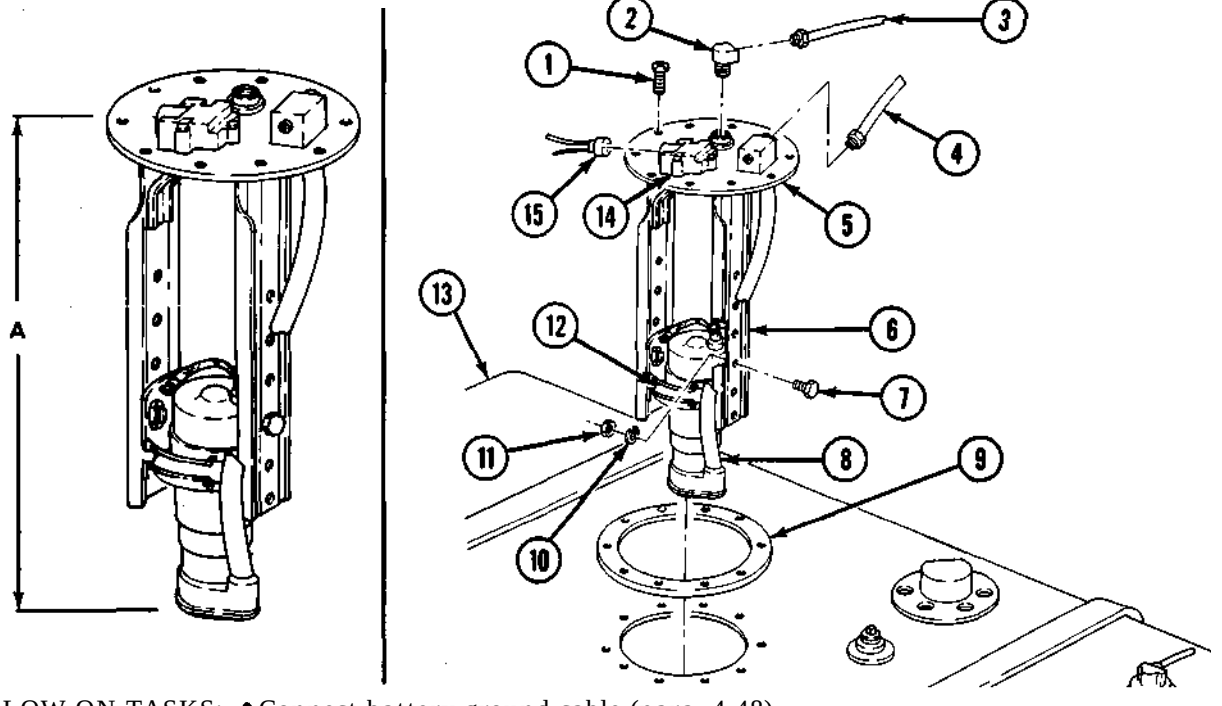

FOLLOW-ON TASKS:
- Connect battery ground cable (para. 4-48).
- Start engine (TM 9-2320-361-10) and check operation of fuel pump.
- Check for fuel leaks.

https://truckmanualshub.com/

3-27. FUEL RETURN TEES AND TUBES REPLACEMENT

This task covers:

a. Removal **b. Installation**

INITIAL SETUP:

APPLICABLE MODELS
All

REFERENCES (TM)
TM 9-2320-361-10
TM 9-2320-361-20P

EQUIPMENT CONDITION
- Parking brake set (TM 9-2320-361-10).
- Hood raised and secured (TM 9-2320-361-10).
- Battery ground cable disconnected (para. 4-48).

GENERAL SAFETY INSTRUCTIONS
Diesel fuel is flammable. Do not perform this task near open flames.

a. Removal

WARNING

- Diesel fuel is flammable. Do not perform fuel system procedures near open flames. Injury or death to personnel may result.
- Before performing fuel system procedure, allow engine to cool. Failure to do so may result in injury or death to personnel.

NOTE

All fuel return tees and tubes are replaced the same way.

1. Loosen two tube nuts (2) on fuel return tube (3), injector nozzle return tee (1), and elbow (4).
2. Remove tube (3) and two tube nuts (2) from injector nozzle return tee (1) and elbow (4).
3. Remove elbow (4) from injector nozzle (6).
4. Disconnect tube nut (7) from injector nozzle return tee (1) and remove injector nozzle return tee (1) from injector nozzle (5).
5. Cut new tube (3) to same length as old tube (3). Discard old tube (3).

b. Installation

1. Install injector nozzle return tee (1) on injector nozzle (5) and connect tube nut (7) to tee (1).
2. Install elbow (4) on injector nozzle (6).
3. Install new tube (3) on injector nozzle tee (1) and elbow (4) with two tube nuts (2).

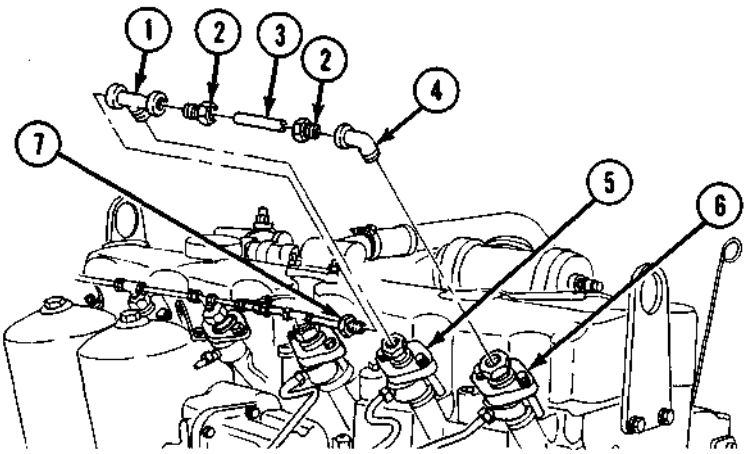

FOLLOW-ON TASKS:
- Connect battery ground cable (para. 4-48).
- Start engine (TM 9-2320-361-10) and check for fuel leaks.

https://truckmanualshub.com/

3-28. PRIMARY FUEL FILTER MAINTENANCE

This task covers:

a. Draining
b. Filter Housing Removal
c. Filter Removal
d. Cleaning and Inspection
e. Filter Installation
f. Filter Housing Installation

INITIAL SETUP:

APPLICABLE MODELS
All

MATERIALS/PARTS
Six lockwashers
Two locknuts
Three gaskets
Filter element
Drycleaning solvent (Appendix C, Item 26)

REFERENCES (TM)
TM 9-2320-361-10
TM 9-2320-361-20P

EQUIPMENT CONDITION
Parking-brake set (TM 9-2320-361-10).
Hood raised and secured (TM 9-2320-361-10).
Battery ground cable disconnected (para. 4-48).

GENERAL SAFETY INSTRUCTIONS
Diesel fuel is flammable. Do not perform this procedure near flames.
Keep fire extinguisher nearby when using drycleaning solvent.

a. Draining

WARNING

Diesel fuel is flammable. Do not perform fuel system procedures near open flame. Injury or death to personnel may result.

NOTE

Have drainage container ready to catch fuel.

1. Open draincock (11) to drain fuel from primary fuel filter (1).
2. Close draincock (11).

b. Filter Housing Removal

1. Disconnect fuel lines (6) and (12) from connector (3) and elbow (13).
2. Remove two locknuts (9), washer (10), lockwasher (4), two screws (2), lockwasher (4), ground wire (5), bracket (7), and primary fuel filter (1) from frame (8) and bracket (7). Discard locknuts (9) and lockwashers (4).
3. Remove four screws (15), lockwashers (14), and bracket (7) from filter head (16). Discard lockwashers (14).
4. Remove elbow (13), connector (17), and connector (3) from filter head (16).

https://truckmanualshub.com/

3-28. PRIMARY FUEL FILTER MAINTENANCE (Contd)

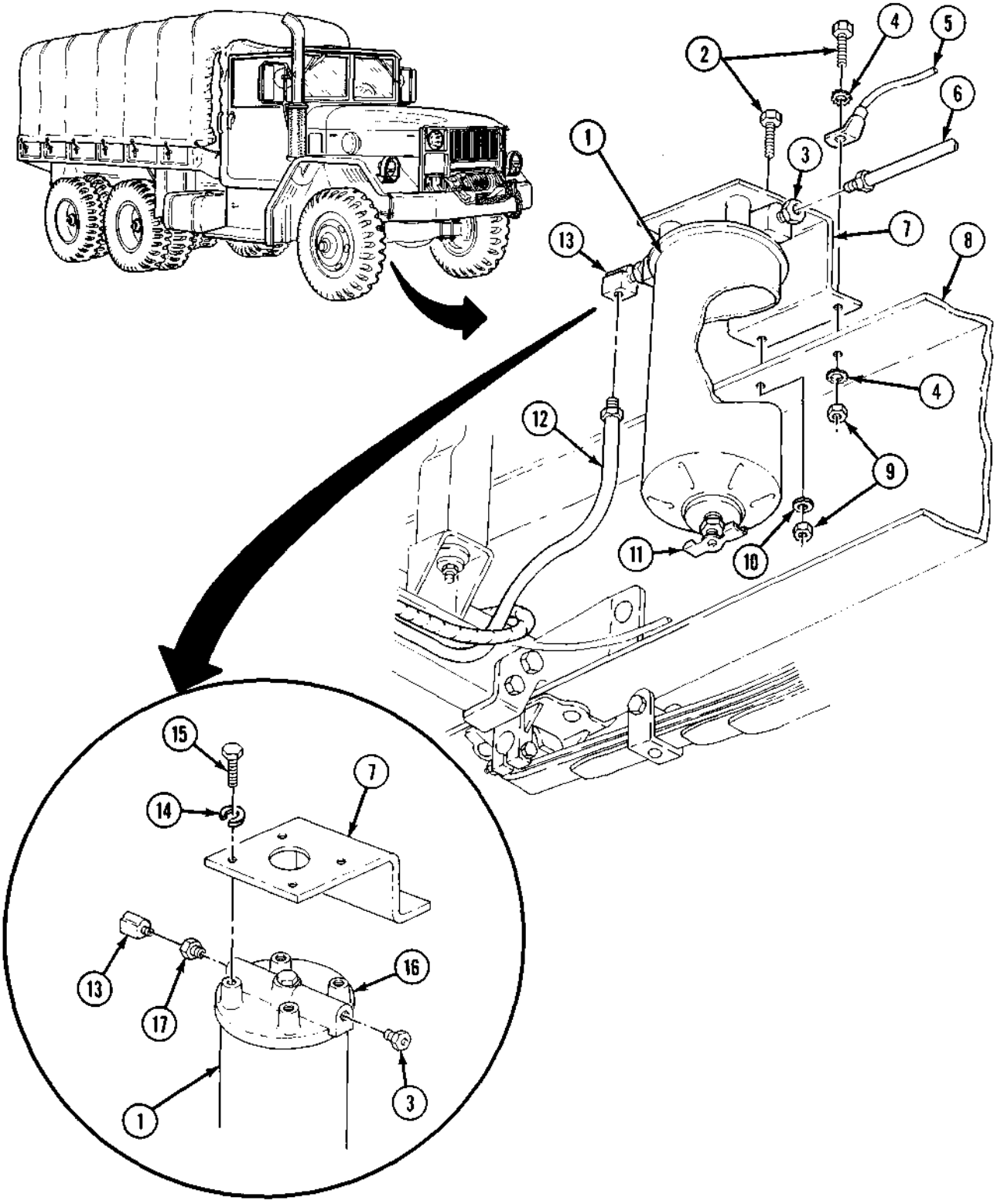

https://truckmanualshub.com/

3-28. PRIMARY FUEL FILTER MAINTENANCE (Contd)

c. Filter Removal

1. Remove sleeve nut (1), gasket (2), filter head (3), and gasket (4) from filter housing (11). Discard gaskets (2) and (4).
2. Remove filter element (5) from filter housing (11). Discard filter element (5).
3. Remove cup (6), gasket (7), washer (8), spring (9), and washer (10) from filter housing (11). Discard gasket (7).

NOTE

Perform step 4 if draincock is damaged.

4. Remove draincock (12) from filter housing (11).

d. Cleaning and Inspection

WARNING

Drycleaning solvent is flammable and will not be used near open flame. Use only in well-ventilated places. Failure to do so may result in injury to personnel.

1. Clean all components with drycleaning solvent and dry with lint-free cloth.
2. Inspect components for stripped threads, burrs, and scratches on mating surfaces.

e. Filter Installation

1. Install draincock (12) on filter housing (11).
2. Install washer (10), spring (9), washer (8), new gasket (7), and cup (6) on filter housing (11).
3. Install new filter element (5), new gasket (4), filter head (3), and new gasket (2) on filter housing (11) with sleeve nut (1). Tighten sleeve nut (1) 15 lb-ft (20.3 N·m).

f. Filter Housing Installation

1. Install connector (16), connector (17), and elbow (18) on primary fuel filter head (3).
2. Install bracket (15) to primary fuel filter head (3) with four new lockwashers (13) and screws (14).
3. Install bracket (15) and ground strap (21) on frame (26) with two screws (19), washer (24), two new lockwashers (20), and new locknuts (23).
4. Connect fuel lines (22) and (25) to connector (16) and elbow (18).

https://truckmanualshub.com/

3-28. PRIMARY FUEL FILTER MAINTENANCE (Contd)

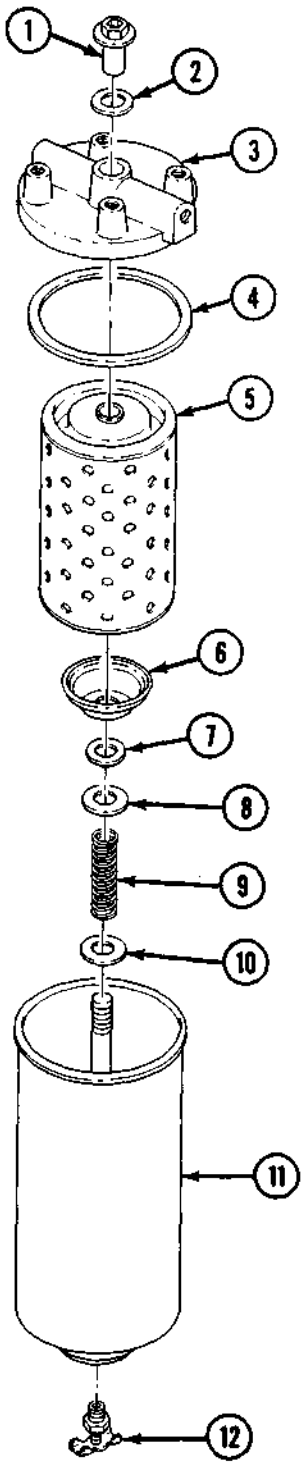

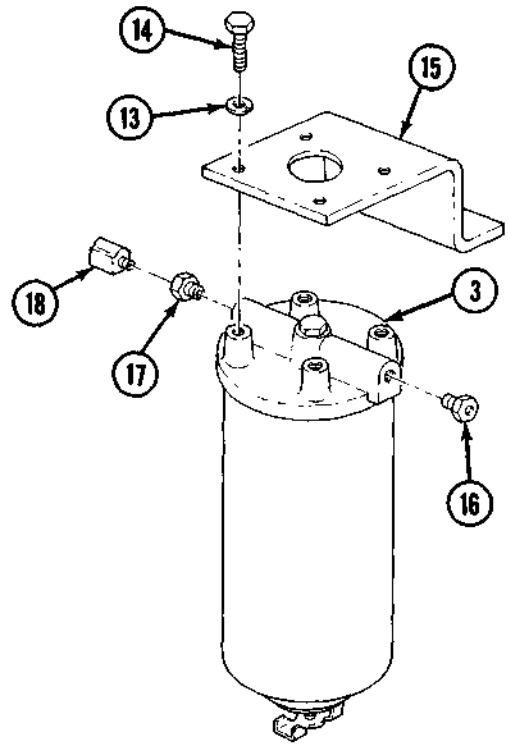

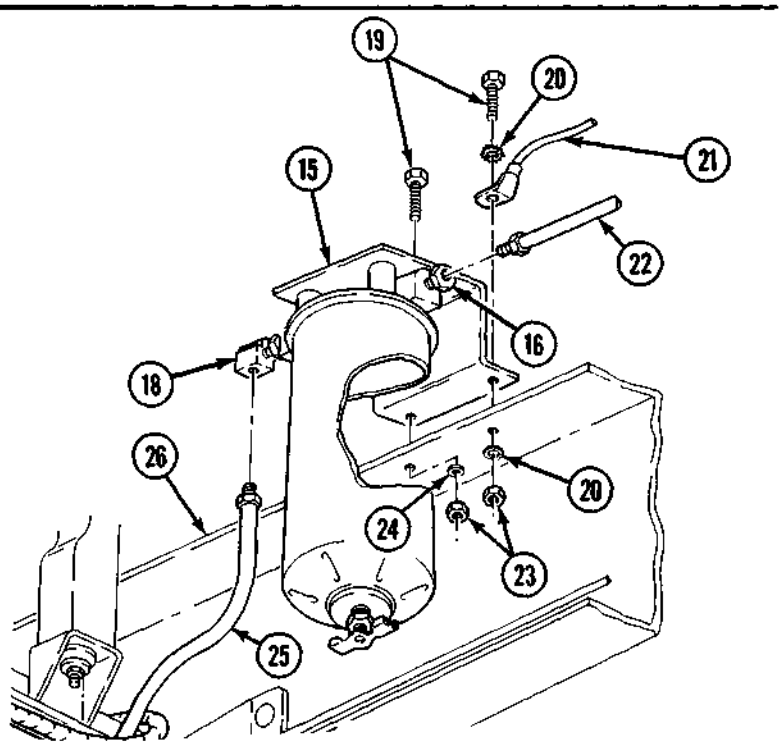

FOLLOW-ON TASKS:

- Connect battery ground cable (para. 4-48).
- Bleed air from fuel system at secondary and final fuel filter (para. 3-28).
- Start engine (TM 9-2320-361-10) and check for fuel leaks.

https://truckmanualshub.com/

3-29. SECONDARY AND FINAL FUEL FILTERS TESTING AND MAINTENANCE

This task covers:

a. Testing Fuel Pressure
b. Draining
c. Fuel Filter Head, Secondary, and Final Fuel Filters Removal
d. Fuel Filters Removal
e. Cleaning and Inspection
f. Fuel Filters Installation
g. Fuel Filter Head, Secondary, and Final Fuel Filters Installation
h. Bleeding Air

INITIAL SETUP:

APPLICABLE MODELS
All

TEST EQUIPMENT
Fuel pressure gage, NSN 4910-00-225-8673

MATERIALS/PARTS
Three lockwashers
Four washers
Six gaskets
Two filter elements
Two cotter pins
Rag (Appendix C, Item 21)
Drycleaning solvent (Appendix C, Item 26)

REFERENCES (TM)
TM 9-2320-361-10
TM 9-2320-361-20P

EQUIPMENT CONDITION
- Parking brake set (TM 9-2320-361-10).
- Hood raised and secured (TM 9-2320-361-10).

GENERAL SAFETY INSTRUCTIONS
- Diesel fuel is flammable. Do not perform fuel system procedures near flames.
- Keep fire extinguisher nearby when using drycleaning solvent.

a. Testing Fuel Pressure

WARNING

Diesel fuel is flammable. Do not perform fuel system procedures near open flame. Injury or death to personnel may result.

NOTE

Fuel filters may have either one or two bleeder valves. Remove only one bleeder valve for testing fuel pressure.

1. Remove bleeder valve (1) or (4) from top of fuel filter head (5).
2. Install adapter (3) and fuel pressure gage (2).

CAUTION

Do not start engine. Starting engine may damage fuel pressure gage.

3. Turn accessory switch to ON position (TM 9-2320-361-10) to start fuel pump.
4. Read pressure on fuel pressure gage (2). If pressure reads at least 2 psi (13.8 kPa), condition of all fuel filters is satisfactory. If not, turn accessory switch to OFF position (TM 9-2320-361-10) and inspect for damaged fuel supply tubes (9) and, if necessary, replace primary fuel filter (para. 3-28). If pressure is still not at least 2 psi (13.8 kPa), continue with task b. to replace secondary and final fuel filter.

https://truckmanualshub.com/

3-29. SECONDARY AND FINAL FUEL FILTERS TESTING AND MAINTENANCE (Contd)

NOTE

Have drainage container ready to catch fuel.

1. Open two draincocks (7) to drain fuel from secondary fuel filter housing (8) and final fuel filter housing (6).
2. Close two draincocks (7).

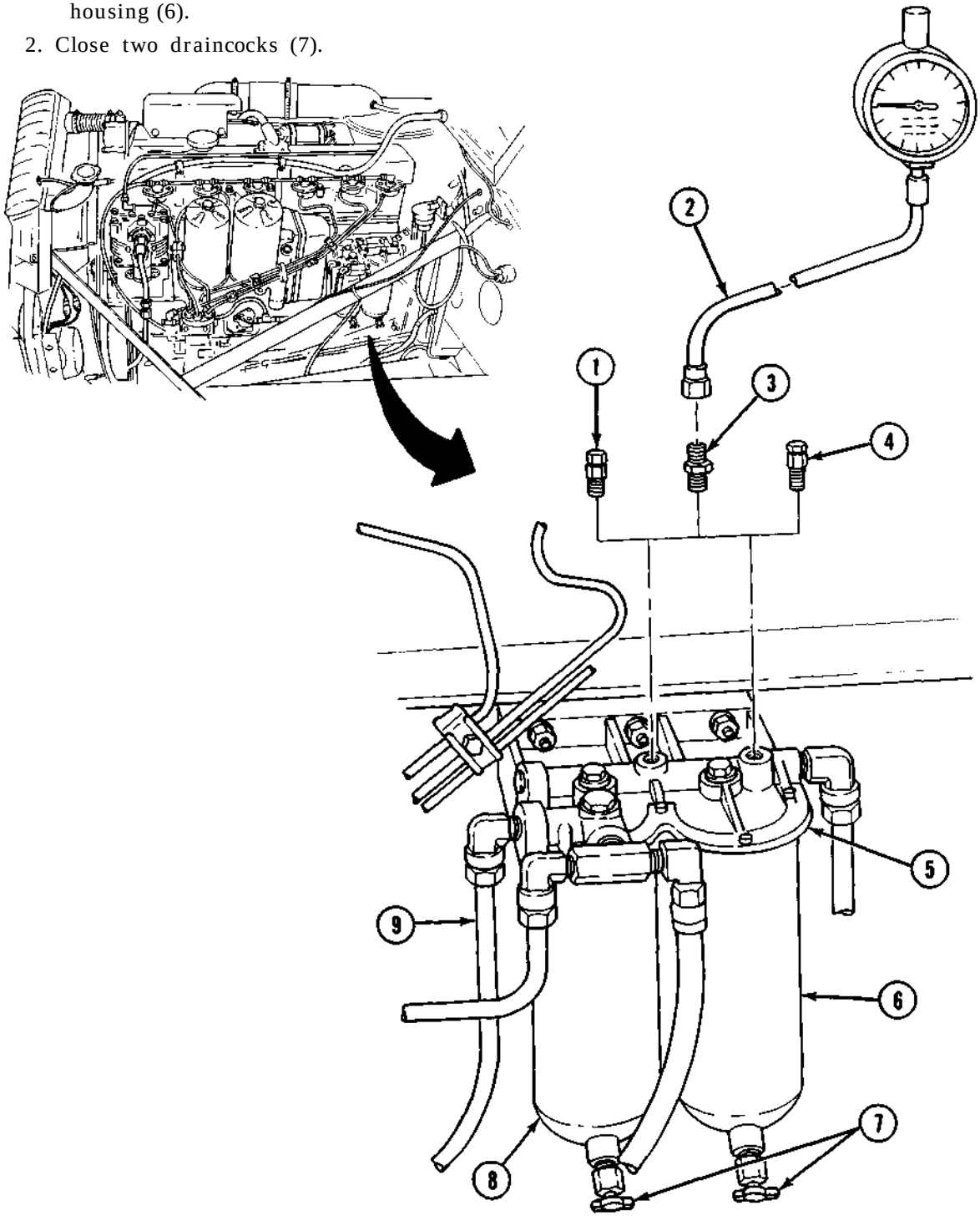

https://truckmanualshub.com/

3-29. SECONDARY AND FINAL FUEL FILTERS TESTING AND MAINTENANCE (Contd)

c. Fuel Filter Head, Secondary, and Final Fuel Filters Removal

NOTE

Tag fuel lines for installation.

1. Disconnect three fuel lines (4) and fuel line (7) from three elbows (3) and elbow (8).
2. Remove three elbows (3), elbow (8), and tee (9) from fuel filter head (2).
3. Remove three nuts (6), lockwashers (5), and fuel filter head (2) from engine (1). Discard lockwashers (5).

d. Fuel Filters Removal

NOTE

Some fuel filters have two bleeder valves.

1. Remove bleeder valve (11) from fuel filter head (2).

NOTE

Secondary and final fuel filters are replaced the same way.

2. Remove sleeve nut (10), washer (23), and gasket (22) from fuel filter head (2). Discard gasket (22).
3. Remove secondary fuel filter housing (18) and gasket (21) from filter head (2). Discard gasket (21).
4. Remove filter element (20) from secondary fuel filter housing (18). Discard filter element (20).
5. Remove cotter pin (17) from center post (12). Discard cotter pin (17).
6. Remove cup (13), gasket (14), washer (15), and spring (16) from center post (12). Discard gasket (14).
7. Remove draincock (19) from secondary fuel filter housing (18).

e. Cleaning and Inspection

WARNING

Drycleaning solvent is flammable and will not be used near open flame. Use only in well-ventilated places. Failure to do so may result in injury to personnel.

1. Clean all components with drycleaning solvent and dry with clean rag.
2. Inspect elbows (3) and (8), tee (9), and center post (12) for burrs and stripped threads.
3. Inspect filter head (2) and filter housing (18) for burrs and scratches on mating surfaces.

f. Fuel Filters Installation

1. Install draincock (19) on secondary fuel filter housing (18).
2. Install spring (16), new washer (15), new gasket (14), and cup (13) on center post (12).
3. Install new cotter pin (17) in center post (12).
4. Install new filter element (20) on secondary fuel filter housing (18).
5. Install secondary fuel filter housing (18) and new gasket (21) on fuel filter head (2) with new gasket (22), new washer (23), and sleeve nut (10). Tighten sleeve nut (10) 15 lb-ft (20.3 N·m).

https://truckmanualshub.com/

3-29. SECONDARY AND FINAL FUEL FILTERS TESTING AND MAINTENANCE (Contd)

NOTE

Some fuel filters have two bleeder valves.

6. Install bleeder valve (11) on fuel filter head (2).

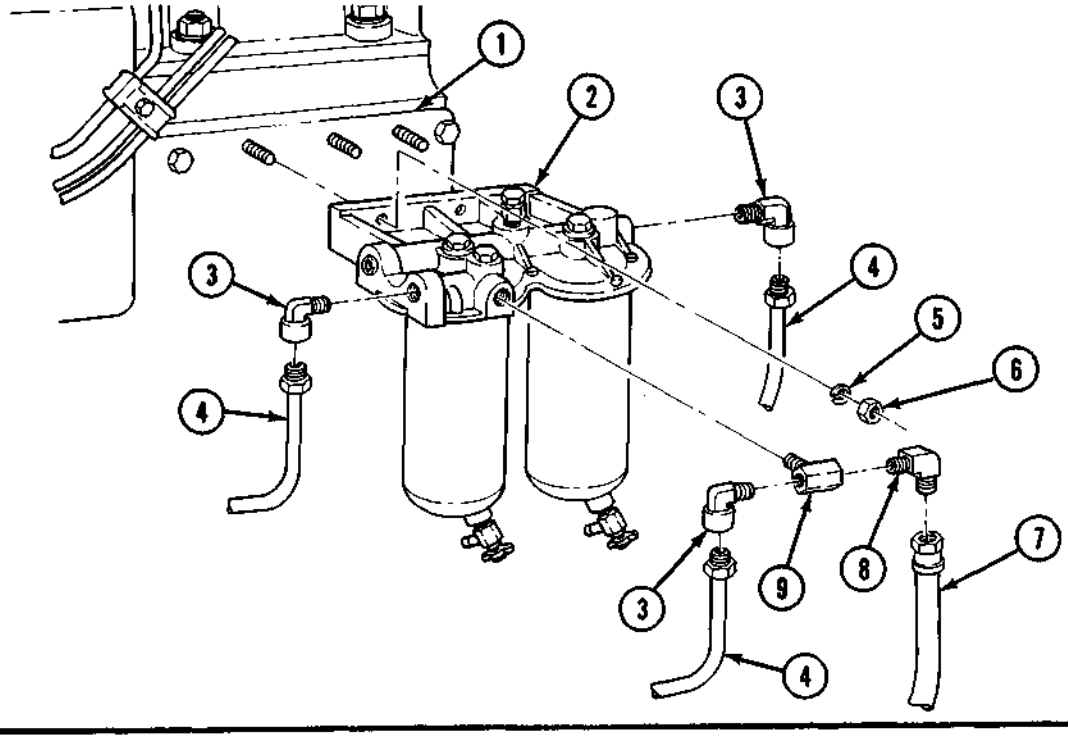

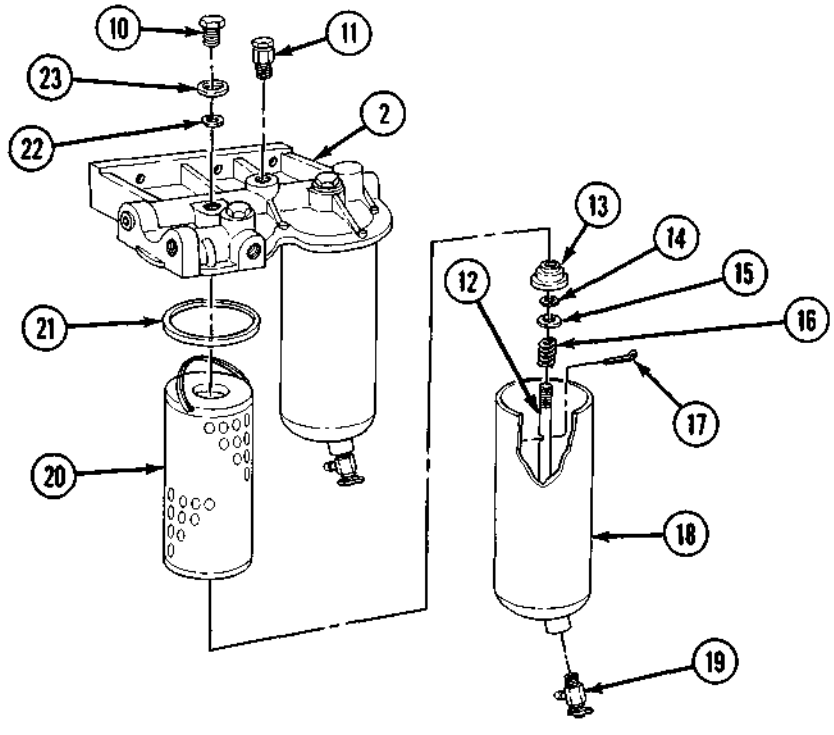

https://truckmanualshub.com/

3-29. SECONDARY AND FINAL FUEL FILTERS TESTING AND MAINTENANCE (Contd)

g. Fuel Filter Head, Secondary, and Final Fuel Filters Installation

1. Install fuel filter head (2) on engine (1) with three new lockwashers (5) and nuts (6).
2. Install tee (9), three elbows (3), and elbow (8) on fuel filter head (2).
3. Connect three fuel lines (4) and fuel line (7) to elbows (3) and (8).

h. Bleeding Air

1. Place accessory switch on instrument panel to ON position (TM 9-2320-361-10) to operate in-tank fuel pump. Do not start engine at this time.

NOTE

Have drainage container ready to catch fuel.

2. Loosen bleeder valve (11). When fuel starts to flow close bleeder valve (11).

NOTE

Perform step 3 for secondary and final fuel filters with two bleeder valves.

3. Open and close each bleeder valve (11) until fuel is clear of air bubbles.

WARNING

- Fuel pressure is sufficient to penetrate skin. Wear hand protection at all times when removing injector tubes. Failure to do so may result in injury to personnel.
- Stay clear of moving parts. Failure to do so may result in injury or death to personnel.

4. Loosen injector tube (13) from injector (12). Crank engine (TM 9-2320-361-10) until no air bubbles are observed in fuel. Tighten injector tube (13).
5. Repeat step 4 for remaining injectors (13) in sequence shown.
6. Start engine (TM 9-2320-361-10).
7. With engine running, again open and close bleeder valve (11) until fuel is clear of air bubbles. Tighten bleeder valve (11) and stop engine (TM 9-2320-361-10).
8. Wipe fuel from secondary and final fuel filter housings (10) and injectors (13) with clean rag.

https://truckmanualshub.com/

3-29. SECONDARY AND FINAL FUEL FILTERS TESTING AND MAINTENANCE (Contd)

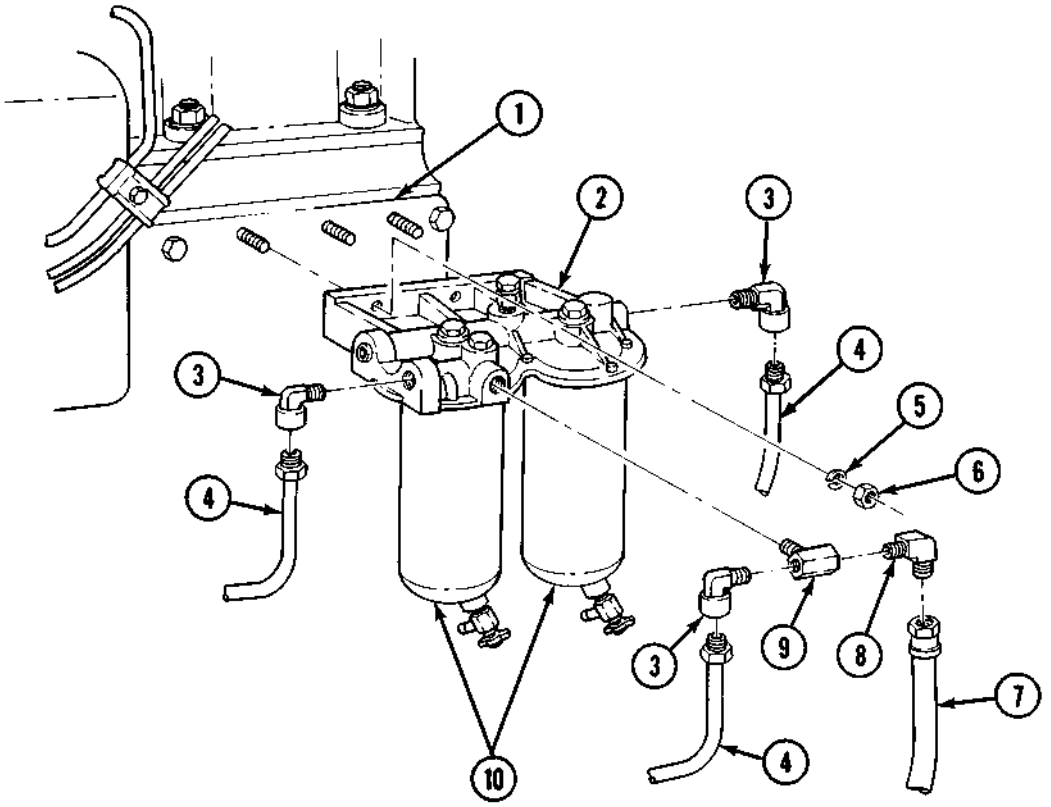

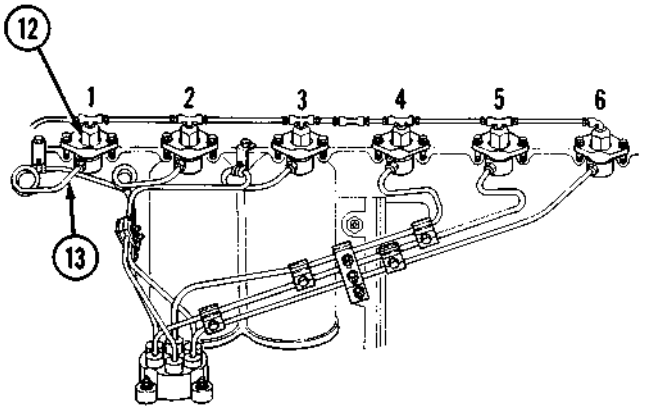

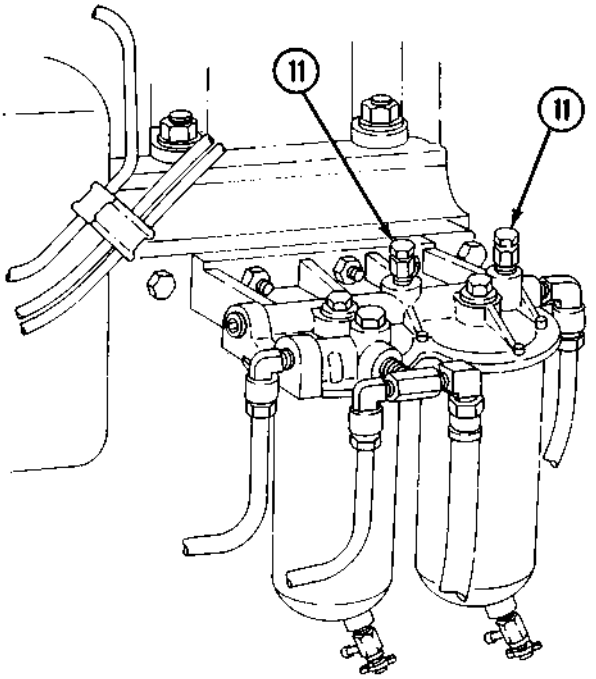

https://truckmanualshub.com/

3-30. MANIFOLD HEATER (COVERED) REPLACEMENT

This task covers:

- **a. Cover Removal**
- **b. Ignition Unit Removal**
- **c. Fuel Nozzle Removal**
- **d. Fuel Pump Removal**
- **e. Elbow Removal**
- **f. Fuel Filter Removal**
- **g. Fuel Filter Installation**
- **h. Elbow Installation**
- **i. Fuel Pump Installation**
- **j. Fuel Nozzle Installation**
- **k. Ignition Unit Installation**
- **l. Cover Installation**

INITIAL SETUP:

APPLICABLE MODELS
All

MATERIALS/PARTS
Two manifold heater fuel filters
Eight lockwashers
Two gaskets
Two filters

REFERENCES (TM)
TM 9-2320-361-10
TM 9-2320-361-20P

EQUIPMENT CONDITION
- Parking brake set (TM 9-2320-361-10).
- Hood raised and secured (TM 9-2320-361-10).
- Battery ground cable disconnected (para. 4-48).
- Breather tube removed (para. 3-6).

a. Cover Removal

Remove four screws (1), clamp (5), and fuel pump cover (2) from bracket (11).

b. Ignition Unit Removal

1. Remove screw (10), lockwasher (9), and wiring harness ground wire (8) from bracket (11). Discard lockwasher (9).
2. Disconnect wire (7) from wiring harness (6).
3. Disconnect wiring harness (6) from ignition unit (4) and fuel pump (12).
4. Disconnect cable assembly (23) from ignition unit (4) and spark plug (15).
5. Remove two clamp assemblies (3) and ignition unit (4) from bracket (11).

c. Fuel Nozzle Removal

1. Remove spark plug (15) and gasket (14) from elbow (13). Discard gasket (14).
2. Disconnect fuel return tube (21) and fuel inlet tube (22) from adapters (20) and (16).
3. Remove adapters (20) and (16) from fuel nozzle (19).
4. Loosen nut (18) and remove fuel nozzle (19) and nut (18) from elbow (13).
5. Remove two filters (17) from fuel nozzle (19). Discard filters (17).

https://truckmanualshub.com/

3-30. MANIFOLD HEATER (COVERED) REPLACEMENT (Contd)

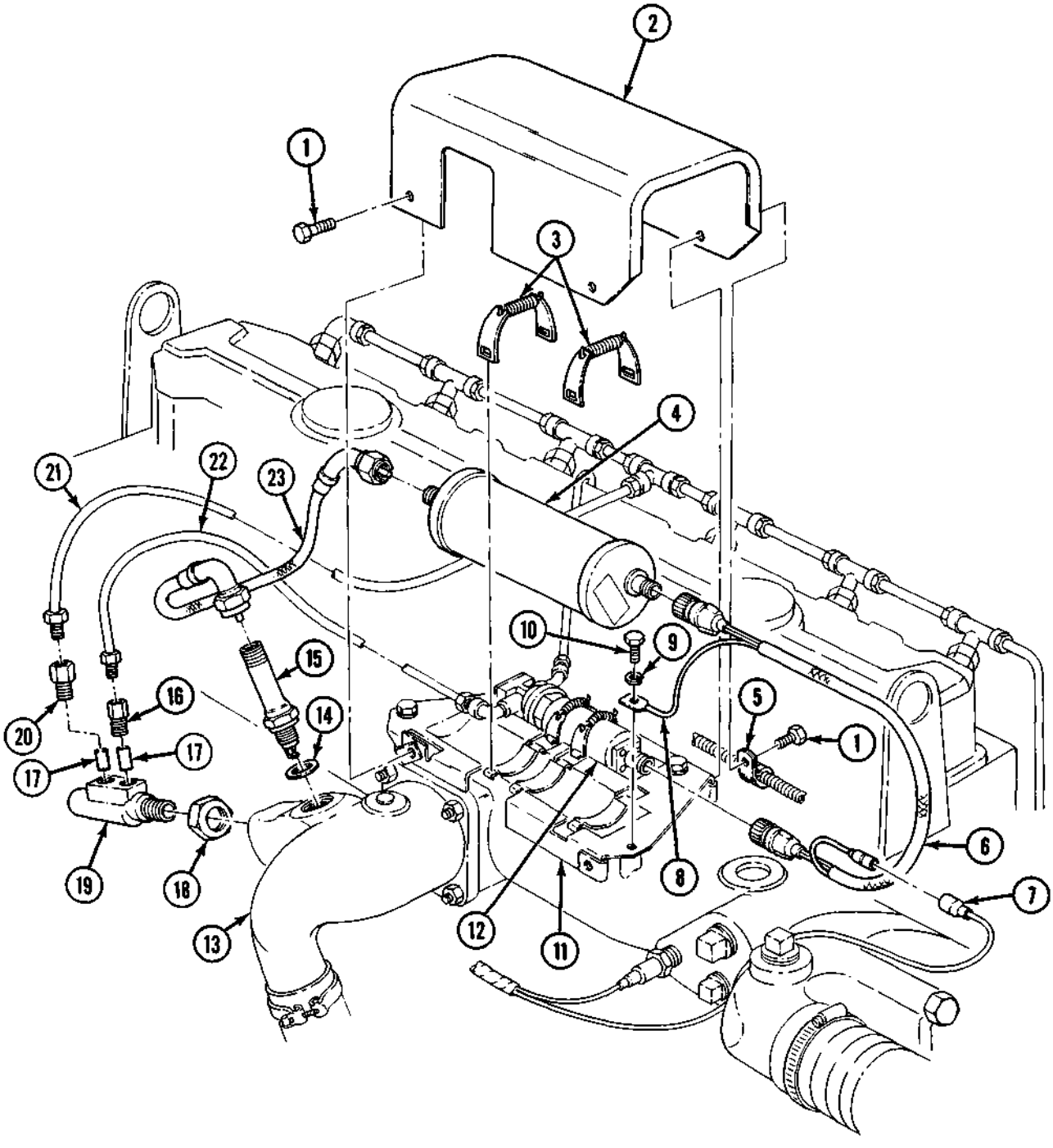

https://truckmanualshub.com/

3-30. MANIFOLD HEATER (COVERED) REPLACEMENT (Contd)

d. Fuel Pump Removal

1. Remove fuel inlet tube (20) from elbow (1).
2. Remove fuel supply tube (5) from elbow (4).
3. Remove two clamps (3) and fuel pump (2) from bracket (10).
4. Remove elbows (1) and (4) from fuel pump (2).
5. Remove two screws (19), lockwashers (18), bracket (10), and four nuts (9) from air intake manifold (8). Discard lockwashers (18).
6. Remove fuel return tube (7) from tee (6).

e. Elbow Removal

1. Loosen clamp (11) on air intake tube (12).
2. Remove four nuts (15), lockwashers (16), clamp (14), elbow (13), and gasket (17) from air intake manifold (8) and air intake tube (12). Discard lockwashers (16) and gasket (17).

f. Fuel Filter Removal

1. Disconnect fuel supply tube (5) from adapter (21).
2. Disconnect fuel supply tube (28) from fuel filter (29).
3. Remove screw (27), lockwasher (26), clamp (25), fuel filter (29), and clamp (24) from side of engine (23). Discard lockwasher (26) and fuel filter (29).
4. Remove adapter (21) and elbow (22) from fuel filter (29).

g. Fuel Filter Installation

1. Install elbow (22) and adapter (21) on new fuel filter (29).
2. Install fuel filter (29) on engine (23) with clamps (24) and (25), new lockwasher (26) and screw (27).
3. Connect fuel supply tube (28) to fuel filter (29).
4. Connect fuel supply tube (5) to adapter (21).

h. Elbow Installation

1. Install new gasket (17), elbow (13), and clamp (14) on air intake tube (12) and air intake manifold (8) with four new lockwashers (16) and nuts (15).
2. Tighten clamp (11) on air intake tube (12).

i. Fuel Pump Installation

1. Install fuel return tube (7) to tee (6).
2. Install four nuts (9) on bracket (10) and install bracket (10) on air intake manifold (8) with two screws (19) and new lockwashers (18).
3. Install elbows (1) and (4) to fuel pump (2).
4. Install fuel pump (2) to bracket (10) with two clamps (3).
5. Connect fuel supply tube (5) to elbow (4).
6. Connect fuel inlet tube (20) to elbow (1).

https://truckmanualshub.com/

3-30. MANIFOLD HEATER (COVERED) REPLACEMENT (Contd)

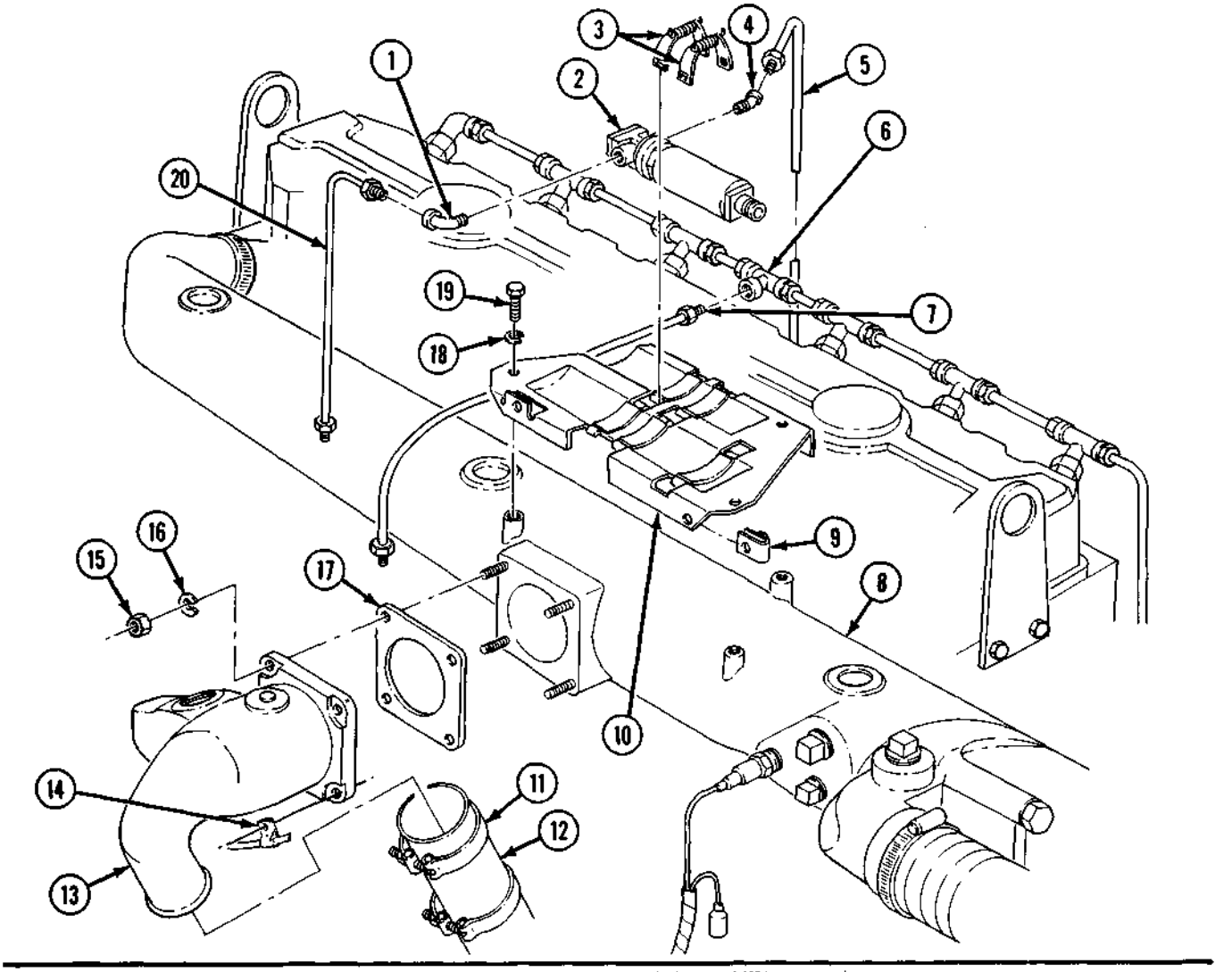

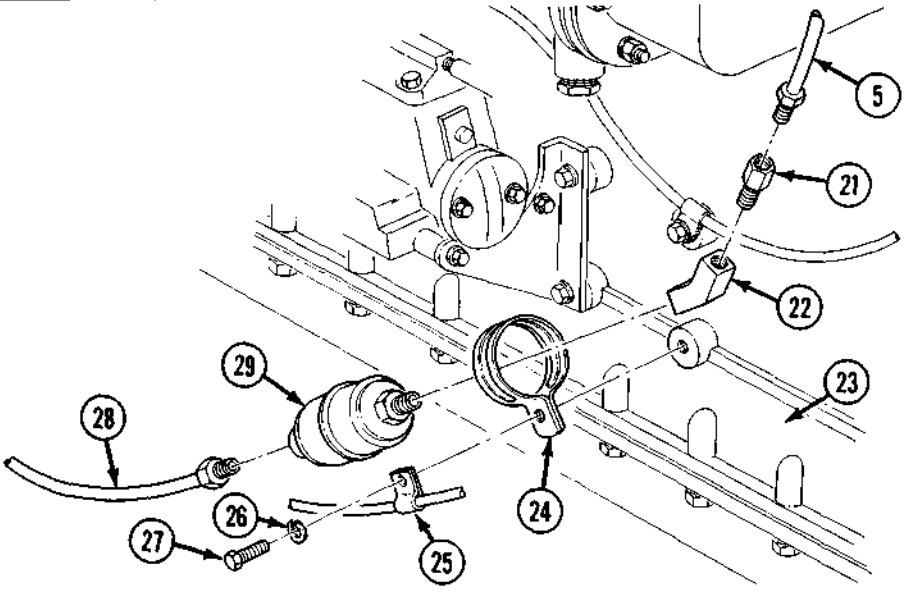

https://truckmanualshub.com/

3-30. MANIFOLD HEATER (COVERED) REPLACEMENT (Contd)

j. Fuel Nozzle Installation

1. Install two new filters (17) on fuel nozzle (19).
2. Install fuel nozzle (19) on elbow (13) with nut (18). Tighten nut (18) securely.
3. Install adapters (16) and (20) on fuel nozzle (19).
4. Connect fuel inlet tube (22) and fuel return tube (21) to adapters (16) and (20).
5. Install new gasket (14) and spark plug (15) on elbow (13).

k. Ignition Unit Installation

1. Install ignition unit (4) on bracket (11) with two clamp assemblies (3).
2. Connect cable assembly (23) to ignition unit (4) and spark plug (15).
3. Connect wiring harness (6) to fuel pump (12) and ignition unit (4).
4. Connect wiring harness ground wire (8) to bracket (11) with screw (10) and new lockwasher (9).
5. Connect wiring harness (6) to wire (7).

l. Cover Installation

Install fuel pump cover (2) and clamp (5) on bracket (11) with four screws (1).

https://truckmanualshub.com/

3-30. MANIFOLD HEATER (COVERED) REPLACEMENT (Contd)

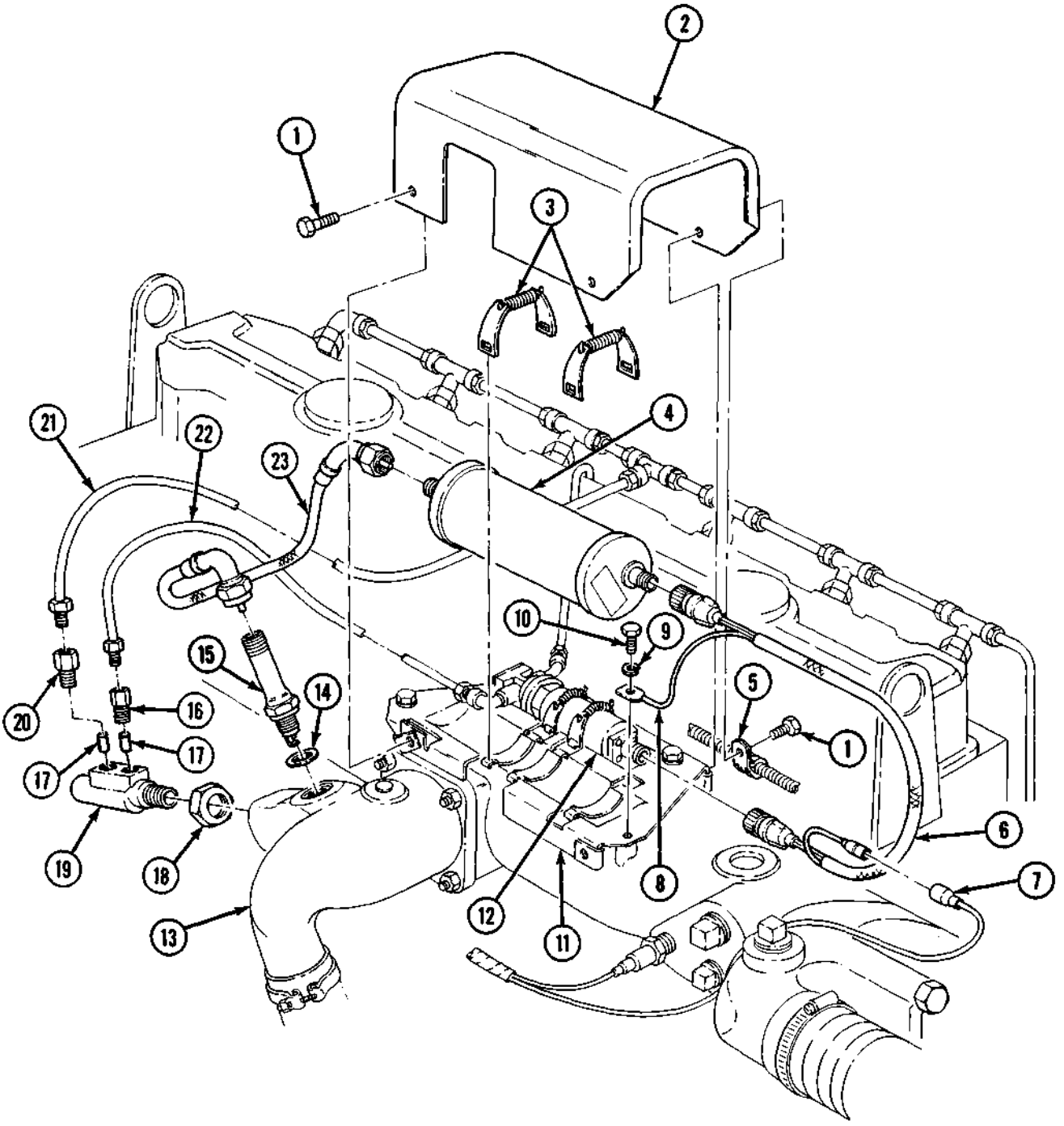

FOLLOW-ON TASKS: • Install breather tube (para. 3-6).
• Connect battery ground cable (para. 4-48).

https://truckmanualshub.com/

3-31. MANIFOLD HEATER (UNCOVERED) REPLACEMENT

This task covers:

a. Fuel Nozzle Removal
b. Ignition Unit Removal
c. Fuel Filter Removal
d. Fuel Pump Removal
e. Elbow Removal
f. Elbow Installation
g. Fuel Pump Installation
h. Fuel Filter Installation
i. Ignition Unit Installation
j. Fuel Nozzle Installation

INITIAL SETUP:

APPLICABLE MODELS
All

MATERIALS/PARTS
Manifold heater fuel filter
Nine lockwashers
Two gaskets
Two filters

REFERENCES (TM)
TM 9-2320-361-10
TM 9-2320-361-20P

EQUIPMENT CONDITION
- Parking brake set (TM 9-2320-361-10).
- Hood raised and secured (TM 9-2320-361-10).
- Battery ground cable disconnected (para. 4-48).

a. Fuel Nozzle Removal

1. Disconnect cable assembly (38) from spark plug (32).
2. Remove spark plug (32) and gasket (31) from elbow (25). Discard gasket (31).
3. Disconnect fuel return tube (7) and fuel inlet tube (10) from adapters (30) and (28).
4. Loosen nut (26) and remove fuel nozzle (27) and nut (26) from elbow (25).
5. Remove two filters (29) from fuel nozzle (27). Discard filters (29).

b. Ignition Unit Removal

1. Remove cable assembly (38) from ignition unit (4).
2. Remove screw (1), lockwasher (2), and ground wire (41) from engine (40) and disconnect wiring harness (39) from ignition unit (4). Discard lockwasher (2).
3. Remove two screws (3), lockwashers (5), clamps (36), and ignition unit (4) from engine (40). Discard lockwashers (5).

c. Fuel Filter Removal

1. Disconnect wire (11) from wire (12).
2. Remove wiring harness (21) from fuel pump (14).
3. Remove fuel return line (7) from tee (9).
4. Disconnect fuel supply line (35) from fuel filter (18).
5. Remove fuel filter (18), elbow (16), and pipe coupling (15) from fuel pump (14). Discard fuel filter (18).

d. Fuel Pump Removal

1. Remove fuel inlet tube (10) and elbow (13) from fuel pump (14).
2. Remove two screws (6), lockwashers (8), clamps (20), and fuel pump (14) from water outlet manifold (19). Discard lockwashers (8).

https://truckmanualshub.com/

3-31. MANIFOLD HEATER (UNCOVERED) REPLACEMENT (Contd)

e. Elbow Removal

1. Loosen clamp (17) on air intake tube (23).
2. Remove four nuts (33), lockwashers (34), clamp (37), elbow (25), and gasket (24) from air intake manifold (22) and air intake tube (23). Discard lockwashers (34) and gasket (24).

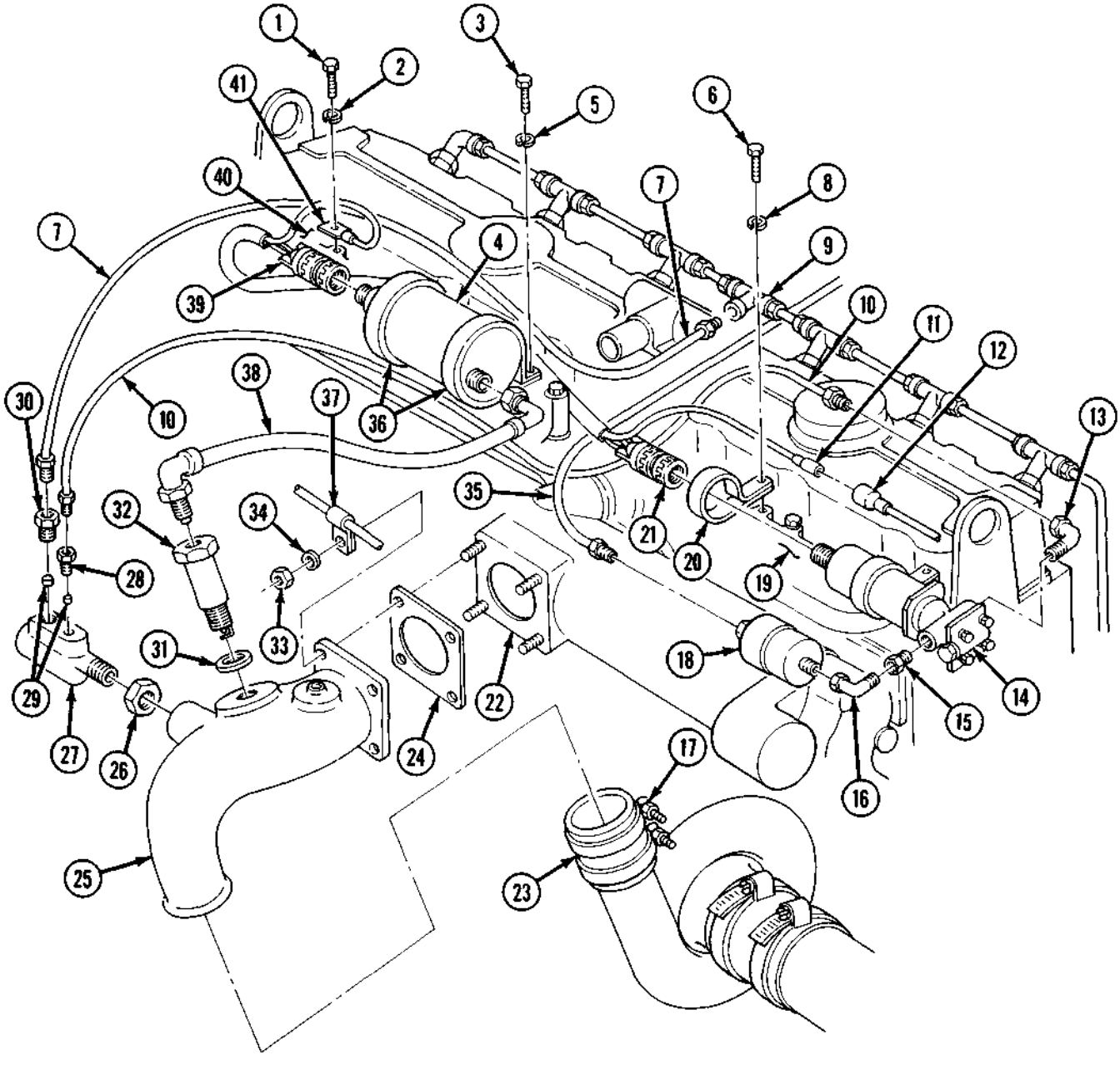

https://truckmanualshub.com/

3-31. MANIFOLD HEATER (UNCOVERED) REPLACEMENT (Contd)

f. Elbow Installation

1. Install new gasket (24), elbow (25), and clamp (37) on air intake tube (23) and air intake manifold (22) with four new lockwashers (34) and nuts (33).
2. Tighten clamp (17) on air intake tube (23).

g. Fuel Pump Installation

1. Install fuel pump (14) on water outlet manifold (19) with two clamps (20), new lockwashers (8), and screws (6).
2. Install elbow (13) on fuel pump (14) and connect fuel inlet tube (10) to elbow (13).

h. Fuel Filter Installation

1. Install pipe coupling (15), elbow (16), and new fuel filter (18) on fuel pump (14).
2. Connect fuel supply line (35) to fuel filter (18).
3. Connect fuel return line (7) to tee (9).
4. Connect wiring harness (21) to fuel pump (14).
5. Connect wire (11) to wire (12).

i. Ignition Unit Installation

1. Install ignition unit (4) on engine (40) with two clamps (36), new lockwashers (5), and screws (3).
2. Connect cable assembly (38) to ignition unit (4).
3. Connect wiring harness (39) to ignition unit (4).
4. Install ground wire (41) on engine (40) with new lockwasher (2) and screw (1).

j. Fuel Nozzle Installation

1. Install two new filters (29) on fuel nozzle (27).
2. Install fuel nozzle (27) and nut (26) on elbow (25).
3, Install adapters (28) and (30) on fuel nozzle (27).
4. Connect fuel inlet tube (10) and fuel return tube (7) to adapters (28) and (30).
5. Install new gasket (31) and spark plug (32) on elbow (25).
6. Connect cable assembly (38) to spark plug (32).

https://truckmanualshub.com/

3-31. MANIFOLD HEATER (UNCOVERED) REPLACEMENT (Contd)

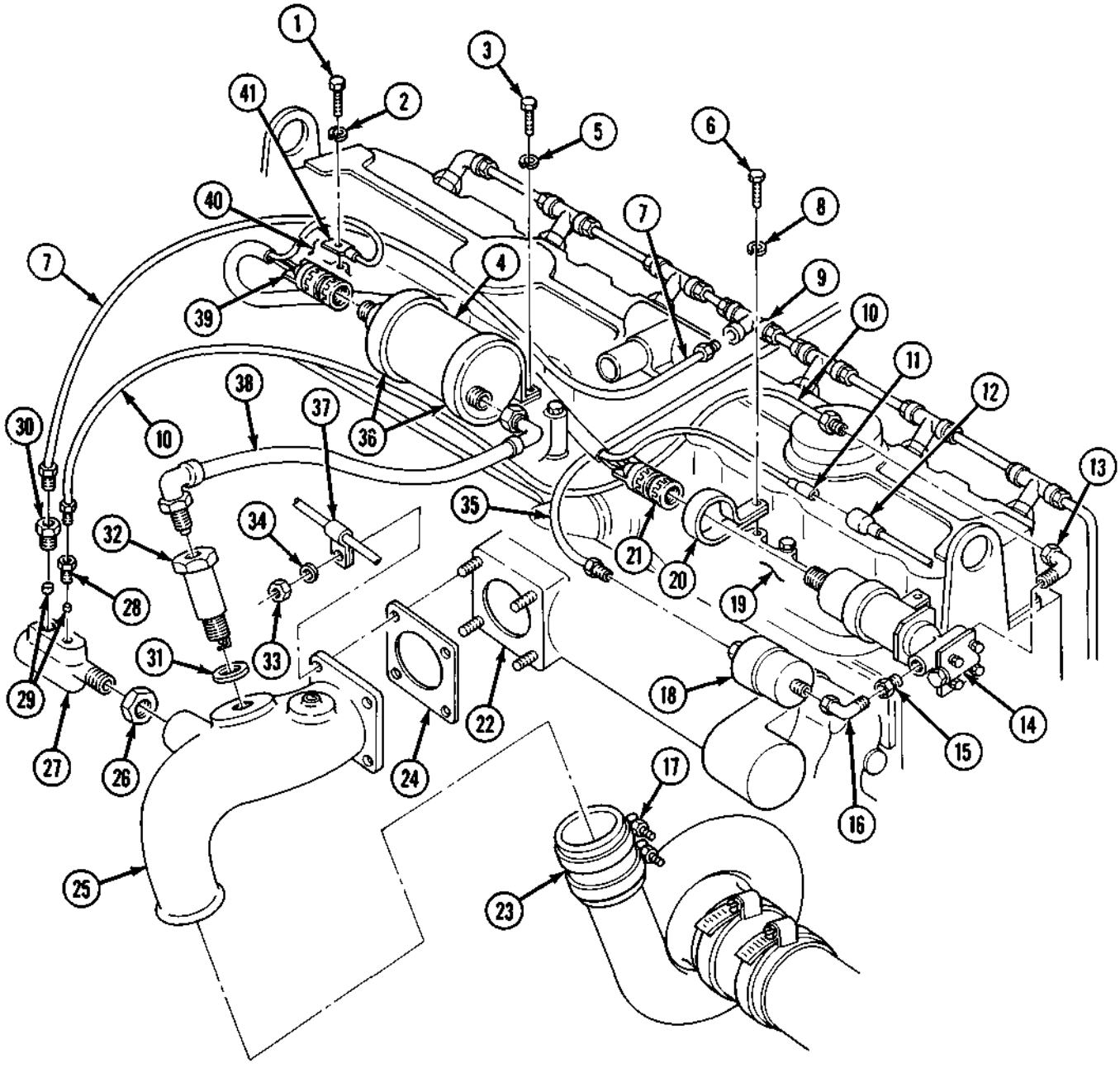

FOLLOW-ON TASK: Connect battery ground cable (para.4-48).

https://truckmanualshub.com/

Section VII. ACCELERATOR SYSTEM MAINTENANCE

3-32. ACCELERATOR SYSTEM MAINTENANCE INDEX

PARA. NO.	TITLE	PAGE NO.
3-33.	Accelerator Pedal, Brackets, and Rod Maintenance	3-70
3-34.	Engine Stop Control Cable Maintenance	3-76
3-35.	Hand Throttle Control Cable Maintenance	3-78

3-33. ACCELERATOR PEDAL, BRACKETS, AND ROD MAINTENANCE

This task covers:

a. Removal
b. Installation
c. Adjustment

INITIAL SETUP:

APPLICABLE MODELS
All

MATERIALS/PARTS
Five locknuts
Seven cotter pins

PERSONNEL REQUIRED
Two

REFERENCES (TM)
TM 9-2320-361-10
TM 9-2320-361-20P

EQUIPMENT CONDITION
- Parking brake set (TM 9-2320-361-10).
- Hood raised and secured (TM 9-2320-361-10).

a. Removal

1. Remove throttle return spring (10) from swivel (9) and throttle return clip (1).
2. Remove screw (3), washers (2), and throttle return clip (1) from steering gear housing (12).
3. Remove cotter pin (4) and pin (11) from swivel (9) and disconnect swivel (9) from pump lever (13). Discard cotter pin (4).
4. Loosen screw (5) and remove connector (6), screw (5), and control wire (7) from accelerator rod (8).
5. Remove locknut (19), ball joint (21), and accelerator rod (22) from lever (20). Discard locknut (19).
6. Remove cotter pin (18), washer (17), and connecting link (16) from lever (20). Discard cotter pin (18).
7. Remove two cotter pins (14), pin (15), and lever (20) from bracket (24). Discard cotter pins (14).

NOTE
Assistant will help with step 8.

8. Remove two locknut (25), screws (26), and bracket (24) from cab floor (23). Discard locknuts (25).

https://truckmanualshub.com/

3-33. ACCELERATOR PEDAL, BRACKETS, AND ROD MAINTENANCE (Contd)

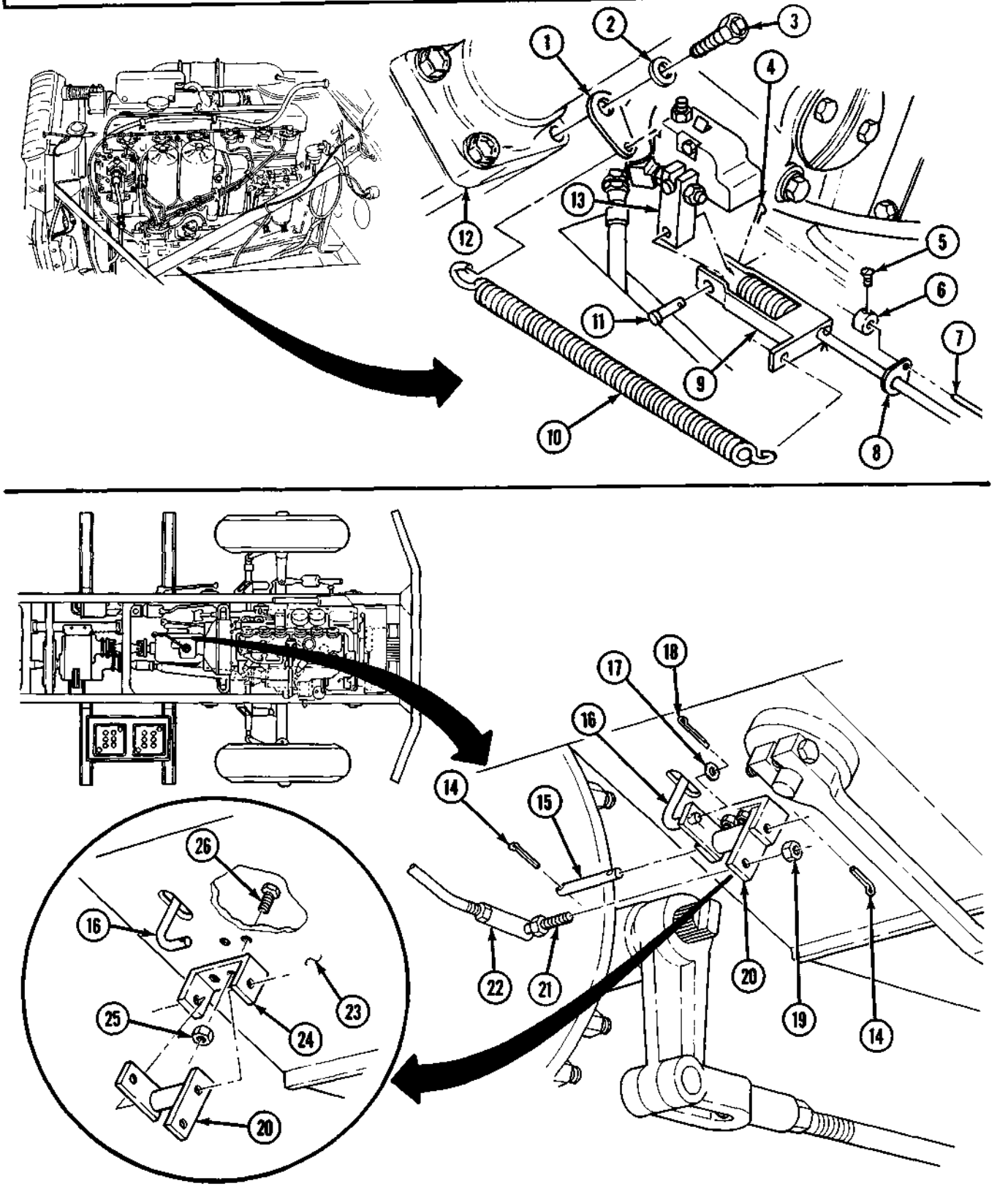

https://truckmanualshub.com/

3-33. ACCELERATOR PEDAL, BRACKETS, AND ROD MAINTENANCE (Contd)

9. Remove cotter pin (3) and connecting link (2) from accelerator pedal (4). Discard cotter pin (3).
10. Remove pin (8) and accelerator pedal (4) from bracket (7).

NOTE

Assistant will help with step 11.

11. Remove two locknuts (6), screws (1), and bracket (7) from cab floor (5). Discard locknuts (6).
12. Remove two cotter pins (12), washer (9), spring (10), and swivel (11) from accelerator rod (13). Discard cotter pins (12).
13. Loosen nut (14) and remove ball point (15) and nut (14) from accelerator rod (13).

b.Installation

1. Install nut (14) and ball joint (15) on accelerator rod (13). Tighten nut (14).
2. Install swivel (11), spring (10), and washer (9), on accelerator rod (13) with two new cotter pins (12).

NOTE

Assistant will help with step 3.

3. Install bracket (7) on cab floor (5) with two screws (1) and new locknuts (6).
4. Install accelerator pedal (4) on bracket (7) with pin (8).
5. Install connecting link (2) on accelerator pedal (4) with new cotter pin (3).

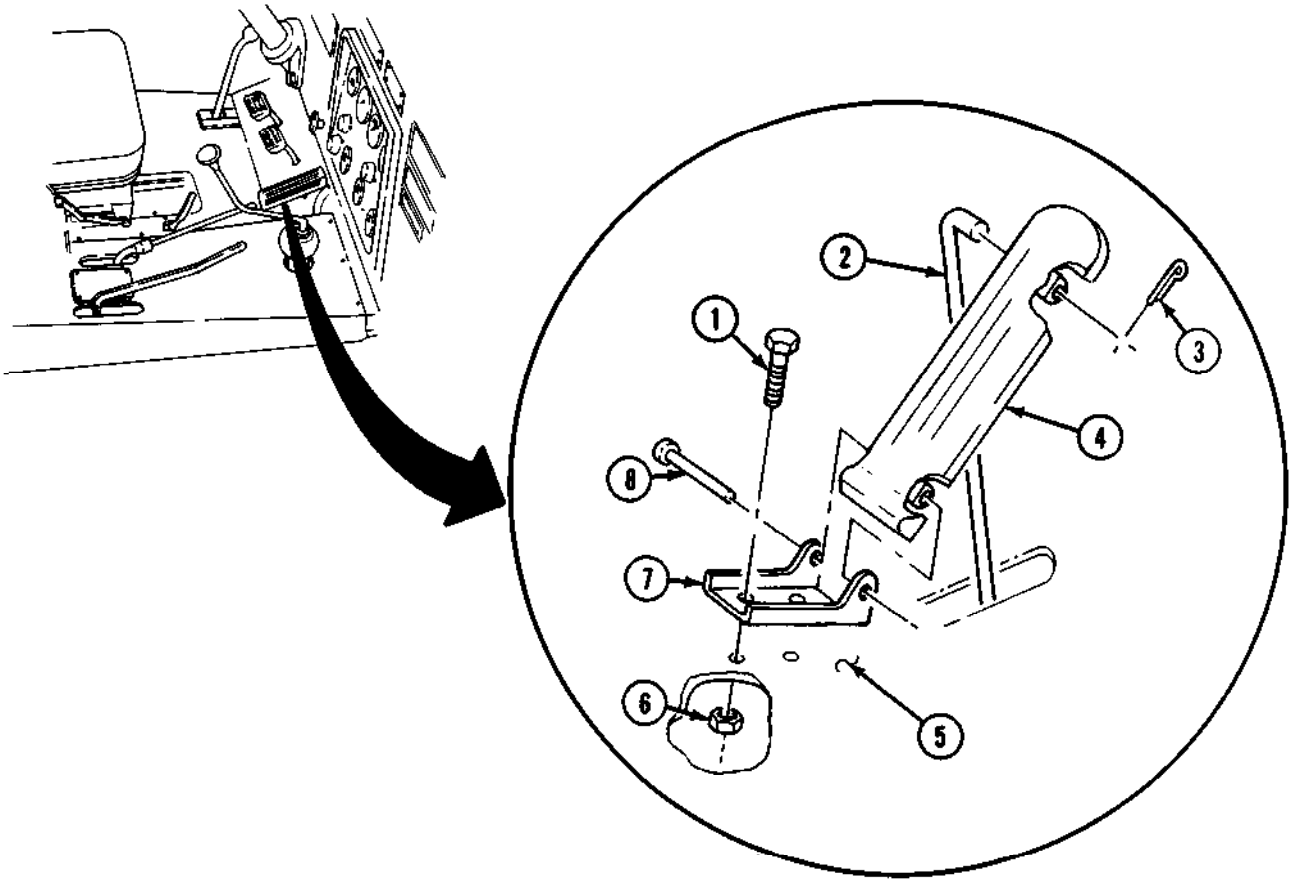

https://truckmanualshub.com/

3-33. ACCELERATOR PEDAL, BRACKETS, AND ROD MAINTENANCE (Contd)

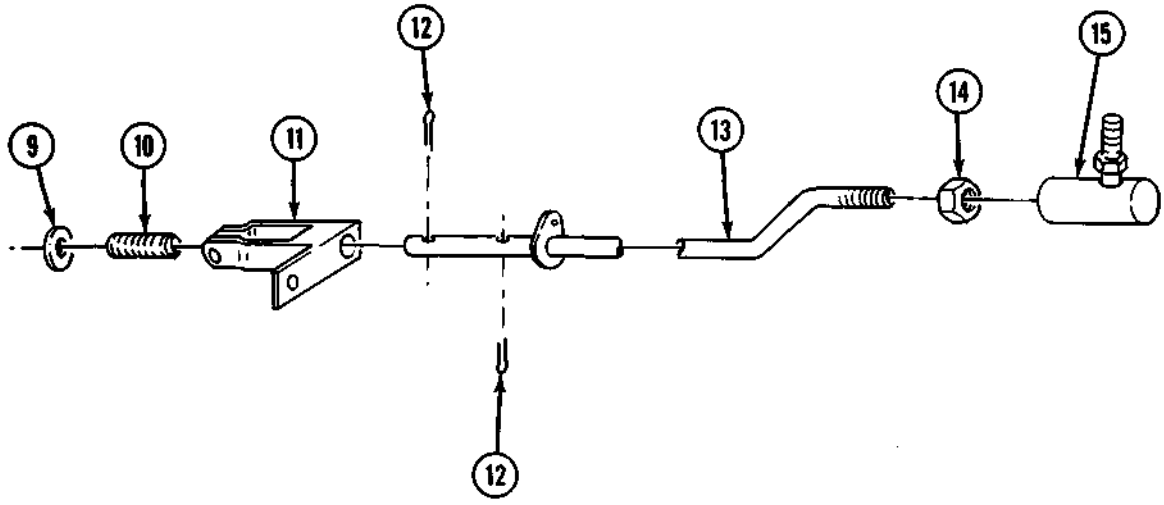

NOTE

Assistant will help with step 6.

6. Install bracket (17) on cab floor (5) with two screws (16) and new locknuts (19).
7. Install lever (18) on bracket (17) with pin (21) and two new cotter pins (20).
8. Install connecting link (2) on lever (18) with washer (23) and new cotter pin (22).
9. Install ball joint (15) and accelerator rod (13) on lever (18) with new locknut (24).

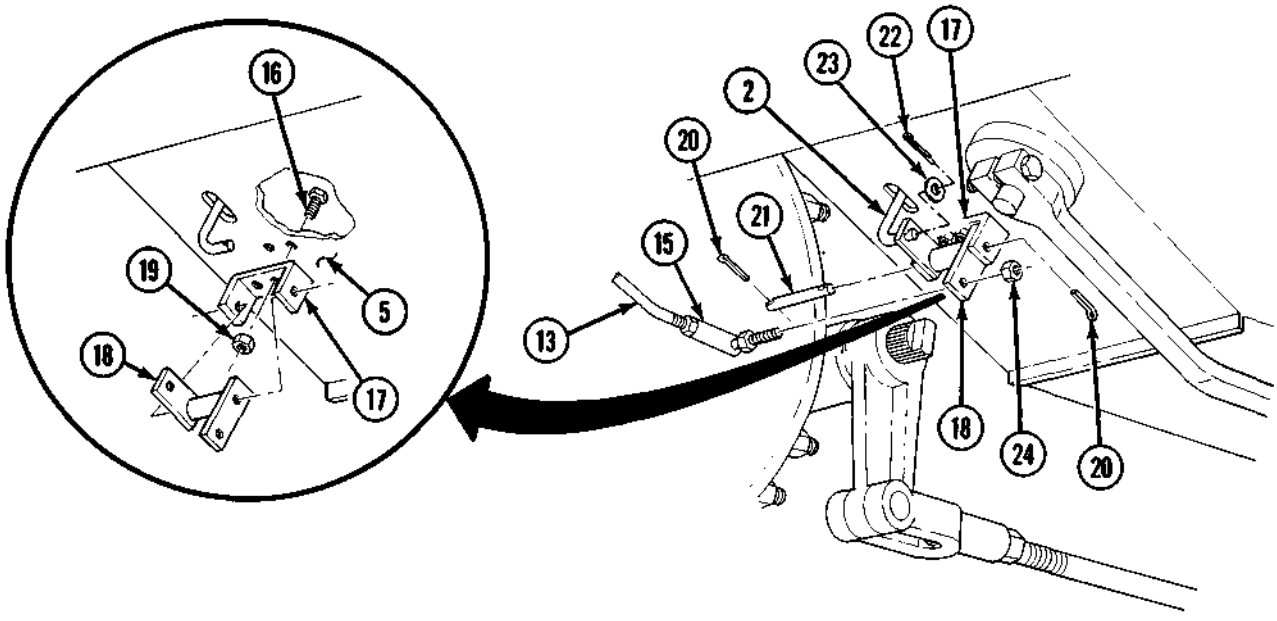

https://truckmanualshub.com/

3-33. ACCELERATOR PEDAL, BRACKETS, AND ROD MAINTENANCE (Contd)

10. Connect swivel (9) to pump lever (12) with pin (11) and new cotter pin (4).
11. Position control wire (7) through flange on accelerator rod (8) and install connector (6) and screw (5) on control wire (7). Do not tighten. Position connector (6) 0.125 in. (0.32 mm) from flange on accelerator rod (8) and tighten screw (5).
12. Install throttle return clip (1) on steering gear housing (13) with washer (2) and screw (3).
13. Install spring (10) on throttle return clip (1) and swivel (9).

c. Adjustment

1. Remove locknut (15) from threaded stud (16) and disconnect threaded stud (16) of ball joint (18) from lever (17).
2. Loosen nut (19) on accelerator rod (14).

NOTE

Rod is shortened by turning ball joint clockwise on rod and lengthened by turning ball joint counterclockwise on rod.

3. Shorten or lengthen accelerator rod (14) until threaded stud (16) of ball joint (18) will freely slide into hole of lever (17).
4. Install locknut (15) on threaded stud (16).
5. Tighten nut (19) on rod (14).

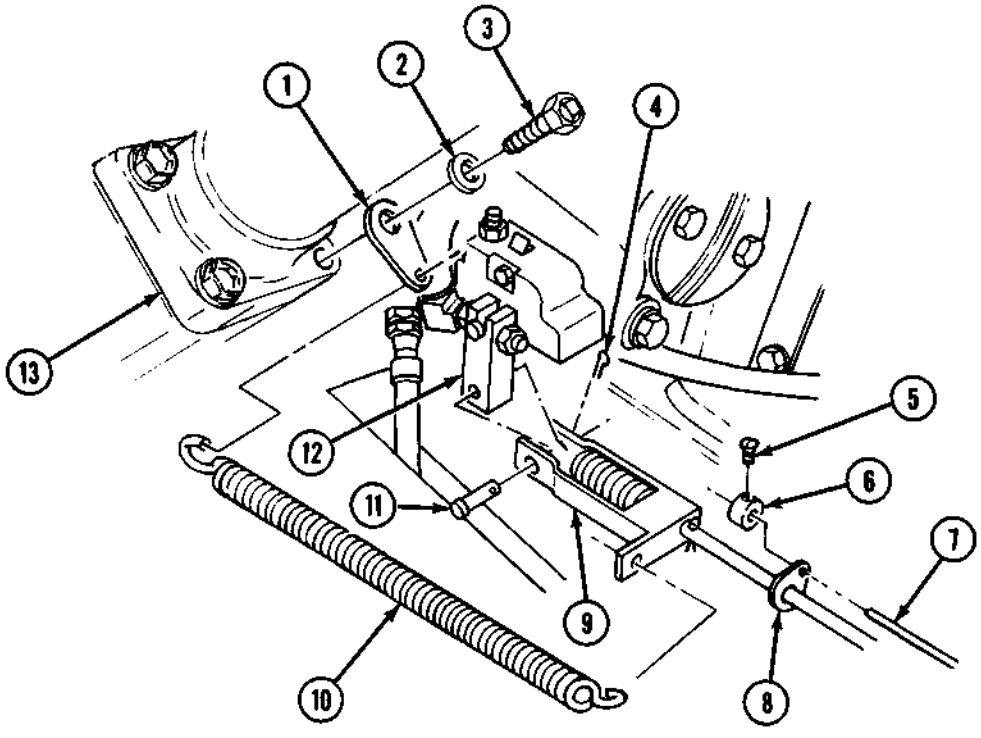

https://truckmanualshub.com/

3-33. ACCELERATOR PEDAL, BRACKETS, AND ROD MAINTENANCE (Contd)

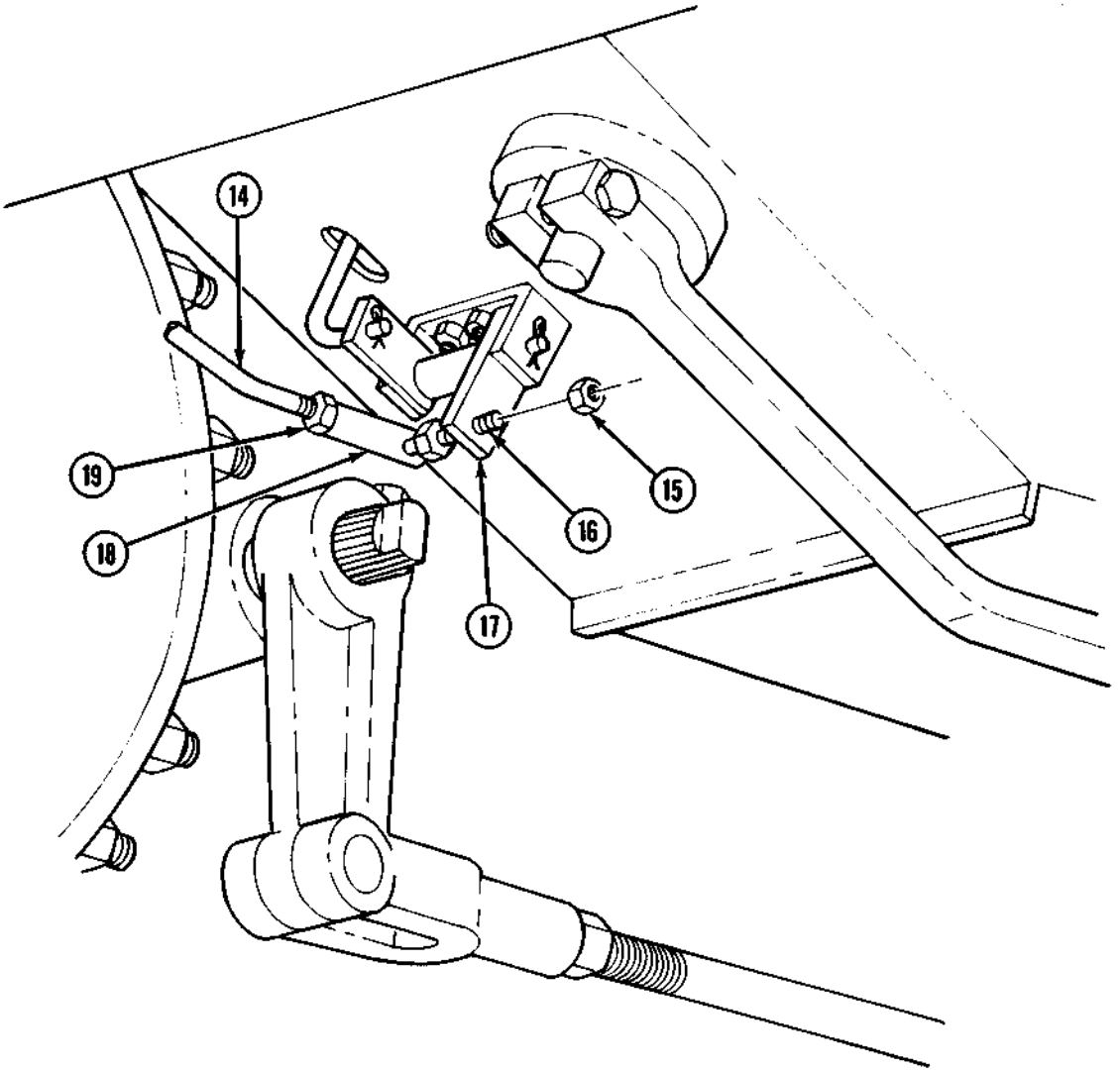

FOLLOW-ON TASK: Start engine (TM 9-2320-361-10) and check throttle for proper operation.

https://truckmanualshub.com/

3-34. ENGINE STOP CONTROL CABLE MAINTENANCE

This task covers:

a. Removal
b. Installation
c. Adjustment

INITIAL SETUP:

APPLICABLE MODELS
All

MATERIALS/PARTS
Four lockwashers
Cotter pin
Tiedown strap (Appendix C, Item 20)

REFERENCES (TM)
TM 9-2320-361-10
TM 9-2320-361-20P

EQUIPMENT CONDITION
- Parking brake set (TM 9-2320-361-10).
- Hood raised and secured (TM 9-2320-361-10).

a. Removal

1. Remove tiedown strap (8) and engine stop control cable (1) from around steering column (9).
2. Remove nut (19), two lockwashers (12), and screw (13) from clamp (16). Discard lockwashers (12).
3. Straighten end of control cable wire (11) and loosen screw (10) on swivel (21).
4. Remove control cable wire (11) and control cable (1) from swivel (21) and clamp (16).
5. Remove cotter pin (18), swivel (21) and screw (10) from fuel shutoff valve (20). Discard cotter pin (18).
6. Remove screw (14), lockwasher (15) and clamp (16) from fuel injection pump (17). Discard lockwasher (15).
7. Loosen nut (6) behind instrument panel (5) and slide nut (6) and lockwasher (3) back on control cable (1).
8. Pull engine stop control (4) out from instrument panel (5) and remove nut (6) and lockwasher (3) from cable (1) as end of cable (1) comes through grommet (7) in firewall (2). Discard lockwasher (3).
9. Remove grommet (7) from firewall (2).

b. Installation

1. Install grommet (7) on firewall (2).
2. Route end of engine stop control (4) through instrument panel (5).
3. Position new lockwasher (3) and nut (6) on end of control cable (1) and insert control cable (1) through grommet (7) and firewall (2).
4. Install engine stop control (4) on instrument panel (5) with lockwasher (3) and nut (6).
5. Install clamp (16) on fuel injection pump (17) with new lockwasher (15) and screw (14).
6. Install swivel (21) on fuel shutoff valve (20) with new cotter pin (18) and install screw (10) on swivel (21). Do not tighten.
7. Slide control cable (1) through clamp (16) and control cable wire (11) through swivel (21).
8. Install two new lockwashers (12), screw (13), and nut (19) on clamp (16). Do not tighten nut (19).

c. Adjustment

1. Push ENGINE STOP control (4) all the way in.
2. Pull fuel shutoff valve (20) out (toward firewall).

https://truckmanualshub.com/

3-34. ENGINE STOP CONTROL CABLE MAINTENANCE (Contd)

3. Position control cable (1) in clamp (16) with end at least 1/2 in. (13 mm) away from fuel shutoff valve (20).
4. Tighten nut (19) on screw (13).
5. Push fuel shutoff valve (20) all the way in and tighten screw (10) on control cable wire (11). Bend end of control cable wire (11) up.
6. Install tiedown strap (8) around steering column (9) and control cable (1).

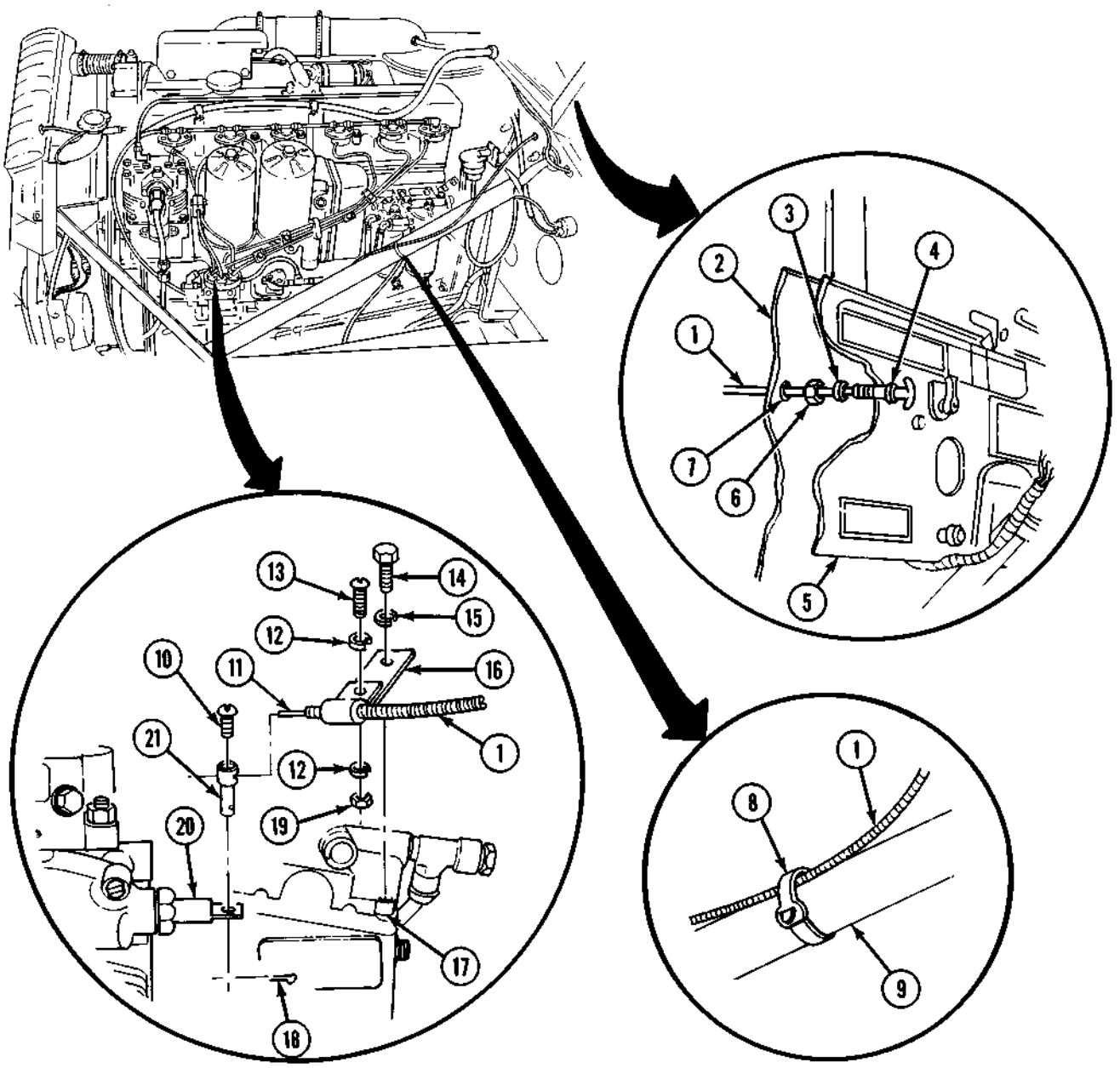

FOLLOW-ON TASK: Start and stop engine (TM 9-2320-361-10).

https://truckmanualshub.com/

3-35. HAND THROTTLE CONTROL CABLE MAINTENANCE

This task covers:

a. Removal
b. Installation
c. Adjustment

INITIAL SETUP:

APPLICABLE MODELS
All

MATERIAL/PARTS
Lockwasher

PERSONNEL REQUIRED
Two

REFERENCES (TM)
TM 9-2320-361-10
TM 9-2320-361-20P

EQUIPMENT CONDITION
- Parking brake set (TM 9-2320-361-10).
- Hood raised and secured (TM 9-2320-361-10).

a. Removal

1. Straighten end of control wire (4) and remove screw (1), connector (2), and control wire (4) from accelerator rod flange (3).

NOTE
Assistant will help with step 2.

2, Remove nut (7) from screw (6) and slide nut (7) off end of control cable (8).
3. Pull control cable (8) up through hole in cab floor (5) and remove screw (6) from end of control cable (8).
4. Remove nut (12) and lockwasher (11) fron control cable (8). Discard lockwasher (11).
5. Pull hand throttle control (10) out from instrument panel (9).

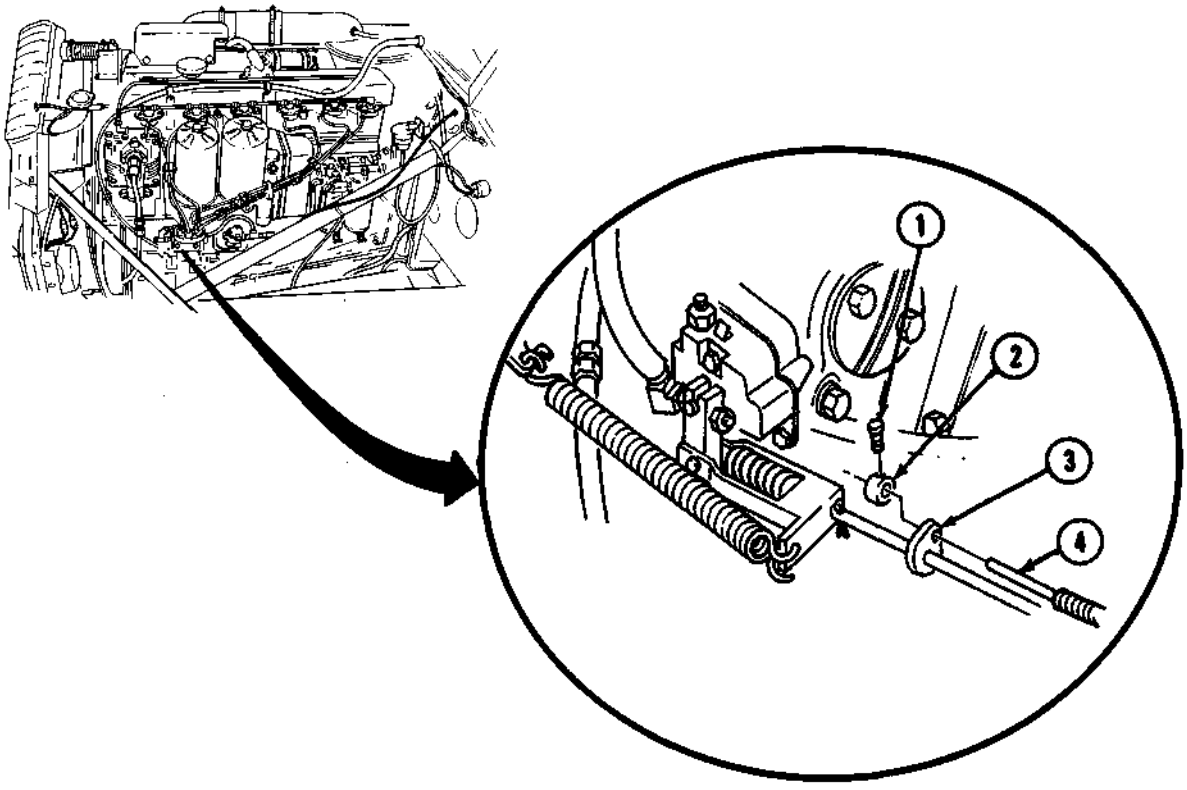

https://truckmanualshub.com/

3-35. HAND THROTTLE CONTROL CABLE MAINTENANCE (Contd)

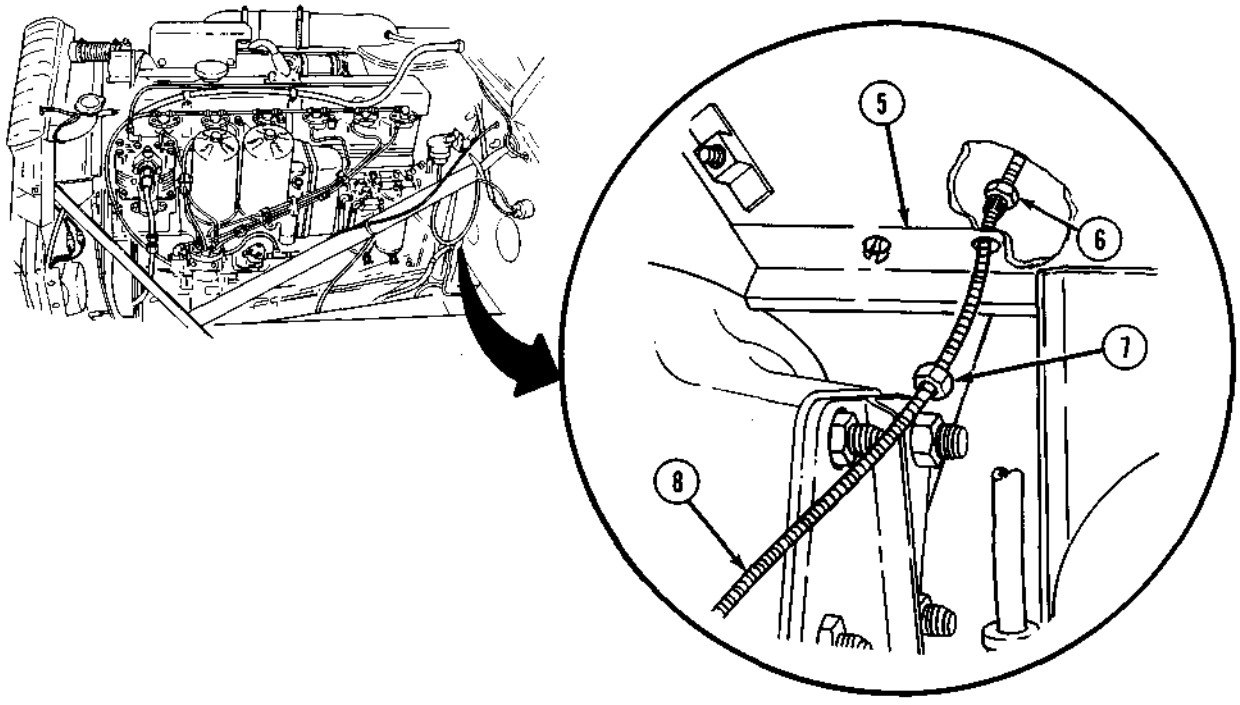

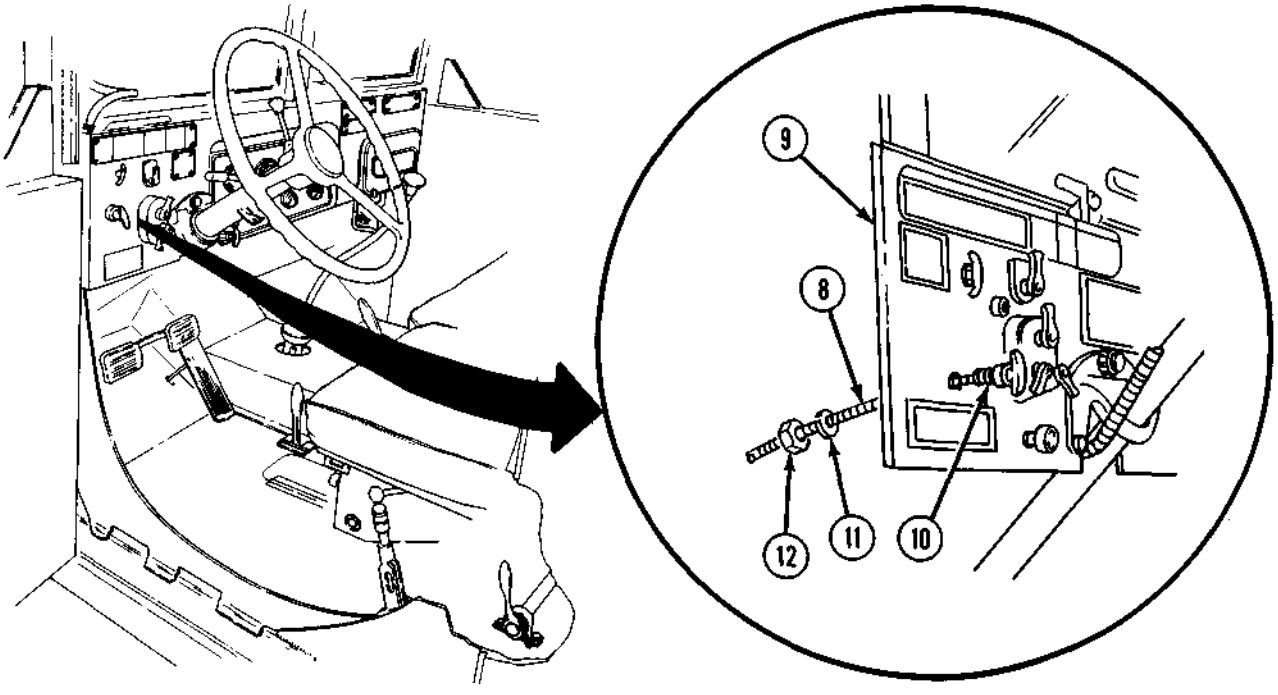

https://truckmanualshub.com/

3-35. HAND THROTTLE CONTROL CABLE MAINTENANCE (Contd)

b. Installation

1. Install control cable (3) through instrument panel (2) and install new lockwasher (5) and nut (6) on hand throttle control (4).
2. Position screw (8) on end of cable (3). Push cable (3) through hole in cab floor (7).
3. Position nut (9) on end of cable (3) and instill nut (9) on screw (8) and cab floor (7). Do not tighten nut (9).
4. Install control wire (13) through accelerator rod flange (12).
5. Install connector (11) and screw (10) on control wire (13). Do not tighten screw (10).

c. Adjustment

1. Push HAND THROTTLE control (4) all the way in.

NOTE

Assistant will help with step 2.

2. Hold accelerator pedal (1) down.
3. Position control cable (3) through floor (7) until distance between end of control cable (3) and accelerator rod flange (12) is approximately 0.5 in. (13 mm).
4. Release accelerator pedal (1).

NOTE

Assistant will help with step 5.

5. Tighten screw (8) and nut (9).
6. Position connector (11) next to accelerator rod flange (12) and tighten screw (10) on control wire (13). Bend end of control wire (13) up.

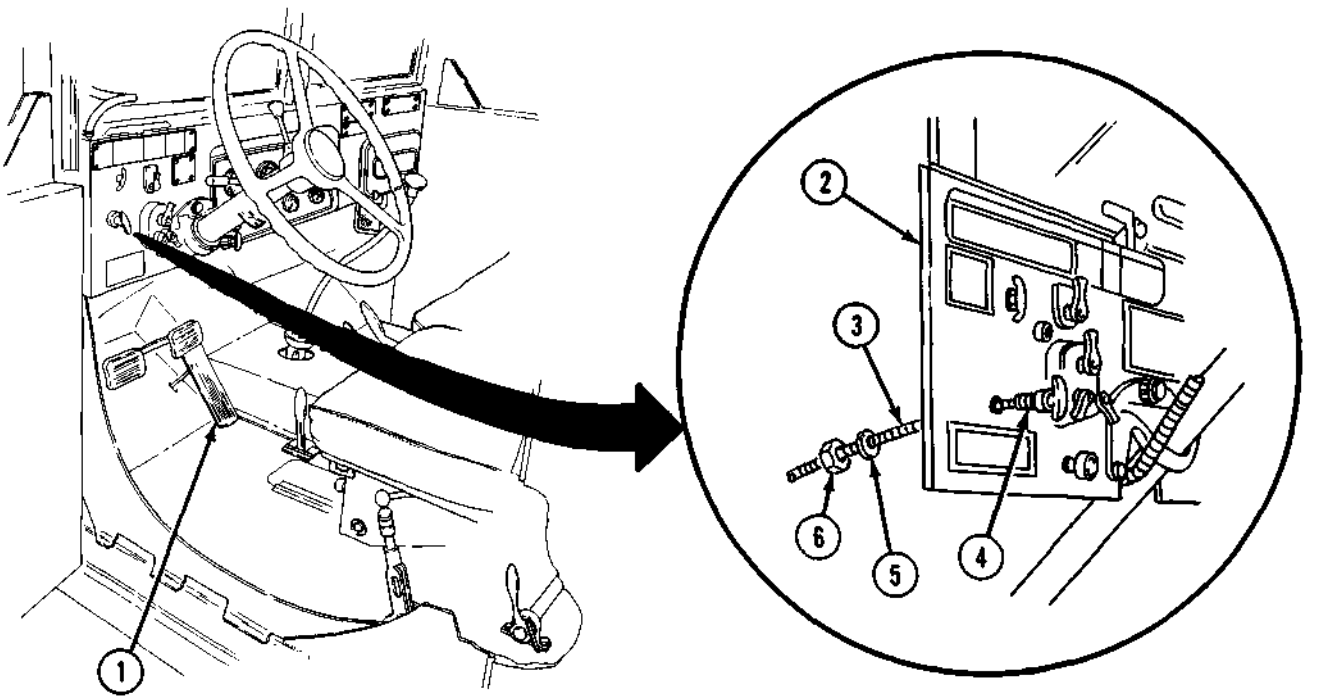

https://truckmanualshub.com/

3-35. HAND THROTTLE CONTROL CABLE MAINTENANCE (Contd)

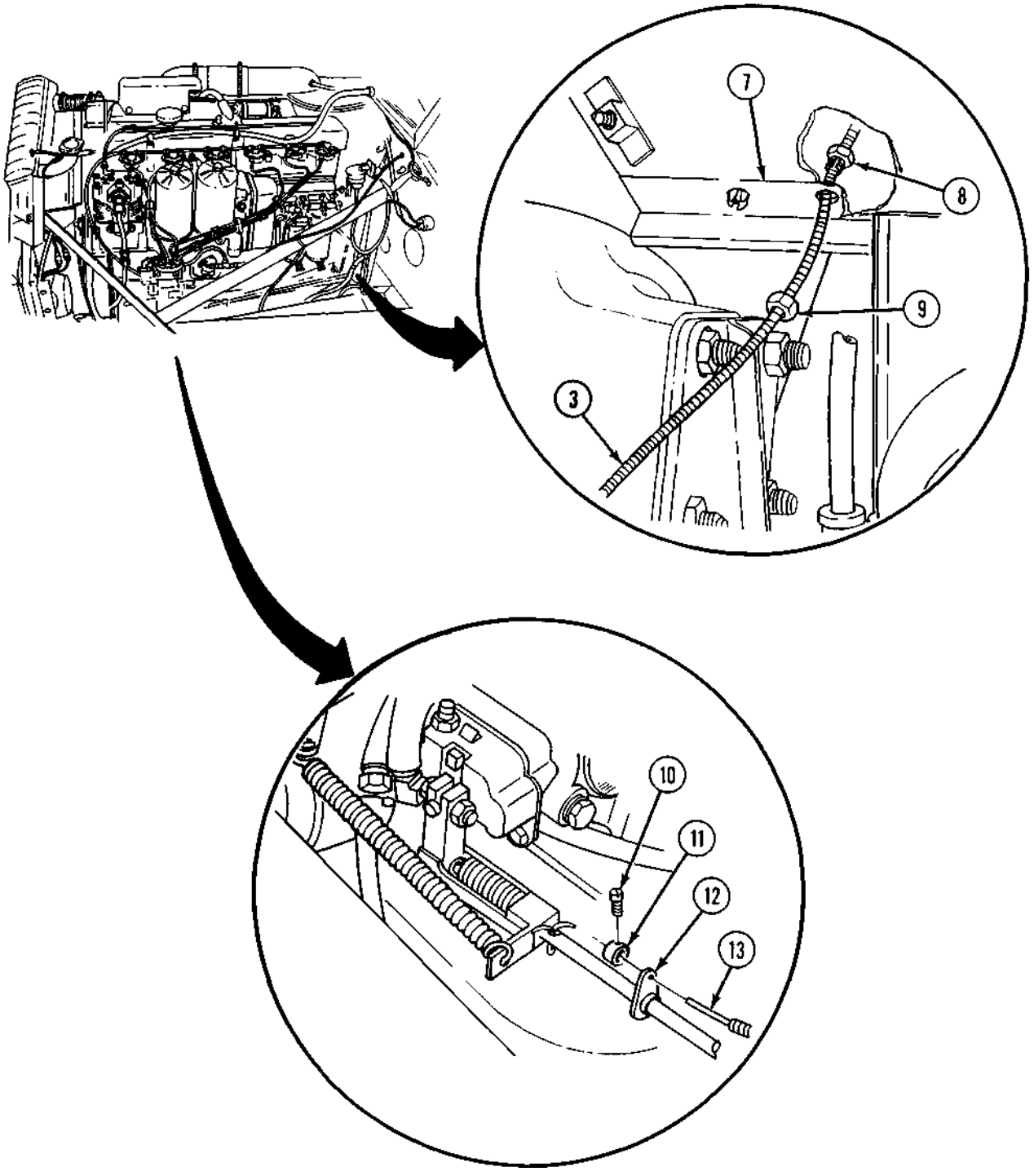

FOLLOW-ON TASK: Start and stop engine (TM 9-2320-361-10).

https://truckmanualshub.com/

Section VIII. EXHAUST SYSTEM MAINTENANCE

3-36. EXHAUST SYSTEM MAINTENANCE INDEX

PARA. NO.	TITLE	PAGE NO.
3-37.	Exhaust System Replacement	3-82
3-38.	Exhaust System Replacement (M50A2 and M50A3)	3-86

3-37. EXHAUST SYSTEM REPLACEMENT

This task covers:

a. Removal **b. Installation**

INITIAL SETUP:

APPLICABLE MODELS
All except M50A2, M50A3

MATERIALS/PARTS
Four gaskets
Ten locknuts
Two lockwashers

REFERENCES (TM)
TM 9-2320-361-10
TM 9-2320-361-20P

EQUIPMENT CONDITION
Air cleaner element removed (para. 3-14).

GENERAL SAFETY INSTRUCTIONS
Do not touch hot exhaust system components with bare hands.

WARNING

Do not touch hot exhaust system components with bare hands.
Severe injury to personnel will result.

a. Removal

1. Remove locknut (13) and screw (7) from coupling (14). Discard locknut (13).
2. Disconnect elbow (9) from flex tube (15), and remove coupling (14) and gasket (8) from elbow (9). Discard gasket (8).
3. Loosen clamp (11) and remove elbow (9), clamp (11), and gasket (10) from turbocharger (12). Discard gasket (10).
4. Remove locknut (22) and screw (21) from coupling (23), and remove flex tube (15), coupling (23), and gasket (24) from exhaust pipe (29). Discard gasket (24) and locknut (22).
5. Remove locknut (2) and screw (38) from coupling (39). Discard locknut (2).
6. Remove stack pipe (1), coupling (39), and gasket (40) from exhaust pipe (29). Discard gasket (40).
7. Remove four locknuts (4), screws (37), two clamps (3), and exhaust shield (36) from exhaust pipe (29). Discard locknuts (4).
8. Remove two locknuts (30), washers (31), screws (34), washers (33), and cover plates (18) from fender (32). Discard locknuts (30).

https://truckmanualshub.com/

3-37. EXHAUST SYSTEM REPLACEMENT (Contd)

9. Remove two nuts (5), lockwashers (6), U-bolt (35), and clamp (17) from exhuast pipe (29) and bracket (16). Discard lockwashers (6).
10. Remove locknut (20), washer (19), screw (28), washer (27), and clamp (26) from exhaust pipe (29) and bracket (25). Discard locknut (20).
11. Remove exhaust pipe (29) from fender (32).

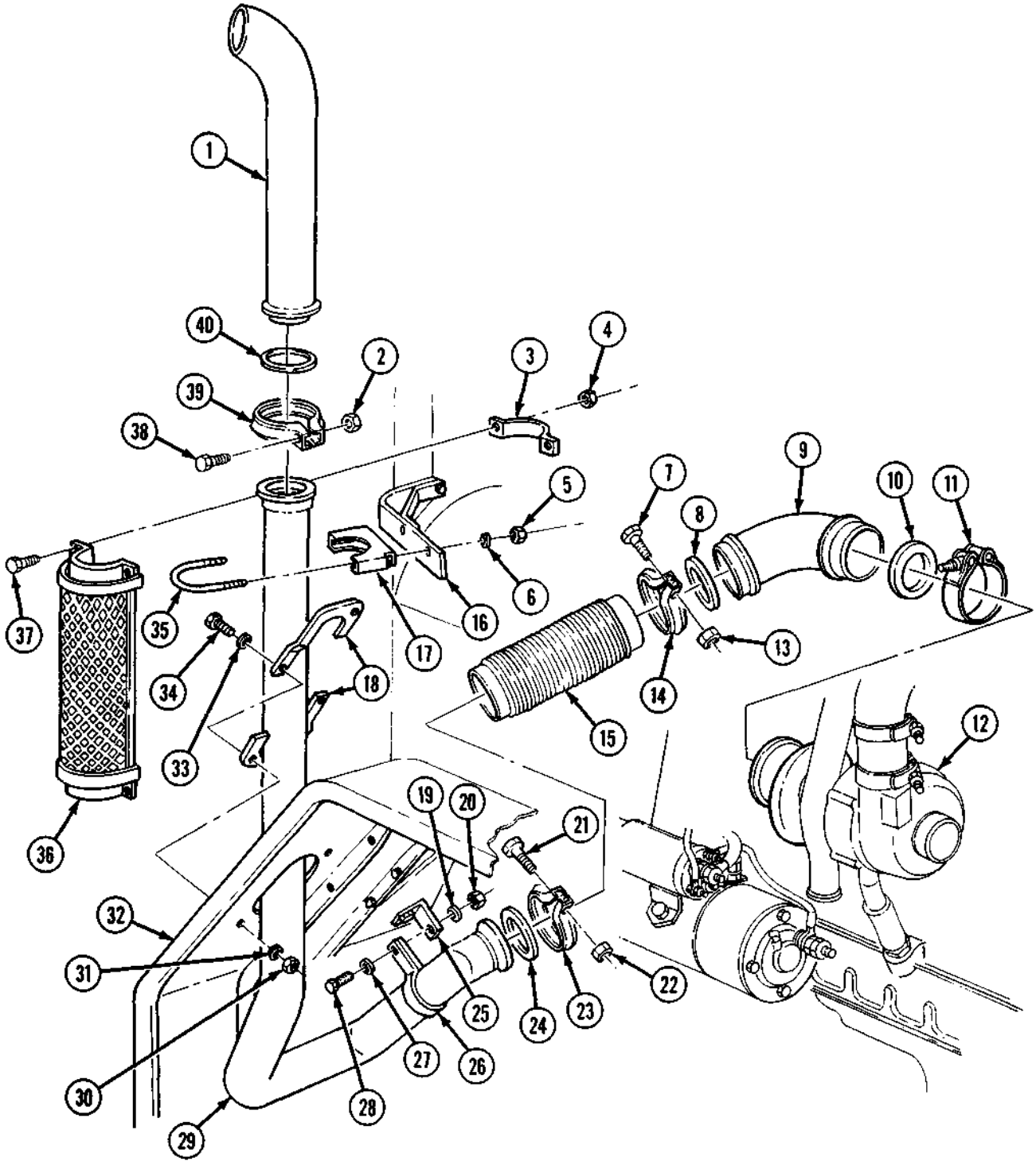

https://truckmanualshub.com/

3-37. EXHAUST SYSTEM REPLACEMENT (Contd)

b. Installation

1. Install exhaust pipe (29) on fender (32).
3. Install exhaust pipe (29) on bracket (16) with U-bolt (35), clamp (17), two new lockwashers (6), and nuts (5).
2. Install exhaust pipe (29) on bracket (25) with clamp (26), washer (27), screw (28), washer (19), and new locknut (20).
4. Install cover plates (18) on fender (32) with two washers (33), screws (34), washers (31), and two new locknuts (30).
5. Install exhaust shield (36) on exhaust pipe (29) with two clamps (3), four screws (37), and new locknuts (4).
6. Install new gasket (40) and stack pipe (1) on exhaust pipe (29) with coupling (39), screw (38), and new locknut (2). Do not tighten locknut (2).
7. Position outlet of stack pipe (1) outward and approximately 45° to the rear of vehicle. Tighten coupling (39).
8. Install new gasket (24) and flex tube (15) on exhaust pipe (29) with coupling (23), screw (21), and new locknut (22). Do not tighten locknut (22).
9. Install new gasket (10) and elbow (9) on turbocharger (12) with clamp (11). Do not tighten clamp (11).
10. Install new gasket (8) and flex tube (15) on elbow (9) with coupling (14), screw (7), and new locknut (13). Tighten coupling (14).
11. Tighten clamp (11) and coupling (23).

https://truckmanualshub.com/

3-37. EXHAUST SYSTEM REPLACEMENT (Contd)

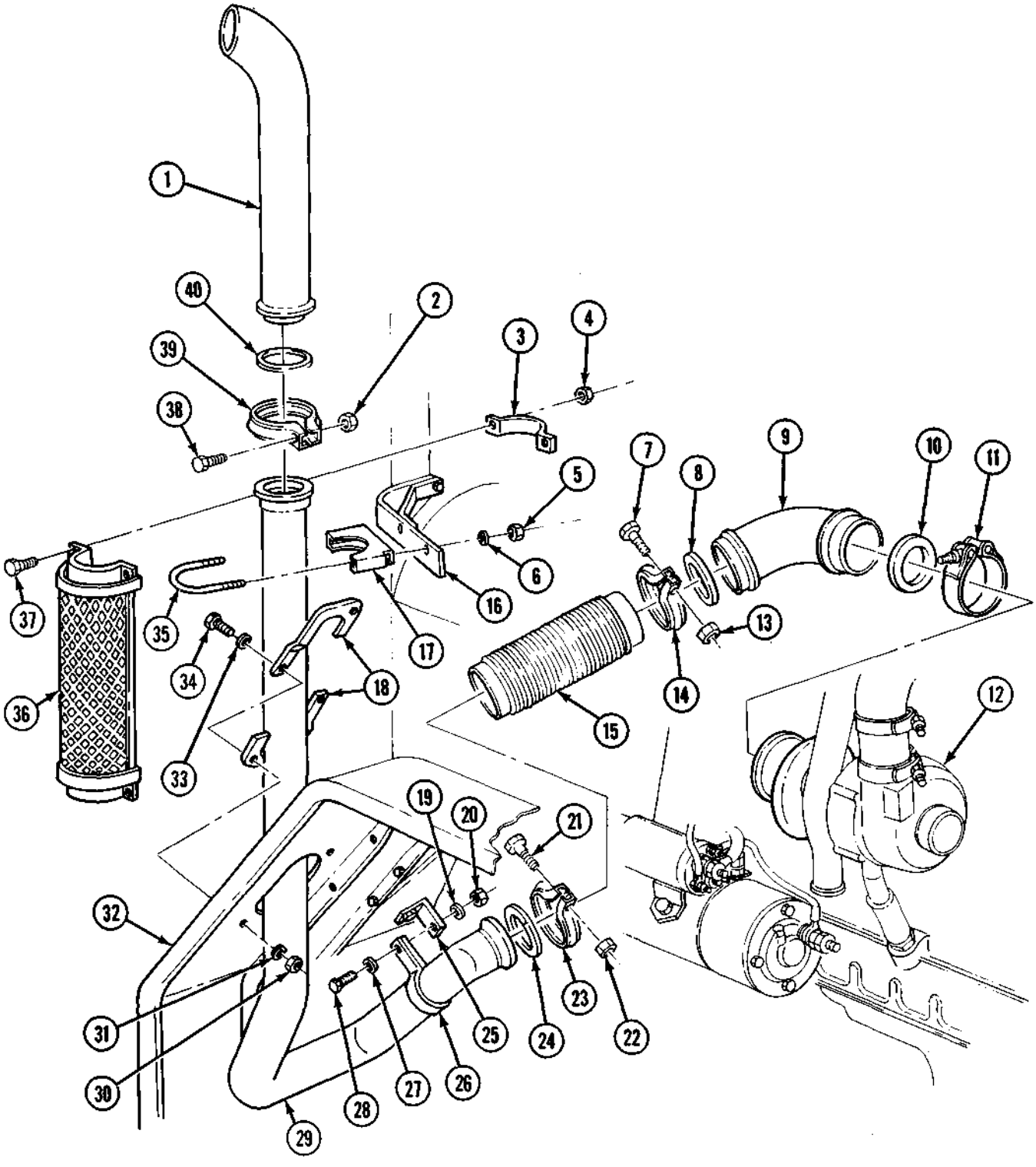

FOLLOW-ON TASKS:
- Install air cleaner element (para. 3-14).
- Start engine (TM 9-2320-361-10) and check for exhaust leaks.

https://truckmanualshub.com/

3-38. EXHAUST SYSTEM REPLACEMENT (M50A2 AND M50A3)

This task covers:

a. Removal **b. Installation**

INITIAL SETUP:

APPLICABLE MODELS
M50A2, M50A3

MATERIALS/PARTS
Seven gaskets
Eighteen locknuts
Two lockwashers

REFERENCES (TM)
TM 9-2320-361-10
TM 9-2320-361-20P

EQUIPMENT CONDITION
Air cleaner element removed (para. 3-14).

GENERAL SAFETY INSTRUCTIONS
Do not touch hot exhaust system components with bare hands.

a. Removal

WARNING

Do not touch hot exhaust system components with bare hands; injury to personnel will result.

1. Remove locknut (15), screw (9), and coupling (16) from flex tube (17) and elbow (11). Discard locknut (15).
2. Remove locknut (24), screw (22), coupling (23), flex tube (17), and gaskets (10) and (25) from elbow (11) and Y-pipe (31). Discard locknut (24) and gaskets (10) and (25).
3. Loosen clamp (13) and remove elbow (11), clamp (13), and gasket (12) from turbocharger (14). Discard gasket (12).
4. Remove locknut (43), screw (2), and exhaust stack shutoff (1) from exhaust pipe (3). Discard locknut (43).
5. Remove locknut (4), screw (40), clamp (41), exhaust pipe (3), and gasket (42) from Y-pipe (31). Discard locknut (4) and gasket (42).
6. Remove four locknuts (6), screws (39), two clamps (5), and exhaust shield (38) from Y-pipe (31). Discard locknuts (6).
7. Remove two nuts (8), lockwashers (18), U-bolt (37), and clamp (19) from Y-pipe (31) and bracket (7). Discard lockwashers (18).
8. Remove two locknuts (32), washers (33), screws (36), washers (35), and cover plates (20) from fender (34). Discard locknuts (32).
9. Remove locknut (21), washer (26), screw (30), washer (29), clamp (28), and Y-pipe (31) from bracket (27). Discard locknut (21).

https://truckmanualshub.com/

3-38. EXHAUST SYSTEM REPLACEMENT (M50A2 AND M50A3) (Contd)

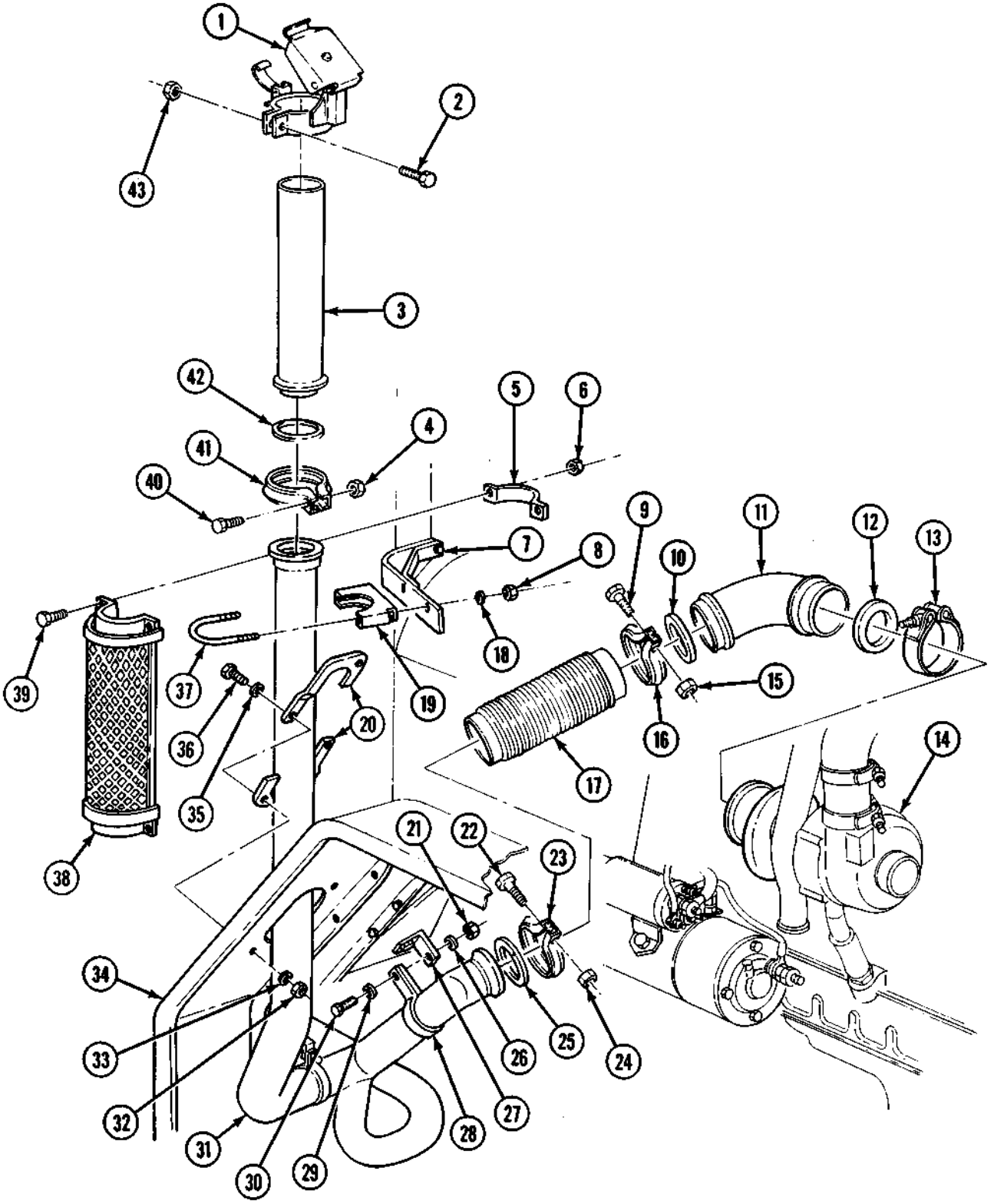

https://truckmanualshub.com/

3-38. EXHAUST SYSTEM REPLACEMENT (M50A2 AND M50A3) (Contd)

10. Remove locknut (10), screw (2), coupling (3), and gasket (4) from exhaust pipe (1) and Y-pipe (5). Discard locknut (10) and gasket (4),
11. Remove locknut (9), screw (6), clamp (7), and Y-pipe (5) from bracket (8). Discard locknut (9).
12. Remove locknut (17), screw (14), coupling (15), exhaust pipe (1), and gasket (16) from exhaust pipe (18). Discard locknut (17) and gasket (16).
13. Remove four locknuts (19), screws (11), exhaust pipe (18), and gasket (13) from manifold (12). Discard locknuts (19) and gasket (13).

b. Installation

1. Install new gasket (13) and exhaust pipe (18) on exhaust manifold (12) with four screws (11) and new locknuts (19).
2. Install new gasket (16) and exhaust pipe (1) on exhaust pipe (18) with coupling (15), screw (14), and new locknut (17).
3. Install Y-pipe (5) on bracket (8) with clamp (7), screw (6), and new locknut (9). Do not tighten locknut (9).
4. Install Y-pipe (5) on exhaust pipe (1) with new gasket (4), coupling (3), screw (2), and new locknut (10).
5. Tighten locknut (9).

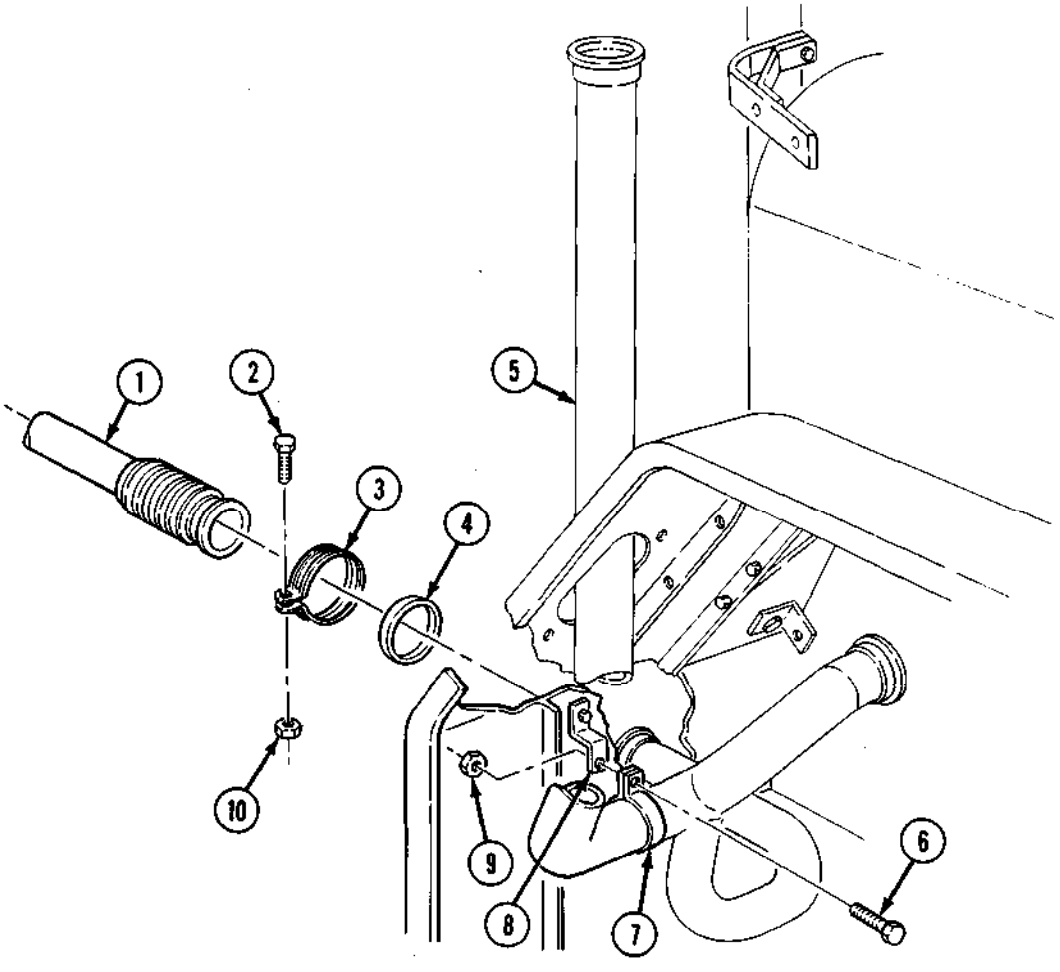

https://truckmanualshub.com/

3-38. EXHAUST SYSTEM REPLACEMENT (M50A2 AND M50A3) (Contd)

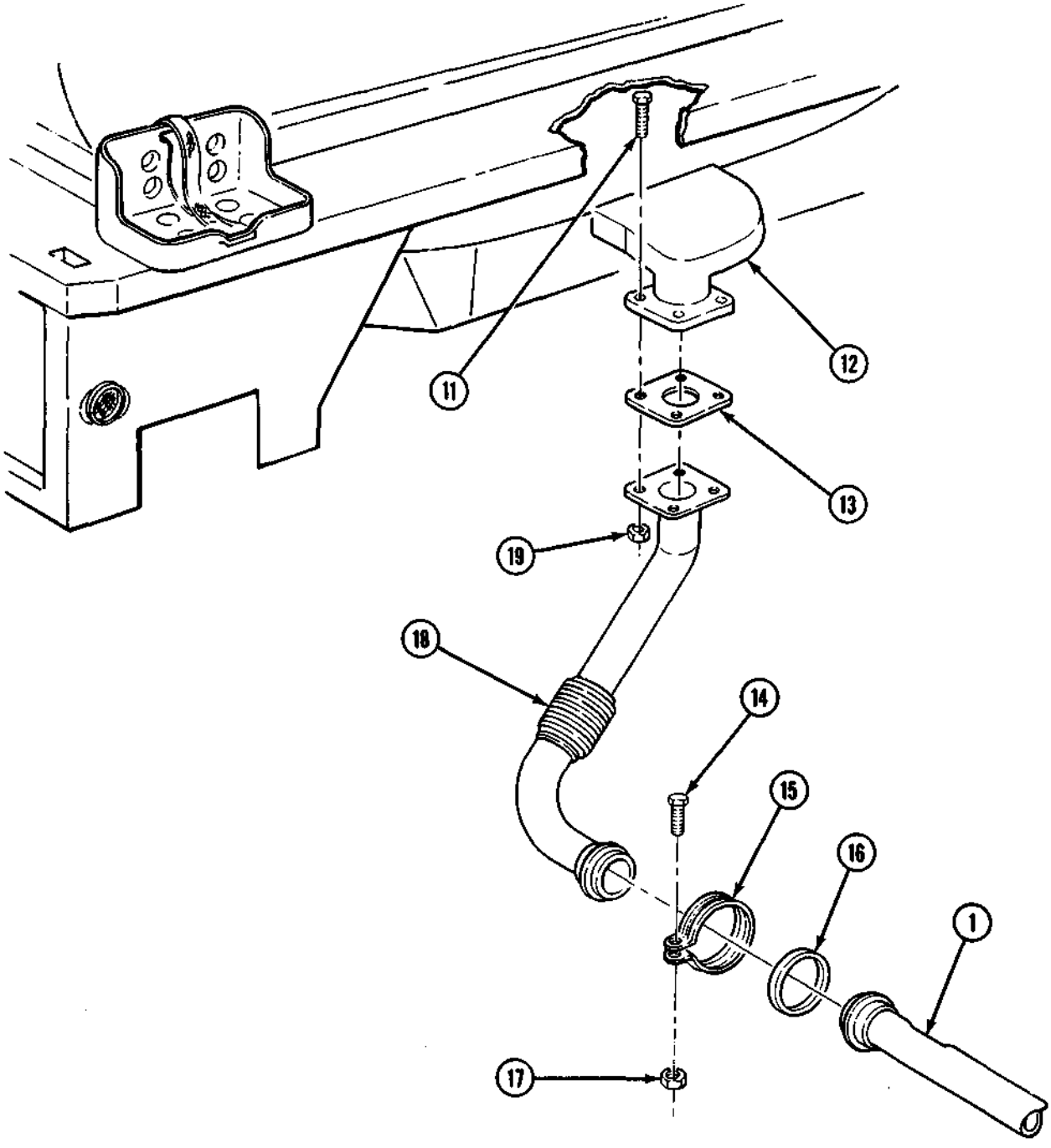

https://truckmanualshub.com/

3-38. EXHAUST SYSTEM REPLACEMENT (M50A2 AND M50A3) (Contd)

6. Install new gasket (12) and elbow (11) on turbocharger (14) with clamp (13). Do not tighten clamp (13).
7. Install new gasket (10) and flex tube (17) on elbow (11) with coupling (16), screw (9), and new locknut (15).
8. Install new gasket (25) and Y-pipe (31) on flex tube (17) with coupling (23), screw (22), and new locknut (24).
9. Install clamp (28) and Y-pipe (31) on bracket (27) with washer (29), screw (30), washer (26), and new locknut (21).
10. Install two cover plates (20) on fender (34) with two washers (35), screws (36), washers (33), and new locknuts (32).
11. Tighten clamp (13) on elbow (11).
12. Install U-bolt (37) and clamp (19) on Y-pipe (31) and bracket (7) with two new lockwashers (18) and nuts (8).
13. Install exhaust shield (38) on Y-pipe (31) with two clamps (5), four screws (39), and new locknuts (6).
14. Install new gasket (42) and exhaust pipe (3) on Y-pipe (31) with coupling (41), screw (40), and new locknut (4).
15. Install exhaust stack shutoff (1) on exhaust pipe (3) with screw (2) and new locknut (43). Do not tighten locknut (43).
16. Position exhaust stack shutoff (1) so exhaust gases are directed away from and toward rear of vehicle at approximately a 45° angle.
17. Tighten locknut (43) on exhaust stack shutoff (1).

https://truckmanualshub.com/

3-38. EXHAUST SYSTEM REPLACEMENT (M50A2 AND M50A3) (Contd)

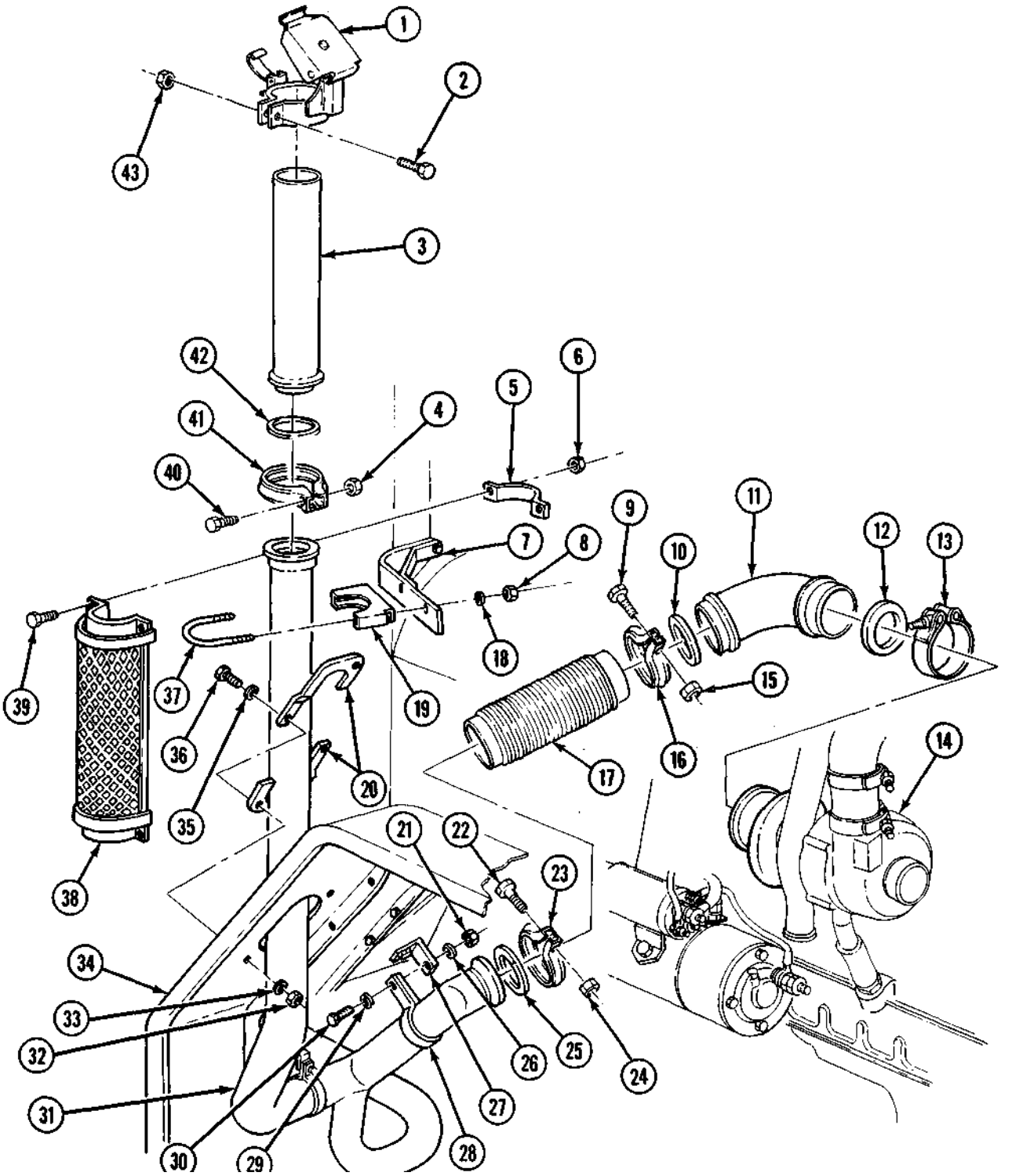

FOLLOW-ON TASKS:
- Install air cleaner element (para. 3-14).
- Start engine (TM 9-2320-361-10) and check for exhaust leaks.

https://truckmanualshub.com/

Section IX. COOLING SYSTEM MAINTENANCE

3-39. COOLING SYSTEM MAINTENANCE INDEX

PARA. NO.	TITLE	PAGE NO.
3-40.	Fan Replacement	3-92
3-41.	Cooling System Servicing	3-94
3-42.	Radiator and Brackets Replacement	3-96
3-43.	Upper and Lower Radiator Hose Replacement	3-100
3-44.	Personnel Heater Inlet and Outlet Hose Replacement	3-102
3-45.	Water Manifold and Hose Replacement	3-103
3-46.	Thermostat, Housing, and Hose Replacement	3-104
347.	Water Pump Housing and Water Pump Replacement	3-106
3-48.	Oil Cooler Tube and Hoses Replacement	3-108

3-40. FAN REPLACEMENT

This task covers:

a. Removal **b. Installation**

INITIAL SETUP:

APPLICABLE MODELS
All

MATERIALS/PARTS
Four lockwashers

REFERENCES (TM)
TM 9-2320-361-10
TM 9-2320-361-20P

EQUIPMENT CONDITION
- Parking brake set (TM 9-2320-361-10).
- Hood raised and secured (TM 9-2320-361-10).
- Battery ground cable disconnected (para. 4-48).
- Upper radiator hose removed (para. 3-43).

a. Removal

CAUTION

Radiator core is easily damaged. Use care when working near or handling radiator.

1. Loosen two locknuts (6) and tilt radiator (5) away from engine.
2. Remove four screws (3) and lockwashers (2) from fan (1) and water pump pulley (4). Discard lockwashers (2).
3. Carefully remove fan (1) from water pump pulley (4).

b. Installation

1. Install fan (1) on water pump pulley (4) with four new lockwashers (2) and screws (3).
2. Push radiator (5) back in position and tighten locknuts (6).

https://truckmanualshub.com/

3-40. FAN REPLACEMENT (Contd)

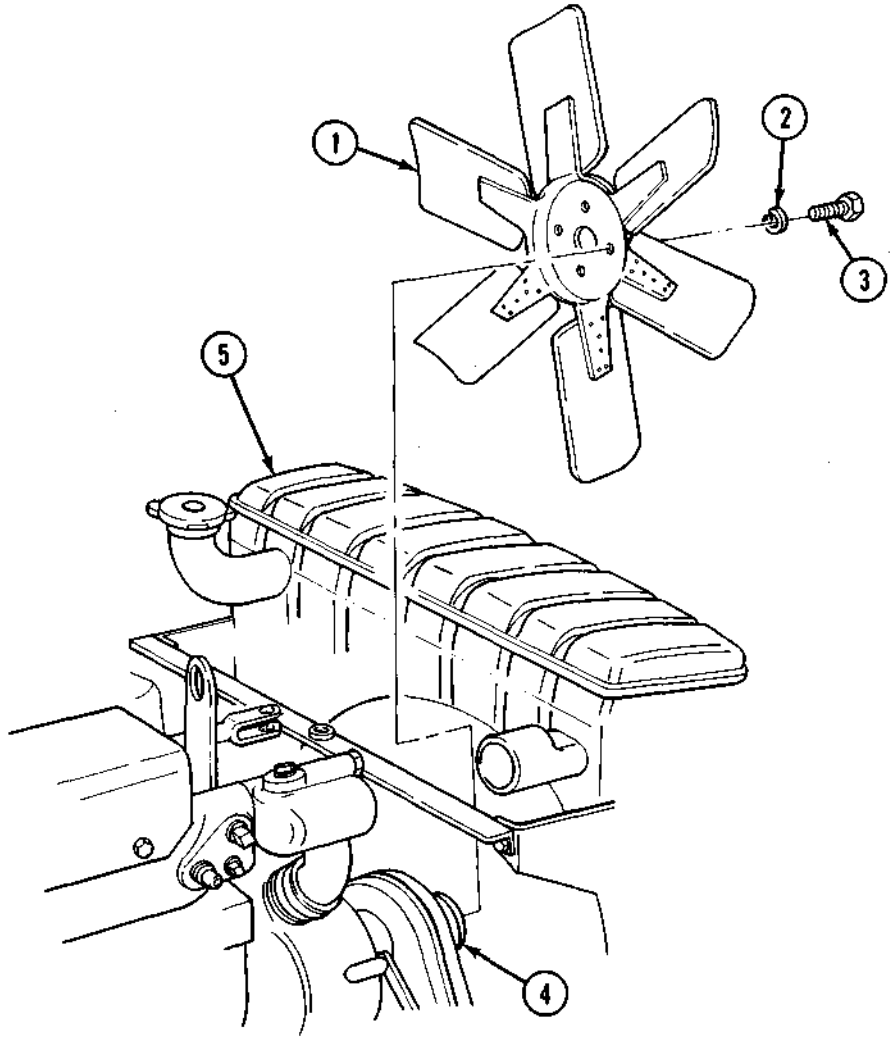

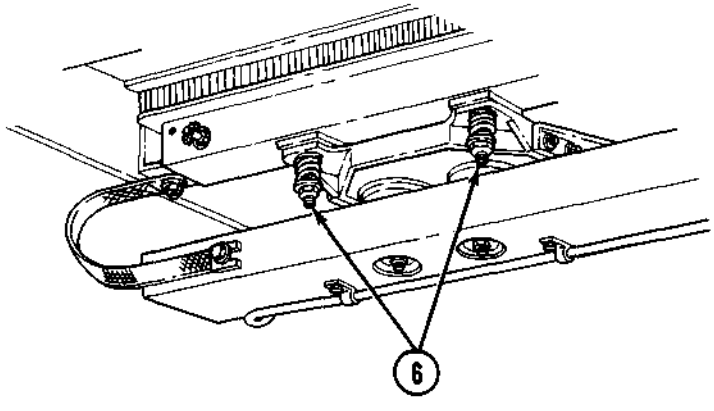

FOLLOW-ON TASKS:
- Install upper radiator hose (para. 3-43).
- Connect battery ground cable (para. 4-48).

https://truckmanualshub.com/

3-41. COOLING SYSTEM SERVICING

This task covers:

a. Draining System
b. Cleaning and Flushing System
c. Filling System

INITIAL SETUP:

APPLICABLE MODELS
All

MATERIALS/PARTS
Antifreeze (Appendix C, Item 6)
Cleaning compound kit (Appendix C, Item 10)

REFERENCES (TM)
TM 9-2320-361-10
TM 9-2320-361-20P

EQUIPMENT CONDITION
- Parking brake set (TM 9-2320-361-10).
- Hood raised and secured (TM 9-2320-361-10).
- Battery ground cable disconnected (para. 4-48).

GENERAL SAFETY INSTRUCTIONS
Do not remove radiator cap if engine is hot.

a. Draining System

WARNING

Do not remove radiator cap if engine is hot. Steam or hot coolant under pressure may cause injury to personnel,

1. Turn radiator cap (1) to first stop. Allow any pressure to escape.
2. Remove radiator cap (1) by pressing down and continue turning counterclockwise. Lift off radiator cap (1) from filler neck (2).

NOTE

Have drainage containers ready to catch coolant.

3. Open engine block draincock (5) and radiator draincock (4).
4. Close engine block draincock (5) and radiator draincock (4).

b. Cleaning and Flushing System

Following cleaning and flushing instructions included in cleaning compound kit, and clean and flush radiator (3) and cooling system.

c. Filling System

NOTE

Capacity of cooling system is 32 quarts (30.3 liters).

1. Fill cooling system with required amount of antifreeze (Table 3-1).
2. Add water to 1 in. (2.45 cm) below top of filler neck (2).
3. Install radiator cap (1) on filler neck (2), start engine (TM 9-2320-361-10), and allow engine to reach normal operating temperature.
4. Stop engine (TM 9-2320-361-10) and allow engine to cool.

WARNING

Do not remove radiator cap if engine is hot. Steam or hot coolant under pressure may cause injury to personnel.

5. Remove radiator cap (1) from filler neck (2) and check level of coolant in radiator (3). Add water if necessary.

https://truckmanualshub.com/

3-41. COOLING SYSTEM SERVICING (Contd)

6. Check antifreeze solution for required lowest expected ambient temperature with optical antifreeze/battery tester (Table 3-1).
7. Install radiator cap (1) on filler neck (2).

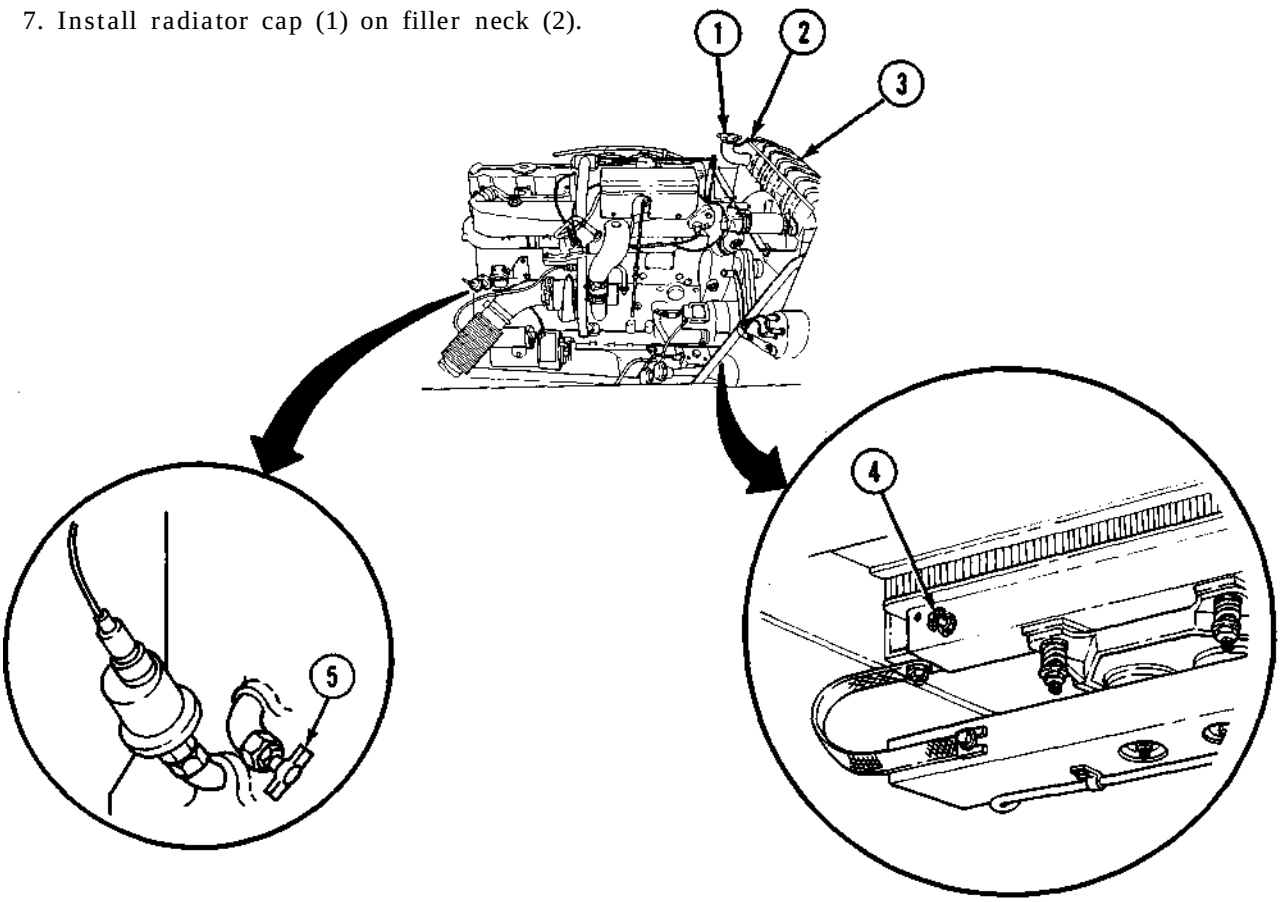

Table 3-1. Guide for Preparation of Antifreeze Solutions

ETHYLENE-GLYCOL -60°F (-51 °C) INHIBITED MIL-A-46153			
LOWEST EXPECTED AMBIENT TEMPERATURE °F	°C	QUARTS OF ANTIFREEZE REQUIRED	ARCTIC GRADE ANTIFREEZE -90°F (-68°C) MIL-A-11755
+20	-7	9	Freezing point of -90°F (-68°C). Issued ready for use and must not be mixed with any other liquid.
+10	-12	11-3/4	
0	-18	16	
-10	-23	19	
-20	-29	20-1/2	
-30	-34	23-1/2	
-40	-40	25	
-50	-46	26-112	
-55	-48	28	
Below -60	Below -51	Use arctic grade antifreeze (-90°F) (-68°C)	

FOLLOW-ON TASK: Connect battery ground cable (para. 4-48).

https://truckmanualshub.com/

3-42. RADIATOR AND BRACKETS REPLACEMENT

This task covers:

a. Removal **b. Installation**

INITIAL SETUP:

APPLICABLE MODELS
All

MATERIALS/PARTS
Ten locknuts
Lockwasher
Antifreeze (Appendix C, Item 6)

PERSONNEL REQUIRED
Two

REFERENCES (TM)
TM 9-2320-361-10
TM 9-2320-361-20P

EQUIPMENT CONDITION
- Parking brake set (TM 9-2320-361-10).
- Hood raised and secured (TM 9-2320-361-10).
- Upper and lower radiator hose removed (para. 3-43).
- Brushguard removed (para. 10-8).
- Fan removed (para. 3-40).

a. Removal

1. Remove locknut (8), washer (9), ground strap (10), lockwasher (11), and screw (1) from radiator (2). Discard locknut (8) and lockwasher (11).
2. Remove two locknuts (6), washers (5), springs (7), and washers (4) from radiator mounting studs (3). Discard locknuts (6).

CAUTION

Radiator core is easily damaged. Use care when working near or handling radiator.

3. Remove locknut (15), screw (12), and rod assembly (14) from bracket (13). Discard locknut (15).

NOTE

Assistant will help with step 4.

4. Tilt radiator (2) forward and carefully lift out of vehicle.

NOTE

Perform step 5 only if radiator and draincock are damaged or if radiator is being replaced.

5. Remove radiator cap (16) and draincock (17) from radiator (2).
6. Remove two shims (18) from radiator mounting studs (3).
7. Remove two locknuts (24), screws (22), and support (21) from left bracket (23) and right bracket (20). Discard locknuts (24).
8. Remove four locknuts (25), screws (19), left bracket (23), and right bracket (20) from radiator (2). Discard locknuts (25).

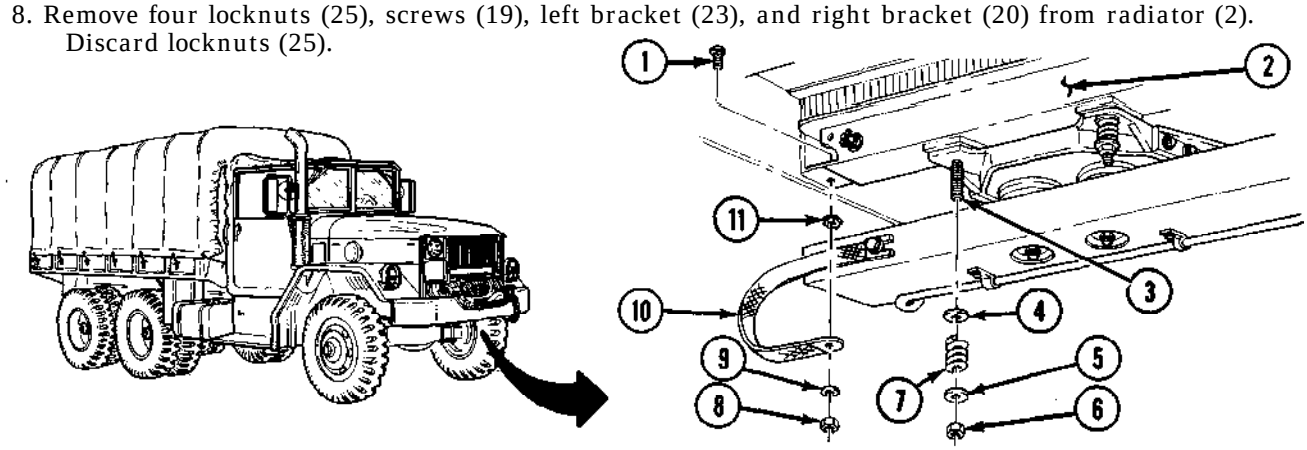

https://truckmanualshub.com/

3-42. RADIATOR AND BRACKETS REPLACEMENT (Contd)

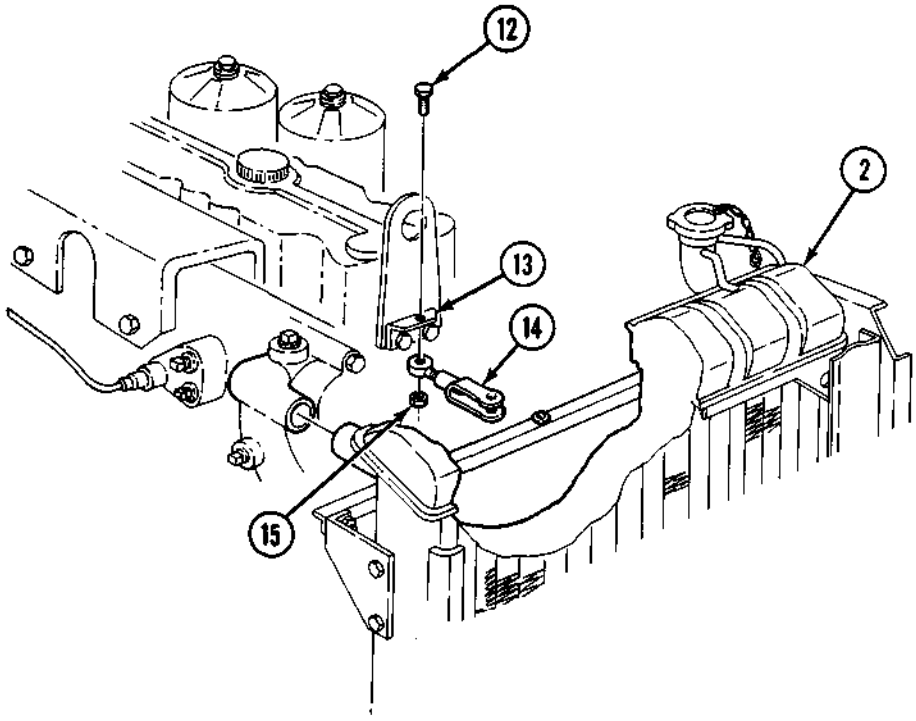

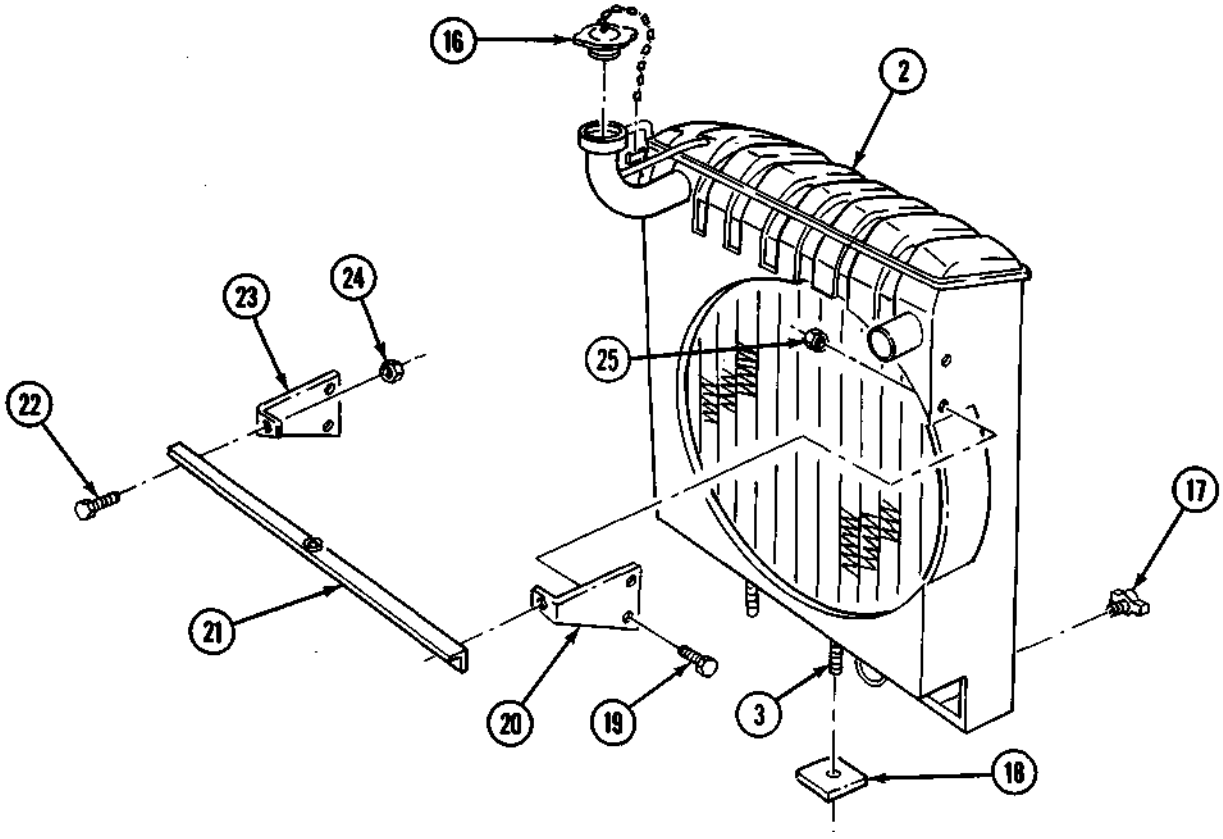

https://truckmanualshub.com/

3-42. RADIATOR AND BRACKETS REPLACEMENT (Contd)

b. Installation

NOTE

Perform step 1 if radiator cap and draincock were removed.

1. Install radiator cap (1) and draincock (3) on radiator (2).
2. Install left bracket (10) and right bracket (7) on radiator (2) with four screws (6) and new locknuts (12).
3. Install support (8) on left bracket (10) and right bracket (7) with two screws (9) and new locknuts (11).
4. Install two shims (4) on radiator mounting studs (5).

CAUTION

Radiator core is easily damaged. Use care when working near or handling radiator.

NOTE

Assistant will help with step 5.

5. Carefully install radiator (2) on vehicle.
6. Install rod assembly (15) on bracket (14) with screw (13) and new locknut (16).
7. Install two washers (18), springs (21), washers (19), and new locknuts (20) on radiator mounting studs (5). Do not fully compress springs (21).
8. Install ground strap (24) on radiator (2) with screw (17), new lockwasher (25), washer (23), and new locknut (22).

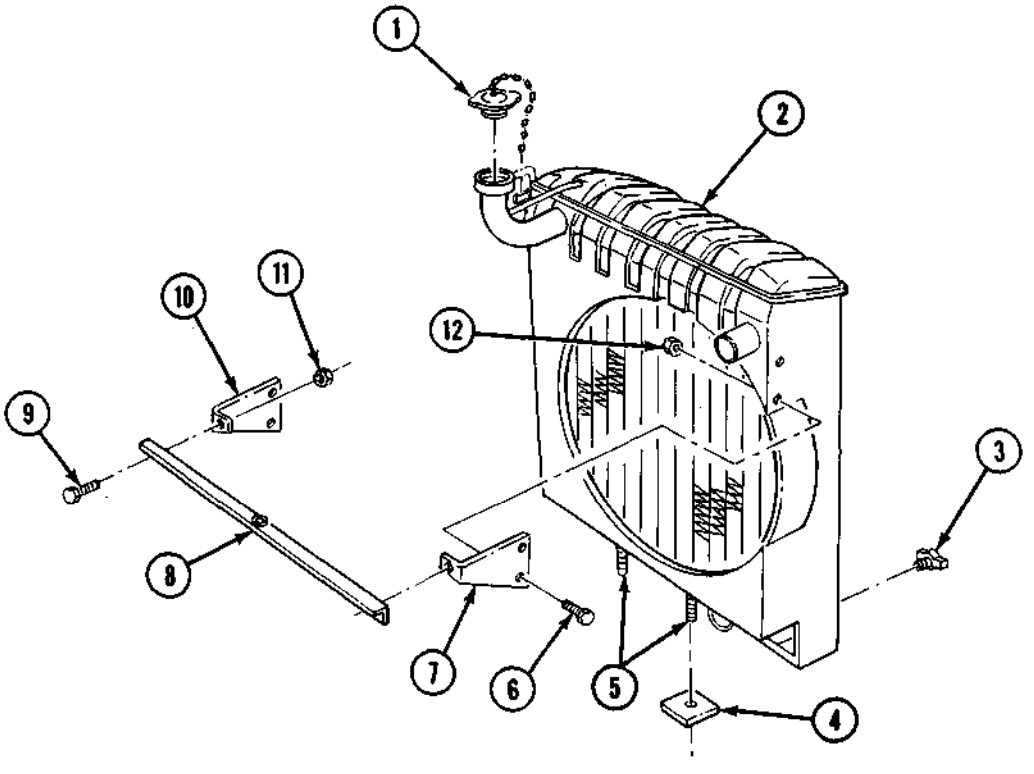

https://truckmanualshub.com/

3-42. RADIATOR AND BRACKETS REPLACEMENT (Contd)

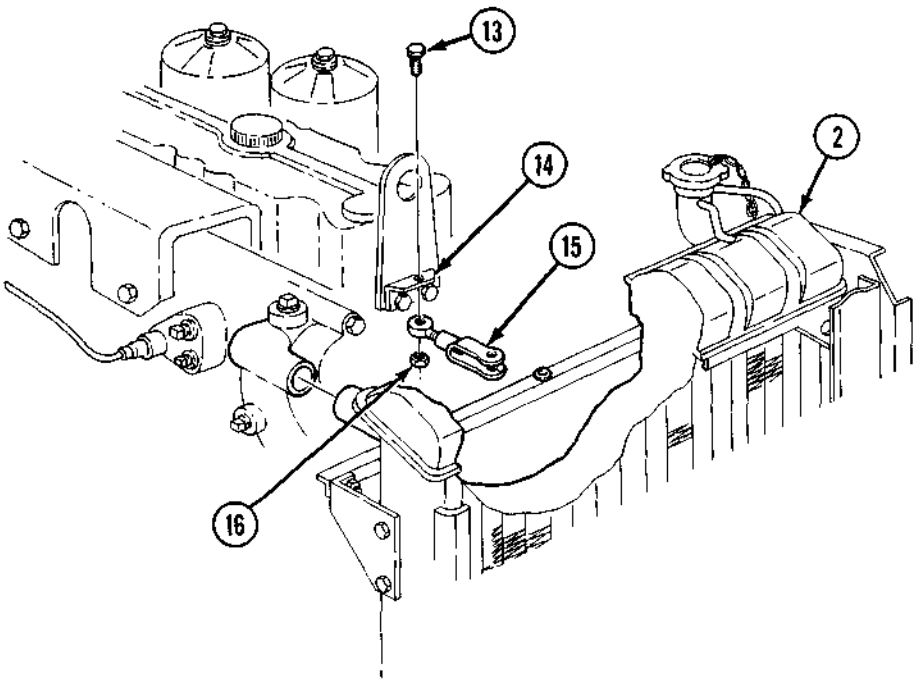

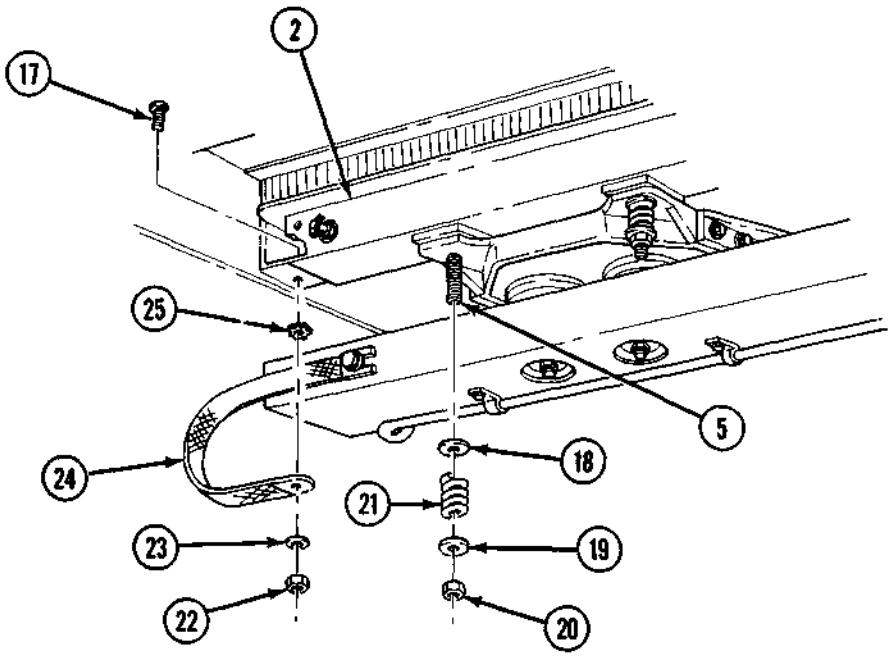

FOLLOW-ON TASKS: Ž Install fan (para. 3-40).
• Install brushguard (para. 10-8).
Ž Install upper and lower radiator hose (para. 3-43).

https://truckmanualshub.com/

3-43. UPPER AND LOWER RADIATOR HOSE REPLACEMENT

This task covers:

a. Upper Hose Removal
b. Lower Hose Removal
c. Upper Hose Installation
d. Lower Hose Installation

INITIAL SETUP:

APPLICABLE MODELS
All

MATERIALS/PARTS
Locknut

REFERENCES TM)
TM 9-2320-361-10
TM 9-2320-361-20P

EQUIPMENT CONDITION
- Parking brake set (TM 9-2320-361-10).
- Hood raised and secured (TM 9-2320-361-10).
- Cooling system drained (lower hose) (para. 3-41).

a. Upper Hose Removal

NOTE
Have drainage container ready to catch coolant.

1. Remove locknut (6) and screw (1) from rod (7) and bracket (8). Discard locknut (6).
2. Loosen two clamps (2) on upper radiator hose (3).
3. Tilt radiator (4) forward and remove upper radiator hose (3) and two clamps (2) from radiator (4) and thermostat housing (5).

b. Lower Hose Removal

1. Loosen two clamps (9) on lower radiator hose (11).
2. Remove lower radiator hose (11) and two clamps (9) from radiator (4) and water pump housing (10),

c. Upper Hose Installation

1. Install upper radiator hose (3) on thermostat housing (5) and radiator (4) with two clamps (2). Do not tighten.
2. Tilt radiator (4) backward and install screw (1) new locknut (6), and rod (7) on bracket (8).
3. Tighten two clamps (2).

d. Lower Hose Installation

Install lower radiator hose (11) on water pump housing (10) and radiator (4) with two clamps (9). Tighten two clamps (9).

https://truckmanualshub.com/

3-43. UPPER AND LOWER RADIATOR HOSE REPLACEMENT (Contd)

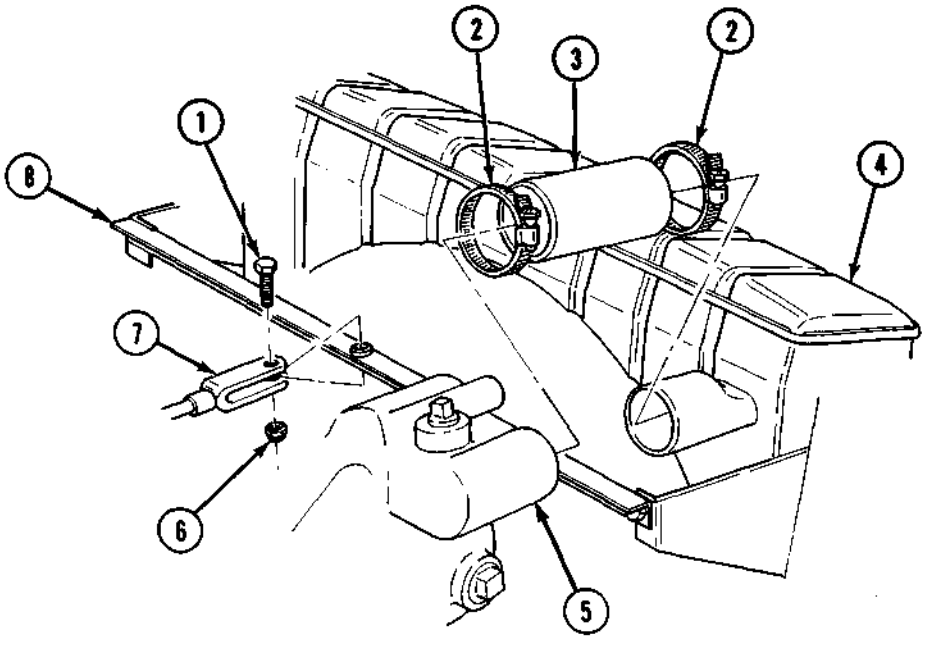

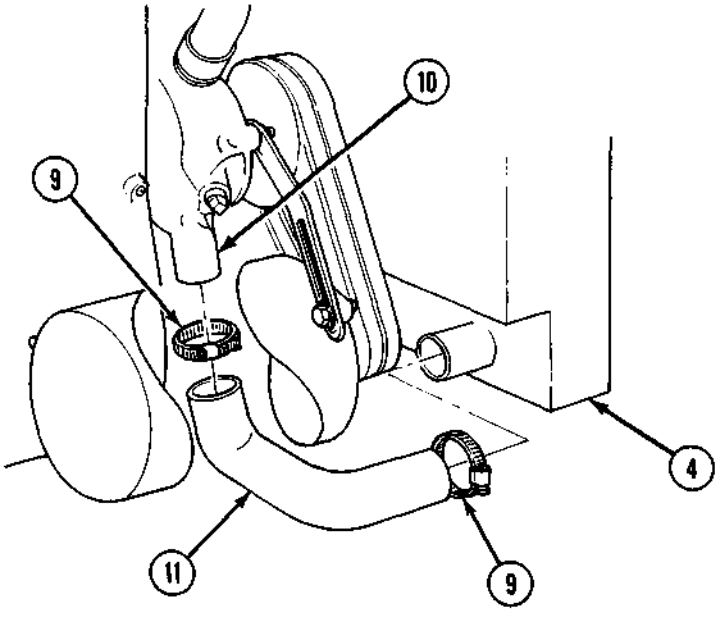

FOLLOW - ON TASK: Fill cooling system (para. 3-41).

https://truckmanualshub.com/

3-44. PERSONNEL HEATER INLET AND OUTLET HOSE REPLACEMENT

This task covers:

a. Removal

b. Installation

INITIAL SETUP:

APPLICABLE MODELS
All

MATERIALS/PARTS
Locknut

REFERENCES (TM)
TM 9-2320-361-10
TM 9-2320-361-20P

EQUIPMENT CONDITION
•Parking brake set (TM 9-2320-361-10).
Ž Hood raised and secured (TM 9-2320-361-10).

a. Removal

1. Remove locknut (10), screw (7), two washers (8), two clamps (1), inlet hose (3), and outlet hose (5) from bracket (2). Discard locknut (10).

NOTE

Have drainage container ready to catch coolant.

2. Loosen four clamps (4) and remove inlet hose (3) and outlet hose (5) from heater (6), water pump (9), and intake manifold (11).
3. Remove four clamps (4) and two clamps (1) from inlet hose (3) and outlet hose (5).

b. Installation

1. Install two clamps (1) and four clamps (4) on inlet hose (3) and outlet hose (5). Do not tighten clamps (4).
2. Install inlet hose (3) and outlet hose (5) on heater (6), water pump (9), and intake manifold (11). Tighten four clamps (4).
3. Install two clamps (1), inlet hose (3), and outlet hose (5) on bracket (2) with screw (7), two washers (8), and new locknut (10).

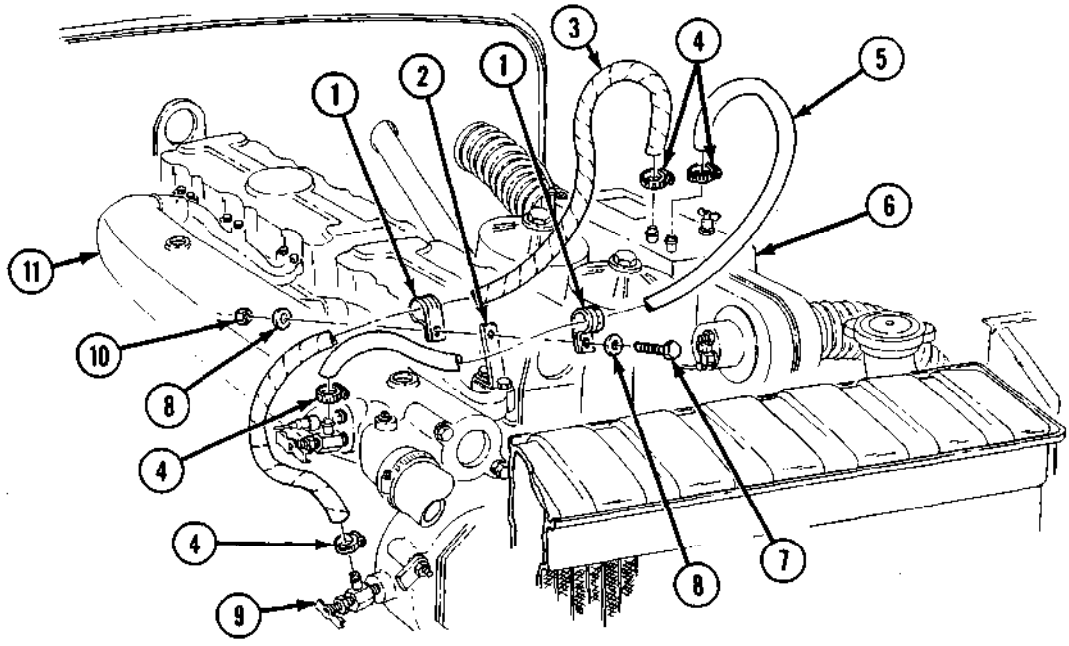

https://truckmanualshub.com/

3-45. WATER MANIFOLD AND HOSE REPLACEMENT

This task covers:

a. Removal b. Installation

INITIAL SETUP:

APPLICABLE MODELS
All

MATERIALS/PARTS
Six lockwashers
Three gaskets

REFERENCES (TM)
TM 9-2320-361-10
TM 9-2320-361-20P

EQUIPMENT CONDITION
- Parking brake set (TM 9-2320-361-10).
- Hood raised and secured (TM 9-2320-361-10).
- Manifold heater removed (uncovered) (para. 3-31).

a. Removal

NOTE

There are two water manifolds and hoses. Both are removed the same way.

1. Loosen two clamps (7) on hose (8).
2. Remove six screws (1) and lockwashers (2) from water manifold (3). Discard lockwashers (2).
3. Remove water manifold (3), three gaskets (4), hose (8), and two clamps (7) from cylinder head (6) and intake manifold (5). Discard gaskets (4).

b. Installation

1. Install hose (8) and two clamps (7) on water manifold (3). Do not tighten clamps (7).
2. Install three new gaskets (4) and water manifold (3) on cylinder head (6) and intake manifold (5) with six new lockwashers (2) and screws (l).
3. Tighten two clamps (7) on hose (8).

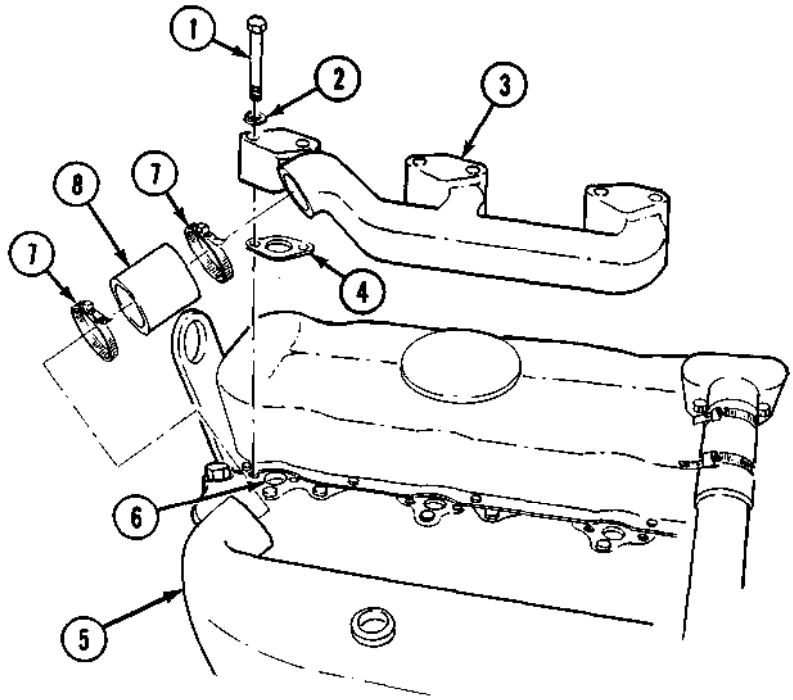

FOLLOW-ON TASK: Install manifold heater (uncovered) (para. 3-31).

https://truckmanualshub.com/

3-46. THERMOSTAT, HOUSING, AND HOSE REPLACEMENT

This task covers:

a. Removal
b. Testing
c. Installation

INITIAL SETUP:

APPLICABLE MODELS
All

MATERIALS/PARTS
Two lockwashers
Gasket
Seal

REFERENCES (TM)
TM 9-2320-361-10
TM 9-2320-361-20P

EQUIPMENT CONDITION
Ž Parking brake set (TM 9-2320-361-10).
• Hood raised and secured (TM 9-2320-361-10).
• Upper radiator hose removed (para. 3-43).

GENERAL SAFETY INSTRUCTIONS
Use caution when testing thermostat. Hot water may cause injury to personnel.

a. Removal

NOTE
Have drainage container ready to catch coolant.

1. Loosen two clamps (4) on hose (5).
2. Remove two screws (3), lockwashers (2), housing (l), and gasket (8) from intake manifold (7) and hose (5). Discard lockwashers (2) and gasket (8).

NOTE
Observe position of seal in housing.

3. Remove thermostat (10) and seal (9) from housing (l). Discard seal (9).
4. Remove hose (5) and two clamps (4) from water pump (6).

b. Testing

WARNING
Use caution when testing thermostat, hot water may cause injury to personnel.

NOTE
Do not let thermostat touch container sides.

1. Place thermostat (10) in container of water heated to 185°F (85°C).
2. Observe thermostat (10). If thermostat fails to open, replace thermostat (10).

c. Installation

1. Install hose (5) and two clamps (4) on water pump (6). Do not tighten clamps (4).

NOTE
New seal must be pressed into same position as old seal.

2. Install new seal (9) on housing (1) by tapping into place.
3. Install thermostat (10) on housing (l).
4. Install new gasket (8) and housing (1) on hose (5) and intake manifold (7) with two new lockwashers (2) and screws (3).
5. Tighten two clamps (4) on hose (5).

https://truckmanualshub.com/

3-46. THERMOSTAT HOUSING AND HOSE REPLACEMENT (Contd)

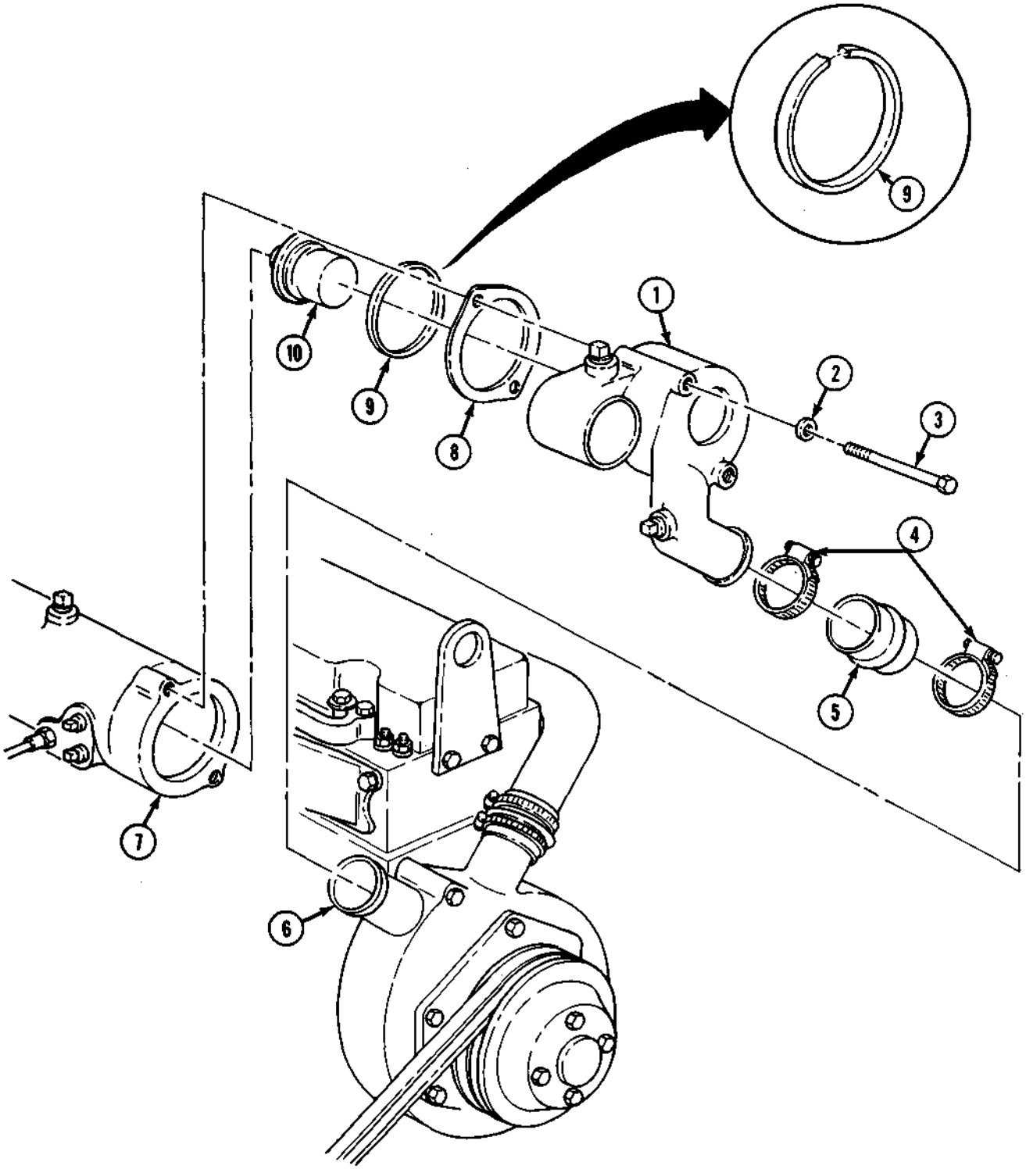

FOLLOW-ON TASK: Install upper radiator hose (para. 3-43).

https://truckmanualshub.com/

3-47. WATER PUMP HOUSING AND WATER PUMP REPLACEMENT

This task covers:

a. Water Pump Housing Removal
b. Water Pump Removal
c. Water Pump Installation
d. Water Pump Housing Installation

INITIAL SETUP:

APPLICABLE MODELS
All

MATERIALS/PARTS
Ten lockwashers
Gasket

REFERENCES (TM)
TM 9-2320-361-10
TM 9-2320-361-20P

EQUIPMENT CONDITION
- Parking brake set (TM 9-2320-361-10).
- Hood raised and secured (TM 9-2320-361-10).
- Radiator removed (para. 3-42).
- Fan removed (para. 3-40).
- Alternator belts removed (para. 4-2).

a. Water Pump Housing Removal

1. Remove nut (10), lockwasher (11), washer (12), and adjusting link (13) from water pump housing (6). Discard lockwasher (11).
2. Loosen two clamps (4) on hoses (5).

NOTE
Have drainage container available to catch coolant.

3. Loosen clamp (2) and disconnect inlet hose (1) from draincock (14).
4. Remove draincock (14) and adapter (3) from water pump housing (6).
5. Remove three screws (8) and lockwashers (7) from water pump housing (6). Discard lockwashers (7),
6. Remove water pump housing (6) from cylinder block (9) and two hoses (5).

b. Water Pump Removal

1. Remove six nuts (15) and lockwashers (16) from water pump housing (6). Discard lockwashers (16).
2. Remove water pump drive assembly (17) and gasket (18) from water pump housing (6). Discard gasket (18).

NOTE
Perform step 3 if studs are to be replaced.

3. Remove six studs (19) and one stud (20) from water pump housing (6).

c. Water Pump Installation

NOTE
Perform step 1 if studs were removed.

1. Install six studs (19) and one stud (20) on water pump housing (6).
2. Install new gasket (18) and water pump drive assembly (17) on water pump housing (6) with six new lockwashers (16) and nuts (15).

d. Water Pump Housing Installation

1. Install water pump housing (6) on two hoses (5) and cylinder block (9) with three new lockwashers (7) and screws (8).
2. Tighten two clamps (4) on hoses (5).

https://truckmanualshub.com/

3-47. WATER PUMP HOUSING AND WATER PUMP REPLACEMENT (Contd)

3. Install adjusting link (13) on water pump housing (6) with washer (12), new lockwasher (11), and nut (10).
4. Install adapter (3) and draincock (14) on water pump housing (6).
5. Install inlet hose (1) on draincock (14). Tighten clamp (2).

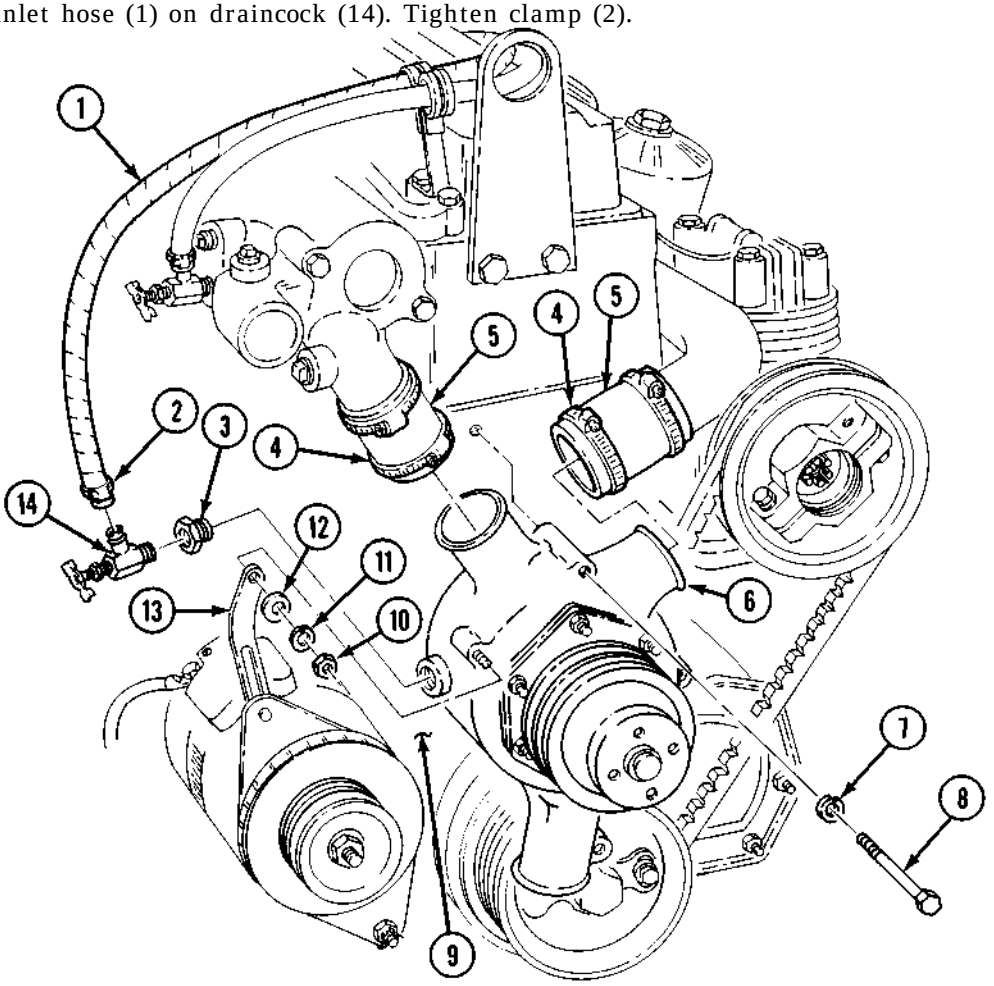

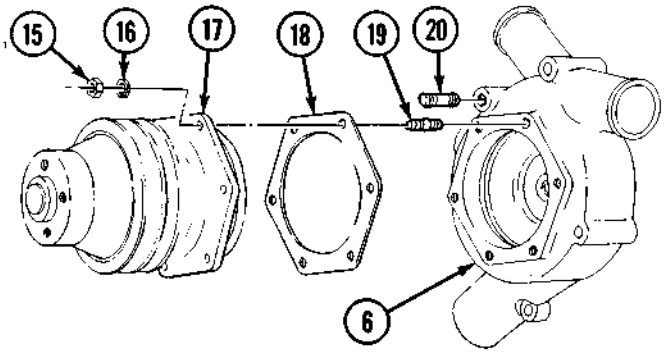

FOLLOW-ON TASKS: Ž Alternator belts replaced (para. 4-2).
- Install fan (para. 3-40).
- Install radiator (para. 3-42).

https://truckmanualshub.com/

3-48. OIL COOLER TUBE AND HOSES REPLACEMENT

This task covers:

a. Removal b. Installation

INITIAL SETUP:

APPLICABLE MODELS
All

REFERENCES (TM)
TM 9-2320-361-10
TM 9-2320-361-20P

EQUIPMENT CONDITION
- Parking brake set (TM 9-2320-361-10).
- Hood raised and secured (TM 9-2320-361-10).
- Radiator removed (para. 3-42).

a. Removal

1. Loosen four clamps (2) on two hoses (3).
2. Remove oil cooler tube (5), two hoses (3), and four clamps (2) from water pump (1) and engine oil cooler (4).

b. Installation

1. Install oil cooler tube (5) and two hoses (3) on water pump (1) and engine oil cooler (4) with four
2. **Tighten four clamps (2) on two hoses (3).**

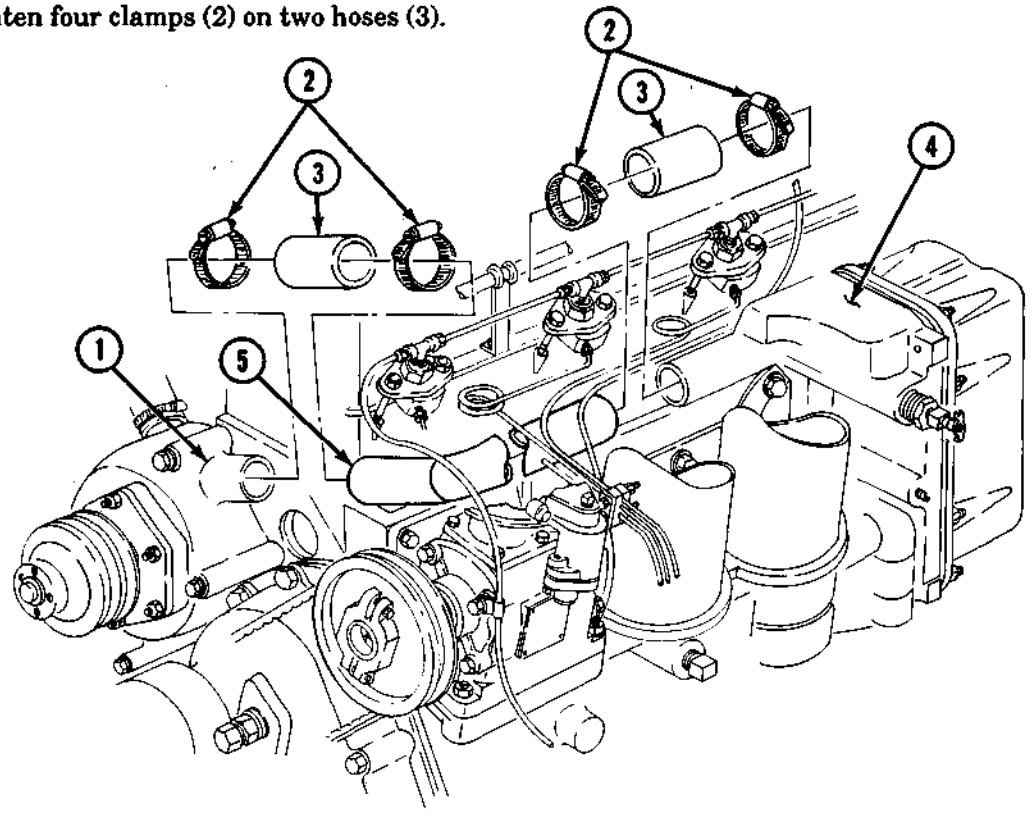

FOLLOW-ON TASK: Install radiator (para. 3-42).

https://truckmanualshub.com/

CHAPTER 4
ELECTRICAL SYSTEM MAINTENANCE

Section I. Charging System Maintenance (page 4-1)
Section II. Starting System Maintenance (page 4-10)
Section III. Instruments, Sending Units, Switches, and Horn Maintenance (page 4-15)
Section IV. Lighting System Maintenance (page 4-57)
Section V. Battery and Battery Box Maintenance (page 4-72)
Section VI. Wiring Harness Maintenance (page 4-79)

Section I. CHARGING SYSTEM MAINTENANCE

4-1. CHARGING SYSTEM MAINTENANCE INDEX

PARA. NO.	TITLE	PAGE NO.
4-2.	Alternator Belts Maintenance	4-1
4-3.	Alternator (60 Ampere) and Mounting Bracket Replacement	4-4
4-4.	Alternator Pulley Replacement	4-8

4-2. ALTERNATOR BELTS MAINTENANCE

This task covers:

a. Removal
b. Inspection
c. Installation and Adjustment

INITIAL SETUP:

APPLICABLE MODELS
All

MATERIALS/PARTS
Two cotter pins

REFERENCES (TM)
TM 9-2320-361-10
TM 9-2320-361-20P

EQUIPMENT CONDITION
- Parking brake set (TM 9-2320-361-10).
- Hood raised and secured (TM 9-2320-361-10).
- Battery ground cable disconnected (para. 4-48).

https://truckmanualshub.com/

4-2. ALTERNATOR BELTS MAINTENANCE (Contd)

a. Removal

1. Loosen screws (9) and nut (2) on alternator adjusting arm (l).
2. Remove two cotter pins (6) and loosen front and rear locknuts (7). Discard cotter pins (6).
3. Rotate alternator (12) toward engine (11) and remove two alternator belts (4) from alternator pulley (8), water pump pulley (3), and vibration damper (5).

b. Inspection

Inspect two alternator belts (4) for cracks, fraying, and splits. Replace if cracked, frayed, or split.

c. Installation and Adjustment

NOTE

Alternator belts are a matched set.

1. Install two alternator belts (4) on vibration damper (5), water pump pulley (3), and alternator pulley (8).
2. Position prybar (10) between engine (11) and alternator (12). Pull prybar (10) down until belts (4) appear tight.
3. Place straight edge (13) across alternator pulley (8) and water pump pulley (3) and check for 0.75 in. (1.905 cm) deflection on alternator belts (4).
4. Tighten screw (9) at adjusting arm (1) 15-20 lb-ft (20-27 N.m).
5. Tighten nut (2) at adjusting arm (1) 25-31 lb-ft (34-42 N.m).
6. Tighten two nuts (7) and install two new cotter pins (6). Tighten nuts (7) 33-42 lb-ft (45-57 N.m).

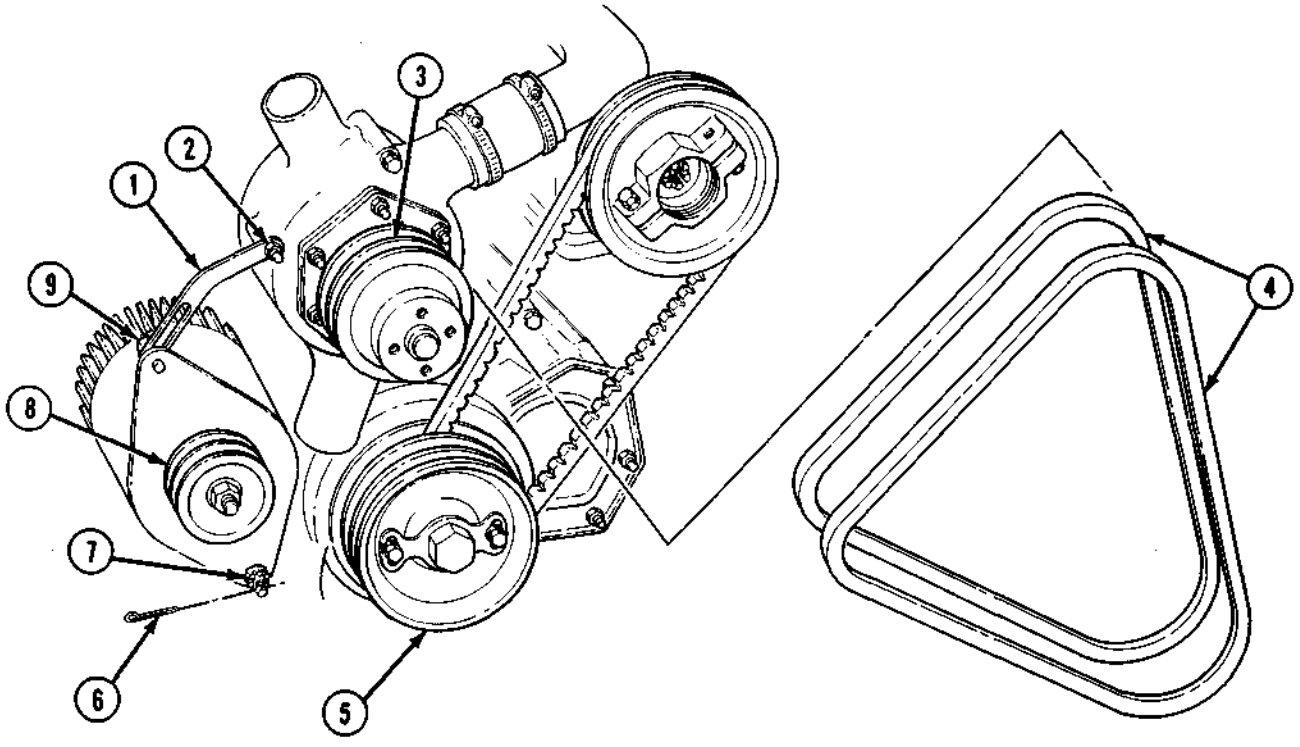

https://truckmanualshub.com/

4-2. ALTERNATOR BELTS MAINTENANCE (Contd)

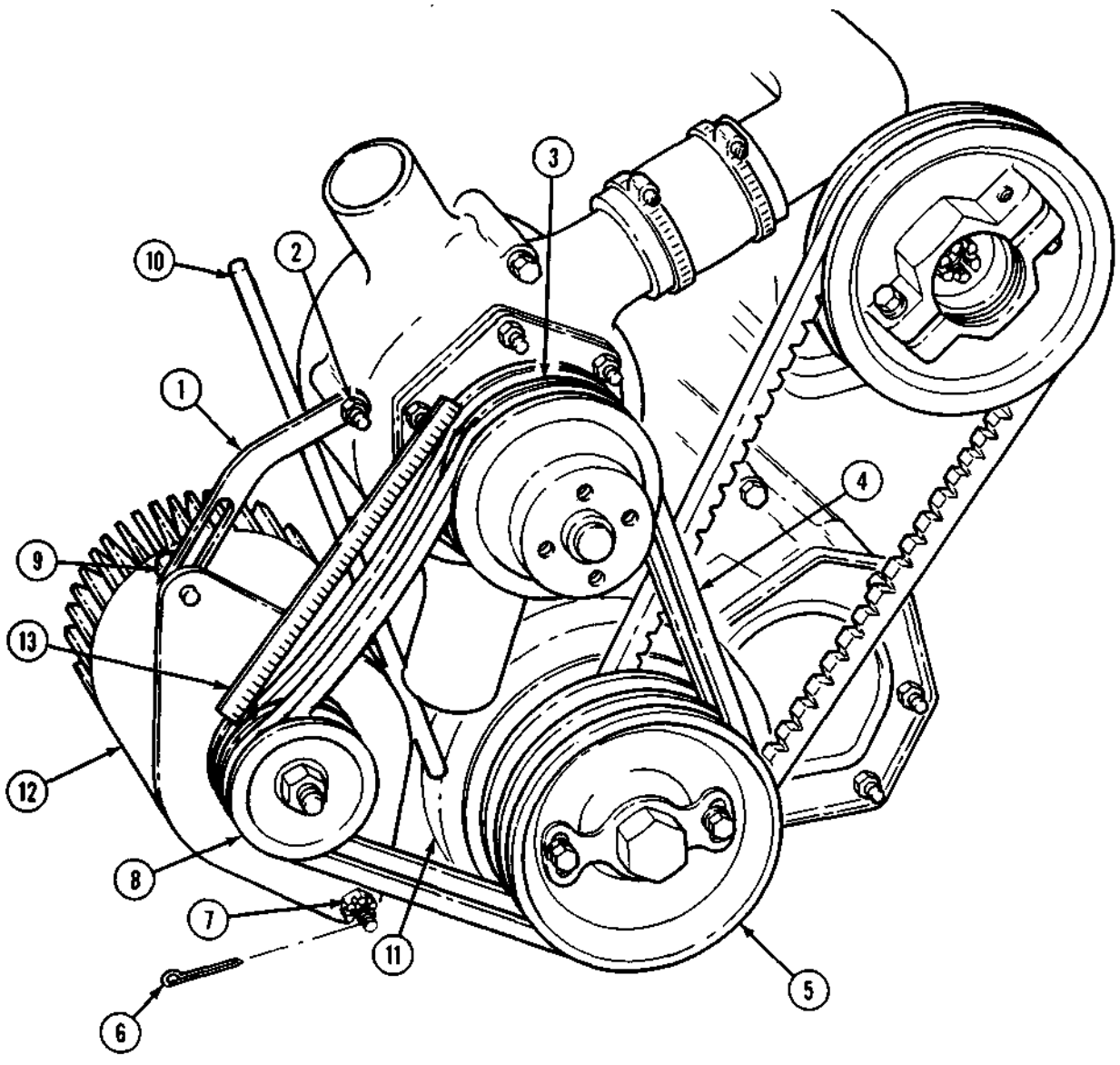

FOLLOW-ON TASKS: • Connect battery ground cable (para. 4-48).
• Start engine (TM 9-2320-361-10) and check if battery-generator indicator is in green area.

https://truckmanualshub.com/

4-3. ALTERNATOR (60 AMPERE) AND MOUNTING BRACKET REPLACEMENT

This task covers:

a. Removal
b. Installation
c. Adjustment

INITIAL SETUP:

APPLICABLE MODELS
All

MATERIALS/PARTS
Two cotter pins
Eleven lockwashers
Adhesive sealant (Appendix C, Item 5)
Sealing compound (Appendix C, Item 23)

PERSONNEL REQUIRED
Two

REFERENCES (TM)
TM 9-2320-361-10
TM 9-2320-361-20P

EQUIPMENT CONDITION
- Parking brake set (TM 9-2320-361-10).
- Hood raised and secured (TM 9-2320-361-10).
- Battery ground cable disconnected (para. 4-48).

GENERAL SAFETY INSTRUCTIONS
Alternator must be supported during removal and installation.

a. Removal

CAUTION

Never operate the alternator with the output terminal (POS) disconnected. Damage to alternator will result.

NOTE

Tag wires for installation.

1. Remove two screws (12) and lockwashers (11) from terminal cover (10). Discard lockwashers (11).
2. Pry cover (10) away from waterproofing sealant and remove cover (10),
3. Remove two screws (4), lockwashers (3), wire retaining strap (2), and spacer (1) from alternator (25). Discard lockwashers (3).
4. Remove screw (6), lockwasher (5), and ground wire (7) from alternator (25). Discard lockwasher (5).

NOTE

- Alternator has an AC terminal not used on M44A2 series trucks.
- Waterproofing sealant must be removed before removing wire in step 5.

5. Remove nut (9), lockwasher (8), and wire (36) from stud (35). Discard lockwasher (8),
6. Disconnect wire (33) from wire (34).
7. Remove screw (18), lockwasher (19), and washer (17) from alternator adjusting arm (16) and alternator (25). Discard lockwasher (19).
8. Remove nut (15), lockwasher (14), and alternator adjusting arm (16) from engine stud (13). Discard lockwasher (14).
9. Remove two alternator belts (20) from alternator pulley (21).

https://truckmanualshub.com/

4-3. ALTERNATOR (60 AMPERE) AND MOUNTING BRACKET REPLACEMENT (Contd)

WARNING

Alternator must be supported during removal. Failure to support alternator may cause injury to personnel or damage to equipment.

10. Remove two cotter pins (22), two nuts (23), shims (31), four washers (24) and (26), two screws (27), and alternator (25). Discard two cotter pins (22).

NOTE

Perform step 11 only if alternator mounting bracket is damaged.

11. Remove three screws (28), lockwashers (29) and alternator mounting bracket (30) from engine (32). Discard lockwashers (29).
12. Remove alternator pulley (21) (para. 4-4).

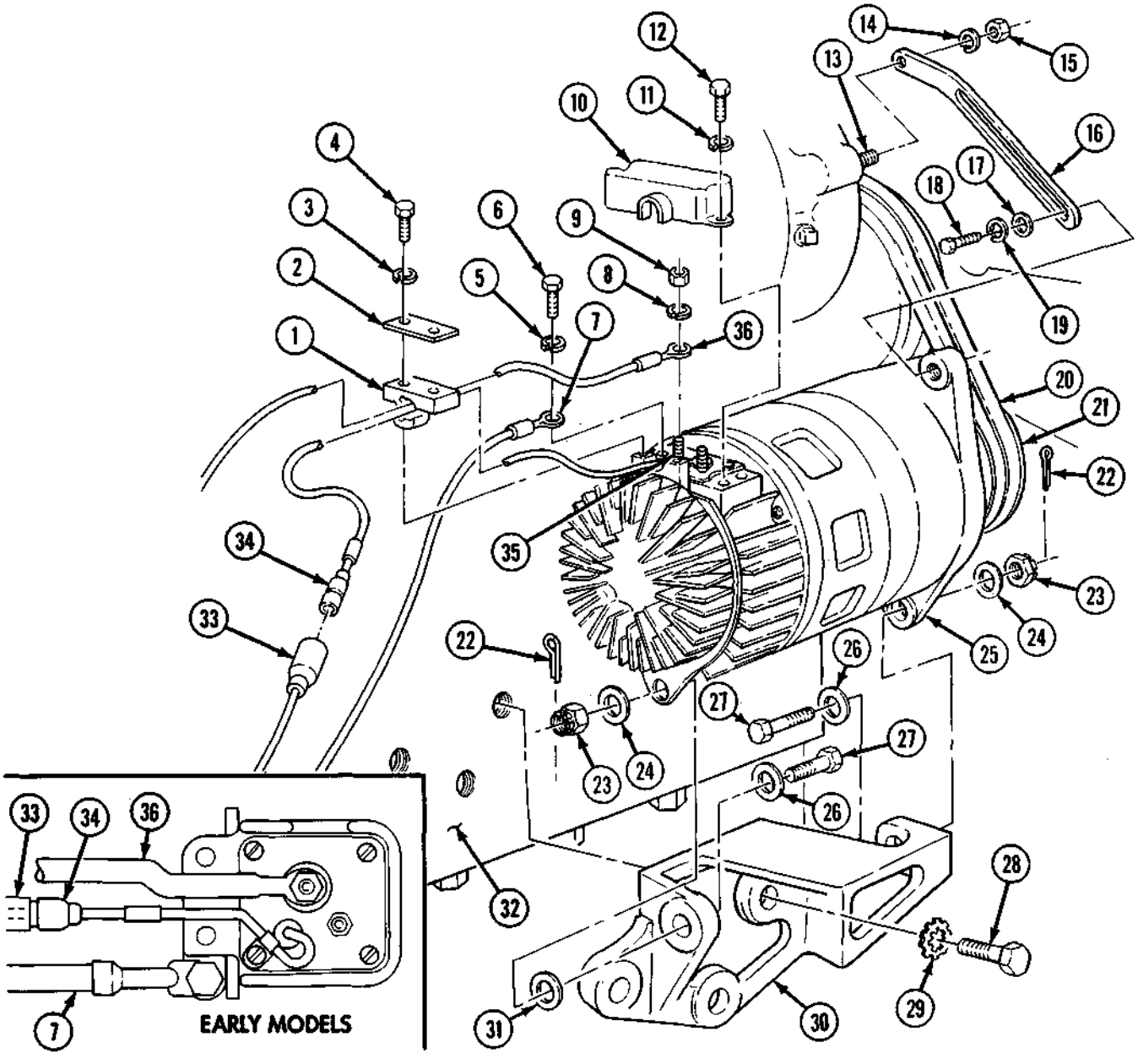

https://truckmanualshub.com/

4-3. ALTERNATOR (60 AMPERE) AND MOUNTING BRACKET REPLACEMENT (Contd)

b. Installation

1. Install alternator pulley (21) (para. 4-4).

NOTE

Perform step 2 only if mounting bracket has been removed.

2. Install alternator mounting bracket (30) on engine (32) with three new lockwashers (29) and screws (28). Tighten screws (28) 60-71 lb-ft (81-96 N•m).
3. Install alternator adjusting arm (16) to engine stud (13) with new lockwasher (14) and nut (15). Finger tighten only.

WARNING

Alternator must be supported during installation. Failure to support alternator may cause injury to personnel or damage to equipment.

4. Install alternator (25) on mounting bracket (30) with two screws (27), four washers (26) and (24), shims (31) as required, and two nuts (23). Finger tighten only.
5. Install alternator adjusting arm (16) on alternator (25) with washer (17), new lockwasher (19), and screw (18). Finger tighten only.
6. Install and adjust alternator belts (20) (para. 4-2). Tighten two screws (27) 33-42 lb-ft (45-57 N•m).
7. Connect wire (33) to wire (34) and install two new cotter pins (22) through locknuts (23).

NOTE

- Ensure terminals are clean before connections are made.
- Alternator has an AC terminal not used on M44A2 series trucks.

8. Install wire (36) on stud (35) with new lockwasher (8) and nut (9). Tighten nut (9) 45-55 lb-in. (5-6 N•m).
9. Install ground wire (7) to alternator (25) with new lockwasher (5) and screw (6). Tighten screw (6) 82-102 lb-in. (9-12 N•m).
10. Install spacer (1) and wire retaining strap (2) over wires (7) and (36) on alternator (25) with two new lockwashers (3) and screws (4). Tighten screws (4) 30-35 lb-in. (1-2 N•m).

c. Adjustment

1. Connect battery ground cable (para. 4-48) and start engine (TM 9-2320-361-10).
2. Set engine speed to 1200 rpm (TM 9-2320-361-10).
3. Turn on headlights (TM 9-2320-361-10) to place load on alternator.
4. Using multimeter, check alternator output voltage. Connect black lead to ground cable (7) and touch red lead to wire (33). Output voltage should be 28.0 ± 0.2 VDC. If adjustment is required, continue with next step. If no adjustment is required, go to step 7.
5. Remove pipe plug (37) from alternator (25).
6. Turn adjusting screw counterclockwise to increase or clockwise to decrease voltage.
7. Apply sealing compound to pipe plug (37) threads. Using hex head driver, install pipe plug (37) and tighten 24-36 lb-in. (3-4 N•m).
8. Turn off headlights (TM 9-2320-361-10).
9. Stop engine (TM 9-2320-361-10).
10. Seal wires (36), (7), and (34) and connectors and stud (35) completely with adhesive sealant.
11. Install terminal cover (10) on alternator (25) with two new lockwashers (11) and screws (12).

https://truckmanualshub.com/

4-3. ALTERNATOR (60 AMPERE) AND MOUNTING BRACKET REPLACEMENT (Contd)

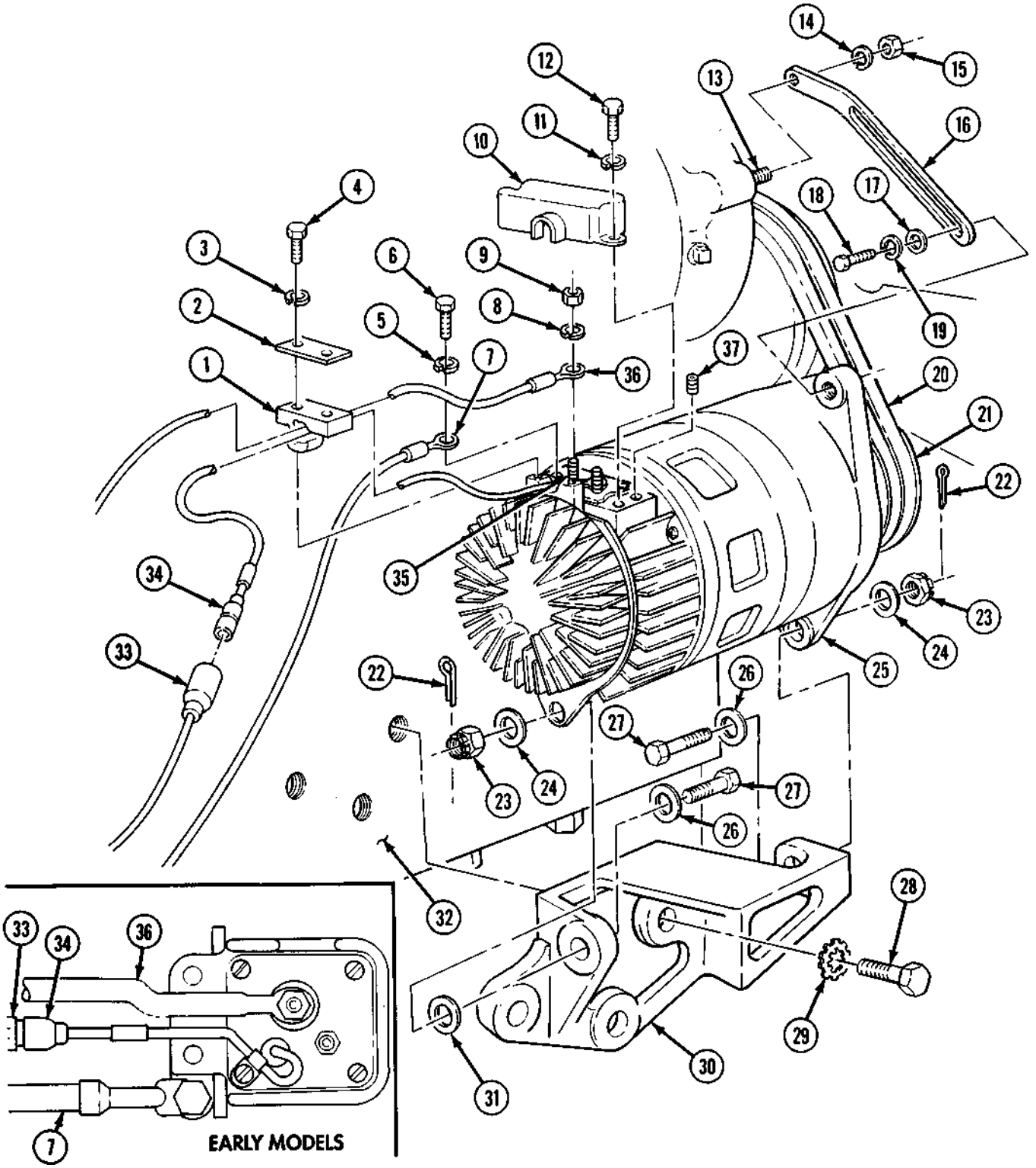

FOLLOW-ON TASKS: • Connect battery ground cable (para. 4-48).
• Start engine (TM 9-2320-361-10) and check if battery-generator indicator is in green area.

https://truckmanualshub.com/

4-4. ALTERNATOR PULLEY REPLACEMENT

This task covers:

a. Removal

b. Installation

INITIAL SETUP:

APPLICABLE MODELS
All

TOOLS
Puller kit PE12

MATERIALS/PARTS
Woodruff key
Locknut

REFERENCES (TM)
TM 9-2320-361-20P

EQUIPMENT CONDITION
Alternator removed (para. 4-3).

a. Removal

1. Clamp alternator pulley (2) in a soft-jawed vice (3).
2. Remove locknut (5) and washer (4) from alternator shaft (7). Discard locknut (5).
3. Remove alternator (1) and pulley (2) from soft-jawed vise (3).
4. Using the puller, remove alternator pulley (2) and woodruff key (6) from alternator shaft (7). Discard woodruff key (6).

b. Installation

1. Position new woodruff key (6) in alternator shaft (7) with flat side up.
2. Aline pulley keyway (8) with woodruff key (6) in alternator shaft (7) and tap pulley (2) onto alternator shaft (7).
3. Install washer (4) and new locknut (5) on alternator shaft (7). Tighten locknut (5) finger tight.
4. Clamp alternator pulley (2) in soft-jawed vise (3).
5. Tighten locknut (5) 90-100 lb-ft (122-135 NŽm).
6. Remove alternator pulley (2) from vise (3).

https://truckmanualshub.com/

4-4. ALTERNATOR PULLEY REPLACEMENT (Contd)

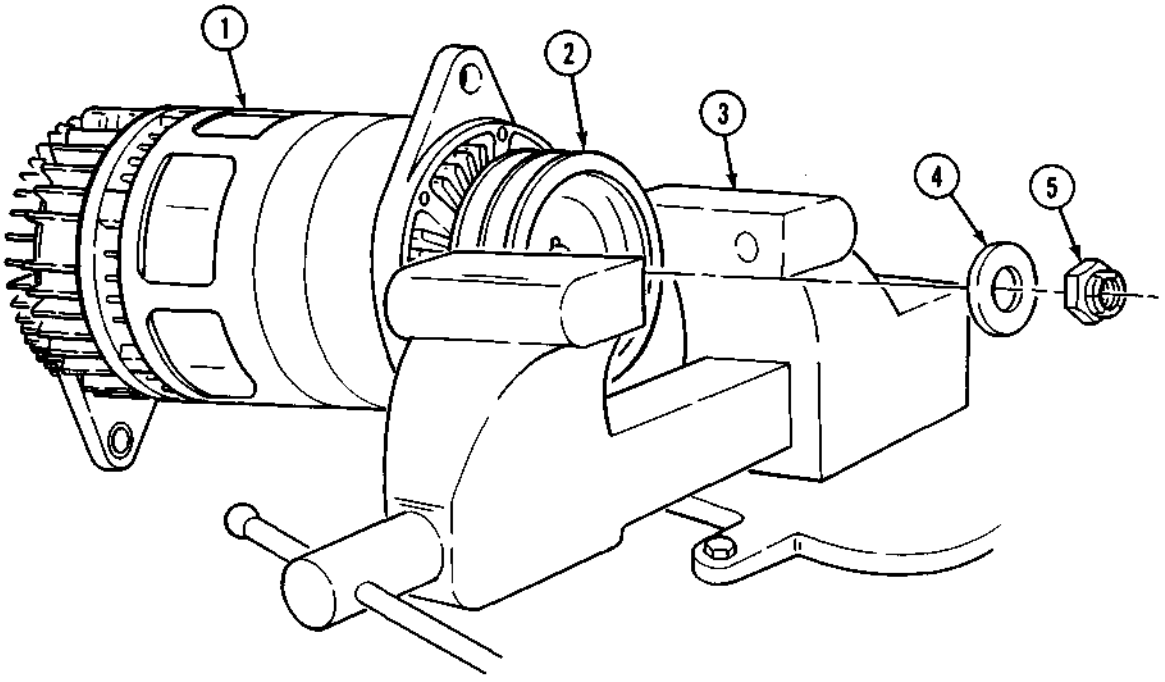

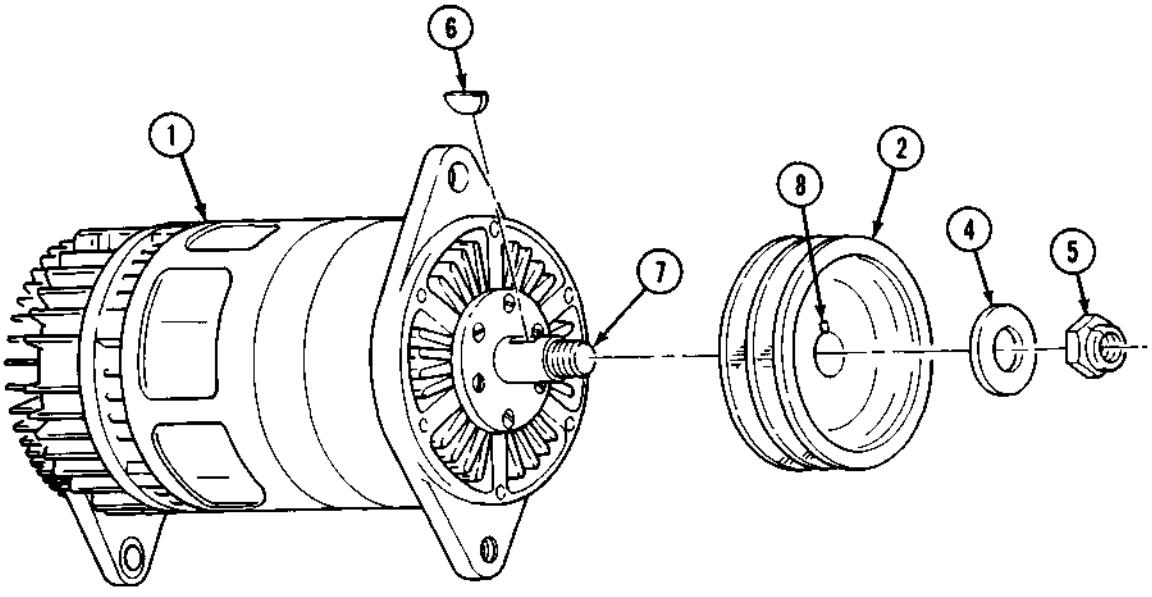

FOLLOW-ON TASK: Install alternator (para. 4-3).

https://truckmanualshub.com/

Section II. STARTING SYSTEM MAINTENANCE

4-5. STARTING SYSTEM MAINTENANCE INDEX

PARA. NO.	TITLE	PAGE NO.
4-6.	Magnetic Starter Relay and Mounting Bracket Replacement	4-10
4-7.	Starter Motor Replacement	4-12
4-8.	Starter Switch Replacement	4-14

4-6. MAGNETIC STARTER RELAY AND MOUNTING BRACKET REPLACEMENT

This task covers:

a. Removal b. Installation

INITIAL SETUP:

APPLICABLE MODELS
All

MATERIALS/PARTS
Two locknuts
Six lockwashers

REFERENCES (TM)
TM 9-2320-361-10
TM 9-2320-361-20P

EQUIPMENT CONDITION
Ž Parking brake set (TM 9-2320-361-10).
- Hood raised and secured (TM 9-2320-361-10).
- Battery ground cable disconnected (para. 4-48).
- Air cleaner assembly removed (para. 3-15).

a. Removal

NOTE
Tag leads for installation.

1. Remove nut (1), washer (2), and cable (3) from magnetic starter relay (19).
2. Remove nut (9), washer (8), and cables (7) and (6) from magnetic starter relay (19).
3. Remove nut (16), washer (17), and cable (18) from magnetic starter relay (19).
4. Remove two locknuts (4), lockwashers (5), screws (15), and magnetic starter relay (19) from mounting bracket (10). Discard two locknuts (4) and lockwashers (5).
5. Remove two screws (14), lockwashers (13) and (12), and mounting bracket (10) from engine block (11). Discard lockwashers (13) and (12).

b. Installation

1. Install mounting bracket (10) on engine block (11) with two screws (14) and new lockwashers (13) and (12).
2. Install magnetic starter relay (19) on mounting bracket (10) with two screws (15), new lockwashers (5), and locknuts (4).
3. Install cable (3) on relay (19) with washer (2) and nut (1).
4. Install cables (6) and (7) on relay (19) with washer (8) and nut (9).
5. Install cable (18) on relay (19) with washer (17) and nut (16).

https://truckmanualshub.com/

4-6. MAGNETIC STARTER RELAY AND MOUNTING BRACKET REPLACEMENT (Contd)

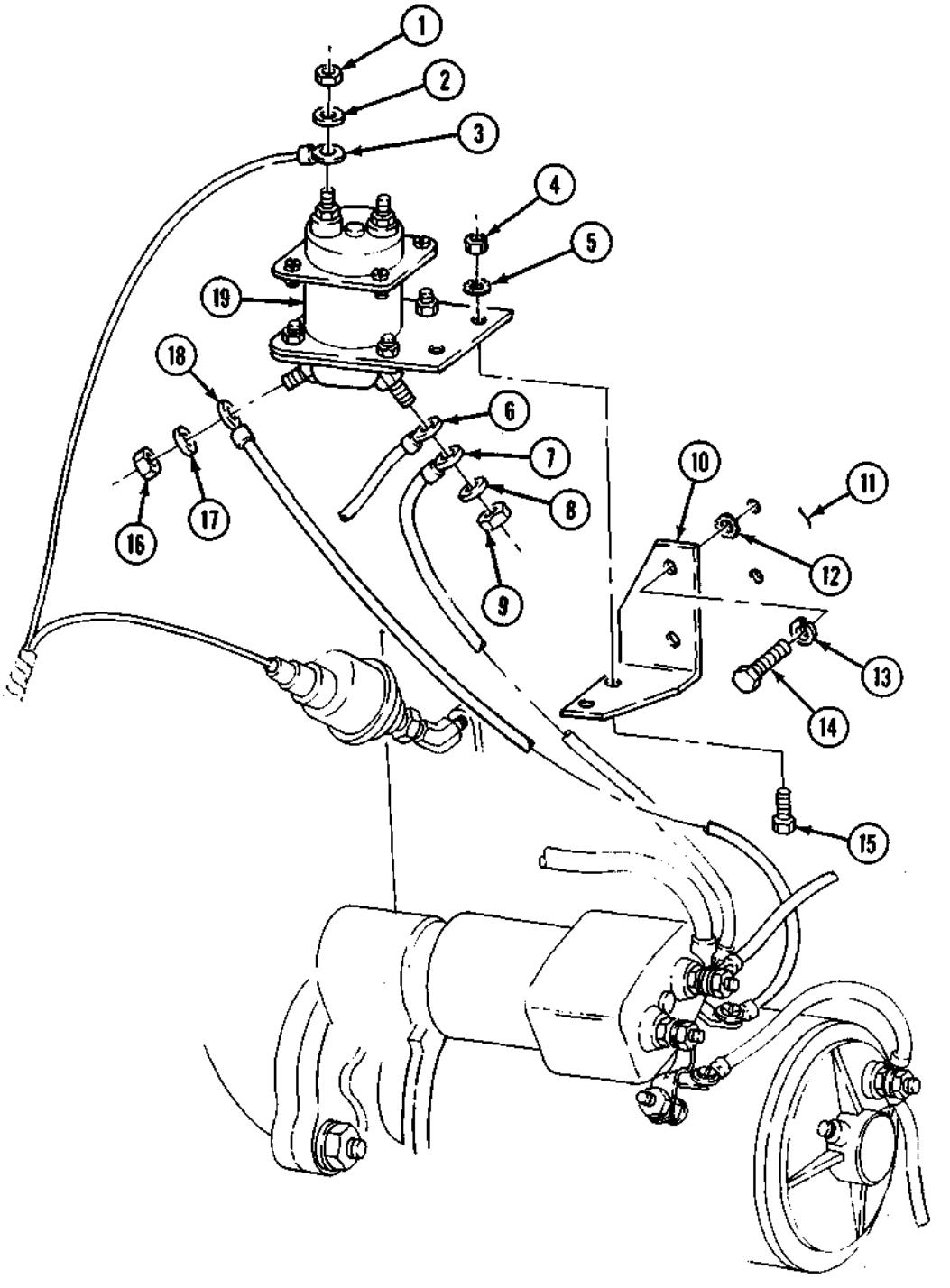

FOLLOW-ON TASKS:
- Install air cleaner assembly (para. 3-15).
- Connect battery ground cable (para. 4-48).
- Start engine (TM 9-2320-361-10).

https://truckmanualshub.com/

4-7. STARTER MOTOR REPLACEMENT

This task covers:

a. Removal

b. Installation

INITIAL SETUP:

APPLICABLE MODELS
All

MATERIALS/PARTS
Two gaskets
Four lockwashers

PERSONNEL REQUIRED
Two

REFERENCES (TM)
TM 9-2320-361-10
TM 9-2320-361-20P

EQUIPMENT CONDITION
Ž Parking brake set (TM 9-2320-361-10).
- Battery ground cable disconnected (para. 4-48).
- Air cleaner assembly removed (para. 3-15).

a. Removal

NOTE
Tag leads for installation.

1. Remove screw (6), clip (7), and wire (8) from starter solenoid terminal (9).

NOTE
Remove two wires from solenoid stud on M756A2 model.

2. Remove nut (5), wire (3), and cable (4) from solenoid stud (2).
3. Remove nut (10), lockwasher (11), and ground cable (12) from starter motor stud (13). Discard lockwasher (11).

NOTE
Assistant will help with step 4.

4. Remove three nuts (15), lockwashers (14), and starter motor (1) from studs (19). Discard lockwashers (14).
5. Remove gasket (16), spacer (17), and gasket (18) from studs (19). Discard gaskets (16) and (18).

b. Installation

1. Position new gasket (18), spacer (17), and new gasket (16) on three studs (19). Make sure flat side of gasket (16) faces starter motor (1).

NOTE
Assistant will help with step 2.

2. Install starter (1) on studs (19) with three new lockwashers (14) and nuts (15). Tighten nuts (15) 70-80 lb-ft (95-108 NŽm).
3. Install ground cable (12) on starter solenoid terminal (13) with new lockwasher (11) and nut (10).

NOTE
Install two wires on solenoid stud for M756A2 model.

4. Install cable (4) and wire (3) on solenoid stud (2) with nut (5).
5. Install wire (8) on starter solenoid terminal (9) with clip (7) and screw (6).

https://truckmanualshub.com/

4-7. STARTER MOTOR REPLACEMENT (Contd)

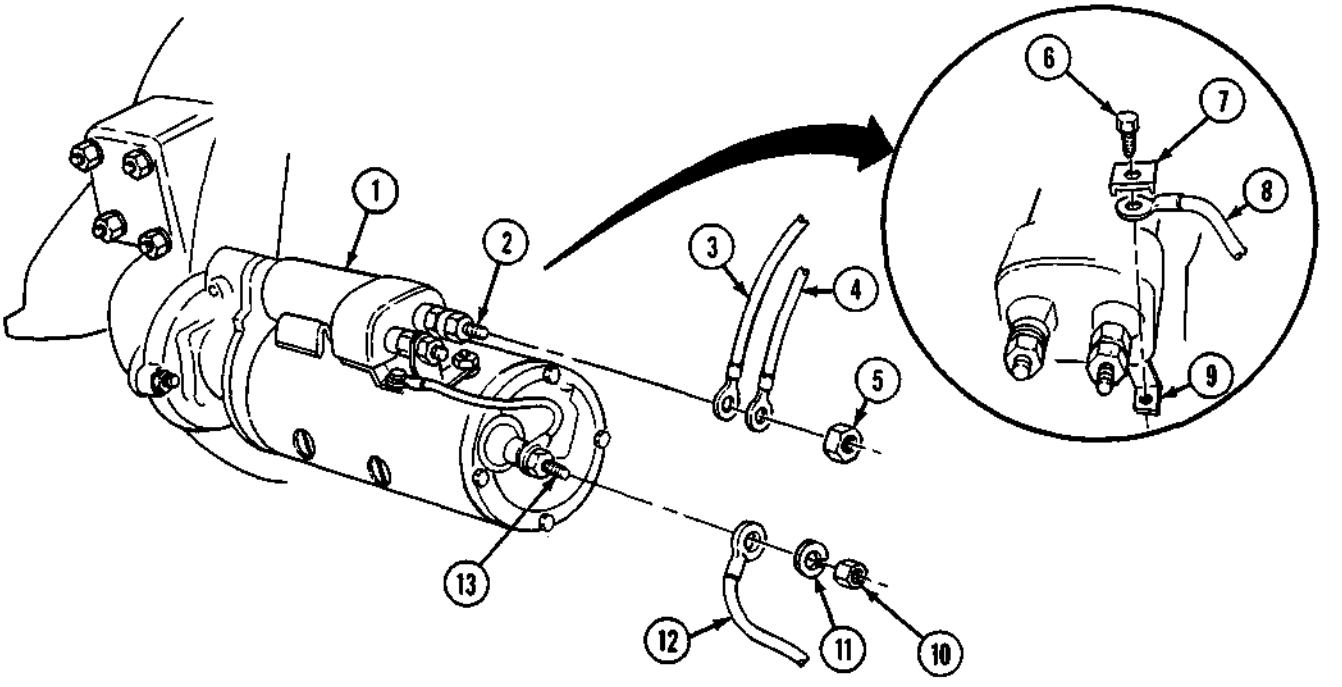

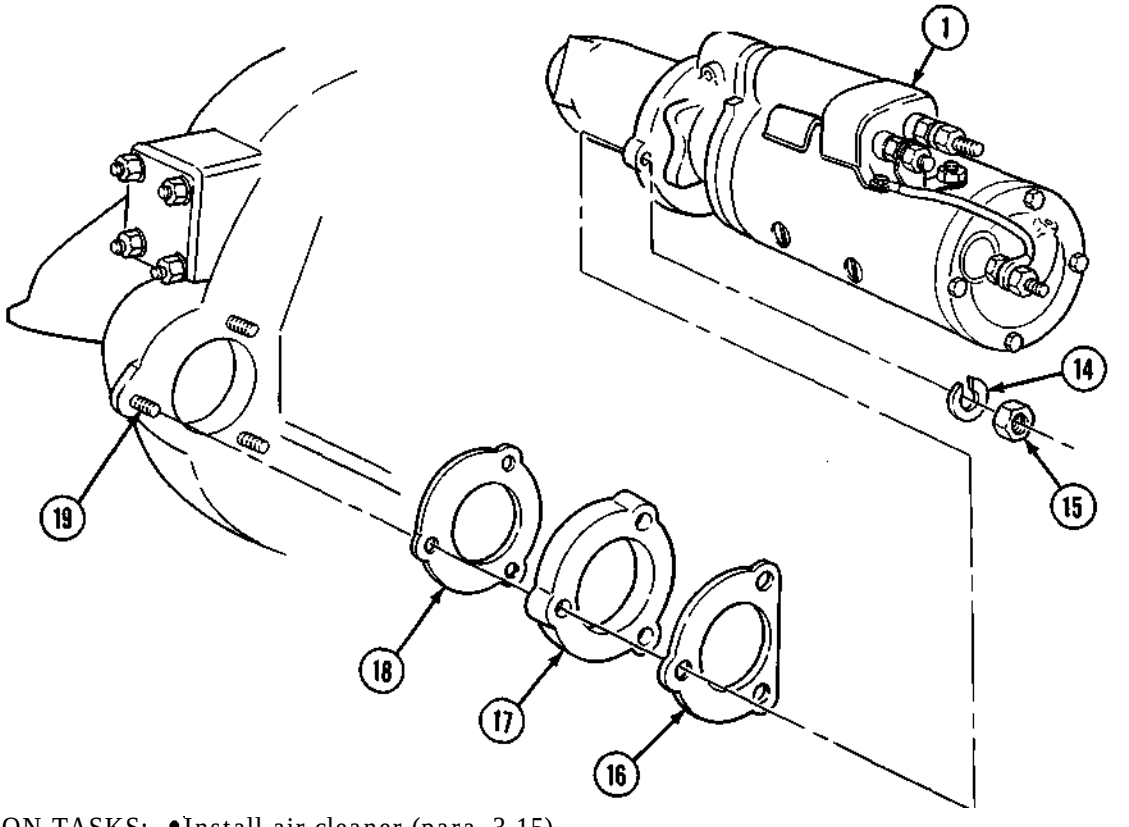

FOLLOW-ON TASKS:
- Install air cleaner (para. 3-15).
- Connect battery ground cable (para. 4-48).
- Start engine (TM 9-2320-361-10) to check starter motor.

https://truckmanualshub.com/

4-8. STARTER SWITCH REPLACEMENT

This task covers:

a. Removal

b. Installation

INITIAL SETUP:

APPLICABLE MODELS
All

MATERIALS/PARTS
Lockwasher

REFERENCES (TM)
TM 9-2320-361-10
TM 9-2320-361-20P

EQUIPMENT CONDITION
- Parking brake set (TM 9-2320-361-10).
- Battery ground cable disconnected (para. 4-48).

NOTE

Starter switch may be located to the right of the steering column on older models.

a. Removal

1. Remove nut (3) from engine starter switch (5).
2. Remove lockwasher (2), plate (l), and starter switch (5) from instrument panel (7). Discard lockwasher (2).
3. Disconnect plug (6) from starter switch (5).
4. Remove adjusting nut (4) from starter switch (5).

b. Installation

1. Install nut (4) on starter switch (5).
2. Connect plug (6) to starter switch (5).
3. Install starter switch (5) and plate (1) on instrument panel (7) with new lockwasher (2) and nut (3).

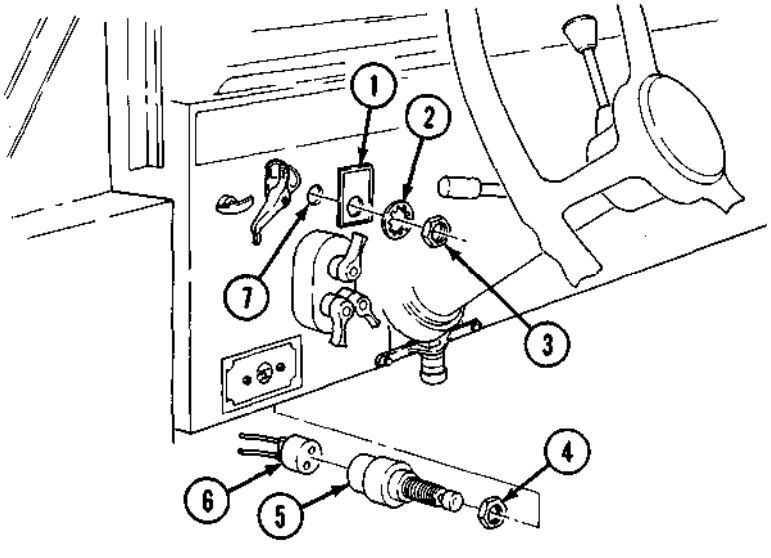

FOLLOW-ON TASKS:
- Connect battery ground cable (para. 4-48).
- Start engine (TM 9-2320-361-10).

https://truckmanualshub.com/

Section III. INSTRUMENTS, SENDING UNITS, SWITCHES, AND HORN MAINTENANCE

4-9. INSTRUMENTS, SENDING UNITS, SWITCHES, AND HORN MAINTENANCE INDEX

PARA. NO.	TITLE	PAGE NO.
4-10.	Instrument Cluster Replacement	4-16
4-11.	Air Pressure Gage Replacement	4-20
4-12.	Oil Pressure Gage, Battery and Generator Gage, Fuel Gage, and Engine Temperature Gage Replacement	4-22
4-13.	Speedometer and Tachometer Replacement	4-24
4-14.	Tachometer Drive shaft and Drive Core Maintenance	4-26
4-15.	Tachometer Adapter Replacement	4-28
4-16.	Speedometer Drive shaft and Adapter Replacement	4-30
4-17.	Headlight High Beam Indicator and Lamp Replacement	4-32
4-18.	Light Switch Replacement	4-33
4-19.	Turn Signal Control and Indicator Lamp Replacement	4-34
4-20.	Turn Signal Flasher Replacement	4-35
4-21.	Accessory Switch Replacement	4-36
4-22.	Manifold Heater Switch Replacement	4-37
4-23.	Oil Pressure Sending Unit Replacement	4-38
4-24.	Engine Temperature Sending Unit Replacement	4-39
4-25.	Low Air Pressure Switch Replacement	4-40
4-26.	Fuel Level Sending Unit Replacement	4-41
4-27.	Low Air Buzzer Replacement	4-42
4-28.	Headlight Dimmer Switch Replacement	4-44
4-29.	Stoplight Switch Replacement	4-45
4-30.	Horn Button Replacement	4-46
4-31.	Air Horn, Solenoid, and Bracket Replacement	4-48
4-32.	Stoplight Air Pressure Switch Replacement (M275A2)	4-50
4-33.	Circuit Breaker Replacement	4-51
4-34.	Hot Water Personnel Heater Control Switch Replacement	4-52
4-35.	Hot Water Personnel Heater Blower Motor Resistor Replacement	4-53
4-36.	Front-Wheel Drive Lock-In Switch Indicator and Air Pressure Switch Replacement	4-54
4-37.	Fuel Pressure Switch Replacement	4-56

https://truckmanualshub.com/

4-10. INSTRUMENT CLUSTER REPLACEMENT

This task covers:

a. Removal
b. Disassembly
c. Assembly
d. Installation

INITIAL SETUP:

APPLICABLE MODELS
All

MATERIALS/PARTS
Antiseize tape (Appendix C, Item 27)

REFERENCES (TM)
TM 9-2320-361-10
TM 9-2320-361-20P

EQUIPMENT CONDITION
- Parking brake set (TM 9-2320-361-10).
- Battery ground cable disconnected (para. 4-48).
- Air reservoirs drained (TM 9-2320-361-10).

GENERAL SAFETY INSTRUCTIONS
Do not disconnect air lines before draining air reservoirs.

a. Removal

1. Turn four lockstuds (1) ¼ turn to left and pull instrument cluster (2) away from instrument panel (3).

NOTE

- Tag each wire, air tube, and drive shaft for installation.
- Location of gages on instrument cluster may vary for M44A2 series trucks, Install gages in their original locations.

2. Disconnect tachometer drive shaft (19) from tachometer (6).
3. Disconnect speedometer drive shafl (12) from speedometer (7).

WARNING

Do not disconnect air lines before draining air reservoir. Small parts under pressure may shoot out with high velocity, causing injury to personnel.

4. Disconnect air line (26) from air pressure gage (27).
5. Disconnect wire plug (16) from wire connector (17).
6. Disconnect wire plugs (5) and (25) from engine temperature gage (4).
7. Disconnect wire plugs (10) and (11) from oil pressure gage (9).
8. Disconnect wire plugs (20) and (18) from fuel gage (21).
9. Disconnect wire connector (14) from high beam indicator (15).
10. Disconnect wire connectors (13) and (23) from two indicator lamps (8).
11. Disconnect wire plug (22) from battery and generator gage (24).
12. Remove instrument cluster (2) from instrument panel (3).

https://truckmanualshub.com/

4-10. INSTRUMENT CLUSTER REPLACEMENT (Contd)

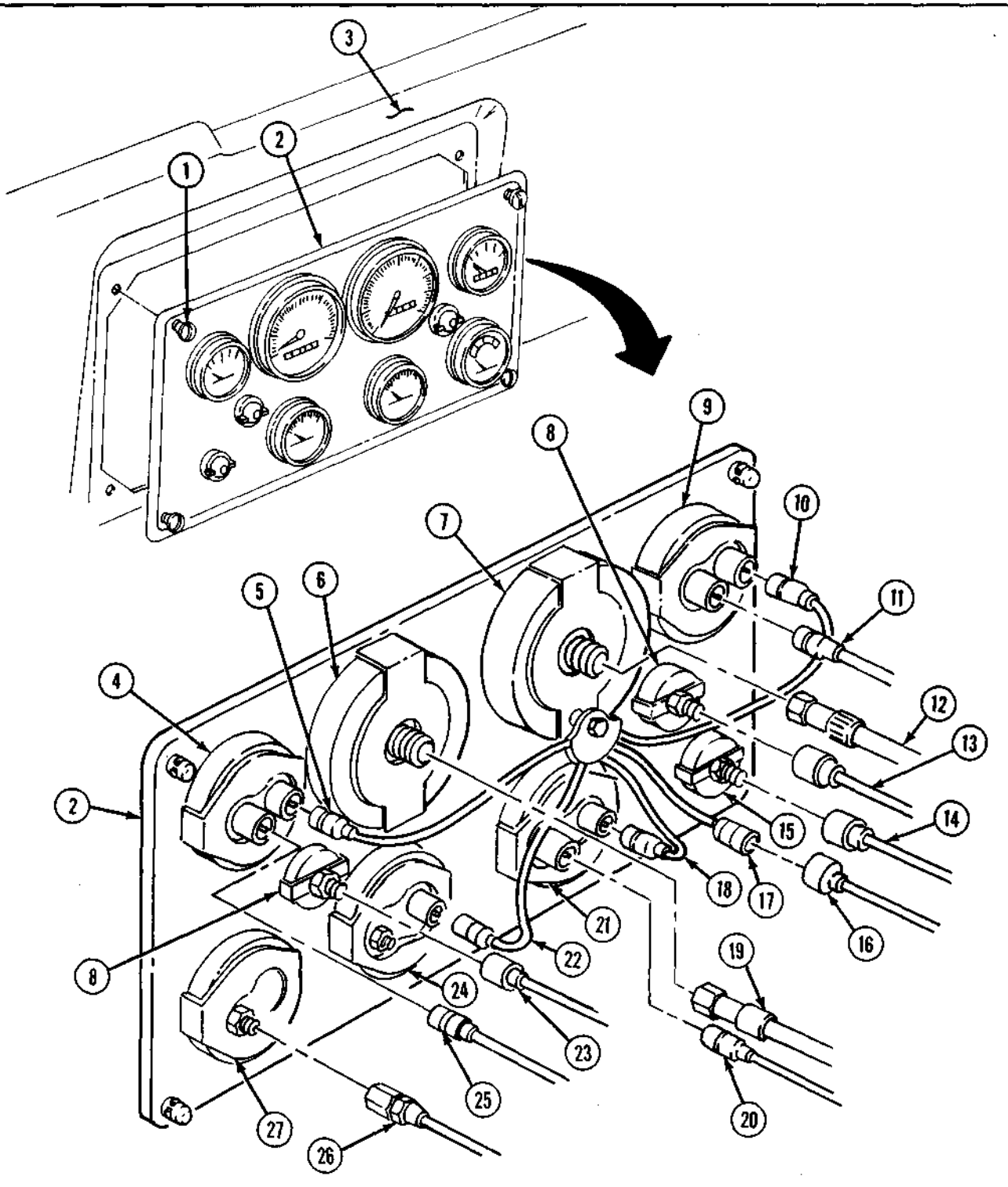

https://truckmanualshub.com/

4-10. INSTRUMENT CLUSTER REPLACEMENT (Contd)

b. Disassembly

1. Remove two indicator panel lamps (8) (para. 4-17).
2. Remove high beam indicator (15) (para. 4-17).
3. Remove tachometer (6) (para. 4-13).
4. Remove speedometer (7) (para. 4-13).
5. Remove oil pressure gage (9), engine temperature gage (4), battery and generator gage (24), and fuel gage (21) (para. 4-12).
6. Remove air pressure gage (27) (para. 4-11).

c. Assembly

1. Install air pressure gage (27) (para. 4-11).
2. Install fuel gage (21), battery and generator gage (24), engine temperature gage (4), and oil pressure gage (9) (para. 4-12).
3. Install speedometer (7) (para. 4-13).
4. Install tachometer (6) (para. 4-13).
5. Install high beam indicator (15) (para. 4-17).
6. Install two indicator panel lamps (8) (para. 4-17).

d. Installation

1. Connect wire plug (22) to battery and generator gage (24).
2. Connect wire connectors (13) and (23) to both panel lamps (8).
3. Connect wire connector (14) to high beam indicator (15).
4. Connect wire plugs (20) and (18) to fuel gage (21).
5. Connect wire plugs (10) and (11) to oil pressure gage (9).
6. Connect wire plugs (5) and (25) to engine temperature gage (4).
7. Connect wire plug (16) to wire connector (17).
8. Wrap threads of air pressure gage (27) with antiseize tape and connect air line (26).
9. Connect speedometer drive shaft (12) to speedometer (7).
10. Connect tachometer drive shaft (19) to tachometer (6).
11. Position instrument cluster (2) to instrument panel (3) and install by turning four lockstuds (1) 1/4 turn to right.

https://truckmanualshub.com/

4-10. INSTRUMENT CLUSTER REPLACEMENT (Contd)

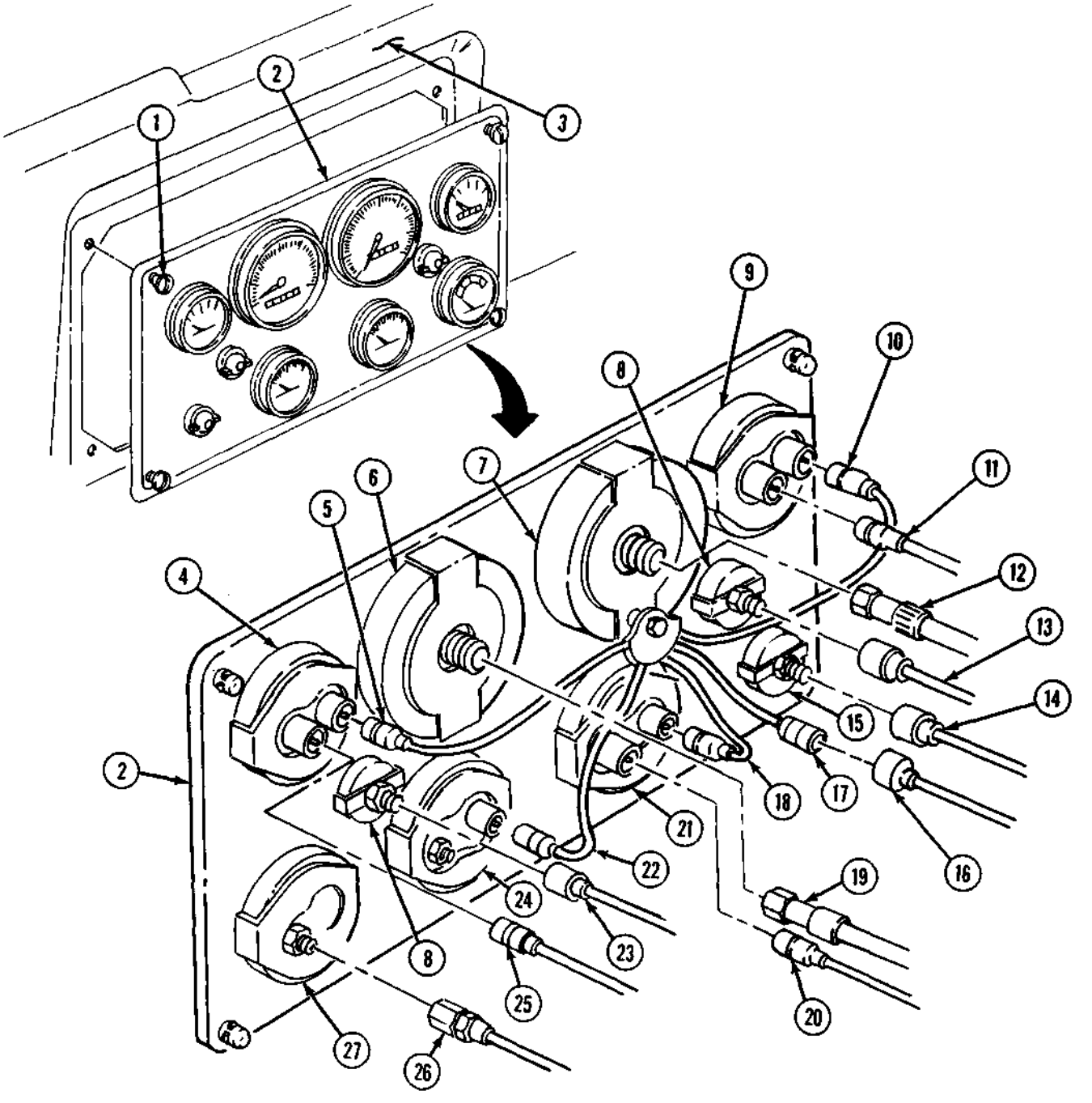

FOLLOW-ON TASKS: Ž Connect battery ground cable (para. 4-48).

- Start engine (TM 9-2320-361-10) and check if gages work properly and allow air pressure to build up to normal operating range.
- Check for air leaks at air pressure gage.

https://truckmanualshub.com/

4-11. AIR PRESSURE GAGE REPLACEMENT

This task covers:

a. Removal

b. Installation

INITIAL SETUP:

APPLICABLE MODELS
All

MATERIALS/PARTS
Two lockwashers
Antiseize tape (Appendix C, Item 27)

REFERENCES (TM)
TM 9-2320-361-10
TM 9-2320-361-20P

EQUIPMENT CONDITION
- Parking brake set (TM 9-2320-361-10).
- Air reservoirs drained (TM 9-2320-361-10).
- Battery ground cable disconnected (para. 4-48).

GENERAL SAFETY INSTRUCTIONS
Do not disconnect air lines before draining air reservoirs.

a. Removal

1. Turn four lockstuds (8) ¼ turn to left and pull instrument cluster (6) away from instrument panel (5).

WARNING

Do not disconnect air lines before draining air reservoirs. Small parts under pressure may shoot out with high velocity, causing injury to personnel.

NOTE

Location of gages on instrument cluster may vary for M44A2 series trucks. Install gages in their original locations.

2. Disconnect air line (1) from air pressure gage (7).
3. Remove two nuts (2), lockwashers (3), and gage mounting bracket (4) from air pressure gage (7). Discard lockwashers (3).
4. Remove air pressure gage (7) from front of instrument cluster (6).

b. Installation

1. Position air pressure gage (7) through front of instrument cluster (6).
2. Position gage mounting bracket (4) on air pressure gage (7) and install with two new lockwashers (3) and nuts (2).

NOTE

Clean male pipe threads and wrap with antiseize tape before installation.

3. Connect air line (1) to air pressure gage (7).
4. Position instrument cluster (6) on instrument panel (5) and lock in place by turning four lockstuds (8) 1/4 turn to right.

https://truckmanualshub.com/

4-11. AIR PRESSURE GAGE REPLACEMENT (Contd)

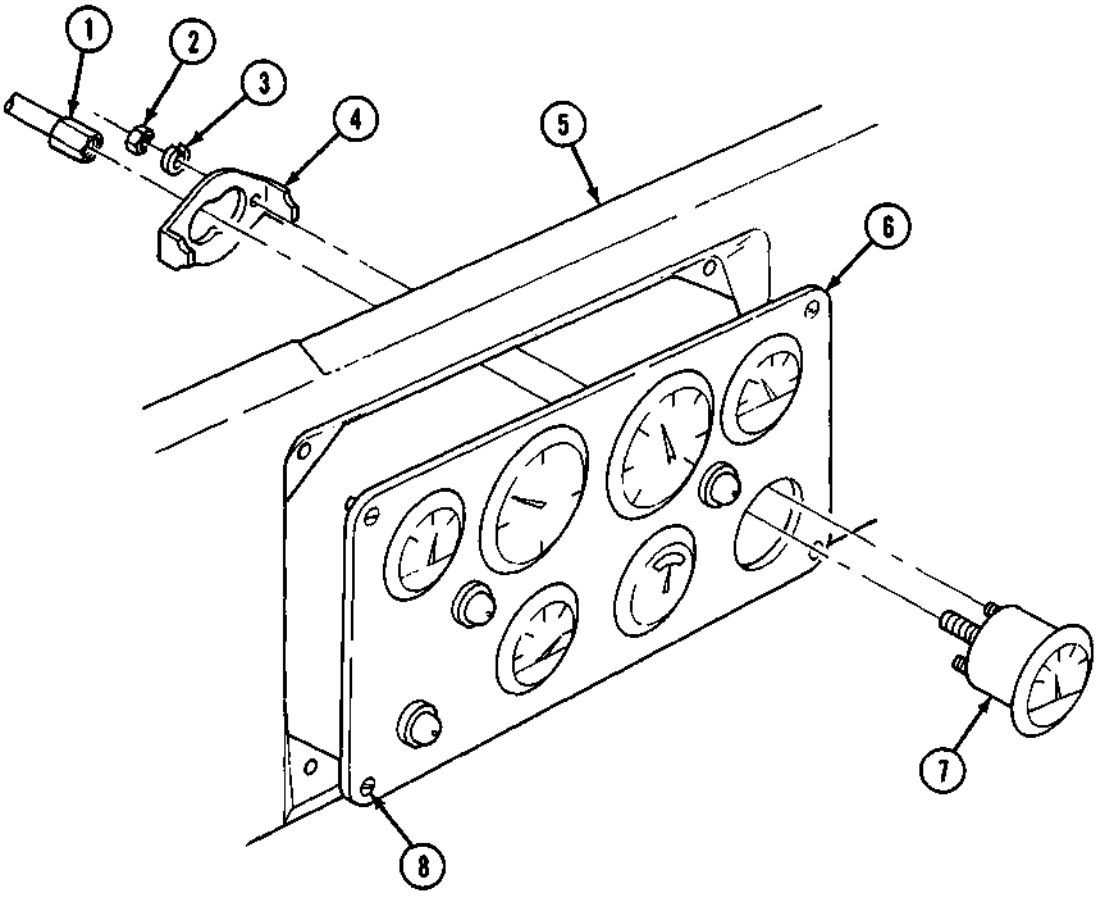

FOLLOW-ON TASKS:
- Connect battery ground cable (para. 4-48).
- Start engine (TM 9-2320-361-10), and allow air pressure to build up to normal operating range.
- Check for air leaks at air pressure gage.

https://truckmanualshub.com/

4-12. OIL PRESSURE GAGE, BATTERY AND GENERATOR GAGE, FUEL GAGE, AND ENGINE TEMPERATURE GAGE REPLACEMENT

This task covers:

a. Removal

b. Installation

INITIAL SETUP:

APPLICABLE MODELS
All

MATERIALS/PARTS
Two lockwashers

REFERENCES (TM)
TM 9-2320-361-10
TM 9-2320-361-20P

EQUIPMENT CONDITION
- Parking brake set (TM 9-2320-361-10).
- Disconnect battery ground cable (para. 4-48).

CAUTION

The 60 psi and 120 psi gages and sending units are not interchangeable. Do not interchange the 60 psi gage or sending unit with a 120 psi gage or sending unit.

NOTE

Engine temperature, oil pressure, battery and generator, and fuel gages are removed and installed the same. This procedure covers the engine temperature gage.

a. Removal

1. Turn four lockstuds (5) ¼ turn to left and pull instrument cluster (7) away from instrument panel (8).

NOTE

Tag wires for installation.

2. Disconnect wires (1) and (9) from engine temperature gage (6).
3. Remove two nuts (2), lockwashers (3), and bracket (4) from temperature gage (6). Discard lockwashers (3).
4. Remove engine temperature gage (6) from instrument cluster (7).

b. Installation

1. Position engine temperature gage (6) through front of instrument cluster (7).
2. Install bracket (4) on temperature gage (6) with two new lockwashers (3) and nuts (2).
3. Connect wires (1) and (9) to engine temperature gage (6).
4. Position instrument cluster (7) to instrument panel (8) and install by turning four lockstuds (5) ¼ turn to right.

https://truckmanualshub.com/

4-12. OIL PRESSURE GAGE, BATTERY AND GENERATOR GAGE, FUEL GAGE, AND ENGINE TEMPERATURE GAGE REPLACEMENT (Contd)

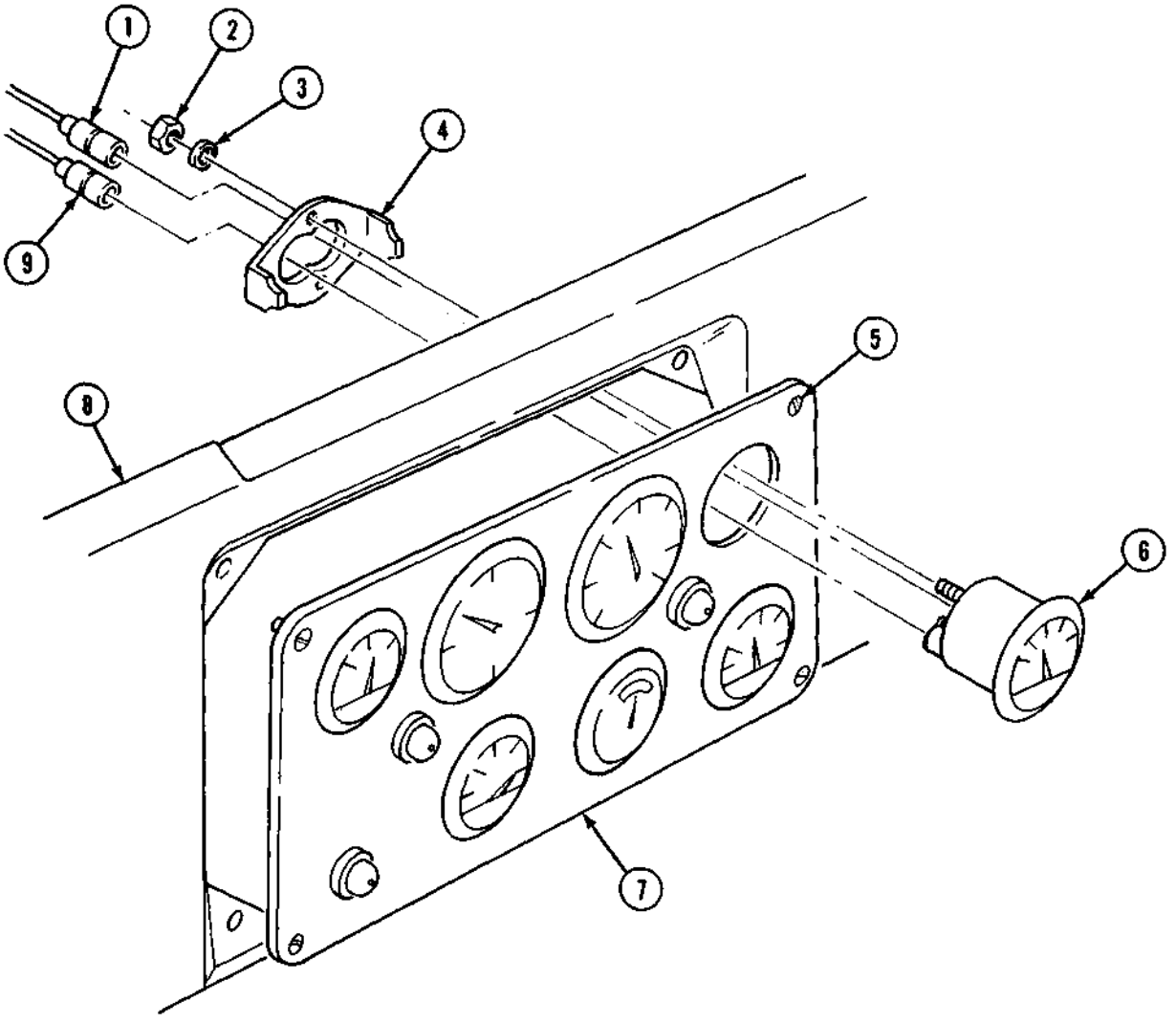

FOLLOW-ON TASKS: • Connect battery ground cable (para. 4-48).
• Start engine (TM 9-2320-361-10) and check gages for proper operation.

https://truckmanualshub.com/

4-13. SPEEDOMETER AND TACHOMETER REPLACEMENT

This task covers:

a. Removal

b. Installation

INITIAL SETUP:

APPLICABLE MODELS
All

MATERIALS/PARTS
Two lockwashers

REFERENCES (TM)
TM 9-2320-361-10
TM 9-2320-361-20P

EQUIPMENT CONDITION
- Parking brake set (TM 9-2320-361-10).
- Battery ground cable disconnected (para. 4-48).

NOTE

Speedometer and tachometer are removed and installed the same way with exception of instrument cluster cable and extension stud which are on speedometer only, This procedure covers the speedometer,

a. Removal

1. Turn four lockstuds (9) 1/4 turn to left and pull instrument cluster (7) away from instrument panel (8).

NOTE

Tag speedometer drive shaft for installation.

2. Loosen shaft nut (2) and disconnect speedometer dive shaft (1) from speedometer (6).
3. Remove two nuts (3), washer (12), instrument cluster cable assembly (11), extension stud (10), two lockwashers (4), and mounting bracket (5) from speedometer (6). Discard two lockwashers (4).
4. Remove speedometer (6) from instrument cluster (7).

b. Installation

1. Position speedometer (6) through front of instrument cluster (7).
2. Position mounting bracket (5) on speedometer (6) and install with two new lockwashers (4), extension stud (10), and nut (3).
3. Install cable assembly (11) with washer (12) and nut (3).
4. Install speedometer dive shaft (1) on speedometer (6) with shaft nut (2).
5. Position instrument cluster (7) on instrument panel (8) and lock in place by turning four lock-studs (9) 1/4 turn to right.

https://truckmanualshub.com/

4-13. SPEEDOMETER AND TACHOMETER REPLACEMENT (Contd)

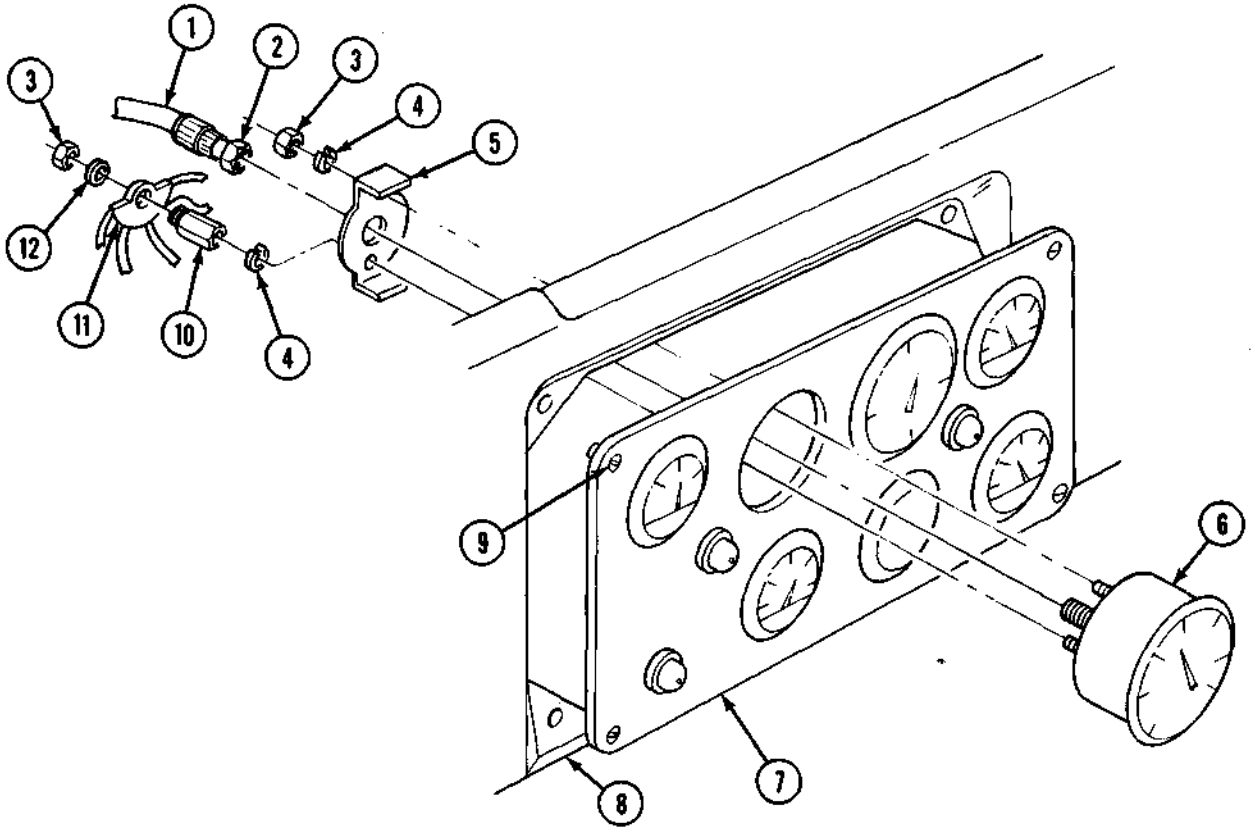

FOLLOW-ON TASKS: •Connect battery ground cable (para. 4-48).
•Start engine (TM 9-2320-361-10) and road test to check speedometer and tachometer for proper operation.

https://truckmanualshub.com/

4-14. TACHOMETER DRIVE SHAFT AND DRIVE CORE MAINTENANCE

This task covers:

a. Removal
b. Inspection
c. Installation

INITIAL SETUP:

APPLICABLE MODELS
All

MATERIALS/PARTS
Three locknuts
Lockwasher

REFERENCES (TM)
TM 9-2320-361-10
TM 9-2320-361-20P

EQUIPMENT CONDITION
- Parking brake set (TM 9-2320-361-10).
- Hood raised and secured (TM 9-2320-361-10).
- Battery ground cable disconnected (para. 4-48).

a. Removal

1. Turn four lockstuds (4) 1/4 turn left and pull instrument cluster (3) away from instrument panel (5).
2. Disconnect tachometer drive shaft (1) from tachometer (2).
3. Disconnect tachometer drive shafi (1) from tachometer drive unit (20).
4. Remove two locknuts (8), screws (15), four clamps (9), tachometer drive shaft (l), and wiring harness (7) from two brackets (17). Discard locknuts (8).
5. Remove locknut (23), screw (21), clamp (22), and tachometer diveshaft. (1) from bracket (19). Discard locknut (23).
6. Remove two screws (10), washers (11), and brackets (17) from rocker arm cover (16).
7. Remove nut (25), lockwasher (24), and bracket (19) from air compressor stud (18). Discard lockwasher (24).
8. Remove grommet (12) and tachometer drive shaft (1) from firewall (13).
9. Remove two clamps (9) and clamp (22) from tachometer drive shaft (l).

Inspect drive shaft drive core (14) and grommet (12). Replace if defective.

c. Installation

1. Install two clamps (9) and clamp (22) on tachometer drive shaft (l).
2. Install tachometer drive shafl (1) and grommet (12) in firewall (13).
3. Install two brackets (17) on rocker arm cover (16) with two washers (11) and screws (10).
4. Install bracket (19) on air compressor stud (18) with new lockwasher (22) and nut (25).
5. Connect tachometer drive shaft (1) to tachometer drive unit (20).
6. Connect tachometer drive shafl. (1) to tachometer (2).
7. Install tachometer drive shafl (l), clamp (22), screw (21), and new locknut (23) on bracket (19).
8. Install tachometer drive shaft (1) and wiring harness (7) on two brackets (17) with four clamps (9), two screws (15), and new locknuts (8).
9. Position instrument cluster (3) on instrument panel (5) and lock in place by turning four lock-studs (4) 1/4 turn to right.

https://truckmanualshub.com/

4-14. TACHOMETER DRIVESHAFT AND DRIVE CORE MAINTENANCE (Contd)

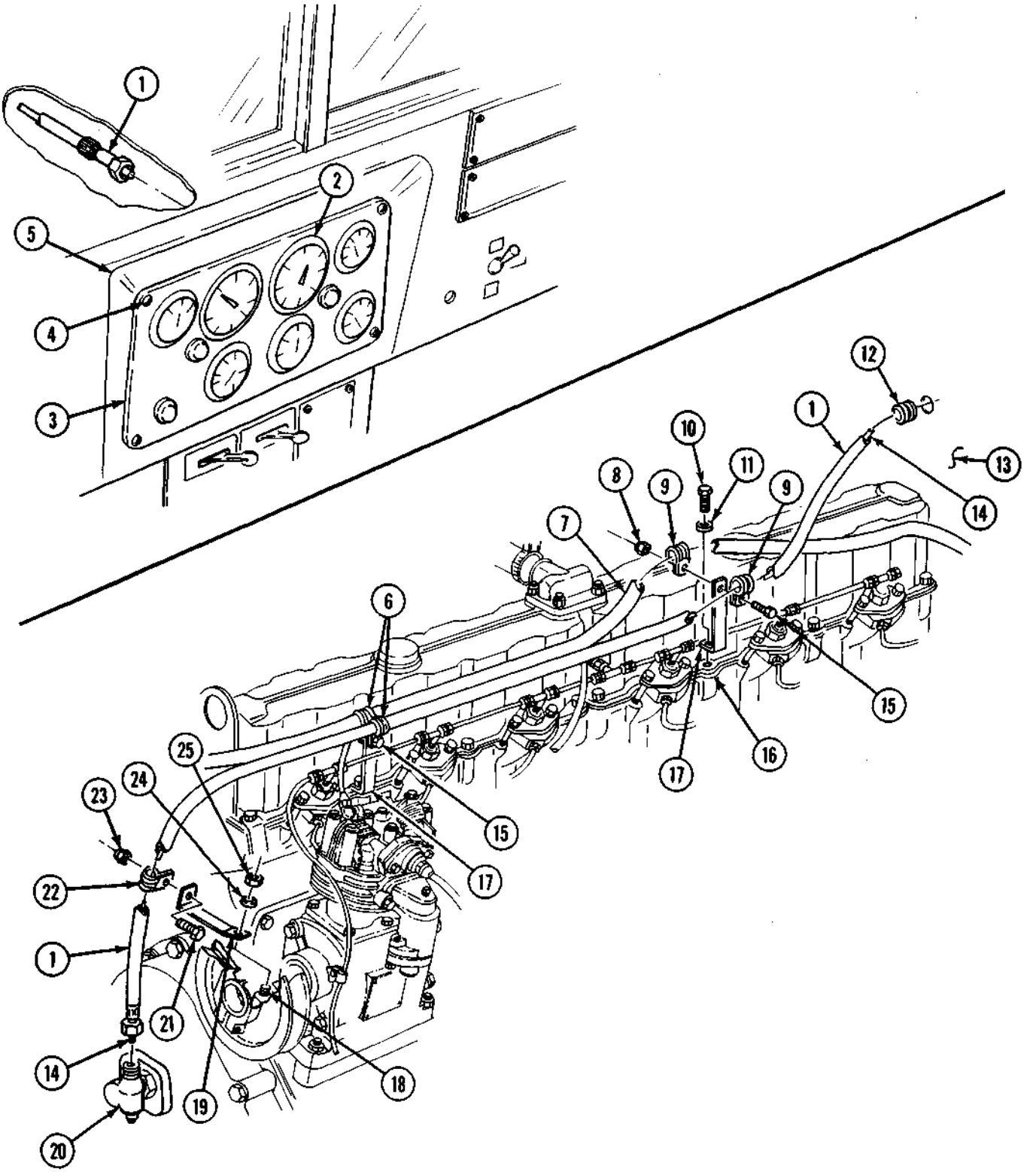

FOLLOW-ON TASK: Connect battery ground cable (para. 4-48).

https://truckmanualshub.com/

4-15. TACHOMETER ADAPTER REPLACEMENT

This task covers:

a. Removal

b. Installation

INITIAL SETUP:

APPLICABLE MODELS
All

MATERIALS/PARTS
Gasket

REFERENCES (TM)
TM 9-2320-361-10
TM 9-2320-361-20P

EQUIPMENT CONDITION
- Parking brake set (TM 9-2320-361-10).
- Radiator removed (para. 3-42).

a. Removal

1. Disconnect tachometer drive shaft (1) from tachometer adapter (5).
2. Remove tachometer adapter (5) from adapter (4).
3. Remove adapter (4) and gasket (3) from timing cover (2). Discard gasket (3).

b. Installation

1. Install new gasket (3) and adapter (4) on timing cover (2).
2. Install tachometer adapter (5) on adapter (4).
3. Connect tachometer drive shaft (1) on tachometer adapter (5).

https://truckmanualshub.com/

4-15. TACHOMETER ADAPTER REPLACEMENT (Contd)

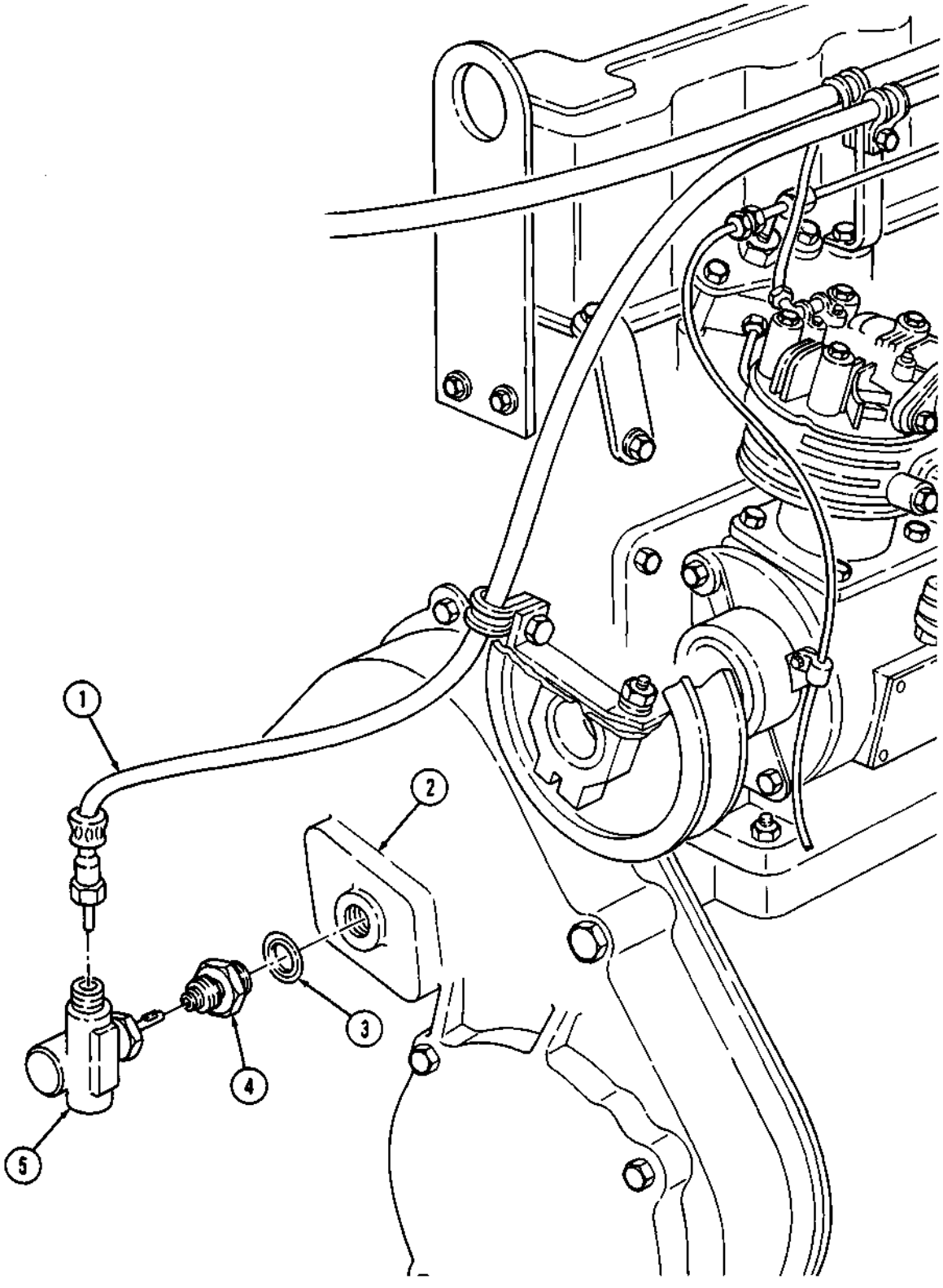

FOLLOW-ON TASK: Install radiator (para. 3-42).

https://truckmanualshub.com/

4-16. SPEEDOMETER DRIVESHAFT AND ADAPTER REPLACEMENT

This task covers:

a. Speedometer Shaft Removal
b. Speedometer Adapter Removal
c. Speedometer Adapter Installation
d. Speedometer Shaft Installation

INITIAL SETUP:

APPLICABLE MODELS
All

REFERENCES (TM)
LO 9-2320-209-12-1
TM 9-2320-361-10
TM 9-2320-361-20P

EQUIPMENT CONDITION
- Parking brake set (TM 9-2320-361-10).
- Battery ground cable disconnected (para. 4-48).
- Front and center cab tunnels removed (para. 11-22).

a. Speedometer Shaft Removal

1. Turn four lockstuds (4) 1/4 turn left and pull instrument cluster (5) away from instrument panel (14).
2. Remove speedometer driveshaft (2) from adapter (12).
3. Remove two nuts (7), clamps (6), screws (1), and speedometer driveshaft (2) from instrument panel (14) and floor (13).
4. Remove speedometer driveshaft (2) from speedometer (3).

b. Speedometer Adapter Removal

1. Remove adapter (12) from transfer case (11).
2. Remove adapter shaft (10), sleeve (9), and driveshaft (8) from adapter (12).

c. Speedometer Adapter Installation

1. Install driveshaft (8), sleeve (9), and adapter shaft (10) on adapter (12).
2. Install adapter (12) on transfer case (11).

d. Speedometer Shaft Installation

1. Install speedometer driveshaft (2) on speedometer (3).
2. Install speedometer driveshaft (2) on instrument panel (14) and floor (13) with two clamps (6), screws (1), and nuts (7).
3. Install speedometer driveshaft (2) on adapter (12).
4. Position instrument cluster (5) on instrument panel (14) and lock in place by turning four lockstuds (4) 1/4 turn to right.

https://truckmanualshub.com/

4-16. SPEEDOMETER DRIVESHAFT AND ADAPTER REPLACEMENT (Contd)

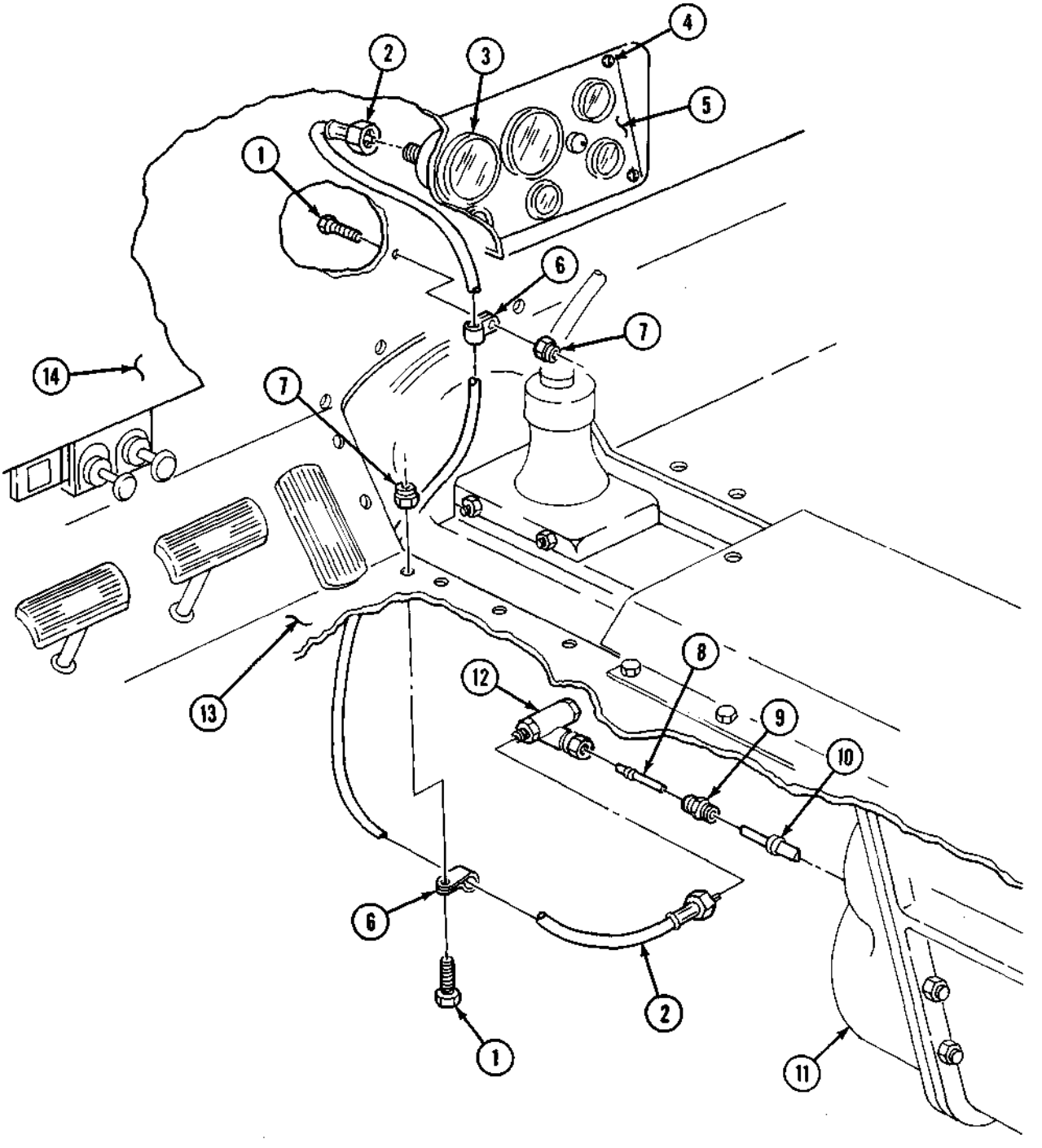

FOLLOW-ON TASKS:
- Install front and center cab tunnels (para. 11-22).
- Install battery ground cable (para. 4-48).
- Lubricate adapter (LO 9-2320-209-12-1).

https://truckmanualshub.com/

4-17. HEADLIGHT HIGH BEAM INDICATOR AND LAMP REPLACEMENT

This task covers:

a. Removal **b. Installation**

INITIAL SETUP:

APPLICABLE MODELS
All

MATERIALS/PARTS
Two lockwashers

REFERENCES (TM)
TM 9-2320-361-10
TM 9-2320-361-20P

EQUIPMENT CONDITION
Parking brake set (TM 9-2320-361-10).

NOTE

Headlight high beam indicator assembly and the two instrument cluster light assemblies are removed and installed the same. This procedure covers the high beam indicator light.

a. Removal

1. Turn lens (2) to left and remove.
2. Push in and turn lamp (3) to left and remove.
3. Remove two screws (4), lockwashers (5), and headlight high beam indicator (6) from instrument cluster (1). Discard lockwashers (5).
4. Disconnect connector (7) from headlight high beam indicator (6).

b. Installation

1. Connect connector (7) to headlight high beam indicator (6).
2. Install headlight high beam indicator (6) in instrument cluster (1) with two new lockwashers (5) and screws (4).
3. Install lamp (3) on high beam indicator (6).
4. Install lens (2) over lamp (3).

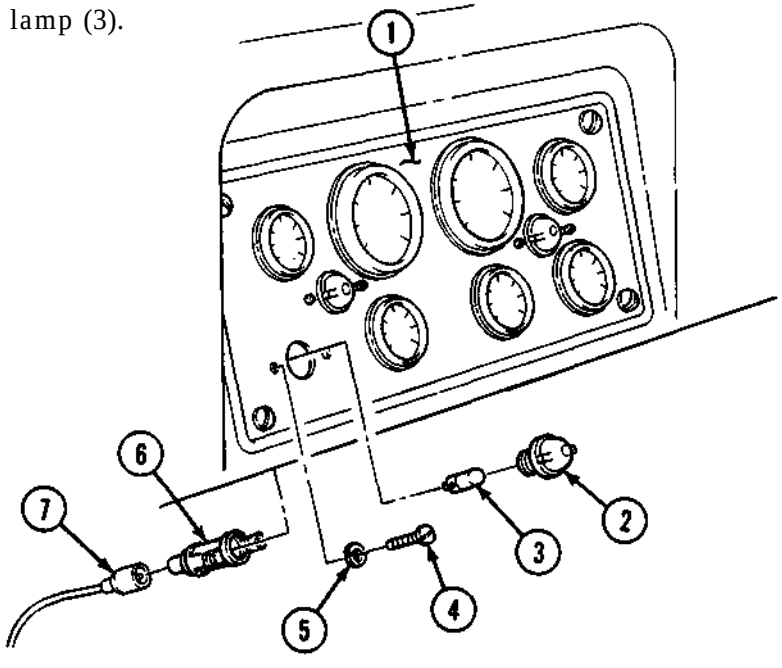

https://truckmanualshub.com/

4-18. LIGHT SWITCH REPLACEMENT

This task covers:

a. Removal

b. Installation

INITIAL SETUP:

APPLICABLE MODELS
All

MATERIALS/PARTS
Three lockwashers

REFERENCES (TM)
TM 9-2320-361-10
TM 9-2320-361-20P

EQUIPMENT CONDITION
- Parking brake set (TM 9-2320-361-10).
- Battery ground cable disconnected (para. 4-48).

a. Removal

1. Remove three screws (6), lockwashers (5), handles (4), and washers (3) from light switch (1). Discard lockwashers (5).
2. Remove four mounting screws (7) from instrument panel (2) and light switch (1). Push light switch (1) through instrument panel (2).
3. Disconnect front wiring harness connector (8) from light switch (1).

b. Installation

1. Connect front wiring harness connector (8) to light switch (1).
2. Position light switch (1) through instrument panel (2) and install with four mounting screws (7).
3. Install three washers (3) and handles (4) on light switch (1) with three new lockwashers (5) and screws (6).

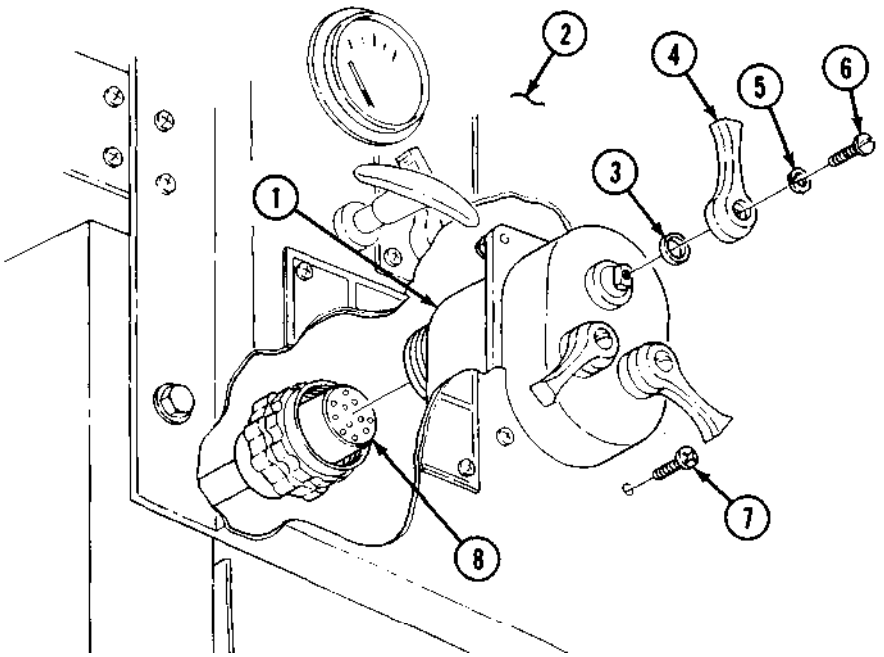

FOLLOW-ON TASKS:
- Connect battery ground cable (para. 4-48).
- Check lights for proper operation (TM 9-2320-361-10).

https://truckmanualshub.com/

4-19. TURN SIGNAL CONTROL AND INDICATOR LAMP REPLACEMENT

This task covers:

a. Removal b. Installation

INITIAL SETUP:

APPLICABLE MODELS
All

REFERENCES (TM)
TM 9-2320-361-10
TM 9-2320-361-20P

EQUIPMENT CONDITION
Ž Parking brake set (TM 9-2320-361-10).
• Battery ground cable disconnected (para. 4-48).

a. Removal

1. Remove cable connector (5) from turn signal control (4).
2. Remove clamp (2) and turn signal control (4) from steering column (3).
3. Turn lamp lens (1) 1/2 turn to left and remove from turn signal control (4).
4. Remove lamp (7) from lamp socket (6).

b. Installation

1. Install lamp (7) in lamp socket (6).
2. Install lamp lens (1) in turn signal control (4) and rotate 1/2 turn to right.
3. Install turn signal control (4) on steering column (3) with clamp (2).
4. Connect cable connector (5) to turn signal control (4).

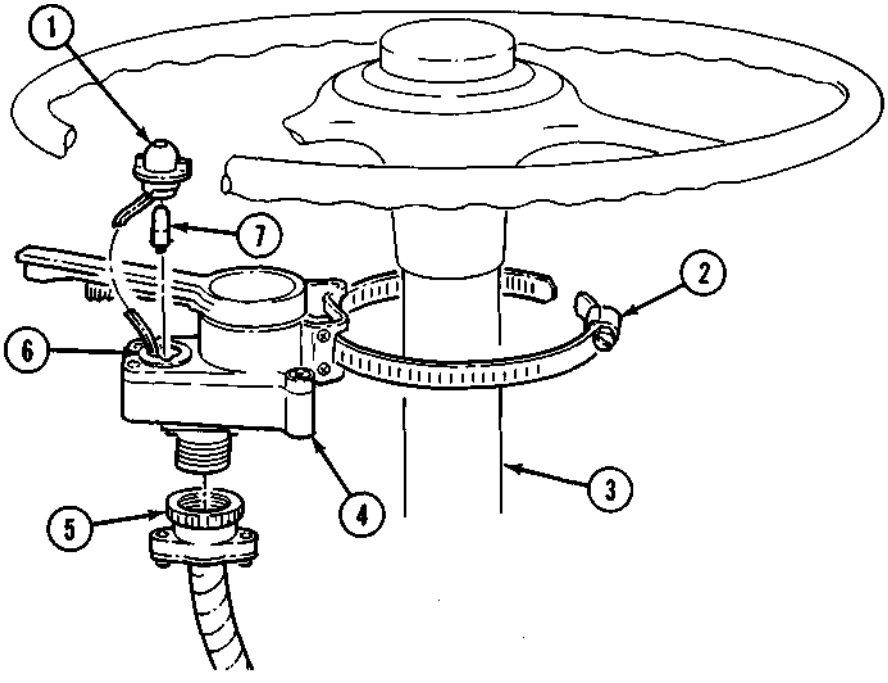

FOLLOW-ON TASKS: ŽConnect battery ground cable (para. 4-48).
• Check turn signal control for proper operation (TM 9-2320-361-10).

https://truckmanualshub.com/

4-20. TURN SIGNAL FLASHER REPLACEMENT

This task covers:

a. Removal

b. Installation

INITIAL SETUP:

APPLICABLE MODELS
All

MATERIALS/PARTS
Four lockwashers

REFERENCES (TM)
TM 9-2320-361-10
TM 9-2320-361-20P

EQUIPMENT CONDITION
- Parking brake set (TM 9-2320-361-10).
- Hood raised and secured (TM 9-2320-361-10).
- Battery ground cable disconnected (para. 4-48).

a. Removal

1. Disconnect cable connector (4) from turn signal flasher (10).
2. Remove nut (1), lockwasher (2), ground wire (3), screw (7), and lockwasher (6) from turn signal flasher (10). Discard lockwashers (2) and (6).
3. Remove nut (12), lockwasher (11), screw (9), lockwasher (8), and turn signal flasher (10) from left front fender (5). Discard lockwashers (11) and (8).

b. Installation

1. Install turn signal flasher (10) on left front fender (5) with screw (9), two new lockwashers (8) and (11), and nut (12).
2. Install screw (7), new lockwasher (6), ground wire (3), new lockwasher (2), and nut (1).
3. Connect cable connector (4) to turn signal flasher (10).

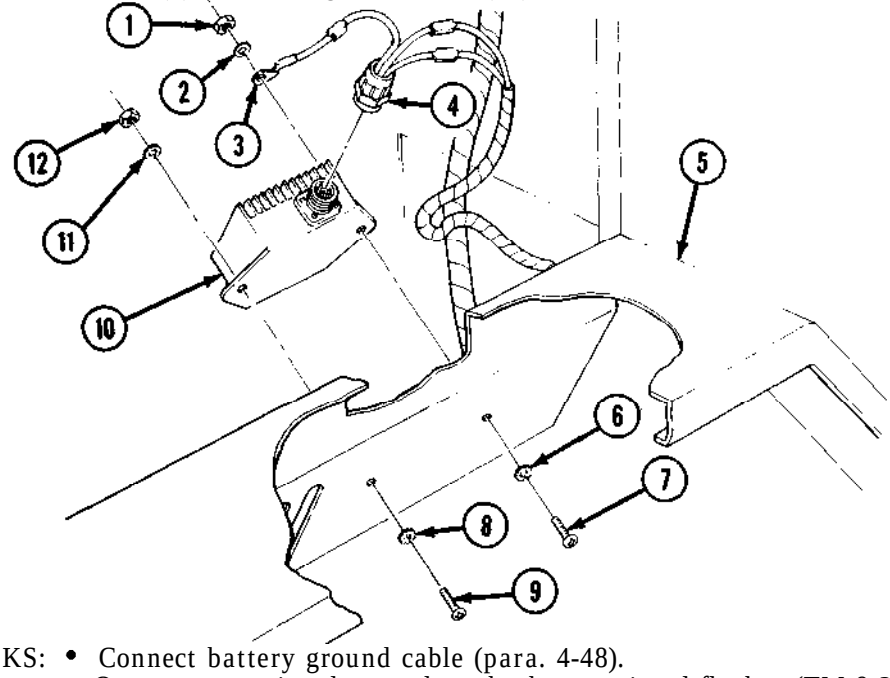

FOLLOW-ON TASKS:
- Connect battery ground cable (para. 4-48).
- Operate turn signal control to check turn signal flasher (TM 9-2320-361-10).

https://truckmanualshub.com/

4-21. ACCESSORY SWITCH REPLACEMENT

This task covers:

a. Removal

b. Installation

INITIAL SETUP:

APPLICABLE MODELS
All

MATERIALS/PARTS
Two lockwashers

REFERENCES (TM)
TM 9-2320-361-10
TM 9-2320-361-20P

EQUIPMENT CONDITION
- Parking brake set (TM 9-2320-361-10).
- Battery ground cable disconnected (para. 4-48).

a. Removal

1. Remove screw (9), lockwasher (10), and handle (8) from switch (4). Discard lockwasher (10).
2. Remove nut (7), lockwasher (6), and switch plate (1) from switch (4). Discard lockwasher (6).
3. Remove switch (4) from instrument panel (5).

NOTE

Tag wires for installation.

4. Disconnect wires (11), (12), (13), and (14) from switch (4).

b. Installation

1. Connect wires (11), (12), (13), and (14) to switch (4).
2. Install switch (4) and switch plate (1) on instrument panel (5) with new lockwasher (6) and nut (7). Position locator tab (3) in hole (2).
3. Install handle (8) on switch (4) with new lockwasher (10) and screw (9).

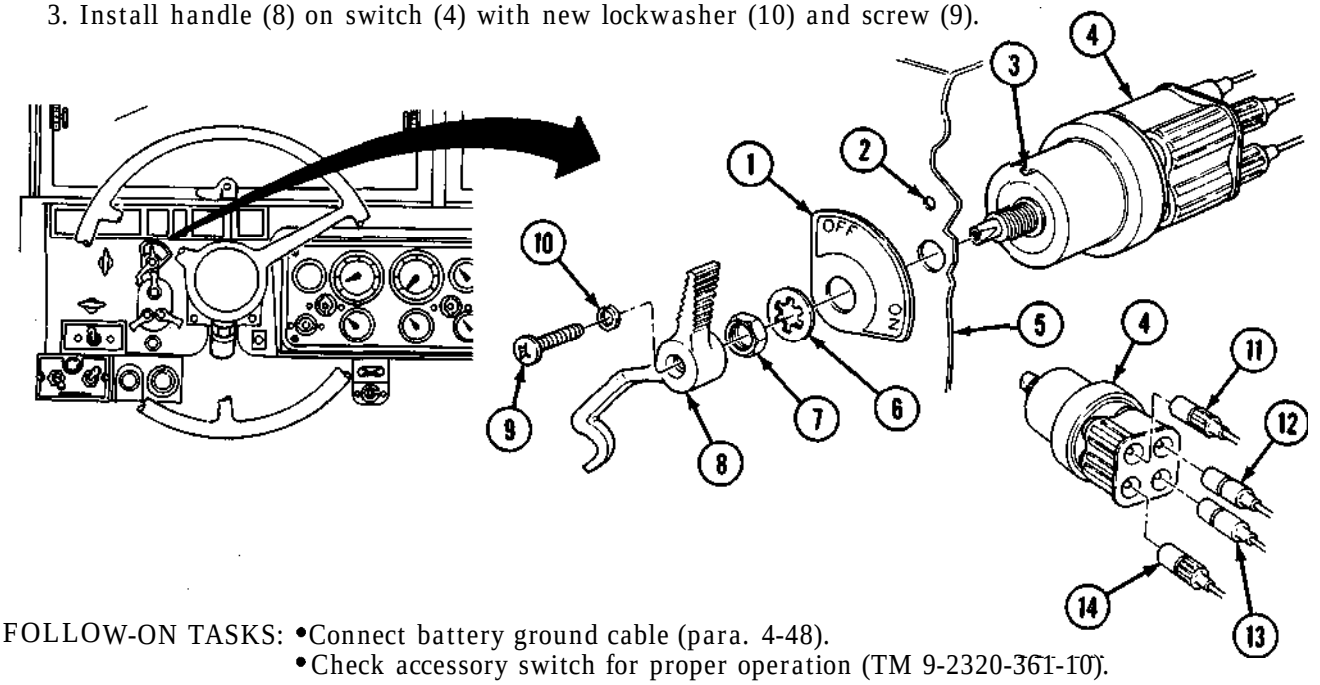

FOLLOW-ON TASKS:
- Connect battery ground cable (para. 4-48).
- Check accessory switch for proper operation (TM 9-2320-361-10).

https://truckmanualshub.com/

4-22. MANIFOLD HEATER SWITCH REPLACEMENT

This task covers:

a. Removal b. Installation

INITIAL SETUP:

APPLICABLE MODELS
All

REFERENCES (TM)
TM 9-2320-361-10
TM 9-2320-361-20P

EQUIPMENT CONDITION
- Parking brake set (TM 9-2320-361-10).
- Battery ground cable disconnected (para. 4-48).

a. Removal

1. Remove two screws (3) and manifold heater switch (6) from instrument panel (4).

NOTE

Tag all wires for installation.

2. Disconnect wires (1) and (7) and remove manifold heater switch (6).

b. Installation

1. Connect wires (1) and (7) to manifold heater switch (6).
2. Push switch lever (5) through hole (2) in instrument panel (4). Be sure switch lever (5) is positioned toward OFF marked on data plate.
3. Install manifold heater switch (6) on instrument panel (4) with two screws (3).

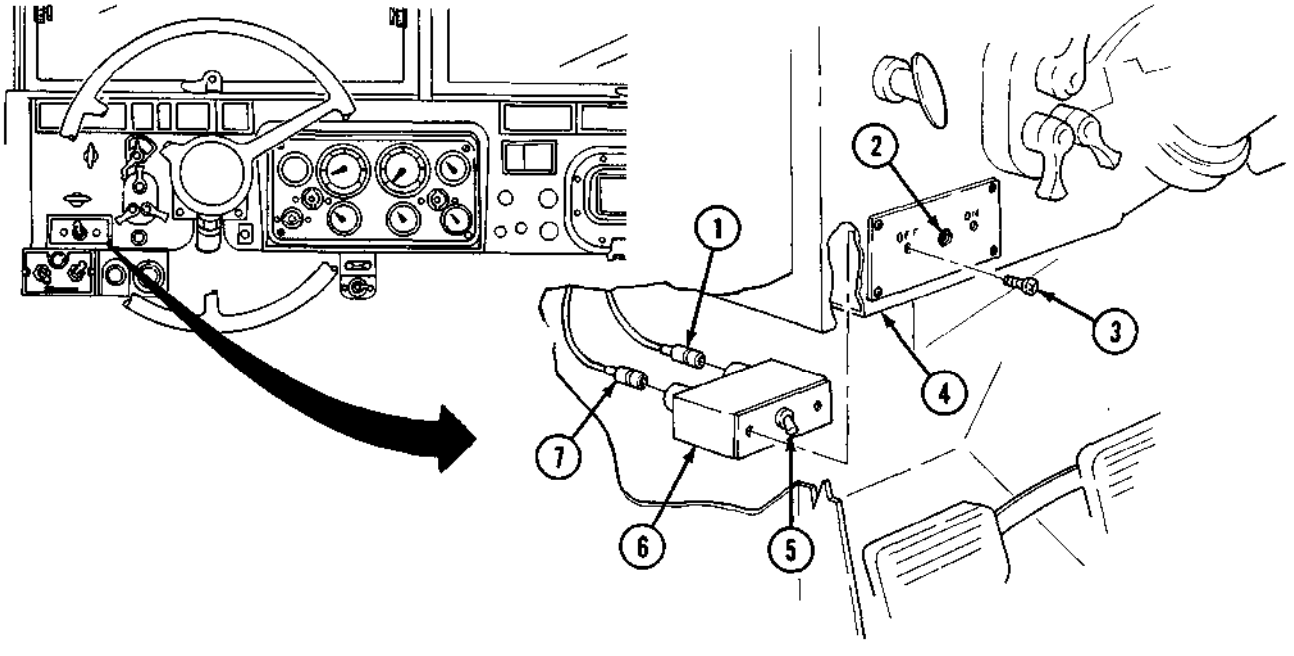

FOLLOW-ON TASKS:
- Connect battery ground cable (para. 4-48).
- Start engine (TM 9-2320-361-10) and check operation of manifold heater switch.

https://truckmanualshub.com/

4-23. OIL PRESSURE SENDING UNIT REPLACEMENT

This task covers:

a. Removal **b. Installation**

INITIAL SETUP:

APPLICABLE MODELS
All

MATERIALS/PARTS
Antiseize tape (Appendix C, Item 27)

REFERENCES [TM)
TM 9-2320-361-10
TM 9-2320-361-20P

EQUIPMENT CONDITION
- Parking brake set (TM 9-2320-361-10).
- Hood raised and secured (TM 9-2320-361-10).
- Battery ground cable disconnected (para. 4-48).
- Remove air cleaner assembly (para. 3-15).

CAUTION

The 60 psi and 120 psi gages and sending units are not interchangeable. Do not interchange the 60 psi gage or sending unit with a 120 psi gage or sending unit.

NOTE

Do not remove elbow and adapter unless items require replacement.

1. Disconnect wire (1) from oil pressure sending unit (2).
2. Remove oil pressure sending unit (2) from adapter fitting (3).
3. Remove adapter fitting (3) and elbow (4) from engine (5).

NOTE

Clean all male pipe threads and wrap with antiseize tape before installation.

1. Install elbow (4) and adapter fitting (3) on engine (5).
2. Install oil pressure sending unit (2) in adapter (3).
3. Connect wire (1) to oil pressure sending unit (2).

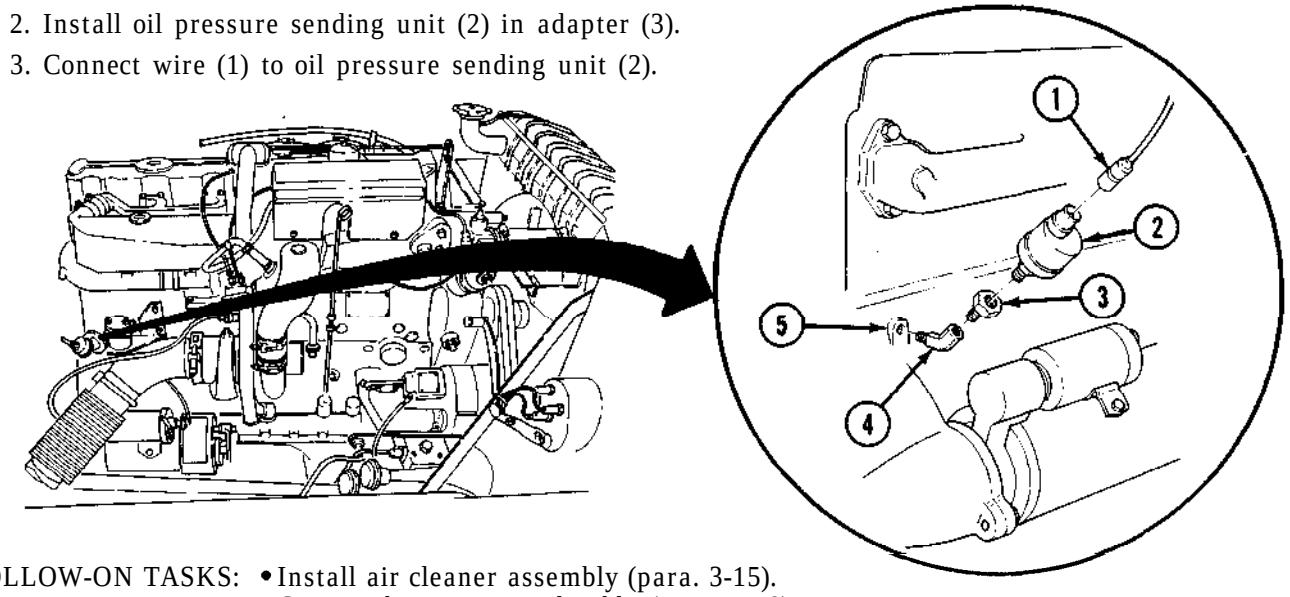

FOLLOW-ON TASKS:
- Install air cleaner assembly (para. 3-15).
- Connect battery ground cable (para. 4-48).
- Start engine (TM 9-2320-361-10) and check for oil leaks around adapter and elbow.
- Check for proper operation of oil pressure gage (TM 9-232-361-10).

https://truckmanualshub.com/

4-24. ENGINE TEMPERATURE SENDING UNIT REPLACEMENT

This task covers:

a. Removal | **b. Installation**

INITIAL SETUP:

APPLICABLE MODELS
All

MATERIALS/PARTS
Sealing compound (Appendix C, Item 23)

REFERENCES (TM)
TM 9-2320-361-10
TM 9-2320-361-20P

EQUIPMENT CONDITION
- Parking brake set (TM 9-2320-361-10).
- Hood raised and secured (TM 9-2320-361-10).
- Battery ground cable disconnected (para. 4-48).
- Cooling system (eight quarts) drained so that coolant level is below engine intake manifold (para. 3-41).

a. Removal

1. Disconnect wire (2) from engine temperature sending unit (3).
2. Remove engine temperature sending unit (3) from intake manifold (1).

b. Installation

NOTE

Clean all male pipe threads and coat with sealing compound before installation.

1. Install engine temperature sending unit (3) in intake manifold (1).
2. Connect wire (2) to engine temperature sending unit (3).

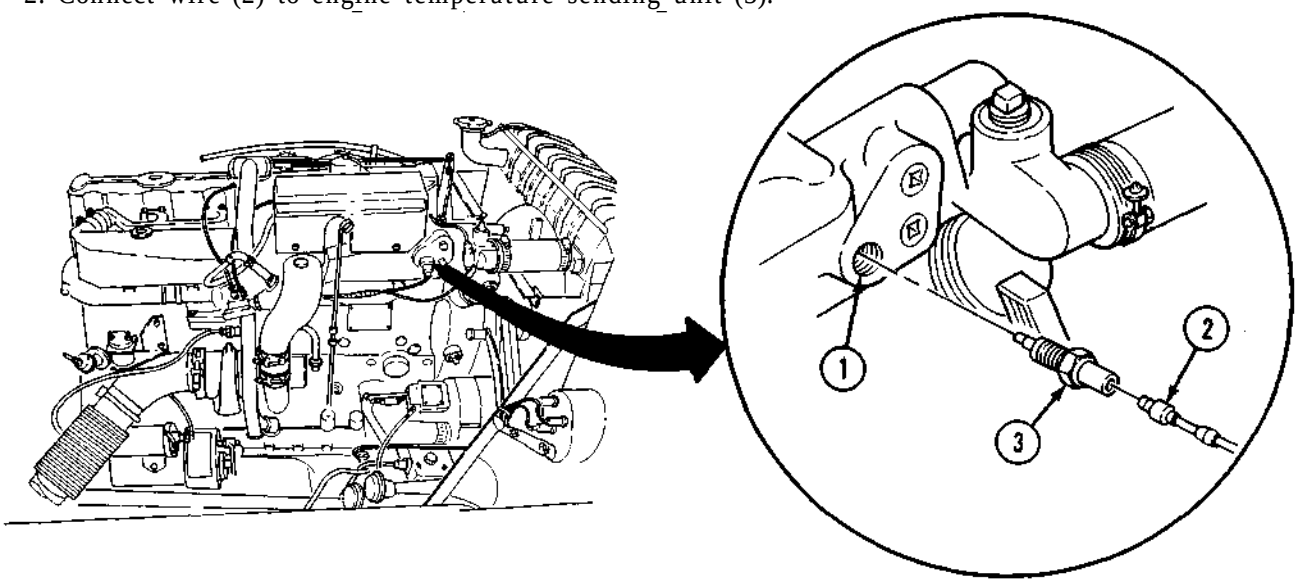

FOLLOW-ON TASKS:
- Connect battery ground cable (para. 4-48).
- Fill cooling system (para. 3-41).
- Start engine (TM 9-2320-361-10) and check for coolant leaks at water manifold.
- Check coolant temperature gage for proper operation.

https://truckmanualshub.com/

4-25. LOW AIR PRESSURE SWITCH REPLACEMENT

This task covers:

a. Removal

b. Installation

INITIAL SETUP:

APPLICABLE MODELS
All

MATERIALS/PARTS
Antiseize tape (Appendix C, Item 27)

REFERENCES (TM)
TM 9-2320-361-10
TM 9-2320-361-20P

EQUIPMENT CONDITION
- Parking brake set (TM 9-2320-361-10).
- Battery ground cable disconnected (para. 4-48).

NOTE
Tag wires for installation.

1. Disconnect wires (1) and (4) from low air pressure switch (2).
2. Remove low air pressure switch (2) from tube and hose manifold (3).

NOTE
Clean all male pipe threads, and wrap with antiseize tape before installation.

1. Install low air pressure switch (2) in tube and hose manifold (3).
2. Connect wires (1) and (4) to low air pressure switch (2).

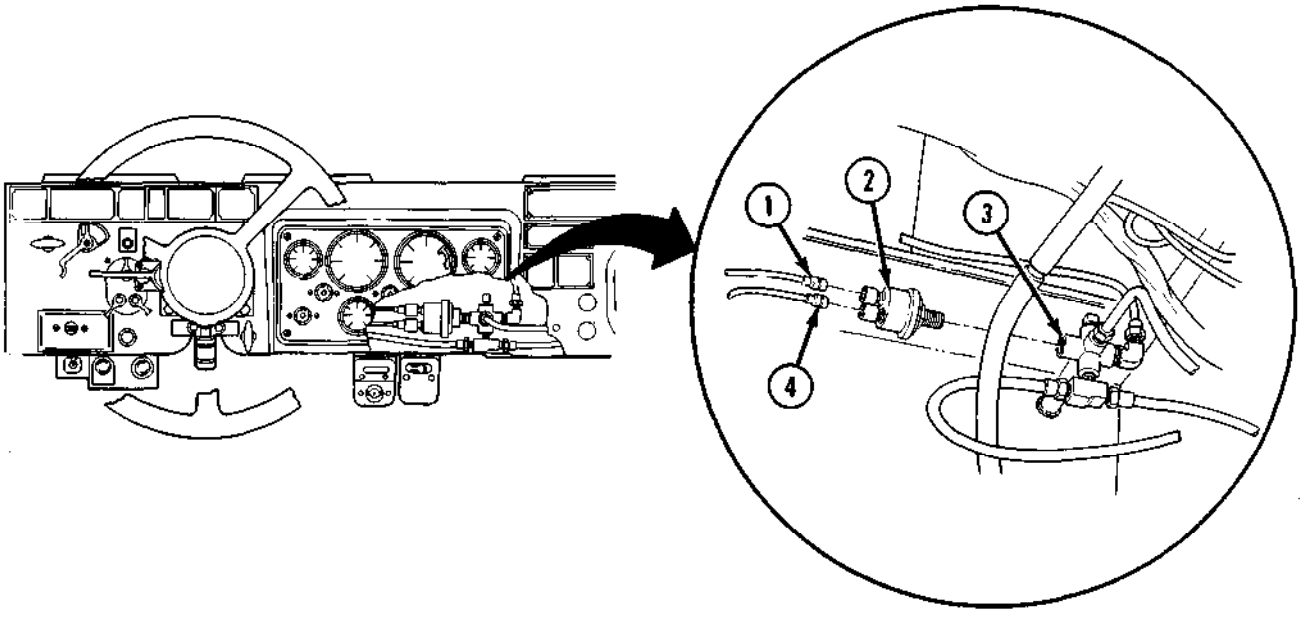

FOLLOW-ON TASKS:
- Connect battery ground cable (para. 4-48)
- Start engine (TM 9-2320-361-10) and check low air pressure switch operation.

https://truckmanualshub.com/

4-26. FUEL LEVEL SENDING UNIT REPLACEMENT

This task covers:

a. Removal **b. Installation**

INITIAL SETUP:

APPLICABLE MODELS
All

MATERIALS/PARTS
Gasket

REFERENCES (TM)
TM 9-2320-361-10
TM 9-2320-361-20P

EQUIPMENT CONDITION
- Parking brake set (TM 9-2320-361-10).
- Battery ground cable disconnected (para. 4-48).
- Spare tire removed (M342A2), (TM 9-2320-361-10).
- Fuel tank removed (M275A2, M756A2, M185A3, and M109A3) (para. 3-24 or 3-25).

GENERAL SAFETY INSTRUCTIONS
Diesel fuel is flammable. Do not perform this procedure near open flames.

WARNING

Diesel fuel is flammable. Do not perform fuel system procedures near open flame. Injury or death to personnel may result.

a. Removal

1. Disconnect wire (3) from sending unit (4).
2. Remove five screws (2) and copper washers (1) from sending unit (4).
3. Remove sending unit (4) and gasket (5) from fuel tank (6). Clean gasket remains from mating surfaces. Discard gasket (5).

b. Installation

1. Install new gasket (5) and sending unit (4) on fuel tank (6) with five copper washers (1) and screws (2).
2. Connect wire (3) to sending unit (4).

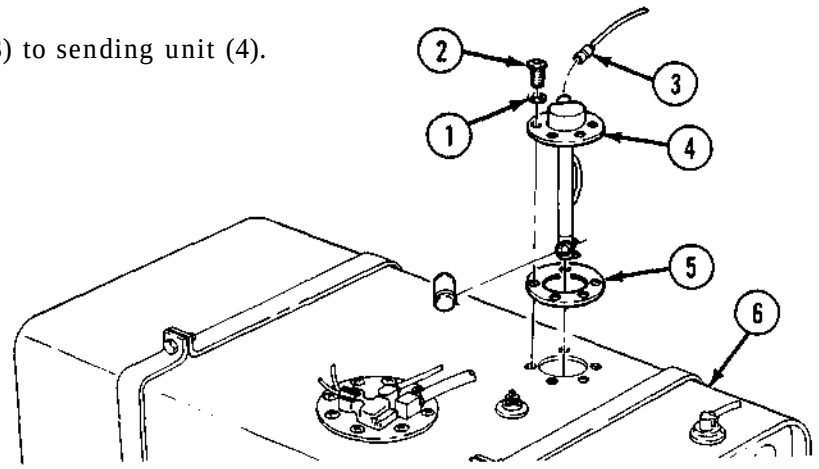

FOLLOW-ON TASKS:
- Install spare tire (TM 9-2320-361-10).
- Install fuel tank (para. 3-24 or 3-25).
- Connect battery ground cable (para. 4-48).
- Start engine (TM 9-2320-361-10) and check fuel gage for proper operation.

https://truckmanualshub.com/

4-27. LOW AIR BUZZER REPLACEMENT

This task covers:

a. Removal b. Installation

INITIAL SETUP:

APPLICABLE MODELS
All

MATERIALS/PARTS
Seven lockwashers

PERSONNEL REQUIRED
Two

REFERENCES (TM)
TM 9-2320-361-10
TM 9-2320-361-20P

EQUIPMENT CONDITION
- Parking brake set (TM 9-2320-361-10).
- Battery ground cable disconnected (para. 4-48).

a. Removal

1. Disconnect wire (13) from low air buzzer (3).
2. Remove two nuts (1) and lockwashers (2) from two stud mounts (4). Discard lockwashers (2).
3. Remove nut (15) and lockwasher (14) from stud mount (11). Discard lockwasher (14).
4. Bend ground strap (12) outward and remove low air buzzer (3) from two stud mounts (4) and stud mount (11).

NOTE
Assistant will help with steps 5 and 6.

5. Remove two nuts (7), lockwashers (6), and mounting studs (4) from firewall (5). Discard lockwashers (6).
6. Remove nut (9), lockwasher (8), stud mount (11), ground strap (12), and lockwasher (10) from firewall (5). Discard lockwashers (8) and (10).

b. Installation

NOTE
Assistant will help with steps 1 and 2.

1. Install stud mount (11) and ground strap (12) on firewall (5) with two new lockwashers (10) and (8) and nut (9).
2. Install two stud mounts (4) in firewall (5) with two new lockwashers (6) and nuts (7).
3. Install low air buzzer (3) on two stud mounts (4) and stud mount (11).
4. Lift end of ground strap (12) and secure on stud mount (11) with new lockwasher (14) and nut (15).
5. Install two new lockwashers (2) and nuts (1) on stud mounts (4).
6. Connect wire (13) to low air buzzer (3).

https://truckmanualshub.com/

4-27. LOW AIR BUZZER REPLACEMENT (Contd)

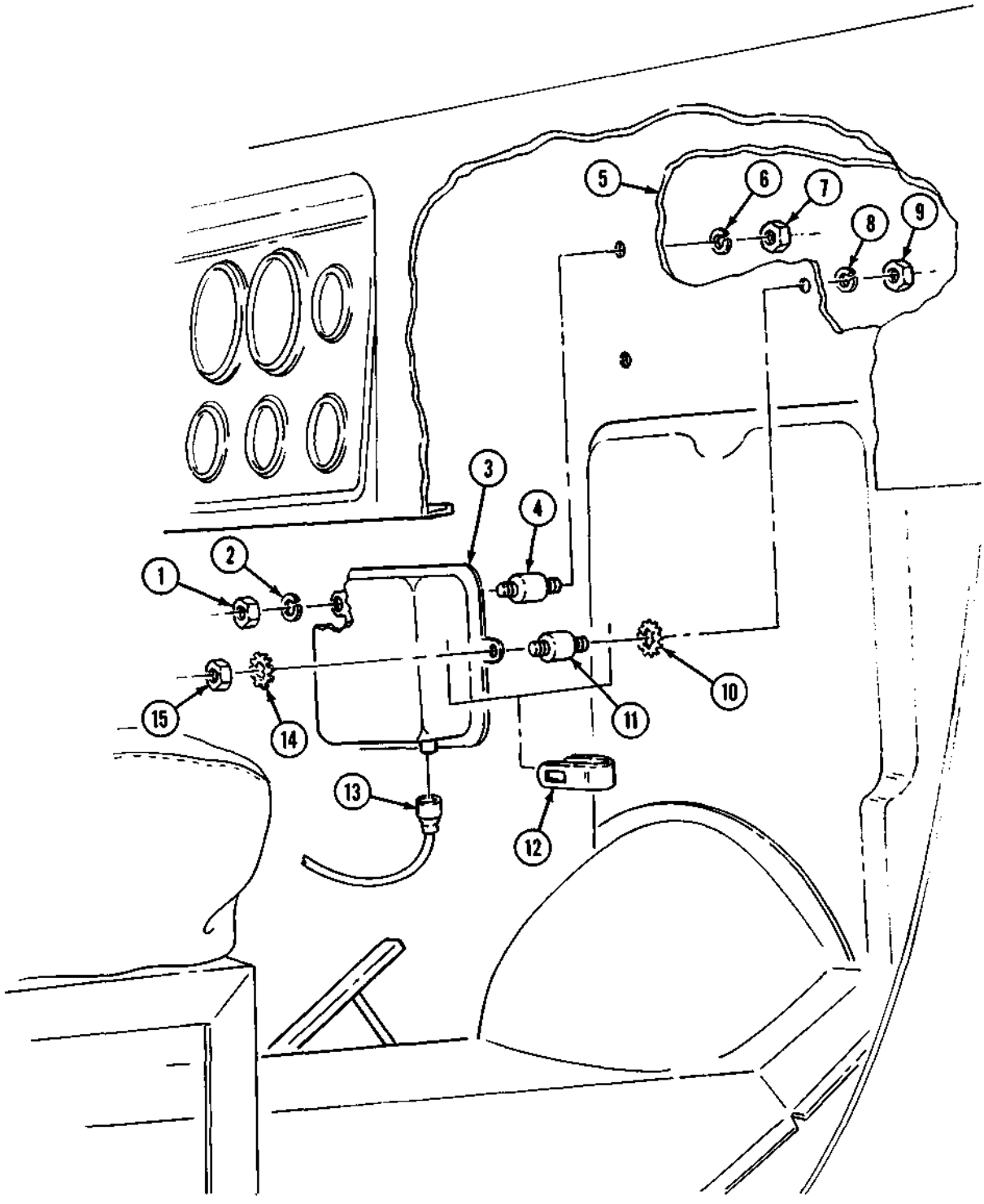

FOLLOW-ON TASKS: • Connect battery ground cable (para. 4-48).
• Start engine (TM 9-2320-361-10) and check low air buzzer operation.

https://truckmanualshub.com/

4-28. HEADLIGHT DIMMER SWITCH REPLACEMENT

This task covers:

a. Removal b. Installation

INITIAL SETUP:

APPLICABLE MODELS
All

MATERIALS/PARTS
Two lockwashers

PERSONNEL REQUIRED
TWO

REFERENCES (TM)
TM 9-2320-361-10
TM 9-2320-361-20P

EQUIPMENT CONDITION
- Parking brake set (TM 9-2320-361-10).
- Battery ground cable disconnected (para. 4-48).

a. Removal

1. Remove two screws (1) and lockwashers (9). Discard lockwashers (9).
2. Push dimmer switch plunger (4) through floorboard (2) and slide dimmer switch (8) away from protective cover (3).

NOTE
Tag wires for installation.

3. Disconnect wires (5), (6), and (7) from dimmer switch (8).

b. Installation

1. Connect three wires (5), (6), and (7) to dimmer switch (8).

NOTE
Assistant will help with steps 2 and 3.

2. Position dimmer switch plunger (4) through floorboard (2) and install with two new lockwashers (9) and screws (1). Do not tighten screws (1).
3. Position protective cover (3) over dimmer switch (8). Slide slotted side of cover (3) on dimmer switch (8) and floorboard (2). Tighten screws (1).

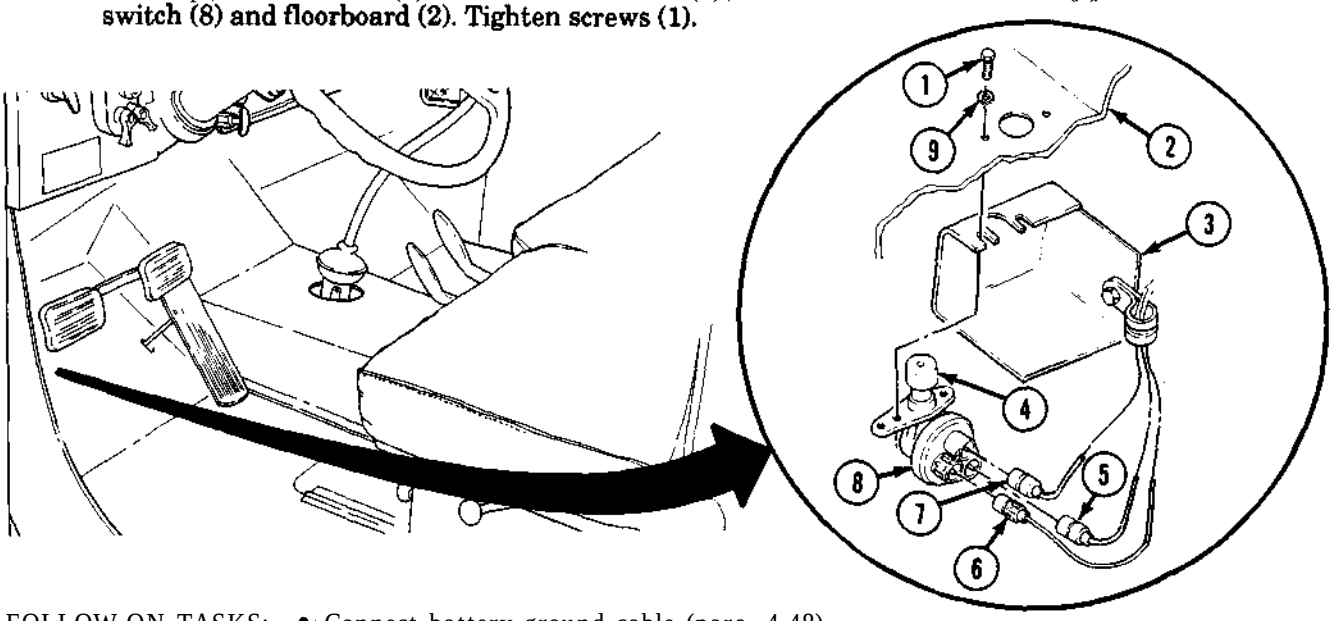

FOLLOW-ON TASKS:
- Connect battery ground cable (para. 4-48).
- Check operation of headlight dimmer switch (TM 9-2320-361-10).

https://truckmanualshub.com/

4-29. STOPLIGHT SWITCH REPLACEMENT

This task covers:

a. Removal

b. Installation

INITIAL SETUP:

APPLICABLE MODELS
All (except M275A2)

REFERENCES (TM)
TM 9-2320-361-10
TM 9-2320-361-20P

EQUIPMENT CONDITION
- Parking brake set (TM 9-2320-361-10).
- Battery ground cable disconnected (para. 4-48).

a. Removal

1. Remove two screws (7) and shield (6) from mounting bracket (1).

NOTE

Tag wires for installation.

2. Disconnect wires (2) and (3) from stoplight switch (4).
3. Remove stoplight switch (4) from tee (5).

b. Installation

1. Install stoplight switch (4) on tee (5).
2. Connect wires (2) and (3) to stoplight switch (4).
3. Install shield (6) to mounting bracket (1) with two screws (7).

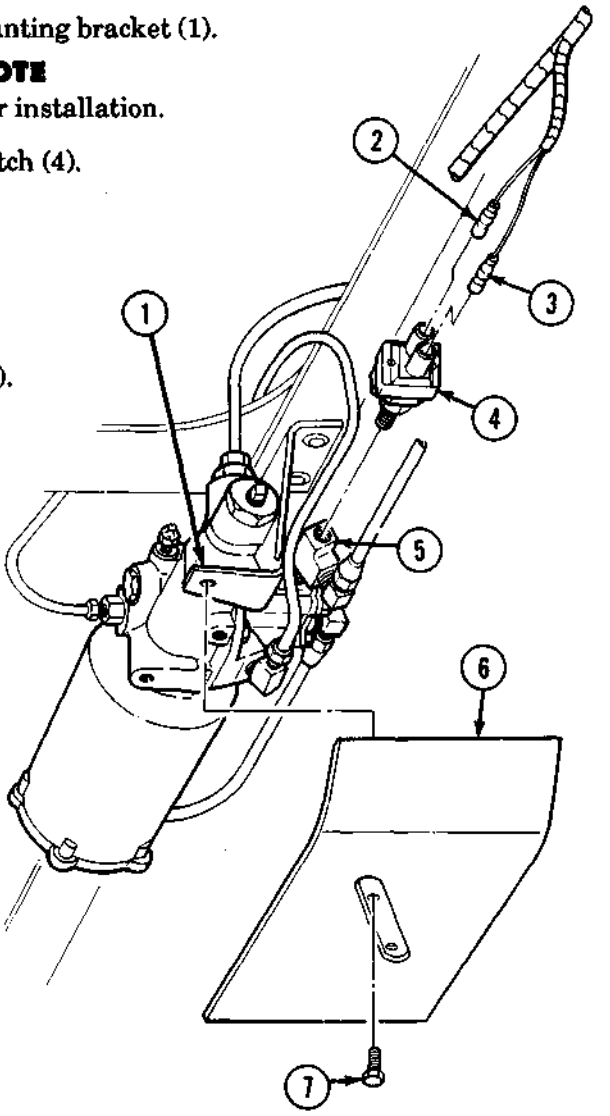

FOLLOW-ON TASKS:
- Connect battery ground cable (para. 4-48).
- Turn light switch to stoplight position and check stoplight operation by pressing brake pedal several times (TM 9-2320-361-10).

https://truckmanualshub.com/

4-30. HORN BUTTON REPLACEMENT

This task covers:

a. Removal b. Installation

INITIAL SETUP:

APPLICABLE MODELS
All

MATERIALS/PARTS
O-ring
Safety wire (Appendix C, Item 22)

REFERENCES (TM)
TM 9-2320-361-10
TM 9-2320-361-20P

EQUIPMENT CONDITION
- Parking brake set (TM 9-2320-361-10).
- Battery ground cable disconnected (para. 4-48).

a. Removal

1. Remove three screws (4) and lift horn button adapter (3) from top of steering wheel (1). Disconnect horn button connector (7) from wire connector (10).
2. Remove spring (9) and seal (2).
3. Remove retaining ring (6), horn button (5), and O-ring (8) from adapter (3). Discard O-ring (8).

NOTE

Perform steps 4 through 8 only if horn wire is damaged.

4. Disconnect plug (16) from connector (15) and slide shell (14) back on horn wire (12).
5. Remove slotted washer (18) from behind connector (15) and slide shell (14) off end of wire (12).
6. Remove rubber bushing (13) from steering gearbox (19) and slide offend of wire (12).

NOTE

Safety wire must be long enough to reach from other end of steering column plus two additional feet.

7. Attach safety wire (17) to horn wire (12).

NOTE

Safety wire must be left inside steering column. It will be used to pull new horn wire through steering column.

8. Pull horn wire (12) through steering column (11). Leave safety wire (17) in steering column (11).

b. Installation

NOTE

If horn wire has not been removed, proceed to step 6.

1. Pull horn wire (12) through steering column (11). Make sure horn wire (12) is taut between steering column (11) and connector (15). Discard safety wire (17).
2. Install rubber bushing (13) on horn wire (12) and into hole in steering gearbox (19).
3. Move shell (14) upward on wire (12) and install slotted washer (18) behind connector (15). Slide shell (14) over slotted washer (18).
4. Connect plug (16) to connector (15).
5. Install spring (9) and seal (2) in steering column (11).
6. Install retaining ring (6), horn button (5), and new O-ring (8) in adapter (3).
7. Connect wire connector (10) to horn button connector (7).
8. Install horn adapter (3) in steering column (11) and steering wheel (1) with three screws (4).

https://truckmanualshub.com/

4-30. HORN BUTTON REPLACEMENT (Contd)

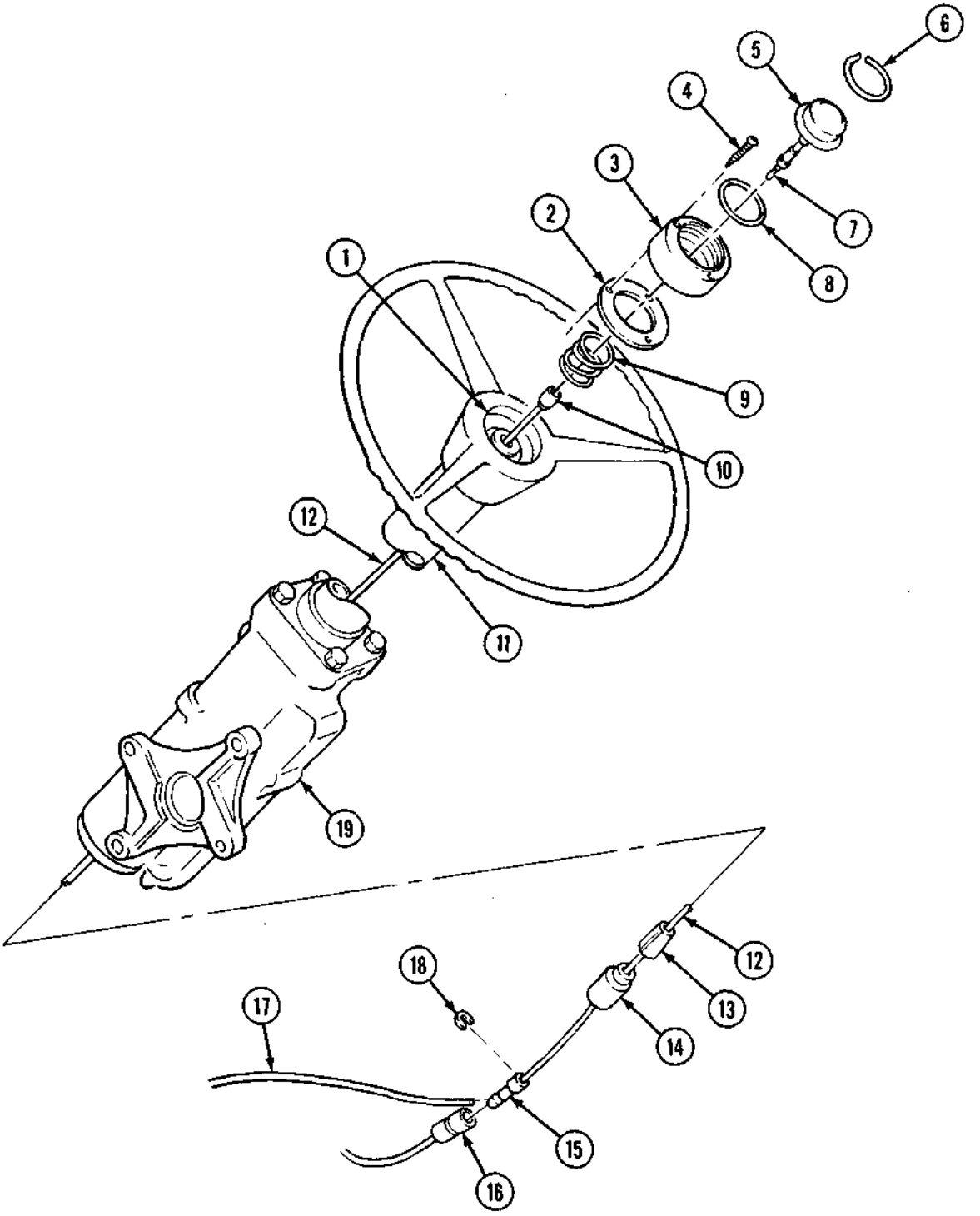

FOLLOW-ON TASKS:
- Connect battery ground cable (para. 4-48).
- Check horn for proper operation.

https://truckmanualshub.com/

4-31. AIR HORN, SOLENOID, AND BRACKET REPLACEMENT

This task covers:

a. Solenoid Removal
b. Air Horn Removal
c. Air Horn Installtion
d. Solenoid Installation

INITIAL SETUP:

APPLICABLE MODELS
All

MATERIALS/PARTS
Four lockwashers
Antiseize tape (Appendix C, Item 27)

REFERENCES (TM)
TM 9-2320-361-10
TM 9-2320-361-20P

EQUIPMENT CONDITION
- Parking brake set (TM 9-2320-361-10).
- Hood raised and secured (TM 9-2320-361-10).
- Battery ground cable disconnected (para. 4-48).
- Air reservoirs drained (TM 9-2320-361-10).

GENERAL SAFETY INSTRUCTIONS
Do not disconnect air lines before draining air reservoirs.

a. Solenoid Removal

WARNING

Do not disconnect air lines before draining air reservoirs. Small parts under pressure may shoot out with high velocity, causing injury to personnel.

1. Disconnect air line (2) from elbow (3).
2. Remove elbow (3) from air solenoid (4).

NOTE

Tag wires for installation.

3. Disconnect wire plugs (5) and (6) from air solenoid (4).
4. Remove air solenoid (4) and nipple (7) from air horn (1).

b. Air Horn Removal

1. Remove two nuts (10), lockwashers (11), screws (16), and air horn (1) from bracket (12). Discard lockwashers(11).
2. Remove two nuts (14), lockwashers (13), screws (9), and bracket (12) from fender (15) and brace (8). Discard lockwashers(13).

c. Air Horn Installation

1. Install bracket (12) on fender (15) with brace (8), two screws (9), new lockwashers (13), and nuts (14).
2. Install air horn (1) on bracket (12) with two screws (16), new lockwashers (11), and nuts (10).

d. Solenoid Installation

NOTE

Clean all male pipe threads and wrap with antiseize tape before installation.

1. Install nipple (7) and air solenoid (4) on air horn (1).
2. Install elbow (3) on air solenoid (4).

https://truckmanualshub.com/

4-31. AIR HORN, SOLENOID, AND BRACKET REPLACEMENT (Contd)

3. Connect air line (2) to elbow (3).
4. Connect wire plugs (5) and (6) to air solenoid (4).

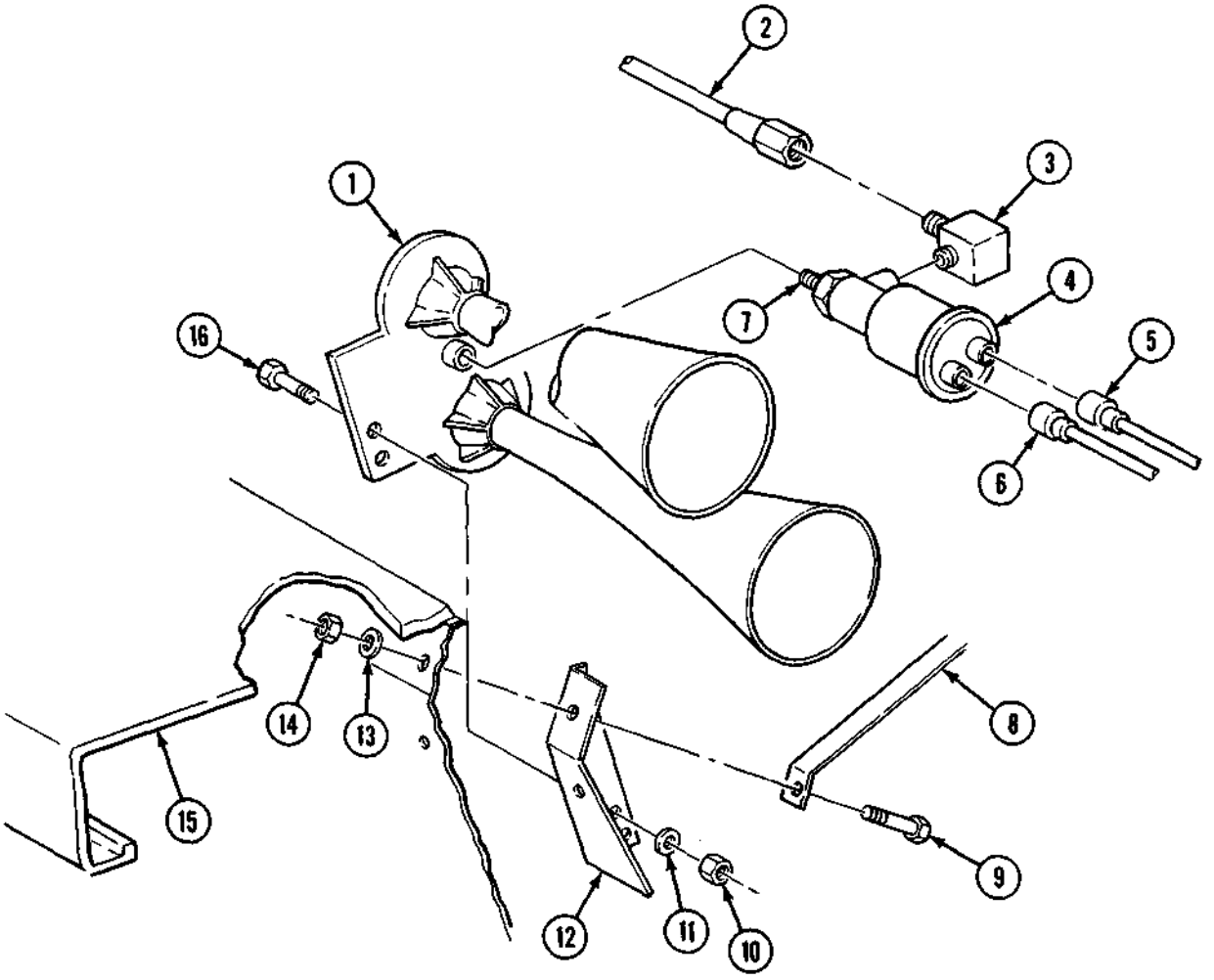

FOLLOW-ON TASKS:
- Connect battery ground cables (para. 4-48).
- Start engine (TM 9-2320-361-10) and allow air pressure to build up to normal operating range. Check for air leaks at horn solenoid.
- Check horn for proper operation (TM 9-2320-361-10).

https://truckmanualshub.com/

4-32. STOPLIGHT AIR PRESSURE SWITCH REPLACEMENT (M275A2)

This task covers:

a. Removal b. Installation

INITIAL SETUP:

APPLICABLE MODELS
M275A2

MATERIALS/PARTS
Antiseize tape (Appendix C, Item 27)

REFERENCES (TM)
TM 9-2320-361-10
TM 9-2320-361-20P

EQUIPMENT CONDITION
- Parking brake set (TM 9-2320-361-10).
- Air reservoirs drained (TM 9-2320-361-10).
- Battery ground cable disconnected (para. 4-48).

GENERAL SAFETY INSTRUCTIONS
Do not disconnect air lines before draining air reservoirs.

a. Removal

WARNING

Do not disconnect air lines before draining air reservoirs. Small parts under pressure may shoot out with high velocity causing injury to personnel.

NOTE

Tag wires for installation.

1. Disconnect wire plugs (4) and (5) from stoplight switch (3).
2. Remove stoplight switch (3) from adapter (2).
3. Remove adapter (2) from air valve (1).

b. Installation

NOTE

Clean all male pipe threads and wrap with antiseize tape before installation.

1. Install adapter (2) on air valve (1).
2. Install stoplight switch (3) on adapter (2).
3. Connect wire plugs (4) and (5) to stoplight switch (3).

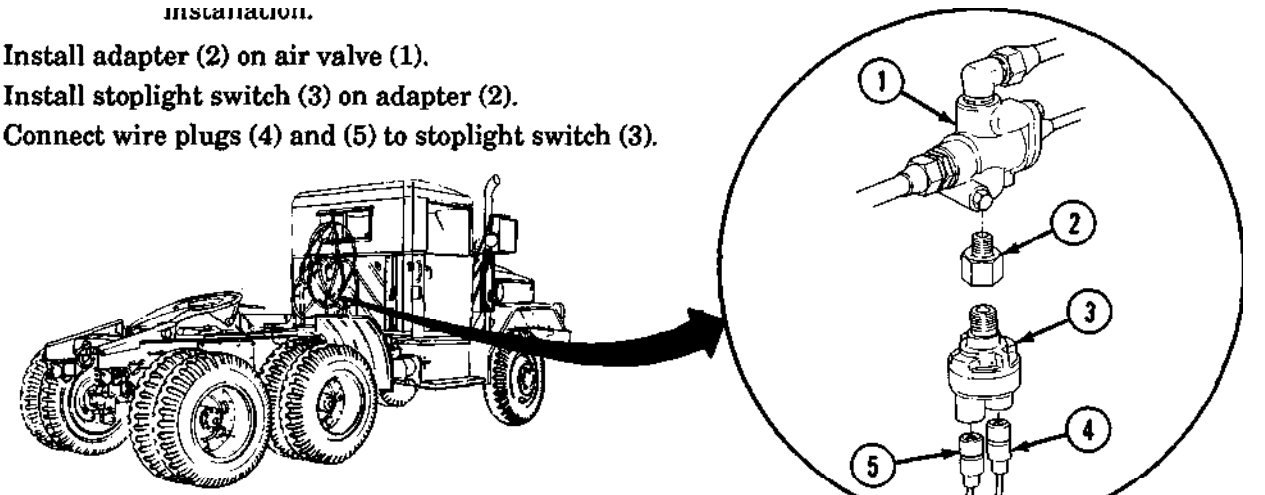

FOLLOW-ON TASKS:
- Connect battery ground cable (para. 4-48).
- Start engine (TM 9-2320-361-10) and allow air pressure to build up to normal operating range. Check stoplights for proper operation.

https://truckmanualshub.com/

4-33. CIRCUIT BREAKER REPLACEMENT

This task covers:

a. Removal

b. Installation

INITIAL SETUP:

APPLICABLE MODELS
All

REFERENCES (TM)
TM 9-2320-361-10
TM 9-2320-361-20P

EQUIPMENT CONDITION
- Parking brake set (TM 9-2320-361-10).
- Hood raised and secured (TM 9-2320-361-10).
- Battery ground cable disconnected (para. 4-48).

a. Removal

NOTE

- Vehicle with auxiliary power outlets and personnel heaters have two additional circuit breakers located next to horn circuit breaker. Replacement procedures are the same for all circuit breakers.
- Tag wires for installation.

1. Disconnect wires (1) and (5) from circuit breaker (2).
2. Remove two screws (4) and circuit breaker (2) from firewall (3).

b. Installation

1. **Install circuit breaker (2) on firewall (3) with two screws (4).**
2. **Connect wires (1) and (5) to circuit breaker (2).**

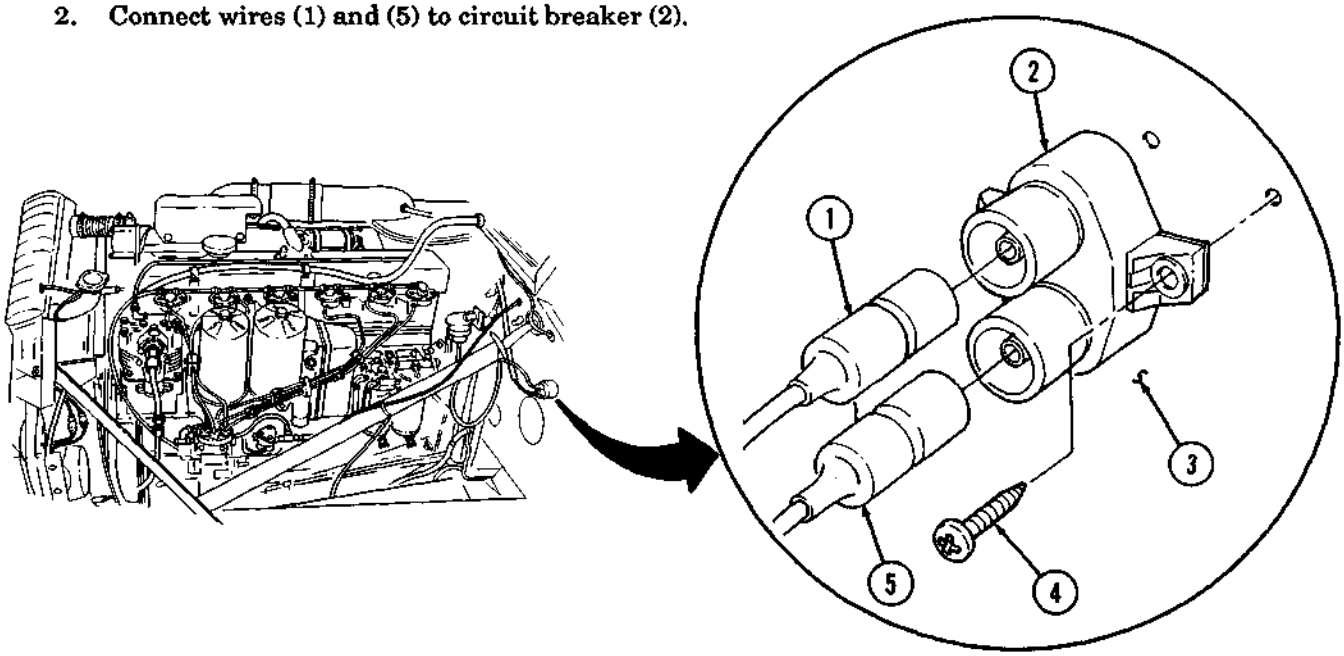

FOLLOW-ON TASKS:
- Connect battery ground cable (para. 4-48).
- Check operation of horn and personnel heater (TM 9-2320-361-10).

https://truckmanualshub.com/

4-34. HOT WATER PERSONNEL HEATER CONTROL SWITCH REPLACEMENT

This task covers:

a. Removal | b. Installation

INITIAL SETUP:

APPLICABLE MODELS
All

MATERIALS/PARTS
Six lockwashers

REFERENCES (TM)
TM 9-2320-361-10
TM 9-2320-361-20P

EQUIPMENT CONDITION
- Parking brake set (TM 9-2320-361-10).
- Battery ground cable disconnected (para. 4-48).

a. Removal

1. Remove nut (5), lockwasher (4), locking ring (3), and switch (6) from mounting bracket (2). Discard lockwasher (4).

NOTE
Tag leads for installation.

2. Remove three screws (9), lockwashers (8), and four wires (7) from switch (6). Discard lockwashers (8).
3. Remove two nuts (12), lockwashers (11), screws (10), and mounting bracket (2) from instrument panel (1). Discard lockwashers (11).

b. Installation

1. Install mounting bracket (2) to instrument panel (1) with two screws (10), new lockwashers (11), and nuts (12).
2. Install four wires (7), three screws (9), and new lockwashers (8) on switch (6).
3. Position keyway in switch down. Install locking ring (3), new lockwasher (4), and nut (5) on switch (6).

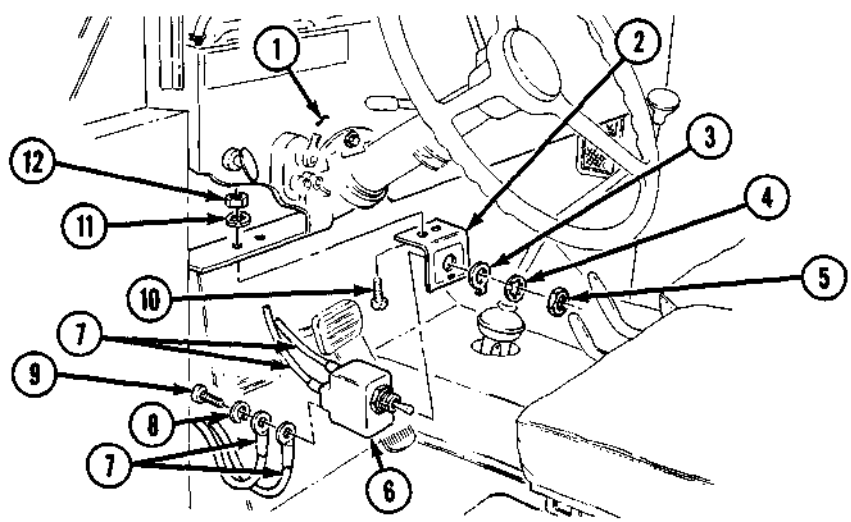

FOLLOW-ON TASKS:
- Connect battery ground cable (para. 4-48).
- Check heater switch for proper operation (TM 9-2320-361-10).

https://truckmanualshub.com/

4-35. HOT WATER PERSONNEL HEATER BLOWER MOTOR RESISTOR REPLACEMENT

This task covers:

a. Removal **b. Installation**

INITIAL SETUP:

APPLICABLE MODELS
All

MATERIALS/PARTS
Two lockwashers

REFERENCES (TM)
TM 9-2320-361-10
TM 9-2320-361-20P

EQUIPMENT CONDITION
- Parking brake set (TM 9-2320-361-10).
- Battery ground cable disconnected (para. 4-48).

a. Removal

Remove two screws (4), lockwashers (3), and resistor (1) from firewall (2). Discard lockwashers (3).

b. Installation

Install resistor (1) on firewall (2) with two new lockwashers (3) and screws (4).

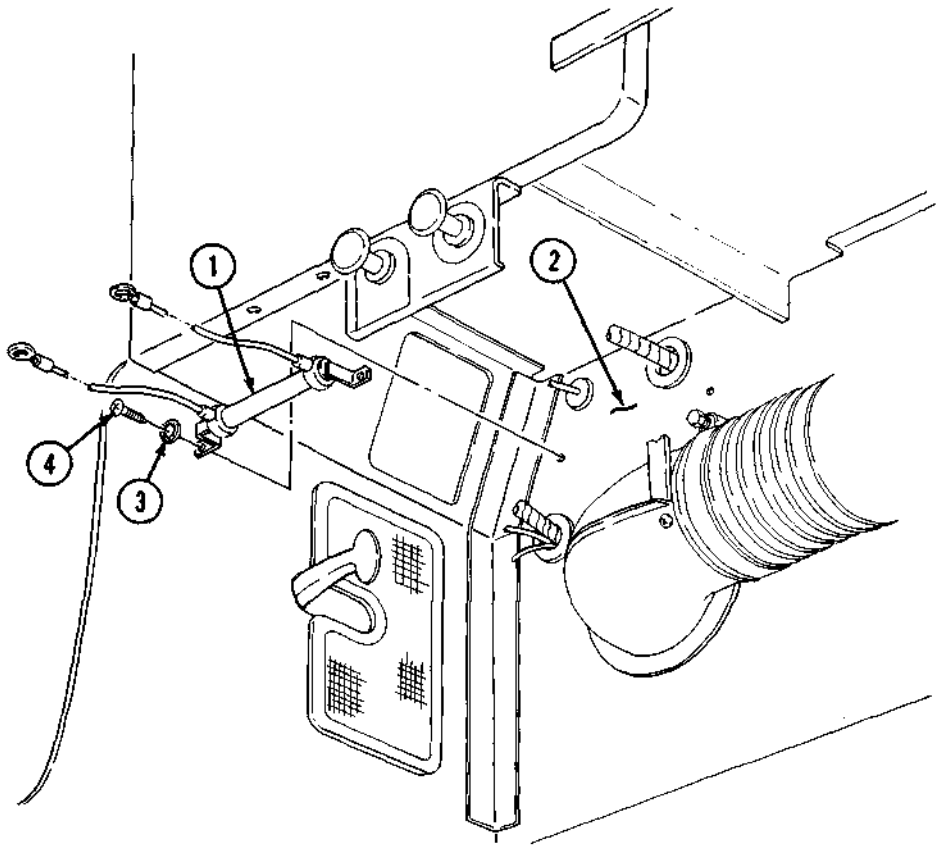

FOLLOW-ON TASKS:
- Connect battery ground cable (para. 4-48).
- Turn on hot water heater switch (TM 9-2320-361-10) and check personel heater operations.

https://truckmanualshub.com/

4-36. FRONT-WHEEL DRIVE LOCK-IN SWITCH INDICATOR AND AIR PRESSURE SWITCH REPLACEMENT

This task covers:

a. Removal

b. Installation

INITIAL SETUP:

APPLICABLE MODELS
All

REFERENCES (TM)
TM 9-2320-361-10
TM 9-2320-361-20P

EQUIPMENT CONDITION
- Parking brake set (TM 9-2320-361-10).
- Air reservoirs drained (TM 9-2320-361-10).
- Battery ground cable disconnected (para. 4-48).

a. Removal

NOTE

Tag all wires for installation.

1. Remove wire connector (10) from air pressure switch (9).
2. Remove air pressure switch (9) from air valve (8).
3. Disconnect wire (14) from connector (15) at front wiring harness (1).
4. Disconnect wires (11) and (12) from connector (13).
5. Disconnect wire (7) from indicator lamp socket (6).
6. Remove lens cover (4) and lamp (3) from indicator lamp socket (6).
7. Remove two screws (5) and indicator lamp socket (6) from bracket (2).

b. Installation

1. Install indicator lamp socket (6) on bracket (2) with two screws (5).
2. Install lamp (3) and lens cover (4) on indicator lamp socket (6).
3. Connect wire (7) to indicator lamp socket (6).
4. Connect wires (11) and (12) to connector (13).
5. Connect wire (14) to connector (15) at front wiring harness (1).
6. Install air pressure switch (9) on air valve (8).
7. Install wire connector (10) on air pressure switch (9).

https://truckmanualshub.com/

4-36. FRONT-WHEEL DRIVE LOCK-IN SWITCH INDICATOR AND AIR PRESSURE SWITCH REPLACEMENT (Contd)

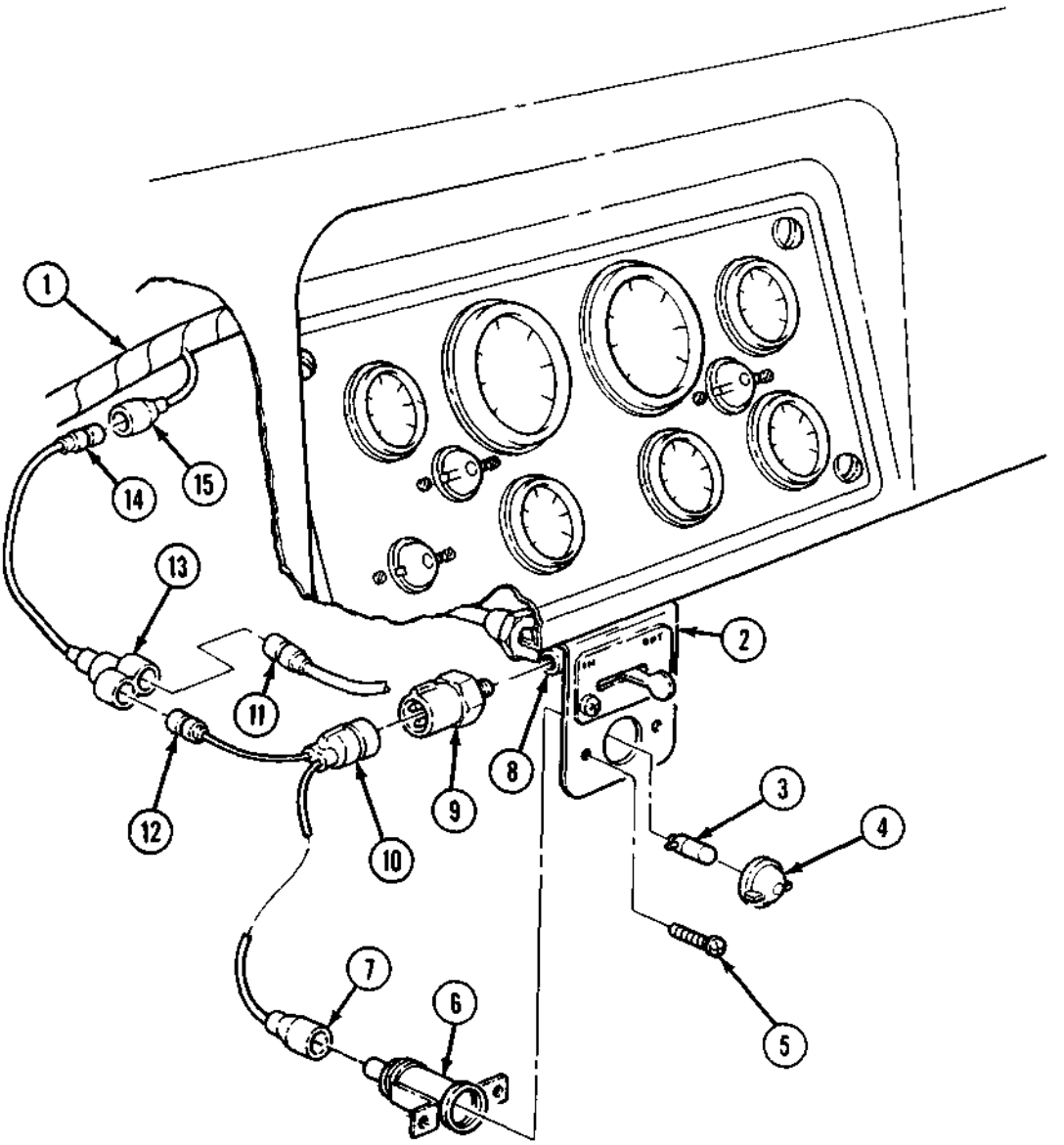

FOLLOW-ON TASKS:
- Connect battery ground cable (para. 4-48).
- Start engine (TM 9-2320-361-10) and allow air pressure to build up to normal operating range. Check for air leaks at switch.
- Engage front-wheel drive lever (TM 9-2320-361-10) and check if indicator light is illuminated.

https://truckmanualshub.com/

4-37. FUEL PRESSURE SWITCH REPLACEMENT

This task covers:

a. Removal

b. Installation

INITIAL SETUP:

APPLICABLE MODELS
All

MATERIALS/PARTS
Antiseize tape (Appendix C, Item 27)

REFERENCES (TM)
TM 9-2320-361-10
TM 9-2320-361-20P

EQUIPMENT CONDITION
- Parking brake set (TM 9-2320-361-10).
- Hood raised and secured (TM 9-2320-361-10).
- Battery ground cable disconnected (para. 4-48).

GENERAL SAFETY INSTRUCTIONS
Diesel fuel is flammable. Do not perform this task near open flames.

WARNING

Diesel fuel is flammable. Do not perform fuel system procedures near open flame. Injury or death to personnel may result.

a. Removal

NOTE

Tag wires for installation.

1. Disconnect wires (2) and (3) from fuel pressure switch (1).
2. Remove fuel pressure switch (1) and adapter (4) from tee (5).

b. Installation

NOTE

Clean all male pipe threads and wrap with antiseize tape before installation.

1. Install adapter (4) in tee (5).
2. Install fuel pressure switch (1) in adapter (4).
3. Connect wires (2) and (3) to fuel pressure switch (1).

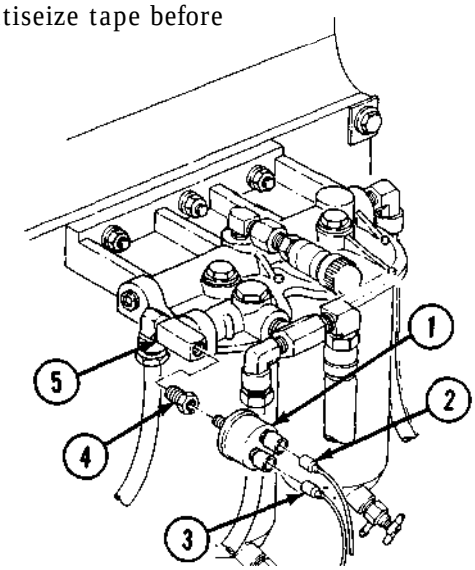

FOLLOW-ON TASKS:
- Connect battery ground cables (para. 4-48).
- Start engine (TM 9-2320-361-10) to ensure switch is closed.

https://truckmanualshub.com/

Section IV. LIGHTING SYSTEM MAINTENANCE

4-38. LIGHTING SYSTEM MAINTENANCE INDEX

PARA. NO.	TITLE	PAGE NO.
4-39.	Sealed Beam and Headlamp Housing Maintenance	4-57
4-40.	Intermediate Turn Signal Replacement	4-61
4-41.	Front Composite Lamps, Housing, and Bracket Replacement	4-62
4-42.	Blackout Drive Lamp and Housing Replacement	4-64
4-43.	Floodlamp Housing and Mount Maintenance	4-66
4-44.	Floodlamp Replacement	4-68
4-45.	Side Marker and Clearance Lamps Replacement	4-69
4-46.	Rear Composite Lamps and Housing Replacement	4-70

4-39. SEALED BEAM AND HEADLAMP HOUSING MAINTENANCE

This task covers:

a. Sealed Beam Removal
b. Headlamp Housing Removal
c. Headlamp Housing Installation
d. Sealed Beam Installation
e. Alinement

APPLICABLE MODELS
All

MATERIALS/PARTS
Six lockwashers
Chalk (Appendix C, Item 9)

REFERENCES (TM)
TM 9-2320-361-10
TM 9-2320-361-20P

EQUIPMENT CONDITION
Parking brake set (TM 9-2320-361-10).
Hood raised and secured (TM 9-2320-361-10).
Battery ground cable disconnected (para. 4-48).

https://truckmanualshub.com/

4-39. SEALED BEAM AND HEADLAMP HOUSING MAINTENANCE (Contd)

a. Sealed Beam Removal

1. Remove three screws (1) and retaining ring (2) from headlamp housing (18).

NOTE

Tag all wires for installation.

2. Disconnect three wires (19) from connector plugs (13) and remove sealed beam (3).

b. Headlamp Housing Removal

1. Disconnect three wires (12) from three connector plugs (13) at rear of housing (7).
2. Remove three nuts (10), lockwashers (9), shock mounts (8), and housing (7), from body (11). Discard lockwashers (9).
3. Loosen two adjusting screws (16) and remove spring (17) from headlamp housing (18).
4. Remove headlamp housing (18) from housing (7).
5. Remove two adjusting screws (16) and adjusting nuts (15) from housing (7).
6. Remove three nuts (4), lockwashers (5), washers (6), and shock mounts (8) from housing (7). Discard lockwashers (5).
7. Remove three connector plugs (13) and grommets (14) from housing (7).

c. Headlamp Housing Installation

1. Install three grommets (14) and connectors (13) in housing (7).
2. Install three shock mounts (8) on housing (7) with three washers (6), new lockwashers (5), and nuts (4).
3. Install two adjusting screws (16) and adjusting nuts (15) in housing (7).

NOTE

Adjusting nuts must move freely for lamp adjustment. Do not bottom adjusting screws in step 4.

4. Install headlamp housing (18) on adjusting screws (16) and tighten adjusting screws (16) evenly.
5. Install spring (17) on housing (18) and adjusting screw (16).
6. Install housing (7) on body (11) with three shock mounts (8), new lockwashers (9), and nuts (10).
7. Connect three wires (12) to connector plugs (13).

d. Sealed Beam Installation

1. Connect three wires (19) to connector plugs (13).
2. Install sealed beam (3) in headlamp housing (18) with retaining ring (2) and three retaining screws (1).

https://truckmanualshub.com/

4-39. SEALED BEAM AND HEADLAMP HOUSING MAINTENANCE (Contd)

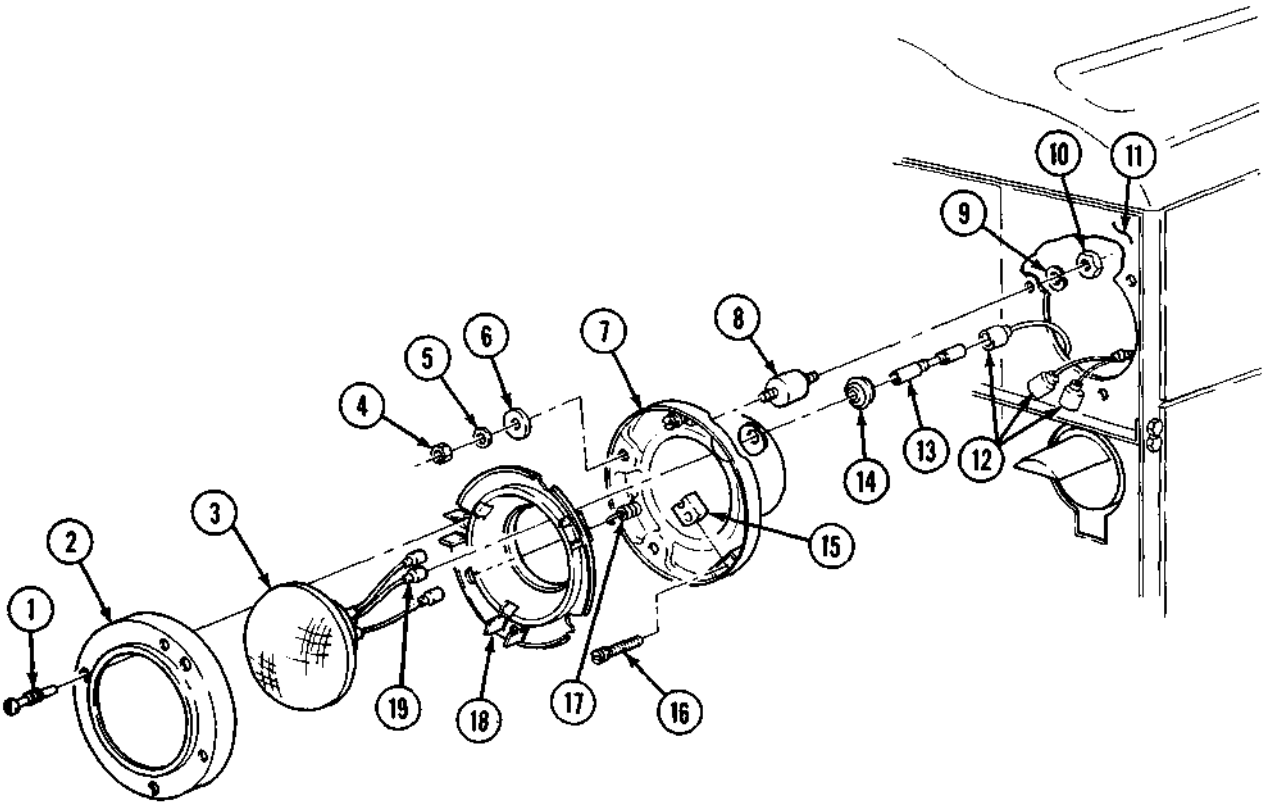

https://truckmanualshub.com/

4-39. SEALED BEAM AND HEADLAMP HOUSING MAINTENANCE (Contd)

1. Using chalk, draw a horizontal line (3) on a wall the height of center of headlamp (6).
2. Park truck facing wall so headlamps (6) are 25 ft (7.62 m) from wall.
3. Using chalk, draw a vertical line (1) through horizontal line (3) so it is in line with center of headlamp (6).
4. Turn headlamps (6) on low beam (TM 9-2320-361-10).
5. Adjust headlamp (6) horizontal direction with adjusting screw (5) until left edge of bright light area (2) on wall is 2-6 in. (5.08-15.24 cm) right of vertical line (1).
6. Adjust headlamp (6) vertical direction with adjusting screw (4) until top edge of bright light area (2) on wall is touching lower side of horizontal line (3).
7. Adjust other headlamp (6) using same procedure.

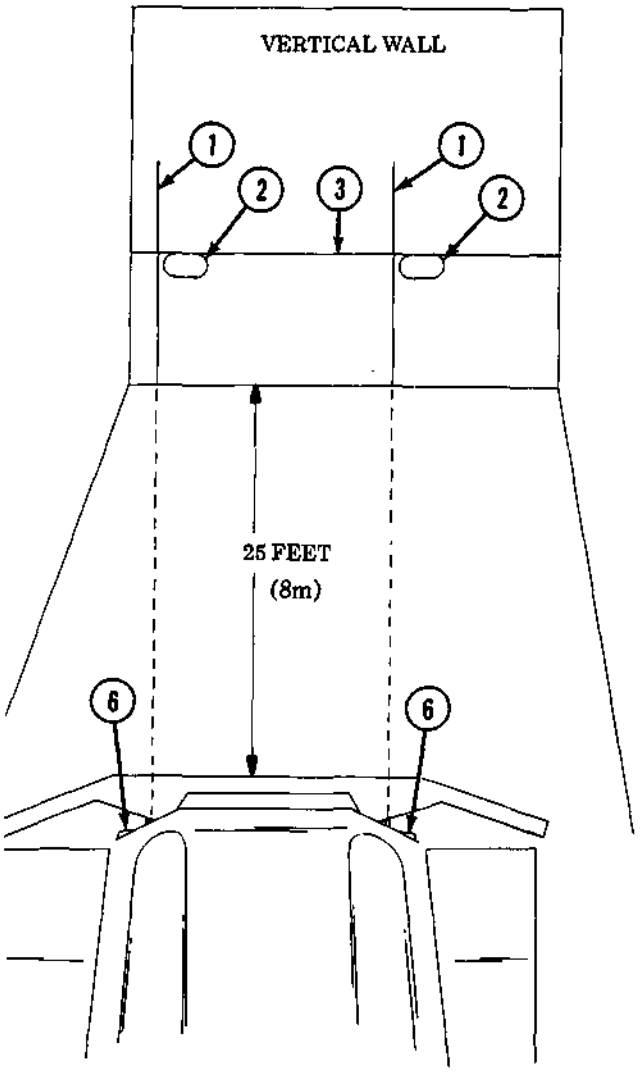

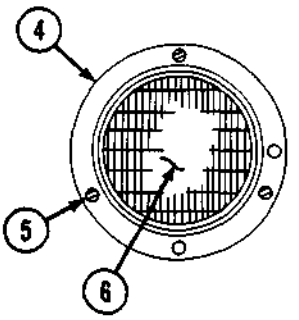

FOLLOW-ON TASK: Connect battery ground cable (para. 4-48).

https://truckmanualshub.com/

4-40. INTERMEDIATE TURN SIGNAL REPLACEMENT

This task covers:

a. Removal

b. Installation

INITIAL SETUP:

APPLICABLE MODELS
All

MATERIALS/PARTS
Three lockwashers
Two O-rings

REFERENCES (TM)
TM 9-2320-361-10
TM 9-2320-361-20P

EQUIPMENT CONDITION
- Parking brake set (TM 9-2320-361-10).
- Battery ground cable disconnected (para. 4-48).

a. Removal

1. Remove amber lens (4), red lens (1), two O-rings (2), and lamp (3) from bracket (14). Discard O-rings (8).
2. Disconnect wire (13) from connector (12).
3. Remove nut (5), lockwasher (6), washer (15), and bracket (14) from brush guard (7). Discard lockwasher (6).
4. Remove two screws (11), lockwashers (10), nuts (9), and brush guard (7) from bracket (8). Discard lockwashers (10).

b. Installation

1. Install brush guard (7) on bracket (8) with two screws (11), new lockwashers (10), and nuts (9).
2. Install bracket (14), washer (15), new lockwasher (6), and nut (5) on brush guard (7).
3. Connect wire (13) to connector (12).
4. Install lamp (3), two new O-rings (2), red lens (1), and amber lens (4) on bracket (14).

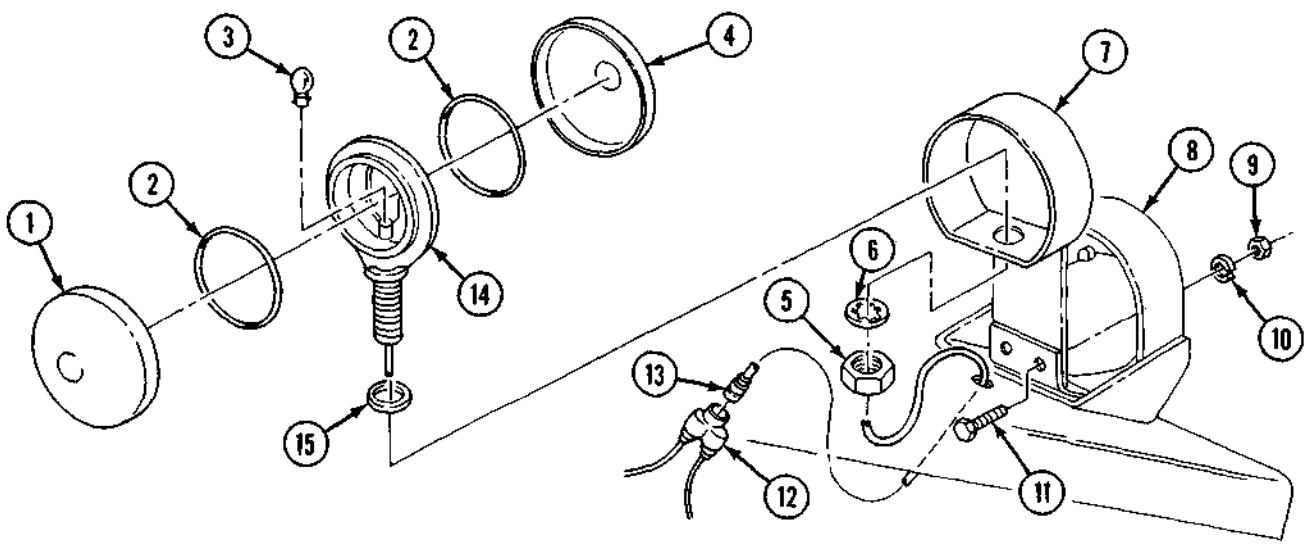

FOLLOW-ON TASKS:
- Connect battery ground cable (para. 4-48).
- Check operation of intermediate turn signal ight (TM 9-2320-361-10).

https://truckmanualshub.com/

4-41. FRONT COMPOSITE LAMPS, HOUSING, AND BRACKETE REPLACEMENT

This task covers:

a. Composite Lamps Removal
b. Composite Light Housing Removal
c. Composite Light Housing Installation
d. Composite Lamps Installation

INITIAL SETUP:

APPLICABLE MODELS
All

MATERIALS/PARTS
Two lockwashers
Four locknuts
Gasket

REFERENCES (TM)
TM 9-2320-361-10
TM 9-2320-361-20P

EQUIPMENT CONDITION
- Parking brake set (TM 9-2320-361-10).
- Battery ground cable disconnected. (para. 4-48).
- Intermediate turn signal removed, if equipped (para. 4-40).

a. Composite Lamps Removal

1. Loosen five screws (2) and remove lens cover (1) and gasket (16) from composite light housing (4). Discard gasket (16).
2. Remove lamp(s) (3) from composite light housing (4).

b. Composite Light Housing Removal

NOTE
Tag all wires for installation.

1. Disconnect three wires (6) from wires (5).
2. Remove two screws (7), lockwashers (8), and composite light housing (4) from upper bracket (15). Discard lockwashers (8).
3. Remove four locknuts (13), screws (14), lower bracket (11), and upper bracket (15) from fender (10). Discard locknuts (13).
4. Remove two grommets (9) and (12) from fender (10) and lower bracket (11).

c. Composite Light Housing Installation

1. Install grommets (9) and (12) on fender (10) and lower bracket (11).
2. Install upper bracket (15) and lower bracket (11) on fender (10) with four screws (14) and new locknuts (13).
3. Install composite light housing (4) on upper bracket (15) with two new lockwashers (8) and screws (7).
4. Connect three wires (6) to three wires (5).

d. Composite Lamps Installation

1. Install lamp(s) (3) in composite light housing (4).
2. Install new gasket (16) and lens cover (1) and tighten five screws (2).

https://truckmanualshub.com/

4-41. FRONT COMPOSITE LAMPS, HOUSING, AND BRACKET REPLACEMENT (Contd)

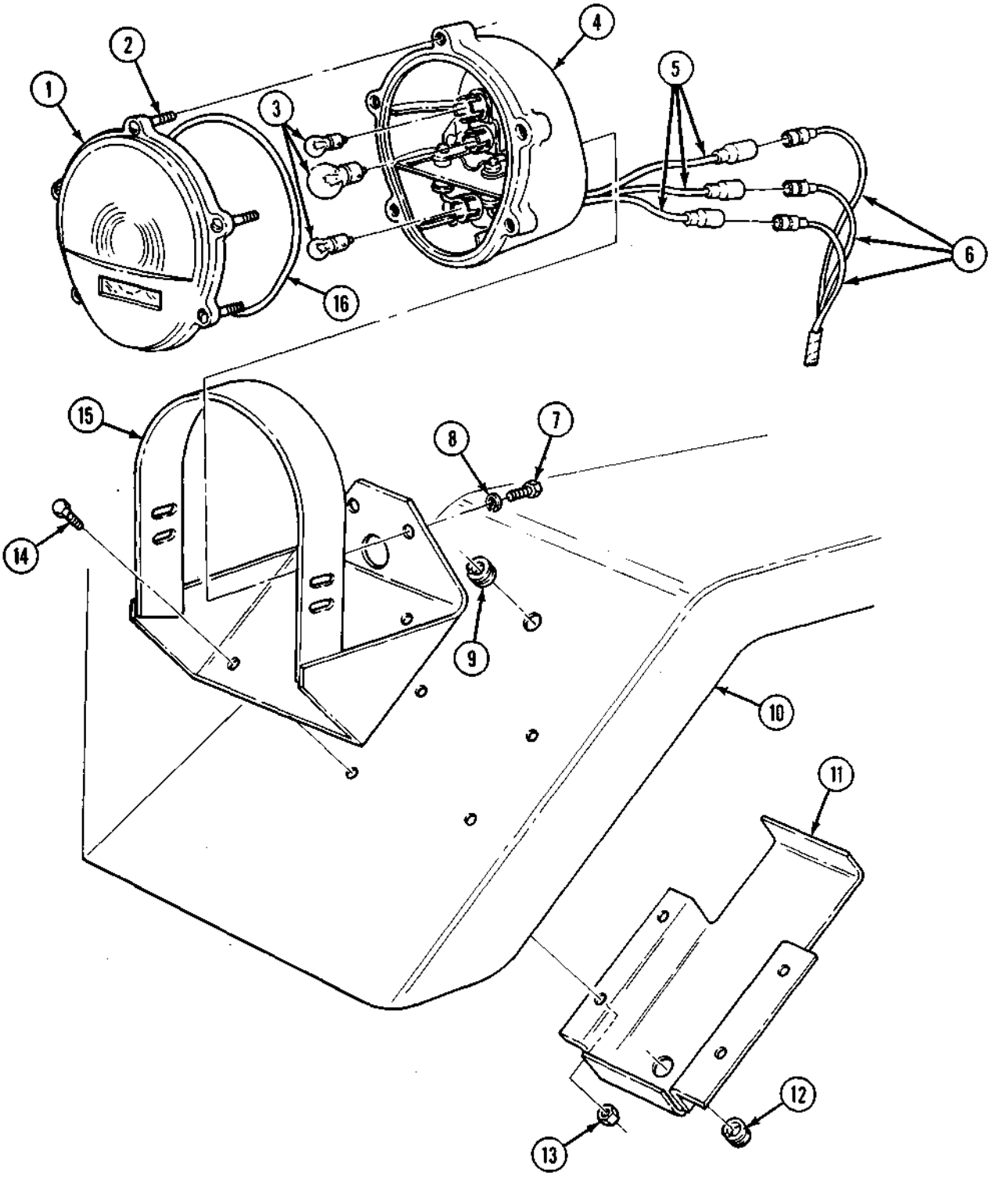

FOLLOW-ON TASKS: •Connect battery ground cable (para. 4-48).
•Check operation of front composite light (TM 9-2320-361-10).

https://truckmanualshub.com/

4-42. BLACKOUT DRIVE LAMP AND HOUSING REPLACEMENT

This task covers:

a. Blackout Drive Lamp Removal
b. Blackout Drive Lamp Housing Removal
c. Blackout Drive Lamp Housing Installation
d. Blackout Drive Lamp Installation

INITIAL SETUP:

APPLICABLE MODELS
All

MATERIALS/PARTS
Nine lockwashers
Three O-rings
Gasket

REFERENCES (TM)
TM 9-2320-361-10
TM 9-2320-361-20P

EQUIPMENT CONDITION
- Parking brake set (TM 9-2320-361-10).
- Hood raised and secured (TM 9-2320-361-10).
- Battery ground cable disconnected (para. 4-48).

a. Blackout Drive Lamp Removal

1. Loosen three screws (2) and remove lens cover (1), three O-rings (9), and gasket (8) from blackout drive lamp housing (4). Discard O-rings (9) and gasket (8).
2. Remove lamp (3) from blackout drive lamp housing (4).

b. Blackout Drive Lamp Housing Removal

NOTE
Tag all wires for installation.

1. Remove wire (5) from connector plug (6).
2. Remove nut (17), lockwasher (18), ground wire (16), mounting washers (19) and (7), and blackout drive lamp housing (4) from bracket (11). Discard lockwasher (18).
3. Remove eight nuts (14), seven lockwashers (15), lockwasher (13), clamp (12), bracket (11), and four shock mounts (10) from plate (20). Discard lockwashers (15) and (13).

c. Blackout Drive Lamp Housing Installation

1. Install four shock mounts (10) and bracket (11) on plate (20) with seven new lockwashers (15), clamp (12), new lockwasher (13), and eight nuts (14).
2. Install blackout drive lamp housing (4), mounting washers (19) and (7), ground wire (16), new lockwasher (18), and nut (17) to bracket (11).
3. Connect wire (5) to connector plug (6).

d. Blackout Drive Lamp Installation

1. Install lamp (3) in blackout drive lamp housing (4).
2. Install new gasket (8), three new O-rings (9), and lens cover (1) on blackout drive lamp housing (4) with three screws (2).

https://truckmanualshub.com/

4-42. BlACKOUT DRIVE LAMP AND HOUSING REPLACEMENT (Contd)

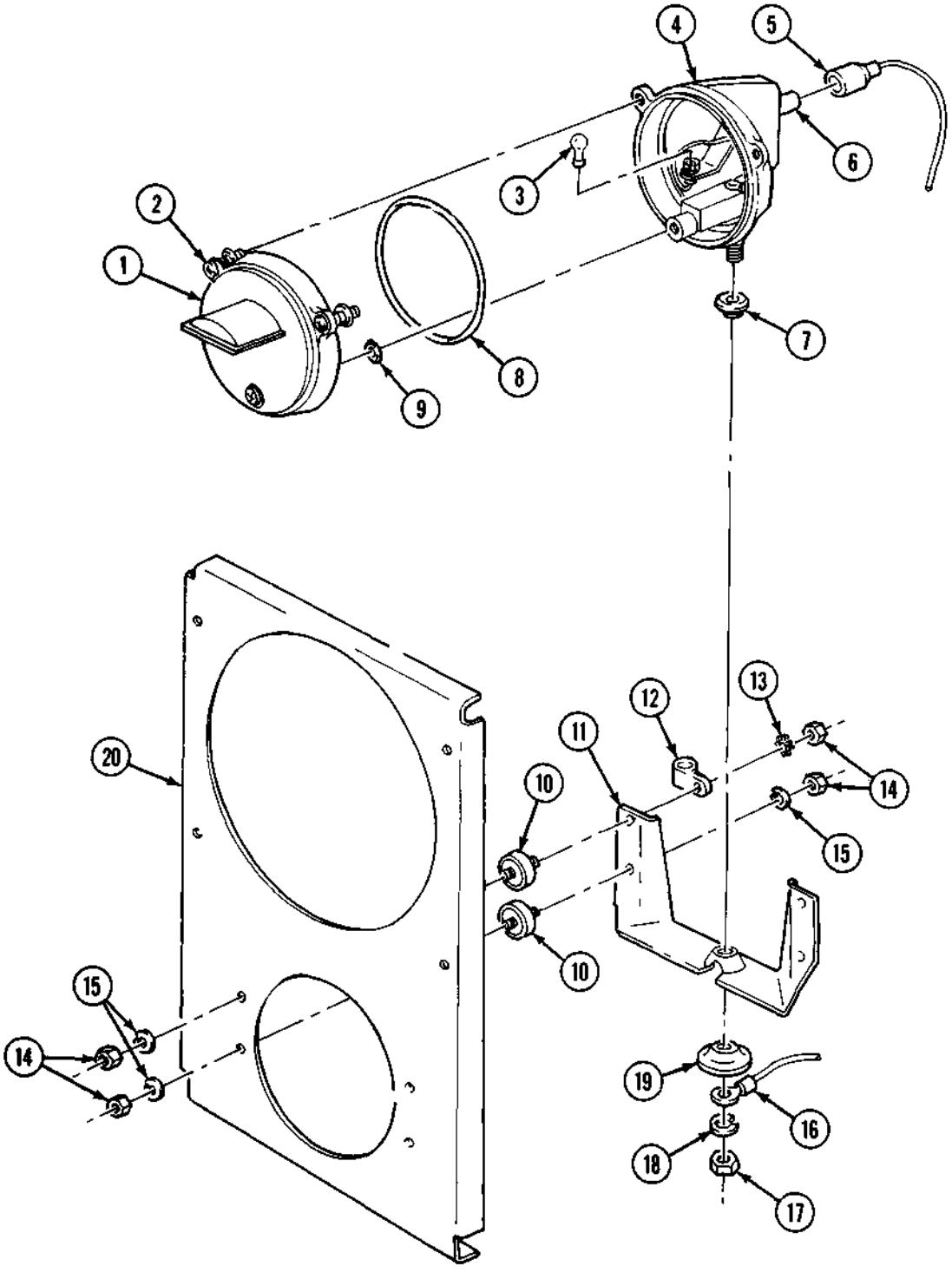

FOLLOW-ON TASKS: • Connect battery ground cable (para. 4-48).
• Check operation of blackout drive lamp (TM 9-2320-361-10)

https://truckmanualshub.com/

4-43. FLOODLAMP HOUSING AND MOUNT MAINTENANCE

This task covers:

a. Floodlamp Housing and Mount Removal
b. Floodlamp Housing and Mount Disassembly
c. Floodlamp Housing and Mount Assembly
d. Floodlamp Housing and Mount Installation

INITIAL SETUP:

APPLICABLE MODELS
M756A2

MATERIALS/PARTS
Four lockwashers

REFERENCES (TM)
TM 9-2320-361-10
TM 9-2320-361-20P

EQUIPMENT CONDITION
- Parking brake set (TM 9-2320-361-10).
- Battery ground cable disconnected (para. 4-48).
- Floodlamp removed (para. 4-44).

a. Floodlamp Housing and Mount Removal

NOTE
Tag all wires for installation.

1. Disconnect two wires (11) from connectors (1).
2. Remove handle (6) from cab protector (10) and remove floodlamp housing (2) and floodlamp housing mount (5).

b. Floodlamp Housing and Mount Disassembly

1. Remove two nuts (7) and (8), washer (9), floodlamp housing bracket (3), and washer (4) from floodlamp housing mount (5).
2. Remove two nuts (13), lockwashers (14), and washers (15) from screws (30). Discard lockwashers (14).
3. Remove two screws (30), washers (29), four spring washers (28), two washers (27), floodlamp housing bracket (3), two washers (26), spacers (20), and grommet (19) from floodlamp housing (2).
4. Disconnect wires (12) and (22) from two connectors (1).
5. Remove two screws (17), lockwashers (18), and switch (23) from floodlamp housing (2). Discard lockwashers (18).
6. Remove two screws (25), retainer (24), and switch top (23) from bottom of switch (21).
7. Remove two connectors (1) and grommets (16) from floodlamp housing (2).

c. Floodlamp Housing and Mount Assembly

1. Install two grommets (16) and connectors (1) in floodlamp housing (2).
2. Install switch top (23), retainer (24), and two screws (25) in switch bottom (21).
3. Install switch (21), two new lockwashers (18), and screws (17) in floodlamp housing (2).
4. Connect two wires (12) and (22) to connectors (1).
5. Install two grommets (19) and spacers (20) on floodlamp housing (2).
6. Position floodlamp housing (2) and two washers (26) on floodlamp housing bracket (3) and install with two washers (27), four spring washers (28), two washers (29), and screws (30).
7. Install two washers (15), new lockwashers (14), and nuts (13) to screws (30).
8. Install washer (4) with floodlamp housing bracket (3), washer (9), and two nuts (8) and (7) to floodlamp housing mount (5).

https://truckmanualshub.com/

4-43. FLOODLAMP HOUSING AND MOUNT MAINTENANCE (Contd)

d. Floodlamp Housing and Mount Installation

1. Install floodlamp housing (2) and floodlamp housing mount (5) to cab protector (10) with handle (6).
2. Connect two wires (11) to connectors (l).

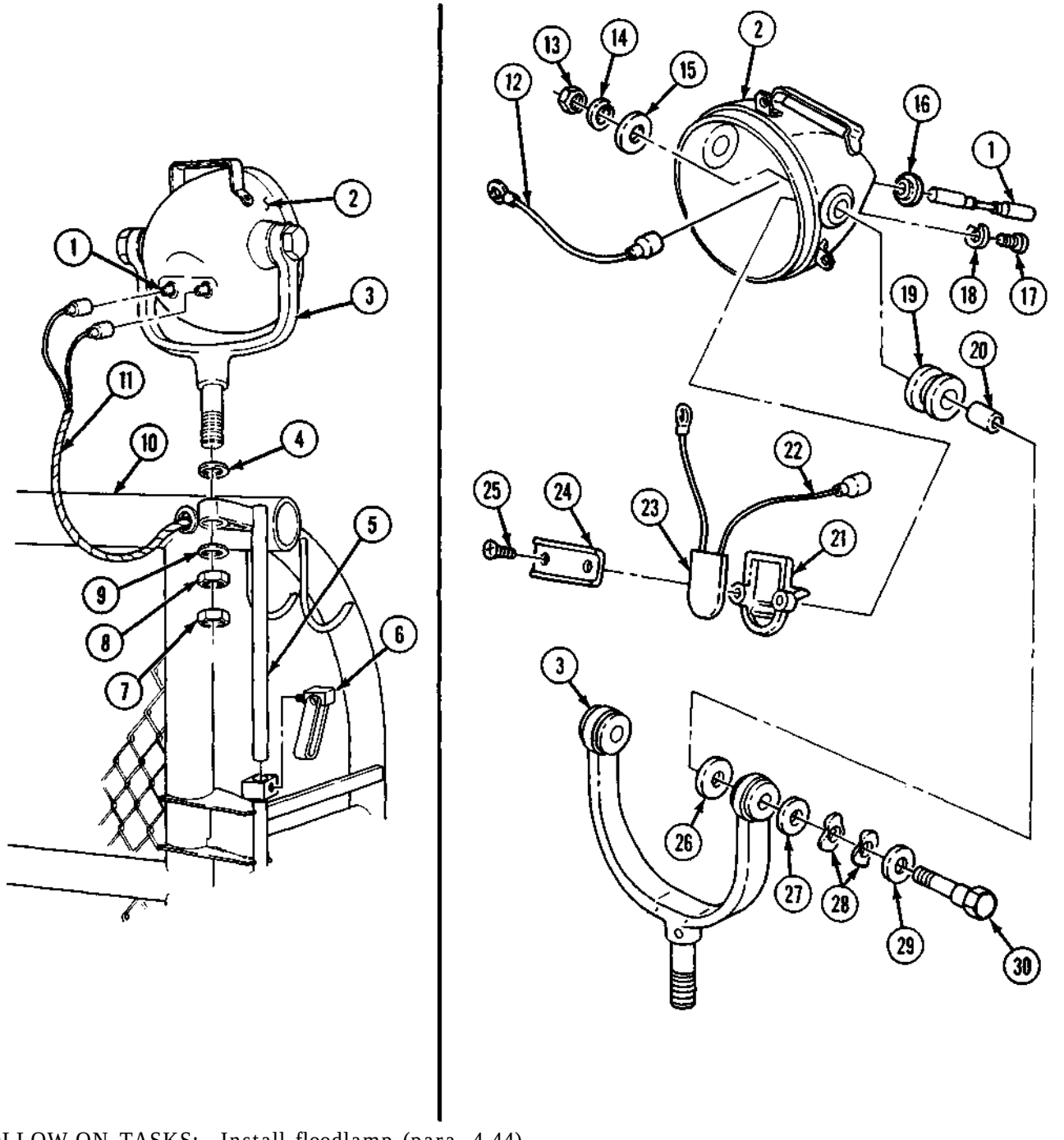

FOLLOW-ON TASKS: • Install floodlamp (para. 4-44).
. Connect battery ground cable (para. 4-48).
• Check operation of floodlamp (TM 9-2320-361-10).

https://truckmanualshub.com/

4-44. FLOODLAMP REPLACEMENT

This task covers:

a. Floodlamp Removal

b. Floodlamp Installation

INITIAL SETUP:

APPLICABLE MODELS
M756A2

MATERIALS/PARTS
Two lockwashers
Three O-rings

REFERENCES (TM)
TM 9-2320-361-10
TM 9-2320-361-20P

EQUIPMENT CONDITION
- Parking brake set (TM 9-2320-361-10).
- Battery ground cable disconnected (para. 4-48).
- Floodlamp housing removed (para. 4-43).

a. Floodlamp Removal

1. Loosen three screws (1) and remove lamp door (2) and three O-rings (3) from floodlamp housing (9). Discard O-rings (3).

NOTE

Tag all wires for installation.

2. Remove two screws (8), lockwashers (7), and wires (5) and (6) from lamp (4). Discard lockwashers (7).
3. Remove four springs (10) and lamp (4) from lamp door (2).

b. Floodlamp Installation

1. **Install lamp (4) on lamp door (2) with four springs (10).**
2. **Install wires (5) and (6) on lamp (4) with two new lockwashers (7) and screws (8).**
3. **Install three new O-rings (3) and lamp door (2) on floodlamp housing (9), and tighten three screws (1).**

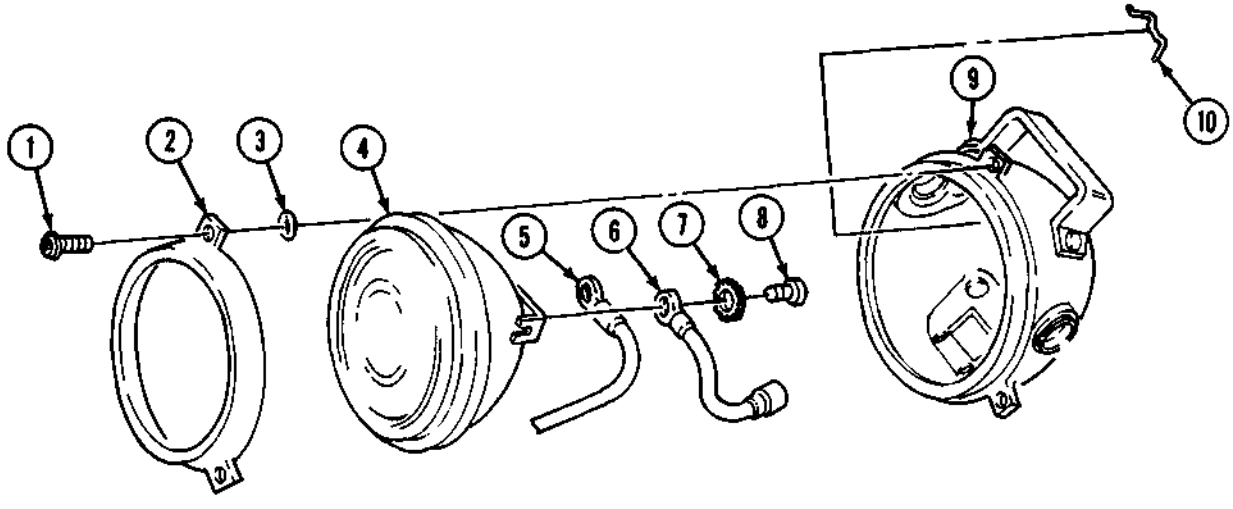

FOLLOW-ON TASKS:
- Connect battery ground cable (para. 4-48).
- Check operation of floodlamp (TM 9-2320-361-10).

https://truckmanualshub.com/

4-45. SIDE MARKER AND CLEARANCE LAMPS REPLACEMENT

This task covers:

a. Removal b. Installation

INITIAL SETUP:

APPLICABLE MODELS
All

MATERIALS/PARTS
Six lockwashers
Locknut

REFERENCES (TM)
TM 9-2320-361-10
TM 9-2320-361-20P

EQUIPMENT CONDITION
Parking brake set (TM 9-2320-361-10).
Battery ground cable disconnected (para. 4-48).

a. Removal

NOTE

All side marker lights and clearance lights are replaced the same.

1. Remove two screws (11), lens frame (10), and lens (9) from marker light base (6).
2. Remove lamp (8) from marker light base (6).
3. Remove four nuts (3), lockwashers (4), and screws (7) from marker light base (6) and bracket (5). Discard lockwashers (4).
4. Disconnect wire (2) from wire (1) and remove marker light base (6) from bracket (5).
5. Remove locknut (13), two lockwashers (14), screw (15), and bracket (5) from fender (12). Discard lockwashers (14) and locknut (13).

b. Installation

1. Install bracket (5) on fender (12) with screw (15), two new lockwashers (14), and new locknut (13).
2. Connect wire (2) to wire (1).
3. Install marker light base (6) on bracket (5) with four screws (7), new lockwashers (4), and nuts (3).
4. Install lamp (8) in marker light base (6).
5. Install lens (9) and lens frame (10) on marker light base (6) with two screws (11).

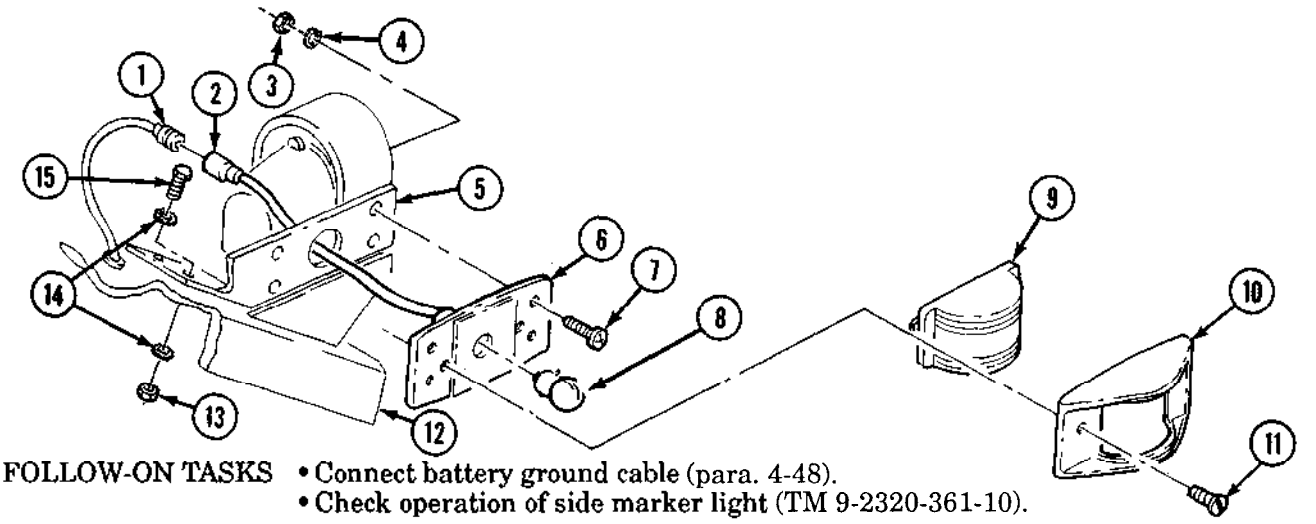

FOLLOW-ON TASKS
- Connect battery ground cable (para. 4-48).
- Check operation of side marker light (TM 9-2320-361-10).

https://truckmanualshub.com/

4-46. REAR COMPOSITE LAMPS AND HOUSING REPLACEMENT

This task covers:

a. Rear Composite Lamps Removal
b. Rear Composite Lamps Housing Removal
c. Rear Composite Lamps Housing Installation
d. Rear Composite Lamps Installation

INITIAL SETUP:

APPLICABLE MODELS
All

MATERIALS/PARTS
Two lockwashers
Gasket

REFERENCES (TM)
TM 9-2320-361-10
TM 9-2320-361-20P

EQUIPMENT CONDITION
- Parking brake set (TM 9-2320-361-10).
- Battery ground cable disconnected (para. 4-48).

a. Rear Composite Lamps Removal

1. Loosen six screws (8) and remove lens (9) and gasket (7) from composite lamp housing (5). Discard gasket (7).
2. Remove lamp(s) (6) from composite lamp housing (5).

b. Rear Composite Lamps Housing Removal

NOTE
Tag all wires for installation.

1. Disconnect four wires (10) from wires (4).
2. Remove two screws (1), lockwashers (2), and composite lamp housing (5) from bracket (3). Discard lockwashers (2).

c. Rear Composite Lamps Housing Installation

1. Install composite lamp housing (5) on bracket (3) with two new lockwashers (2) and screws (1).
2. Connect four wires (10) to wires (4).

d. Rear Composite Lamps Installation

1. Install lamp(s) (6) in composite lamp housing (5).
2. Install new gasket (7) and lens (9) on composite lamp housing (5) with six screws (8).

https://truckmanualshub.com/

4-46. REAR COMPOSITE LAMPS AND HOUSING REPLACEMENT (Contd)

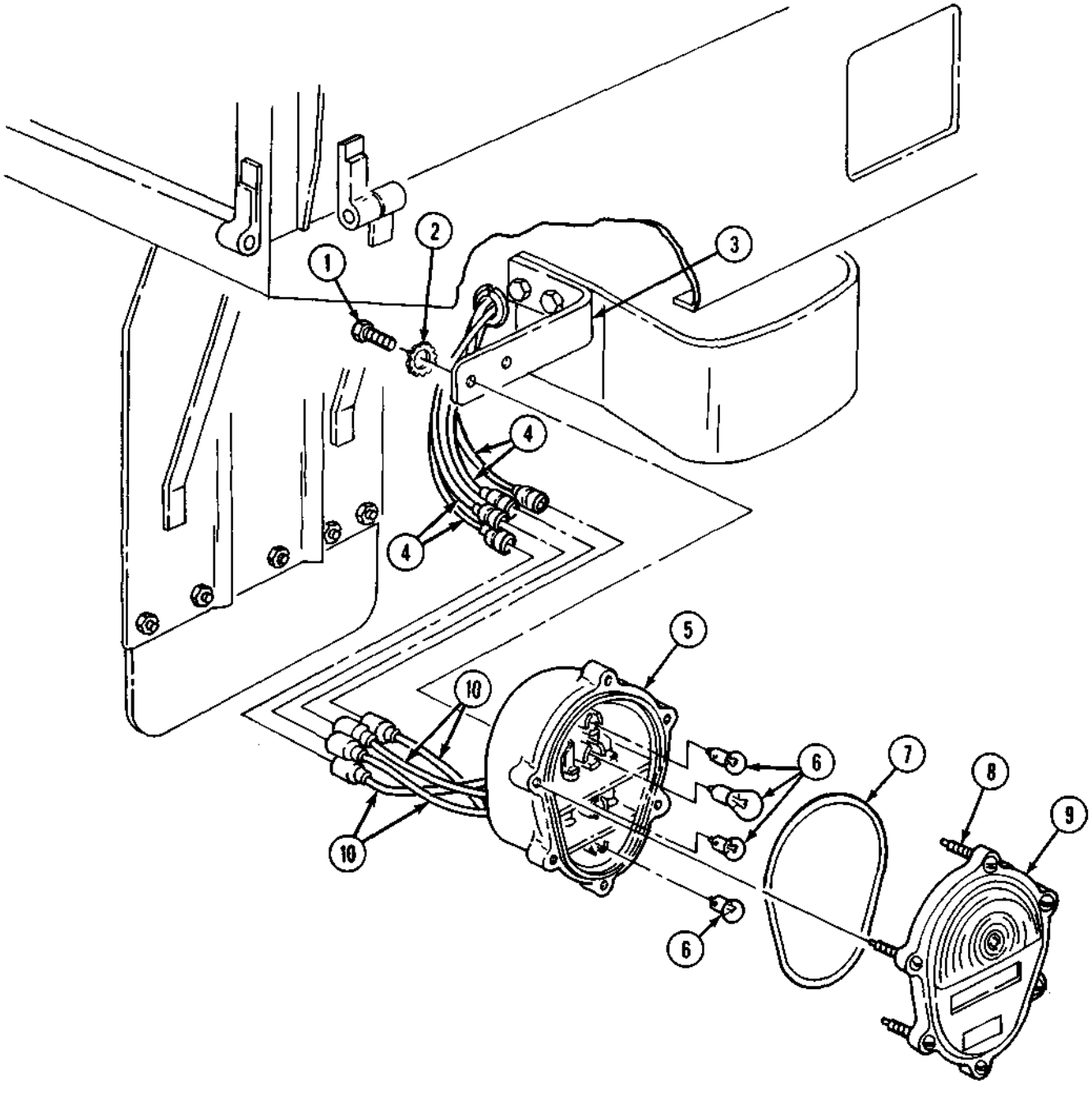

FOLLOW-ON TASKS:
- Connect battery ground cable (para. 4-48).
- Check operation of rear composite lamps (TM 9-2320-361-10).

https://truckmanualshub.com/

Section V. BATTERY AND BATTERY BOX MAINTENANCE

4-47. BATTERY AND BATTERY BOX MAINTENANCE INDEX

PARA. NO.	TITLE	PAGE NO.
4-48.	Battery Cables and Clamps Replacement	4-72
4-49.	Battery and Battery Box Replacement and Servicing	4-76

4-48. BATTERY CABLES AND CLAMPS REPLACEMENT

This task covers:

a. Ground Cable Disconnection
b. Ground Cable Connection
c. Ground Cable Removal
d. Battery-to-Battery Cable Removal
e. Positive Cable Removal
f. Battery Clamps Removal
g. Battery Clamps Installation
h. Positive Cable Installation
i. Battery-to-Battery Cable Installation
j. Ground Cable Installation

INITIAL SETUP:

APPLICABLE MODELS
All

MATERIALS/PARTS
Two lockwashers
GAA grease (Appendix C, Item 13)

REFERENCES (TM)
TM 9-2320-361-10
TM 9-2320-361-20P
TM 9-6140-200-14

EQUIPMENT CONDITION
Parking brake set (TM 9-2320-361-10).

GENERAL SAFETY INSTRUCTIONS
- Wear safety goggles and rubber gloves.
- Do not smoke when performing battery maintenance.
- Remove all jewelry.
- When removing battery cables, disconnect ground cable first.

WARNIN6

- Battery acid (electrolyte) is extremely harmful. Always wear safety goggles and rubber gloves when performing battery maintenance. Severe injury will result if acid contacts eyes or skin.
- Do not smoke, have open flame, or make sparks when performing battery maintenance. Batteries may explode causing severe injury to personnel.
- Remove all jewelry such as rings, dog tags, bracelets, etc. If jewelry or disconnected battery ground cable contacts positive battery post, a direct short can result, causing damage to equipment, or severe injury to personnel.
- When removing battery cables, disconnect ground cable first. Do not allow tools to come in contact with vehicle when disconnecting cable clamps. A direct short can result, causing instant heating of tools, tool damage, battery damage, or battery explosion, and severe injury to personnel.

https://truckmanualshub.com/

4-48. BATTERY CABLES AND CLAMPS REPLACEMENT (Contd)

CAUTION

- During installation of battery terminals, make sure positive clamps are installed on positive posts (+) and negative clamps are installed on negative (-) posts. Failure to connect clamps to correct posts will reverse polarity of circuitry and may cause damage to rectifier diodes in alternator, vehicle wiring, and radios (if equipped).
- Do not use a hammer during installation of battery terminal. Spread battery terminal open, or damage to equipment may result.

NOTE

- For general cleaning instructions, maintenance, and servicing of battery cables and clamps, refer to TM 9-6140-200-14.
- Apply a light coat of GAA grease to all battery terminals after installation. Wipe off excess grease.

a. Ground Cable Disconnection

1. Open battery compartment door (7).
2. Loosen two thumbscrews (8) and clamps (11), and pull battery box (10) onto running board (9).
3. Remove nut (2), screw (4), and disconnect ground cable (1) from battery clamp (6).
4. Remove nut (3), screw (5), and clamp (6) from negative post (12).

b. Ground Cable Connection

1. Install clamp (6) on negative post (12) with screw (5) and nut (3).
2. Install ground cable (1) on battery clamp (6) with screw (4) and nut (2).

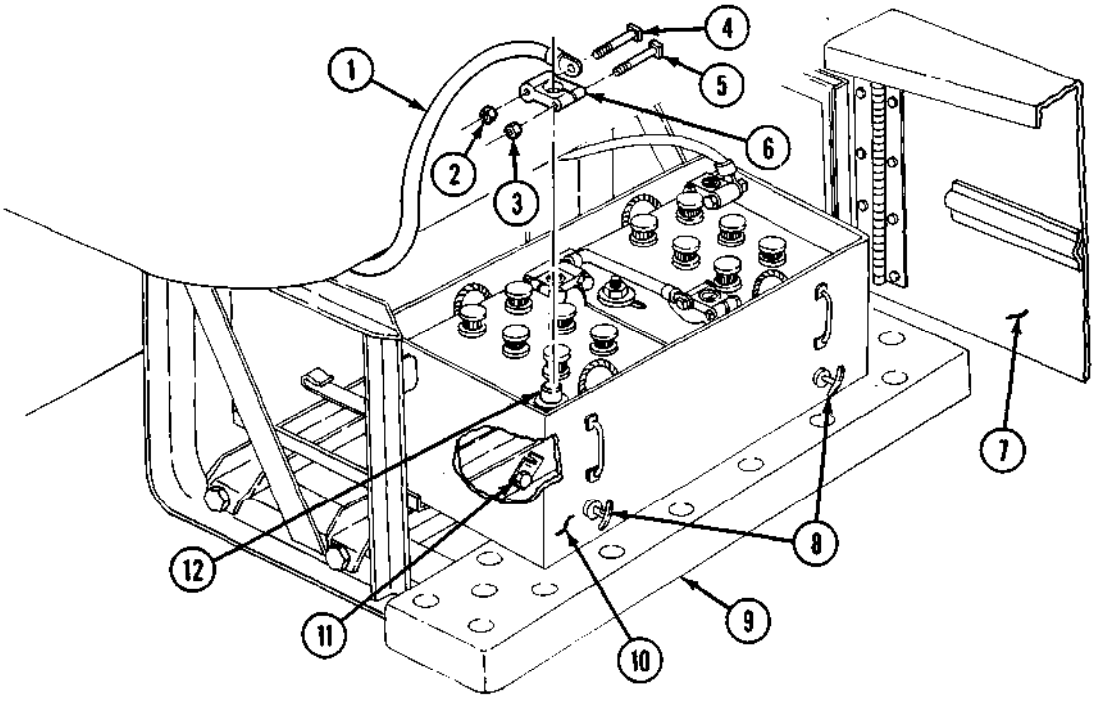

https://truckmanualshub.com/

4-48. BATTERY CABLES AND CLAMPS REPLACEMENT (Contd)

c. Ground Cable Removal

1. Remove nut (24), screw (34), and disconnect ground cable (26) from battery clamp (25).
2. Remove nut (18), lockwasher (19), ground cable (26), lockwasher (22), and screw (21) from frame (20). Discard lockwashers (19) and (22).

d. Battery-to-Battery Cable Removal

1. Remove nut (30), screw (2), and cable (1) from negative clamp (4).
2. Remove nut (32), screw (29), and cable (1) from positive clamp (27).

e. Positive Cable Removal

1. Remove nut (7), screw (10), and disconnect positive cable (5) from battery clamp (6).

NOTE

Remove two wires from starter solenoid on M756A2 model.

2. Remove nut (40) and disconnect positive cable (5) and wire (39) from starter solenoid (38).
3. Remove screw (36), clamp (37), and positive cable (5) from frame (20).

f. Battery Clamps Removal

1. Remove two nuts (31) and (23), screws (3) and (35), and clamps (4) and (25) from two negative posts (15).
2. Remove two nuts (8) and (33), screws (11) and (28), and clamps (6) and (27) from two positive posts (12).

g. Battery Clamps Installation

1. Install two clamps (6) and (27) on two positive posts (12) with two screws (11) and (28) and nuts (8) and (33).
2. Install two clamps (4) and (25) on two negative posts (15) with two screws (3) and (35) and nuts (31) and (23).

h. Positive Cable Installation

1. Install clamp (37) and positive cable (5) on frame (20) with screw (36).

NOTE

Install two wires on starter solenoid for M756A2 model.

2. Connect wire (39) and positive cable (5) to starter solenoid (38) with nut (40).
3. Connect positive cable (5) to clamp (6) with screw (10) and nut (7).

i. Battery-to-Battery Cable Installation

1. Install cable (1) on positive clamp (27) with screw (29) and nut (32).
2. Install cable (1) on negative clamp (4) with screw (2) and nut (30).

j. Ground Cable Installation

1. Connect ground cable (26) to frame (20) with new lockwasher (22), screw (21), lockwasher (19), and nut (18).
2. Connect ground cable (26) to battery clamp (25) with screw (34) and nut (24).
3. Push battery box (13) into battery compartment (17) and install with two clamps (16) and thumbscrews (14).
4. Close battery compartment door (9).

https://truckmanualshub.com/

4-48. BATTERY CABLES AND CLAMPS REPLACEMENT (Contd)

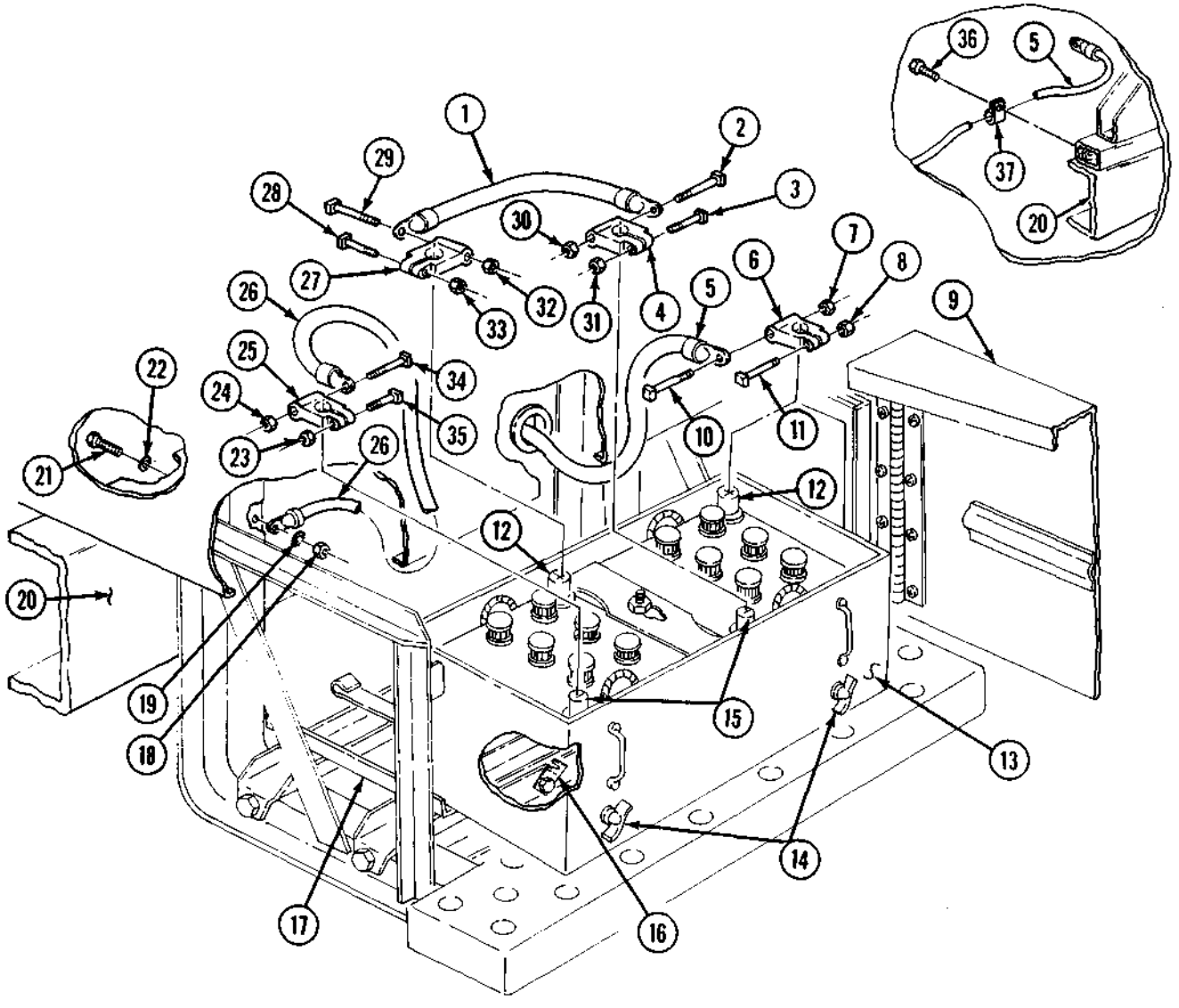

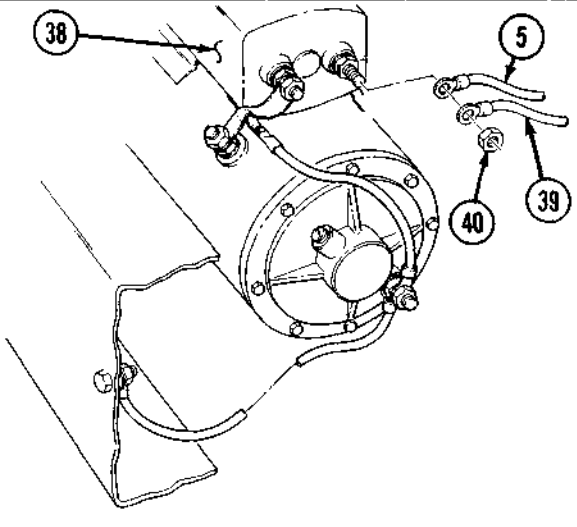

https://truckmanualshub.com/

4-49. BATTERY AND BATTERY BOX REPLACEMENT AND SERVICING

This task covers:

a. Batteries and Battery Box Removal
b. Battery Box Support Removal
c. Battery and Battery Box Servicing
d. Battery Box Support Installation
e. Batteries and Battery Box Installation

INITIAL SETUP:

APPLICABLE MODELS
All

MATERIALS/PARTS
Eleven locknuts
Four lockwashers
Two spring washers

PERSONNEL REQUIRED
Two

REFERENCES (TM)
TM 9-2320-361-10
TM 9-2320-361-20P
TM 9-6140-200-14

EQUIPMENT CONDITION
- Parking brake set (TM 9-2320-361-10).
- Battery clamps removed (para. 4-48).

GENERAL SAFETY INSTRUCTIONS
- Wear safety goggles and rubber gloves.
- Do not smoke when performing battery maintenance.
- Remove all jewelry.
- When removing batteries, disconnect battery ground cable first.

WARNING

- Battery acid (electrolyte) is extremely harmful. Always wear safety goggles and rubber gloves when performing battery maintenance. Severe injury will result if acid contacts eyes or skin.
- Do not smoke, have open flame, or make sparks when performing battery maintenance. Batteries may explode causing severe injury to personnel.
- Remove all jewelry such as rings, dog tags, bracelets, etc. If jewelry or disconnected battery ground cable contacts positive battery post, a direct short can result, causing damage to equipment or severe injury to personnel.
- When removing battery cables, disconnect ground cable first. Do not allow tools to come in contact with vehicle when disconnecting cable clamps. A direct short can result, causing instant heating of tools, tool damage, battery damage, or battery explosion, and severe injury to personnel.

a. Batteries and Battery Box Removal

1. Remove four nuts (1), lockwashers (2), J-bolts (4), and battery holddown (3) from battery box (6) and two batteries (5). Discard lockwashers (2).

NOTE

Assistant will help with step 2.

2. Remove two batteries (5) from battery box (6).
3. Remove battery box (6) from battery box support (7).
4. Remove five locknuts (20), screws (18), and shield (19) from battery box (6). Discard locknuts (20).
5. Remove two nuts (8), thumb screws (10), and washers (9) from battery box (6).

b. Battery Box Support Removal

1. Remove four locknuts (16), screws (17), and battery box support (7) from two running board brackets (15), Discard locknuts (16).
2. Remove two locknuts (11), screws (14), spring washers (13), and clamps (12) from battery box support (7), Discard locknuts (11) and spring washers (13).

https://truckmanualshub.com/

4-49. BATTERY AND BATTERY BOX REPLACEMENT AND SERVICING (Contd)

c. Battery and Battery Box Servicing

For battery and battery box servicing instructions refer to TM 9-6140-200-14.

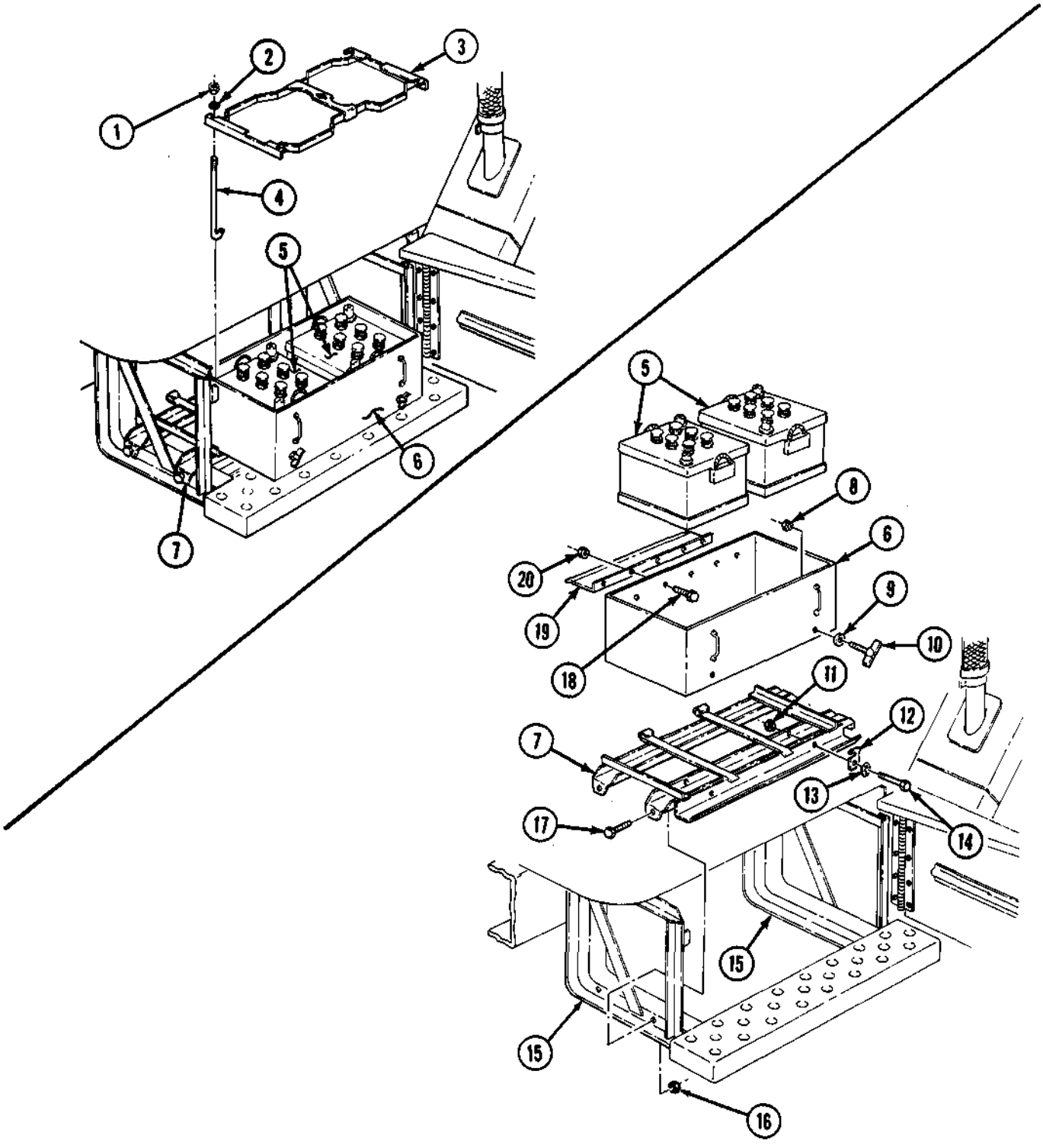

https://truckmanualshub.com/

4-49. BATTERY AND BATTERY BOX REPLACEMENT AND SERVICING (Contd)

d. Battery Box Support Installation

NOTE

Ensure clamps move freely when nuts are installed.

1. Install two clamps (12) on battery box support (7) with two new spring washers (13), screws (14), and new locknuts (11). Tighten nuts (11) so that clamps (12) may move freely.
2. Install battery box support (7) on two running board brackets (15) with four screws (17) and new locknuts (16).

e. Batteries and Battery Box Installation

1. Install shield (19) on battery box (6) with five screws (18) and new locknuts (20).
2. Install two washers (9) and thumbscrews (10) on battery box (6) with two nuts (8).
3. Install battery box (6) on battery box support (7).

NOTE

Assistant will help with step 4.

4. Place two batteries (5) in battery box (6). Install battery holddown (3) on battery box (6) and batteries (5) with four J-bolts (4), new lockwashers (2), and nuts (1).

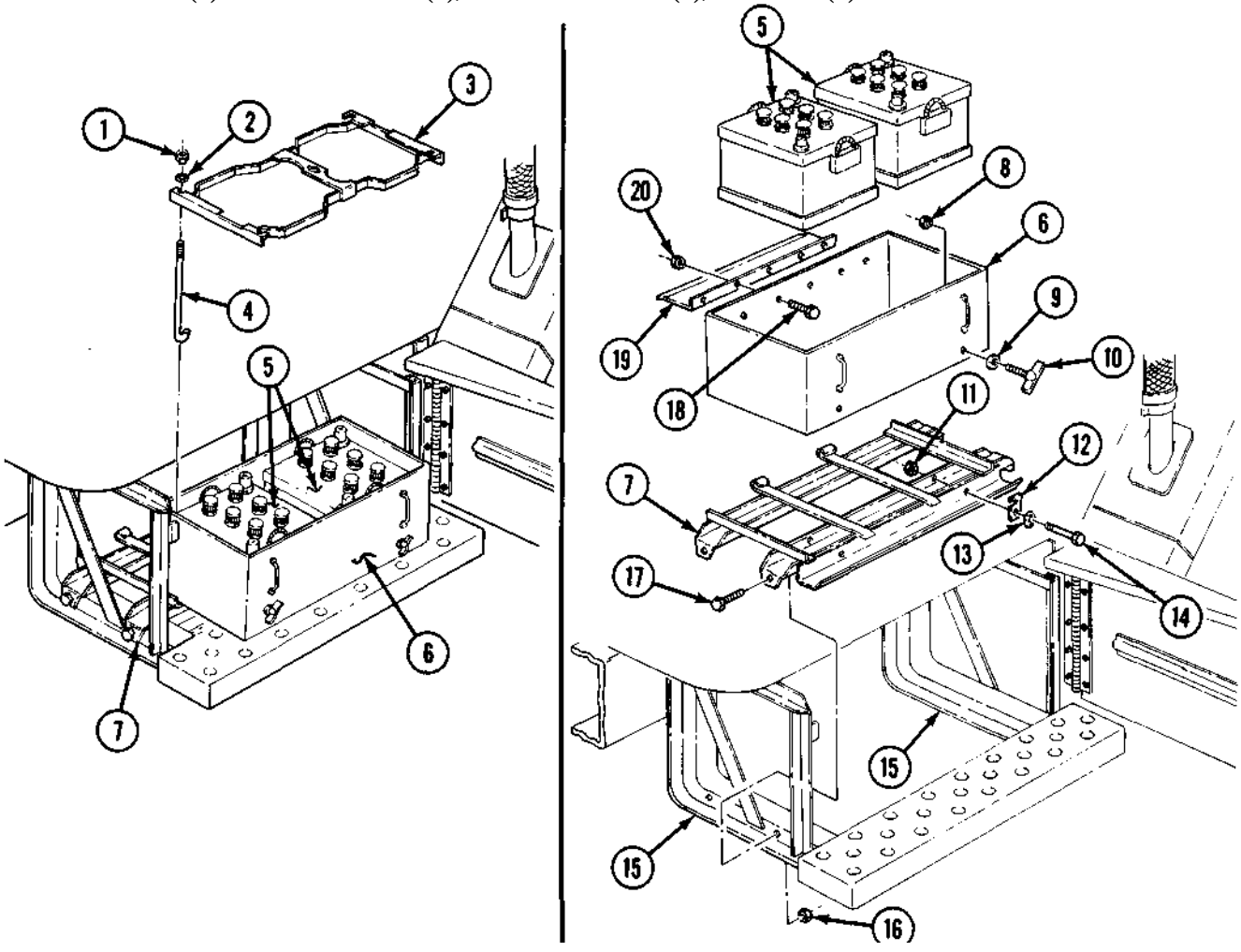

FOLLOW-ON TASK: Install battery clamps (para. 4-48).

https://truckmanualshub.com/

Section VI. WIRING HARNESS MAINTENANCE

4-50. WIRING HARNESS MAINTENANCE INDEX

PARA. NO.	TITLE	PAGE NO.
4-51.	Wiring Harness Connector Repair	4-79
4-52.	Cab Protector Wiring Harness Replacement (M756A2)	4-82

4-51. WIRING HARNESS CONNECTOR REPAIR

This task covers:

a. Terminal-Type Cable Connector Repair
b. Male Cable Connector Repair
c. Female Cable Connector Repair
d. Connector Assembly Repair
e. Receptacle Assembly Repair

INITIAL SETUP:

APPLICABLE MODELS
All

EQUIPMENT CONDITION
Battery ground cable disconnected (para. 4-48).

REFERENCES (TM)
TM 9-237
TM 9-2320-361-20P

a. Terminal-Type Cable Connector Repair

1. Strip cable insulation (1) from cable (2) to equal depth of terminal well (4).
2. Slide insulator (3) over cable insulation (1).
3. Insert cable (2) into terminal well (4) and crimp.
4. Slide insulator (3) over crimped end of terminal (5).

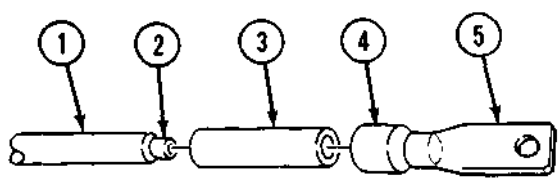

https://truckmanualshub.com/

4-51. WIRING HARNESS CONNECTOR REPAIR (Contd)

b. Male Cable Connector Repair

1. Strip cable insulation (1) from cable (2) to equal depth of terminal well (5).
2. Slide shell (3) over cable insulation (1).
3. Insert cable (2) into terminal well (6) and crimp.
4. Place slotted washer (4) over crimped junction at terminal (6).
5. Slide shell (3) over slotted washer (4) and terminal (6).

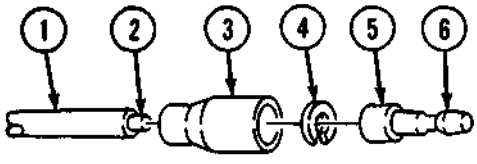

c. Female Cable Connector Repair

1. Strip cable insulation (7) from cable (8) to equal depth of terminal well (11).
2. Slide shell (9) and sleeve (10) over cable insulation (7).
3. Insert cable (8) into terminal well (11) and crimp.
4. Slide shell (9) and sleeve (10) over terminal (12).

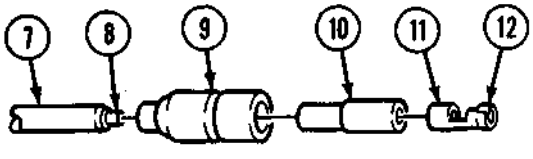

d. Connector Assembly Repair

NOTE

Refer to TM 9-237 for soldering instructions.

1. Strip cable insulation (13) to depth of solder wells (16) on inserts (17).
2. Slide cable ends (20) through grommet retaining nut (14) and grommet (16).
3. Place cable ends (20) into solder wells (16) and solder.
4. Slide grommet (15) over inserts (17) and press into shell assembly (18) until seated.
5. Screw grommet retaining nut (14) on shell assembly (18) and coupling nut (19) until seated.

https://truckmanualshub.com/

4-51. WIRING HARNESS CONNECTOR REPAIR (Contd)

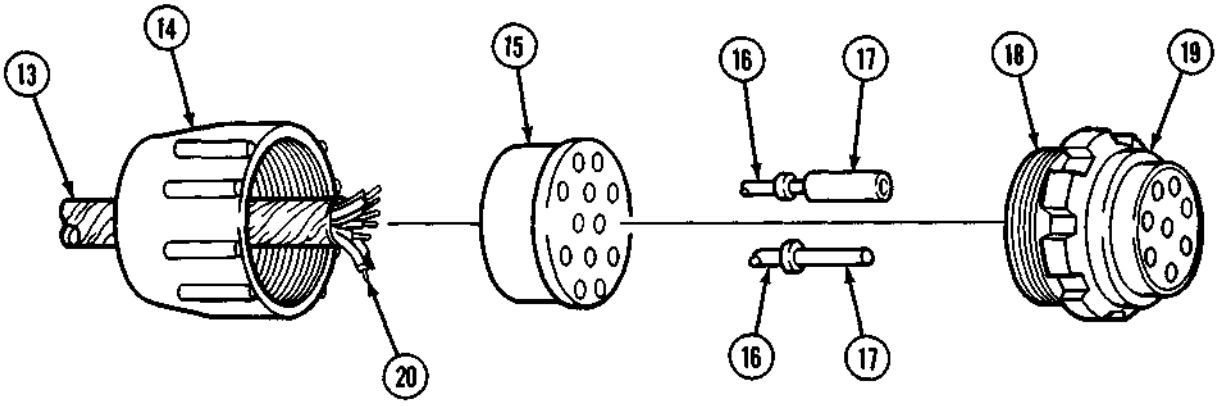

e. Receptacle Assembly Repair

NOTE

Refer to TM 9-237 for soldering instructions.

1. Strip cable insulation (21) to depth of solder wells (25) on inserts (26).
2. Slide cable ends (23) through grommet retaining nut (22) and grommet (24).
3. Place cable ends (23) into solder wells (25) and solder.
4. Slide grommet (24) over inserts (26) and press into receptacle (27) until seated.
5. Screw grommet retaining nut (22) onto receptacle (27) until seated.

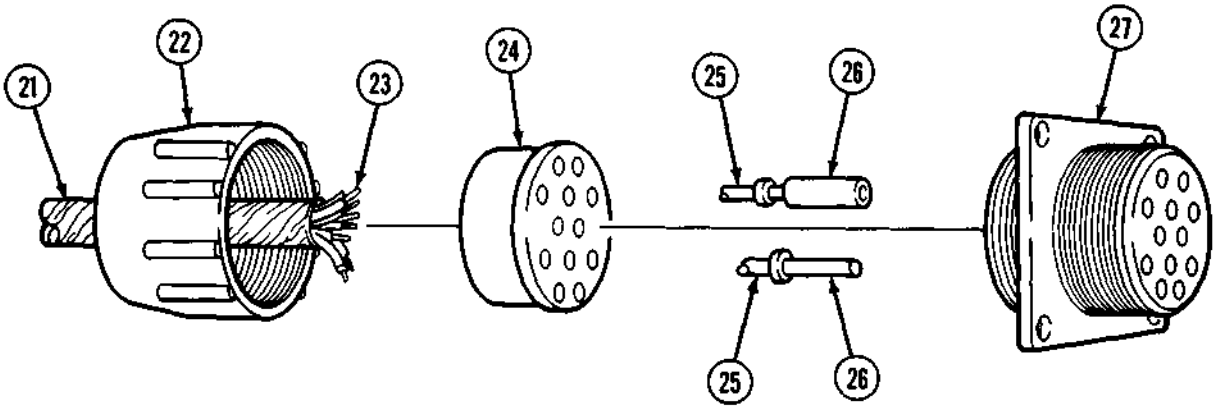

FOLLOW-ON TASK: Connect battery ground cable (para. 4-48).

https://truckmanualshub.com/

4-52. CAB PROTECTOR WIRING HARNESS REPLACEMENT (M756A2)

This task covers:

a. Removal **b. Installation**

INITIAL SETUP:

APPLICABLE MODELS
M756A2

MATERIALS/PARTS
Two locknuts
Lockwasher
Safety wire (Appendix C, Item 22)

REFERENCES (TM)
TM 9-2320-361-10
TM 9-2320-361-20P

EQUIPMENT CONDITION
- Parking brake set (TM 9-2320-361-10).
- Battery ground cable disconnected (para. 4-48).

a. Removal

CAUTION

Use care when removing or routing harness. Snagging may result, and forceful pulling will cause damage to harness.

NOTE

Tag all leads for installation.

1. Disconnect cab protector wiring harness (2) from two floodlights (5), three clearance light wires (4), and rear wiring harness (11).
2. Remove four grommets (3) from cab protector (1) and cab protector wiring harness (2).
3. Remove locknut (7), screw (16), and clamp (6) from cab protector wiring harness (2) and rear winch support (8). Discard locknut (7).
4. Remove locknut (10), screw (13), lockwasher (14), ground terminal (12), and clamp (15) from crossmember (9) and cab protector wiring harness (2). Discard locknut (10) and lockwasher (14).
5. Remove cab protector wiring harness (2) from cab protector (1).

b. Installation

1. Install cab protector wiring harness (2) in cab protector (1).
2. Install four grommets (3) on cab protector wiring harness (2) and cab protector (1).
3. Install clamp (15), ground terminal (12), and cab protector wiring harness (2) on crossmember (9) with new lockwasher (14), screw (13), and new locknut (10).
4. Install clamp (6) on cab protector wiring harness (2) and rear winch support (8) with screw (16) and new locknut (7).
5. Connect cab protector wiring harness (2) to rear wiring harness (11), three clearance light wires (4), and two floodlights (5).

https://truckmanualshub.com/

4-52. CAB PROTECTOR WIRING HARNESS REPLACEMENT (M756A2) (Contd)

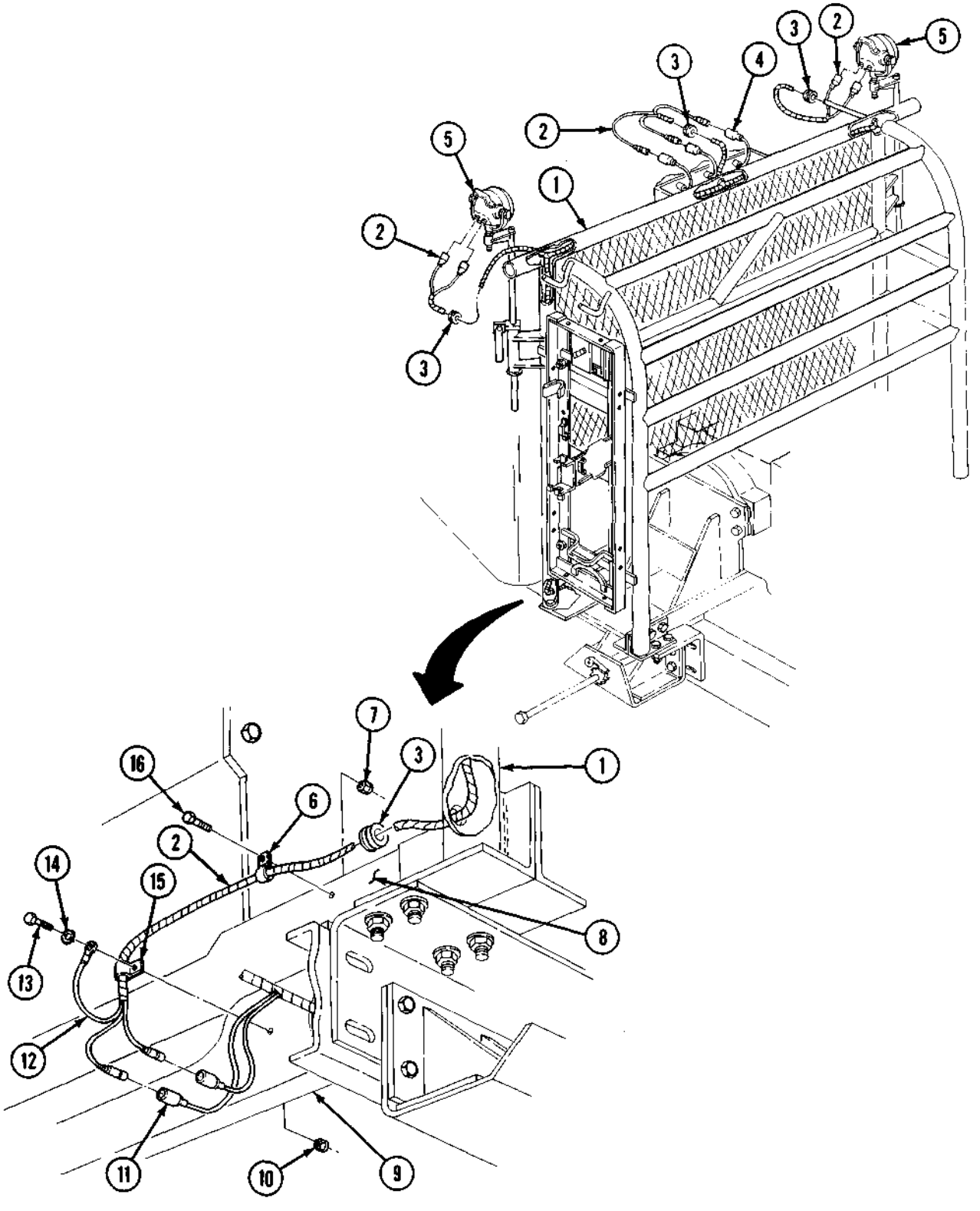

FOLLOW-ON TASK: Connect battery ground cable (para. 4-48).

https://truckmanualshub.com/

https://truckmanualshub.com/

CHAPTER 5
TRANSMISSION MAINTENANCE

5-1. TRANSMISSION MAINTENANCE INDEX

PARA. NO.	TITLE	PAGE NO.
5-2.	Transmission Breather Maintenance	5-1
5-3.	Transmission (Gearshift Lever Knob and Boot Replacement	5-3
5-4.	Transmission Gearshift Lever Replacement	5-4

5-2. TRANSMISSION BREATHER MAINTENANCE

This task covers:

a. Removal
b. Cleaning
c. Installation

INITIAL SETUP:

APPLICABLE MODELS
All

MATERIALS/PARTS
Drycleaning solvent (Appendix C, Item 26)
Rag (Appendix C, Item 21)

REFERENCES (TM)
TM 9-2320-361-10
TM 9-2320-361-20P

EQUIPMENT CONDITION
- Parking brake set (TM 9-2320-361-10).
- Cab intermediate tunnel removed (para. 11-22).

GENERAL SAFETY INSTRUCTIONS
Keep fire extinguisher nearby when using drycleaning solvent.

https://truckmanualshub.com/

5-2. TRANSMISSION BREATHER MAINTENANCE (Contd)

a. Removal

1. Wipe area around transmission breather hole (2) with rag.
2. Remove transmission breather (1) from transmission housing (3).

b. Cleaning

WARNING

Drycleaning solvent is flammable and will not be used near open flame. Use only in well-ventilated places. Failure to do so may result in injury to personnel.

Clean transmission breather (1) with drycleaning solvent.

c. Installation

Install transmission breather (1) on transmission housing (3).

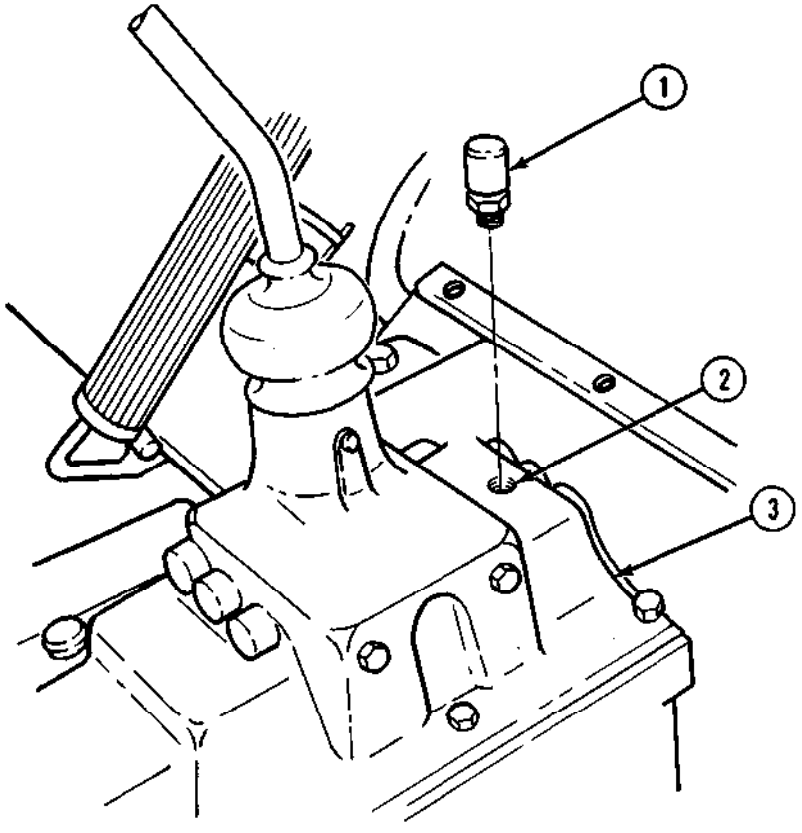

FOLLOW-ON TASK: Install cab intermediate tunnel (para. 11-22).

https://truckmanualshub.com/

5-3. TRANSMISSION GEARSHIFT LEVER KNOB AND BOOT REPLACEMENT

This task covers:

a. Removal b. Installation

INITIAL SETUP

APPLICABLE MODELS
All

REFERENCES [TM]
TM 9-2320-361-10
TM 9-2320-361-20P

EQUIPMENT CONDITION
Parking brake set (TM 9-2320-361-10).

a. Removal

1. Rotate gearshift knob (1) counterclockwise, and remove from gearshift lever (3).
2. Slide boot (2) up and off ball socket pedestal (4) and gearshift lever (3).

CAUTION

Use care during installation to prevent sharp edges from cutting boot.

1. Slide boot (2), small end facing up, over gearshift lever (3) and slide down to fit over ball socket pedestal (4) on transmission housing.
2. Rotate gearshift knob (1) clockwise to install on gearshift lever (3).

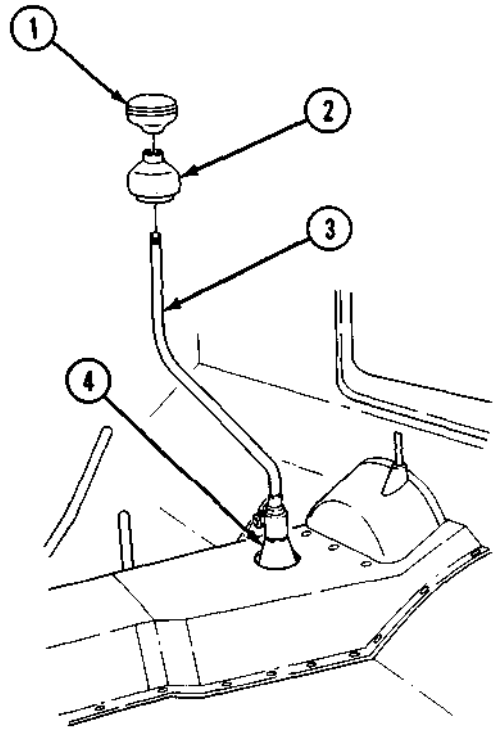

https://truckmanualshub.com/

5-4. TRANSMISSION GEARSHIFT LEVER REPLACEMENT

This task covers:

a. Removal

b. Installation

INITIAL SETUP:

APPLICABLE MODELS
All

REFERENCES (TM)
TM 9-2320-361-20P

MATERIALS/PARTS
Lockwasher

EQUIPMENT CONDITION
Transmission gearshift lever knob and boot removed (para. 5-3)

1. Position transmission shifter shaft (3) in neutral.
2. Remove nut (1), lockwasher (2), screw (4), and gearshift lever (3) from transmission shaft (5). Discard lockwasher (2).

Install gearshift lever (3) on transmission shifter shaft (5) with screw (4), new lockwasher (2), and nut (1). Tighten nut (1) 40-50 lb-ft. (54-68 NŽm).

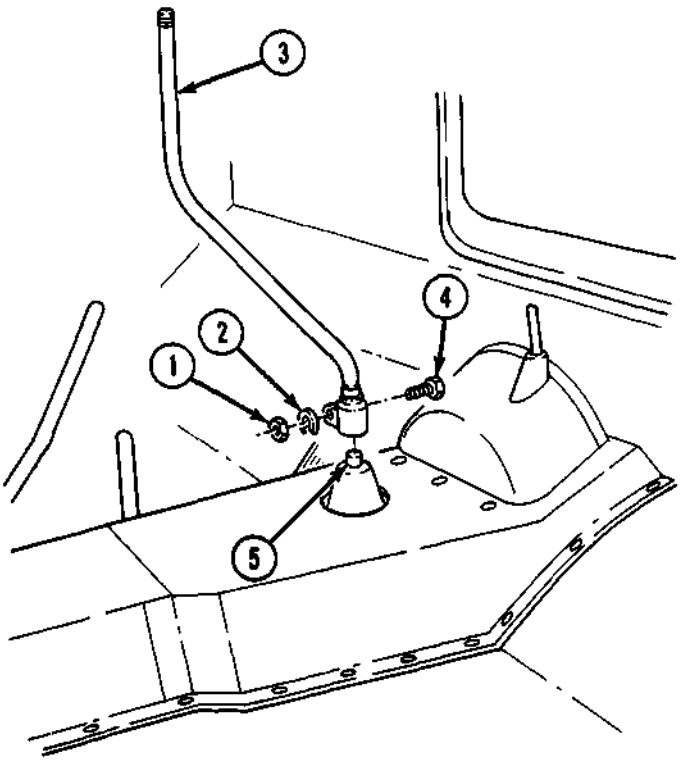

FOLLOW-ON TASK: Install gearshift lever knob and boot (para. 5-3).