https://truckmanualshub.com/

Genie®
A TEREX COMPANY

Service Manual

	Serial Number Range
GS™-1530/32	from GS3005A-76000 from GS3005B-76000 from GS3008C-101
GS™-1930/32	from GS3005A-76000 from GS3005B-76000 from GS3008C-101
GS™-2032	from GS3205-75407 from GS3208C-101
GS™-2632	from GS3205-75407 from GS3208C-101
GS™-3232	from GS3205-75407 from GS3208C-101
GS™-2046	from GS4605-75438
GS™-2646	from GS4605-75438
GS™-3246	from GS4605-75438

Part No. 97385
Rev E9
January 2011

https://truckmanualshub.com/

Introduction

Important

Read, understand and obey the safety rules and operating instructions in the appropriate Operator's Manual on your machine before attempting any maintenance procedure.

Basic mechanical, hydraulic and electrical skills are required to perform most procedures. However, several procedures require specialized skills, tools, lifting equipment and a suitable workshop. In these instances, we strongly recommend that maintenance and repair be performed at an authorized Genie dealer service center.

Compliance

Machine Classification
Group A/Type 3 as defined by ISO 16368

Machine Design Life
Unrestricted with proper operation, inspection and scheduled maintenance.

Technical Publications

Genie Industries has endeavored to deliver the highest degree of accuracy possible. However, continuous improvement of our products is a Genie policy. Therefore, product specifications are subject to change without notice.

Readers are encouraged to notify Genie of errors and send in suggestions for improvement. All communications will be carefully considered for future printings of this and all other manuals.

Contact Us:

www.genieindustries.com
e-mail: techpub@terex.com

Serial Number Information

Genie Industries offers the following Service Manuals for these models:

Title	Part No.
Genie GS-1530 and GS-1930 Service Manual, First Edition (before serial number 17408)	39528
Genie GS-1530 and GS-1930 Service Manual, Second Edition (from serial number 17408 to 59999)	72876
Genie GS-1530 and GS-1930 Service Manual, Third Edition (from serial number 60000 to 75999)	96316
Genie GS-2032 Service Manual, First Edition (before serial number 17408)	46326
Genie GS-2032 and GS-2632 Service Manual, Second Edition (from serial number 17408 to 59999)	72963
Genie GS-2032 and GS-2632 Service Manual, Third Edition (from serial number 60000 to 75406)	96316
Genie GS-2046, GS-2646 and GS-3246 Service Manual, First Edition (before serial number 17408)	48339
Genie GS-2046, GS-2646 and GS-3246 Service Manual, Second Edition (from serial number 17408 to 59999)	72972
Genie GS-2046, GS-2646 and GS-3246 Service Manual, Third Edition (from serial number 60000 to 75437)	96316

Copyright © 1997 by Genie Industries

97385 Rev E March 2007
Fourth Edition, Fifth Printing

"Genie" is a registered trademark of Genie Industries in the USA and many other countries.
"GS" is a trademark of Genie Industries.

Printed on recycled paper

Printed in U.S.A.

https://truckmanualshub.com/

Serial Number Legend

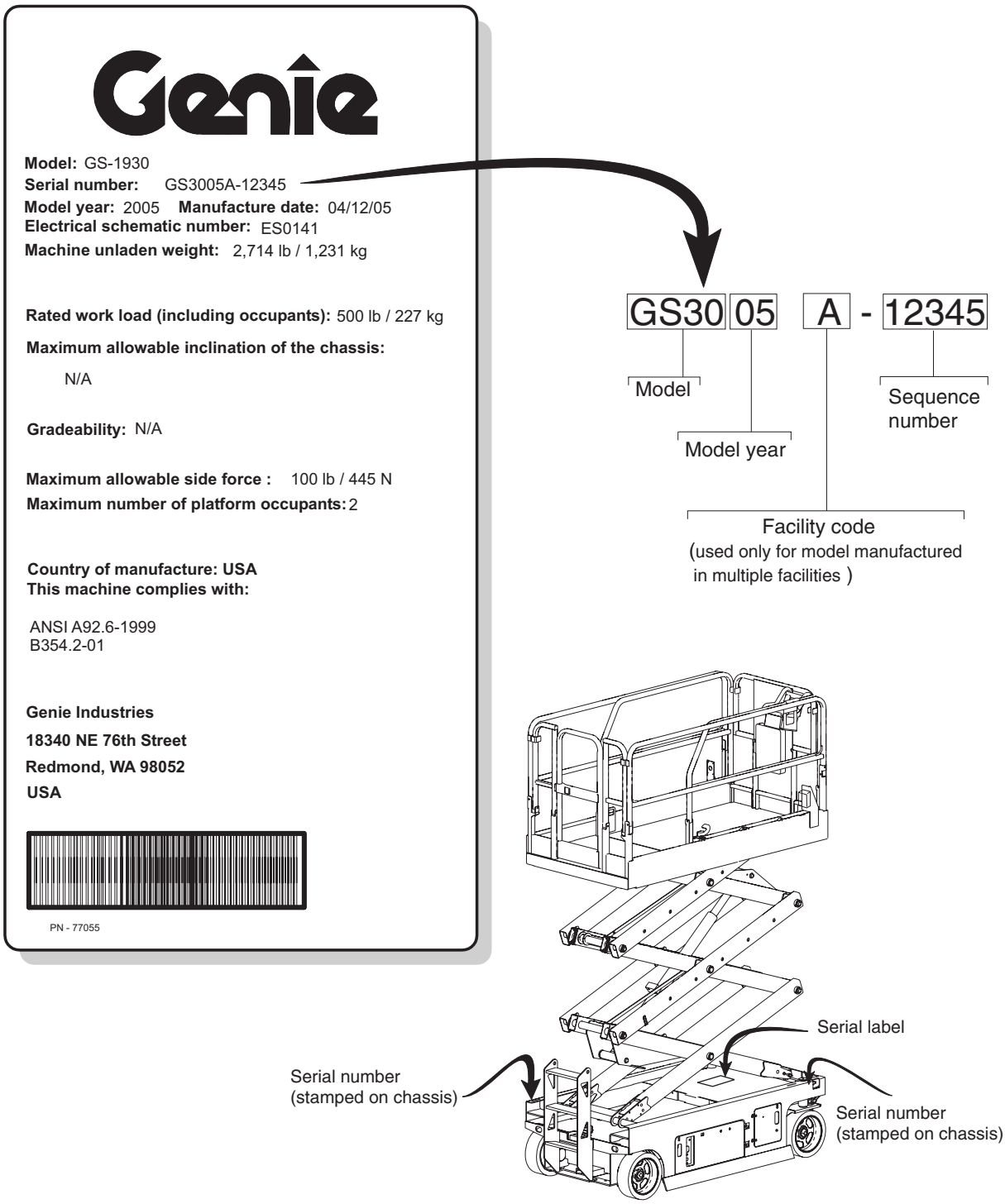

https://truckmanualshub.com/

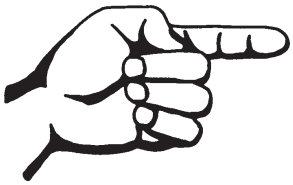

This page intentionally left blank.

https://truckmanualshub.com/

Safety Rules

Danger

Failure to obey the instructions and safety rules in this manual and the appropriate Operator's Manual on your machine will result in death or serious injury.

Many of the hazards identified in the operator’s manual are also safety hazards when maintenance and repair procedures are performed.

Do Not Perform Maintenance Unless:

☑ You are trained and qualified to perform maintenance on this machine.

☑ You read, understand and obey:
- manufacturer’s instructions and safety rules
- employer’s safety rules and worksite regulations
- applicable governmental regulations

☑ You have the appropriate tools, lifting equipment and a suitable workshop.

https://truckmanualshub.com/

SAFETY RULES

Personal Safety

Any person working on or around a machine must be aware of all known safety hazards. Personal safety and the continued safe operation of the machine should be your top priority.

Read each procedure thoroughly. This manual and the decals on the machine, use signal words to identify the following:

Safety alert symbol—used to alert personnel to potential personal injury hazards. Obey all safety messages that follow this symbol to avoid possible injury or death.

DANGER Indicates an imminently hazardous situation which, if not avoided, will result in death or serious injury.

WARNING Indicates a potentially hazardous situation which, if not avoided, could result in death or serious injury.

CAUTION Indicates a potentially hazardous situation which, if not avoided, may cause minor or moderate injury.

NOTICE Indicates a potentially hazardous situation which, if not avoided, may result in property damage.

Be sure to wear protective eye wear and other protective clothing if the situation warrants it.

Be aware of potential crushing hazards such as moving parts, free swinging or unsecured components when lifting or placing loads. Always wear approved steel-toed shoes.

Workplace Safety

Be sure to keep sparks, flames and lighted tobacco away from flammable and combustible materials like battery gases and engine fuels. Always have an approved fire extinguisher within easy reach.

Be sure that all tools and working areas are properly maintained and ready for use. Keep work surfaces clean and free of debris that could get into machine components and cause damage.

Be sure any forklift, overhead crane or other lifting or supporting device is fully capable of supporting and stabilizing the weight to be lifted. Use only chains or straps that are in good condition and of ample capacity.

Be sure that fasteners intended for one time use (i.e., cotter pins and self-locking nuts) are not reused. These components may fail if they are used a second time.

Be sure to properly dispose of old oil or other fluids. Use an approved container. Please be environmentally safe .

Be sure that your workshop or work area is properly ventilated and well lit.

https://truckmanualshub.com/

Table of Contents

Introduction

Important Information ..... *ii*
Serial Number Information ..... *ii*
Serial Number Legend ..... *iii*

Section 1 **Safety Rules**

General Safety Rules ..... *v*

Section 2 **Rev** **Specifications**

G Machine Specifications ..... 2 - 1
Performance Specifications ..... 2 - 2
Hydraulic Specifications ..... 2 - 3
Manifold Component Specifications ..... 2 - 4
Hydraulic Hose and Fitting Torque Specifications ..... 2 - 5
SAE and Metric Fasteners Torque Charts ..... 2 - 7

Section 3 **Rev** **Scheduled Maintenance Procedures**

Introduction ..... 3 - 1
Pre-delivery Preparation Report ..... 3 - 3
Maintenance Inspection Report ..... 3 - 5

C **Checklist A Procedures**

A-1 Inspect the Manuals and Decals ..... 3 - 6
A-2 Perform Pre-operation Inspection ..... 3 - 7
A-3 Perform Function Tests ..... 3 - 7
A-4 Perform 30 Day Service ..... 3 - 8
A-5 Grease the Steer Yokes ..... 3 - 8

https://truckmanualshub.com/

TABLE OF CONTENTS

Section 3	Rev	Scheduled Maintenance Procedures, continued	
	J	**Checklist B Procedures**	
		B-1 Inspect the Batteries	3 - 9
		B-2 Inspect the Electrical Wiring	3 - 11
		B-3 Inspect the Tires, Wheels and Castle Nut Torque	3 - 12
		B-4 Test the Emergency Stop	3 - 12
		B-5 Test the Key Switch	3 - 13
		B-6 Test the Automotive-style Horn (if equipped)	3 - 13
		B-7 Test the Drive Brakes	3 - 14
		B-8 Test the Drive Speed - Stowed Position	3 - 17
		B-9 Test the Drive Speed - Raised Position	3 - 18
		B-10 Test the Slow Drive Speed	3 - 19
		B-11 Perform Hydraulic Oil Analysis	3 - 20
		B-12 Inspect the Hydraulic Tank Cap Venting System	3 - 20
		B-13 Check the Module Tray Latch Components	3 - 21
		B-14 Inspect the Voltage Inverter (if equipped)	3 - 22
		B-15 Test the Down Limit Switch and the Pothole Limit Switches	3 - 23
		B-16 Test the Up Limit Switch (if equipped) and the Outrigger Limit Switches (if equipped)	3 - 26
	C	**Checklist C Procedures**	
		C-1 Test the Platform Overload System (if equipped)	3 - 27
		C-2 Replace the Hydraulic Tank Breather Cap - Models with Optional Hydraulic Oil	3 - 29
	E	**Checklist D Procedures**	
		D-1 Check the Scissor Arm Wear Pads	3 - 30
		D-2 Replace the Hydraulic Tank Return Filter Element	3 - 33
	C	**Checklist E Procedure**	
		E-1 Test or Replace the Hydraulic Oil	3 - 34

https://truckmanualshub.com/

TABLE OF CONTENTS

Section 4	Rev	Repair Procedures	
		Introduction	4 - 1
	J	**Platform Controls**	
		1-1 Circuit Boards	4 - 2
		1-2 Controller Adjustments	4 - 4
		1-3 Software Configuration	4 - 9
		1-4 Outrigger ECM	4 - 14
		1-5 Outrigger Controls Software Update	4 - 17
	B	**Platform Components**	
		2-1 Platform	4 - 34
		2-2 Platform Extension	4 - 35
	C	**Scissor Components**	
		3-1 Scissor Assembly, GS-1530 and GS-1532	4 - 36
		3-2 Scissor Assembly, GS-1930 and GS-1932	4 - 42
		3-3 Scissor Assembly, GS-2032 and GS-2046	4 - 50
		3-4 Scissor Assembly, GS-2632 and GS-2646	4 - 56
		3-5 Scissor Assembly, GS-3232 and GS-3246	4 - 64
		3-6 Lift Cylinder	4 - 72
		3-7 Platform Overload System	4 - 77
	D	**Ground Controls**	
		4-1 Manual Platform Lowering Cable	4 - 79
		4-2 Level Sensors	4 - 80
	B	**Hydraulic Pump**	
		5-1 Function Pump	4 - 86

https://truckmanualshub.com/

TABLE OF CONTENTS

Section 4	Rev	Repair Procedures, continued	
	F	**Manifolds**	
		6-1 Function Manifold Components - GS-1530, GS-1532, GS-1930 and GS-1932	4 - 88
		6-2 Function Manifold Components - GS-2032, GS-2632, GS-3232, GS-2046, GS-2646 and GS-3246	4 - 90
		6-3 Outrigger Function Manifold Components - GS-3232	4 - 92
		6-4 Outrigger Cylinder Manifold Components - GS-3232	4 - 93
		6-5 Check Valve Manifold Components - GS-1530, GS-1532, GS-1930 and GS-1932	4 - 94
		6-6 Valve Adjustments - Function Manifold	4 - 95
		6-7 Valve Coils	4 - 99
	B	**Hydraulic Tank**	
		7-1 Hydraulic Tank	4 - 101
	B	**Steer Axle Components**	
		8-1 Yoke and Drive Motor	4 - 102
		8-2 Steer Cylinder	4 - 103
		8-3 Steer Bellcrank	4 - 104
	A	**Non-steer Axle Components**	
		9-1 Drive Brake	4 - 105
	A	**Brake Release Hand Pump Components**	
		10-1 Brake Release Hand Pump Components	4 - 106
	A	**Outrigger Components**	
		11-1 Outrigger Cylinder	4 - 107

https://truckmanualshub.com/

TABLE OF CONTENTS

Section 5	Rev	Fault Codes	
		Introduction	5 - 1
	C	Fault Code Chart	5 - 3
	B	Outrigger Fault Code Chart	5 - 5

Section 6	Rev	Schematics	
		Introduction	6 - 1
	C	Electrical Component Legend	6 - 2
	B	Wire Color Legend	6 - 3
	D	ECM Pin-out Legend	6 - 4
	A	Outrigger ECM Pin-out Legend	6 - 5
	B	Wiring Diagram - Ground Controls and Level Sensor Harness	6 - 6
	B	Wiring Diagram - Platform Control Box and Outrigger Control Pad	6 - 7
	C	Limit Switch Legend	6 - 8
	B	Electrical Symbols Legend	6 - 9
		Electrical Schematics - ANSI, CSA and Australia Models	
	E	GS-1530/1532/1930/1932 (from serial number GS3005A-76000 to GS3006A-83067) (from serial number GS3005B-76000 to GS3006B-79659)	6 - 10
	C	GS-1530/1532/1930/1932 (from serial number GS3006A-83068 to GS3007A-87490) (from serial number GS3006B-79660 to GS3007B-82543)	6 - 14
	B	GS-1530/1532/1930/1932 (from serial number GS3007A-87491 to GS3007A-89537) (from serial number GS3007B-82544 to GS3007B-84599)	6 - 18
	C	GS-1530/1532/1930/1932 (after serial number GS3007A-89537) (after serial number GS3007B-84599)	6 - 22
	E	GS-2032/2632 (from serial number GS3205-75407 to GS3206-79991) GS-2046/2646/3246 (from serial number GS4605-75438 to GS4606-78915)	6 - 26
	C	GS-2032/2632 (from serial number GS3206-79992 to GS3207-83650) GS-2046/2646/3246 (from serial number GS4606-78916 to GS4607-82535)	6 - 30

https://truckmanualshub.com/

TABLE OF CONTENTS

Section 6	Rev	**Schematics**, continued	
	B	GS-2032/2632 (from serial number GS3207-83651 to GS3207-84866) GS-2046/2646/3246 (from serial number GS4607-82536 to GS4607-84839)	6 - 34
	C	GS-2032/2632/3232 (after serial number GS3207-84866) GS-2046/2646/3246 (after serial number GS4607-84839)	6 - 38
		Electrical Schematics - CE Models	
	E	GS-1530/1532/1930/1932 (from serial number GS3005A-76000 to GS3005A-76388) (from serial number GS3005B-76000 to GS3005B-76030)	6 - 42
	E	GS-1530/1532/1930/1932 (from serial number GS3005A-76389 to GS3005A-79394) (from serial number GS3005B-76031 to GS3005B-76920)	6 - 46
	D	GS-1530/1532/1930/1932 (from serial number GS3005A-79395 to GS3006A-83067) (from serial number GS3005B-76921 to GS3006B-79659)	6 - 50
	C	GS-1530/1532/1930/1932 (from serial number GS3006A-83068 to GS3007A-87490) (from serial number GS3006B-79660 to GS3007B-82543)	6 - 54
	B	GS-1530/1532/1930/1932 (from serial number GS3007A-87491 to GS3007A-89537) (from serial number GS3007B-82544 to GS3007B-84599)	6 - 58
	F	GS-1530/1532/1930/1932 (after serial number GS3007A-89537 and GS3007B-84599) (from serial number GS3008C-101)	6 - 62
	E	GS-2032/2632 (from serial number GS3205-75407 to GS3205-77290) GS-2046/2646/3246 (from serial number GS4605-75438 to GS4605-76734)	6 - 66
	D	GS-2032/2632 (from serial number GS3205-77291 to GS3206-79991) GS-2046/2646/3246 (from serial number GS4605-76735 to GS4606-78915)	6 - 70

https://truckmanualshub.com/

Section 6 **Rev** **Schematics**, continued

C GS-2032/2632
(from serial number GS3206-79992 to GS32007-83650)
GS-2046/2646/3246
(from serial number GS4606-78916 to GS4607-82535) ..... 6 - 74

B GS-2032/2632
(from serial number GS3207-83651 to GS32007-84866)
GS-2046/2646/3246
(from serial number GS4607-82536 to GS4607-84839) ..... 6 - 78

F GS-2032/2632/GS-3232
(after serial number GS32007-84866 and from GS3208C-101)
GS-2046/2646/3246
(after serial number GS4607-84839 and from GS4609C-101) ..... 6 - 82

Hydraulic Schematics

B Component Reference and Hydraulic Symbols Legend ..... 6 - 86

B GS-1530/1532/1930/1932
(from serial number GS3005A-76000 to 76491)
(from serial number GS3005B-76000 to 76084) ..... 6 - 88

D GS-1530/1532/1930/1932
(after serial number GS3005A-76491)
(after serial number GS3005B-76084)
(from serial number GS3008C-101) ..... 6 - 89

D GS-2032/2632
(from serial number GS3205-75407 to GS3206-80131)
GS-2046/2646/3246
(from serial number GS4605-75438 to GS4606-79027) ..... 6 - 90

A GS-2032/2632
(from serial number GS3206-80132 to GS3207-84866)
GS-2046/2646/3246
(form serial number GS4606-79028 to GS4607-84839) ..... 6 - 91

D GS-2032/2632/3232
(after serial number GS3207-84866 and from GS3208C-101)
GS-2046/2646/3246
(after serial number GS4607-84839 and from GS4609-101) ..... 6 - 92

D GS-3232
(from serial number GS3207-84867)
(from serial number GS3208C-101) ..... 6 - 93

https://truckmanualshub.com/

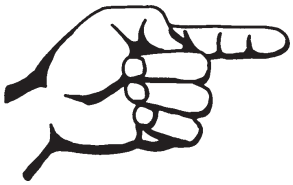

This page intentionally left blank.

https://truckmanualshub.com/

REV G

Specifications

Machine Specifications

Batteries, Standard	
Voltage	6V DC
Group	GC2
Type	T-105
Quantity	4
Battery capacity, maximum	225AH
Reserve capacity @ 25A rate	447 minutes
Weight, each	62 lbs 28 kg

Batteries, Maintenance-free (option)	
Voltage	6V DC
Group	GC2
Type	6V-AGM
Quantity	4
Battery capacity, maximum	200AH
Reserve capacity @ 25A rate	380 minutes
Weight, each	62 lbs 28 kg

Fluid capacities	
Hydraulic tank All models	3.75 gallons 14.2 liters
Hydraulic system (including tank) GS-3232 and GS-3246	5 gallons 19 liters
Hydraulic system (including tank) All other models	4.5 gallons 18 liters

For operational specifications, refer to the Operator's Manual.

Tires and wheels	
GS-1530, GS-1532, GS-1930, GS-1932	
Tire size (solid rubber)	12 x 4.5 in 30.5 x 11.4 cm
Tire contact area	9 sq in 58 cm^2
Castle nut torque, dry	300 ft-lbs 406.7 Nm
Castle nut torque, lubricated	225 ft-lbs 305 Nm
GS-2032, GS-2632, GS-3232, GS-2046, GS-2646, GS-3246	
Tire size (solid rubber)	15 x 5 in 38.1 x 12.7 cm
Tire contact area	15 sq in 96.7 cm^2
Castle nut torque, dry	300 ft-lbs 406.7 Nm
Castle nut torque, lubricated	225 ft-lbs 305 Nm

Continuous improvement of our products is a Genie policy. Product specifications are subject to change without notice.

https://truckmanualshub.com/

SPECIFICATIONS REV G

Performance Specifications

Drive speed, maximum	
GS-1530, GS-1532, GS-1930 and GS-1932	
Platform stowed, fast	2.5 mph 40 ft / 10.7 sec 4 km/h 12.2 m / 10.7 sec
Platform stowed, slow	1.1 mph 40 ft / 24.8 sec 1.8 km/h 12.2 m / 24.8 sec
Platform raised	0.5 mph 40 ft / 55 sec 0.8 km/h 12.2 m / 55 sec
GS-2032, GS-2632, GS-3232, GS-2046, GS-2646 and GS-3246	
Platform stowed, fast	2.2 mph 40 ft / 12.4 sec 3.5 km/h 12.2 m / 12.4 sec
Platform stowed, slow	1.1 mph 40 ft / 24.8 sec 1.8 km/h 12.2 m / 24.8 sec
Platform raised	0.5 mph 40 ft / 55 sec 0.8 km/h 12.2 m / 55 sec

Braking distance, maximum	
High range on paved surface	24 in ± 12 in 61 cm ± 30 cm

Gradeability	
GS-1930, GS-1932, GS-2632, GS-3232 and GS-3246	25%
GS-1530, GS-1532, GS-2032, GS-2046 and GS-2646	30%
Airborne noise emissions Maximum sound level at normal operation workstations (A-weighted)	<70 dB

Function speed, maximum from platform controls (with 1 person in platform)	
GS-1530 and GS-1532	
Platform up	15 to 17 seconds
Platform down	16 to 18 seconds
GS-1930 and GS-1932	
Platform up	15 to 17 seconds
Platform down	22 to 24 seconds
GS-2032 and GS-2046	
Platform up	28 to 32 seconds
Platform down	26 to 30 seconds
GS-2632 and GS-2646	
Platform up	28 to 32 seconds
Platform down	22 to 26 seconds
GS-3232 and GS-3246	
Platform up	55 to 59 seconds
Platform down	38 to 42 seconds

Rated work load at full height, maximum	
GS-1530 and GS-1532	600 lbs 272 kg
GS-1930, GS-1932, GS-2632 and GS-3232	500 lbs 227 kg
GS-2032	800 lbs 363 kg
GS-2046	1200 lbs 544 kg
GS-2646	1000 lbs 454 kg
GS-3246	700 lbs 317 kg

GS-3232 Outrigger leveling capacity, maximum	
Side to side	5°
Front to rear	3°

Continuous improvement of our products is a Genie policy. Product specifications are subject to change without notice.

https://truckmanualshub.com/

Hydraulic Specifications

Hydraulic Oil Specifications	
Hydraulic oil type	Chevron Rando HD equivalent
Viscosity grade	Multi-viscosity
Viscosity index	200
Cleanliness level, minimum	15/13
Water content, maximum	200 ppm

Chevron Rando HD oil is fully compatible and mixable with Shell Donax TG (Dexron III) oils. Genie specifications require hydraulic oils which are designed to give maximum protection to hydraulic systems, have the ability to perform over a wide temperature range, and the viscosity index should exceed 140. They should provide excellent antiwear, oxidation, corrosion inhibition, seal conditioning, and foam and aeration suppression properties.

Optional fluids	
Biodegradable	Petro Canada Environ MV 46 Statoil Hydra Way Bio Pa 32 BP Biohyd SE-S
Fire resistant	UCON Hydrolube HP-5046 Quintolubric 822
Mineral based	Shell Tellus T32 Shell Tellus T46 Chevron Aviation A

NOTICE Continued use of Chevron Aviation A hydraulic fluid when ambient temperatures are consistently above 32°F / 0°C may result in component damage.

Note: Use Chevron Aviation A hydraulic fluid when ambient temperatures consistently below 0°F / -17°C.

Note: Use Shell Tellus T46 hydraulic oil when oil temperatures consistently exceed 205°F / 96°C.

Note: Genie specifications require additional equipment and special installation instructions for the approved optional fluids. Consult the Genie Industries Service Department before use.

Function pump	
Type	Gear
Displacement per revolution	0.244 cu in 4 cc
Flow rate @ 2500 psi / 172 bar	4 gpm 15 L/min
Hydraulic tank return filter	10 micron with 25 psi / 1.7 bar bypass

Function manifold	
System relief valve pressure, maximum	3700 psi 255 bar
Lift relief valve pressure	1800 to 3700 psi 124 to 241 bar
Steer relief valve pressure	1500 psi 103 bar

Outrigger manifold	
Relief valve pressure, maximum	3500 psi 241 bar

Check valve manifold - GS-1530, GS-1532, GS-1930, GS-1932	
Check valve pressure, maximum	200 psi 13.8 bar

Continuous improvement of our products is a Genie policy. Product specifications are subject to change without notice.

https://truckmanualshub.com/

Manifold Component Specifications

Plug torque	
SAE No. 2	50 in-lbs / 6 Nm
SAE No. 4	13 ft-lbs / 18 Nm
SAE No. 6	18 ft-lbs / 24 Nm
SAE No. 8	50 ft-lbs / 68 Nm
SAE No. 10	55 ft-lbs / 75 Nm
SAE No. 12	75 ft-lbs / 102 Nm

Valve Coil Resistance

Note: The following coil resistance specifications are at an ambient temperature of 68°F / 20°C. As valve coil resistance is sensitive to changes in air temperature, the coil resistance will typically increase or decrease by 4% for each 18°F / -7.7°C that your air temperature increases or decreases from 68°F / 20°C.

Description	Specification
Solenoid valve, 3 position 4 way 20V DC with diode (schematic items F and AC)	27.2Ω
Solenoid valve, 3 position 4 way 20V DC with diode (schematic item E)	19Ω
Solenoid valve, 2 position 4 way 20V DC with diode (schematic item H and AI)	19Ω
Solenoid valve, 2 position 2 way N.C. 20V DC with diode (schematic item N)	25Ω
Solenoid valve, 2 position 4 way 20V DC with diode (schematic items AE)	19Ω
Solenoid valve, 3 position 5 way 20V DC with diode (schematic item AG)	19Ω
Solenoid valve, 2 position 2 way 20V DC with diode (schematic item CA, CB, CC and CD)	27.2Ω
Solenoid valve, 3 position 4 way 20V DC with diode (schematic item BA)	19Ω

Continuous improvement of our products is a Genie policy. Product specifications are subject to change without notice.

https://truckmanualshub.com/

Hydraulic Hose and Fitting Torque Specifications

Your machine is equipped with JIC 37° flared fittings and hose ends. Genie specifications require that fittings and hose ends be torqued to specification when they are removed and installed or when new hoses or fittings are installed.

SAE O-ring Boss Port
(tube fitting - installed into Aluminum)

SAE Dash size	Torque
-4	11 ft-lbs / 14.9 Nm
-6	23 ft-lbs / 31.2 Nm
-8	40 ft-lbs / 54.2 Nm
-10	69 ft-lbs / 93.6 Nm
-12	93 ft-lbs / 126.1 Nm
-16	139 ft-lbs / 188.5 Nm
-20	172 ft-lbs / 233.2 Nm
-24	208 ft-lbs / 282 Nm

JIC 37° Fittings
(swivel nut or hose connection)

SAE Dash size	Thread Size	Flats
-4	7/16-20	2
-6	9/16-18	1 1/4
-8	3/4-16	1
-10	7/8-14	1
-12	1 1/16-12	1
-16	1 5/16-12	1
-20	1 5/8-12	1
-24	1 7/8-12	1

SAE O-ring Boss Port
(tube fitting - installed into Steel)

SAE Dash size	Torque
-4	16 ft-lbs / 21.7 Nm
-6	35 ft-lbs / 47.5 Nm
-8	60 ft-lbs / 81.3 Nm
-10	105 ft-lbs / 142.4 Nm
-12	140 ft-lbs / 190 Nm
-16	210 ft-lbs / 284.7 Nm
-20	260 ft-lbs / 352.5 Nm
-24	315 ft-lbs / 427.1 Nm

https://truckmanualshub.com/

Torque Procedure

JIC 37° fittings

1 Align the tube flare (hex nut) against the nose of the fitting body (body hex fitting) and tighten the hex nut to the body hex fitting to hand-tight, approximately 30 in-lbs / 3.4 Nm.

2 Make a reference mark on one of the flats of the hex nut, and continue it on to the body hex fitting with a permanent ink marker. Refer to Figure 1.

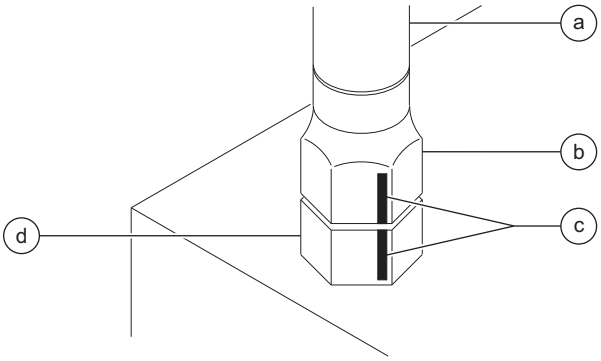

Figure 1

a hydraulic hose
b hex nut
c reference mark
d body hex fitting

3 Working clockwise on the body hex fitting, make a second mark with a permanent ink marker to indicate the proper tightening position. Refer to Figure 2.

Note: Use the *JIC 37° Fittings* table on the previous page to determine the correct number of flats for the proper tightening position.

Note: The marks indicate that the correct tightening positions have been determined. Use the second mark on the body hex fitting to properly tighten the joint after it has been loosened.

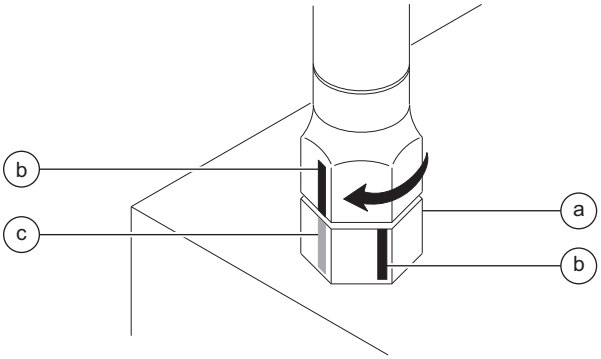

Figure 2

a body hex fitting
b reference mark
c second mark

4 Tighten the hex nut until the mark on the hex nut is aligned with the second mark on the body hex fitting.

5 Operate all machine functions and inspect the hoses and fittings and related components to confirm that there are no leaks.

https://truckmanualshub.com/

SAE FASTENER TORQUE CHART

• This chart is to be used as a guide only unless noted elsewhere in this manual •

SIZE	THREAD	Grade 5				Grade 8				A574 High Strength Black Oxide Bolts	
		LUBED		DRY		LUBED		DRY		LUBED	
		in-lbs	Nm	in-lbs	Nm	in-lbs	Nm	in-lbs	Nm	in-lbs	Nm
1/4	20	80	9	100	11.3	110	12.4	140	15.8	130	14.7
	28	90	10.1	120	13.5	120	13.5	160	18	140	15.8
		LUBED		DRY		LUBED		DRY		LUBED	
		ft-lbs	Nm	ft-lbs	Nm	ft-lbs	Nm	ft-lbs	Nm	ft-lbs	Nm
5/16	18	13	17.6	17	23	18	24	25	33.9	21	28.4
	24	14	19	19	25.7	20	27.1	27	36.6	24	32.5
3/8	16	23	31.2	31	42	33	44.7	44	59.6	38	51.5
	24	26	35.2	35	47.4	37	50.1	49	66.4	43	58.3
7/16	14	37	50.1	49	66.4	50	67.8	70	94.7	61	82.7
	20	41	55.5	55	74.5	60	81.3	80	108.4	68	92.1
1/2	13	57	77.3	75	101.6	80	108.4	110	149	93	126
	20	64	86.7	85	115	90	122	120	162	105	142
9/16	12	80	108.4	110	149	120	162	150	203	130	176
	18	90	122	120	162	130	176	170	230	140	189
5/8	11	110	149	150	203	160	217	210	284	180	244
	18	130	176	170	230	180	244	240	325	200	271
3/4	10	200	271	270	366	280	379	380	515	320	433
	16	220	298	300	406	310	420	420	569	350	474
7/8	9	320	433	430	583	450	610	610	827	510	691
	14	350	474	470	637	500	678	670	908	560	759
1	8	480	650	640	867	680	922	910	1233	770	1044
	12	530	718	710	962	750	1016	990	1342	840	1139
1 1/8	7	590	800	790	1071	970	1315	1290	1749	1090	1477
	12	670	908	890	1206	1080	1464	1440	1952	1220	1654
1 1/4	7	840	1138	1120	1518	1360	1844	1820	2467	1530	2074
	12	930	1260	1240	1681	1510	2047	2010	2725	1700	2304
1 1/2	6	1460	1979	1950	2643	2370	3213	3160	4284	2670	3620
	12	1640	2223	2190	2969	2670	3620	3560	4826	3000	4067

METRIC FASTENER TORQUE CHART

• This chart is to be used as a guide only unless noted elsewhere in this manual •

Size (mm)	Class 4.6 (4.6)				Class 8.8 (8.8)				Class 10.9 (10.9)				Class 12.9 (12.9)			
	LUBED		DRY		LUBED		DRY		LUBED		DRY		LUBED		DRY	
	in-lbs	Nm	in-lbs	Nm	in-lbs	Nm	in-lbs	Nm	in-lbs	Nm	in-lbs	Nm	in-lbs	Nm	in-lbs	Nm
5	16	1.8	21	2.4	41	4.63	54	6.18	58	6.63	78	8.84	68	7.75	91	10.3
6	19	3.05	36	4.07	69	7.87	93	10.5	100	11.3	132	15	116	13.2	155	17.6
7	45	5.12	60	6.83	116	13.2	155	17.6	167	18.9	223	25.2	1.95	22.1	260	29.4
	LUBED		DRY		LUBED		DRY		LUBED		DRY		LUBED		DRY	
	ft-lbs	Nm	ft-lbs	Nm	ft-lbs	Nm	ft-lbs	Nm	ft-lbs	Nm	ft-lbs	Nm	ft-lbs	Nm	ft-lbs	Nm
8	5.4	7.41	7.2	9.88	14	19.1	18.8	25.5	20.1	27.3	26.9	36.5	23.6	32	31.4	42.6
10	10.8	14.7	14.4	19.6	27.9	37.8	37.2	50.5	39.9	54.1	53.2	72.2	46.7	63.3	62.3	84.4
12	18.9	25.6	25.1	34.1	48.6	66	64.9	88	69.7	94.5	92.2	125	81	110	108	147
14	30.1	40.8	40	54.3	77.4	105	103	140	110	150	147	200	129	175	172	234
16	46.9	63.6	62.5	84.8	125	170	166	226	173	235	230	313	202	274	269	365
18	64.5	87.5	86.2	117	171	233	229	311	238	323	317	430	278	377	371	503
20	91	124	121	165	243	330	325	441	337	458	450	610	394	535	525	713
22	124	169	166	225	331	450	442	600	458	622	612	830	536	727	715	970
24	157	214	210	285	420	570	562	762	583	791	778	1055	682	925	909	1233

https://truckmanualshub.com/

This page intentionally left blank.

https://truckmanualshub.com/

Scheduled Maintenance Procedures

Observe and Obey:

- ☑ Maintenance inspections shall be completed by a person trained and qualified on the maintenance of this machine.
- ☑ Scheduled maintenance inspections shall be completed daily, quarterly, semi-annually, annually and every 2 years as specified on the *Maintenance Inspection Report.*

⚠WARNING Failure to properly complete each inspection when required may cause death, serious injury or substantial machine damage.

- ☑ Immediately tag and remove from service a damaged or malfunctioning machine.
- ☑ Repair any machine damage or malfunction before operating the machine.
- ☑ Use only Genie approved replacement parts.
- ☑ Machines that have been out of service for a period longer than 3 months must complete the quarterly inspection.
- ☑ Unless otherwise specified, perform each procedure with the machine in the following configuration:
  - Machine parked on a firm, level surface
  - Platform in the stowed position
  - Key switch in the off position with the key removed
  - The red Emergency Stop button in the off position at both ground and platform controls
  - Wheels chocked
  - All external AC power supply disconnected from the machine

About This Section

This section contains detailed procedures for each scheduled maintenance inspection.

Each procedure includes a description, safety warnings and step-by-step instructions.

Symbols Legend

⚠ Safety alert symbol—used to alert personnel to potential personal injury hazards. Obey all safety messages that follow this symbol to avoid possible injury or death.

⚠DANGER Indicates an imminently hazardous situation which, if not avoided, will result in death or serious injury.

⚠WARNING Indicates a potentially hazardous situation which, if not avoided, could result in death or serious injury.

⚠CAUTION Indicates a potentially hazardous situation which, if not avoided, may cause minor or moderate injury.

NOTICE Indicates a potentially hazardous situation which, if not avoided, may result in property damage.

⊙ Indicates that a specific result is expected after performing a series of steps.

⊠ Indicates that an incorrect result has occurred after performing a series of steps.

https://truckmanualshub.com/

SCHEDULED MAINTENANCE PROCEDURES

Maintenance Symbols Legend

Note: The following symbols have been used in this manual to help communicate the intent of the instructions. When one or more of the symbols appears at the beginning of a maintenance procedure, it conveys the meaning below.

Indicates that tools will be required to perform this procedure.

Indicates that new parts will be required to perform this procedure.

Indicates that a cold motor or pump will be required to perform this procedure.

Indicates that dealer service will be required to perform this procedure.

Pre-delivery Preparation Report

The pre-delivery preparation report contains checklists for each type of scheduled inspection.

Make copies of the *Pre-delivery Preparation* report to use for each inspection. Store completed forms as required.

Maintenance Schedule

There are five types of maintenance inspections that must be performed according to a schedule—daily, quarterly, semi-annually, annually, and two year. The *Scheduled Maintenance Procedures Section and the Maintenance Inspection Report* have been divided into five subsections—A, B, C, D, and E. Use the following chart to determine which group(s) of procedures are required to perform a scheduled inspection.

Inspection	Checklist
Daily or every 8 hours	A
Quarterly or every 250 hours	A + B
Semi-annually or every 500 hours	A + B + C
Annually or every 1000 hours	A + B + C + D
Two year or every 2000 hours	A + B + C + D + E

Maintenance Inspection Report

The maintenance inspection report contains checklists for each type of scheduled inspection.

Make copies of the *Maintenance Inspection Report* to use for each inspection. Maintain completed forms for a minimum of 4 years or in compliance with your employer, jobsite and governmental regulations and requirements.

https://truckmanualshub.com/

Pre-Delivery Preparation

Fundamentals

It is the responsibility of the dealer to perform the Pre-delivery Preparation.

The Pre-delivery Preparation is performed prior to each delivery. The inspection is designed to discover if anything is apparently wrong with a machine before it is put into service.

A damaged or modified machine must never be used. If damage or any variation from factory delivered condition is discovered, the machine must be tagged and removed from service.

Repairs to the machine may only be made by a qualified service technician, according to the manufacturer's specifications.

Scheduled maintenance inspections shall be performed by qualified service technicians, according to the manufacturer's specifications and the requirements listed in the responsibilities manual.

Instructions

Use the operator's manual on your machine.

The Pre-delivery Preparation consists of completing the Pre-operation Inspection, the Maintenance items and the Function Tests.

Use this form to record the results. Place a check in the appropriate box after each part is completed. Follow the instructions in the operator's manual.

If any inspection receives an N, remove the machine from service, repair and re-inspect it. After repair, place a check in the R box.

Legend

Y = yes, completed
N = no, unable to complete
R = repaired

Comments

Pre-Delivery Preparation	Y	N	R
Pre-operation inspection completed			
Maintenance items completed			
Function tests completed			

Model

Serial number

Date

Machine owner

Inspected by (print)

Inspector signature

Inspector title

Inspector company

A TEREX BRAND

Genie Industries USA
18340 NE 76th Street
PO Box 97030
Redmond, WA 98073-9730
(425) 881-1800

Genie UK
The Maltings, Wharf Road
Grantham, Lincolnshire
NG31- 6BH England
(44) 1476-584333

Copyright © 2002 by Genie Industries. Genie® is a registered trademark of Genie Industries. Rev B

https://truckmanualshub.com/

This page intentionally left blank.

https://truckmanualshub.com/

Maintenance Inspection Report

Model

Serial number

Date

Hour meter

Machine owner

Inspected by (print)

Inspector signature

Inspector title

Inspector company

Instructions

- Make copies of this report to use for each inspection.
- Select the appropriate checklist(s) for the type of inspection to be performed.

☐	**Daily or 8 hours Inspection:**	**A**
☐	**Quarterly or 250 hours Inspection:**	**A+B**
☐	**Semi-annually or 500 hours Inspection:**	**A+B+C**
☐	**Annually or 1000 hours Inspection:**	**A+B+C+D**
☐	**Two year or 2000 hours Inspection:**	**A+B+C+D+E**

- Place a check in the appropriate box after each inspection procedure is completed.
- Use the step-by-step procedures in this section to learn how to perform these inspections.
- If any inspection receives an “N”, tag and remove the machine from service, repair and re-inspect it. After repair, place a check in the “R” box.

Legend

Y = yes, acceptable

N = no, remove from service

R = repaired

Checklist A - Rev C		Y	N	R
A-1	Inspect the manuals and decals			
A-2	Pre-operation inspection			
A-3	Function tests			
Perform after 40 hours:				
A-4	30 day service			
Perform every 100 hours:				
A-5	Grease steer yokes			

Checklist B - Rev J		Y	N	R
B-1	Batteries			
B-2	Electrical wiring			
B-3	Tires and wheels			
B-4	Emergency stop			
B-5	Key switch			
B-6	Horn (if equipped)			
B-7	Drive brakes			
B-8	Drive speed - stowed			
B-9	Drive speed - raised			
B-10	Drive speed - slow			
B-11	Hydraulic oil analysis			
B-12	Tank venting system			
B-13	Latch components			
B-14	Voltage inverter (if equipped)			
B-15	Test the down and pothole limit switches			
B-16	Test the up and outrigger limit switches (if equipped)			

Checklist C - Rev C		Y	N	R
C-1	Platform overload (if equipped)			
C-2	Breather cap - models with optional oil			

Checklist D - Rev E		Y	N	R
D-1	Scissor arm wear pads			
D-2	Hydraulic filter			

Checklist E - Rev C		Y	N	R
E-1	Hydraulic oil			

Comments

https://truckmanualshub.com/

Checklist A Procedures

REV C

A-1
Inspect the Manuals and Decals

Maintaining the operator's and safety manuals in good condition is essential to safe machine operation. Manuals are included with each machine and should be stored in the container provided in the platform. An illegible or missing manual will not provide safety and operational information necessary for a safe operating condition.

In addition, maintaining all of the safety and instructional decals in good condition is mandatory for safe machine operation. Decals alert operators and personnel to the many possible hazards associated with using this machine. They also provide users with operation and maintenance information. An illegible decal will fail to alert personnel of a procedure or hazard and could result in unsafe operating conditions.

1 Check to make sure that the operator's and safety manuals are present and complete in the storage container on the platform.

2 Examine the pages of each manual to be sure that they are legible and in good condition.

⊙ Result: The operator's manual is appropriate for the machine and all manuals are legible and in good condition.

⊠ Result: The operator's manual is not appropriate for the machine or all manuals are not in good condition or is illegible. Remove the machine from service until the manual is replaced.

3 Open the operator's manual to the decals inspection section. Carefully and thoroughly inspect all decals on the machine for legibility and damage.

⊙ Result: The machine is equipped with all required decals, and all decals are legible and in good condition.

⊠ Result: The machine is not equipped with all required decals, or one or more decals are illegible or in poor condition. Remove the machine from service until the decals are replaced.

4 Always return the manuals to the storage container after use.

Note: Contact your authorized Genie distributor or Genie Industries if replacement manuals or decals are needed.

https://truckmanualshub.com/

A-2
Perform Pre-operation Inspection

Completing a Pre-operation Inspection is essential to safe machine operation. The Pre-operation Inspection is a visual inspection performed by the operator prior to each work shift. The inspection is designed to discover if anything is apparently wrong with a machine before the operator performs the function tests. The Pre-operation Inspection also serves to determine if routine maintenance procedures are required.

Complete information to perform this procedure is available in the appropriate operator's manual. Refer to the Operator's Manual on your machine.

A-3
Perform Function Tests

Completing the function tests is essential to safe machine operation. Function tests are designed to discover any malfunctions before the machine is put into service. A malfunctioning machine must never be used. If malfunctions are discovered, the machine must be tagged and removed from service.

Complete information to perform this procedure is available in the appropriate operator's manual. Refer to the Operator's Manual on your machine.

https://truckmanualshub.com/

CHECKLIST A PROCEDURES REV C

A-4
Perform 30 Day Service

The 30 day maintenance procedure is a one time procedure to be performed after the first 30 days or 40 hours of usage. After this interval, refer to the maintenance tables for continued scheduled maintenance.

1 Perform the following maintenance procedures:

- B-3 Inspect the Tires, Wheels and Castle Nut Torque
- D-2 Replace the Hydraulic Tank Return Filter Element

A-5
Grease the Steer Yokes

Genie specifications require that this procedure be performed every 100 hours of operation.

Regular application of lubrication to the steer yokes is essential to good machine performance and service life. Continued use of an insufficiently greased steer yoke will result in component damage.

1 Locate the grease fitting on the top of the steer yoke.

2 Pump multipurpose grease into the steer yoke until the steer yoke is full and grease is being forced past the bearings. Repeat this step for the other steer yoke.

Grease Specification
Chevron Ultra-duty grease, EP NLGI 1 (lithium based) or equivalent

https://truckmanualshub.com/

Checklist B Procedures

REV J

B-1
Inspect the Batteries

Genie requires that this procedure be performed every 250 hours or quarterly, whichever comes first.

Proper battery condition is essential to good machine performance and operational safety. Improper fluid levels or damaged cables and connections can result in component damage and hazardous conditions.

WARNING Electrocution/burn hazard. Contact with electrically charged circuits could result in death or serious injury. Remove all rings, watches and other jewelry.

WARNING Bodily injury hazard. Batteries contain acid. Avoid spilling or contacting battery acid. Neutralize battery acid spills with baking soda and water.

1 Release the battery pack latch and rotate the battery pack out and away from the chassis.

2 Be sure that the battery cable connections are free of corrosion.

Note: Adding terminal protectors and a corrosion preventative sealant will help eliminate corrosion on the battery terminals and cables.

3 Be sure that the battery retainers and cable connections are tight.

4 Fully charge the batteries. Allow the batteries to rest 24 hours before performing this procedure to allow the battery cells to equalize.

5 Put on protective clothing and eye wear.

Models without maintenance-free or sealed batteries:

6 Remove the battery vent caps and check the specific gravity of each battery cell with a hydrometer. Note the results.

7 Check the ambient air temperature and adjust the specific gravity reading for each cell as follows:

- Add 0.004 to the reading of each cell for every 10° / 5.5° C above 80° F / 26.7° C.
- Subtract 0.004 from the reading of each cell for every 10° / 5.5° C below 80° F / 26.7° C.

Result: All battery cells display an adjusted specific gravity of 1.277 or higher. The battery is fully charged. Proceed to step 11.

Result: One or more battery cells display a specific gravity of 1.217 or below. Proceed to step 8.

8 Perform an equalizing charge OR fully charge the batteries and allow the batteries to rest at least 6 hours.

9 Remove the battery vent caps and check the specific gravity of each battery cell with a hydrometer. Note the results.

10 Check the ambient air temperature and adjust the specific gravity reading for each cell as follows:

- Add 0.004 to the reading of each cell for every 10° / 5.5° C above 80° F / 26.7° C.
- Subtract 0.004 from the reading of each cell for every 10° / 5.5° C below 80° F / 26.7° C.

Result: All battery cells display a specific gravity of 1.277 or greater. The battery is fully charged. Proceed to step 11.

Result: The difference in specific gravity readings between cells is greater than 0.1 OR the specific gravity of one or more cells is less than 1.177. Replace the battery.

https://truckmanualshub.com/

CHECKLIST B PROCEDURES REV J

11 Check the battery acid level. If needed, replenish with distilled water to 1/8 inch / 3 mm below the bottom of the battery fill tube. Do not overfill.

12 Install the vent caps and neutralize any electrolyte that may have spilled.

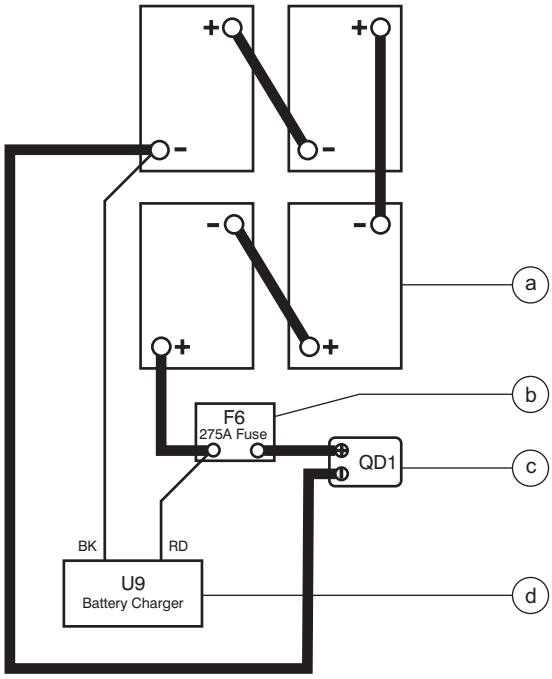

a batteries B5
b 275A fuse F6
c quick disconnect QD1
d battery charger U9

All models:

13 Check each battery pack and verify that the batteries are wired correctly.

14 Inspect the battery charger plug and pigtail for damage or excessive insulation wear. Replace as required.

15 Connect the battery charger to a properly grounded 115V/60Hz or 230V/60Hz single phase AC power supply.

Result: The charger should operate and begin charging the batteries.

If, simultaneously, the charger alarm sounds and the LEDs blink **one time**, correct the charger connections at the fuse and battery. The charger will then operate correctly and begin charging the batteries.

If, simultaneously, the charger alarm sounds and the LEDs blink **two times**, the input voltage is too low or too high. Correct the voltage issue. The charger will then operate correctly and begin charging the batteries.

If, simultaneously, the charger alarm sounds and the LEDs blink **three times**, the charger is overheated. Allow the charger to cool. The charger will then operate correctly and begin charging the batteries.

Note: For best results, use an extension of adequate size with a length no longer than 50 feet / 15 m.

Note: If you have any further questions regarding the battery charger operation, please contact the Genie Industries Scissor Service Department.

https://truckmanualshub.com/

B-2
Inspect the Electrical Wiring

Genie requires that this procedure be performed every 250 hours or quarterly, whichever comes first.

Maintaining electrical wiring in good condition is essential to safe operation and good machine performance. Failure to find and replace burnt, chafed, corroded or pinched wires could result in unsafe operating conditions and may cause component damage.

WARNING Electrocution/burn hazard. Contact with electrically charged circuits could result in death or serious injury. Remove all rings, watches and other jewelry.

1 Inspect the underside of the chassis for damaged or missing ground strap(s).

2 Inspect the following areas for burnt, chafed, corroded and loose wires:

- Ground control panel
- Hydraulic power unit module tray
- Battery pack module tray
- Scissor arms
- Platform controls

3 Inspect for a liberal coating of dielectric grease in the following locations:

- Between the ECM and platform controls
- All wire harness connectors
- Level sensor

4 Turn the key switch to ground control and pull out the red Emergency Stop button to the on position at both the ground and platform controls.

5 Raise the platform approximately 8 feet / 2.4 m from the ground.

6 Rotate the safety arm away from the machine and let it hang down.

7 Lower the platform onto the safety arm.

WARNING Crushing hazard. Keep hands clear of the safety arm when lowering the platform.

8 Inspect the center chassis area and scissor arms for burnt, chafed and pinched cables.

9 Inspect the following areas for burnt, chafed, corroded, pinched and loose wires:

- Scissor arms
- ECM to platform controls
- Power to platform wiring

10 Inspect for a liberal coating of dielectric grease in all connections between the ECM and the platform controls.

11 Raise the platform and return the safety arm to the stowed position.

12 Lower the platform to the stowed position and turn the machine off.

https://truckmanualshub.com/

CHECKLIST B PROCEDURES REV J

B-3
Inspect the Tires and Wheels (including castle nut torque)

Genie requires that this procedure be performed every 250 hours or quarterly, whichever comes first.

Maintaining the tires and wheels in good condition is essential to safe operation and good performance. Tire and/or wheel failure could result in a machine tip-over. Component damage may also result if problems are not discovered and repaired in a timely fashion.

1 Check the tire surface and sidewalls for cuts, cracks, punctures and unusual wear.

2 Check each wheel for damage, bends and cracks.

3 Remove the cotter pin and check each castle nut for proper torque. Refer to Section 2, *Specifications.*

Note: Always replace the cotter pin with a new one when removing the castle nut or when checking the torque of the castle nut.

4 Install a new cotter pin. Bend the cotter pin to lock it in place.

B-4
Test the Emergency Stop

Genie requires that this procedure be performed every 250 hours or quarterly, whichever comes first.

A properly functioning Emergency Stop is essential for safe machine operation. An improperly operating red Emergency Stop button will fail to shut off power and stop all machine functions, resulting in a hazardous situation.

As a safety feature, selecting and operating the ground controls will override the platform controls, except the platform red Emergency Stop button.

1 Turn the key switch to ground control and pull out the red Emergency Stop button to the on position at both the ground and platform controls.

2 Push in the red Emergency Stop button at the ground controls to the off position.

⊙ Result: No machine functions should operate.

3 Turn the key switch to platform control and pull out the red Emergency Stop button to the on position at both the ground and platform controls.

4 Push down the red Emergency Stop button at the platform controls to the off position.

⊙ Result: No machine functions should operate.

Note: The red Emergency Stop button at the ground controls will stop all machine operation, even if the key switch is switched to platform control.

https://truckmanualshub.com/

B-5
Test the Key Switch

Genie requires that this procedure be performed every 250 hours or quarterly, whichever comes first.

Proper key switch action and response is essential to safe machine operation. The machine can be operated from the ground or platform controls and the activation of one or the other is accomplished with the key switch. Failure of the key switch to activate the appropriate control panel could cause a hazardous operating situation.

Perform this procedure from the ground using the platform controls. Do not stand in the platform.

1 Pull out the red Emergency Stop button to the on position at both the ground and platform controls.

2 Turn the key switch to **platform control**.

3 Check the platform up/down function from the **ground controls**.

⊙ Result: The machine functions should **not** operate.

4 Turn the key switch to **ground control**.

5 Check the machine functions from the **platform controls**.

⊙ Result: The machine functions should **not** operate.

6 Turn the key switch to the off position.

⊙ Result: No function should operate.

B-6
Test the Automotive-style Horn (if equipped)

Genie requires that this procedure be performed every 250 hours or quarterly, whichever comes first.

The horn is activated at the platform controls and sounds at the ground as a warning to ground personnel. An improperly functioning horn will prevent the operator from alerting ground personnel of hazards or unsafe conditions.

1 Turn the key switch to platform control and pull out the red Emergency Stop button to the on position at both the ground and platform controls.

2 Push down the horn button at the platform controls.

⊙ Result: The horn should sound.

https://truckmanualshub.com/

B-7
Test the Drive Brakes

Genie requires that this procedure be performed every 250 hours or quarterly, whichever comes first.

Proper brake action is essential to safe machine operation. The drive brake function should operate smoothly, free of hesitation, jerking and unusual noise. Hydraulically-released individual wheel brakes can appear to operate normally when not fully operational.

Perform this procedure with the machine on a firm level surface that is free of obstructions, with the platform extension deck fully retracted and the platform in the stowed position.

1 Mark a test line on the ground for reference.

2 Turn the key switch to platform control and pull out the red Emergency Stop button to the on position at both the ground and platform controls.

3 Lower the platform to the stowed position.

4 Press the drive function select button. Refer to Illustration 1.

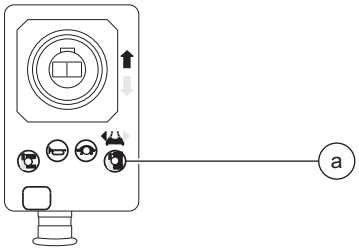

Illustration 1

a drive function select button BN8

5 Choose a point on the machine; i.e., contact patch of a tire, as a visual reference for use when crossing the test line.

6 Bring the machine to top drive speed before reaching the test line. Release the function enable switch or the joystick when your reference point on the machine crosses the test line.

7 Measure the distance between the test line and your machine reference point. Refer to Section 2, *Specifications*.

Result: The machine stops within the specified braking distance. No action required.

Result: The machine does not stop within the specified braking distance. Proceed to step 8 and determine if the machine is equipped with a dynamic braking valve.

Note: The brakes must be able to hold the machine on any slope it is able to climb.

8 Disconnect the battery pack from the machine.

WARNING Electrocution/burn hazard. Contact with electrically charged circuits could result in death or serious injury. Remove all rings, watches and other jewelry.

9 Locate the drive forward/reverse valve on the function manifold. Refer to Illustrations 2 and 3.

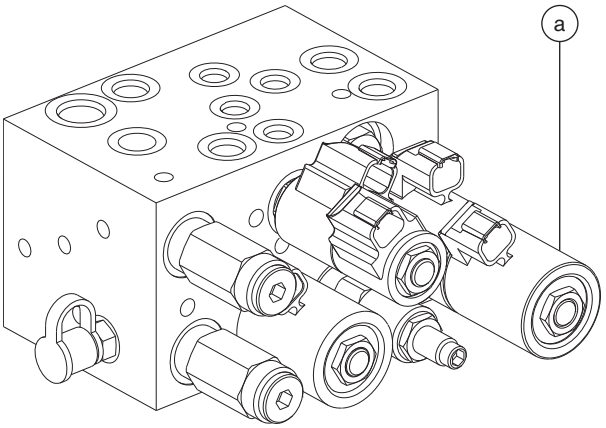

GS-1530 • GS-1532 • GS-1930 • GS-1932

Illustration 2

a drive forward/reserve valve

https://truckmanualshub.com/

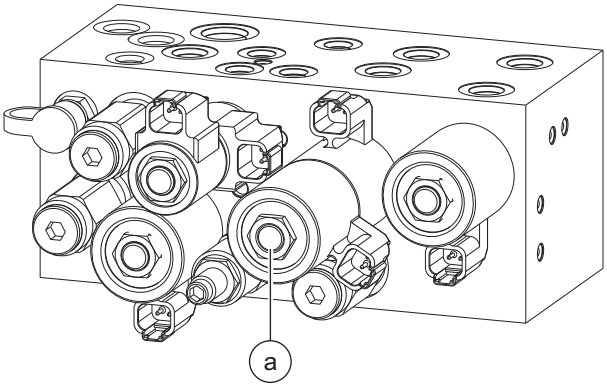

GS-2032 • GS-2632 • GS-3232
GS-2046 • GS-2646 • GS-3246

Illustration 3

a drive forward/reverse valve

10 Tag the forward and the reverse valve coils. Remove the coils from the valve.

Note: The forward valve coil has white and brown wires attached.

Note: The reverse valve coil has white/black and brown wires attached.

Note: For reassembly, it will be helpful to leave the wire harness attached to the valve coils.

For GS-1530, GS-1532, GS-1930 and GS-1932 (all models) proceed to step 11.

For GS-2032 and GS-2632 before serial number GS3204-51608 proceed to step 11.

For GS-2046, GS-2646 and GS-3246 before serial number GS4604-60000 proceed to step 11.

For GS-2032 and GS-2632 after serial number GS3204-51607 and from GS3208C-101 proceed to step 21.

For GS-2046, GS-2646 and GS-3246 after serial number GS4604-59999 and from GS4609-101 proceed to step 21.

11 Remove the drive forward/reverse valve from the function manifold. Plug the open port of the manifold.

12 Carefully inspect the hex portion of the valve for an identification stamp.

⊙ Result: SV10-4727 is stamped on the hex portion of the drive forward/reverse valve. This indicates the machine is equipped with a dynamic brake valve. Proceed to step 13.

⊗ Result: SV10-4727 is not stamped on the hex portion of the drive forward/reverse valve. This indicates the machine is not equipped with a dynamic brake valve. Proceed to step 18.

13 Install the drive forward/reverse valve removed in step 11 into the function manifold and torque to 25 ft-lbs / 34 Nm.

14 In order, install the reverse valve coil (with white/black and brown wires), spacer washer and the forward valve coil (with white and brown wires) onto the valve.

Note: For the machine to function correctly, the reverse valve coil must be closest to the manifold.

15 Install the coil nut onto the valve and torque to 60 in-lbs / 7 Nm.

16 Connect the battery pack to the machine.

17 Replace the brakes and repeat this procedure beginning with step 1. Refer to Repair Procedure 9-1, *How to Remove a Drive Brake.* Repeat this procedure beginning with step 1.

18 Contact the Genie Industries Service Parts Department and order kit part number 105457.

19 Install the new valve received in the kit and mark the new valve with a white paint pen to identify new valve installation.

20 Repeat this procedure beginning with step 1.

If the machine fails to stop within the specified stopping distance after installing new brakes, please contact the Genie Industries Scissors Service Department, 1-800-536-1800 Ext. 8710.

https://truckmanualshub.com/

CHECKLIST B PROCEDURES REV J

21 Remove the drive forward/reverse valve from the function manifold. Plug the open port of the manifold.

22 Carefully inspect the hex portion of the valve for an identification stamp.

⊙ Result: SV10-5905 is stamped on the hex portion of the drive forward/reverse valve. This indicates the machine is equipped with a dynamic brake valve. Proceed to step 23.

⊠ Result: SV10-5905 is not stamped on the hex portion of the drive forward/reverse valve. This indicates the machine is not equipped with a dynamic brake valve. Proceed to step 28.

23 Install the drive forward/reverse valve removed in step 21 into the function manifold and torque to 25 ft-lbs / 34 Nm.

24 In order, install the reverse valve coil (with white/black and brown wires), spacer washer and the forward valve coil (with white and brown wires) onto the valve.

Note: For the machine to function correctly, the reverse valve coil must be closest to the manifold.

25 Install the coil nut onto the valve and torque to 60 in-lbs 7 Nm.

26 Connect the battery pack to the machine.

27 Replace the brakes and repeat this procedure beginning with step 1. Refer to Repair Procedure 9-1, *How to Remove a Drive Brake.* Repeat this procedure beginning with step 1.

28 Contact the Genie Industries Service Parts Department and order kit part number 105458.

29 Install the new valve received in the kit and mark the new valve with a white paint pen to identify new valve installation.

30 Repeat this procedure beginning with step 1.

If the machine fails to stop within the specified stopping distance after installing new brakes, please contact the Genie Industries Scissors Service Department, 1-800-536-1800 Ext. 8710.

https://truckmanualshub.com/

B-8
Test the Drive Speed - Stowed Position

Genie requires that this procedure be performed every 250 hours or quarterly, whichever comes first.

Proper drive functions are essential to safe machine operation. The drive function should respond quickly and smoothly to operator control. Drive performance should also be free of hesitation, jerking and unusual noise over the entire proportionally controlled speed range.

Perform this procedure with the machine on a firm, level surface that is free of obstructions.

1 Create start and finish lines by marking two lines on the ground 40 feet / 12.2 m apart.

2 Turn the key switch to platform control and pull out the red Emergency Stop button to the on position at both the ground and platform controls.

3 Lower the platform to the stowed position.

4 Press the drive function select button.

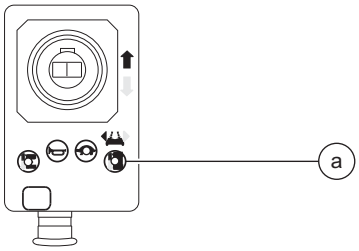

a drive function select button BN8

5 Choose a point on the machine; i.e., contact patch of a tire, as a visual reference for use when crossing the start and finish lines.

6 Bring the machine to top drive speed before reaching the start line. Begin timing when your reference point on the machine crosses the start line.

7 Continue at full speed and note the time when your reference point on the machine passes over the finish line. Refer to Section 2, *Specifications*.

https://truckmanualshub.com/

B-9
Test the Drive Speed - Raised Position

Genie requires that this procedure be performed every 250 hours or quarterly, whichever comes first.

Proper drive functions are essential to safe machine operation. The drive function should respond quickly and smoothly to operator control. Drive performance should also be free of hesitation, jerking and unusual noise over the entire proportionally controlled speed range.

Perform this procedure with the machine on a firm, level surface that is free of obstructions.

1 Create start and finish lines by marking two lines on the ground 40 feet / 12.2 m apart.

2 Turn the key switch to platform control and pull out the red Emergency Stop button to the on position at both the ground and platform controls.

3 Press the lift function select button.

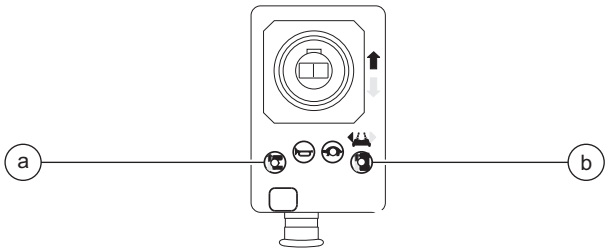

a lift function select button BN9
b drive function select button BN8

4 Press and hold the function enable switch on the joystick.

5 Raise the platform approximately 4 feet / 1.2 m from the ground.

6 Press the drive function select button.

7 Choose a point on the machine; i.e., contact patch of a tire, as a visual reference for use when crossing the start and finish lines.

8 Bring the machine to top drive speed before reaching the start line. Begin timing when your reference point on the machine crosses the start line.

9 Continue at full speed and note the time when your reference point on the machine passes over the finish line. Refer to Section 2, *Specifications*.

https://truckmanualshub.com/

B-10
Test the Slow Drive Speed

Genie requires that this procedure be performed every 250 hours or quarterly, whichever comes first.

Proper drive functions are essential to safe machine operation. The drive function should respond quickly and smoothly to operator control. Drive performance should also be free of hesitation, jerking and unusual noise over the entire proportionally controlled speed range.

Perform this procedure with the machine on a firm, level surface that is free of obstructions.

1 Create start and finish lines by marking two lines on the ground 40 feet / 12.2 m apart.

2 Turn the key switch to platform control and pull out the red Emergency Stop button to the on position at both the ground and platform controls.

3 Lower the platform to the stowed position.

4 Press the slow speed select button.

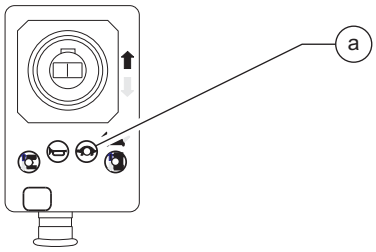

a slow speed select button BN6

5 Choose a point on the machine; i.e., contact patch of a tire, as a visual reference for use when crossing the start and finish lines.

6 Bring the machine to top drive speed before reaching the start line. Begin timing when your reference point on the machine crosses the start line.

7 Continue at full speed and note the time when your reference point on the machine passes over the finish line. Refer to Section 2, *Specifications*.

https://truckmanualshub.com/

CHECKLIST B PROCEDURES REV J

B-11
Perform Hydraulic Oil Analysis

Genie requires that this procedure be performed every 250 hours or quarterly, whichever comes first.

Replacement or testing of the hydraulic oil is essential for good machine performance and service life. Dirty oil may cause the machine to perform poorly and continued use may cause component damage. Extremely dirty conditions may require oil changes to be performed more often. Refer to Section 2, *Specifications*.

Before replacing the hydraulic oil, the oil may be tested by an oil distributor for specific levels of contamination to verify that changing the oil is necessary.
If the hydraulic oil is not replaced at the two year inspection, test the oil quarterly. Replace the oil when it fails the test. See E-1, *Test or Replace the Hydraulic Oil.*

B-12
Inspect the Hydraulic Tank Cap Venting System

Genie requires that this procedure be performed quarterly or every 250 hours, whichever comes first. Perform this procedure more often if dusty conditions exist.

A free-breathing hydraulic tank cap is essential for good machine performance and service life. A dirty or clogged cap may cause the machine to perform poorly. Extremely dirty conditions may require that the cap be inspected more often.

1 Remove the breather cap from the hydraulic tank.

2 Check for proper venting.

⊙ Result: Air passes through the breather cap.

⊠ Result: If air does not pass through the cap, clean or replace the cap. Proceed to step 3.

Note: When checking for positive tank cap venting, air should pass freely through the cap.

3 Using a mild solvent, carefully wash the cap venting system. Dry using low pressure compressed air. Repeat step 2.

4 Install the breather cap onto the hydraulic tank.

https://truckmanualshub.com/

B-13
Check the Module Tray Latch Components

Genie requires that this procedure be performed every 250 hours or quarterly, whichever comes first.

Maintaining the module tray latch components in good condition is essential to good performance and service life. Failure to detect worn out latch components may result in module trays opening unexpectedly, creating an unsafe operating condition.

1 Inspect each module tray rotary latch and related components for wear. Tighten any loose fasteners.

2 Lubricate each module tray rotary latch. Using light oil, apply a few drops to each of the springs and to the sides of the rotary latch mechanism.

https://truckmanualshub.com/

CHECKLIST B PROCEDURES REV J

B-14
Inspect the Voltage Inverter (if equipped)

Genie requires that this procedure be performed every 250 hours or quarterly, whichever comes first.

1 Inspect the inverter plug and pigtail for damage or excessive insulation wear. Replace as required.

2 Turn the key switch to the on position and pull out the red Emergency Stop button to the on position at both the ground and platform controls.

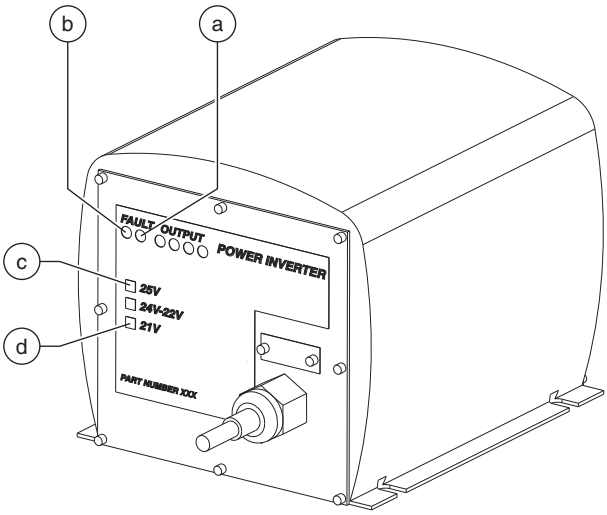

a right fault LED
b left fault LED
c 25V LED
d 21V LED

3 Connect an appropriate power tool to the inverter. Activate the tool.

⊙ Result: The power tool should operate. There may be a brief (0.5 second) delay if the power tool has not been used in the previous 10 minutes.

☒ If the left fault LED (REV_POL) is illuminated, the inverter is connected to batteries with the incorrect polarity. Correct the polarity issue with the red wire to battery positive and the black wire to battery negative. The inverter will then operate correctly and begin supplying AC power.

☒ If the right fault LED (123) blinks **one time**, the power draw is too high. The tool being used requires too much power to operate or is being used at or near the limit of the inverter for an extended period of time. Reduce the power draw. The inverter will then operate correctly and begin supplying AC power.

☒ If the right fault LED (123) blinks **two times**, the Ground Fault Interrupt (GFI) has been activated. A short circuit or partial short exists between the AC hot and ground in the tool or outlet. Check the tool for burnt, chafed, corroded and loose wires, and inspect the tool for internal moisture. Correct the short circuit or moisture issue OR inspect the wiring in the power-to-platform box. The inverter will then operate correctly and begin supplying AC power.

☒ If right fault LED (123) blinks **three times**, the inverter is overheated. Allow the inverter to cool. The inverter will then operate correctly and begin supplying AC power.

☒ If the battery 25 volt fault LED (25V) blinks one time, the battery voltage is over 30V. Operate the machine to lower the voltage level. The inverter will then operate correctly and begin supplying AC power.

☒ If the battery 21 volt fault LED (21V) blinks one time, the battery voltage is less than 20V DC. The inverter will continue to operate until the battery voltage falls to 17.8V DC.

https://truckmanualshub.com/

B-15
Test the Down Limit Switch and the Pothole Limit Switches

Genie requires that this procedure be performed every 250 hours or quarterly, whichever comes first.

Maintaining the limit switches is essential to safe operation and good machine performance. Operating the machine with a faulty limit switch could result in reduced machine performance and a potentially unsafe operating condition.

Perform these procedures with the machine on a firm, level surface that is free of obstructions.

Down Limit Switch

1 Remove the platform controls from the platform.

2 Raise the platform 7 to 8 feet / 2.1 to 2.4 m.

3 Lift the safety arm, move it to the center of the scissor arm and rotate down to a vertical position.

4 Lower the platform onto the safety arm.

WARNING Crushing hazard. Keep hands clear of the safety arm when lowering the platform.

5 Turn the key switch to the off position.

6 Tag and disconnect the platform control box at the platform.

7 **GS-1530/32 and GS-1930/32:** Follow the platform control cable down the scissor stack to the alarm bracket on the chassis deck. Tag and disconnect the platform control cable from the ECM cable at the 6-pin Deutsch connector.

GS-2032, GS-2632, GS-3232, GS-2046, GS-2646 and GS-3246: Follow the platform control cable down the scissor stack to the underside of the chassis deck. Tag and disconnect the platform cable from the ECM cable at the 6-pin Deutsch connector under the chassis deck.

8 Securely install the platform control box harness plug into the 6-pin Deutsch connector of the ECM cable.

9 Disable the down limit switch. Loosen the fastener securing the roller arm to the limit switch, and rotate the roller arm 90 degrees in a downwards direction. Do not activate the switch contacts.

10 Turn the key switch to platform control.

11 Raise the platform and return the safety arm to the stowed position.

12 Working at the platform controls, press the lift function select button. Lower the platform to the stowed position.

Result: The diagnostic display will show code 18, an alarm sounds and the lift function should operate. The machine is functioning properly.

Result: The diagnostic display does not show code 18, the alarm does not sound and the lift function should not operate. Replace the down limit switch.

https://truckmanualshub.com/

CHECKLIST B PROCEDURES REV J

13 Press the drive function select button. Attempt to drive the machine.

⊙ Result: The diagnostic display will show code 18, an alarm sounds, and the steer and drive functions should not operate. The machine is functioning properly.

⊠ Result: The diagnostic display does not show code 18, the alarm does not sound, and the steer and drive functions operate. Replace the down limit switch.

14 Press the lift function select button. Raise the platform approximately 12 inches / 0.3 m.

⊙ Result: The diagnostic display will show code 18 and an alarm sounds. The machine is functioning properly.

⊠ Result: The diagnostic display does not show code 18 and the alarm does not sound. Replace the down limit switch.

15 Raise the platform until the pothole guards are deployed.

⊙ Result: The diagnostic display does not show code 18 and the alarm does not sound. The machine is functioning properly.

⊠ Result: The diagnostic display shows code 18 and an alarm sounds. Replace the down limit switch.

16 Raise the platform 7 to 8 feet / 2.1 to 2.4 m.

17 Lift the safety arm, move it to the center of the scissor arm and rotate down to a vertical position.

18 Lower the platform onto the safety arm.

⚠WARNING Crushing hazard. Keep hands clear of the safety arm when lowering the platform.

19 Turn the key switch to the off position.

20 Disconnect the platform controls from the ECM cable.

21 Securely install the connector of the ECM cable into the platform control cable.

22 Working at the platform, securely install the connector of the platform controls into the platform control cable.

23 Enable the down limit switch. Loosen the fastener securing the roller arm to the limit switch, and rotate the roller arm 90 degrees in a upwards direction. Do not activate the switch contacts.

24 Turn the key switch to platform control.

25 Raise the platform and return the safety arm to the stowed position.

26 Lower the platform to the stowed position.

https://truckmanualshub.com/

Pothole Limit Switches

27 Move the machine onto a grade which exceeds the rating of the level sensor. Refer to the serial label on the machine.

28 Press the lift function select button. Standing on the up-hill side of the machine, attempt to raise the platform to approximately 8 feet / 2.4 m.

⊙ Result: The diagnostic display shows code LL, an alarm sounds, and the machine stops lifting after the pothole guards are deployed. The machine is functioning properly.

⊠ Result: The diagnostic display does not show code LL, the alarm does not sound and the machine will continue to lift the platform after the pothole guards are deployed. Adjust or replace the pothole limit switch.

29 Press the drive function select button. Standing on the up-hill side of the machine, attempt to steer and drive the machine.

⊙ Result: The diagnostic display shows code LL, an alarm sounds, and the machine will not steer or drive. The machine is functioning properly.

⊠ Result: The diagnostic display does not show code LL, the alarm does not sound and the steer and drive functions operate. Adjust or replace the pothole limit switch.

30 Lower the platform to the stowed position. Move the machine onto a firm, level surface.

31 Place a wooden block approximately 2 inches / 5 cm tall under the right pothole guard.

32 Press the lift function select button. Attempt to raise the platform approximately 8 feet / 2.4 m.

⊙ Result: The pothole guard contacts the block and does not fully deploy, the diagnostic display shows code 18, an alarm sounds and the platform will lift to 8 feet / 2.4 m or beyond. The machine is functioning properly.

⊠ Result: The pothole guard contacts the block and does not fully deploy, the diagnostic display does not show code 18, the alarm does not sound and the machine will continue to lift the platform after the pothole guards are deployed. Adjust or replace the pothole limit switch.

33 Press the drive function select button. Attempt to steer or drive the machine.

⊙ Result: The diagnostic display shows code 18, an alarm sounds, and the machine will not steer or drive. The machine is functioning properly.

⊠ Result: The diagnostic display does not show code 18, the alarm does not sound and the steer and drive functions operate. Adjust or replace the down limit switch.

34 Lower the platform to the stowed position and remove the block under the right pothole guard.

35 Repeat this procedure beginning with step 31 for the left pothole guard.

36 Lower the platform to the stowed position, remove the block under the left pothole guard.

37 Turn off the machine.

https://truckmanualshub.com/

B-16
Test the Up Limit Switch (if equipped) and the Outrigger Limit Switches (if equipped)

Genie requires that this procedure be performed every 250 hours or quarterly, whichever comes first.

Maintaining the limit switches is essential to safe operation and good machine performance. Operating the machine with a faulty limit switch could result in reduced machine performance and a potentially unsafe operating condition.

Perform these procedures with the machine on a firm, level surface that is free of obstructions.

Up Limit Switch (if equipped)

1 Turn the key switch to ground control and raise the platform approximately 8 feet / 2.4 m from the ground.

2 Rotate the safety arm away from the machine and let it hang down.

3 Lower the platform onto the safety arm.

WARNING Crushing hazard. Keep hands clear of the safety arm when lowering the platform.

4 While raising the platform from the ground controls, push the arm of the up limit switch towards the steer end of the machine to activate the limit switch.

Result: The platform stops raising. The machine is functioning properly.

Result: The platform continues to raise. Adjust or replace the up limit switch.

Outrigger Limit Switches (if equipped)

5 Lower the platform onto the safety arm.

6 While raising the platform from the ground controls and working with the outrigger limit switch at the battery side of the machine, push the arm of the outrigger limit switch towards the steer end of the machine to activate the limit switch.

Result: The platform stops raising. The machine is functioning properly.

Result: The platform continues to raise. Adjust or replace the outrigger limit switch.

Note: Repeat this procedure for the outrigger limit switch at ground controls side of the machine.

7 Return the safety arm to the stowed position.

8 Lower the platform to the stowed position and turn off the machine.

https://truckmanualshub.com/

Checklist C Procedures

REV C

C-1 Test the Platform Overload System (if equipped)

Genie specifications require that this procedure be performed every 500 hours or six months, whichever comes first OR when the machine fails to lift the maximum rated load.

Testing the platform overload system regularly is essential to safe machine operation. Continued use of an improperly operating platform overload system could result in the system not sensing an overloaded platform condition. Machine stability could be compromised resulting in the machine tipping over.

The platform overload system is designed to prevent machine operation in the event the platform is overloaded. Models equipped with the platform overload option are provided with two additional machine control components: the overload pressure switch and a maximum height limit switch.

The overload pressure switch, which is adjustable and located at the barrel-end of the lift cylinder, is used to determine when the hydraulic lift cylinder requires too much pressure to support the load inside the platform. When this occurs, the pressure switch will send a signal to the ECM, which will not allow the machine to function until the extra weight is removed from the platform.

The maximum height limit switch, located in the middle of the drive chassis under the scissor arms, is used to disable the lift valve coil when the platform is near maximum height. When activated, the limit switch keeps the lift cylinder from going over lift relief which would cause the pressure switch to falsely indicate an overload condition.

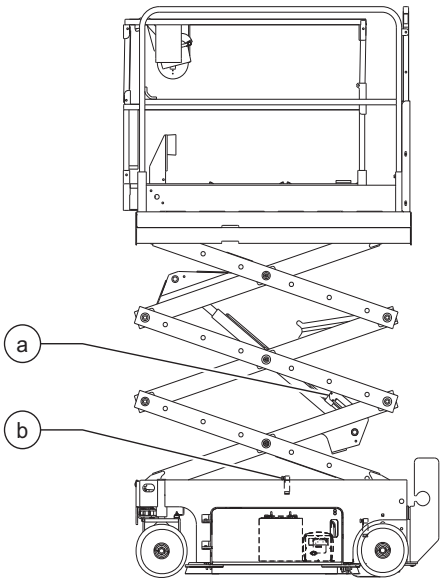

a overload pressure switch
b maximum height limit switch

https://truckmanualshub.com/

CHECKLIST C PROCEDURES REV C

1 Locate the lift valve coil on the function manifold.

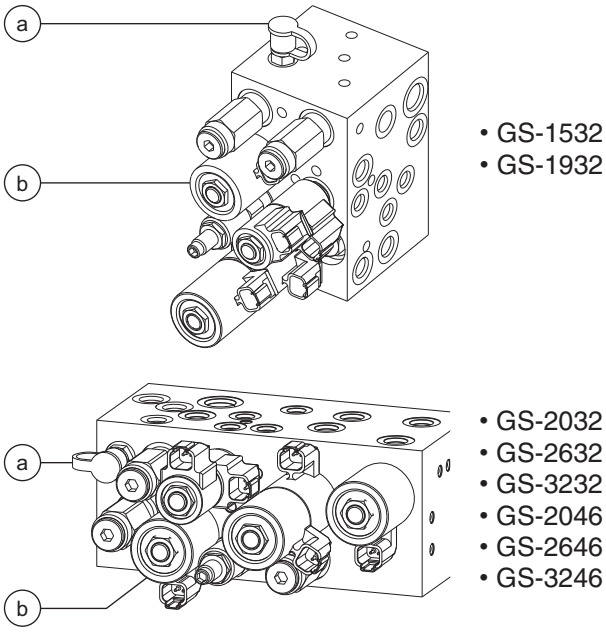

a test port
b lift valve coil

2 Tag and disconnect the black and white wires of the up limit switch wire harness from the blue/black wires of the manifold wire harness at the lift valve coil on the manifold.

3 Securely connect together the terminals of the two blue/black wires of the manifold wire harness, disconnected from the limit switch wire harness in step 2.

4 Turn the key switch to ground control and pull out the red Emergency Stop button to the on position at both the ground and platform controls.

5 Fully raise the platform. Release the toggle switch.

⊙ Result: The alarm should sound.

⊠ Result: The alarm does not sound. Calibrate the platform overload system. Refer to Repair Procedure 3-7, *Calibrate the Platform Overload System (if equipped).*

6 Using the manual lowering knob, lower the platform to the stowed position.

7 Disconnect the two blue/black wires of the manifold wire harness at the lift valve coil on the manifold.

8 Securely connect the black and white wires of the up limit switch wire harness to the two blue/black wires of the manifold wire harness at the lift valve coil on the manifold.

9 Fully raise the platform. Release the toggle switch.

⊙ Result - models with software revision A0 and A1: The alarm should not sound and fault code 54 should be present in the diagnostic display. The system is functioning correctly.

⊙ Result - models with software revision A2 and higher: The alarm should not sound. The system is functioning correctly.

⊠ Result - all models: The alarm sounds. The system is not functioning correctly. Troubleshoot the limit switch, limit switch wire harness or limit switch mount bracket OR the platform overload system needs to be calibrated. Refer to Repair Procedure 3-7, *Calibrate the Platform Overload System (if equipped).*

Note: To determine the software revision level, refer to Repair Procedure 1-2, *How to Determine the Revision Level.*

10 Lower the platform to the stowed position.

https://truckmanualshub.com/

C-2
Replace the Hydraulic Tank Breather Cap - Models with Optional Hydraulic Oil

Genie requires that this procedure be performed every 500 hours or semi-annually, whichever comes first.

The hydraulic tank is a vented-type tank. The breather cap has an internal air filter that can become clogged or, over time, can deteriorate. If the breather cap is faulty or improperly installed, impurities can enter the hydraulic system which may cause component damage. Extremely dirty conditions may require that the cap be inspected more often.

1 Remove and discard the hydraulic tank breather cap.

2 Install a new cap onto the tank.

https://truckmanualshub.com/

Checklist D Procedures

REV E

D-1
Check the Scissor Arm Wear Pads

Genie requires that this procedure be performed every 1000 hours or annually, whichever comes first.

Maintaining the condition of the scissor arm wearpads is essential to safe machine operation. Continued use of worn out wear pads may result in component damage and unsafe operating conditions.

Perform this procedure with the platform in the stowed position.

GS-1530, GS-1532, GS-1930 and GS-1932:

1 **From serial numbers GS3003A-60000 to GS3006A-85006 and from GS3005B-76000 to GS3006B-80468:** Measure the distance between the number one outer arm cross tube and the chassis deck at the ground controls side of the non-steer end of the machine. Refer to illustration 1.

After serial numbers GS3006A-85006, GS3006B-80468 and GS3008C-101: Measure the distance between the number one inner arm cross tube and the chassis deck at the ground controls side of the non-steer end of the machine.
Refer to illustration 2.

Result: The measurement is 0.90 inch / 22.9 mm or more. Proceed to step 2.

Result: The measurement is less than 0.90 inch / 22.9 mm. Replace both wear pads. Refer to Repair Procedure 3-1 or 3-2, *How to Replace the Scissor Arm Wear Pads*.

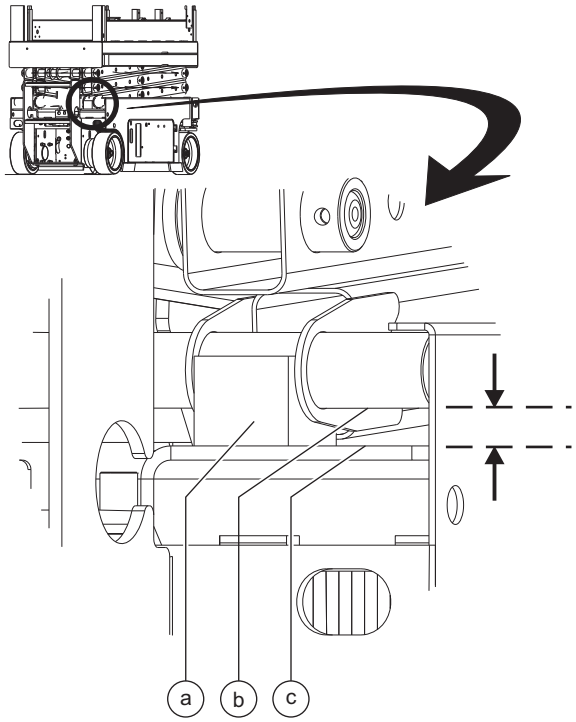

Illustration 1

a wear pad
b outer arm cross tube
c chassis deck

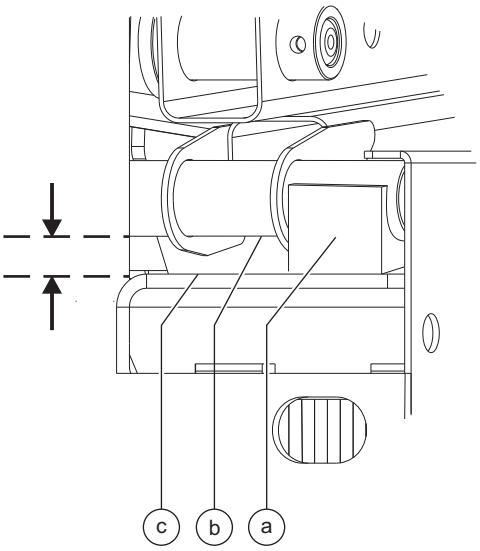

Illustration 2

a wear pad
b inner arm cross tube
c chassis deck

https://truckmanualshub.com/

2 **From serial numbers GS3003A-60000 to GS3006A-85006 and from GS3005B-76000 to GS3006B-80468:** Measure the distance between the number one outer arm cross tube and the chassis deck at the battery pack side of the non-steer end of the machine.
Refer to illustration 1.

After serial numbers GS3006A-85006, GS3006B-80468 and GS3008C-101: Measure the distance between the number one inner arm cross tube and the chassis deck at the battery pack side of the non-steer end of the machine.
Refer to illustration 2.

⊙ Result: The measurement is 0.90 inch / 22.9 mm or more. Proceed to step 3.

⊠ Result: The measurement is less than 0.90 inch / 22.9 mm. Replace both wear pads. Refer to Repair Procedure 3-1 or 3-2, *How to Replace the Scissor Arm Wear Pads.*

3 Apply a thin layer of dry film lubricant to the area of the chassis where the scissor arm wear pads make contact.

Cross tube to chassis specification	
Measurement, minimum	0.90 inch 22.9 mm

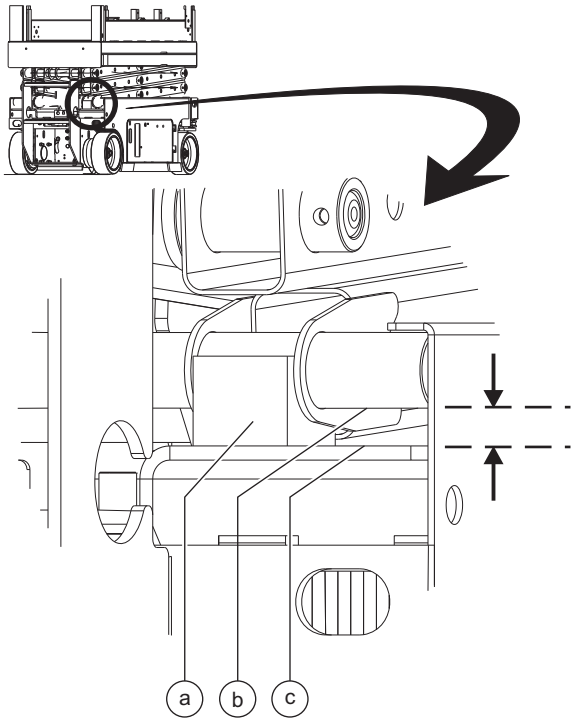

Illustration 1

a wear pad
b outer arm cross tube
c chassis deck

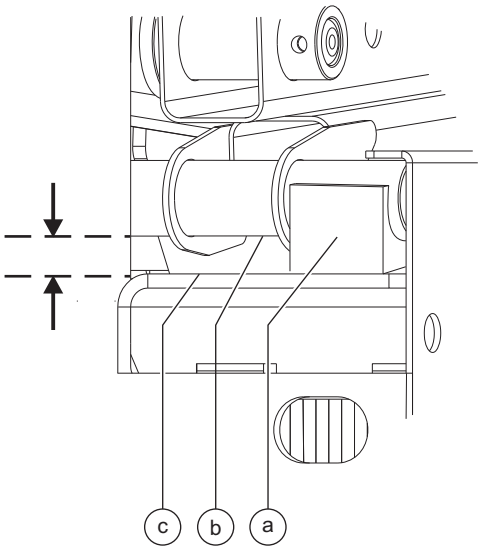

Illustration 2

a wear pad
b inner arm cross tube
c chassis deck

https://truckmanualshub.com/

CHECKLIST D PROCEDURES REV E

GS-2032, GS-2632, GS-3232, GS-2046, GS-2646 and GS-3246:

1 Measure the distance between the number one outer arm cross tube and the fork lift tube at the ground controls side of the non-steer end of the machine.

Result: The measurement is 0.88 inch / 22.4 mm or more. Proceed to step 2.

Result: The measurement is less than 0.88 inch / 22.4 mm. Replace both wear pads. Refer to Repair Procedure 3-3, 3-4 or 3-5, *How to Replace the Scissor Arm Wear Pads.*

2 Measure the distance between the number one outer arm cross tube and the fork lift tube at the battery pack side of the non-steer end of the machine.

Result: The measurement is 0.88 inch / 22.4 mm or more. Proceed to step 3.

Result: The measurement is less than 0.88 inch / 22.4 mm. Replace both wear pads. Refer to Repair Procedure 3-3, 3-4 or 3-5, *How to Replace the Scissor Arm Wear Pads.*

3 Apply a thin layer of dry film lubricant to the area of the chassis where the scissor arm wear pads make contact.

Cross tube to chassis specification	
Measurement, minimum	0.88 inch 22.4 mm

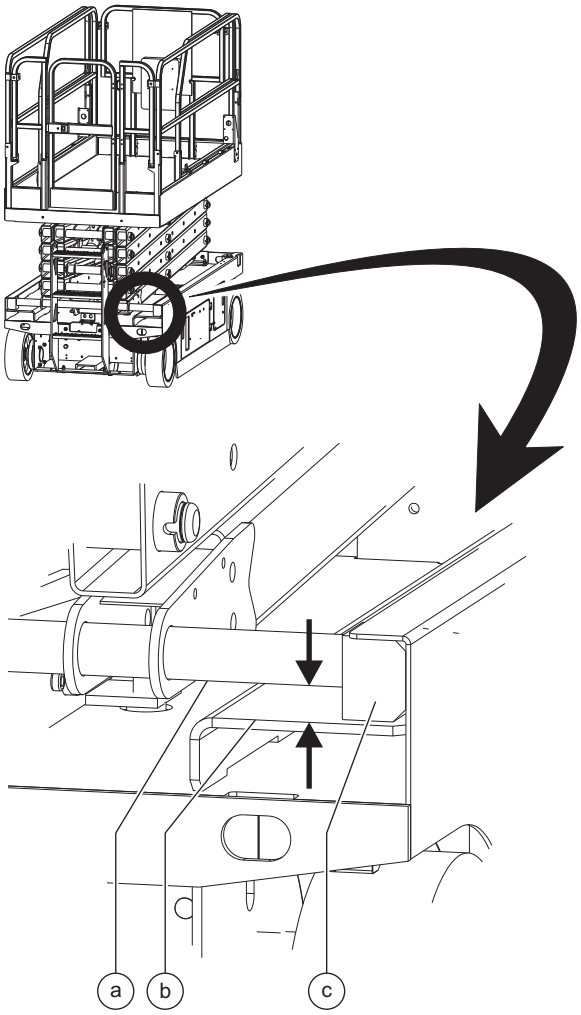

a outer arm cross tube
b fork lift tube
c wear pad

https://truckmanualshub.com/

D-2
Replace the Hydraulic Tank Return Filter Element

Genie requires that this procedure be performed every 1000 hours or annually, whichever comes first.

Replacement of the hydraulic tank return filter is essential for good machine performance and service life. A dirty or clogged filter may cause the machine to perform poorly and continued use may cause component damage. Extremely dirty conditions may require that the filter be replaced more often.

CAUTION Beware of hot oil. Contact with hot oil may cause severe burns.

Note: The hydraulic tank return filter is mounted on the function manifold next to the hydraulic power unit.

1 Clean the area around the oil filter. Remove the filter with an oil filter wrench.

2 Apply a thin layer of oil to the new oil filter gasket.

3 Install the new filter and tighten it securely by hand.

4 Use a permanent ink marker to write the date and number of hours from the hour meter onto the filter.

5 Turn the key switch to ground control and pull out the red Emergency Stop button to the on position at both the ground and platform controls.

6 Activate and hold the platform up toggle switch.

7 Inspect the filter and related components to be sure that there are no leaks.

8 Clean up any oil that may have spilled.

Torque specifications	
Hydraulic tank drain plug, dry	40 in-lbs 4.5 Nm
Hydraulic tank drain plug, lubricated	30 in-lbs 3.4 Nm

https://truckmanualshub.com/

Checklist E Procedure

REV C

E-1
Test or Replace the Hydraulic Oil

Genie requires that this procedure be performed every 2000 hours or every two years, whichever comes first.

Replacement or testing of the hydraulic oil is essential for good machine performance and service life. Dirty oil may cause the machine to perform poorly and continued use may cause component damage. Extremely dirty conditions may require oil changes to be performed more often. Refer to Section 2, *Specifications*.

Before replacing the hydraulic oil, the oil may be tested by an oil distributor for specific levels of contamination to verify that changing the oil is necessary.
If the hydraulic oil is not replaced at the two year inspection, test the oil quarterly. Replace the oil when it fails the test.

Note: Perform this procedure with the platform in the stowed position.

1 Disconnect the battery pack from the machine.

WARNING Electrocution/burn hazard. Contact with electrically charged circuits could result in death or serious injury. Remove all rings, watches and other jewelry.

2 Open the power unit module tray.

3 Tag and disconnect the hydraulic tank return hard line from the hydraulic filter head and remove the hard line from the tank. Cap the fitting on the filter head.

4 Tag and disconnect the hydraulic pump inlet hard line and remove the hard line from the tank. Cap the fitting on the pump.

5 Remove the hydraulic tank retaining fasteners and remove the hydraulic tank from the machine.

6 Drain all of the oil into a suitable container. Refer to Section 2, *Specifications*, for capacity information.

WARNING Bodily injury hazard. Spraying hydraulic oil can penetrate and burn skin. Loosen hydraulic connections very slowly to allow the oil pressure to dissipate gradually. Do not allow oil to squirt or spray.

7 Clean up any oil that may have spilled. Properly discard the used oil.

8 Clean the inside of the hydraulic tank using a mild solvent. Allow the tank to dry completely.

9 Install the hydraulic tank and install and tighten the hydraulic tank retaining fasteners. Torque to specification.

Torque specifications	
Hydraulic tank retaining fasteners, dry	35 in-lbs 4 Nm
Hydraulic tank retaining fasteners, lubricated	26 in-lbs 2.9 Nm

https://truckmanualshub.com/

10 Install the hydraulic pump inlet hard line into the tank. Install the fitting onto the pump and torque to specification. Refer to Section 2, *Specifications*.

11 Install the hydraulic pump return hard line into the tank. Install the fitting onto the hydraulic filter head and torque to specification. Refer to Section 2, *Specifications*.

12 Fill the tank with hydraulic oil until the fluid is at the FULL indicator on the hydraulic tank. Do not overfill.

13 Activate the pump to fill the hydraulic system with oil and bleed the system of air.

NOTICE Component damage hazard. The pump can be damaged if operated without oil. Be careful not to empty the hydraulic tank while in the process of filling the hydraulic system. Do not allow the pump to cavitate.

14 Repeat steps 12 through 13 until the hydraulic system and tank are both full.

https://truckmanualshub.com/

This page intentionally left blank.

https://truckmanualshub.com/

Repair Procedures

Observe and Obey:

- ☑ Repair procedures shall be completed by a person trained and qualified on the repair of this machine.
- ☑ Immediately tag and remove from service a damaged or malfunctioning machine.
- ☑ Repair any machine damage or malfunction before operating the machine.

Before Repairs Start:

- ☑ Read, understand and obey the safety rules and operating instructions in the appropriate operator's manual on your machine.
- ☑ Be sure that all necessary tools and parts are available and ready for use.
- ☑ Use only Genie approved replacement parts.
- ☑ Read each procedure completely and adhere to the instructions. Attempting shortcuts may produce hazardous conditions.
- ☑ Unless otherwise specified, perform each repair procedure with the machine in the following configuration:
  - Machine parked on a firm, level surface
  - Platform in the stowed position
  - Key switch in the off position with the key removed
  - The red Emergency Stop button in the off position at both ground and platform controls
  - Wheels chocked
  - All external AC power supply disconnected from the machine

About This Section

Most of the procedures in this section should only be performed by a trained service professional in a suitably equipped workshop. Select the appropriate repair procedure after troubleshooting the problem.

Perform disassembly procedures to the point where repairs can be completed. Then to re-assemble, perform the disassembly steps in reverse order.

Symbols Legend

Safety alert symbol—used to alert personnel to potential personal injury hazards. Obey all safety messages that follow this symbol to avoid possible injury or death.

DANGER Indicates an imminently hazardous situation which, if not avoided, will result in death or serious injury.

WARNING Indicates a potentially hazardous situation which, if not avoided, could result in death or serious injury.

CAUTION Indicates a potentially hazardous situation which, if not avoided, may cause minor or moderate injury.

NOTICE Indicates a potentially hazardous situation which, if not avoided, may result in property damage.

⊙ Indicates that a specific result is expected after performing a series of steps.

⊠ Indicates that an incorrect result has occurred after performing a series of steps.

https://truckmanualshub.com/

Platform Controls

REV J

The platform controls, used to operate the machine from the platform or while standing on the ground, can also be used to tune the performance of the machine.

Moving the joystick or activating a button sends a signal to the Electronic Control Module (ECM). When the ECM is in the function mode, the platform controls are used to operate the various machine functions. When the ECM is in the programming mode (PS is shown in the diagnostic display window), the platform controls are used to adjust the function speed parameters.

The platform controls consist of an electronic circuit board, joystick, membrane decal, buttons, LEDs and a diagnostic display.

For further information or assistance, consult the Genie Industries Service Department.

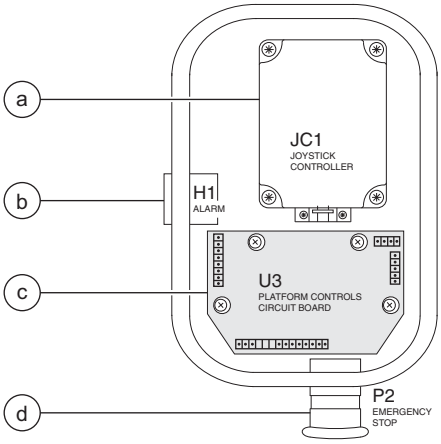

a joystick controller JC1
b alarm H1
c platform controls circuit board U3
d red Emergency Stop button P2

1-1 Circuit Boards

How to Remove the Platform Controls Circuit Board

1 Push in the red Emergency Stop button to the off position at both the ground and platform controls.

2 Remove the fasteners securing the platform control box together. Open the control box.

3 Locate the circuit board mounted to the top half of the platform control box.

WARNING Electrocution/burn hazard. Contact with electrically charged circuits could result in death or serious injury. Remove all rings, watches and other jewelry.

NOTICE Component damage hazard. Electrostatic discharge (ESD) can damage printed circuit board components. Maintain firm contact with a metal part of the machine that is grounded at all times when handling printed circuit boards OR use a grounded wrist strap.

4 Remove the alarm and the red Emergency Stop button assemblies from the control box.

5 Carefully disconnect the wire harness connectors from the circuit board.

6 Carefully remove the circuit board retaining fasteners and remove the circuit board from the control box.

https://truckmanualshub.com/

The outrigger control pad is used to operate the outriggers from the platform or while standing on the ground and can also be used to calibrate the outrigger ECM and the outrigger level sensor.

Activating buttons on the outrigger control pad sends a signal to the outrigger Electronic Control Module (ECM). When the outrigger ECM receives a signal, it enables the outrigger control pad to extend, retract or autolevel the outriggers. When calibrating the outrigger ECM and the outrigger level sensor, the outrigger control pad buttons are used in a specific sequence to achieve calibration.

The outrigger control pad consist of an electronic circuit board, membrane decal, buttons and LEDs.

For further information or assistance, consult the Genie Industries Service Department.

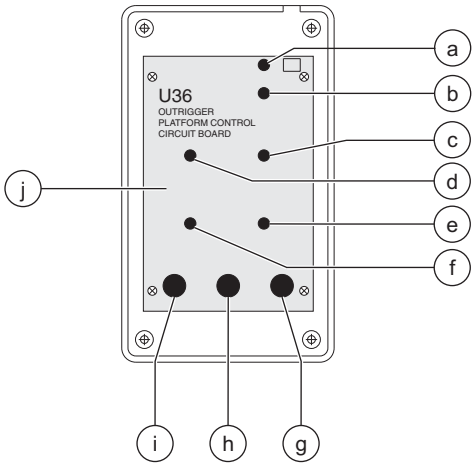

Outrigger Control Pad

a lift enable L69 (solid green light)
b lift error L70 (flashing red or solid red light)
c right front outrigger L52 (solid green or solid red light)
d left front outrigger L51 (solid green or solid red light)
e right rear outrigger L54 (solid green or solid red light)
f left rear outrigger L53 (solid green or solid red light)
g outrigger extend BN105
h function enable BN106
i outrigger retract BN107
j outrigger control circuit board U36

How to Remove the Outrigger Control Pad Circuit Board

1 Push in the red Emergency Stop button to the off position at both the ground and platform controls.

2 Remove the fasteners securing the outrigger control pad to the outrigger control pad bracket. Set the fasteners to the side.

3 Carefully remove the top half of the control pad and set to the side.

4 Locate the circuit board mounted to the bottom half of the outrigger control pad.

WARNING Electrocution/burn hazard. Contact with electrically charged circuits could result in death or serious injury. Remove all rings, watches and other jewelry.

NOTICE Component damage hazard. Electrostatic discharge (ESD) can damage printed circuit board components. Maintain firm contact with a metal part of the machine that is grounded at all times when handling printed circuit boards OR use a grounded wrist strap.

5 Carefully disconnect the wire harness connectors from the circuit board.

6 Carefully remove the circuit board retaining fasteners and remove the circuit board from the control pad.

https://truckmanualshub.com/

1-2 Controller Adjustments

Platform lift speed, stowed drive speed, raised drive speed and high torque drive speed are adjustable to compensate for wear in the hydraulic pump and drive motors.

The function speeds are determined by the percentage of total controller output.

For further information or assistance, consult the Genie Industries Service Department.

DANGER Tip-over hazard. Do not adjust the lift and/or drive speed higher than specified in this procedure. Setting the function speeds greater than specifications could cause the machine to tip over resulting in death or serious injury.

DANGER Tip-over hazard. This procedure must only be performed by a trained service professional. Attempting this procedure without the necessary skills will result in death or serious injury.

Note: Select a test area that is firm, level and free of obstructions.

How to Determine the Software Revision Level

1 Remove the platform controls from the platform.

2 Place the platform controls close to the diagnostic display on the power unit side of the machine.

3 Turn the key switch to platform control and pull out the red Emergency Stop button to the on position at both the ground and platform controls.

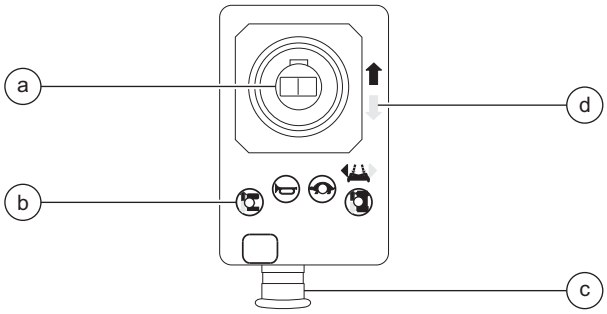

a joystick controller JC1
b lift function select button BN9
c red Emergency Stop button P2
d yellow arrow

4 Press the lift function select button.

5 Slowly move the joystick in the direction indicated by the yellow arrow.

⊙ Result: The software revision level will appear in the diagnostic display.

6 Push in the red Emergency Stop button to the off position at both the ground and platform controls and turn the key switch to the off position.

https://truckmanualshub.com/

How to Adjust the Lift Speed

DANGER Tip-over hazard. Do not adjust the lift and/or drive speed higher than specified in this procedure. Setting the function speeds greater than specifications could cause the machine to tip over resulting in death or serious injury.

DANGER Tip-over hazard. This procedure must only be performed by a trained service professional. Attempting this procedure without the necessary skills will result in death or serious injury.

1 Pull out the red Emergency Stop button to the on position at the ground controls.

2 Push in the red Emergency Stop button to the off position at the platform controls.

3 Turn the key switch to platform control.

4 At the platform controls, press and hold the lift function select and horn buttons and pull out the red Emergency Stop button to the on position.

⊙ Result: The diagnostic display will show "PS."

5 Release the lift function select and horn buttons.

⊙ Result: The diagnostic display will show the maximum lift speed percentage.

6 Press the lift function select button.

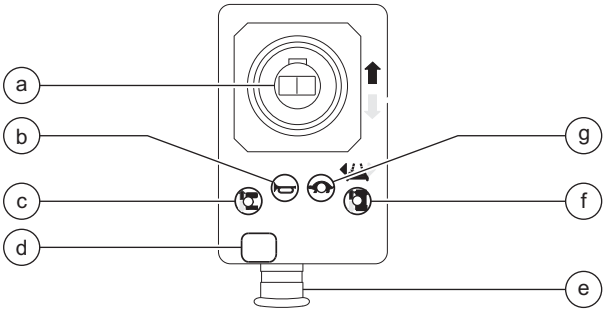

a joystick controller JC1 with thumb steering rocker SW6
b horn button BN5
c lift function select button BN9
d diagnostic display G8
e red Emergency Stop button P2
f drive function select BN8
g speed select button BN6

7 Use the steering thumb rocker switch on the joystick to increase or decrease the maximum lift speed percentage. Refer to Section 2, *Specifications*, for function speeds.

8 Turn the key switch to the off position.

Note: Any change in software settings will not take effect until the key switch is turned to the off position.

https://truckmanualshub.com/

How to Adjust the Stowed Drive Speed

DANGER Tip-over hazard. Do not adjust the lift and/or drive speed higher than specified in this procedure. Setting the function speeds greater than specifications could cause the machine to tip over resulting in death or serious injury.

DANGER Tip-over hazard. This procedure must only be performed by a trained service professional. Attempting this procedure without the necessary skills will result in death or serious injury.

On machines with software revision A4 and higher, setting the raised drive speed percentage to zero will result in the steer function being disabled when the platform is above the down limit switch. Refer to 1-2, *How to Determine the Software Revision Level*.

1 Pull out the red Emergency Stop button to the on position at the ground controls.

2 Push in the red Emergency Stop button to the off position at the platform controls.

3 Turn the key switch to platform control.

4 At the platform controls, press and hold the lift function select and horn buttons and pull out the red Emergency Stop button to the on position.

⊙ Result: The diagnostic display will show "PS."

5 Release the lift function select and horn buttons.

⊙ Result: The diagnostic display will show the maximum lift speed percentage.

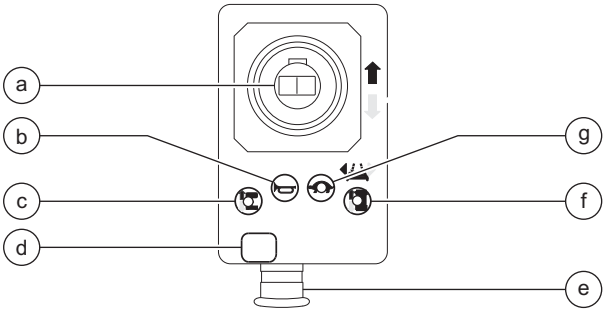

a joystick controller JC1 with thumb steering rocker SW6
b horn button BN5
c lift function select button BN9
d diagnostic display G8
e red Emergency Stop button P2
f drive function select BN8
g speed select button BN6

6 Press the drive function select button.

⊙ Result: The diagnostic display will show the stowed drive speed percentage.

7 Use the steering thumb rocker switch on the joystick to increase or decrease the stowed drive speed percentage. Refer to Section 2, *Specifications*, for drive speeds.

8 Turn the key switch to the off position.

Note: Any change in software settings will not take effect until the key switch is turned to the off position.

https://truckmanualshub.com/

How to Adjust the Raised Drive Speed

DANGER Tip-over hazard. Do not adjust the lift and/or drive speed higher than specified in this procedure. Setting the function speeds greater than specifications could cause the machine to tip over resulting in death or serious injury.

DANGER Tip-over hazard. This procedure must only be performed by a trained service professional. Attempting this procedure without the necessary skills will result in death or serious injury.

On machines with software revision A4 and higher, setting the raised drive speed percentage to zero will result in the steer function being disabled when the platform is above the down limit switch. Refer to 1-2, *How to Determine the Software Revision Level*.

1 Pull out the red Emergency Stop button to the on position at the ground controls.

2 Push in the red Emergency Stop button to the off position at the platform controls.

3 Turn the key switch to platform control.

4 At the platform controls, press and hold the lift function select and horn buttons and pull out the red Emergency Stop button to the on position.

⊙ Result: The diagnostic display will show "PS."

5 Release the lift function select and horn buttons.

⊙ Result: The diagnostic display will show the maximum lift speed percentage.

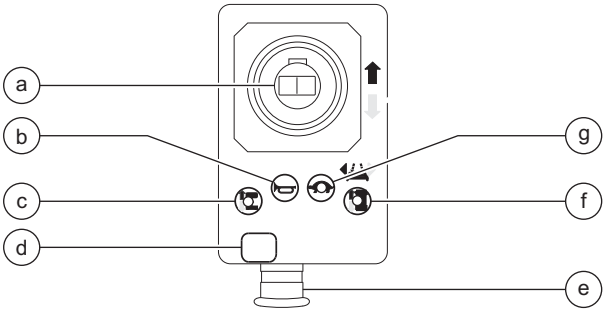

a joystick controller JC1 with thumb steering rocker SW6
b horn button BN5
c lift function select button BN9
d diagnostic display G8
e red Emergency Stop button P2
f drive function select BN8
g speed select button BN6

6 Press the drive function select button.

7 Press and hold the horn button.

⊙ Result: The diagnostic display will show the raised drive speed percentage.

8 Use the steering thumb rocker switch on the joystick to increase or decrease the raised drive speed percentage. Refer to Section 2, *Specifications*, for drive speeds.

9 Turn the key switch to the off position.

Note: Any change in software settings will not take effect until the key switch is turned to the off position.

https://truckmanualshub.com/

How to Adjust the Slow or High Torque Drive Speed

DANGER Tip-over hazard. Do not adjust the lift and/or drive speed higher than specified in this procedure. Setting the function speeds greater than specifications could cause the machine to tip over resulting in death or serious injury.

DANGER Tip-over hazard. This procedure must only be performed by a trained service professional. Attempting this procedure without the necessary skills will result in death or serious injury.

On machines with software revision A4 and higher, setting the raised drive speed percentage to zero will result in the steer function being disabled when the platform is above the down limit switch. Refer to 1-2, *How to Determine the Software Revision Level*.

1 Pull out the red Emergency Stop button to the on position at the ground controls.

2 Push in the red Emergency Stop button to the off position at the platform controls.

3 Turn the key switch to platform control.

4 At the platform controls, press and hold the lift function select and horn buttons and pull out the red Emergency Stop button to the on position.

⊙ Result: The diagnostic display will show "PS."

5 Release the lift function select and horn buttons.

⊙ Result: The diagnostic display will show the maximum lift speed percentage.

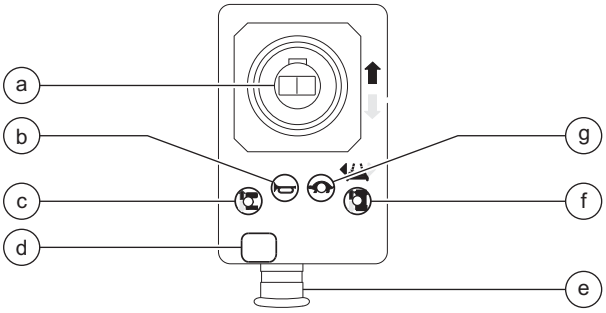

a joystick controller JC1 with thumb steering rocker SW6
b horn button BN5
c lift function select button BN9
d diagnostic display G8
e red Emergency Stop button P2
f drive function select BN8
g speed select button BN6

6 Press the drive function select button.

⊙ Result: The diagnostic display will show the stowed drive speed percentage.

7 Press and hold the speed select button.

⊙ Result: The diagnostic display will show the stowed high torque drive speed percentage.

8 Use the steering thumb rocker switch on the joystick to increase or decrease the stowed high torque drive speed percentage.

9 Turn the key switch to the off position.

Note: Any change in software settings will not take effect until the key switch is turned to the off position.

https://truckmanualshub.com/

1-3
Software Configuration

The Electronic Control Module (ECM) contains programming for all configurations of the Genie GS-30, GS-32 and GS-46. The machine can be adjusted to a different configuration using the buttons at the platform controls.

How to Determine the Software Configuration

1 Remove the platform controls from the platform.

2 Pull out the red Emergency Stop button to the on position at the ground controls.

3 Push in the red Emergency Stop button to the off position at the platform controls.

4 At the platform controls, press and hold the lift function select and speed select buttons, and pull out the red Emergency Stop button to the on position.

⊙ Result: The diagnostic display, at the platform controls and the ECM, will show "SC."

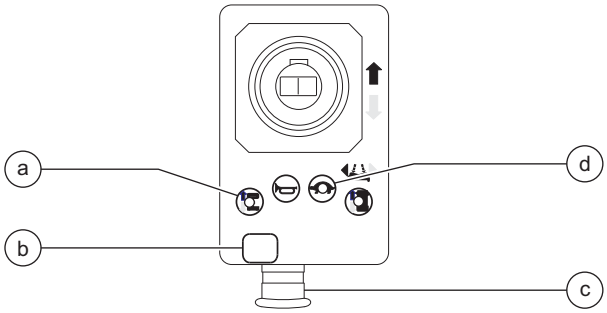

a lift function select button BN9
b diagnostic display
c red Emergency Stop button P2
d speed select button BN6

5 Release the lift function select and speed select buttons.

⊙ Result: The diagnostic display will show the current configuration.

6 Push in the red Emergency Stop button to the off position at both the ground and platform controls and turn the key switch to the off position.

Machine Option / Feature Definitions

Motion Alarm: The motion alarm will sound when operating any function.

Lift/Drive Cut Out: In addition to an alarm sounding, lift and drive functions are disabled when the platform is raised above the down limit switch and the incline of the chassis exceeds the rating on the serial plate. Configured on all machines.

Platform Overload: When the platform overload limit switch is tripped, signaling an overload condition in the platform, all machine functions are disabled. The additional weight must be removed from the platform and the power cycled from off to on before any function can be resumed. Required for CE models.

Descent Delay: This option halts descent for 4 to 6 seconds. All controls must be released and re-engaged before descent is re-enabled. Required for CE models.

Battery Drain Alarm: When the machine is turned on and in the stowed position, and no function is activated for 2 minutes, an alarm will sound once every 3 seconds.
When this option is configured, a dot in the diagnostic display window will remain continuously illuminated when the ECM is in the 'SC' mode OR when the platform up function is activated.

https://truckmanualshub.com/

How to Change the Software Configuration

1 Pull out the red Emergency Stop button to the on position at the ground controls.

2 Push in the red Emergency Stop button to the off position at the platform controls.

3 Turn the key switch to platform control.

4 At the platform controls, press and hold the lift function select and speed select buttons, and pull out the red Emergency Stop button to the on position.

⊙ Result: The diagnostic display, at the platform controls and the ECM, will show "SC."

5 Release the lift function select and speed select buttons.

⊙ Result: The diagnostic display will show the current configuration.

6 Press the lift function select button.

⊙ Result: The 'tens' digit setting will be activated and the current 'tens' setting will flash in the diagnostic display. Use the steering thumb rocker switch on the joystick to increase or decrease the value. See 1-3, *Machine Configuration Code Chart* for configuration settings.

7 Press and hold the lift function select button for a minimum of 3 seconds to set the 'tens' value.

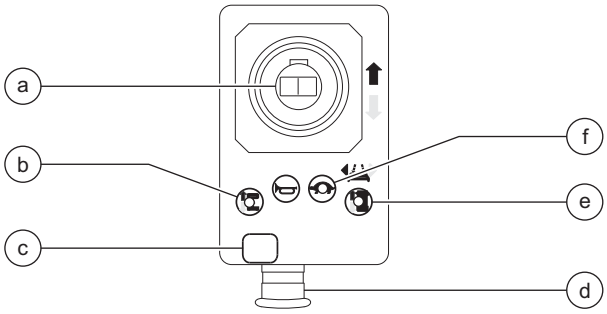

a joystick controller JC1 with thumb steering rocker SW6
b lift function select button BN9
c diagnostic display
d red Emergency Stop button P2
e drive function select button BN8
f speed select button BN6

8 Press the speed select button.

⊙ Result: The 'ones' digit setting will be activated and the current 'ones' setting will flash in the diagnostic display. Use the steering thumb rocker switch on the joystick to increase or decrease the value. See 1-3, *Machine Configuration Code Chart* for configuration settings.

9 Press and hold the speed select button for a minimum of 3 seconds to set the 'ones' value.

10 Turn the key switch to the off position.

Note: Any change in software settings will not take effect until the key switch is turned to the off position.

https://truckmanualshub.com/

Machine Configuration Code Chart (before serial numbers GS3007A-89468 and GS3007B-84527)

A mark in the four right columns indicates the machine configuration code, in the left column, includes this feature.

GS-1530 • GS-1532 • GS-1930 • GS-1932 (ECMs with software revisins A0 to A4)				
Machine Function Code at Diagnostic Display	Motion Alarm	Lift/Drive Cut Out	Platform Overload	Descent Delay
00				
01				•
02			•	
03		•		
04	•			
06			•	•
07		•		•
08	•			•
10		•	•	•
11	•		•	•
13	•	•		•
16	•	•	•	•
21		•	•	
22	•		•	
24	•	•	•	
28	•	•		

Machine Configuration Code Chart (after serial numbers GS3007A-89467 and GS3007B-84526) (from serial number GS3008C-101)

A mark in the four right columns indicates the machine configuration code, in the left column, includes this feature.

GS-1530 • GS-1532 • GS-1930 • GS-1932 (ECMs with software revisions A5 and higher)				
Machine Function Code at Diagnostic Display	Motion Alarm	Lift/Drive Cut Out	Platform Overload	Descent Delay
00		•		
01		•		•
02		•	•	
03		•		
04	•	•		
06		•	•	•
07		•		•
08	•	•		•
10		•	•	•
11	•	•	•	•
13	•	•		•
16	•	•	•	•
21		•	•	
22	•	•	•	
24	•	•	•	
28	•	•		

https://truckmanualshub.com/

Machine Configuration Code Chart (before serial numbers GS3207-85153 and GS4607-84772)

A mark in the four right columns indicates that the machine configuration code, in the left column, includes this feature.

GS-2032 • GS-2632 GS-2046 • GS-2646 • GS-3246 (ECMs with software revisins A0 to A4)				
Machine Function Code at Diagnostic Display	Motion Alarm	Lift/Drive Cut Out	Platform Overload	Descent Delay
32				
33				•
34			•	
35		•		
36	•			
38			•	•
39		•		•
40	•			•
42		•	•	•
43	•		•	•
45	•	•		•
48	•	•	•	•
53		•	•	
54	•		•	
56	•	•	•	
60	•	•		

Machine Configuration Code Chart (after serial numbers GS3207-85152 and GS4607-84771) (from serial numbers GS3208C-101 and GS4609C-101)

A mark in the four right columns indicates that the machine configuration code, in the left column, includes this feature.

GS-2032 • GS-2632 • GS-3232 GS-2046 • GS-2646 • GS-3246 (ECMs with software revisions A5 and higher)				
Machine Function Code at Diagnostic Display	Motion Alarm	Lift/Drive Cut Out	Platform Overload	Descent Delay
32		•		
33		•		•
34		•	•	
35		•		
36	•	•		
38		•	•	•
39		•		•
40	•	•		•
42		•	•	•
43	•	•	•	•
45	•	•		•
48	•	•	•	•
53		•	•	
54	•	•	•	
56	•	•	•	
60	•	•		

https://truckmanualshub.com/

How to Activate the Battery Drain Alarm Option

1 Pull out the red Emergency Stop button to the on position at the ground controls.

2 Push in the red Emergency Stop button to the off position at the platform controls.

3 Turn the key switch to platform control.

4 At the platform controls, press and hold the lift function select and speed select buttons, and pull out the red Emergency Stop button to the on position.

⊙ Result: The diagnostic display, at the platform controls and the ECM, will show "SC."

5 Release the lift function select and speed select buttons.

⊙ Result: The diagnostic display will show the current configuration.

6 Press the speed select button.

⊙ Result: The 'ones' digit setting will be activated and the current 'ones' setting will flash in the diagnostic display.

7 Press the horn button.

⊙ Result: A dot, located at the lower right of the diagnostic display window, will become illuminated. This indicates that the battery drain alarm option has been activated.

8 Press and hold the speed select button for a minimum of 3 seconds or until the 'ones' setting stops flashing.

9 Turn the key switch to the off position.

Note: To deactivate the battery drain alarm option on a machine which has the option activated, repeat this procedure. When the ECM is in the 'SC' mode and the option is deactivated, there will not be an illuminated dot in the diagnostic display window.

How to Determine the Battery Voltage

The diagnostic display on the platform controls is used to indicate the battery voltage at all times when the machine is in normal operation.

Limp Mode: If the battery level falls to less than 17.8V DC, the single bar in the diagnostic display will be flashing and machine drive speed is limited to that of the raised drive speed. Refer to Section 2, *Specifications*.

the battery level is 22.6V DC or higher

the battery level is 21.6 to 22.5V DC

the battery level is 20.7 to 21.5V DC

the battery level is 19.7 to 20.6V DC

the battery level is 17.8 to 19.6V DC

the battery level is less than 17.8V DC

https://truckmanualshub.com/

1-4
Outrigger ECM

The Electronic Control Module (ECM) is programmed to deactivate the drive and steer functions while the outriggers are deployed and activate an alarm when a signal is received from the outrigger level sensor, indicating the outriggers are not deployed or the machine is out of level.

The ECM is also used to calibrate the outrigger level sensor to achieve a levelness of 0° +/- 0.5° front to back and side to side, while the outriggers are deployed.

For further information or assistance, consult the Genie Industries Service Department.

How to Calibrate the Outrigger Level Sensor

1 Move the machine to a firm level surface that is free of obstructions. Use a digital level to confirm.

2 Turn the key switch to platform control.

3 Pull out the red Emergency Stop button to the on position at the ground controls.

4 Push in the red Emergency Stop button to the off position at the platform controls.

5 Press and hold the function enable, extend and retract buttons on the outrigger control pad and pull out the red Emergency Stop button to the on position at the platform controls.

Result: The lift error light turns red on the outrigger control pad.

6 Continue to hold the function enable, outrigger extend and outrigger retract buttons.

Result: After approximately 3 seconds at the outrigger control pad, the right rear outrigger and left front outrigger lights turn red. The right front outrigger and left rear outrigger lights turn green, and the lift error light remains red.

7 Continue to hold the outrigger extend and outrigger retract buttons. Release the function enable button.

Result: After approximately 5 seconds at the outrigger control pad, the lift enable, right rear outrigger and left front outrigger lights turn green. The right front outrigger and left rear outrigger lights remain green.

Result: All lights turn red on the outrigger control pad and the alarm sounds continuously. The outrigger level sensor is installed incorrectly OR the machine is not on a level surface. Check the levelness of the surface and inspect the digital level sensor to ensure the bubble at the top of the level sensor is centered in the circles. Repeat this procedure beginning with step 3.

8 Push in the Red Emergency Stop button at the platform controls. The outrigger level sensor is now calibrated.

Note: After installing a new outrigger level sensor, the new outrigger level sensor must be calibrated.

https://truckmanualshub.com/

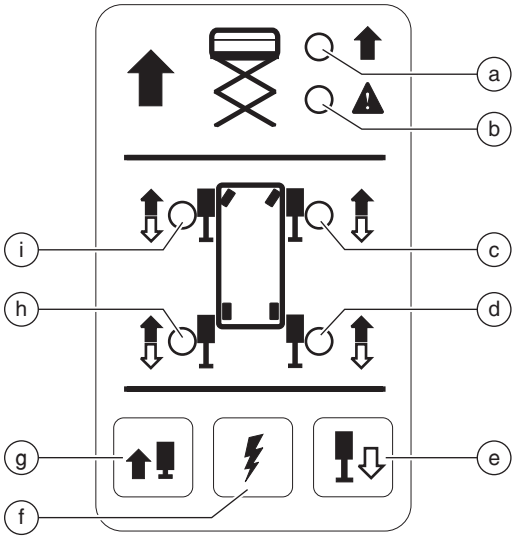

Outrigger Control Pad

a lift enable
b lift error
c right front outrigger
d right rear outrigger
e outrigger extend
f function enable
g outrigger retract
h left rear outrigger
i left front outrigger

How to Calibrate the Outrigger Pressure Transducers

Note: For best performance, calibrate the pressure transducers when the ambient temperature is 32°F / 0°C, or above.

1 Move the machine to a firm level surface that is free of obstructions. Use a digital level to confirm.

2 Turn the key switch to platform control.

3 Pull out the red Emergency Stop button to the on position at the ground controls.

4 Push in the red Emergency Stop button to the off position at the platform controls.

5 Press and hold the outrigger extend and retract buttons and pull out the red Emergency Stop button to the on position at the platform controls.

⊙ Result: The lift error light turns red at the outrigger control pad.

6 Continue to hold the outrigger extend and retract buttons.

⊙ Result: After approximately 3 seconds at the outrigger control pad, the right front outrigger, right rear outrigger, left rear outrigger and left front outrigger lights turn red. The lift error light remains red.

7 Continue to hold the outrigger retract button and release the outrigger extend button.

⊙ Result: After approximately 5 seconds at the outrigger control pad, the lift enable light turns green. The right front outrigger, right rear outrigger, left rear outrigger and left front outrigger lights remain red.

https://truckmanualshub.com/

8 Press and hold the function enable and outrigger extend buttons until the outriggers are fully extended. Continue to hold the outrigger extend button and release the function enable button.

⊙ Result: After approximately 5 seconds at the outrigger control pad, the right front outrigger, right rear outrigger, left rear outrigger and left front outrigger lights turn green.

⊙ Result: The outrigger controls alarm will sound for approximately 1 second.

9 Press and hold the function enable and outrigger retract buttons until the outriggers are fully retracted. Push in the red Emergency Stop button to the off position at the platform controls. The pressure transducers are now calibrated.

Note: After installing a new cylinder or pressure transducer, the pressure transducers on the machine must be calibrated.

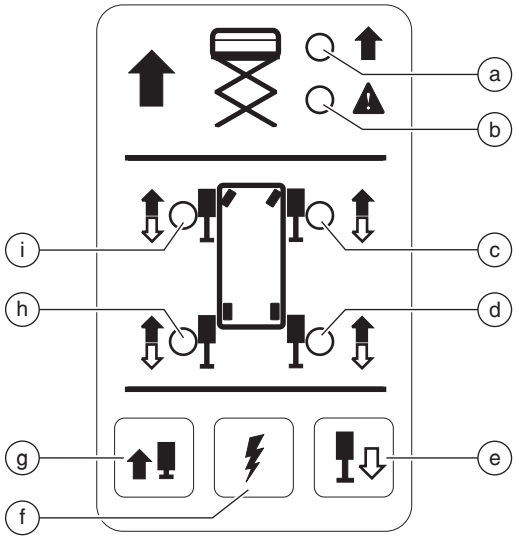

Outrigger Control Pad

a lift enable
b lift error
c right front outrigger
d right rear outrigger
e outrigger extend
f function enable
g outrigger retract
h left rear outrigger
i left front outrigger

How to Activate the Outrigger Motion Alarm Option

1 Turn the key switch to platform control.

3 Pull out the red Emergency Stop button to the on position at the ground controls.

4 Push in the red Emergency Stop button to the off position at the platform controls.

5 Press and hold the outrigger extend button and pull out the red Emergency Stop button to the on position at the platform controls.

⊙ Result: After approximately 5 seconds, the outrigger controls alarm will sound twice. The outrigger motion alarm is now activated.

How to Deactivate the Outrigger Motion Alarm Option

1 Turn the key switch to platform control.

3 Pull out the red Emergency Stop button to the on position at the ground controls.

4 Push in the red Emergency Stop button to the off position at the platform controls.

5 Press and hold the outrigger extend button and pull out the red Emergency Stop button to the on position at the platform controls.

⊙ Result: After approximately 5 seconds, the outrigger controls alarm will sound twice. The outrigger motion alarm is now deactivated.

https://truckmanualshub.com/

1-5 Outrigger Controls Software Update

Periodically the outrigger controls system is updated to improve system performance. When an update is available for the outrigger controls system, the system can be updated with the latest software revision. Updates to the outrigger controls system include updating the outrigger ECM and/or the outrigger control pad.

Prior to updating the outrigger controls system, the software programmer, hardware and firmware must be acquired through the Genie Industries Service Department.

Note: Perform this procedure with the machine on a firm, level surface.

Note: Failure to update the firmware on the outrigger ECM and/or the outrigger control pad when updating the outrigger controls system, may result in abnormal operation of the outrigger controls system.

How to Remove and Disassemble the Outrigger Control Pad

1 Disconnect the battery pack from the machine.

⚠WARNING Electrocution/burn hazard. Contact with electrically charged circuits could result in death or serious injury. Remove all rings, watches and other jewelry.

2 Push in the red Emergency Stop button to the off position at both the ground and platform controls.

3 Tag and disconnect the outrigger controls coil cord from the outrigger controls cable.

4 Remove the fasteners securing the outrigger control pad to the outrigger control pad bracket. Set the fasteners to the side. Refer to Illustration 1.

NOTICE Component damage hazard. After removing the fasteners securing the control pad assembly to the control pad bracket, the control pad assembly may slide away from the bracket. Use caution when removing the fasteners.

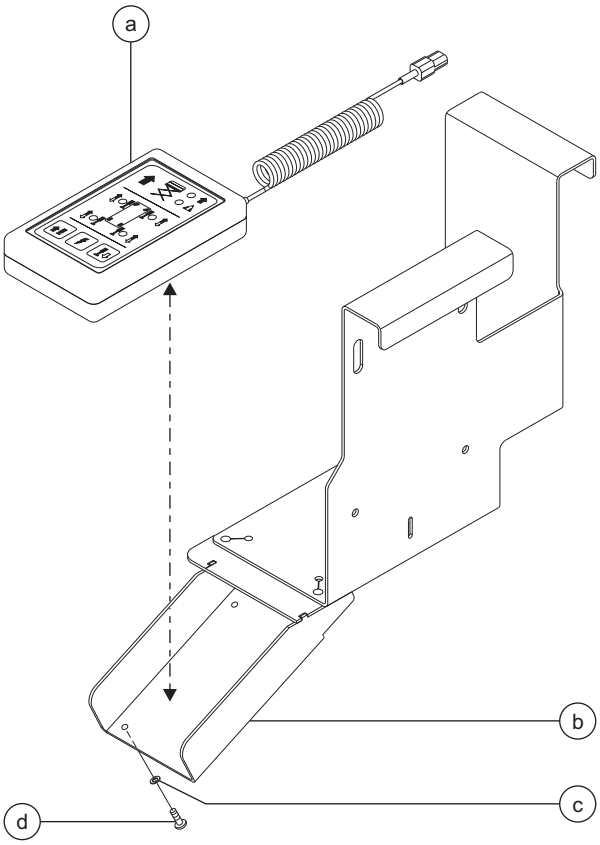

Illustration 1

a control pad
b control pad bracket
c washer
d screw

5 Carefully remove the outrigger control pad from the outrigger control pad bracket. Refer to Illustration 1.

https://truckmanualshub.com/

PLATFORM CONTROLS REV J

6 Remove the top enclosure of the control pad and set to the side. Refer to Illustration 2.

NOTICE Component damage hazard. Electrostatic discharge (ESD) can damage printed circuit board components. Maintain firm contact with a metal part of the machine that is grounded at all times when handling printed circuit boards OR use a grounded wrist strap.

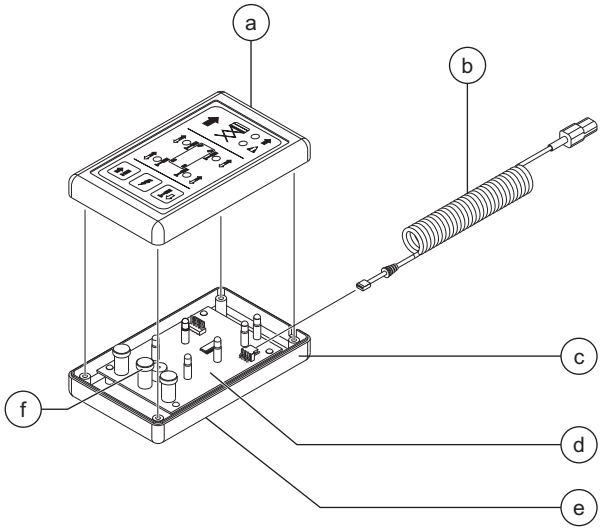

Illustration 2

a top enclosure
b coil cord
c bottom enclosure
d printed circuit board
e control pad decal (hidden from view)
f button cap

7 Locate the printed circuit board mounted to the bottom enclosure of the outrigger control pad and remove the button caps. Refer to Illustration 2.

8 Using a set of pliers, grasp the connector of the coil cord and slowly pull the coil cord away from the printed circuit board. Refer to Illustration 3.

NOTICE Component damage hazard. Attempting to disconnect the coil cord from the printed circuit board at the cord wires, may result in the cord wires pulling out of the connector.

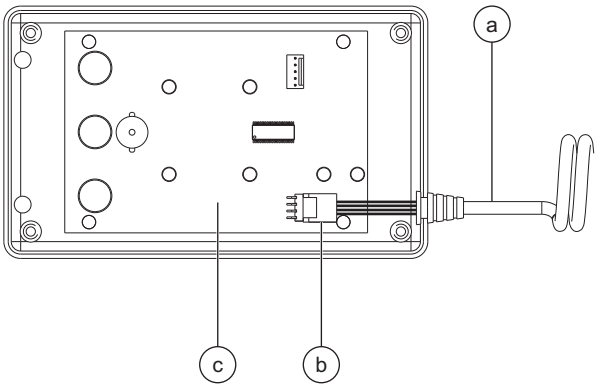

Illustration 3

a coil cord
b coil cord connector
c printed circuit board

9 Proceed to step 16 to update the firmware.

https://truckmanualshub.com/

How to Remove and Disassemble the Outrigger ECM

10 At the battery pack side of the machine, open the access door to the ECM. Refer to Illustration 4.

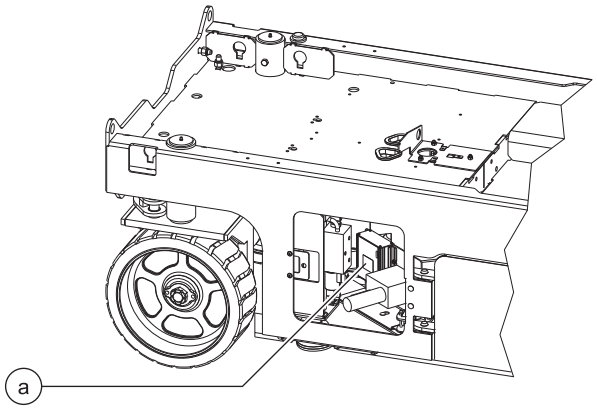

Illustration 4

a outrigger ECM

11 Tag and disconnect the wire harness from the Outrigger ECM.

12 Remove the fasteners securing the outrigger ECM to the mounting bracket and remove the ECM from the machine. Set the fasteners to the side.

13 Remove the fasteners securing the bottom cover to the ECM enclosure. Set the cover and the fasteners to the side. Refer to Illustration 5.

14 Carefully remove the printed circuit board from the ECM enclosure. Refer to Illustration 5.

NOTICE Component damage hazard. Electrostatic discharge (ESD) can damage printed circuit board components. Maintain firm contact with a metal part of the machine that is grounded at all times when handling printed circuit boards OR use a grounded wrist strap.

15 Proceed to step 16 to update the firmware.

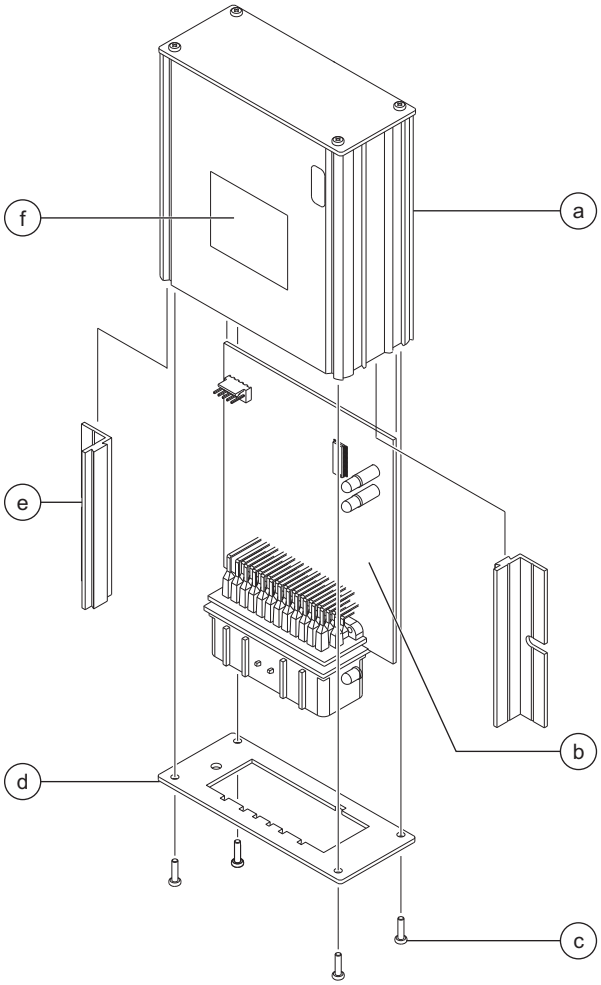

Illustration 5

a ECM enclosure
b printed circuit board
c torx screw
d bottom cover
e mounting bracket
f ECM decal

https://truckmanualshub.com/

How to Update the Firmware

Note: The PSoC Programmer (Genie part number 125324), updated Hex files for the outrigger control pad (Genie part number 125132) and the updated Hex files for the outrigger ECM (Genie part number 125131) must be installed on a PC or laptop.

16 Plug the USB end of the PSoC MiniProg cable into a PC or laptop.

Note: A window may ask to find a driver for the PSoC MiniProg cable. Click "Yes" until finished.

17 Plug the PSoc MiniProg cable into the printed circuit board of the ECM or the control pad, making sure the "VDD" on the PSoC MiniProg cable line up with the "+" on the printed circuit board. Refer to Illustration 6.

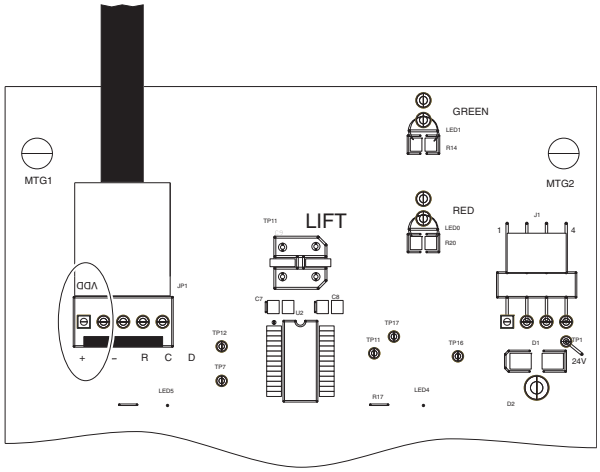

Illustration 6

18 Open the PSoC Programmer on a PC or laptop.

https://truckmanualshub.com/

19 Select "MINIProg1/048E47470618" from the "Port" drop down menu.

⊙ Result: All the boxes in the lower right corner of the "PSoC Programmer" window should have a green background and show as being "Connected."

https://truckmanualshub.com/

20 Click the "File Load" button.

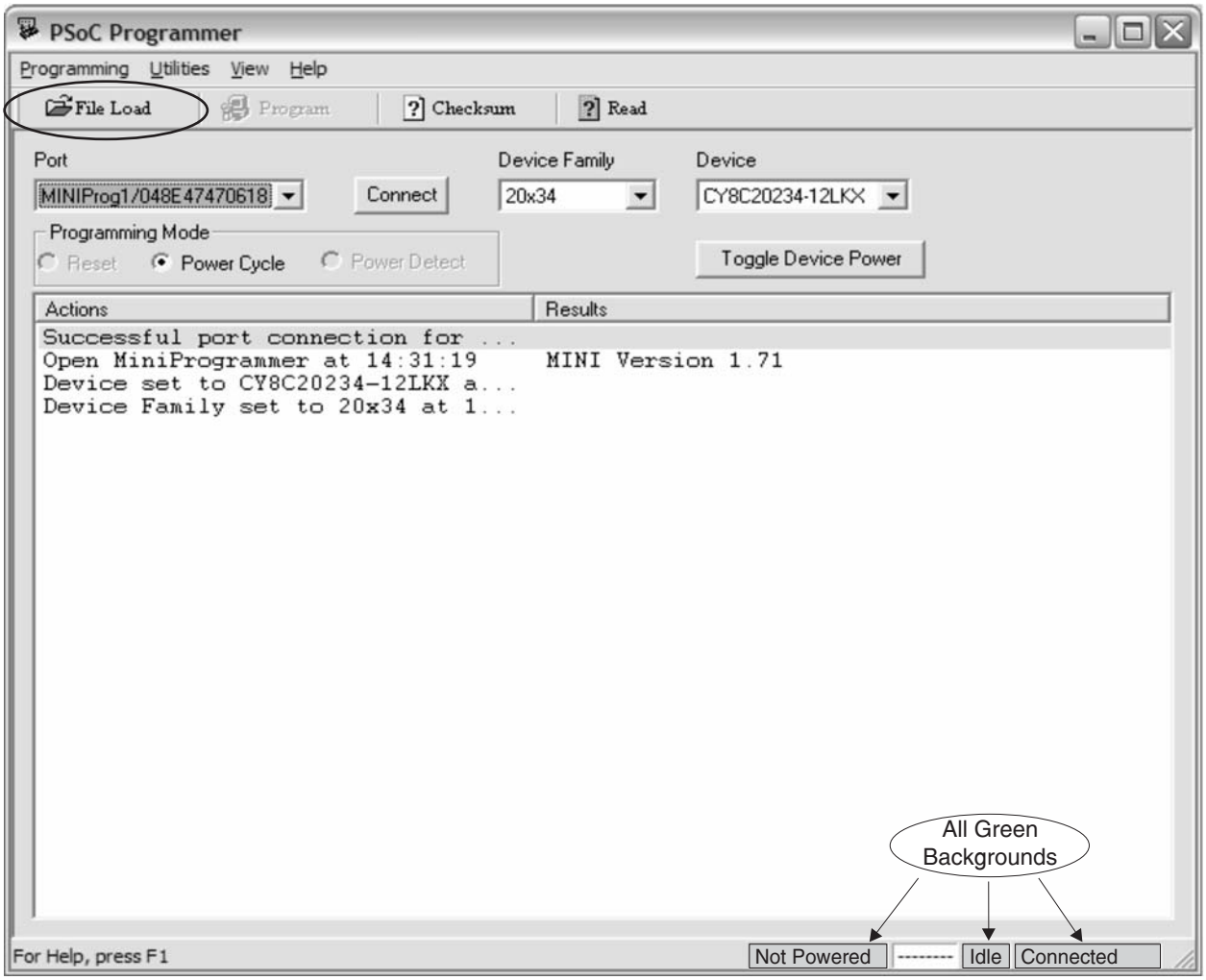

https://truckmanualshub.com/

21 Browse the folder containing the appropriate .hex file, select the file and click "Open."

⊙ Result: All the boxes in the lower right hand corner of the "PSoC Programmer" window should have a green background.

Note: To ensure the correct file is selected for either the ECM or control pad update, refer to the decals located in Illustrations 2 and 5. An example of the firmware file number and revision level can be found on the decals as shown below.

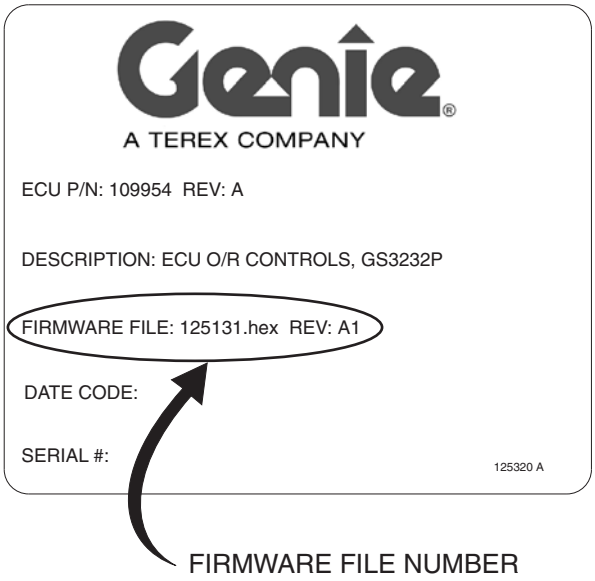

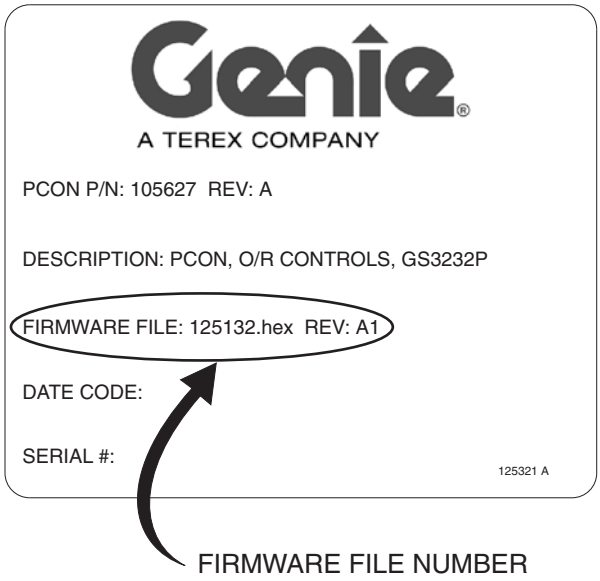

https://truckmanualshub.com/

22 With the background of all boxes in the lower right corner of the PSoc Programmer window green in color, locate the "Device Family" drop down menu and select "29x66."

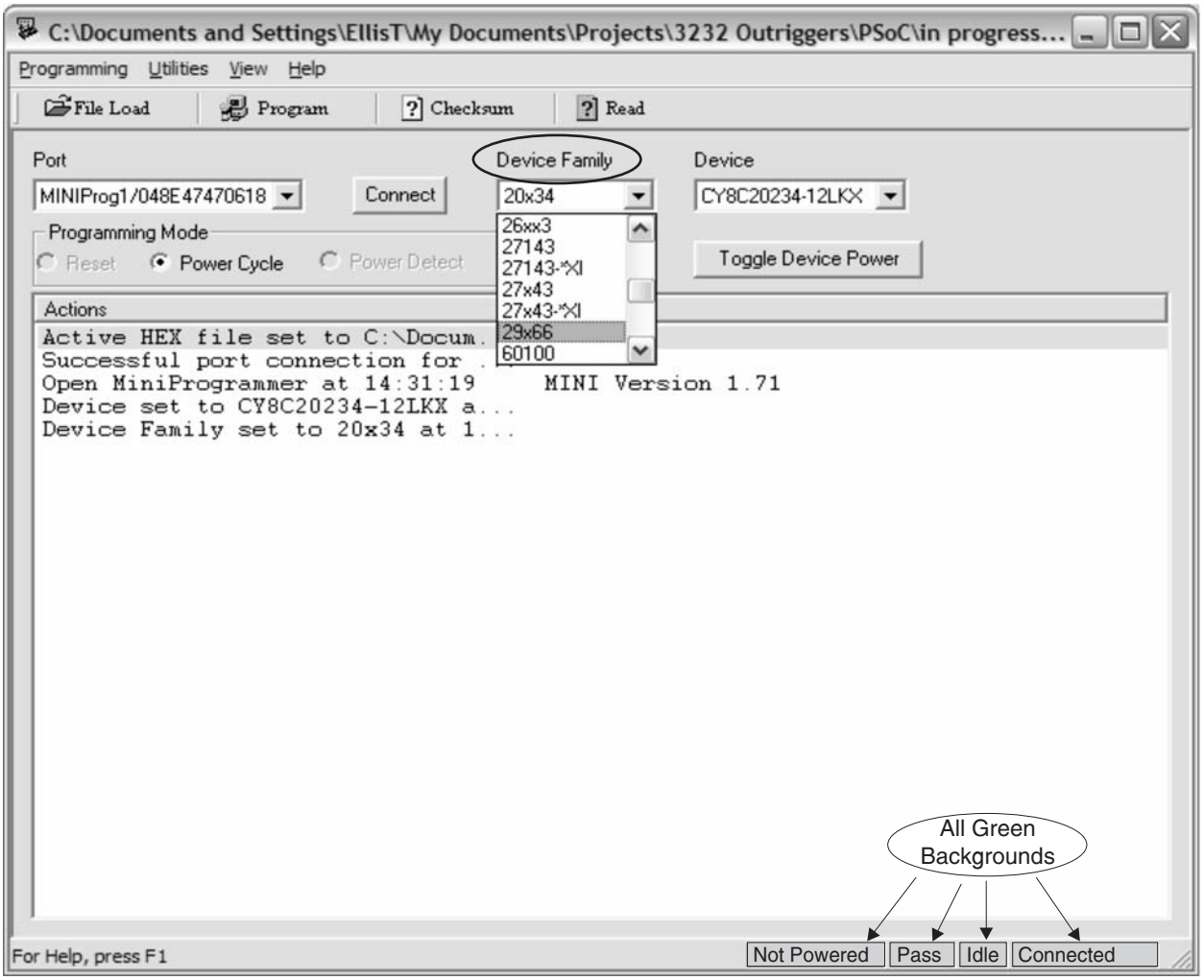

https://truckmanualshub.com/

REV J PLATFORM CONTROLS

Note: The ECM printed circuit board will be labeled with Genie part number 105368 and will serve as the identifier when for selecting "29x66" from the "Device Family" drop-down menu. Refer to Illustration 7.

Note: The control pad printed circuit board will be labeled with Genie part number 105370 and will serve as the identifier when for selecting "29x66" from the "Device Family" drop-down menu. Refer to Illustration 8.

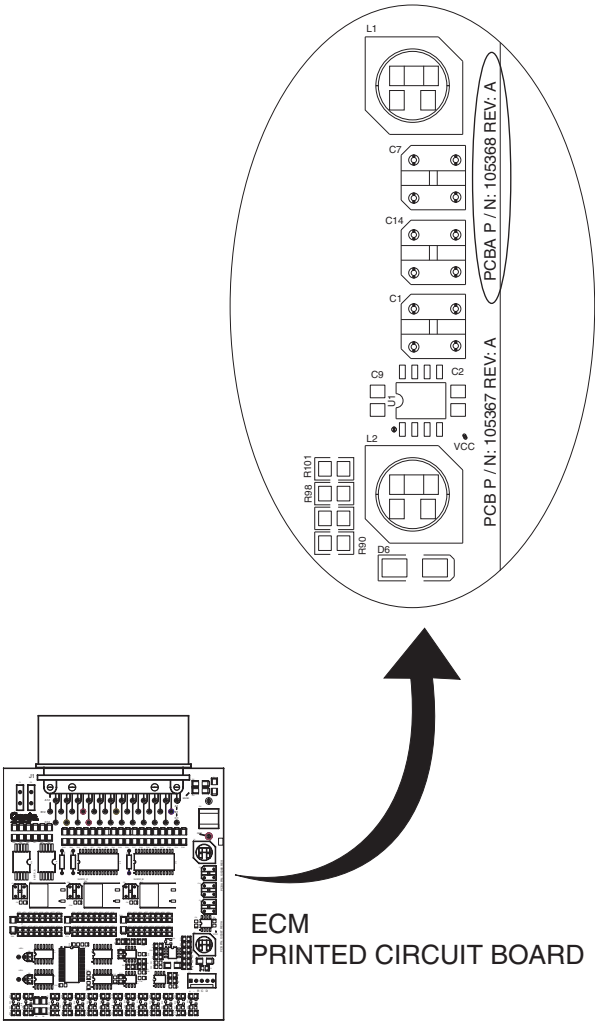

Illustration 7

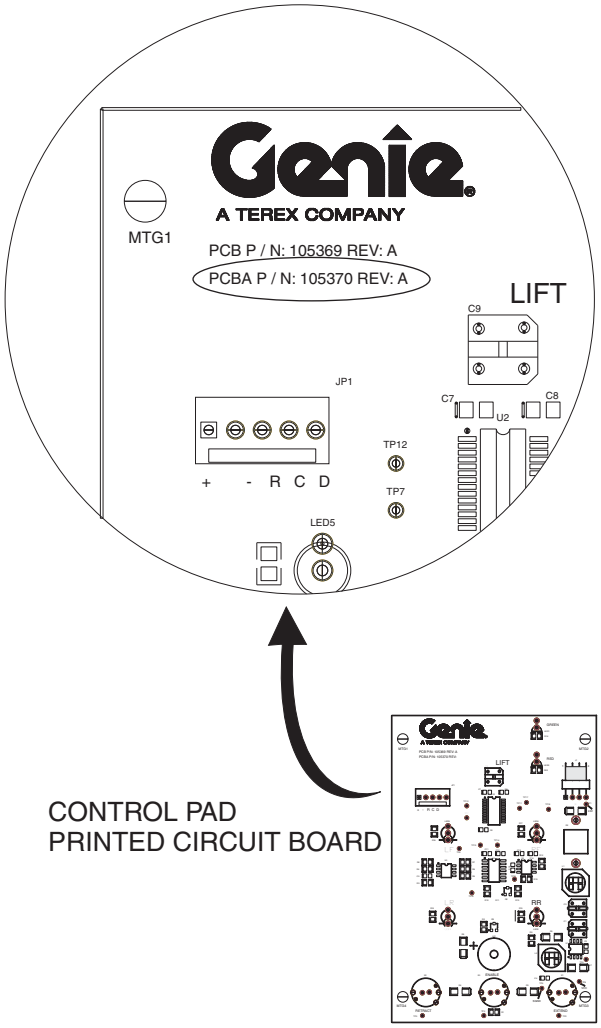

Illustration 8

https://truckmanualshub.com/

23 At the "Device" drop-down menu select CY8C29666 if the outrigger ECM firmware is being updated OR select CY8C29466 if the outrigger control pad firmware is being updated.

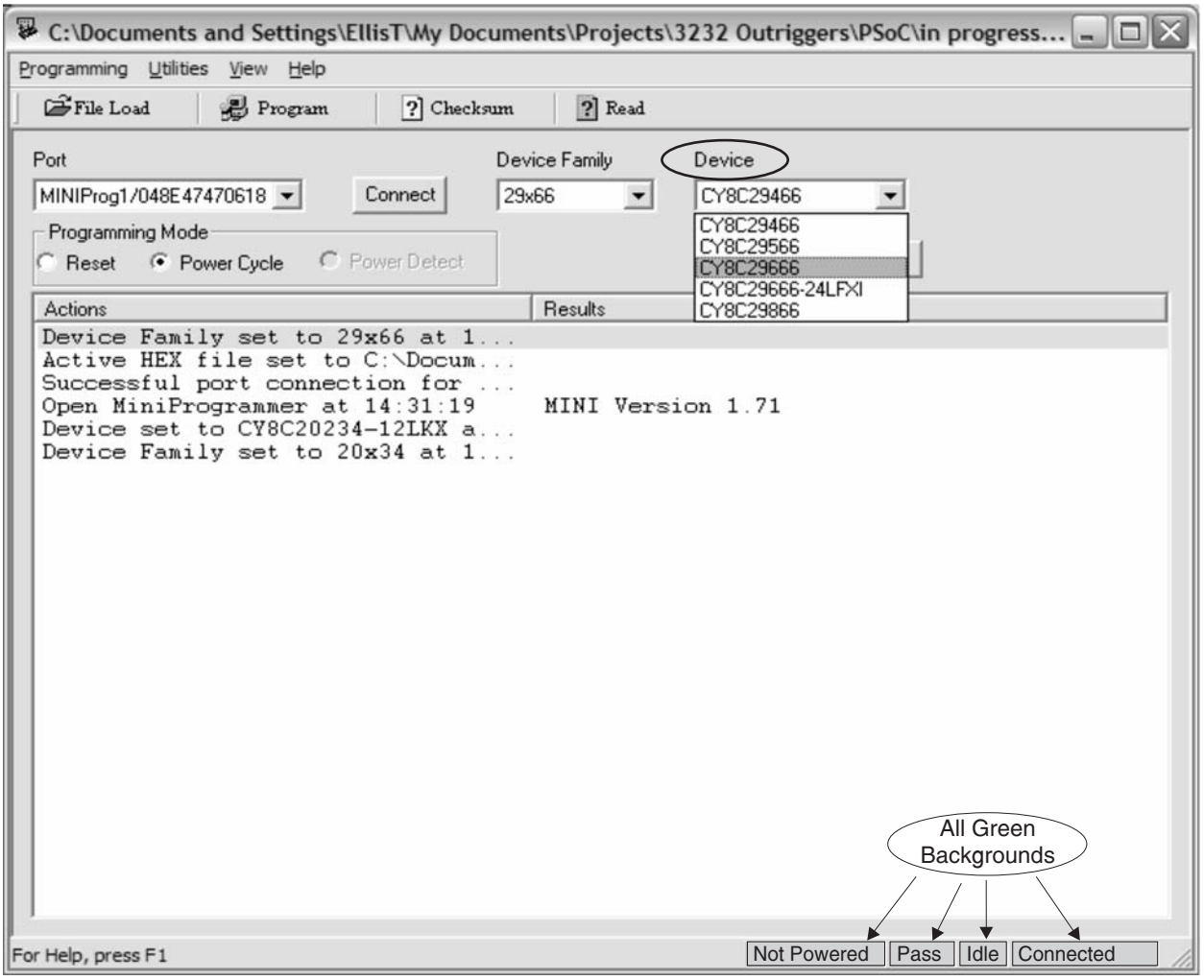

https://truckmanualshub.com/

24 At "Programming Mode", select the "Reset" bullet.

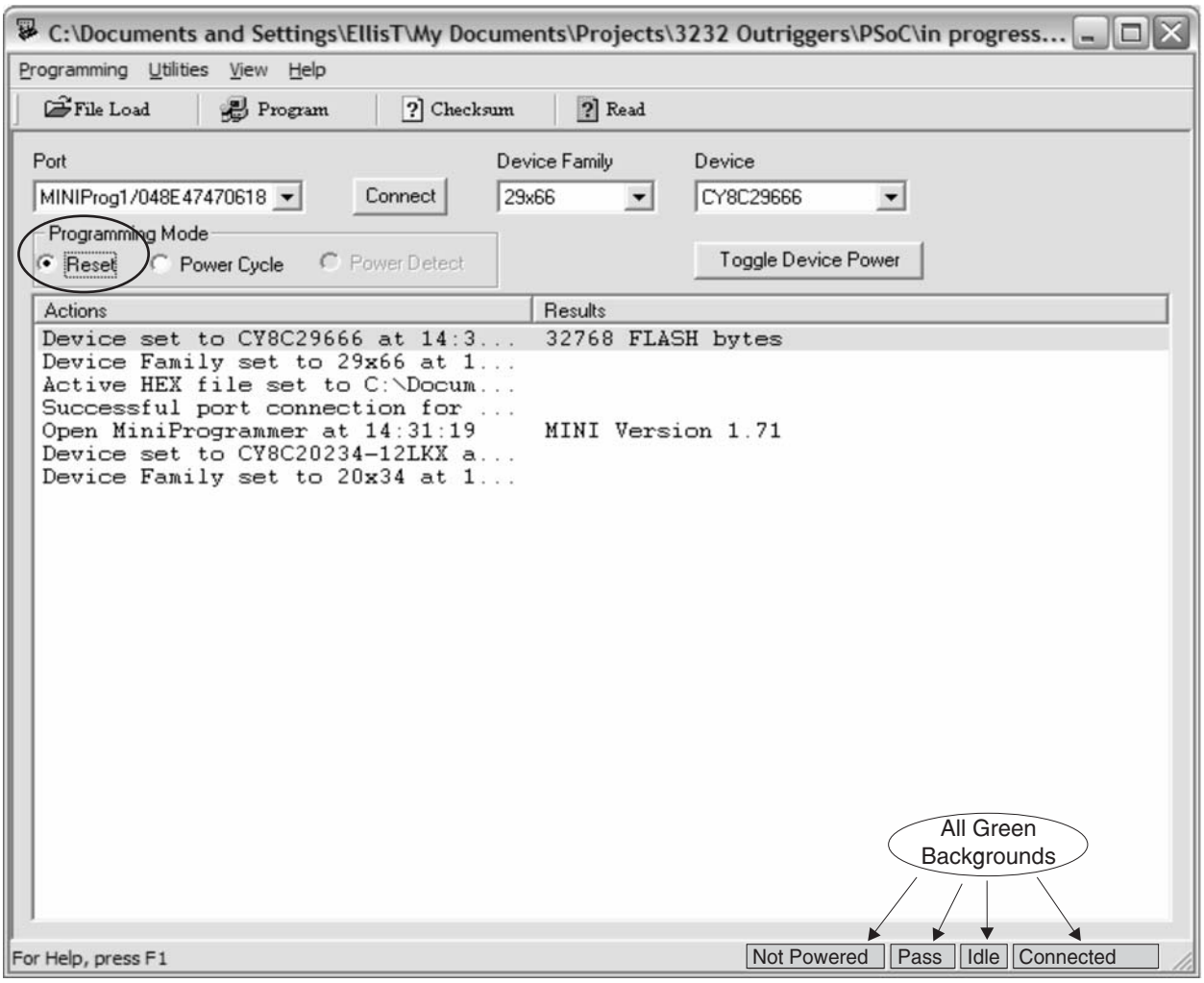

https://truckmanualshub.com/

25 Click the "Toggle Device Power" button.

- Result: A portion of the lower right hand corner in the "PSoC Programmer" window should now be red and show as being "Powered".
- Result: The red light labeled "Target Power" on the MiniProg cable should be on.

26 Click the "Program" button to update the firmware of either the ECM or the control pad.

- Result: The main "PSoC Programmer" window will indicate a successful program.

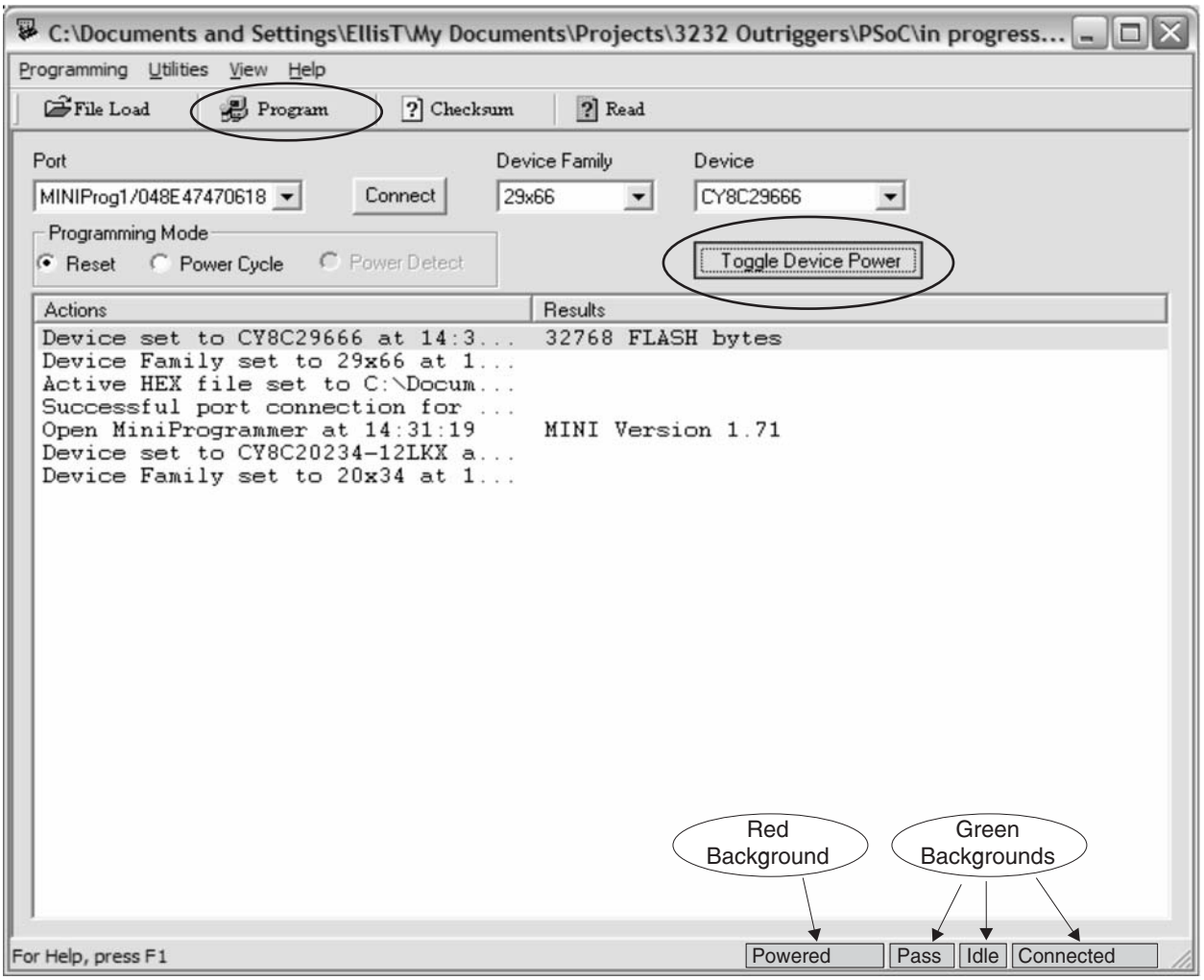

https://truckmanualshub.com/

27 Click the "Toggle Device Power" button to power down the printed circuit board.

⊙ Result: All the boxes in the lower right hand corner of the "PSoC Programmer" window should have a green background and should indicate "Not Powered."

28 Carefully disconnect the "MiniProg" cable from the printed circuit board.

NOTICE Component damage hazard. Electrostatic discharge (ESD) can damage printed circuit board components. Maintain firm contact with a metal part of the machine that is grounded at all times when handling printed circuit boards OR use a grounded wrist strap.

Note: Repeat this procedure beginning with step 16 if updates are required of the outrigger ECM AND the outrigger control pad.

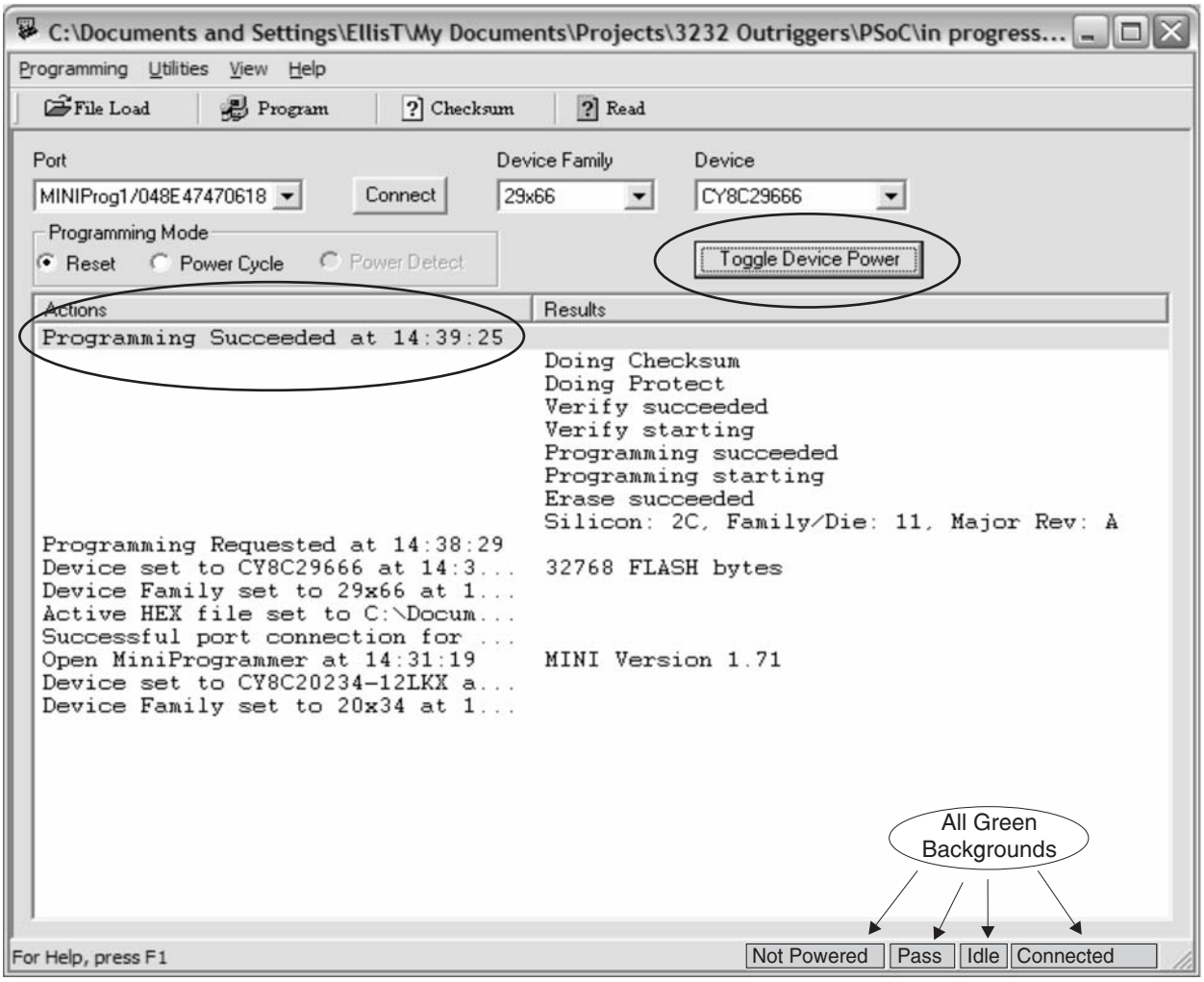

https://truckmanualshub.com/

How to Assemble and Install the Outrigger Control Pad

30 Carefully connect the control pad coil cord to the control pad printed circuit board. Refer to Illustration 2.

31 Install the button caps removed in step 7 onto the buttons of the control pad printed circuit board. Refer to Illustration 2.

NOTICE Component damage hazard. Electrostatic discharge (ESD) can damage printed circuit board components. Maintain firm contact with a metal part of the machine that is grounded at all times when handling printed circuit boards OR use a grounded wrist strap.

32 Install the control pad top enclosure onto the control pad bottom enclosure. Refer to Illustration 2.

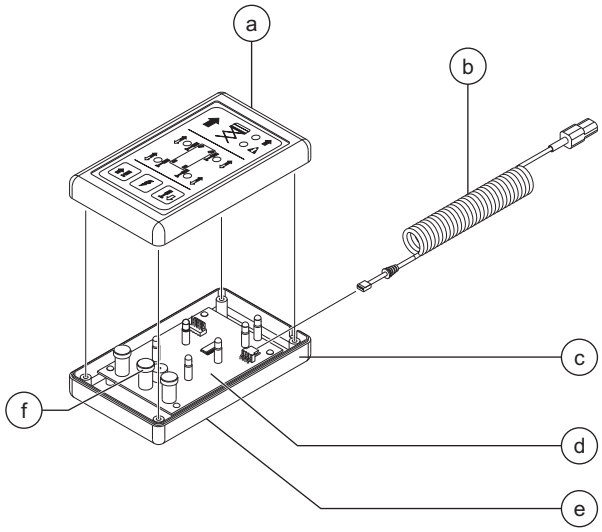

Illustration 2

a top enclosure
b coil cord
c bottom enclosure
d printed circuit board
e control pad decal (hidden from view)
f button cap

33 Install the control pad onto the control pad bracket and secure using the fasteners removed in step 4. Do not over tighten the fasteners. Refer to Illustration 1.

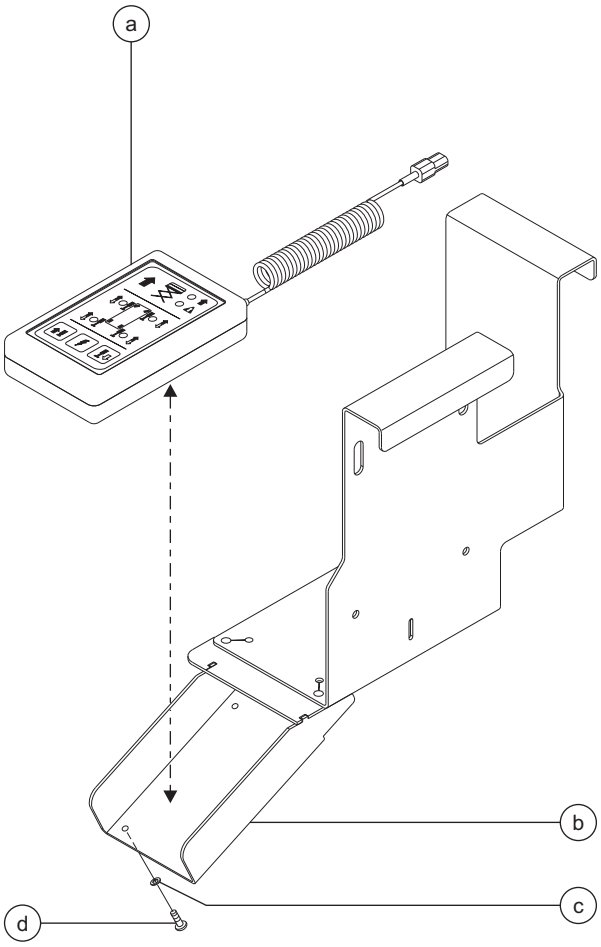

Illustration 1

a control pad
b control pad bracket
c washer
d screw

34 Connect the outrigger controls coil cord to the outrigger controls cable.

https://truckmanualshub.com/

How to Assemble and Install the Outrigger ECM

35 Insert the ECM printed circuit board into the ECM enclosure. Refer to Illustration 5.

NOTICE Component damage hazard. Electrostatic discharge (ESD) can damage printed circuit board components. Maintain firm contact with a metal part of the machine that is grounded at all times when handling printed circuit boards OR use a grounded wrist strap.

36 Using the fasteners removed in step 13, securely install the ECM bottom cover to the ECM enclosure. Do not over tighten. Refer to Illustration 5.

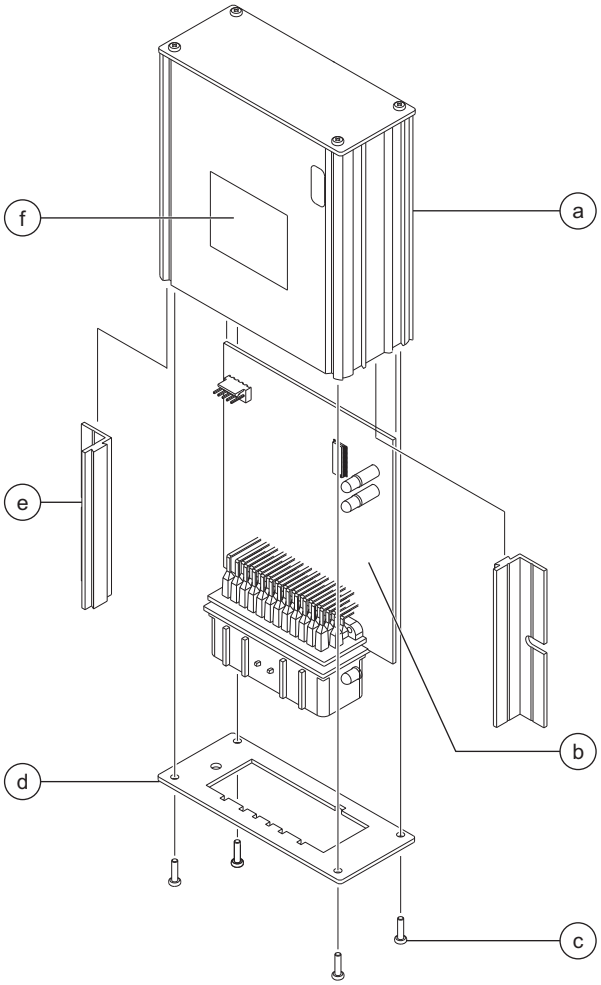

Illustration 5

a ECM enclosure
b printed circuit board
c torx screw
d bottom cover
e mounting bracket
f ECM decal

https://truckmanualshub.com/

37 Using the fasteners removed in step 12, securely install the ECM assembly onto the ECM bracket. Do not over tighten. Refer to Illustration 9.

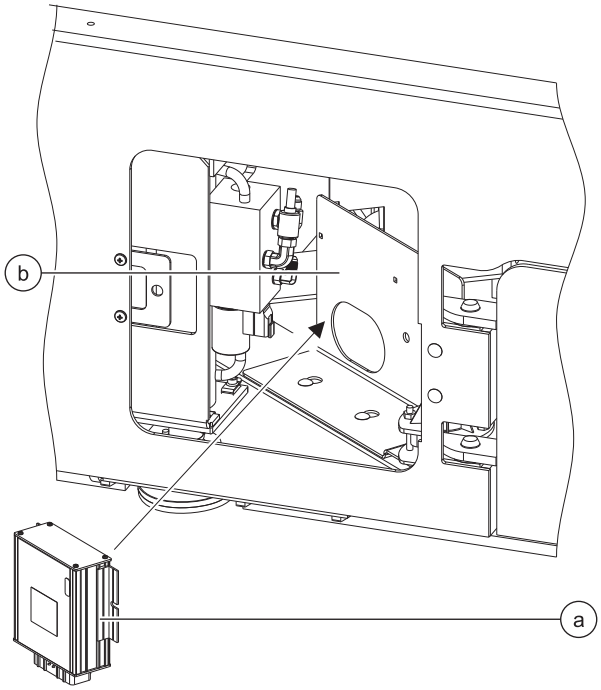

Illustration 9

a ECM assembly
b ECM bracket

38 Connect the ECM harness to the ECM.

39 Close the access door and secure in place.

How to Finish the Outrigger Controls Software Update

40 Connect the battery pack to the machine.

WARNING Electrocution/burn hazard. Contact with electrically charged circuits could result in death or serious injury. Remove all rings, watches and other jewelry.

41 Calibrate the outrigger level sensor. See 1-4, *How to Calibrate the Outrigger Level Sensor.*

42 Calibrate the outrigger pressure transducers. See 1-4, *How to Calibrate the Outrigger Pressure Transducers.*

43 Perform the function tests. Refer to the Operator's Manual on your machine.

44 Return the machine to service.

If you have any further questions regarding these instructions or need assistance, please contact the Genie Industries Scissors Service Department,
1-800-536-1800 Ext. 8710

https://truckmanualshub.com/

This page intentionally left blank.

https://truckmanualshub.com/

Platform Components

REV B

2-1 Platform

How to Remove the Platform

Perform this procedure with the platform extension fully retracted and locked in position.

1 Raise the platform to approximately 3 ft / 1 m.

2 Remove the retaining fasteners securing the platform to the platform mount at the steer end of the machine.

3 Lower the platform to the stowed position.

4 Disconnect the battery packs from the machine.

WARNING Electrocution/burn hazard. Contact with electrically charged circuits could result in death or serious injury. Remove all rings, watches and other jewelry.

5 Disconnect the platform controls from the control cable at the platform.

6 Remove the cover from the AC outlet. Tag and disconnect the wiring from the outlet.

WARNING Electrocution hazard. Contact with electrically charged circuits could result in death or serious injury. Remove all rings, watches and other jewelry.

7 Disconnect the wiring from the platform and pull the wiring free of the platform.

8 **Models with air line to platform option:** Disconnect the air line from the platform. Pull the air line free of the platform.

9 Support the platform with a forklift at the non-steer end. Do not apply any lifting pressure.

10 Attach a strap from the lanyard anchorage point on the platform railings to the carriage on the forklift to help support the platform.

11 **GS-1530/32 and GS-1930/32:** Lift the steer end of the platform slightly to clear the platform mount and slide the platform towards the non-steer end of the machine until the platform slide blocks at the non-steer end of the machine are visible through the access holes in the bottom of the platform.

All other models: Lift the steer end of the platform slightly to clear the platform mount and slide the platform towards the steer end of the machine until the platform slide blocks at the non-steer end of the machine are visible through the access holes in the bottom of the platform.

WARNING Crushing hazard. The platform will fall if not properly supported.

12 Carefully lift the platform off of the machine and place it on a structure capable of supporting it.

Note: Take notice of the wear pad position before the platform is removed, so when the platform is installed they will be in the correct position.

https://truckmanualshub.com/

2-2 Platform Extension

How to Remove the Platform Extension

1 Lower the platform to the stowed position.

2 Extend the platform approximately 3 feet / 1 m.

3 Remove the platform controls from the platform and lay them off to the side of the machine.

4 Support the platform extension with a forklift at the steer end of the machine. Do not apply any lifting pressure.

5 Attach a strap from the platform extension railings to the carriage on the forklift to help support the platform extension.

6 Remove the two retaining fasteners from each platform extension roller bracket assembly. Remove each assembly from the machine.

Note: Do not remove the platform roller bolt.

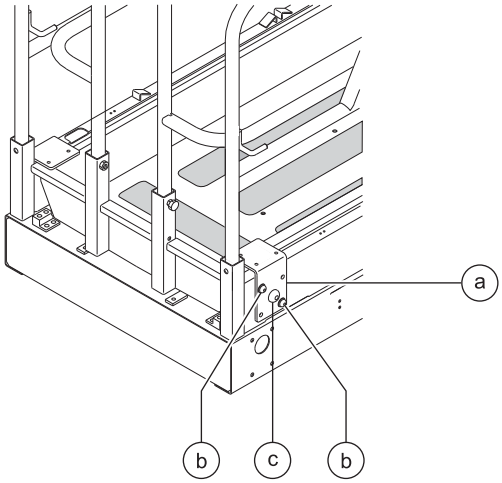

a roller bracket assembly
b assembly retaining fastener
c platform roller bolt

7 Remove the platform roller wheels from the machine.

8 Carefully slide the platform extension out from the platform and place it on a structure capable of supporting it.

How to Replace the Platform Extension Wear Pads

1 Remove the Platform Extension. See 2-2, *How to Remove the Platform Extension.*

2 Drill out the rivets which hold the wear pads in place.

3 Install the new wear pads using new rivets. When installing the new rivets, make sure the rivet heads are not above the surface of the wear pad.

https://truckmanualshub.com/

Scissor Components

REV C

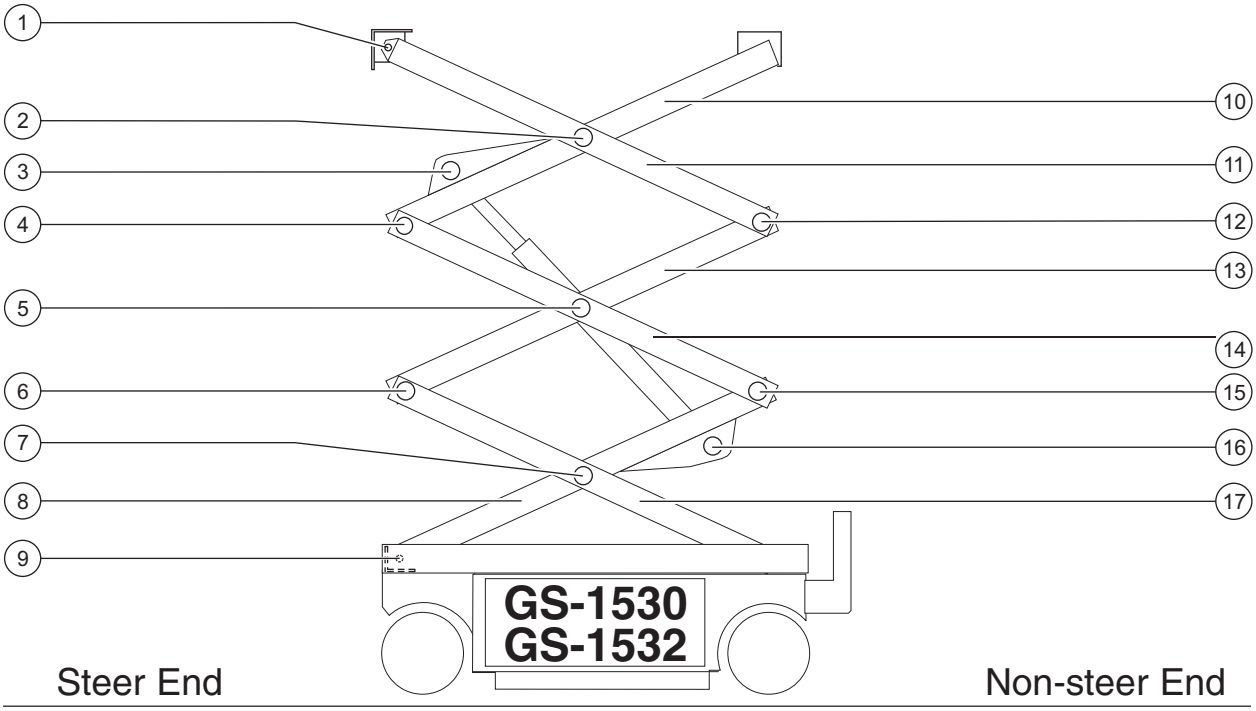

1 Number 4 pivot pin
2 Number 3 center pivot pin (2 pins)
3 Lift cylinder rod-end pivot pin
4 Number 3 pivot pin (steer end)
5 Number 2 center pivot pin (2 pins)
6 Number 2 pivot pin (steer end)
7 Number 1 center pivot pin (2 pins)
8 Number 1 inner arm
9 Number 1 pivot pin
10 Number 3 inner arm
11 Number 3 outer arm
12 Number 3 pivot pin (non-steer end)
13 Number 2 inner arm
14 Number 2 outer arm
15 Number 2 pivot pin (non-steer end)
16 Lift cylinder barrel-end pivot pin
17 Number 1 outer arm

https://truckmanualshub.com/

3-1 Scissor Assembly, GS-1530 and GS-1532

How to Disassemble the Scissor Assembly, GS-1530 and GS-1532

WARNING Bodily injury hazard. The procedures in this section require specific repair skills, lifting equipment and a suitable workshop. Attempting this procedure without these skills and tools could result in death or serious injury and significant component damage. Dealer service is required.

When removing a hose assembly or fitting, the O-ring on the fitting and/or hose end must be replaced and then torqued to specification during installation. Refer to Section 2, *Hydraulic Hose and Fitting Torque Specifications.*

1 Remove the platform. See 2-1, *How to Remove the Platform.*

2 Remove the cables from the number 3 outer arm (index #11) at the ground controls side.

NOTICE Component damage hazard. Cables can be damaged if they are kinked or pinched.

3 Remove the cables from the number 3 cable bridge and lay them off to the side.

NOTICE Component damage hazard. Cables can be damaged if they are kinked or pinched.

Models with dual number 3 outer arms:

4 Attach a lifting strap from an overhead crane to the number 3 outer arm at the ground controls side of the machine (index #11).

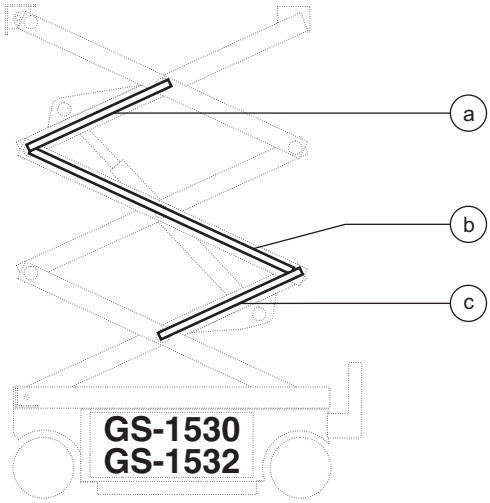

Cable bridge legend

a cable bridge 3
b cable bridge 2
c cable bridge 1

5 Remove the external snap rings and retaining fasteners from the number 3 center pivot pin at the ground control side of the machine (index #2).

6 Use a soft metal drift to remove the number 3 center pivot pin at the ground control side of the machine (index #2).

7 Remove the retaining fasteners from the number 3 pivot pin (index #12) at the non-steer end of the machine.

8 Use a soft metal drift to remove the number 3 pivot pin (index #12) from the non-steer end of the machine. Remove the number 3 outer arm at the ground control side (index #11) from the machine.

WARNING Crushing hazard. The number 3 outer arm may become unbalanced and fall if not properly supported when removed from the machine.

9 Attach a lifting strap from an overhead crane to the number 3 outer arm at the battery pack side of the machine (index #11).

https://truckmanualshub.com/

10 Remove the external snap rings and retaining fasteners from the number 3 center pivot pin at the battery pack side of the machine (index #2).

11 Use a soft metal drift to remove the number 3 center pivot pin at the battery pack side of the machine (index #2).

12 Remove the number 3 outer arm at the battery pack side (index #11) from the machine.

⚠WARNING Crushing hazard. The number 3 outer arm may become unbalanced and fall if not properly supported when removed from the machine.

Models with a single number 3 outer arm assembly:

13 Attach a lifting strap from an overhead crane to the number 3 outer arm (index #11).

14 Remove the external snap rings and retaining fasteners from the number 3 center pivot pins (index #2).

15 Use a soft metal drift to remove the number 3 center pivot pins (index #2).

16 Remove the retaining fasteners from the number 3 pivot pin (index #12) at the non-steer end of the machine.

17 Use a soft metal drift to remove the number 3 pivot pin (index #12) from the non-steer end of the machine. Remove the number 3 outer arm (index #11) from the machine.

⚠WARNING Crushing hazard. The number 3 outer arm may become unbalanced and fall if not properly supported when removed from the machine.

All models:

18 Remove the number 3 cable bridge mounting fasteners and remove the cable bridge from the machine.

19 Attach a lifting strap from an overhead crane to the lug on the rod end of the lift cylinder for support. Do not apply any lifting pressure.

20 Remove the pin retaining fasteners from the lift cylinder rod-end pivot pin (index #3). Use a soft metal drift to remove the pin.

⚠CAUTION Bodily injury hazard. The cylinder may fall when the rod-end pivot pin is removed if not properly supported.

21 Lower the cylinder onto the number 1 inner arm (index #8).

NOTICE Component damage hazard. Cables can be damaged if they are kinked or pinched.

22 Attach a lifting strap from an overhead crane to the number 3 inner arm (index #10).

23 Remove the retaining fasteners from the number 3 pivot pin (index #4) at the steer end.

24 Use a soft metal drift to remove the number 3 pivot pin (index #4). Remove the number 3 inner arm (index #10) from the machine.

⚠WARNING Bodily injury hazard. The number 3 inner arm may become unbalanced and fall if not properly supported when removed from the machine.

25 Remove the cables from the number 2 cable bridge and lay them off to the side.

NOTICE Component damage hazard. Cables can be damaged if they are kinked or pinched.

26 Remove the external snap rings and retaining fasteners from the number 2 center pivot pin (index #5) at the ground controls side.

27 Remove the number 2 cable bridge mounting fasteners and remove the cable bridge from the machine.

28 Attach a lifting strap from an overhead crane to the number 2 outer arm (index #14) at the ground controls side.

29 Use a soft metal drift to remove the number 2 center pivot pin (index #5) at the ground controls side.

https://truckmanualshub.com/

30 Remove the retaining fasteners from the number 2 pivot pin (index #15) at the non-steer end of the machine.

31 Use a soft metal drift to tap the number 2 pivot pin (index #15) halfway out at the non-steer end of the machine. Remove the number 2 outer arm (index #14) from the ground controls side of the machine.

⚠CAUTION Bodily injury hazard. The number 2 outer arm at the ground controls side may become unbalanced and fall if not properly supported when removed from the machine.

32 Attach a lifting strap from an overhead crane to the number 2 outer arm (index #14) at the battery pack side.

33 Remove the external snap rings and retaining fasteners from the number 2 center pivot pin (index #5) at the battery pack side.

34 Use a soft metal drift to remove the number 2 center pivot pin (index #5) at the battery pack side.

⚠CAUTION Bodily injury hazard. The number 2 outer arm at the battery pack side may become unbalanced and fall if not properly supported when removed from the machine.

35 Use a soft metal drift to tap the number 2 pivot pin (index #15) in the other direction at the non-steer end. Remove the number 2 outer arm (index #14) from the battery pack side of the machine.

⚠CAUTION Bodily injury hazard. The number 2 outer arm at the battery pack side may become unbalanced and fall if not properly supported when removed from the machine.

36 Attach a lifting strap from an overhead crane to the number 2 inner arm (index #13).

37 Remove the retaining fasteners from the number 2 pivot pin (index #6) at the steer end of the machine.

38 Use a soft metal drift to remove the number 2 pivot pin (index #6). Remove the number 2 inner arm (index #13) from the machine.

⚠CAUTION Bodily injury hazard. The number 2 inner arm may become unbalanced and fall if not properly supported when removed from the machine.

39 Remove the safety arm from the number 2 inner arm (index #13) that was just removed.

40 Attach a lifting strap from an overhead crane to the number 1 inner arm (index #8).

41 Raise the number 1 inner arm (index #8) approximately 2 feet / 60 cm and install the safety arm between the number 1 inner arm (index #8) and the number 1 outer arm (index #17). Lower the scissor arms onto the safety arm.

⚠CAUTION Bodily injury hazard. Keep hands clear of moving parts when lowering the scissor arms onto the safety arm.

42 Attach a lifting strap from an overhead crane to the lug on the rod end of the lift cylinder (index #3). Raise the lift cylinder approximately 3 ft / 1 m.

43 Tag, disconnect and plug the hydraulic hoses on the lift cylinder. Cap the fittings on the cylinder.

⚠WARNING Bodily injury hazard. Spraying hydraulic oil can penetrate and burn skin. Loosen hydraulic connections very slowly to allow the oil pressure to dissipate gradually. Do not allow oil to squirt or spray.

44 Tag and disconnect the wires and manual lowering cable from the solenoid valve on the cylinder.

45 **Models with platform overload option:** Tag and disconnect the wire harness from the platform overload switch.

https://truckmanualshub.com/

46 Raise the lift cylinder to a vertical position.

47 Remove the pin retaining fasteners from the lift cylinder barrel-end pin (index #16). Use a soft metal drift to remove the pin. Remove the lift cylinder from the machine.

⚠WARNING Crushing hazard. The lift cylinder could become unbalanced and fall when it is removed from the machine if not properly attached to the overhead crane.

NOTICE Component damage hazard. Be careful not to damage the valve or fittings on the cylinder while removing it from the machine.

48 Place a 4 x 4 x 48 inch / 10 cm x 10 cm x 1.2 m long block across both sides of the chassis under the number 1 center pivot pin (index #7).

49 Attach a lifting strap from an overhead crane to the number 1 inner arm (index #8) at the non-steer end. Raise the number 1 inner arm and remove the safety arm. Lower the number 1 inner arm (index #8) onto the block that was placed across the chassis.

⚠CAUTION Bodily injury hazard. Keep hands clear of moving parts when lowering the arms onto the block.

50 Remove the cables from the number 1 cable bridge and lay them off to the side.

NOTICE Component damage hazard. Cables can be damaged if they are kinked or pinched.

51 Support and secure the entry ladder to an appropriate lifting device.

52 Remove the fasteners from the entry ladder and remove the entry ladder from the machine.

⚠CAUTION Crushing hazard. The entry ladder may become unbalanced and fall if not properly supported and secured to the lifting device.

53 Attach a lifting strap from an overhead crane to the number 1 outer arm (index #17). Do not apply any lifting pressure.

54 Remove the external snap rings and retaining fasteners from the number 1 center pivot pins (index #7).

55 Remove the number 1 cable bridge from the machine.

56 Use a soft metal drift to remove the number 1 center pivot pins (index #7).

⚠CAUTION Bodily injury hazard. The number 1 outer arm may become unbalanced and fall if not properly supported when the pin is removed.

57 Slide the number 1 outer arm (index #17) to the non-steer end and remove it from the machine.

⚠CAUTION Bodily injury hazard. The number 1 outer arm may become unbalanced and fall if not properly supported when removed from the machine.

58 Attach the strap from an overhead crane to the number 1 inner arm (index #8). Do not lift it.

59 Remove the upper fasteners securing the number 1 inner arm pivot bracket to the end of the chassis. Loosen the lower fasteners.

60 Remove the number 1 inner arm (index #8) from the machine.

⚠CAUTION Bodily injury hazard. The number 1 inner arm may become unbalanced and fall if not properly supported when removed from the machine.

NOTICE Component damage hazard. Be sure not to damage the limit switch or level sensor box components when the number 1 inner arm is removed from the machine.

https://truckmanualshub.com/

How to Replace the Scissor Arm Wear Pads

1 Remove the platform. See 2-1, *How to Remove the Platform.*

2 Support and secure the entry ladder to an appropriate lifting device.

3 Remove the fasteners from the entry ladder and remove the entry ladder from the machine.

CAUTION Crushing hazard. The entry ladder may become unbalanced and fall if not properly supported and secured to the lifting device.

4 Secure the ends of the scissor arms together at the steer end of the machine with a strap or other suitable device.

5 Secure the ends of the scissor arms together at the non-steer end of the machine with a strap or other suitable device.

6 Remove the retaining fasteners securing the chassis mount bracket to the chassis at the steer end of the machine.

7 Attach a lifting strap from an overhead crane to the scissor arm assembly.

8 Raise the scissor arm assembly at the steer end with the overhead crane until the chassis mount bracket will clear the level sensor.

9 Remove the scissor assembly from the machine just enough to access both wear pads.

DANGER Crushing hazard. The scissor assembly will fall if not properly supported when removed from the drive chassis.

NOTICE Component damage hazard. Be careful not to damage the level sensor or limit switch while moving the scissor assembly.

10 Remove both old wear pads.

11 Install two new wear pads.

12 Slide the scissor assembly back into the drive chassis.

13 Lower the scissor assembly into position and install the chassis mount bracket onto the chassis. Securely install and tighten the fasteners. Do not overtighten.

NOTICE Component damage hazard. Be careful not to damage the level sensor or limit switch while moving the scissor assembly.

https://truckmanualshub.com/

SCISSOR COMPONENTS REV C

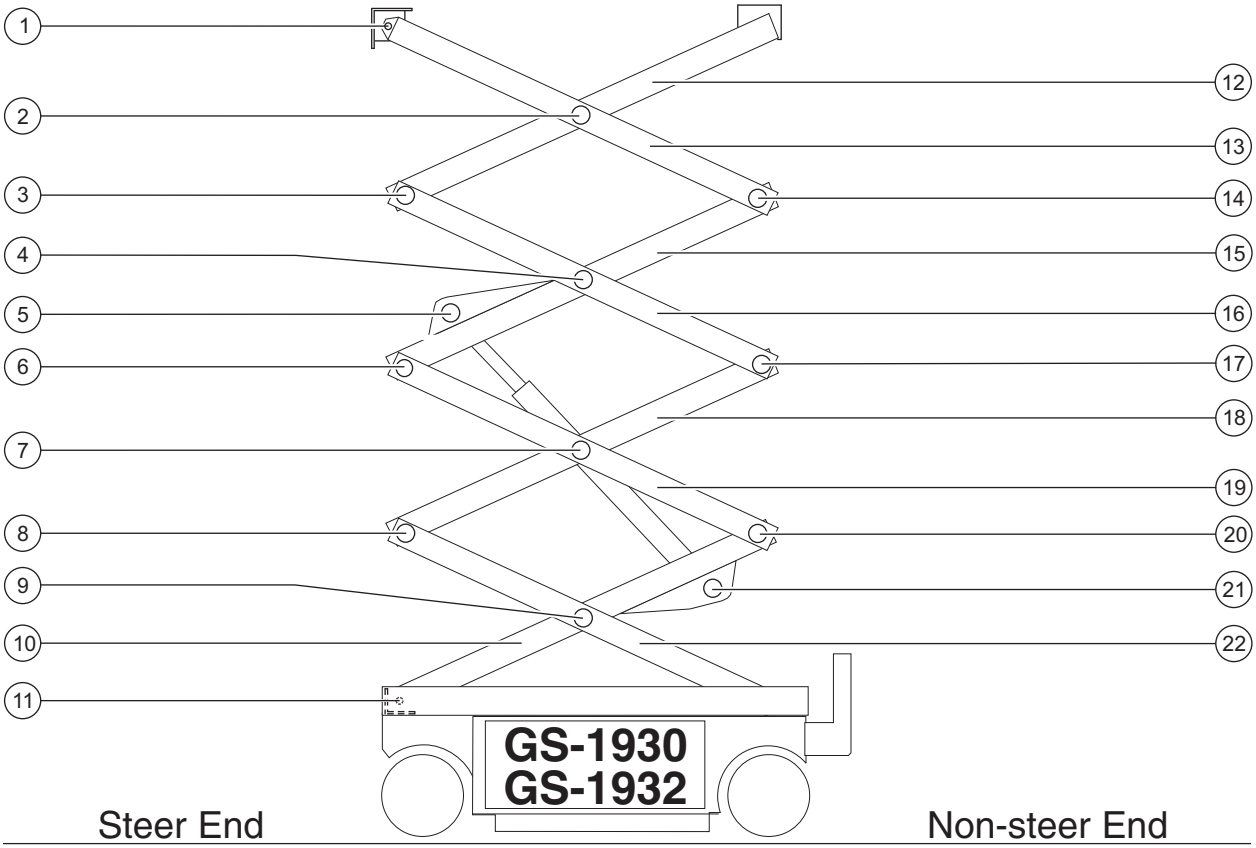

1 Number 5 pivot pin
2 Number 4 center pivot pin (2 pins)
3 Number 4 pivot pin (steer end)
4 Number 3 center pivot pin (2 pins)
5 Lift cylinder rod-end pivot pin
6 Number 3 pivot pin (steer end)
7 Number 2 center pivot pin (2 pins)
8 Number 2 pivot pin (steer end)
9 Number 1 center pivot pin (2 pins)
10 Number 1 inner arm
11 Number 1 pivot pin
12 Number 4 inner arm
13 Number 4 outer arm
14 Number 4 pivot pin (non-steer end)
15 Number 3 inner arm
16 Number 3 outer arm
17 Number 3 pivot pin (non-steer end)
18 Number 2 inner arm
19 Number 2 outer arm
20 Number 2 pivot pin (non-steer end)
21 Lift cylinder barrel-end pivot pin
22 Number 1 outer arm

https://truckmanualshub.com/

3-2 Scissor Assembly, GS-1930 and GS-1932

How to Disassemble the Scissor Assembly, GS-1930 and GS-1932

WARNING Bodily injury hazard. The procedures in this section require specific repair skills, lifting equipment and a suitable workshop. Attempting this procedure without these skills and tools could result in death or serious injury and significant component damage. Dealer service is required.

When removing a hose assembly or fitting, the O-ring on the fitting and/or hose end must be replaced and then torqued to specification during installation. Refer to Section 2, *Hydraulic Hose and Fitting Torque Specifications.*

1 Remove the platform. See 2-1, *How to Remove the Platform.*

2 Remove the cables from the number 4 outer arm (index #13) at the ground controls side.

NOTICE Component damage hazard. Cables can be damaged if they are kinked or pinched.

3 Remove the cables from the number 4 cable bridge and lay them off to the side.

NOTICE Component damage hazard. Cables can be damaged if they are kinked or pinched.

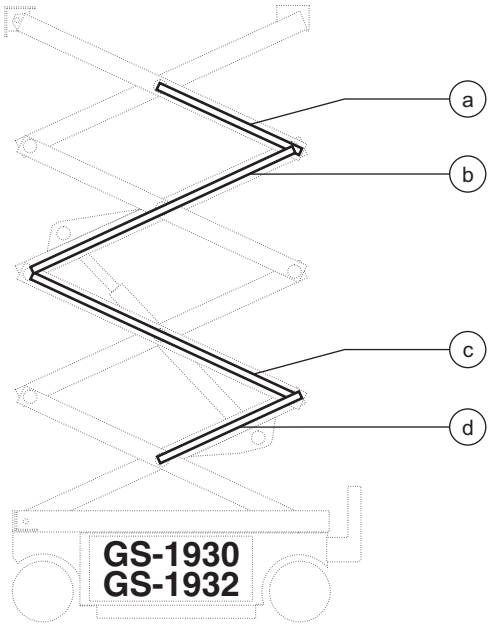

Cable bridge legend

a	cable bridge 4
b	cable bridge 3
c	cable bridge 2
d	cable bridge 1

Models with dual number 4 outer arms:

4 Attach a lifting strap from an overhead crane to the number 4 outer arm at the ground controls side of the machine (index #13).

5 Remove the external snap rings and retaining fasteners from the number 4 center pivot pin at the ground control side of the machine (index #2).

6 Use a soft metal drift to remove the number 4 center pivot pin at the ground control side of the machine (index #2).

7 Remove the retaining fasteners from the number 4 pivot pin (index #14) at the non-steer end of the machine.

https://truckmanualshub.com/

8 Use a soft metal drift to remove the number 4 pivot pin (index #14) from the non-steer end of the machine. Remove the number 4 outer arm at the ground control side (index #13) from the machine.

WARNING Crushing hazard. The number 3 outer arm may become unbalanced and fall if not properly supported when removed from the machine.

9 Attach a lifting strap from an overhead crane to the number 4 outer arm at the battery pack side of the machine (index #13).

10 Remove the external snap rings and retaining fasteners from the number 4 center pivot pin at the battery pack side of the machine (index #2).

11 Use a soft metal drift to remove the number 4 center pivot pin at the battery pack side of the machine (index #2).

12 Remove the number 4 outer arm at the battery pack side (index #13) from the machine.

WARNING Crushing hazard. The number 4 outer arm may become unbalanced and fall if not properly supported when removed from the machine.

Models with a single number 4 outer arm assembly:

13 Attach a lifting strap from an overhead crane to the number 4 outer arm (index #13).

14 Remove the external snap rings and retaining fasteners from the number 4 center pivot pins (index #2).

15 Use a soft metal drift to remove the number 4 center pivot pins (index #2).

16 Remove the retaining fasteners from the number 4 pivot pin (index #14) at the non-steer end of the machine.

17 Use a soft metal drift to remove the number 4 pivot pin (index #14) from the non-steer end of the machine. Remove the number 4 outer arm (index #13) from the machine.

WARNING Crushing hazard. The number 4 outer arm may become unbalanced and fall if not properly supported when removed from the machine.

All models:

18 Remove the number 4 cable bridge mounting fasteners and remove the cable bridge from the machine.

19 Attach a lifting strap from an overhead crane to the number 4 inner arm (index #12).

20 Remove the retaining fasteners from the number 4 pivot pin (index #3).

21 Use a soft metal drift to remove the number 4 pivot pin (index #3) at the steer end. Remove the number 4 inner arm (index #12) from the machine.

CAUTION Crushing hazard. The number 4 inner arm may become unbalanced and fall if not properly supported when removed from the machine.

22 Remove the cables from the number 3 cable bridge and lay them off to the side.

NOTICE Component damage hazard. Cables can be damaged if they are kinked or pinched.

23 Remove the number 3 cable bridge mounting fasteners and remove the cable bridge from the machine.

https://truckmanualshub.com/

24 Attach a lifting strap from an overhead crane to the number 3 outer arm (index #4) at the ground controls side.

25 Remove the external snap rings and retaining fasteners from the number 3 center pivot pins (index #4).

26 Use a soft metal drift to remove the number 3 center pivot pin (index #4) at the ground control side.

27 Remove the retaining fasteners from the number 3 pivot pin (index #17) at the non-steer end of the machine.

28 Use a soft metal drift to tap the number 3 pivot pin (index #17) halfway out at the non-steer end of the machine. Remove the number 3 outer arm (index #16) at the ground controls side from the machine.

⚠CAUTION Bodily injury hazard. The number 3 outer arm at the ground controls side may become unbalanced and fall if not properly supported when removed from the machine.

29 Attach a lifting strap from an overhead crane to the number 3 outer arm (index #16) at the battery pack side.

30 Use a soft metal drift to remove the number 3 center pivot pin (index #4) at the battery pack side of the machine.

31 Use a soft metal drift to tap the number 3 pivot pin (index #17) in the other direction. Remove the number 3 outer arm (index #16) from the battery pack side of the machine.

⚠CAUTION Bodily injury hazard. The number 3 outer arm at the battery pack side may become unbalanced and fall if not properly supported when removed from the machine.

32 Remove the number 3 pivot pin (index #17) from the non-steer end of the machine.

33 Attach a lifting strap from an overhead crane to the lug on the rod end of the lift cylinder for support. Do not apply any lifting pressure.

34 Remove the pin retaining fasteners from the lift cylinder rod-end pivot pin (index #5). Use a soft metal drift to remove the pin.

⚠CAUTION Bodily injury hazard. The cylinder may fall when the rod-end pivot pin is removed if not properly supported.

35 Lower the cylinder onto the number 1 inner arm (index #9).

NOTICE Component damage hazard. Cables can be damaged if they are kinked or pinched.

36 Attach a lifting strap from an overhead crane to the number 3 inner arm (index #15).

37 Remove the retaining fasteners from the number 3 pivot pin (index #6) at the steer end.

38 Use a soft metal drift to remove the number 3 pivot pin (index #6). Remove the number 3 inner arm (index #15) from the machine.

⚠CAUTION Bodily injury hazard. The number 3 inner arm may become unbalanced and fall if not properly supported when removed from the machine.

39 Remove the cables from the number 2 cable bridge and lay them off to the side.

NOTICE Component damage hazard. Cables can be damaged if they are kinked or pinched.

40 Remove the external snap rings and retaining fasteners from the number 2 center pivot pin (index #7) at the ground controls side.

https://truckmanualshub.com/

41 Remove the number 2 cable bridge mounting fasteners and remove the cable bridge from the machine.

42 Attach a lifting strap from an overhead crane to the number 2 outer arm (index #19) at the ground controls side.

43 Use a soft metal drift to remove the number 2 center pivot pin (index #7) at the ground controls side.

44 Remove the retaining fasteners from the number 2 pivot pin (index #20) at the non-steer end of the machine.

45 Use a soft metal drift to tap the number 2 pivot pin (index #20) halfway out at the non-steer end of the machine. Remove the number 2 outer arm (index #19) from the ground controls side of the machine.

⚠CAUTION Bodily injury hazard. The number 2 outer arm at the ground controls side may become unbalanced and fall if not properly supported when removed from the machine.

46 Attach a lifting strap from an overhead crane to the number 2 outer arm (index #19) at the battery pack side.

47 Remove the external snap rings and retaining fasteners from the number 2 center pivot pin (index #7) at the battery pack side.

48 Use a soft metal drift to remove the number 2 center pivot pin (index #7) at the battery pack side.

⚠CAUTION Bodily injury hazard. The number 2 outer arm at the battery pack side may become unbalanced and fall if not properly supported when removed from the machine.

49 Use a soft metal drift to tap the number 2 pivot pin at the non-steer end (index #20) in the other direction. Remove the number 2 outer arm (index #19) from the battery pack side of the machine.

⚠CAUTION Bodily injury hazard. The number 2 outer arm at the battery pack side may become unbalanced and fall if not properly supported when removed from the machine.

50 Remove the number 3 pivot pin (index #17) from the non-steer end of the machine.

51 Attach a lifting strap from an overhead crane to the number 2 inner arm (index #18).

52 Remove the retaining fasteners from the number 2 pivot pin (index #8) at the steer end of the machine.

53 Use a soft metal drift to remove the number 2 pivot pin (index #8). Remove the number 2 inner arm (index #18) from the machine.

⚠CAUTION Bodily injury hazard. The number 2 inner arm may become unbalanced and fall if not properly supported when removed from the machine.

54 Remove the safety arm from the number 2 inner arm (index #18) that was just removed.

55 Attach a lifting strap from an overhead crane to the number 1 inner arm (index #10).

56 Raise the number 1 inner arm (index #10) approximately 2 feet / 60 cm and install the safety arm between the number 1 inner arm (index #10) and the number 1 outer arm (index #22) at the non-steer end of the machine. Lower the scissor arms onto the safety arm.

⚠CAUTION Bodily injury hazard. Keep hands clear of moving parts when lowering the scissor arms onto the safety arm.

https://truckmanualshub.com/

57 Attach a lifting strap from an overhead crane to the lug on the rod end of the lift cylinder (index #5). Raise the lift cylinder approximately 3 ft / 1 m.

58 Tag, disconnect and plug the hydraulic hoses on the lift cylinder. Cap the fittings on the cylinder.

⚠WARNING Bodily injury hazard. Spraying hydraulic oil can penetrate and burn skin. Loosen hydraulic connections very slowly to allow the oil pressure to dissipate gradually. Do not allow oil to squirt or spray.

59 Tag and disconnect the wires and manual lowering cable from the solenoid valve on the cylinder.

60 **Models with platform overload option:** Tag and disconnect the wire harness from the platform overload switch.

61 Raise the lift cylinder to a vertical position.

62 Remove the pin retaining fasteners from the lift cylinder barrel-end pin (index #21). Use a soft metal drift to remove the pin. Remove the lift cylinder from the machine.

⚠WARNING Crushing hazard. The lift cylinder may become unbalanced and fall when it is removed from the machine if not properly attached to the overhead crane.

NOTICE Component damage hazard. Be careful not to damage the valve or fittings on the cylinder while removing it from the machine.

63 Place a 4 x 4 x 48 inch / 10 cm x 10 cm x 1.2 m long block across both sides of the chassis under the number 1 center pivot pin (index #11).

64 Attach a lifting strap from an overhead crane to the number 1 inner arm (index #10) at the non-steer end. Raise the number 1 inner arm and remove the safety arm. Lower the number 1 inner arm (index #10) onto the block that was placed across the chassis.

⚠CAUTION Bodily injury hazard. Keep hands clear of moving parts when lowering the arms onto the block.

65 Remove the cables from the number 1 cable bridge and lay them off to the side.

NOTICE Component damage hazard. Cables can be damaged if they are kinked or pinched.

66 Support and secure the entry ladder to an appropriate lifting device.

67 Remove the fasteners from the entry ladder and remove the entry ladder from the machine.

⚠CAUTION Crushing hazard. The entry ladder may become unbalanced and fall if not properly supported and secured to the lifting device.

68 Attach a lifting strap from an overhead crane to the number 1 outer arm (index #22). Do not apply any lifting pressure.

69 Remove the external snap rings and retaining fasteners from the number 1 center pivot pins (index #11).

70 Remove the number 1 cable bridge from the machine.

71 Use a soft metal drift to remove the number 1 center pivot pins (index #9).

⚠CAUTION Bodily injury hazard. The number 1 outer arm may become unbalanced and fall if not properly supported when the pin is removed.

https://truckmanualshub.com/

72 Slide the number 1 outer arm (index #22) to the non-steer end and remove it from the machine.

CAUTION Bodily injury hazard. The number 1 outer arm may become unbalanced and fall if not properly supported when removed from the machine.

73 Attach the strap from an overhead crane to the number 1 inner arm (index #10). Do not lift it.

74 Remove the upper fasteners securing the number 1 inner arm pivot bracket to the end of the chassis. Loosen the lower fasteners.

75 Remove the number 1 inner arm (index #10) from the machine.

CAUTION Bodily injury hazard. The number 1 inner arm may become unbalanced and fall if not properly supported when removed from the machine.

NOTICE Component damage hazard. Be sure not to damage the limit switch or level sensor box components when the number 1 inner arm is removed from the machine.

How to Replace the Scissor Arm Wear Pads

1 Remove the platform. See 2-1, *How to Remove the Platform.*

2 Support and secure the entry ladder to an appropriate lifting device.

3 Remove the fasteners from the entry ladder and remove the entry ladder from the machine.

CAUTION Crushing hazard. The entry ladder may become unbalanced and fall if not properly supported and secured to the lifting device.

4 Secure the ends of the scissor arms together at the steer end of the machine with a strap or other suitable device.

5 Secure the ends of the scissor arms together at the non-steer end of the machine with a strap or other suitable device.

6 Remove the retaining fasteners securing the chassis mount bracket to the chassis at the steer end of the machine.

7 Attach a lifting strap from an overhead crane to the scissor arm assembly.

8 Raise the scissor arm assembly at the steer end with the overhead crane until the chassis mount bracket will clear the level sensor.

https://truckmanualshub.com/

REV C

9 Remove the scissor assembly from the machine just enough to access both wear pads.

DANGER Crushing hazard. The scissor assembly will fall if not properly supported when removed from the drive chassis.

NOTICE Component damage hazard. Be careful not to damage the level sensor or limit switch while moving the scissor assembly.

10 Remove both old wear pads.

11 Install two new wear pads.

12 Slide the scissor assembly back into the drive chassis.

13 Lower the scissor assembly into position and install the chassis mount bracket onto the chassis. Securely install and tighten the fasteners. Do not over tighten.

NOTICE Component damage hazard. Be careful not to damage the level sensor or limit switch while moving the scissor assembly.

https://truckmanualshub.com/

SCISSOR COMPONENTS REV C

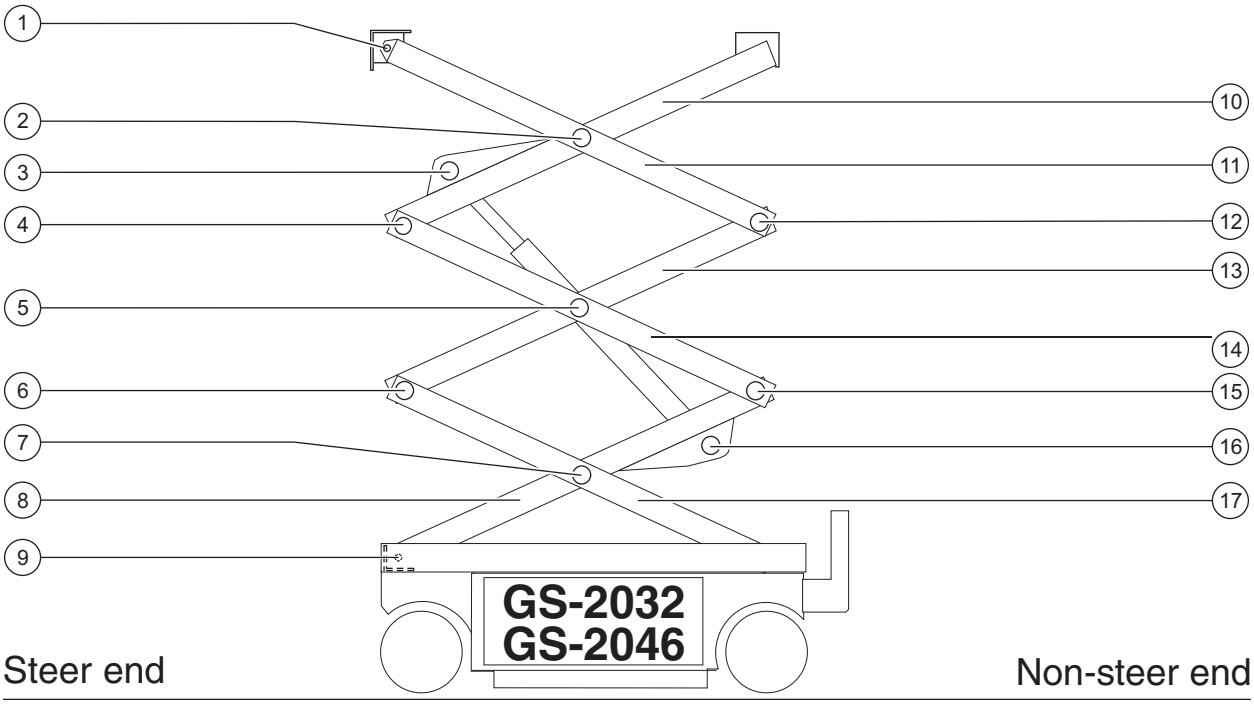

1 Number 4 pivot pin
2 Number 3 center pivot pin (2 pins
3 Lift cylinder rod-end pivot pin
4 Number 3 pivot pin (steer end)
5 Number 2 center pivot pin (2 pins)
6 Number 2 pivot pin (steer end
7 Number 1 center pivot pin (2 pins)
8 Number 1 inner arm
9 Number 1 pivot pin
10 Number 3 inner arm
11 Number 3 outer arm
12 Number 3 pivot pin (non-steer end)
13 Number 2 inner arm
14 Number 2 outer arm
15 Number 2 pivot pin (non-steer end)
16 Lift cylinder barrel-end pivot pin
17 Number 1 outer arm

https://truckmanualshub.com/

3-3 Scissor Assembly, GS-2032 and GS-2046

How to Disassemble the Scissor Assembly, GS-2032 and GS-2046

WARNING Bodily injury hazard. The procedures in this section require specific repair skills, lifting equipment and a suitable workshop. Attempting this procedure without these skills and tools could result in death or serious injury and significant component damage. Dealer service is required.

When removing a hose assembly or fitting, the O-ring on the fitting and/or hose end must be replaced and then torqued to specification during installation. Refer to Section 2, *Hydraulic Hose and Fitting Torque Specifications.*

1 Remove the platform. See 2-1, *How to Remove the Platform.*

2 Support and secure the entry ladder to an appropriate lifting device.

3 Remove the fasteners from the entry ladder and remove the entry ladder from the machine.

CAUTION Crushing hazard. The entry ladder may become unbalanced and fall if not properly supported and secured to the lifting device.

4 Remove the cables from the number 3 cable bridge and lay them off to the side.

NOTICE Component damage hazard. Cables can be damaged if they are kinked or pinched.

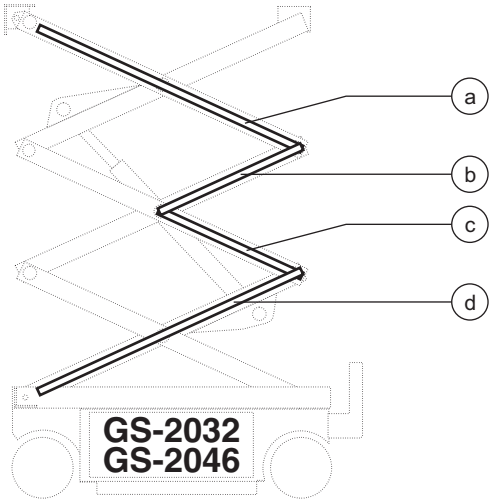

Cable bridge legend

a	cable bridge 3
b	cable bridge 2A
c	cable bridge 2B
d	cable bridge 1

5 Disconnect the number 3 cable bridge from the number 3 outer arm (index #11) and remove the cable bridge from the machine.

6 Remove the retaining fasteners from the number 4 pivot pin (index #1).

7 Use a soft metal drift to remove the number 4 pivot pin (index #1). Remove the platform mount bracket from the machine.

8 Attach a lifting strap from an overhead crane to the number 3 outer arm at the ground control side (index #11).

9 Remove the retaining fasteners from the number 3 center pivot pin (index #2) at the ground control side.

10 Place a rod through the number 3 center pivot pin at the ground control side (index #2) and twist to remove the pin.

11 Remove the retaining fasteners from the number 3 pivot pin (index #12) at the non-steer end.

https://truckmanualshub.com/

12 Use a soft metal drift to remove the number 3 pivot pin (index #12) from the non-steer end of the machine. Remove the number 3 outer arm at the ground control side (index #11) from the machine.

⚠CAUTION Crushing hazard. The number 3 outer arm at the ground control side (index #11) may become unbalanced and fall if not properly supported when removed from the machine.

13 Attach a lifting strap from an overhead crane to the number 3 outer arm at the battery side (index #11).

14 Remove the retaining fasteners from the number 3 center pivot pin (index #2) at the battery side.

15 Place a rod through the number 3 center pivot pin at the battery side (index #2) and twist to remove the pin.

16 Remove the number 3 outer arm (index #11) from the machine.

⚠CAUTION Crushing hazard. The number 3 outer arm (index #11) may become unbalanced and fall if not properly supported when removed from the machine.

17 Attach a lifting strap from an overhead crane to the lug of the rod end of the lift cylinder.

18 Remove the retaining fasteners from the lift cylinder rod end pivot pin (index #3).

19 Use a soft metal drift to remove the lift cylinder rod end pivot pin (index #3) from the machine.

⚠CAUTION Crushing hazard. The lift cylinder will fall if not properly supported when the pivot pin is removed.

20 Place a 2 x 4 x 10 inch / 10 x 10 x 25 cm block onto the number 1 inner arm cylinder plate (index #8).

21 Lower the cylinder onto the block.

⚠CAUTION Bodily injury hazard. Keep hands clear of moving parts when lowering the cylinder onto the block.

22 Attach a lifting strap from an overhead crane to the number 3 inner arm (index #10). Raise the arm to a vertical position.

23 Remove the retaining fasteners from the number 3 pivot pin at the steer end of the machine (index #4).

24 Use a soft metal drift to remove the number 3 pivot pin (index #4) from the steer end of the machine. Remove the number 3 inner arm (index #10) from the machine.

⚠CAUTION Crushing hazard. The number 3 inner arm (index #10) may become unbalanced and fall if not properly supported when the pivot pin is removed.

25 Remove the cables from the number 2A and 2B cable bridge and lay them off to the side.

NOTICE Component damage hazard. Cables can be damaged if they are kinked or pinched.

26 Disconnect the number 2A and 2B cable bridges from the scissor linkset and remove both cable bridges from the machine.

27 Attach a lifting strap from an overhead crane to the number 2 outer arm at the ground control side (index #14).

28 Remove the retaining fasteners from the number 2 center pivot pin (index #5) at the ground control side.

29 Place a rod through the number 2 center pivot pin at the ground control side (index #5) and twist to remove the pin.

https://truckmanualshub.com/

30 Remove the retaining fasteners from the number 2 pivot pin (index #15) at the non-steer end.

31 Use a soft metal drift to remove the number 2 pivot pin (index #15) from the non-steer end of the machine. Remove the number 2 outer arm at the ground control side (index #14) from the machine.

⚠CAUTION Crushing hazard. The number 2 outer arm at the ground control side (index #14) may become unbalanced and fall if not properly supported when the pivot pin is removed.

32 Attach a lifting strap from an overhead crane to the number 2 outer arm at the battery side (index #14).

33 Remove the retaining fasteners from the number 2 center pivot pin (index #5) at the battery side.

34 Place a rod through the number 2 center pivot pin at the battery side (index #5) and twist to remove the pin.

⚠CAUTION Crushing hazard. The number 2 outer arm (index #14) may become unbalanced and fall if not properly supported when the pivot pin is removed.

35 Remove the number 2 outer arm (index #14) from the machine.

⚠CAUTION Crushing hazard. The number 2 outer arm (index #14) may become unbalanced and fall if not properly supported when removed from the machine.

36 Attach a lifting strap from an overhead crane to the number 2 inner arm (index #13). Raise the arm to a vertical position.

37 Remove the retaining fasteners from the number 2 pivot pin at the steer end of the machine (index #6).

38 Use a soft metal drift to remove the number 2 pivot pin (index #6) from the steer end of the machine. Remove the number 2 inner arm (index #13) from the machine.

⚠CAUTION Crushing hazard. The number 2 inner arm (index #13) may become unbalanced and fall if not properly supported when the pivot pin is removed.

39 Attach a lifting strap from an overhead crane to the number 1 inner arm (index #8).

40 Raise the number 1 inner arm (index #8) approximately 2 feet / 60 cm.

41 Place a 4 x 4 x 48 inch / 10 cm x 10 cm x 1.2 m long block across both sides of the chassis under the number 1 center pivot pin (index #7).

42 Lower the scissor arms onto the block that was placed across the chassis.

⚠CAUTION Bodily injury hazard. Keep hands clear of moving parts when lowering the scissor arms.

43 Attach a lifting strap from an overhead crane to the lug of the rod end of the lower lift cylinder.

44 Tag, disconnect and plug the hydraulic hose on the lower lift cylinder. Cap the fittings on the cylinder.

⚠WARNING Bodily injury hazard. Spraying hydraulic oil can penetrate and burn skin. Loosen hydraulic connections very slowly to allow the oil pressure to dissipate gradually. Do not allow oil to squirt or spray.

45 Tag and disconnect the wire harness from the solenoid valve on the cylinder.

https://truckmanualshub.com/

46 Tag and disconnect the wires and manual lowering cable from the solenoid valve on the cylinder.

47 **Models with platform overload option:** Tag and disconnect the wire harness from the platform overload switch.

48 Raise the lift cylinder to a vertical position.

49 Remove the pin retaining fasteners from the lift cylinder barrel-end pivot pin (index #16). Use a soft metal drift to remove the pin. Remove the lift cylinder from the machine.

⚠CAUTION Crushing hazard. The lift cylinder will fall if not properly supported when the pivot pin is removed.

NOTICE Component damage hazard. Be careful not to damage the valve or fittings on the cylinder while removing it from the machine.

50 Remove the cables from the number 1 cable bridge and lay them off to the side.

NOTICE Component damage hazard. Cables can be damaged if they are kinked or pinched.

51 Disconnect the number 1 cable bridge from the number 1 outer arm (index #17) and remove the cable bridge from the machine.

52 Attach a lifting strap from an overhead crane to the number 1 inner arm (index #8).

53 Raise the arm slightly and remove the block.

54 Lower the arm to the stowed position.

⚠CAUTION Bodily injury hazard. Keep hands clear of moving parts when lowering the scissor arms.

55 Secure the ends of the scissor arms together at the steer end of the machine with a strap or other suitable device.

56 Secure the ends of the scissor arms together at the non-steer end of the machine with a strap or other suitable device.

57 Remove the retaining fasteners securing the chassis mount bracket to the chassis.

58 Remove the linkset from the machine

⚠CAUTION Bodily injury hazard. The number 1 inner and outer arms (index #8 and #17) may become unbalanced and fall if not properly supported when removed from the machine.

NOTICE Component damage hazard. Be sure not to damage the limit switch or level sensor box components when the number 1 inner and outer arms (index #8 and #17) is removed from the machine.

https://truckmanualshub.com/

How to Replace the Scissor Arm Wear Pads

1 Remove the platform. See 2-1, *How to Remove the Platform.*

2 Support and secure the entry ladder to an appropriate lifting device.

3 Remove the fasteners from the entry ladder and remove the entry ladder from the machine.

CAUTION Crushing hazard. The entry ladder may become unbalanced and fall if not properly supported and secured to the lifting device.

4 Secure the ends of the scissor arms together at the steer end of the machine with a strap or other suitable device.

5 Secure the ends of the scissor arms together at the non-steer end of the machine with a strap or other suitable device.

6 Remove the retaining fasteners securing the chassis mount bracket to the chassis at the steer end of the machine.

7 Attach a lifting strap from an overhead crane to the scissor arm assembly.

8 Raise the scissor arm assembly at the steer end with the overhead crane until the chassis mount bracket will clear the level sensor.

9 Move the scissor assembly towards the non-steer end of the machine slightly and to one side of the machine until one of the scissor arm wear pads is accessible. Do not allow both wear pads to slide out of the drive chassis.

NOTICE Component damage hazard. Be careful not to damage the level sensor or limit switch while moving the scissor assembly.

10 Remove the old wear pad.

11 Install the new wear pad.

12 Rotate the scissor assembly towards the other side of the machine until the other scissor arm wear pad is accessible. Do not allow both wear pads to slide out of the drive chassis.

DANGER Crushing hazard. The scissor assembly will fall if both wear pads are allowed to slide out of the drive chassis.

NOTICE Component damage hazard. Be careful not to damage the level sensor or limit switch while moving the scissor assembly.

13 Remove the old wear pad.

14 Install the new wear pad.

15 Slide the scissor assembly back into the drive chassis.

16 Lower the scissor assembly into position and install the chassis mount bracket onto the chassis. Securely install and tighten the fasteners. Do not overtighten.

NOTICE Component damage hazard. Be careful not to damage the level sensor or limit switch while moving the scissor assembly.

https://truckmanualshub.com/

SCISSOR COMPONENTS REV C

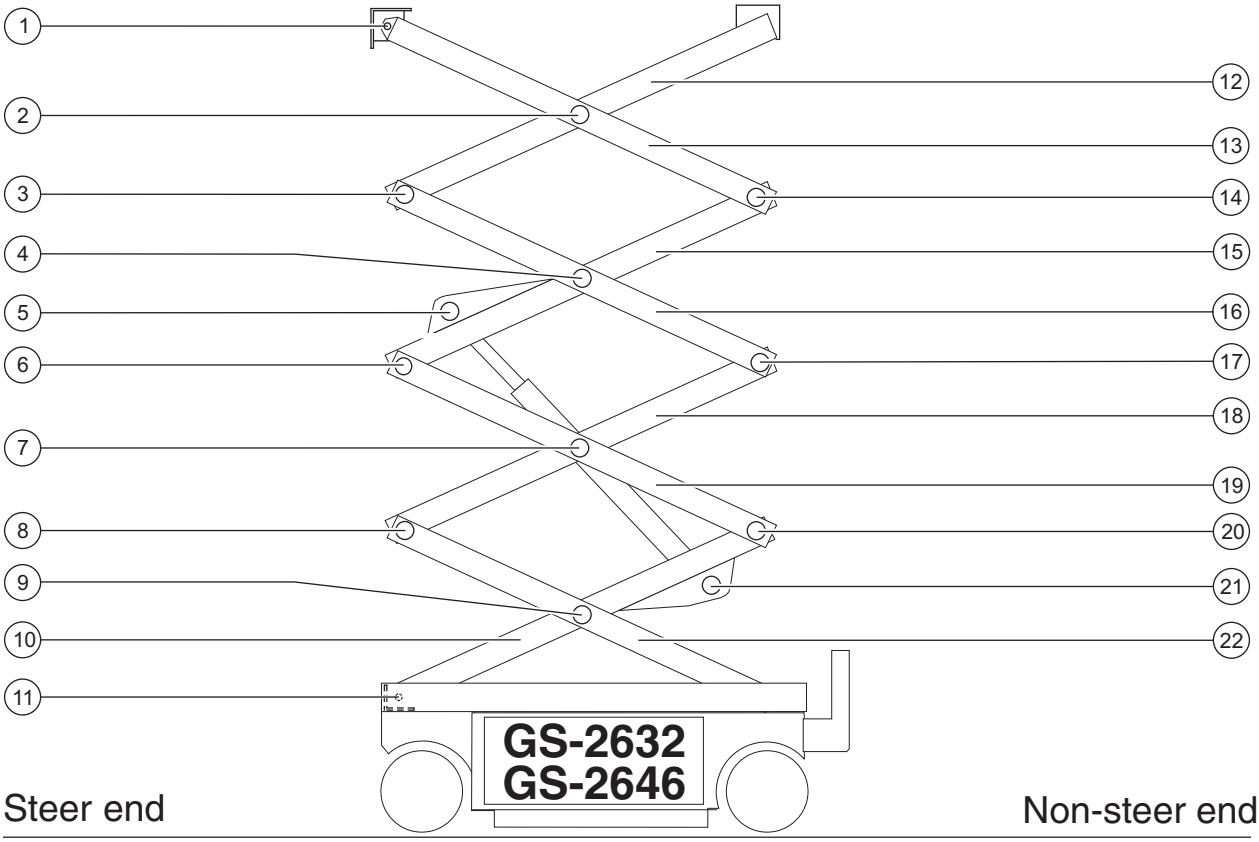

1 Number 5 pivot pin
2 Number 4 center pivot pin (2 pins)
3 Number 4 pivot pin (steer end)
4 Number 3 center pivot pin (2 pins)
5 Lift cylinder rod end pivot pin
6 Number 3 pivot pin (steer end)
7 Number 2 center pivot pin (2 pins)
8 Number 2 pivot pin (steer end)
9 Number 1 center pivot pin (2 pins)
10 Number 1 inner arm
11 Number 1 pivot pin
12 Number 4 inner arm
13 Number 4 outer arm
14 Number 4 pivot pin (non-steer end)
15 Number 3 inner arm
16 Number 3 outer arm
17 Number 3 pivot pin (non-steer end)
18 Number 2 inner arm
19 Number 2 outer arm
20 Number 2 pivot pin (non-steer end)
21 Lift cylinder barrel-end pivot pin
22 Number 1 outer arm

https://truckmanualshub.com/

3-4 Scissor Assembly, GS-2632 and GS-2646

How to Disassemble the Scissor Assembly, GS-2632 and GS-2646

WARNING Bodily injury hazard. The procedures in this section require specific repair skills, lifting equipment and a suitable workshop. Attempting this procedure without these skills and tools could result in death or serious injury and significant component damage. Dealer service is required.

When removing a hose assembly or fitting, the O-ring on the fitting and/or hose end must be replaced and then torqued to specification during installation. Refer to Section 2, *Hydraulic Hose and Fitting Torque Specifications.*

1 Remove the platform. See 2-1, *How to Remove the Platform.*

2 Support and secure the entry ladder to an appropriate lifting device.

3 Remove the fasteners from the entry ladder and remove the entry ladder from the machine.

CAUTION Crushing hazard. The entry ladder may become unbalanced and fall if not properly supported and secured to the lifting device.

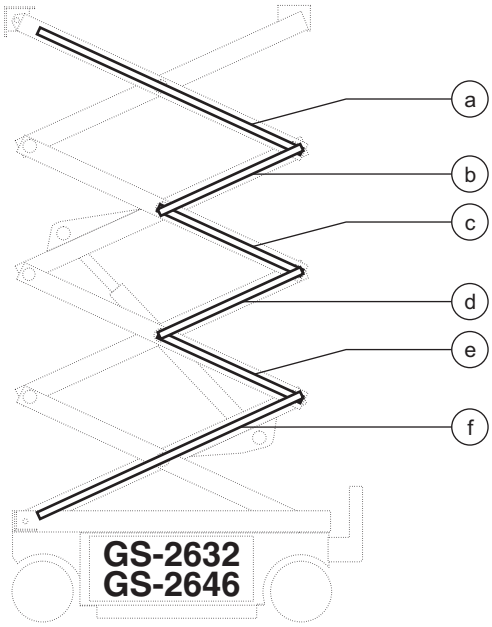

Cable bridge legend

a	cable bridge 4
b	cable bridge 3A
c	cable bridge 3B
d	cable bridge 2A
e	cable bridge 2B
f	cable bridge 1

4 Remove the cables from the number 4 cable bridge and lay them off to the side.

NOTICE Component damage hazard. Cables can be damaged if they are kinked or pinched.

5 Disconnect the number 4 cable bridge from the number 4 outer arm (index #13) and remove the cable bridge from the machine.

6 Remove the retaining fasteners from the number 5 pivot pin (index #1).

https://truckmanualshub.com/

7 Use a soft metal drift to remove the number 5 pivot pin (index #1). Remove the platform mount bracket from the machine.

8 Attach a lifting strap from an overhead crane to the number 4 outer arm at the ground control side (index #13).

9 Remove the retaining fasteners from the number 4 center pivot pin (index #2) at the ground control side.

10 Place a rod through the number 4 center pivot pin at the ground control side (index #2) and twist to remove the pin.

11 Remove the retaining fasteners from the number 4 pivot pin (index #15) at the non-steer end.

12 Use a soft metal drift to remove the number 4 pivot pin (index #14) from the non-steer end of the machine. Remove the number 4 outer arm at the ground control side (index #13) from the machine.

⚠CAUTION Crushing hazard. The number 4 outer arm at the ground control side (index #13) may become unbalanced and fall if not properly supported when removed from the machine.

13 Attach a lifting strap from an overhead crane to the number 4 outer arm at the battery side (index #13).

14 Remove the retaining fasteners from the number 4 center pivot pin (index #2) at the battery side.

15 Place a rod through the number 4 center pivot pin at the battery side (index #2) and twist to remove the pin.

16 Remove the number 4 outer arm (index #13) from the machine.

⚠CAUTION Crushing hazard. The number 4 outer arm (index #13) may become unbalanced and fall if not properly supported when removed from the machine.

17 Attach a lifting strap from an overhead crane to the number 4 inner arm (index #12). Raise the arm to a vertical position.

18 Remove the retaining fasteners from the number 4 pivot pin at the steer end of the machine (index #3).

19 Use a soft metal drift to remove the number 4 pivot pin (index #3) from the steer end of the machine. Remove the number 4 inner arm (index #12) from the machine.

⚠CAUTION Crushing hazard. The number 4 inner arm (index #12) may become unbalanced and fall if not properly supported when removed from the machine.

20 Remove the cables from the number 3A and 3B cable bridge and lay them off to the side.

NOTICE Component damage hazard. Cables can be damaged if they are kinked or pinched.

21 Disconnect the number 3A and 3B cable bridges from the scissor linkset and remove both cable bridges from the machine.

https://truckmanualshub.com/

22 Attach a lifting strap from an overhead crane to the number 3 outer arm at the ground control side (index #16).

23 Remove the retaining fasteners from the number 3 center pivot pin (index #4) at the ground control side.

24 Place a rod through the number 3 center pivot pin at the ground control side (index #4) and twist to remove the pin.

25 Remove the retaining fasteners from the number 3 pivot pin (index #17) at the non-steer end.

26 Use a soft metal drift to remove the number 3 pivot pin (index #17) from the non-steer end of the machine. Remove the number 3 outer arm at the ground control side (index #16) from the machine.

⚠CAUTION Crushing hazard. The number 3 outer arm at the ground control side (index #16) may become unbalanced and fall if not properly supported when removed from the machine.

27 Attach a lifting strap from an overhead crane to the number 3 outer arm at the battery side (index #16).

28 Remove the retaining fasteners from the number 3 center pivot pin (index #4) at the battery side.

29 Place a rod through the number 3 center pivot pin at the battery side (index #4) and twist to remove the pin.

30 Remove the number 3 outer arm (index #16) from the machine.

⚠CAUTION Crushing hazard. The number 3 outer arm (index #16) may become unbalanced and fall if not properly supported when removed from the machine.

31 Attach a lifting strap from an overhead crane to the lug of the rod end of the lift cylinder.

32 Remove the retaining fasteners from the lift cylinder rod end pivot pin (index #5).

33 Use a soft metal drift to remove the lift cylinder rod end pivot pin (index #5) from the machine.

⚠CAUTION Crushing hazard. The lift cylinder will fall if not properly supported when the pivot pin is removed.

34 Place a 2 x 4 x 10 inch / 10 x 10 x 25 cm block onto the number 1 inner arm cylinder plate (index #10).

35 Lower the cylinder onto the block.

⚠CAUTION Bodily injury hazard. Keep hands clear of moving parts when lowering the cylinder onto the block.

36 Attach a lifting strap from an overhead crane to the number 3 inner arm (index #15). Raise the arm to a vertical position.

37 Remove the retaining fasteners from the number 3 pivot pin at the steer end of the machine (index #6).

https://truckmanualshub.com/

38 Use a soft metal drift to remove the number 3 pivot pin (index #6) from the steer end of the machine. Remove the number 3 inner arm (index #15) from the machine.

⚠CAUTION Crushing hazard. The number 3 inner arm (index #15) may become unbalanced and fall if not properly supported when the pivot pin is removed.

39 Remove the cables from the number 2A and 2B cable bridge and lay them off to the side.

NOTICE Component damage hazard. Cables can be damaged if they are kinked or pinched.

40 Disconnect the number 2A and 2B cable bridges from the scissor linkset and remove both cable bridges from the machine.

41 Attach a lifting strap from an overhead crane to the number 2 outer arm at the ground control side (index #19).

42 Remove the retaining fasteners from the number 2 center pivot pin (index #7) at the ground control side.

43 Place a rod through the number 2 center pivot pin at the ground control side (index #7) and twist to remove the pin.

44 Remove the retaining fasteners from the number 2 pivot pin (index #20) at the non-steer end.

45 Use a soft metal drift to remove the number 2 pivot pin (index #20) from the non-steer end of the machine. Remove the number 2 outer arm at the ground control side (index #19) from the machine.

⚠CAUTION Crushing hazard. The number 2 outer arm at the ground control side (index #19) may become unbalanced and fall if not properly supported when the pivot pin is removed.

46 Attach a lifting strap from an overhead crane to the number 2 outer arm at the battery side (index #19).

47 Remove the retaining fasteners from the number 2 center pivot pin (index #7) at the battery side.

48 Place a rod through the number 2 center pivot pin at the battery side (index #7) and twist to remove the pin.

⚠CAUTION Crushing hazard. The number 2 outer arm (index #19) may become unbalanced and fall if not properly supported when the pivot pin is removed.

49 Remove the number 2 outer arm (index #19) from the machine.

⚠CAUTION Crushing hazard. The number 2 outer arm (index #19) may become unbalanced and fall if not properly supported when removed from the machine.

https://truckmanualshub.com/

50 Attach a lifting strap from an overhead crane to the number 2 inner arm (index #18). Raise the arm to a vertical position.

51 Remove the retaining fasteners from the number 2 pivot pin at the steer end of the machine (index #8).

52 Use a soft metal drift to remove the number 2 pivot pin (index #8) from the steer end of the machine. Remove the number 2 inner arm (index #18) from the machine.

⚠CAUTION Crushing hazard. The number 2 inner arm (index #18) may become unbalanced and fall if not properly supported when the pivot pin is removed.

53 Attach a lifting strap from an overhead crane to the number 1 inner arm (index #10).

54 Raise the number 1 inner arm (index #10) approximately 2 feet / 60 cm.

55 Place a 4 x 4 x 48 inch / 10 cm x 10 cm x 1.2 m long block across both sides of the chassis under the number 1 center pivot pin (index #9).

56 Lower the scissor arms onto the block that was placed across the chassis.

⚠CAUTION Bodily injury hazard. Keep hands clear of moving parts when lowering the scissor arms.

57 Attach a lifting strap from an overhead crane to the lug of the rod end of the lower lift cylinder.

58 Tag, disconnect and plug the hydraulic hose on the lower lift cylinder. Cap the fittings on the cylinder.

⚠WARNING Bodily injury hazard. Spraying hydraulic oil can penetrate and burn skin. Loosen hydraulic connections very slowly to allow the oil pressure to dissipate gradually. Do not allow oil to squirt or spray.

59 Tag and disconnect the wire harness from the solenoid valve on the cylinder.

60 Tag and disconnect the wires and manual lowering cable from the solenoid valve on the cylinder.

61 **Models with platform overload option:** Tag and disconnect the wire harness from the platform overload switch.

62 Raise the lift cylinder to a vertical position.

63 Remove the pin retaining fasteners from the lift cylinder barrel-end pivot pin (index #21). Use a soft metal drift to remove the pin. Remove the lift cylinder from the machine.

⚠CAUTION Crushing hazard. The lift cylinder will fall if not properly supported when the pivot pin is removed.

NOTICE Component damage hazard. Be careful not to damage the valve or fittings on the cylinder while removing it from the machine.

https://truckmanualshub.com/

64 Remove the cables from the number 1 cable bridge and lay them off to the side.

NOTICE Component damage hazard. Cables can be damaged if they are kinked or pinched.

65 Disconnect the number 1 cable bridge from the number 1 outer arm (index #22) and remove the cable bridge from the machine.

66 Attach a lifting strap from an overhead crane to the number 1 inner arm (index #10).

67 Raise the arm slightly and remove the block.

68 Lower the arm to the stowed position.

⚠CAUTION Bodily injury hazard. Keep hands clear of moving parts when lowering the scissor arms.

69 Secure the ends of the scissor arms together at the steer end of the machine with a strap or other suitable device.

70 Secure the ends of the scissor arms together at the non-steer end of the machine with a strap or other suitable device.

71 Remove the retaining fasteners securing the chassis mount bracket to the chassis.

72 Remove the linkset from the machine

⚠CAUTION Bodily injury hazard. The number 1 inner and outer arms (index #10 and #22) may become unbalanced and fall if not properly supported when removed from the machine.

NOTICE Component damage hazard. Be sure not to damage the limit switch or level sensor box components when the number 1 inner and outer arms (index #10 and 22) is removed from the machine.

How to Replace the Scissor Arm Wear Pads

1 Remove the platform. See 2-1, *How to Remove the Platform.*

2 Support and secure the entry ladder to an appropriate lifting device.

3 Remove the fasteners from the entry ladder and remove the entry ladder from the machine.

⚠CAUTION Crushing hazard. The entry ladder may become unbalanced and fall if not properly supported and secured to the lifting device.

4 Secure the ends of the scissor arms together at the steer end of the machine with a strap or other suitable device.

5 Secure the ends of the scissor arms together at the non-steer end of the machine with a strap or other suitable device.

6 Remove the retaining fasteners securing the chassis mount bracket to the chassis at the steer end of the machine.

7 Attach a lifting strap from an overhead crane to the scissor arm assembly.

8 Raise the scissor arm assembly at the steer end with the overhead crane until the chassis mount bracket will clear the level sensor.

9 Move the scissor assembly towards the non-steer end of the machine slightly and to one side of the machine until one of the scissor arm wear pads is accessible. Do not allow both wear pads to slide out of the drive chassis.

NOTICE Component damage hazard. Be careful not to damage the level sensor or limit switch while moving the scissor assembly.

https://truckmanualshub.com/

10 Remove the old wear pad.

11 Install the new wear pad.

12 Rotate the scissor assembly towards the other side of the machine until the other scissor arm wear pad is accessible. Do not allow both wear pads to slide out of the drive chassis.

DANGER Crushing hazard. The scissor assembly will fall if both wear pads are allowed to slide out of the drive chassis.

NOTICE Component damage hazard. Be careful not to damage the level sensor or limit switch while moving the scissor assembly.

13 Remove the old wear pad.

14 Install the new wear pad.

15 Slide the scissor assembly back into the drive chassis.

16 Lower the scissor assembly into position and install the chassis mount bracket onto the chassis. Securely install and tighten the fasteners. Do not overtighten.

NOTICE Component damage hazard. Be careful not to damage the level sensor or limit switch while moving the scissor assembly.

https://truckmanualshub.com/

SCISSOR COMPONENTS REV C

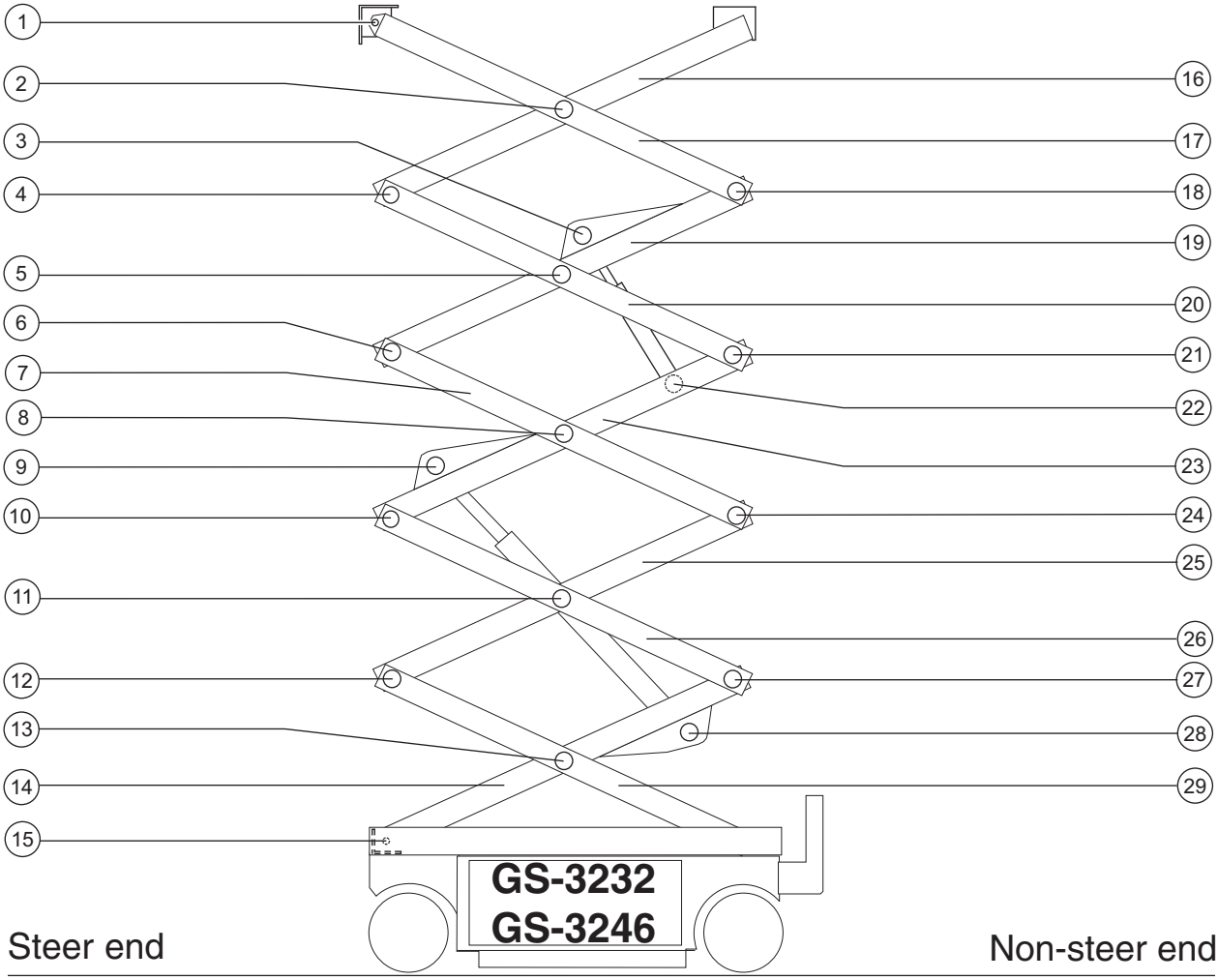

1 Number 6 pivot pin
2 Number 5 center pivot pin (2 pins)
3 Upper lift cylinder rod-end pivot pin
4 Number 5 pivot pin (steer end)
5 Number 4 center pivot pin (2 pins)
6 Number 4 pivot pin (steer end)
7 Number 3 outer arm
8 Number 3 center pivot pin (2 pins)
9 Lower lift cylinder rod-end pivot pin
10 Number 3 pivot pin (steer end)
11 Number 2 center pivot pin (2 pins)
12 Number 2 pivot pin (steer end)
13 Number 1 center pivot pin (2 pins)
14 Number 1 inner arm
15 Number 1 pivot pin (steer end) (2 pins)
16 Number 5 inner arm
17 Number 5 outer arm
18 Number 5 pivot pin (non-steer end)
19 Number 4 inner arm
20 Number 4 outer arm
21 Number 4 pivot pin (non-steer end)
22 Upper lift cylinder barrel-end pivot pin
23 Number 3 inner arm
24 Number 3 pivot pin (non-steer end)
25 Number 2 inner arm
26 Number 2 outer arm
27 Number 2 pivot pin (non-steer end)
28 Lower lift cylinder barrel-end pivot pin
29 Number 1 outer arm

https://truckmanualshub.com/

3-5 Scissor Assembly, GS-3232 and GS-3246

How to Disassemble the Scissor Assembly, GS-3232 and GS-3246

WARNING Bodily injury hazard. The procedures in this section require specific repair skills, lifting equipment and a suitable workshop. Attempting this procedure without these skills and tools could result in death or serious injury and significant component damage. Dealer service is required.

When removing a hose assembly or fitting, the O-ring on the fitting and/or hose end must be replaced and then torqued to specification during installation. Refer to Section 2, *Hydraulic Hose and Fitting Torque Specifications.*

1 Remove the platform. See 2-1, *How to Remove the Platform.*

2 Support and secure the entry ladder to an appropriate lifting device.

3 Remove the fasteners from the entry ladder and remove the entry ladder from the machine.

CAUTION Crushing hazard. The entry ladder may become unbalanced and fall if not properly supported and secured to the lifting device.

4 Remove the cables from the number 5 cable bridge and lay them off to the side.

NOTICE Component damage hazard. Cables can be damaged if they are kinked or pinched.

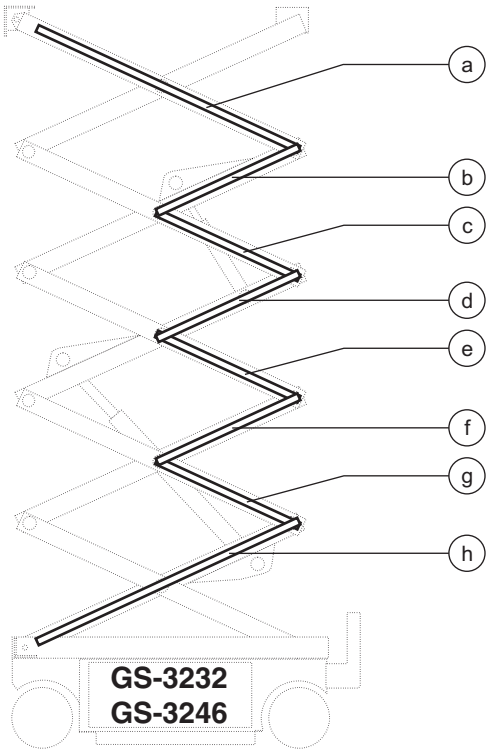

Cable bridge legend

a	cable bridge 5
b	cable bridge 4A
c	cable bridge 4B
d	cable bridge 3A
e	cable bridge 3B
f	cable bridge 2A
g	cable bridge 2B
h	cable bridge 1

5 Disconnect the number 5 cable bridge from the number 5 outer arm (index #17) and remove the cable bridge from the machine.

6 Remove the retaining fasteners from the number 6 pivot pin (index #1).

7 Use a soft metal drift to remove the number 6 pivot pin (index #1). Remove the platform mount bracket from the machine.

8 Attach a lifting strap from an overhead crane to the number 5 outer arm at the ground control side (index #17).

https://truckmanualshub.com/

9 Remove the retaining fasteners from the number 5 center pivot pin (index #2) at the ground control side.

10 Place a rod through the number 5 center pivot pin at the ground control side (index #2) and twist to remove the pin.

11 Remove the retaining fasteners from the number 5 pivot pin (index #18) at the non-steer end.

12 Use a soft metal drift to remove the number 5 pivot pin (index #18) from the non-steer end of the machine. Remove the number 5 outer arm at the ground control side (index #17) from the machine.

⚠CAUTION Crushing hazard. The number 5 outer arm at the ground control side (index #17) may become unbalanced and fall if not properly supported when removed from the machine.

13 Attach a lifting strap from an overhead crane to the number 5 outer arm at the battery side (index #17).

14 Remove the retaining fasteners from the number 5 center pivot pin (index #2) at the battery side.

15 Place a rod through the number 5 center pivot pin at the battery side (index #2) and twist to remove the pin.

16 Remove the number 5 outer arm (index #17) from the machine.

⚠CAUTION Crushing hazard. The number 5 outer arm (index #17) may become unbalanced and fall if not properly supported when removed from the machine.

17 Attach a lifting strap from an overhead crane to the number 5 inner arm (index #16). Raise the arm to a vertical position.

18 Remove the retaining fasteners from the number 5 pivot pin at the steer end of the machine (index #4).

19 Use a soft metal drift to remove the number 5 pivot pin (index #18) from the steer end of the machine. Remove the number 5 inner arm (index #16) from the machine.

⚠CAUTION Crushing hazard. The number 5 inner arm (index #16) may become unbalanced and fall if not properly supported when removed from the machine.

20 Tag, disconnect and plug the hydraulic hose on the upper lift cylinder. Cap the fittings on the cylinder.

⚠WARNING Bodily injury hazard. Spraying hydraulic oil can penetrate and burn skin. Loosen hydraulic connections very slowly to allow the oil pressure to dissipate gradually. Do not allow oil to squirt or spray.

21 Tag and disconnect the wire harness from the solenoid valve on the cylinder.

22 Remove the cables from the number 4A and 4B cable bridges and lay them off to the side.

NOTICE Component damage hazard. Cables can be damaged if they are kinked or pinched.

23 Disconnect the number 4A and 4B cable bridges from the scissor linkset and remove both cable bridges from the machine.

24 Attach a lifting strap from an overhead crane to the lug of the rod end of the upper lift cylinder.

25 Remove the retaining fasteners from the upper lift cylinder rod end pivot pin (index #3).

https://truckmanualshub.com/

26 Use a soft metal drift to remove the upper lift cylinder rod end pivot pin (index #3) from the machine.

⚠CAUTION Crushing hazard. The lift cylinder may become unbalanced and fall if not properly supported when the pivot pin is removed.

27 Lower the cylinder onto the linkset.

28 Attach a lifting strap from an overhead crane to the number 4 outer arm at the ground control side (index #20).

29 Remove the retaining fasteners from the number 4 center pivot pin (index #5) at the ground control side.

30 Place a rod through the number 4 center pivot pin at the ground control side (index #5) and twist to remove the pin.

31 Remove the retaining fasteners from the number 4 pivot pin (index #21) at the non-steer end.

32 Use a soft metal drift to remove the number 4 pivot pin (index #21) from the non-steer end of the machine. Remove the number 4 outer arm at the ground control side (index #20) from the machine.

⚠CAUTION Crushing hazard. The number 4 outer arm at the ground control side (index #20) may become unbalanced and fall if not properly supported when removed from the machine.

33 Attach a lifting strap from an overhead crane to the number 4 outer arm at the battery side (index #20).

34 Remove the retaining fasteners from the number 4 center pivot pin (index #5) at the battery side.

35 Place a rod through the number 4 center pivot pin at the battery side (index #5) and twist to remove the pin.

36 Remove the number 4 outer arm (index #20) from the machine.

⚠CAUTION Crushing hazard. The number 4 outer arm (index #20) may become unbalanced and fall if not properly supported when removed from the machine.

37 Attach a lifting strap from an overhead crane to the number 4 inner arm (index #19). Raise the arm to a vertical position.

38 Remove the retaining fasteners from the number 4 pivot pin at the steer end of the machine (index #6).

39 Use a soft metal drift to remove the number 4 pivot pin (index #6) from the steer end of the machine. Remove the number 4 inner arm (index #19) from the machine.

⚠CAUTION Crushing hazard. The number 4 inner arm (index #19) may become unbalanced and fall if not properly supported when removed from the machine.

40 Remove the cables from the number 3A and 3B cable bridges and lay them off to the side.

NOTICE Component damage hazard. Cables can be damaged if they are kinked or pinched.

41 Disconnect the number 3A and 3B cable bridges from the scissor linkset and remove both cable bridges from the machine.

42 Attach a lifting strap from an overhead crane to the number 3 outer arm at the ground control side (index #7).

43 Remove the retaining fasteners from the number 3 center pivot pin (index #8) at the ground control side.

44 Place a rod through the number 3 center pivot pin at the ground control side (index #8) and twist to remove the pin.

45 Remove the retaining fasteners from the number 3 pivot pin (index #24) at the non-steer end.

https://truckmanualshub.com/

46 Use a soft metal drift to remove the number 3 pivot pin (index #24) from the non-steer end of the machine. Remove the number 3 outer arm at the ground control side (index #7) from the machine.

⚠CAUTION Crushing hazard. The number 3 outer arm at the ground control side (index #7) may become unbalanced and fall if not properly supported when removed from the machine.

47 Attach a lifting strap from an overhead crane to the number 3 outer arm at the battery side (index #7).

48 Remove the retaining fasteners from the number 3 center pivot pin (index #8) at the battery side.

49 Place a rod through the number 3 center pivot pin at the battery side (index #8) and twist to remove the pin.

50 Remove the number 3 outer arm (index #7) from the machine.

⚠CAUTION Crushing hazard. The number 3 outer arm (index #7) may become unbalanced and fall if not properly supported when removed from the machine.

51 Attach a lifting strap from an overhead crane to the lug of the rod end of the upper lift cylinder.

52 Raise the lift cylinder to a vertical position.

53 Remove the pin retaining fasteners from the lift cylinder barrel-end pivot pin (index #22). Remove the lift cylinder from the machine.

⚠CAUTION Crushing hazard. The lift cylinder will fall if not properly supported when the pivot pin is removed.

NOTICE Component damage hazard. Be careful not to damage the valve or fittings on the cylinder while removing it from the machine.

54 Attach a lifting strap from an overhead crane to the lug of the rod end of the lower lift cylinder.

55 Remove the retaining fasteners from the lower lift cylinder rod end pivot pin (index #9).

56 Use a soft metal drift to remove the lower lift cylinder rod end pivot pin (index #9) from the machine.

⚠CAUTION Crushing hazard. The lower lift cylinder will fall if not properly supported when the pivot pin is removed.

57 Place a 2 x 4 x 10 inch / 10 x 10 x 25 cm block onto the number 1 inner arm cylinder plate (index #14).

58 Lower the cylinder onto the block.

⚠CAUTION Bodily injury hazard. Keep hands clear of moving parts when lowering the cylinder.

59 Attach a lifting strap from an overhead crane to the number 3 inner arm (index #23). Raise the arm to a vertical position.

60 Remove the retaining fasteners from the number 3 pivot pin at the steer end of the machine (index #10).

61 Use a soft metal drift to remove the number 3 pivot pin (index #10) from the steer end of the machine. Remove the number 3 inner arm (index #23) from the machine.

⚠CAUTION Crushing hazard. The number 3 inner arm (index #23) may become unbalanced and fall if not properly supported when the pivot pin is removed.

62 Remove the cables from the number 2A and 2B cable bridges and lay them off to the side.

NOTICE Component damage hazard. Cables can be damaged if they are kinked or pinched.

https://truckmanualshub.com/

63 Disconnect the number 2A and 2B cable bridges from the scissor linkset and remove both cable bridges from the machine.

64 Attach a lifting strap from an overhead crane to the number 2 outer arm at the ground control side (index #26).

65 Remove the retaining fasteners from the number 2 center pivot pin (index #11) at the ground control side.

66 Place a rod through the number 2 center pivot pin at the ground control side (index #11) and twist to remove the pin.

67 Remove the retaining fasteners from the number 2 pivot pin (index #27) at the non-steer end.

68 Use a soft metal drift to remove the number 2 pivot pin (index #27) from the non-steer end of the machine. Remove the number 2 outer arm at the ground control side (index #26) from the machine.

⚠CAUTION Crushing hazard. The number 2 outer arm at the ground control side (index #26) may become unbalanced and fall if not properly supported when the pivot pin is removed.

69 Attach a lifting strap from an overhead crane to the number 2 outer arm at the battery side (index #26).

70 Remove the retaining fasteners from the number 2 center pivot pin (index #11) at the battery side.

71 Place a rod through the number 2 center pivot pin at the battery side (index #11) and twist to remove the pin.

⚠CAUTION Crushing hazard. The number 2 outer arm (index #26) may become unbalanced and fall if not properly supported when the pivot pin is removed.

72 Remove the number 2 outer arm (index #26) from the machine.

⚠CAUTION Crushing hazard. The number 2 outer arm (index #26) may become unbalanced and fall if not properly supported when removed from the machine.

73 Attach a lifting strap from an overhead crane to the number 2 inner arm (index #25). Raise the arm to a vertical position.

74 Remove the retaining fasteners from the number 2 pivot pin at the steer end of the machine (index #12).

75 Use a soft metal drift to remove the number 2 pivot pin (index #12) from the steer end of the machine. Remove the number 2 inner arm (index #25) from the machine.

⚠CAUTION Crushing hazard. The number 2 inner arm (index #25) may become unbalanced and fall if not properly supported when the pivot pin is removed.

76 Attach a lifting strap from an overhead crane to the number 1 inner arm (index #14).

77 Raise the number 1 inner arm (index #14) approximately 2 feet / 60 cm.

78 Place a 4 x 4 x 48 inch / 10 cm x 10 cm x 1.2 m long block across both sides of the chassis under the number 1 center pivot pin (index #13).

79 Lower the scissor arms onto the block that was placed across the chassis.

⚠CAUTION Bodily injury hazard. Keep hands clear of moving parts when lowering the scissor arms.

80 Attach a lifting strap from an overhead crane to the lug of the rod end of the lower lift cylinder.

https://truckmanualshub.com/

81 Tag, disconnect and plug the hydraulic hose on the lower lift cylinder. Cap the fittings on the cylinder.

⚠WARNING Bodily injury hazard. Spraying hydraulic oil can penetrate and burn skin. Loosen hydraulic connections very slowly to allow the oil pressure to dissipate gradually. Do not allow oil to squirt or spray.

82 Tag and disconnect the wire harness from the solenoid valve on the cylinder.

83 Tag and disconnect the wires and manual lowering cable from the solenoid valve on the cylinder.

84 **Models with platform overload option:** Tag and disconnect the wire harness from the platform overload switch.

85 Raise the lift cylinder to a vertical position.

86 Remove the pin retaining fasteners from the lift cylinder barrel-end pivot pin (index #28). Use a soft metal drift to remove the pin. Remove the lift cylinder from the machine.

⚠CAUTION Crushing hazard. The lift cylinder will fall if not properly supported when the pivot pin is removed.

NOTICE Component damage hazard. Be careful not to damage the valve or fittings on the cylinder while removing it from the machine.

87 Remove the cables from the number 1 cable bridge and lay them off to the side.

NOTICE Component damage hazard. Cables can be damaged if they are kinked or pinched.

88 Disconnect the number 1 cable bridge from the number 1 outer arm (index #29) and remove the cable bridge from the machine.

89 Attach a lifting strap from an overhead crane to the number 1 inner arm (index #14).

90 Raise the arm slightly and remove the block.

91 Lower the arm to the stowed position.

⚠CAUTION Bodily injury hazard. Keep hands clear of moving parts when lowering the scissor arms.

92 Secure the ends of the scissor arms together at the steer end of the machine with a strap or other suitable device.

93 Secure the ends of the scissor arms together at the non-steer end of the machine with a strap or other suitable device.

94 Remove the retaining fasteners securing the chassis mount bracket to the chassis.

95 Remove the linkset from the machine

⚠CAUTION Bodily injury hazard. The number 1 inner and outer arms (index #14 and #29) may become unbalanced and fall if not properly supported when removed from the machine.

NOTICE Component damage hazard. Be sure not to damage the limit switch or level sensor box components when the number 1 inner and outer arms (index #14 and 29) is removed from the machine.

https://truckmanualshub.com/

How to Replace the Scissor Arm Wear Pads

1 Remove the platform. See 2-1, *How to Remove the Platform.*

2 Support and secure the entry ladder to an appropriate lifting device.

3 Remove the fasteners from the entry ladder and remove the entry ladder from the machine.

CAUTION Crushing hazard. The entry ladder may become unbalanced and fall if not properly supported and secured to the lifting device.

4 Secure the ends of the scissor arms together at the steer end of the machine with a strap or other suitable device.

5 Secure the ends of the scissor arms together at the non-steer end of the machine with a strap or other suitable device.

6 Remove the retaining fasteners securing the chassis mount bracket to the chassis at the steer end of the machine.

7 Attach a lifting strap from an overhead crane to the scissor arm assembly.

8 Raise the scissor arm assembly at the steer end with the overhead crane until the chassis mount bracket will clear the level sensor.

9 Move the scissor assembly towards the non-steer end of the machine slightly and to one side of the machine until one of the scissor arm wear pads is accessible. Do not allow both wear pads to slide out of the drive chassis.

NOTICE Component damage hazard. Be careful not to damage the level sensor or limit switch while moving the scissor assembly.

10 Remove the old wear pad.

11 Install the new wear pad.

12 Rotate the scissor assembly towards the other side of the machine until the other scissor arm wear pad is accessible. Do not allow both wear pads to slide out of the drive chassis.

DANGER Crushing hazard. The scissor assembly will fall if both wear pads are allowed to slide out of the drive chassis.

NOTICE Component damage hazard. Be careful not to damage the level sensor or limit switch while moving the scissor assembly.

13 Remove the old wear pad.

14 Install the new wear pad.

15 Slide the scissor assembly back into the drive chassis.

16 Lower the scissor assembly into position and install the chassis mount bracket onto the chassis. Securely install and tighten the fasteners. Do not over tighten.

NOTICE Component damage hazard. Be careful not to damage the level sensor or limit switch while moving the scissor assembly.

https://truckmanualshub.com/

3-6
Lift Cylinder

How to Remove the Lift Cylinder

⚠WARNING Bodily injury hazard. This procedure requires specific repair skills, lifting equipment and a suitable workshop. Attempting this procedure without these skills and tools could result in death or serious injury and significant component damage. Dealer service is strongly recommended.

When removing a hose assembly or fitting, the fitting and/or hose end must be torqued to specification during installation. Refer to Section 2, *Hydraulic Hose and Fitting Torque Specifications.*

GS-1530, GS-1532, GS-1930 and GS-1932:

1 Raise the platform 7 to 8 feet / 2.1 to 2.4 m.

2 Lift the safety arm, move it to the center of the scissor arm and rotate down to a vertical position.

3 Lower the platform onto the safety arm.

⚠WARNING Crushing hazard. Keep hands clear of the safety arm when lowering the platform.

4 Tag and disconnect the wiring from the solenoid valve coil at the barrel end of the lift cylinder.

5 **Models with platform overload option:** Tag and disconnect the wiring from the platform overload switch.

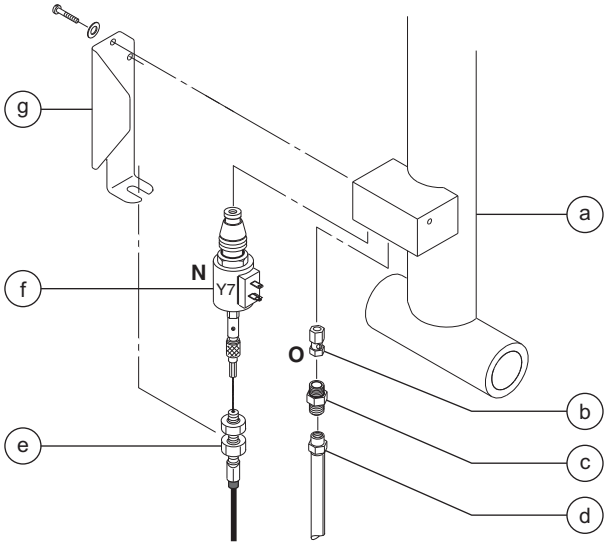

a lift cylinder
b orifice (schematic item O)
c connector fitting
d hydraulic hose
e manual lowering cable
f solenoid valve (schematic item N)
g cable mount bracket

6 Loosen the adjustment nuts on the solenoid valve and disconnect the manual lowering cable from the valve.

Note: During assembly, the manual platform lowering cable needs to be properly adjusted. See 4-1, *How to Adjust the Manual Platform Lowering Cable*.

7 Remove the fasteners securing the manual lowering cable mount bracket to the cylinder. Remove the bracket from the cylinder.

8 Tag, disconnect and plug the hydraulic hoses on the lift cylinder. Cap the fittings on the cylinder.

⚠WARNING Bodily injury hazard. Spraying hydraulic oil can penetrate and burn skin. Loosen hydraulic connections very slowly to allow the oil pressure to dissipate gradually. Do not allow oil to squirt or spray.

https://truckmanualshub.com/

9 Attach a lifting strap from an overhead crane to the rod end of the lift cylinder for support.

10 Remove the retaining fasteners from the lift cylinder rod-end pivot pin. Use a soft metal drift to remove the pin.

⚠WARNING Crushing hazard. The lift cylinder will fall if not properly supported.

11 Lower the cylinder onto the number 2 inner arm.

12 Attach a lifting strap from an overhead crane or similar lifting device to the barrel end of the lift cylinder for support.

13 Remove the retaining fasteners from the lift cylinder barrel-end pivot pin. Use a soft metal drift to remove the pin.

⚠WARNING Crushing hazard. The lift cylinder will fall if not properly supported when the pin is removed.

14 Support and secure the lift cylinder to an appropriate lifting device.

15 Remove the lift cylinder through the scissor arms at the steer end of the machine.

⚠CAUTION Crushing hazard. The lift cylinder may become unbalanced and fall if not properly supported and secured to the lifting device.

NOTICE Component damage hazard. Be careful not to damage the valve or fittings on the cylinder while removing it from the machine.

Torque specification	
Solenoid valve, 2 position 2 way N.C. (schematic item N)	20 ft-lbs 27 Nm
Coil nut	5 ft-lbs 7 Nm

GS-2032, GS-2632, GS-2046 and GS-2646:

1 Raise the platform 7 to 8 feet / 2.1 to 2.4 m.

2 Lift the safety arm, move it to the center of the scissor arm and rotate down to a vertical position.

3 Lower the platform onto the safety arm.

⚠WARNING Crushing hazard. Keep hands clear of the safety arm when lowering the platform.

4 Tag and disconnect the wiring from the solenoid valve coil at the barrel end of the lift cylinder.

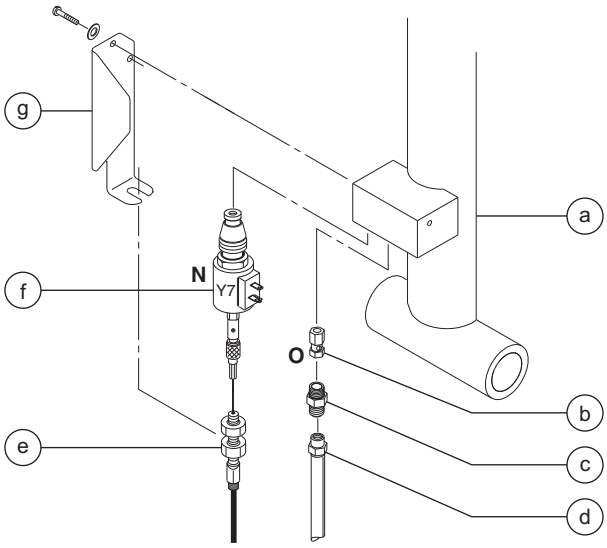

a lift cylinder
b orifice (schematic item O)
c connector fitting
d hydraulic hose
e manual lowering cable
f solenoid valve (schematic item N)
g cable mount bracket

5 **Models with platform overload option:** Tag and disconnect the wiring from the platform overload switch.

https://truckmanualshub.com/

6 Loosen the adjustment nuts on the solenoid valve and disconnect the manual lowering cable from the valve.

Note: During assembly, the manual platform lowering cable needs to be properly adjusted. See 4-1, *How to Adjust the Manual Platform Lowering Cable*.

7 Remove the fasteners securing the manual lowering cable mount bracket to the cylinder. Remove the bracket from the cylinder.

8 Tag, disconnect and plug the hydraulic hoses on the lift cylinder. Cap the fittings on the cylinder.

⚠WARNING Bodily injury hazard. Spraying hydraulic oil can penetrate and burn skin. Loosen hydraulic connections very slowly to allow the oil pressure to dissipate gradually. Do not allow oil to squirt or spray.

9 Attach a lifting strap from an overhead crane to the rod end of the lift cylinder for support.

10 Remove the retaining fasteners from the lift cylinder rod-end pivot pin. Use a soft metal drift to remove the pin.

⚠WARNING Crushing hazard. The lift cylinder will fall if not properly supported.

11 Lower the cylinder onto the number 1 inner arm cylinder plate.

⚠CAUTION Bodily injury hazard. Keep hands clear of moving parts when lowering the cylinder.

12 Attach a lifting strap from an overhead crane or similar lifting device to the barrel end of the lift cylinder for support.

13 Remove the retaining fasteners from the lift cylinder barrel-end pivot pin. Use a soft metal drift to remove the pin.

⚠WARNING Crushing hazard. The lift cylinder will fall if not properly supported when the pin is removed.

14 Support and secure the lift cylinder to an appropriate lifting device.

15 Remove the lift cylinder through the scissor arms at the steer end of the machine.

⚠CAUTION Crushing hazard. The lift cylinder may become unbalanced and fall if not properly supported and secured to the lifting device.

NOTICE Component damage hazard. Be careful not to damage the valve or fittings on the cylinder while removing it from the machine.

Torque specification	
Solenoid valve, 2 position 2 way N.C. (schematic item N)	20 ft-lbs 27 Nm
Coil nut	5 ft-lbs 7 Nm

https://truckmanualshub.com/

GS-3232 and GS-3246:

1 Raise the platform 7 to 8 feet / 2.1 to 2.4 m.

2 Lift the safety arm, move it to the center of the scissor arm and rotate down to a vertical position.

3 Lower the platform onto the safety arm.

⚠WARNING Crushing hazard. Keep hands clear of the safety arm when lowering the platform.

4 Tag and disconnect the wiring from the solenoid valve coil at the barrel end of the lift cylinder.

Skip to step 9 if removing the upper cylinder.

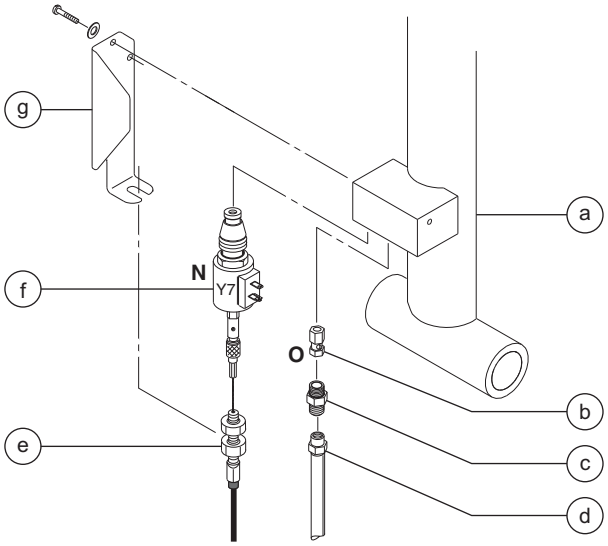

Lower Lift Cylinder

a lift cylinder
b orifice fitting (schematic item O)
c connector fitting
d hydraulic hose
e manual lowering cable
f solenoid valve (schematic item N)
g cable mount bracket

Note: At the lower lift cylinder, install the orifice fitting with the small opening of the orifice fitting closest to the supply hose.

5 **Models with platform overload option:** Tag and disconnect the wiring from the platform overload switch.

6 Loosen the adjustment nuts on the solenoid valve and disconnect the manual lowering cable from the valve.

Note: During assembly, the manual platform lowering cable needs to be properly adjusted. See 4-1, *How to Adjust the Manual Platform Lowering Cable*.

7 Remove the fasteners securing the manual lowering cable mount bracket to the cylinder. Remove the bracket from the cylinder.

8 Tag, disconnect and plug the hydraulic hoses on the lift cylinder. Cap the fittings on the cylinder.

⚠WARNING Bodily injury hazard. Spraying hydraulic oil can penetrate and burn skin. Loosen hydraulic connections very slowly to allow the oil pressure to dissipate gradually. Do not allow oil to squirt or spray.

9 Attach a lifting strap from an overhead crane to the rod end of the lift cylinder for support.

10 Remove the retaining fasteners from the lift cylinder rod-end pivot pin. Use a soft metal drift to remove the pin.

⚠WARNING Crushing hazard. The lift cylinder will fall if not properly supported.

11 Lower the cylinder to a horizontal position.

⚠CAUTION Bodily injury hazard. Keep hands clear of moving parts when lowering the cylinder.

https://truckmanualshub.com/

SCISSOR COMPONENTS REV C

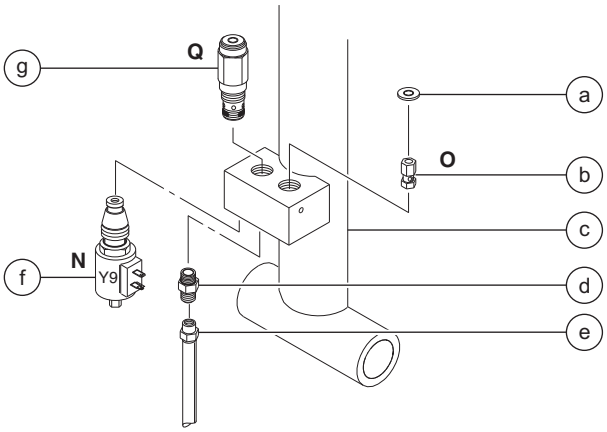

Upper Lift Cylinder
(before serial GS4607-83692)

a manifold plug
b orifice fitting (schematic item O)
c lift cylinder
d connector fitting
e hydraulic hose
f solenoid valve (schematic item N)
g relief valve (schematic item Q)

Note: Before serial number GS4607-83692 at the upper lift cylinder, install the orifice fitting with the large opening of the orifice fitting closest to the manifold plug.

12 Attach a lifting strap from an overhead crane or similar lifting device to the barrel end of the lift cylinder for support.

13 Remove the retaining fasteners from the lift cylinder barrel-end pivot pin. Use a soft metal drift to remove the pin.

WARNING Crushing hazard. The lift cylinder will fall if not properly supported when the pin is removed.

14 Support and secure the lift cylinder to an appropriate lifting device.

15 Remove the lift cylinder through the scissor arms at the steer end of the machine.

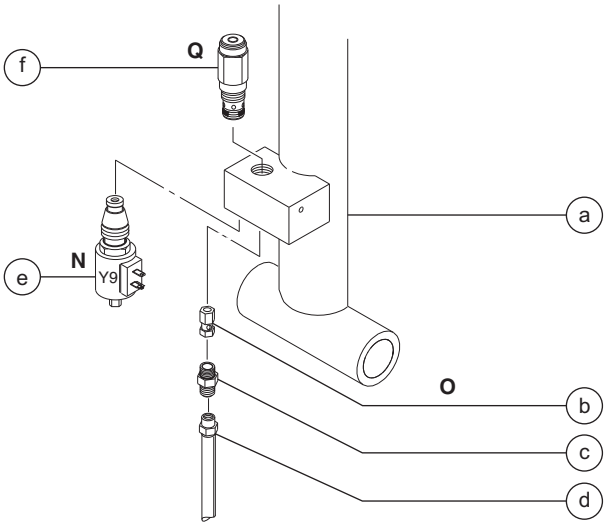

Upper Lift Cylinder
(after serial GS4607-83691)

a lift cylinder
b orifice fitting (schematic item O)
c connector fitting
d hydraulic hose
e solenoid valve (schematic item N)
f relief valve (schematic item Q)

Note: After serial number GS4607-83691 and from GS4609-101, at the upper lift cylinder, install the orifice fitting with the small opening of the orifice fitting closest to the supply hose.

CAUTION Crushing hazard. The lift cylinder may become unbalanced and fall if not properly supported and secured to the lifting device.

NOTICE Component damage hazard. Be careful not to damage the valve or fittings on the cylinder while removing it from the machine.

Torque specification	
Solenoid valve, 2 position 2 way N.C. (schematic item N)	20 ft-lbs 27 Nm
Relief Valve (schematic item Q)	20 ft-lbs 27 Nm
Coil nut	5 ft-lbs 7 Nm

https://truckmanualshub.com/

3-7
Platform Overload System

How to Calibrate the Platform Overload System (if equipped)

Perform this procedure after confirming that the maximum height limit switch and the limit switch bracket are not damaged and are functioning correctly.

1 Fully charge the batteries and check the hydraulic fluid level.

Note: The hydraulic fluid level must be between the FULL and ADD marks on the hydraulic tank.

2 Apply a thin layer of dry film lubricant to the area of the chassis where the scissor arm wear pads make contact.

3 Chock both sides of the wheels at the steer end of the machine.

4 Turn the key switch to ground control and pull out the red Emergency Stop button to the on position at both the ground and platform controls.

5 **GS-1532 and GS-1932:** Raise the platform approximately 1.5 m.

6 Using a suitable lifting device, place a test weight, corresponding to the maximum load as indicated on the capacity indicator decal, in the center of the platform floor. Secure the weight to the platform. Refer to the chart below.

GS-1532	484 kg
GS-1932	435 kg
GS-2032	693 kg
GS-2632	479 kg
GS-3232	498 kg
GS-2046	985 kg
GS-2646	798 kg
GS-3246	649 kg

7 Apply a piece of tape onto the side of the platform at a point which corresponds to the maximum load position of the capacity indicator decal on the side of the platform.

8 Raise the platform until the position indicator corresponds to the maximum load position of the capacity indicator decal on the platform. Release the toggle switch.

DANGER Tip-over hazard. Raising the platform with maximum load above the maximum load position, as shown on the capacity indicator decal on the side of the platform, could result in the machine tipping over, resulting in death or serious injury. Do not raise the platform above the maximum load position of the capacity indicator decal on the side of the platform.

Note: To perform this step, the lift relief valve will need to be adjusted.

9 Lift the safety arm, move it to the center of the scissor arm and rotate down to a vertical position.

https://truckmanualshub.com/

10 **Models with round pressure switch:** Remove the retaining ring securing the cover to the pressure switch and remove the cover. Using a flat blade, turn the slotted switch adjustment screw of the platform overload pressure switch into the hydraulic line in 90° increments until the overload alarm does not sound.
Models with box-shaped pressure switch: Remove the fasteners securing the cover to the pressure switch and remove the cover. Using a wrench, turn the nut of the platform overload pressure switch into the hydraulic line in 90° increments until the overload alarm does not sound.

Note: To allow the platform overload system to reset, the red Emergency Stop button must be cycled after each quarter turn of the nut or slotted switch adjustment screw.

Note: Turning the nut or slotted switch adjustment screw into the hydraulic line will deactivate the alarm; turning the nut or slotted switch adjustment screw out of the hydraulic line will activate the alarm.

11 Slowly turn the nut or adjustment screw of the platform overload pressure switch out of the hydraulic line just until the overload alarm sounds.

Note: To allow for the platform overload system delay, wait 3 seconds between each quarter turn of the nut or adjustment screw.

12 Turn the nut or adjustment screw one quarter turn into the hydraulic line.

13 Return the safety arm to the stowed position.

14 Using the manual lowering knob, lower the platform to the stowed position and remove all test weight from the platform.

15 Using a suitable lifting device, place a test weight in the center of the platform floor. Secure the weight to the platform. Refer to the chart below.

GS-1532	272 kg
GS-1932	227 kg
GS-2032	363 kg
GS-2632	227 kg
GS-3232	227 kg
GS-2046	544 kg
GS-2646	454 kg
GS-3246	317 kg

16 Raise the platform to 25 cm less than full height.

17 Lift the safety arm, move it to the center of the scissor arm and rotate down to a vertical position.

18 Raise the platform in 5 cm increments until the overload alarm sounds. Adjust the up limit switch until it actuates just before this point was reached.

19 Install the cover onto the platform overload pressure switch and install and tighten the cover retaining fastener(s). Do not over tighten.

20 Apply Sentry Seal to the fastener(s) securing the cover onto the platform overload pressure switch.

21 Return the safety arm to the stowed position.

22 Using the machine controls, lower the platform to the stowed position and remove all test weight from the platform.

23 Calibrate the lift relief valve. See 6-6, *How to Adjust the Platform Lift Relief Valve.*

https://truckmanualshub.com/

Ground Controls

REV D

4-1
Manual Platform Lowering Cable

The manual platform lowering cable lowers the platform in the event of a main power failure. The manual platform lowering cable is attached to the barrel end of the lift cylinder and is activated next to the ground controls.

How to Adjust the Manual Platform Lowering Cable

1 Raise the platform 7 to 8 feet / 2.1 to 2.4 m.

2 Lift the safety arm, move it to the center of the scissor arm and rotate down to a vertical position.

3 Lower the platform onto the safety arm.

⚠WARNING Crushing hazard. Keep hands clear of the safety arm when lowering the platform.

4 Pull the handle of the manual platform lowering cable out until considerable resistance is felt. Release the handle.

5 Measure the distance between the base of the handle and cable mounting nut.

⊙ Result: The measurement should be no greater than 1/8 inch / 3 mm.

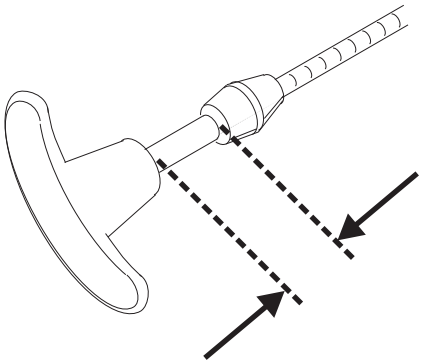

Platform manual lowering cable specification	
Gap, lowering handle to mounting nut	0 to 1/8 inch 0 to 3 mm

Skip to step 8 if the measurement is correct.

6 To adjust, loosen the upper lock nut on the cable mounting bracket at the cylinder. Turn the lower lock nut clockwise to decrease the distance or counterclockwise to increase the distance. Tighten the upper lock nut.

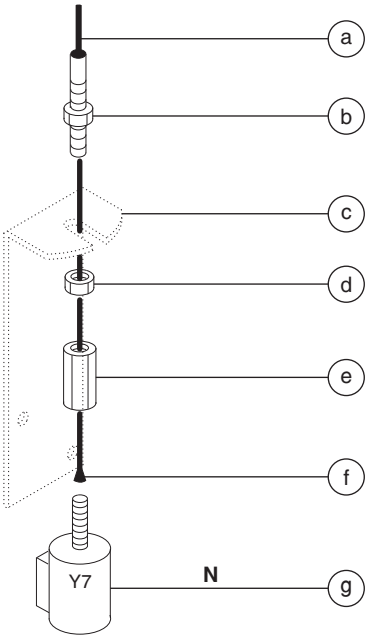

a manual lowering cable sheath
b upper lock nut
c cable mounting bracket
d lower lock nut
e cable mounting nut
f end of the lowering cable
g manual lowering valve (hydraulic schematic item N)

7 Repeat this procedure beginning with step 4.

8 Raise the platform and rotate the safety arm to the stowed position.

9 Pull the manual lowering handle at the ground controls 2 to 3 times to ensure it is functioning correctly.

https://truckmanualshub.com/

4-2
Level Sensors

The Electronic Control Module (ECM) is programmed to deactivate the lift and drive functions and activate an alarm when a signal is received from the level sensor.

The tilt alarm sounds when the incline of the chassis exceeds 1.5° to the side and 3° to the front or rear.

How to Install and Calibrate the 1.5° Level Sensor

DANGER Tip-over hazard. Failure to install or calibrate the level sensor as instructed will compromise machine stability and cause the machine to tip over, resulting in death or serious injury. Do not install or calibrate the level sensor other than specified in this procedure.

1 Move the machine to an area that has a firm, level surface and is free of obstructions.

2 Remove the platform controls from the platform.

3 Turn the key switch to platform control and pull out the red Emergency Stop button to the on position at both the ground and platform controls.

4 Raise the platform 7 to 8 feet / 2.1 to 2.4 m.

5 Lift the safety arm, move it to the center of the scissor arm and rotate down to a vertical position.

6 Lower the platform onto the safety arm.

WARNING Crushing hazard. Keep hands clear of the safety arm when lowering the platform.

If you are not installing a new level sensor, proceed to step 15.

7 Turn the key switch to the off position and push in the red Emergency Stop button to the off position at the ground controls.

8 Tag and disconnect the level sensor wire harness from the chassis wire harness.

Note: The wire harness connection is located next to the level sensor, on top of the chassis at the steer end of the machine.

9 Remove the level sensor retaining fasteners. Remove the level sensor from the machine.

10 Tag and disconnect the level sensor wires from the level sensor connector plug.

11 Securely install the wires of the new level sensor into the level sensor connector plug.

https://truckmanualshub.com/

12 Place the new level sensor onto the level sensor mount bracket with the "X" on the level sensor base closest to the long side of the level sensor mount and the "Y" on the level sensor base closest to the short side of the level sensor mount.

DANGER Tip-over hazard. The level sensor must be installed with the "X" on the level sensor base closest to the long side of the tilt level sensor box and the "Y" on the level sensor base closest to the short side of the tilt level sensor box. Failure to install the tilt level sensor as instructed could result in the machine tipping over, causing death or serious injury.

13 Install the level sensor retaining fasteners through the level sensor and springs, and into the mount bracket. Tighten the fasteners and measure the distance between the level sensor and the level sensor mount bracket.

⊙ Result: The measurement should be approximately 3/8 inch / 10 mm.

14 Connect the chassis wire harness to the level sensor wire harness.

15 Turn the key switch to the ground control and pull out the red Emergency Stop button to the on position at the ground controls.

16 Adjust the level sensor retaining fasteners until the bubble in the top of the level sensor is centered in the circles.

⊙ Result: The tilt sensor alarm should not sound.

Steer end

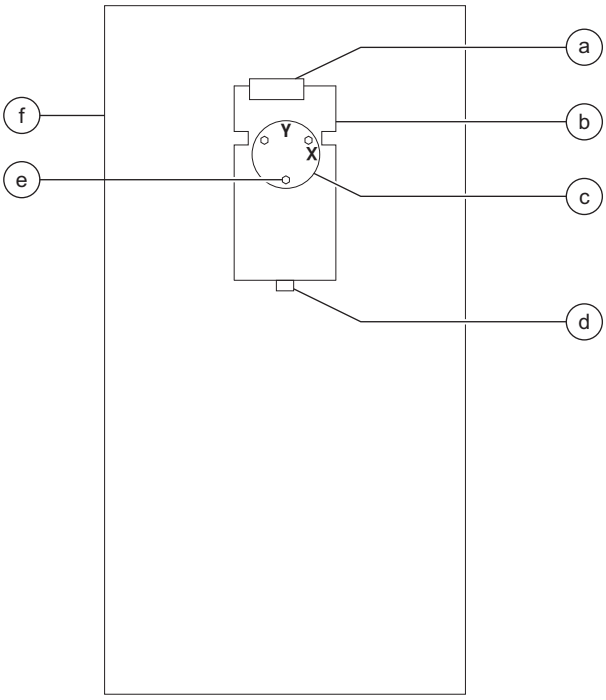

Non-steer end

a limit switch
b level sensor mount bracket
c level sensor S7
d alarm H5
e level sensor retaining fastener
f scissor chassis

17 Raise the platform slightly.

18 Return the safety arm to the stowed position.

19 Lower the platform to the stowed position.

20 Center a lifting jack under the drive chassis at the ground controls side of the machine.

21 Raise the machine approximately 2 inches / 5 cm.

https://truckmanualshub.com/

22 **GS-1530 and GS-1930:** Place a 0.64 x 6 x 6 inch / 16.2 mm x 15 cm x 15 cm thick steel block under both wheels at the ground controls side of the machine.

GS-1532 and GS-1932: Place a 0.68 x 6 x 6 inch / 17.2 mm x 15 cm x 15 cm thick steel block under both wheels at the ground controls side of the machine.

GS-2032, GS-2632 and GS-3232: Place a 0.66 x 6 x 6 inch / 16.8 mm x 15 cm x 15 cm thick steel block under both wheels at the ground controls side of the machine.

GS-2046, GS-2646 and GS-3246: Place a 1 x 6 x 6 inch / 25.4 mm x 15 cm x 15 cm thick steel block under both wheels at the ground controls side of the machine.

23 Lower the machine onto the blocks.

24 Raise the platform 7 to 8 feet / 2.1 to 2.4 m.

⊙ Result: The level sensor alarm should not sound.

⊠ Result: The level sensor alarm does sound and fault code LL appears in the diagnostic display. Adjust the level sensor retaining fasteners just until the level sensor alarm does not sound.

25 Lower the platform to the stowed position.

26 Raise the machine approximately 2 inches / 5 cm.

27 Remove the blocks from under both wheels.

28 Lower the machine and remove the jack.

29 Center a lifting jack under the drive chassis at the battery pack side of the machine.

30 Raise the machine approximately 2 inches / 5 cm.

31 **GS-1530 and GS-1930:** Place a 0.77 x 6 x 6 inch / 19.6 mm x 15 cm x 15 cm thick steel block under both wheels at the battery pack side of the machine.

GS-1532 and GS-1932: Place a 0.83 x 6 x 6 inch / 21.1 mm x 15 cm x 15 cm thick steel block under both wheels at the battery pack side of the machine.

GS-2032, GS-2632 and GS-3232: Place a 0.8 x 6 x 6 inch / 20.3 mm x 15 cm x 15 cm thick steel block under both wheels at the battery pack side of the machine.

GS-2046, GS-2646 and GS-3246: Place a 1.22 x 6 x 6 inch / 31 mm x 15 cm x 15 cm thick steel block under both wheels at the battery pack side of the machine.

https://truckmanualshub.com/

32 Lower the machine onto the blocks.

33 Raise the platform 7 to 8 feet / 2.1 to 2.4 m.

⊙ Result: The platform should stop, an alarm should sound and fault code LL appears in the diagnostic display.

⊠ Result: The platform does not stop or the level sensor alarm does not sound. Adjust the level sensor until the alarm just begins to sound OR the down limit switch may need to be adjusted.

34 Lift the safety arm, move it to the center of the scissor arm and rotate down to a vertical position.

35 Lower the scissor arms onto the safety arm.

⚠WARNING Crushing hazard. Keep hands clear of the safety arm when lowering the platform.

36 Raise the platform 7 to 8 feet / 2.1 to 2.4 m.

37 Return the safety arm to the stowed position.

38 Lower the platform to the stowed position.

39 Raise the machine approximately 2 inches / 5 cm.

40 Remove the blocks from under both wheels.

41 Lower the machine and remove the jack.

https://truckmanualshub.com/

How to Install the Outrigger Level Sensor

DANGER Tip-over hazard. Failure to install the outrigger level sensor as instructed will compromise machine stability and cause the machine to tip over, resulting in death or serious injury. Do not install the outrigger level sensor other than specified in this procedure.

1 Move the machine to an area that has a firm, level surface and is free of obstructions.

2 Turn the key switch to the off position and push in the red Emergency Stop button to the off position at both the ground and platform controls.

3 Open the access door at the battery side of the machine.

4 Tag and disconnect the outrigger level sensor wire harness from the outrigger level sensor.

5 Remove the outrigger level sensor retaining fasteners and remove the outrigger level sensor from the machine.

6 Place the new outrigger level sensor onto the outrigger level sensor base with the flat side of the outrigger level sensor closest to the battery side access door. Refer to Illustration 1.

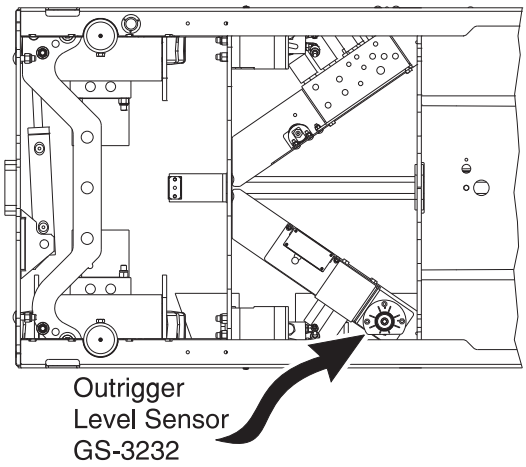

Illustration 1

7 Secure the outrigger level sensor onto the base with the retaining fasteners removed in step 5.

8 Adjust the outrigger level sensor retaining fasteners until the bubble in the top of the level sensor is centered in the circles.

9 Connect the outrigger level sensor wire harness to the new outrigger level sensor.

10 Close the access door at the battery side of the machine.

11 Calibrate the new outrigger level sensor. Refer to Section 1-4, *How to Calibrate the Outrigger Level Sensor.*

https://truckmanualshub.com/

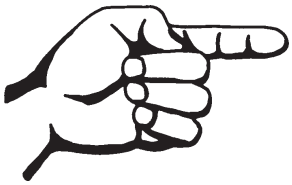

This page intentionally left blank.

https://truckmanualshub.com/

Hydraulic Pump

REV B

5-1
Function Pump

The hydraulic pump is attached to the motor which makes up the hydraulic power unit.

How to Test the Hydraulic Pump

When removing a hose assembly or fitting, the fitting and/or hose end must be torqued to specification during installation.
Refer to Section 2, *Hydraulic Hose and Fitting Torque Specifications.*

1 Tag, disconnect and plug the high pressure hydraulic hose from the hydraulic pump.

WARNING Bodily injury hazard. Spraying hydraulic oil can penetrate and burn skin. Loosen hydraulic connections very slowly to allow the oil pressure to dissipate gradually. Do not allow oil to squirt or spray.

2 Connect a 0 to 5000 psi / 0 to 350 bar pressure gauge to the high pressure port on the pump.

3 Turn the key switch to ground control and pull out the red Emergency Stop button to the on position at both the ground and platform controls.

4 Activate the platform up function from the ground controls.

⊙ Result: If the pressure gauge reads 3200 psi / 221 bar, immediately stop. The pump is good.

⊙ Result: If pressure fails to reach 3200 psi / 221 bar, the pump is bad and will need to be serviced or replaced.

NOTICE Component damage hazard. There is no relief valve in the hydraulic pump and the pump can be damaged if the pressure is allowed to exceed 3200 psi / 221 bar. When testing the pump, activate the pump in one second intervals until 3200 psi / 221 bar is confirmed. Do not over-pressurize the pump.

5 Remove the pressure gauge and reconnect the hydraulic hose. Torque to specification.

WARNING Bodily injury hazard. Spraying hydraulic oil can penetrate and burn skin. Loosen hydraulic connections very slowly to allow the oil pressure to dissipate gradually. Do not allow oil to squirt or spray.

https://truckmanualshub.com/

How to Remove the Hydraulic Pump

When removing a hose assembly or fitting, the O-ring on the fitting and/or hose end must be replaced and then torqued to specification during installation.
Refer to Section Two, *Hydraulic Hose and Fitting Torque Specifications.*

1 Disconnect the battery pack from the machine.

WARNING Electrocution/burn hazard. Contact with electrically charged circuits could result in death or serious injury. Remove all rings, watches and other jewelry.

2 Tag and disconnect the hydraulic power unit cables at the motor controller.

3 Disconnect the filter head from the filter head mounting bracket. Rotate the filter out and away from the hydraulic power unit.

4 Remove the hydraulic power unit retaining fasteners.

5 Tag, disconnect and plug the hydraulic hard line from the pump. Cap the fitting on the pump.

6 Tag, disconnect and plug the high pressure hose at the pump. Cap the fitting on the pump.

WARNING Bodily injury hazard. Spraying hydraulic oil can penetrate and burn skin. Loosen hydraulic connections very slowly to allow the oil pressure to dissipate gradually. Do not allow oil to squirt or spray.

7 Remove the hydraulic power unit from the machine.

8 Remove the pump mounting bolts. Carefully remove the pump.

DANGER Tip-over hazard. After replacing the hydraulic pump, it is critical to return the function speed settings to original factory specifications. Failure to restore the machine to original factory specifications could cause the machine to tip over resulting in death or serious injury.

https://truckmanualshub.com/

Manifolds

REV F

6-1
Function Manifold Components - GS-1530, GS-1532, GS-1930 and GS-1932

The function manifold is mounted under the machine, between the module trays.

Index No.	Description	Schematic Item	Function	Torque
—	Coil nut (item F)			4-5 ft-lbs / 5-7 Nm
—	Coil nut (items E and H)			5-7 ft-lbs / 7-9 Nm
1	Diagnostic nipple	A	Testing	
2	Check disc	B	Steer circuit	18 ft-lbs / 24 Nm
3	Relief valve, 1800 to 3700 psi / 124 to 255 bar	C	Lift relief	20 ft-lbs / 27 Nm
4	Check valve, 10 psi / 0.7 bar	D	Drive circuit	20 ft-lbs / 27 Nm
5	Solenoid valve, 3 position 4 way	E	Drive forward/reverse	25 ft-lbs / 34 Nm
6	Solenoid valve, 3 position 4 way	F	Steer left/right	25 ft-lbs / 34 Nm
7	Flow regulator and relief valve, 0.75 gpm / 2.8 L/min, 1500 psi / 103 bar	G	Steer circuit	26 ft-lbs / 35 Nm
8	Solenoid valve, 2 position 4 way	H	Platform up	25 ft-lbs / 34 Nm
9	Relief valve, 3700 psi / 255 bar maximum	I	System relief	20 ft-lbs / 27 Nm

How to Install a Valve Cartridge

1 Dip the cartridge in clean oil to lube the O-rings.

2 Screw the cartridge in by hand until the top O-ring is met, then torque to specification.

3 If required, install the valve coil(s) onto the valve stem. Install the coil nut onto the valve stem and torque to specification.

https://truckmanualshub.com/

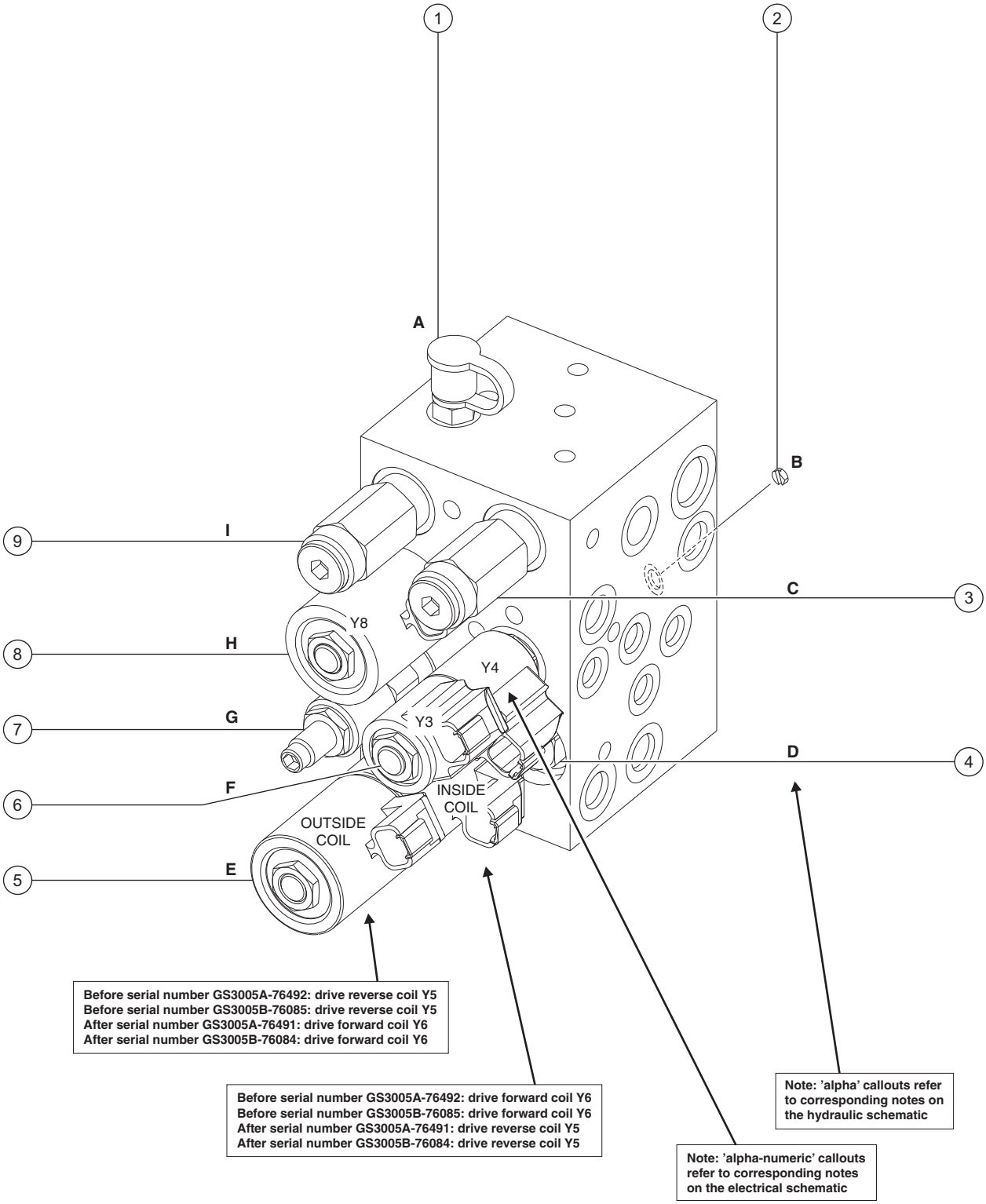

https://truckmanualshub.com/

6-2
Function Manifold Components - GS-2032, GS-2632, GS-3232, GS-2046, GS-2646 and GS-3246

The function manifold is mounted behind an inspection door on the ground control side of the machine.

Index No.	Description	Schematic Item	Function	Torque
—	Coil nut (item AC)			4-5 ft-lbs / 5-7 Nm
—	Coil nut (items AE, AG and AI)			5-7 ft-lbs / 7-9 Nm
1	Diagnostic nipple	AA	Testing	
2	Relief valve, 3700 psi / 255 bar maximum	AB	System relief	20 ft-lbs / 27 Nm
3	Solenoid valve, 3 position 4 way	AC	Steer left/right	25 ft-lbs / 34 Nm
4	Check disc	AD	Steer circuit	18 ft-lbs / 24 Nm
5	Solenoid valve, 2 position 4 way	AE	Drive speed select circuit	25 ft-lbs / 34 Nm
6	Relief valve, Before serial number GS3206-80132 and GS4606-79028 130 psi / 9 bar After serial number GS3206-80131 and GS4606-79027 50 psi / 3.4 bar	AF	Brake release	20 ft-lbs / 27 Nm
7	Solenoid valve, 3 position 5 way	AG	Drive forward/reverse	25 ft-lbs / 34 Nm
8	Flow regulator and relief valve, 0.75 gpm / 2.8 L/min, 1500 psi / 103 bar	AH	Steer circuit	26 ft-lbs / 35 Nm
9	Solenoid valve, 2 position 4 way	AI	Platform up	25 ft-lbs / 34 Nm
10	Relief valve, 1800 to 3700 psi / 124 to 255 bar	AJ	Lift relief	20 ft-lbs / 27 Nm

How to Install a Valve Cartridge

1 Dip the cartridge in clean oil to lube the O-rings.

2 Screw the cartridge in by hand until the top O-ring is met, then torque to specification.

3 If required, install the valve coil(s) onto the valve stem. Install the coil nut onto the valve stem and torque to specification.

https://truckmanualshub.com/

REV F MANIFOLDS

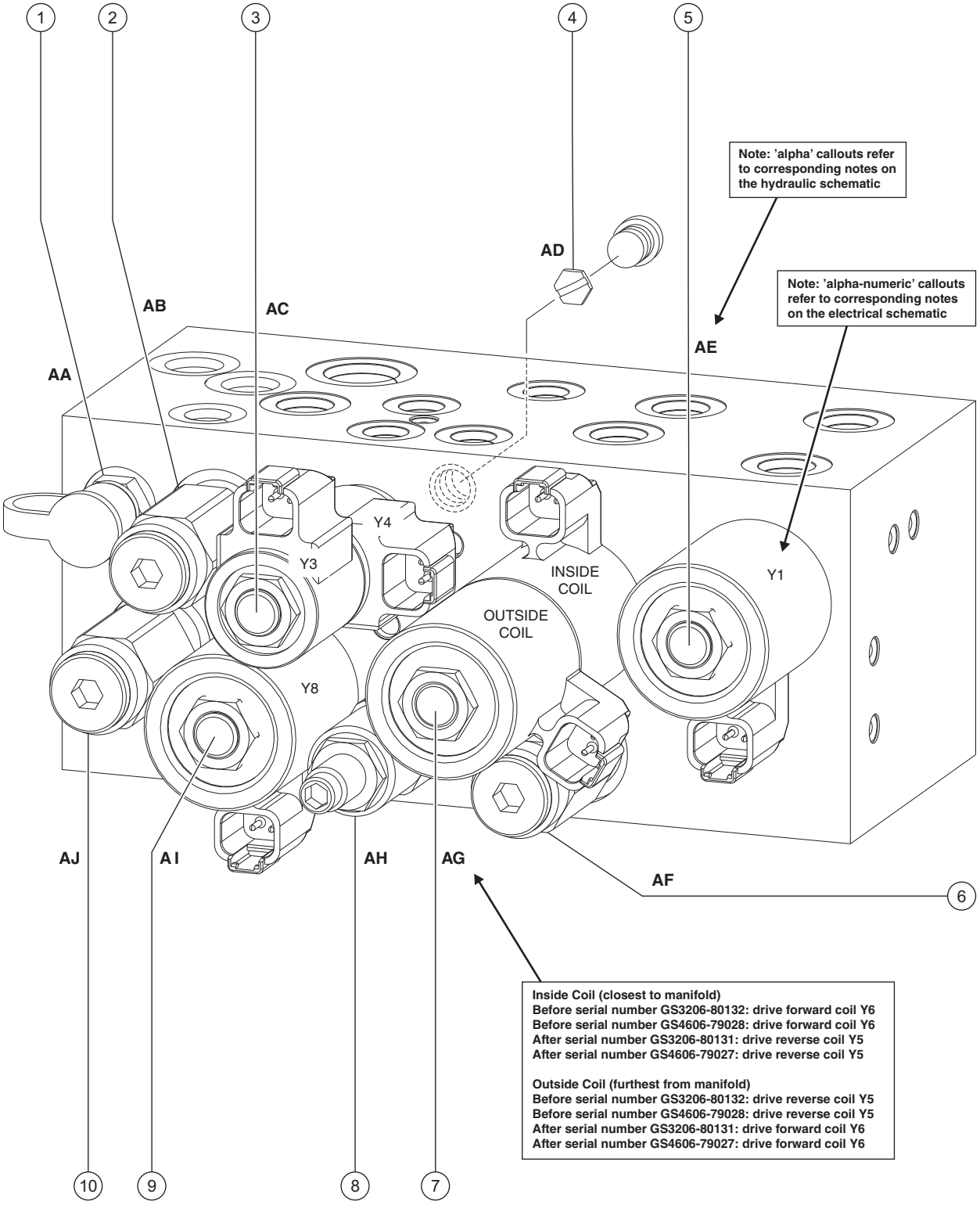

Inside Coil (closest to manifold)
Before serial number GS3206-80132: drive forward coil Y6
Before serial number GS4606-79028: drive forward coil Y6
After serial number GS3206-80131: drive reverse coil Y5
After serial number GS4606-79027: drive reverse coil Y5

Outside Coil (furthest from manifold)
Before serial number GS3206-80132: drive reverse coil Y5
Before serial number GS4606-79028: drive reverse coil Y5
After serial number GS3206-80131: drive forward coil Y6
After serial number GS4606-79027: drive forward coil Y6

https://truckmanualshub.com/

6-3
Outrigger Function Manifold Components - GS-3232

The outrigger function manifold is mounted behind an inspection door on the battery side of the machine.

Index No.	Description	Schematic Item	Function	Torque
—	Coil nut (item BA)			4-5 ft-lbs / 5-7 Nm
1	Solenoid valve, 3 position 4 way	BA	Outrigger extend/retract	25 ft-lbs / 34 Nm
2	Relief valve, 3500 psi / 241 bar maximum	BB	Outrigger circuit	20 ft-lbs / 27 Nm

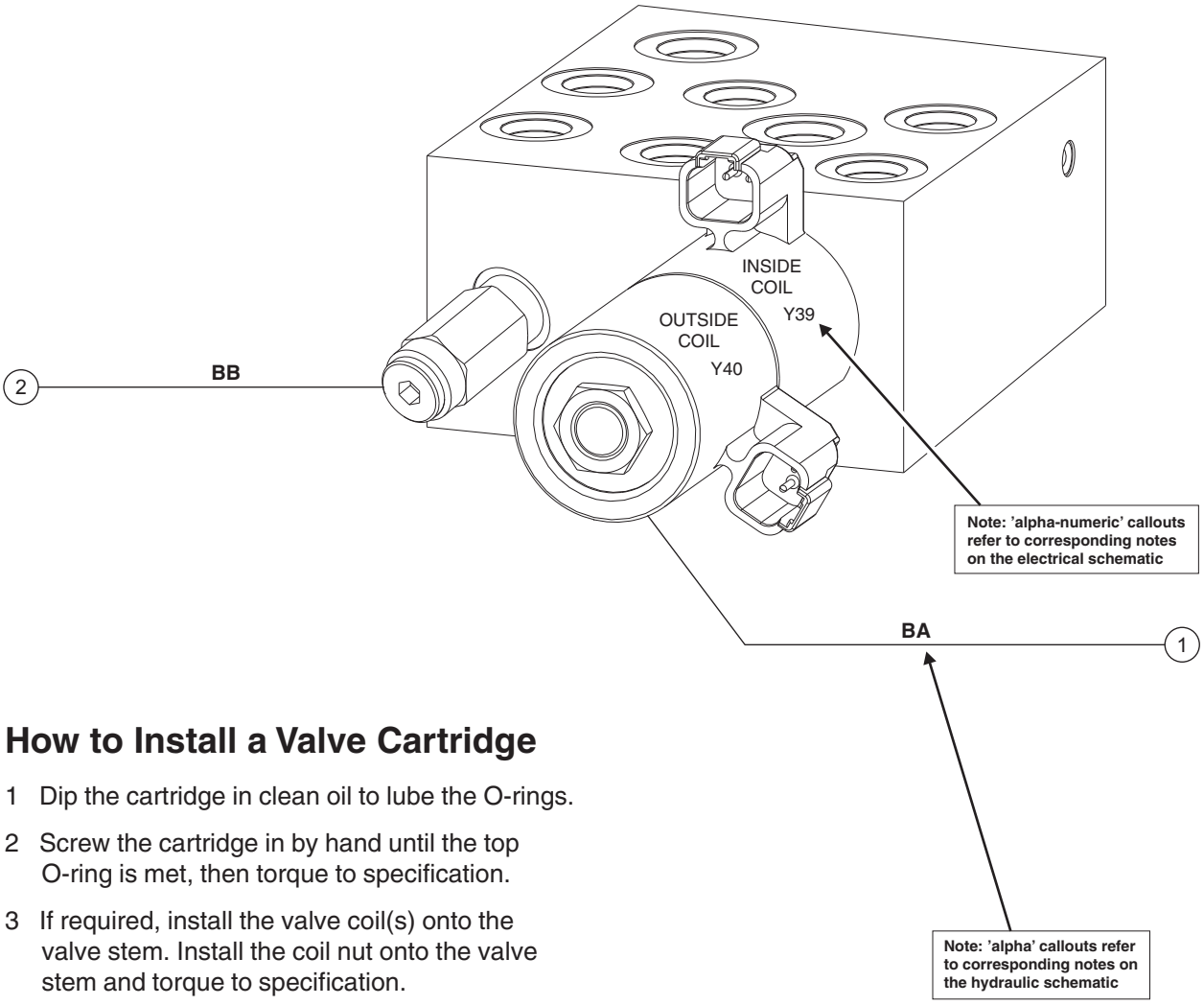

How to Install a Valve Cartridge

1 Dip the cartridge in clean oil to lube the O-rings.

2 Screw the cartridge in by hand until the top O-ring is met, then torque to specification.

3 If required, install the valve coil(s) onto the valve stem. Install the coil nut onto the valve stem and torque to specification.

https://truckmanualshub.com/

6-4
Outrigger Cylinder Manifold Components - GS-3232

The front outrigger cylinders are located behind the inspection doors at the battery side and at the ground control side of the machine. The rear outrigger cylinders are located inside the outrigger enclosures at the rear of the machine.

Index No.	Description	Schematic Item	Function	Torque
—	Coil nut (item CA, CB, CC, CD)			4-5 ft-lbs / 5-7 Nm
1	Solenoid valve, 2 position 2 way	CA, CB, CC, CD	Outrigger extend/retract	25 ft-lbs / 34 Nm
2	Orifice - plug, 0.037 inch / 0.94 mm	CE	Outrigger retract	
3	Check valve, pilot operated	CF	Retract flow control	20 ft-lbs / 27.1 Nm
4	Pressure Transducer	CG	Outrigger autolevel	16 ft-lbs / 21.7 Nm

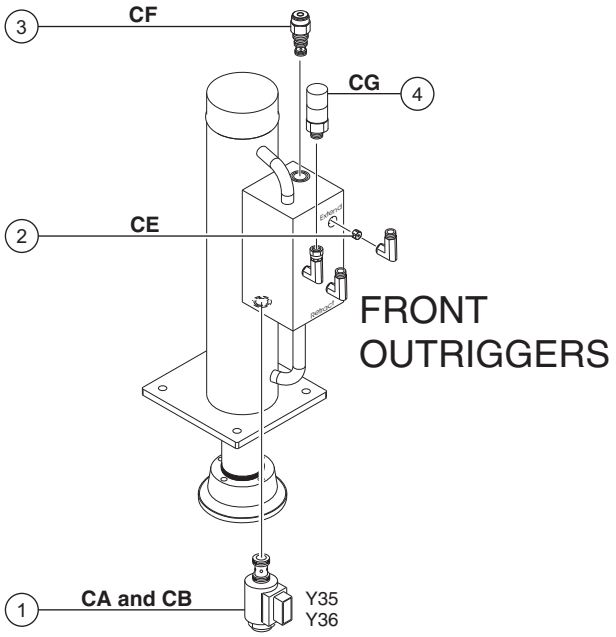

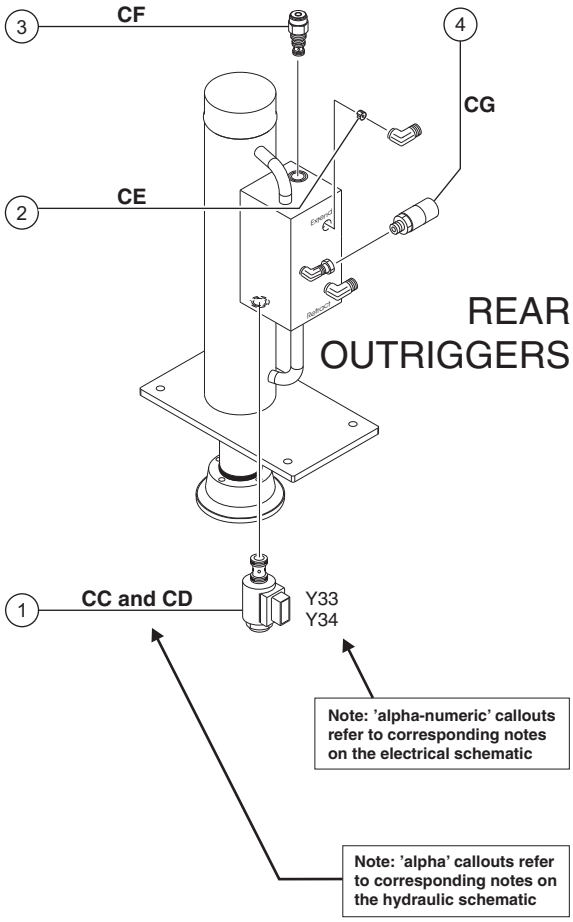

How to Install a Valve Cartridge

1 Dip the cartridge in clean oil to lube the O-rings.

2 Screw the cartridge in by hand until the top O-ring is met, then torque to specification.

3 If required, install the valve coil(s) onto the valve stem. Install the coil nut onto the valve stem and torque to specification.

https://truckmanualshub.com/

6-5
Check Valve Manifold Components - GS-1530, GS-1532, GS-1930 and GS-1932

The check valve manifold is mounted on the function manifold.

Index No.	Description	Schematic Item	Function	Torque
1	Check valve, 200 psi / 13.8 bar	S	Drive circuit	20 ft-lbs / 27 Nm

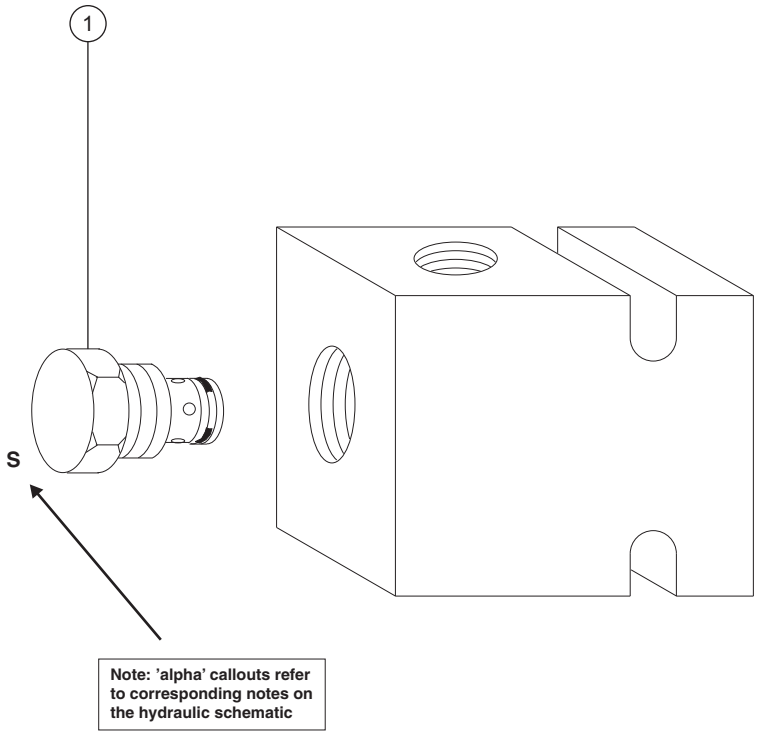

How to Install a Valve Cartridge

1 Dip the cartridge in clean oil to lube the O-rings.

2 Screw the cartridge in by hand until the top O-ring is met, then torque to specification.

3 If required, install the valve coil(s) onto the valve stem. Install the coil nut onto the valve stem and torque to specification.

https://truckmanualshub.com/

6-6 Valve Adjustments - Function Manifold

How to Adjust the System Relief Valve

Perform this test from the ground with the platform controls. Do not stand in the platform.

Be sure that the hydraulic oil level is at the FULL mark on the hydraulic tank.

1 Locate the system relief valve on the function manifold (schematic item I or AB).

2 Connect a 0 to 5000 psi / 0 to 350 bar pressure gauge to the test port on the function manifold (schematic item A or AA).

3 Chock both sides of the wheels at the steer end of the machine.

4 Remove the platform controls from the platform.

5 Turn the key switch to platform control and pull out the red Emergency Stop button to the on position at both the ground and platform controls.

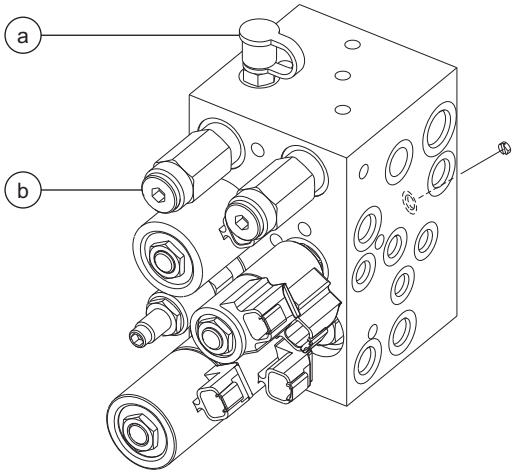

GS-1530/32 and GS-1930/32

a test port
b system relief valve

6 Press and hold the function enable switch.

7 Move and hold the joystick fully in either direction while observing the pressure reading on the pressure gauge. Note the pressure. Refer to Section 2, *Specifications*.

8 Turn the machine off. Hold the system relief valve with a wrench and remove the cap (schematic item I or AB).

9 Adjust the internal hex socket. Turn it clockwise to increase the pressure or counterclockwise to decrease the pressure.

DANGER Tip-over hazard. Failure to adjust the relief valves to specification could result in the machine tipping over, causing death or serious injury. Do not adjust the relief valve pressures higher than specifications.

10 Install the relief valve cap.

11 Repeat steps 5 through 7 to confirm the relief valve pressure.

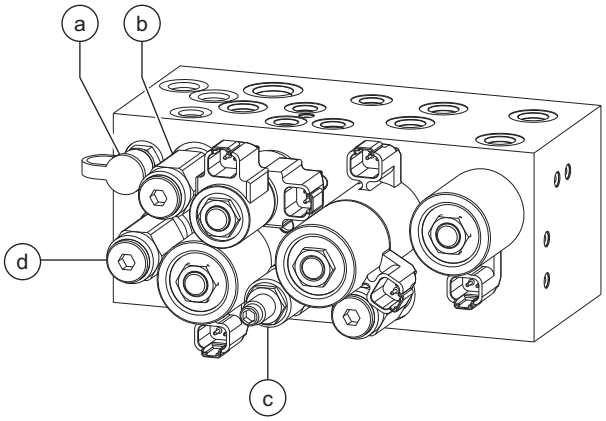

GS-32 and GS-46

a test port
b system relief valve
c steer relief valve
d lift relief valve

https://truckmanualshub.com/

How to Adjust the Platform Lift Relief Valve

Perform this test from the ground with the platform controls. Do not stand in the platform.

Be sure that the hydraulic oil level is at the FULL mark on the hydraulic tank.

1 Locate the system relief valve on the function manifold (item I).

2 Connect a 0 to 5000 psi / 0 to 350 bar pressure gauge to the test port on the function manifold (schematic item A or AA).

3 Chock both sides of the wheels at the steer end of the machine.

4 Remove the platform controls from the platform.

5 Turn the key switch to platform control and pull out the red Emergency Stop button to the on position at both the ground and platform controls.

6 Press and hold the function enable switch.

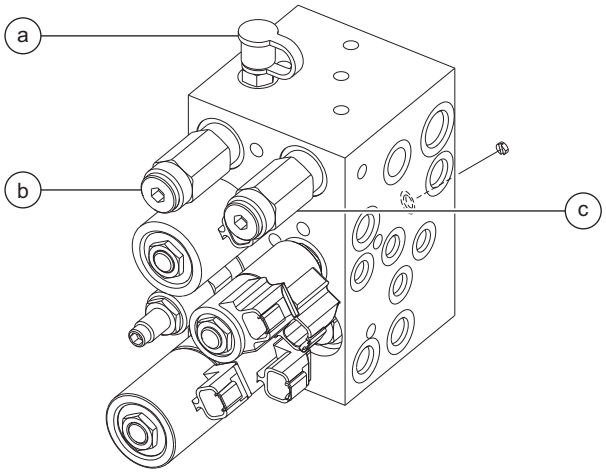

GS-1530/32 and GS-1930/32

a test port
b system relief valve
c lift relief valve

7 Move and hold the joystick fully in either direction while observing the pressure reading on the pressure gauge. Note the pressure. Refer to Section 2, *Specifications*.

8 Turn the machine off. Hold the system relief valve with a wrench and remove the cap (hydraulic schematic item I or AB).

9 Adjust the internal hex socket. Turn it clockwise to increase the pressure or counterclockwise to decrease the pressure.

DANGER Tip-over hazard. Failure to adjust the relief valves to specification could result in the machine tipping over, causing death or serious injury. Do not adjust the relief valve pressures higher than specifications.

10 Install the relief valve cap.

11 Repeat steps 4 through 7 to confirm the relief valve pressure.

12 Place maximum rated load into the platform. Secure the load to the platform. Refer to Section 2, *Specifications*.

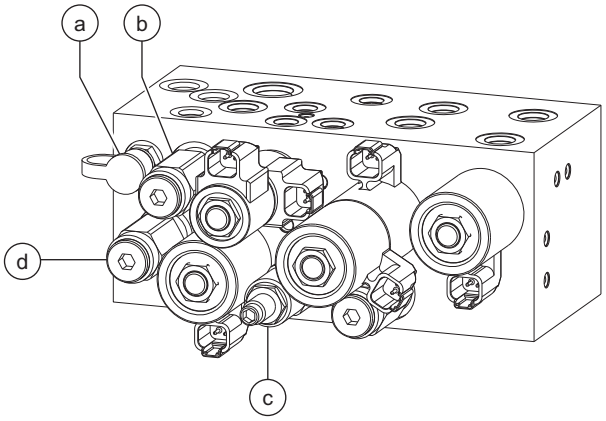

GS-32 and GS-46

a test port
b system relief valve
c steer relief valve
d lift relief valve

https://truckmanualshub.com/

13 Turn the key switch to ground control and pull out the red Emergency Stop button to the on position at both the ground and platform controls.

14 Hold the lift relief valve with a wrench and remove the cap (schematic item C or AJ).

15 While activating the platform up function, adjust the internal hex socket clockwise, just until the platform fully raises.

16 Fully lower the platform.

17 Add an additional 50 pounds / 22.7 kg to the platform. Secure the additional weight.

18 Attempt to raise the platform.

Result: The power unit should **not** be able to lift the platform.

Result: If the power unit lifts the platform, adjust the internal hex socket counterclockwise until the platform will not raise.

19 Install the relief valve cap.

20 Remove the weight from the platform.

21 Bleed the hydraulic system by raising the platform to full height. If the pump cavitates or the platform fails to reach full height, add hydraulic oil until the pump is functioning correctly. Do not overfill the hydraulic tank.

NOTICE Component damage hazard. Do not continue to operate the machine if the hydraulic pump is cavitating.

https://truckmanualshub.com/

How to Adjust the Steer Relief Valve

Perform this test from the ground with the platform controls. Do not stand in the platform.

Be sure that the hydraulic oil level is at the FULL mark on the hydraulic tank.

1 Locate the steer relief valve on the function manifold (schematic item G or AH).

2 Connect a 0 to 5000 psi / 0 to 350 bar pressure gauge to the test port (schematic item A or AA) on the function manifold.

3 Remove the platform controls from the platform.

4 Turn the key switch to platform control and pull out the red Emergency Stop button to the on position at both the ground and platform controls.

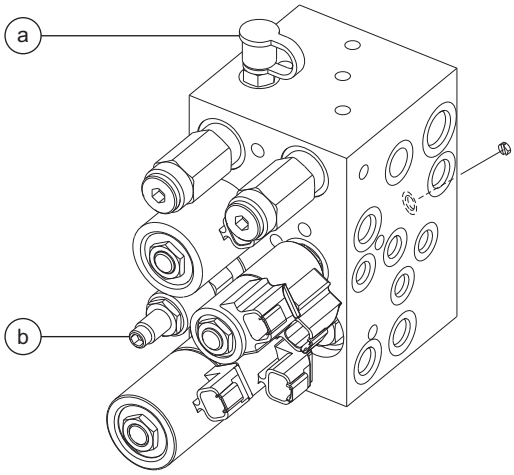

GS-1530/32 and GS-1930/32

a test port
b steer relief valve

5 Activate the function enable switch and press and hold the steer thumb rocker switch to the right. Allow the wheels to completely turn to the right. Continue holding the switch while observing the pressure reading on the pressure gauge. Note the pressure. Refer to Section 2, *Specifications*.

6 Press and hold the steer thumb rocker switch to the left. Allow the wheels to completely turn to the left. Continue holding the switch while observing the pressure reading on the pressure gauge.

7 Turn the machine off. Hold the steer relief valve with a wrench and remove the cap (schematic item G or AH).

8 Adjust the internal hex socket. Turn it clockwise to increase the pressure or counterclockwise to decrease the pressure.

NOTICE Component damage hazard. Do not adjust the relief valve pressures higher than specifications.

9 Install the relief valve cap.

10 Repeat steps 5 through 6 to confirm the relief valve pressure.

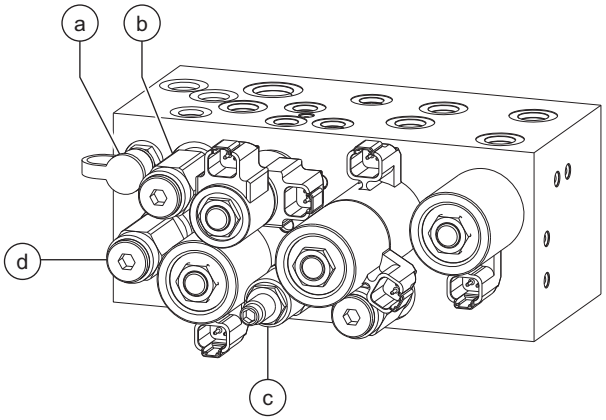

GS-32 and GS-46

a test port
b system relief valve
c steer relief valve
d lift relief valve

https://truckmanualshub.com/

6-7 Valve Coils

How to Test a Coil

A properly functioning coil provides an electromagnetic force which operates the solenoid valve. Critical to normal operation is continuity within the coil. Zero resistance or infinite resistance indicates the coil has failed.

Since coil resistance is sensitive to temperature, resistance values outside specification can produce erratic operation. When coil resistance decreases below specification, amperage increases. As resistance rises above specification, voltage increases.

While valves may operate when coil resistance is outside specification, maintaining coils within specification will help ensure proper valve function over a wide range of operating temperatures.

⚠WARNING Electrocution/burn hazard. Contact with electrically charged circuits could result in death or serious injury. Remove all rings, watches and other jewelry.

Note: If the machine has been in operation, allow the coil to cool at least 3 hours before performing this test.

1 Tag and disconnect the wiring from the coil to be tested.

2 Test the coil resistance using a multimeter set to resistance (Ω). Refer to the Valve Coil Resistance Specification table.

Result: If the resistance is not within the adjusted specification, plus or minus 10%, replace the coil.

Valve Coil Resistance Specification

Note: The following coil resistance specifications are at an ambient temperature of 68°F / 20°C. As valve coil resistance is sensitive to changes in air temperature, the coil resistance will typically increase or decrease by 4% for each 18°F / -7.7°C that your air temperature increases or decreases from 68°F / 20°C.

Valve Coil Resistance Specifications

Description	Specification
Solenoid valve, 3 position 4 way 20V DC with diode (schematic items F and AC)	27.2Ω
Solenoid valve, 3 position 4 way 20V DC with diode (schematic item E)	19Ω
Solenoid valve, 2 position 4 way 20V DC with diode (schematic item H and AI)	19Ω
Solenoid valve, 2 position 2 way N.C. 20V DC with diode (schematic item N)	25Ω
Solenoid valve, 2 position 4 way 20V DC with diode (schematic items AE)	19Ω
Solenoid valve, 3 position 5 way 20V DC with diode (schematic item AG)	19Ω
Solenoid valve, 2 position 2 way 20V DC with diode (schematic item CA, CB, CC and CD)	27.2Ω
Solenoid valve, 3 position 4 way 20V DC with diode (schematic item BA)	19Ω

https://truckmanualshub.com/

How to Test a Coil Diode

Genie incorporates spike suppressing diodes in all of its coils. Properly functioning coil diodes protect the electrical circuit by suppressing voltage spikes. Voltage spikes naturally occur within a function circuit following the interruption of electrical current to a coil. Faulty diodes can fail to protect the electrical system, resulting in a tripped circuit breaker or component damage.

⚠WARNING Electrocution/burn hazard. Contact with electrically charged circuits could result in death or serious injury. Remove all rings, watches and other jewelry.

1 Test the coil for resistance. See 6-7 *How to Test a Coil.*

2 Connect a 10Ω resistor to the negative terminal of a known good 9V DC battery. Connect the other end of the resistor to a terminal on the coil.

Note: The battery should read 9V DC or more when measured across the terminals.

Resistor, 10Ω	
Genie part number	27287

3 Set a multimeter to read DC amperage.

Note: The multimeter, when set to read DC amperage, should be capable of reading up to 800 mA.

4 Connect the negative lead to the other terminal on the coil.

Note: If testing a single-terminal coil, connect the negative lead to the internal metallic ring at either end of the coil.

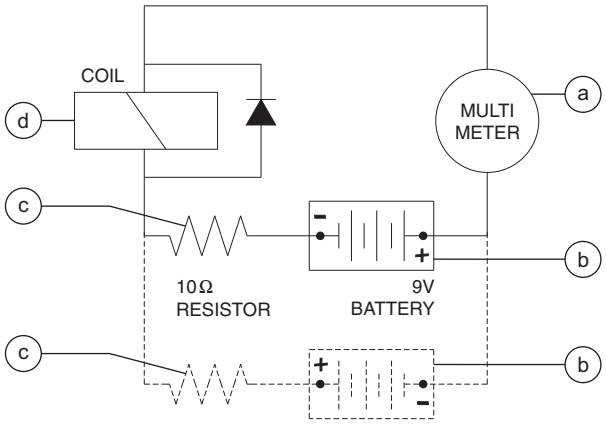

a multimeter
b 9V DC battery
c 10Ω resistor
d coil

Note: Dotted lines in illustration indicate a reversed connection as specified in step 6

5 Momentarily connect the positive lead from the multimeter to the positive terminal on the 9V battery. Note and record the current reading.

6 At the battery or coil terminals, reverse the connections. Note and record the current reading.

⊙ Result: Both current readings are greater than 0 mA and are different by a minimum of 20%. The coil is good.

⊠ Result: If one or both of the current readings are 0 mA, or if the two current readings do not differ by a minimum of 20%, the coil and/or its internal diode are faulty and the coil should be replaced.

https://truckmanualshub.com/

Hydraulic Tank

REV B

7-1 Hydraulic Tank

The primary functions of the hydraulic tank are to cool and deaerate the hydraulic fluid during operation. It utilizes internal suction strainers for the pump supply lines and has an external return line filter.

How to Remove the Hydraulic Tank

NOTICE Component damage hazard. The work area and surfaces where this procedure will be performed must be clean and free of debris that could get into the hydraulic system.

When removing a hose assembly or fitting, the fitting and/or hose end must be torqued to specification during installation.
Refer to Section 2, *Hydraulic Hose and Fitting Torque Specifications.*

Perform this procedure with the platform in the stowed position.

1 Disconnect the battery pack from the machine.

WARNING Electrocution/burn hazard. Contact with electrically charged circuits could result in death or serious injury. Remove all rings, watches and other jewelry.

2 Remove the drain plug from the hydraulic tank and allow all of the oil from the tank to drain into a suitable container. Refer to Section 2, *Specifications*.

WARNING Bodily injury hazard. Spraying hydraulic oil can penetrate and burn skin. Loosen hydraulic connections very slowly to allow the oil pressure to dissipate gradually. Do not allow oil to squirt or spray.

3 Tag and disconnect the hydraulic tank return hard line from the filter. Remove the hard line from the machine. Cap the fitting on the filter head.

4 Tag and disconnect the hydraulic tank hard line from the pump. Remove the hard line from the machine. Cap the fitting on the pump.

5 Remove the hydraulic tank retaining fasteners and remove the hydraulic tank from the machine.

Torque specifications	
Hydraulic tank retaining fasteners, dry	35 in-lbs 4 Nm
Hydraulic tank retaining fasteners, lubricated	26 in-lbs 2.9 Nm

https://truckmanualshub.com/

Steer Axle Components

REV B

8-1
Yoke and Drive Motor

How to Remove the Yoke and Drive Motor Assembly

When removing a hose assembly or fitting, the fitting and/or hose end must be torqued to specification during installation. Refer to Section 2, *Hydraulic Hose and Fitting Torque Specifications.*

1 Block the non-steer wheels.

2 Remove the cotter pin from the wheel castle nut.

Note: Always replace the cotter pin with a new one when removing the castle nut.

3 Loosen the wheel castle nut. Do not remove it.

4 Center a lifting jack under the drive chassis at the steer end of the machine.

5 Raise the machine approximately 6 inches / 15 cm. Place blocks under the chassis for support.

WARNING Crushing hazard. The chassis could fall if not properly supported.

6 Remove the wheel castle nut. Remove the wheel.

7 Tag, disconnect and plug the hydraulic hoses on the drive motor. Cap the fittings on the drive motor.

WARNING Bodily injury hazard. Spraying hydraulic oil can penetrate and burn skin. Loosen hydraulic connections very slowly to allow the oil pressure to dissipate gradually. Do not allow oil to squirt or spray.

NOTICE Component damage hazard. Hoses can be damaged if they are kinked or pinched.

8 Support and secure the yoke assembly to an appropriate lifting device.

9 Remove the retaining fastener from the steer link at the yoke assembly.

Note: While removing the retaining fasteners, take note of the quantity and location of the spacers when disconnecting the steer link from the yoke assembly.

10 Remove the retaining fastener from the top of the yoke pivot shaft.

Note: The pivot shaft retaining fastener is located above the main deck.

11 Lower the yoke assembly out of the chassis.

CAUTION Bodily injury hazard. The yoke/motor assembly may fall if not properly supported when it is removed from the chassis.

https://truckmanualshub.com/

How to Remove a Drive Motor

1 Block the non-steer wheels.

2 Remove the cotter pin from the wheel castle nut of the motor to be removed.

Note: Always replace the cotter pin with a new one when removing the castle nut.

3 Loosen the wheel castle nut. Do not remove it.

4 Center a lifting jack under the drive chassis at the steer end of the machine.

5 Raise the machine approximately 2 inches / 5 cm. Place blocks under the chassis for support.

WARNING Crushing hazard. The chassis could fall if not properly supported.

6 Remove the wheel castle nut. Remove the wheel.

7 Tag, disconnect and plug the hydraulic hoses on the drive motor. Cap the fittings on the drive motor.

WARNING Bodily injury hazard. Spraying hydraulic oil can penetrate and burn skin. Loosen hydraulic connections very slowly to allow the oil pressure to dissipate gradually. Do not allow oil to squirt or spray.

NOTICE Component damage hazard. Hoses can be damaged if they are kinked or pinched.

8 Remove the drive motor mounting fasteners. Remove the motor.

Torque specifications	
Drive motor mounting fasteners, dry	75 ft-lbs 101.7 Nm
Drive motor mounting fasteners, lubricated	56 ft-lbs 76.3 Nm

8-2 Steer Cylinder

How to Remove the Steer Cylinder

When removing a hose assembly or fitting, the O-ring on the fitting and/or hose end must be replaced and then torqued to specification during installation.
Refer to Section Two, *Hydraulic Hose and Fitting Torque Specifications.*

1 Block the non-steer wheels.

2 Remove the pin retaining fasteners from the rod-end pivot pin. Remove the pivot pin.

Note: While removing the pin retaining fasteners, take note of the quantity and location of the spacers when removing the pivot pin.

3 Remove the pin retaining fasteners from the barrel-end pivot pin. Remove the pin.

Note: While removing the pin retaining fasteners, take note of the quantity and location of the spacers when removing the pin.

4 Remove the steer cylinder from the machine.

5 Tag, disconnect and plug the hydraulic hoses from the steer cylinder. Cap the fittings on the cylinder.

WARNING Bodily injury hazard. Spraying hydraulic oil can penetrate and burn skin. Loosen hydraulic connections very slowly to allow the oil pressure to dissipate gradually. Do not allow oil to squirt or spray.

NOTICE Component damage hazard. Hoses can be damaged if they are kinked or pinched.

https://truckmanualshub.com/

8-3
Steer Bellcrank

How to Remove the Steer Bellcrank

1 Remove the steer cylinder. See 8-2, *How to Remove the Steer Cylinder.*

2 Remove the retaining fasteners from the steer links at each end of the bellcrank.

Note: While removing the retaining fasteners, take note of the quantity and location of the spacers between the bellcrank and the steer links.

3 Center a lifting jack under the drive chassis at the steer end.

4 Raise the machine approximately 14 inches / 36 cm. Place blocks under the chassis for support.

⚠WARNING Crushing hazard. The chassis could fall if not properly supported.

5 Turn the yokes to the side so the bellcrank can be removed.

6 Remove the bellcrank from the machine.

Note: While removing the bellcrank from the machine, take note of the quantity and location of the spacers between the bellcrank and the steer links.

Note: Before re-installing the steer bellcrank onto the machine, apply a small amount of Loctite onto the threads of the fasteners. Torque the fasteners to 31 ft-lbs / 42 Nm.

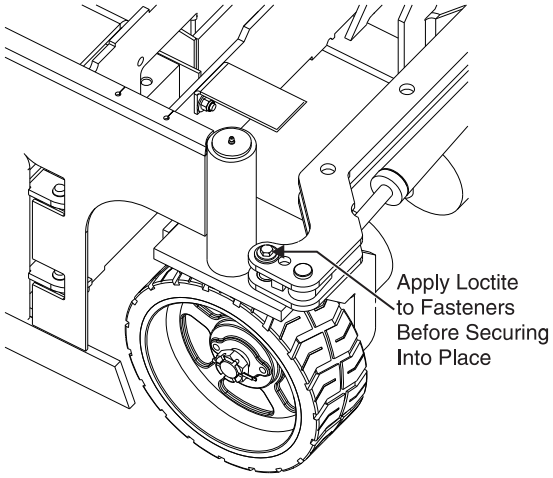

https://truckmanualshub.com/

REV A

Non-steer Axle Components

9-1
Drive Brake

How to Remove a Drive Brake

When removing a hose assembly or fitting, the fitting and/or hose end must be torqued to specification during installation.
Refer to Section 2, *Hydraulic Hose and Fitting Torque Specifications.*

1 Support and secure the entry ladder to an appropriate lifting device.

2 Remove the entry ladder mounting fasteners. Remove the entry ladder from the machine.

⚠CAUTION Crushing hazard. The entry ladder may become unbalanced and fall if it is not properly supported and secured to the lifting device.

3 Block the steer wheels.

4 Remove the cotter pin from the wheel castle nut.

Note: Always replace the cotter pin with a new one when removing the castle nut.

5 Loosen the wheel castle nut. Do not remove it.

6 Center a lifting jack under the drive chassis at the non-steer end.

7 Raise the machine approximately 2 inches / 5 cm. Place blocks under the chassis for support.

⚠WARNING Crushing hazard. The chassis could fall if not properly supported.

8 Remove the wheel castle nut. Remove the wheel.

9 Tag, disconnect and plug the hydraulic hose from the brake. Cap the fitting on the brake.

⚠WARNING Bodily injury hazard. Spraying hydraulic oil can penetrate and burn skin. Loosen hydraulic connections very slowly to allow the oil pressure to dissipate gradually. Do not allow oil to squirt or spray.

10 Place a lifting jack under the brake for support.

11 Remove the fasteners that attach the brake to the drive chassis. Remove the brake.

⚠CAUTION Crushing hazard. The brake will fall if not properly supported when the mounting fasteners are removed.

Torque specifications	
Brake mounting fasteners, dry	75 ft-lbs 102 Nm
Brake mounting fasteners, lubricated	56 ft-lbs 76 Nm

https://truckmanualshub.com/

Brake Release Hand Pump Components

REV A

10-1
Brake Release Hand Pump Components

The brake release hand pump manifold is mounted behind the entry ladder.

Index No.	Description	Schematic Item	Function	Torque
1	Hand pump	L	Manual brake release	30 ft-lbs / 41 Nm
2	Needle valve	M	Manual brake release enable	45-50 in-lbs / 5 Nm

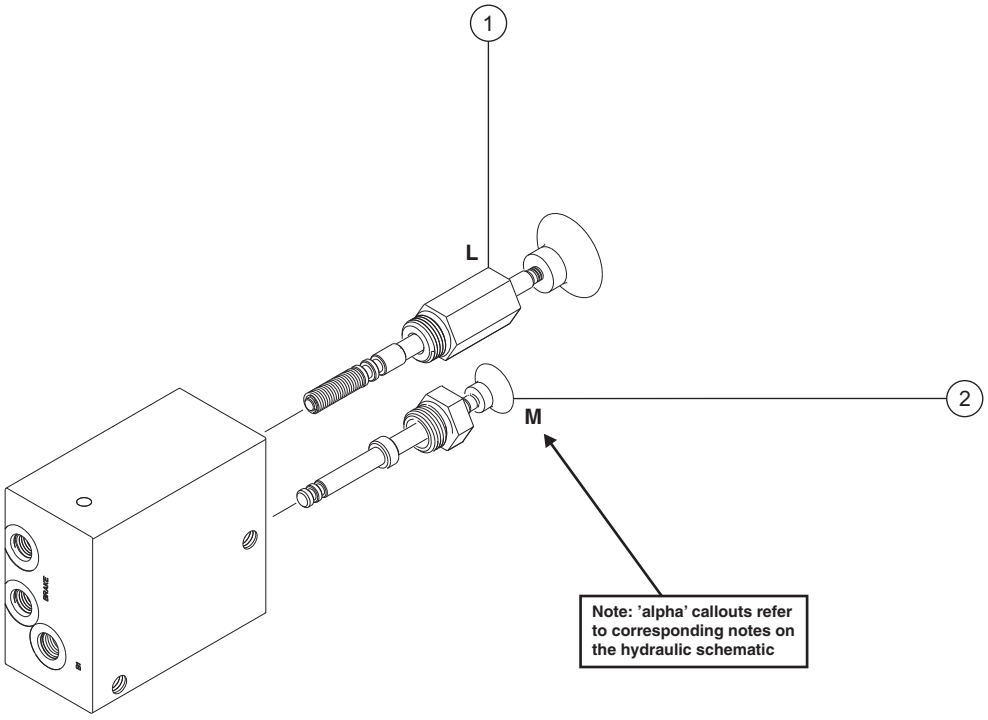

https://truckmanualshub.com/

Outrigger Components

REV A

11-1
Outrigger Cylinder

How to Remove an Outrigger Cylinder

Perform this procedure with the platform in the stowed position and the outriggers fully retracted.

When removing a hose assembly or fitting, the O-ring on the fitting and/or hose end must be replaced and then torqued to specification during installation. Refer to Section 2, *Hydraulic Hose and Fitting Torque Specifications.*

Steer End:

1 Chock the wheels at the non-steer end of the machine.

2 With a suitable floor jack, lift the steer end of the machine to a height that will allow the outrigger cylinder to be removed.

3 Open the access door at the battery side and (or) at the hydraulic tank side of the machine.

4 Tag and disconnect the wire harness from the outrigger cylinder solenoid valve and the pressure transducer.

5 Tag and disconnect the pressure transducer from the outrigger cylinder. Plug the fitting on the cylinder.

6 Tag, disconnect and plug the hydraulic hoses from the outrigger cylinder. Cap the fittings on the cylinder.

⚠WARNING Bodily injury hazard. Spraying hydraulic oil can penetrate and burn skin. Loosen hydraulic connections very slowly to allow the oil pressure to dissipate gradually. Do not allow oil to squirt or spray.

7 Support and secure the outrigger cylinder to a suitable lifting device.

8 Remove the outrigger cylinder mounting fasteners.

9 Remove the outrigger cylinder from the machine.

⚠CAUTION Crushing hazard. The outrigger cylinder may become unbalanced and fall if not properly supported when it is removed from the machine.

Note: After installing a new cylinder or pressure transducer, the pressure transducers on the machine must be calibrated. Refer to Section 1-4, *How to Calibrate the Outrigger Pressure Transducers.*

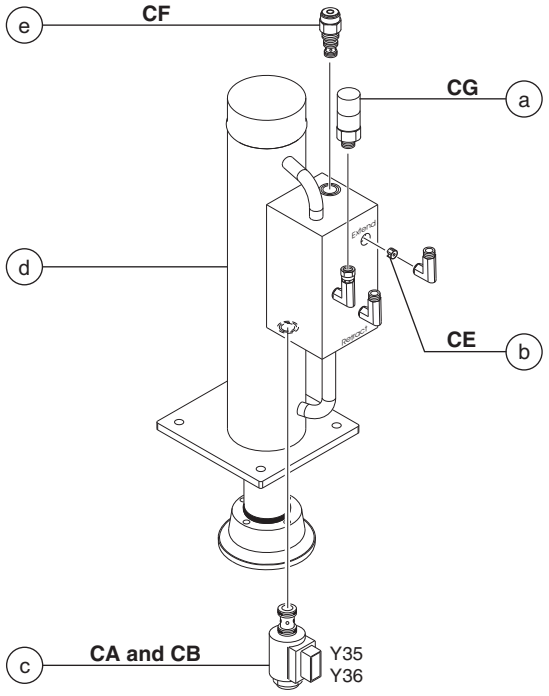

Steer End Outrigger

a pressure transducer
b orifice
c valve coil
d outrigger cylinder
e check valve

https://truckmanualshub.com/

OUTRIGGER COMPONENTS REV A

Non-steer End:

1 Chock the wheels at the steer end of the machine.

2 With a suitable floor jack, lift the non-steer end of the machine to a height that will allow the outrigger cylinder to be removed.

3 Remove the fasteners securing the cover to the rear outrigger enclosure. Set the fasteners to the side and remove the cover.

4 Tag and disconnect the wire harness from the outrigger cylinder solenoid valve and the pressure transducer.

5 Tag and disconnect the pressure transducer from the outrigger cylinder. Plug the fitting on the cylinder.

6 Tag, disconnect and plug the hydraulic hoses from the outrigger cylinder. Cap the fittings on the cylinder.

⚠WARNING Bodily injury hazard. Spraying hydraulic oil can penetrate and burn skin. Loosen hydraulic connections very slowly to allow the oil pressure to dissipate gradually. Do not allow oil to squirt or spray.

7 Support and secure the outrigger cylinder to a suitable lifting device.

8 Remove the outrigger cylinder mounting fasteners.

9 Remove the outrigger cylinder from the machine.

⚠CAUTION Crushing hazard. The outrigger cylinder may become unbalanced and fall if not properly supported when it is removed from the machine.

Note: After installing a new cylinder or pressure transducer, the pressure transducers on the machine must be calibrated. Refer to Section 1-4, *How to Calibrate the Outrigger Pressure Transducers.*

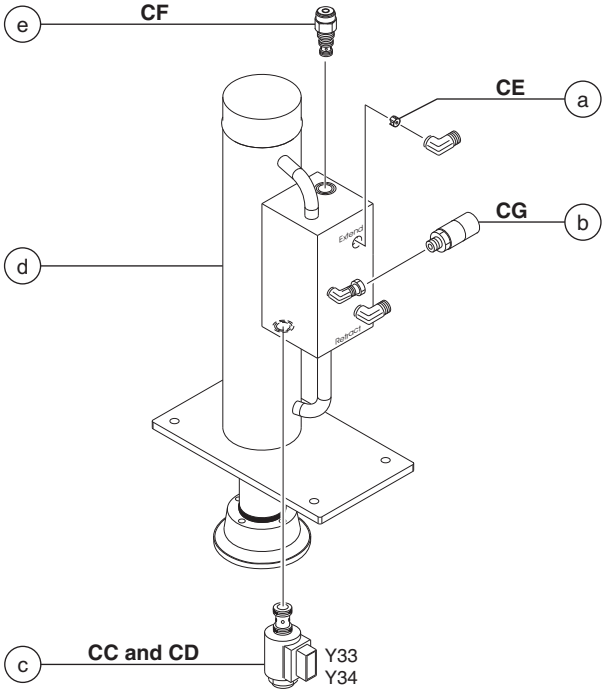

Non-steer End Outrigger

a orifice
b pressure transducer
c valve coil
d outrigger cylinder
e check valve

https://truckmanualshub.com/

Fault Codes

Observe and Obey:

- ☑ Troubleshooting and repair procedures shall be completed by a person trained and qualified on the repair of this machine.
- ☑ Immediately tag and remove from service a damaged or malfunctioning machine.
- ☑ Repair any machine damage or malfunction before operating the machine.
- ☑ Unless otherwise specified, perform each repair procedure with the machine in the following configuration:
  - Machine parked on a firm, level surface
  - Platform in the stowed position
  - Key switch in the off position with the key removed
  - The red Emergency Stop button in the off position at both ground and platform controls
  - Wheels chocked
  - All external AC power supply disconnected from the machine

Before Troubleshooting:

- ☑ Read, understand and obey the safety rules and operating instructions in the appropriate operator's manual on your machine.
- ☑ Be sure that all necessary tools and test equipment are available and ready for use.
- ☑ Read each appropriate fault code thoroughly. Attempting short cuts may produce hazardous conditions.
- ☑ Be aware of the following hazards and follow generally accepted safe workshop practices.

DANGER Crushing hazard. When testing or replacing any hydraulic component, always support the structure and secure it from movement.

WARNING Electrocution/burn hazard. Contact with electrically charged circuits could result in death or serious injury. Remove all rings, watches and other jewelry.

WARNING Bodily injury hazard. Spraying hydraulic oil can penetrate and burn skin. Loosen hydraulic connections very slowly to allow the oil pressure to dissipate gradually. Do not allow oil to squirt or spray.

https://truckmanualshub.com/

FAULT CODES

About This Section

When a malfunction is discovered, the fault code charts in this section will help a service professional pinpoint the cause of the problem. To use this section, basic hand tools and certain pieces of test equipment are required — voltmeter, ohmmeter, pressure gauges.

General Repair Process

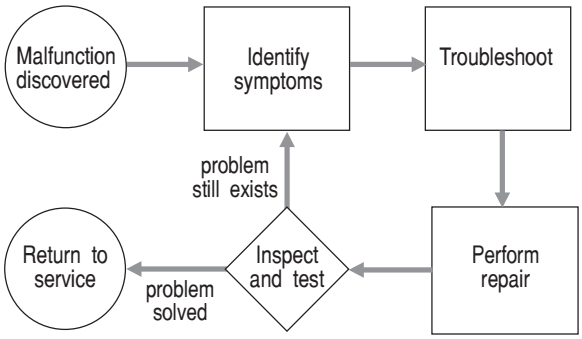

LED Diagnostic Readout

The diagnostic readout displays numerical codes that provide information about the machine operating status and about malfunctions. The dot to the right of the numbers remain on when a fault code is displayed.

The codes listed in the Fault Code Chart describe malfunctions and can aid in troubleshooting the machine by pinpointing the area or component affected.

https://truckmanualshub.com/

REV C

Fault Code Chart

Fault Code	Problem	Possible Causes	Solution
01	Internal ECM error.	EPROM not programmed.	Replace ECM.
02	ECM/Platform communication error.	Malfunctioning control cable OR malfunctioning platform controls.	Troubleshoot control cable OR troubleshoot platform controls.
03	Undefined platform DIP switch settings.	DIP switch settings incorrect.	Correct DIP switch settings.
12	Chassis up/down toggle closed at start up.	Malfunctioning up/down switch.	Troubleshoot up/down switch.
18	Pothole guard failure.	Malfunctioning pothole switch OR obstruction in pothole guard linkage.	Troubleshoot pothole switch OR remove obstruction.
19	Limit switch failure.	Malfunctioning limit switch OR wire disconnected from limit switch.	Troubleshoot limit switch OR inspect wire connection.
42	Platform left turn switch fault.	Malfunctioning steer left microswitch.	Troubleshoot steer left microswitch.
43	Platform right turn switch fault.	Malfunctioning steer right microswitch.	Troubleshoot steer right microswitch.
46	Platform drive enable switch fault.	Malfunctioning drive enable switch.	Troubleshoot drive enable switch.
47	Platform joystick fault.	Joystick potentiometer not centered.	Verify potentiometer setting.
52	Forward coil fault.	Malfunctioning coil OR wire disconnected from coil.	Troubleshoot coil OR inspect wire connection.
53	Reverse coil fault.	Malfunctioning coil OR wire disconnected from coil.	Troubleshoot coil OR inspect wire connection.
54	Up coil fault. (Not used on GS-3232)	Malfunctioning coil OR wire disconnected from coil.	Troubleshoot coil OR inspect wire connection.
55	Down coil fault.	Malfunctioning coil OR wire disconnected from coil.	Troubleshoot coil OR inspect wire connection.
56	Steer right coil fault.	Malfunctioning coil OR wire disconnected from coil.	Troubleshoot coil OR inspect wire connection.
57	Steer left coil fault.	Malfunctioning coil OR wire disconnected from coil.	Troubleshoot coil OR inspect wire connection.
58	Brake coil fault.	Malfunctioning coil OR wire disconnected from coil.	Troubleshoot coil OR inspect wire connection.
59	Series/parallel coil fault.	DIP switch settings are incorrect.	Troubleshoot and correct DIP switch settings.
68	Low battery voltage.	Batteries discharged.	Charge batteries.
LL	Off level fault.	Tilt of chassis exceeds level sensor setting	Reduce chassis angle.
OL	Overload cutout fault.	Too much weight in platform	Remove weight.

https://truckmanualshub.com/

Outrigger Control Pad

The outrigger control pad displays solid red or blinking red lights, as well as a audible alarm that provide information about the outrigger operating status and about malfunctions.

The codes listed in the Outrigger Fault Code Chart describe malfunctions and can aid in troubleshooting the machine by pinpointing the area or component affected.

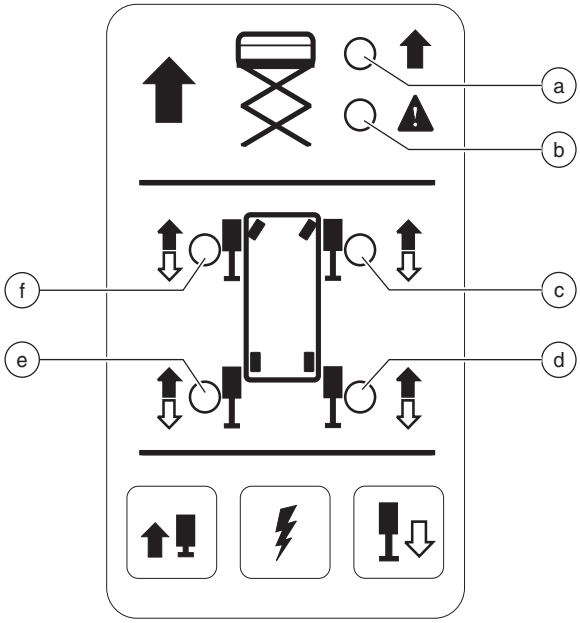

Outrigger Control Pad

a lift enable
b lift error
c right front outrigger
d right rear outrigger
e left rear outrigger
f left front outrigger

https://truckmanualshub.com/

REV B

Outrigger Fault Code Chart

Fault Code	Problem	Possible Causes	Solution
Lift error light blinks red 2 times.	Up coil fault.	Malfunctioning coil OR wire disconnected from coil.	Troubleshoot coil OR inspect wire connection.
Left front outrigger light blinks red 2 times.	Left front outrigger coil fault.	Malfunctioning coil OR wire disconnected from coil.	Troubleshoot coil OR inspect wire connection.
Right front outrigger light blinks red 2 times.	Right front outrigger coil fault.	Malfunctioning coil OR wire disconnected from coil.	Troubleshoot coil OR inspect wire connection.
Right rear outrigger light blinks red 2 times.	Right rear outrigger coil fault.	Malfunctioning coil OR wire disconnected from coil.	Troubleshoot coil OR inspect wire connection.
Left rear outrigger light blinks red 2 times.	Left rear outrigger coil fault.	Malfunctioning coil OR wire disconnected from coil.	Troubleshoot coil OR inspect wire connection.
Left front outrigger light blinks red 3 times.	Left front outrigger pressure transducer fault.	Ground short OR wire disconnected from pressure transducer.	Inspect wire connection.
Right front outrigger light blinks red 3 times.	Right front outrigger pressure transducer fault.	Ground short OR wire disconnected from pressure transducer.	Inspect wire connection.
Right rear outrigger light blinks red 3 times.	Right rear outrigger pressure transducer fault.	Ground short OR wire disconnected from pressure transducer.	Inspect wire connection.
Left rear outrigger light blinks red 3 times.	Left rear outrigger pressure transducer fault.	Ground short OR wire disconnected from pressure transducer.	Inspect wire connection.
Left front outrigger light blinks red 4 times.	Left front outrigger pressure transducer fault.	Short to power.	Troubleshoot the harness to the pressure transducer OR replace the harness.
Right front outrigger light blinks red 4 times.	Right front outrigger pressure transducer fault.	Short to power.	Troubleshoot the harness to the pressure transducer OR replace the harness.

Outrigger fault code chart cotinued on next page.

https://truckmanualshub.com/

OUTRIGGER FAULT CODES cont. REV B

Fault Code	Problem	Possible Causes	Solution
Right rear outrigger light blinks red 4 times.	Right rear outrigger pressure transducer fault.	Short to power.	Troubleshoot the harness to the pressure transducer OR replace the harness.
Left rear outrigger light blinks red 4 times.	Left rear outrigger pressure transducer fault.	Short to power.	Troubleshoot the harness to the pressure transducer OR replace the harness.
Outrigger lights blink red, alternating front to rear.	Outrigger level sensor fault.	Ground short OR wire disconnected from level sensor.	Inspect wire connection.
Outrigger lights blink red, alternating left to right.	Outrigger level sensor fault.	Short to power.	Troubleshoot the harness to the outrigger sensor OR replace the harness.
Outrigger lights blink red in a clockwise sequence.	Extend coil fault.	Malfunctioning coil OR wire disconnected from coil.	Troubleshoot coil OR inspect wire connection.
Outrigger lights blink red in a counter clockwise sequence.	Retract coil fault.	Malfunctioning coil OR wire disconnected from coil.	Troubleshoot coil OR inspect wire connection.
All lights turn red on initial power up and the alarm sounds.	No calibration data.	Outrigger level sensor and pressure transducers not calibrated.	Calibrate the outrigger level sensor and pressure transducers.
During operation, all lights turn red and all functions cut out.	Motor controller fault.	Motor controller throttle short.	Troubleshoot the harness to the motor controller OR replace the harness.
After auto-leveling the machine, all lights turn red and the alarm sounds.	Outrigger off level fault.	Machine is out of level OR all outriggers are not in contact with the ground.	Relocate the machine OR redeploy the outriggers.
All lights turn red and the alarm sounds. (Only while calibrating the outrigger level sensor.)	Outrigger level sensor fault.	Outrigger level sensor installed incorrectly OR the machine in not on level ground.	Troubleshoot outrigger level sensor.
All lights turn red and the alarm sounds. (Only while calibrating the outrigger pressure transducers.)	Outrigger pressure transducer fault.	Pressure transducer installed incorrectly, in improper position, or faulty.	Make sure the pressure transducers are wired correctly and functioning properly.
Individual OR light turns solid red and the alarm sounds. (While auto leveling.)	Outrigger has reached End of Stroke. (EOS)	Slope too steep to level machine.	Retract outriggers and repeat auto level procedure.

https://truckmanualshub.com/

Schematics

Observe and Obey:

- ☑ Troubleshooting and repair procedures shall be completed by a person trained and qualified on the repair of this machine.
- ☑ Immediately tag and remove from service a damaged or malfunctioning machine.
- ☑ Repair any machine damage or malfunction before operating the machine.

Before Troubleshooting:

- ☑ Read, understand and obey the safety rules and operating instructions in the appropriate operator's manual on your machine.
- ☑ Be sure that all necessary tools and test equipment are available and ready for use.

About This Section

There are two groups of schematics in this section. An illustration legend precedes each group of drawings.

Electrical Schematics

⚠WARNING Electrocution/burn hazard. Contact with electrically charged circuits could result in death or serious injury. Remove all rings, watches and other jewelry.

Hydraulic Schematics

⚠WARNING Bodily injury hazard. Spraying hydraulic oil can penetrate and burn skin. Loosen hydraulic connections very slowly to allow the oil pressure to dissipate gradually. Do not allow oil to squirt or spray.

General Repair Process

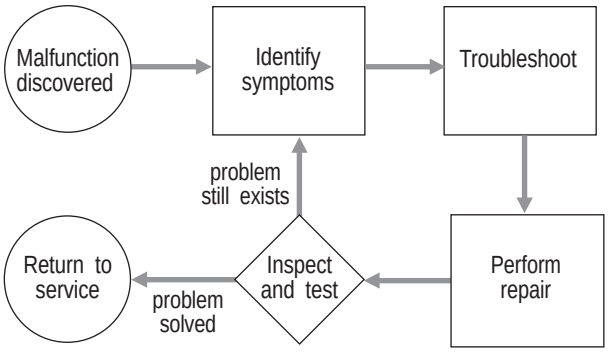

https://truckmanualshub.com/

Electrical Component Legend

REV C

ELECTRICAL COMPONENT LEGEND	
Item	**Description**
B5	Battery
BN	Button
	BN5 = Horn BN6 = High torque BN8 = Drive select BN9 = Lift select BN105 = Outrigger extend (GS-3232) BN106 = Outrigger function enable (GS-3232) BN107 = Outrigger retract (GS-3232)
C5	Capacitor, 4700 uF
CB2	Circuit breaker, 7A
CR	Control relay
	CR5 = Horn relay (with H2 option) CR27A = Overload (motor controller) (option) CR27B = Overload (load sense) (option) CR27C = Overload (down coil) (option) CR27D = Overload (down delay) (option) CR48 = Power relay to U5 (e-stop)
D7	Voltage regulator (Platform controls circuit board)
F6	Fuse, 275A
FB	Flashing beacons
G	Gauge
	G6 = Hour meter G8 = Diagnostic Display
GND	Ground
H	Horn or alarm
	H1 = Horn H2 = Automotive-style horn (option) H5 = Multifunction alarm H8 = Multifunction alarm outrigger control pad (GS-3232)
JC1	Joystick controller
KS1	Key switch
L	LED or light
	L16 = Lift L17 = Drive L21 = High torque L30 = Work light (option) L51 = LF outrigger (GS-3232) L52 = RF outrigger (GS-3232) L53 = LR outrigger (GS-3232) L54 = RR outrigger (GS-3232) L69 = Lift enable (outrigger control pad) (GS-3232) L70 = Lift error (outrigger control pad) (GS-3232)
LS	Limit switch
	LS5 = Platform up (option) LS5A = Up Limit Switch (GS-3232) LS5B = Up Limit Switch (GS-3232) LS6 = Platform down LS7 = Pothole LS8 = Pothole
M5	Hydraulic power unit
NC	Normally closed
NCHO	Normally closed held open
NOHC	Normally open held closed

ELECTRICAL COMPONENT LEGEND cont.	
Item	**Description**
P	Power switch
	P1 = Emergency Stop button at ground controls P2 = Emergency Stop button at platform controls
PS2	Platform overload pressure switch (option)
PT	Pressure transducer
	PT1 = Left front outrigger (GS-3232) PT2 = Right front outrigger (GS-3232) PT3 = Right rear outrigger (GS-3232) PT4 = Left rear outrigger (GS-3232)
QD	Quick disconnect
	QD1 = Battery quick disconnect QD3 = Control cable to ground QD4 = Control cable to platform QD20 = Cable to outrigger control pad (GS-3232)
R	Resistor
	R24 = 25 ohm
SW	Switch
	SW5 = Function enable SW6 = Steer left/right
S	Sensor
	S7 = Tilt level sensor S8 = 2 axis tilt level sensor (GS-3232)
TS66	Platform up/down toggle switch
U	Electronic component
	U3 = Platform controls printed circuit board U5 = Electronic control module U6 = Motor controller U9 = Battery charger U13 = Voltage inverter (option) U27 = 47 mH inductor, noise suppression U36 = Outrigger control printed circuit board (GS-3232) U39 = Outrigger control CPU (GS-3232) U40 = Outrigger control power supply chip (GS-3232) U41 = Outrigger control transmit/receive chip (GS-3232) U42 = Outrigger electronic control module (GS-3232)
Y	Valve coil
	Y1 = Parallel (GS-2032, GS-2632 and all GS-46) Y3 = Steer right Y4 = Steer left Y5 = Drive reverse Y6 = Drive forward Y7 = Platform down Y8 = Platform up Y9 = Platform down (GS-3246) Y33 = Left rear outrigger (GS-3232) Y34 = Right rear outrigger (GS-3232) Y35 = Left front outrigger (GS-3232) Y36 = Right front outrigger (GS-3232) Y39 = Outrigger retract (GS-3232) Y40 = Outrigger extend (GS-3232)

https://truckmanualshub.com/

Wire Color Legend

REV B

WIRE COLOR LEGEND	
Color	**Description**
BK	Black
BL	Blue
BL/BK	Blue/Black
BL/WH	Blue/White
BN	Brown
GN	Green
GN/BK	Green/Black
GN/WH	Green/White
GY	Gray
OR	Orange
OR/BK	Orange/Black
OR/WH	Orange/White
PP	Purple
RD	Red
RD/BK	Red/Black
RD/WH	Red/White
WH	White
WH/BK	White/Black

https://truckmanualshub.com/

ECM Pin-out Legend

REV D

ECM PIN-OUT LEGEND	
Item	**Description**
A1	Flashing beacon FB (output)
A2	Ground from platform controls (input) (White wire at platform controls)
A3	Plug
A4	Driver power (input)
A5	Level sensor power S7 (output)
A6	Platform up coil Y8 (output)
A7	Drive reverse coil Y5 (output)
A8	Motor controller U6, terminal 1
A9	Motor controller U6, terminal 3
A10	Overload sensor PS2 (input)
A11	Key switch to platform control (input)
A12	Platform down TS66 (input)
B1	Platform data link (high) (input) (Blue wire at platform controls)
B2	Plug
B3	ECM ground (output)
B4	Plug
B5	Plug
B6	Platform down coil Y7 (output)
B7	Steer left coil Y4 (output)
B8	Automotive-style horn H2 (option) (output)
B9	Multi-function alarm H5 (output)
B10	Pothole limit switch (input)
B11	Drive enable power/up limit switch (input)
B12	Platform up TS66 (input)
C1	Platform data link (low) (input) (Orange wire at platform controls)
C2	Power from platform controls to ECM (input) (Red wire at platform controls)
C3	Plug
C4	Plug
C5	Not used
C6	Drive forward coil Y6 (output)
C7	Steer right coil Y3 (output)
C8	Parallel coil Y1 (not available on GS-1530/32 and GS-1930/32)
C9	Work light L30 (option)
C10	Not used
C11	Level sensor signal S7 (input)
C12	Down limit switch LS66 (input)

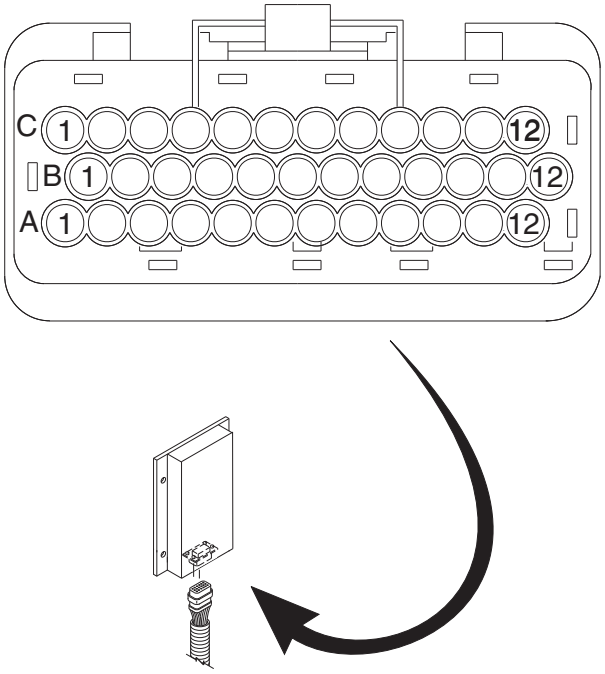

https://truckmanualshub.com/

Outrigger ECM Pin-out Legend

REV A

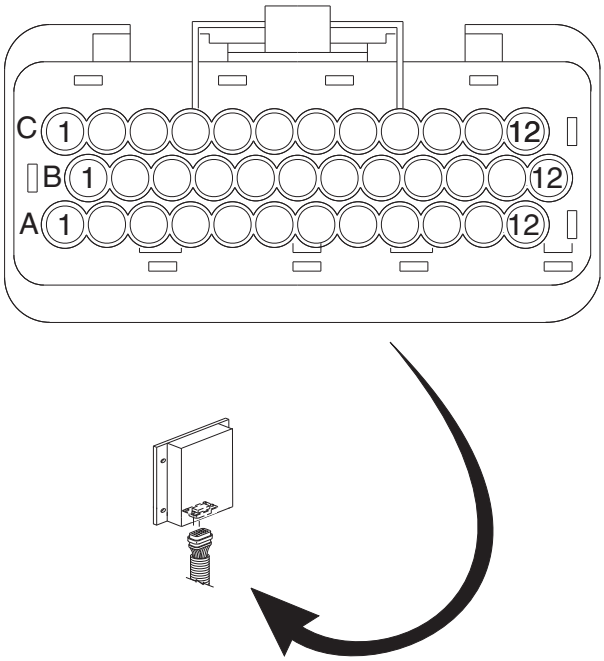

OUTRIGGER ECM PIN-OUT LEGEND	
Item	**Description**
A1	24V C
A2	24V CC
A3	Right rear outrigger pressure transducer signal (input)
A4	Right front outrigger pressure transducer signal (input)
A5	Left rear outrigger pressure transducer signal (input)
A6	Left front outrigger pressure transducer signal (input)
A7	2 axis tilt level sensor - pitch S8 (input)
A8	2 axis tilt level sensor - roll S8 (input)
A9	Outrigger data link (high) (input)
A10	Outrigger data link (lo) (input)
A11	Power for platform controller (output)
A12	Ground for platform controller (output)
B1	Outrigger ECM ground (input)
B2	Plug
B3	Plug
B4	Motor controller throttle (output)
B5	Motor controller enable (input)
B6	Height limit signal (input)
B7	Down limit switch LS66 (input)
B8	Key switch KS1 (input)
B9	Up signal from Gen 5 ECM U5 (input)
B10	Drive reverse Y5 (input)
B11	Drive forward Y6 (input)
B12	24V A
C1	24V B
C2	Plug
C3	Outrigger retract Y39 (output)
C4	Outrigger extend Y40 (output)
C5	Left front outrigger Y35 (output)
C6	Right front outrigger Y36 (output)
C7	Left rear outrigger Y33 (output)
C8	Right rear outrigger Y34 (output)
C9	Motor controller enable (output)
C10	Outrigger transducer, 2 axis tilt level sensor S8 and up limit switch LS5A power (output)
C11	Platform up Y8 (output)
C12	Drive enable

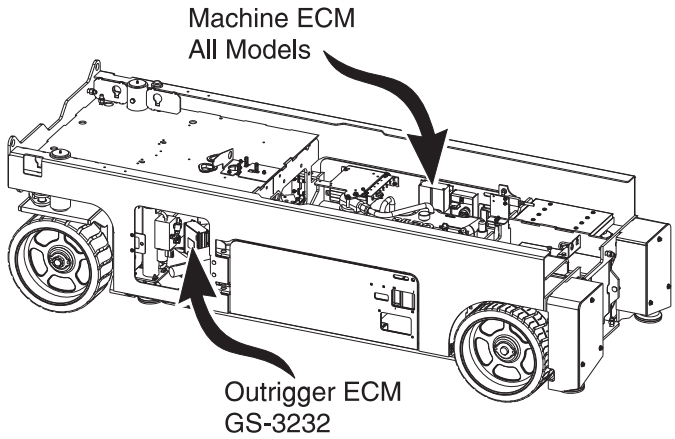

https://truckmanualshub.com/

Wiring Diagram

Ground Controls and Level Sensor Harness

REV B

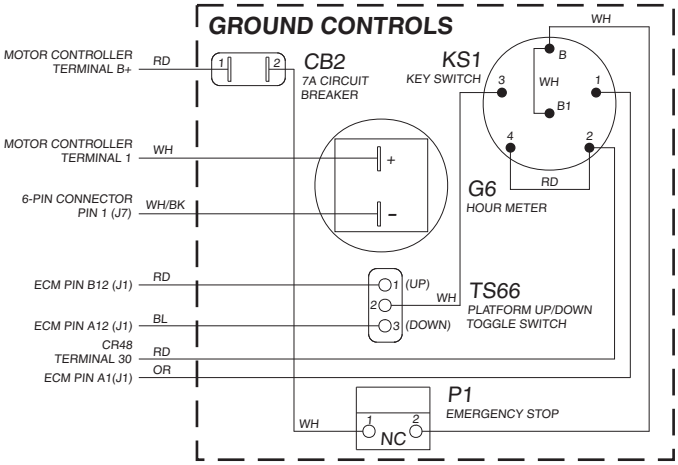

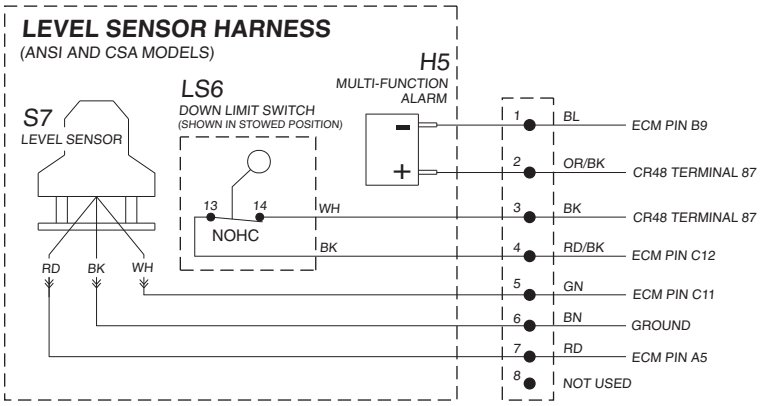

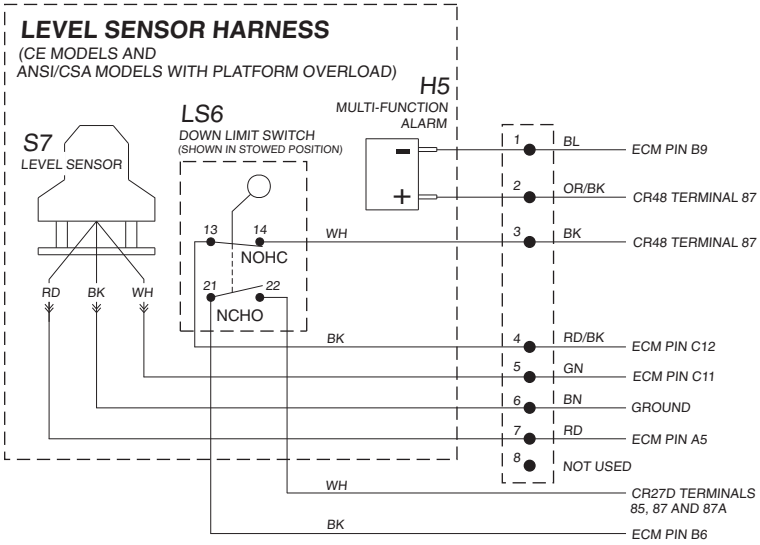

https://truckmanualshub.com/

Wiring Diagram

REV B

Platform Control Box and Outrigger Control Pad

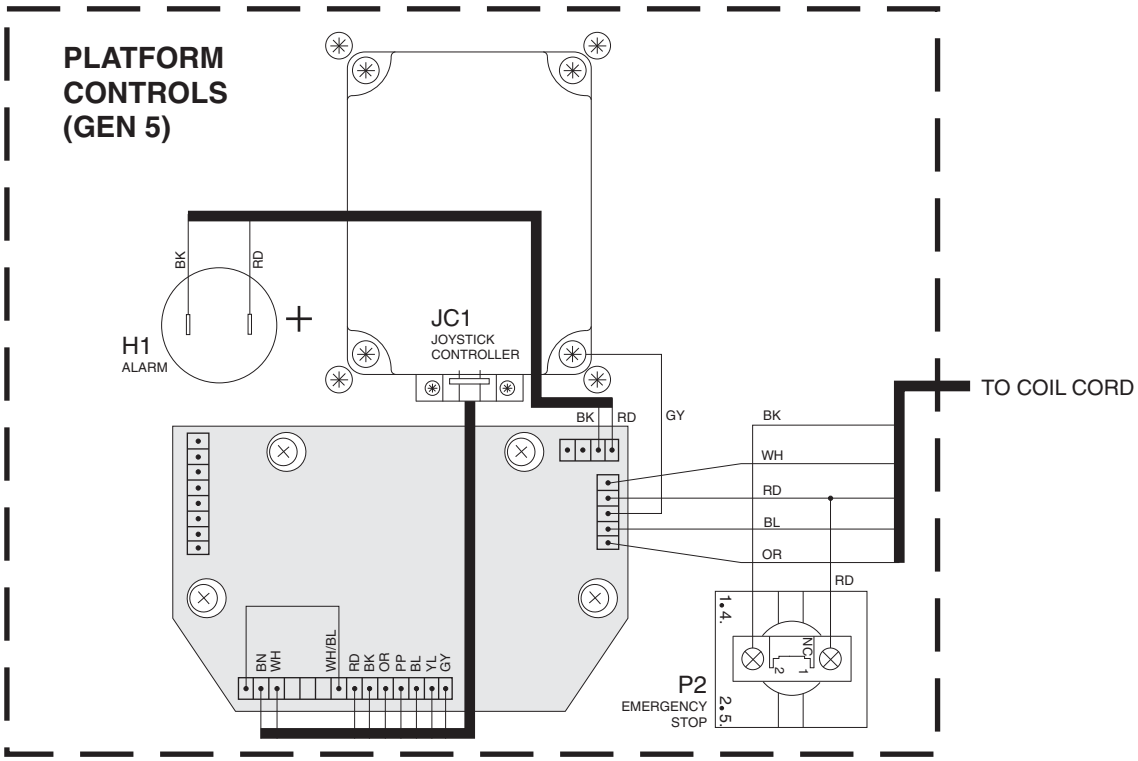

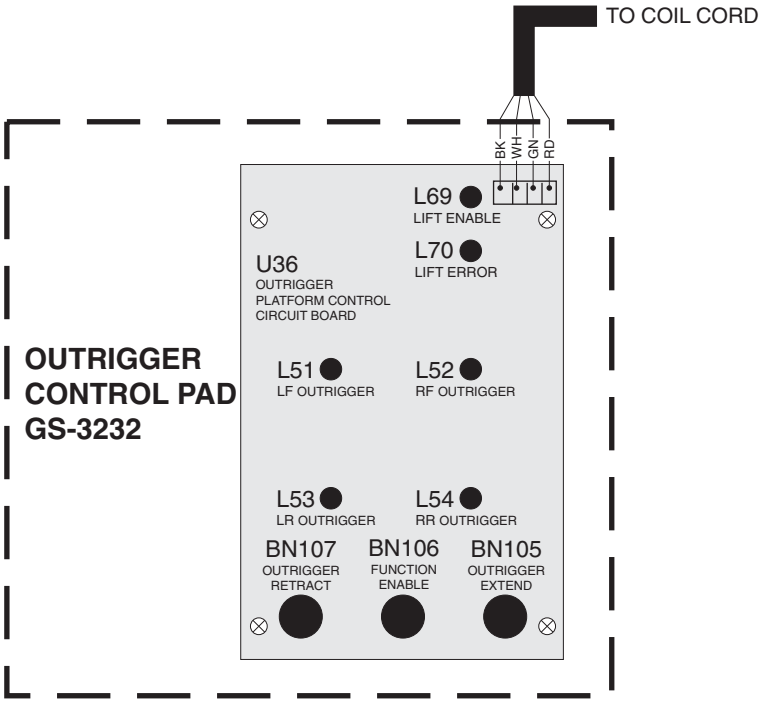

https://truckmanualshub.com/

Limit Switch Legend

REV C

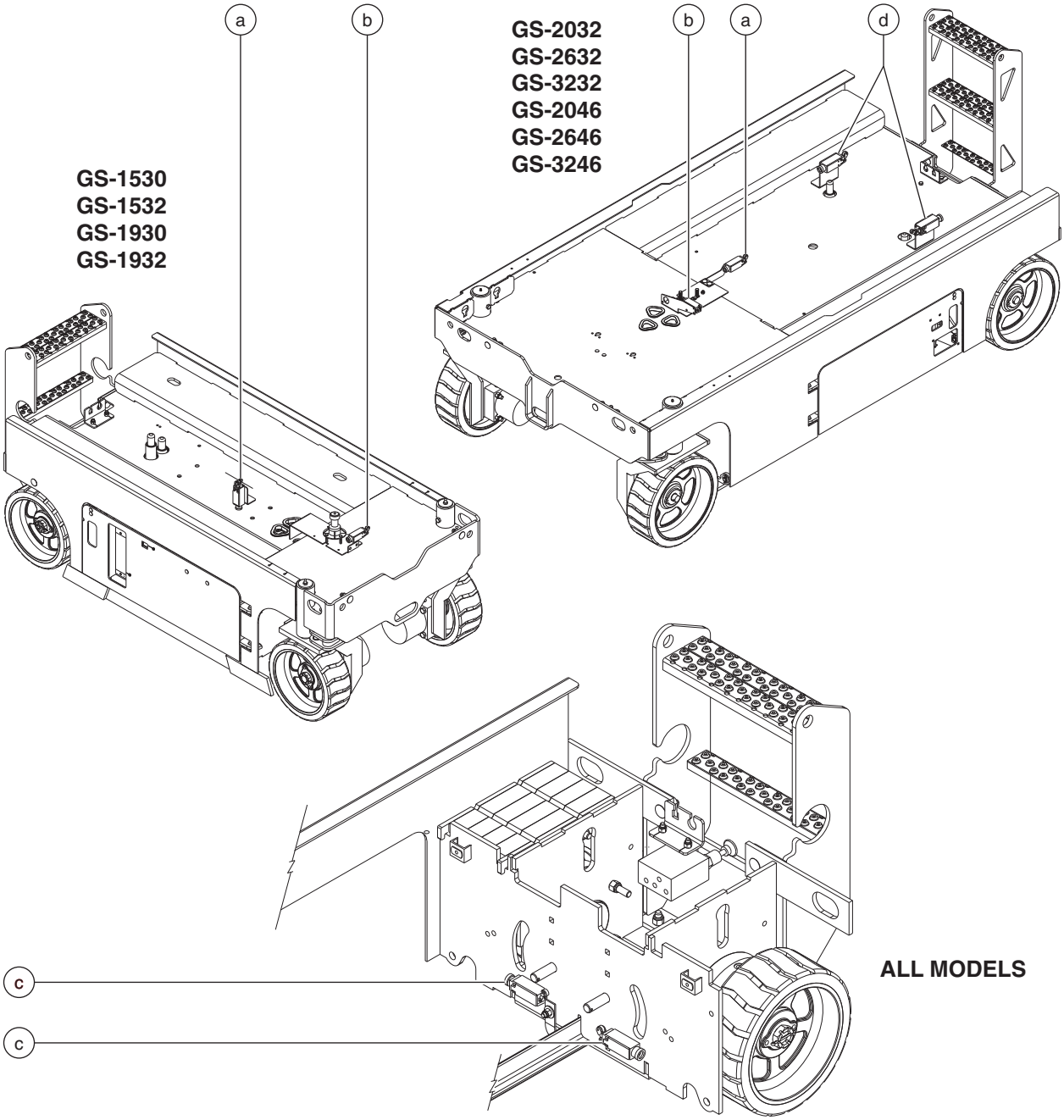

Limit Switch Legend

a maximum height limit switch LS5 (CE models)
b down limit switch LS6
c pothole switches LS7, LS8
d 22 ft / 6.7 m maximum drive height when outriggers are not deployed LS5A (GS-3232)

https://truckmanualshub.com/

Electrical Symbols Legend

REV B

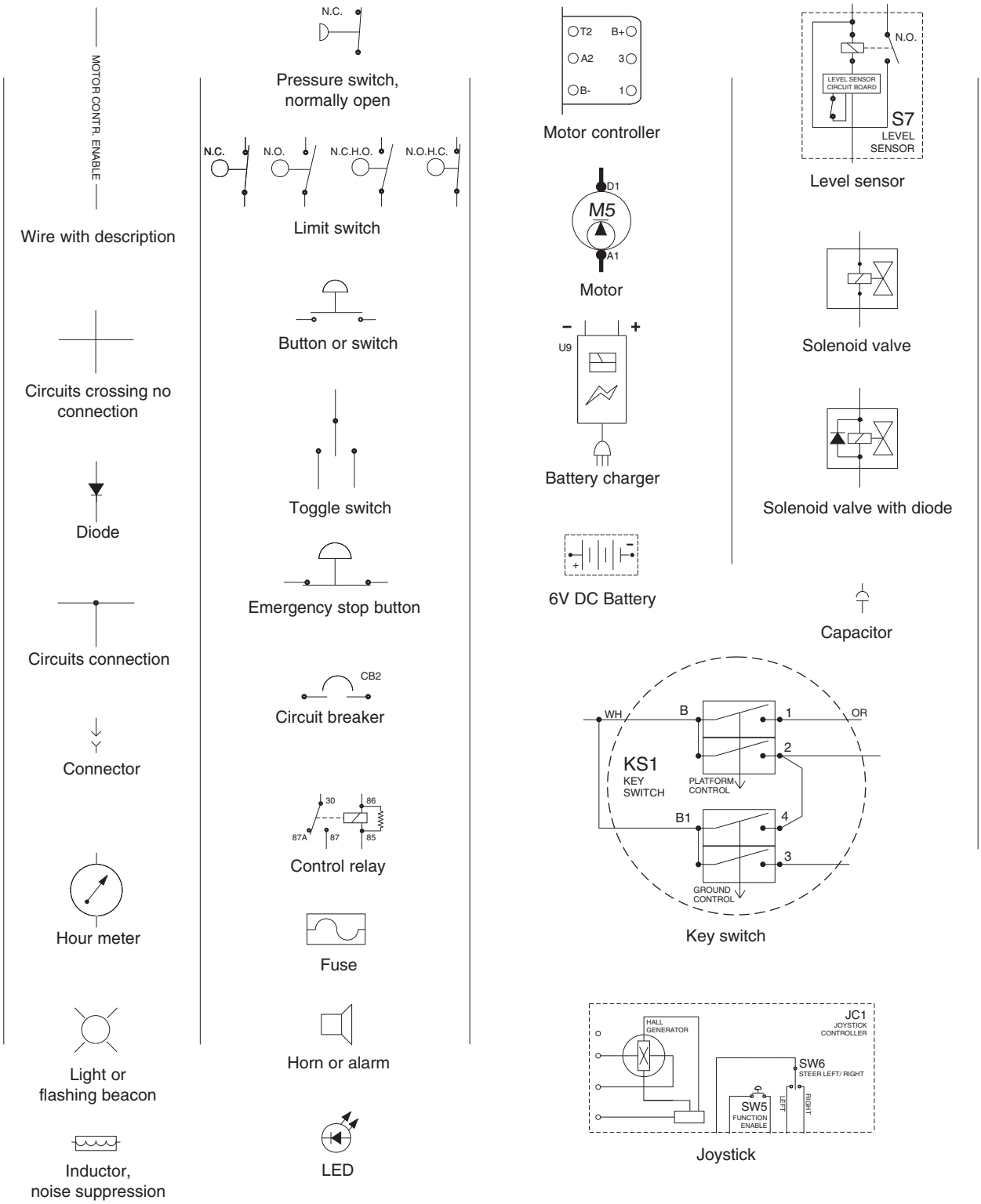

https://truckmanualshub.com/

Electrical Schematic

ANSI, CSA and Australia Models

REV E

GS-1530/1532/1930/1932 (from serial number GS3005A-76000 to GS3006A-83067)
GS-1530/1532/1930/1932 (from serial number GS3005B-76000 to GS3006B-79659)

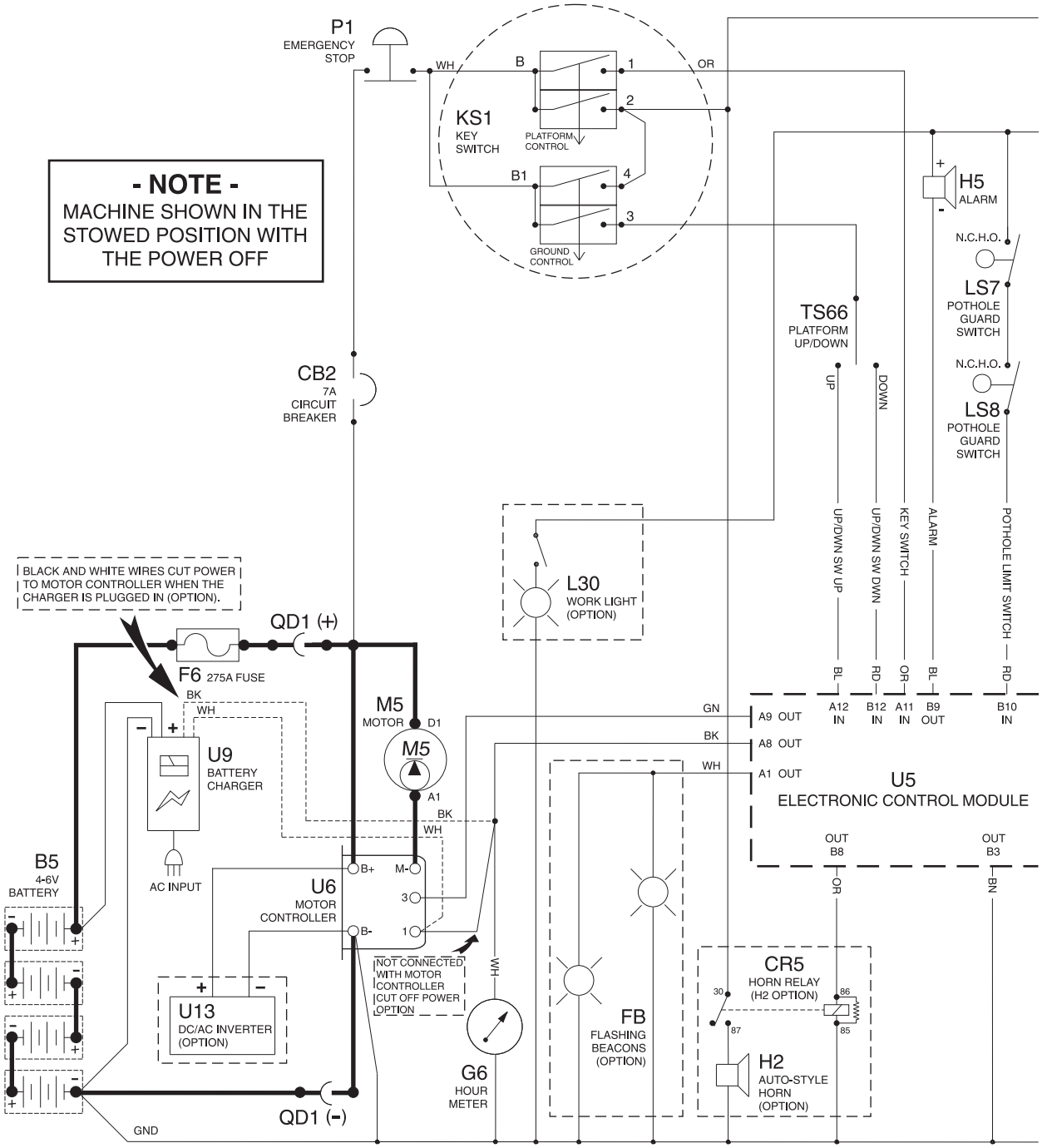

ES0141H

https://truckmanualshub.com/

Electrical Schematic

REV E

ANSI, CSA and Australia Models

GS-1530/1532/1930/1932 (from serial number GS3005A-76000 to GS3006A-83067)
GS-1530/1532/1930/1932 (from serial number GS3005B-76000 to GS3006B-79659)

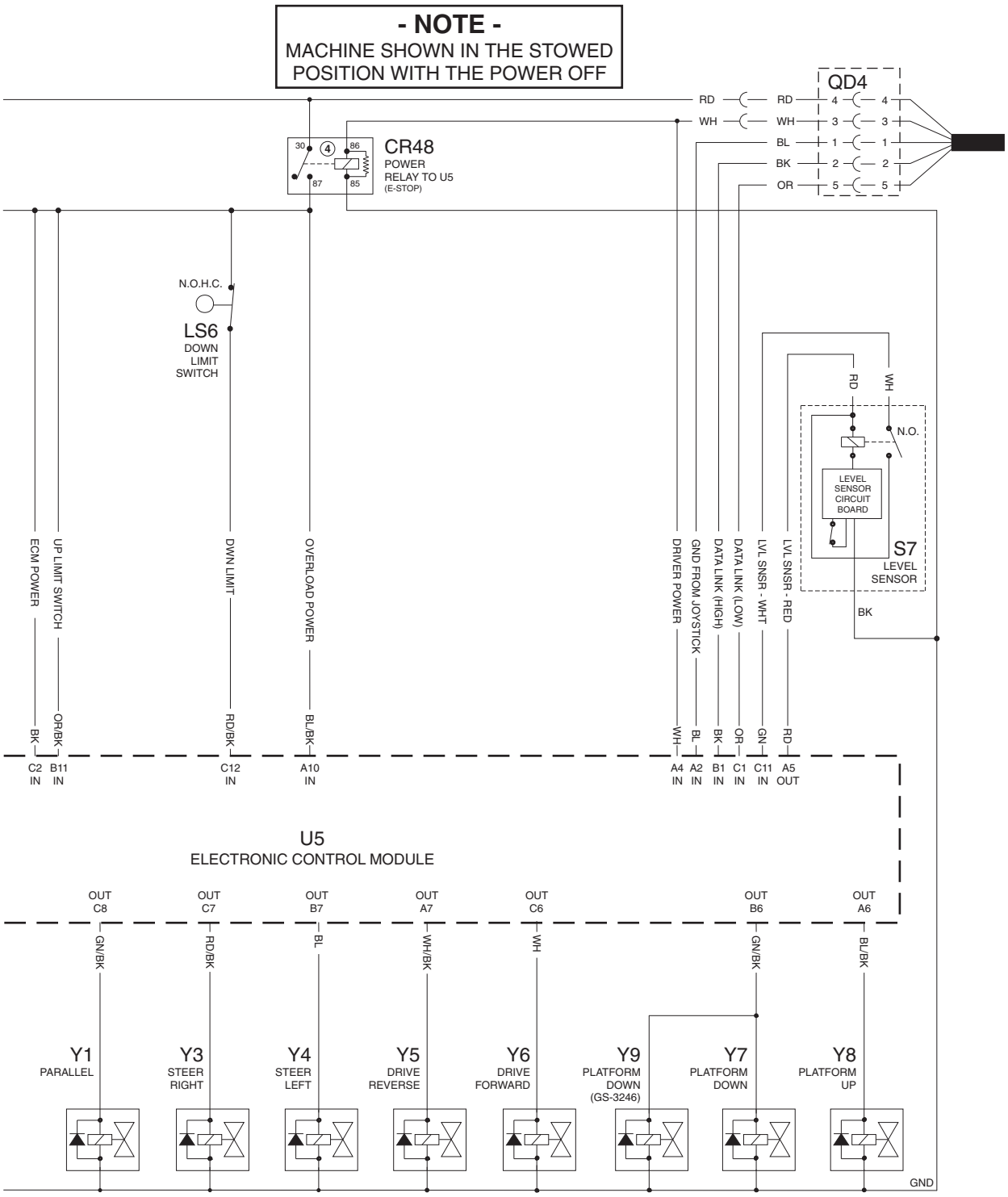

ES0141H

https://truckmanualshub.com/

Electrical Schematic

ANSI, CSA and Australia Models

REV E

GS-1530/1532/1930/1932 (from serial number GS3005A-76000 to GS3006A-83067)
GS-1530/1532/1930/1932 (from serial number GS3005B-76000 to GS3006B-79659)

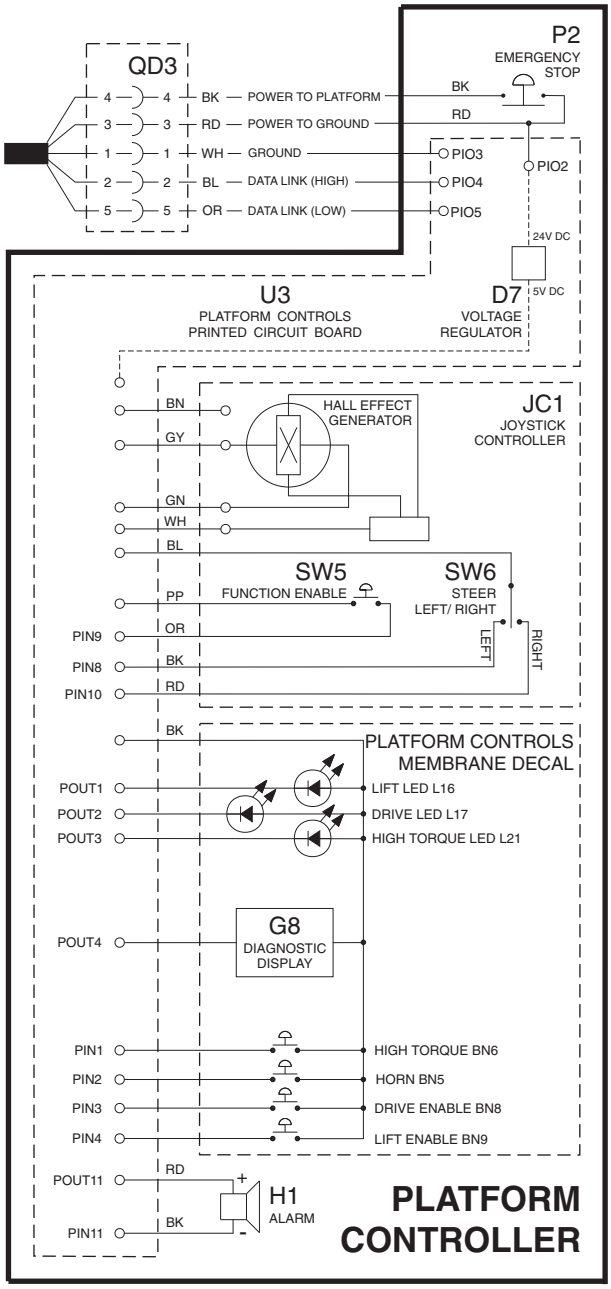

ES0141H

https://truckmanualshub.com/

This page intentionally left blank.

https://truckmanualshub.com/

Electrical Schematic

ANSI, CSA and Australia Models REV C

GS-1530/1532/1930/1932 (from serial number GS3006A-83068 to GS3007A-87490)
GS-1530/1532/1930/1932 (from serial number GS3006B-79660 to GS3007B-82543)

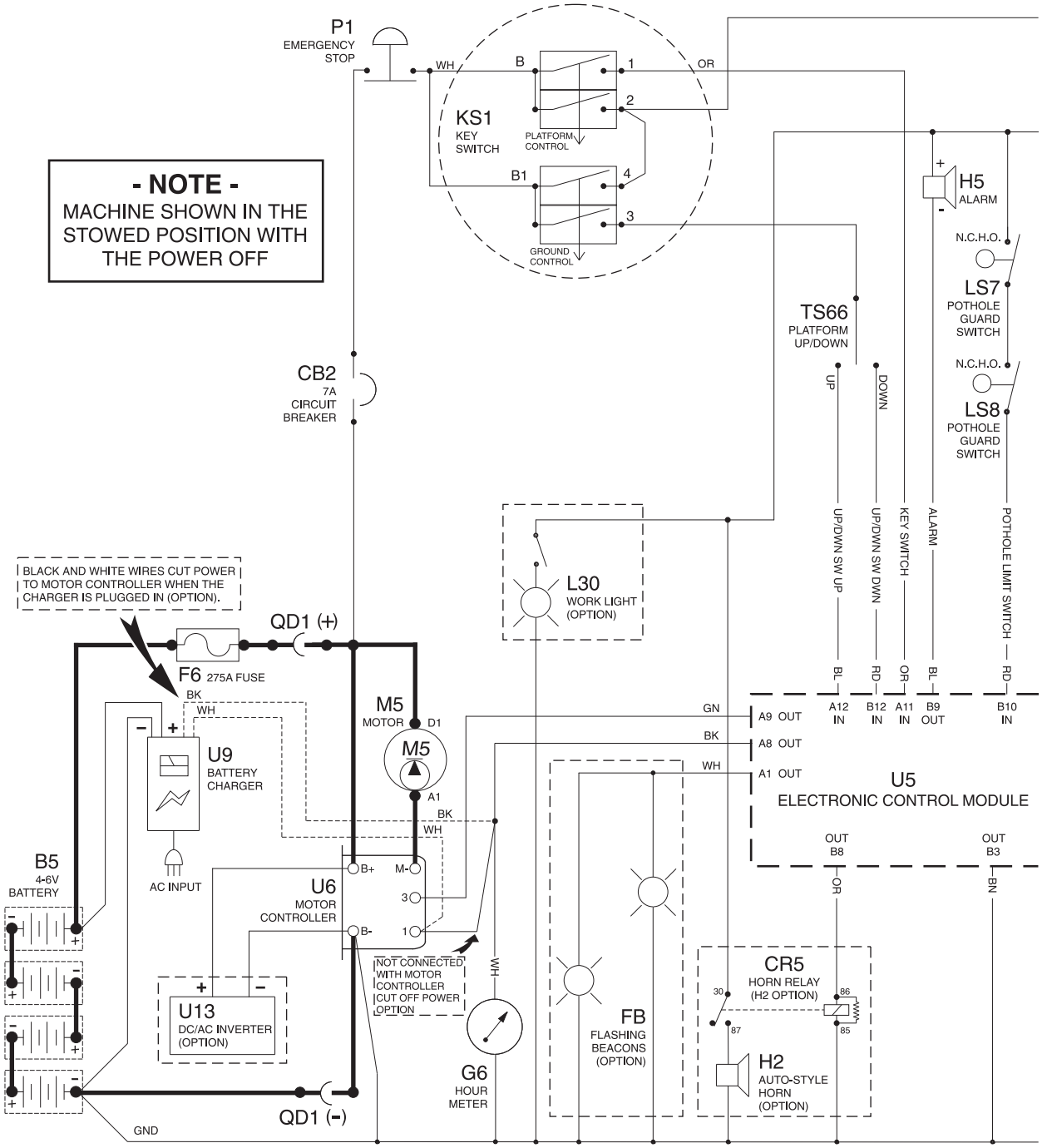

ES0141K

https://truckmanualshub.com/

Electrical Schematic

REV C

ANSI, CSA and Australia Models

GS-1530/1532/1930/1932 (from serial number GS3006A-83068 to GS3007A-87490)
GS-1530/1532/1930/1932 (from serial number GS3006B-79660 to GS3007B-82543)

- NOTE -
MACHINE SHOWN IN THE STOWED POSITION WITH THE POWER OFF

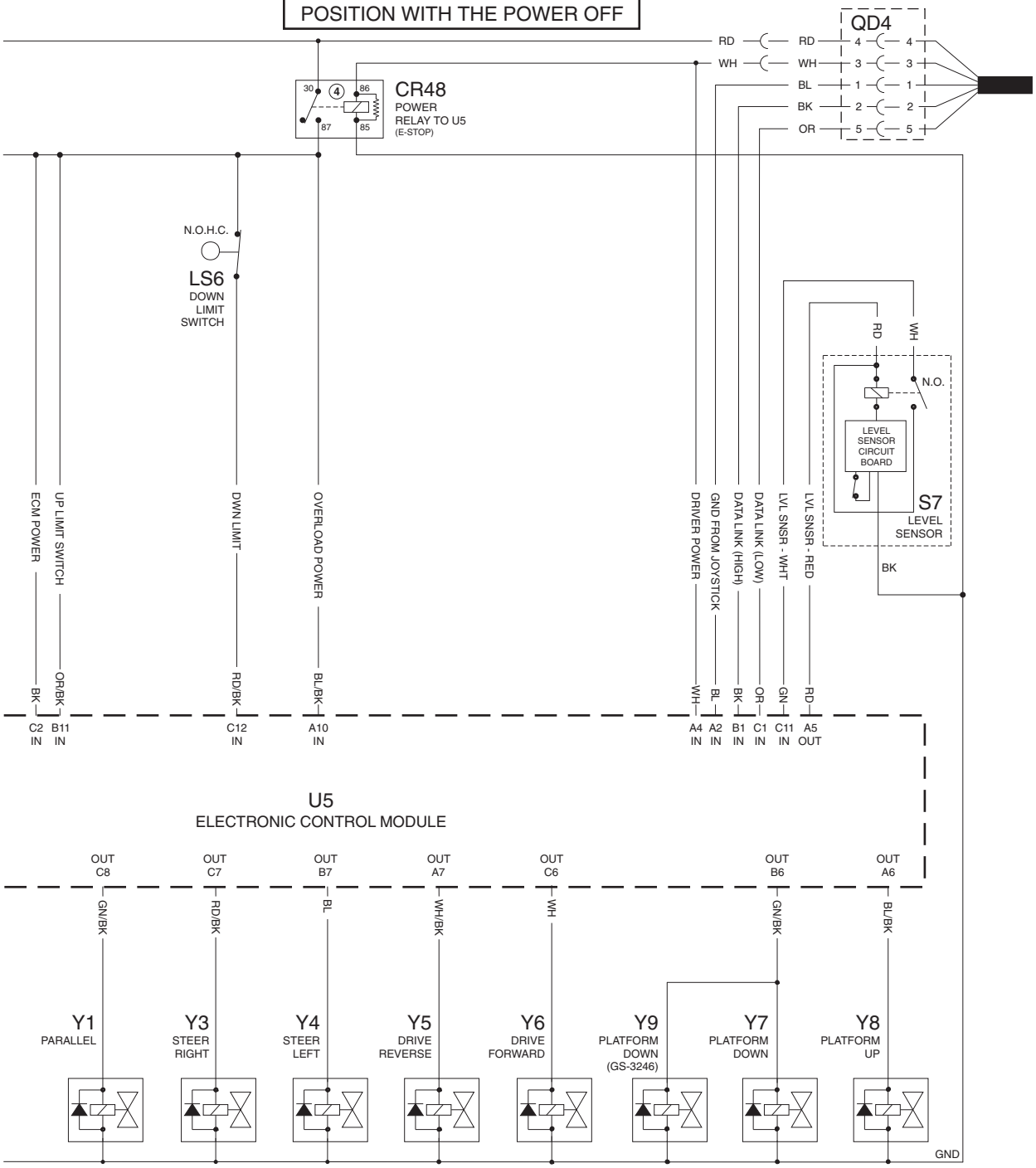

ES0141K

https://truckmanualshub.com/

Electrical Schematic

ANSI, CSA and Australia Models

REV C

GS-1530/1532/1930/1932 (from serial number GS3006A-83068 to GS3007A-87490)
GS-1530/1532/1930/1932 (from serial number GS3006B-79660 to GS3007B-82543)

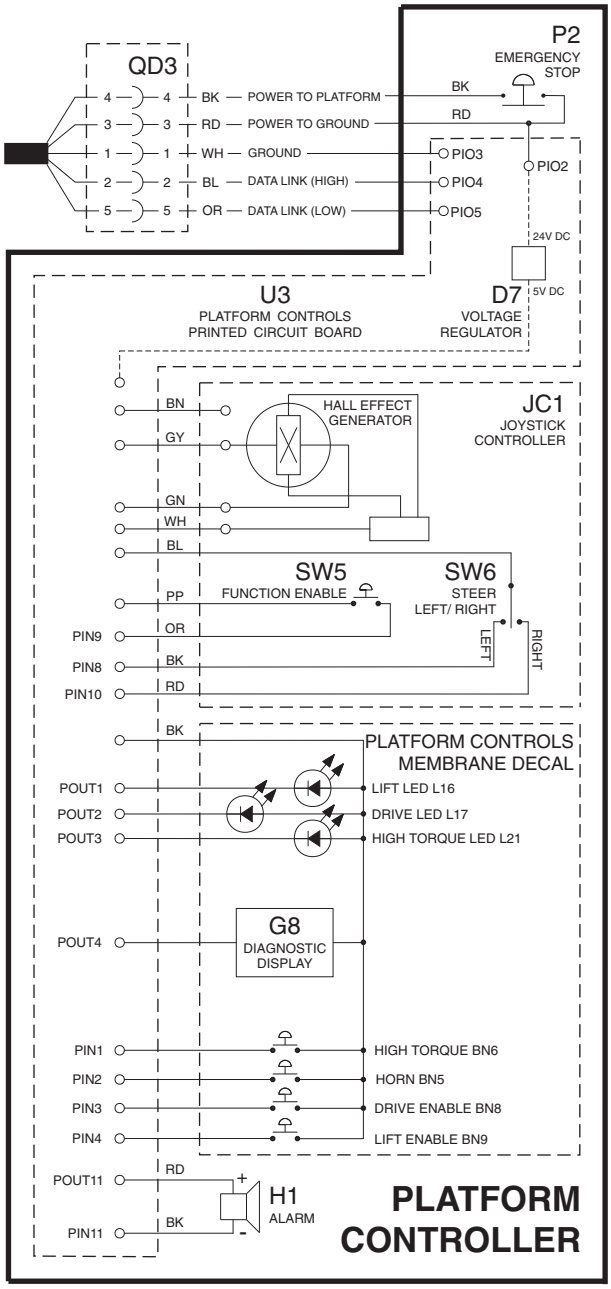

ES0141K

https://truckmanualshub.com/

This page intentionally left blank.

https://truckmanualshub.com/

Electrical Schematic

ANSI, CSA and Australia Models

REV B

GS-1530/1532/1930/1932 (from serial number GS3007A-87491 to GS3007A-89537)
GS-1530/1532/1930/1932 (from serial number GS3007B-82544 to GS3007B-84599)

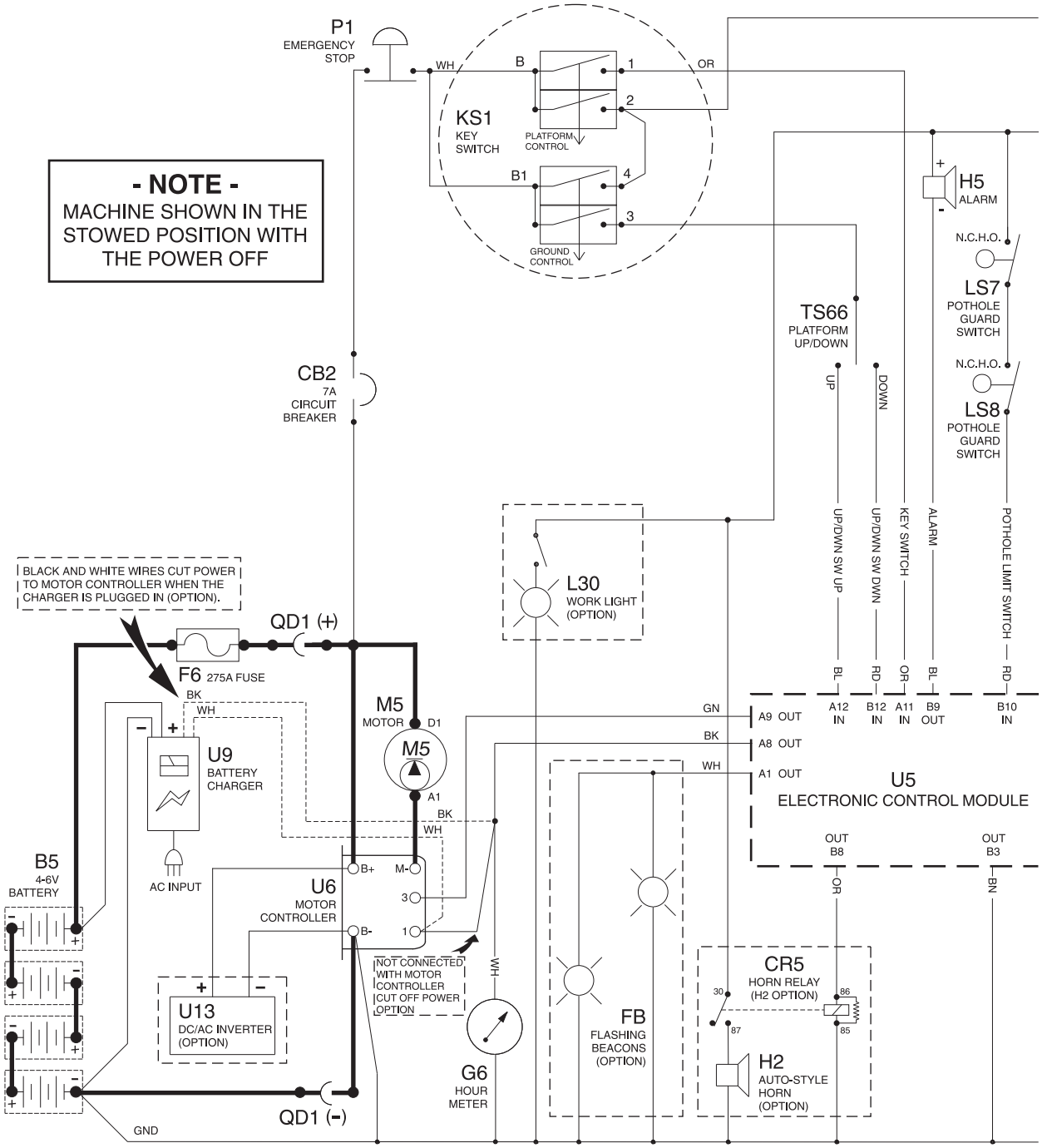

ES0141M

https://truckmanualshub.com/

Electrical Schematic

REV B

ANSI, CSA and Australia Models

GS-1530/1532/1930/1932 (from serial number GS3007A-87491 to GS3007A-89537)
GS-1530/1532/1930/1932 (from serial number GS3007B-82544 to GS3007B-84599)

- NOTE -
MACHINE SHOWN IN THE STOWED POSITION WITH THE POWER OFF

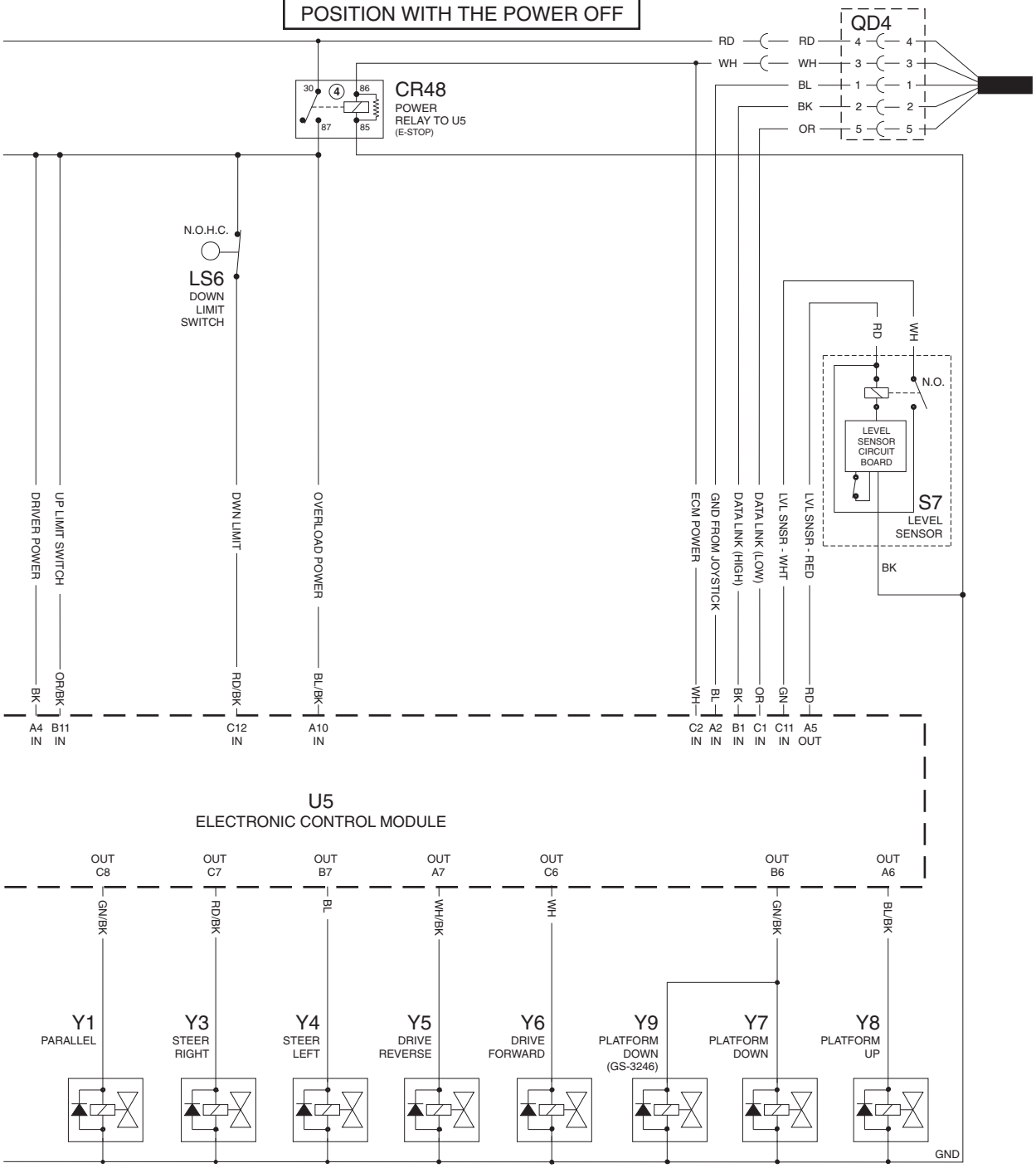

ES0141M

https://truckmanualshub.com/

Electrical Schematic

ANSI, CSA and Australia Models

REV B

GS-1530/1532/1930/1932 (from serial number GS3007A-87491 to GS3007A-89537)
GS-1530/1532/1930/1932 (from serial number GS3007B-82544 to GS3007B-84599)

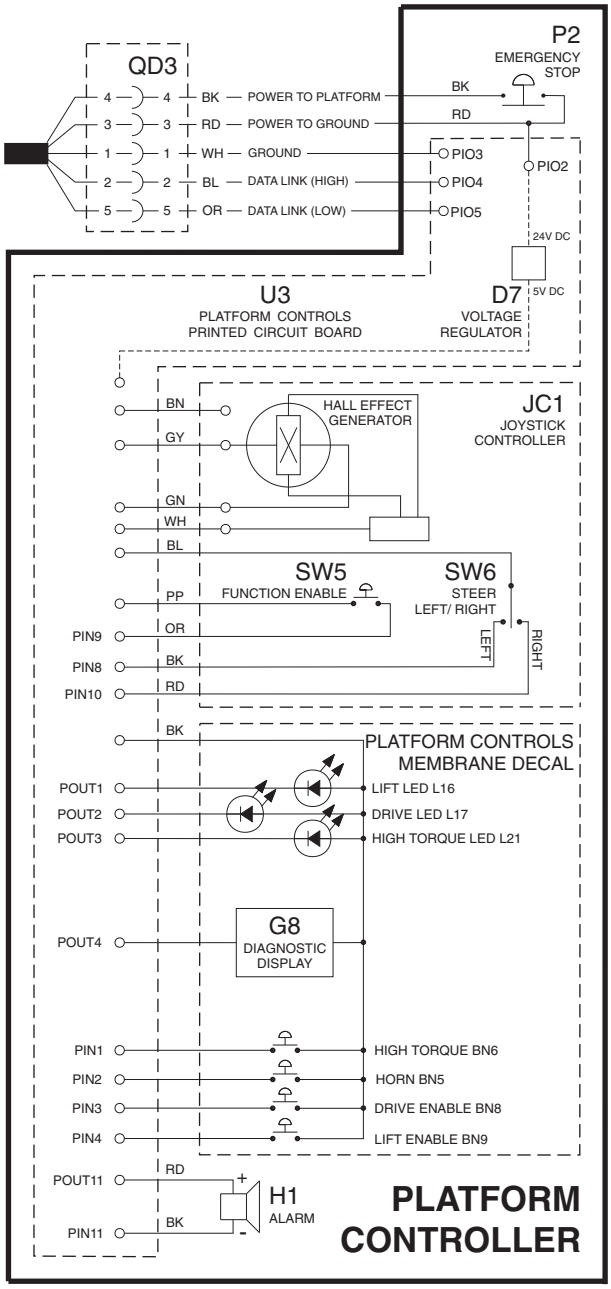

ES0141M

https://truckmanualshub.com/

This page intentionally left blank.

https://truckmanualshub.com/

Electrical Schematic

ANSI, CSA and Australia Models

REV C

GS-1530/1532/1930/1932 (after serial number GS3007A-89537)
GS-1530/1532/1930/1932 (after serial number GS3007B-84599)

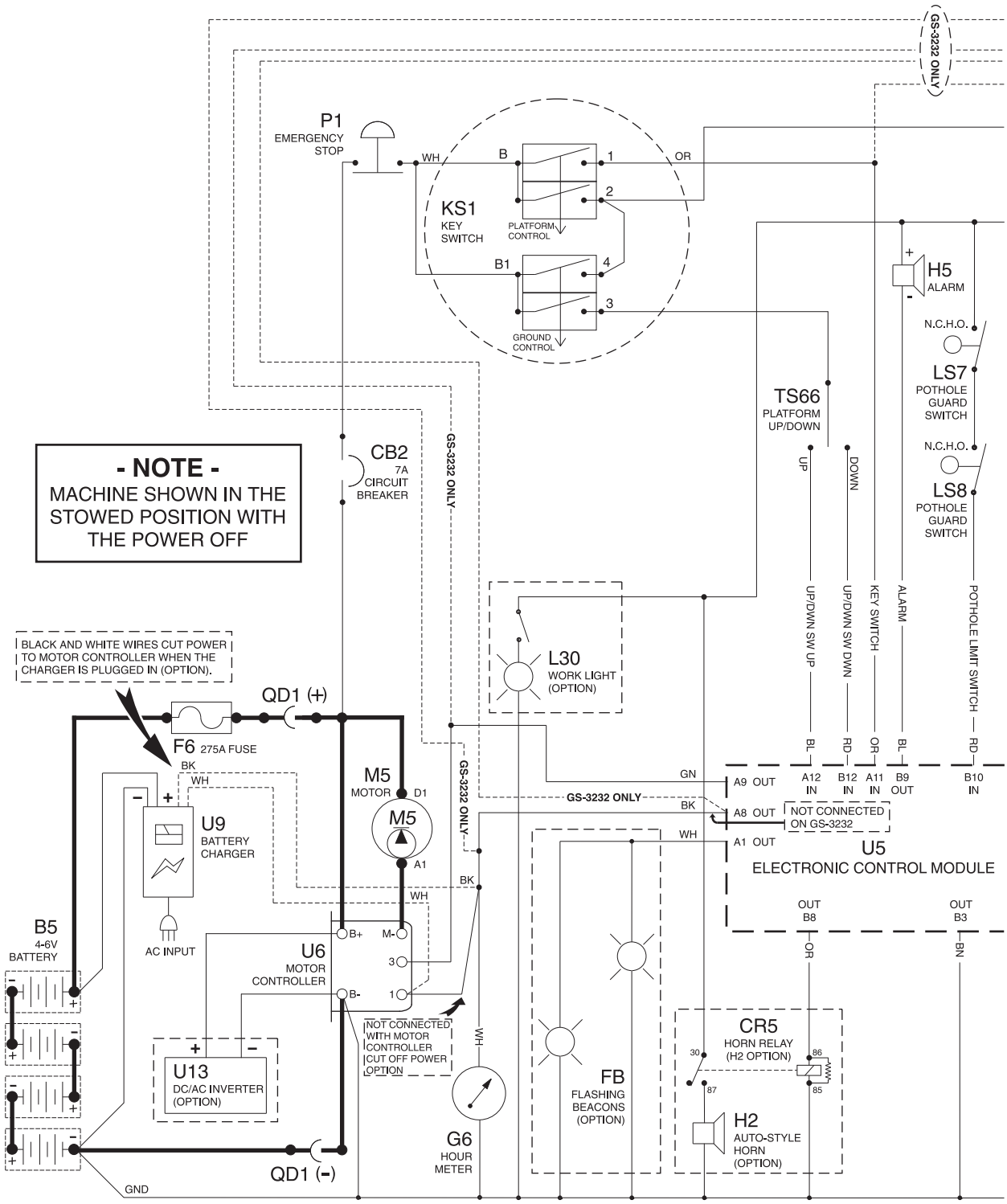

ES0141P

https://truckmanualshub.com/

Electrical Schematic

REV C

ANSI, CSA and Australia Models

GS-1530/1532/1930/1932 (after serial number GS3007A-89537)
GS-1530/1532/1930/1932 (after serial number GS3007B-84599)

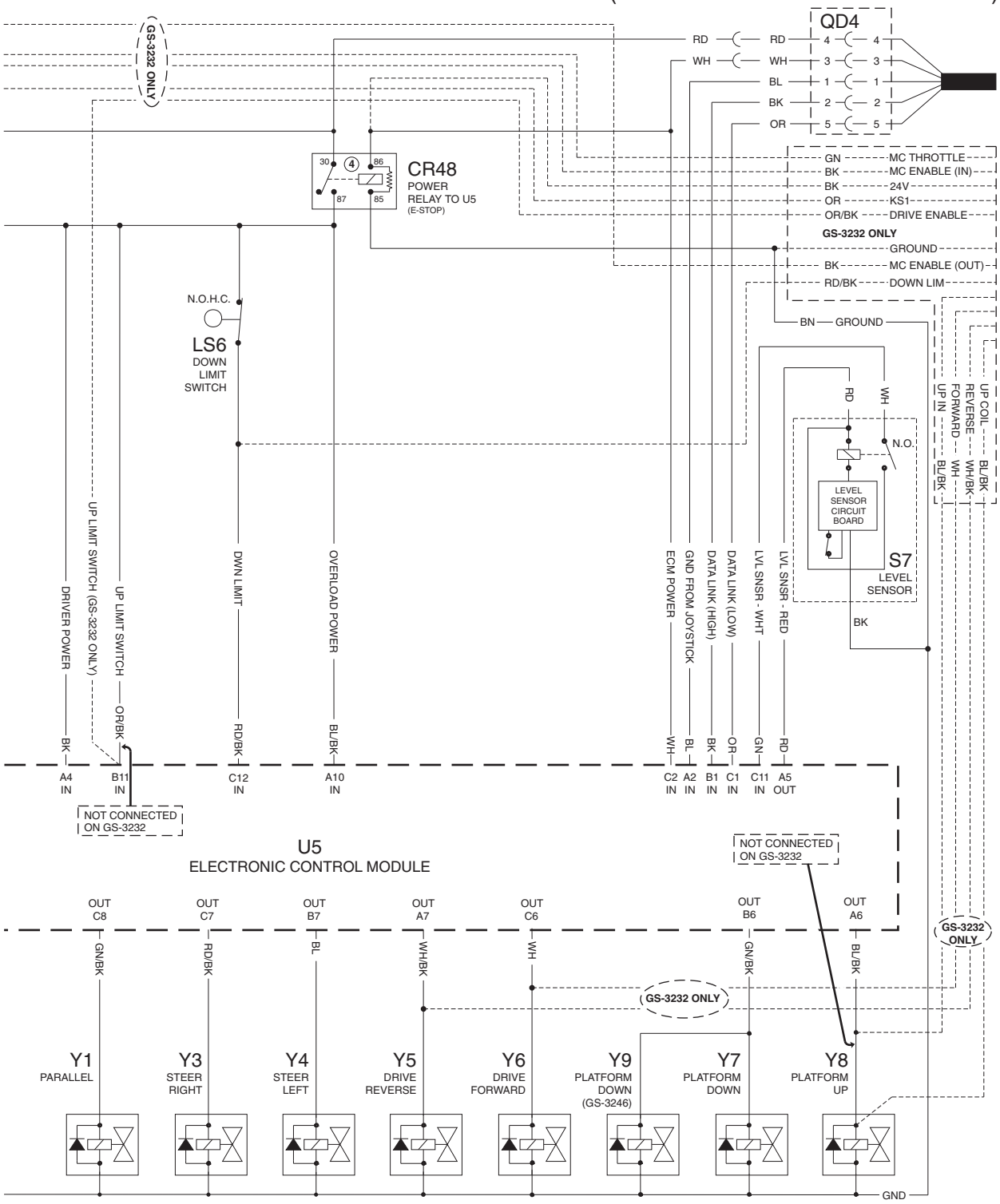

ES0141P

https://truckmanualshub.com/

Electrical Schematic

ANSI, CSA and Australia Models

REV C

GS-1530/1532/1930/1932 (after serial number GS3007A-89537)
GS-1530/1532/1930/1932 (after serial number GS3007B-84599)

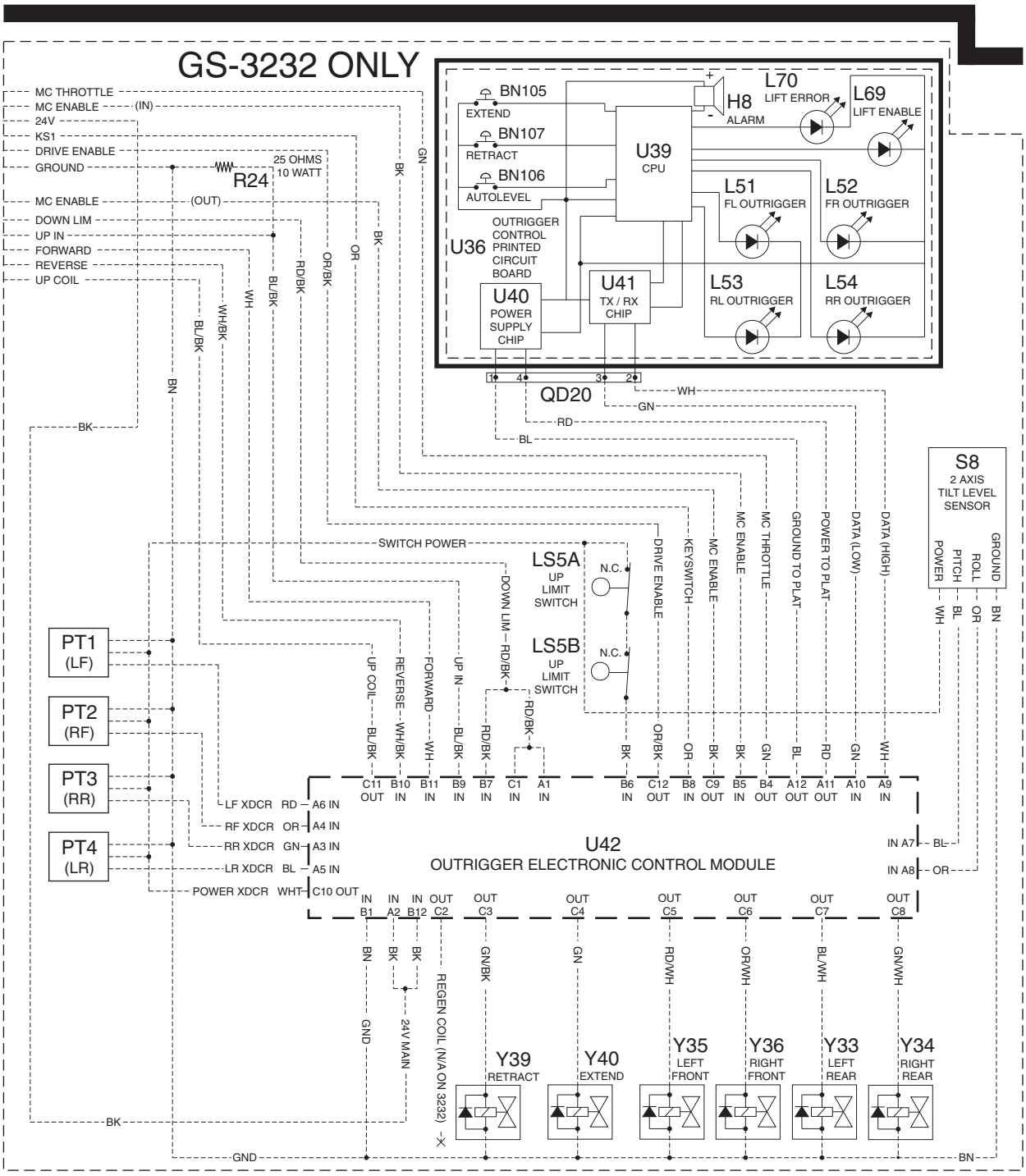

ES0141P

https://truckmanualshub.com/

Electrical Schematic

REV C

ANSI, CSA and Australia Models

GS-1530/1532/1930/1932 (after serial number GS3007A-89537)
GS-1530/1532/1930/1932 (after serial number GS3007B-84599)

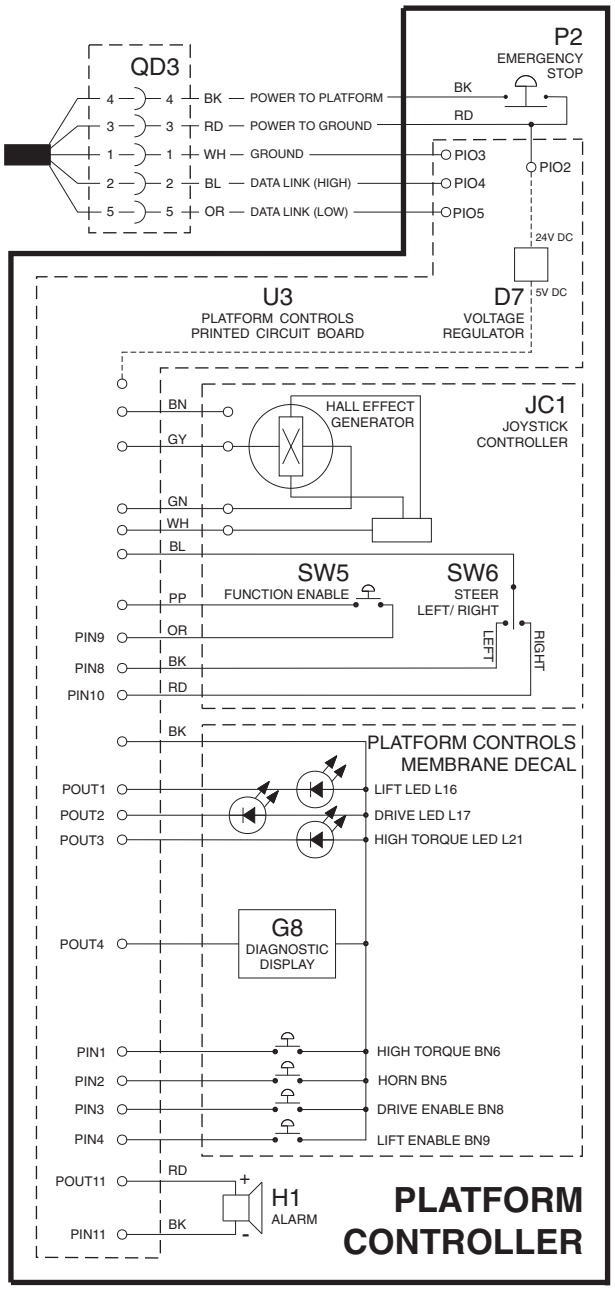

- NOTE -
MACHINE SHOWN IN THE STOWED POSITION WITH THE POWER OFF

ES0141P

https://truckmanualshub.com/

Electrical Schematic

ANSI, CSA and Australia Models REV E

GS-2032/2632 (from serial number GS3205-75407 to GS3206-79991)

GS-2046/2646/3246 (from serial number GS4605-75438 to GS4606-78915)

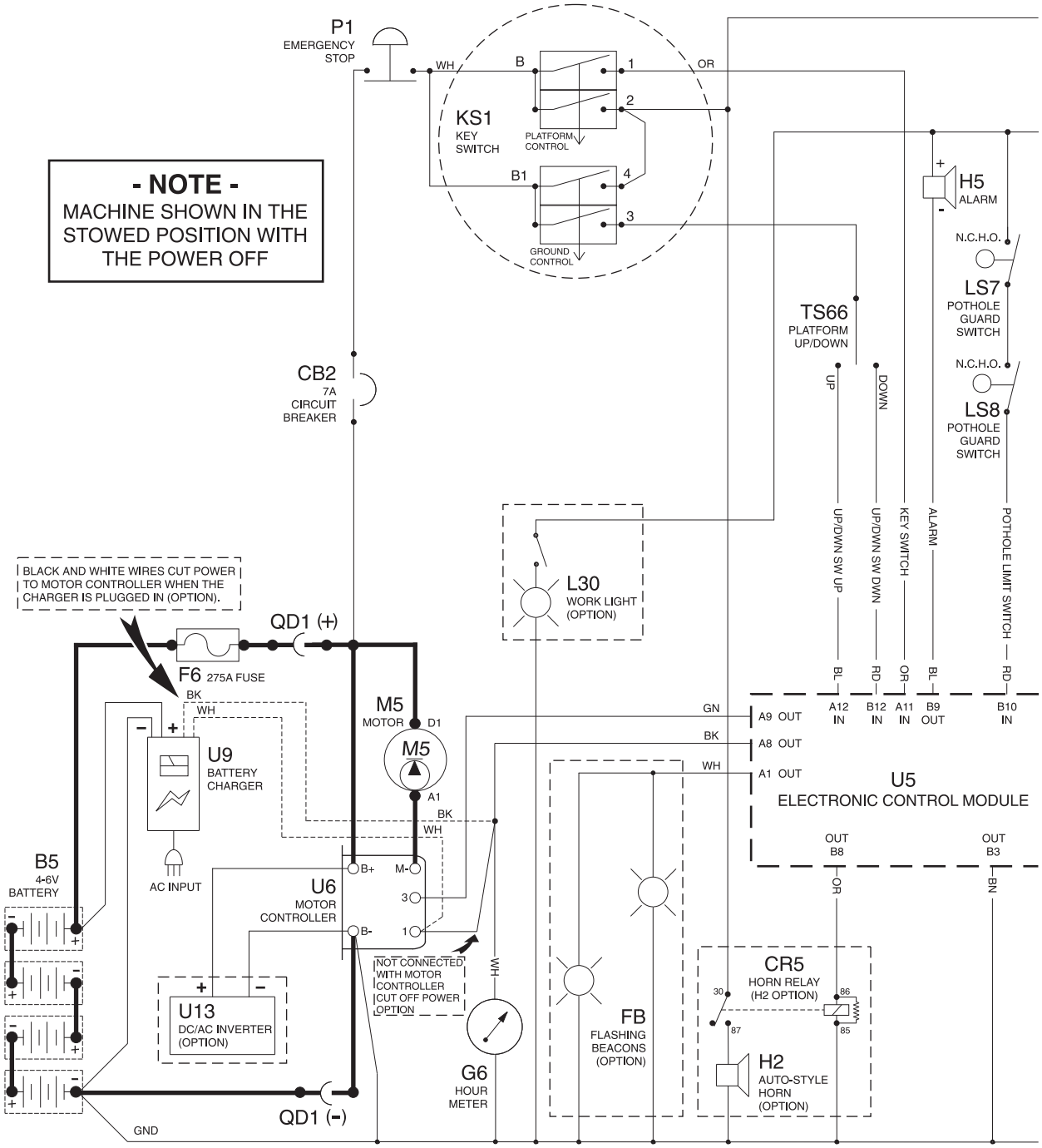

ES0141H

https://truckmanualshub.com/

Electrical Schematic

REV E

ANSI, CSA and Australia Models

GS-2032/2632 (from serial number GS3205-75407 to GS3206-79991)
GS-2046/2646/3246 (from serial number GS4605-75438 to GS4606-78915)

- NOTE -
MACHINE SHOWN IN THE STOWED POSITION WITH THE POWER OFF

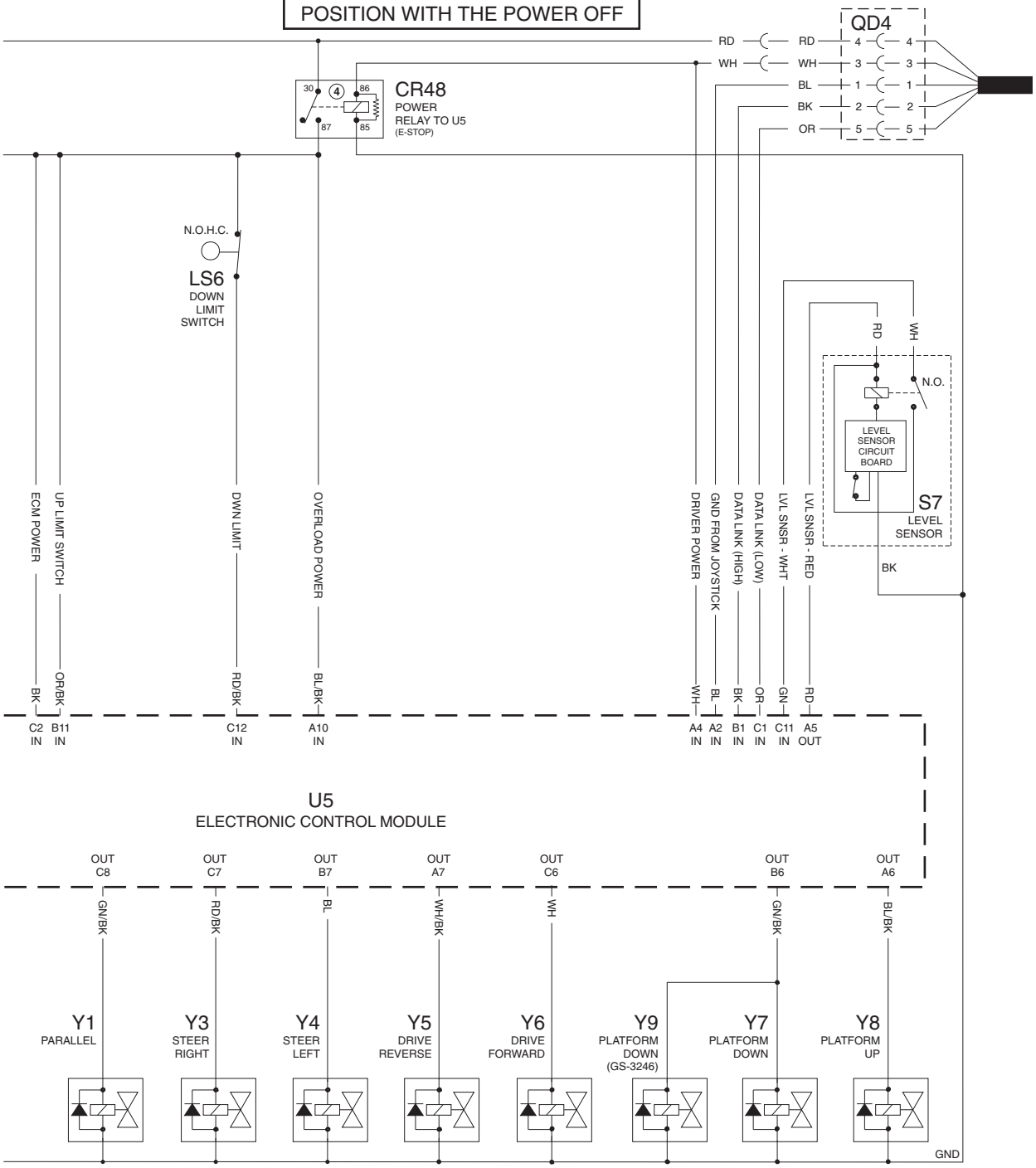

ES0141H

https://truckmanualshub.com/

Electrical Schematic

ANSI, CSA and Australia Models

REV E

GS-2032/2632 (from serial number GS3205-75407 to GS3206-79991)
GS-2046/2646/3246 (from serial number GS4605-75438 to GS4606-78915)

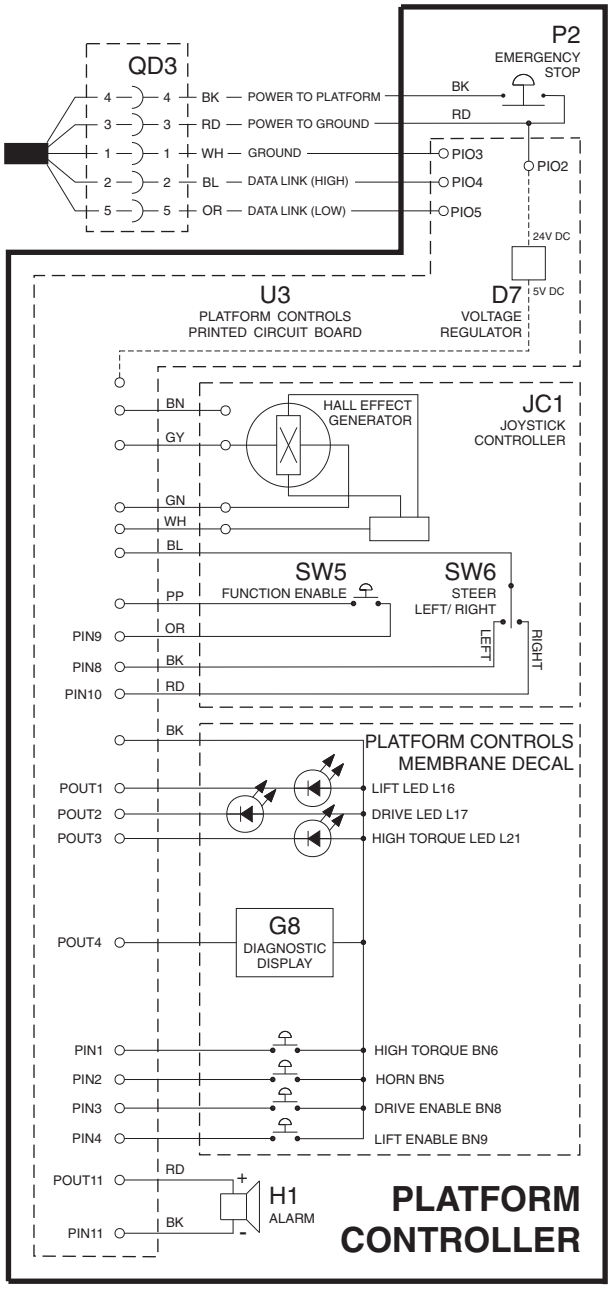

ES0141H

https://truckmanualshub.com/

This page intentionally left blank.

https://truckmanualshub.com/

Electrical Schematic

ANSI, CSA and Australia Models

REV C

GS-2032/2632 (from serial number GS3206-79992 to GS3207-83650)
GS-2046/2646/3246 (from serial number GS4606-78916 to GS4607-82535)

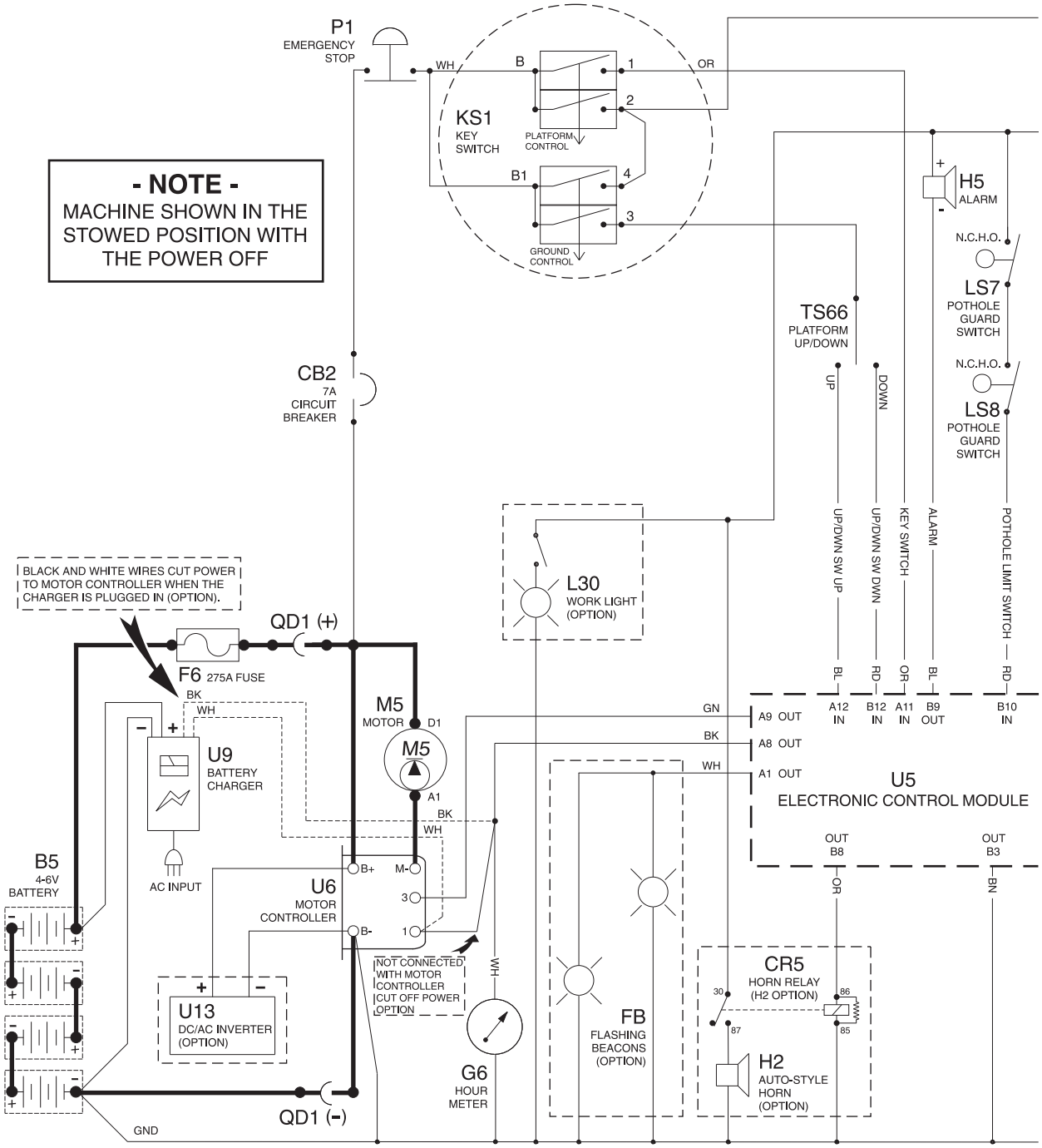

ES0141K

https://truckmanualshub.com/

Electrical Schematic

REV C

ANSI, CSA and Australia Models

GS-2032/2632 (from serial number GS3206-79992 to GS3207-83650)
GS-2046/2646/3246 (from serial number GS4606-78916 to GS4607-82535)

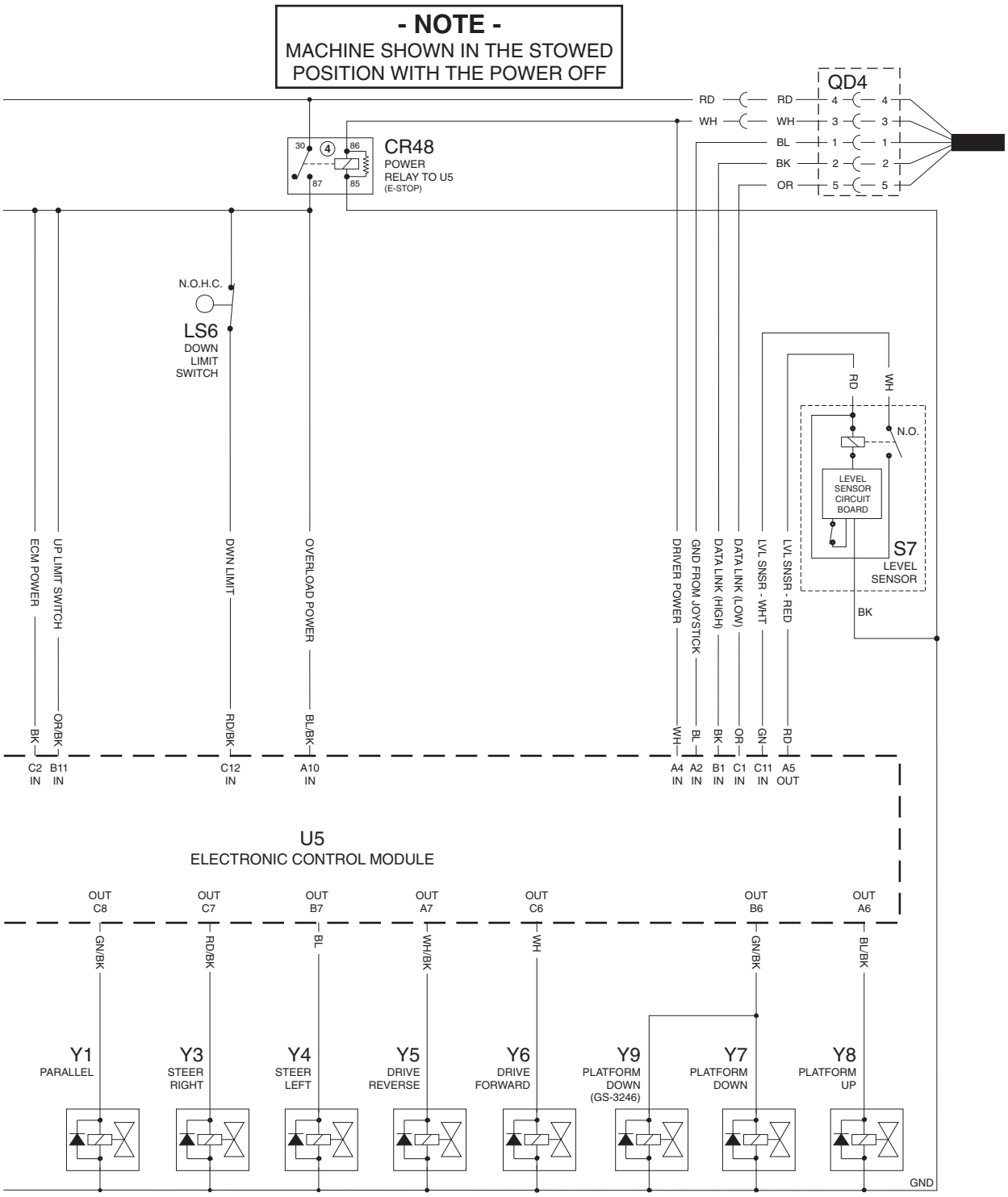

ES0141K

https://truckmanualshub.com/

Electrical Schematic

ANSI, CSA and Australia Models

REV C

GS-2032/2632 (from serial number GS3206-79992 to GS3207-83650)
GS-2046/2646/3246 (from serial number GS4606-78916 to GS4607-82535)

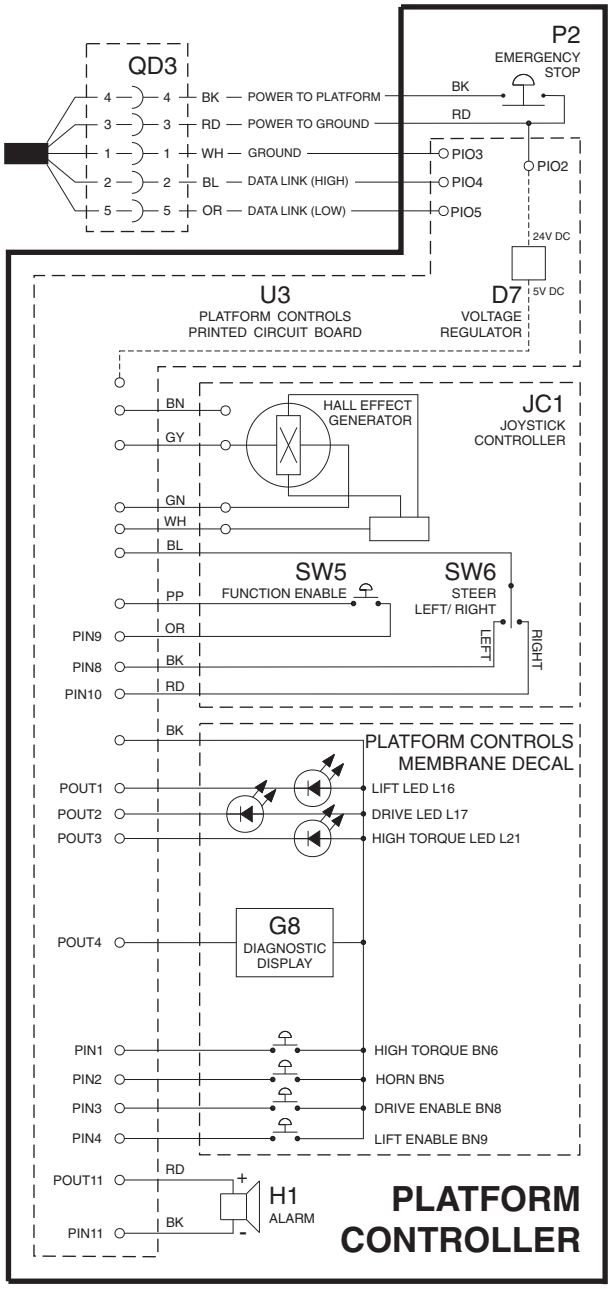

ES0141K

https://truckmanualshub.com/

This page intentionally left blank.

https://truckmanualshub.com/

Electrical Schematic

ANSI, CSA and Australia Models REV B

GS-2032/2632 (from serial number GS3207-83651 to GS3207-84866)

GS-2046/2646/3246 (from serial number GS4607-82536 to GS4607-84839)

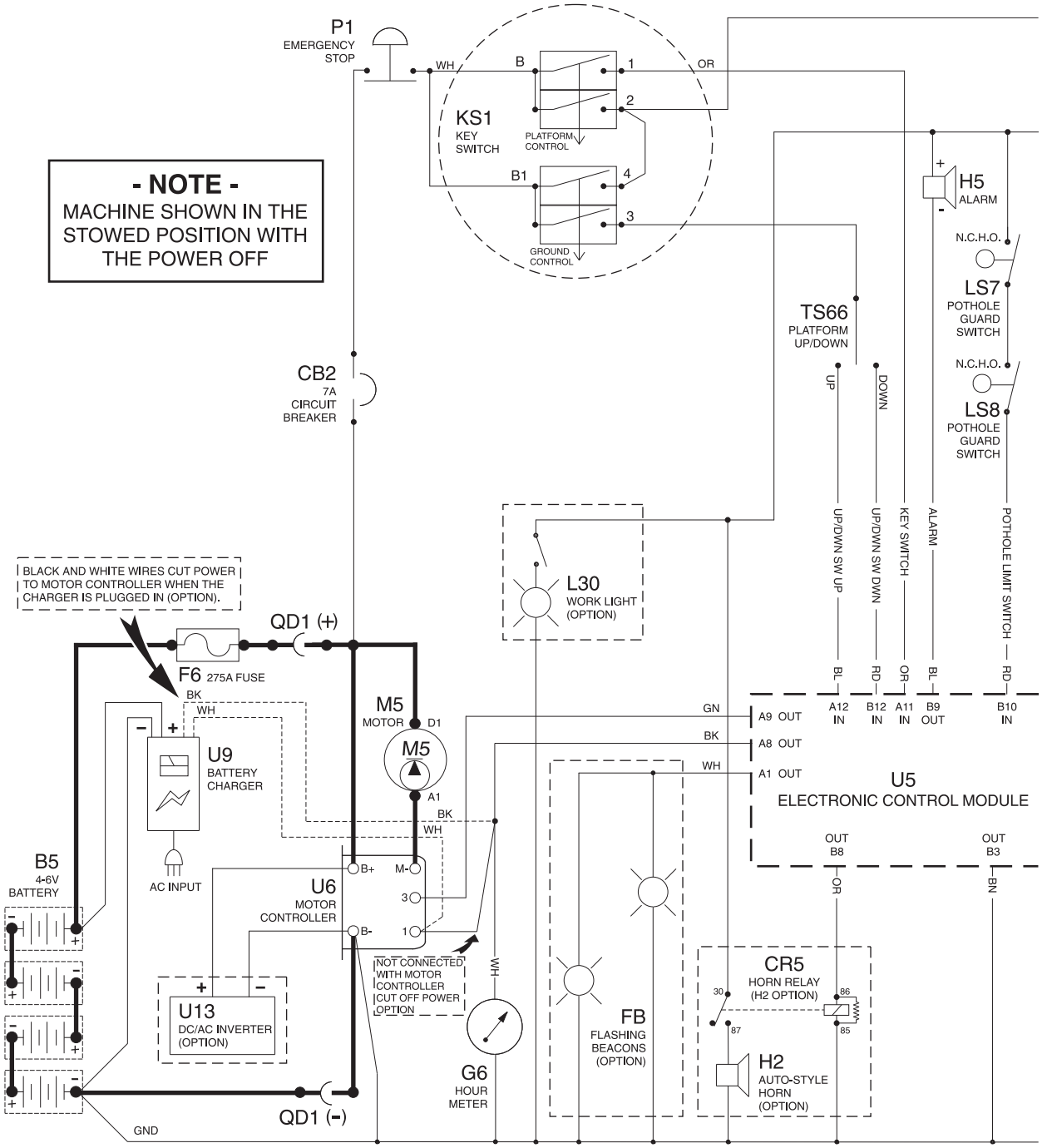

ES0141M

https://truckmanualshub.com/

Electrical Schematic

REV B

ANSI, CSA and Australia Models

GS-2032/2632 (from serial number GS3207-83651 to GS3207-84866)
GS-2046/2646/3246 (from serial number GS4607-82536 to GS4607-84839)

- NOTE -
MACHINE SHOWN IN THE STOWED POSITION WITH THE POWER OFF

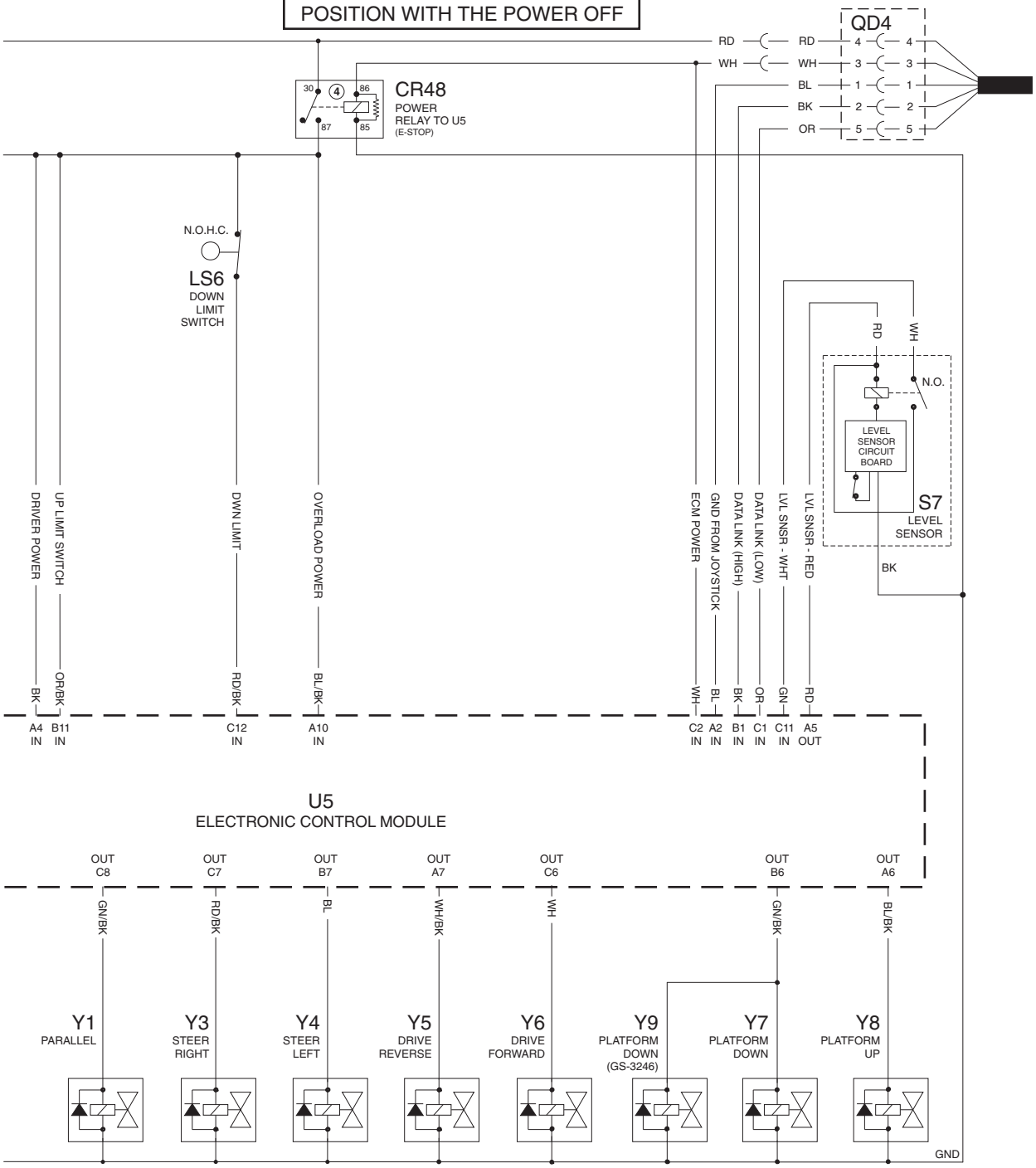

ES0141M

https://truckmanualshub.com/

Electrical Schematic

ANSI, CSA and Australia Models

REV B

GS-2032/2632 (from serial number GS3207-83651 to GS3207-84866)
GS-2046/2646/3246 (from serial number GS4607-82536 to GS4607-84839)

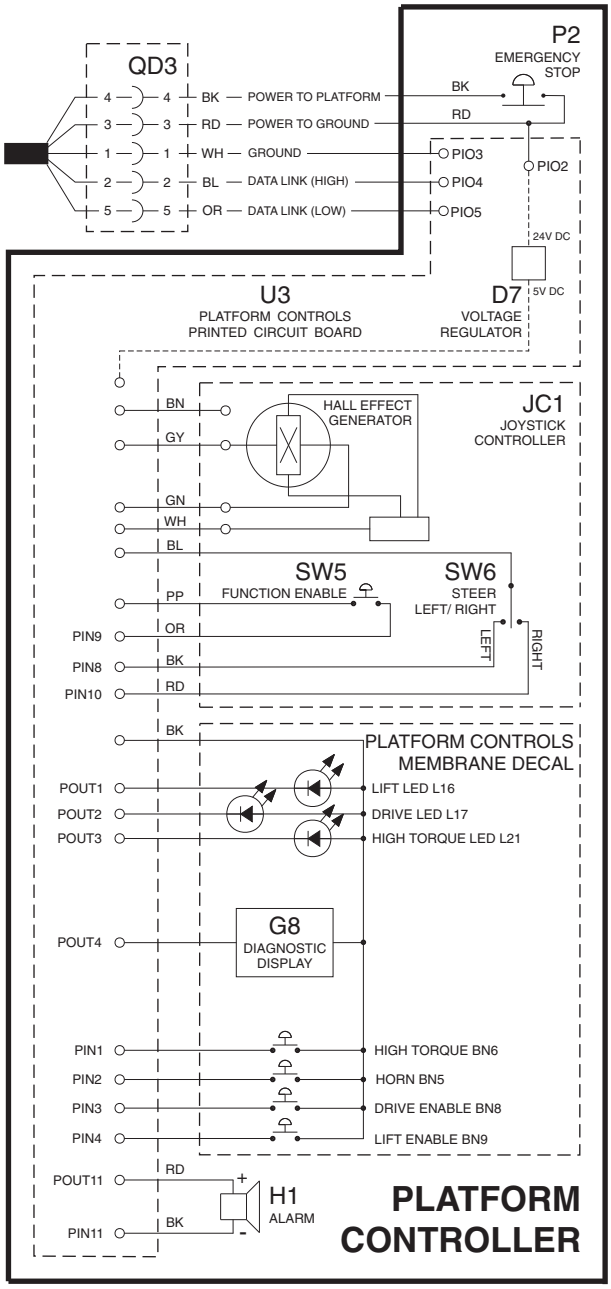

ES0141M

https://truckmanualshub.com/

This page intentionally left blank.

https://truckmanualshub.com/

Electrical Schematic

ANSI, CSA and Australia Models

REV C

GS-2032/2632/3232 (after serial number GS3207-84866)
GS-2046/2646/3246 (after serial number GS4607-84839)

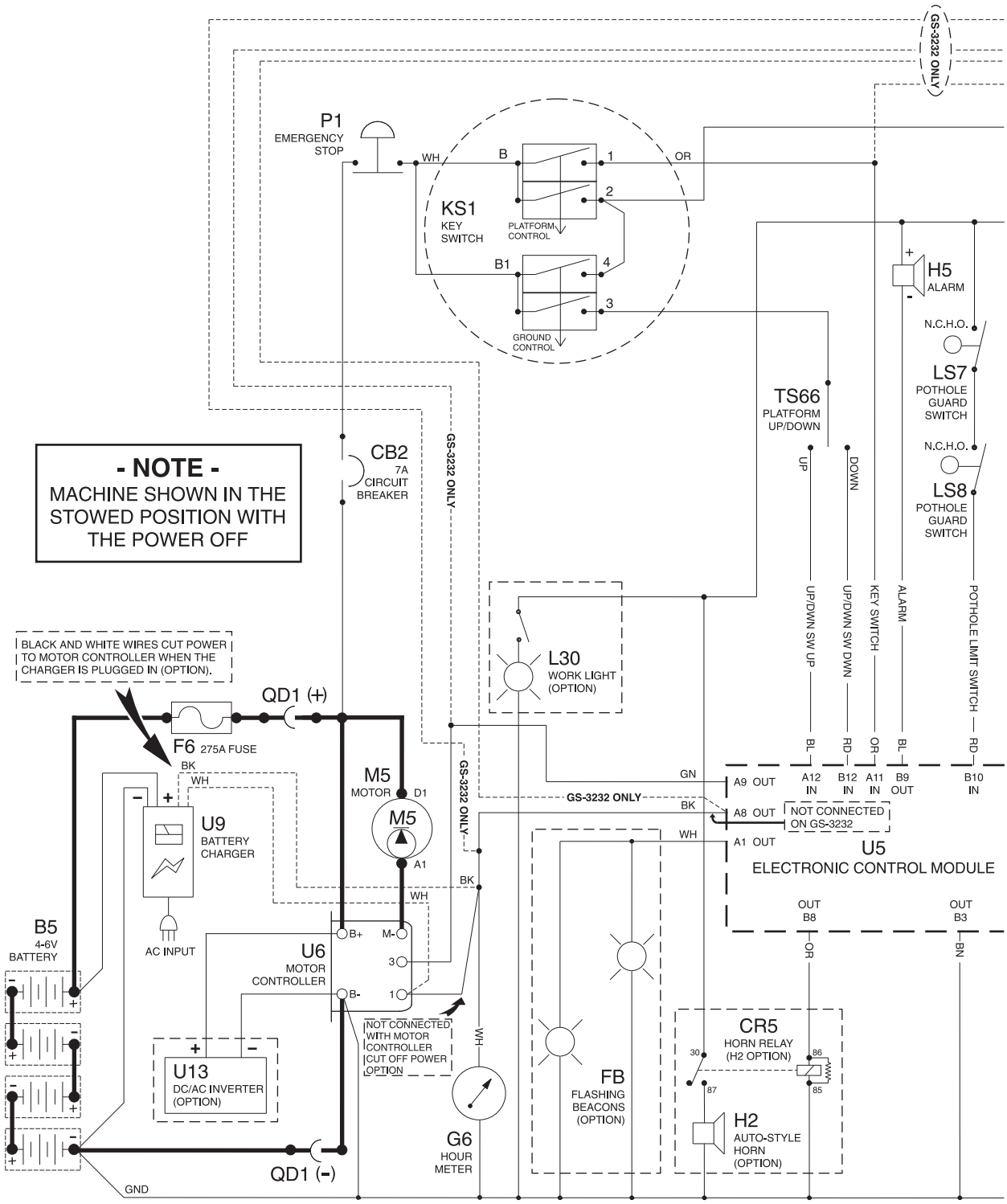

ES0141P

https://truckmanualshub.com/

Electrical Schematic

REV C

ANSI, CSA and Australia Models

GS-2032/2632/3232 (after serial number GS3207-84866)
GS-2046/2646/3246 (after serial number GS4607-84839)

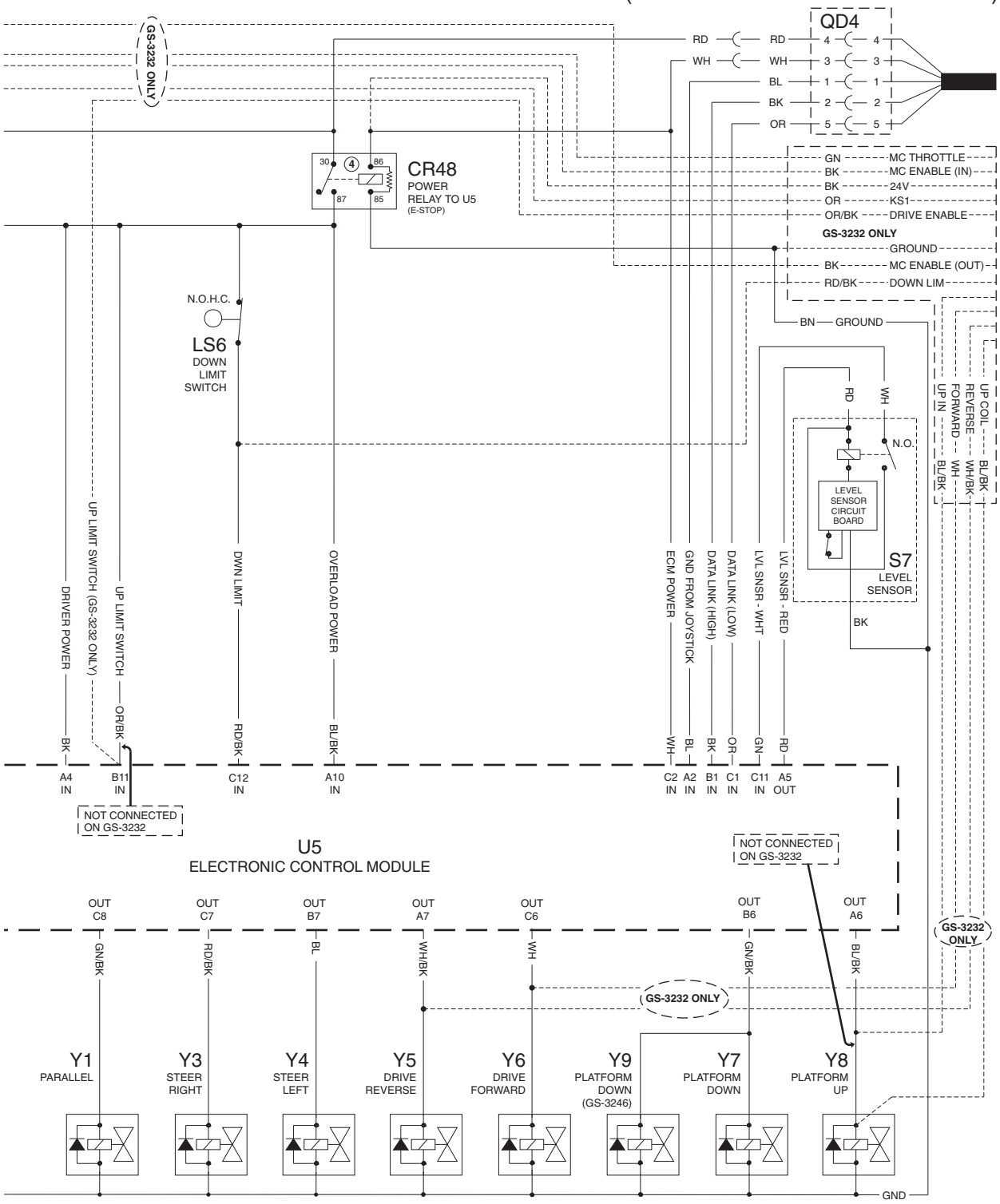

ES0141P

https://truckmanualshub.com/

Electrical Schematic

ANSI, CSA and Australia Models REV C

GS-2032/2632/3232 (after serial number GS3207-84866)
GS-2046/2646/3246 (after serial number GS4607-84839)

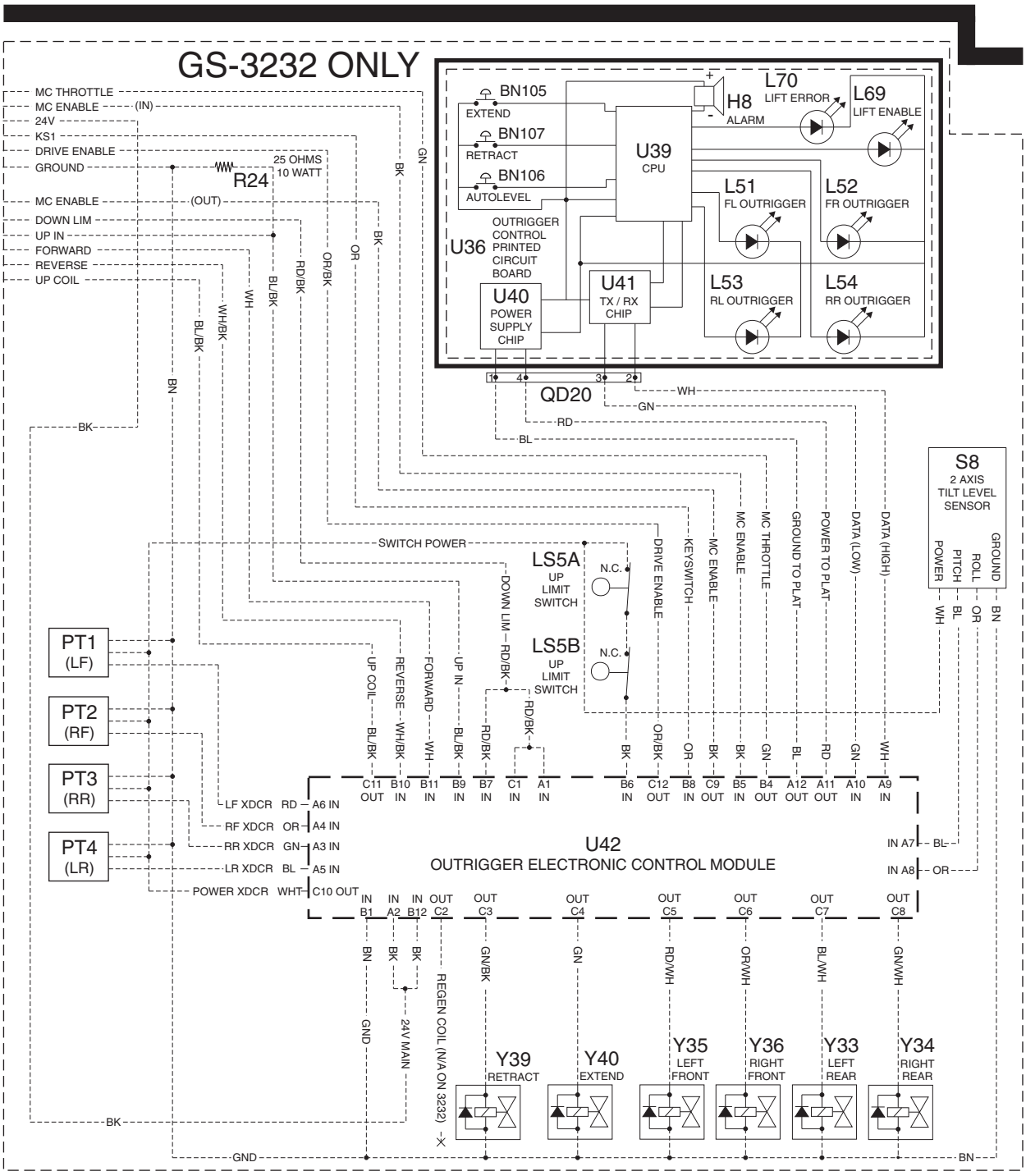

ES0141P

https://truckmanualshub.com/

Electrical Schematic

REV C

ANSI, CSA and Australia Models

GS-2032/2632/3232 (after serial number GS3207-84866)

GS-2046/2646/3246 (after serial number GS4607-84839)

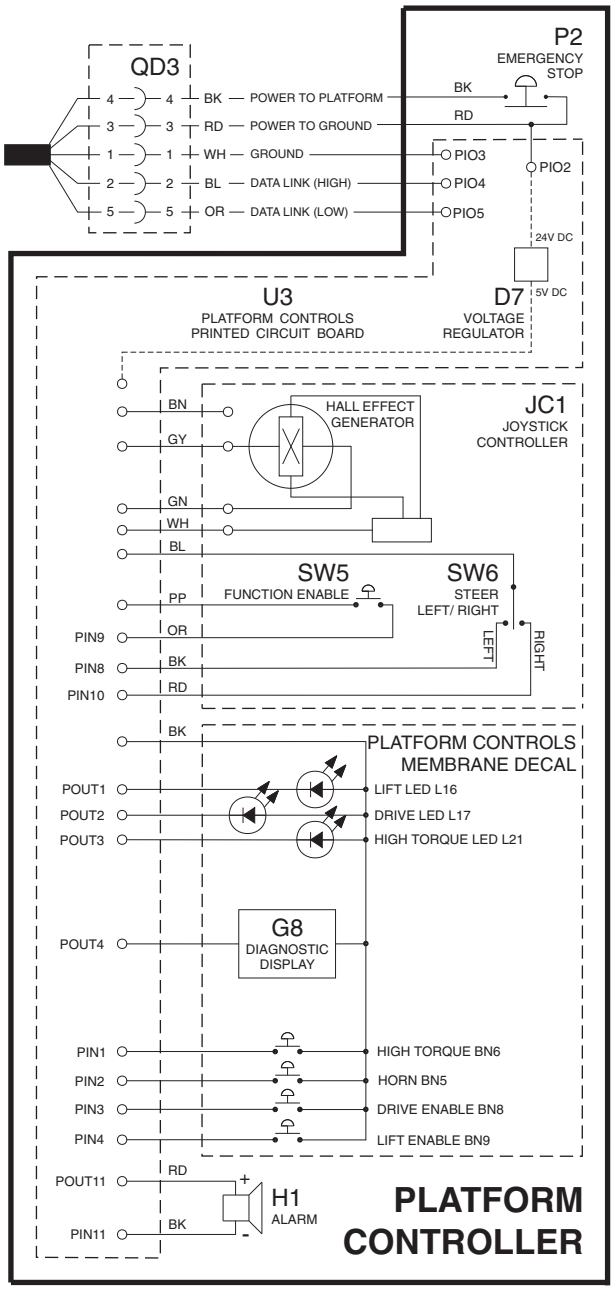

- NOTE -

MACHINE SHOWN IN THE STOWED POSITION WITH THE POWER OFF

ES0141P

https://truckmanualshub.com/

Electrical Schematic

CE Models

REV E

GS-1530/1532/1930/1932 (from serial number GS3005A-76000 to GS3005A-76388)
GS-1530/1532/1930/1932 (from serial number GS3005B-76000 to GS3005B-76030)

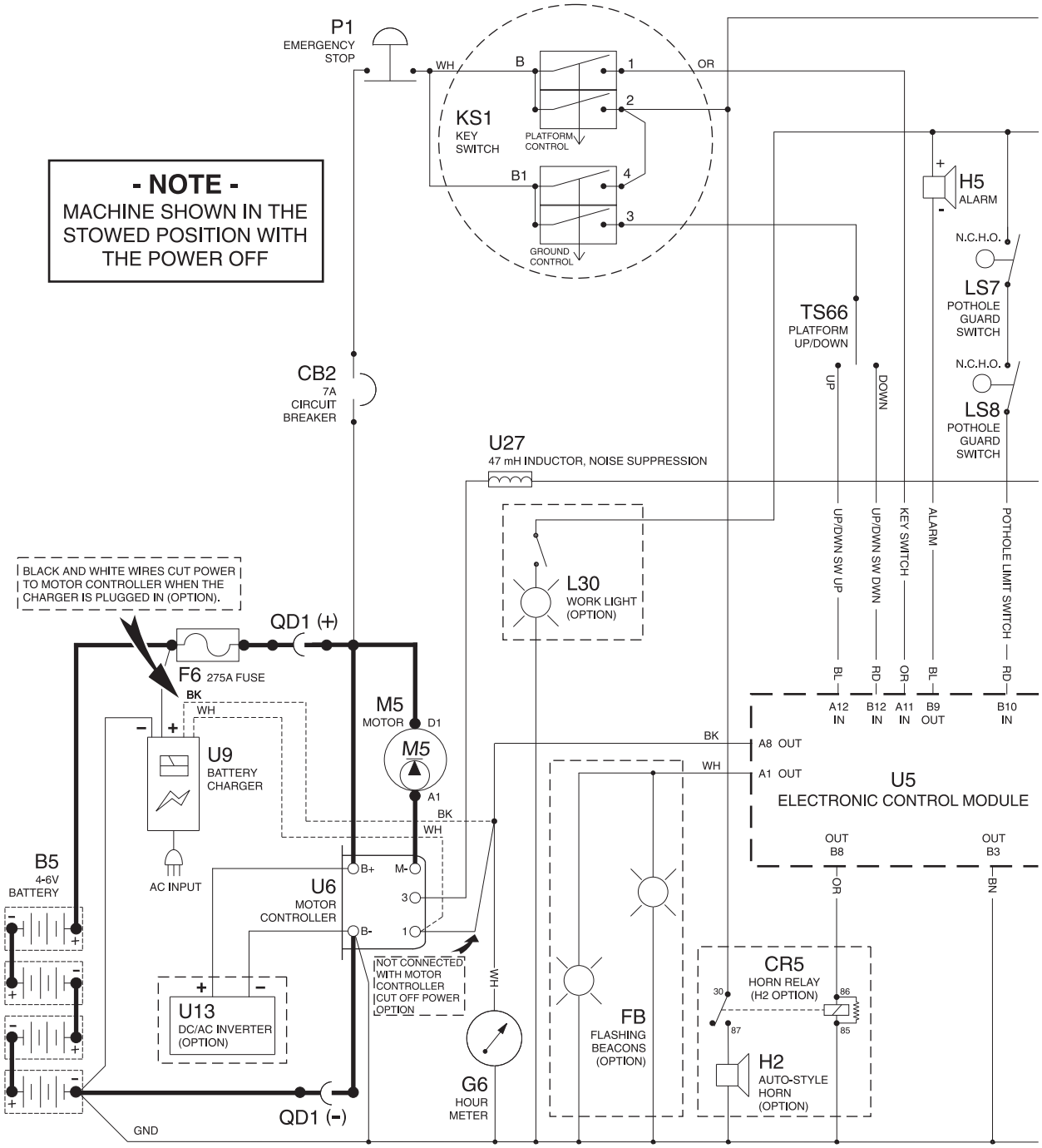

ES0142D

https://truckmanualshub.com/

Electrical Schematic

REV E

CE Models

GS-1530/1532/1930/1932 (from serial number GS3005A-76000 to GS3005A-76388)
GS-1530/1532/1930/1932 (from serial number GS3005B-76000 to GS3005B-76030)

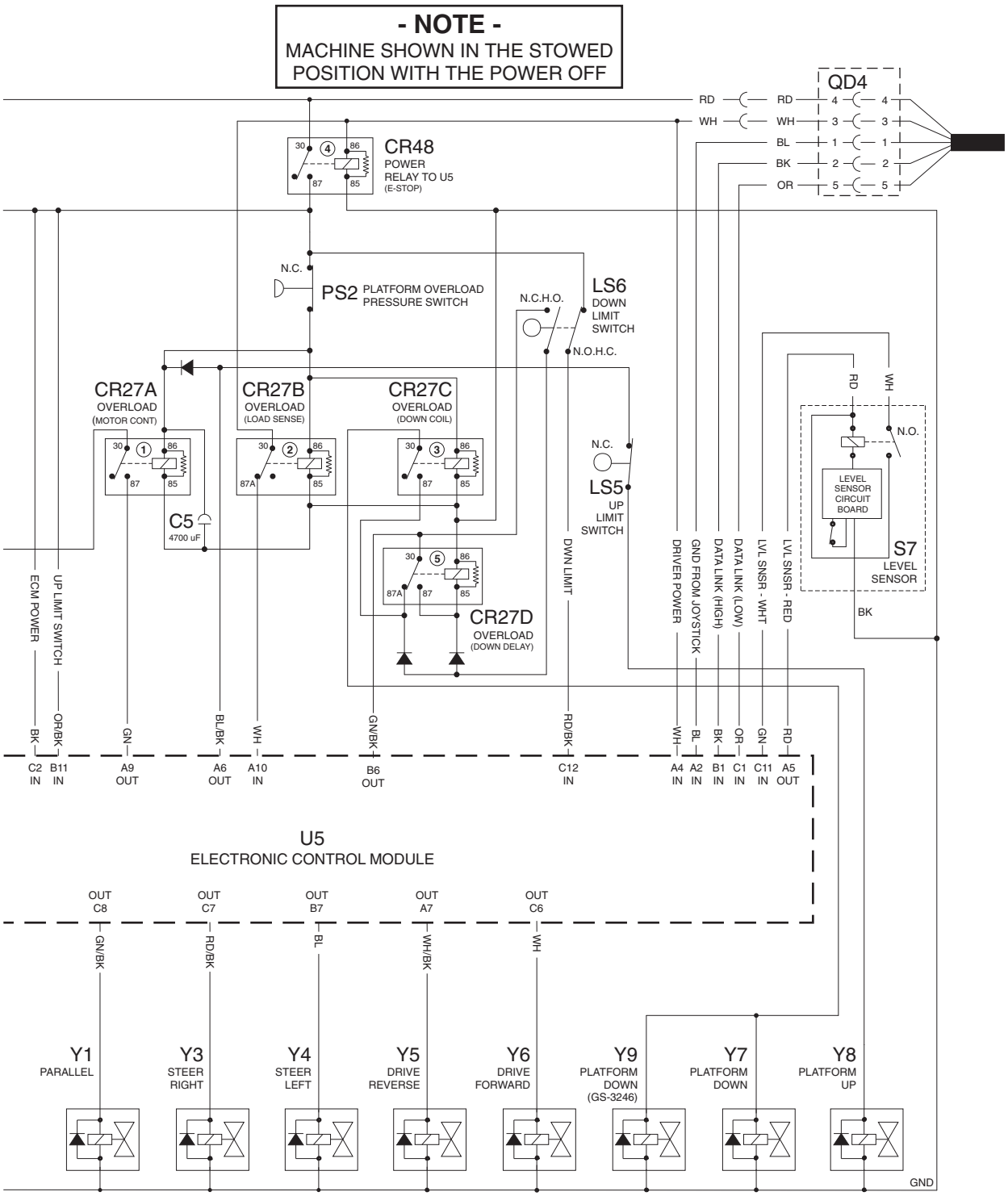

ES0142D

https://truckmanualshub.com/

Electrical Schematic

CE Models

REV E

GS-1530/1532/1930/1932 (from serial number GS3005A-76000 to GS3005A-76388)
GS-1530/1532/1930/1932 (from serial number GS3005B-76000 to GS3005B-76030)

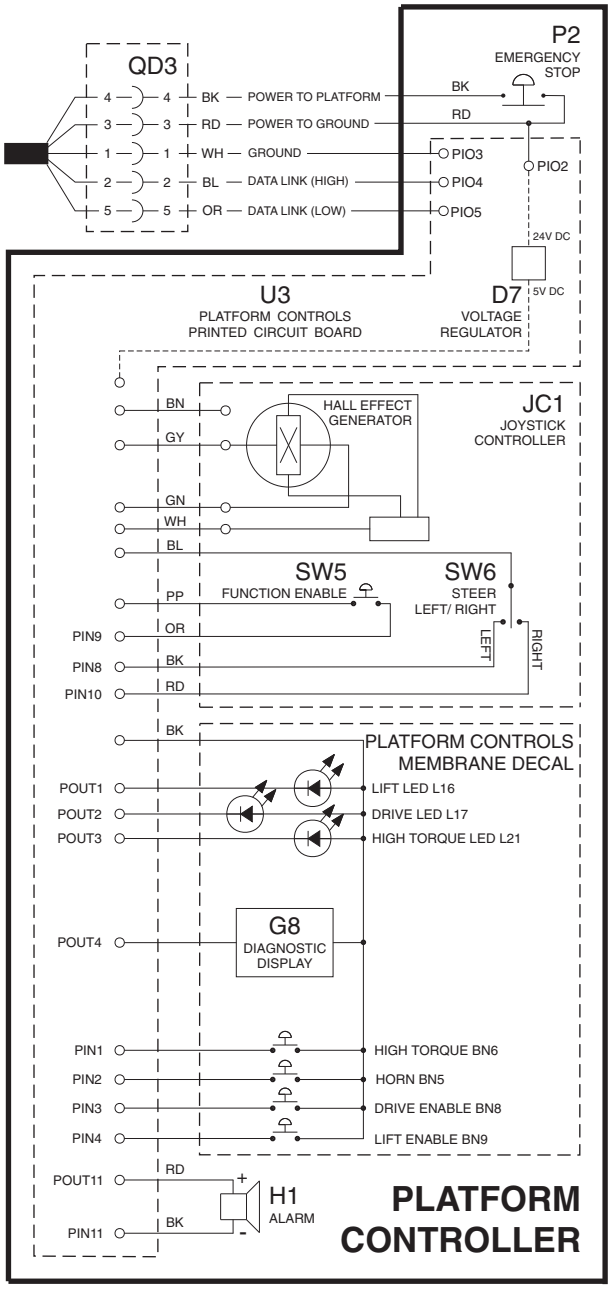

ES0142D

https://truckmanualshub.com/

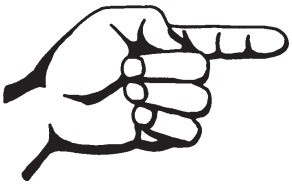

This page intentionally left blank.

https://truckmanualshub.com/

Electrical Schematic

CE Models

REV E

GS-1530/1532/1930/1932 (from serial number GS3005A-76389 to GS3005A-79394)
GS-1530/1532/1930/1932 (from serial number GS3005B-76031 to GS3005B-76920)

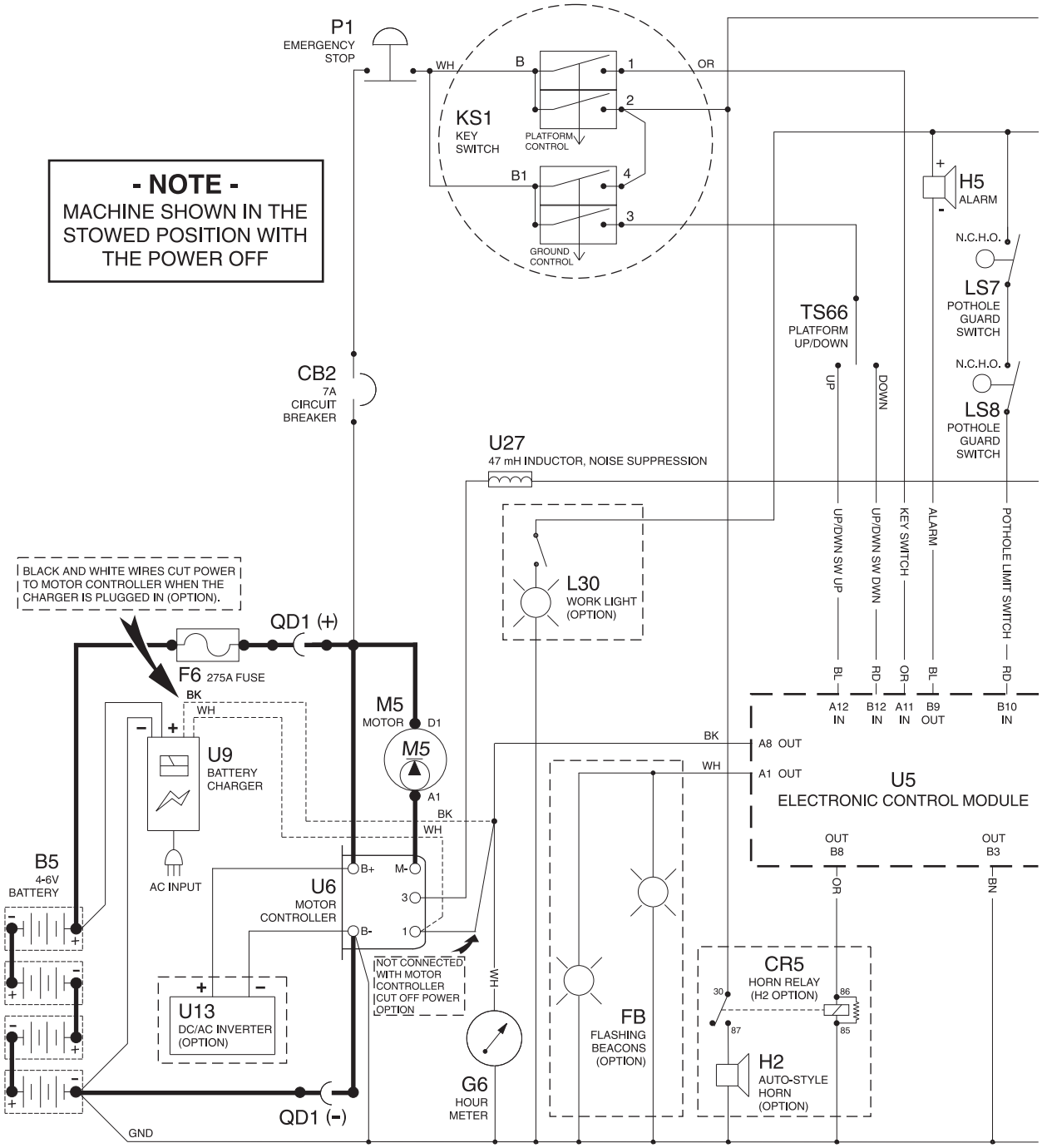

ES0142G

https://truckmanualshub.com/

Electrical Schematic

REV E

CE Models

GS-1530/1532/1930/1932 (from serial number GS3005A-76389 to GS3005A-79394)
GS-1530/1532/1930/1932 (from serial number GS3005B-76031 to GS3005B-76920)

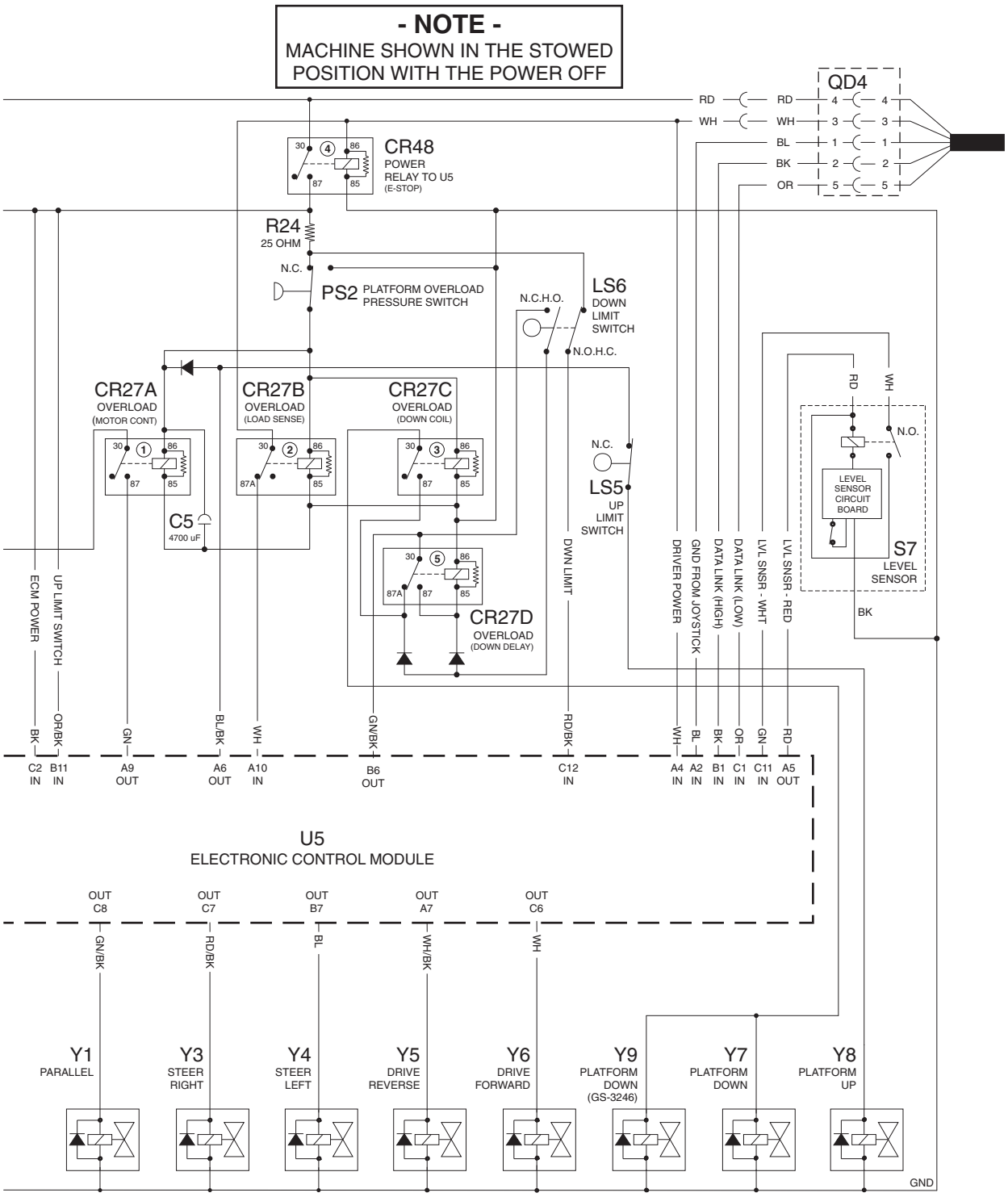

ES0142G

https://truckmanualshub.com/

Electrical Schematic

CE Models

REV E

GS-1530/1532/1930/1932 (from serial number GS3005A-76389 to GS3005A-79394)
GS-1530/1532/1930/1932 (from serial number GS3005B-76031 to GS3005B-76920)

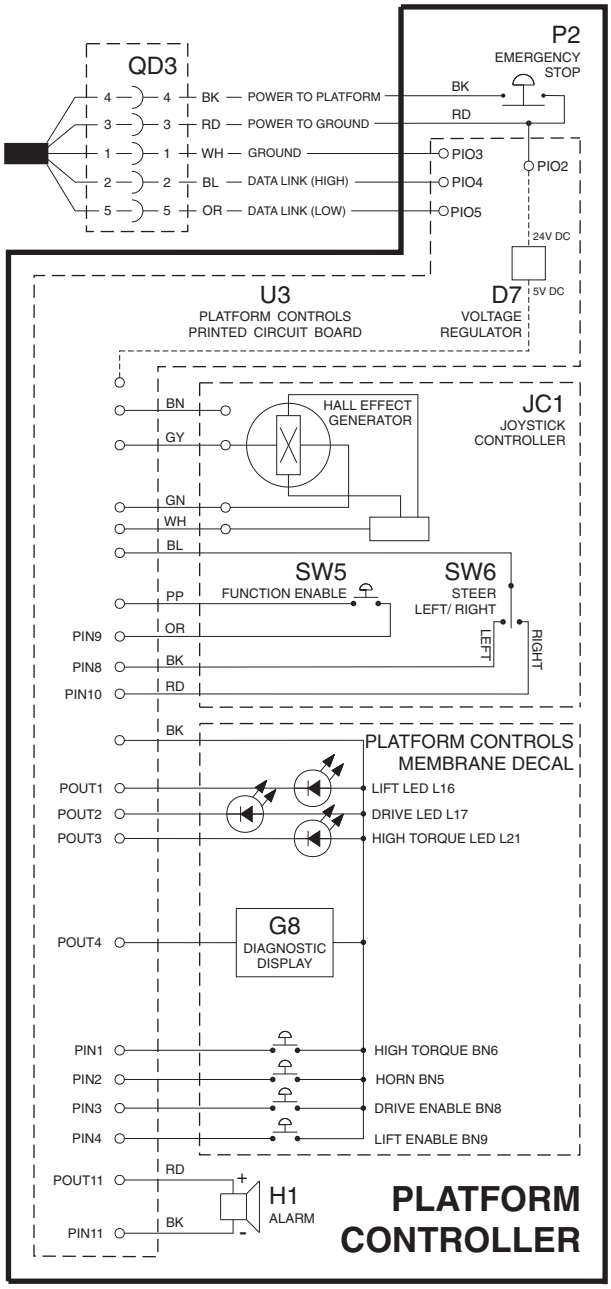

ES0142G

https://truckmanualshub.com/

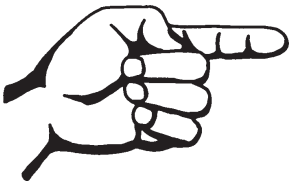

This page intentionally left blank.

https://truckmanualshub.com/

Electrical Schematic

CE Models

REV D

GS-1530/1532/1930/1932 (from serial number GS3005A-79395 to GS3006A-83067)
GS-1530/1532/1930/1932 (from serial number GS3005B-76921 to GS3006B-79659)

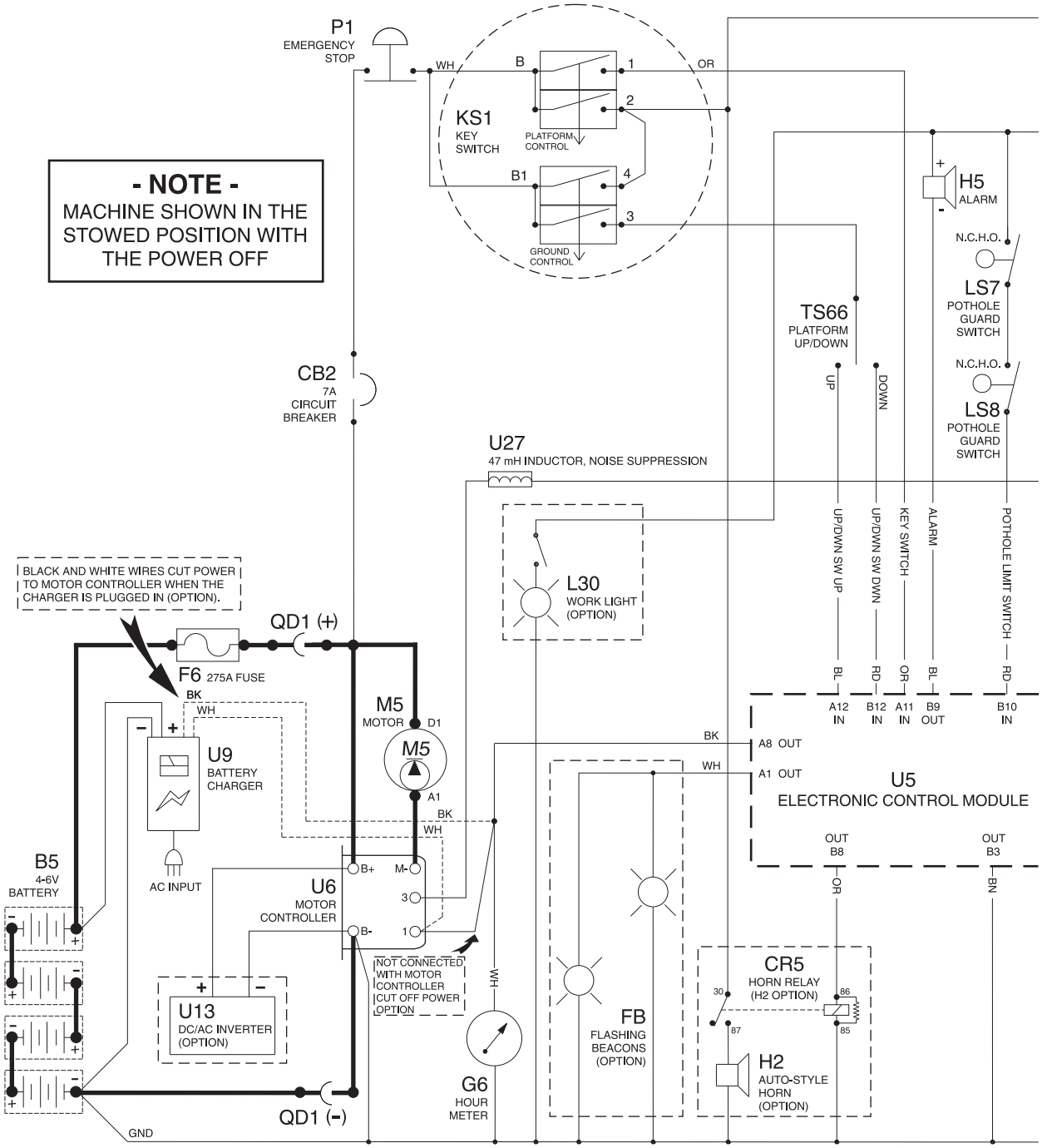

ES0142J

https://truckmanualshub.com/

Electrical Schematic

REV D

CE Models

GS-1530/1532/1930/1932 (from serial number GS3005A-79395 to GS3006A-83067)
GS-1530/1532/1930/1932 (from serial number GS3005B-76921 to GS3006B-79659)

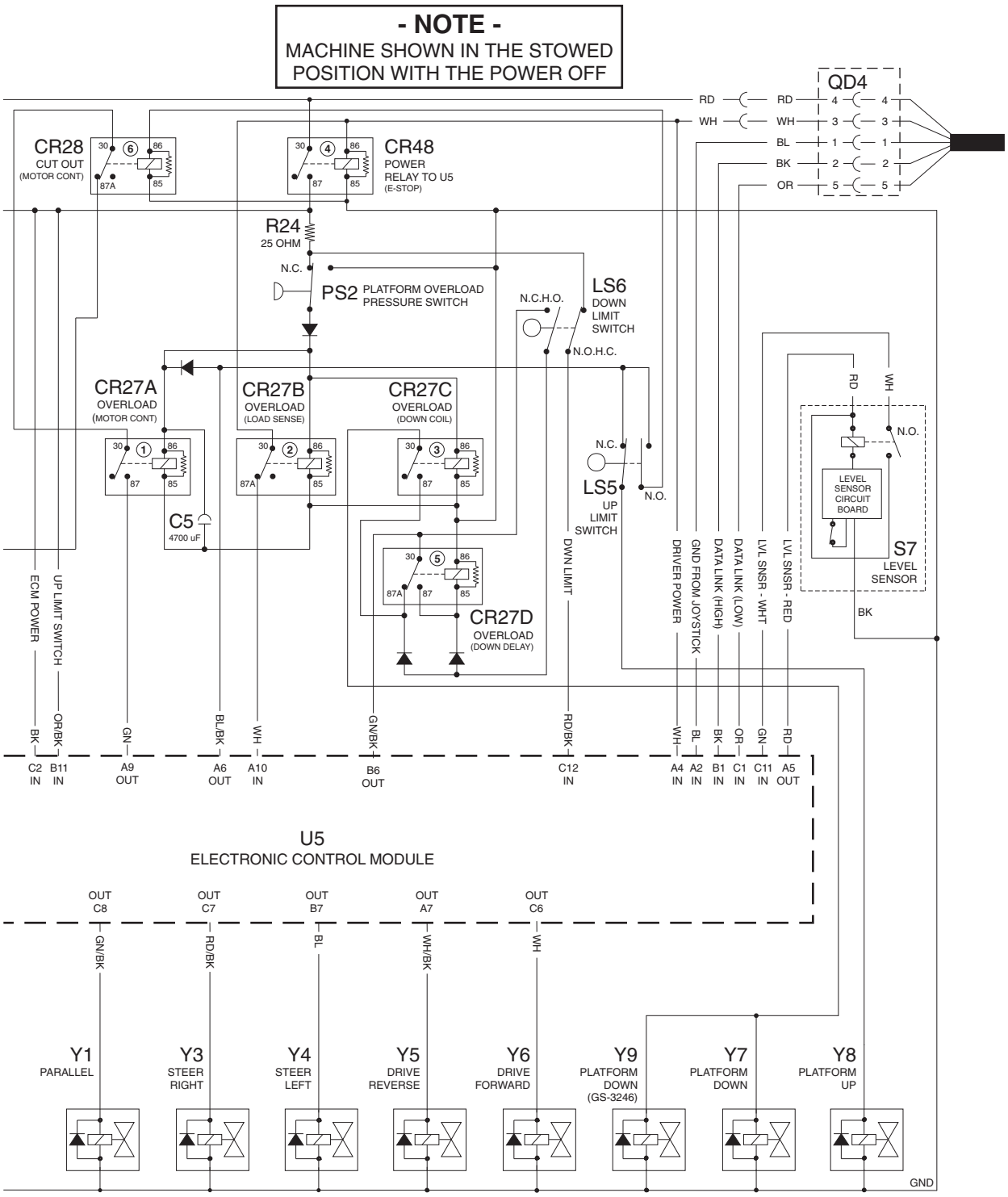

ES0142J

https://truckmanualshub.com/

Electrical Schematic

CE Models

REV D

GS-1530/1532/1930/1932 (from serial number GS3005A-79395 to GS3006A-83067)
GS-1530/1532/1930/1932 (from serial number GS3005B-76921 to GS3006B-79659)

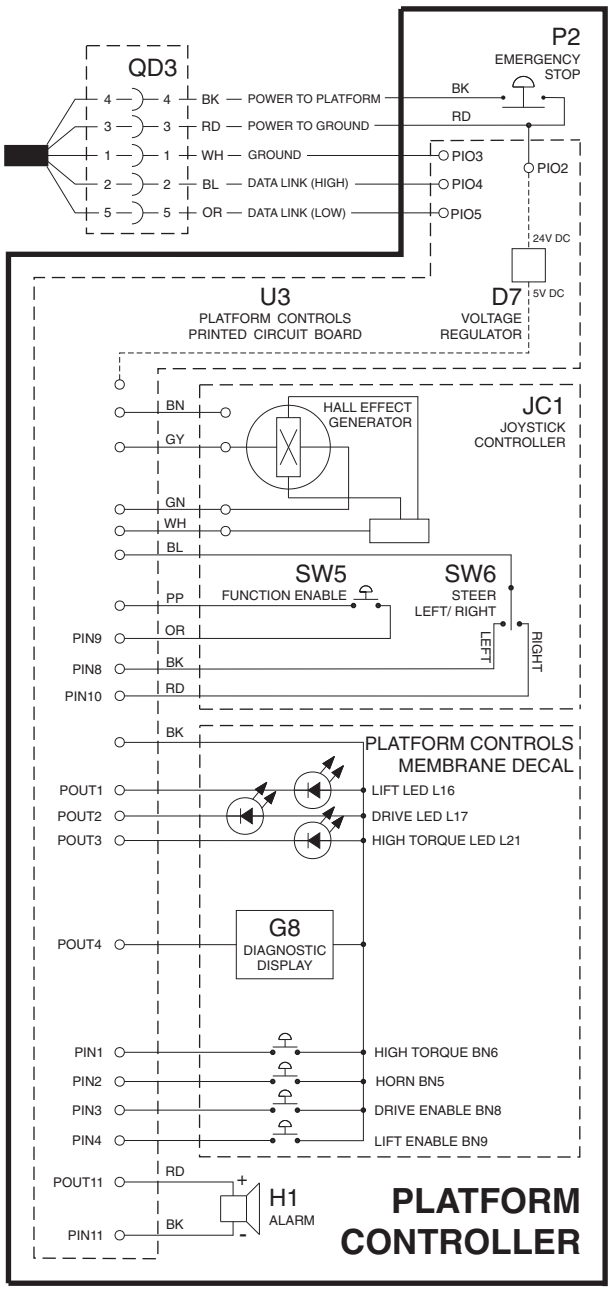

ES0142J

https://truckmanualshub.com/

This page intentionally left blank.

https://truckmanualshub.com/

Electrical Schematic

CE Models

REV C

GS-1530/1532/1930/1932 (from serial number GS3006A-83068 to GS3007A-87490)
GS-1530/1532/1930/1932 (from serial number GS3006B-79660 to GS3007B-82543)

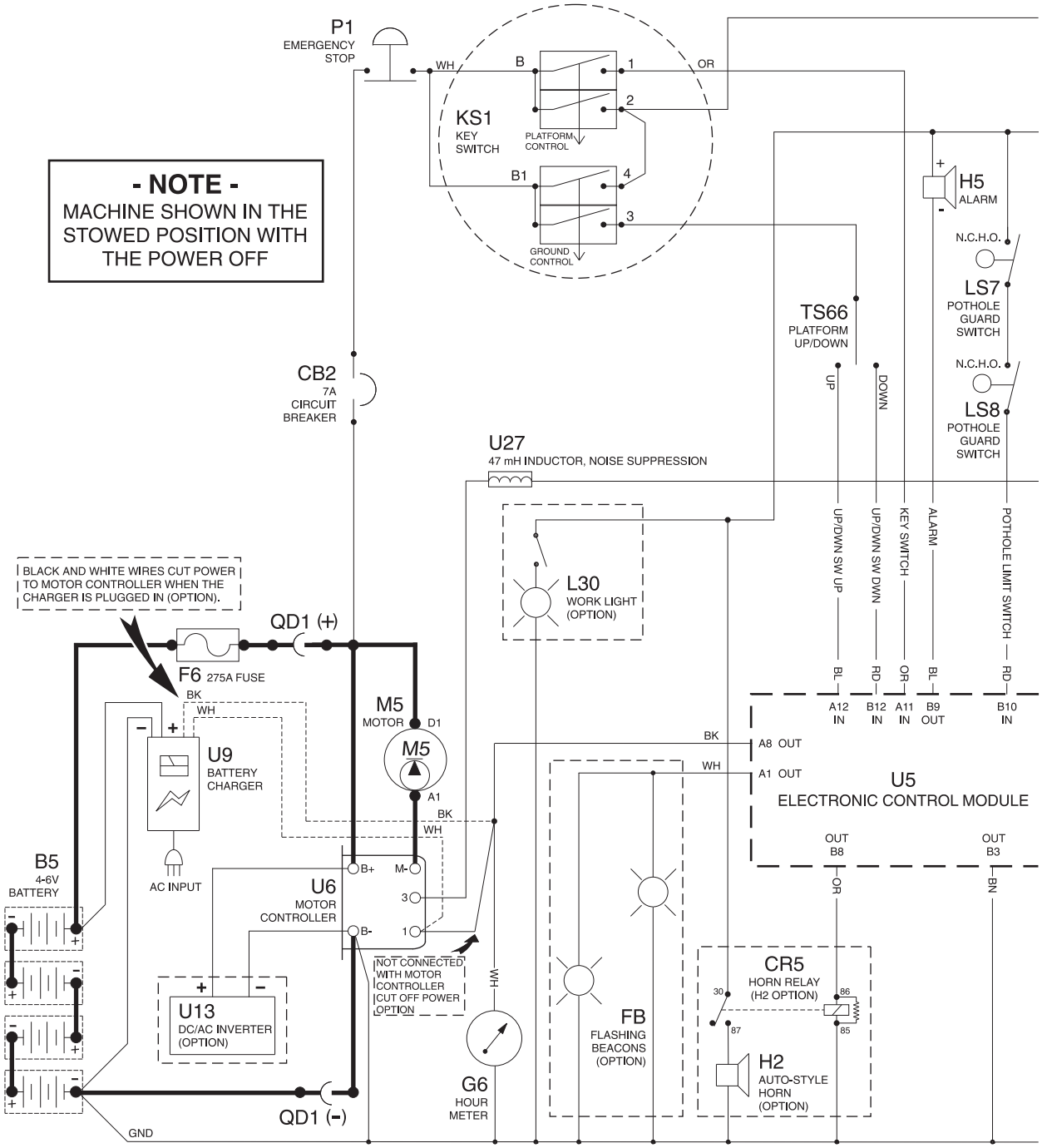

ES0142K

https://truckmanualshub.com/

Electrical Schematic

REV C

CE Models

GS-1530/1532/1930/1932 (from serial number GS3006A-83068 to GS3007A-87490)
GS-1530/1532/1930/1932 (from serial number GS3006B-79660 to GS3007B-82543)

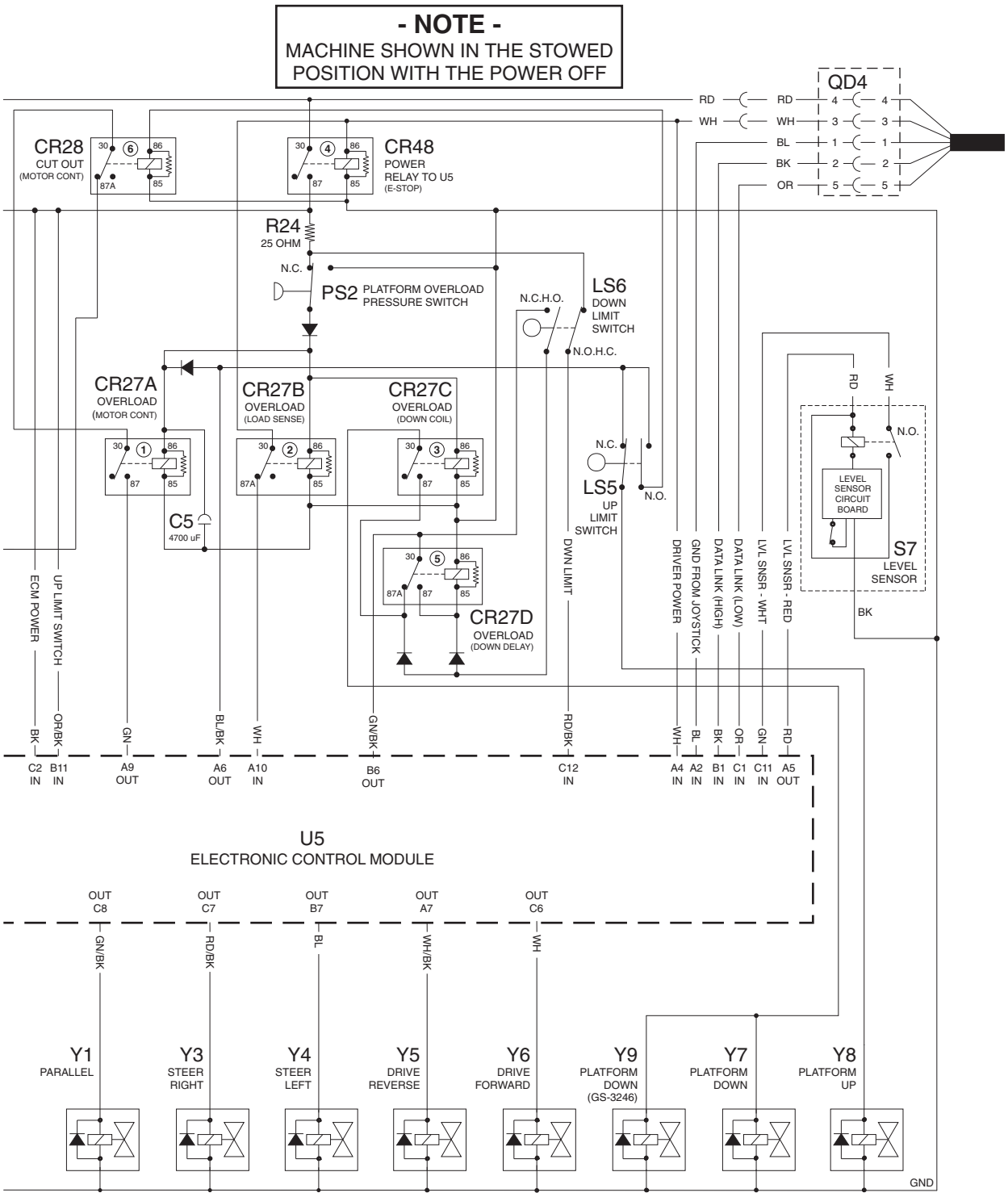

ES0142K

https://truckmanualshub.com/

Electrical Schematic

CE Models

REV C

GS-1530/1532/1930/1932 (from serial number GS3006A-83068 to GS3007A-87490)
GS-1530/1532/1930/1932 (from serial number GS3006B-79660 to GS3007B-82543)

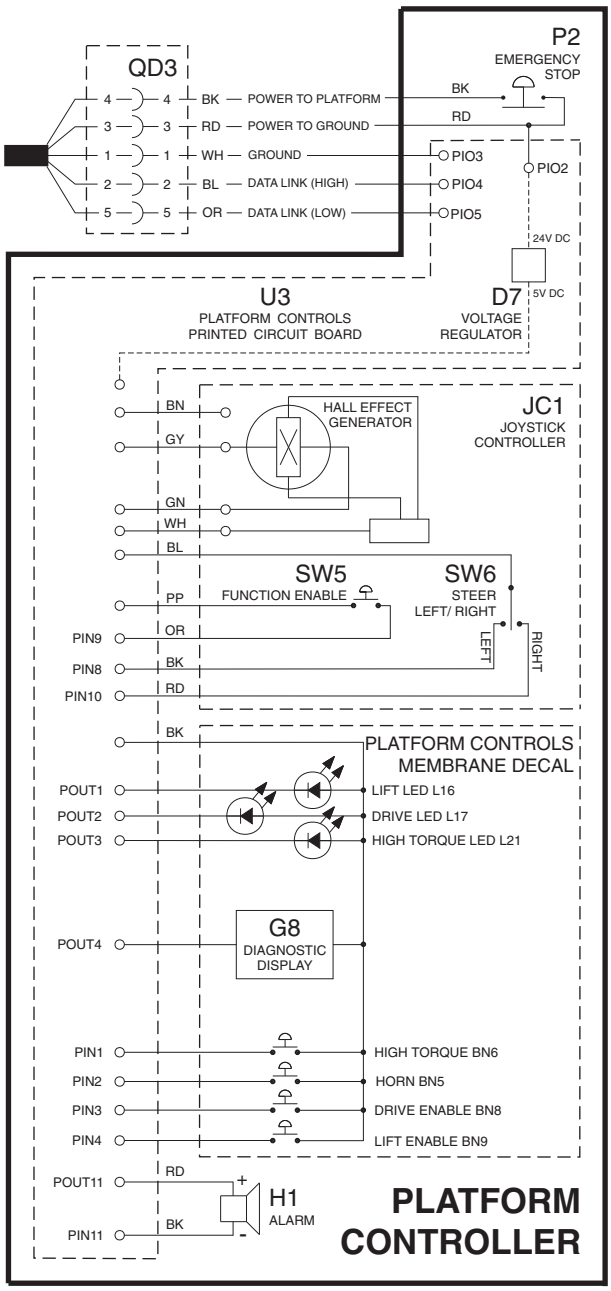

ES0142K

https://truckmanualshub.com/

This page intentionally left blank.

https://truckmanualshub.com/

Electrical Schematic

CE Models

REV B

GS-1530/1532/1930/1932 (from serial number GS3007A-87491 to GS3007A-89537)
GS-1530/1532/1930/1932 (from serial number GS3007B-82544 to GS3007B-84599)

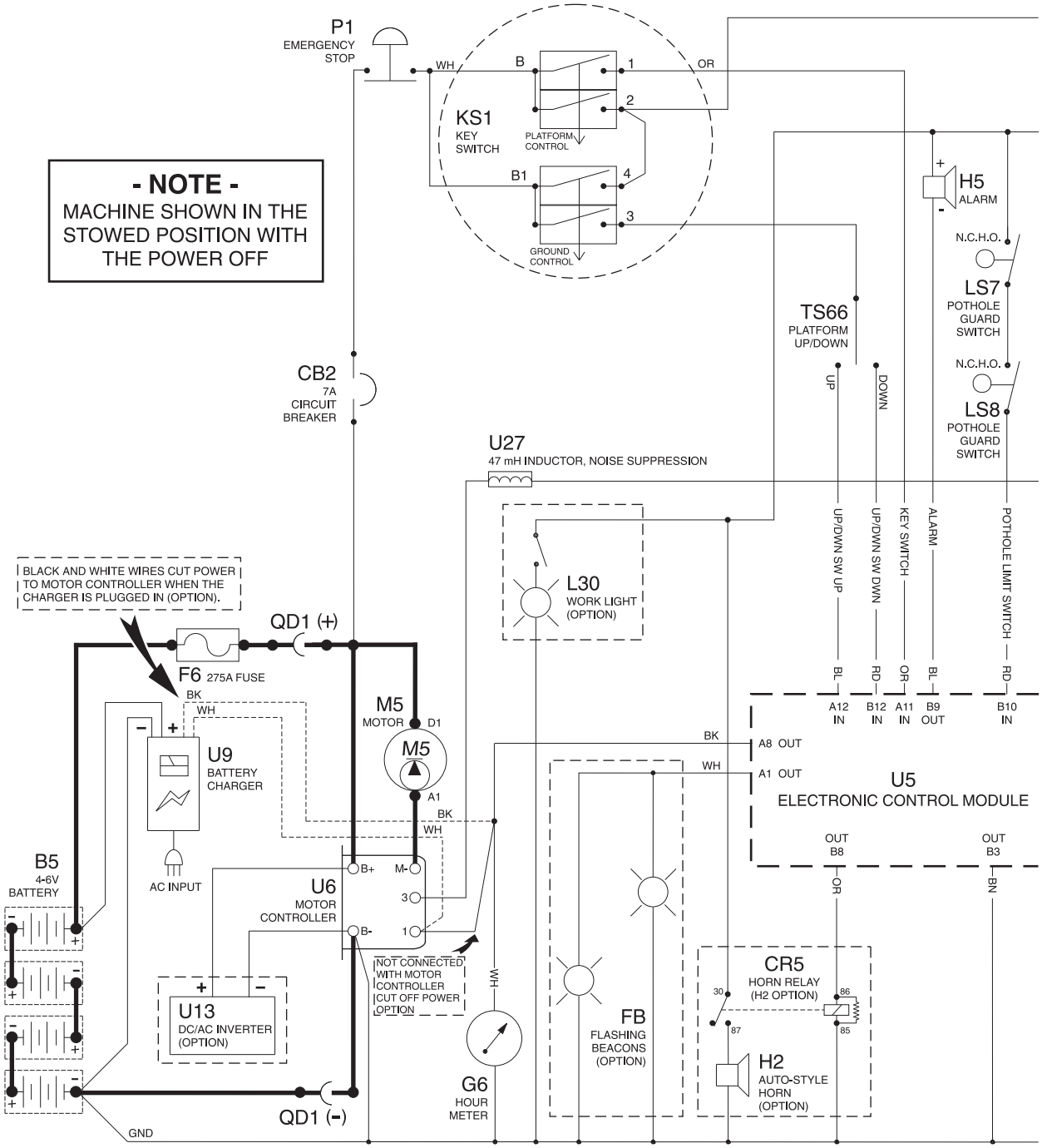

ES0142M

https://truckmanualshub.com/

Electrical Schematic

REV B

CE Models

GS-1530/1532/1930/1932 (from serial number GS3007A-87491 to GS3007A-89537)
GS-1530/1532/1930/1932 (from serial number GS3007B-82544 to GS3007B-84599)

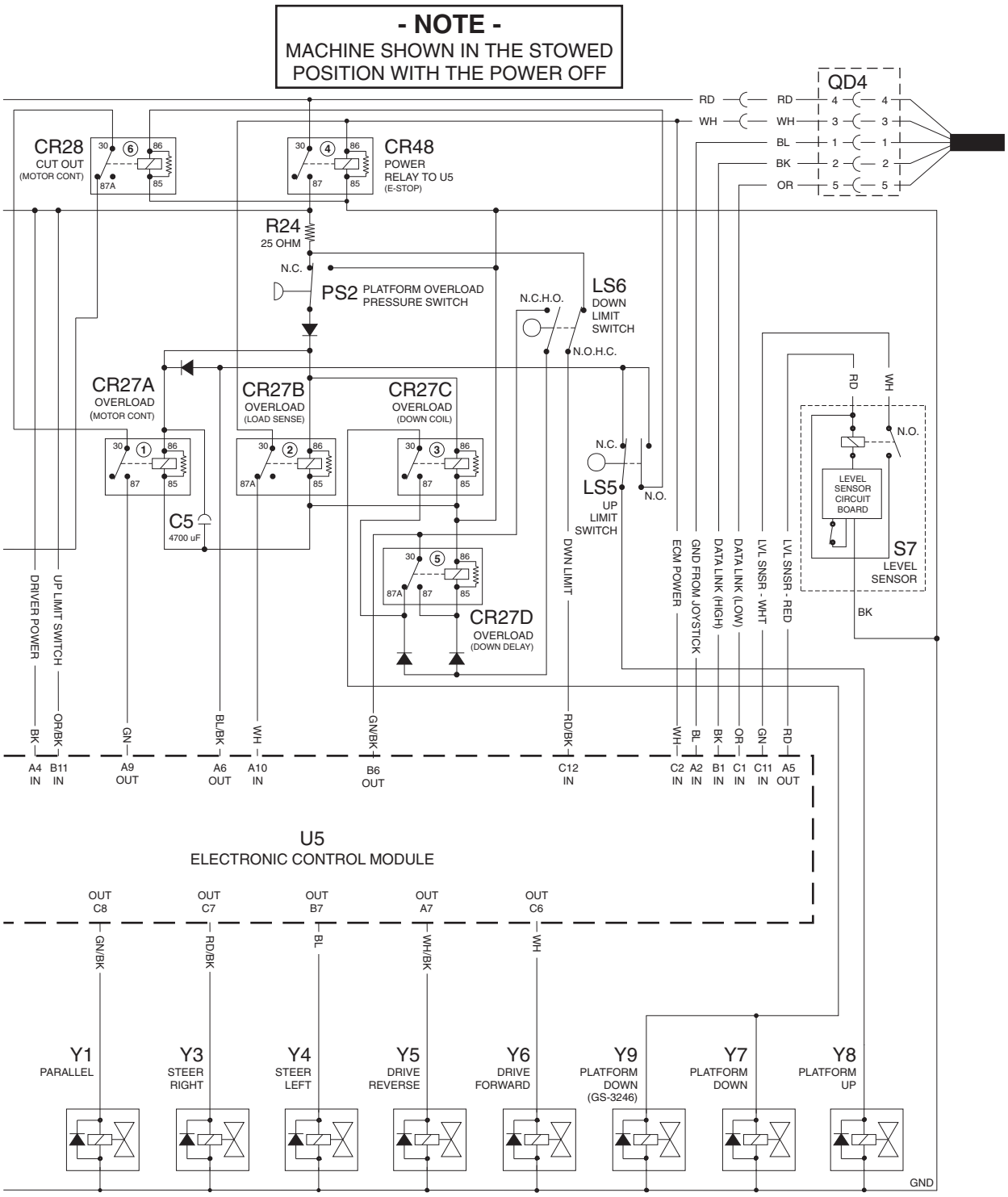

ES0142M

https://truckmanualshub.com/

Electrical Schematic

CE Models

REV B

GS-1530/1532/1930/1932 (from serial number GS3007A-87491 to GS3007A-89537)
GS-1530/1532/1930/1932 (from serial number GS3007B-82544 to GS3007B-84599)

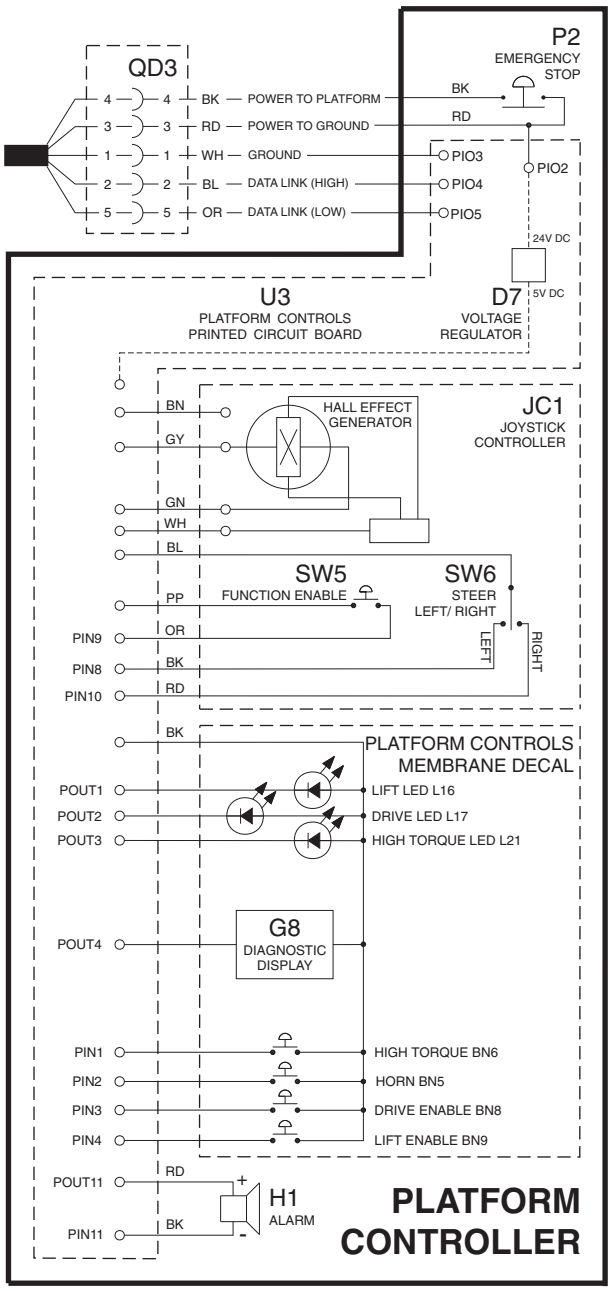

ES0142M

https://truckmanualshub.com/

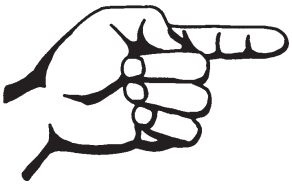

This page intentionally left blank.

https://truckmanualshub.com/

Electrical Schematic

CE Models

REV F

GS-1530/1532/1930/1932 (after serial number GS3007A-89537 and GS3007B-84599)
GS-1530/1532/1930/1932 (from serial number GS3008C-101)

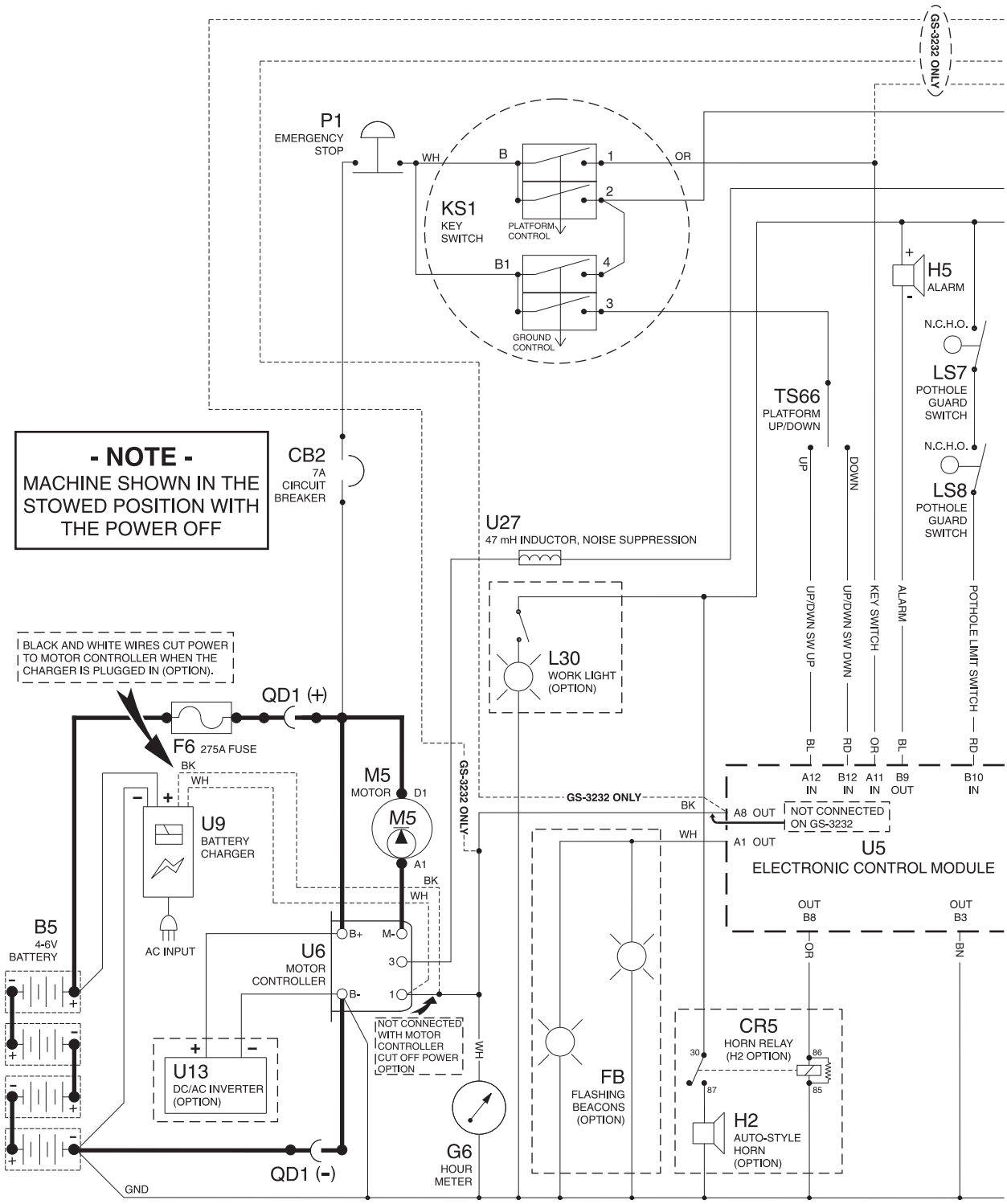

ES0142P

https://truckmanualshub.com/

Electrical Schematic

REV F

CE Models

GS-1530/1532/1930/1932 (after serial number GS3007A-89537 and GS3007B-84599)

GS-1530/1532/1930/1932 (from serial number GS3008C-101)

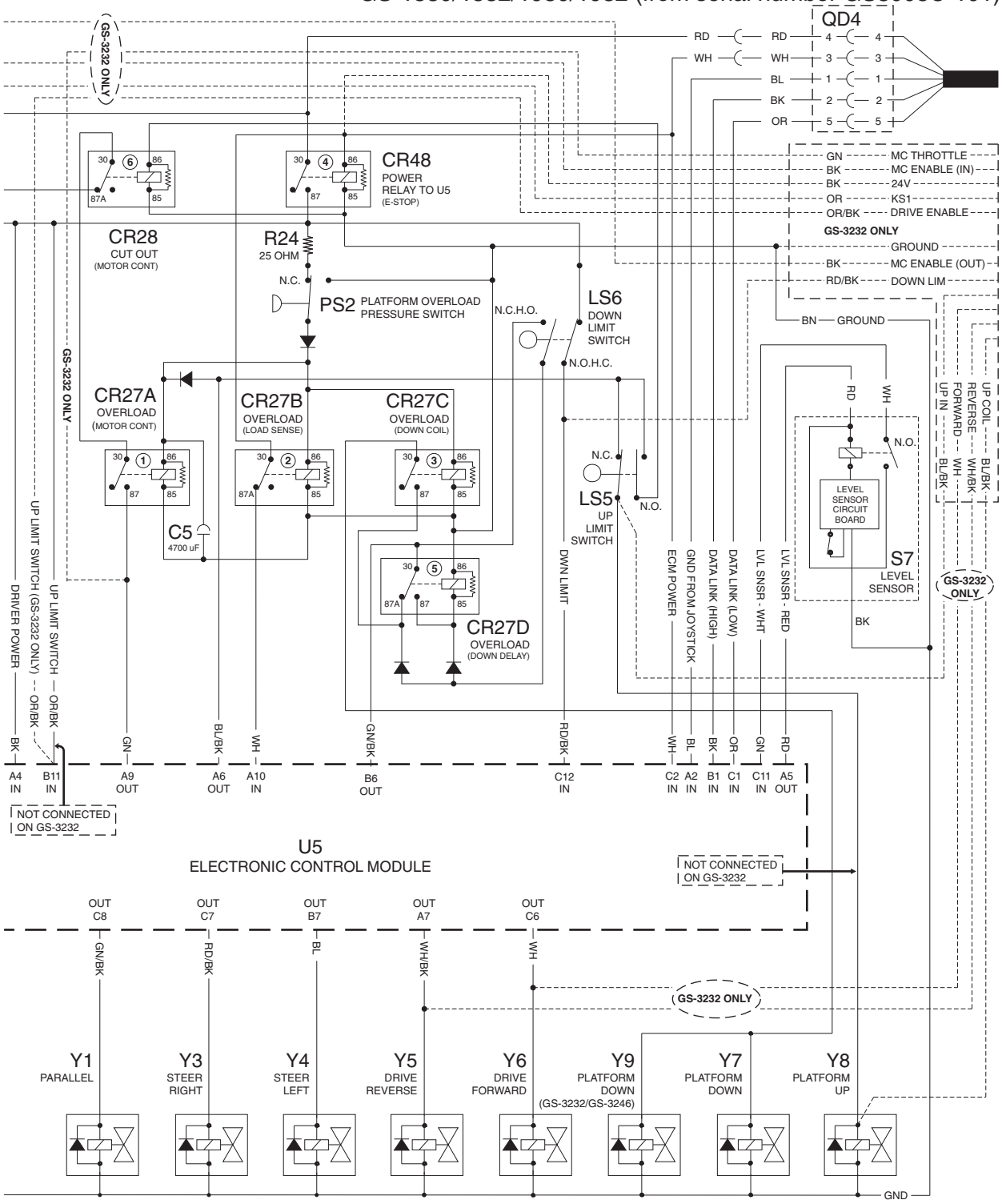

ES0142P

https://truckmanualshub.com/

Electrical Schematic

CE Models

REV F

GS-1530/1532/1930/1932 (after serial number GS3007A-89537 and GS3007B-84599)
GS-1530/1532/1930/1932 (from serial number GS3008C-101)

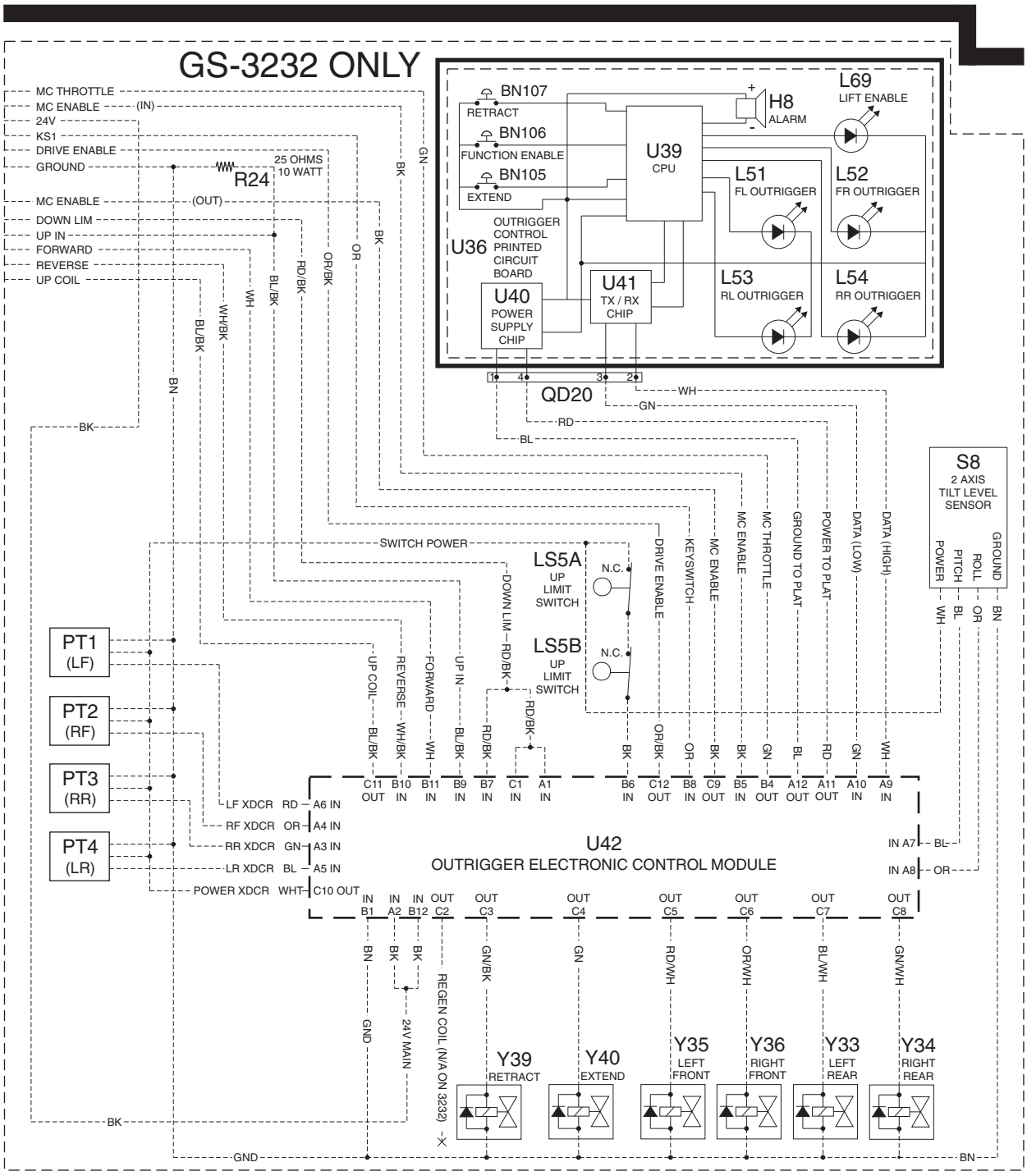

ES0142P

https://truckmanualshub.com/

Electrical Schematic

REV F

CE Models

GS-1530/1532/1930/1932 (after serial number GS3007A-89537 and GS3007B-84599)
GS-1530/1532/1930/1932 (from serial number GS3008C-101)

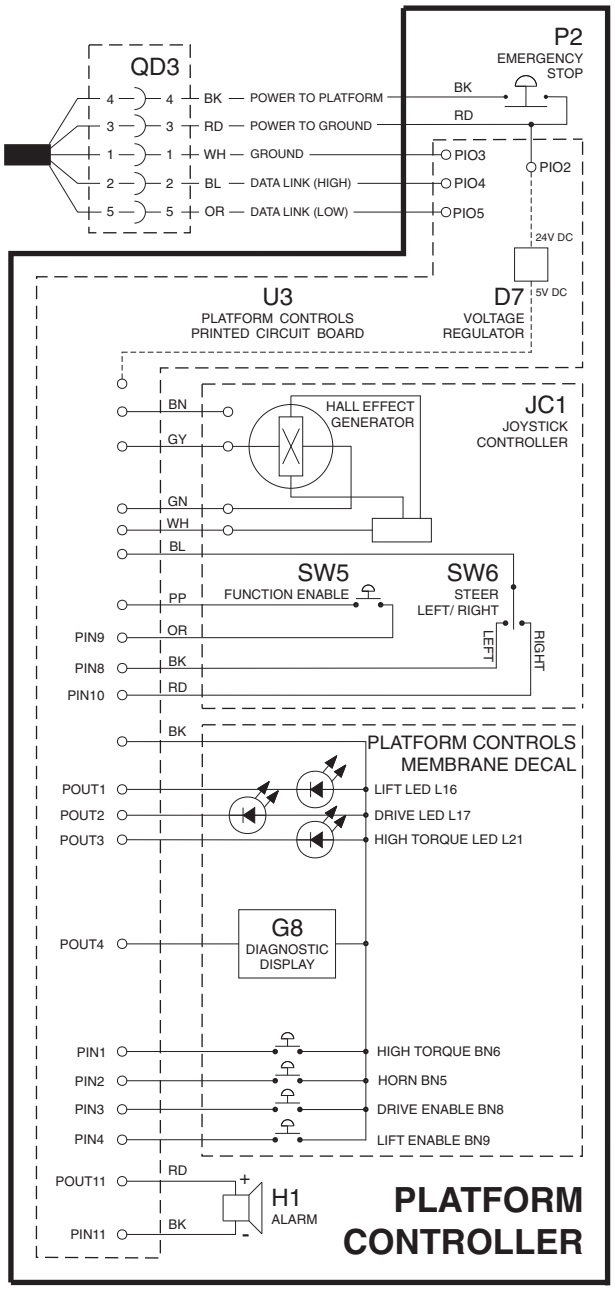

- NOTE -
MACHINE SHOWN IN THE STOWED POSITION WITH THE POWER OFF

ES0142P

https://truckmanualshub.com/

Electrical Schematic

CE Models

REV E

GS-2032/2632 (from serial number GS3205-75407 to GS3205-77290)
GS-2046/2646/3246 (from serial number GS4605-75438 to GS4605-76734)

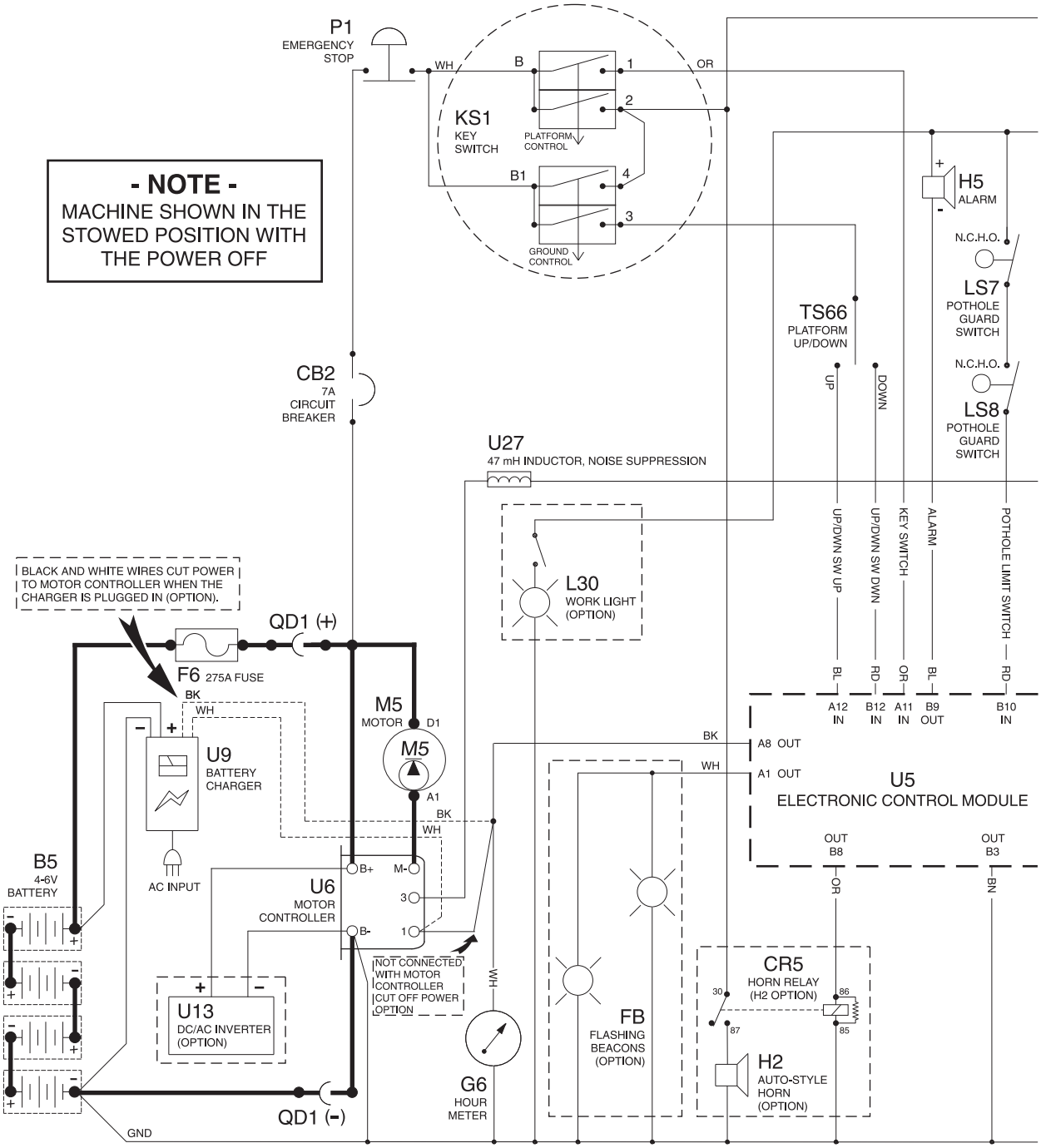

ES0142G

https://truckmanualshub.com/

Electrical Schematic

REV E

CE Models

GS-2032/2632 (from serial number GS3205-75407 to GS3205-77290)
GS-2046/2646/3246 (from serial number GS4605-75438 to GS4605-76734)

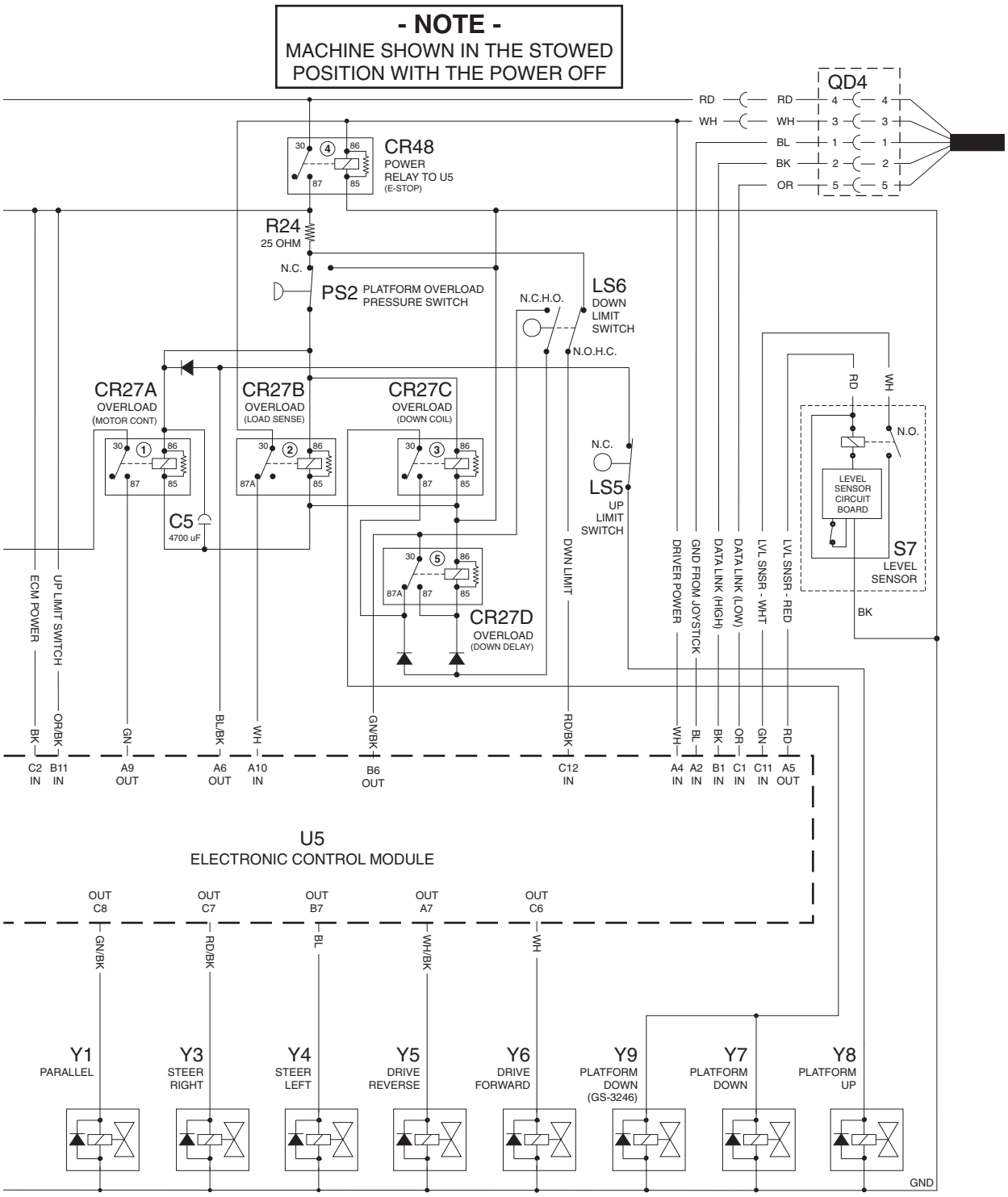

ES0142G

https://truckmanualshub.com/

Electrical Schematic

CE Models

REV E

GS-2032/2632 (from serial number GS3205-75407 to GS3205-77290)
GS-2046/2646/3246 (from serial number GS4605-75438 to GS4605-76734)

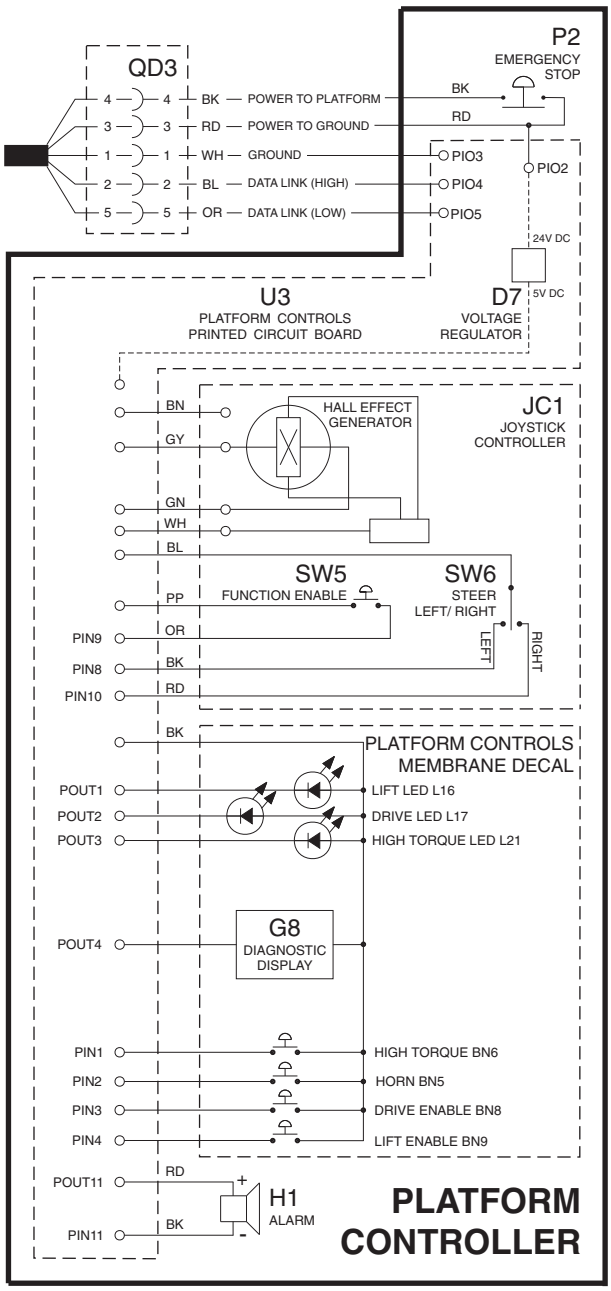

ES0142G

https://truckmanualshub.com/

This page intentionally left blank.

https://truckmanualshub.com/

Electrical Schematic

CE Models

REV D

GS-2032/2632 (from serial number GS3205-77291 to GS3206-79991)
GS-2046/2646/3246 (from serial number GS4605-76735 to GS4606-78915)

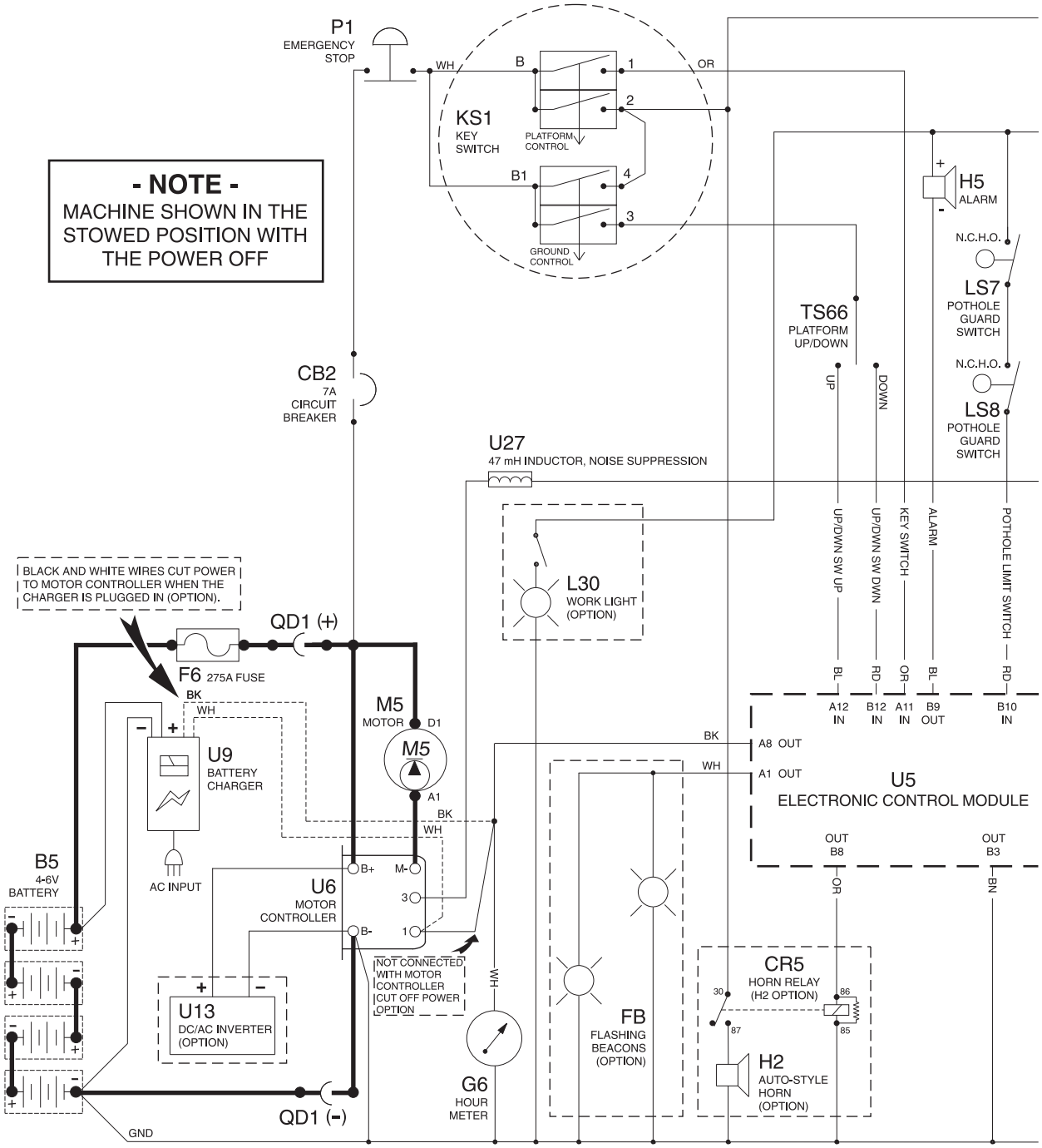

ES0142J

https://truckmanualshub.com/

Electrical Schematic

REV D

CE Models

GS-2032/2632 (from serial number GS3205-77291 to GS3206-79991)
GS-2046/2646/3246 (from serial number GS4605-76735 to GS4606-78915)

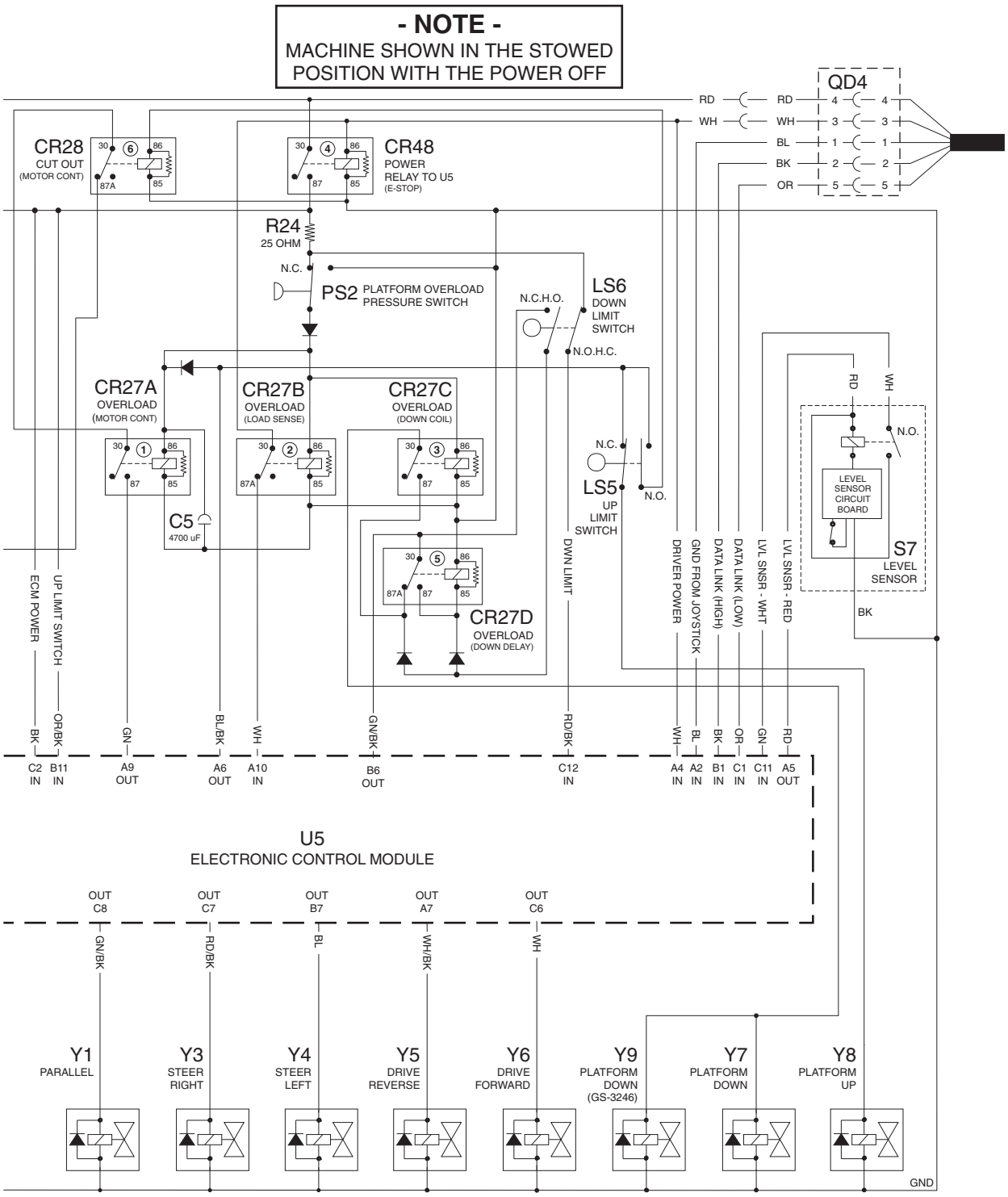

ES0142J

https://truckmanualshub.com/

Electrical Schematic

CE Models

REV D

GS-2032/2632 (from serial number GS3205-77291 to GS3206-79991)
GS-2046/2646/3246 (from serial number GS4605-76735 to GS4606-78915)

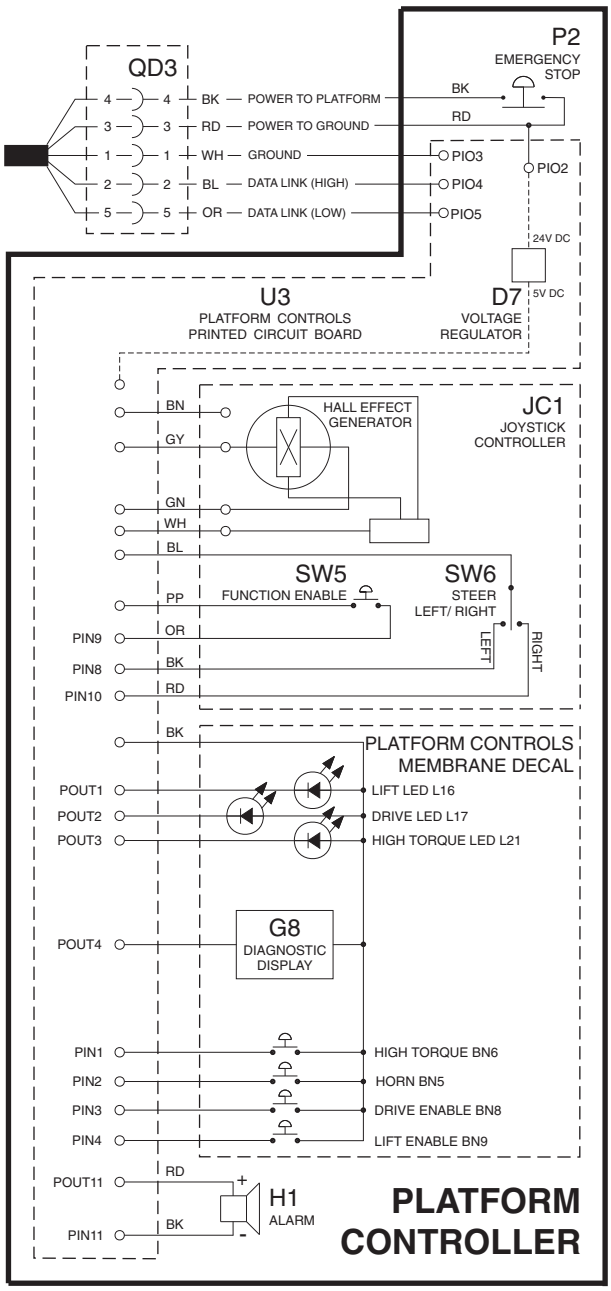

ES0142J

https://truckmanualshub.com/

This page intentionally left blank.

https://truckmanualshub.com/

Electrical Schematic

CE Models

REV C

GS-2032/2632 (from serial number GS3206-79992 to GS3207-83650)
GS-2046/2646/3246 (from serial number GS4606-78916 to GS4607-82535)

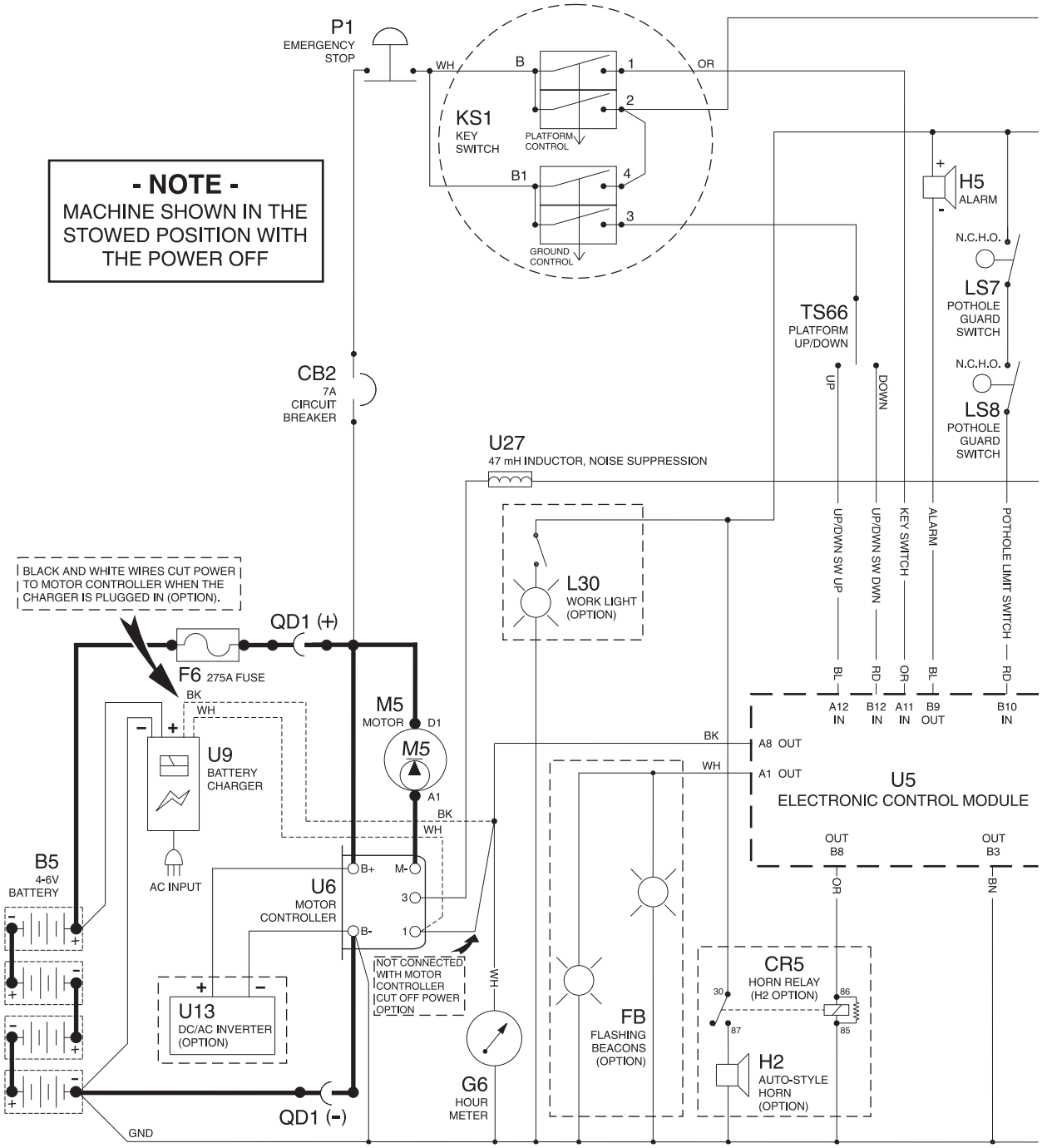

ES0142K

https://truckmanualshub.com/

Electrical Schematic

REV C

CE Models

GS-2032/2632 (from serial number GS3206-79992 to GS3207-83650)
GS-2046/2646/3246 (from serial number GS4606-78916 to GS4607-82535)

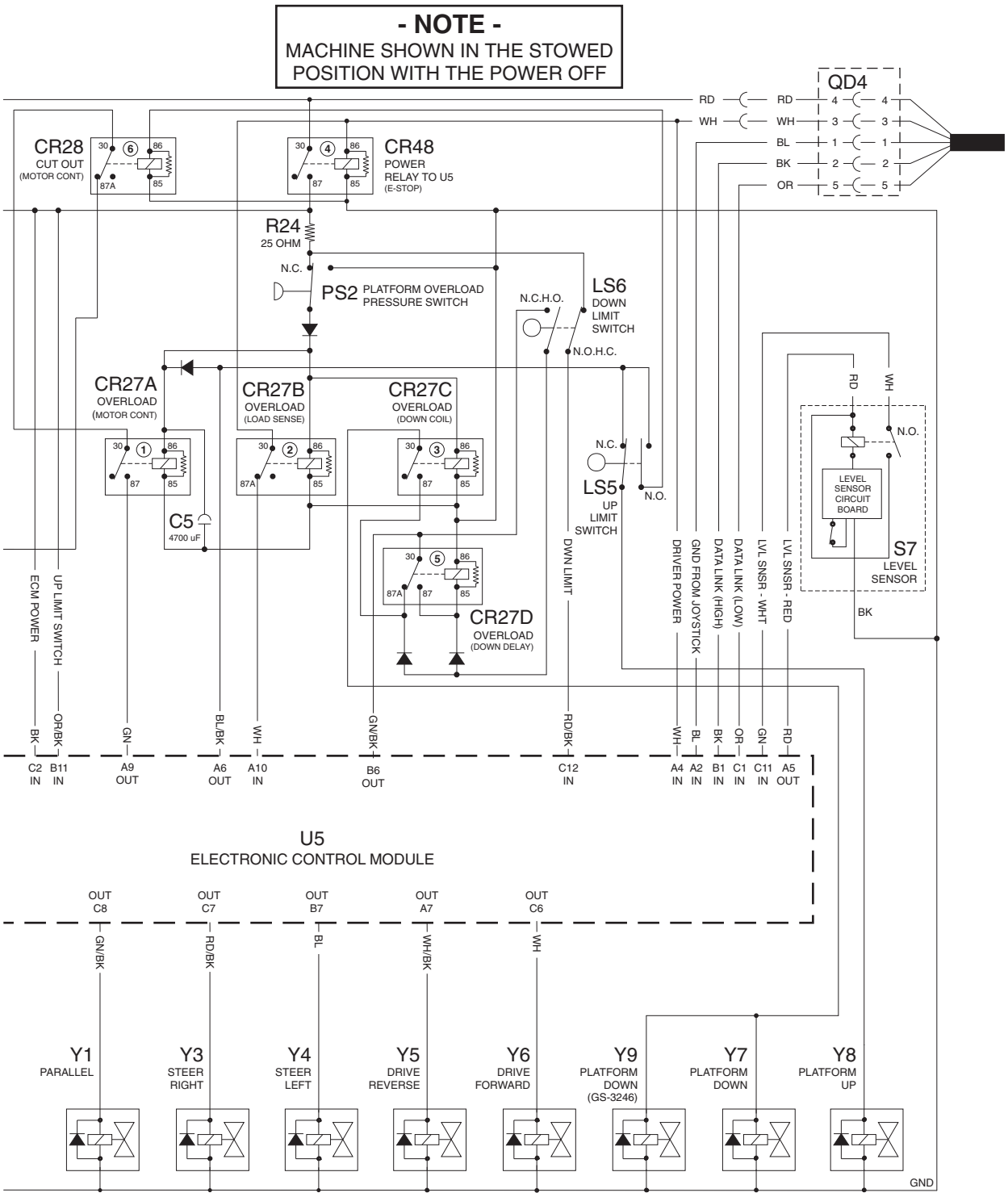

ES0142K

https://truckmanualshub.com/

Electrical Schematic

CE Models

REV C

GS-2032/2632 (from serial number GS3206-79992 to GS3207-83650)
GS-2046/2646/3246 (from serial number GS4606-78916 to GS4607-82535)

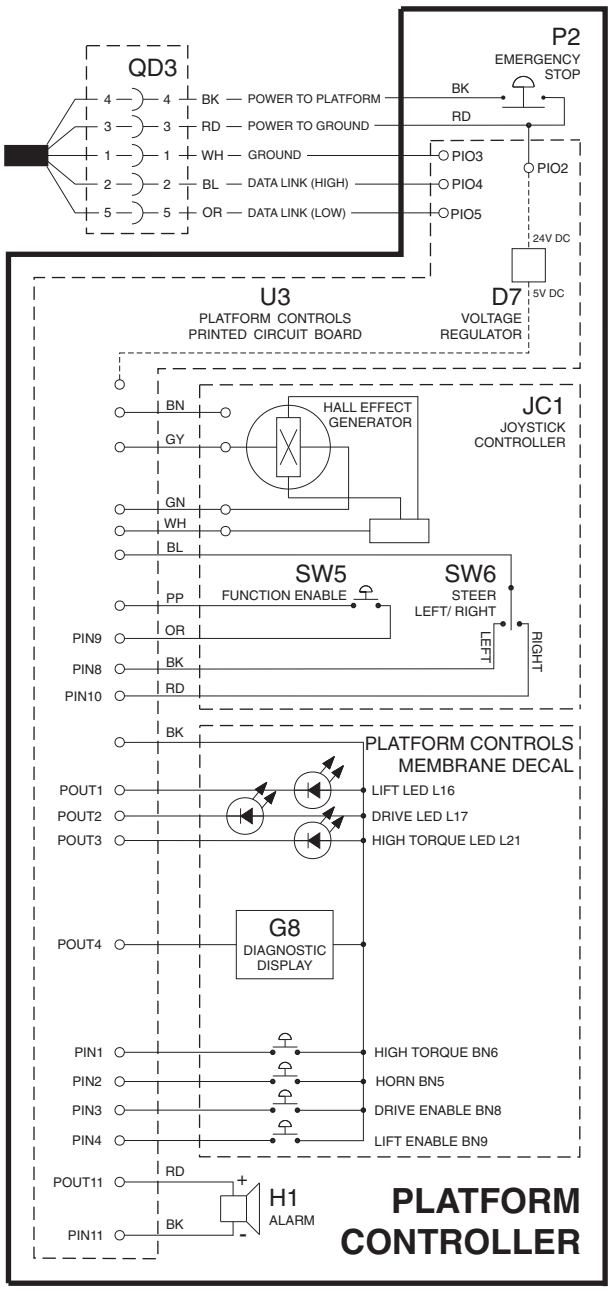

ES0142K

https://truckmanualshub.com/

This page intentionally left blank.

https://truckmanualshub.com/

Electrical Schematic

CE Models

REV B

GS-2032/2632 (from serial number GS3207-83651 to GS3207-84866)
GS-2046/2646/3246 (from serial number GS4607-82536 to GS4607-84839)

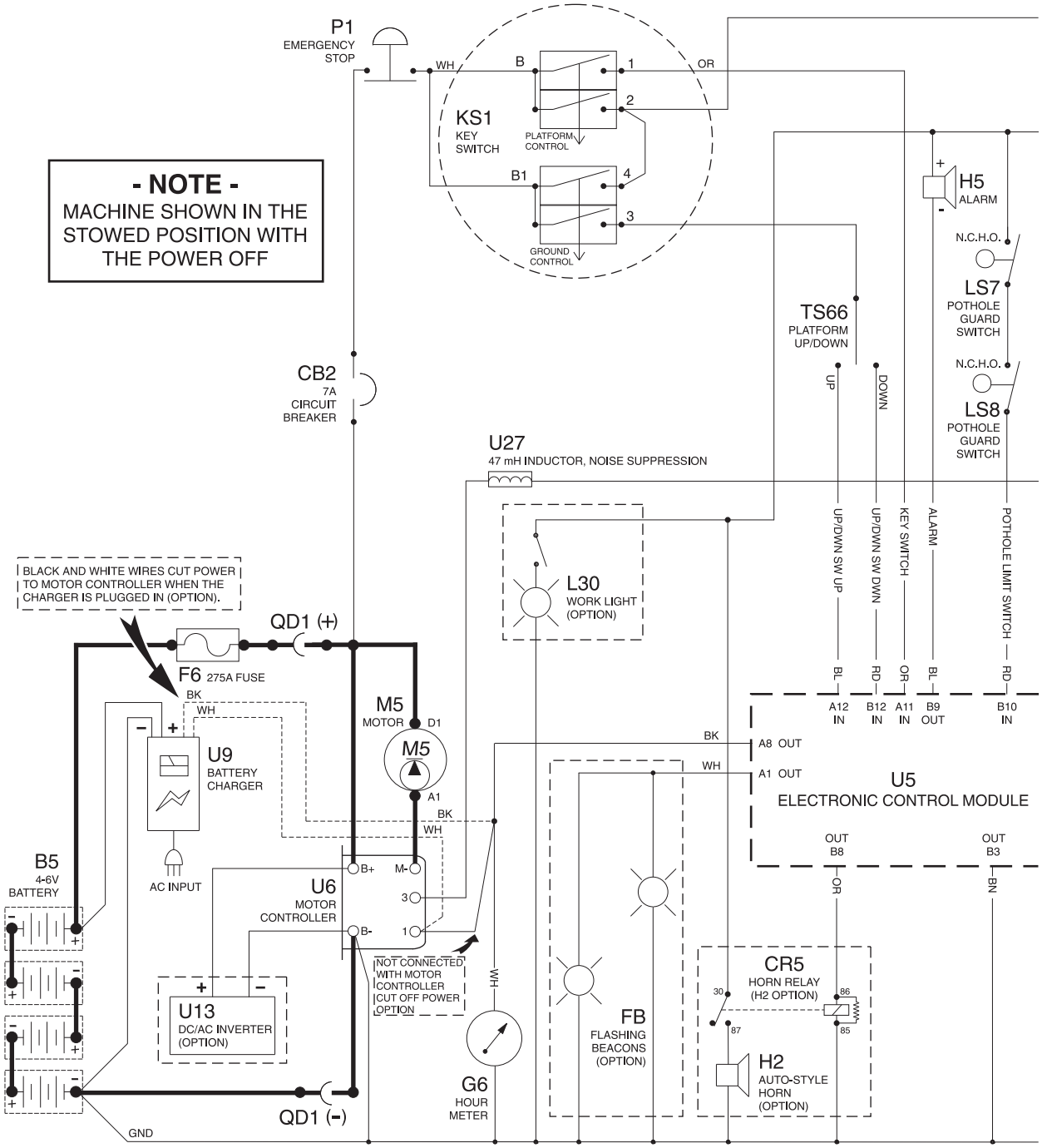

ES0142M

https://truckmanualshub.com/

Electrical Schematic

REV B

CE Models

GS-2032/2632 (from serial number GS3207-83651 to GS3207-84866)
GS-2046/2646/3246 (from serial number GS4607-82536 to GS4607-84839)

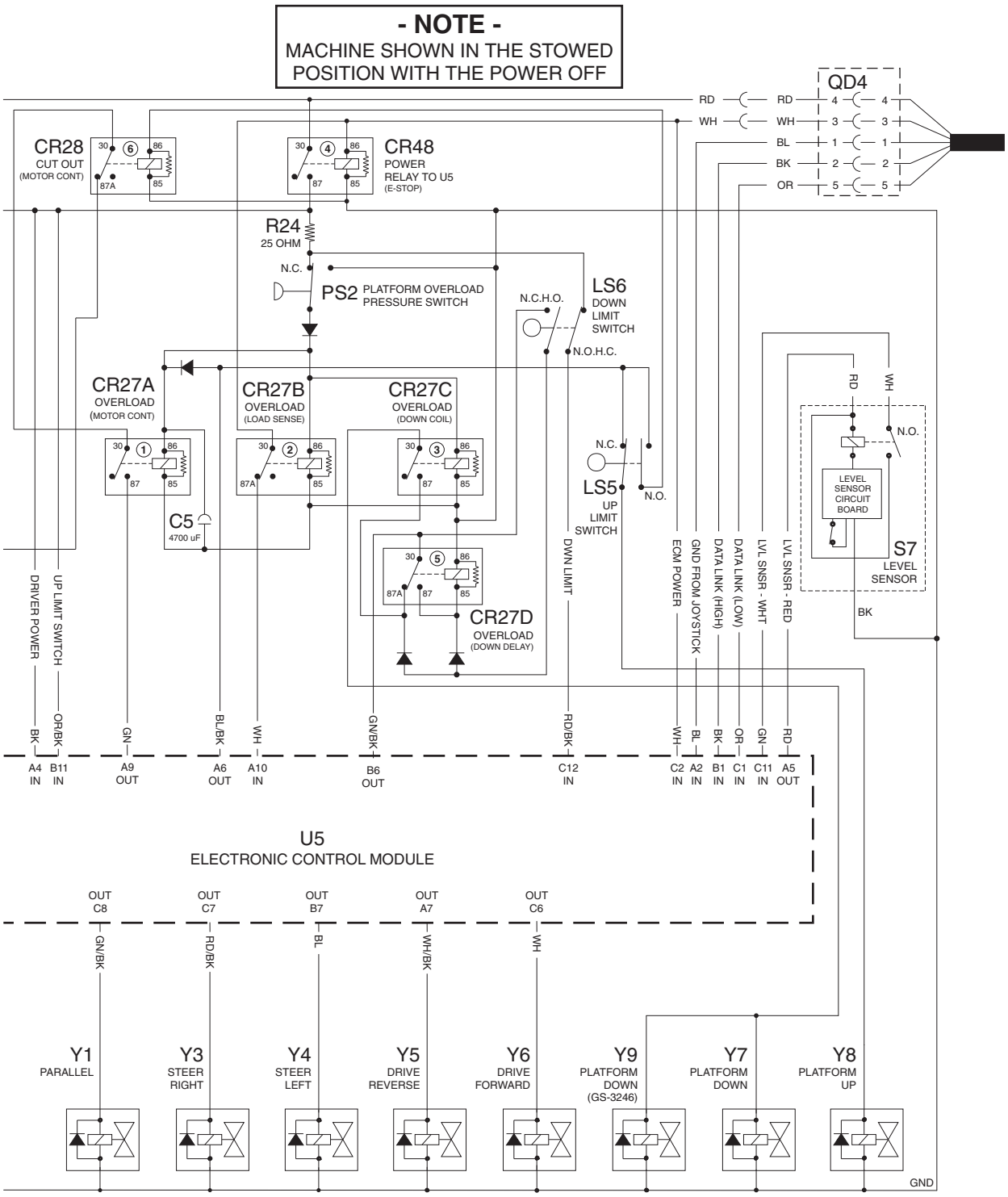

ES0142M

https://truckmanualshub.com/

Electrical Schematic

CE Models

REV B

GS-2032/2632 (from serial number GS3207-83651 to GS3207-84866)
GS-2046/2646/3246 (from serial number GS4607-82536 to GS4607-84839)

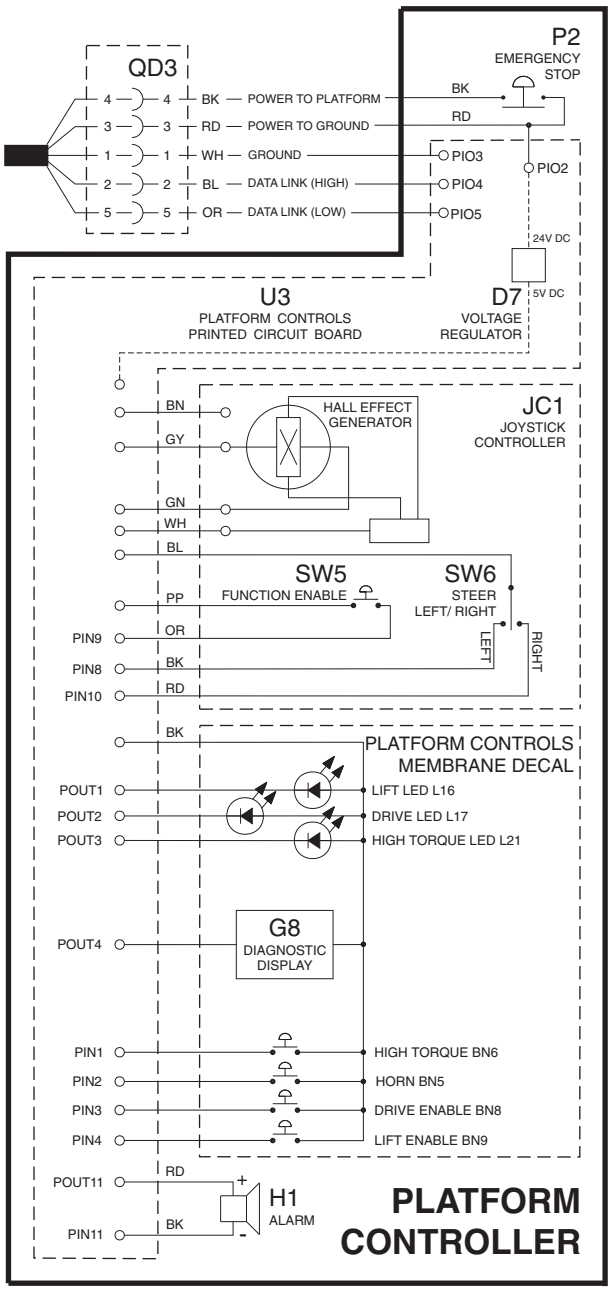

ES0142M

https://truckmanualshub.com/

This page intentionally left blank.

https://truckmanualshub.com/

Electrical Schematic

CE Models

REV F

GS-2032/2632/3232 (after serial number GS3207-84866 and from GS3208C-101)
GS-2046/2646/3246 (after serial number GS4607-84839 and from GS4609C-101)

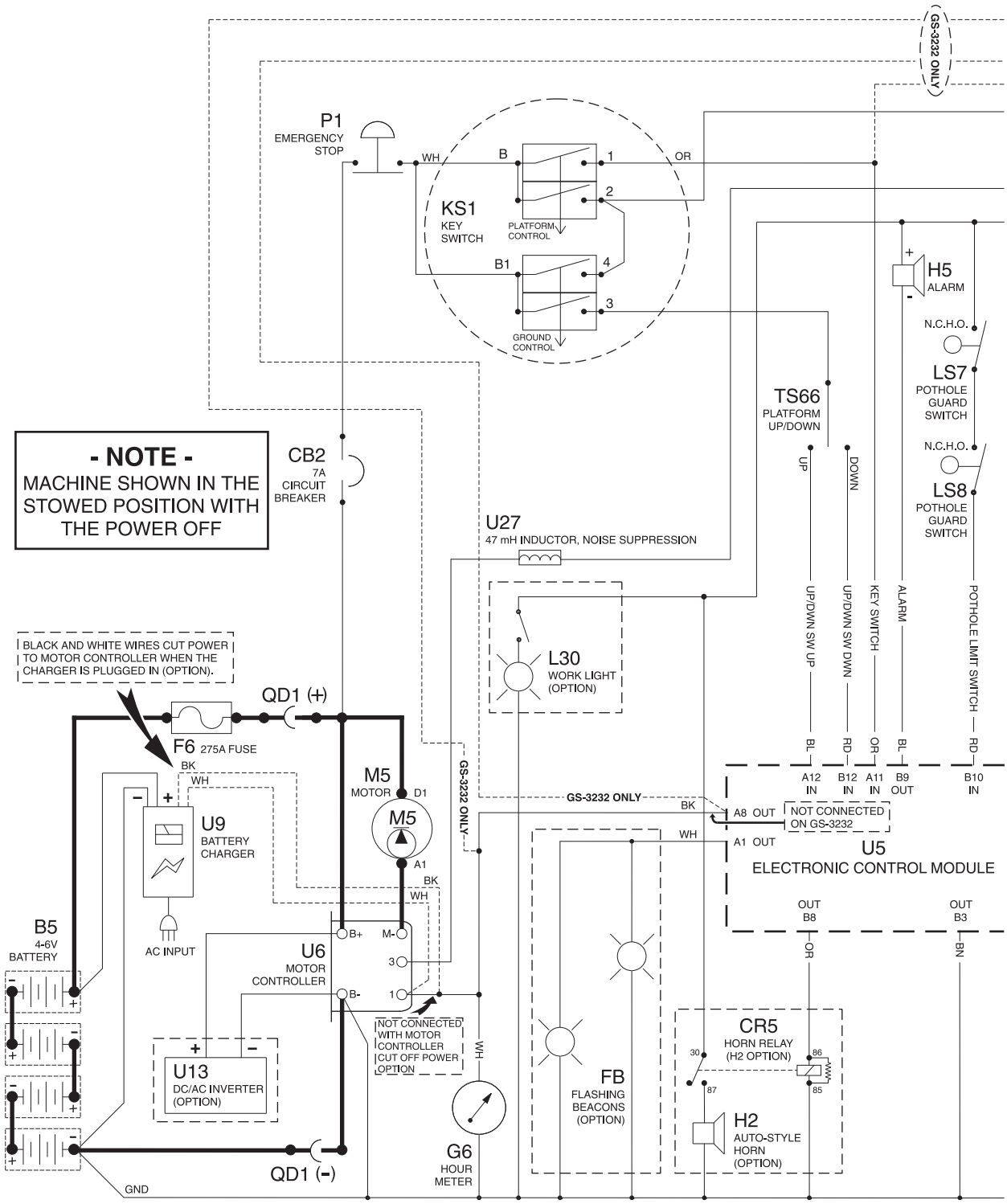

ES0142P

https://truckmanualshub.com/

Electrical Schematic

REV F

CE Models

GS-2032/2632/3232 (after serial number GS3207-84866 and from GS3208C-101)
GS-2046/2646/3246 (after serial number GS4607-84839 and from GS4609C-101)

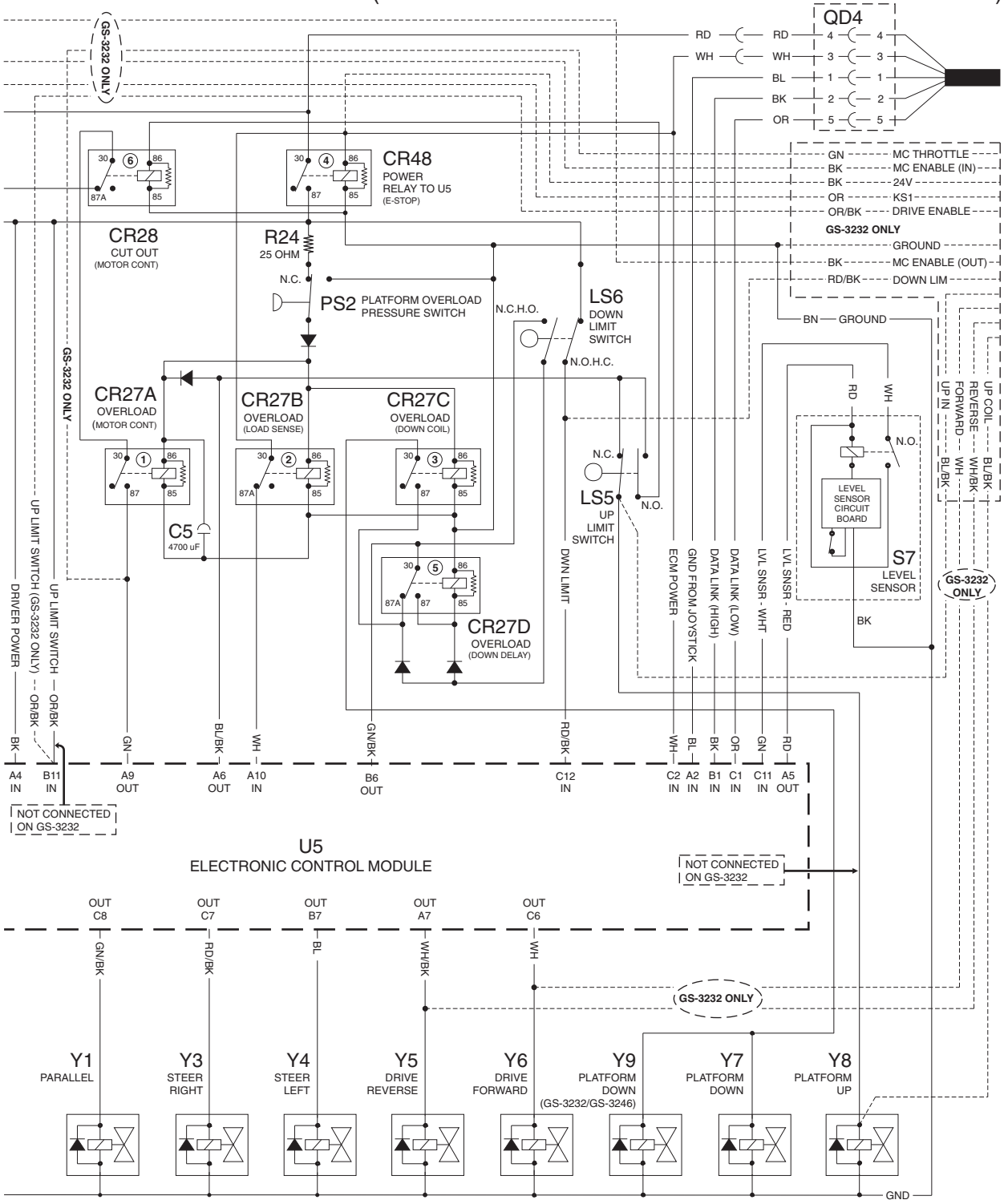

ES0142P

https://truckmanualshub.com/

Electrical Schematic

CE Models

REV F

GS-2032/2632/3232 (after serial number GS3207-84866 and from GS3208C-101)
GS-2046/2646/3246 (after serial number GS4607-84839 and from GS4609C-101)

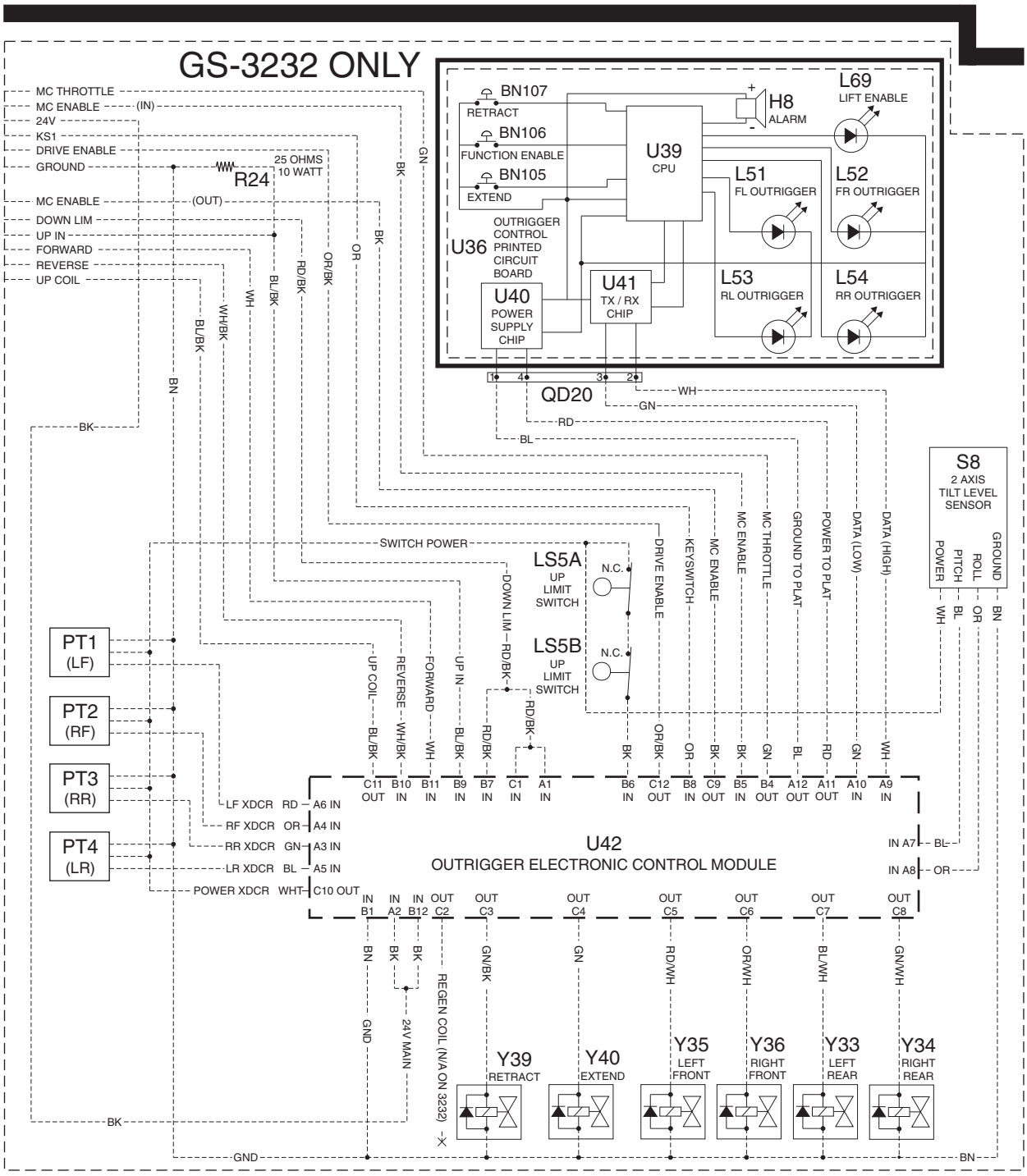

https://truckmanualshub.com/

Electrical Schematic

REV F

CE Models

GS-2032/2632/3232 (after serial number GS3207-84866 and from GS3208C-101)
GS-2046/2646/3246 (after serial number GS4607-84839 and from GS4609C-101)

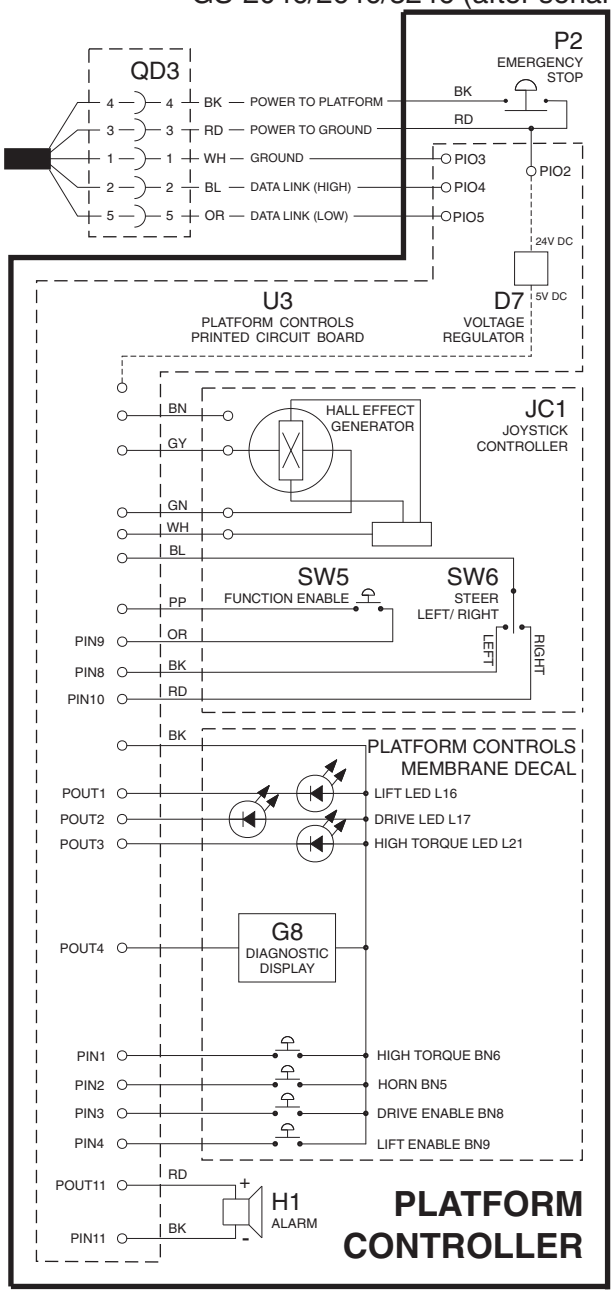

- NOTE -
MACHINE SHOWN IN THE STOWED POSITION WITH THE POWER OFF

ES0142P

https://truckmanualshub.com/

Component Reference and Hydraulic Symbols Legend

REV B

Hydraulic cylinder

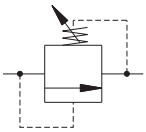

Relief valve

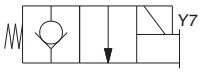

Solenoid operated 2 position 2 way directional valve normally closed

Orifice with size

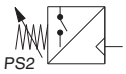

Platform overload pressure switch

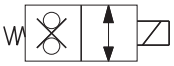

Solenoid operated 2 position 2 way valve, normally closed

Variable speed motor

Fixed displacement pump

Bi-directional motor

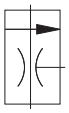

Priority flow regulator

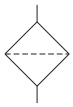

Filter

Brake

Shuttle valve

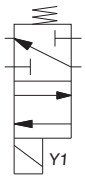

Solenoid operated 2 position 4 way directional valve

Accumulator

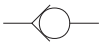

Check valve

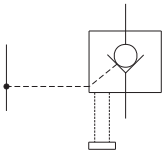

Pilot operated check valve with needle valve

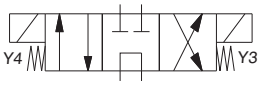

Solenoid operated 3 position 4 way directional valve

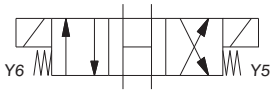

Solenoid operated 3 position 4 way directional valve

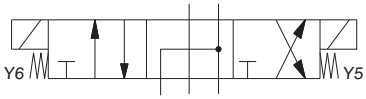

Solenoid operated 3 position 5 way directional valve

https://truckmanualshub.com/

REV B

Component Reference and Hydraulic Symbols Legend

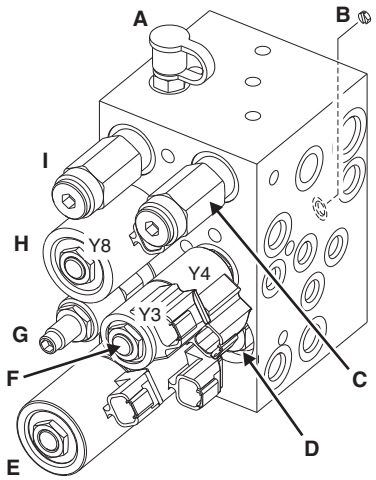

Function manifold,
GS-1530, GS-1532,
GS-1930 and GS-1932

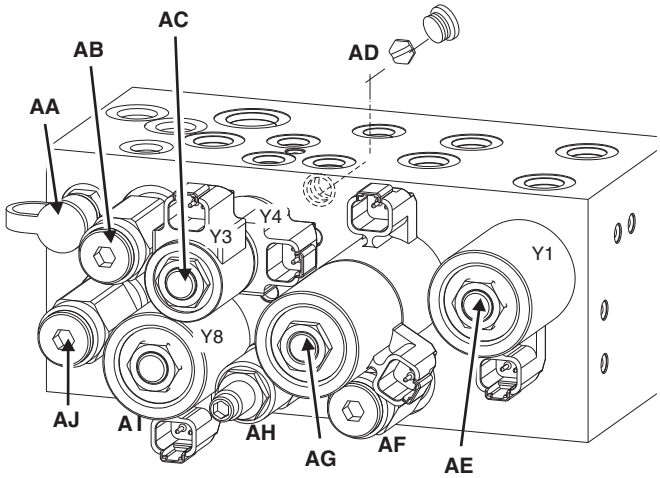

Function manifold,
GS-2032, GS-2632, GS-3232
GS-2046, GS-2646 and GS-3246

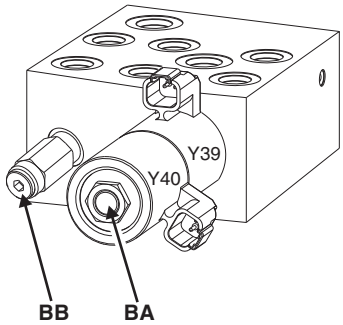

Outrigger manifold,
GS-3232

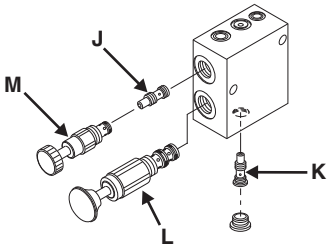

Brake release manifold,
all models

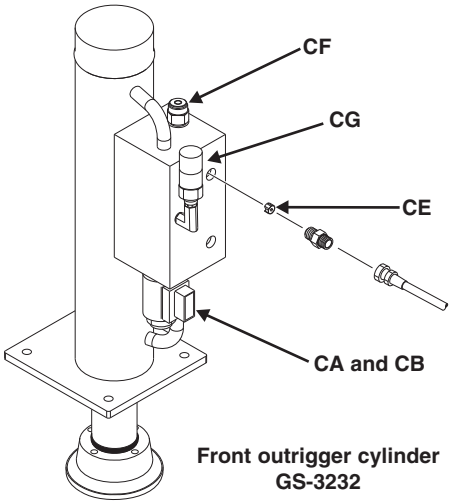

Front outrigger cylinder
GS-3232

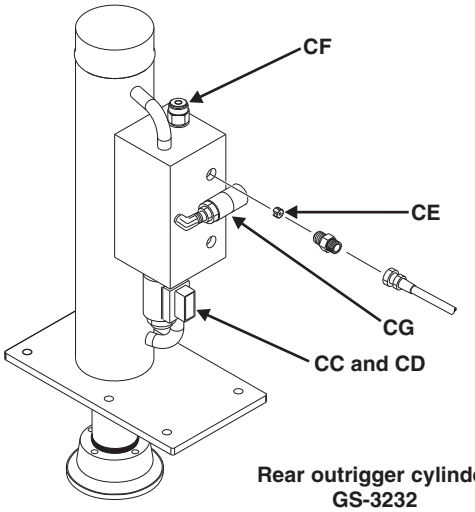

Rear outrigger cylinder
GS-3232

https://truckmanualshub.com/

Hydraulic Schematic

GS-1530/1532/1930/1932 (from serial number GS3005A-76000 to GS3005A-76491) REV B
GS-1530/1532/1930/1932 (from serial number GS3005B-76000 to GS3005B-76084)

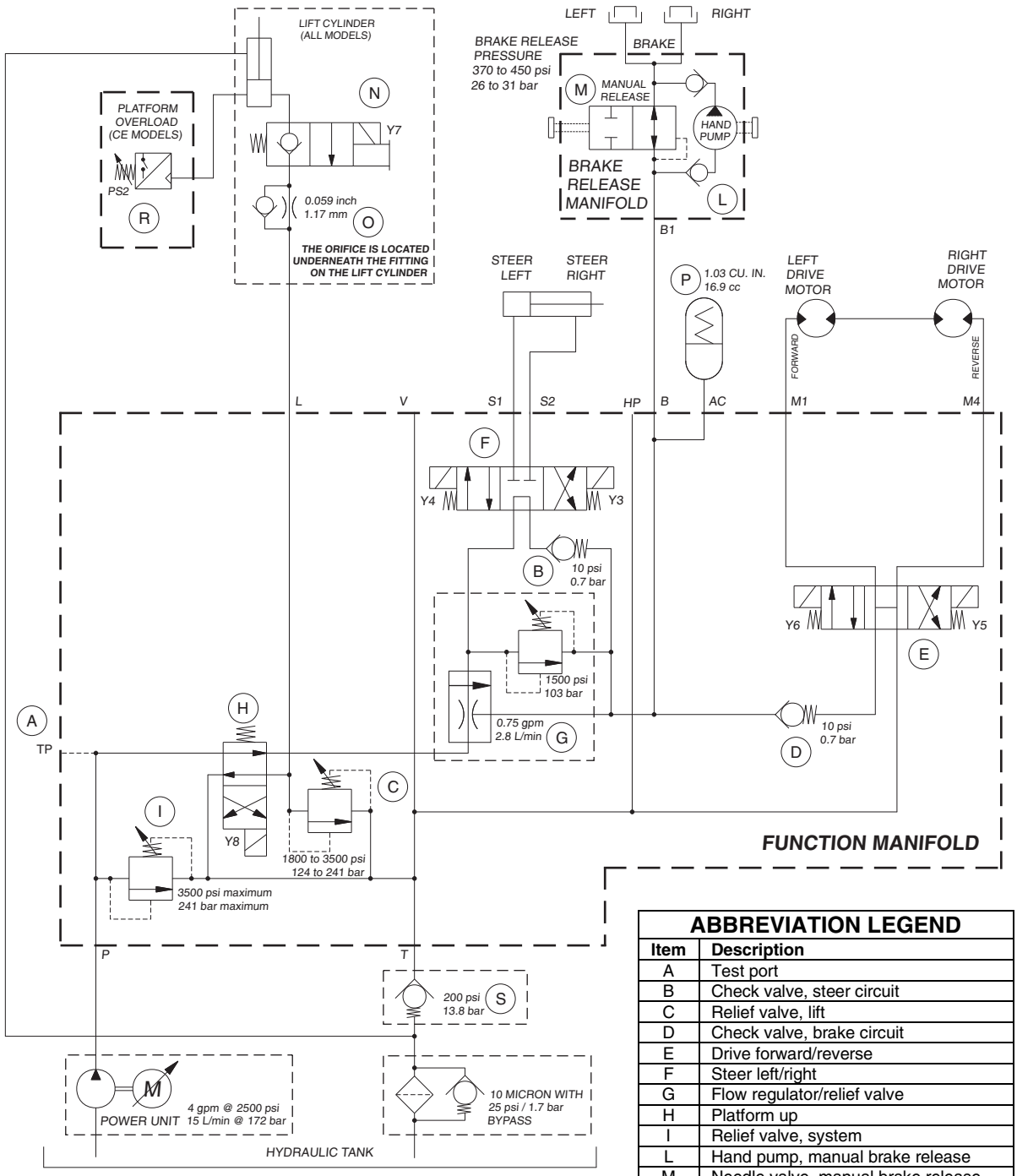

ABBREVIATION LEGEND	
Item	**Description**
A	Test port
B	Check valve, steer circuit
C	Relief valve, lift
D	Check valve, brake circuit
E	Drive forward/reverse
F	Steer left/right
G	Flow regulator/relief valve
H	Platform up
I	Relief valve, system
L	Hand pump, manual brake release
M	Needle valve, manual brake release
N	Platform lowering valve
O	Orifice, platform down circuit
P	Accumulator
R	Pressure switch, platform overload
S	Check valve, drive circuit

HS0035F

https://truckmanualshub.com/

Hydraulic Schematic

REV D

GS-1530/1532/1930/1932 (after serial number GS3005A-76491)
GS-1530/1532/1930/1932 (after serial number GS3005B-76084)
GS-1530/1532/1930/1932 (from serial number GS3008C-101)

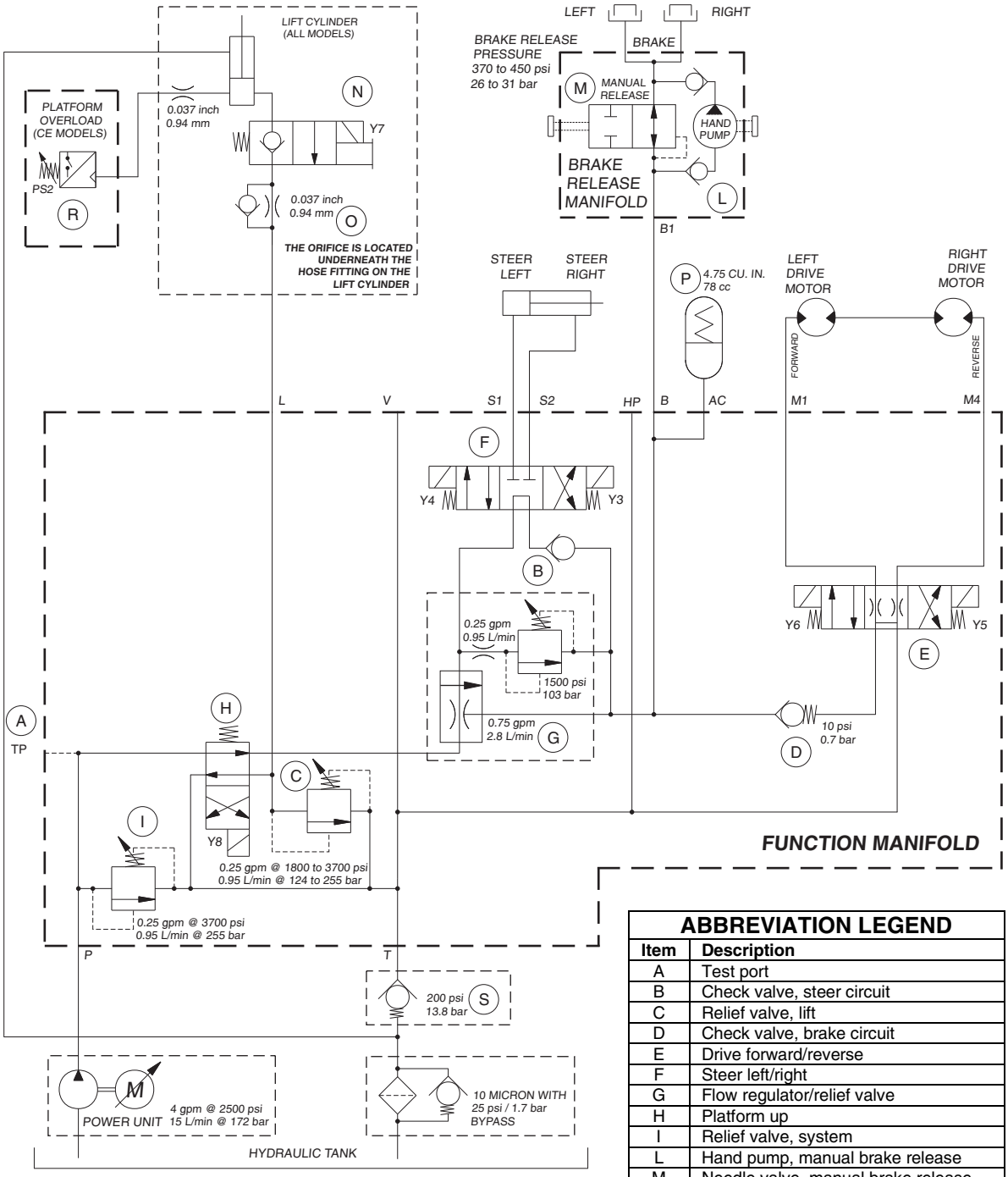

ABBREVIATION LEGEND	
Item	**Description**
A	Test port
B	Check valve, steer circuit
C	Relief valve, lift
D	Check valve, brake circuit
E	Drive forward/reverse
F	Steer left/right
G	Flow regulator/relief valve
H	Platform up
I	Relief valve, system
L	Hand pump, manual brake release
M	Needle valve, manual brake release
N	Platform lowering valve
O	Orifice, platform down circuit
P	Accumulator
R	Pressure switch, platform overload
S	Check valve, drive circuit

HS0035J

https://truckmanualshub.com/

Hydraulic Schematic

GS-2032/2632 (from serial number GS3205-75407 to GS3206-80131) REV D
GS-2046/2646/3246 (from serial number GS4605-75438 to GS4606-79027)

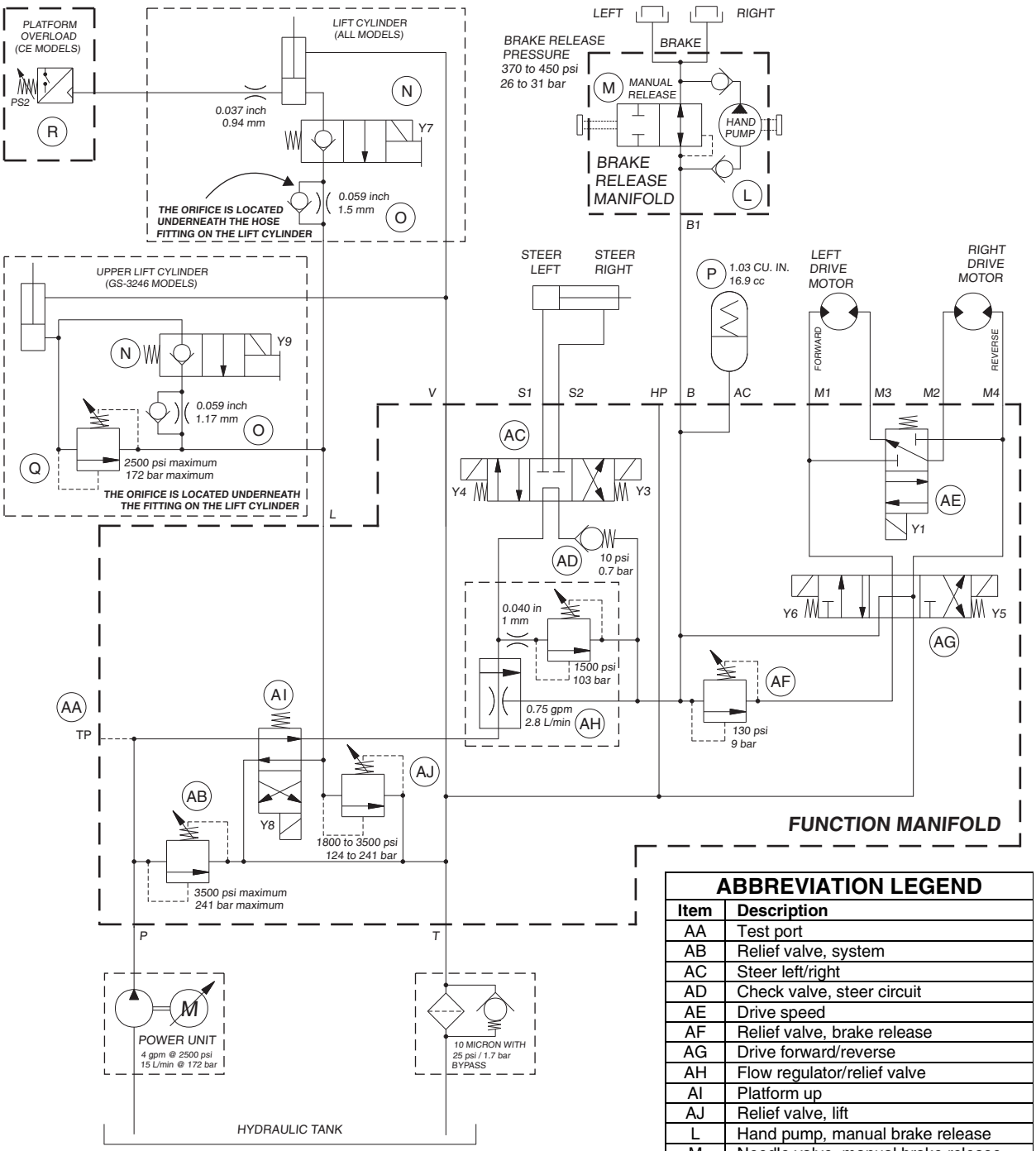

HS0036H

ABBREVIATION LEGEND	
Item	**Description**
AA	Test port
AB	Relief valve, system
AC	Steer left/right
AD	Check valve, steer circuit
AE	Drive speed
AF	Relief valve, brake release
AG	Drive forward/reverse
AH	Flow regulator/relief valve
AI	Platform up
AJ	Relief valve, lift
L	Hand pump, manual brake release
M	Needle valve, manual brake release
N	Platform lowering valve
O	Orifice, platform down circuit
P	Accumulator
Q	Relief valve, platform down
R	Pressure switch, platform overload

https://truckmanualshub.com/

Hydraulic Schematic

REV A

GS-2032/2632 (from serial number GS3206-80132 to GS3207-84866)
GS- 2046/2646/3246 (from serial number GS4606-79028 to GS4607-84839)

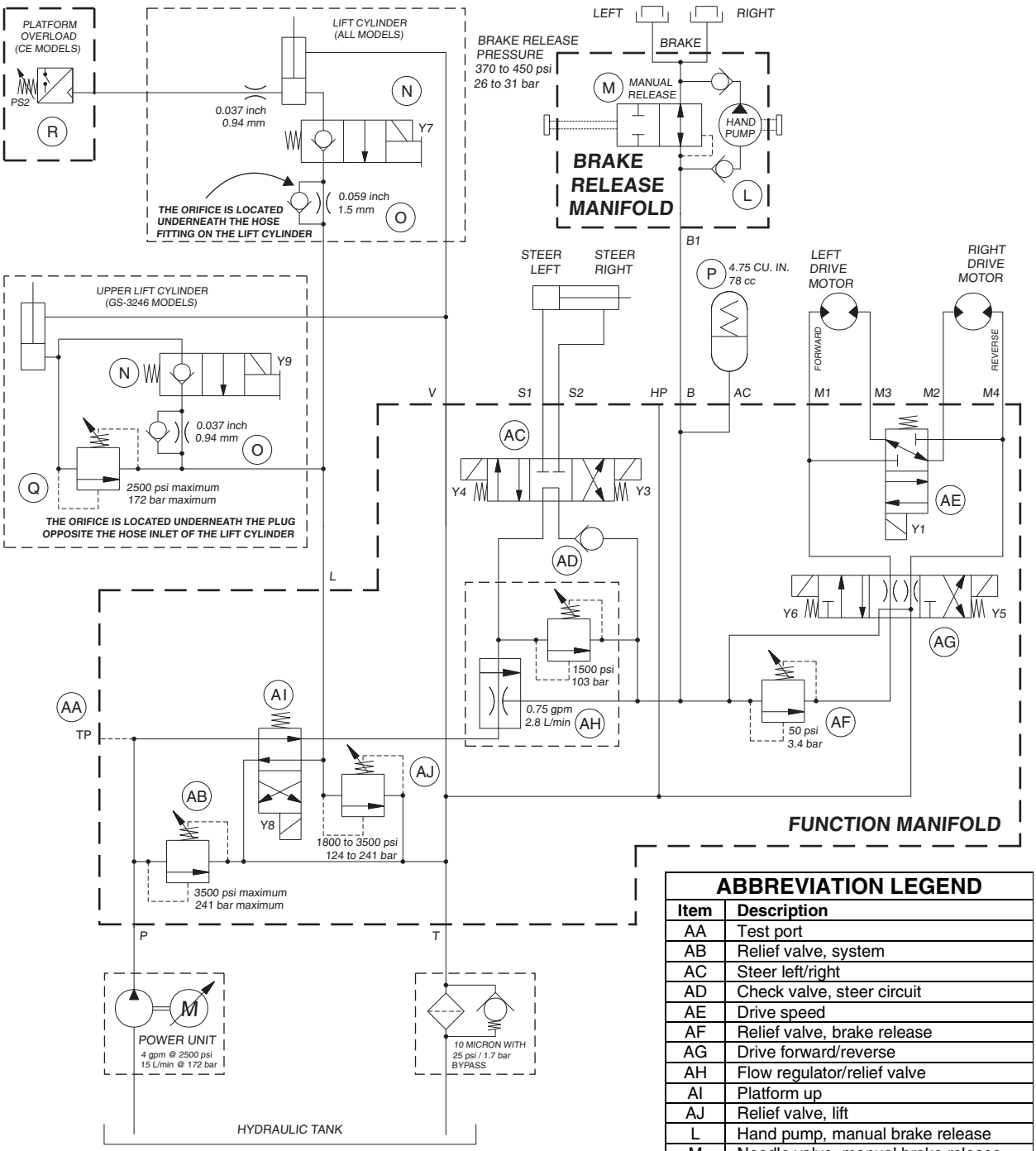

ABBREVIATION LEGEND	
Item	**Description**
AA	Test port
AB	Relief valve, system
AC	Steer left/right
AD	Check valve, steer circuit
AE	Drive speed
AF	Relief valve, brake release
AG	Drive forward/reverse
AH	Flow regulator/relief valve
AI	Platform up
AJ	Relief valve, lift
L	Hand pump, manual brake release
M	Needle valve, manual brake release
N	Platform lowering valve
O	Orifice, platform down circuit
P	Accumulator
Q	Relief valve, platform down
R	Pressure switch, platform overload

HS0036L

https://truckmanualshub.com/

Hydraulic Schematic

GS-2032/2632/3232 (after serial number GS3207-84866 and from GS3208C-101) REV D
GS-2046/2646/3246 (after serial number GS4607-84839 and from GS4609C-101)

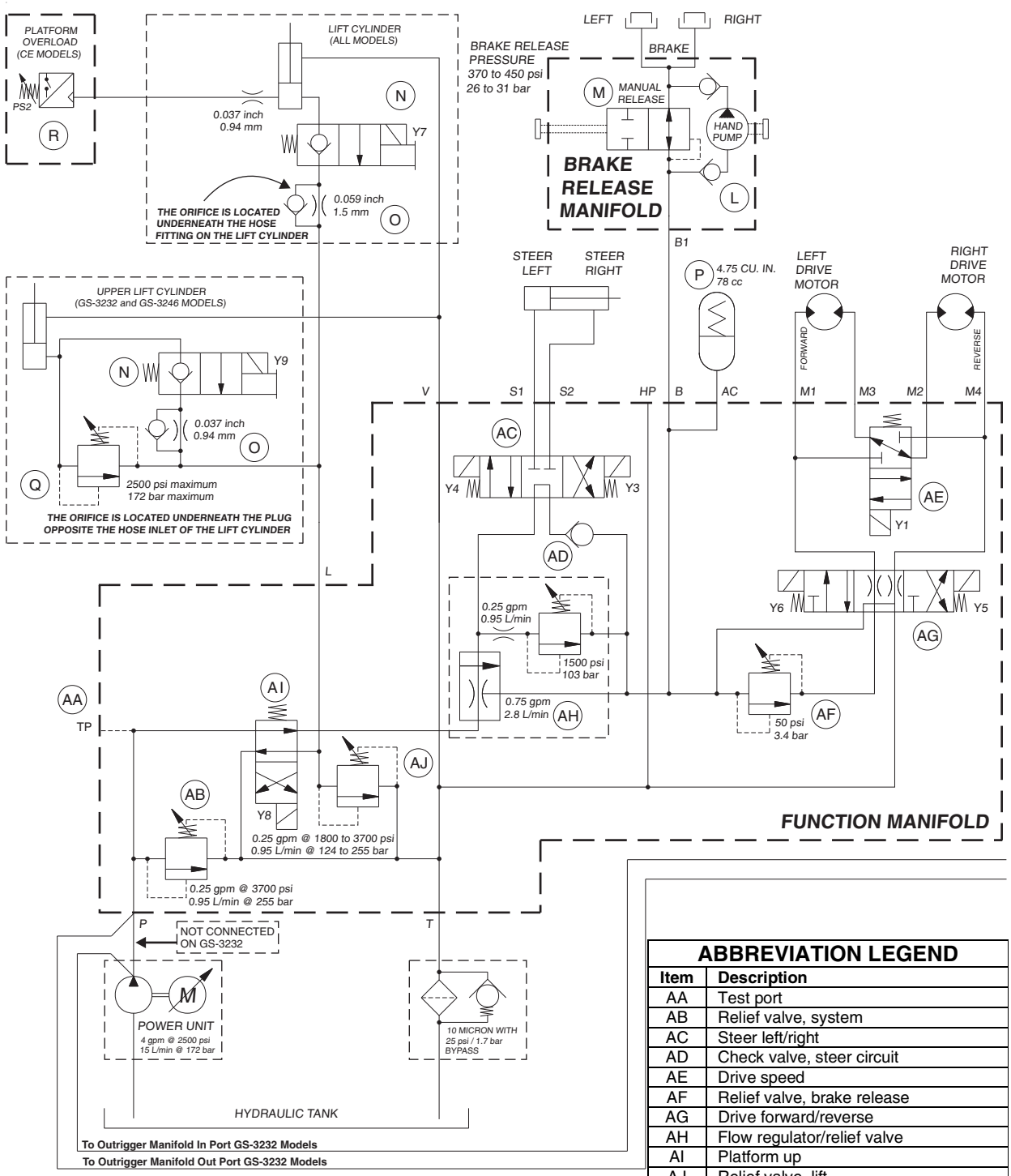

ABBREVIATION LEGEND	
Item	**Description**
AA	Test port
AB	Relief valve, system
AC	Steer left/right
AD	Check valve, steer circuit
AE	Drive speed
AF	Relief valve, brake release
AG	Drive forward/reverse
AH	Flow regulator/relief valve
AI	Platform up
AJ	Relief valve, lift
BA	3 position, 4 way directional valve – outrigger cylinder extend/retract
BB	Relief valve, outrigger circuit

HS0036N

https://truckmanualshub.com/

Hydraulic Schematic

REV D

GS-3232 (from serial number GS3207-84867)
(from serial number GS3208C-101)

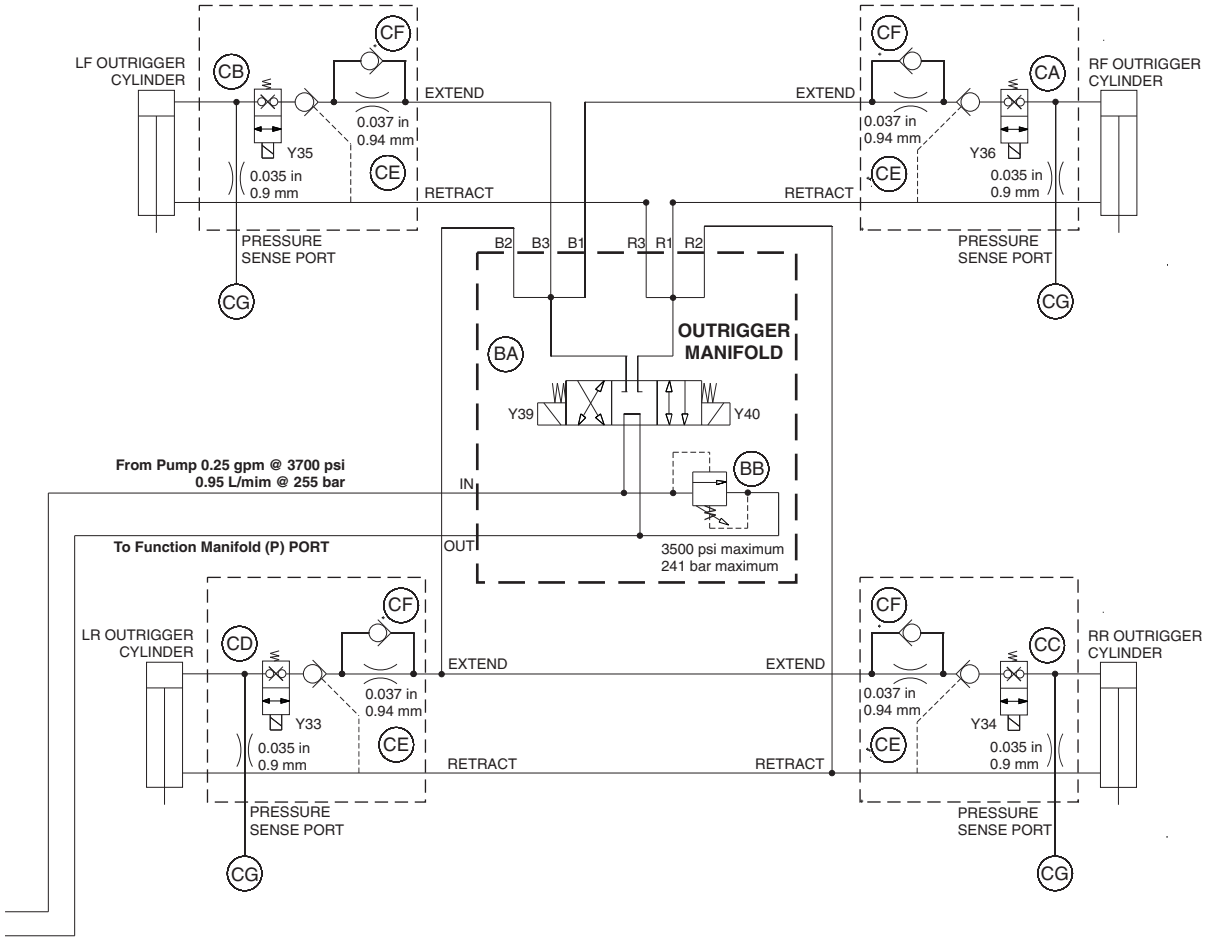

ABBREVIATION LEGEND cont.	
Item	**Description**
CA	Right front outrigger extend / retract
CB	Left front outrigger extend / retract
CC	Right rear outrigger extend / retract
CD	Left rear outrigger extend / retract
CE	Orifice plug – outrigger retract
CF	Check valve, pilot operated
CG	Pressure transducer
L	Hand pump, manual brake release
M	Needle valve, manual brake release
N	Platform lowering valve
O	Orifice, platform down circuit
P	Accumulator
Q	Relief valve, platform down
R	Pressure switch, platform overload

HS0040B

https://truckmanualshub.com/

Distributed By:

Genie North America
Phone 425.881.1800
Toll Free USA and Canada
800.536.1800
Fax 425.883.3475

Genie Australia Pty Ltd.
Phone +61 7 3375 1660
Fax +61 7 3375 1002

Genie China
Phone +86 21 53852570
Fax +86 21 53852569

Genie Malaysia
Phone +65 98 480 775
Fax +65 67 533 544

Genie Japan
Phone +81 3 3453 6082
Fax +81 3 3453 6083

Genie Korea
Phone +82 25 587 267
Fax +82 25 583 910

Genie Brasil
Phone +55 11 41 665 755
Fax +55 11 41 665 754

Genie Holland
Phone +31 183 581 102
Fax +31 183 581 566

Genie Scandinavia
Phone +46 31 575100
Fax +46 31 579020

Genie France
Phone +33 (0)2 37 26 09 99
Fax +33 (0)2 37 26 09 98

Genie Iberica
Phone +34 93 579 5042
Fax +34 93 579 5059

Genie Germany
Phone 0800 180 9017
Phone +49 422 149 1818
Fax +49 422 149 1820

Genie U.K.
Phone +44 (0)1476 584333
Fax +44 (0)1476 584334

Genie Mexico City
Phone +52 55 5666 5242
Fax +52 55 5666 3241

https://truckmanualshub.com/

Service Manual
GS-30•GS-32•GS-46

(from serial number GS3005A-7600)
(from serial number GS3005B-7600)
(from serial number GS3205-75407)
(from serial number GS4605-75438)

Part No. 97385
Rev E9

Genie
A TEREX COMPANY