https://truckmanualshub.com/

This Service Bulletin replaces Service Bulletin, 431–03 “I-Shift Transmission, Design and Function” dated 1.2008.

Transmission, Design and Function

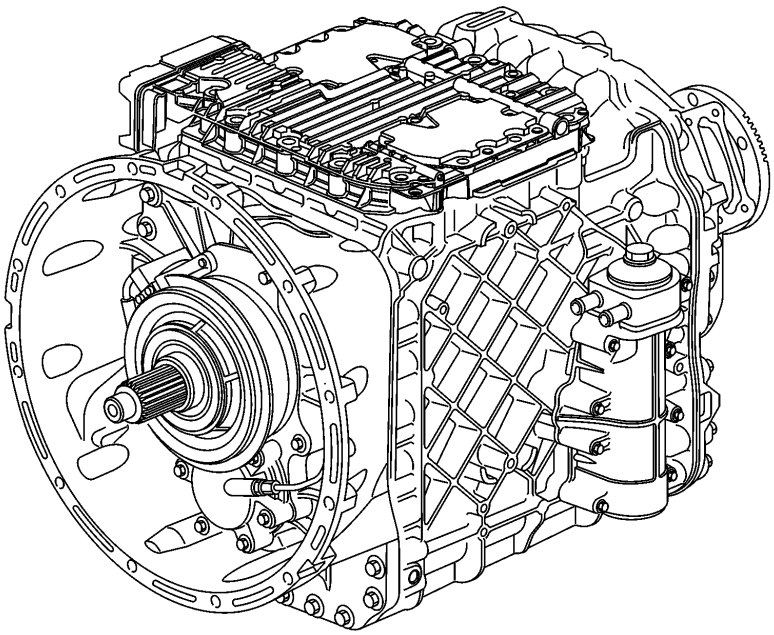

T4021207

The I-Shift transmission is a technologically advanced automated **mechanical** transmission, designed specifically to work in conjunction with Volvo’s new family of heavy-duty diesel engines. In order to work as a total package, the I-Shift is programmed with each engines’ efficiency map and is offered with different software options to fulfill each operators needs.

- “Transmission, Mechanical”, page 2

Transmission, Mechanical

General

All variants of the Volvo I-Shift have 12 forward speeds and up to 4 reverse speeds depending on programming. It is a single countershaft transmission built up with a splitter section, a main section with three forward and one reverse gear, and a range gear section. It is an automated **mechanical** transmission and uses synchronizers in its splitter and range gears but not in the main section. The main section utilizes a countershaft brake to mesh gears and equalize shaft speeds as needed. A single disc automated clutch system is utilized in place of a torque converter. The I-Shift is a "two pedal" transmission and does not require a clutch pedal.

The I-Shift uses compressed air and electrical solenoids to perform shift functions, clutch control and countershaft brake functions. All of these functions are timed and controlled by the transmission control module (TCM). A dedicated air tank is needed on the vehicle to supply air for these components. The air is plumbed to the transmission via a supply line and is distributed to the other components internally. The air control solenoids are housed in the transmission control housing and in the clutch control valve assembly.

All Volvo Truck models will be available with this transmission including the VT, VN Series & VHD vocational trucks. Multiple I-Shift models will be offered to support the power ranges of the engines as well as offering different gear arrangements.

	AT2512C	ATO2512C	AT2812C	ATO3112C
Operation	Two Pedal	Two Pedal	Two Pedal	Two Pedal
Forward Speeds	12	12	12	12
Engines Available	D11/D13	D11/D13	D16	D16
Overall Ratio	14.94:1	15.04:1	14.94:1	15.04:1
Top Ratio	Direct 1.00:1	Overdrive 0.78:1	Direct 1.00:1	Overdrive 0.78:1
Weight lbs (kg)	597 (275)	597 (275)	610 (281)	610 (281)

	AT2612D	ATO2612D	ATO3112D
Operation	Two Pedal	Two Pedal	Two Pedal
Forward Speeds	12	12	12
Engines Available	D11/D13	D11/D13	D16
Overall Ratio	14.94:1	15.04:1	15.04:1
Top Ratio	Direct 1.00:1	Overdrive 0.78:1	Overdrive 0.78:1
Weight lbs (kg)	614 (279)	614 (279)	627 (285)

Transmission Identification

Each transmission has two identification tags. One is found on the top of the clutch housing and the other is found on the back of the range housing. The transmission version can be readily identified by the following nomenclature table.

Make	Volvo
Type	AT2512C, ATO2512C, AT2612D, ATO2612D, AT2812C, ATO3112C, and ATO3112D
Transmission Nomenclature	A — Automatic T — Transmission O — Overdrive 25 — Torque Capacity 2500 Nm (1850 ft-lb) 26 — Torque Capacity 2600 Nm (1900 ft-lb) 28 — Torque Capacity 2800 Nm (2050 ft-lb) 31 — Torque Capacity 3100 Nm (2300 ft-lb) 12 — Number of forward gears C or D — Design Level

Gear Ratio

Gear ratios for AT2512C, AT2612D, AT2812C, ATO2512C, ATO2612D, ATO3112C, and ATO3112D are as shown in the table:

Gear selection	**12 geared AT2512C, AT2612D, AT2812C**	**12 geared ATO2512C, ATO2612D, ATO3112C, ATO3112D**
1st	14.94:1	11.73:1
2nd	11.73:1	9.21:1
3rd	9.04:1	7.09:1
4th	7.09:1	5.57:1
5th	5.54:1	4.35:1
6th	4.35:1	3.41:1
7th	3.44:1	2.70:1
8th	2.70:1	2.12:1
9th	2.08:1	1.63:1
10th	1.63:1	1.28:1
11th	1.27:1	1.00:1
12th	1.00:1	0.78:1
Reverse gear R1	17.48:1	13.73:1
Reverse gear R2	13.73:1	10.78:1
Reverse gear R3	4.02:1	3.16:1
Reverse gear R4	3.16:1	2.48:1

Transmission Construction

The transmission has three main parts: a clutch housing, main housing and range housing. The **clutch housing (1)** also forms the front wall of the transmission housing. The **main housing (2)** contains the main, counter and reverse shafts along with the selector assembly which is integrated into the transmission control housing. The **range housing (3)** contains the range planetary gear assembly and output shaft.

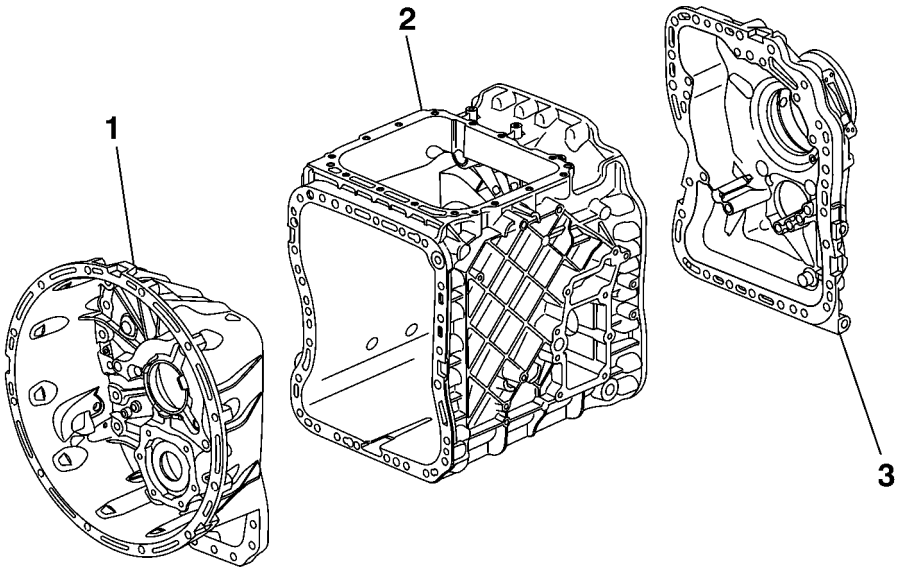

W4002905

1 Clutch housing

2 Main housing

3 Range housing

The main internal parts in the transmission are the input shaft (1), main shaft (2), range gear with selector unit (3), countershaft (4), oil pump with reverse shaft (5), control housing with selector unit (6) and if equipped, a power takeoff (PTO) drive shaft (7).

The trailing wheel for the reverse gear, the main gears and the range sections sun gear are located on the main shaft. The range section also incorporates planetary gears that are integrated with the output shaft. The countershaft has fixed gears.

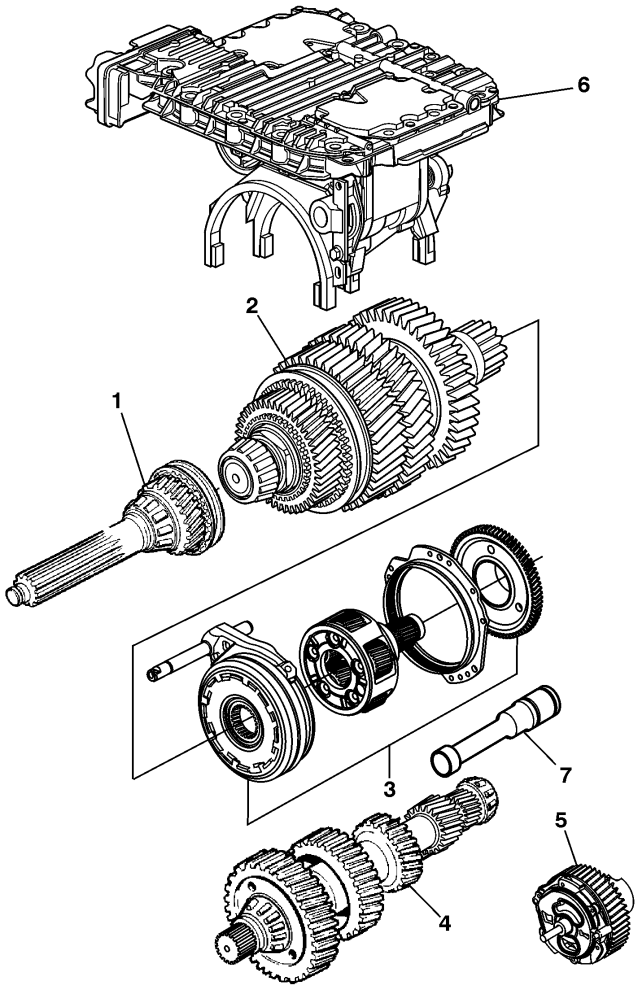

T4021728

1 Input shaft

2 Main shaft

3 Range gear with selector unit

4 Countershaft

5 Oil pump with reverse shaft

6 Control housing with selector unit

7 Drive shaft for PTO

Synchronization

- The split gear **(A)** is synchronized.
- The main transmission housing gears **(B)** are non—synchronized, but instead utilize a countershaft brake to equalize shaft speeds and mesh the gears. For more information see, page 11.
- The range gear **(C)** is synchronized.

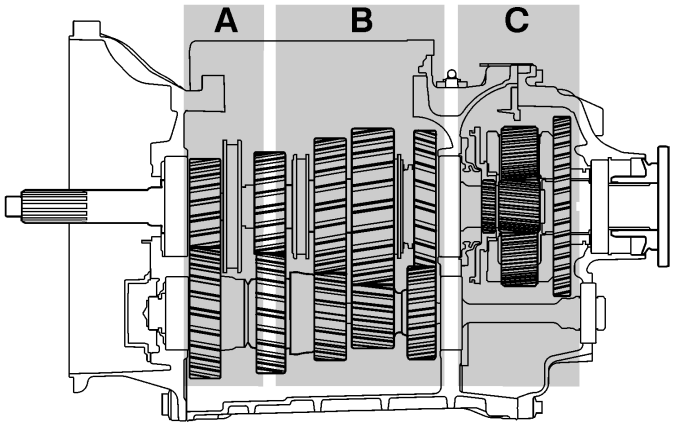

T4021404

Range Gear

The range gears synchronization lies outside the ring gear, reducing the unit's length. The large synchronization area results in short selection time; the wide planetary gears offer strength and the helical gears result in a quiet planetary gear operation.

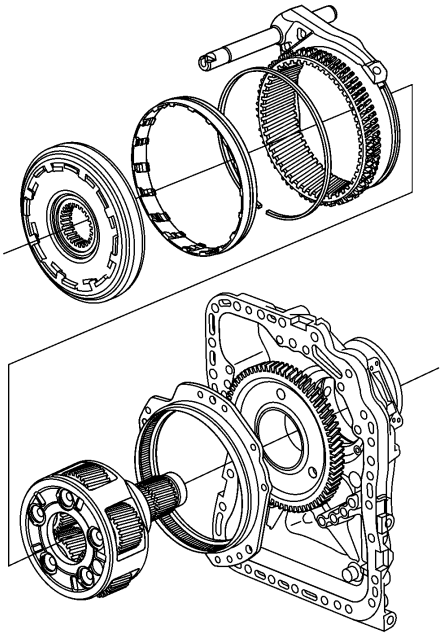

W4002906

Range gear assembly with selector unit

Control Housing Assembly

The control housing assembly contains the transmission control module (TCM), shift solenoids, countershaft brake solenoid, gear position sensors, oil temperature sensor, shaft speed sensors, the shift forks and their shift cylinders. When a gear is selected using the gear selector, these components work in conjunction with the engine control module (ECM) to reduce the engine torque to a suitable level, before the control housing shifts the transmission to neutral and then to the selected gear. The solenoids are used to control pressurized air to cylinders, that perform the action of changing the gears. The control housing also contains and controls the countershaft brake solenoid. This solenoid controls air pressure to the brake assembly which aids in synchronizing the shaft speeds to mesh the main gears. After the transmission has been put into neutral, the ECM begins to adjust engine speed (RPM) to accommodate the selected gear after the shift takes place.

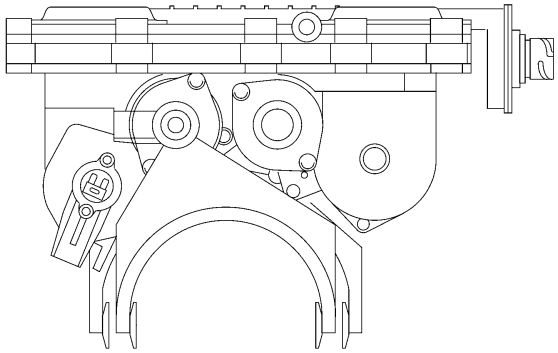

W4002915

The control housing cover has two electrical sockets and also contains the TCM.

1 Vehicle communication

2 Clutch cylinder

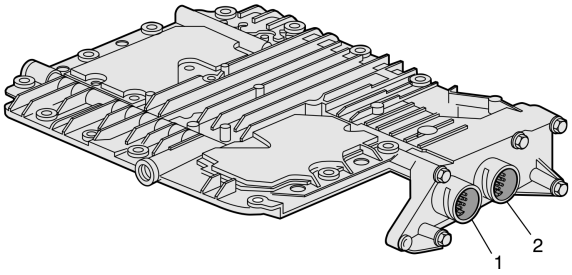

W4002936

The control housing cover contains nine solenoid valves that control the path of pressurized air:

2. Solenoid valve 2nd gear
LR. Solenoid valve, low range
3. Solenoid valve 3rd gear
HR. Solenoid valve, high range
B. Solenoid valve, brake
LS. Solenoid valve, low split
R. Solenoid valve, reverse
HS. Solenoid valve, high split
1. Solenoid valve 1st gear

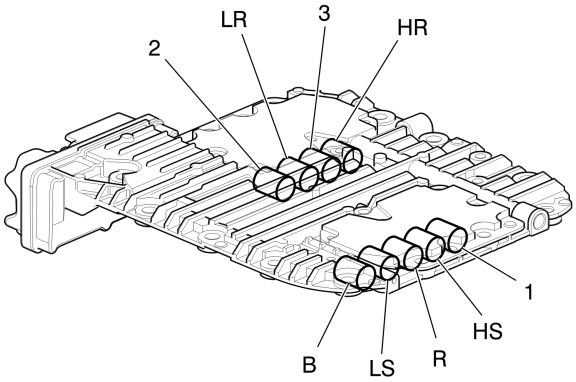

W4002918

Overdrive Transmissions

2. Solenoid valve 2nd gear
LR. Solenoid valve, low range
3. Solenoid valve 3rd gear
HR. Solenoid valve, high range
B. Solenoid valve, brake
HS. Solenoid valve, high split
R. Solenoid valve, reverse
LS. Solenoid valve, low split
1. Solenoid valve 1st gear

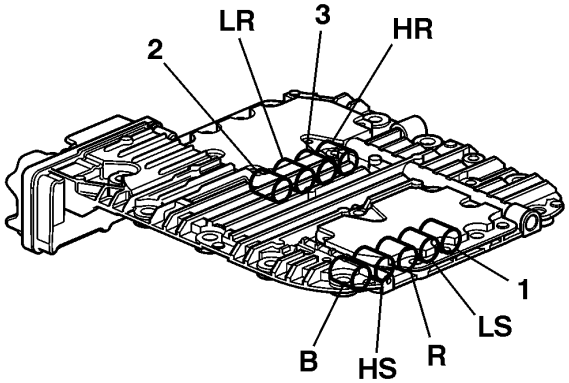

T4018189

Direct Drive Tranmission

The following shows the locations of the four parallel cylinders and one of the cylinder position sensors.

A. Split cylinder

B. 1/R cylinder

C. 2/3 cylinder

D. Range cylinder

E. Split cylinder position sensor

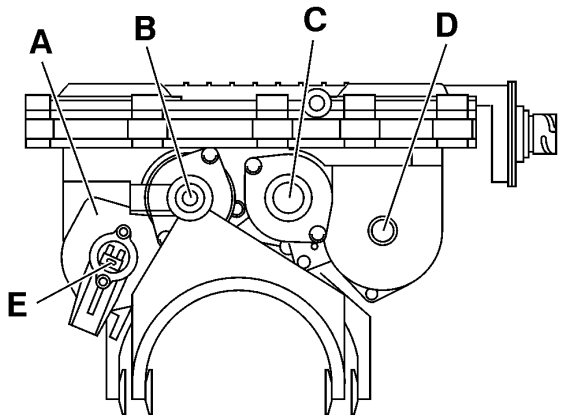

T4018494

The following shows the locations of the other three cylinder position sensors and the speed sensors.

A. Range cylinder position sensor

B. Countershaft speed sensor

C. Main shaft speed sensor

D. 2nd/3rd gear cylinder position sensor

E. 1st/reverse cylinder position sensor

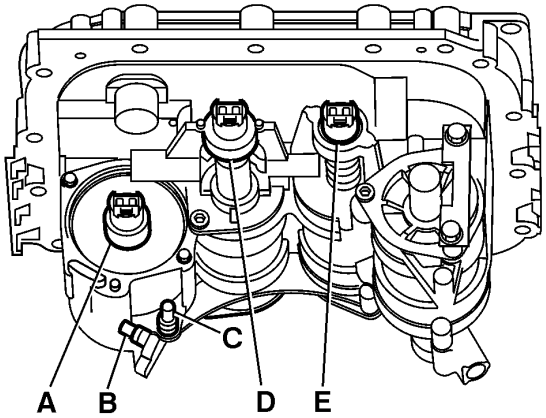

T4018201

The following shows the locations of the other three shift forks.

1. 1st-Reverse gear shift fork
2. 2nd-3rd gear shift fork
3. Splitter gear shift fork

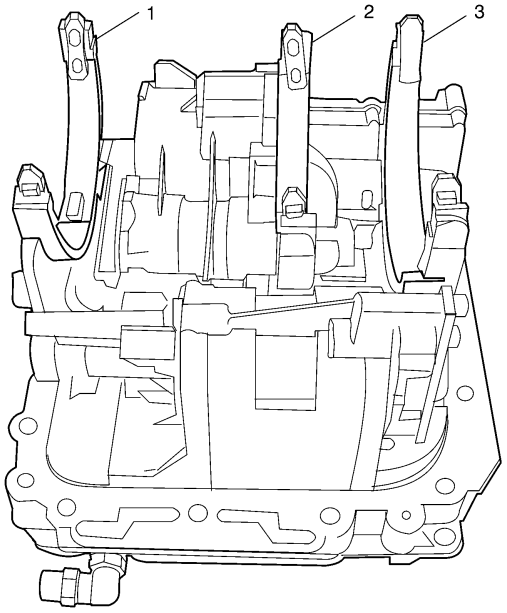

W4002920

Countershaft Brake

The countershaft brake is located at the front of the countershaft within the clutch housing. It is used to stop the rotating parts in the transmission when a starting gear is selected, which eliminates transmission wear and noise. The brake is also used when changing gears, to aid in synchronizing the shaft speeds for quicker gear changes. It is activated by a solenoid contained in the control housing. The solenoid controls pressurized air flow to the brakes integrated pneumatic cylinder which applies pressure to friction and steel disc plates.

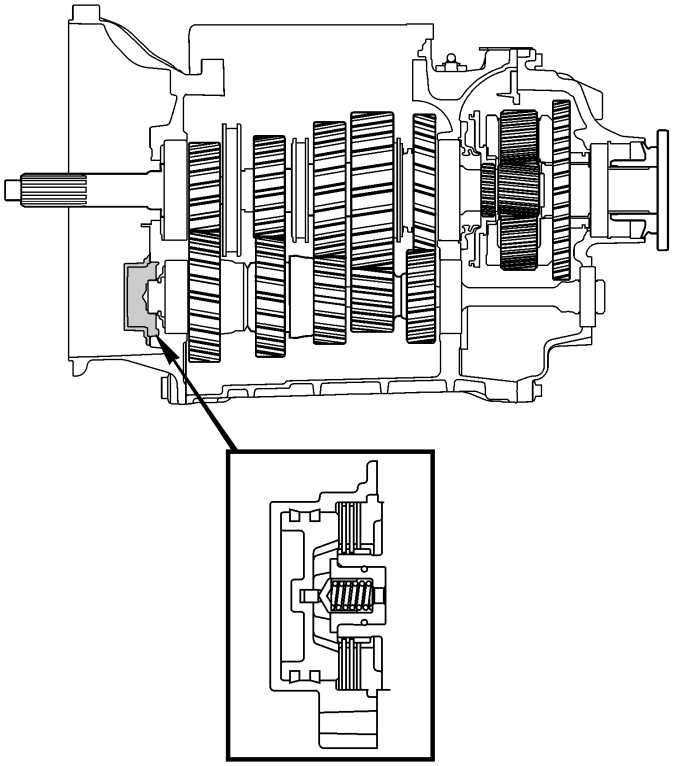

T4021408

Countershaft brake location

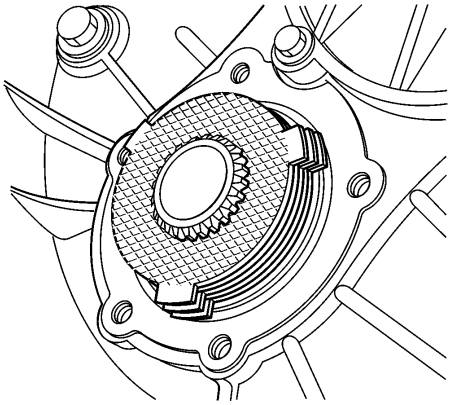

T4022010

Countershaft brake discs

Clutch

All I-Shift equipped vehicles have a single disc, dry type clutch. The pressure plate used in the vehicles will vary depending on the engine that the vehicle is built with. Vehicles equipped with the D11 or D13 engines, will use a non adjustable pressure plate while the D16 equipped vehicles will use a self adjusting pressure plate. Due to the self adjusting nature of the D16's pressure plate, it's necessary to cage the adjusting system prior to pressure plate removal. The adjuster can not be reset if not caged properly. All clutch and pressure plates are replaced in matched sets.

The I-Shift clutch is fully automated and is actuated by a clutch cylinder mounted behind the pressure plate. This automation includes clutch protection that is programmed into the transmission control module (TCM) software. If a vehicle is held stationary on a grade using the accelerator or too high gear is selected which allows excessive clutch slippage or load, a "clutch protection active"warning or "high clutch load" warning will appear in the driver information display (DID) and an audible warning. If these warnings are ignored the clutch will slowly engage to protect the clutch. If the accelerator pedal (AP) is released the clutch will immediately disengage.

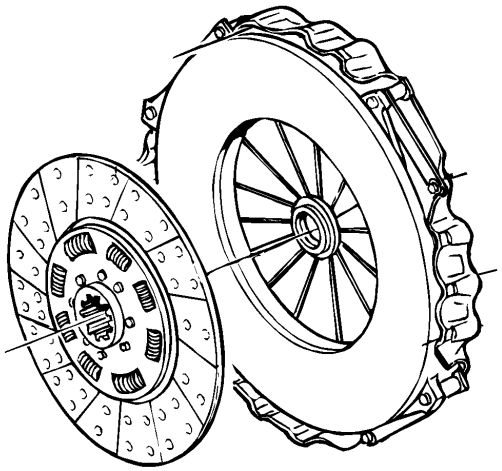

T4012799

Clutch Cylinder

The clutch cylinder is located inside the clutch housing. This fully automated cylinder encircles the input shaft and is responsible for the actuation of the clutch. Compressed air is used to move the cylinder as needed to actuate the clutch. The pressurized air, is regulated by the clutch control valve located on the outside of the clutch housing. The clutch cylinder also houses the release bearing. In situations where the I-Shift is unintentionally left in gear and the parking brake has been applied, the transmission control module (TCM) will automatically go into neutral after a period of four minutes. This provides protection against release bearing damage as well as crank shaft thrust bearing wear and damage.

A clutch cylinder position sensor is mounted to the outside of the cylinder. It is used to monitor clutch position and clutch engagement point. As a secondary responsibility it is used to calculate clutch wear. There are two clutch position reference values that are necessary in monitoring the clutch.

1 X1 Value — This is the base line value set whenever a new clutch is installed. This is done using the scan tool by performing the "Clutch Engagement Point Calibration".

2 X2 Value — This is the value that represents the present position of the clutch.

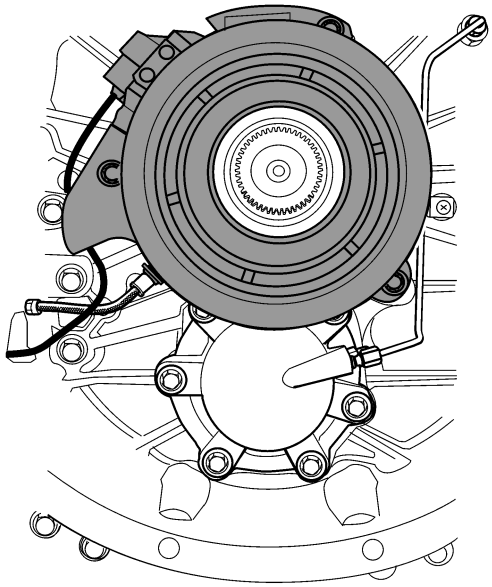

T4021527

Clutch Control Valve

The clutch control valve is located on the outside of the clutch housing. It controls the supply of compressed air to the clutch cylinder to control clutch engagement and disengagement. The control valve contains four solenoid valves. There are two engagement valves, one slow and one fast. There are also two disengagement valves, one slow and one fast. These valves can be used alone or together as needed to achieve the desired engagement or disengagement speed. The valve also contains a serviceable filter to prevent contaminants from entering the clutch cylinder through the air supply.

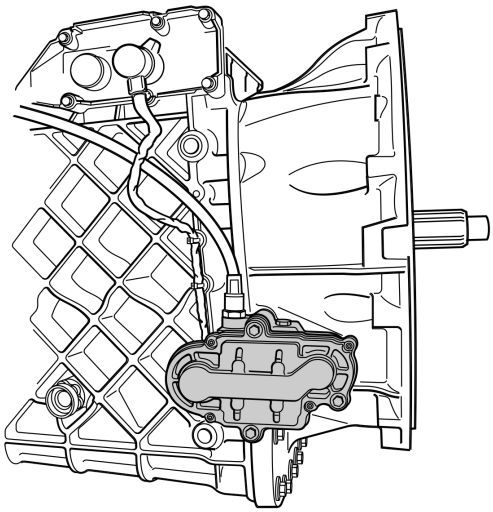

W4002898

https://truckmanualshub.com/

Lubrication System

CAUTION

Never reuse drained I-Shift oil. The oil must be replaced along with the oil filter. Reusing drained oil can result in damage to transmission components.

The transmission is lubricated through a combination of pressure from an oil pump and splashing. The oil is led into the main shaft to lubricate and cool the range gears, the input shaft and main shaft bearings. The countershaft brake and output shaft bearings, are also lubricated. The lubrication system has two overflow valves. One valve ensures that the transmission is lubricated if the filter gets blocked while the other prevents excessive pressure in the system, e.g. during cold start. The valves are made up of a compression spring and a valve peg.

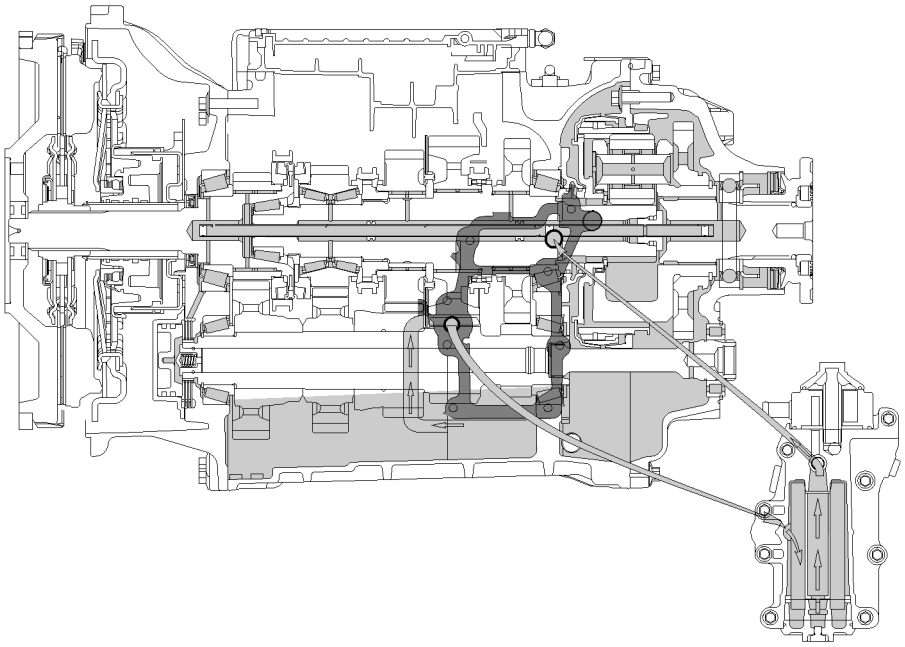

T4021401

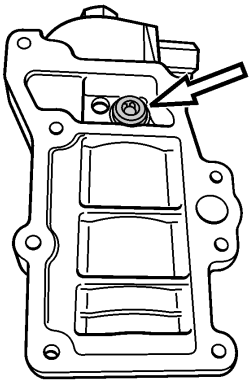

T4021730

Overflow valve to ensure that the transmission is lubricated.

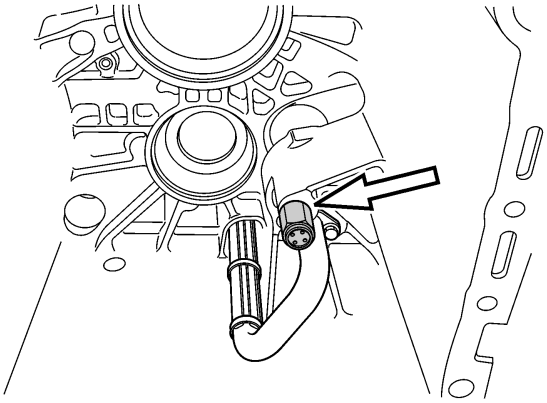

T4021729

Overflow valve to prevent excessive oil pressure.

Oil Pump

The oil pump is an eccentric pump. It is driven off of the reverse gear. The oil is filtered by a cartridge style filter on the pressure side of the pump.

Oil Filter

The transmission oil filter is located in a filter housing that is bolted to the outside of the main housing. It is a cartridge style filter. A filter support tube is integrated in the cover to prevent the filter from collapsing. The top portion of the housing contains the inlet and outlet ports for the oil cooler lines.

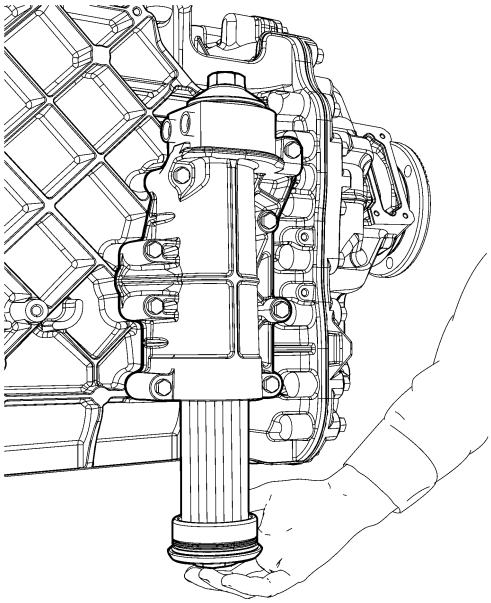

W4002908

Oil Cooler

The transmission oil cooler is of a liquid to liquid design and is located inside the lower tank of the radiator. Transmission oil is pumped to the cooler where the transmission oil can transfer its heat, and then back to the transmission.

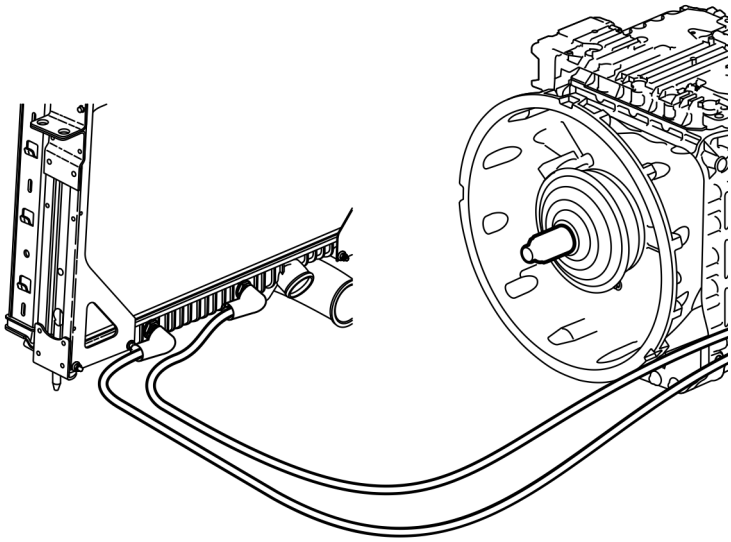

W4002919

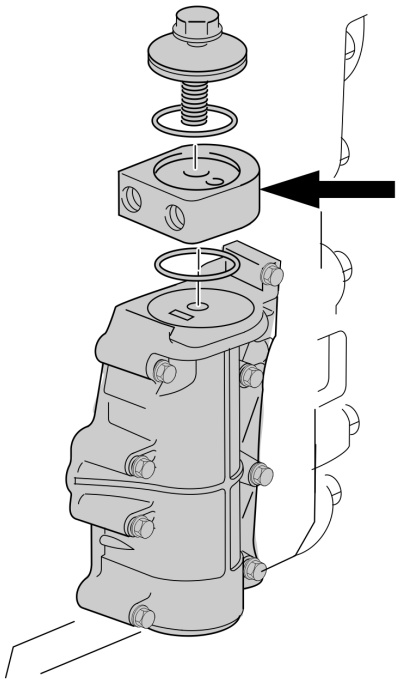

W4002917

Transmission Cooler Inlet/Outlet Housing

Oil Level

The oil is drained via a plug at the bottom (1A) and/or a plug on the right side (1B) of the transmission..

Note: There are two oil drain plugs.

The oil fill plug (3), is on the right side. Check the oil level through the sight glass (2).

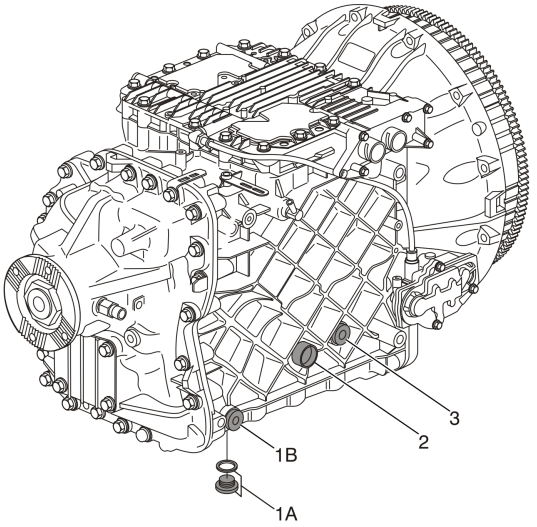

W4002904

1A. Drain plug at the bottom of the transmission, 1B. Drain plug on the right side of the transmission, 2. Sight glass, 3. Fill plug and level.

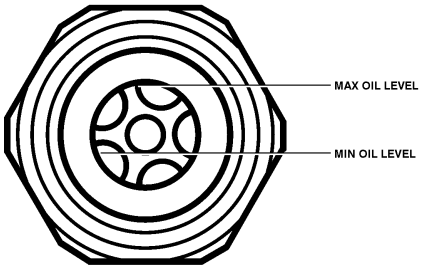

T4021684

Sight glass for checking the oil level.

Ventilation

For design level C transmissions, case ventilation is provided via a hose that passes over the control housing and down behind the clutch control valve unit. The vent fitting in the side of the transmission is installed at a 45 degree upward angle to prevent oil leakage.

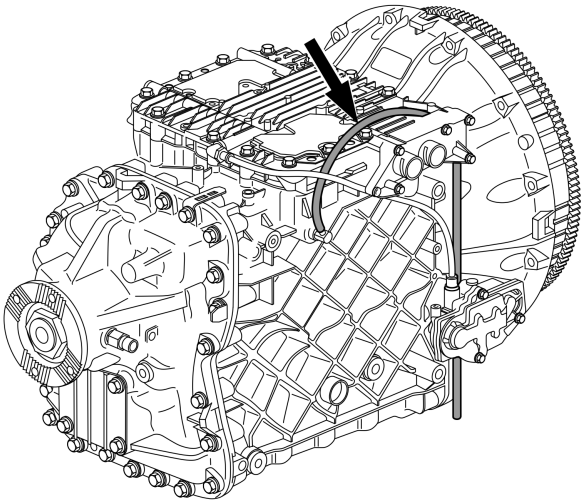

W4002937

For design level D transmissions, case ventilation is enhanced to add internal case venting. This extends oil life and maintenance intervals.

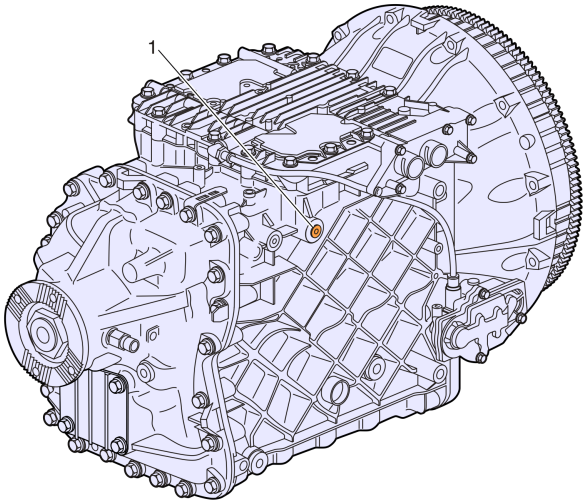

W4054739

1. Plugged vent.

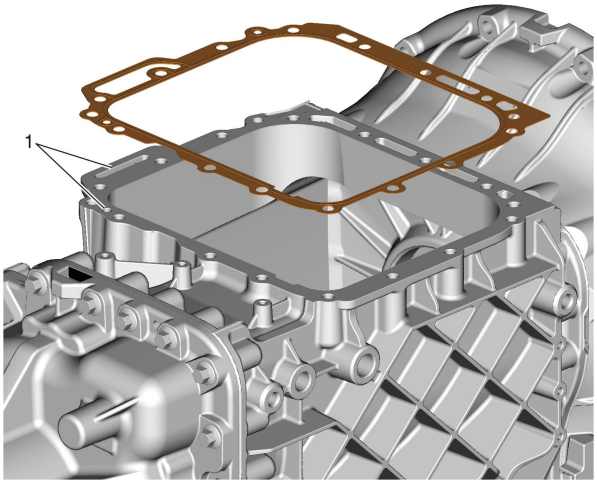

W4054740

1. Vent holes.

Electrical System

Sensors and Electrical Connections

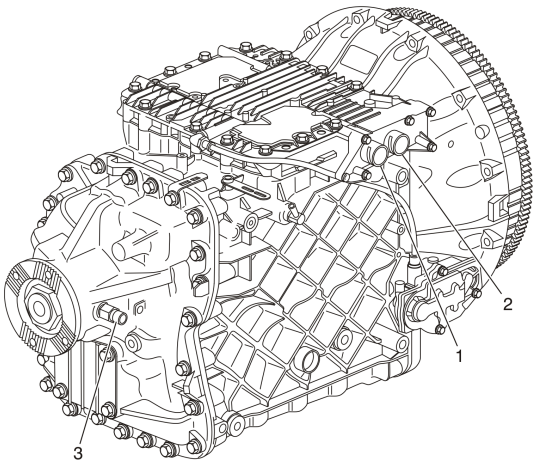

W4002910

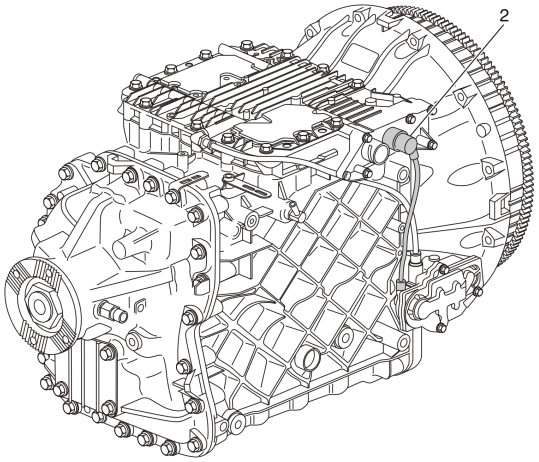

W4002911

1. Vehicle communication
2. Clutch control valve
3. Speed sensor

Wiring harness connector **2** to the clutch control valve.

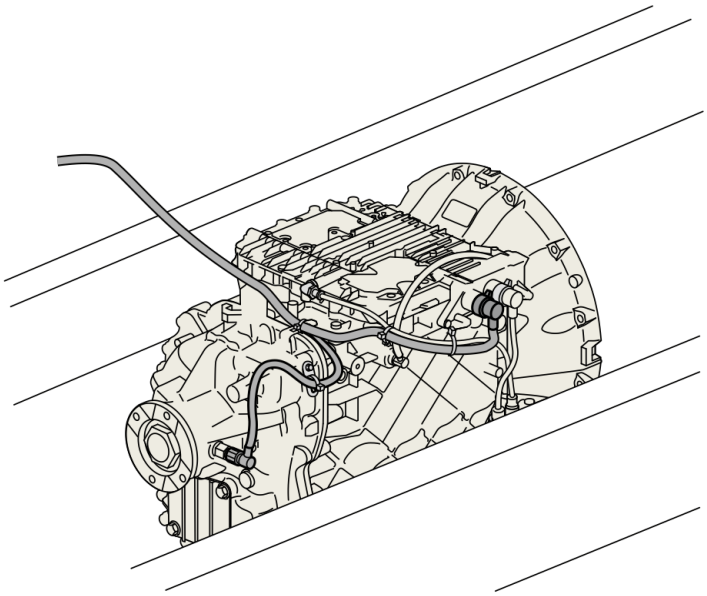

W4002939

General wiring harness routing

Pneumatic System

Compressed Air Connections

Compressed air is used to perform the shifting, clutch disengagement and countershaft brake engagement. The compressed air is controlled by solenoid valves. A dedicated air tank mounted to the frame is needed to supply the air for the transmission. Air is supplied to the transmission via a supply line to the left side of control housing. The tank is pressurized by the engine mounted air compressor and contains a check valve, to prevent air pressure lose if a leak is present in the main air system.

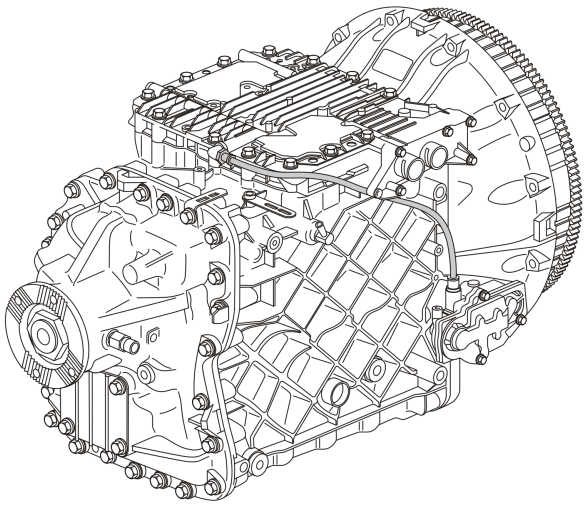

W4002913

Compressed air connection between the control housing and the clutch control valve.

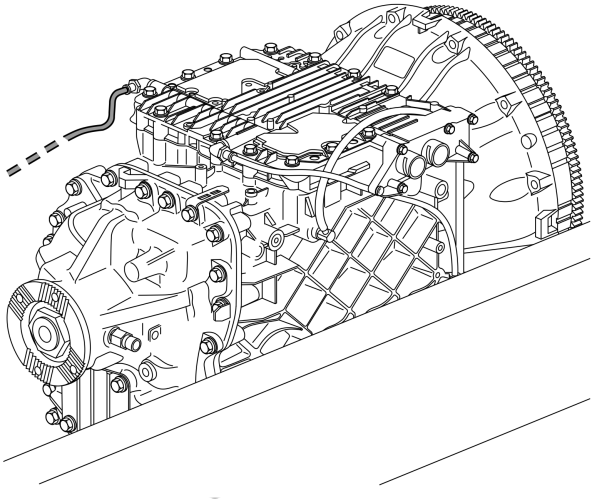

W4002938

Compressed air connection between the tank and the control housing.

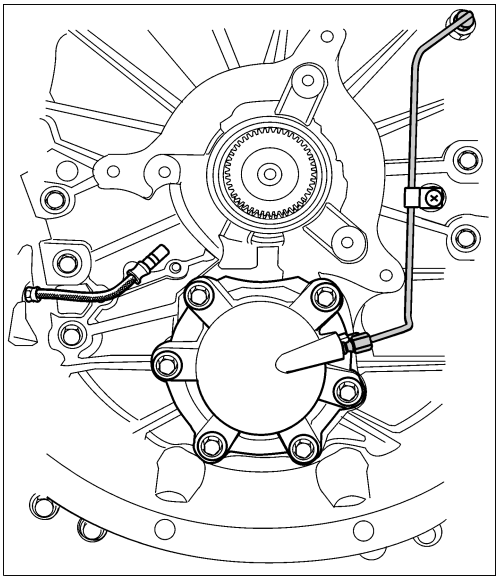

T4021417

Air connection between control housing and countershaft brake (hard line). Air connection from the clutch control valve to the clutch cylinder (hose).

https://truckmanualshub.com/

Power Path

The following illustrations show the power path for AT2512C, AT2612D, and AT2812C.

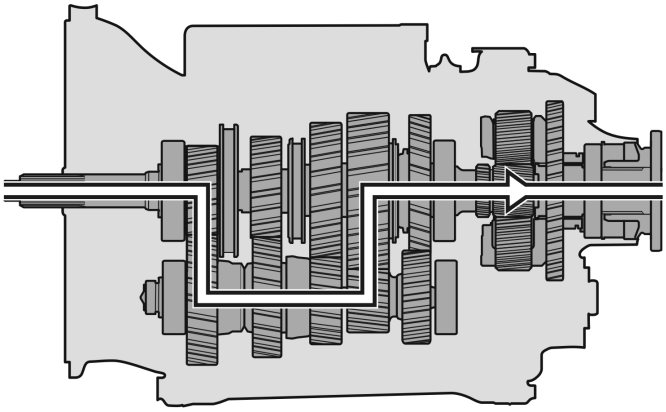

T4021693

1st gear (planetary section engaged, low range)

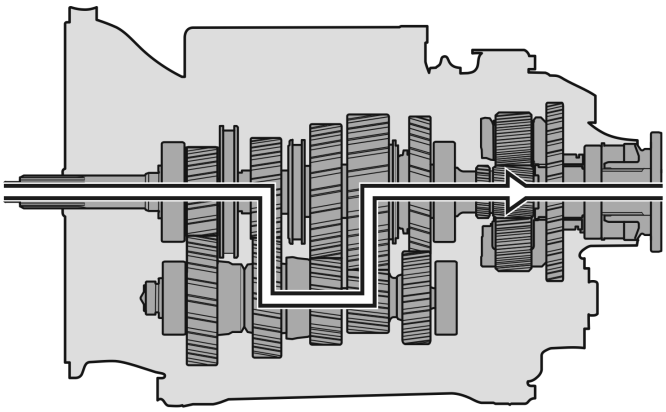

T4021694

2nd gear (planetary section engaged, low range)

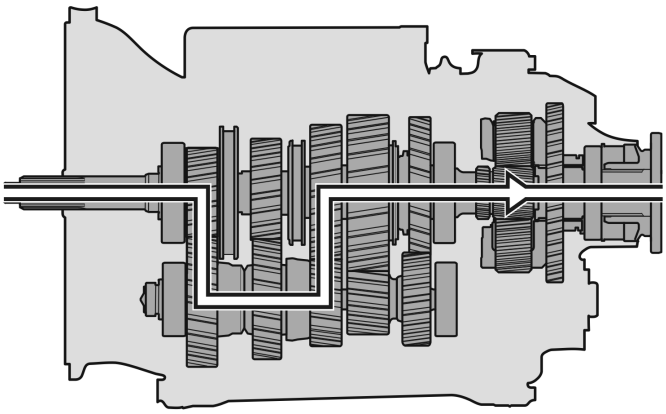

T4021695

3rd gear (planetary section engaged, low range)

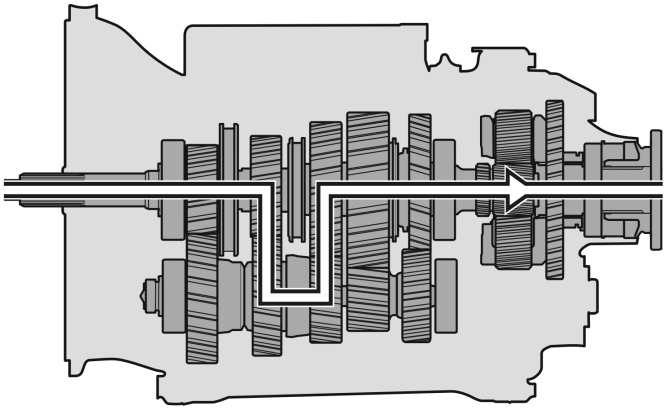

T4021696

4th gear (planetary section engaged, low range)

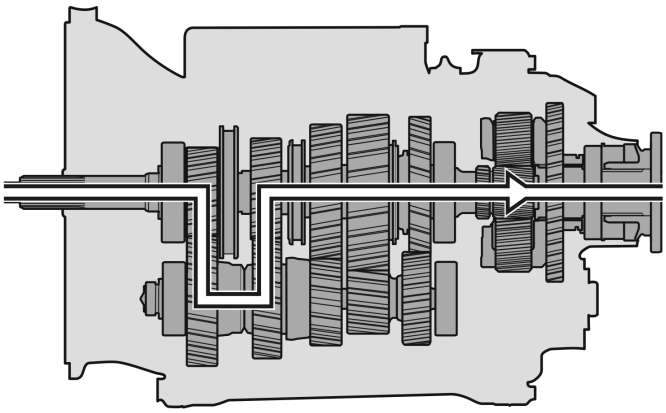

T4021697

5th gear (planetary section engaged, low range)

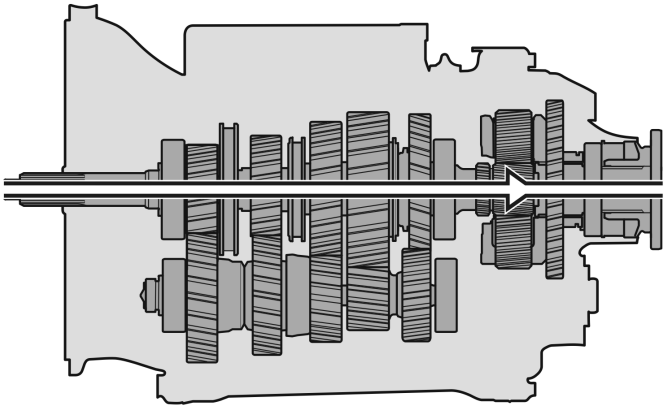

T4021698

6th gear (planetary section engaged, low range)

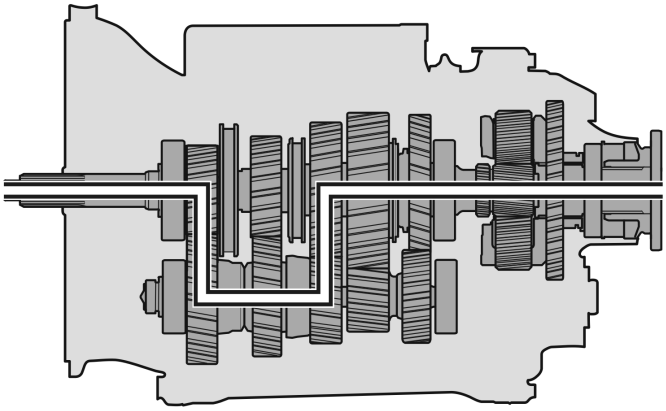

T4021701

9th gear (direct drive through range section, high range)

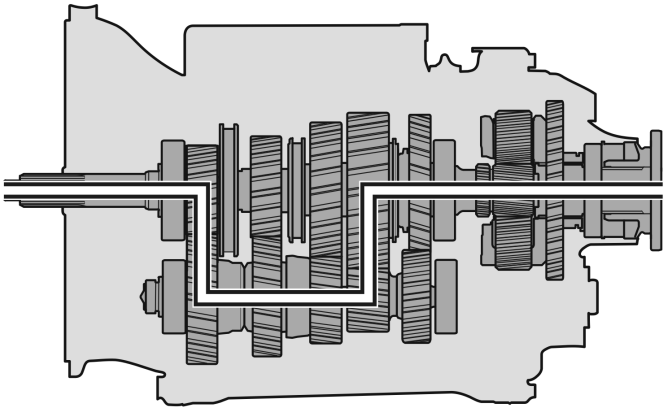

T4021699

7th gear (direct drive through range section, high range)

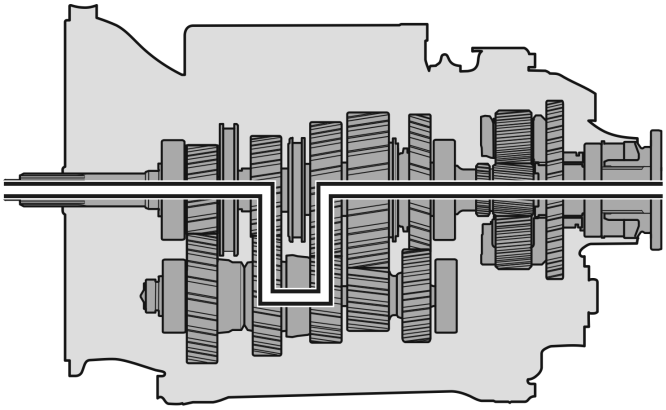

T4021702

10th gear (direct drive through range section, high range)

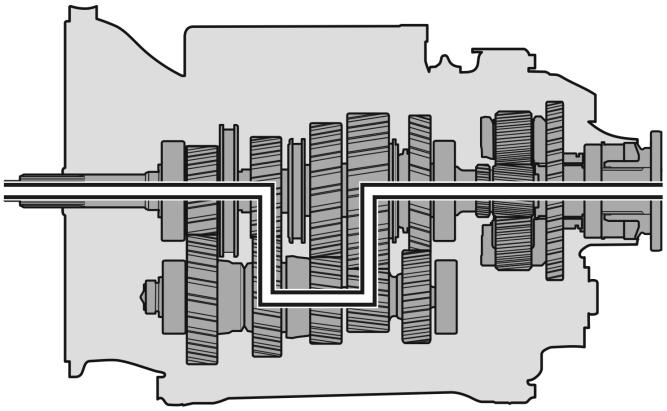

T4021700

8th gear (direct drive through range section, high range)

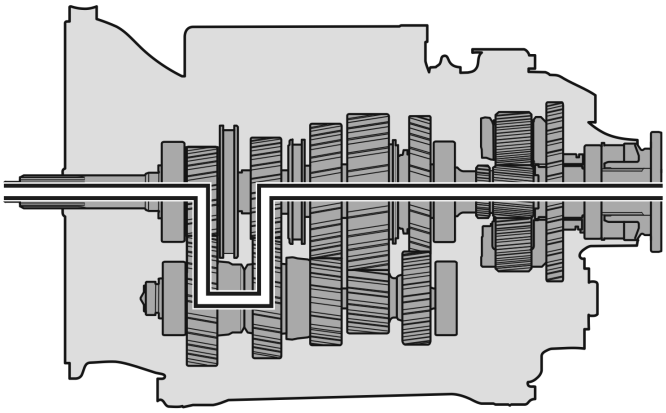

T4021703

11th gear (direct drive through range section, high range)

https://truckmanualshub.com/

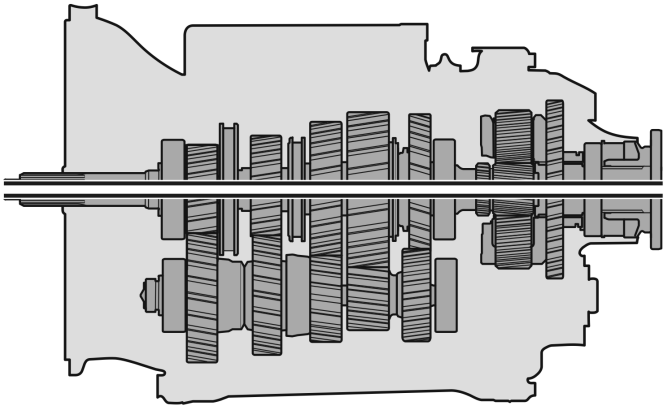

T4021704

12th gear (direct drive through range section, high range)

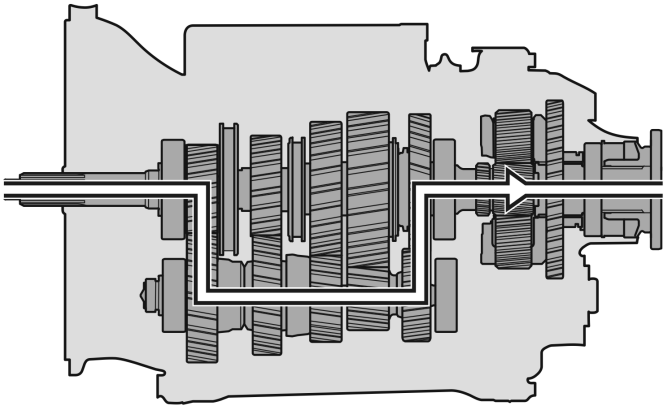

T4021687

Reverse gear R1 (planetary section engaged, low range)

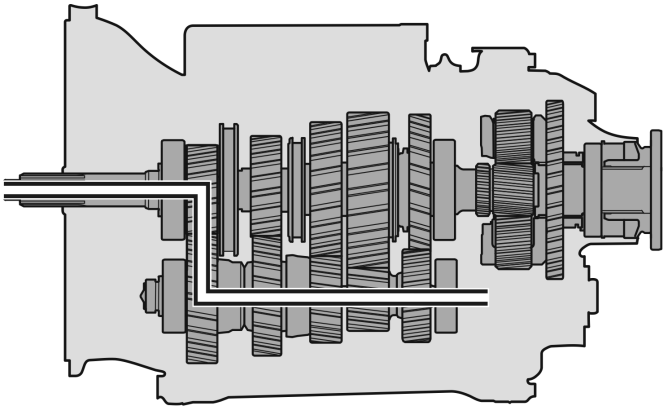

T4021691

Neutral N1

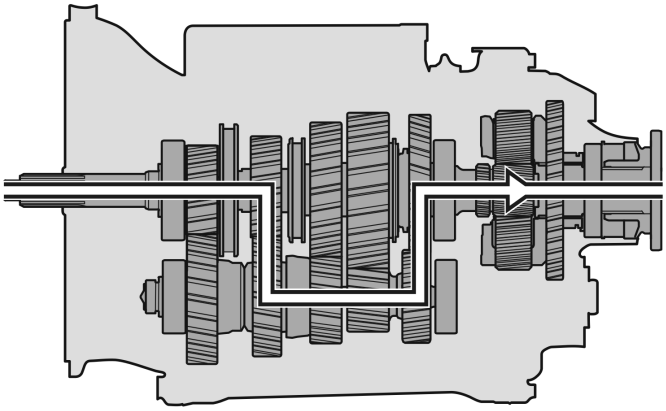

T4021688

Reverse gear R2 (planetary section engaged, low range)

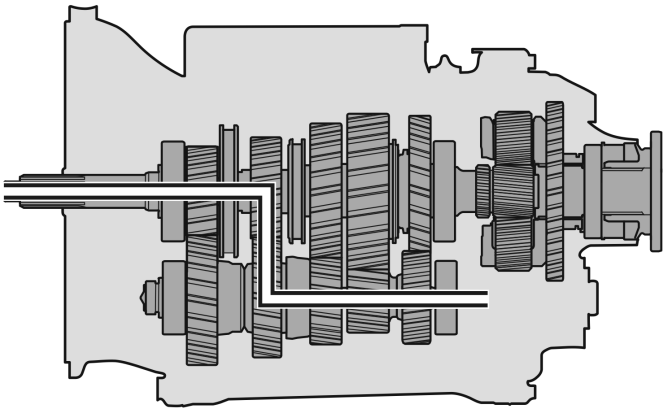

T4021692

Neutral N2

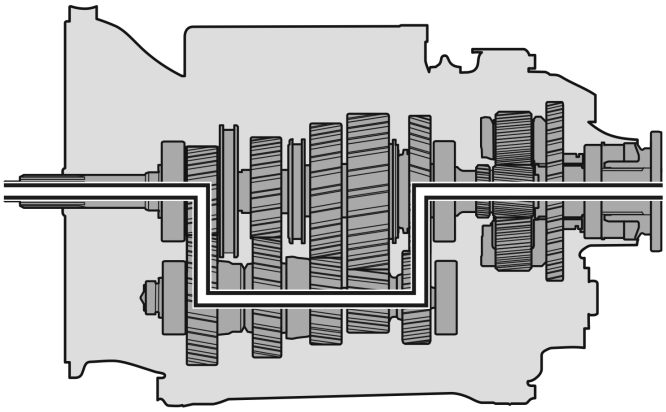

T4021689

Reverse gear R3 (direct drive through range section, high range)

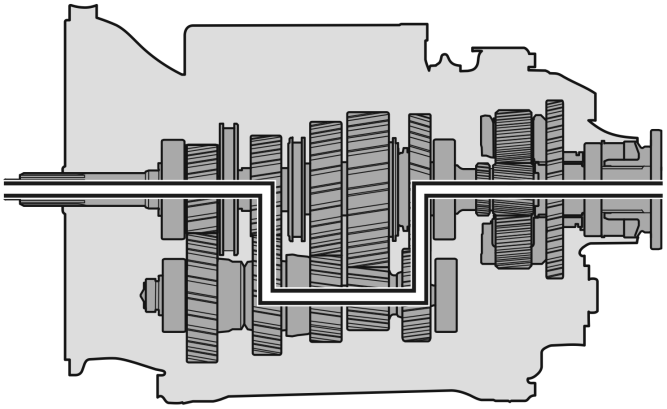

T4021690

Reverse gear R4 (direct drive through range section, high range)

The following illustrations show the power path for ATO2512C, ATO2612D, ATO3112C, and ATO3112D.

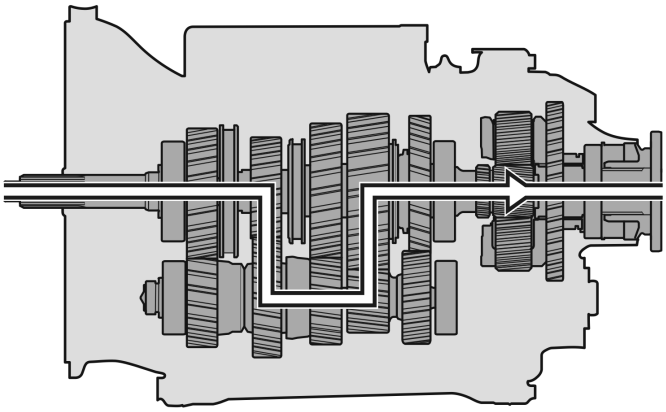

T4021711

1st gear (planetary section engaged, low range)

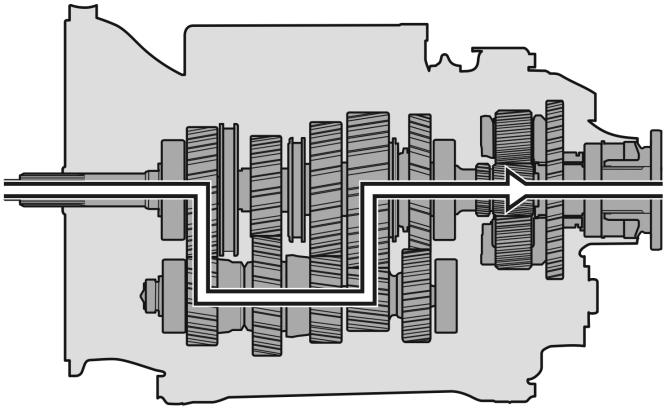

T4021712

2nd gear (planetary section engaged, low range)

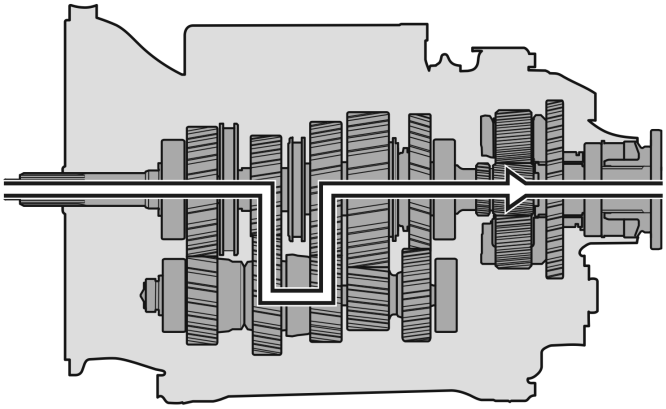

T4021713

3rd gear (planetary section engaged, low range)

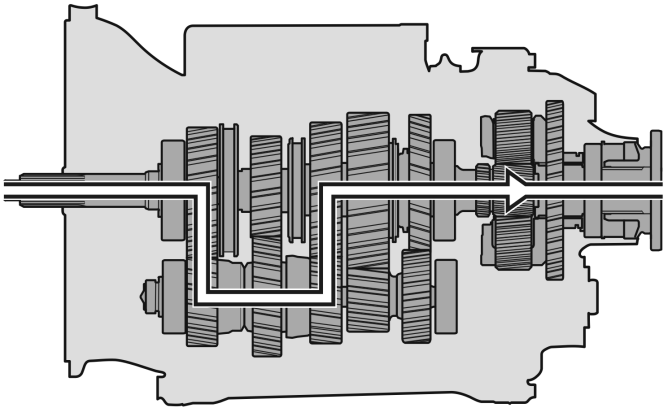

T4021714

4th gear (planetary section engaged, low range)

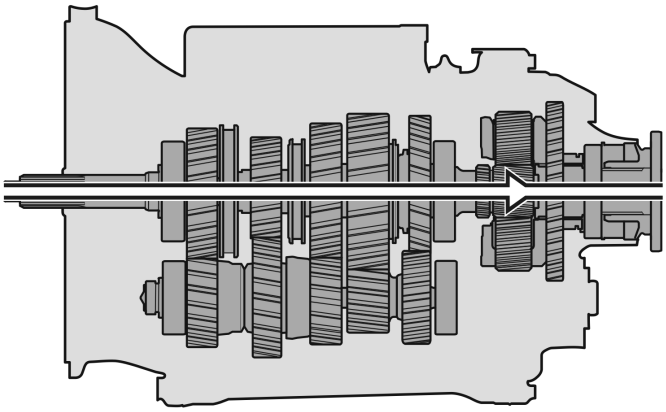

T4021716

5th gear (planetary section engaged, low range)

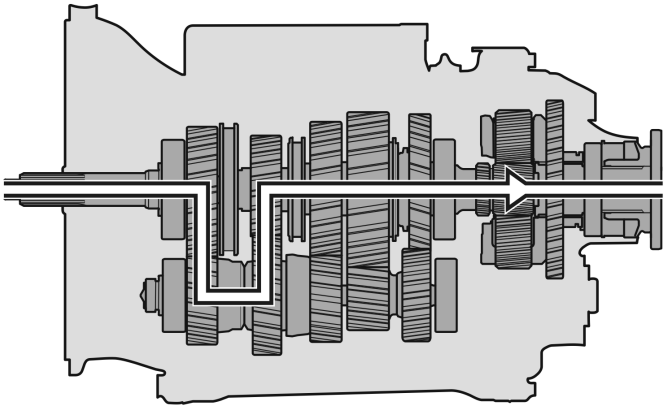

T4021715

6th gear (planetary section engaged, low range)

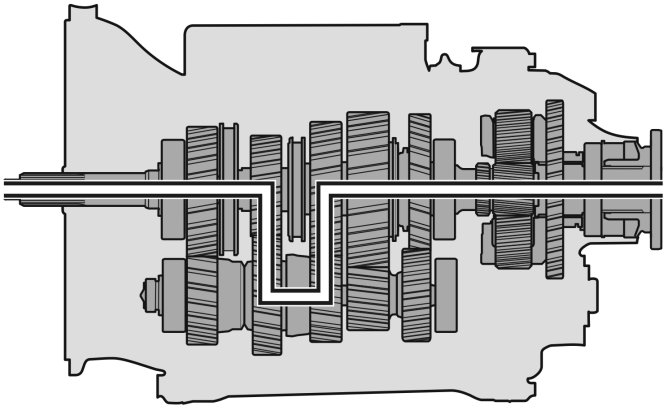

T4021719

9th gear (direct drive through range section, high range)

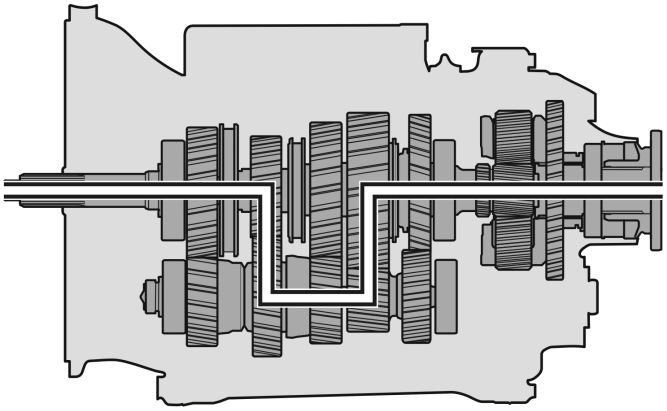

T4021717

7th gear (direct drive through range section, high range)

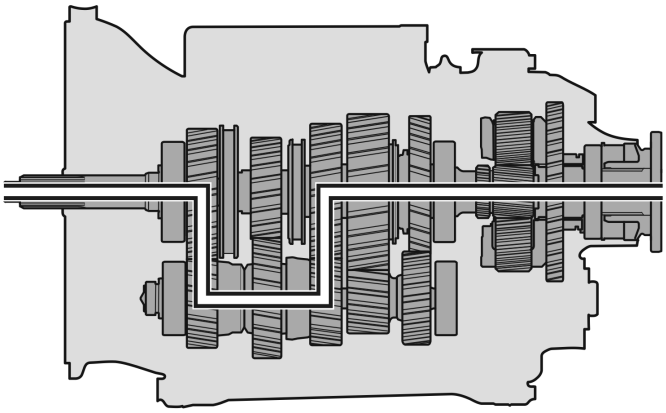

T4021720

10th gear (direct drive through range section, high range)

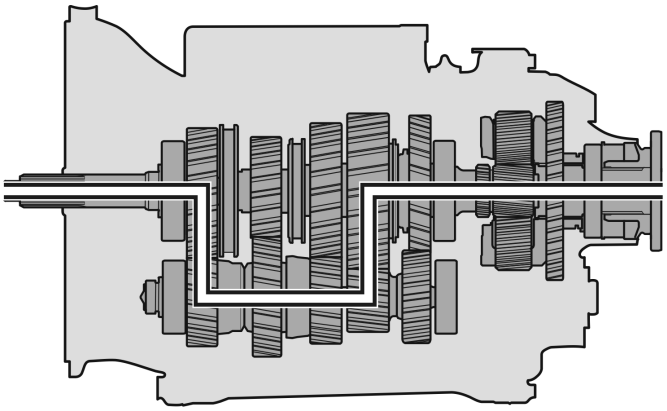

T4021718

8th gear (direct drive through range section, high range)

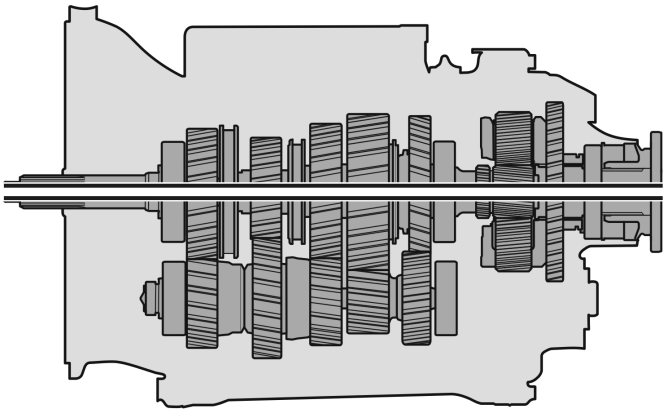

T4021721

11th gear (direct drive through range section, high range)

https://truckmanualshub.com/

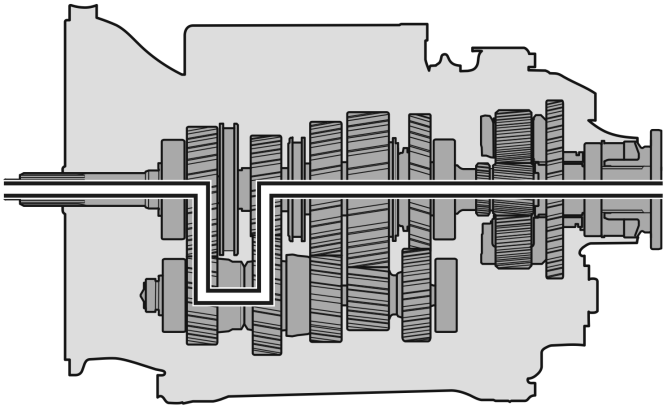

T4021722

12th gear (direct drive through range section, high range)

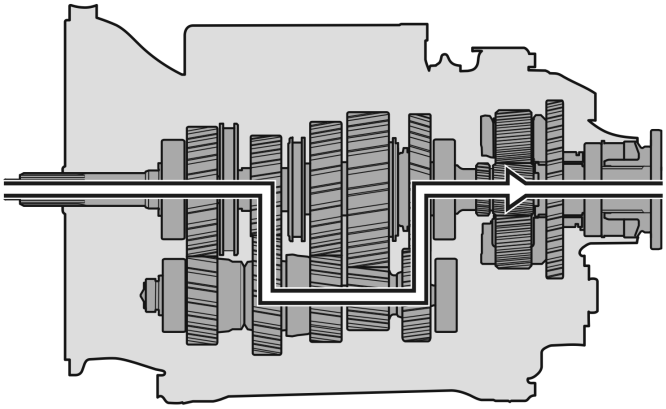

T4021705

Reverse gear R1 (planetary section engaged, low range)

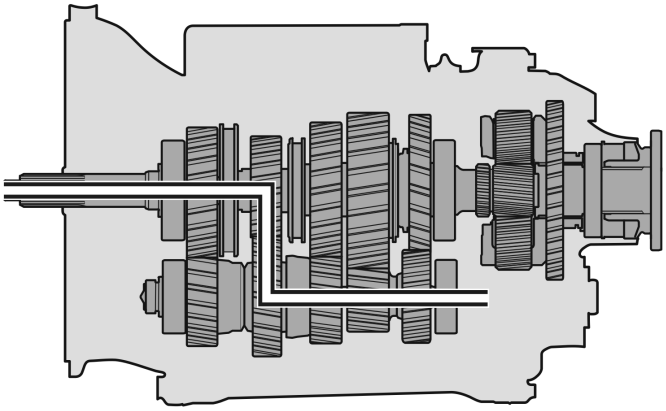

T4021709

Neutral N1

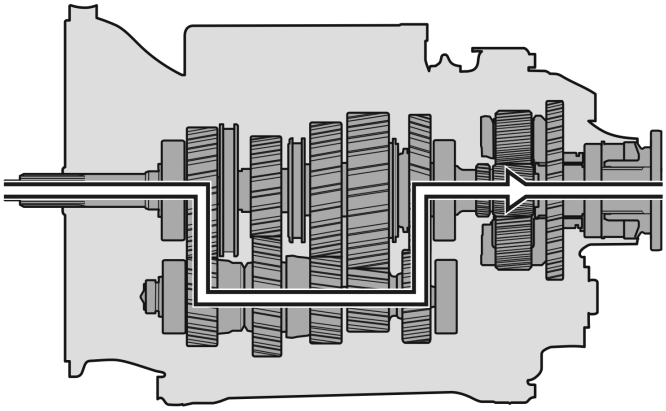

T4021706

Reverse gear R2 (planetary section engaged, low range)

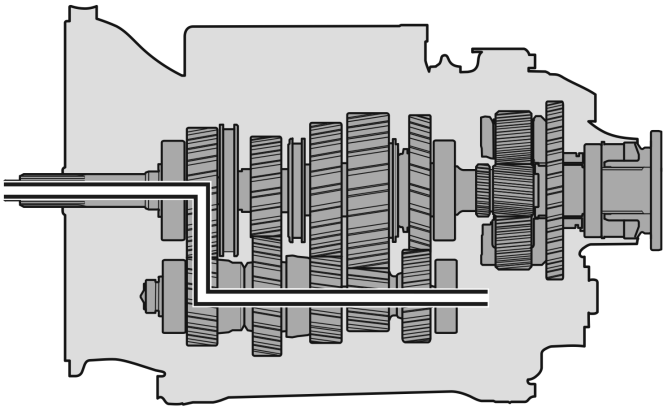

T4021710

Neutral N2

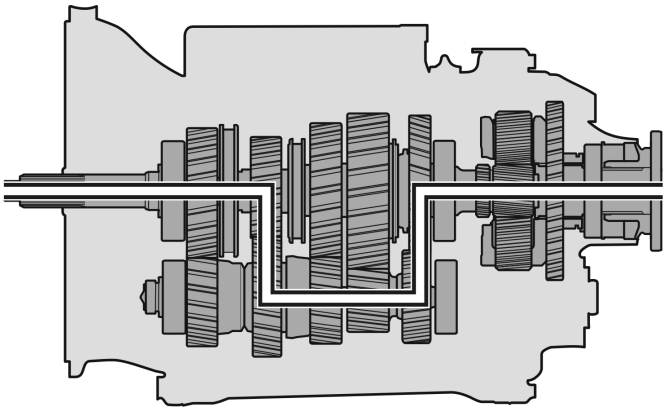

T4021707

Reverse gear R3 (direct drive through range section, high range)

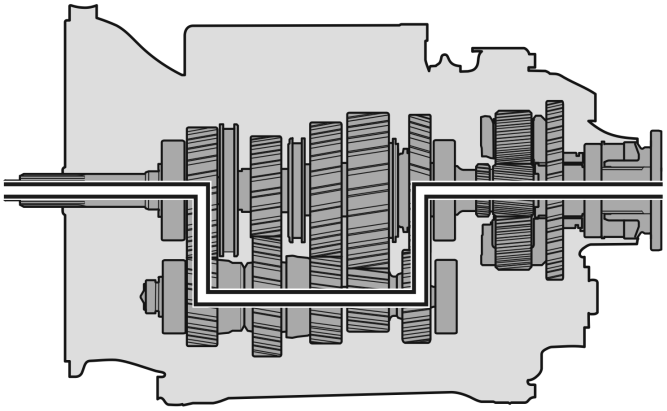

T4021708

Reverse gear R4 (direct drive through range section, high range)

Volvo Engine Brake

Note: For basic operator information about the Volvo engine brake, refer to the Operator's Manual.

Volvo's enhanced engine brake (I-VEB) is standard with I-Shift transmissions. I-Shift equipped vehicles with this system operate with some new features that are now available due to the integrated operation of the transmission control module (TCM) and the engine control module (ECM). This sharing of information and integration allows for a more optimized engine brake performance. The transmission can now down shift to increase the engine braking effect. As the vehicle slows, the transmission may downshift to keep braking torque high. All I-Shift equipped vehicles will have a new 6 position brake stalk. Positions 0, A, 1, 2, and 3 are of a fixed or locking switch position while the B position is of a momentary type switch. The following chart shows the braking effect in each brake stalk position.

Note: When the Volvo engine brake is active and the transmission is shifting gear, there will be a momentary interruption of the braking torque. This may lead to a temporary increase of the speed.

Stalk Position	Percentage of Available Engine Torque Used For Braking
0 (Off)	0%
A	50%[1]
1	40%
2	70%
3	100%
B	100%[2]

1 50% when the service brake is applied. 0–100% depending on brake cruise request, and braking demand to maintain vehicle brake cruise setting
2 + Downshifts if necessary

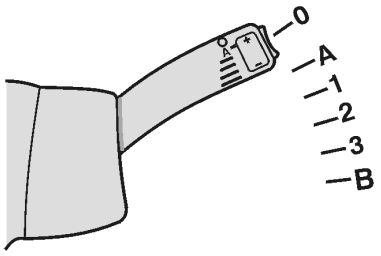

T5012243

1 **0** I-VEB Off

2 **A** Automatic Mode

3 **1–3** Manual Modes

4 **B** Brake Performance Mode

Gear Selector

Note: For basic operator information about the gear selector, refer to the Operator's Manual.

The gear selector is attached to the drivers seat and can be folded away to aid in entering the cabin. There are two available selector configurations, a basic and a premium. The selector in the vehicle is dependant on which program package level the vehicle is built with.
Both selectors have gear positions of R (Reverse), N (Neutral), D (Drive), and M (Manual). With the selector in the drive position the transmission will shift as an automatic, performing gear selections and shifting without driver input. When in the manual position, the driver either selects the gears using the gear selector button (premium selector) or will lock the gear that the transmission is presently operating in and hold that gear until the selector is placed in the drive position again (basic selector). With the basic selector, if the manual position is engaged at a stop the vehicle will start in first and hold that gear. The basic selector isn't equipped with a gear selector button or a economy/performance drive mode button.
In situations where the I-Shift is unintentionally left in gear with the parking brake applied, the transmission control module (TCM) will automatically go to neutral when the ignition key is turned to OFF position. This is done to avoid the transmission getting stuck in gear due to drive line "torque up".
There is a gear selector control module (GSCM) that is located in the dashboard. The GSCM receives signals from the selector and interprets these signals into communication information that is transmitted to the TCM.

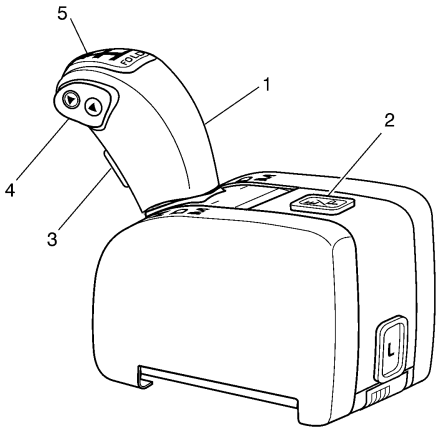

W4002922

1 Gear Lever
2 Economy/Performance Drive Mode Select Button
3 Gear Selector Lock
4 Gear Selector Button
5 Lever Fold Button

Selector Folding

The gear selector is capable of folding forward to aid in cab entry and is also used to identify which software level that is program in the TCM. With the selector in the neutral position (N) press in the fold button and the lever can be folded forward. The display will then show the program package level in place of the driving mode. This is found just to the right of the present gear within the display.

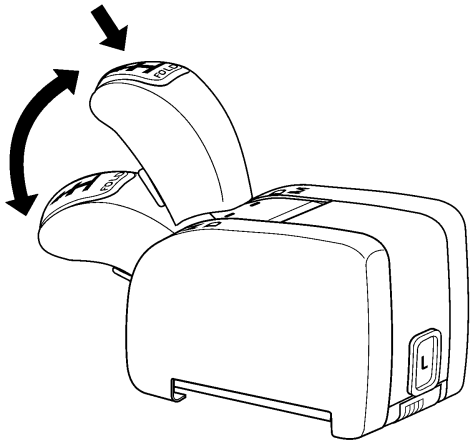

W4002855

Folding the Selector

Limp Home Mode

Note: Limp Home Mode should only be used to get a vehicle to a safe or secure location. It is not meant for driving any distance.

At times when a major sensor failure or internal transmission damage has occurred, “Limp Home Mode” can be activated. Press and hold the L button on the gear selector while moving the gear lever to the D position to active “Limp Home Mode”. When activated, L is displayed as the driving mode in the driver information display (DID). In “Limp Home Mode”, only forward gears 1, 3 and 5 are available for vehicles with the premium selector and only first gear for vehicles with the basic selector. No matter which selector the vehicle has, reverse gear 1 is available also. The vehicle must be stationary to shift gears. The “Limp Home Mode”, will be deactivated when the ignition key is turned to OFF position. This mode is only meant to get a vehicle to a safe or secure location. It is not meant for driving any type of distance.

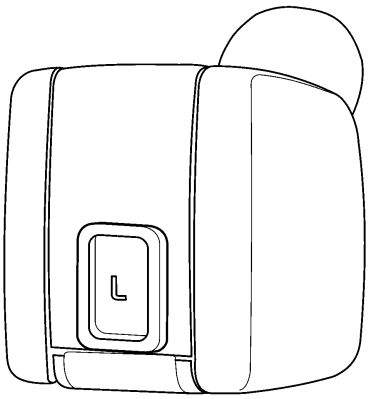

W4002856

Limp Home Mode Button

Driver Information Display (DID)

Note: For basic operator information about the DID, refer to the Operator’s Manual.

The DID in the instrument cluster provides current operating information.

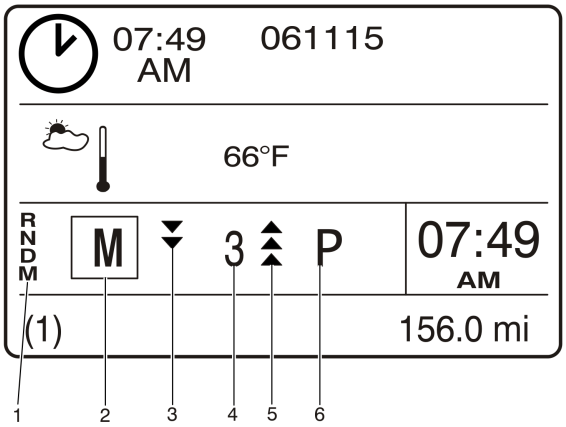

W4002916

1 Gear Selector Pattern

2 Gear Range

3 Available Gears (down)

4 Current Gear

5 Available Gears (up)

6 Driving Mode (program package level with shift lever in folded position)

Programming and Features

I-Shift Hill Start Assist

DANGER

Hill Start Assist is only intended to temporarily hold the vehicle on a grade during a vehicle launch. The vehicle brake must be applied, independent of Hill Start Assist, to hold the vehicle on a grade for an extended period of time. Failure to follow this instruction can result in loss of vehicle control and serious personal injury or death.

Note: For basic operator information about the Hill Start Assist feature, refer to the Operator's Manual.

The Volvo I-Shift Hill Start Assist feature (option), provides the operator with anti-rollback assistance during vehicle launch on a hill. Hill Start Assist works by applying the vehicles brakes when in a forward gear and starting on an incline, or in a reverse gear when starting on a decline. When enabled, it automatically activates when all of the following conditions are met:

- Ignition key in the RUN position and the engine speed (RPM) is present
- **and** the vehicle speed is equal to 0 km/h (0 mph)
- **and** vehicle is in a forward gear on an incline equal to or greater then 2%, or in a reverse gear on a decline equal to or greater then 2%
- **and** the service brake applied
- **and** the Hill Start Assist disable switch is not selected
- **and** no failures with expected SAE J1939 data link communications are present
- **and** the function is not in a downgraded mode.

Function in a downgraded mode:

- When an existing fault or loss of information from other necessary control modules such as the transmission control module (TCM) and the anti-lock brake system control module (ABS).
- Another downgraded mode would be if braking with active ABS, automatic traction control (ATC) or electronic stability program (ESP) is detected.

Activation of the system is triggered by the release of the service brake pedal. Once activated, brake chamber pressure is maintained for up to three seconds or until positive torque is identified in the drive line (which ever occurs first). When active, the driver information display (DID) will read "Hill Start Assist Active" to alert the operator of the function.
Hill Start Assist always defaults to the on position upon vehicle start up. A momentary switch is located on the dash for temporary deactivation of the feature but, will re-enable if the vehicle begins another drive cycle, the momentary switch is depressed again or the vehicle exceeds 20 km/h (12 mph). When temporarily disabled, the Hill Start Assist telltale in the instrument cluster will blink. This telltale is also used to alert the driver of a permanently disabled system, but the telltale will be solidly illuminated in this instance.

The following components are responsible for operating this feature:

- Hill Start Assist momentary switch
- Vehicle Electronic Control Unit (Vehicle ECU)
- Solenoids to the ABS

The following components are used to support the operation of this feature with input to the Vehicle ECU:

- TCM
- Brake Control Unit (ABS)

Program Packages

Note: For basic operator information about the program packages and there functions, refer to the Operator's Manual.

Aside from the I-Shift being programmed to compliment the engines characteristics, it is available with different optional program packages. These packages offer flexibility to tailor the truck to specific applications or operator needs. The transmission has different characteristics or features, depending on which program package software is installed in the transmission control module (TCM). It is also dependant on which features are active within the package. Some features within a given package can be deactivated to further tailor the system if desired. The following program packages are available.

- **Basic**
- **Enhanced Basic**
- **Performance**
- **Fuel Economy**
- **Comprehensive**
- **Gentle**

Program Package Identification

To identify which software level the transmission control module (TCM) is program with, move the gear selector to the folded position. With the selector in the neutral (N) position, press in the fold button and the lever can be folded forward. The Driver's Information Display (DID) then shows the software variant.

Software Variant Display Terms	Program Packages
B	Basic
EB	Enhanced Basic
P	Performance
FE	Fuel Economy
CO	Comprehensive
G	Gentle

Replacing the Program Package

When a program package is replaced, an update of the "Vehicle Data Administration (VDA)", must be performed before it can be downloaded into the vehicle. This is done by entering the appropriate "Conversion Kit Number" into the scan tool. For more information refer to, "VCADS PRO Conversion Kit and Accessory Kit Numbers" in function group 0. After completion of the conversion, reprogramming of the TCM (MID 130) must be carried out.

Package Features

Program packages are made up of different features. Some features are standard and some are optional within a program package. Not all features may be active within a given package and some parameters have adjustable values. This allows the operator flexibility to tailor the package to their specific needs or liking. For more information about these features and parameters refer to “Parameter Programming”, found in function group 1 in the scan tool.

Features	Basic	Enhanced Basic	Fuel Economy	Perfor-mance	Comprehensive	Gentle
Automatic Gear Shifting in Drive Mode	X	X	X	X	X	X
Manual Gear Shifting in Drive Mode				X	X	X
Manual Gear Shifting in Manual Mode	Hold Only	Hold Only	Hold Only	X	X	X
Manual Selection of Start Gear				X	X	X
Idle Governor Driving Mode		X	X	X	X	X
Economy Mode	X	X	X	X	X	X
Performance Mode				X[1]	X[1]	X[1]
Kick-Down		X[1]	X[1]	X[1]	X[1]	X[1]
Eco-Roll			X[1]		X[1]	X[1]
Extra Engine Brake Performance Mode	X[2]	X	X	X	X	X[1]
Dynamometer Mode	X	X	X	X	X	X
Standard PTO Features	X	X	X	X	X	X
Enhanced PTO Features	Optional	Optional	Optional	Optional	Optional	Optional

1 Feature can be enabled or disabled per customer preference

2 Limited functionality.

Feature Description and Function

- **Automatic Gear Shifting in Drive Mode**
  This mode is the default mode and should be used in most driving situations. When necessary or able, this automated mode will take full advantage of other I-Shift features whether its Engine Braking, Eco-Roll, Kick-Down, Performance Mode or Economy Mode. The starting gear will be selected based on the engine power rating, load and slope of the road. Typically the start gear is 1 or 2 with a trailer connected and 4 when bob-tailing. The transmission will perform all gear changes to optimize fuel economy or performance, depending on the mode selected.

- **Manual Shifting in Drive and Manual Mode**
  The driver can manually select gears using the up/down buttons located on the handle of the premium selector. The driver information display (DID) will indicate how many up/down gears are available by the means of up/down arrows.

- **Manual Selection of Starting Gear**
  In "Manual mode" the driver can select starting gears within the range from 1- 6 without trailer and 1–3 with a trailer connected. In “Drive Mode” the starting gear will be selected based on the engine power rating and slope of the road. However, the driver can adjust the selected gear by up to two gears above the calculated as long as it does not exceed "Highest available start gear". The highest available start gear is a customer programmable parameter in the range from 1-6 with a default value of 6.

- **Idle Governor Driving Mode**
  The idle drive mode allows driving in congested traffic without the need to constantly depress or release the accelerator pedal (AP). The transmission control module (TCM) fully engages the clutch and utilizes the engine control module (ECM) to control engine speed (RPM) by means of the engine idle governor. Although the engine load may vary, the idle governor will adjust the torque to maintain idle speed and constant vehicle speed. Since the clutch remains fully engaged it eliminates wear and over heating of the clutch. In order to enable the idle-drive mode, the vehicle speed is increased to a desired gear and then the pedal is fully released. Typically there are two methods of selecting a lower idle-driver speed. This can be accomplished by depressing the down-arrow on the gear lever or by slightly applying the service brake. Both will cause the transmission to down shift to a lower gear.

- **Economy Mode**
  When the key switch is turned on, the transmission is in Economy mode. An E is displayed as the driving mode in the DID. The transmission automatically selects shift points and engine parameters to optimize fuel economy. Economy mode should be used as the primary driving mode under normal conditions.

- **Performance Mode**
  In Performance mode, a P is displayed as the driving mode in the DID. The transmission strategy changes to optimize gradeability. The TCM is able (based on customer parameters) to revert back to Economy Mode if it determines that Performance Mode is no longer necessary.

- **Kick-Down**
  This feature is activated by depressing the AP all the way to the floor, thus depressing the kickdown switch located on the AP assembly. The system changes the gear selection strategy to maximize vehicle acceleration. Typically this results in an immediate gear downshift. In some situations depending on the available engine power, the TCM will not downshift. The kick-down is deactivated once the AP is lifted, thus releasing the kickdown switch.

- **Eco-Roll**
  Two versions of this feature exist. The basic version is activated when the brake stalk switch is in the A position where as the second version is activated with the brake stalk in the 0 position as well as the A positions. This feature optimizes the topology (down grades) by opening the driveline via the splitter gears, thus contributing to fuel savings. With the splitter gears being synchronized they are able to re-engage at an instant if the driver touches the brake, AP, or if the engine brake engages. The main section of the transmission stays in gear during this free-rolling. It operates when driving with the AP or with the cruise control set. With the cruise control set and the brake stalk in the A position, if the vehicle is free-rolling and the over speed setting of the cruise control is met, the engine brake will engage automatically to keep the vehicle at the desired max speed. When engaged, an E+ along with the text “Eco-Roll” is displayed in the driving mode window as well as an N in the current gear window within the DID when the vehicle is free-rolling. The second version is easily identified by a momentary switch on the dash board. The switch can be used to turn the feature off but the system defaults to **on** whenever the vehicle is started.

- **Extra Engine Brake Performance Mode**
  The Engine Brake Performance Mode is activated by moving the 6-position engine brake stalk switch to the B position, which is a momentary switch position. When activated, B is driving mode in the drivers display. When the Extra Engine Brake Performance mode is requested, the transmission monitors the RPMs and helps the engine provide maximum braking torque by automatically selecting a lower gear(s) in order to keep the engine speed as high as possible. This function is only available in the high range gears (7–12) and will automatically disable once a low range gear is attained.

- **Dynamometer Mode**
  A Dynamometer mode is part of all vehicles software for times when the vehicle is run on a dynamometer. The I-Shift transmission, will not up shift if the front wheels are not moving at or near the same speed as the rear wheels. Due to this, when on a dynamometer, place the gear selector in the D position and depress the AP all the way to the floor. The vehicle will hold its present gear for 10 second at which time, the dynamometer mode will engage and the transmission will begin to shift. To disengage dynamometer mode, release the AP. When the transmission is operated in Dynamometer Mode, E^ is displayed as the driving mode in the DID.

- **Standard Power Takeoff (PTO) Features**
  The Basic PTO Function is standard with the I-Shift transmission and is always available. Predefined splitter positions are included in the Basic function. It is possible to set software parameters that define which splitter gear to engage when transmission PTO 1 and/or 2 are engaged.

- **Enhanced PTO Features**
  The Enhanced PTO Functions option for I-Shift make it possible to activate PTO features by setting software parameters. The following list show the features and require that a bodybuilders module (BBM) is installed in the vehicle.

  1. **Gear Selection adaptation to RPM limits** It is possible to set software parameters that will limit the RPMs when engine or transmission PTO(s) are used. This feature will adapt the gear selection strategy to these speed limitations.
  2. **Auto Neutral** The “Auto Neutral” function provides the transmission the ability to go to neutral and back into gear based on an external input (e.g. parking brake status), regardless of the gear lever position.
  3. **Reverse Inhibit** The “Reverse Inhibit” function provides necessary applications the ability to block the reverse gear even though the operator has moved the gear lever to reverse.
  4. **Split Box Engagement** The use of a chassis mounted splitter box for running high capacity PTO(s), is supported by the software. The direct gear is engaged when the Body Builder Module engages the split box.

https://truckmanualshub.com/

Communication With Other Electronic Control Units (ECUs)

Summary, Components (signal summary)

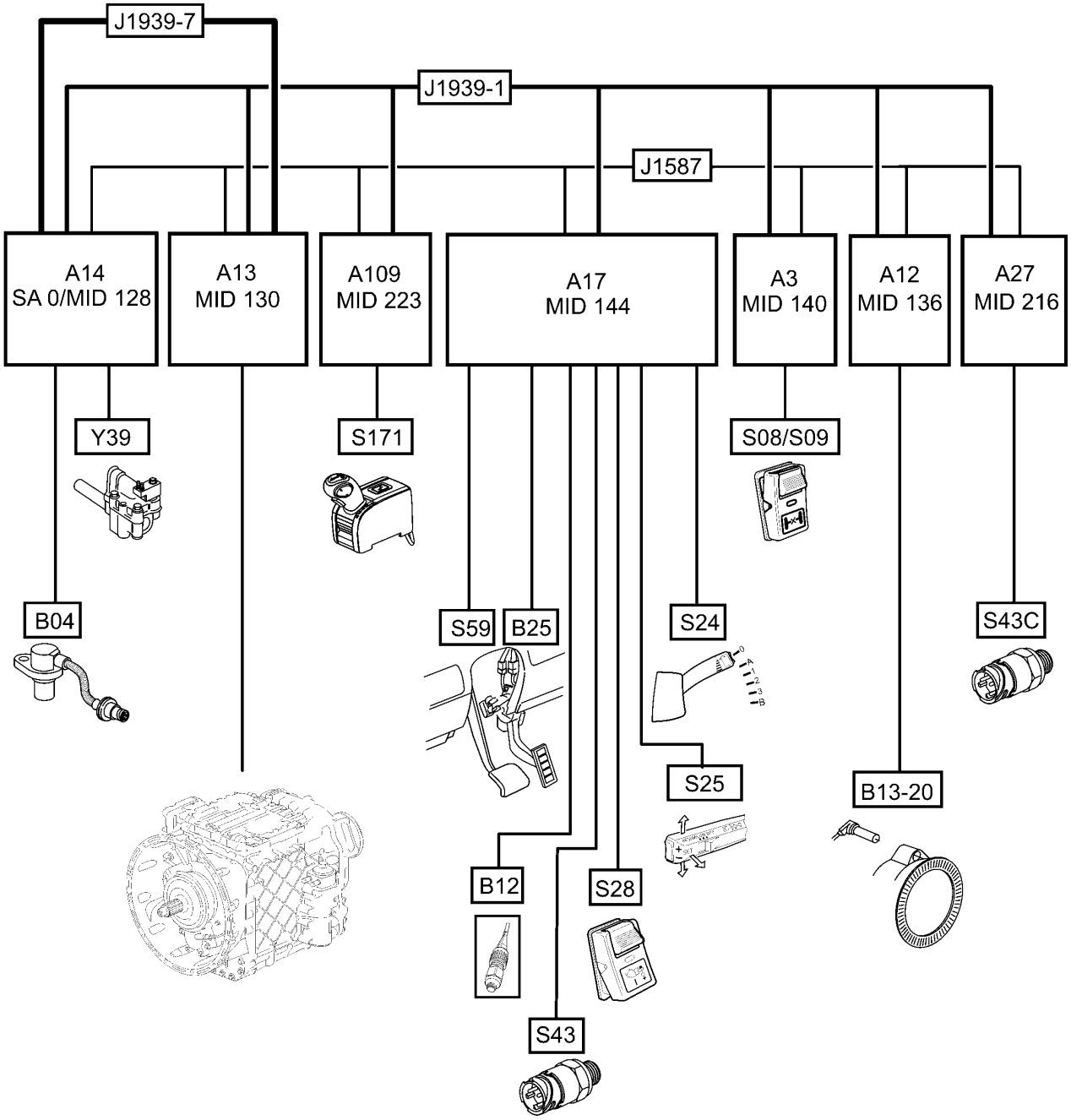

W4055714

Component list

MID	Component	Description
SA 0/MID128/ECM	A14	ECM (engine control module)
	B04	Sensor, crankshaft position (CKP)
	Y39	Solenoid valve, VCB (Volvo compression brake)
MID130/TCM	A13	TCM (transmission control module)
MID223/GSCM	A109	GSCM (gear selector control module)
	S171	Gear selector
MID144/Vehicle ECU	A17	Vehicle ECU (vehicle electronic control unit)
	S59	Position switch, brake pedal
	B25	Sensor, accelerator pedal (with kickdown)
	B12	Sensor, output shaft speed (road speed)
	S43	Pressure switch, parking brake
	S28	Switch, power takeoff
	S25	Stalk switch, cruise control
	S24	Stalk switch, engine brake
MID140/Central Instrument Cluster	A3	Instrument cluster
	S08/S09	Switch, differential lock / wheel lock
MID136/ABS	A12	ABS control unit (anti-lock brake system control module)
	B13-20	Sensor, wheel speed
MID216/LCM	A27	LCM (lamp control module), external lighting
	S43C	Pressure Switch, Trailer parking brake

Communication with Engine Control Module (ECM), SA 0/MID 128

Signals / information:

- Engine signals such as; engine speed (RPM) and torque monitoring

Communication with Gear Selector Control Module (GSCM), MID 223

Signals / information:

- Gear selector input

Communication with Vehicle ECU, MID 144

Signals / information:

- Accelerator pedal (AP) position, including “kickdown”.
- Cruise control.
- Power takeoff (PTO) control
- Brake pedal status
- Parking brake status
- Engine brake stalk switch
- Hill start assist (HSA)

Communication with Instrument Cluster MID 140

Signals / information:

- Gear selector display information
- Driver information display (DID) warnings
- On board diagnostics trouble codes (DTCs) for the TCM and GSCM

Communication with Anti-Lock Brake System (ABS) Control Module, MID 136

Signals / information:

- Wheel speed sensor information
- ABS status information
- Traction control status information
- Volvo enhanced stability technology (VEST) information
- Hill start assist (HSA)

Communication with Lighting Control Module (LCM), MID 216

Signals / information:

- Trailer parking brake switch status, (trailer connected)
- The transmission control module (TCM) will select the wrong starting gear and wrong gears if the parameter ID “ANI” is not enabled. Since the TCM can not detect if a trailer is connected, the TCM will default to the lowest possible starting gear.
- Reverse lights (lights are illuminated once the reverse gear is physically attained)