https://truckmanualshub.com/

OM515C520C99/1E

OPERATOR`S MANUAL

515C - 520C

SERIAL NUMBER 7001
AND UP
9001 AND UP FOR 515CH

SERIAL NUMBER 11001
AND UP
13001 AND UP FOR 520CH

DRESSTA Co. Ltd.
A JOINT VENTURE OF KOMATSU AMERICA INTERNATIONAL CO. AND HUTA STALOWA WOLA S.A.

https://truckmanualshub.com/

FOREWORD

Welcome to the growing group of value-conscious people who operate DRESSTA machines

This manual covers the instructions for safe operation, lubrications, adjustments and maintenance for normal daily care. These instructions are divided into six sections to simplify your reference to the information most important to you. Refer to the contents page at the beginning of the section for a complete list of the subjects covered except for Section 2, which should be read entirely.

This manual has been prepared to help you operate and maintain your machine with utmost efficiency and safety. Read this manual thoroughly and learn your machine before you attempt to operate it.

It is our policy to improve our products whenever it is possible and practical to do so. We reserve the right to make changes or add improvements at any time without incurring any obligation to install such changes on products sold previously.

Due to this continuous program of research and development, periodic revisions may be made to this publication. It is recommended that customers contact their distributor for information on the latest revision.

We hope you will be able to use our machines safety and to the best advantage.

DRESSTA Co. Ltd.

This material is proprietary to DRESSTA Co. Ltd. and is not to be reproduced, used or disclosed except in accordance with written authorization from DRESSTA Co. Ltd.

https://truckmanualshub.com/

https://truckmanualshub.com/

SECTION INDEX

Section 1 Introduction 1.1
Section 2 Safety Precautions 2.1
Section 3 Storage and Shipping 3.1
Section 4 Operating 4.1
Section 5 Maintenance 5.1
Section 6 Specifications 6.1

https://truckmanualshub.com/

https://truckmanualshub.com/

SECTION CONTENTS

SECTION 1 - INTRODUCTION
This section discusses the use of this manual and serial number locations.

SECTION 2 - SAFETY PRECAUTIONS
This section lists safety rules concerning personal safety. Read this section carefully and observe safety precautions specified herein.

SECTION 3 - STORAGE AND SHIPPING
This section discusses how to ship or store this machine.

SECTION 4 - OPERATING
The front portion of this section provides you with instructions for trouble free operation of the machine. A universal symbol chart for instruments and controls designation is provided. The instruments and controls area is designed to tell you "where it is, what it does and how to use it". Read this area carefully. The remaining portion of this section outlines and illustrates the step-by-step procedures for starting, operating and stopping the machine and discusses a few operating suggestions and techniques and simple ideas to help ease the work and lengthen the useful life of your machine.

SECTION 5 - MAINTENANCE
The beginning of this section outlines a complete scheduled maintenance program, which helps to reduce down-time and expense, and increase the profit and work from your machine. Read and use this area. Following the maintenance program are the lubrication recommendations and requirements for the machine. The remainder of the section is devoted to clearly explaining the "how to" of the many maintenance and adjustment procedures listed in the maintenance program.

SECTION 6 - SPECIFICATIONS
This section covers the general dimensions schematics, forces and weights, refill capacities, ground speeds and the standard and special torque values.

https://truckmanualshub.com/

https://truckmanualshub.com/

SECTION CONTENTS

1. INTRODUCTION

1.1. Introduction 3
1.2. Serial Numbers 5

2. SAFETY PRECAUTIONS

2.1. General 3
2.2. Before Starting the Engine 4
2.3. Operating the Machine 4
2.4. General Maintenance Precautions 6
2.5. When Parking 10
2.6. Safety Graphics Location 11

3. MACHINE TRANSPORT AND STORAGE

3.1. Machine Transport 3
3.2. Lifting on Slings 5
3.3. Moving a Disabled Machine 6
3.4. Machine Storage 7

4. OPERATING

4.1. General 3
4.2. Universal Symbols for Instruments and Controls 4
4.3. Instruments and Controls 8
4.4. Cab Door and Windows 20
4.5. Operator’s Seat 21
4.6. Seat Belt 24
4.7. Cab Heating and Ventilation 25
4.8. Air Cleaner Service Indicator 27
4.9. Electrical Master Switch 27
4.10. Dome Lights with Switches 28
4.11. Starting and Stopping the Engine 28
4.12. Driving the Machine 30
4.13. Shifting Gears 32
4.14. Steering 32
4.15. Stopping the Machine 33
4.16. Parking the Machine 34
4.17. Loader Operations 34
4.18. Loader Techniques 41
4.19. Economical Operation of the Machine 54
4.20. Quickcoupling 54
4.21. Ride Stabilizing Mechanism 56
4.22. High-Dump Bucket 57

https://truckmanualshub.com/

5. MAINTENANCE

5.1. General Precautions 3
5.2. Scheduled Maintenance Guide 4
5.3. Maintenance and Service Chart 6
5.4. Lubrication 9
5.5. Seasonal Preparations 14
5.6. Air Cleaning System 15
5.7. Brakes 19
5.8. Cooling System 22
5.9. Drive Axles 27
5.10. Electrical System 29
5.11. Engine 31
5.12. Ether Injector 37
5.13. Fuel System 38
5.14. Hydraulic System 42
5.15. Seat Belt 47
5.16. Steering Gear 47
5.17. Tires and Rims 47
5.18. Transmission System 48
5.19. ROPS Cab and ROPS Canopy 53
5.20. Hood Assembly and Radiator Grill 54
5.21. Loader Equipment 55
5.22. Air Conditioner or Heater 56

6. SPECIFICATIONS

6.1. Application 3
6.2. Technical Description 3
6.3. Schematic of 515C and 520C Wheel Loader Drive Train 4
6.4. Schematic of Transmission Hydraulic System 5
6.5. Loader Equipment and Steering Hydraulic System Schematic 6
6.6. Wiring Diagram 14
6.7. Brake Hydraulic System Schematic 25
6.8. Specifications 26
6.9. 515C and 520C Loader Equipment 32
6.10. Torque Values for Standard Metric Fasteners 35
6.11. Torque Values for Standard English Fasteners 35
6.12. Torque Values for Split Flange Connections 36
6.13. Torque Values for Hydraulic Tubes and Fittings 37
6.14. Torque Values for Hose Clamps 37
6.15. Torque Values for Air Conditioning Tubes and Fittings 38
6.16. Torque Values for Air Conditioning O-Ring Connections 38
6.17. Special Torques 39
6.18. Service Tools 40

https://truckmanualshub.com/

SECTION 1

INTRODUCTION

https://truckmanualshub.com/

INTRODUCTION

SECTION CONTENTS

1.1. Introduction 3
1.2. Serial Numbers 5

https://truckmanualshub.com/

https://truckmanualshub.com/

1.1. INTRODUCTION

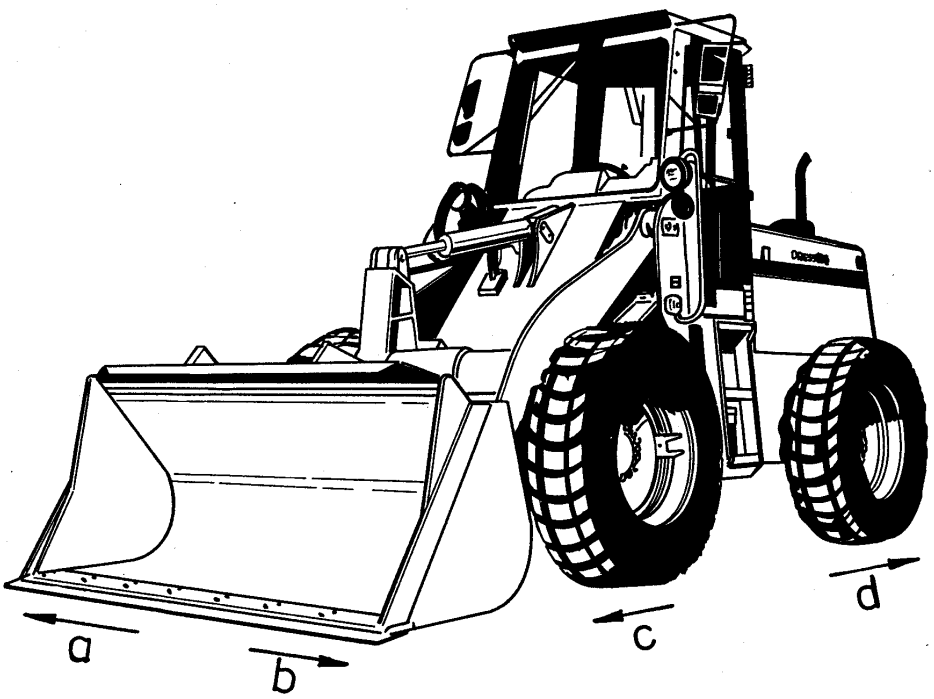

Fig. 1.1. 515 Series C Wheel Loader

a - Right Hand Side of the Machine
b - Left Hand Side of the Machine
c - Front of the Machine
d - Rear of the Machine

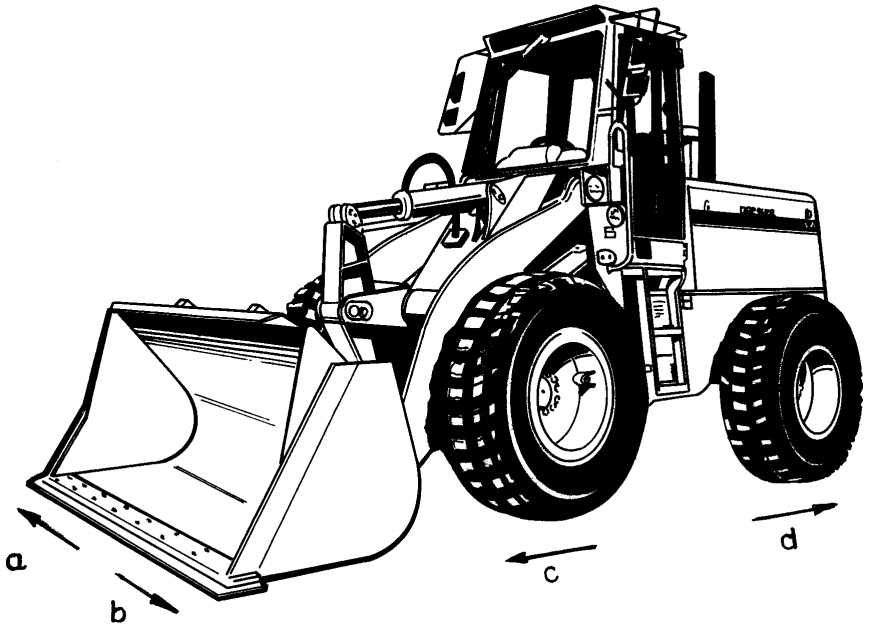

Fig. 1.2. 520 Series C Wheel Loader

a - Right Hand Side of the Machine
b - Left Hand Side of the Machine
c - Front of the Machine
d - Rear of the Machine

https://truckmanualshub.com/

INTRODUCTION

GENERAL

Throughout this manual there will be two types of cross references. One type - numerical - refers to a heading within the same section. The other type - numerical followed by the section title - refers to a heading in another section. Refer to the section contents page at the beginning of the individual sections for specific page numbers.

Throughout this manual the use of the terms "left", "right", "front", and "rear" must be understood to avoid confusion when following the instructions. "Left" and "right" indicate the left and right sides of the machine when facing forward in the operator's seat. The „front” is in front of the operator, the „rear” - behind his back. See Fig. 1.1, 1.2.

Some illustrations are of general application of this model and may not show your machine accurately in all details.

The loaders are available in 2 different versions:

1. standard version equipped with a mechanical feedback steering and a hydraulic system controlled with either 2 or 3 levers mechanically connected with a 2 or 3-spool control valve respectively.
2. upgraded version: equipped with a hydraulic feedback steering and a hydraulic system controlled with 1 or 2 levers hydraulically connected with a 2 or 3-spool control valve respectively. In this version it can be configured as CE version according to EC directives.

WARNING!: This symbol and text in bold letters is used throughout this manual to call your attention to instructions concerning personal safety. Observe and follow these instructions. Be certain anyone operating and servicing this machine is aware of these rules. Failure to follow these rules may result in injury or death.

IMPORTANT: *This sign and text in italics is used throughout this manual to call your attention to key problems for machine operation. Failure to follow such instructions may result in damage of the machine and heavy material losses.*

NOTE: *This sign and text in italics is used throughout this manual to call your attention to important function having influence on the right functioning of the machine or for informational purposes.*

https://truckmanualshub.com/

1.2. SERIAL NUMBERS

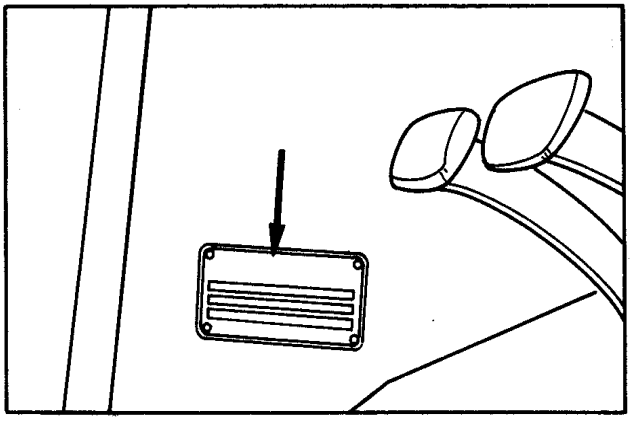

Fig.1.3. Location of Machine Serial Number plates

1. The machine serial number plate is located at the bottom of the left hand side of the cab. It is also stamped on the left rear corner of the rear frame.

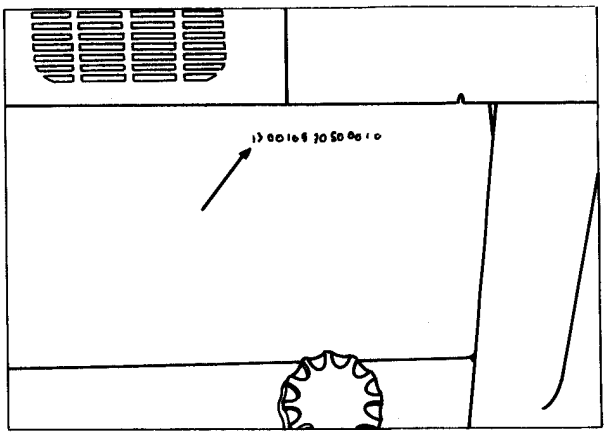

Fig.1.4. Location of stamped machine serial number

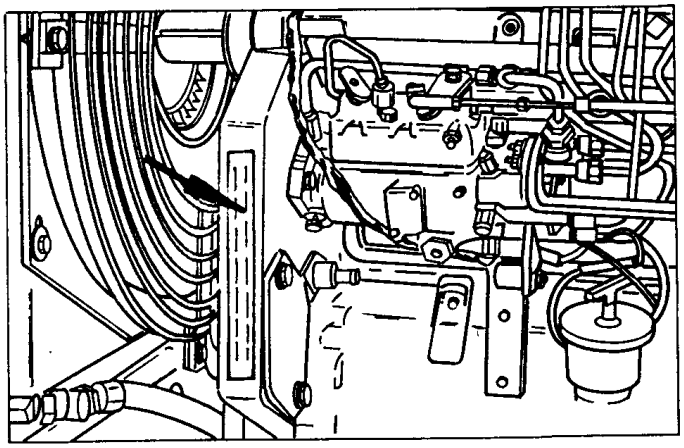

Fig.1.5. Engine Serial Number Plate

https://truckmanualshub.com/

2. The engine serial number plate is located on the left hand side of the engine in the space designated “Engine serial number” (Fig. 1.5).

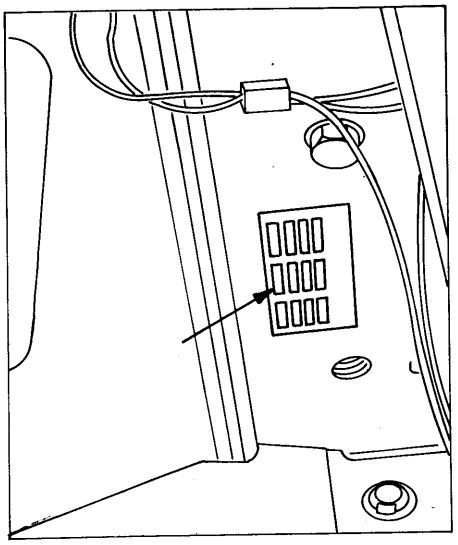

Fig.1.6. Cab Serial Number Plate

3. The cab serial number plate is located inside the cab in the right front corner near the floor board (Fig. 1.6).

All other main components having serial numbers are each equipped with a separate serial number plate or the number is stamped on the component body.

Use respective serial numbers when requesting information or ordering parts and proper numbers from Parts Catalogue.

https://truckmanualshub.com/

SECTION 2

SAFETY PRECAUTIONS

https://truckmanualshub.com/

SECTION CONTENTS

2.1. General 3
2.2. Before Starting the Engine 4
2.3. Operating the Machine 4
2.4. General Maintenance Precautions 6
2.5. When Parking 10
2.6. Safety Graphics Location 11
2.6.1. Safety Graphics 12
2.6.2. Safety Graphics (Version CE) 16

https://truckmanualshub.com/

https://truckmanualshub.com/

2.1. GENERAL

WORK SAFELY - FOLLOW THESE RULES

WARNING!: This symbol and text with bold letters is used throughout this manual to call your attention to instructions concerning personal safety. Observe and follow these instructions. Be certain anyone operating and servicing this machine is aware of these rules. Failure to follow these rules may result in injury or death.

Recommendations and information given in this Section do not cover all subjects to be acquired for safe operating of the machine. Detailed information respecting safe operating of the machine are specified in the following Sections. Observe and follow these rules.

Operating and servicing this machine can be hazardous if performed improperly. Personnel must have necessary skill information and use proper procedures and recommendations included in this manual.

Only trained and authorized personnel should be allowed to operate and service this machine.

Do not rush. Hurrying can lead to accidents. Haste, carelessness and lack of training are the primary causes of equipment-related injuries.

The machine must be equipped with a fully charged fire extinguisher recharged immediately after use and first-aid kit. The fire extinguisher is fixed on the floor at the left band side of the operator’s seat. Operator’s seat must be equipped with safety belt. Also, the machine must be equipped with a safety triangle.

If the machine is equipped with outside ventilation check the engine exhaust system periodically for leaks. Exhaust gases are dangerous to the operator. On machines equipped with a cab without outside ventilation, keep sliding windows open to outside air.

The operator must not wear loose fitting or hanging clothing, belts or jewelry and must wear shoes with non-slipping soles as well as a hard hat insulated during cold weather.

Do not jump on or off the machine. Keep two hands and one foot, or two feet and one hand in contact with the steps and handholds at all times. Always face the machine when climbing on or off to reduce the chances of slipping and injury.

Follow all machine-mounted safety signs before starting, operating, maintaining or servicing the machine.

The operator must be alert, physically fit and free from the influences of alcohol, drugs or medications that might affect his eyesight, hearing, reactions or judgment.

Do not use controls or hoses as hand holds when climbing on or off the machine. The hoses and controls can move and do not provide solid support. Movement of the controls may cause inadvertent and unexpected movement of the machine or its equipment.

Be sure the area of the operator's compartment, all mounting steps and grab handles are free of oil, grease, loose objects, ice and mud to lessen the possibility of slipping. All damaged steps or grab handles should be repaired immediately. Remove or secure all maintenance and personal items so they will not interfere with the operator or jam the controls.

https://truckmanualshub.com/

2.2. BEFORE STARTING THE ENGINE

Never start the engine indoors unless proper exhaust ventilation is provided to remove deadly exhaust gases. Once the engine is operating, move the machine outdoors as soon as possible.

Perform a visual check of the machine before starting the engine. Look for such things as improper fluid levels, oil leaks, lack of safety equipment, concentration of dirt and loose, damaged or missing parts. Do not start the engine until any unsafe conditions are corrected.

Be sure all filler caps, dipsticks, plugs, latches, service doors, etc. are secure before starting.

Walk completely around the machine before entering the operator's compartment, clear the immediate area surrounding the machine of personnel and obstructions.

Know the alternative exit route from the operator's compartment for use in an emergency.

Sit in the operator's seat before starting the engine. Keep hands and footwear free of grease, water and mud to insure positive control movement.

Before starting the engine or when the machine is standing with the engine running idle; lock the transmission shift lever in neutral (N), apply the parking brake, and lower the bucket if raised.

Before operating the machine, check that the frame locking bar and pin are stowed on the rear frame. Broken or lost frame locking bar and pin should be repaired or replaced immediately so that this device is always available for use.

When using a booster battery and jumper cables, switch off the master switch, then connect the positive terminal on the booster battery to the positive terminal of the battery on the machine. Connect the negative terminal on the booster battery to the negative terminal of the battery on the machine.

2.3. OPERATING THE MACHINE

Release the parking brake before moving the machine. The brake could burn or be damaged if the machine is driven with the brake applied.

Before driving the machine, adjust the seat and fasten the seat belt. Never wear the seat belt across the abdomen.

Always carefully check overhead clearance before operating in areas with overhead obstructions such as guy wires, power lines, bridges, tree branches and building doors).

Do not smoke when using the ether injector. Do not use the ether injector when the air temperature is above freezing. Follow the correct method for starting the engine.

Before moving the machine, sound the horn to warn the nearby personnel.

Check the brakes, steering and attachment controls. All systems must be fully operative.

After starting and while operating, observe instruments and warning lights frequently. Investigate any unusual indications or noises in the machine.

https://truckmanualshub.com/

OPERATING THE MACHINE

Before work know the locations of underground cables, water mains, gas lines, etc. A broken gas line or electrical cable could cause personal injury or death.

Avoid undercutting high banks because the bank may cave in. Ramp up and remove the top layers first.

Avoid operating too close to an overhang, deep ditch, or excavation because the machine's weight may cause the edge to collapse and result in personal injury.

If the ground driven steering light comes on, immediately stop the machine in a safe place. Shut off the engine and apply the parking brake. Correct the cause before operating again.

Keep the work area free from obstructions and as smooth as possible.

Turn on the machine's lights at night and times of poor visibility to see and be seen.

When loading trucks, be careful not to hit the truck with the loader or its bucket.

If engine has a tendency to stall for any reason under load or at idle, stop the machine immediately and correct the malfunction.

Trucks should be loaded from the driver's side whenever possible. When the truck is being loaded, be sure the driver either stays in the cab (on cab-protected trucks) or away from the truck and loader.

If the machine begins to tip over because of an overload, immediately lower the bucket to regain stability.

Do not swing a load over the heads of other workers or a truck cab.

A machine's weight and the vibration it creates can cause the edge of a high wall to collapse. Keep your machine back from the edges of banks and excavations. If this cannot be avoided, face the machine towards the bank's edge while operating.

Operating in rough virgin terrain with such hazards as trees, logs, large rocks and brush calls for special attention. Avoid falling branches and upturning roots.

When pushing over trees never allow the machine to climb up the root structure, especially when the tree is being felled. Use extreme care when pushing over any tree with dead branches.

Operate at speeds low enough to ensure complete control of the machine. Travel slowly in congested areas or on rough ground, slopes or near drop-offs or on snow, ice or slippery surfaces.

Maintain a safe distance between your machine and other vehicles according to the condition of the road and load.

Keep the machine as close to the side of the road as is possible to provide for oncoming or passing vehicles. Pass other vehicles only when the road is clear and there is enough room and reserve power to pass.

Never try to get on or off the machine while it is moving. A serious injury or death could result.

https://truckmanualshub.com/

SAFETY PRECAUTIONS

OPERATING THE MACHINE

Never shift the transmission direction lever into neutral when travelling downhill. The machine may go out of control and a rollover could result or the transmission, torque converter or engine could be damaged when the transmission is again placed in gear. Always put the transmission in the low range position before starting downhill. Use the accelerator pedal and brake pedal to slow the machine.

Never haul passengers. Only the operator should be on the machine when it is moving.

If the brake system warning light and buzzer come on during operation, immediately stop the machine in a safe place. Apply the parking brake. Correct the cause before operating again.

Lock the levers when roading the machine so as not to actuate the levers accidentally.

Maintain clear vision of all work and travel areas. Keep the windows and mirrors clean and repaired.

Look in the mounted equipment control intended travel direction to be sure the personnel and allied equipment do not interfere with the machine's work pattern. Do not operate if exposed personnel enter the immediate work area.

When traveling fast or downhill never apply the brake and transmission disconnect pedal as this shifts the transmission into neutral (N). The machine could go out of control or the power train could be damaged when the pedal is released and the transmission is shifted into gear again.

Do not drive the machine without checking the brakes for correct operation.

Avoid sidehill travel whenever possible. Drive straight up and down the hill. If the machine starts slipping sideways, turn downhill immediately, and lower the bucket.

Do not overspeed the engine. Excessive speeds can be hazardous and harmful to the power train. Select the proper gear before starting downhill. Control the speed with the brakes.

Avoid crossing obstacles such as ditches, ridges, curbs, logs, rocks, and railroad tracks. If you cannot avoid them, reduce speed and cross at an angle.

Never use the bucket as a brake except in an emergency.

Do not adjust the seat while the machine is moving because a loss of control may result. Stop the machine, apply the parking brake and then adjust the seat.

Never allow anyone to stand on the ladder when the bucket is raised or the machine is moving.

Carry the bucket low for maximum visibility and stability when traveling.

Use extra caution when moving with the bucket raised. The stability is reduced as the bucket is raised.

Know the traffic flow patterns of the job site. Obey flagmen, signs and signals.

There is no substitute for good judgment when working on a slope. Slope operation should be limited according to the ground and traction conditions, the load being carried, and the speed of the machine.

https://truckmanualshub.com/

2.4. GENERAL MAINTENANCE PRECAUTIONS

Replace any missing or defaced product graphics. When parts which have product graphics on them are replaced, be sure to install new product graphics. New product graphics are available from the Authorized Distributor of Construction Equipment.

Never let anyone near the machine's articulation pivot. If the machine is turned, they could be crushed.

Before servicing the machine use the frame safety bar to prevent accidental articulation.

Before servicing the machine, be sure the engine is off, the bucket is lowered, the transmission shift lever is locked in neutral (N), the electrical system master switch is off and the key is removed. Tag the machine.

Use only approved parts for repairs and maintenance. Failure to do so could compromise personal safety, machine performance, and reliability.

Before working under the machine, block the tires to prevent machine movement.

It is not possible to anticipate all conceivable ways or conditions under which this machine may be serviced or to provide precautions for all the possible hazards that may result. Safety is always the most important rule. Constantly be aware of dangers involved in working on the machine and take proper precautions. Standard and accepted safety precautions and equipment should be used.

Never attempt to start servicing close to the operating fan as it may result in serious injury.

When changing cutting edges, securely support the bucket for your protection.

If the bucket is provided with teeth, use special hammer for installation to prevent teeth breakage. Wear safety goggles.

Lift and handle all heavy parts with lifting devices of adequate capacity. Secure the parts with proper slings and hooks. Use lifting eyes provided. Warn the nearby personnel to stand clear.

Keep work area clean and dry. Remove water and oil spills immediately to reduce the chance of slipping and injury.

Do not pile up oily or greasy rags; they are a fire hazard. Store them in an approved, closed metal container.

Do not carry loose objects in your pockets because they might catch on the machine and result in a fall or injury.

Use the proper tool for the job. Be sure all tools are in good condition. Do not use tools which are worn, bent or have mushroomed heads because they can lead to injury.

Do not use the loader bucket or forks to lift personnel or as a work platform.

When service requires access to areas that cannot be reached from the ground or service platform on the machine, use a ladder or platform of adequate size and capacity.

Never adjust relief valves higher than the specified pressure because this may damage the machine and lead to injury. When checking pressures, use the correct gauge for the expected pressure. Consult the Authorized Distributor of Construction Equipment

https://truckmanualshub.com/

SAFETY PRECAUTIONS

GENERAL MAINTENANCE PRECAUTIONS

Jacking up the machine can be hazardous if performed improperly. Use jacking equipment with sufficient capacity. Be sure the jacking points are strong enough for the expected load. Be sure the supports for the jacks are stable. Before jacking up the machine, block the tires on the opposite side of the machine. Because the rear axle pivots, securely block it in position. Do not run the engine with the machine on jacks. For your safety, support the machine before servicing if.

This machine is assembled using high strength fasteners. Replacement fasteners must be of the same size and strength as the originals.

Refer to the parts catalog for this machine. Tighten fasteners to the proper torque.

When cutting, grinding, pounding, prying, or whenever material could fly or fall, wear proper protective equipment (such as goggles, hard hat, safety shoes, and heavy gloves).

During servicing do not allow anyone in the operator's compartment who is not trained and assisting in the servicing.

When it is necessary to make any checks or adjustments with the engine running, use two people. A trained operator must be at the controls to safeguard the mechanic making the checks or adjustments. Be sure the transmission shift lever is locked in neutral (N), the parking brake is applied and the frame halves are locked together.

Never stand near the bucket or tires while the engine is running.

If compressed air or water under pressure is used for cleaning parts, wear safety goggles. Limit air pressure to 200 [kPa] and water pressure to 270 [kPa].

Never run the engine when cleaning or lubricating the machine because serious injury could result from contacting moving parts. Use a nontoxic, nonflammable commercial solvent for cleaning parts unless otherwise specified.

Avoid use of gasoline, diesel fuel, kerosene or other flammable solvents for cleaning parts.

Never place these solvents in an open pan.

Use gloves and safety goggles when draining hot fluids.

For your safety lower the bucket before servicing the machine. Be sure no one is standing near the bucket when it is being lowered.

Do not service the air conditioning system (if equipped) unless you are completely familiar with air conditioning and the safety precautions for handling liquid refrigerant which can cause severe frostbite. Contact the Authorized Distributor of Construction Equipment

Before working on the engine or electrical system turn off the starting switch and the master switch and take the keys out. Tag the cables and controls to warn against starting.

Keep the engine exhaust manifold(s) and exhaust system clear of combustible material to reduce the chance of fire.

Never remove any guards or shields with the engine running because of the danger of contacting rotating parts.

https://truckmanualshub.com/

GENERAL MAINTENANCE PRECAUTIONS

Before working on the hydraulic system, be sure the system pressure is relieved. To do so lower the bucket on the ground, move boom control lever in float position and switch off the engine.

Do not use hands to search for hydraulic leaks. Hydraulic oil escaping under pressure from a very small hole can be almost invisible yet have sufficient force to penetrate the skin. Use a piece of cardboard or wood to search for suspected leaks. If injured by escaping oil, see a doctor immediately because of the possibility of infection or reaction to the oil.

Never work or walk under a raised bucket without proper blocking.

Use extra caution when adjusting the loader's bucket leveler or boom kick-out. Use two trained people and guard against accidental movement of the machine or loader linkage.

The roll-over protective structure ROPS provides operator protection in the event of machine rollover or upset. It is designed to bend during a rollover to protect the operator from sudden impact loads. Do not attempt to repair a ROPS after an accident. Repaired structures do not provide the original strength and protection. Contact the Authorized Distributor of Construction Equipment for information on ROPS (or cab) replacement. Do not operate the machine again until the ROPS has been replaced. Periodically inspect the ROPS for fatigue cracks. Cracks indicate a weakened structure which should be replaced for your protection. Bolts fastening cab or ROPS must be torqued to a specific value. Do not cut, grind, weld, drill or tap holes in the ROPS This could weaken the structure or affect the overall energy absorption capability. Always wear the seat belt during all operation in order to realize protection of the ROPS (or cab).

When transporting the machine, lock the frame halves together with the frame locking bar and pins.

Corrosion inhibitors are volatile and flammable. Use them only in a well ventilated area. Keep flames and sparks away. Do not smoke. Store container in a cool, well ventilated place.

For your safety never push or tow a disabled machine farther than absolutely necessary. When using a chain or cable, be sure it is strong enough for the expected load and properly secured to the drawbar pin or towhook. Avoid kinking. Do not pull with a kinked chain or cable because the high stresses could cause failure in a kinked area. Wear heavy gloves when handling chain or cable. When pulling with a chain or cable, take up the slack slowly to avoid jerking. A chain or cable which fails under load can whip and cause serious injury. Do not pull or tow unless the operator's compartment is guarded against or out of reach of a whipping chain or cable. Hitch only to the drawbar pin or towhook. Prior to towing release the parking brake.

Rims and tires must be repaired in specialized shops featuring proper technology. Improper repairs may result in malfunctions and accidents.

Never inflate a flat tire without inspecting the tire and rim for damage. Be sure the components are properly assembled. Unmounted tires being inflated or deflated should be placed in a tire safety cage. Inflate a tire to 100 – 140 [kPa] and check that all components are properly seated. Never stand directly in front of a tire and rim assembly while inflating. Use a clip-on chuck with a hose long enough to allow person inflating the tire to stand to the side. Serious injure could result if the tire and rim were to separate.

https://truckmanualshub.com/

2.5. WHEN PARKING

Avoid parking on a slope. If necessary to park on a slope, park at a right angle to the slope and block the tires.

Park the machine in place free from grease and fuel to prevent tire damage.

Never leave the machine with the engine running or the bucket raised. When parking a machine, shut off the engine, lower the bucket to the ground, lock the transmission shift lever in neutral (N), apply the parking brake, turn off the starting switch and the electric system master switch, and remove the keys.

Park the machine in a nontraffic area. If parking near or in traffic lanes cannot be avoided, identify the machine in accordance with traffic rules.

Always lock the machine, including any anti-vandalism attachments when leaving it unattended.

If the loader is equipped with a multi-purpose bucket, close the clam before dismounting.

When operating in bad weather and storm lightning is nearby, dismount and seek shelter away from the machine. Lightning will be attracted to the machine and cause serious injury or death.

ADDITIONAL INFORMATION

1. The vibration level measured at the operator's seat does not exceed the admissible value of 1.25 [m/s^2] according to PN-91/N-01352 standard.
2. The noise level measured at the operator's seat during intensive operation does not exceed the admissible value of 85 [dB] (A) according to PN-86/M-47015.
3. Sound level L_A produced by a machine does not exceed a value of 85 [dB] (A) according to PN-86/M-47016.
4. A loader can be operated in temperature ranging from -34 [^{o}C] to +49 [^{o}C].

A wheel loader in standard configuration is not adapted to operation in terrain where a mixture of gasses, vapors, aerosols or dust with air creates explosion hazard zones.

5. A wheel loader in CE configuration was given TÜV Hannover Laboratory DE 10-893 641 16 Noise Level Certificate on 17 May 1999. The level of noise produced by a brand new machine reached 104 [dB] (A) when measured according to ISO-6395 standard (admissible value according to EEC/662/86 directive is 107 [dB] (A)).

https://truckmanualshub.com/

2.6.SAFETY GRAPHICS LOCATION

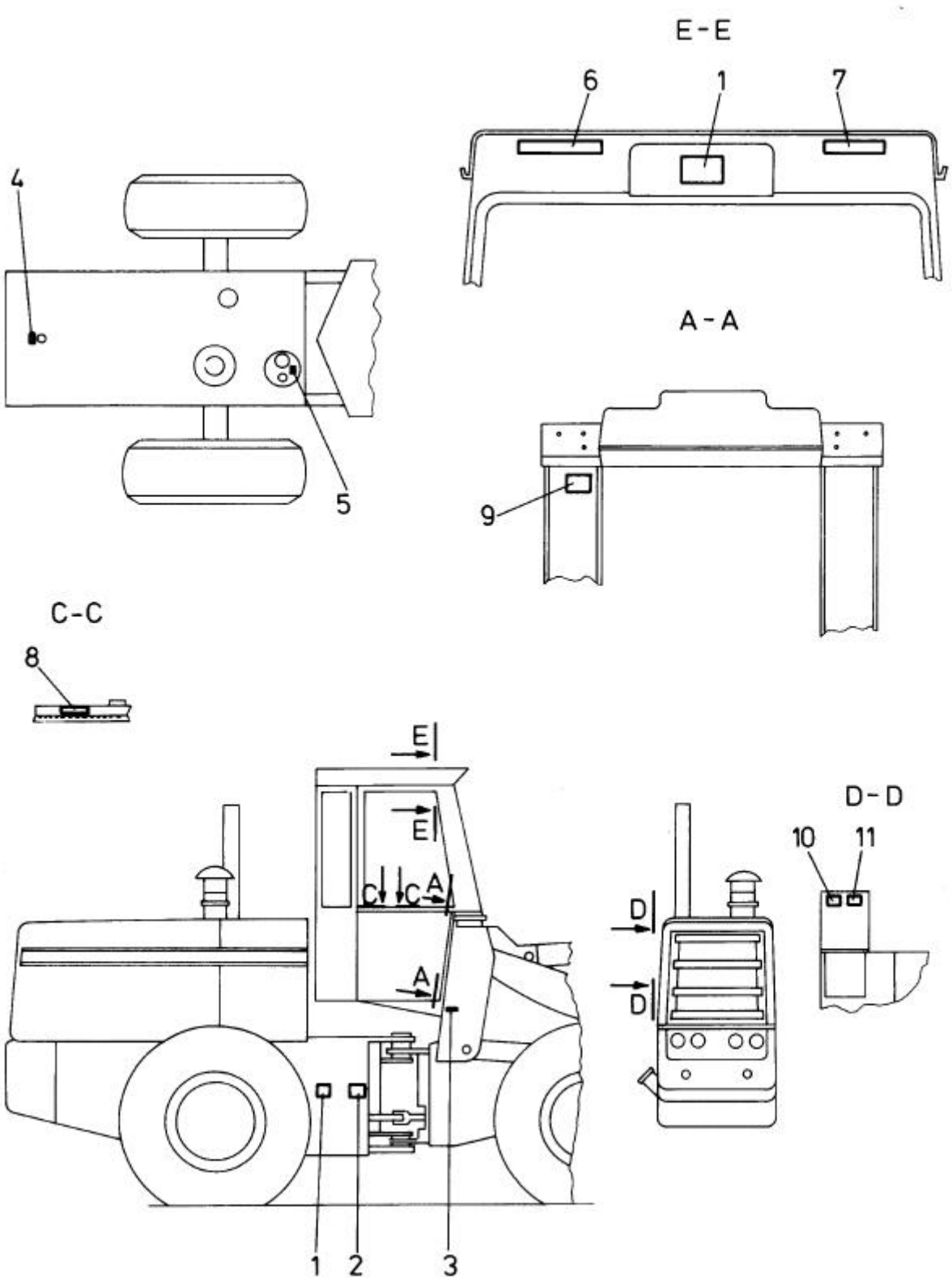

Fig. 2.1. Safety Graphics Location

https://truckmanualshub.com/

SAFETY GRAPHICS LOCATION

2.6.1. SAFETY GRAPHICS

Decal 1 - On the rear frame near the center articulation pivot and on the instrument panel in the operator’s cab

Decal 2 - On the rear frame near the center articulation pivot

Decal 3 - Near the ladders and steps

https://truckmanualshub.com/

SAFETY GRAPHICS LOCATION

Decal 4 - Near the radiator filler cap

Decal 5 - On the hydraulic reservoir

Decal 6 - In the operator’s cab

https://truckmanualshub.com/

SAFETY PRECAUTIONS

SAFETY GRAPHICS LOCATION

Decal 7 - In the operator's cab

Decal 8 - In the cab on the side window

Decal 9 - In the operator's cab

Decal 10 - On the battery box

https://truckmanualshub.com/

SAFETY GRAPHICS LOCATION

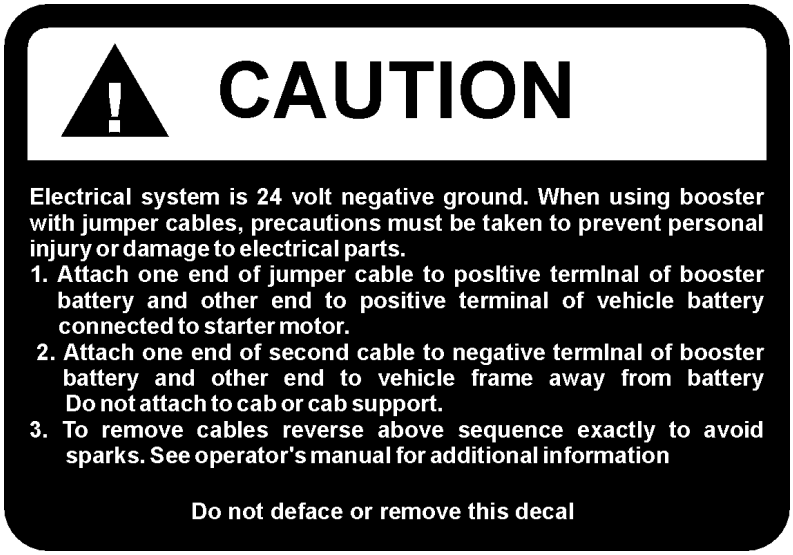

Decal 11 - On the battery box

https://truckmanualshub.com/

SAFETY GRAPHICS LOCATION

2.6.2. SAFETY GRAPHICS (Version CE)

Decal 1 - On the rear frame near the center articulation pivot and on the instrument panel in the operator’s cab

Decal 2 - On the rear frame near the center articulation pivot

Decal 3 - Near the ladders and steps

https://truckmanualshub.com/

SAFETY GRAPHICS LOCATION

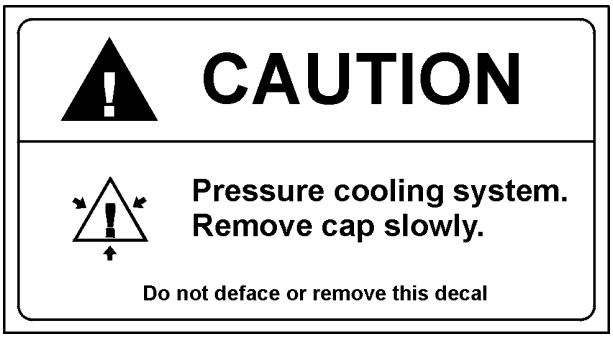

Decal 4 - Near the radiator filler cap

Decal 5 - On the hydraulic reservoir

Decal 6 - In the operator's cab

https://truckmanualshub.com/

SAFETY GRAPHICS LOCATION

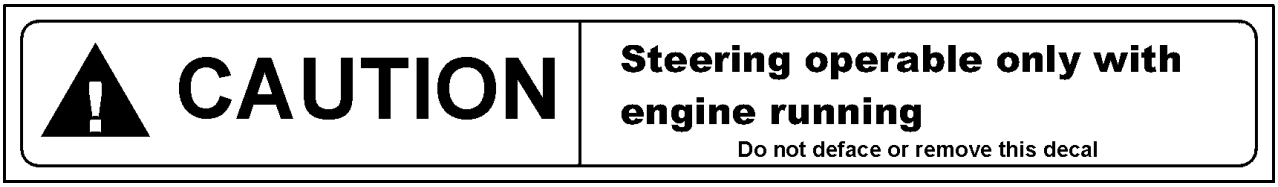

Decal 7 - In the operator's cab

Decal 8 - In the cab on the side window

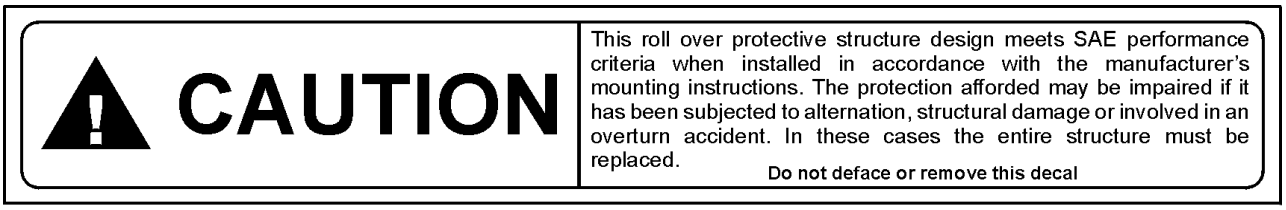

Decal 9 - In the operator's cab

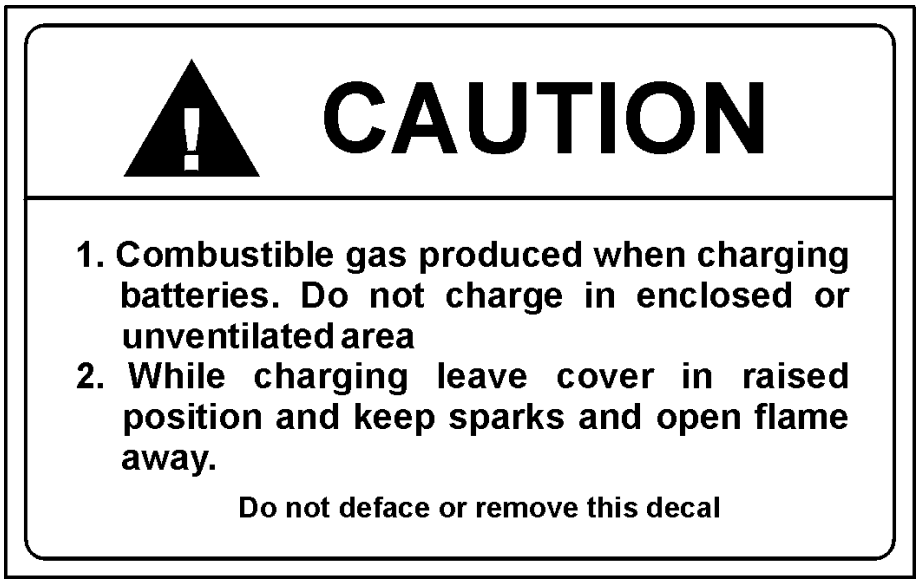

Decal 10 - On the battery box

https://truckmanualshub.com/

SAFETY GRAPHICS LOCATION

CAUTION

Electrical system is 24 volt negative ground. When using booster with jumper cables, precautions must be taken to prevent personal injury or damage to electrical parts.

1. **Attach one end of jumper cable to posltive terlmnal of booster battery and other end to positive terminal of vehicle battery connected to starter motor**
2. **Attach one end of second cable to negative terlmnal of booster battery and other end to vehicle frame away from battery. Do not attach to cab or cab support.**
3. **To remove cables reverse above sequence exactly to avoid sparks. See operator's manual for additional information.**

Do not deface or remove this decal

Decal 11 - On the battery box

https://truckmanualshub.com/

SECTION 3

MACHINE TRANSPORT AND STORAGE

https://truckmanualshub.com/

SECTION CONTENTS

3.1. Machine Transport 3
3.1.1. General 3
3.1.2. Transportation on Trailer, Railway Car or by Sea 5
3.1.3. Transportation by Machine Own Drive 5
3.2. Lifting on Slings 5
3.3. Moving a Disabled Machine 6
3.4. Machine Storage 7
3.4.1. Preparing for Storage 7
3.4.2. Servicing During Storage 9
3.4.3. Preparing for Operation after Storage 10

https://truckmanualshub.com/

https://truckmanualshub.com/

3.1. MACHINE TRANSPORT

3.1.1. GENERAL

WARNING! During transportation of a machine the front and rear frame should be blocked by means of a special locking bar and interlocking pins.

A frame locking bar and two pins (Fig. 3.1 and Fig. 3.2) - in the stowed position are provided on the LH side of a loader. They are used to lock the front and rear frame of a loader to prevent accidental frame turning during service and lifting on lifting slings.

METHOD OF LOCKING OF FRONT AND REAR FRAME OF LOADER

Prior to operating of the machine, place the locking bar in the stowed position as shown in Fig. 3.1. Repair or replace the frame locking bar and pins if damaged or lost to ensure frame locking, (Fig. 3.2).

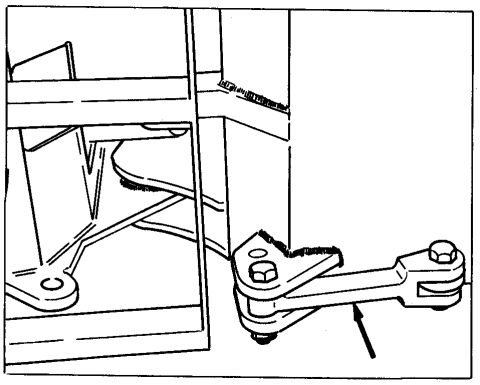

Fig. 3.1. Frame Locking Bar and Pins in stowed position

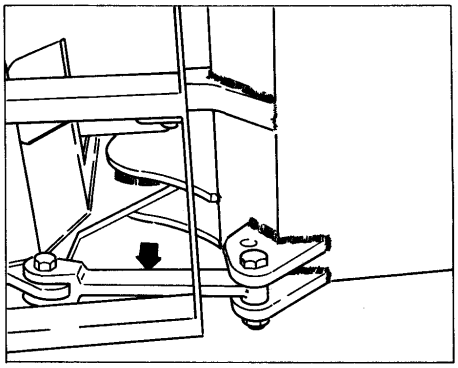

Fig. 3.2. Frame Locking Bar and Pins in locked position

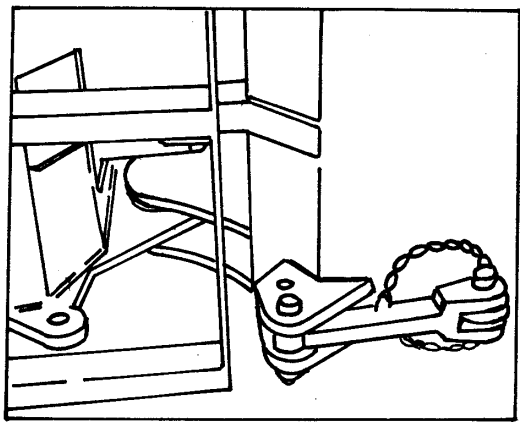

Fig. 3.1.A. Frame Locking Bar and Pins in stowed position (CE version)

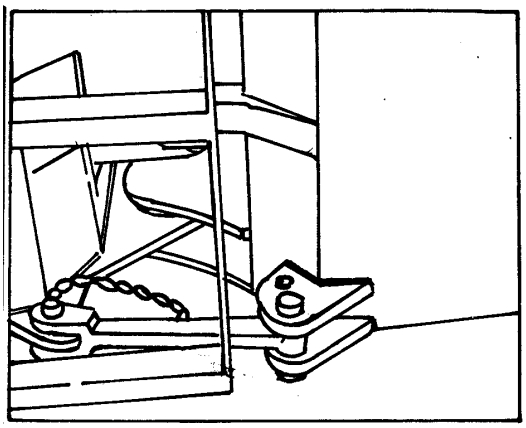

Fig. 3.2.A. Frame Locking Bar and Pins in locked position (CE version)

https://truckmanualshub.com/

MACHINE TRANSPORT

Always tie down securely a machine for transport to prevent movement.

WARNING! When transporting a machine be especially careful during loading and unloading. Use low gear range and low speed. Load and unload the machine on even surface that makes full support for the machine and transport facility. Block the transport facility so that it cannot move. Make use of loading platform of sufficient strength, small approach angle and appropriate height.

1. Clean clay, oil and other slippery material of the loader tires.
2. The hydraulic, cooling and braking system should be filled up.
3. The fuel tank should be filled with app. 10 [l] of fuel.
4. The parking brake should be applied. The pressure in the tires should conform to this instruction, see "TIRES", Section 6.
5. The batteries should be fully charged, the electric system master switch turned off.
6. The starting switch should be in the neutral position and the key removed.

IMPORTANT ! *When transporting this machine on a high speed carrier or railaway car, seal the exhaust pipe and air intake openinings to prevent turbocharger damage.*

REAR LAMPS

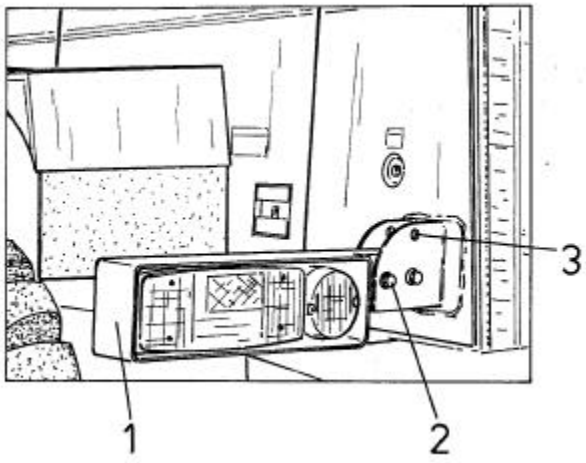

Fig. 3.3. Rear Lamps

1. Bracket 2. Bolt 3. Hole

The rear lamps are mounted on pivotable brackets (1, Fig. 3.3). The lights positioned as shown in the drawing above, conform to the traffic regulations. To change the rear lights position:

1. Unscrew and remove bolt (2).
2. Turn bracket (1) into the required position.
3. Reinstall the bolt in hole (3) and tighten.

IMPORTANT: *It is recommended to change the position of lamps (to fold brackets) before machine transport to prevent damage.*

https://truckmanualshub.com/

MACHINE TRANSPORT

3.1. 2. TRANSPORTATION ON TRAILER, RAILWAY CAR OR BY SEA

1. When using automotive trailer or railway car for transportation of a machine, you should take into account state, local and railway regulations obligatory in a particular country or region. If necessary, co-ordinate the details of transportation and safety measures with the competent authorities.
2. During transportation by sea, when it is necessary to carry a loader by means of a crane, use the method of fastening the loader that will ensure maximal safety of persons loading the machine and will not result in damage of the machine. The lifting slings used for fastening the loader should be attached only to special lifting lugs marked with special plates on the machine (Fig. 3.4).

3.1. 3. TRANSPORTATION BY MACHINE OWN DRIVE

1. Passage conditions must be coordinated with the local road traffic administration.
2. Observe the traffic regulations ensuring a safe travel.
3. Do not drive a loader at long distances.
4. Place the boom and bucket in transport position.
5. Interlock the working system control levers and unlock the articulated frame by setting the frame locking bar in the stowed position as shown in Fig. 3.1. and 3.1.A.
6. Detailed information on safety precautions when driving – see "SAFETY PRECAUTIONS", Section 2.

3.2. LIFTING ON SLINGS

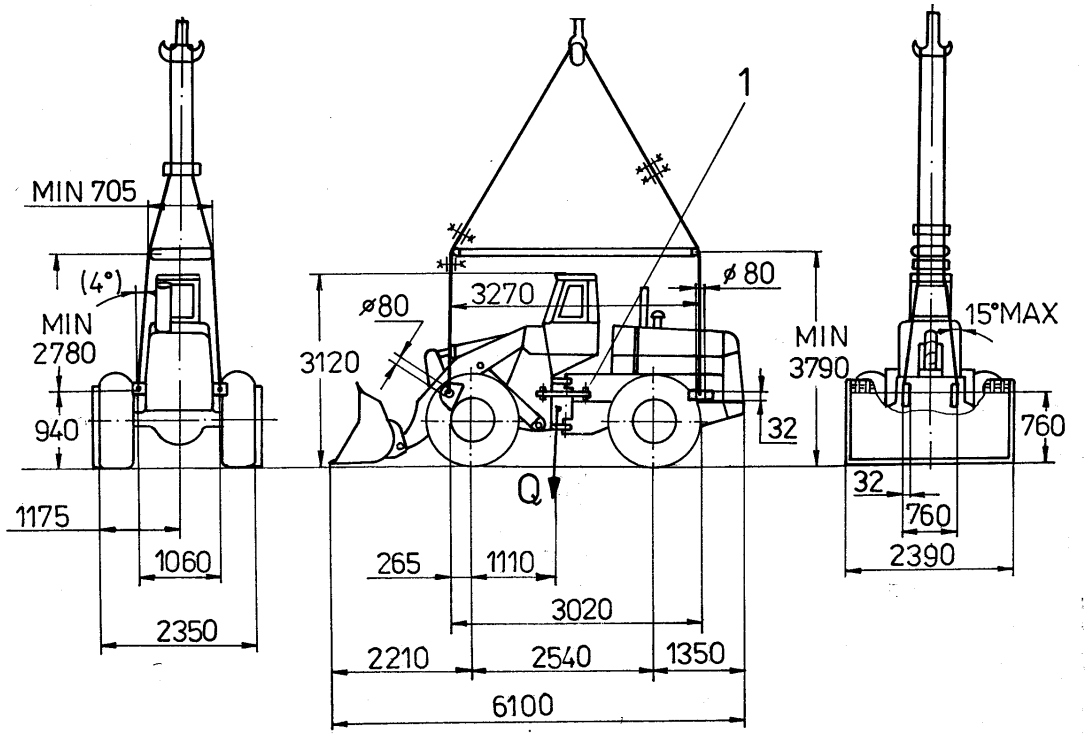

Fig. 3.4. Method of Handling 515C Loader by a Crane (for a machine equipped with 15.5R25 Tires and 1.53 [m^3]. bucket)

1. Frame Locking Bar
Machine's weight Q = 9000 [kG]

https://truckmanualshub.com/

LIFTING ON SLINGS

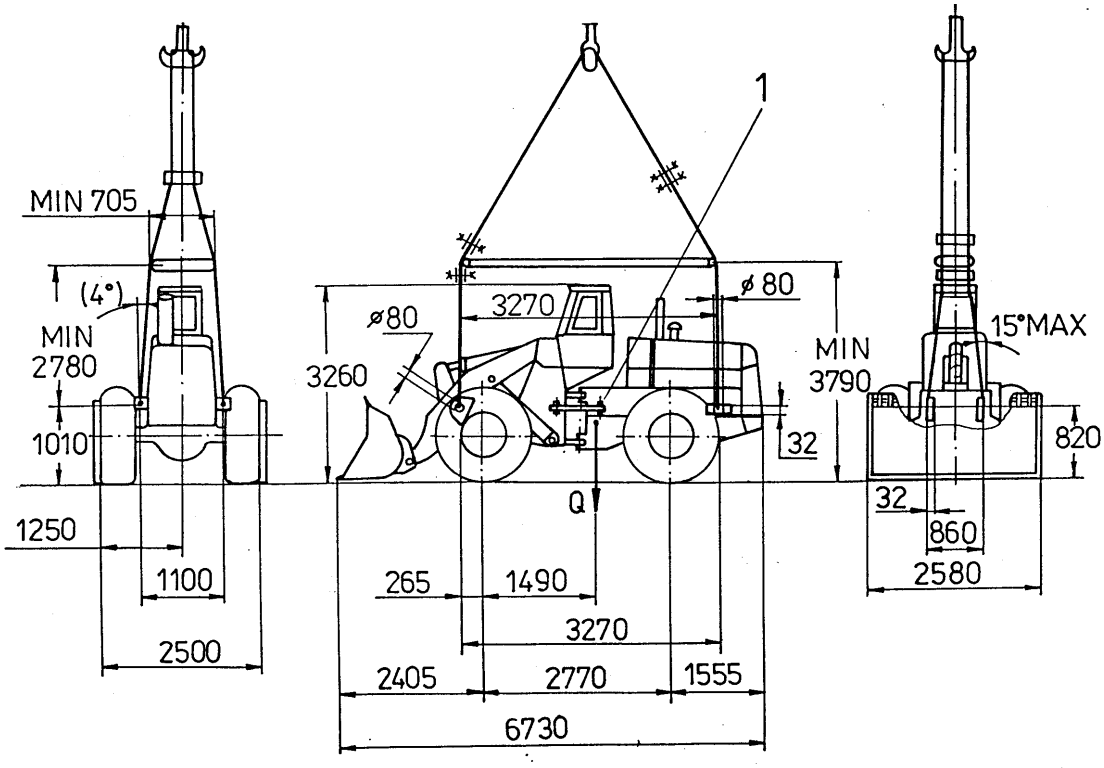

Fig. 3.4A. Method of Handling 520C Loader by a Crane (for machine equipped with 20.5R25 Tires and 2.29 [m^3] bucket)

1. Frame Locking Bar
Machine's weight Q = 10800 [kG]

3.3. MOVING A DISABLED MACHINE

Towing this machine is not recommended. To move a disabled machine, use a trailer or low-boy truck if possible. If towing is necessary, such as freeing a stuck machine, tow it only as far as necessary. Towing machine backwards is recommended. When towing, the engine must be running (if operative) to enable turning and braking of the machine.

Towing of machines equipped with ground driven system is easier. Prior to towing release spring parking brake (refer to "PARKING BRAKE", Section 5) and unlock frames by placing locking bar in the stowed position as shown in Fig. 3.1 and 3.1A.

WARNING: When pulling with a chain or cable, take up the slack slowly to avoid jerking. A chain or cable which fails under load can whip and cause serious injury. Stand clear. Do not pull or tow unless the operator's compartment is guarded against or out of reach of a whipping chain or cable.

WARNING: Observe safety precautions specified in this manual. Refer to "SAFETY PRECAUTIONS", Section 2.

Hook a towing line or cable of adequate strength to the towing lug. The towing load should not exceed a force of 80 [kN].

https://truckmanualshub.com/

MOVING A DISABLED MACHINE

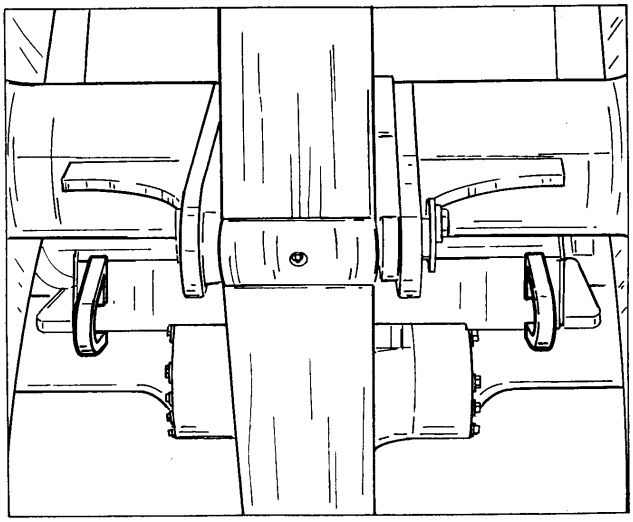

Fig. 3.5. Towing Lugs

3.4. MACHINE STORAGE

3.4.1. PREPARING FOR STORAGE

When a machine is taken out of service and stored for a period of time exceeding 30 days, steps must be taken to protect the machine. Wash and dry the machine and place in a dry enclosure. An enclosure will protect the machine from rapid temperature changes and lessen the amount of condensation that forms in hydraulic components, engine, fuel tank, axles and transmission. Leaving equipment outdoors exposed to the elements will materially shorten its life. If it is not possible to put the machine in an enclosure, cover it with a tarpaulin. After the machine has been positioned for storage and the engine shutdown, perform the following operations:

1. Visually inspect the machine for external leakage and other defects.
2. Clean the radiator, refer to "CLEANING THE RADIATOR", Section 5.
3. Thoroughly clean the machine, be sure to rinse off any caustic residue.
4. Correct any defects found. Consult Authorized Distributor of Construction Equipment.
5. Clean or replace the air cleaner filter elements. Refer to "AIR CLEANING SYSTEM", Section 5.
6. The cooling system should be completely drained, chemically flushed, and refilled with a conditioned water/anti-freeze solution suitable for the lowest temperature anticipated. Refer to "ANTIFREEZE", Section 5 for the proper anti-freeze and conditioner concentrations.

IMPORTANT: *To avoid corrosion, under no circumstances should the machine with air conditioner or cab heaters (if equipped) be stored with a dry cooling system.*

7. Drain the water from the fuel tank. Refer to "FUEL TANK", Section 5. Clean the fuel strainer installed in the filler neck.
8. Remove and replace the fuel filters. Refer to "FUEL SYSTEM", Section 5.

https://truckmanualshub.com/

MACHINE STORAGE

9. It is recommended to use fuel stabilizer in quantity specified by the manufacturer. Stabilizer will prevent degrading of fuel, sludge buildup, and stop the growth of bacteria in fuel during storage. Fuel stabilizer may be purchased from:

FUEL PREP 1000
NALCO CHEMICAL COMPANY
2901 BUTTERFIELD ROAD
OAK BROOK, ILLINOIS 60521, USA
or Machine Distributor

WARNING: Corrosion inhibitors are volatile and flammable. Use them only in a well-ventilated area. Keep flames and sparks away. DO NOT SMOKE. Store a container in a cool, well-ventilated place.

WARNING: Avoid prolonged exposure to volatile corrosion inhibitors because eye and skin irritation may occur.

10. It is recommended to use volatile corrosion inhibitor (VCI) in a fuel tank. VCI provides corrosion protection by contact with metal, and in a closed system, the vapors provide sufficient protection for areas that are not in contact with fuel. When using VCI per HMS B00-0006 pour 120 [ml] of volatile corrosion inhibitor for each 100 [l] of total fuel capacity. VCI may be purchased from:

NOX RUST VCI #105 OIL
DAUBERT CHEMICAL COMPANY
1200 JORIES BLVD.
OAK BROOK, ILLINOIS 60521, USA
or Machine Distributor

11. Deaerate the fuel system. Refer to "FUEL SYSTEM", Section 5.
12. Start the engine and run idle at half throttle for 3 minutes and then stop the engine.
13. Lubricate all points of the machine as outlined in the "SERVICE GUIDE", Section 5.

IMPORTANT: *Be sure to oil or grease all linkage connections, joints, nuts, pins, shafts, and bushings not covered in the "SERVICE GUIDE".*

14. Drain the engine oil, replace the engine oil filters and fill them with proper grade of oil. Refer to ENGINE, Section 5.
15. Add 15 [ml] VCI for each liter of engine oil to the crankcase. (example: if the total capacity of a crankcase is 10 [l] add 150 [ml] VCI).
16. Start the engine and run it idle at half throttle for 30 seconds and then stop the engine.
17. Remove the air precleaner.
18. Seal all external openings (i.e. engine exhaust outlet, filler caps, breathers, etc.) with tape wide enough to cover the opening, regardless of its size.

NOTE: *When sealing with tape, be sure to extend tape approximately one inch (25 [mm]) beyond an opening to insure good sealing.*

19. Pour 60 [ml] VCI to the intake manifold to prevent corrosion of the space between piston and the bottom part of the engine head.

https://truckmanualshub.com/

MACHINE STORAGE

20. It is recommended to pour 50 [ml] VCI type 1 oil per HMS B00-0006 Standard to the hydraulic reservoir.
21. Remove the batteries and place them on wooden skids. Then store them in a cool, clean, dry, well-ventilated place away from areas provided for storing or dispensing fuel and oil, not near any heat source and preferably where the temperature range is between 0 [°C] to +21 [°C] . Be sure the batteries are fully charged.

IMPORTANT: *Do not place battery on a concrete floor or in temperature below 0 [**°** C].*

IMPORTANT: *If the machine is stored with dry charged batteries or no batteries, the alternator output lead (+) must be disconnected and insulated. Failure to do so may result in permanent damage to the alternator.*

22. If the bucket is detached for storage, secure the cylinder piston rod to the machine to avoid damage.
23. Coat all machined and unpainted surfaces with chassis grease to prevent rust. It is recommended to use AKORIN N-2 grease.
24. If it is desirable to leave the tires on the machine, jack the machine up and place it on blocks leaving the tires in suspension. Deflate and cover the tires. Tires should not be exposed to direct sunlight or any fuel or solvent vapors.

WARNING: Use extra caution when jacking up the machine. Jacking up the machine can be hazardous if performed improperly. Use jacking equipment of sufficient capacity. Be sure the jacking points are strong enough to support the machine. Be sure the jack is stable and well supported. Before jacking up the machine, block the tires which will not be lifted. Lock the frame halves together with the locking bar and pins. If the rear tires are being lifted, block the rear axle to prevent it from pivoting unexpectedly. DO NOT run the engine with the machine on jacks.

3.4.2. SERVICING DURING STORAGE

ONE-MONTH REPETITIVE SERVICE PERIOD

Be sure the batteries are fully charged. Never allow batteries to run down below 3/4 full charge.

WARNING: DO NOT charge batteries in a closed area. Provide proper ventilation to guard against explosion of an accumulation of the gas given off in the charging process.

SIX-MONTH REPETITIVE SERVICE PERIOD

1. Visually inspect the engine and radiator for leakage and other defects. Correct all defects, consult Authorized Construction Equipment Distributor if necessary.
2. Remove all seals from the machine ports: crank-case and hydraulic breather plugs, engine air intake, fuel tank vent lines, etc.
3. Install fully charged batteries. Refer to "BATTERIES", Section 5.

WARNING: Be sure the electrical system master switch is off when connecting or disconnecting batteries to minimize the chance of sparks and explosion.

https://truckmanualshub.com/

MACHINE STORAGE

WARNING: Check that batteries are level in the holders and securely held. The hold-down fasteners should hold the batteries firmly but not too tight to warp or damage either the hold-down bar or batteries.

WARNING: Battery cables must be so arranged to enable easy removal of all pugs. Lay the cables so they do not chafe against the hold-down bar. Always connect the negative ground cable last to minimize the chance of sparks or an explosion. The electric system master switch must be in the OFF position and the key removed.

4. Check the coolant level in the radiator and add proper concentrations of antifreeze, if required. Refer to "CHECKING COOLANT LEVEL", Section 5.
5. Perform steps 7 thru 21 per item 3.4.1.

3.4.3. PREPARING FOR OPERATION AFTER STORAGE

1. Visually inspect the machine for external leakage and other defects.
2. Clean the radiator, refer to "CLEANING THE RADIATOR", Section 5.
3. Thoroughly clean the machine, being sure to rinse off any caustic residue.
4. Correct any defects found. Consult Authorized Construction Equipment Distributor if necessary.
5. If the machine was jacked up (refer to 3.4.1. item 24) inflate the tires to the normal operating inflation pressure. Refer to "TIRES", Section 6.
6. Remove all seals from the machine: filler plugs, breathers, engine air intake and exhaust, etc.
7. Remove the air cleaner filter elements for cleaning or replacement. Refer to "AIR CLEANING SYSTEM", Section 5.
8. Remove and replace the fuel filters. Refer to "CHANGING THE OF FUEL FILTERS", Section 5.
9. Fill the fuel tank with approved diesel fuel. Refer to "REFILL SPECIFICATIONS AND CAPACITIES", Section 5.
10. Lubricate all points of the machine as outlined in the "LUBRICATION", Section 5.

IMPORTANT: *Be sure to oil or grease all linkage connections, joints, nuts, pins, shafts, and bushings not covered in the "SCHEDULED MAINTENANCE GUIDE".*

11. Change the engine oil and fuel filters. Refer to ENGINE, Section 5.

WARNING: Be sure the electrical system master switch is off when connecting or disconnecting batteries to minimize the chance of sparks or explosion.

12. Install fully charged batteries. Refer to "BATTERIES", Section 5.

WARNING: Check that batteries are level in the holders and securely held. The hold-down fasteners should hold the batteries firmly but not too tight to warp or damage either the hold-down bar or batteries. Lay the cables so they do not chafe against the hold-down bar or the fasteners.

https://truckmanualshub.com/

MACHINE STORAGE

WARNING: Never start the engine indoors unless proper exhaust ventilation is provided. Once the engine is running, move the machine outdoors as soon as possible. Exhaust gases are dangerous and can cause unconsciousness and death.

13. Start the engine, refer to "STARTING AND STOPPING THE ENGINE", Section 4 and "SCHEDULED MAINTENANCE GUIDE" recommendations (daily service), Section 5.

https://truckmanualshub.com/

SECTION 4

OPERATING

https://truckmanualshub.com/

SECTION CONTENTS

4.1. General 3
4.2. Universal Symbols for Instruments and Controls 4
4.3. Instruments and Controls 8
4.4. Cab Door and Windows 20
4.5. Operator's Seat 21
4.6. Seat Belt 24
4.7. Cab Heating and Ventilation 25
4.7.1. Defroster Fan 25
4.7.2. Heater 25
4.7.3. Air Conditioner 26
4.8. Air Cleaner Service Indicator 27
4.9. Electric System Master Switch 27
4.10. Dome Lights with Switches 28
4.11. Starting and Stopping the Engine 28
4.11.1. Normal Start (ambient temperature above 0 [°C]) 28
4.11.2. Cold Weather Start (using ether injector, ambient temperature below 0 [°C]) 29
4.11.3. Stopping the Engine 30
4.12. Driving the Machine 30
4.13. Shifting the Gears 32
4.14. Steering 32
4.15. Stopping the Machine 33
4.16. Parking the Machine 34
4.17. Loader Operations 34
4.17.1. Boom Control Lever Positions 34
4.17.2. Automatic Boom Kick-Out 36
4.17.3 Bucket Control Lever Positions 37
4.17.4. Automatic Bucket Leveler 38
4.17.5. Multi-purpose Bucket Control Lever Positions (if equipped) 38
4.18. Loader Techniques 41
4.18.1. Loading, Transporting and Piling 41
4.18.2. Digging, Clearing and Leveling 47
4.19. Economical Operation of Machine 54
4.20. Quickcoupling 54
4.20.1. Quickcoupling with 3-Spool Valve 55
4.20.2. Quickcoupling with a 2-Spool Valve 56
4.21. Ride Stabilizing Mechanism 56
4.21.1. Driving a Machine equipped with RMS System 57
4.22. High-Dump Bucket 57
4.22.1. High-Dump Bucket Control 57
4.22.2. Operating the High-Dump Bucket 57

https://truckmanualshub.com/

https://truckmanualshub.com/

4.1. GENERAL

Stay alert and aware of what you are doing. Use common sense. Do not operate when ill or fatigued.

Know your machine.

For your safety, read the Operator's Manual carefully and follow all instructions and precautions. Read carefully Section 2 and follow safety precautions specified therein.

Before starting or operating this machine, read the following general precautions. These are listed there to help you protect the machine and to remind you of protection for yourself and those around you. Common sense and observance of these rules will help make your job a safer one. Perform a visual check of the machine before starting the engine. Look for such things as missing protective devices, leaks, improper fluid levels, trash buildup and loose, damaged or missing parts. DO NOT start the engine until any unsafe conditions are corrected.

Keep the transmission in low gear when going downhill. Never coast downhill with the transmission in neutral because the machine could go out of control and tip over. Always drive the machine slowly when on hillsides, ramps or rough terrain. Be extremely careful when working around trenches or banks. Failure to do so could cause the machine to roll over.

Before starting operation, check the machine for correct function of the steering controls, brake controls, hydraulic controls, instruments and safety equipment. Make all necessary repairs or adjustments before operating the machine.

Do not place a machine under load without the proper engine oil pressure and operating temperature. After starting the engine, move the accelerator pedal to the low idle position.

Allow the engine to run at low idle for 3 to 5 minutes at 1000 [RPM] until normal oil pressure registers on the gauge to obtain complete distribution of the lubricating oil. Do not run the engine idle more than 10 minutes. To prevent any possible damage to the alternator, the electric system master switch must be in the ON position when the engine is running. The switch must be in the OFF position when the engine is shut down at the end of each day or when the operator leaves the machine unattended.

Never park in places contaminated with grease or oil to prevent tire damage.

Never park in swampy area as it may cause freeze-up of the tires.

Never pour cold coolant into the radiator when the engine is hot unless conditions make it absolutely necessary. Use extreme caution as hot coolant could cause burns. Keep your face away from the filler neck. Under such conditions, start the engine and let it idle while slowly pouring coolant into the radiator. The engine is recommended to be allowed to cool down to 50 [°C].

Pouring cold coolant into a hot engine may cause damage to the cast components of the engine.

Fill the fuel tank at the end of each day’s work to reduce condensation.

When towing with a long chain or cable, take up the slack slowly to avoid jerking. Before shutting down operate the engine at idle (no load) for 3 to 5 minutes. This will aid in cooling the engine and turbocharger.

https://truckmanualshub.com/

4.2. UNIVERSAL SYMBOLS FOR INSTRUMENTS AND CONTROLS

The use of universal symbols will pictorially identify various instruments and controls. These symbols are an effort to overcome language differences for all operators in a positive way, thus enhancing their safety through quicker recognition of the instruments and controls while operating the equipment.

Study the following symbols so you will know their meaning immediately and at a glance.

NOTE: *Some symbols may not pertain to your machine.*

https://truckmanualshub.com/

UNIVERSAL SYMBOLS FOR INSTRUMENTS AND CONTROLS

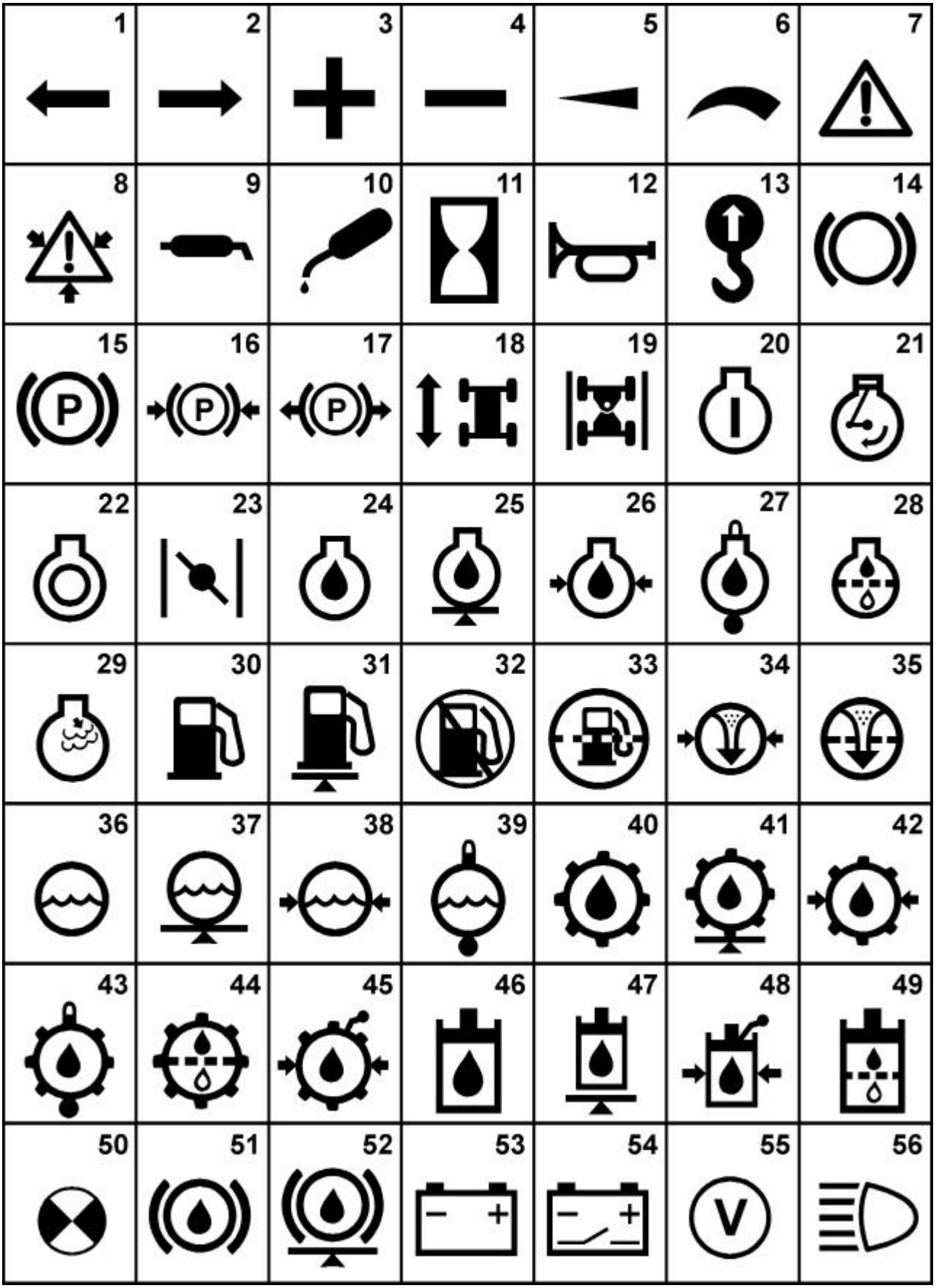

Fig. 4.1. Universal Symbols for Instruments and Controls

https://truckmanualshub.com/

UNIVERSAL SYMBOLS FOR INSTRUMENTS AND CONTROLS

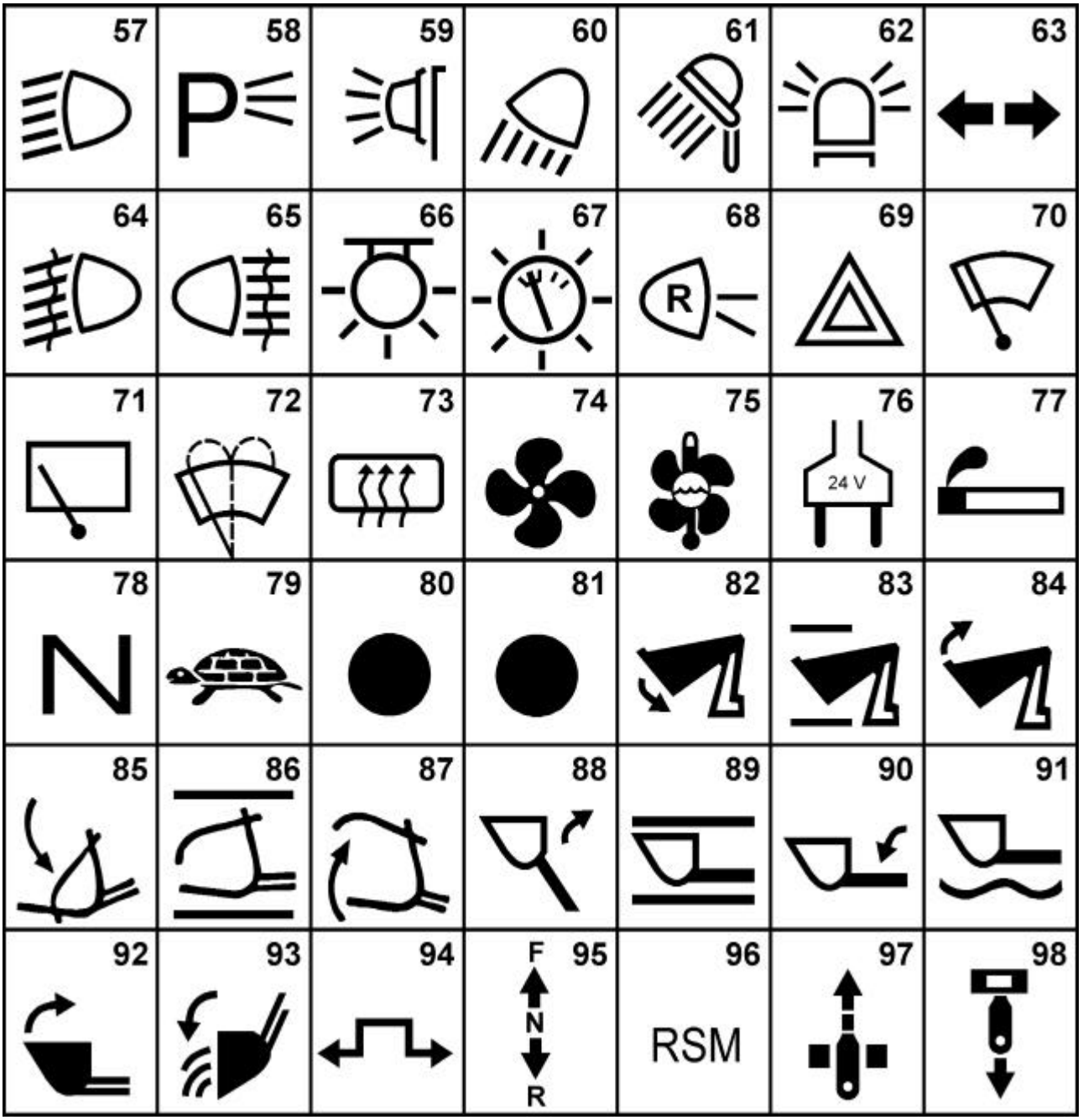

https://truckmanualshub.com/

UNIVERSAL SYMBOLS FOR INSTRUMENTS AND CONTROLS

Description to Fig. 4.1.

1. Left
2. Right
3. Positive
4. Negative
5. Invariable by Sliding
6. Invariable by Turning
7. Caution
8. Caution-High Pressure
9. Grease Lubricant
10. Oil Lubricant
11. Hourmeter
12. Horn
13. Attach Point
14. Brake (General)
15. Parking Brake (General)
16. Parking Brake On
17. Parking Brake Off
18. Wheel Machine – Forward and Reverse
19. Articulated Frame Locking
20. Engine Start
21. Engine Speed
22. Engine Stop
23. Throttle
24. Engine Oil Fill
25. Engine Oil Level
26. Engine Oil Pressure
27. Engine Oil Temperature
28. Engine Oil Filter
29. Engine Starting Aid
30. Fuel Fill
31. Fuel Level
32. Fuel Reserve
33. Fuel Filter
34. Air Pressure
35. Air Filter
36. Coolant Fill
37. Coolant Level
38. Coolant Pressure
39. Coolant Temperature
40. Power Train Oil Fill
41. Power Train Oil Level
42. Power Train Oil Pressure
43. Power Train Oil Temperature
44. Power Train Oil Filter
45. Power Train Oil Pressure Diagnostic Point
46. Hydraulic Oil Fill
47. Hydraulic Oil Level
48. Hydraulic Oil Pressure Diagnostic Point
49. Hydraulic Oil Filter
50. Test
51. Brake Fluid Fill
52. Brake Fluid Level
53. Battery Charge Indicator
54. Battery Disconnect
55. Voltmeter
56. Road Lights
57. Low Level Lights

https://truckmanualshub.com/

UNIVERSAL SYMBOLS FOR INSTRUMENTS AND CONTROLS

58. Parking Lights
59. Contour Light
60. Work Light
61. Search Light
62. Flash Light
63. Turn Signal Light
64. Front Floodlights
65. Rear Floodlights
66. Dome Light
67. Instrument Panel Illumination Light
68. Backup Light
69. Emergency Light
70. Windshield Wiper
71. Rear Window Wipers
72. Window Washer
73. Mirror Heating
74. Fan
75. A/C
76. Receptacle 24 V
77. Electric Lighter
78. Neutral Position
79. Slow
80. Outside Air for Heating (Blue)
81. Recirculation Air for Heating (Red)
82. Multi-Purpose Bucket Roll Back
83. Multi-Purpose Bucket Hold
84. Multi-Purpose Bucket Dump
85. Grapple Closing
86. Grapple Hold
87. Grapple Opening
88. Boom With Bucket Raise
89. Boom With Bucket Hold
90. Boom With Bucket Lower
91. Boom With Bucket Float
92. Bucket Roll Back
93. Bucket Dump
94. Ground Driven System
95. Change of Direction: Forward - Reverse
96. RSM - Ride Control
97. Quick Coupler Connected
98. Quick Coupler Disconnected

4.3. INSTRUMENTS AND CONTROLS

GENERAL

Before operating the machine you must be thoroughly familiar with the location and use of all instruments and controls.

WARNING: Understand all control functions before starting the engine.

Each reference number in the illustrations of this section has a corresponding reference number and explanation in the text.

https://truckmanualshub.com/

INSTRUMENTS AND CONTROLS

IMPORTANT! *Check all instruments and warning lights indicating operation of individual systems of the machine prior to starting and at frequent intervals during operation.*

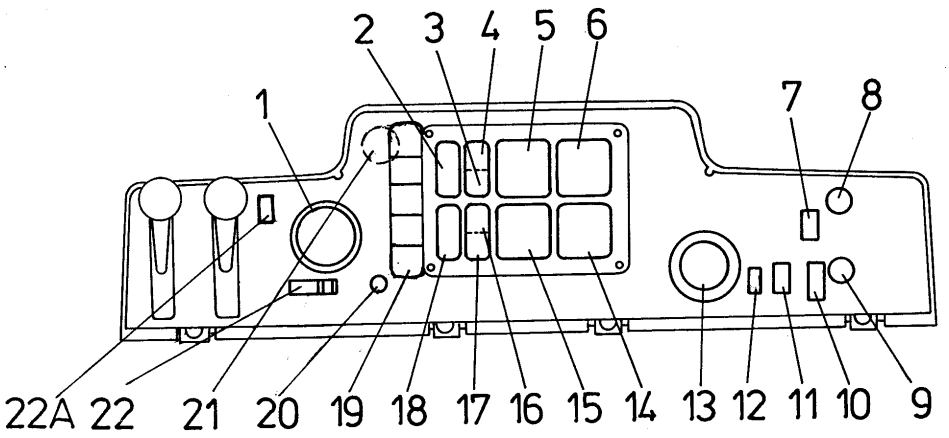

Fig. 4.2. Instrument Panel

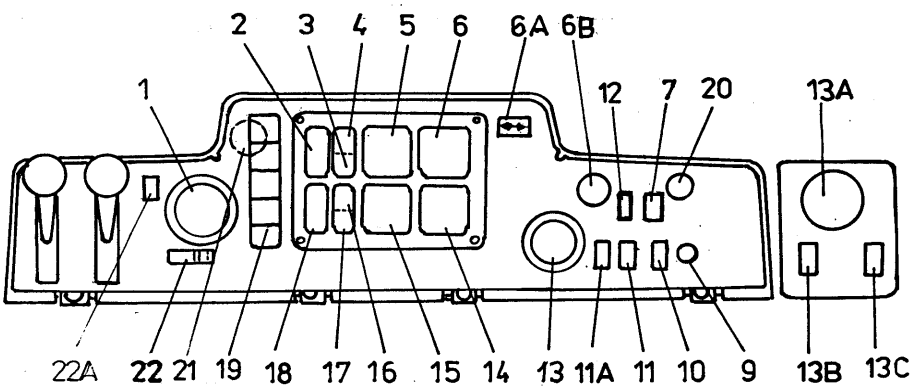

Fig. 4.2.A. Instrument Panel – (CE Version)

1. Hourmeter
2. Engine Oil Pressure Warning Light
3. Engine Coolant Temperature Warning Light
4. Parking Brake Warning Light
5. Engine Coolant Temperature Gauge
6. Fuel Level Gauge

6A. Turn Signal Warning Light
6B. Engine Oil Pressure Gauge

7. Ether Start Button
8. Instrument Panel Illumination Light
9. Starting Switch
10. Rear Parking and Front Work Lights Switch (Front, Rear Parking Lights/Low Beam Lights Switch in CE Version)
11. Work Lights Switch (Front and Rear Work Lights Switch in CE Version) and Bulb Check Switch

11A. Emergency Lights Switch

https://truckmanualshub.com/

12. Quickcoupling Solenoid Valve Switch
13. Tachometer or Speedometer
13A. Tachometer
13B. Rear Window Heating Switch
13C. Flash Light Switch
14. Voltmeter
15. Torque Converter Temperature Gauge
16. Service Brake Warning Light
17. Torque Converter Oil Temperature Warning Light
18. Ground Driven Steering Warning Light (If Equipped)
19. Warning Lights (If equipped)
20. 24 V Receptacle
21. Audible Alarm (Buzzer under the Instrument Panel)
22. Transmission Direction Lever Lock Switch
22A. RSM System Switch

1. HOURMETER
The hourmeter electrically records the actual hours of engine operation. It is activated when the engine is running. It eliminates guess work when determining proper lubrication and maintenance periods.

2. ENGINE OIL PRESSURE WARNING LIGHT
The light will come on when the engine oil pressure is too low. At the same time a buzzer will sound.

IMPORTANT: *When the light comes on, stop the engine immediately to prevent damage to the engine. Do not start the engine again until the problem has been corrected.*

3. ENGINE COOLANT TEMPERATURE WARNING LIGHT
The light will indicate when the coolant temperature exceeds the allowable limit. If the light comes on, maneuver the machine to the side and operate the engine at low idle. Do not shut the engine down. If the light stays on, investigate the cause and take corrective action before operating the machine again.

4. PARKING BRAKE WARNING LIGHT
The light will indicate if the parking brake is applied. At the same time a buzzer will sound.

IMPORTANT: *Release the parking brake before moving a machine. The brake could burn or be damaged if the machine is driven with the brake applied.*

5. ENGINE COOLANT TEMPERATURE GAUGE
The gauge pointer should remain within the green area equivalent to 71 to 93 [°C] temperature range. During normal loader operation the pointer readings may vary between the minimum and maximum limited by the green area of the gauge. Continuous operation of the engine below the minimal temperature means insufficient engine lubrication. Too low coolant temperature causes excessive exhaust fumes and an increase in fuel consumption. If the ambient temperature is low it may be necessary to cover the radiator grill partly in order to keep the proper temp. of the coolant (the pointer should stay within the green area of the meter). The gauge pointer should also remain in the green area under full load conditions. If the temperature remains too high in spite of interruptions of engine operation, check the coolant level, the condition of the radiator, fan, water pump and thermostat.

https://truckmanualshub.com/

INSTRUMENTS AND CONTROLS

6. FUEL GAUGE
This gauge is electrically operated and indicates the available fuel supply in the fuel tank. The gauge is accurate only when the machine is level.

6A. TURN SIGNAL WARNING LIGHTS
The lights start blinking when the turn signal switch is put on.

6B. ENGINE OIL PRESSURE GAUGE
The gauge indicates engine oil pressure.

7. ETHER START BUTTON (if equipped)
This switch injects a spray of ether to facilitate start of the engine in low air temperatures. Press the switch to release a measured shot of starting fluid into the engine. Refer to Section 4.11.2 for more information.

IMPORTANT: *DO NOT use the ether injector when air temperature is above 0 [°C]. Follow the correct method for starting the engine.*

8. INSTRUMENT PANEL ILLUMINATION LIGHT
The light illuminates the lower part of the instrument panel with the starting switch when the parking lights are on.

9. STARTING SWITCH.

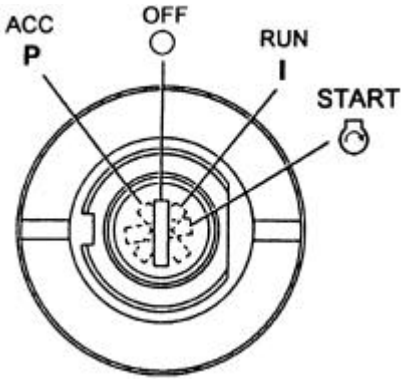

Fig. 4.3. Starting Switch Positions

The starting switch is used to connect and disconnect the circuits of the electric system and switching on and off the engine and is equipped with a key.

Starting switch positions:
ACC – to the left – not used,
OFF - after inserting the key- disconnects the electric circuits,
RUN - to the right – activates the electric circuits,
START- to the right with automatic return to RUN when released – engine startup,
Midposition between RUN and START - warning lights check - activates all warning lights,

IMPORTANT: *Do not hold the key in START position for more than 30 second. Allow a 2–3 minute interval between cranking. Never place the key in START position when engine is running.*

https://truckmanualshub.com/

INSTRUMENTS AND CONTROLS

10. REAR PARKING AND FRONT WORK LIGHTS SWITCH (FRONT AND REAR PARKING AND PASSING LIGHTS SWITCH IN CE VERSION)
It switches on and off the rear parking and front work lights or, in CE machine, it switches on or off the front and rear parking lights and passing lights of a loader.

11. REAR WORK LIGHTS SWITCH (FRONT AND REAR WORK LIGHTS SWITCH IN CE VERSION) / BULB CHECK SWITCH.
It switches on or off the rear work lights (the front and rear work lights in CE machine). It is also used to check the condition of the warning lights.

11A. EMERGENCY WARNING LIGHTS SWITCH
It switches on or off the emergency lights.

12. QUICKCOUPLING SOLENOID VALVE SWITCH
The switch has 2 positions:
- position ON (locked): in this position the solenoid valve remains electrically inactive. The quickcoupling pins are pushed out to lock the coupling,
- position OFF (unlocked): in this position the solenoid valve is activated. The quickcoupling pins are retracted (refer section 4.20, QUICKCOUPLING) and the coupling is disengaged.

13 and 13A. TACHOMETER OR SPEEDOMETER (IF EQUIPPED)
The tachometer indicates engine crankshaft [RPM]. A machine can be equipped with a speedometer which replaces the tachometer and indicates machine speed in [km/h].

13B. REAR WINDOW HEATING SWITCH
It switches on and off the rear window heating.

13C. FLASHLIGHT SWITCH
It switches on and off the flashlight mounted on the cab roof.

14. VOLTMETER
The voltmeter indicates the condition of the batteries. At low idle speed, the gauge pointer should be within the first green area, which indicates a good battery charge. If the voltage drops below the first green area, the batteries should be checked. With the engine operating above low idle speed, the gauge pointer should be within the second green area, which is the normal operating range. If the pointer drops below or exceeds the second green area, the batteries and /or voltage regulator or alternator with integral regulator should be checked.

15. TORQUE CONVERTER OIL TEMPERATURE GAUGE
The gauge indicator should remain within green area. If the temperature is too high, follow the recommendations specified below in "TORQUE CONVERTER OIL TEMPERATURE WARNING LIGHT"

16. SERVICE BRAKE WARNING LIGHT
The light indicates failure of one of the brake circuits. Also, a buzzer will come on.

17. TORQUE CONVERTER OIL TEMPERATURE WARNING LIGHT
The light will come on if the torque converter oil temperature exceeds the allowable limit.

IMPORTANT: *If the light comes on during operation, reduce the work load by operating in a lower gear. If the light stays on, stop the machine and run the engine until the temperature drops to app. 90 [°C]. Find the reason of oil overheating:*
- *transmission oil low level,*
- *dirty radiator,*
- *dirt suction filter.*

https://truckmanualshub.com/

18. GROUND DRIVEN STEERING WARNING LIGHT (IF EQUIPPED)
If a machine is equipped with the ground driven system (that enables steering of the machine at loss of pressure in the steering system) the light will come on when the system is activated. A buzzer will also come on.

WARNING: If the ground driven steering warning light start blinking, stop the engine and apply the parking brake. Do not start the engine until the failure has been corrected.

19. WARNING LIGHTS (IF EQUIPPED)
This clustered indicator contains the following 5 warning lights (located from the bottom of the indicator up):

a). transmission oil filter warning light: it come on when the filter element is contaminated and must be replaced,
b). hydraulic oil filter warning light: it comes on when the filter element is contaminated and must be replaced,
c). air cleaner warning light: it comes on when the cleaner elements are contaminated and must be washed or replaced.
d). low engine coolant warning light: it comes on when the coolant in the radiator top tank reaches its minimal level,
e). hydraulic oil temperature warning light: it comes on when the oil temperature is too high.

20. 24V RECEPTACLE
Used for connecting portable lamp with cable (included in the machine accessories).

21. AUDIBLE ALARM (BUZZER)
It is located under the instrument panel. It sounds if any of the following warning lights starts glowing:

- engine oil pressure warning light,
- parking brake warning light,
- service brake warning light,
- ground driven steering warning light (if equipped).

22. TRANSMISSION DIRECTION LEVER LOCK SWITCH.
This switch locks the transmission direction lever in its neutral position if shifted into the furthest left position. To release the lock, shift it to the right.

22A. RSM System Switch

This switch has 2 positions:

ON - the ride stabilizing system is switched on,
OFF - the ride stabilizing system is switched off.

https://truckmanualshub.com/

OPERATING

INSTRUMENTS AND CONTROLS

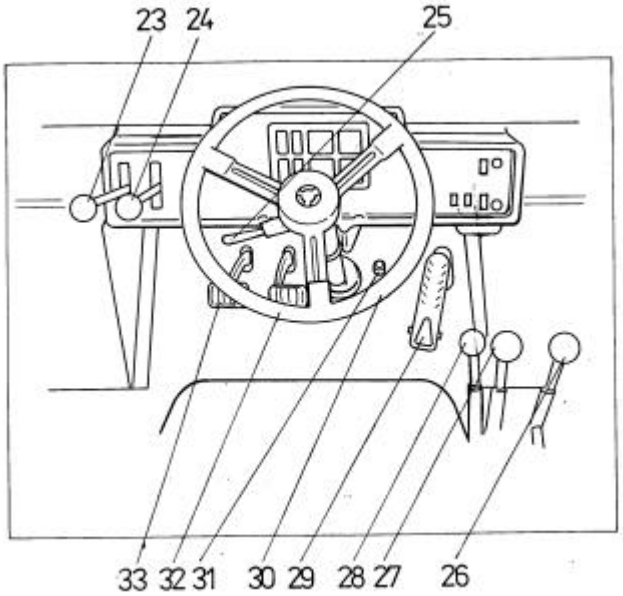

Fig. 4.4. Steering and Controls (for standard configuration)

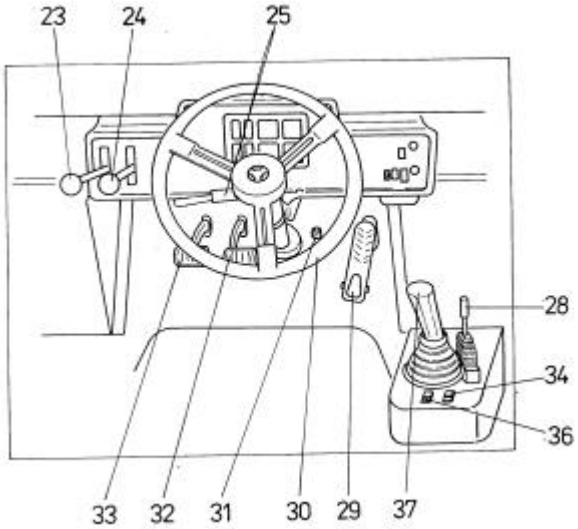

Fig. 4.5. Steering and Controls (for upgraded configuration)

23 - Transmission Gear Range Lever
24 - Transmission Direction Lever
25 - Turn Signal and Emergency Light Switch
26 - Boom Control Lever
27 - Bucket Control Lever
28 - Auxiliary Equipment Lever
29 - Accelerator Pedal
30 - Steering Wheel
31 - Horn Button
32 - Brake Pedal
33 - Brake and Transmission Disconnect Pedal
34 - Hydraulic Pilot Control Valve Lock Switch
35 - Control Levers Lock Plate (Fig. 4.7)
36 - Float Position Lock Switch
37 - Bucket and Boom Pilot Control Valve Lever

https://truckmanualshub.com/

NOTE: *items 26,27,35 refer to the standard machine*
items 34, 36, 37 refer to the upgraded machine

23. TRANSMISSION GEAR RANGE LEVER
This lever is used to select the gear range according to the operating conditions. Refer to Par. 4.13 for additional information.

24. TRANSMISSION DIRECTION LEVER
This lever is used to select machine direction. Refer to Par. 4.13 for additional information.

WARNING: When parking a machine, lock the transmission direction lever in neutral (N) by applying the transmission direction lever lock switch.

25. TURN SIGNAL LEVER WITH EMERGENCY LIGHT SWITCH
The turn signal lever with emergency light switch is clamped on the LH side of the steering column. When pulled back toward the operator's seat it activates the left turn signal lights. When pushed away from the operator's seat it activates the right turn signal lights. The corresponding arrow indicator light (left of right) on top of the turn signal switch will also flash. Pull the lever to the left to make both turn signal lights flash at the same time (in CE version the emergency lights and the turn signal warning lights are located on the instrument panel - see item 6A, 14B).

26. BOOM CONTROL LEVER
The lever controls raising and lowering operations of the boom. Refer to Par. 4.17.1 for additional information.

27. BUCKET CONTROL LEVER
The lever controls roll back and dumping operation of the bucket. Refer to Par. 4.17.3 for additional information.

28. AUXILIARY EQUIPMENT LEVER
The lever is located:

a) on the LH side of the bucket control lever in machines of standard configuration,
b) on the RH side of the boom and bucket control lever in machines in CE configuration.

The lever is integrated with a 3-spool control valve equipped as an optional attachment with optional mounted equipment such a multi-purpose bucket, quickcoupling etc.

It performs the following functions:

a) with a multi-purpose bucket:
- when shifted forward it opens the bucket,
- when shifted back it closes the bucket.

b) with a quickcoupling tool carrier:
- when shifted forward it locks the quickcoupling,
- when shifted back it unlocks the quickcoupling.

29. ACCELERATOR PEDAL
Depress the pedal to increase engine speed, release the pedal to decrease engine speed. Pedal returns automatically to the low idle position.

https://truckmanualshub.com/

INSTRUMENTS AND CONTROLS

30. STEERING WHEEL HEIGHT ADJUSTMENT KNOB
The steering wheel operates the steering valve, which directs hydraulic fluid into the steering cylinders. When the steering wheel is turned clockwise, the steering cylinders articulate the machine so a right turn can be made. When the steering wheel is turned counterclockwise, the machine is articulated so a left turn can be made. The machine continues as long as you turn the steering wheel. When you stop turning the steering wheel, the machine will remain in the articulated position it is in.
In the upgraded machine steering column height and its inclination can be adjusted (total adjustment ranges up to 80 [mm] and 40 [°] respectively). Adjustment can be made after releasing lever (1, Fig. 4.6). Pull the lever up to extend the steering column. Push it down to change the inclination.

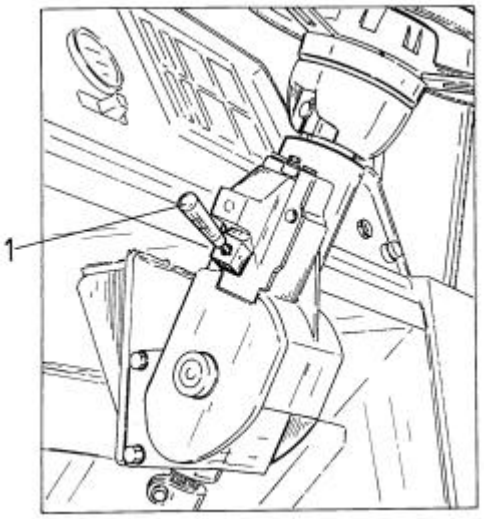

Fig. 4.6. Steering Column Adjustment (Upgraded Machine)

1. Lever

31. HORN BUTTON
Depress the button to sound the horn, release the button to stop.

32. BRAKE PEDAL
This pedal actuates the machine service brakes. Depress the pedal, gradually increasing pressure until a desired braking action is achieved. The faster pressure is applied to the pedal, the stronger is the braking action.

33. BRAKE AND TRANSMISSION DISCONNECT PEDAL
This pedal works in the same manner as the brake pedal except that it also relieves clutch pressure in the transmission. When this pedal is depressed, no power can be transmitted through the transmission and full engine power can be used to operate the machine hydraulics while braking.

WARNING! Do not press the transmission disconnect pedal when traveling fast or going downhill because this shifts the transmission into neutral. Loss of control or damage to the power train could result when the pedal is released and transmission re-engages.

https://truckmanualshub.com/

34. HYDRAULIC PILOT CONTROL VALVE LOCK SWITCH (Fig. 4.8)
The switch has two positions:
- ON: hydraulic pilot valve is locked
- OFF: hydraulic pilot valve can be operated

35. CONTROL LEVER LOCKING PLATE (Fig. 4.7)

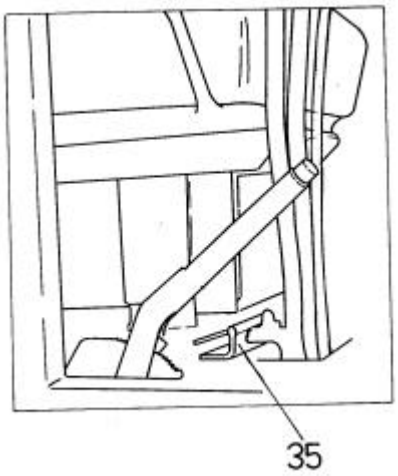

Fig. 4.7 Control Lever Locking Plate (Standard Version)

35. Locking Plate

Locking plate (35) is used to lock the control levers in the neutral position and guard them against accidental activation. In the illustration above the plate is shown in the non-locked position. To lock it turn the plate round 180 [°].

WARNING! When roading the machine, engage the hydraulic control lever locking plate. Accidental actuation of the levers may cause personal injury or damage of the machine.

36. FLOAT POSITION PILOT VALVE LOCK SWITCH
This switch has 2 positions:
- ON: keeps the boom in the float position,
- OFF: releases the float position lock.

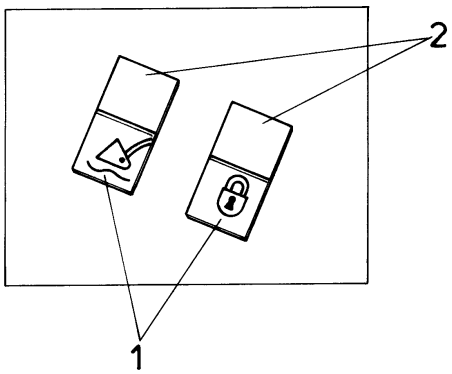

Fig. 4.8. Hydraulic Pilot Control Lever Lock Switch (34) and Pilot Valve "Float" Position Lock Switch

1. ON 2. OFF

https://truckmanualshub.com/

OPERATING

INSTRUMENTS AND CONTROLS

37. BUCKET AND BOOM PILOT CONTROL LEVER
The lever controls raising and lowering as well as rollback and dumping operations of the bucket. Refer to Par. 4.17.1 and 4.17.3 for additional information.

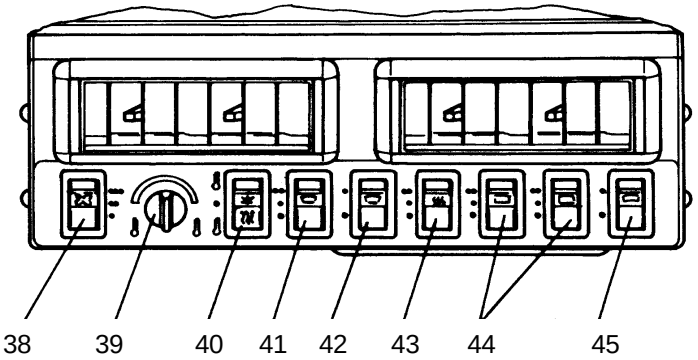

Fig. 4.9. Side Control Panel

38. Fan Control Switch
39. Heater/Air Conditioner Temperature Control Knob
40. Main Switch
41. Windshield Wiper Switch
42. Windshield Washer Switch
43. Defroster Fan Switch
44. Rear Window Wiper Switch (if equipped)
45. Rear Window Washer Switch (if equipped)

38. FAN CONTROL SWITCH
This switch controls the speed of the heater fan circulating air inside the cab. It has three positions:

- OFF,
- LO.
- HI.

Move the switch to the desired position.
If the air outside is very dusty, switch the fan into “HI" position. This will create high pressure inside the cab, which will prevent dusty air from coming into the cab.

39. HEATER /AIR CONDITIONING TEMPERATURE CONTROL
If lower temperature is required, turn the knob to the left. If higher temperature is required turn the knob to the right.

40. MAIN SWITCH
It switches either the air conditioning or heating. It has three settings:

- neutral,
- heater,
- air conditioning

WARNING! Switch off the defroster fan before adjusting the direction of flow to avoid injury.

41. WINDSHIELD WIPER CONTROL SWITCH
This switch controls the speed of the windshield wiper motor. It has three positions:

- OFF,
- LO,
- HI.

Move the switch to the desired position for low or high speed wiper operation.

https://truckmanualshub.com/

42. WINDSHIELD WASHER SWITCH
This switch controls the windshield washer. Push the switch button down to run the washer. Release the button to stop the washer. Use the washer prior to switching on the wipers to protect the windshield from being scratched.

43. DEFROSTER FAN SWITCH
This switch is used to control the air (hot or cold) supplied onto the windows of the cab.

44. REAR WINDOW WIPER CONTROL SWITCH (IF EQUIPPED)
This switch controls the speed of the rear window wiper motors. It has three positions:

- OFF,
- LO,
- HI.

Move the switch to the desired position for low or high speed wiper operation.

45. REAR WINDOW WASHER SWITCH (IF EQUIPPED)
This switch controls the rear window washers. Push the switch button down to run the washer. Release the button to stop the washer. Use the washer prior to switching on the wipers to protect the windshield from being scratched.

46. PARKING BRAKE LEVER (Fig. 4.10)
The parking brake lever is located to the rear right of the operator's seat on the floorboard. To apply the parking brake, pull the lever up. To release, lift the lever and depress the button, then lower the lever. Apply the parking brake before leaving the machine.
It is recommended that the parking brake only be used to hold the machine after it has come to a stop. However, should the brake system ever fail, the parking brake may be used to make an emergency stop.

IMPORTANT: *Release the parking brake before moving the machine. The brake could burn or be damaged if the machine is driven with it applied.*

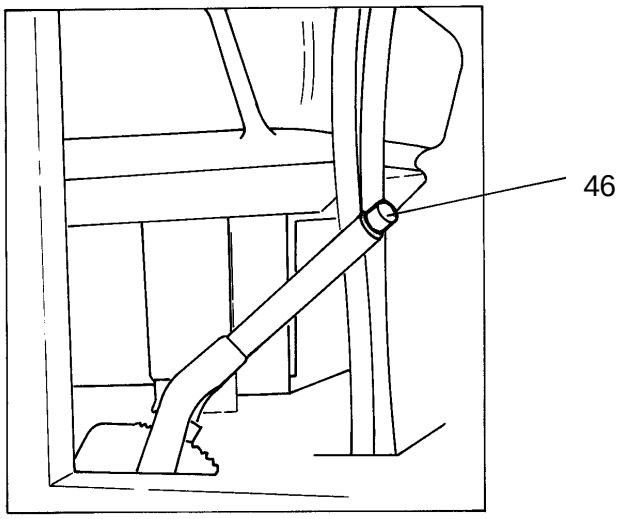

Fig. 4.10. Parking Brake Lever

https://truckmanualshub.com/

4.4. CAB DOOR AND WINDOWS

LEFT HAND CAB DOOR HANDLE AND WINDOW LATCHES (Fig. 4.11)
To open the door, push down on handle (2). The handle will automatically return.
To open the windows, turn latch (1) and slide the window up or down as required.
To close the windows, slide the window up or down as required and put latch (1) in the catch.

WARNING: Do not operate the machine with left hand cab door opened.

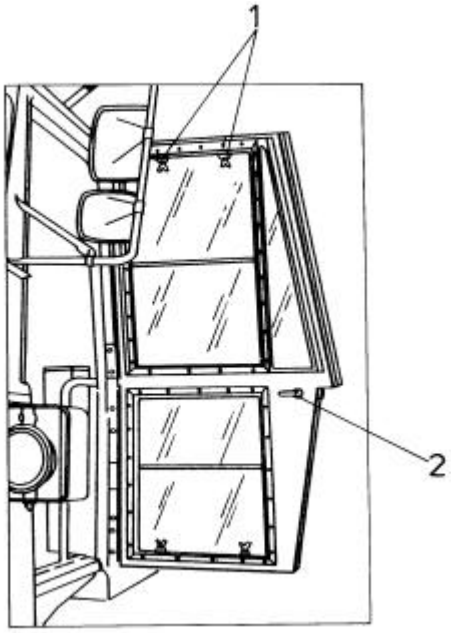

Fig. 4.11. Left Hand Cab Door

1. Window Latch 2. Door Handle

CAB DOOR LATCH (Fig. 4.11A, CE VERSION)

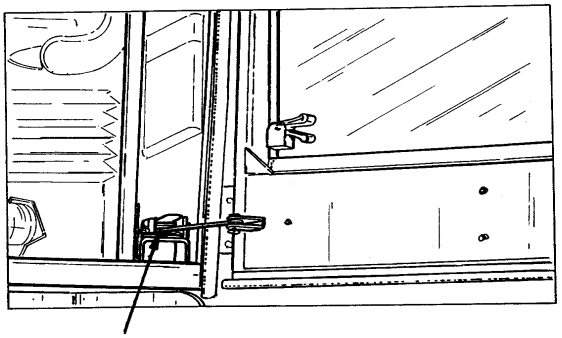

Fig. 4.11A. Cab Door Latch

The cab door may be locked in an open position. The latch is particularly useful for cab ventilation when operating in high ambient temperatures.
The latch will be released automatically if the door is pulled energetically to close.

https://truckmanualshub.com/

CAB DOOR AND WINDOWS

CAB RIGHT HAND WINDOW (Fig. 4.12)

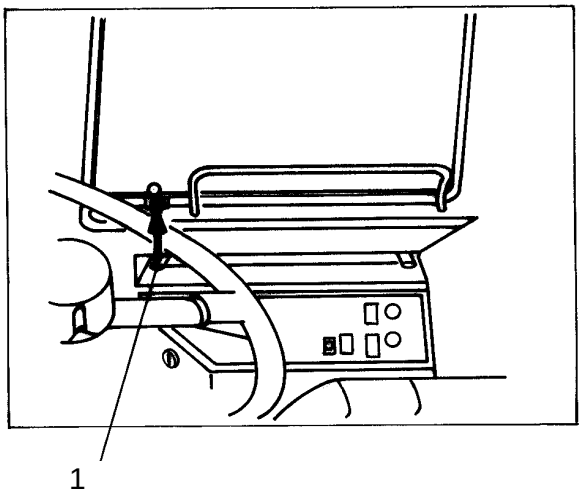

Fig. 4.12. Cab Right Hand Window

1. Knob

To open the window press the knob (1) and push the window open, the window may be locked by tightening the catch at the top of the window.

NOTE: *Do not lock the window open far enough when operating to interfere with the hood when the machine articulates.*

4.5. OPERATOR'S SEAT

A loader can be equipped with different types of operator's seats (solid base or suspension).

WARNING: Do not adjust the seat position while the machine is moving, because a lose of control may result. Stop the machine, apply the parking brake and then adjust the seat position.

SOLID BASE OPERATOR'S SEAT (Fig. 4.13)
For operator's convenience in reaching the controls and improved operating visibility, the operator's seat can be adjusted to various positions.

The seat adjustment lever is attached to the bottom left front side of the seat. To adjust the seat forward or rearward, pull the lever under the seat and slide the seat in the desired direction.

The height can be adjusted by removing the bolts that secure the inner post to the outer post and lining up the holes in both posts at a higher or lower setting. Be sure to put in and tighten the bolts.

https://truckmanualshub.com/

CAB DOOR AND WINDOWS

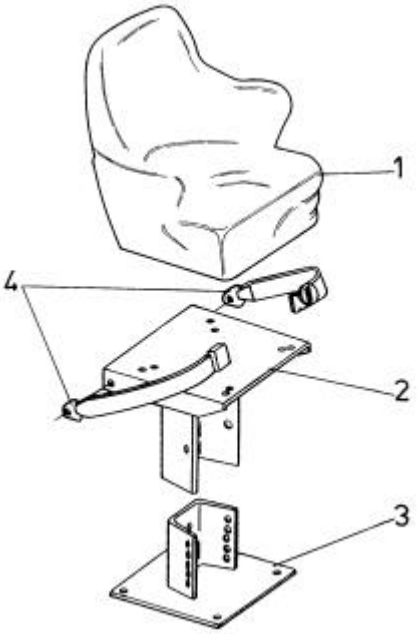

Fig. 4.13. Solid Base Operator's Seat and its Adjusting Controls

1. Seat
2. Inner Height Adjustment Post
3. Outer Height Adjustment Post
4. Seat belt

SUSPENSION SEAT (VIKING-BOSTROM)

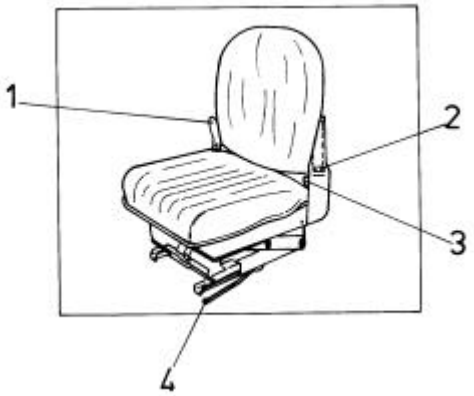

Fig. 4.14. Suspension Seat Adjusting Controls (Viking-Bostrom)

1. Preload Adjustment Ratchet Lever
2. Back Seat Angle Adjustment Catch
3. Seat belt
4. Forward and Rearward Control Lever

For operator's convenience in reaching the controls and improved operating visibility, the operator's seat can be adjusted to various positions. Pull lever (4) back and slide the seat to the desired forward or rearward position. Release the lever to lock the seat.

To adjust the angle of the back seat cushion, lift up the seat back and tilt it to one of its three positions. Release the cushion allowing the catches on the seat back to engage in bracket notches (2).The suspension preload should be adjusted to the operator's weight for proper ride control. While sitting in the seat, turn ratchet lever (1) clockwise to increase the preload. Turn the ratchet counterclockwise to decrease the preload.

https://truckmanualshub.com/

CAB DOOR AND WINDOWS

SUSPENSION SEAT (GRAMMER)

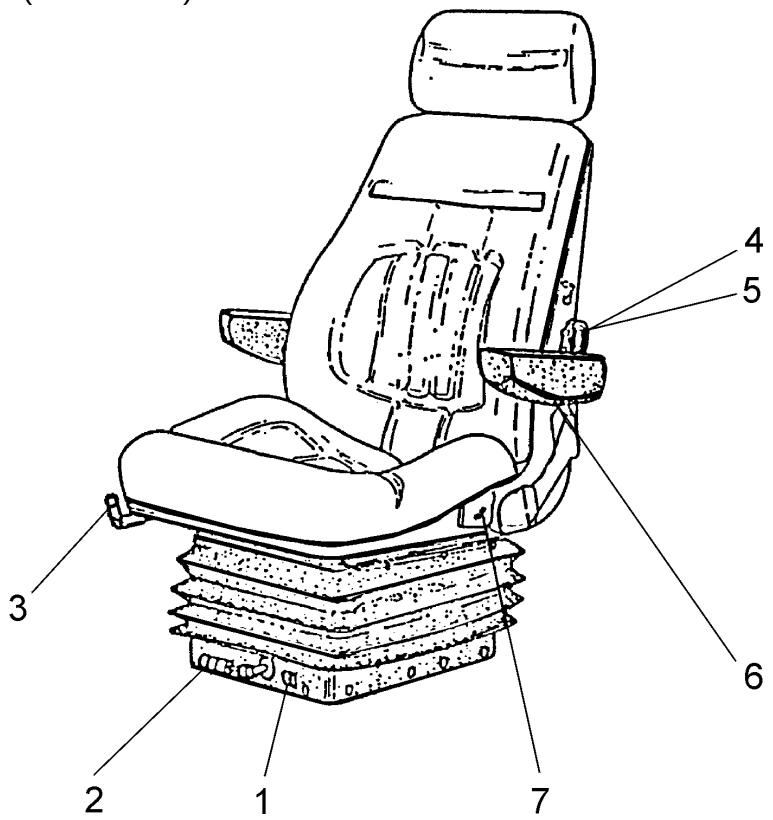

Fig. 4.15. Suspension Seat (Grammer)

1. Weight Indicator
2. Weight Adjustment Knob
3. Seat Travel Lever
4. Backrest Profile Adjustment Knob
5. Backrest Profile Adjustment Knob
6. Armrest Profile Adjustment Knob
7. Backrest Angle Adjustment Lever

This is a suspension seat with several adjustments to provide the maximal comfort to the operator.

Adjustment to the operator's weight – seated in the operator's seat turn adjustment knob (2) clockwise or counterclockwise until proper weight value corresponding to the operator' s weight appears in weight indicator window (1).

Seat travel adjustment - pull up the lever (3) (on the right hand side of the seat) and slide the seat forward or rearward to the desired position and lock with the lock lever.

Seat height adjustment - lift the seat cushion up or press it down and hold it with both hands until it settles at the desired height.

Backrest angle adjustment - pull up lever (7) to release the lock. Upon the adjustment of the backrest angle (pressing the backrest) apply the lock.

Backrest profile adjustment – performed with two knobs: knob (4) located on the left hand side of the seat and knob (5) located on the right hand side of the seat. Turn knob (4) to change the backrest profile in the middle part, turn knob (5) to change the lower and upper part of the backrest profile.

Armrest angle adjustment – performed with screws (6) located under the armrests (tilt back the armrests to facilitate adjustment).

https://truckmanualshub.com/

4.6. SEAT BELT

The seat belt is for operator's safety and should be worn at all times while operating the machine. Adjust the seat to the desired position before fastening the seat belt.

WARNING: DO NOT use bleach, dye, or solvents on the seat belt, because this may weaken the webbing and result in personal injury. Clean the seat belt with warm water and a mild detergent. Replace belts with worn, frayed, torn, faded, stiff, or rotted webbing.

WARNING: Before driving the machine, adjust the seat and fasten the seat belt Adjust the seat belt to fit snugly and low around the hips to lessen the chance and severity of injury in the event of an accident. NEVER wear the seat belt across the abdomen.

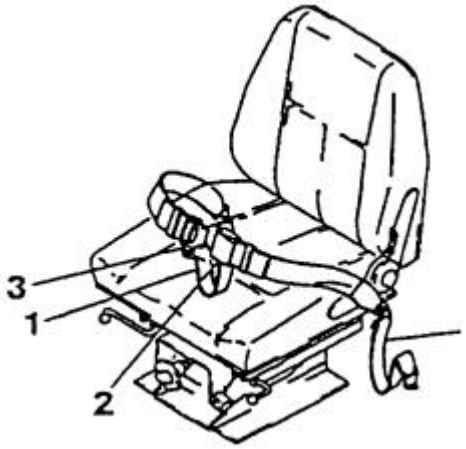

Fig. 4.16. Seat Belt

1. Belt 2. Buckle 3. Tang

Fasten the belt and remove it in the following manner:

1. Adjust the seat so that the brake pedal can be depressed all the way with the operator's back against the backrest.
2. With the seat unoccupied, tense belt (1) lightly across the seat and install. Check that there are no kinks in the belt.
3. Sit in the seat. Hold buckle (2) and insert tang (3) into the buckle. Check that the bet has locked by pulling it.
4. When removing the belt, raise the tip of the buckle lever to release it.

When leaving the operator's seat, release the seat belt and hang it over the arm rest.
Fasten the belt across your body without kinking it. Adjust the lengths of the belt on both the buckle and tang ends so that the buckle is located at the mid-point of your body front.

Adjust the belt length in the following manner:

1. To shorten the belt, pull the free end of the belt at either the buckle or tang end or at both ends.
2. To lengthen the belt, pull the belt while holding it at a right angle to the buckle or tang.

https://truckmanualshub.com/

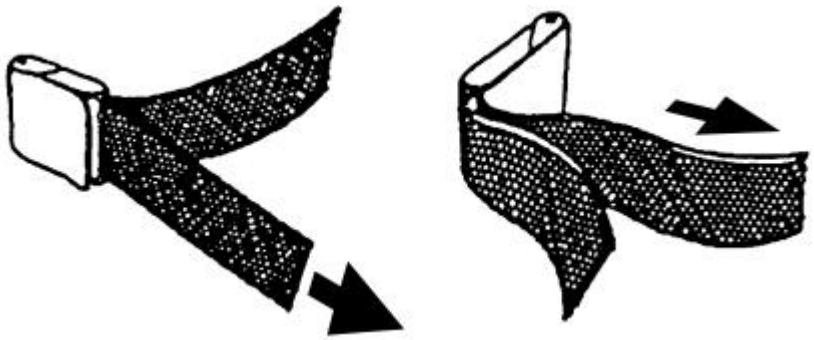

Fig. 4.17. Adjusting the Belt Length

4.7. CAB HEATING AND VENTILATION

4.7.1. DEFROSTER FAN

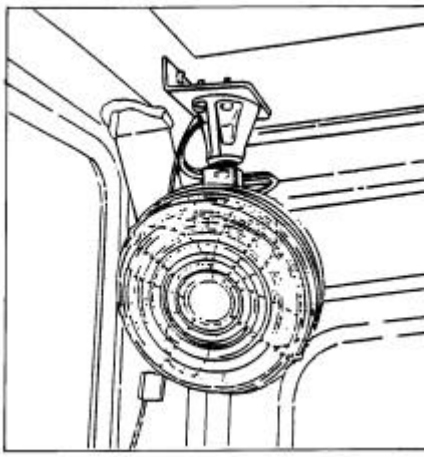

Fig. 4.18. Defroster Fan

The fan is designed for cab ventilation (air circulation) and defrosting or defogging the windshield. The switch has two positions and is located on the side control panel (43, Fig. 4.19).

WARNING! Turn off the motor before adjusting defroster fan to avoid hand injury.

4.7.2. HEATER

For cab heating, ventilation and air conditioning integrated heater and air conditioner installed in the right hand side of the cab wall is used. The heater and air conditioner controls are situated in the side control panel.

https://truckmanualshub.com/

CAB HEATING AND VENTILATION

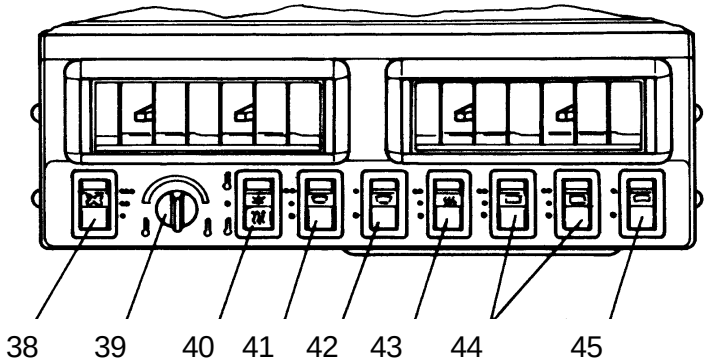

Fig. 4.19. Side Control Panel

38. Fan Control Switch
39. Heater/Air Conditioner Temperature Control Knob
40. Main Switch
41. Windshield Wiper Switch
42. Windshield Washer Switch
43. Defroster Fan Switch
44. Rear Window Wiper Switch (if equipped)
45. Rear Window Washer Switch (if equipped)

For description of controls refer to Par. 4.3.

4.7.3. AIR CONDITIONER

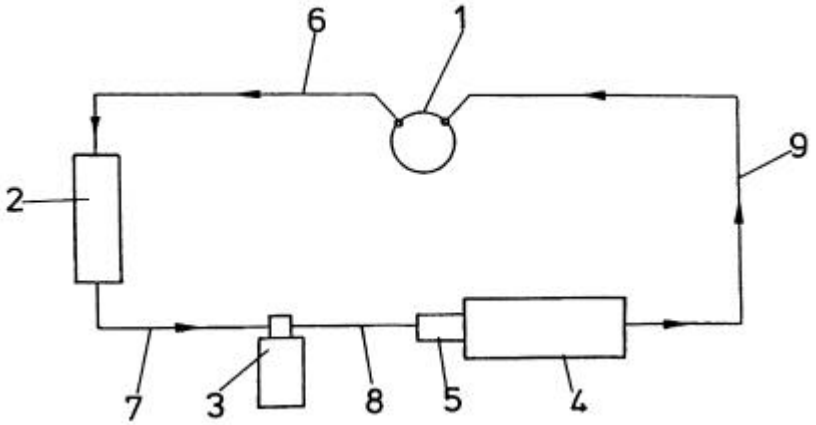

Fig. 4.20. Block Diagram of A/C Connections

The wheel loader may be equipped with air conditioner to reduce air temperature and relative humidity inside the cab. An air conditioner consists of the following principal components:

1. Compressor – V-belt driven thru pulley mounted on the engine
2. Condenser – radiator mounted
3. Dehumidifier – mounted on a bracket on the RH side of the rear frame
4. Evaporator – RH side cab wall mounted
5. Expansion valve – integrated with the evaporator

The a/m components are connected with hoses 6 – 9. The A/C system is filled with R-134A gas.

NOTE: *If A/C system refilling is required contact Construction Equipment Authorized Distributor. The system must be filled in accordance with the manufacturer's instructions.*

https://truckmanualshub.com/

4.8. AIR CLEANER SERVICE INDICATOR

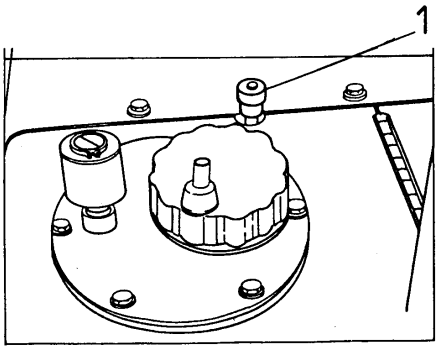

Fig. 4.21. Service Indicator

1. Service Indicator

The indicator is located in the upper front part of the hydraulic reservoir (behind the cab). During operation, the red band will gradually rise in the indicator window as dirt accumulates in the air filter elements. When the filter elements reach the maximum allowable restriction, the red band will completely fill the indicator window and automatically lock in this position. The red band will remain fully exposed even after stopping the engine. When this happens, filter element service is required. Press the reset button on top of indicator after the elements have been serviced.

4.9. ELECTRIC SYSTEM MASTER SWITCH

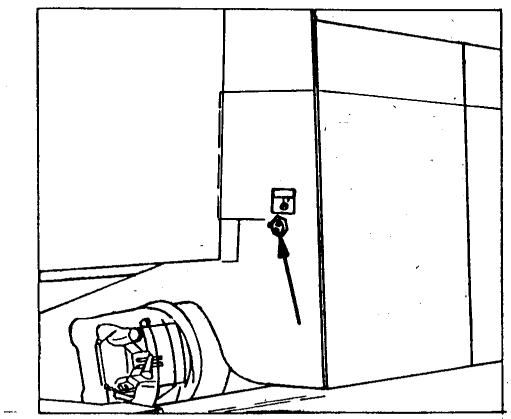

Fig. 4.22. Electric System Master Switch

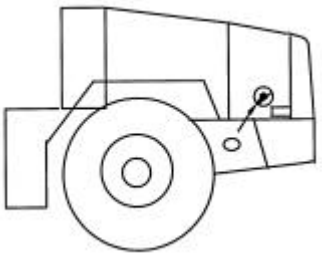

Fig. 4.22A. Electric System Master Switch (CE Version)

The switch is located on the LH side of the hydraulic tank behind the cab and is connected in series between the battery positive terminal (+) and receivers, thus turning "ON" or "OFF" battery voltage to all electric systems. The master switch must always be turned to the "ON" position when the engine is running to prevent any damage to the alternator and/or electric system. On machines in CE version the switch is located at the back on the left hand side.

WARNING: Before servicing the machine, turn off the electric system master switch and remove the key. Tag the machine to warn against starting the engine.

https://truckmanualshub.com/

4.10. DOME LIGHT WITH SWITCHES

Dome light is installed in the roof of the cab on the right and left hand side of the operator's head. The light is equipped with a switch. Two lights are installed on machines in CE version.

4.11. STARTING AND STOPPING THE ENGINE

4.11.1. NORMAL START (AMBIENT TEMPERATURE ABOVE 0 [°C])

WARNING: DO NOT jump on or off the machine. Keep two hands and one foot, or two feet and one hand in contact with the steps and hand holds at all times. Always face the machine when climbing on or off to reduce the chances of slipping and injury.

1. Check that the parking brake switch is applied (machine stopped)
2. Check that transmission direction lever is locked in the "N" (neutral) position.
3. Turn the master electric system switch "ON" (Refer to Fig. 4.22, 4.22.A).
4. With your back against the back rest of the operator's seat, adjust the seat position so that the brake and decelerator pedal can be easily depressed (Refer to Fig. 4.6).
5. Sound the horn to clear the area of personnel.

NOTE: *All the warning lights should light up while the starting key is between RUN and START position. Replace any bulb that fails to light up.*

NOTE: *The engine will not start while the direction lever is in any position other than "N" (neutral).*

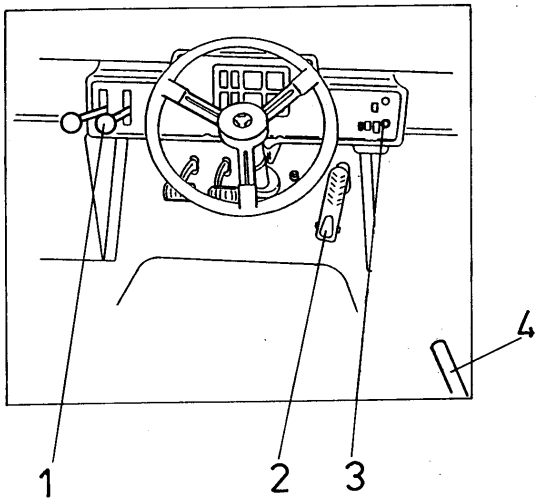

Fig. 4.23. Starting and Stopping the Engine

1. Transmission Direction Lever
2. Accelerator Pedal
3. Starting Switch
4. Parking Brake Lever

6. Turn the starting key from RUN to START position (Fig. 4.3) to start the engine with accelerator pedal released (idle speed).

7. Keep the key till the engine starts but no longer than 30 seconds. Then release the key immediately, it returns automatically to the RUN position.

https://truckmanualshub.com/

STARTING AND STOPPING THE ENGINE

IMPORTANT: *To prevent damage to the cranking motor and avoid low battery output, do not continuously crank engine for more than 30 seconds. Allow a recovery period of 2 minutes between crankings.*

WARNING: Never start the engine indoors unless proper exhaust ventilation is provided to remove deadly exhaust gases. Once the engine is running, move the machine outdoors as soon as possible. Exhaust gases are hazardous and can cause unconsciousness and death.

NOTE: *Engine oil pressure must register 15 seconds after startup. If no oil pressure is registered stop the engine immediately.*

8. If a cold engine is being started, increase its speed slowly to ensure proper lubrication of the bearings.

IMPORTANT: *Do not run the engine at idle speed more than 10 minutes as it may cause engine damage.*

9. Allow the engine to run idle for 3 to 5 minutes before placing it under load.

IMPORTANT: *When starting the engine after engine oil change or after the engine has been shut off for 30 days disconnect the fuel shut-off valve electric wire and crank the engine until oil pressure registers on the gauge and the oil pressure warning light goes out. Connect the fuel shut-off valve wire again. Start the engine as described above.*

4.11.2. COLD WEATHER START (USING ETHER INJECTOR, AMBIENT TEMPERATURE BELOW 0 [°C])

NOTE: *Never operate ether injector switch except when starting the engine.*

WARNING! Ether starting fluid is highly flammable. Follow the precautions on the container. An explosion can result if sparks or flame contact ether or if the container is stored where the temperature exceeds 70 [°C].
Observe the following precautions:

a) Do not use the ether injector when the air temperature is above freezing.
b) Never smoke when using ether starting fluid or installing the container.
c) Do not store fluid containers in the operator's compartment. Store the containers in a cool, well-ventilated place.
d) Keep the fluid containers out of reach of children.
e) Do not breathe the hazardous ether vapor.
f) Do not let ether contact your skin, as it can cause frostbite.
g) Never puncture the fluid container or put it into fire. Dispose of empty containers properly.
h) For your safety, remove the ether container when welding, grinding, or using a torch on the machine.
I) Follow the correct method for starting the engine.

https://truckmanualshub.com/

STARTING AND STOPPING THE ENGINE

When starting the engine in low temperatures, do as follows:

Perform the steps 1 thru 5 of Par. 4.11.1.

6. Press the accelerator pedal down half the full stroke.
7. Crank the engine and simultaneously press the ether start button to fill the ether chamber in the valve with a measured shot of starting fluid. Pressing the ether start button once will release a single dose of ether into the engine. If the ambient temperature is below -18 [°C] additional doses of ether may be needed.

IMPORTANT: *If the engine does not start with maximum of two ether injections determine and correct the cause before attempting to start the engine again.*

If the engine will not start or runs roughly it may be due to one of the following:

a). Air may be in the fuel system,
b). The ether injector is not functioning correctly.

8. After the engine has started release the accelerator pedal.

NOTE: *Proper engine oil pressure must register on the gauge 15 seconds after startup. If no oil pressure is registered stop the engine immediately.*

9. Check all the instruments for proper operation.

4.11.3. STOPPING THE ENGINE

1. Allow the engine to cool down after operation at full load. Run the engine with no load at idle for about 3 to 5 minutes before shutting it down to ensure a gradual and even cooling.

IMPORTANT: *Failure to do so may result in damage to the engine and turbocharger.*

2. Shut down the engine by turning the starting key to the OFF position (Fig. 4.3). Before leaving the machine remove the key and turn off the electric system master switch into OFF position (Fig. 4.22, 4.22.A).

4.12. DRIVING THE MACHINE

WARNING! Before operating the machine observe strictly the following precautions:

a) never haul passengers in the cab - the loader is equipped with a cab for the operator only,
b) never allow anyone to stand on steps or on the platform when driving and operating the machine,
c) sit in the operator's seat before operating any controls or switches,
d) keep your hands and footwear free of grease, water and mud to insure positive control movement,
e) before driving the machine, adjust the seat and seat belt to fit snugly and low around the hips,
f) sound the horn to warn the nearby personnel,
g) never try to get on or off the machine when it is moving,
h) check all the instruments, gauges and warning light for correct operation

https://truckmanualshub.com/

4.12. DRIVING THE MACHINE

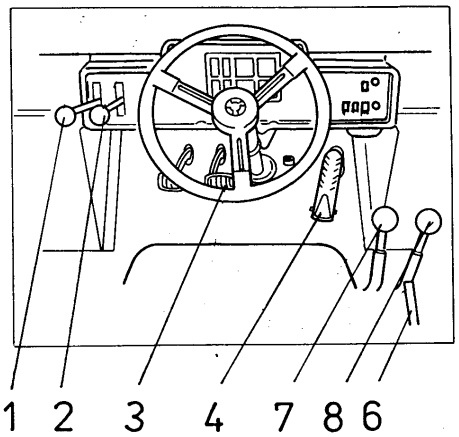

Fig. 4.24. Driving and Stopping the Machine (Standard Version)

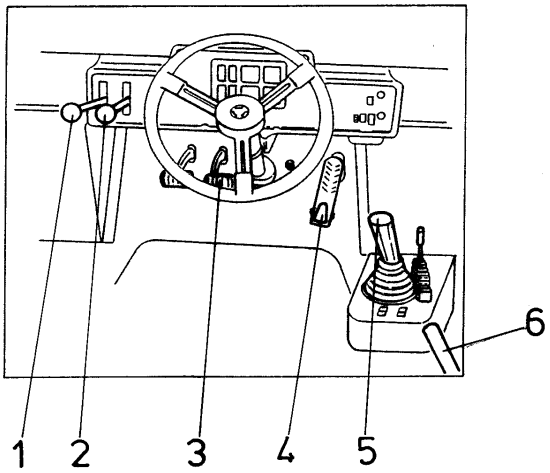

Fig. 4.25. Driving and Stopping the Machine (Upgraded Version)

1. Transmission Gear Range Lever
2. Transmission Direction Lever
3. Brake Pedal
4. Accelerator Pedal
5. Boom and Bucket Pilot Control Valve Lever
6. Parking Brake Lever
7. Bucket Control Lever
8. Boom Control Lever

1. Depress brake pedal (3).
2. Release parking brake lever (6).
3. Using lever (8 standard version) or lever (5 upgraded version), raise the boom until the bucket is off the ground and in the carry position.
4. Using lever (7 standard version) or lever (5 for upgraded version), close the bucket.
5. Place transmission gear range lever (1) in the first gear position.
6. Move the transmission hinge lock plate to the right. Then place the transmission direction lever (2) in the desired position forward or reverse.

NOTE: *If the machine is equipped with a back-up warning alarm, the alarm will sound when the lever is placed in reverse.*

7. Release brake pedal (3) and gradually depress accelerator pedal (4).

https://truckmanualshub.com/

4.13. SHIFTING GEARS

The transmission has three forward gear ranges, three reverse gear ranges, and neutral, which are manually selected with transmission gear range lever (1, Fig. 4.25) and direction lever (2, Fig. 4.25). The transmission is full powershift type and any gear range or direction can be changed at any time without stopping the machine.

The first gear is the lowest and main working range. The second gear can be used when working in loose material or hauling at short distances. The third gear is used to road the machine at longer distances at maximal machine speeds. The direction lever must be in neutral "N" before the engine can be started. Reverse also has 3 gears.

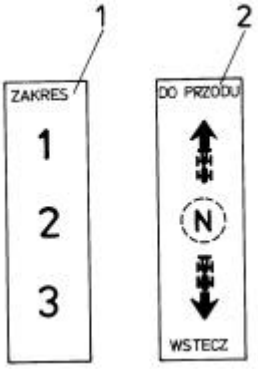

Fig. 4.26. Shifting Gears

1. Gear Ranges 2. Travel Directions

DOWN-SHIFTING
Down-shifting should never be made at a vehicle ground speed higher than the maximal speed for the gear you intend to shift down to. Failure to do so results in sudden braking of the machine. For speed ranges in the respective gears refer to TRANSMISSION, Section 6.

IMPORTANT: *Down-shifting from 3 to 1 or 2 when driving at maximum speed may result in drive train damage.*

UP-SHIFTING
An up-shift from "1" to "2" or from "2" to "3" can be made at any speed. To get proper acceleration, speed up the machine to the maximal speed before up-shifting. For speed ranges in the respective gears refer to TRANSMISSION, Section 6.

DIRECTION-SHIFTING
Decelerate the engine for all direction changes, by applying the accelerator and brake pedal. This will result in a smoother directional change rather than using the transmission disconnect pedal.

4.14. STEERING

The machine is articulated and steering is accomplished by hydraulic power which pivots the front and rear frame at the center articulation pivot. Turn the steering wheel until reaching the desired angle of turn. Hydraulic power holds the angle of the turn until the steering wheel is turned again.

WARNING! Never allow anyone near the center articulation pivot with engine running.

https://truckmanualshub.com/

STEERING

GROUND DRIVEN STEERING (IF EQUIPPED)
If there is a drop in hydraulic steering pressure, the ground driven steering will be actuated automatically and a warning light on the instrument panel will flash. The amount of oil supplied by the ground driven pump depends upon the machine ground speed (pump driven by the transmission output shaft). The steering response is reduced as the machine slows down.

WARNING! If the ground driven steering warning light comes "ON", immediately maneuver the machine to a safe place. Shut down the engine and apply the parking brake. Correct the problem before operating the machine again.

WARNING! The steering response with ground driven steering system actuated depends upon the machine ground speed. The steering response is reduced as the machine slows down.

4.15. STOPPING THE MACHINE (Fig. 4.25)

Perform the steps the in following order:

1. Fully release accelerator pedal (4).
2. Apply brake pedal (3) until the machine comes to a complete stop. Braking efficiency depends upon the amount of pressure exerted on the brake pedal, the higher pressure the more efficient braking.

WARNING!: Never brake with the drive disconnected (33, Fig. 4.4 or 4.5) when traveling fast or going downhill. Releasing the brake pedal automatically makes the transmission clutches to re-engage. With ground speed higher than the maximal speed at the previously shifted gear the machine will brake suddenly, which may result in a loss of control or damage to the power train.

3. Place transmission direction lever (2) in "N" (neutral) position and lock the lever in this position.

WARNING!: The transmission can remain in gear when the machine is brought to a temporary stop during operation. However, the operator must remain seated with the seat belt fastened.

4. Apply parking brake (6).
5. Place bucket control lever (7, Fig. 4.24 or 5, 4.25) in the detented position - bucket roll back.
6. Push forward boom control lever (8, Fig. 4.24 or 5, 4.25) to lower the boom and rest the bucket on the ground. The bucket will be leveled automatically.

WARNING!: Never leave the machine unattended with the engine running or the bucket raised. When parking a machine: stop the engine, lower the bucket to the ground, lock the transmission shift lever in neutral (N), apply the parking brake, turn off the electric system master switch, and remove the keys.

https://truckmanualshub.com/

4.16. PARKING THE MACHINE

WARNING!: When parking the machine observe the following rules:

a) Park the machine in a non-traffic area. If parking in traffic lanes cannot be avoided, provide appropriate flags, barriers, flares, and warning signals. Also provide advance warning signals in the traffic lane for approaching traffic.

b) Always lock the machine, including any anti-vandalism attachments, when leaving the machine unattended.

C) Avoid parking on a slope, however, if parking on a hillside is necessary, park at the right angle to the hill and block the tires as shown in Fig. 4.27.

NOTE: *Avoid parking the machine in puddles of oil, grease or gasoline because this damages the tires.*

Fig. 4.27. Hillside Parking

NOTE: *Park the machine on level ground to obtain accurate coolant, lubricant, hydraulic, fuel level checks.*

4.17. LOADER OPERATIONS

The loader equipment is hydraulically operated. When the bucket circuit is being operated, oil flow to the boom is cut off.

IMPORTANT: *Holding the control lever in any position except B "hold" and D “float" for an extended period of time after the hydraulic cylinder rod has reached the limit of its travel will produce excessive heat in the hydraulic system which may affect loader performance.*

4.17.1. BOOM CONTROL LEVER POSITIONS (Fig. 4.28.)

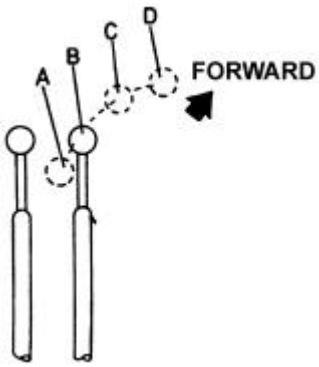

Fig. 4.28. Boom Control Lever Positions (Standard Version)

A. Raise B. Hold C. Lower D. Float

https://truckmanualshub.com/

LOADER OPERATIONS

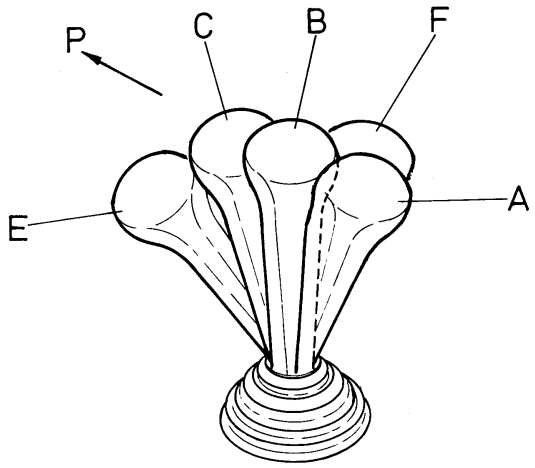

Fig. 4.29. Boom Control Lever Positions (Upgraded Version)

A. Raise	C. Lower	F. Bucket Dump
B. Hold	E. Bucket Rollback	P. Forward Direction of the Lever

In standard version the boom control is located to the far right of the operator's seat. It has four positions: A, B, C, D ("raise", "hold", "lower", and "float").

In upgraded version, a single lever controlling both the boom and the bucket movement is located on the right of the operator's seat. It has three positions for boom control: "raise", "hold", "lower", and three positions for bucket control: "rollback", "dump" and "hold". The hold position is common for both the bucket and the boom.

RAISE (A, Fig. 4.28, 4.29)
To raise the boom assembly, pull the lever back as far as it will go. A solenoid latch in the valve locks the lever in detented position. The return to "HOLD" must be done manually or will be done automatically when the boom reaches the preset stopping height of the automatic boom kick-out.

HOLD (B, Fig. 4.28, 4.29)
The control lever, when not in a detented position, will automatically return to "HOLD" when released. The boom will remain stationary in this position.

LOWER (C, Fig. 4.28, 4.29)
Push the lever part way forward (in standard version) or all the way forward (in upgraded version) to lower the boom. The lever will automatically return to "HOLD" when released.

WARNING! Do not leave the machine with a raised boom. The boom may drop down even if the engine is shut down. (Refer to CHANGING THE HYDRAULIC SYSTEM OIL, Section 5.14.2).

FLOAT (D, Fig. 4.28, FOR STANDARD VERSION)
The boom assembly can be lowered at any time by moving the lever to C "lower" or D "float" position. Push the lever all the way forward for this position. This position is detented so the lever must be pulled back manually to the "hold" position. Use the "float" position to follow the contour of the ground when leveling or to lower the boom by gravity.

https://truckmanualshub.com/

FLOAT (UPGRADED VERSION)
When the float switch is on (Fig. 4.8), the boom will gradually lower. This position is locked with a spring. To shift back to "hold" the switch must be put off. Use the “float" position to follow the contour of the ground when backdragging or leveling hard ground.

WARNING! It is forbidden to lower the boom from fully raised position by moving the control lever to “float" position. Due to weight of loader linkage it may be dangerous for nearby personnel and damaging to the machine.

4.17.2. AUTOMATIC BOOM KICK-OUT (Fig. 4.30.)

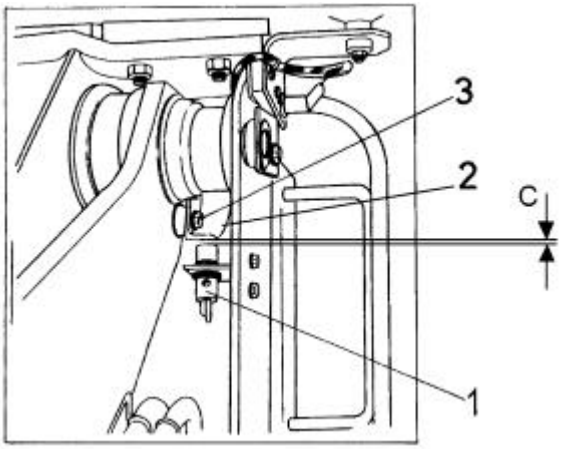

Fig. 4.30. Automatic Boom Kick Out

1. Proximity Switch
2. Adjustment Plate
3. Locking Bolt
C. Plate-to-Switch Clearance

The electronically operated kick-out control system stops boom travel automatically at a preselected height. This eliminates unnecessary boom travel during operation and provides for a more efficient cycle.

Adjustment plate (2) is bolted to the left boom arm and is adjustable. Proximity switch (1) is mounted to the front frame. Proximity switch (1) creates a magnetic field circuit which is completed by the proximity of adjustment plate (2) within the magnetic field. Once the boom is raised to its preselected height, adjustment plate (2) has moved out of the magnetic field, breaking the circuit. Breaking the magnetic field circuit causes the boom control lever to move out of the detented "RAISE" position and into the "HOLD" position, thereby stopping the travel of the boom arms. Plate-to-switch clearance "C" necessary for the proper operation of the proximity switch is 7 to 8 [mm].

ADJUSTMENT OF AUTOMATIC BOOM KICK-OUT
To change the automatic boom kick-out position, raise the boom arms to the desired stopping height. Place the boom control lever in the "HOLD" position. Loosen locking bolt (3) on sensor plate (2). Move adjustment plate (2) until it is just out of the magnetic field of proximity switch (1). Tighten locking bolt (3) on adjustment plate (2). Start the machine and test the adjustment. Repeat this procedure until the automatic kick-out height is obtained.

WARNING! Use extra caution when adjusting loader’s bucket leveler or boom kick-out. Use two trained people and guard against accidental movement of the machine or loader linkage. No personnel is allowed within the reach of loader linkage. Never work or walk under raised bucket without proper blocking.

https://truckmanualshub.com/

4.17.3. BUCKET CONTROL LEVER POSITIONS (Fig. 4.31)

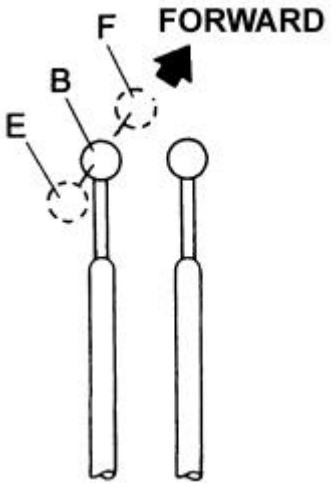

Fig. 4.31. Bucket Control Lever Positions (Standard Version)

E. Rollback B. Hold C. Dump

The bucket control lever is situated on the RH side of the operator’s seat and close to the boom control lever (closest to the operator's seat). It has three positions E, B, F ("roll back, "hold", and "dump").

Refer to Par. 4.17.1 (Fig. 4.29) for the location and positions of the bucket and boom control lever (upgraded version). It can take 3 positions:

F - dump,
B - hold,
E - rollback.

IMPORTANT: *Holding the control lever in any position except B "hold" and D “float" for an extended period of time after the hydraulic cylinder rod has reached the limit of its travel will produce excessive heat in the hydraulic system which may affect loader performance.*

ROLL BACK E (Fig. 4.29 and 4.31)
To roll the bucket back (load the bucket) pull the lever:

a) in standard version: all the way back,
b) in upgraded version: to the left towards the operator.

When the automatic leveler is inoperative, the lever automatically returns to the hold position when released. When the automatic leveler is operative, the lever will be locked automatically with the solenoid latch. This latch can be released manually.

HOLD B
The control lever, if not in E detented position, will return automatically to hold position B when released and will maintain the bucket in the required position.

DUMP F
To dump the bucket, push the lever:

a) in standard version: all the way forward,
b) in upgraded version; to the right, away from the operator.

When the lever is released, it will automatically return to hold position B.

https://truckmanualshub.com/

4.17.4. AUTOMATIC BUCKET LEVELER

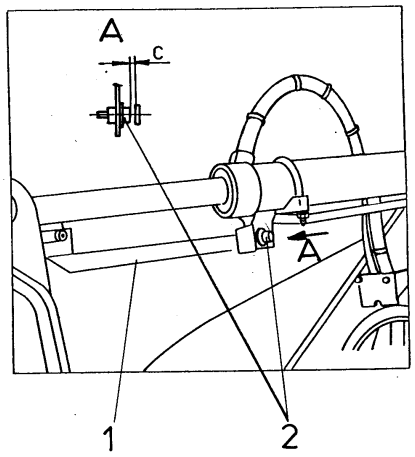

Fig. 4.32. Automatic Bucket Leveler

1. Trip Bar 2. Proximity Switch with Adjustment Nut C. Bar-To-Switch Clearance

The automatic bucket leveler is located on the underside of the bucket cylinder and is preset to stop the bucket in the horizontal or digging position. Trip bar (1) is attached to the cylinder rod. The trip bar moves with the cylinder rod. Proximity switch (2) creates a magnetic field circuit which is completed by the proximity of trip bar (1) within the magnetic field. Once the bucket is dumped, move the bucket control lever to its detented "ROLL BACK" position. When the bucket reaches its preset position, trip bar (1) has moved out of the magnetic field circuit created by the proximity switch; it will automatically stop and the bucket control lever will return to the "HOLD" position. Bar-to-switch clearance "C" necessary for the proper operation of the proximity switch is 7 [mm] to 8 [mm]. It is adjusted with the proximity switch nuts.

ADJUSTMENT OF AUTOMATIC BOOM KICK-OUT
Place the bucket flat on the ground. Place the key in the starting switch in the "RUN" position. If the electromagnetic field of proximity switch (2) is making contact with trip bar (1) mounted under the cylinder rod, the bucket control lever will stay in the "HOLD" position. Slide the proximity switch mounting "U" bolt back toward the base end of cylinder until contact of the electro-magnetic field is broken. This will be the kick-out position for a level bucket.

4.17.5. MULTI-PURPOSE BUCKET CONTROL LEVER POSITIONS (IF EQUIPPED)

The multi-purpose bucket control lever controls the opening and closing of the clam on the bucket. Before changing the bucket position raise the bucket 1 [m] above the ground. In standard version it is located next to the bucket control lever closest to the operator’s seat 28, Fig. 4.4). In upgraded version it is located on the right of the bucket and boom control lever (28, Fig. 4.5).

OPEN
Push the control lever forward to open the bucket clam. When released, the lever will automatically return to the "HOLD" position.

HOLD
The control lever will return automatically to the "HOLD" position from either the "OPEN" or "CLOSE" position when released. The bucket clam will remain in the same position it was in when the control lever was released.

https://truckmanualshub.com/

LOADER OPERATIONS

CLOSE
Put the control lever back to close the bucket clam. When released, the lever will return to the "HOLD" position.

When a machine is equipped with a multi-purpose bucket, it is also equipped with a clam position indicator.

A clam opening product graphic (A, Fig. 4.33) is located on the upper left hand side of the bucket. This product graphic indicates to what extent the clam is opened or closed.

"0" indicates closed, "2" indicated half open and "4" indicates a fully open clam.

To set the multi-purpose bucket as a bucket, pull the control lever back until the clam indicator is at the "0" setting on the clam product graphic (A, Fig. 4.33).

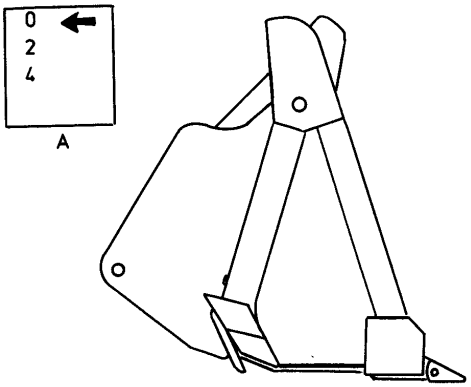

Fig. 4.33. Multi-purpose Bucket set in "Bucket" Position.
A. Clam Product Graphic

To set the multi-purpose bucket as a scraper, open the clam until the indicator points to "2" or "4" on the clam product graphic (A, Fig. 4.34). The more the clam is open, the deeper a cut can be made.

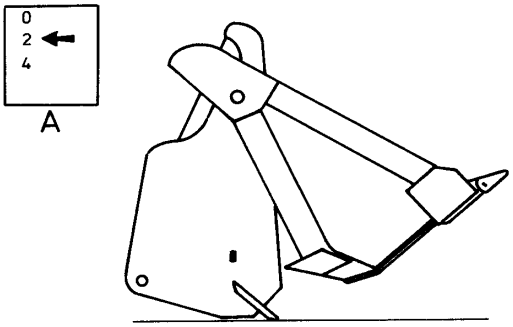

Fig. 4.34. Multi-purpose Bucket set in "Scraper" Position.

A. Clam Product Graphic

https://truckmanualshub.com/

To use the multi-purpose bucket as a dozer, open the clam until the clam indicator is at the bottom of the clam decal (A, Fig. 4.35).

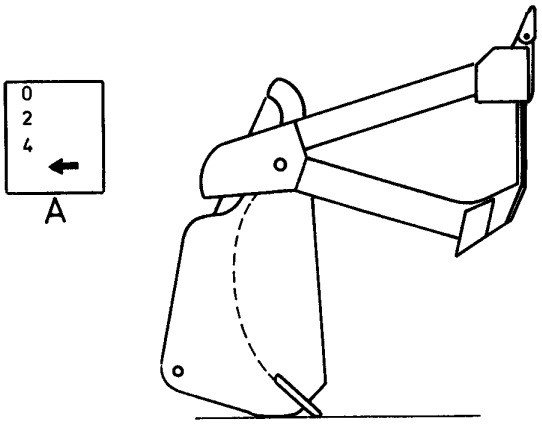

Fig. 4.35. Multi-purpose Bucket set in "Dozer" Position.

A. Clam Product Graphic

Position "A", Fig. 4.36 is for level grading. Position "B", Fig. 4.36 is for a deeper cut and position "C", Fig. 4.36 is for a lesser amount of cut.

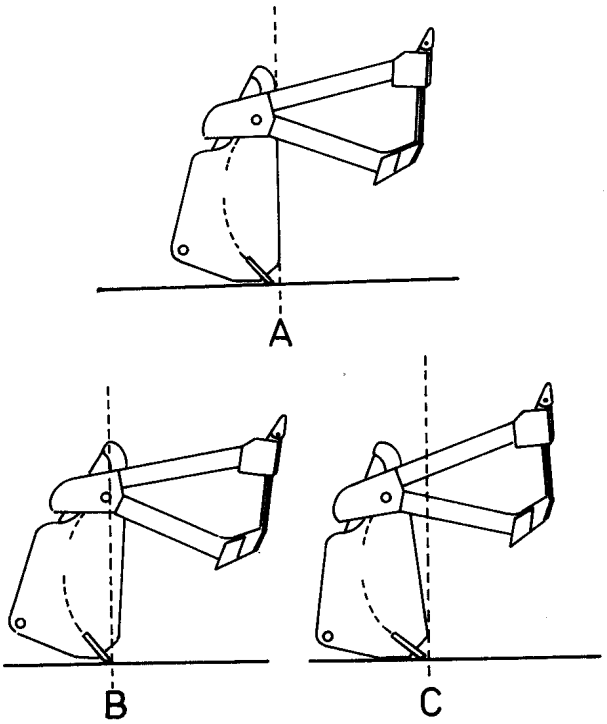

Fig. 4.36. "Dozer Blade Pitch" Position.
A. Clam Product Graphic

https://truckmanualshub.com/

LOADER OPERATIONS

To use the multi-purpose bucket as a clamshell, open the clam until the indicator is at the bottom or completely open (A, Fig. 4.37).

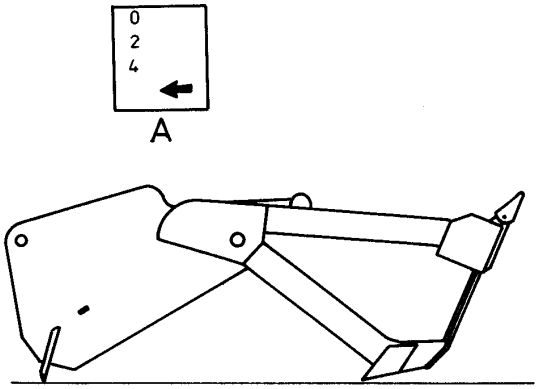

Fig. 4.37. Multi-purpose Bucket set in "Clamshell" Position.

A. Clam Product Graphic

4.18. LOADER TECHNIQUES

Terrain, footing conditions, types of materials being worked and maneuvering space determine the speed at which the loader can function. When the bucket is at work, keep the engine speed at full throttle and operate in the first (1) gear transmission range.
Use gear range two (2) and three (3) for traveling purposes. The techniques for using the loader as described below are not intended to be all inclusive. Each work situation will vary. Loader operation may be altered for each particular application for its best efficiency. When possible, start all jobs from relatively level ground. If necessary, level an area large enough to provide sufficient working space. This prevents back and forth pitching of the loader and will result in easier operation. Avoid wheel spin whenever possible; this wastes effort and causes ruts and piles that pitch and tilt the loader. In cold weather, this material can freeze and cause additional difficulty the following day.

4.18.1. LOADING, TRANSPORTING AND PILING

1. When loading from a bank or stockpiling, use the V-method shown in Fig. 4.38, or the step loading method shown in Fig. 4.39. Keep the trucks close to the work area to minimize loader travel. Keep work areas clean and level. When possible, spot the next truck to be loaded on the opposite side as shown in Fig. 4.38.

https://truckmanualshub.com/

LOADER TECHNIQUES

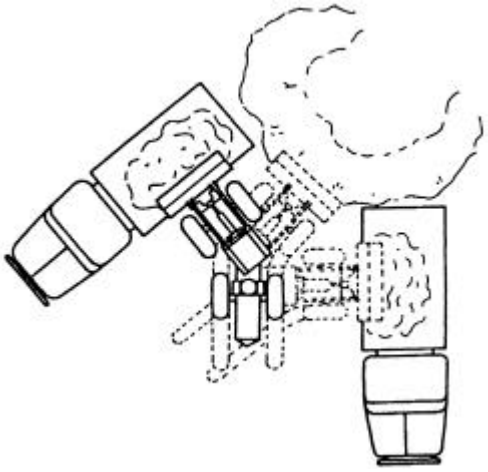

Fig. 4.38."V" Loading Method

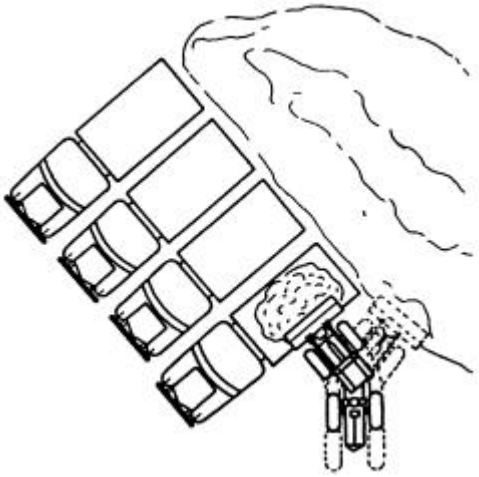

Fig. 4.39. Step Loading Method

Approach the bank or stockpile with the engine at full governed speed. Keep the bucket flat, working into the material at or near ground level. As the bucket penetrates the material, raise the bucket slightly. When the material boils to the top of the spillboard, roll the bucket all the way back, raise the bucket to provide ground clearance and, at the same time, disengage the forward travel of the loader as shown in Fig. 4.38. Back away in an arc from the bank or stockpile as show in Fig. 4.38 and 4.39 just far enough to allow turning of the loader for the approach to the truck. Digging in hard material can be aided by "wiggling" the bucket edge immediately after penetration. Operate the bucket control lever alternately between the roll back and dump positions. This action will loosen the material and improve bucket loading. Coordinated operation of the two hydraulic control levers as the bucket enters the material will yield satisfactory bucket loads. The boom assy need not be fully raised to dump the bucket. Adjust the dump height to the height of the side of the loaded vehicle.

NOTE: *The boom assembly need not be fully raised to load the bucket. Maximum bucket loading can be obtained before the bucket reaches the operator's eye level.*

Approach the bank or stockpile with the engine at full governed speed. Keep the bucket flat, working into the material at or near ground level. As the bucket penetrates the material, raise the bucket slightly. When the material boils to the top of the spillboard, roll the bucket all the way back (Fig. 4.40 and 4.41).

Raise the bucket to provide ground clearance and, at the same time, disengage the forward travel of the loader. Back away in an arc from the bank or stockpile as shown in Fig. 4.38 and 4.39 just far enough to allow turning of the loader for the approach to the truck.

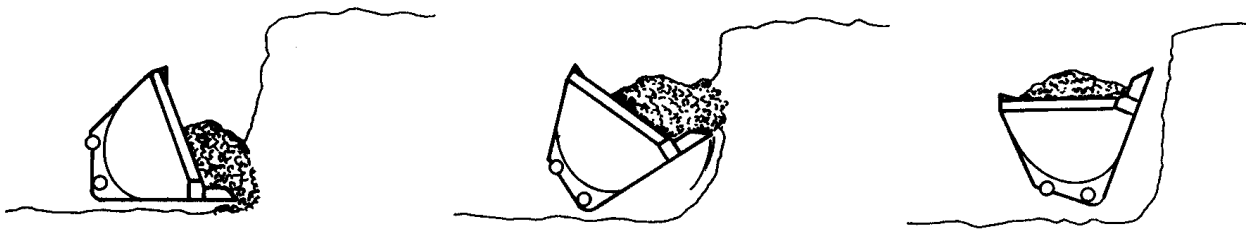

Fig. 4.40. Bank Loading (Working into Material)

https://truckmanualshub.com/

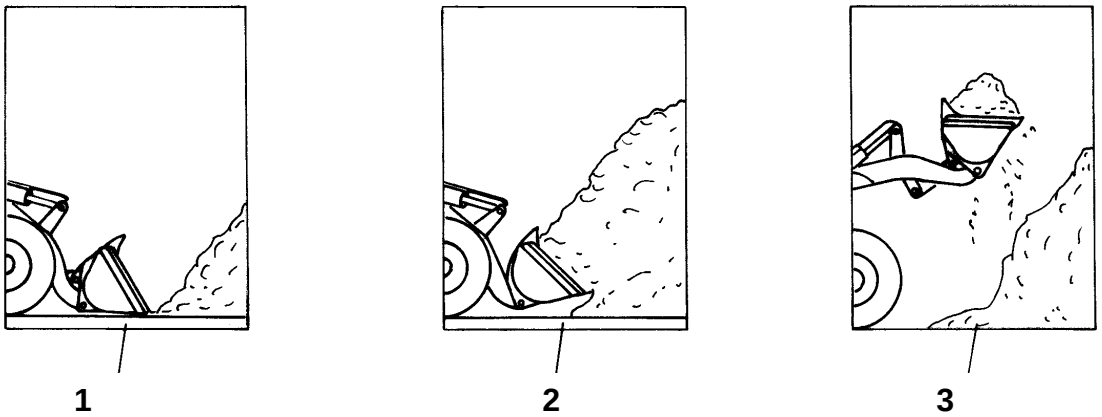

Fig. 4.41. Stockpile Loading

1. Approach 2. Thrust and Load 3. Backaway

2. To use the multi-purpose bucket for scraping, position the bucket on the ground and open the clam until the indicator points to "2" or "4" on the clam product graphic (A, Fig. 4.42) according to the desired depth of cut.

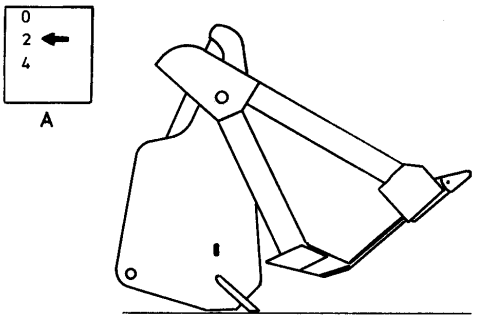

Fig. 4.42. Multi-purpose Bucket set in "Scraper" Position.

A. Clam Product Graphic

3. To use a multi-purpose bucket as a bucket, roll the bucket forward or backward and move the machine forth. The cutting edge will penetrate into the ground till the clam's cutting edge gets into full contact with the ground (Fig. 4.43).

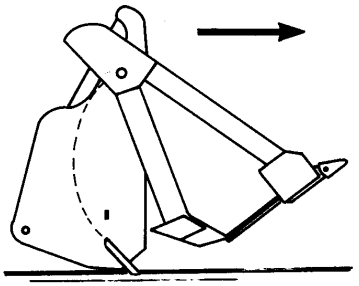

Fig. 4.43. Starting to Load

https://truckmanualshub.com/

LOADER TECHNIQUES

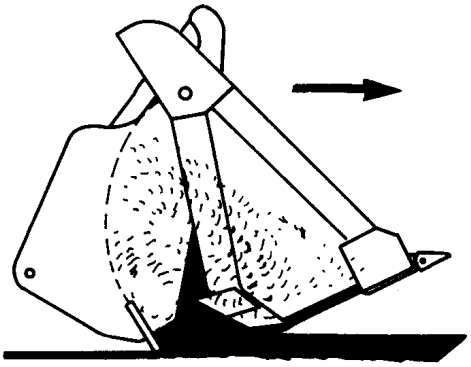

Fig. 4.44. Loading

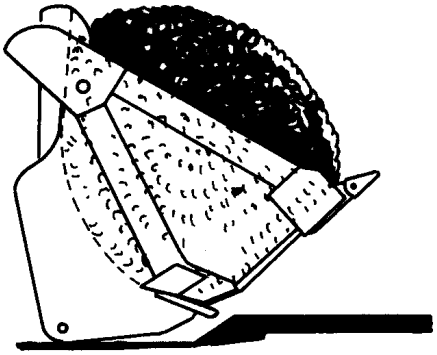

Fig. 4.45. Full Bucket

Carry on driving the machine forward till the bucket is filled with spoil (Fig. 4.44). Then roll the bucket back and close the clam (Fig. 4.45). Raise the bucket over the ground and transport the spoil to the dumping area.

4. When bank loading, keep the cutting edge flat as shown in Figure 4.46. Rolling the bucket back too far forces the flat of the cutting edge against the bank preventing the bucket from digging. This non-productive maneuver causes waste of power and time and possible damage to the bucket cylinders and linkage.

5. When stockpiling, move each load only once and keep travel distance down to a minimum. When possible, locate stockpiles as close as possible without hindering other work on the site.

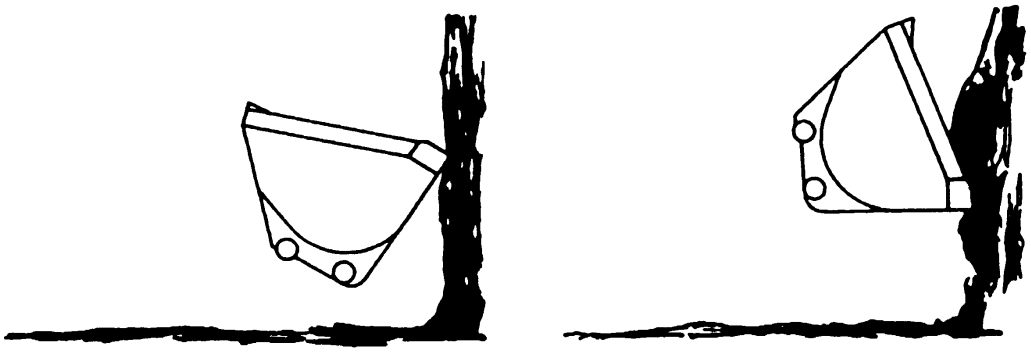

Fig. 4.46. Bank Loading

6. Transport filled bucket in the roll back position close to the ground (Fig. 4.47). If it is necessary to carry the bucket raised in transit, the operator should use increased caution. Perform all steering and shifting as smoothly as possible. Use the lower transmission gear range for bucket loading and the transportation of loads. The higher gear range may be used for making return trips to the loading sites.

WARNING! Transport loads with bucket in the carry position only. A loaded bucket must never be transported in the fully raised boom or with boom in horizontal position.

https://truckmanualshub.com/

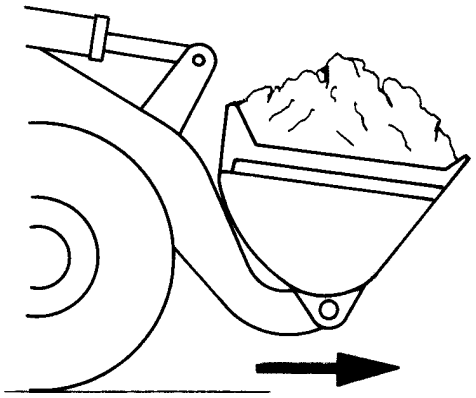

Fig. 4.47. Transporting full Bucket

7. Upon reaching the truck, raise the bucket high enough to clear the truck body. Reduce forward speed and dump the load slowly (Fig. 4.48). This will reduce the shock of weight transfer to the rear axle when the bucket is emptied. Shake the bucket and raise the boom to loosen dirt from within.

   When the bucket empties, close it. Back the loader away from the truck, lower the boom and return to the loading site.

   If the boom height is insufficient to clear the truck pack or the loaded container, build a ramp out of hard ground.

   Using the automatic boom kick-out and bucket leveler is particularly recommended in continuous operation of even working cycle. For this kind of operation the positioning of the truck receiving the spoil is of importance.

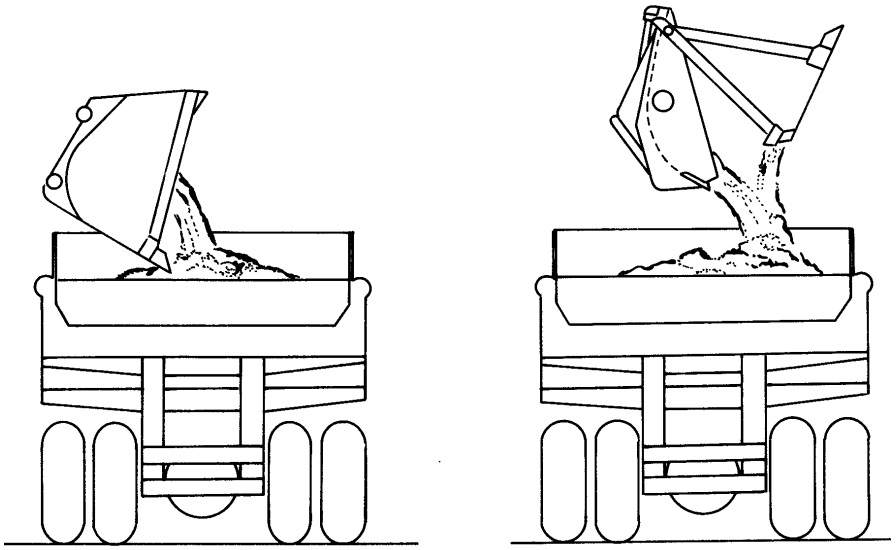

Fig. 4.48. Dumping Into Truck

https://truckmanualshub.com/

8. When transporting trees or other large objects, always balance the load as shown in Fig. 4.49. Balance the load when picking it up to prevent twisting the boom assembly and linkage.

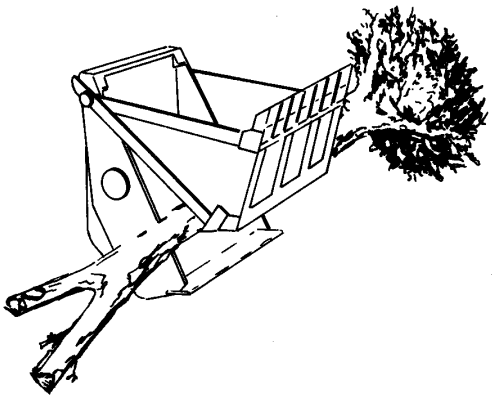

Fig. 4.49. Transporting Trees with Multi-purpose Bucket

9. Lower loaded or unloaded bucket to the ground when waiting for any length of time.

10. Put enough loose rock or dirt into the truck first to act as cushioning material before proceeding to load larger rocks (Figure 4.50). Place large rocks into the center of the truck from the lowest possible height.

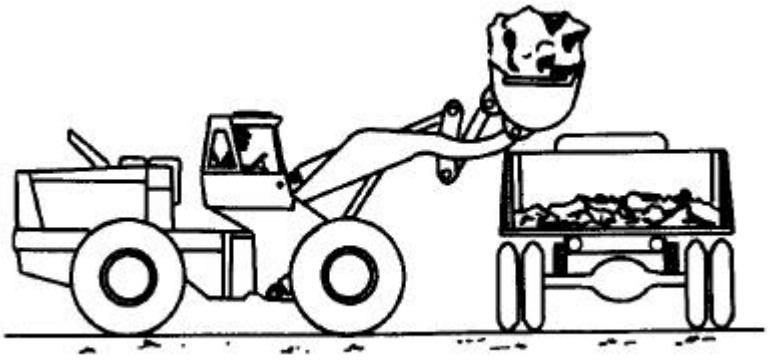

Fig. 4.50. Dumping Large Rocks Into Truck

Plan excavating jobs so that most of the work can be done with the loader being driven forward, rather than being backed out. Use as flat a ramp as possible. A steeper ramp can be used when driving forward rather than in reverse.

Always feed the bucket into the ground gradually until the desired depth of cut is obtained. When selecting the gear range and determining the depth of cut, allow for an increase in resistance as the load increases. It may be necessary to raise the lift arms slightly to obtain greater traction.

Less loading effort is required when the material can be moved downhill.

WARNING! Never travel with an unstable and solid rock.

https://truckmanualshub.com/

4.18.2. DIGGING, CLEARING AND LEVELING

1. When digging or excavating lower the bucket to the ground. Adjust the angle of the cutting edge when the machine moves forward (Fig. 4.52). Change inclination of the angle of the cutting edge and cutting depth using the boom and bucket control levers depending on bucket filling. Establish the parameters to obtain the best bucket filling. When the bucket is full, roll it back and raise it clear off the ground and carry the load to the desired dump area.

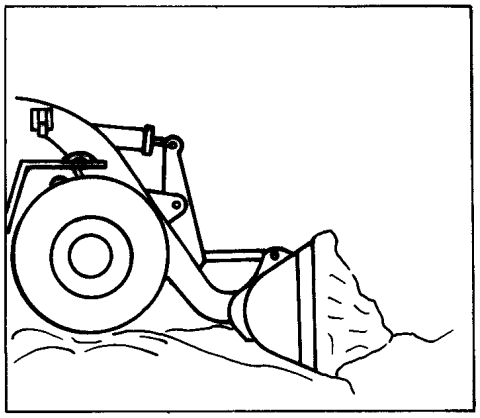

Fig. 4.51. Digging or Excavating

Clearing an excavation (Fig. 4.52) may be performed with the bucket partly in the dump position by disposing of the material carried in the bucket.

It is recommended to clear an excavation a little above the ground level because after compaction the ground will be level. Approach an excavation at the right angle and stop the front wheels at a safe distance from the edge of the excavation.

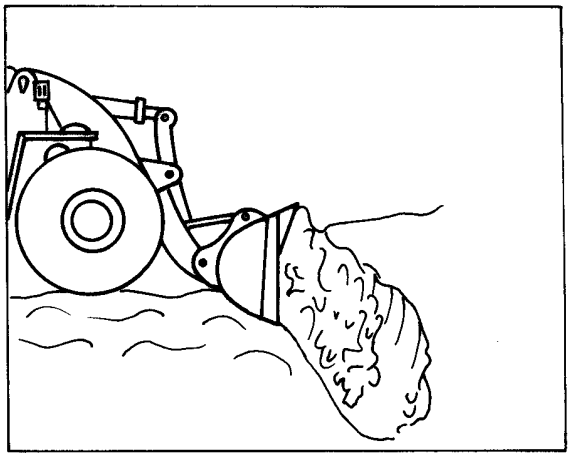

Fig. 4.52. Filling an Excavation

WARNING! Never backdrag, push any objects (trees, rocks, etc) with the bucket in the utmost dump position as due to unfavorable distribution of forces a serious damage to loading mechanism can result. It is particularly unfavorable when operating with boom raised.

https://truckmanualshub.com/

LOADER TECHNIQUES

WARNING! Do not operate close to dangerous overhangs. Unskillful operation of the loader may result in occurrence of overhangs that may slide on the loader. Prevent occurrence of the overhangs or remove them using other methods e.g. firing, digging from the top, etc.

Sequence of bank loading is shown in Fig. 4.53.

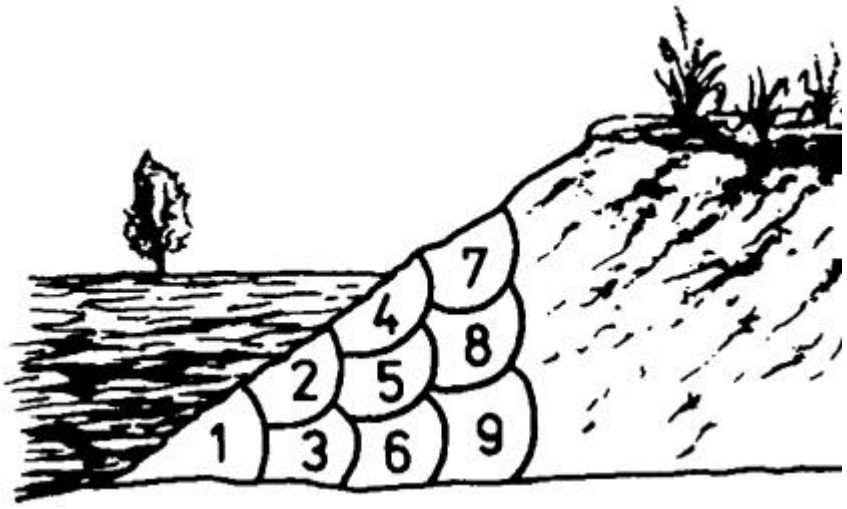

Fig. 4.53. Bank Loading

1. With the clam fully open, the multi-purpose bucket can be used as a bulldozer. Position the bucket as shown in Fig. 4.54 for digging.

   When the ground is hard or frozen and the area must be ripped before it can be worked, rip a relatively small section and work it to grade before enlarging the cut. This will require ripping each section only once, not every morning after the ground has refrozen. To prevent breaking or bending scarifier teeth, never turn the loader while the scarifier teeth are in the ground.

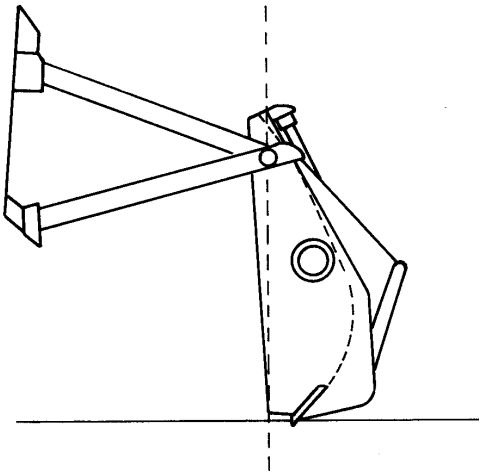

Fig. 4.54. Bulldozing with Multi-purpose Bucket

https://truckmanualshub.com/

3. When clearing trees, raise the bucket high to gain leverage and make contact gently to reduce possible harm to the operator and loader. The bucket must be positioned with bottom parallel with the ground. DO NOT push with the top of the bucket (Fig. 4.55)

WARNING! When using the machine for site clearing and tree removal, protect the operator from trees and branches.

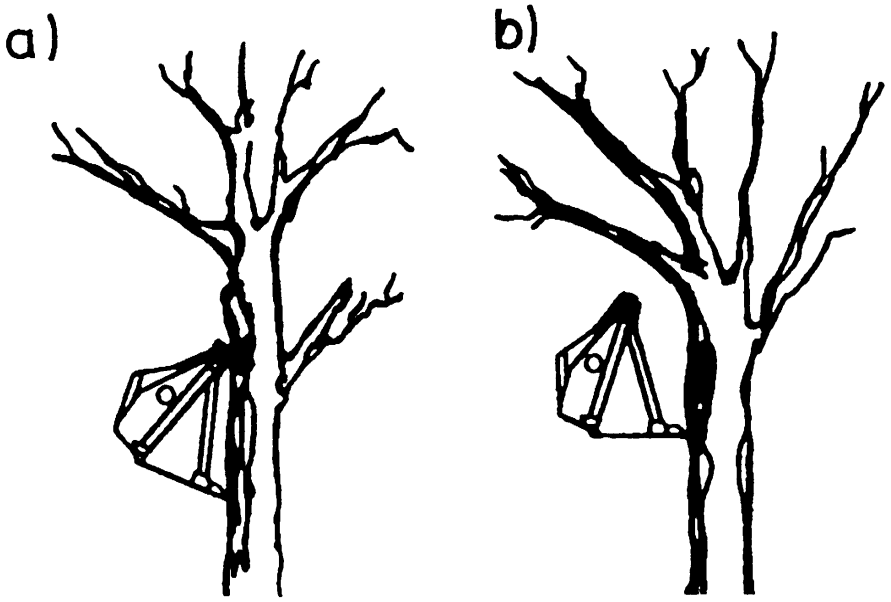

Fig. 4.55. Position of the Bucket When Removing Small Tree

A. Wrong B. Right

Heavy roots of large trees may require cutting from several sides of the tree (Fig. 4.56). Use a cable to topple and remove trees from soft ground. Topple the tree, back the loader and lower the bucket to the ground and push the tree from the site.

Fig. 4.56. Removing Large Trees

https://truckmanualshub.com/

4. When clearing a rocky area, remove the small and loose rocks first, large and solid rocks can then be loosened and moved with less difficulty.

When loosening large or solid rocks, greater force and penetration can be obtained by digging under the rock with the bucket (Fig. 4.57). Lifting the rock with the bucket while pushing will increase traction i reduce wheel spinning.
Never use the clamshell to remove buried or anchored objects.

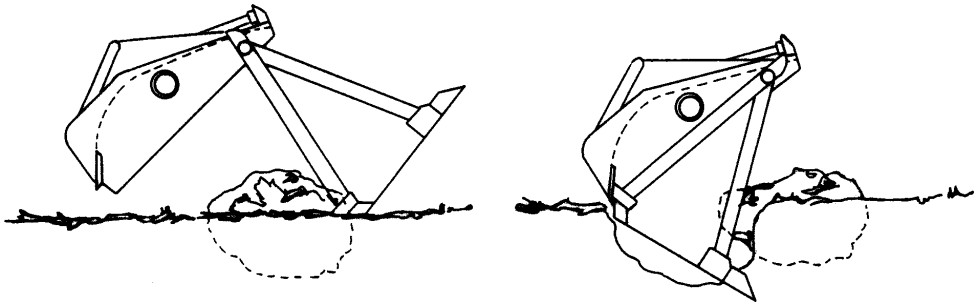

Fig. 4.57. Large Rock Removal

When finishing a non-solid material, position the bucket as shown in Fig, 4.58 or Fig. 4.59 and backdrag the loose material. This method is not recommended where abrasive material is common.

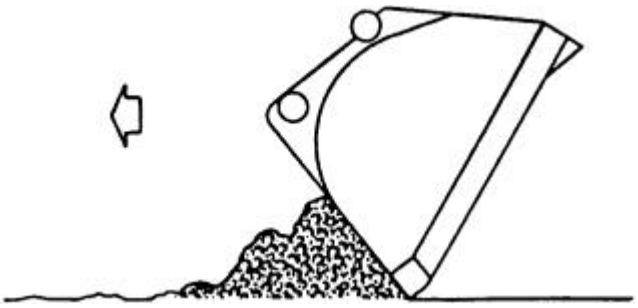

Fig. 4.58. Backdragging and Leveling

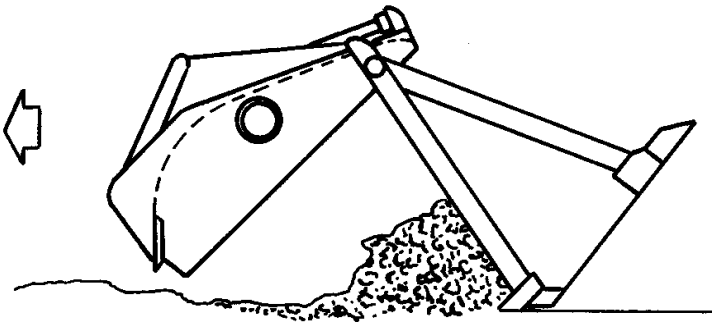

Fig. 4.59. Backdragging and Leveling with Multi-Purpose Bucket

https://truckmanualshub.com/

LOADER TECHNIQUES

By placing the multi-purpose bucket in the scraper position and opening the clam slightly, spreading of material can be done on the "run". The amount of spread can be controlled by the amount of clam opening (Fig. 4.60).

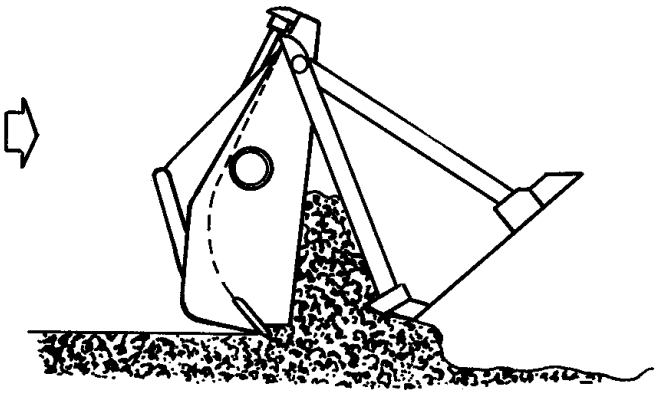

Fig. 4.60. Spreading with Multi-Purpose Bucket

5. With the clam fully open, the multi-purpose bucket can be used to bulldoze material. Position the bucket as shown in Fig. 4.61 for level grading. Position the bucket as shown in Fig. 4.62 for spreading or to obtain a lesser cut.

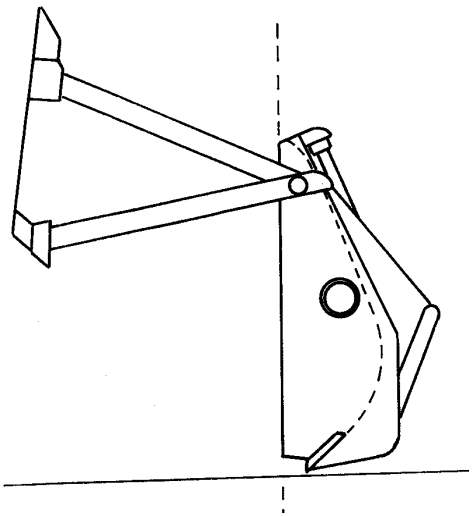

Fig. 4.61. Leveling with Multi-Purpose Bucket

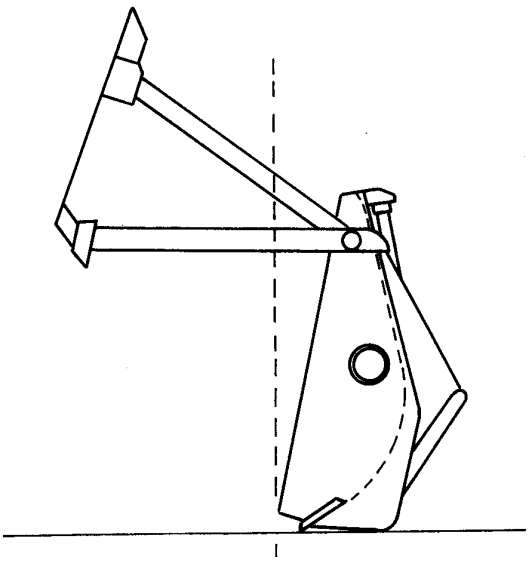

Fig. 4.62. Bulldozing with Multi-Purpose Bucket

6. Improper use of the multi-purpose bucket.

Much unnecessary damage can be done to multi-purpose buckets by subjecting them to uses for which they were not designed. The following illustrates some of the ways a multi-purpose bucket should NOT be used.

DO NOT use roll back force to pull stumps or buried objects from the ground – it may bend the clam (Fig. 4.63).

https://truckmanualshub.com/

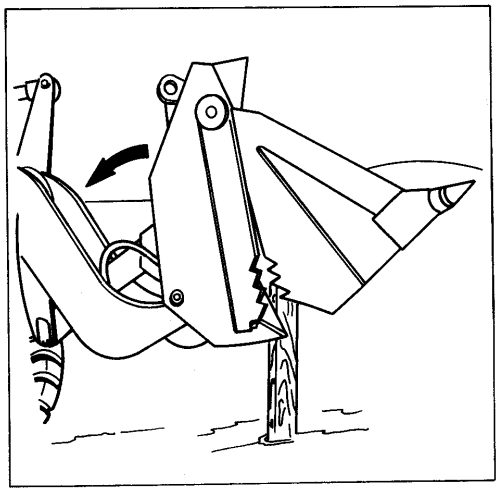

Wrong

Fig. 4.63. Removing Buried Objects with Multi-Purpose Bucket

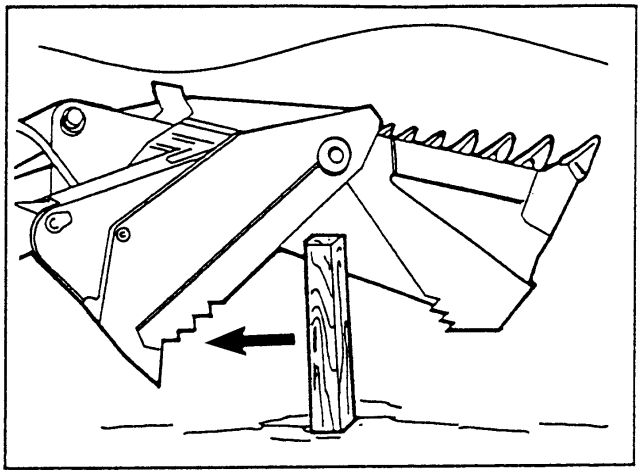

Wrong

Fig. 4.64. Backdragging with Multi-Purpose Bucket

DO NOT try to break off buried or anchored objects with the clam, while backdragging – it may bend the clam (Fig. 4.64).

DO NOT side load the clam against anchored objects – especially when open (Fig. 4.65). This may bend the sides of the clam.

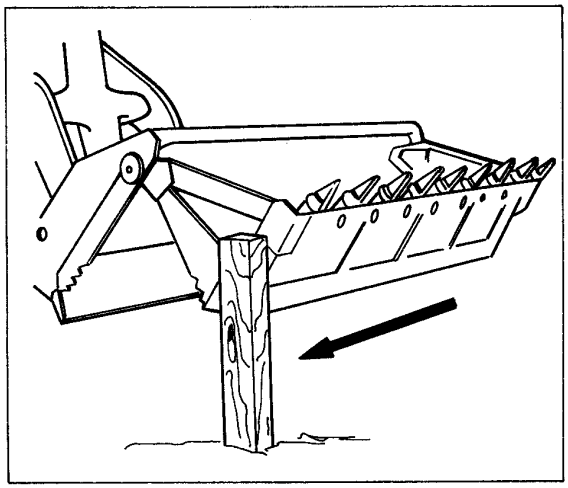

Wrong

Fig. 4.65. Side Loading the Clam against an Anchored Object

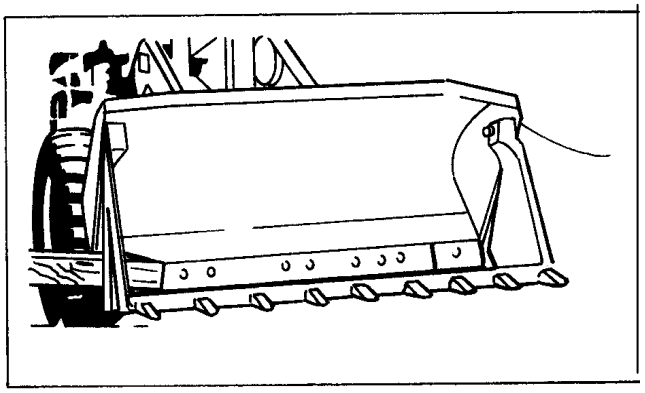

Wrong

Fig. 4.66. Uneven Stress to Clam

DO NOT clamp objects on only one side of the clam. It causes uneven stresses and may twist the clam out of the line (Fig. 4.66).

https://truckmanualshub.com/

LOADER TECHNIQUES

DO NOT clamp objects and use them as battering rams (Fig. 4.67). This may bend the clam and the blade.

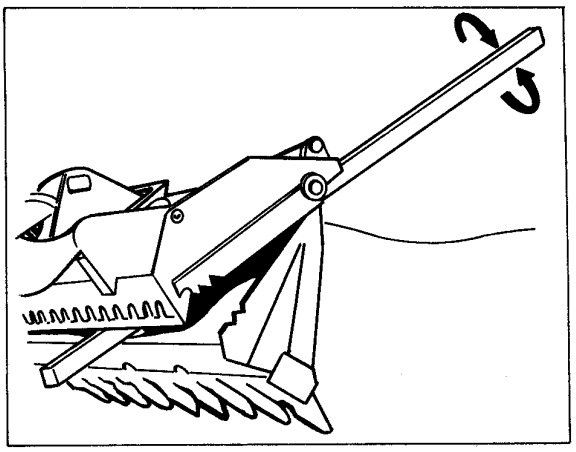

Wrong

Fig. 4.67. Using Clamped Objects as Battering Rams

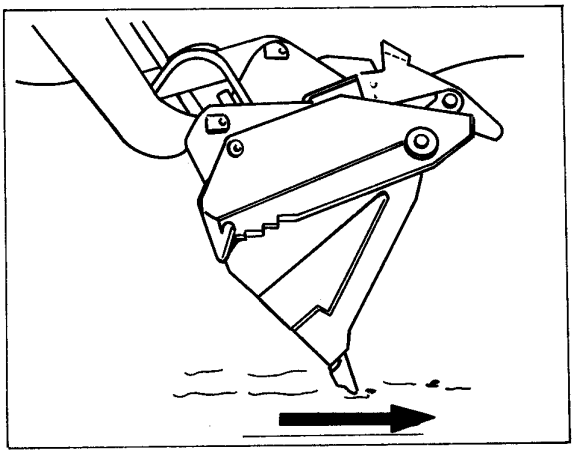

Wrong

Fig. 4.68. Grading with Multi-Purpose Bucket

DO NOT grade in the forward direction with the bucket in dump position (Fig. 4.68). This could cause damage to tilt cylinder and linkage.

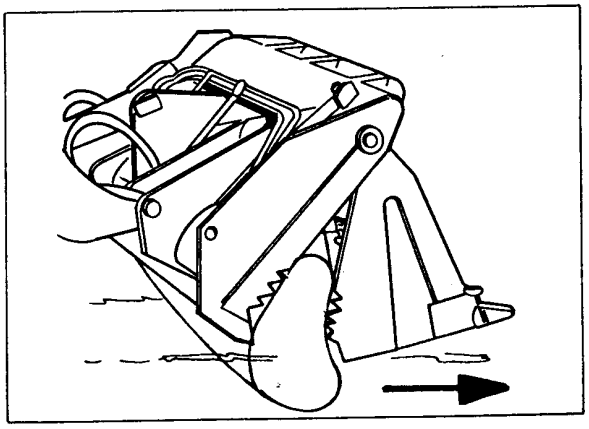

Wrong

Fig. 4.69. Twisting the Multi-Purpose Bucket out of Alignment

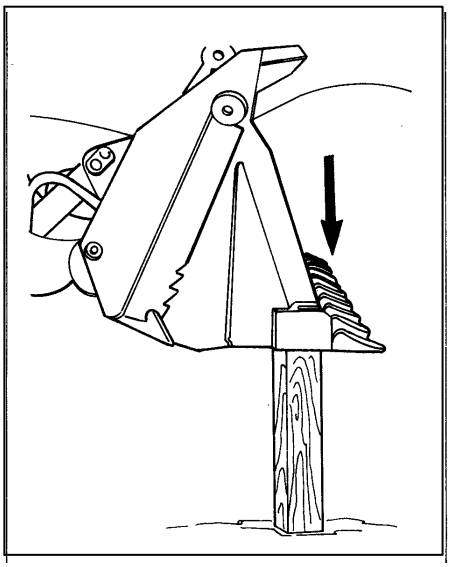

Wrong

Fig. 4.70. Using Multi-Purpose Bucket as Pile Driver

Do not charge a bank with an object caught between the clam and blade (Fig. 4.69). This can twist the clam out of alignment.

DO NOT use the bottom of the clam as a pile driver (Fig. 4.70). This will bend the clam.

https://truckmanualshub.com/

LOADER TECHNIQUES

DO NOT try to pick up objects too large to handle (Fig. 4.71). It may damage the bucket and linkage.

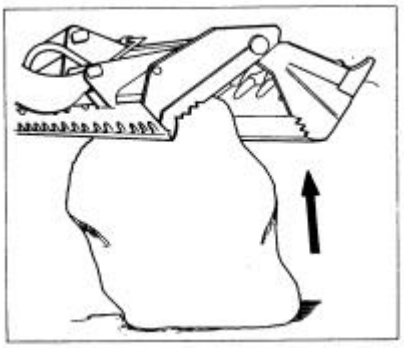

Wrong

Fig. 4.71. Picking up Large Objects with Multi-Purpose Bucket

4.19. ECONOMICAL OPERATION OF MACHINE

Fuel consumption during operation of a loader depends on many factors as: engine characteristics, load, terrain, operator' s skill and experience, manner of operation.

A relatively conclusive indicator of fuel consumption is the quantity of moved material per unit of consumed fuel. To reach the most favorable value of this ratio observe the following principles of loader operation:

- avoid long distance transporting of material,
- loading and pushing of material must be performed in a gear which ensures maximum drawbar pull (at high torque converter efficiency),
- take care to fill the bucket correctly during operation, use 1st and 2nd gear, avoid maximum speed of the engine,
- avoid stopping machine due to stall of the engine.

4.20. QUICKCOUPLING

The quickcoupling is a device installed on the boom, designed for quick fastening and removal of the mounted equipment such as a bucket, grapple, forklift, dozer blade etc.

The quickcoupling is an angle section frame fitted with an equipment bracket and two mounting pins controlled by two hydraulic cylinders (Refer to QUICKCOUPLING, Section 6).

The hydraulic hoses supplying the cylinders with oil are equipped with quick disconnect couplers.

The quickcoupling tool carrier is mounted on the boom with pins. It can be fitted on machines equipped with a 3-spool control valve or 2-spool control valve along with a pilot solenoid valve

The hydraulic schematic of a 520 C loader equipped with a 3-spool control valve is shown in Section 6.

The hydraulic schematic of a 520C loader equipped with a 2-spool control valve and a pilot solenoid valve (standard and upgraded version) is shown in Section 6.

https://truckmanualshub.com/

4.20. QUICKCOUPLING

4.20.1. QUICKCOUPLING WITH 3-SPOOL VALVE

1. HYDRAULIC SYSTEM

The hydraulic system controls the following functions of a machine:

- raising and lowering operations of the boom and tool carrier,
- operations of the mounted equipment.
- locking and unlocking of the quickcoupling mounting pins,
- securing the mounted equipment on the tool carrier.

Two hydraulic hoses supplying oil to the quickcoupling cylinders or alternately equipment hydraulic cylinders are routed along the boom. These hoses can easily be disconnected by hand and switched to their alternative application thanks to the quick couplers they are fitted with.

2. QUICKCOUPLING CONTROL

The quickcoupling is controlled from the operator's cab by means of a lever. In standard version the lever is located on the left of the bucket control lever, close to the operator. In upgraded machine, it is located on the right of the bucket and boom control lever. The lever controls the locking and unlocking function of the securing pins.

3. PIN LOCKING

To secure the equipment on the tool carrier (the pins in the locked position) push the lever away from the operator's seat. When released, the lever will automatically return to the hold position. The pins will remain in the locking position.

4. PIN UNLOCKING

To dismount the equipment mounted on the tool carrier (the removal of the pins), pull the lever back towards the operator's seat. When released, the lever will automatically return to the hold position. The pins will be retracted

5. INSTALLATION OF THE EQUIPMENT

To mount the equipment on the tool carrier, take the following steps:

- lower the tool carrier to the same level as that of the equipment fixture,
- drive the tool carrier onto the equipment mounting brackets,
- set the equipment securely on the tool carrier by rolling back the tool carrier until the equipment takes the horizontal position. In order to do so shift the bucket control lever into the roll back position,
- lock the equipment (see PIN LOCKING above)

6. REMOVAL OF THE EQUIPMENT

- lower the equipment and set it level on the ground,
- unlock the equipment from the tool carrier (see PIN UNLOCKING above),
- shift the bucket control lever into the dumping position slowly backing the machine away so as to drive the tool carrier away from the mounted equipment

https://truckmanualshub.com/

QUICKCOUPLING

4.20.2. QUICKCOUPLING WITH 2-SPOOL VALVE

1. HYDRAULIC SYSTEM

The hydraulic system controls the following functions of a machine:

- raising and lowering operations of the boom,
- operations of the mounted equipment.
- securing the mounted equipment on the tool carrier.

Two hydraulic hoses supplying oil to the quickcoupling cylinders are routed along the boom.

2. QUICKCOUPLING CONTROL

The quickcoupling is controlled from the operator's cab by means of a switch controlling a pilot solenoid valve (12, Fig. 4.2).

3. PIN LOCKING

To secure the equipment on the tool carrier (the pins in the locked position) switch the pilot solenoid valve switch into the ON position. In this position the electric circuit controlling the mounting pin cylinders is inactive.

4. PIN UNLOCKING

To dismount the equipment mounted on the tool carrier (the removal of the pins), place the switch in the "OFF" position.

5. INSTALLATION OF THE EQUIPMENT

Refer to Par. 5, section 4.20.1

6. REMOVAL OF THE EQUIPMENT

Refer to Par. 6, section 4.20.1

4.21. RIDE STABILIZING MECHANISM

Ride stabilizing mechanism is a hydraulic system consisting of a block of hydraulic valves and accumulators preset for a pressure of 1.6 [MPa] (16 [bars]) (there are 5 accumulators in 515C and 6 in 520C loader). All the components are built-in in the loader's front frame.

When a loader travels at speeds exceeding 5 [km/h] whether the bucket is empty or full, the difference of pressure on the two sides of the boom cylinder pistons caused by unevenness of ground causes machine pitching harmful to the operator.

The stabilizing mechanism improves machine stability, which results in:

a) greater comfort of traveling,
b) increase of traveling speed along driveways to the work area,
c) increase of travel speed with full bucket.

The stabilizing mechanism dampens machine's pitching (the values of acceleration on the operator's seat can thus be reduced by half).

The RSM system is switched on automatically at a speed in excess of 5 [km/h]. The connection of the mechanism with the hydraulic system is shown in the hydraulic schematic in Section 6.

https://truckmanualshub.com/

RIDE STABILIZING MECHANISM

4.21.1. DRIVING A MACHINE WITH RSM SYSTEM

The RSM mechanism is switched on with a double-pole switch fitted with a illuminating light located on the left hand side of the instrument panel (Fig. 4.2 and 4.2A). It has two positions: ON and OFF.

On turning the switch on, the stabilizing mechanism is actuated as soon as the machine speed exceeds 5 [km/h], the minimal speed at which pitching occurs.

It is not recommended to switch on the mechanism while carrying spoil at short distances as sudden ""“jumps" of the bucket up to 250 [mm] can occur.

NOTE: *If pitching persists even when the RSM mechanism is on, contact an Authorized Dealer of Construction Machines, to correct the cause. Do not perform any repairs of either the valves or hydraulic accumulators on your own.*

4.22. HIGH-DUMP BUCKET

The high-dump bucket is one of optional auxiliary equipment mounted on a 515C loader fitted with a 3-spool control valve. The assembly consists of a bucket, bucket frame and cylinders.

The assembly is installed on the boom. Any other bucket can be installed instead of the high-dump bucket (Refer to HIGH-DUMP BUCKET, Section 6).

To keep the rules of work safety and proper machine use to protect its excessive wear and the wear of the hydraulic system do not use the high-dump bucket in the soil, whose specific gravity is greater than 1300 [kg/m^3]. Working in soils exceeding this gravity, particularly when the bucket is full can damage the hydraulic system or cause the loss of stability and machine tipping over.

4.22.1. HIGH-DUMP BUCKET CONTROL

The bucket is controlled with a lever from the operator’s cab. The lever is located on the left of the standard bucket control lever or on the right of the boom and bucket control lever in upgraded version.

BUCKET OPENING
To open the bucket, push the control lever forward. When released the lever will automatically return to the hold position.

BUCKET CLOSING
To close the bucket, pull the control lever back. When released the lever will automatically return to the hold position.

4.22.2. OPERATING THE HIGH-DUMP BUCKET

Load the bucket and raise it up to the standard maximal height of dump in the same manner as the standard bucket. Then with the bucket still closed, push the high-dump control lever forward. The bucket will start opening while the boom is continuing to rise higher then the standard dump height. After dumping pull the high-dump control lever back, drive the machine away from the dumping place, lower the boom and steer the machine to the working area.

https://truckmanualshub.com/

SECTION 5

MAINTENANCE

https://truckmanualshub.com/

SECTION CONTENTS

5.1. General Precautions 3
5.2. Scheduled Maintenance Guide 4
5.2.1. Ground Level Inspection 6
5.3. Maintenance and Service Chart 6
5.3.1. Service Points 8
5.4. Lubrication 9
5.4.1. When Shipped 9
5.4.2. When Serviced 9
5.4.3. Lubricant Selection 9
5.4.4. Viscosities 9
5.4.5. Refill Specifications and Capacities 10
5.4.6. Lubricant, Coolant and Fuel Equivalents 11
5.4.7. Lubricating Fittings 12
5.5. Seasonal Preparations 14
5.5.1. Fuel System 14
5.5.2. Cooling System 14
5.5.3. Electrical System 14
5.6. Air Cleaning System 15
5.6.1. Air Cleaner 15
5.6.2. Primary (Outer) Filter Element 15
5.6.3. Safety (Inner) Filter Element 17
5.6.4. Precleaner Screen 17
5.6.5. Dust Vacuator Valve 18
5.6.6. Checking Air Intake System for Leaks 18
5.7. Brakes 19
5.7.1. Service Brake System 19
5.7.2. Checking the Brake Fluid Level 19
5.7.3. Changing the Brake Fluid 20
5.7.4. Filling and Venting the System 21
5.7.5. Parking Brake 21
5.8. Cooling System 22
5.8.1. Water 22
5.8.2. Antifreeze 23
5.8.3. Radiator Cap 23
5.8.4. Checking the Coolant Level 24
5.8.5. Draining the System 25
5.8.6. Cleaning the System 26
5.8.7. Filling the System 26
5.8.8. Cleaning the Radiator 27
5.9. Drive Axles 27
5.9.1. Checking the Oil Level 27
5.9.2. Servicing the Breather 28
5.9.3. Changing the Oil 28
5.10. Electrical System 29
5.10.1. Electric Wires 29
5.10.2. Circuit Breakers 29
5.10.3. Bulb and Lamp Replacement 29
5.10.4. Batteries 29
5.11. Engine 31
5.11.1. Checking the Crankcase Oil Level 31
5.11.2. Changing the Crankcase Oil and Filter 32
5.11.3. Checking the Condition and Tension of Belts 33

https://truckmanualshub.com/

5.11.4. Checking the Condition of Fan and Hub 34
5.11.5. Inspection of Idler Pulley 35
5.11.6. Adjustment of Engine Valves 35
5.12. Ether Injector 37
5.13. Fuel System 38
5.13.1. Fuel Tank 39
5.13.2. Changing the Fuel Filters 39
5.13.3. Fuel Filter with Water Separator 40
5.13.4. Venting the Fuel System 41
5.14. Hydraulic System 42
5.14.1. Checking the Reservoir Oil Level 42
5.14.2. Changing the Hydraulic System Oil 44
5.14.3. Changing the Hydraulic Oil Return Filter 45
5.14.4. Servicing the Hydraulic Reservoir Breather 46
5.15. Seat Belt 47
5.16. Steering Gear 47
5.17. Tires and Rims 47
5.18. Transmission System 48
5.18.1. Checking the Oil Level 48
5.18.2. Changing the Oil 49
5.18.3. Changing the Transmission Pressure Filter 50
5.18.4. Cleaning the Transmission Suction Strainer 52
5.18.5. Servicing the Breather 52
5.19. ROPS Cab and ROPS Canopy 53
5.20. Hood Assembly and Radiator Grill 54
5.21. Loader Equipment 55
5.22. Air Conditioner or Heater (if Equipped) 56
5.22.1. Inside Filter 56
5.22.2. Outside Filter 57
5.22.3. Air Conditioner Off Season Care 57

https://truckmanualshub.com/

5.1. GENERAL PRECAUTIONS

WORK SAFELY - FOLLOW THESE RULES

WARNING!: This symbol and text with bold letters is used throughout this manual to call attention to instructions concerning your personal safety. Observe and follow these instructions. Be certain anyone operating and servicing this machine is aware of these rules. Failure to follow these rules may result in injury or death.

A CAREFUL OPERATOR IS THE BEST INSURANCE AGAINST AN ACCIDENT

GENERAL SAFETY PRECAUTIONS

The procedures in this section contain many notes and precautions which should be followed along with standard safety procedures to minimize the possibility of personal injury or improper service.

Improper service could compromise machine's safety or cause it to function improperly, which could result in personal injury or death. Review the precautions listed in Section 2, "SAFETY PRECAUTIONS."

Do not attempt to do repairs you do not understand. Use your "Service Manual" or consult your Authorized Distributor for information.

Do not jump on or off the machine. When working under the machine, turn off the electric system master switch, apply parking brake and tag controls to warn against starting the machine.

When servicing in the area of the engine fan or belts, take care to prevent accidental cranking of the engine. Turn off and lock the electric master switch and tag the machine.

It is not possible to anticipate all conceivable ways or conditions under which this machine may be serviced or to provide precaution for all the possible hazards that may result. Safety is always the most important rule.

Constantly be aware of dangers involved in working on the machine and take proper precautions. Standard and accepted safety precautions and equipment should be used.

This machine is assembled using high strength fasteners. Do not substitute. Replacement fasteners must be of the same size and strength as the originals (refer to Section 6, SPECIFICATIONS). Tighten fasteners to the proper torque value specified in Section 6, SPECIFICATIONS, unless otherwise specified.

Refer to Spare Parts Catalog of respective model for all replacement parts.

Use safety goggles, hard hats, safety shoes, heavy duty gloves and other protection during cutting, grinding, chiseling, prying or any other process which could cause material removal or projectiles.

Many machined parts are hardened and can chip. Use the proper size and type of tool for the job being done. Select a wrench that fits and be sure it is on straight. Keep your tools clean and in good condition. Some procedures require the use of tools specially designed for that specific purpose. Before substituting another tool or procedure, you must be completely satisfied that neither personal safety nor the performance of the machine will be endangered.

Scheduled maintenance is a normal procedure necessary to provide a machine’s proper operation.

WARNING! For your personal safety carry out all maintenance service in accordance with specified scheduled maintenance guide and instructions.

To prolong the service life of your equipment follow the scheduled maintenance listed in 5.2. and 5.3.

https://truckmanualshub.com/

5.2. SCHEDULED MAINTENANCE GUIDE

Every 10 Hours of Operation (daily maintenance)

1. Perform the ground level inspection. Refer to 5.2.1.
2. Check the hydraulic tank oil level and add oil if necessary. Refer to 5.14.1.
3. Check the transmission oil level and add oil if necessary. Refer to 5.18.1.
4. Check the coolant level in the radiator. Refer to 5.8.4.
5. Check the engine oil level. Refer to 5.11.1.
6. Check the brake fluid level in the master cylinder housing. Refer to 5.7.2.
7. Visually check the condition of the fan blades and fan drive belt. Refer to 5.11.3 and 5.11.4.
8. Check the tires for cracks, cuts delamination, check the air pressure (inflate if necessary). Refer to 5.17.
9. Check and clean the precleaner screen, if necessary. Refer to 5.6.4.
10. Check the service indicator and perform service if the filter contamination is signaled by the indicator. Refer to 5.6.2 and 5.6.3.
11. Drain water and sediment from the fuel tank. Refer to 5.13.1.
12. Drain water and sediment from the fuel filter water separator. Refer to 5.13.3.
13. Refill the fuel tank at the end of each day's operation. Refer to 5.13.1.

Every 50 Hours of Operation

1. Perform the service as specified in "Every 10 hours of operation"
2. Air clean the radiator core. Refer to 5.8.8.
3. Lubricate:

   – the drive shafts splines and pivots,
   – rear axle bolster pivots,
   – cylinder pivots (steering, boom, bucket),
   – center articulation pivots,
   – transfer drive bearings,
   – the boom and bucket pivots,

   Refer to 5.4.7.

4*) Clean transmission system suction strainer. Refer to 5.18.4.
5*) Replace transmission system pressure filter element. Refer to 5.18.3.
6*) Replace hydraulic system return filter element. Refer to 5.14.3.

.

*) after initial 50 hours of operation only

Every 250 Hours of Operation or 6 Months

1. Perform the service as specified in "Every 50 hours of operation".
2. Check the air intake system for loose clamps, the condition of hoses and tubes. Refer to 5.6.6.
3. Check the wheel mounting hardware for torque. Refer to 5.17.
4. Check the operation of the parking brake. Refer to 5.7.5.
5. Check the drive axles (differential and planetaries) oil level. Refer to 5.9.1.
6. Change the engine crankcase oil and engine oil filter. Refer to 5.11.2.

https://truckmanualshub.com/

SCHEDULED MAINTENANCE GUIDE

Every 500 Hours of Operation

1. Perform the service as specified in "Every 250 hours of operation"
2. Check antifreeze concentration if in winter. Refer to 5.8.2.
3. Replace the fuel filters. Refer to 5.13.2.
4. Lubricate the tracking system linkage pivots. Refer to 5.3.1 (only standard version).

Every 1000 Hours of Operation

1. Perform the service as specified in "Every 500 hours of operation"
2. Clear the hydraulic reservoir breather. Refer to 5.14.4.
3. *) Replace the transmission oil pressure filter. Refer to 5.18.3.
4. Change the oil in the transmission system, clean the suction strainer and transmission breather. Refer to 5.18.2., 5.18.4, 8.15.5.
5. Change the oil in drive axles (differential and planetaries). Clean the axles breathers. Check the service brake discs for wear. Refer to 5.9.2, 5.9.3.
6. *) Change the oil in the hydraulic system. Refer to 5.14.2.
7. *) Change the hydraulic tank return filter element. Refer to 5.14.3.
8. **) Check and adjust engine valve lash. Refer to 5.11.6.
9. Check the condition of the fan hub. Refer to 5.11.4.
10. Check the condition of the idler pulley assembly. Refer to 5.11.5.
11. Check and adjust the drive belts tension. Refer to 5.11.3.
12. Change the steering gear oil (only standard version). Refer to 5.16.

*) Replacement every 1200 hours of operation is permissible,
**) After the initial 1000 hours. Then service every 2000 hours of operation.

Periodic (at least once a year or as required)

1. Check the condition of the hydraulic and pneumatic lines and electrical wires. Repair or replace if necessary.
2. Check the condition of the safety belt and replace if necessary. Weak spots and damage of the seat belt are inadmissible. Refer to 5.15.
3. Check the bucket teeth and cutting edge for wear (and forklift tines).
4. Check the condition and torque of the ROPS cab-to-frame mounting hardware. Refer to 5.19.
5. Deaerate the service brake system. Refer to 5.7.4.
6. Remove and clean the fuel tank strainer (if equipped). Clean the fuel tank breather. Refer to 5.13.1
7. Change fuel strainer. Refer to 5.13.2
8. Clean and replace the air cleaner elements. Refer to 5.6.2 and 5.6.3.
9. Replace the ether container (if empty). Refer to 5.12. (optional attachment).
10. Lubricate:

– the control levers,
– the pedals,
– the superstructure and cab hinges, etc.
Refer to 5.4.7.

11. Clean the air conditioner or heater filters (if equipped). Refer to 5.22.

https://truckmanualshub.com/

SCHEDULED MAINTENANCE GUIDE

Every 2000 Hours of Operation or every year (per Engine Operation Manual)

1. Perform the service as specified in "Every 1000 hours of operation"
2. Change the brake fluid. Refer to 5.7.3.
3. Clean the cooling system and change coolant. Refer to 5.8.5, 5.8.6., 5.8.7.
4. Check the condition of the muffler. Refer to Engine Operation Manual.

5.2.1. GROUND LEVEL INSPECTION

1. Loader Equipment: condition, efficiency.
2. Radiator: condition, evidence of leakage and condition of the grill (rod or sand - if equipped).
3. Hydraulic components: condition, leakage, operation.
4. Drive train: condition, leakage, noise, clearance.
5. Wheels: condition of tires, tire mounting on wheel rims.
6. Engine compartment: fuel, air intake, exhaust, lubrication and cooling system for leaks.
7. Control panels: check the condition and operation of instruments, gauges and warning lights.
8. ROPS: the condition of ROPS cab, operator's seat with seat belt, access openings.

No defects of ROPS structure are permissible that may adversely affect its protection in case of machine rollover.

9. Visually check the screw joints, particularly:

- Drive axle to frame mounting,
- Driveshaft connecting,
- Center articulation pivot mounting,
- Wheel mounting,
- Cab to frame mounting.

5.3. MAINTENACE AND SERVICE CHART

IMPORTANT: *The points of service are individually explained in more details in the following text. Always use clean lubricators and containers. Wipe the dirt from the fittings before fresh grease is added. Use the hourmeter to determine service intervals. Do not use the warning lights to determine the service intervals.*

IMPORTANT: *The intervals of time between services are based on the average operating conditions. In severe conditions of operation reduce the interval of time between the services.*

Chart 1.

Service Interval	Ref.No	Point of Service	Service Points	Lubricant	Service
△ Every 10 Hours		Ground Level Inspection		-	Perform
	1	Brake Fluid Level	1	-	Check
	2	Radiator Coolant Level	1	-	Check
	3	Engine Crankcase Oil Level	1	EO1	Check
	4	Hydraulic Reservoir Oil Level	1	HDTF/EO2	Check
	5	Transmission Oil Level	1	HDTF	Check
	6	Fuel Tank	1	-	Drain Water and Sediment
	3	Water Separator	1	-	

https://truckmanualshub.com/

MAINTENACE AND SERVICE CHART

Every 50 Hours	7 8 9 10 11	Drive Shafts Bucket Pivots and Link Pins Hydraulic and Steering Cylinders Pivots Bolster Pivots Center Articulation Pivots	8 6 7 2 2	MPG2 MPG1 MPG1 MPG1 MPG1	Lube Lube Lube Lube Lube
Every 250 Hours	3 12 3	Engine Crankcase Oil Drive Axles Oil Level Engine Oil Filter	1 2 1	EO1 HDTF -	Change Check Replace
Every 500 Hours	3 15	Fuel Filters Tracking System Linkage	2 4(s)	- MPG1	Replace Lube
Every 1000 Hours	4 5 12 4 5 5 4	Hydraulic System Oil Transmission Oil Drive Axles Oil Hydraulic Reservoir Breather Transmission Pressure Filter Transmission Suction Strainer and Breather Hydraulic Oil Filter Element	1 1 2 1 1 1 1	HDTF/EO2 HDTF HDTF	Change Change Change Clean Replace Clean Replace
Periodic or at Least Once a Year	16 13 3 13 14	Air Conditioner Or Heater Filters Control Levers and Pedals Fuel Strainer Filter Superstructure Hinges Air Filter Elements	1 + 1 5(u) 8(s) 1 7 2	MPG 1	Clean Grease with a greaser or a brush Change Clean
Every 2000 hours or every 2 years	1 2	Brake Fluid Radiator Coolant	1 1	ATF	Change Change

DESCRIPTION:

E01 – Engine Oil
E02 – Multigrade Engine Oil
MPG1 – Muli-Purpose Grease, Grade 1
MPG2 – Muli-Purpose Grease, Grade 2
ATF – Automatic Transmission Fluid
HDTF – Hydraulic and Transmission Fluid
MPL - Multigrade Transmission Oil
(s) – for standard machines
(u) – for upgraded machines

https://truckmanualshub.com/

MAINTENACE AND SERVICE CHART

5.3.1. SERVICE POINTS

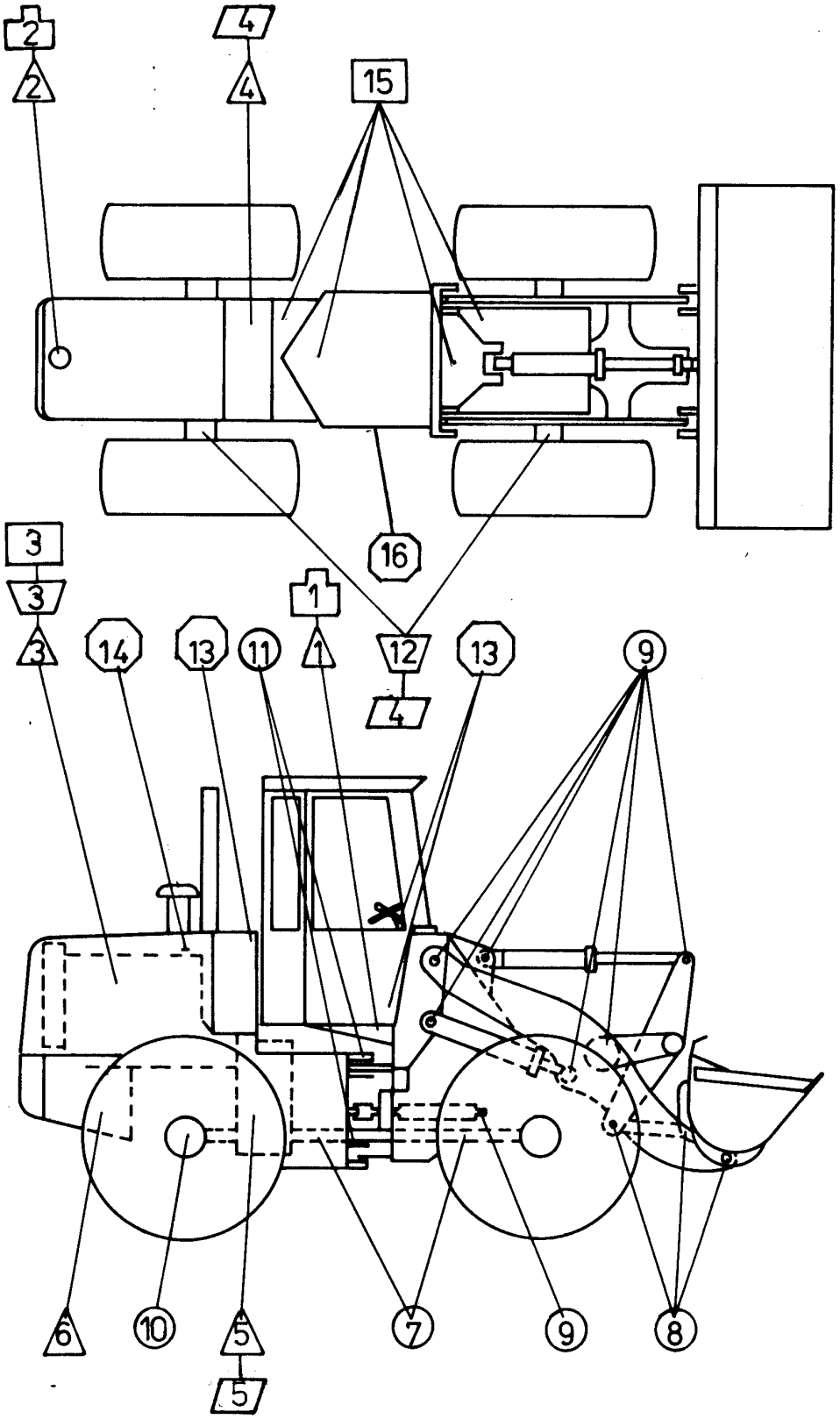

Fig. 5.1. Service Lube Points

Service point description is given in Chart 1.

https://truckmanualshub.com/

5.4. LUBRICATION

5.4.1. WHEN SHIPPED

This Wheel Loader has been lubricated at the factory for operation in an air temperature range of +21 [°C] to -23 [°C]. If this machine is to be operated above or below this range, change to the correct lubricants. Unless an exception is shown below, all lubricants can be used (within above temperature range) until regular scheduled (normal) change intervals occur. Refer to "SERVICE CHART", Section 5.3, for the scheduled (normal) change intervals and to Chart 2 for the proper oil grades for ambient temperatures.

5.4.2. WHEN SERVICED

The life and performance of a wheel loader and its equipment depends on the service that it is given. Proper lubrication is an important part of the maintenance service.
Thorough lubrication service performed at the specified intervals will aid in prolonging the life of a loader and its equipment and in reducing operating expense. The type of work being done, load, ground and weather conditions are all factors to consider in frequency of lubrication.

The scheduled intervals between the lubrication periods shown in the "SERVICE CHART" are approximate, based on average operating conditions. It may be necessary to lubricate after shorter working periods under severe operating conditions such as extreme dust, low engine temperatures, intermittent operation, excessively heavy loads with high oil temperatures, or when diesel fuel with a high sulfur content is used. However, the time intervals between lubrication periods must never exceed those indicated in this manual.

5.4.3. LUBRICANT SELECTION

The selection of the proper type (specification) and the grade (weight or viscosity) of lubricant is important.

Many tests have been made to determine the correct lubricants for this wheel loader and its equipment. The resulting recommendations are included in section 5.4.5 and 5.4.6.

5.4.4. VISCOSITIES

During cold weather, base the selection of a crankcase lubricating oil viscosity on the lowest anticipated temperature for the day to make starting easier. For hot weather operation, base the selection on the highest anticipated temperature. Refer to the "REFILL SPECIFICATIONS AND CAPACITIES", Section 5.4.5, Chart 2.

https://truckmanualshub.com/

MAINTENANCE

LUBRICATION

5.4.5. REFILL SPECIFICATIONS AND CAPACITIES

Chart 2.

Lubrication point	Capacity [l] 515C	Capacity [l] 520C	Grade	Temp. +49[°C] to –7[°C]	Temp. +21[°C] to –23[°C]	Temp. – 12[°C] to –34[°C]
Crankcase and filter	16.4	16.4	EO1	Engine Oil per B21-0002 CE/SG per API SAE 15W/40		SAE 5W/30 SAE 5W/40 NOTE: Refer to Engine Operation and Maintenance Manual
Hydraulic System	65	80	HDTF or EO2	Hydraulic & Transmission Fluid Per HMS B21-0006 passing Test C-4/TO-4*) SAE 10W or Engine Oil per HMS B21-0003 or CD MIL-L-2104C* SAE 10W		
Drive Axles (each)	15	16.5	HDTF or EO2	Hydraulic & Transmission Fluid per HMS B21-0006 Passing Test C-4/TO-4*) SAE 30 or Engine Oil per HMS B21-0003 or CD MIL-L-2104C* SAE 30		
Transmission System	27	30	HDTF	Hydraulic & Transmission Fluid Per HMS B21-0006 passing Test C-4/TO-4*) SAE 10W		
Steering Gear Housing**	0.3	0.3	MPL	Transmission Oil per HMS B22-0003 or GL-5, MIL-L-2105C SAE 85W/140	SAE 80W/90 SAE 85W/140	SAE 80W/90
All Lube Fittings	As required		MPG2	Multi-purpose Grease per HMS B27-0002 or Lithium Grease NLGI 2 with 3% MoS_2		
Lever, Pedals, Locks	As required		MPG1 or MPL	Lithium Grease per HMS B27-0005 NLGI 1		
Break System	3.8	3.8	ATF	Automatic Transmission Fluid per HMS B22-0004 DEXRON II E		
Cooling System	30	33		Antifreeze per HMS B21-0001 50% antifreeze concentrate 50% water		
Fuel Tank	132.5	172		Diesel oil per HMS B32-0001 or ASTM D975 1D 2D		

*) oil should not include viscosity improving additives
**) refers to standard machines only

E01 – Engine Oil
E02 – Multigrade Engine Oil
ATF – Automatic Transmission Fluid
HDTF – Hydraulic & Transmission Fluid
MPL - Multigrade Transmission Oil
MPG1 – Muli-Purpose Grease, Grade 1
MPG2 – Muli-Purpose Grease, Grade 2

https://truckmanualshub.com/

5.4.6. LUBRICANT, COOLANT AND FUEL EQUIVALENTS

Chart 3

RECOMMENDED LUBRICANT	EQIVALENT LUBRICANT			TYPE
	POLISH	SHELL	TEXACO	
Engine oil per HMS B21-0002 or API CE/SG API, or MIL-L2104C with sulfated ash of 1.85%				
SAE 15W/40	LOTOS DIESEL CE/SF SAE 15W/40	MYRINA TX 15W/40 RIMULA X 15W/40	URSA SUPER LA 15W/40	E01
SAE 10W/30		MYRINA TX 10W/30	URSA TD 10W/30	
SAE 5W/40	HELIUS SAE 5W/40	–	–	
Multi-grade Engine Oil per HMS B21-0003 or CD or MIL-L2104C				
SAE 10W	SUPEROL CD SAE 10W	ROTELLA TX 10W	URSA SUPER LA 10W	E02
SAE 30	SUPEROL CD SAE 30	ROTELLA TX 30	URSA SUPER LA 30	
Hydraulic & Transmission Fluid HDTF per HMS B21-0006 passing formula C-4 and TO-4 tests				HDTF
SAE 10W	GERAX TKD SAE 10W	DONAX TC 10	TEXTRAN HD 10W	
SAE 30	GERAX TKD SAE 30	DONAX TC 30	TEXTRAN HD 30	
Gear Lube per HMS B22-0003 or API GL-5 or MIL-L-2105C				MPL
SAE 85W/140	HIPOL 85W/140	SPIRAX HD 85W/140	GEARTEX EP-C 85W/140	
SAE 80W/90	HIPOL 80W/90	SPIRAX HD 80W/90	GEARTEX EP-C 80W/90	
Multi-purpose Grease per HMS B27-0002 or Lithium Grease NLGI grade #2 with 3% minimum molybdenum disulfide (MoS_2)	LITMOS EP-23	RETINAX EPX2	MOLYTEX EP-2	MPG
Lithium Grease per HMS B27-0005 NLGI 1	LITEN EP-1	ALVANIA EP-1	MULTIFAC EP-1	MPG1
Automatic Transmission Fluid per HMS B22-0004 DEXRON II E	----------	DONAX TG	TEXAMATIC 7045	ATF
Anti-freeze, ethylene glycol base per HMS B01-0001	ERGOFRYZ	GLYCOSHELL DILUTED	ANTIFREEZE ETX 6042	
Diesel Fuel per HMS B32-0001 or ASTM D875 1D: above - 12 2D: above - 20 DFA: below - 30	Diesel Fuel per Polish Standard PN-C-96051:1992 DL: above - 0 [°C] DP: above - 12 [°C] DZ: above - 20 [°C] IZ-40: above - 30 [°C] For temperatures below - 30 [°C] add depressant			

https://truckmanualshub.com/

5.4.7. LUBRICATING FITTINGS (LUBRICATED WITH SOLID GREASE)

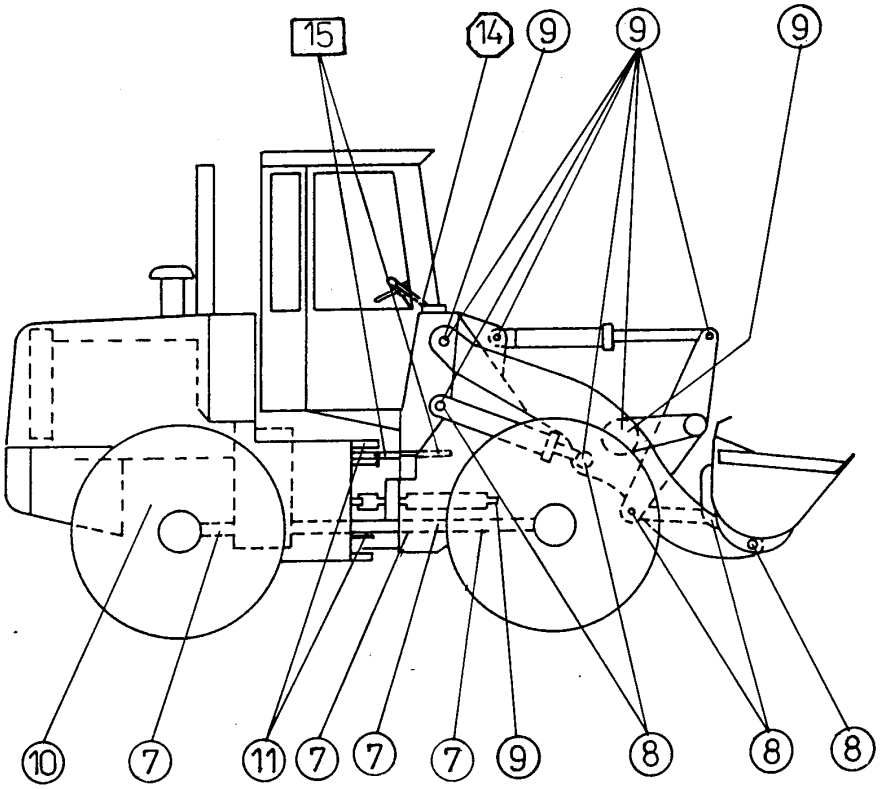

Fig. 5.2. Lubricating Points (fittings)

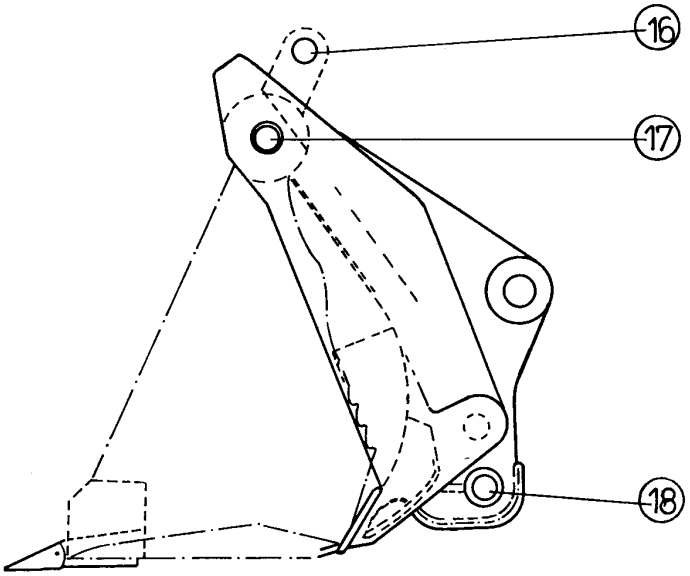

Fig. 5.2A. Multi-Purpose and High-dump Bucket Lubricating Points

Service point description is given in Chart 2.

https://truckmanualshub.com/

LUBRICATION

WARNING! Never run the engine when cleaning or lubricating the machine because serious injury could result from contacting moving parts. Before servicing the machine, be sure the engine is off, the bucket is lowered, the transmission range gear lever locked in neutral position, the parking brake applied and the electric master switch is off and the key is removed.

The lubricating fittings (see Fig. 5.2 and 5.2.A) are to be greased at the intervals indicated in the service chart.

Always use a clean lubricator. Wipe all accumulated dirt from fittings before applying fresh grease. Apply grease at each fitting until fresh grease appears. If grease fails to go through the fitting, determine the cause and correct it. Other service points such as the pedals, cab hinges and superstructure hinges which are not fitted with lubricating fittings must also be lubricated with a brush or otherwise.

Lubricating Points as shown in Fig. 5.2.:

10	Bolster Pivots	2 points
7	Rear Axle Drive Shaft	2 points
11	Center Articulation Pivot Bearing	2 points
7	Countershaft	3 points
7	Transfer Drive Bearing	1 point
7	Front Axle Drive Shaft	2 points
9	Steering Cylinders Pivots	2 points per cylinder
9	Boom Cylinder Pivots	2 points per cylinder
8	Bucket Link Pins	2 points
8	Bucket Pins	2 points
9	Bellcrank Pin	1 point
9	Bucket Cylinder	2 points
9	Boom Pivots	2 points
14	Transmission Control Lever	2 points
14	Boom and Bucket Control Levers	2 points (std version only)
14	Auxiliary Equipment Control Lever	1 point (std version only)
15	Tracking System Pivots	2 points per lever (std version only)

If a loader is equipped with a multi-purpose bucket grease the following points every 50 hours of operation – Fig. 5.2A.

16	Clam Cylinder Upper Pins,	1 point on each side
	High-dump Bucket Cylinder Upper Pins	1 point on each side
17	Clam Hinge Pins,	1 point on each side
	High-dump Bucket Hinge Pins	1 point on each side
18	Clam Cylinder Lower Pins,	1 point on each side
	High-dump Bucket Cylinder Lower Pins	1 point on each side

https://truckmanualshub.com/

5.5. SEASONAL PREPARATION

GENERAL
Mechanical efficiency is enhanced during seasonal air temperature changes, when these instructions are followed.

OPERATION IN SUB-ZERO WEATHER.
Wheel loaders left outside for prolonged periods in sub-zero weather will suffer from "cold-soak." Lubricants become viscous and incapable of lubricating the moving parts. Extreme wear could result to the engine, transmission and final drives unless proper precautions are taken. A source of outside heat is necessary under these conditions. There are electric as well as propane-fired engine coolant heaters available. Gas-fired forced air heaters may also be obtained to heat the transmission and final drives.

WARNING! For your personal safety, use caution and follow the manufacturer's instructions when using external heaters.

5.5.1. FUEL SYSTEM

Recommendations referring diesel fuels which give the most satisfactory performance of the engine are listed in paragraph 5.4.6.

5.5.2. COOLING SYSTEM

Prepare the cooling system as follows:

1. Check the entire engine system for leaks.
2. Inspect the condition of all hoses and replace the hoses and hose clamps as necessary.
3. Clean the cooling system.
4. Check the drive belts tension and replace a worn belt.
5. Remove all debris from the radiator core using air or water under pressure. Direct the flow through the core, opposite the normal direction of air flow.

WARNING! For your personal protection, water pressure should not exceed 270 [kPa] and air pressure should not exceed 210 [kPa]. Use safety goggles.

6. Clean the radiator guard and the outside of the core.
7. Protect your cooling system from damage by using approved antifreeze (based on ethylene glycol) and coolant.
8. Keep your cooling system clean and minimize corrosion by changing the coolant filter at the correct intervals. Refer to Section 5.8.6.

5.5.3. ELECTRICAL SYSTEM

Clean batteries and remove all corrosion from the battery terminals and cables. Repair or replace all wires which have worn, cracked or frayed insulation and broken or loose wires. Service the batteries.

https://truckmanualshub.com/

5.6. AIR CLEANING SYSTEM

5.6.1. AIR CLEANER

This machine has a “dry-type” cleaner with replaceable elements (Fig. 5.3.) The cleaner has two elements: safety and primary. The primary cleaner can be cleaned for a limited number of times before replacement is necessary, however, the safety element must be replaced when plugged.
To protect the engine against dirt penetration perform as follows:

CHECKING AIR INTAKE SYSTEM FOR LEAKS

1. As a precaution against dirt entering the engine, all gasket and rubber hoses between the air cleaner, turbocharger and intake manifold, and between the manifold and cylinder head must be in a good condition and the joints or connections must be tight.
2. Never operate the engine unless filter elements are installed.
3. Never start the engine unless the air cleaner elements are in place and the covers are tight.

5.6.2. PRIMARY (OUTER) FILTER ELEMENT

The air cleaner primary element must be serviced whenever indicated by the air cleaner service indicator (Fig. 5.5) or air cleaner filter warning light. Refer to "INSTRUMENTS AND CONTROLS”, Section 4.3. The element can be cleaned by either of the two methods: washing or compressed air. Washing is the preferred method as it removes more dust and soot and restores the element to an almost new condition. The result being better performance and longer intervals between the required element service. It is recommended that a spare element be obtained for use while the serviced element is drying. This will reduce unit down time to only a few minutes and will allow sufficient time to wash and dry removed element properly.

IMPORTANT! *The primary filter element must be replaced after six washings.*

Cleaning the element with compressed air is not considered an entirely satisfactory method. Some dust will remain in the element causing more frequent servicing of the element. Use this method only as a temporary measure until sufficient time is available to clean the element by washing. Always wash the filter element when contaminated with greasy dust.

IMPORTANT! *After cleaning, if an element is to be stored for later use, place it in a plastic bag and store in an element shipping container to protect against dirt and damage.*

REMOVAL (Fig. 5.3)

1. Stop the engine. Clean thoroughly dust vacuator (2).
2. Release the fasteners and remove cover (1) with the dust vacuator.
3. Remove primary element (3).

IMPORTANT: *Be careful not to dislodge dust from the dirty element onto the safety element.*

4. Remove all dirt from inside air cleaner body (5) with a damp cloth. A small amount of nonsudsing detergent added to the water will remove the soot.

https://truckmanualshub.com/

AIR CLEANING SYSTEM

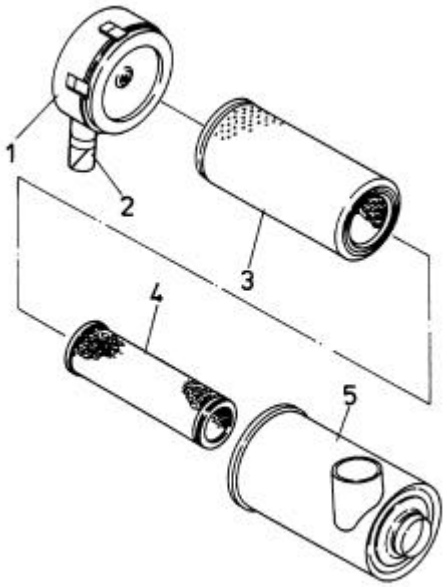

Fig. 5.9. Air Cleaner Assembly

1. Cover with Snap Fasteners 2. Dust Vacuator 3. Primary Element 4. Safety Element 5. Body

WASHING THE PRIMARY ELEMENT

IMPORTANT! *Never wash an element in fuel, oil, gas or solvent. DO NOT OIL ELEMENTS. Do not pull down the element. Do not tap the element against a hard surface; this will damage the element.*

1. Carefully tap the side or end of the element against the palm of your hand to remove loose dust.
2. Wash the element in clean, warm water 20 [°C] to 40 [°C]. A small amount of nonsudsing detergent added to the water will remove the soot.
3. Rinse the element in clear water. Shake the element carefully to remove excess water.

IMPORTANT! *Do not use compressed air to speed the drying of the element; the air pressure will rupture the wet element.*

4. Lay the element on its side and allow it to air-dry before reinstalling. Overnight drying is usually sufficient. When drying the element, protect it from dirt and/or freezing

NOTE: *If no spare element is available, the wet element, after excess water has been shaken out, may be installed in the air cleaner and the engine operated at low idle for 10 minutes before operating.*

COMPRESSED AIR CLEANING

1. Carefully tap the side or end of the element against the palm of your hand to remove loose dust.
2. Direct clean dry compressed air (max. pressure 200 [kPa]) up and down the pleats on the inside of the element. Always direct the flow of compressed air opposite the normal operating air flow direction through the element.

INSPECTION

1. Inspect the filter element for leaks or damage by placing a bright light inside the element. Inspection of the element on the outside will disclose any holes where concentrated light shines through. The slightest rupture requires replacement of the filter element.
2. Inspect the contact surfaces of the air cleaner body. If faulty or damaged surfaces are noted, correct these conditions immediately.

https://truckmanualshub.com/

INSTALLATION (Fig. 5.3)
1. Insert the open end of the element into air cleaner body (5) over the safety element.
2. Install cover (1) and secure the cover to the body with the snap fasteners.
3. Inspect and tighten all air cleaner connections before resuming operation.

NOTE: *After servicing the filter element press reset button (1, Fig. 5.4.) to reset the air cleaner service indicator (Fig. 5.5). The red strip should disappear after resetting.*

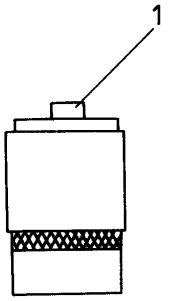

Fig. 5.4. Air Cleaner Service Indicator

1. Reset button

4. Start the engine. If the air cleaner service indicator indicates air restriction, stop the engine and replace the primary or primary and safety filter elements.

5.6.3. SAFETY (INNER) FILTER ELEMENT

Replace the safety element with every third change of the primary element or when plugged, as shown by the service indicator.

REMOVAL (Fig. 5.3)
1. Remove the primary element as described above.
2. Pull safety element (4) out of the body.
3. Clean the inside of body (5) with a damp cloth. A small amount of nonsudsing detergent added to the water will facilitate removal the soot.

INSTALLATION
1. Install new safety element (4) the open end first into body (5).
2. Install outer element (3) as described above.

5.6.4. PRECLEANER SCREEN

The dome of precleaner hood (2, Fig. 5.5.) serves as a rain shield and the screen prevents chaff and course dirt from getting into the air cleaner. Keep this screen clean from all chaff, oil or dust. Clogged holes in the screen will reduce the power of the engine by restricting the airflow.

Loosen clamp screw (3, Fig. 5.5) on the precleaner hood. Twist and pull upward to remove the cap. Use compressed air to clean the screen. If compressed air is not available, wash in clean hot water or water containing a small amount of nonsudsing detergent.

https://truckmanualshub.com/

AIR CLEANING SYSTEM

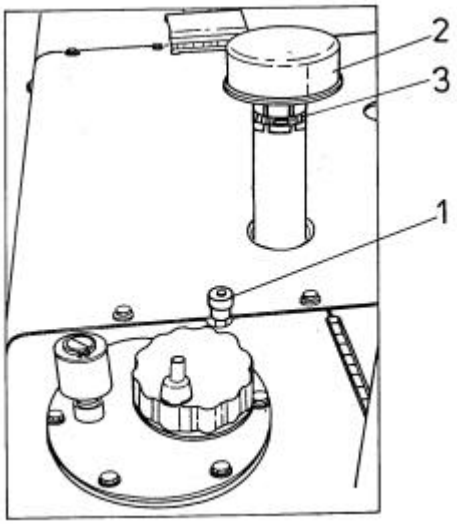

Fig. 5.5. Air Cleaning System

1. Air Cleaner Service Indicator 2. Precleaner Hood 3. Clamp

IMPORTANT: *Never wash precleaner installed on the machine as water may penetrate to the engine.*

5.6.5. DUST VACUATOR VALVE (2, Fig. 5.3)

The dust vacuator will automatically remove dust and water from the air cleaner. To function, the vacuator valve lips must point downward and be kept free of debris. The lips should be closed except when engine is idling slowly or stopped. If the vacuator valve is lost or damaged, replace it to maintain air cleaner efficiency and normal element service life.

5.6.6. CHECKING AIR INTAKE SYSTEM FOR LEAKS

Air intake system leakproof tests must be performed after each disassembly of the intake system or if necessary (leaks or loose clamps).

1. Remove the cover from the air cleaner body.
2. Remove the primary element.
3. Mask the entire perforated metal outside diameter of safety element (smaller) with the duct tape and reinstall. Sealing must be airtight. Connect regulated compressed air supply to one of the existing connecting ports on air intake manifold. Connect the pressure gauge to the other connecting port on the intake manifold to air cleaner service indicator.
4. Check if pressure reading of 15–30 [kPa] has been obtained on the pressure meter. If improper pressure is seen, adjust pressure to 15–30 [kPa] by cranking the engine crankshaft to a position where minimum leakage occurs past engine valves.
5. Coat the following areas with soap solution and check for leaks. Leaks will cause air bubbles to form.
   a) the air cleaner body surface around the outlet pipe to app. the outside diameter of the safety element,
   B) the pipe connector and the hose between the air cleaner outlet and air cleaner service indicator,
   C) all clamped hose and gasket connections between the air cleaner outlet and the intake manifold including turbocharger connections,
   D) the surface of all air induction hoses, the air cleaner and air intake manifold,
6. No leakage is permitted between air cleaner and intake manifold (the entire air induction

https://truckmanualshub.com/

system).

5.7. BRAKES

5.7.1. SERVICE BRAKE SYSTEM

This machine utilizes a split type hydraulic brake system whereby a common dual chamber master brake cylinder supplies fluid to each axle independently. If a failure occurs in either the front or the rear axle braking system the other brake system can stop the machine. The master cylinder is located beneath the floorboard in the floorboard in the operator's compartment (Fig. 5.6).

The service brake is actuated with the brake pedal (the right one) or the brake and transmission disconnect pedal (the left one) from the operator's cab. Increasing gradually pressure exerted on the brake pedal the required braking effect is obtained. The more the pedal is depressed the stronger the braking effect. As required, there is possibility of braking as described above with the transmission connected or disconnected. Braking with the transmission disconnected occurs with all clutches of the transmission released. In such a case the full engine power may be used to operate the loader hydraulics.

WARNING! When adding brake fluid, wear safety goggles. Fluid contact can result in serious eye injury.

WARNING! Whenever the brake lines have been disturbed, or if the brake pedal feels soft or spongy, the brake system must be bled to remove entrapped air. Consult your distributor.

5.7.2. CHECKING THE BRAKE FLUID LEVEL

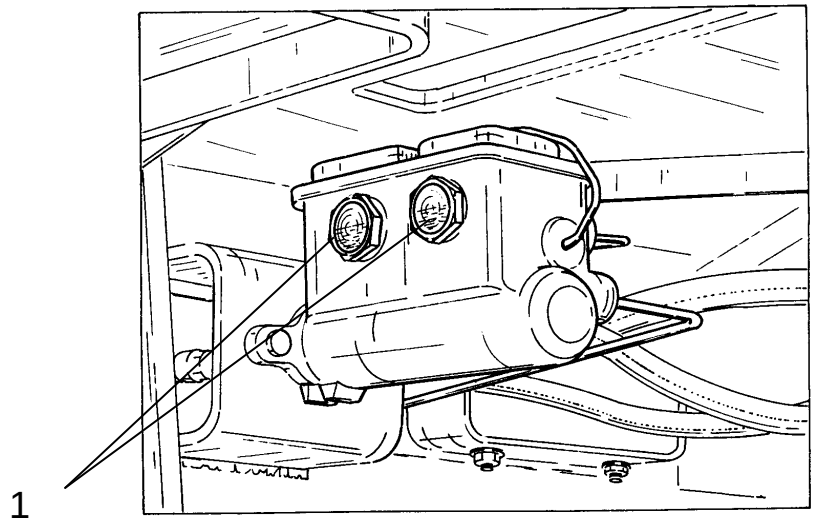

Fig. 5.6. Master Brake Cylinder Sight Gauge (under the floorboard)

Check the sight gauges on the master cylinder (Fig. 5.6). The sight gauges must be completely filled with fluid.

https://truckmanualshub.com/

BRAKES

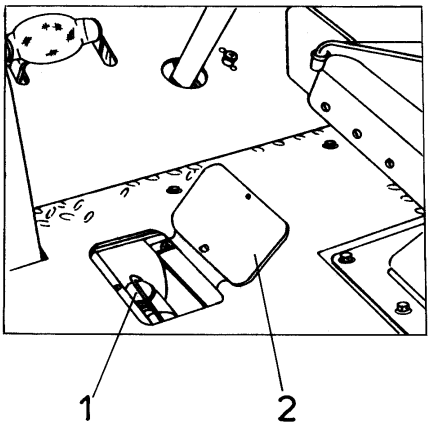

Fig. 5.7. Adding Fluid Into Master Brake Cylinder

1. Master Brake Cylinder 2. Access Door

If the sight gauge is only partially filled or shows no fluid, lift the inspection door (2, Fig. 5.7) in the floorboard just to the left of the operator's seat. Clean filter cap (2) before removing it to prevent foreign matter from falling into the master cylinder housing. Undo the securing fasteners and remove the filter cap (1, Fig. 5.7) and add fluid. The correct fluid level is 6 [mm] from the top edge of the master cylinder. Reinstall the filler cap.

5.7.3. CHANGING THE BRAKE FLUID

Perform the following steps when changing brake fluid:

1. Disassemble brake system warning light switch (3) from differential valve (2, Fig. 6.7)
2. Disconnect brake lines (1 and 2) supplying both LH and RH brakes of both axles from tee connector (3, Fig. 5.8). Connect the lines and drain the fluid from the drive axle to a container.

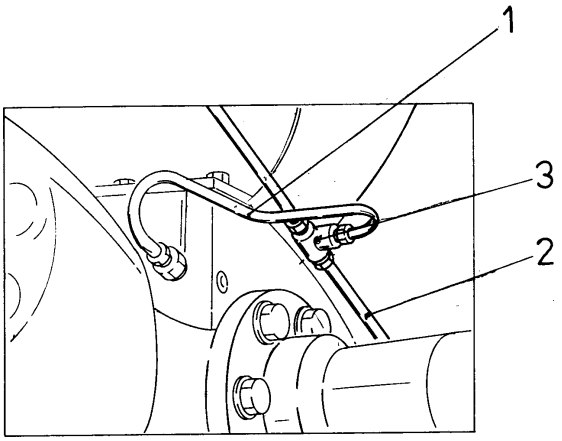

Fig. 5.8. Disconnecting Service Brake Piping

1. Supplying Tube 2. Supplying Tube 3. Tee

3. Pressing the brake pedal pump the brake fluid out of the circuit into the container till all the fluid has flown out and air escapes from the circuit.
4. If necessary, (i.e. if still some fluid has remained in the master cylinder), disconnect the lines from the master cylinder and drain the remaining fluid.

https://truckmanualshub.com/

5.7.4. FILLING AND VENTING THE SYSTEM

1. Reassemble all lines (if disconnected). Do not assemble the brake system warning light switch.
2. Fill the master cylinder with brake fluid.
3. “Pump” the brake pedal and add more fluid until the fluid level is 6 [mm] below the top edge of the master cylinder.
4. If the system is aerated (“soft“ pedal), vent the system in the following way:
   a). loosen the axle bleeder screws, connect a transparent plastic tube on the valve. Put the other end of the tube in a small amount of oil in a clear container (Fig. 6.9).
   b). depress the brake pedal (air bubbles should escape through the plastic tube dipped in the brake fluid),
   c). when clear fluid without air bubbles starts flowing out, turn on the bleeder screws and release the pedal,
   d). repeat the above steps for each of the four bleeder screws,
   e). assemble the brake system warning light switch.

5.7.5. PARKING BRAKE

The parking brake is mounted on the front differential housing. It is a two shoe internal expanding type, actuated by a hand lever in the operator’s compartment. When the parking brake is applied the electrical switch activates the indicator light and buzzer.

CHECKING THE OPERATION

WARNING! Before entering the operator’s compartment, walk completely around the machine and clear the area of personnel and obstructions.

WARNING! When testing the parking brake, be sure the area near the machine is clear of personnel and obstructions because the machine may move during this test.

1. Start and operate the engine at low idle to warm up the engine. Refer to “STARTING THE ENGINE”, Section 4.
2. With the parking brake engaged, place the transmission gear range lever in the third gear, and the transmission direction lever in “FORWARD”. Slowly depress the accelerator pedal until it is fully applied.

IMPORTANT: *DO NOT test the brake for more than 1o seconds.*

3. If the parking brake holds the machine stationary in this third speed stall condition, the brake system is satisfactory.
4. If the parking brake dose not hold the machine stationary in this speed stall condition, release the accelerator pedal, apply the service brakes, place the transmission direction lever in “NEUTRAL”, lower the bucket to the ground, and stop the engine.

WARNING! If the parking brake does not hold the machine stationary correct the cause. Until the cause is corrected, park the machine on level ground and block the tires to prevent it from moving.

https://truckmanualshub.com/

5. Inspect the parking brake. If service is necessary, consult your distributor (the minimal brake shoes thickness is 4 [mm]).
6. After the deficiencies have been corrected, recheck the system by repeating steps 1 thru 3.

WARNING! After operating a machine in poor conditions (mire, clay), to avoid penetration of dirt into the parking brake, which can cause deterioration of braking capability), wash the brake with water and dry it with compressed air. If the brake has been soiled, clean all metal parts, coat the latches with Litomos EP-23 grease (or equivalent, refer to chart 2, section 5.4).

5.8. COOLING SYSTEM

GENERAL
The cooling system operates under pressure which is controlled by the pressure relief valve in the radiator cap.

The belt driven water pump circulates the coolant through the engine block, cylinder heads, radiator, and engine oil cooler. In the radiator bottom tank there is an oil cooler which cools the transmission oil (Fig. 6.3). Machines in EC configuration are equipped with another “oil-air” type transmission oil cooler connected serially with the standard oil cooler. This additional cooler is mounted on the standard cooler housing at the rear of the machine coolant. Circulation is controlled by the thermostat which by-passes coolant flow around the radiator until the engine reaches operating temperature.

Proper cooling is possible only when the system is sealed, the radiator cap gasket is in good condition, the pressure relief valve and thermostats are operating properly, the system is free of coolant and air flow restrictions and is filled to the proper level.

Selection and maintenance of the engine coolant is important to long engine life. The following information provides recommendations for selecting the engine coolant, maintaining the coolant inhibitors and servicing the cooling system.

The system operates successfully with a water/antifreeze mixture of inhibited/conditioned water as the coolant. Water alone allows rust, scale deposits, and corrosion to occur within the system.

5.8.1. WATER

Use water which has a low mineral content. Water used in conjunction with antifreeze, coolant filters and inhibited water must meet the following standards:

Total hardness: Not to exceed 170 parts per million to prevent scale deposits. Water containing dissolved magnesium and calcium (the usual reason for water hardness) above the specified amount will cause scale deposits to develop in the engine.

Chlorides - Not to exceed 100 parts per million to prevent corrosion.

Dissolved solids - Not to exceed 340 parts per million to minimize sludge deposits, scale deposits and corrosion.

If any of the requirements cannot be met, use distilled, de-ionized or de-mineralized water. To determine if the local water supplies meet these standards, water samples can be tested by water treatment laboratories. Softened water that is prepared using common salt (sodium chloride) contains excessive amounts of chlorides and should not be used.

https://truckmanualshub.com/

5.8.2. ANTIFREEZE

Low silicate ethylene glycol antifreeze is recommended. The antifreeze should contain no more that 0.1% anhydrous alkali metasilicate. Low silicate antifreeze is recommended to avoid the formation of silica-gel (hydro-gel). This gel formation can occur when the cooling system contains an over concentration of high silicate antifreeze and/or supplemental coolant additive. DO NOT use methanol or alcohol as an antifreeze because of its low boiling point. Antifreeze may retain its freeze protection for more than one season but coolant conditioners must be added to maintain corrosion protection. Antifreeze formulated with metoxy propanol, or propylene glycol is not recommended for this system.

IMPORTANT! *Do not mix types of antifreeze solutions. Mixed solutions make it impossible to determine the protection against freezing. Antifreeze containing sealer or anti-leak additives should not be used in this system. Sealer or anti- leak additives will plug the coolant filter and cause plugging problems in the cooling system.*

Chart 4 below shows percentage of antifreeze concentration required for various temperatures.

Approximate Freezing Point in [ºC]	Percentage of Antifreeze Concentration by Volume
0	0
- 7	15
-12	25
- 18	33
- 23	40
- 29	45
- 34	48
- 40	53
- 46	56
- 51	59
- 57	62
- 62	65
- 68	67
- 69	68

5.8.3. RADIATOR CAP (Fig. 5.9)

The radiator cap seals the coolant filler opening in the top tank of the radiator. Positive sealing requires a cap gasket and contacting surfaces to be in good condition and a properly tightened cap. The radiator cap incorporates a pressure relief valve. The pressure relief valve maintains the pressure of the cooling system. When the preset pressure is exceeded the excess of the steam is released to the atmosphere thru an overflow tube routed under the radiator.

WARNING! Never remove radiator cap if engine is hot. Wait until the temperature drops below 50 [°C]. Failure to meet this recommendation may result in personal injury with hot coolant or steam.

WARNING! Hot, scalding coolant can spray out if the radiator cap is removed suddenly. Relieve system pressure by slowly turning the cap to the first notch or lifting the safety lever (if equipped). Remove the cap only after the pressure is relieved.

https://truckmanualshub.com/

To remove the cap, press it down and turn until it is free to be removed. Prior to removing the cap make sure all pressure is released. When installing the cap, the gasket and contacting surfaces must be clean. Turn the cap to the right or clockwise until snug.

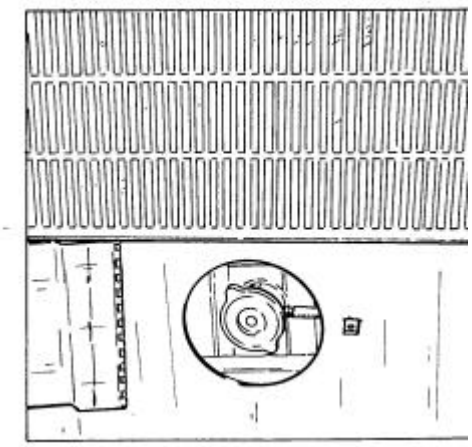

Fig. 5.9. Radiator Cap

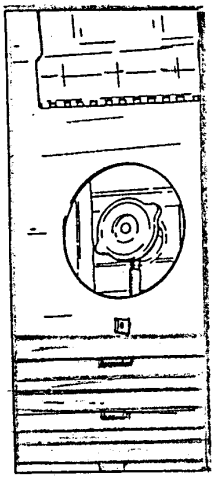

Fig. 5.9A. Radiator Cap (CE Version)

5.8.4. CHECKING THE COOLANT LEVEL

NOTE: *Check the coolant level before starting the engine. To obtain the proper reading place the machine on level ground.*

1. Check the coolant level through the sight gauge (Fig. 5.10) in the radiator top tank. The coolant should be visible in the sight gauge and the coolant level should be midway of the sight gauge (in CE version the access to the gauge is gained after lifting the radiator grill, 1, Fig. 5.48A).
2. Add coolant if it must be added; remove the radiator cap as outlined above (Fig. 5.9).
3. Add coolant until the level in sight gauge in reached.
4. Reinstall the radiator cap.

https://truckmanualshub.com/

WARNING! Never add coolant when the engine is hot. This may result in damage to the engine. Allow the engine to cool down below 50 [°C] prior to replenishing the coolant in the radiator. Failure to meet this recommendation may result in personal injury.

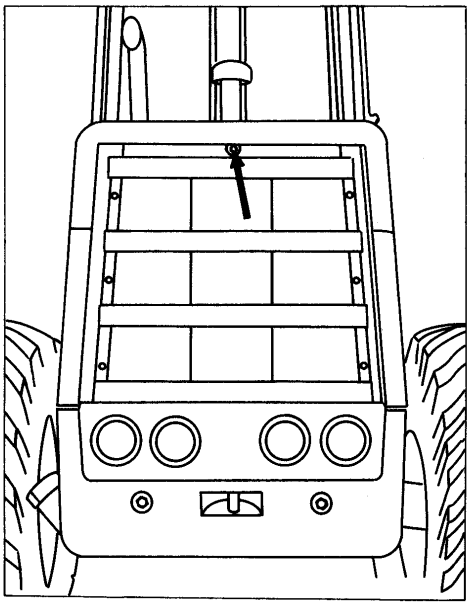

Fig. 5.10. Coolant Level Sight Gauge

5.8.5. DRAINING THE SYSTEM

WARNING! To drain the coolant allow the coolant to cool down below 50 [°C]. Failure to meet this recommendation may result in personal injury.

1. Remove the radiator cap (Fig. 5.9 and 5.9A) as outlined above.
2. Remove the crankcase coolant drain plug on the engine, refer to ENGINE OPERATION AND MAINTENANCE MANUAL.
3. Open the radiator drain valve on the engine (Fig. 5.11).
4. Open the cab heater water valve on the engine block (Fig. 5.12).
5. Allow the system to drain completely into a suitable container. Make sure all the valves and holes are not plugged.
6. Close the radiator drain valve and install the crankcase and oil cooler drain plugs on the engine.
7. Close the cab heater water valve on the engine.
8. Check all the hoses and clamps for damage and the radiator for leaks and damage. If the system is contaminated, it must be cleaned as described below.

https://truckmanualshub.com/

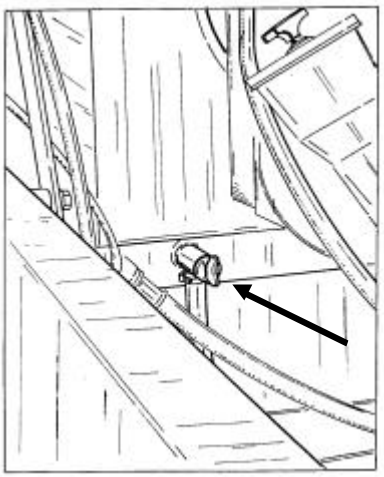

Fig. 5.11. Radiator Drain Plug

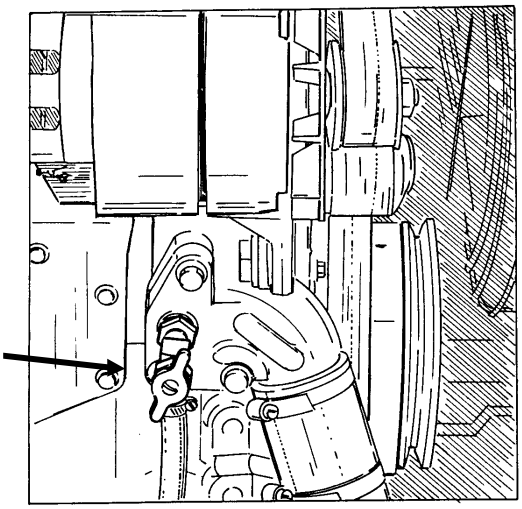

Fig. 5.12. Cab Heater Water Valve

5.8.6. CLEANING THE SYSTEM

NOTE: *If necessary, clean the cooling system in accordance with the instructions of Engine Operation and Maintenance Manual and the cleaning compound's manufacturer.*

5.8.7. FILLING THE SYSTEM

NOTE: *Be sure to fill the heater and heater supply lines with fresh coolant, even if the heater is not in use (warm weather). Leaving the heater core empty causes corrosion in the heater.*

1. Be sure the radiator drain valve and engine drain plugs are closed.
2. Fill the cooling system to the required capacity. For filling use antifreeze specified in Chart 2. It is recommended to use antifreeze according to the ambient temperature.
3. Start the engine and run it idle until the normal operating temperature is reached. Add coolant as needed to keep the level to the neck of the radiator visible in the sight gauge.
4. After all air is removed and level remains fixed, install the radiator cap and check the system for leaks.

https://truckmanualshub.com/

IMPORTANT! *Never add coolant into the radiator of an overheated engine unless absolutely necessary.*

IMPORTANT! *Cooling system must be deaerated and filled at the rate of 19 [l/min].*

5.8.8. CLEANING THE RADIATOR

Remove all bugs and dirt from the radiator core, using air or water under pressure. Direct the flow through the core, opposite to the normal direction of air flow (from outside the coolant level sight gauge, Fig. 5.10). The following should be cleaned:

oil cooler,

the air conditioner cooler (if equipped).

In CE version clean also the transmission oil cooler. To gain the access to the cooler, the radiator grill must be lifted up (Fig. 5.48A).

5.9. DRIVE AXLES

5.9.1. CHECKING THE OIL LEVEL

WARNING: Before working under the machine, block the tires to prevent machine movement.

Both the differential and axle oil levels are checked at the filler plug on the axle (the front axle plug is located at the rear left, and the rear axle plug is located at the front right).

1. Position the machine on level ground. Apply the parking brake and block the tires. Let the machine sit long enough for the oil to level out in the planetary and housing.
2. Remove the filler plug on either the front or rear axle. The oil must reach the lower edge of the plug hole. Add lubricant until it starts flowing from the hole. Refer to “REFILL SPECIFICATIONS AND CAPACITIES CHART” for the type of lubricant specified.

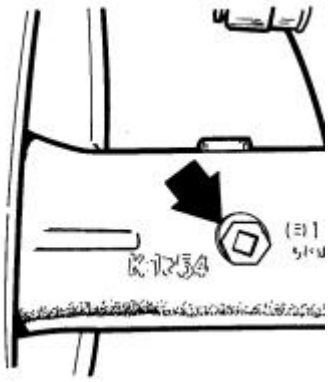

Fig. 5.13. Axle Level and Filler Plug

3. Install the filler plug.

https://truckmanualshub.com/

DRIVE AXLES

5.9.2. SERVICING THE BREATHER

1. Completely lower the bucket, apply the parking brake and shut down the engine.
2. Unscrew the breather and inspect it. If the breather is clogged, clean or replace it with a new one.

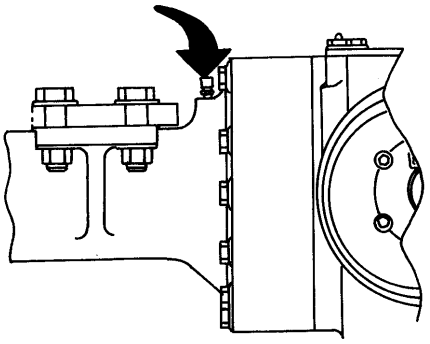

Fig. 5.14. Axle Breather

5.9.3. CHANGING THE OIL (Fig. 5.15)

1. Work the machine until the axle lubricant reaches the operating temperature. Park the machine on level ground and shut down the engine. Apply the parking brake and block the tires.
2. Remove axle filler plugs (1) and drain plugs in both axles.
3. Allow the lubricant to drain thoroughly.
4. Install the axle drain plugs.
5. Remove brake inspection plugs (2), inspect the brake discs for wear, use a gap gauge. Reinstall the plugs. If brake discs show excessive amount of wear consult your distributor (minimal brake disc thickness shall be 0.7 [mm] at the least).
6. Fill the axle with fresh lubricant through the fill hole in the axle until the lubricant starts to flow from the hole.
7. Install the filler and inspection plugs.

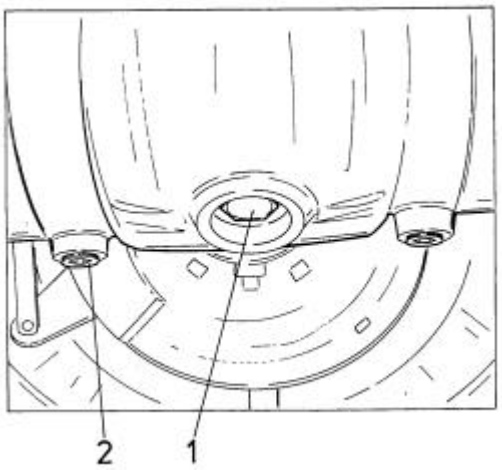

Fig. 5.15. Axle Drain and Brake Inspection Plugs

1. Brake Drain Plug 2. Brake Inspection Plug

https://truckmanualshub.com/

5.10. ELECTRICAL SYSTEM

5.10.1. ELECTRIC WIRES

WARNING! Before working on the electric system, disconnect the master electrical switch and remove the key.

All terminals must be clean and fastened securely. Repair or replace all broken wires immediately.

Surface under all terminals must be clean and good electrical connections must be established after reassembly. Also all clips must grip cables tightly to prevent vibrations and rapid cable wear. All clips and straps must be closed in a workmanlike manner, so as not to damage the insulation.

5.10.2. CIRCUIT BREAKERS

AUTOMATIC CIRCUIT BREAKERS
Electrical circuits are protected by automatic reset circuit breakers. They are located under the instrument panel. In the event of a "short circuit" or "ground", the circuit breaker will open before damage occurs and will continue to open and close until the trouble clears or is corrected. When replacing use circuit breakers of the same amps.

To replace circuit breaker carry out as follows:
1. Remove two screws and lock washers securing the breaker to the instrument panel.
2. Remove the circuit breaker and replace it.
3. Reassembly in the reverse order.

5.10.3. BULB OR LAMP REPLACEMENT

FRONT AND REAR ROAD LIGHTS
Remove the sealed beam unit and replace the bulb with a new one.

STOP AND PARKING LIGHTS
Raise the rubber retainer lip and remove the sealed beam or the bulb depending on the type of lamp. Install a new sealed beam or bulb of the same type.

INSTUMENT PANEL LIGHTS
Reach under the instrument panel and turn the bulb holder. Pull the holder free. Press down on the bulb in the holder, turn counterclockwise and pull it free of the socket. Replace with a bulb of the same type. Place a new bulb into the holder, press down and turn clockwise. Insert the holder into the instrument panel and turn until secure.

5.10.4. BATTERIES

A loader is equipped with two twelve volt maintenance free batteries. They are located in the battery compartment on the left-hand side of the rear main frame. (In CE version they are located in the counterweight recess).

Never allow the battery to stand on concrete, ground or a metal support unless proper insulation is provided. A wooden platform or board is sufficient insulation. Be sure the battery is fastened securely to avoid damage from vibration.

https://truckmanualshub.com/

ELECTRICAL SYSTEM

WARNING! Batteries give off a highly flammable gas. Do not smoke or allow sparks open flame near the batteries because a fire or explosion could result.

WARNING! Battery acid causes severe burns. Avoid contact with eyes, skin, or clothing. Wear goggles, rubber glove, and apron. If eye contact occurs, flush with water for 15 minutes and get prompt medical attention. If skin contact occurs, flush with water.

WARNING! When using a booster battery and jumper cables, connect the negative (ground) cable to the machine's frame, away from the battery. Always connect the ground cable last and disconnect it first to avoid sparks near the battery. A spark could cause a battery explosion and injury.

WARNING! Never check the battery charge by placing a metal object across the terminals. The sparks could cause a battery explosion. Use a voltmeter or hydrometer to measure the charge.

WARNING! Be sure the electric system disconnect switch is off when connecting or disconnecting batteries to minimize the chance of sparks and explosion.

WARNING! The engine can be started with the transmission in gear if the neutral start switch is bypassed. Do not connect across the terminals of the starter motor. Attach the booster batteries as directed in this manual.

MAINTENANCE
Proper battery maintenance will assure maximum service. Following are a few simple rules:

1. Keep the battery cable terminals clean and tight.
2. Replace the worn, cracked, broken or corroded cables.
3. Keep the batteries fastened securely in the frame.
4. Maintain the proper electrolyte level when using service batteries.
5. Maintain the batteries fully charged, particularly in winter.

NOTE: *Excessive tightening can warp or crack the battery case.*

CLEANING THE BATTERIES
If the top of a battery is dirty, it may be cleaned with a brush dipped in ammonia or soda solution. After the foaming stops, flush off the battery with clean water.

ATTACHING THE BOOSTER BATTERY
When the charge in the machine's batteries is to low to crank the engine, a booster battery can be used to help start the engine. Connect the booster battery plug with the starting receptacle and start the engine. When the engine has started remove the plug from the receptacle.

If the machine is not equipped with a starting receptacle, connect the positive cable of the booster battery to the cranking motor and connect the negative (ground) cable of the booster battery to the machine frame. Be sure the negative cable is 300 [mm] or more away from the battery. The parking brake should be applied, and transmission lever locked in neutral position.

https://truckmanualshub.com/

ELECTRICAL SYSTEM

CHARGING FULLY DISCHARGED BATTERIES.
When a machine is not in use for an extended period, the maintenance-free battery can become discharged. For this reason, when a machine will not be used for over 30 days, it is recommended that the negative ground terminal cable be disconnected. Prior to starting up a machine that has been idle, always make a visual inspection of the battery and take an open circuit voltage test. A reading of 1.23 [g/cm^3] (75 % of full charge) or less indicates a state of discharge.

Check amount of charge of batteries:

100% of full charge	1.26 - 1.28 [g/cm^3]
75% of full charge	1.23 - 1.25 [g/cm^3]
50% of full charge	1.20 - 1.22 [g/cm^3]
Fully discharged	1.11 - 1.13 [g/cm^3]

5.11. ENGINE

WARNING! Wear hand and eye protection when draining hot fluids.

WARNING! Before servicing the engine, be sure the bucket is lowered to the ground, the transmission direction lever is locked in neutral (N), the parking brake is applied, electric system master switch is off, and the key removed. Tag the machine.

5.11.1. CHECKING THE CRANKCASE OIL LEVEL

Check the crankcase oil level every day with dipstick (1, Fig. 5.16). In order to do this, lift the hood or radiator grill (Fig. 5.48, 5.48A and 5.48B). Do not operate the engine if the oil level is below mark L (low) or above mark H (high) on the dipstick (Fig. 5.17). Check the oil level before starting the engine or at least after 15 minutes after stopping it. This allows the oil to drain back to the crankcase.

IMPORTANT: *Park the loader on level ground for correct oil level reading.*

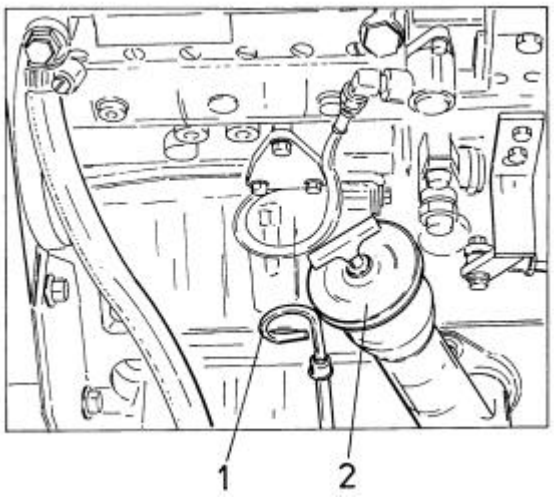

Fig. 5.16. Checking the Crankcase Oil Level

1. Dipstick 2. Filler Port

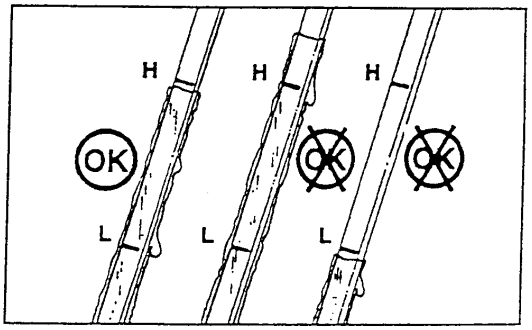

Fig. 5.17. Engine Oil Dipstick

https://truckmanualshub.com/

5.11.2. CHANGING THE CRANKCASE OIL AND FILTER

WARNING! Avoid direct contact of hot oil with your skin. Hot oil can cause personal injury.

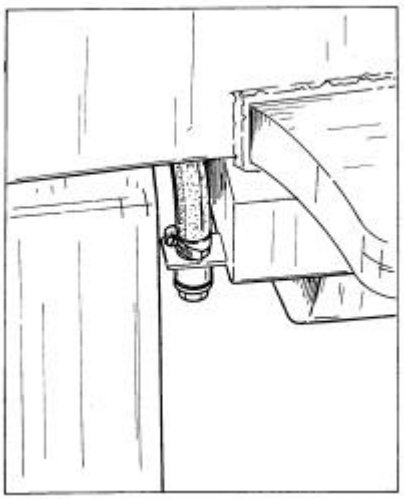

Fig. 5.18. Oil Drain Hose (on RH Side of Machine)

Start the engine and warm it up to the temperature of 60 [ºC] (green area of the engine oil temperature gauge). Stop the engine. Lift up the hood or radiator grill (Fig. 5.48, 5.48A and 5.48B). Remove the draining plug and drain the oil completely to remove all oil and impurities from the engine (Fig. 5.18).

Machines in CE configuration are equipped with automatic drain valve and drain hose (included in the machine accessories). Remove the castellated nut protecting the automatic valve. Install the drain valve on the open thread. The drain valve will be opened automatically as the hose nut is threaded in. Fully threaded nut opens the valve completely.

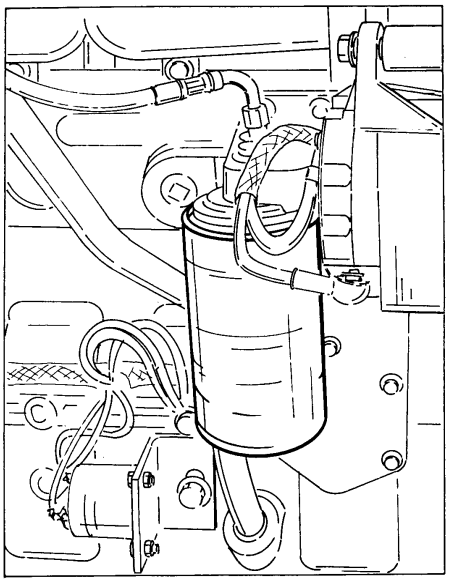

Fig. 5.19. Lubricating Oil Filter (LH Side of Machine)

https://truckmanualshub.com/

Clean the area around the filter header. Using a filter wrench, remove the oil filter (Fig. 5.19). Clean the filter gasket surface of the filter header.

IMPORTANT: *The oil filter O-ring may stick to the filter header. Make sure the O-ring is removed.*

Apply a thin coat of clean engine oil to the seal of the filter. Fill the new filter with clean engine oil.

IMPORTANT: *If the filter is not filled with engine oil, there will be a lack of lubrication during the delay until the filters are pumped full of oil. This lack of lubrication is harmful to the engine.*

Install the filter on the filter head.

IMPORTANT: *Do not overtighten the filter. This can warp the thread and damage the filter seal.*

Check the condition and clean the drain plug thread and the gasket contact surface. Reinstall and tighten the drain plug.

IMPORTANT: *Use high quality oil as specified in Chart 2 and 3.*

Refill the engine with fresh and clean oil up to the required level. The total capacity of the engine crankcase is 14 liters (Refer to Chart 2). The filter capacity is 2 liters. Check the oil level.

Start the engine and idle it for a few minutes. Inspect for oil leaks at the filters and drain plug. Then stop the engine, wait for 15 minutes to allow the oil to drain and check the oil level. If necessary, add oil to bring the oil level up to specified mark H on the oil dipstick.

5.11.3. CHECKING THE CONDITION AND TENSION OF BELTS

INSPECTION
Inspect visually the drive belts every day (Fig. 5.20). Replace badly worn, greasy or severely cracked belts immediately. Transverse (across the belt width) cracks are acceptable. Adjust the belts that have shiny or glazed surface, which indicates belt slippage. Correctly installed and tensioned belts will show even pulley and belt wear.

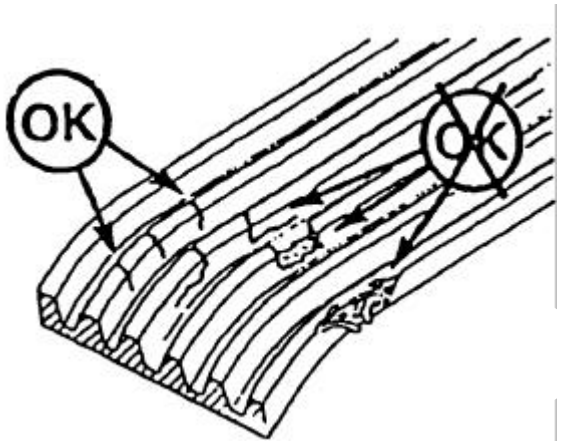

Fig. 5.20. Belt Inspection

Check belt tension midway between the pulleys every 1000 hours of operation. Application of a force of 270 to 580 [N] should cause deflection of a belt of 9.5 – 12.7 [mm] at the most.

https://truckmanualshub.com/

IMPORTANT: *Use ST-1293 belt tension gauge to check belt tension.*

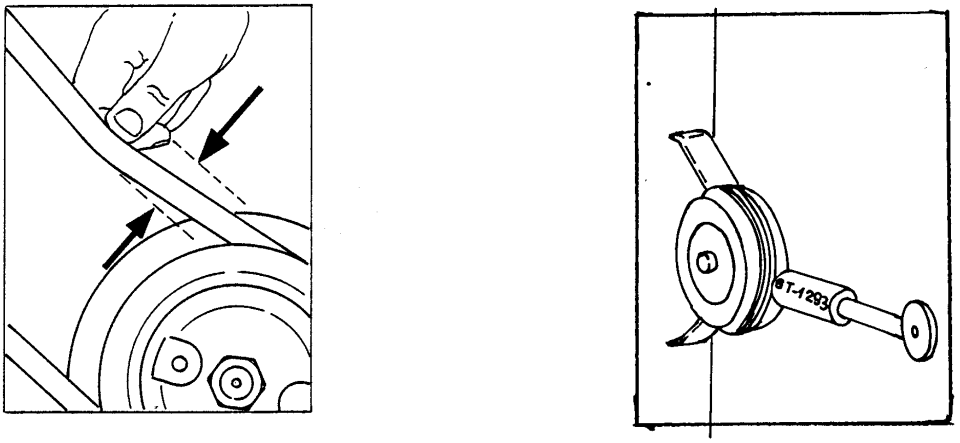

Fig. 5.21. Checking Belt Tension

5.11.4. CHECKING THE CONDITION OF FAN AND HUB

WARNING! Damaged fan blades may cause serious injury. Never pull the fan blades nor lift them. This may damage the fan and cause injury.

Radiator fan must be checked every day (Fig. 5.22). Check for cracks, loose rivets and bent or loose blades. Check the fan to make sure it is securely mounted. Replace any fan that is damaged. Check the fan hub every 1000 hours of operation. It should rotate freely although without excessive loose.

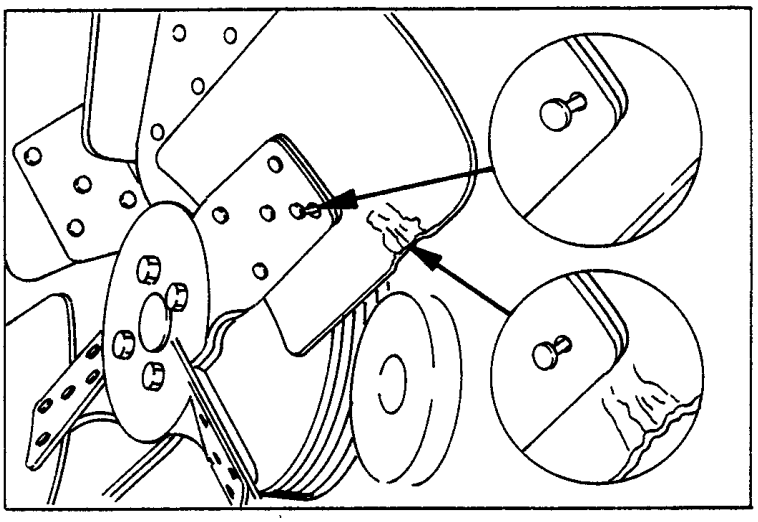

Fig. 5.22. Checking for Fan Defects

https://truckmanualshub.com/

5.11.5. INSPECTION OF IDLER PULLEY

Idler pulley should be checked every 1000 hours of operation. The pulley should rotate freely. Inadmissible are rough indents which can be detected with a finger (Fig. 5.23).

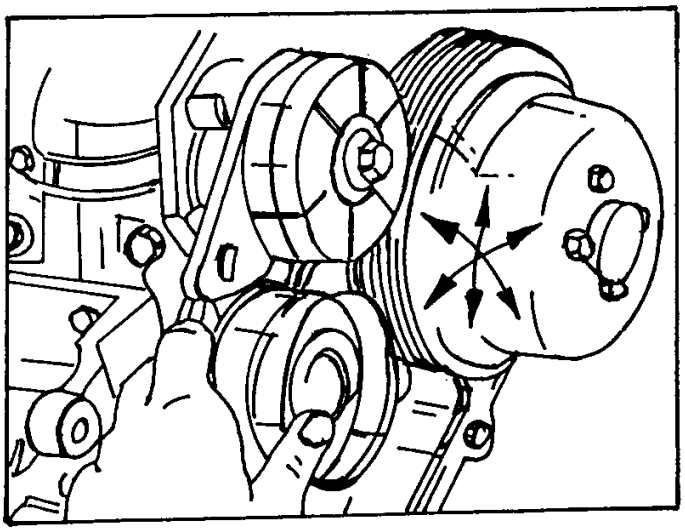

Fig. 5.23. Inspection of Idler Pulley

5.11.6. ADJUSTMENT OF ENGINE VALVES

1. Lift the hood or radiator grill (Fig. 5.48, 5.48A and 5.48B).
2. Disconnect the turbocharger air inlet hose. Remove the valve covers (Fig. 5.24).

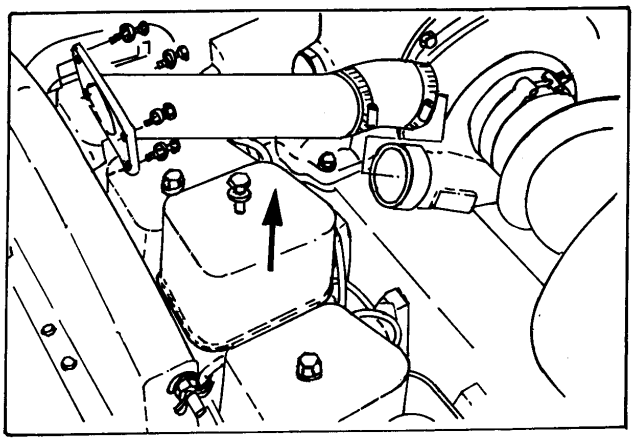

Fig. 5.24. Removal of Valve Covers.

3. Position the first cylinder piston in the top dead center (TDC) by turning the pinion on the rack by hand and simultaneously pressing the timing pin (Fig. 5.25). When the pin slides into the camshaft hole/opening, the cylinder piston has reached the top dead center (TDC).

https://truckmanualshub.com/

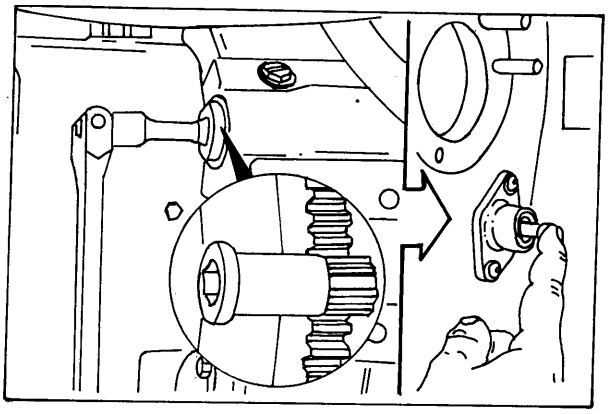

Fig. 5.25. Positioning a Cylinder Piston in TDC

IMPORTANT: *When the piston is positioned in its TDC remove the pin so as not to cause damage to the pin or engine.*

4. Check and adjust, if necessary, the valve lash as shown in Fig. 5.26. Use a screw driver and a wrench. The value of the valve lash should be as follows:

- Suction valve (I): 0.25 [mm],
- Exhaust valve (E): 0.51 [mm].

Tighten the adjusting nut up to the torque of 24 [Nm] and check the lash again.

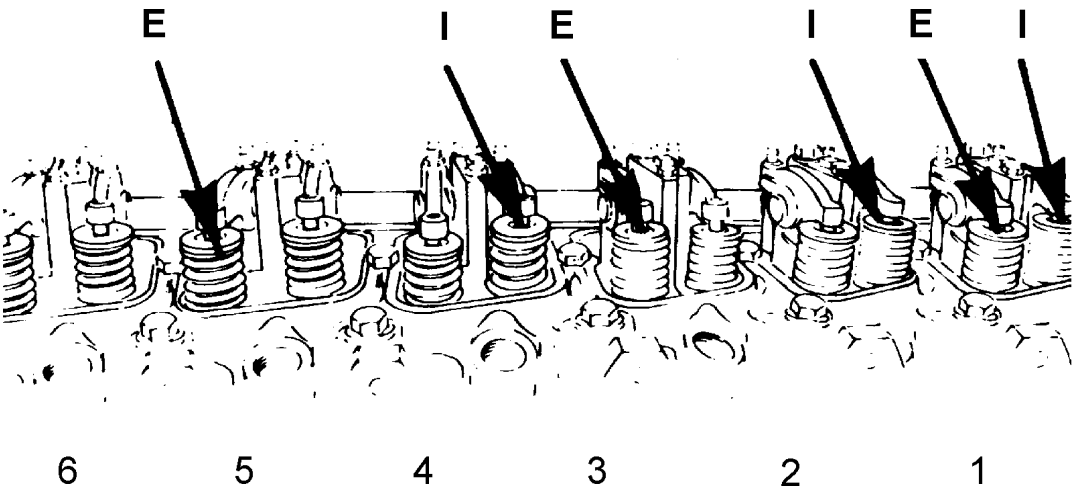

Fig. 5.26. Engine Valves

1. Suction Valves 2. Exhaust Valves

5. Mark the position of the vibration damper, rotate it by 360 [º]. Check and adjust, if necessary, the other valves as shown in Fig. 5.27 as described in item 4 above.

https://truckmanualshub.com/

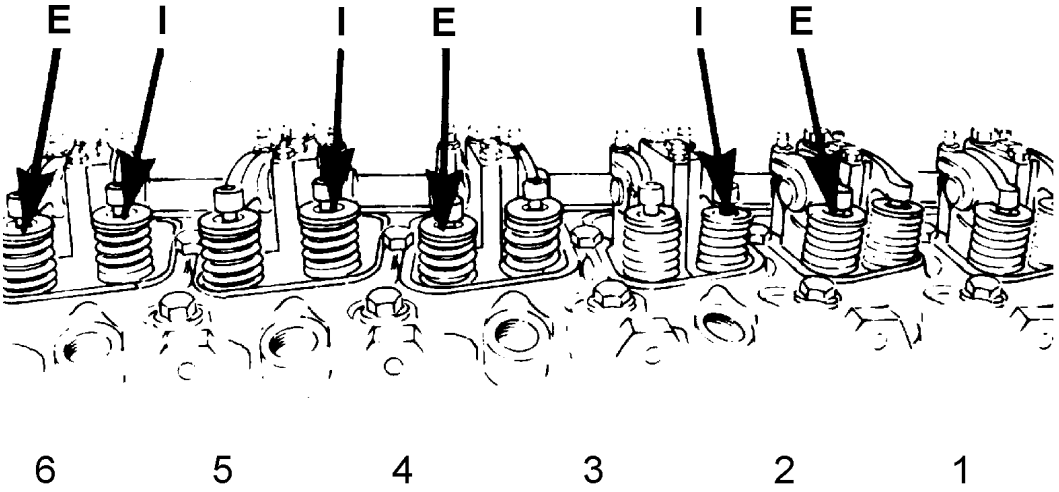

Fig. 5.27. Engine Valves

1. Suction Valves 2. Exhaust Valves

6. Install the valve covers and torque to 24 [Nm].

NOTE: *Refer to ENGINE OPERATION AND MAINTENANCE MANUAL for more detailed instructions of valve lash adjustment.*

5.12. ETHER INJECTOR

PRECAUTIONS

WARNING! Ether starting fluid is highly flammable. Follow strictly the precautions on the container. An explosion can result if sparks or flame contact the ether or if the container is stored where the temperature exceeds 70 [°C].

1. Do not use the ether injector when the air temperature is above freezing (0 [°C]).
2. Do not smoke when using ether starting fluid.
3. Do not store fluid containers in the operator's compartment.
4. Keep the fluid containers out of reach of children.
5. Do not breathe the hazardous ether vapor.
6. Do not let ether contact you skin, because it can cause frostbite.
7. Never puncture the fluid container or put it into a fire. Dispose of empty containers properly.
8. For your safety, remove the ether container when welding, grinding, or using a torch on the machine.

NOTE: *Improper starting fluids can cause valve seizure and severe damage to the engine. Consult an authorized distributor for the recommended starting fluid to be used.*

IMPORTANT: *The ether starting valve inlet must be sealed against the entry of dirt at all times by having a container installed or by installing the dust cap provided with the valve.*

INSPECTION AND CLEANING
Make certain that ether is available under pressure. To do so, remove the ether container and check if a good spray is obtained. If not, replace with a new container. If a good spray was obtained. Install the container and test the ether injector as follows:

https://truckmanualshub.com/

1. Disconnect the ether tube at the spray nozzle in the engine manifold. Remove the spray nozzle.
2. Reconnect the nozzle to the tube.
3. Direct the nozzle away from the engine and actuate the ether injector.
4. Dribbling or no spray indicates a blocked spray nozzle or tube. If necessary, clean or replace the nozzle and/or tube. If the spray is insufficient, replace the container.

CHANGING THE FLUID CONTAINER
1. Loosen wing nuts (1) securing fluid container support saddle (4).
2. Unscrew and discard container (2) from the ether starting valve in a suitable, closed refuse container.
3. Install a new container in valve (3).
4. Secure the container in place by tightening the saddle nuts. Do not over tighten the nuts.

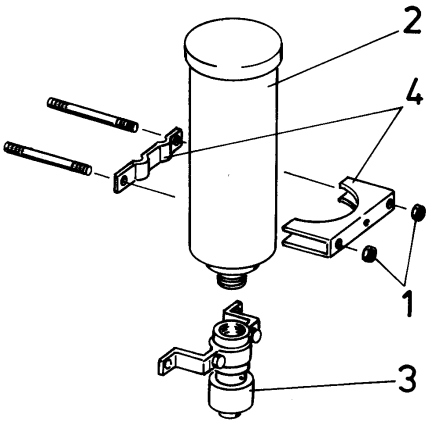

Fig. 5.28. Installing Ether Injector

1. Mounting Nut
2. Ether Container
3. Valve
4. Saddle

5.13. FUEL SYSTEM

Cleanliness of diesel fuel determines the service life of the fuel injection components. Water contaminants, allowed to reach precision injection components, cause rapid wear and poor performance. Clean fuel and regular servicing of the fuel tank and fuel filtering components are necessary for long service life. Always clean the area around the fuel tank filler cap before refueling.

WARNING! Do not smoke while filling the fuel tank or servicing the fuel system because a fire or explosion could result

WARNING! When filling the fuel tank, place the fuel nozzle against the side of the neck to reduce the chance of static electricity sparks.

WARNING! Never remove the fuel filler cap or fill the fuel tank while the engine is running or when the machine is indoors. The fumes are hazardous and a spark or flame can cause a fire or explosion.

WARNING! Never mix gasoline, gasohol (a mixture of corn alcohol and 90 % gasoline), or alcohol with diesel fuel. This creates a fire or explosion hazard which could result in personal injury or death.

https://truckmanualshub.com/

5.13.1. FUEL TANK

Check the fuel level at the gauge on the instrument panel. To prevent moisture due to condensation, the fuel tank must be filled at the end of each day's operation.

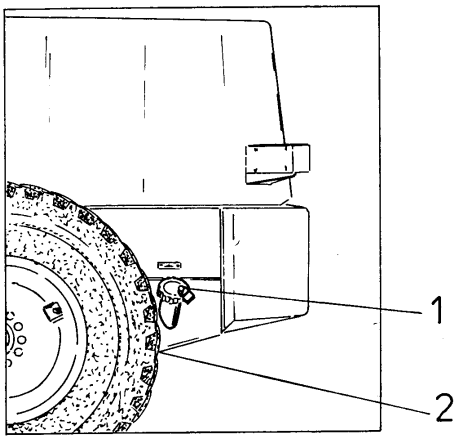

Fig. 5.29. Fuel Tank

1. Filler Pipe 2. Draining Plug

FUEL STRAINER (if equipped)
The fuel strainer is installed in the filler pipe. Access is possible upon the removal of filler cap (1) and retainer. The fuel strainer performs a coarse filtration of fuel facilitating the operation of the fuel filters. Keep the fuel strainer clean. Use kerosene or diesel fuel for cleaning.

FUEL TANK BREATHER
The breather is located on the right side of the fuel tank, close to the engine crankcase. Access is possible upon lifting the hood (Fig. 5.48, 5.48A and 5.48B) or the radiator grill (Fig. 5.48A). Clean the breather with a suitable solvent and dry with compressed air.

DRAINING WATER
Drain water daily before starting the operation of a machine. Remove drain plug (2) located on the front wall of the tank in its lowest point. Wait until clean fuel starts to flow. Reinstall the drain plug. Drain fuel to a clean container. Allow water and sediment to collect on the bottom of the container and refill the clean fuel collected above the sediment and water.

5.13.2. CHANGING THE FUEL FILTERS

1. There is a strainer in the fuel line (Fig. 5.31A). The strainer must be periodically replaced. Before replaced, it is necessary to close the fuel shut valve located under fuel tank and loosen the hoses farting clamps. Install the new strainer that way the arrow on the strainer is orientated the fuel flow.

2. The engine is equipped with two filters (one with water separator). The filters must be replaced every 500 hours of operation or every 6 months. Lift the hood (Fig. 5.48, 5.48A and 5.48B), clean the area around the fuel filters. Using a filter wrench, remove the fuel filters (Fig. 5.30), remove the O-ring. Clean the fitter gasket surfaces of the filter header for each filter (Fig. 5.31). Fill the new filters with clean diesel fuel. Install the new O-ring supplied with a filter. Then apply a thin coat of clean engine oil to the seal of the filter. Install the filters on the filter header.

https://truckmanualshub.com/

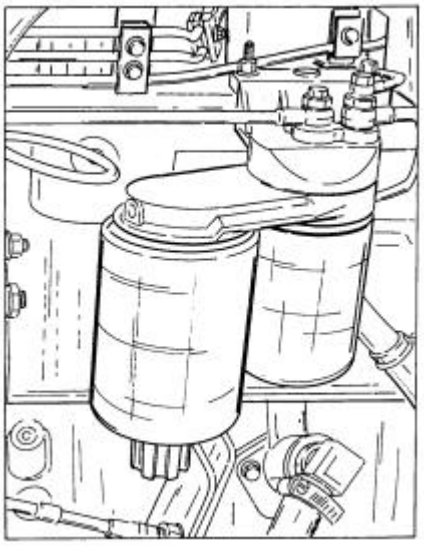

Fig. 5.30. Fuel Filters (RH Side of Machine)

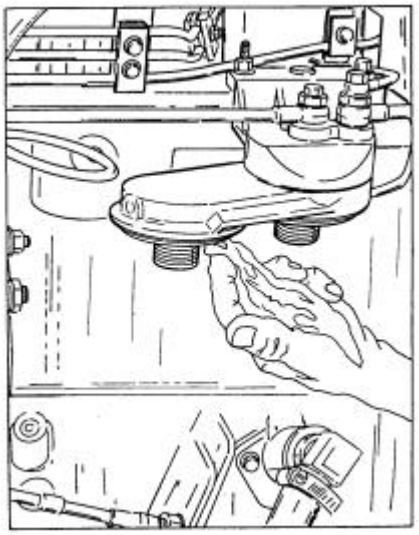

Fig. 5.31. Cleaning Fuel Filter Header

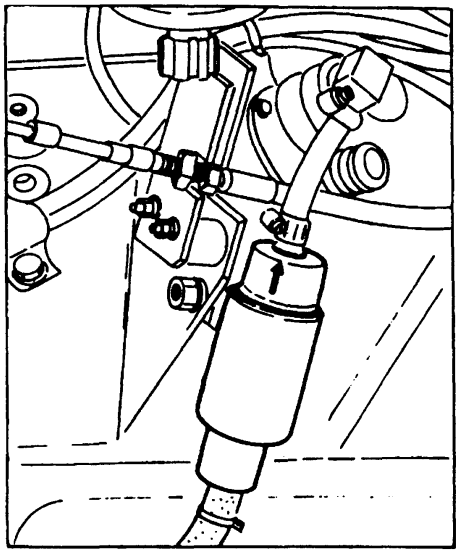

Fig. 5.31A. Fuel Filter Strainer

5.13.3. FUEL FILTER WITH WATER SEPARATOR

One of the fuel filters is equipped with a water separator (Fig. 5.32). Water and sediment should be removed at the end of each day's operation.

To drain water and sediment carry out as follows:

- stop the engine,
- turn the water separator drain valve to the left by 1.5 to 2 turns,
- drain the water until clear fuel start to flow,
- close the valve by turning home to the right.

https://truckmanualshub.com/

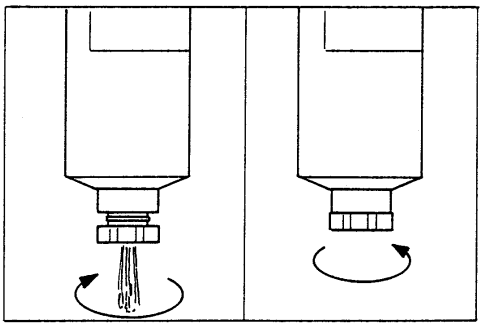

Fig. 5.32. Draining Fuel Filter Water Separator (RH Side of Machine)
(left - draining right - closing)

IMPORTANT: *Do not overtighten the valve not to damage valve thread.*

5.13.4. VENTING THE FUEL SYSTEM (Fig. 5.33)

Controlled venting is provided at the injection pump through the fuel drain pipe. Small amounts of air introduced by changing the filters or injection pump supply line will be vented automatically provided the filters are changed in accordance with the instructions.

Manual venting will be required if:

a) the fuel filters are not filled prior to installation,
b) the injection pump is replaced,
c) the high presser fuel lines are replaced,
d) after machine's prolonged standstill,
e) if the fuel tank has been emptied completely.

Vent the low pressure lines and fuel filters as follows:

1. Lift the hood (Fig. 5.48, 5.48A and 5.48B).
2. Open bleeder screw (1) on the filter header.
3. Operate hand lever (2) until the fuel flowing from the vent plug hole is free of air.
4. Tighten the bleeder screw to 8 [Nm].

Vent the injection pump as follows:

1. Bosch PES6A in-line injection pumps are equipped with automatic venting system.

Vent the high pressure lines as follows:

1. Loosen the high pressure line nut on one of the injectors.
2. Crank the engine till clean fuel appears.

NOTE: *While cranking keep away from the rotating engine parts.*

3. Torque the high pressure line nut to 24 [Nm].
4. Start the engine and run it at low idle till the system is vented (smooth operation)

https://truckmanualshub.com/

ENGINE

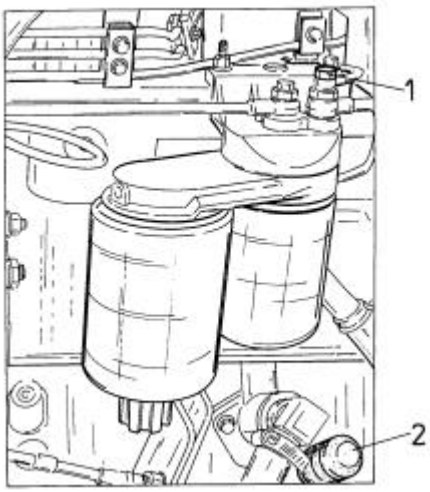

Fig. 5.33. Venting the Fuel System

1. Bleeder Plug 2. Hand Pump

5.14. HYDRAULIC SYSTEM

GENERAL

Before removing any components from the hydraulic reservoir, clean the top surface of the reservoir and the components to be dismantled with a commercial cleaning solvent.

WARNING! Before servicing the machine, be sure the engine is off, the bucket is lowered, the transmission direction lever is locked in neutral (N), the parking brake is applied, the electric system master switch is off, and the keys are removed.

WARNING! This machine has a pressurized hydraulic reservoir. Loosen the filler cap slowly to relieve the pressure before disassembly of any hydraulic system component. Do not overfill.

WARNING! Always lock the frame halves together with the frame locking bar and pins before performing service near the machine's articulation pivot.

5.14.1. CHECKING THE RESERVOIR OIL LEVEL

1. Park the machine on level ground. Lower the bucket to the ground.
2. Stop the engine and apply the parking brake.
3. Check the oil level sight gauge. If the ball is not floating in the sight gauge (Fig. 5.34), oil must be added.

WARNING! This machine has a pressurized hydraulic reservoir. Loosen the filler cap slowly to release the pressure. It is obligatory before disassembly of any hydraulic system components.

https://truckmanualshub.com/

4. Slowly remove reservoir filler cap 16 (Fig. 5.35, 5.35A). Add oil until the ball in the sight gauge reaches the top of the gauge. Refer to CHART 2 and 3 for the grade of oil specified.
5. Install the filler cap.

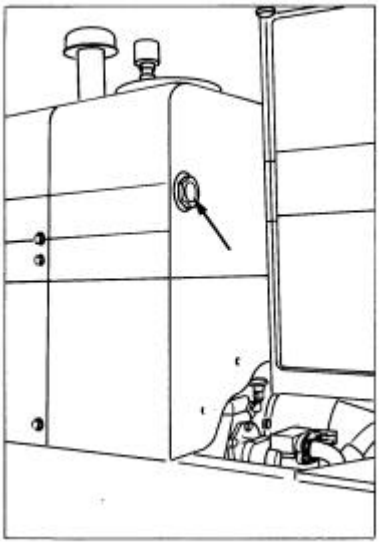

Fig. 5.34. Hydraulic Tank Sight Gauge (behind Cab on RH Side of Machine)

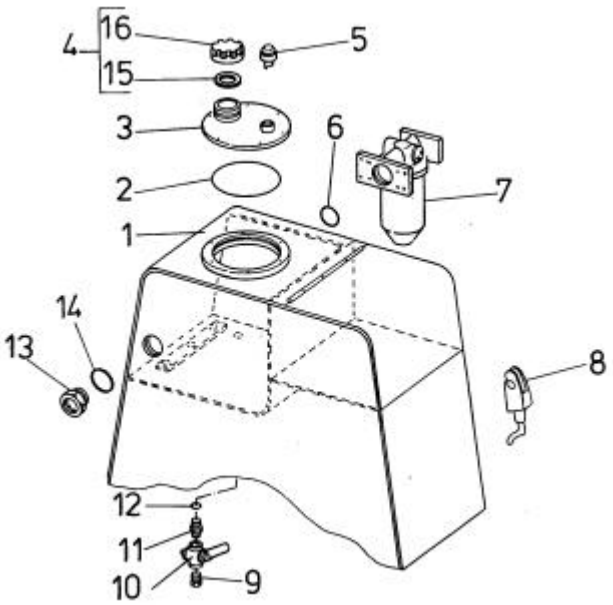

Fig. 5.35. Hydraulic Reservoir

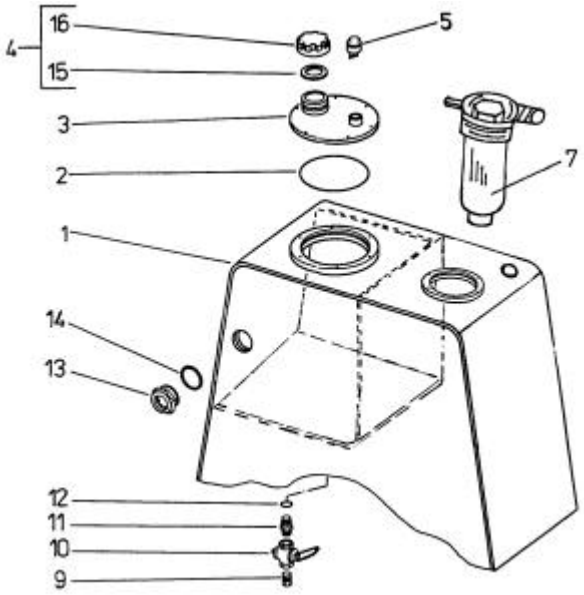

Fig. 5.35A. Hydraulic Reservoir (CE Version)

1. Reservoir
2. O-Ring
3. Filler Neck
4. Filler Cap Assembly
5. Breather
6. O-Ring
7. Hydraulic Oil Return Filter
8. Latch
9. Drain Valve Plug
10. Drain Valve
11. Adapter
12. O-Ring
13. Sight Gauge
14. O-Ring
15. Filler Cap Gasket
16. Filler Cap

https://truckmanualshub.com/

5.14.2. CHANGING THE HYDRAULIC SYSTEM OIL

Operate the boom, bucket and steering circuits until the hydraulic oil becomes warm.

1. Park the machine on level ground, lower the bucket flat on the ground. Stop the engine, and apply the parking brake. Lock the front and rear frames.
2. Remove plug (9) from reservoir drain valve (10). Fit a short threaded ¾ ["] pipe connector into the end of a piece of hose (enclosed in accessories). Screw the pipe connector into the drain valve. Put the other end of the hose into a container large enough to hold the oil from the reservoir. DO NOT open the drain valve yet!
3. Clean the top of the reservoir with kerosene or cleaning solvent.
4. Slowly open drain valve (4).
5. Start the engine. Raise the bucket completely, and roll the bucket all the way back.
6. Shut the engine down. Switch off the electric system master switch.

WARNING! NEVER work or walk under a raised bucket without proper blocking in raised position.

7. Open drain valve (10), allow the reservoir to drain.
8. Lower the boom slowly. After the boom comes to rest on the ground, push the bucket lever forward to ”dump” position. This will force the hydraulic oil out of the boom and bucket cylinders and into the reservoir (standard version only).

8a. Lower the boom of a CE version with a boom safety valve (Fig. 5.36).

9. Close drain valve (10) after the reservoir has drained.
10. Remove the drain pipe and hose from the drain valve. Install plug (9) into the drain valve.
11. Replace reservoir filter (7) as described in section 5.14.3.
12. Fill the reservoir with clean oil until the ball in sight gauge (13) reaches the top of the gauge. Refer to Chart 2 and 3 for the grade of oil specified.
13. Install and tighten filler cap (4).
14. Start the engine and operate the boom and bucket to fill the hydraulic cylinders with oil.
15. Lower the bucket to the ground and shut down the engine. Check the oil level as described in section 5.14.1.

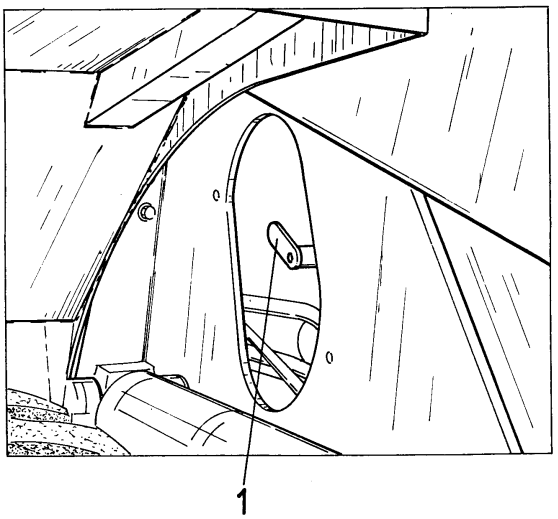

Fig. 5.36. Boom Safety Valve (on RH Side of Machine)

1. Valve Lever

https://truckmanualshub.com/

IMPORTANT: *The reservoir must be refilled in this manner until the proper level is maintained after the hydraulic system is operated at least five complete cycles (boom raise and lower plus bucket close and dump operations).*

5.14.3. CHANGING THE HYDRAULIC OIL RETURN FILTER (Fig. 5.37)

Replace the oil filter according to the Maintenance Schedule or when the filter warning light comes on (if equipped).

1. Drain the reservoir as described in section 5.14.2.
2. Remove filter element (1) from header (4) by turning the element counterclockwise (the filter is located at the back of the reservoir).
3. Remove indicator assembly (2) from the element. Inspect and, if necessary, replace O-ring (5).
4. Remove and inspect O-ring (3); if worn or deteriorated, replace.
5. Install O-ring (3).
6. Place indicator assembly (2) in new filter element (1).
7. Apply a light coating of clean engine oil or chassis grease to the seal surface on new filter (1).
8. Install the new filter, turning it until the O-ring just contacts filter header (4).
9. Make aligning marks on the filter and the filter header; give the filter an additional ¼ to ½ turn.

IMPORTANT: *Do not overtighten the filter or use any tools for installation because this can damage the O-ring or filter.*

In CE version it is not necessary to drain the reservoir to replace the return filter. The oil level is below the filter header and so the oil will not flow out of the reservoir while the element is being removed. The element should be replaced when the filter warning light comes on.

To replace the filter element carry out as follow:
1. Remove cover (3) from filter header (2, Fig. 5.37A).
2. Remove old element (1) and replace it with a new one.
3. Clean the dismantled parts and install cover (3).

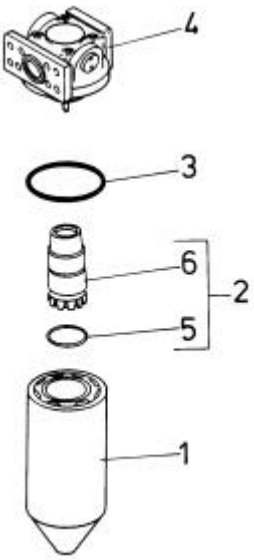

Fig. 5.37. Hydraulic Reservoir Return Filter

1. Filter Element	3. O-Ring	5. O-Ring
2. Indicator Assembly	4. Filter Header	6. Indicator

https://truckmanualshub.com/

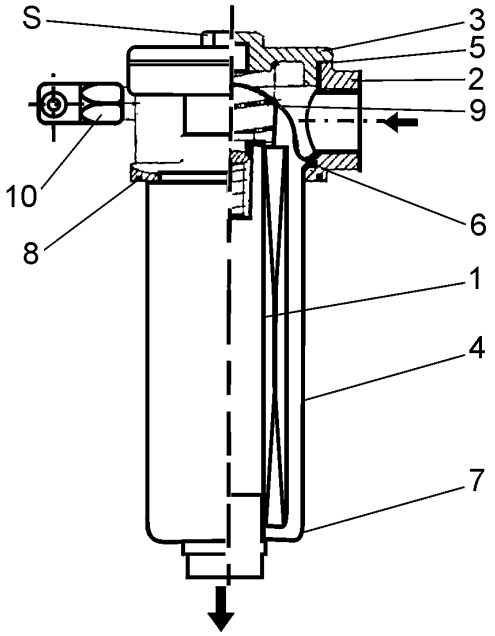

Fig. 5.37A. Hydraulic Reservoir Return Filter (CE Machine)

1. Filter Element	4. Filter Housing	9. Spring
2. Filter Header	5. Gasket	10. Oil Filter Restriction Switch
3. Cover	6, 7, 8. O-Rings	S = 30 mm

5.14.4. SERVICING THE HYDRAULIC RESERVOIR BREATHER

Breather filter (5) should be either cleaned or replaced periodically (Fig. 5.38).

1. Loosen the filter cap on the reservoir to relieve system pressure.
2. Remove retaining ring (2) and cover (4).

WARNING! Wear eye protection when using air or water under pressure to clean parts. Limit air pressure to 200 kPa and water pressure to 270 kPa.

3. Remove filter (5) and clean in a commercial solvent and dry with compressed air (or replace).
4. Check seal rings (3) for wear or deterioration. Replace if necessary.
5. Reinstall filter (5) (cleaned or new) and cover (4). Secure with ring (2).
6. Tighten the reservoir filler cap.

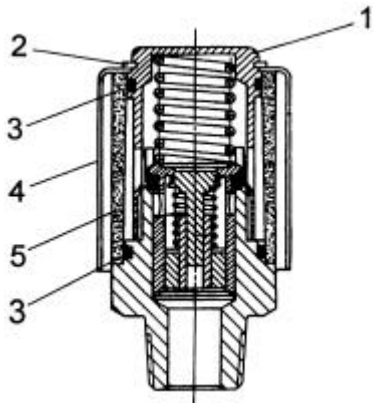

Fig. 5.38. Hydraulic Reservoir Breather

1. Cap 2. Retaining Ring 3. Filter Seal 4. Cover 5. Filter

https://truckmanualshub.com/

5.15. SEAT BELT

WARNING! Do not use bleach, color dye or solvents on the seat belt webbing, because this can weaken it and cause personal injury. Clean the seat belt only with warm water and a mild detergent. Replace belts when worn, frayed, torn, stiff, or rotted webbing or defects of the tang, buckle or anchors are detected.

Keep belt flat to avoid twisting and roping when not being used. Do not place heavy or sharp objects on the belt.

The entire seat belt assembly should be inspected periodically for corrosion, wear, fraying or weak spots. The seat belt mounting bolts should also be periodically inspected for looseness.

5.16. STEERING GEAR

Check the lubricant level by removing the cap screw in the side cover (Fig. 5.39). If the lubricant is below the cap screw hole add lubricant through the hole as necessary. Refer to Chart 2 and 3.

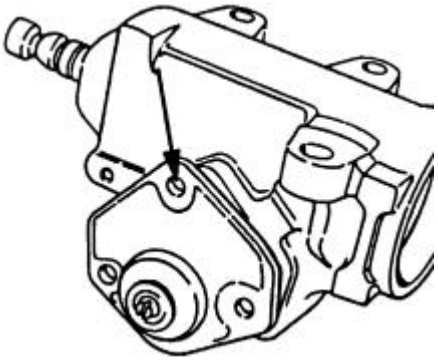

Fig. 5.39. Steering Gear Fill Location

5.17. TIRES AND RIMS

Avoid parking the machine in puddles of oil, grease or gasoline because this damages the tires.

INFLATION

WARNING! Never inflate a flat tire without inspecting the tire, rim and wheel for damage. Be sure all components are properly assembled. Unmounted tires being inflated or deflated should be placed in a tire safety cage. Inflate the tire to 100 – 140 [kPa] and check that all components are properly seated. Then continue to inflate to 240 – 280 [kPa]. Never stand directly in front of a tire and rim assembly while inflating. Use a clip-on chuck with a hose long enough to allow the person inflating the tire to stand to the side. Serious injury could result if the tire and mounting were to separate.

PROPER INFLATION
Maintaining the proper air pressure provides maximum road contact and results in increased tire life. Check inflation pressures with an accurate tire pressure gauge when the tires are cool. Be sure to install valve caps after inflating a tire. Never vent built-up pressure in a tire, such as encountered on hot days. Pressure build-up on hot days actually protects the tires by avoiding excessive sidewall flexing and its overheating, which are detrimental to tire life. Venting tires will also result in underinflation when the tires cool.

https://truckmanualshub.com/

UNDERINFLATION
To little air pressure increases deflection, causes the tire to wipe and scuff over the road, results in extra strain on the tire and increases the chance of bruising.

OVERINFLATION
Overinflation reduces the tire deflection and the tire contact area causing the tire to ride on the crown and results in rapid wear in the center of the tread.

CHANGING

WARNING! Tire and rim repairs must be done by specially trained persons using special safety tools. An improperly repaired tire or rim can separate suddenly and cause serious injury.

Wheel rim components should be checked for damage and cracks. Damaged parts must be replaced, NOT repaired. Disassembly of tubeless tire of this size is very difficult. Therefore, do not replace parts yourself. Contact Construction Equipment Authorized Distributor or tire distributor where persons with special training and safety tools are available.

WHEEL RIM MOUNTING
Torque the bolts to their special torque value 920 [Nm] or 870 [Nm] for 1["] and M24x3 respectively.

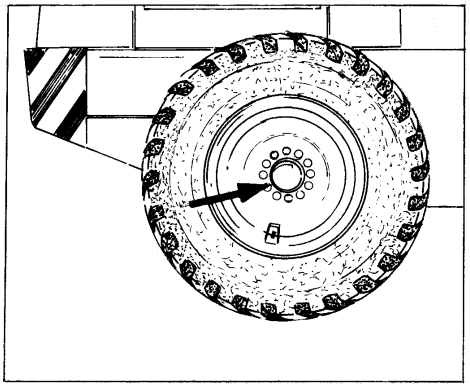

Fig. 5.40. Wheel Mounting Hardware

5.18. TRANSMISSION SYSTEM

5.18.1. CHECKING THE OIL LEVEL

WARNING! When it is necessary to make any checks or adjustments with the engine running, use two people. A trained operator must be at the controls to safeguard the mechanic making the checks or adjustments. Be sure the transmission direction lever is locked in neutral (N), the frame halves are locked together and the parking brake is applied.

1. Park the machine on level ground.
2. Lock the transmission in "N" (neutral), lower the bucket to the ground and apply the parking brake.
3. Check the oil level in lower sight gauge (2, Fig. 5.41) through a cut-out in the rear frame left wall.

https://truckmanualshub.com/

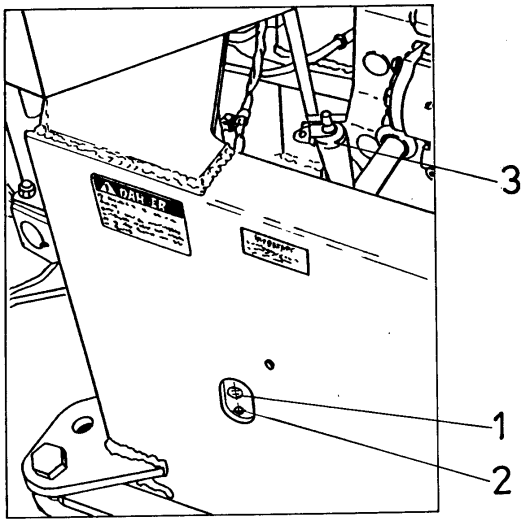

Fig. 5.41. Checking the Transmission Oil Level

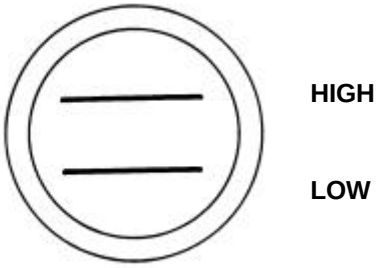

Fig. 5.42. Upper Sight Gauge

1. Upper Sight Gauge
2. Lower Sight Gauge
3. Filler Plug

4. If the oil level is too low, stop the engine, lock the frame locking bar, remove oil filter cap (3, Fig. 5.41) and add oil.
5. Start the engine and let it run at low idle.
6. Check the oil level in both sight gauges through the cut-out in the frame (Fig. 5.41). If the oil level is not between the high and low mark (Fig. 5.42) on the top sight gauge, remove filler cap (3, Fig. 5.41) and add oil until the level settles in the middle of the upper gauge (maximal level should not exceed the middle of the upper gauge). Refer to Chart 2 and 3 to choose the proper oil grade. When refilled reinstall the cap.

IMPORTANT: *If the oil level is above the upper sight gauge, drain the oil until the level is in the middle of it. Too much oil in the transmission will cause aeration of the oil.*

WARNING! Protect your eyes and hands while draining hot oil.

5.18.2. CHANGING THE OIL

1. With the oil at the operating temperature, park the machine on level ground. Lower the bucket to the ground, apply the parking brake and stop the engine.
2. Install the frame locking bar.

WARNING! Wear hand and eye protection when draining hot fluids.

3. Remove drain plug (1, Fig. 5.43) from the transmission while the oil is still warm.
4. Unscrew transmission oil filler cap (2, Fig. 5.41). This will vent the case and allow the oil to drain faster.
5. While the oil is draining, service the transmission pressure filter element. Refer to Par. 5.18.3.
6. Service the transmission suction strainer. Refer to Par. 5.18.4.

https://truckmanualshub.com/

TRANSMISSION SYSTEM

7. Reinstall the drain plug.
8. Fill the transmission with fresh oil to the proper level. Refer to Chart 2 and 3. Start the engine and operate the transmission through all gear ranges to fill the clutches with oil. Check for leaks.
9. Check the lubricant level. Refer to Par. 5.18.1.

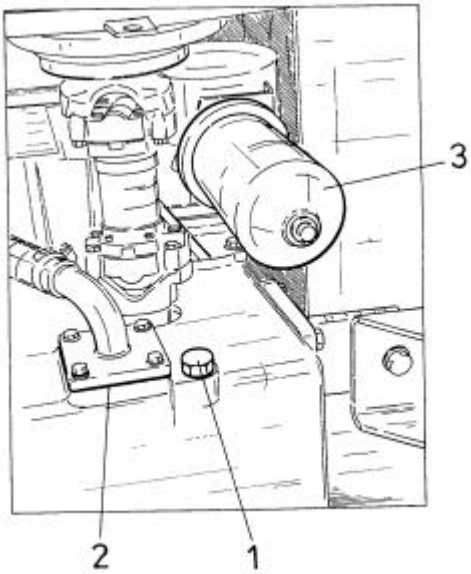

Fig. 5.43. Drain Plug and Transmission Filters (View From Underneath)

1. Drain Plug 2. Suction Strainer 3. Pressure Filter

5.18.3. CHANGING THE TRANSMISSION PRESSURE FILTER

Pressure filter (3, Fig. 5.43) is located at the back on the RH side of the transmission.

1. After reaching the operating temperature, park the machine on level ground, apply the parking brake, and lower the bucket to the ground. Install the frame locking bar in the locked position.
2. Clean the outside of filter case (6, Fig. 5.44) and head (11).
3. Remove drain plug (3) and O-ring (2) allowing oil to drain completely from the filter case.
4. Remove center bolt (1), washer (4), and O-ring (5) from the case.
5. Remove case (6), spring (7), element (9), gasket (8), and large O-ring (10) from head (11).
6. Discard element (9).
7. Place spring (7), case (6), drain plug (3), washer (4), and center bolt 1 in a solvent bath. Wash out any sludge that has accumulated in case (6). Wipe the inside of head (11) clean. Dry all parts thoroughly.
8. Insert spring (7) squarely into the bottom of case (6). Install a new gasket (8) into one end plate of new filter element (9). Place the element into the case. Be sure the element is seated squarely on top of spring (7) in the bottom of the case.
9. Install large O-ring (10) into the head.
10. Slide case (6) with all the preassembled parts within into the head assembly.
11. Place washer (4) and O-ring (5) onto the center bolt into the bottom of the case. Torque the bolt to 65 - 88 [Nm].
12. Install drain plug (3) and O-ring (2) into the case.
13. Start the engine and run it idle for about 5 minutes. Stop the engine and check all connections for leaks. Correct if necessary.
14. Check the transmission oil level (Refer to Par. 5.18.1).

https://truckmanualshub.com/

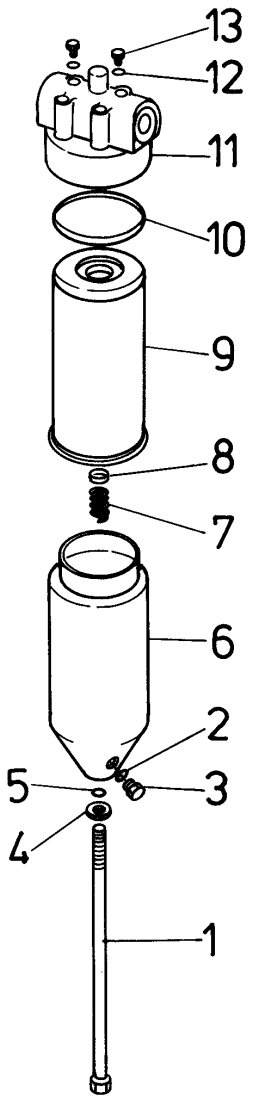

Fig. 5.44. Transmission Oil Pressure Filters

1. Center Bolt
2. O-Ring
3. Drain Plug
4. Washer
5. O-Ring
6. Case
7. Spring
8. Gasket
9. Element
10. O-Ring
11. Filter Header
12. O-Ring
13. Plug

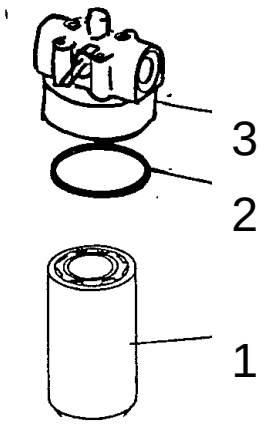

Fig. 5.44A. Transmission Oil Pressure Filters

1. Filter Element
2. O-Ring
3. Filter Head

Machines in CE version are equipped with a pressure filter shown in Fig. 5.44A. The element should be replaced also when the transmission filter warning light starts glowing. If this happens carry out as follows:

1. Remove element (1) from filter head (3) by turning it couterclockwise.
2. Remove O-ring (2). Check its condition. If it shows any signs of wear or deterioration, replace it.
3. Install O-ring (2).
4. Coat the seal contact area of new element (1) with engine oil or chassis grease.
5. Install the new element by turning it clockwise in the head till it contacts filter head (4).
6. Make aligning marks on the filter and the filter head and then give the filter an additional 1 to 1.5 turns.

https://truckmanualshub.com/

5.18.4. CLEANING THE TRANSMISSION SUCTION STRAINER

The location of the suction strainer is shown in Fig. 5.43.

1. The transmission should be drained as described under Par. 5.18.2. Install the drain plug.
2. Disconnect tube (1, Fig. 5.45) from elbow (2), then loosen bolts (3), remove retainer (4) with strainer assembly (6) from the transmission housing, and remove gasket (5).
3. Thoroughly clean the gasket material from the transmission housing and retainer (4).
4. Unscrew strainer assembly (6) from retainer (4). Look inside the strainer and inspect the valve spring for breakage. Replace, if necessary.
5. Wash the parts in a commercial cleaning solvent. Remove all particles from the magnetic rods on the strainer (if there are such particles). If necessary, the rods can be removed. Dry all parts thoroughly.
6. Install strainer assembly (6) into retainer (4) and apply a new gasket (5) to the retainer. Install this assembly into the transmission housing. Thread elbow (2) into retainer (4) and tighten. Attach tube (1) to the elbow.
7. Fill the transmission with oil (Refer to Par. 5.18.2).

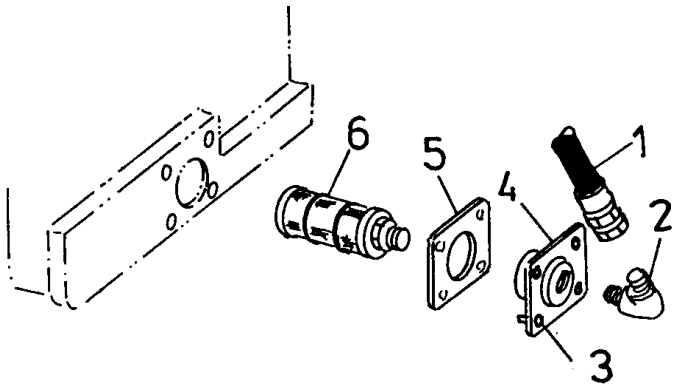

Fig. 5.45. Transmission Oil Suction Strainer

1. Tube	4. Retainer
2. Elbow	5. Gasket
3. Bolts	6. Strainer Assembly

5.18.5. SERVICING THE BREATHER

1. Remove the breather located on the RH side of a machine (Refer to Fig. 5.46).
2. Wash the breather in a commercial cleaning solvent to completely remove any sediment in the cap.

WARNING! Wear eye protection when using air or water under pressure to clean parts. Limit air pressure to 200 [kPa] and water pressure to 270 [kPa].

3. Dry the breather thoroughly using compressed air. If compressed air is not available, shake to remove the excess cleaning solvent.
4. Dip the cap in clean engine oil. Allow the excess oil to run out.
5. Reinstall the breather.

https://truckmanualshub.com/

TRANSMISSION SYSTEM

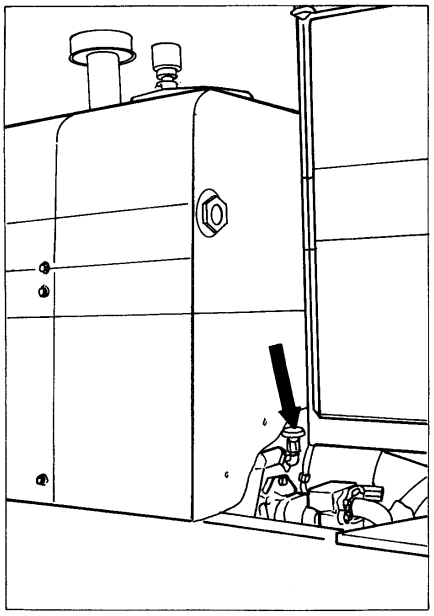

Fig. 5.46. Transmission Breather

5.19. ROPS CAB AND ROPS CANOPY

A loader can be equipped with a ROPS cab or ROPS canopy.

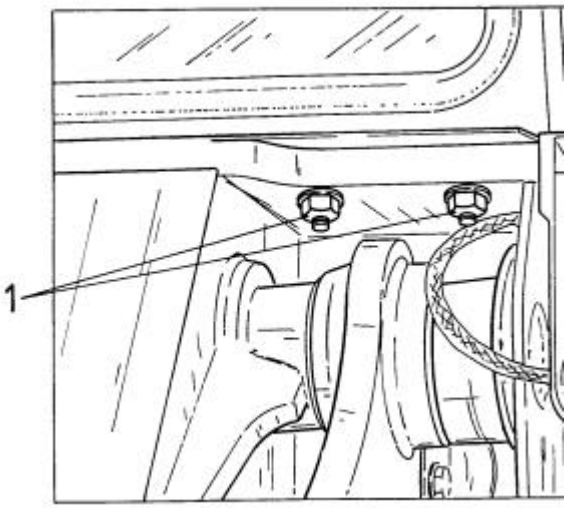

Fig. 5.47. ROPS Cab Mounting

1. Bolts (3 on Each Side)

Check periodically or once a year the torque of ROPS cab mounting bolts (320 [Nm]). Check and torque, if necessary, rearview mirrors, wipers, guards, screens and covers.

https://truckmanualshub.com/

5.20. HOOD ASSEMBLY AND RADIATOR GRILL

Ample access to the engine compartment is provided by two side doors in 515C loaders. The doors are opened by pulling handles 1 and lifting the doors up. The doors are held in this position by two gas springs. Lubricate the gas spring seats and the door hinges periodically.

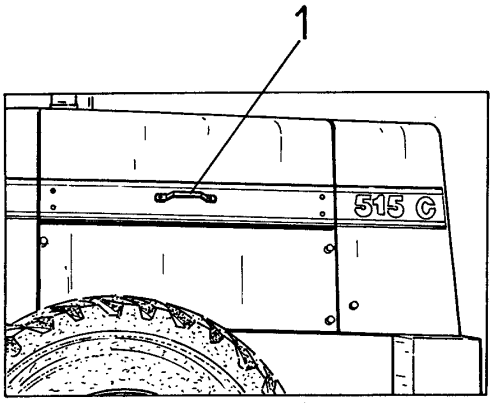

Fig. 5.48. Hood Assembly (515C Loader)

1. Handle Bar

The hood assembly can be swung back giving an easy access to the engine points in 520C. Release lever (2) and pull handle bar (1) back to open the hood assembly. Grease periodically hinge pins (3).

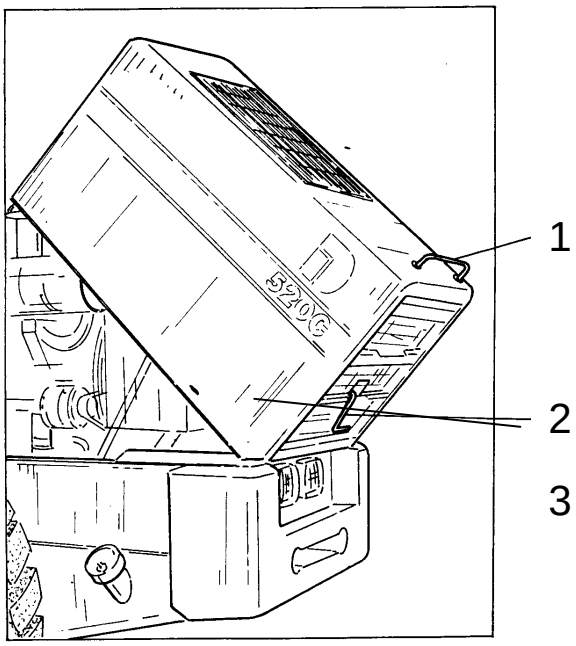

Fig. 5.48A. Hood Assembly (520C Loader)

1. Handle Bar 2. Lever 3. Pins

In CE version the side access doors can be opened by pulling latch handle (2) and swinging the door up and held in this position by gas springs. The radiator shield (1) can also be swung up. Grease periodically the spring seats, door hinges and hood pins.

https://truckmanualshub.com/

HOOD ASSEMBLY AND RADIATOR GRILL

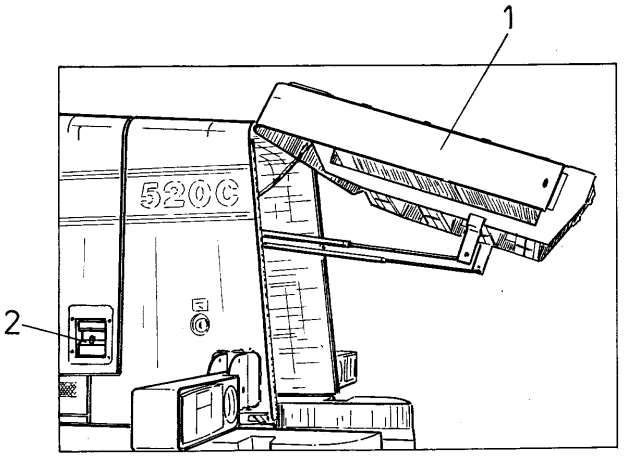

Fig. 5.48B. Hood Assembly (520C CE Version)

1. Radiator Shield 2. Door Latch

5.21. LOADER EQUIPMENT

BUCKET INSTALLATION AND REMOVAL

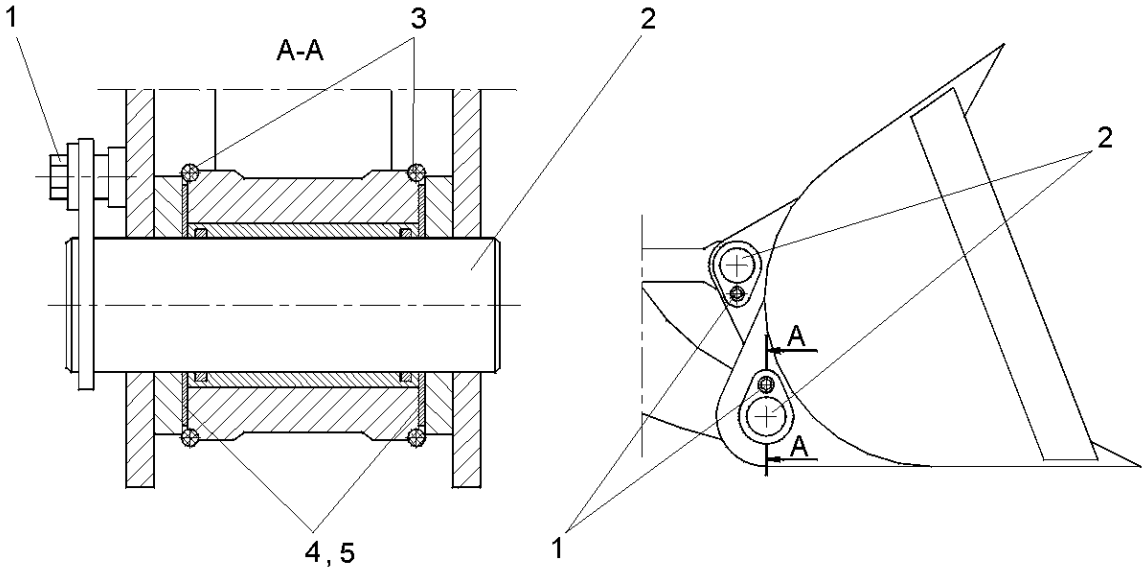

Fig. 5.49. Bucket Installation

1. Bolt 2. Pin 3. O-Ring 4,5. Shims

To replace the bucket carry out as follows:

1. Park the machine on level ground or in the workshop.
2. Place the bucket in position as shown in Fig. 5.49.
3. Remove bolts (1) and tap pins (2) out.
4. Move away with the machine or lift the boom.

https://truckmanualshub.com/

5. Protect disassembled O-rings (3) and 1.5 [mm] shims (4) per drawing 429-17-1006 and shim (5) per drawing 429-17-1005.
6. Reinstall the bucket in the reverse order.

IMPORTANT: *Allowable gap between bucket supports and boom arms is 1.5 [mm]. If gaps are bigger, fill symmetrically with shims.*

WARNING! When replacing the bucket, take care. Disassembled heavy components of loader linkage system (boom arms, bellcrank) must be securely protected against sudden movement.

5.22. AIR CONDITIONER OR HEATER (IF EQUIPPED)

5.22.1. INSIDE FILTER (Fig. 5.50)

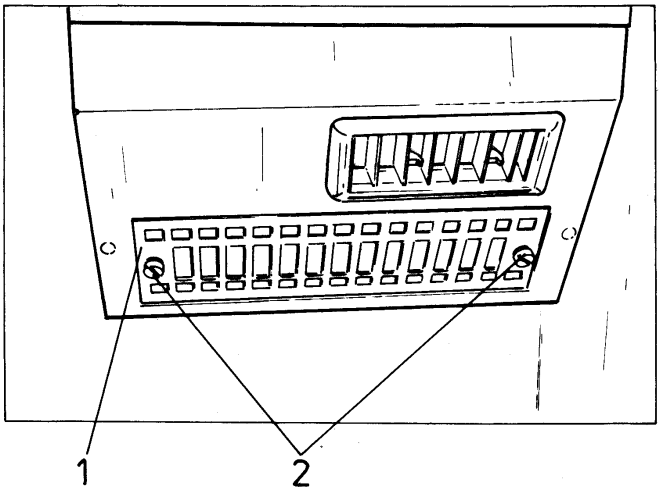

Fig. 5.50. Inside Filter

1. Filter Cover 2. Screw

A filter inside the console cleans the air as it is recirculated. The filter should be changed periodically.

1. Remove cover (1) by turning thumb screws.
2. Remove the filter from the cover.
3. Wash the filter in warm water with a small amount of nonsudsing detergent. Rinse the filter in clean water and dry it thoroughly.
4. Reinstall the filter in the housing and reinstall the cover.

https://truckmanualshub.com/

AIR CONDITIONER OR HEATER (IF EQUIPPED)

5.22.2. OUTSIDE FILTER (Fig. 5.51)

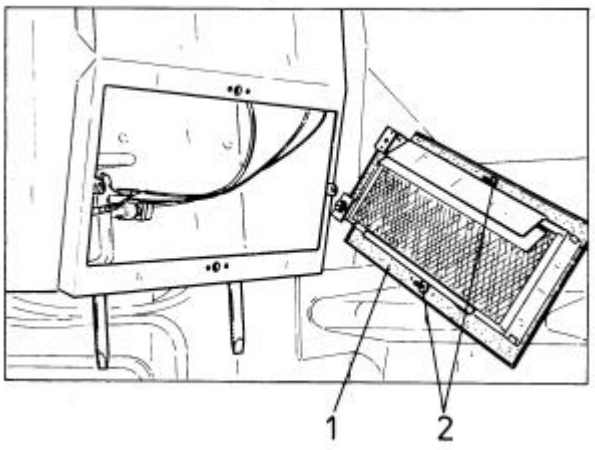

Fig. 5.51. Outside Filter

1. Filter Cover 2. Screw

A filter located outside of the cab in the air conditioning system cleans the fresh air before it enters the heater or air conditioner. This filter should be cleaned periodically.

1. Open cover (1) with the filter.
2. Remove the filter located in the cover.
3. Carefully tap the filter against the palm of your hand to remove loose dust.
4. Direct clean, dry, compressed air up and down the pleats on the clean side of the filter.

NOTE: *Air pressure at the nozzle must not exceed 210 [kPa]. Keep a reasonable distance between the air nozzle and the filter element*

5. Reinstall the filter inside the cover. Close cover (1) with screws (2).

5.22.3. AIR CONDITIONER OFF SEASON CARE

The system should be operated for 5 to 10 minutes each week in the off season. The temperature control should be turned to maximum cold position during this 5 to 10 minute run.

https://truckmanualshub.com/

SECTION 6

SPECIFICATIONS

https://truckmanualshub.com/

SECTION CONTENTS

6.1. Application 3
6.2. Technical Description 3
6.3. Schematic of 515C and 520C Wheel Loader Drive Train 4
6.4. Schematic of Transmission Hydraulic System 5
6.5. Loader Equipment and Steering Hydraulic System Schematic 6
6.6. Wiring Diagrams 14
6.7. Brake Hydraulic System Schematic 25
6.8. Specifications 26
6.8.1. General Specifications of 515C and 520C Loaders 28
6.8.2. Capacities 28
6.8.3. Engine 29
6.8.4. Electrical System 29
6.8.5. Transmission 29
6.8.6. Torque Converter 29
6.8.7. Drive Axles 30
6.8.8. Tires 30
6.8.9. Rims 30
6.8.10. Brakes 30
6.8.11. Loader Hydraulic System 30
6.8.12. Steering System 31
6.8.13. Drive Train 31
6.8.14 Cycle Times 31
6.8.15. Fuel Consumption 31
6.9. 515C and 520C Loaders Equipment 32
6.9.1. Quickcoupling 32
6.9.2. Buckets for Quickcoupling 32
6.9.3. Forklift for Quickcoupling 33
6.9.4. Multi-purpose Bucket 34
6.9.5. 515C Loader High-dump Bucket 34
6.10. Torque Values for Standard Metric Fasteners 35
6.11. Torque Values for Standard English Fasteners 35
6.12. Torque Values for Split Flange Connections 36
6.13. Torque Values for Hydraulic Tubes and Fittings 37
6.14. Torque Values for Hose Clamps 37
6.15. Torque Values for Air Conditioning Tubes and Fittings 38
6.16. Torque Values for Air Conditioning O-Ring Connections 38
6.17. Special Torques 39
6.18. Service Tools 40

https://truckmanualshub.com/

https://truckmanualshub.com/

6.1. APPLICATION

515C and 520C Wheel Loaders are modern machines of C series (i.e. second upgrade) featuring the following foredesign criteria: optimization of performance, long service life, reliability, maximum unification of parts and assemblies, simplified maintenance and serviceability. These general purpose rugged loaders are designed for various applications such as small construction site works, various municipal applications, loading and reloading operations and transportation of loose materials at short distances. The wheel loaders may also perform the following works:

bank loading of cohesive soils,
dozing and stockpiling,
digging and excavating,
snow removal from streets and squares,
backdragging and leveling.

The scope of works may be increased by the application of specialized equipment mounted instead of the standard bucket such as:

1. Multi-purpose bucket,
2. Quickcoupling,
3. Buckets for quickcoupling,
4. Liftfork for quickcoupling,
5. High-dump bucket.

6.2. TECHNICAL DESCRIPTION

Main units of 515C and 520C wheel loaders include:

- Chassis,
- Superstructure,
- loader equipment.

CHASSIS
The chassis includes an articulated frame supported on two drive axles. The front one is rigidly mounted to the frame, whereas the rear one is trunnion mounted and oscillates allowing the machine to operate in uneven ground. The chassis comprises hydraulic, electrical and cooling systems, as well as drive train that consists of engine, torque converter with transmission, drive shafts, drive axles and wheels.

SUPERSTRUCTURE
The superstructure consists of a front mounted cab, hood, fenders and platforms, oil reservoirs, tank fuel and containers.

INSTRUMENT PANEL
The instrument panel located in the cab includes gauges and warning lights necessary for continuous monitoring operation of the machine and convenient and easy to operate controls of the machine. The instrument panel is equipped with instruments necessary to control operation of the machine. Control levers and pushbuttons necessary for operating the machine are located in the cab.

OPERATOR’S SEAT
The operator's seat is equipped with armrests and a seat belt.

https://truckmanualshub.com/

TECHNICAL DESCRIPTION

CAB
A cab includes ROPS-FOPS protecting structure providing the operator protection against injury under weight of the machine in the event of machine rollover or upset. Also, the structure provides protection against falling objects. The cab meets safety requirements of SAE standard 1040C.

LOADER EQUIPMENT
The Z-type loader linkage system provides significant dump angle within the whole operating range of the loader linkage system. It features excellent capacity, breakout force and resistance to dynamic loads ensuring high operational durability and reliability.

6.3. SCHEMATIC OF 515C AND 520C WHEEL LOADERS DRIVE TRAIN

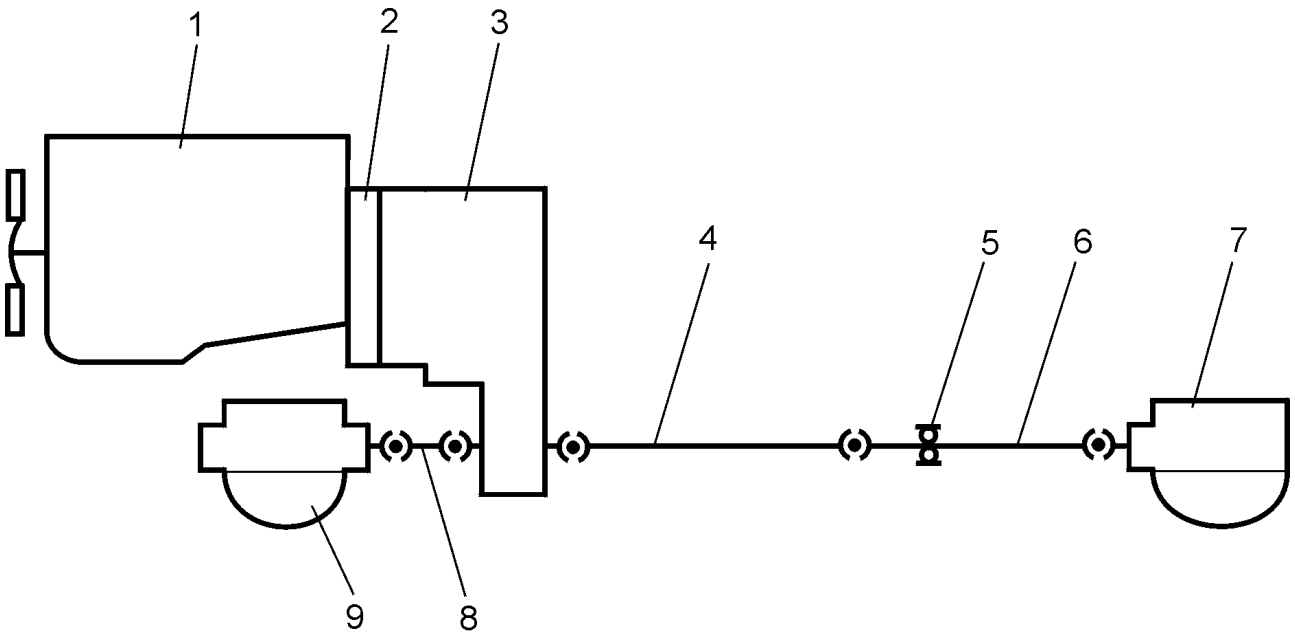

Fig. 6.1. 515C and 520C Wheel Loaders Drive Train Schematic

1. Engine
2. Torque Converter
3. Transmission
4-6-8. Drive Shafts
5. Transfer Drive
7. Front Drive Axle
9. Rear Drive Axle

https://truckmanualshub.com/

6.4. SCHEMATICS OF TRANSMISSION HYDRAULIC SYSTEM

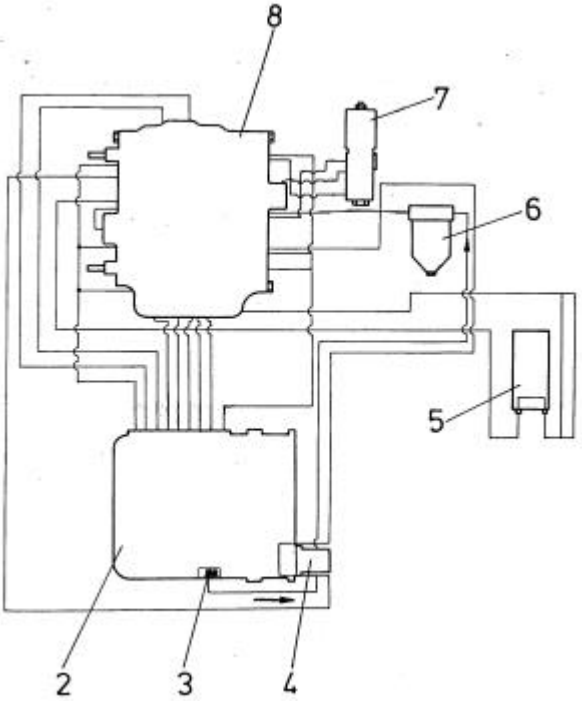

Fig. 6.2. Schematic of 515C Loader Transmission Hydraulic System

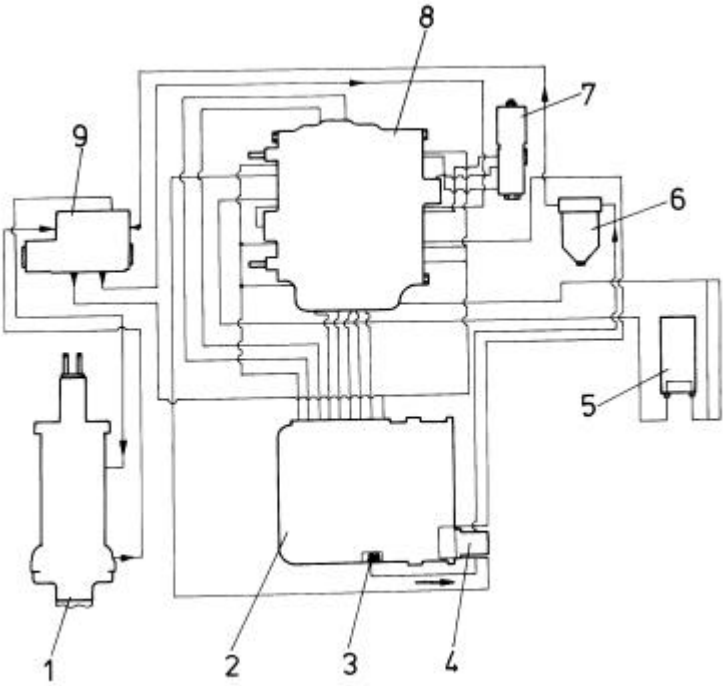

Fig. 6.2A. Schematic of 520C Loader Transmission Hydraulic System

The description of the drive train assemblies shown in Fig. 6.2. and 6.2A

1. Booster Valve
2. Transmission
3. Suction Strainer
4. Charge Pump
5. Oil Cooler
6. Pressure Filter
7. Solenoid Valve
8. Transmission Control Valve
9. Pressure Regulating Valve

https://truckmanualshub.com/

6.5. LOADER EQUIPMENT AND STEERING HYDRAULIC SYSTEM SCHEMATIC

Fig. 6.3 shows the hydraulic system of the 515C and 520C loader equipped with a 2-spool control valve (standard version). Fig. 6.4 shows the hydraulic system of the standard 515C and 520C loader equipped with a 3-spool control valve (standard version).

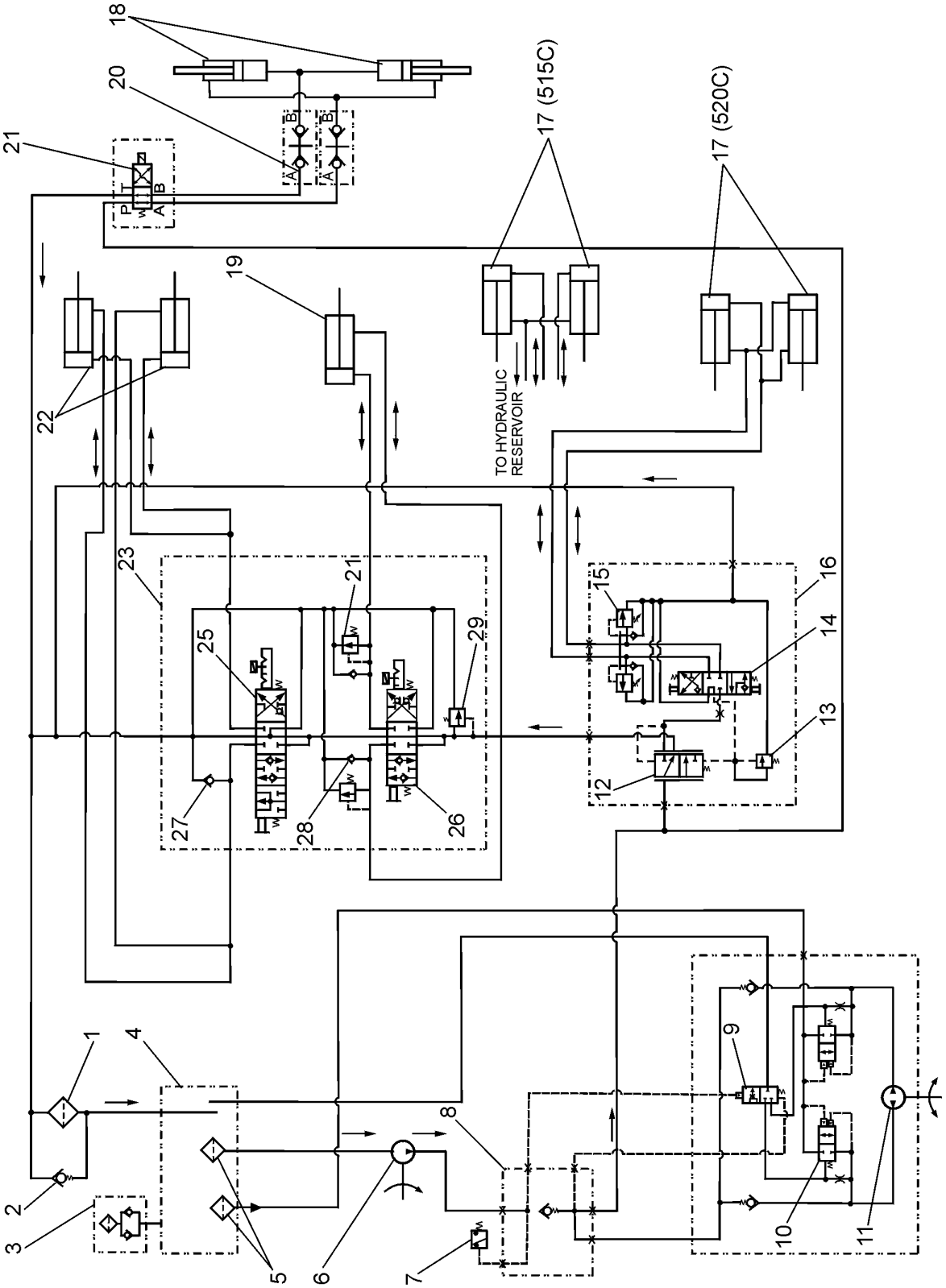

Fig. 6.3. Loader Equipment and Steering Hydraulic System Schematic (Standard 515C and 520C Loader with 2-spool Control Valve)

https://truckmanualshub.com/

LOADER EQUIPMENT AND STEERING HYDRAULIC SYSTEM SCHEMATIC

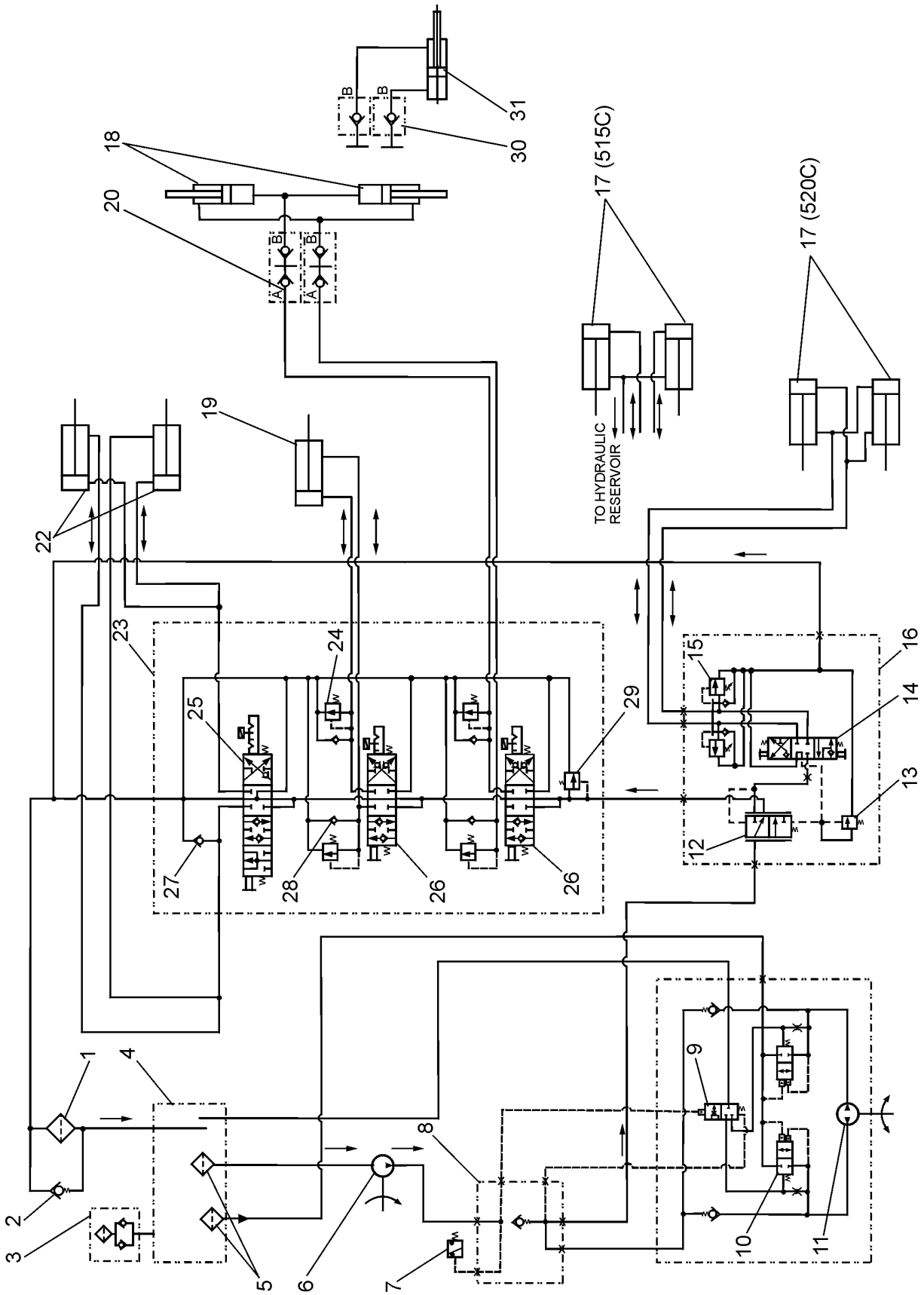

Fig. 6.4. Loader Equipment and Steering Hydraulic System Schematic (Standard 515C and 520C Loader with 3-spool Control Valve)

https://truckmanualshub.com/

LOADER EQUIPMENT AND STEERING HYDRAULIC SYSTEM SCHEMATICS

The description of the assemblies shown in hydraulic system schematic, Fig. 6.3 (standard 515C and 520 C loader with 2-spool control valve), 6.4 (standard 515C and 520 C loader with 3-spool control valve):

1. Return Filter
2. Return Filter Check Valve
3. Reservoir Breather with Filter
4. Hydraulic Reservoir
5. Suction Strainers
6. Hydraulic Main Pump
7. Ground Driven Steering System Warning Light Switch
8. Ground Driven Steering Check Valve
9. Ground Driven Steering Pump Switch Spool (normal steering)
10. Ground Driven Steering Pump Switch Spools (emergency steering)
11. Ground Driven Steering Pump
12. Priority Valve
13. Steering System Relief Valve (20.7 [MPa])
14. Steering Valve Spool
15. Circuit Shock/Anticavitation Valve
16. Steering Valve
17. Steering Cylinders
18. Quickcoupling Cylinders
19. Bucket Cylinder
20. Quick Disconnect Couplers
21. Quickcoupling Solenoid Valve
22. Boom Cylinders
23. Hydraulic Control Valve
24. Quickcoupling and Bucket Cylinders Shock Valves
25. Boom Control Valve Spool
26. Bucket Control Valve Spool
27. Boom Lower Anticavitation Valve
28. Bucket Dump Anticavitation Valve
29. Relief Valve (20.7 [MPa])
30. Quick Disconnect Coupler (type B)
31. Quickcoupling Attachment Cylinders

https://truckmanualshub.com/

LOADER EQUIPMENT AND STEERING HYDRAULIC SYSTEM SCHEMATIC

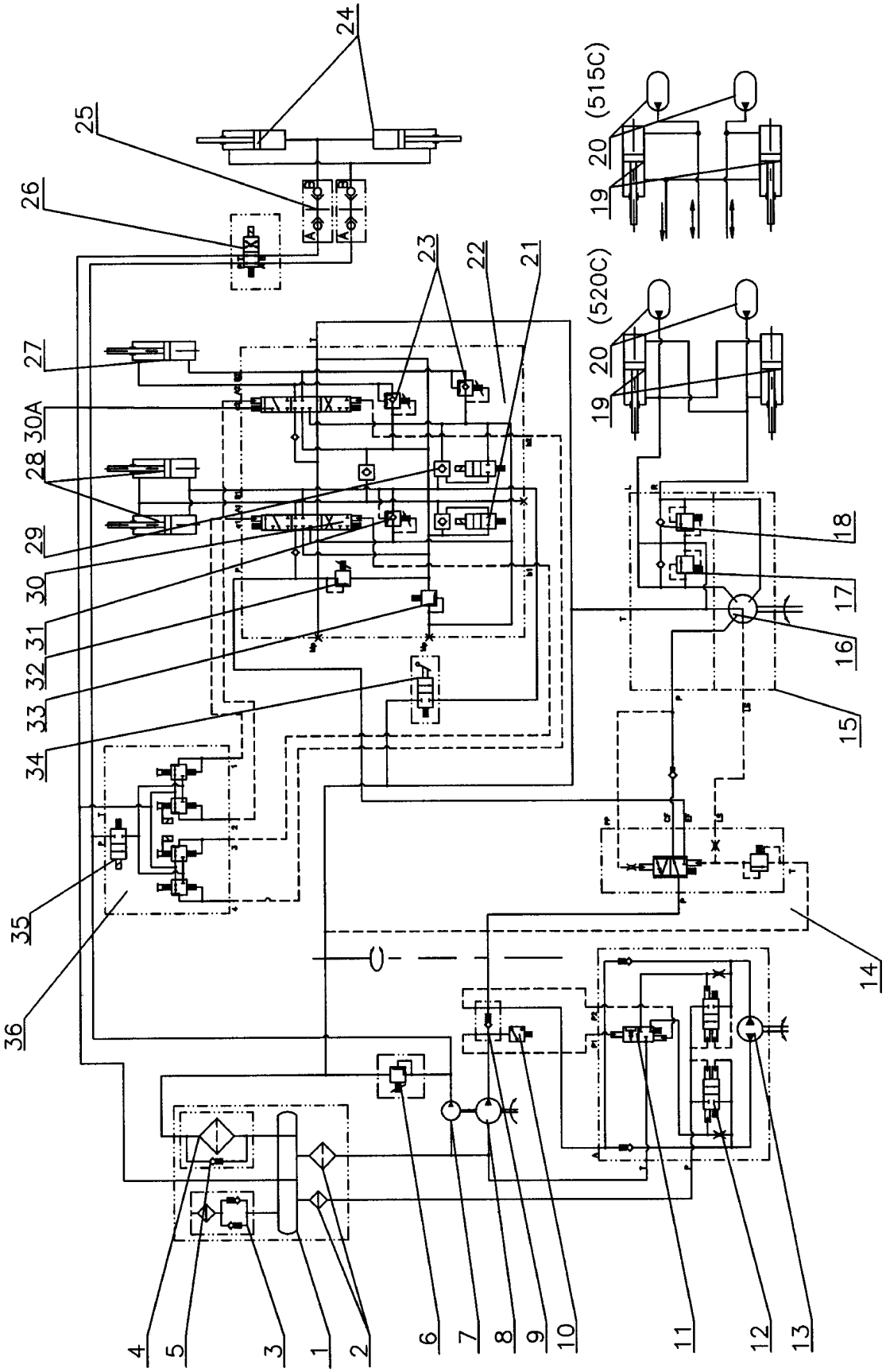

Fig. 6.5. Loader Equipment and Steering Hydraulic System Schematic (515C and 520C Upgraded Loaders with 2-spool Control Valve)

https://truckmanualshub.com/

SPECIFICATIONS

LOADER EQUIPMENT AND STEERING HYDRAULIC SYSTEM SCHEMATIC

The description of the assemblies shown in hydraulic system schematic, Fig. 6.5. (515C and 520C upgraded loaders with 2-spool control valve):

1. Return Filter
2. Return Filter Check Valve
3. Reservoir Breather with Filter (0.002 and 0.17 [MPa])
4. Hydraulic Reservoir
5. Suction Strainers
6. Relief Valve (3 [MPa])
7. Pilot Pump
8. Hydraulic Main Pump
9. Check Valve
10. Ground Driven Steering System Warning Light Switch
11. Ground Driven Steering Pump Switch Spool (normal steering)
12. Ground Driven Steering Pump Switch Spools (emergency steering)
13. Ground Driven Steering Pump
14. Priority Valve
15. Steering Control Valve
16. Steering Control Valve Spool Assembly
17. Circuit Shock Valves
18. Circuit Anticavitation Valves
19. Steering Cylinders
20. Hydraulic Accumulators
21. Solenoid Valves
22. Hydraulic Control Valve
23. Bucket Cylinder Shock Valves (24 [MPa])
24. Quickcoupling Cylinders
25. Quick Disconnect Couplers
26. Quickcoupling Solenoid Valve
27. Bucket Cylinder
28. Boom Cylinder
29. Hydraulically Controlled Check Valve
30. Boom Control Valve Spool Assemblies

30A. Bucket Control Spool Assembly

31. Boom Cylinder Shock Valve (27 [MPa])
32. Relief Valve (20.7 [MPa])
33. Anticavitation Valve (0.7 – 0.9 [MPa])
34. Boom Emergency Lowering Valve
35. Pilot Lock Solenoid Valve
36. Hydraulic System Pilot Valve

https://truckmanualshub.com/

LOADER EQUIPMENT AND STEERING HYDRAULIC SYSTEM SCHEMATIC

The description of the assemblies shown in hydraulic system schematic, Fig. 6.5A (515C and 520C Upgraded Loaders with 3-spool Control Valve):

1. Return Filter
2. Return Filter Check Valve
3. Reservoir Breather with Filter (0.002 and 0.17 [MPa])
4. Hydraulic Reservoir
5. Suction Strainers
6. Relief Valve (3 [MPa])
7. Pilot Pump
8. Hydraulic Main Pump
9. Check Valve
10. Ground Driven Steering System Warning Light Switch
11. Ground Driven Steering Pump Switch Spool (normal steering)
12. Ground Driven Steering Pump Switch Spools (emergency steering)
13. Ground Driven Steering Pump
14. Priority Valve
15. Steering Control Valve
16. Steering Control Valve Spool Assembly
17. Circuit Shock Valves
18. Circuit Anticavitation Valves
19. Steering Cylinders
20. Hydraulic Accumulators
21. Solenoid Valves
22. Hydraulic Control Valve
23. Bucket Cylinder, Quickcoupling and Attachment Shock Valves (24 [MPa])
24. Attachment Cylinder
25. Quick Disconnect Couplers (male connector, type B)
26. Quickcoupling Cylinders
27. Quick Disconnect Couplers (female connector, type A, male connector, type B)
28. Bucket Cylinder
29. Boom Cylinder
30. Hydraulically Controlled Check Valves
31. Boom Control Valve Spool Assembly

31A. Bucket Control Spool Assembly

32. Boom Cylinder Shock Valve (27 [MPa])
33. Relief Valve (20.7 [MPa])
34. Anticavitation Valve (0.7 – 0.9 [MPa])
35. Boom Emergency Lowering Valve
36. Pilot Lock Solenoid Valve
37. Hydraulic System Pilot Valve

https://truckmanualshub.com/

SPECIFICATIONS

LOADER EQUIPMENT AND STEERING HYDRAULIC SYSTEM SCHEMATIC

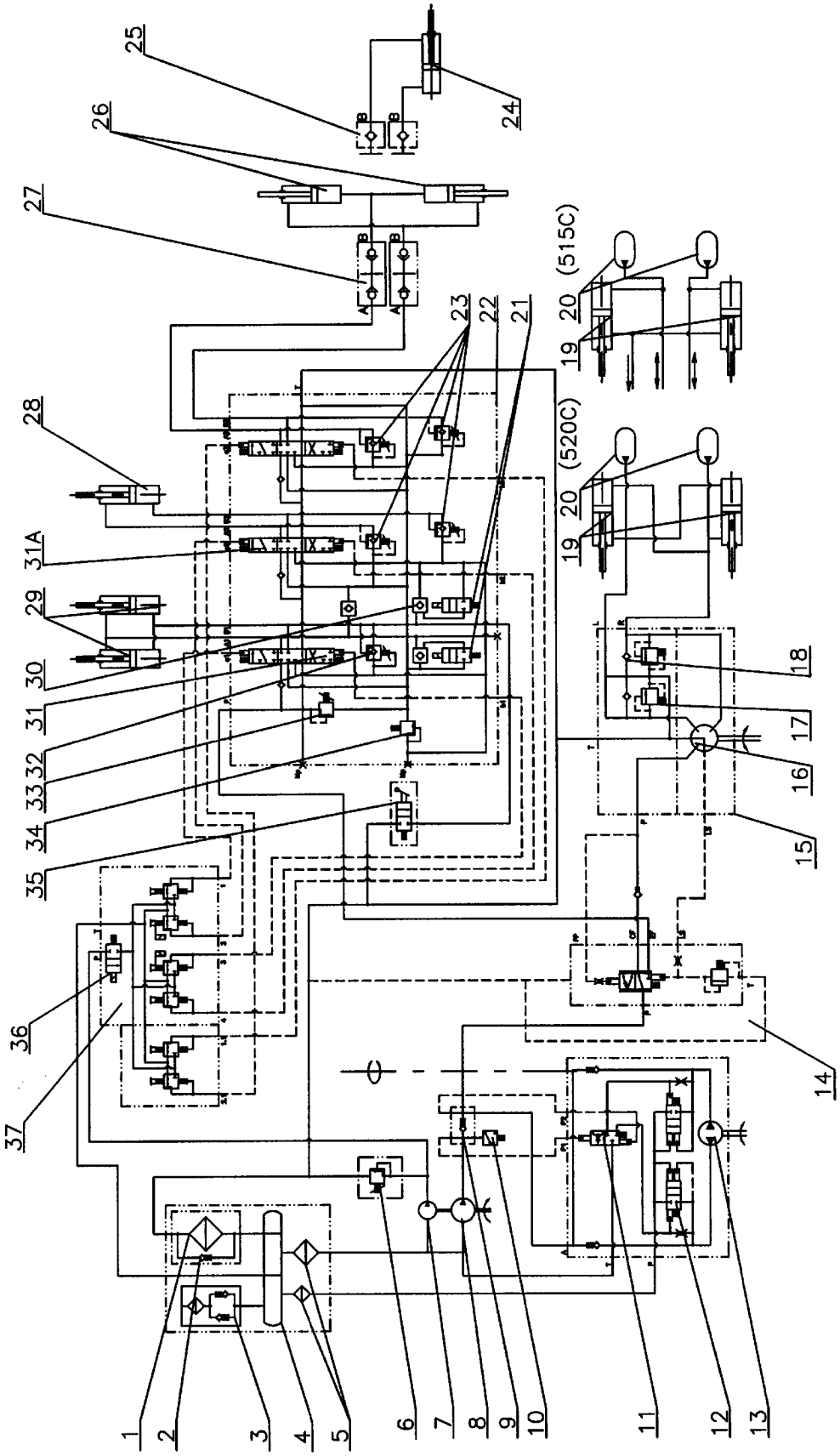

Fig. 6.5A. Loader Equipment and Steering Hydraulic System Schematic (515C and 520C Upgraded Loaders with 3-spool Control Valve)

https://truckmanualshub.com/

LOADER EQUIPMENT AND STEERING HYDRAULIC SYSTEM SCHEMATIC

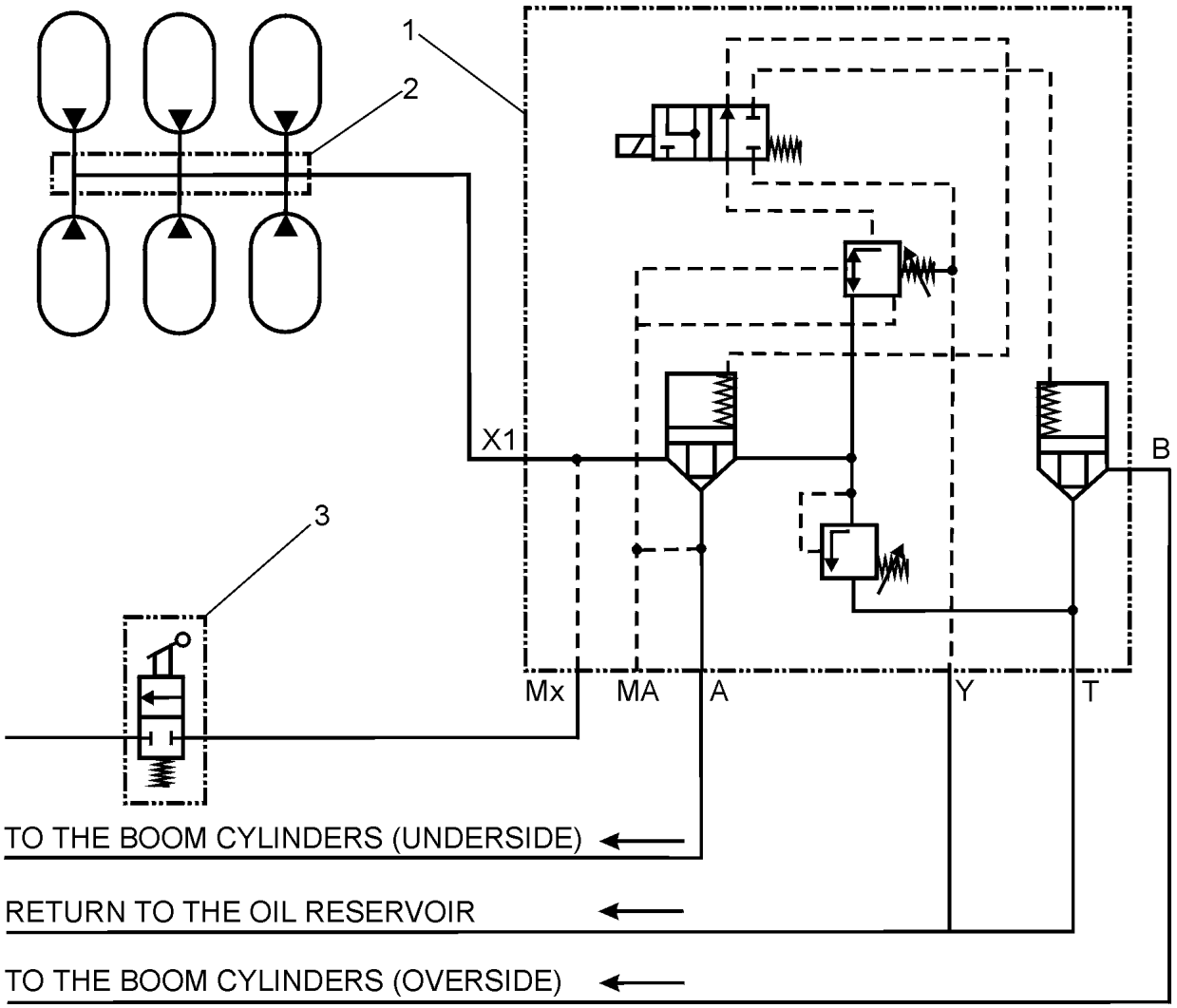

Fig. 6.5B. 515C and 520C Loaders RMS Hydraulic System Diagram

1. RSM Module
2. Hydraulic Accumulators (515C - 5 pcs)
   (520C - 6 pcs)
3. Shut-off Valve

https://truckmanualshub.com/

6.6. WIRING DIAGRAMS

The description of the wiring diagram in Fig. 6.6:

1. Left Stop Lamp
2. Rear Left Parking Lamp
5. Rear Left Working Lamp
6. *Back-up Alarm
8. Rear Right Parking Lamp
9. Right Stop Lamp
10. Coolant Temperature Warning Light Switch
11. Coolant Temperature Sensor
12. *Coolant Low Level Warning Light Switch
13. Alternator
14. *A/C Clutch
15. Magnetic Switch
16. Engine Fuel Shut-off Solenoid Valve
17. Fuel Level Sensor
18. Cranking Motor
19. *Air Cleaner Service Warning Light Switch
20. Engine Oil Pressure Switch
21. *Engine Oil Pressure Sensor
22. *A/C High Pressure Switch
23. *Tachometer or Speedometer Sender
25. *Ether Start Solenoid Valve
26. Battery
27. Electric System Master Switch
28. *A/C Low Pressure Switch
29. Torque Converter Temperature Sensor
30. Direction Lever Neutral Safety Switch
31. Cab Connectors
32. T/C Temperature Warning Light Switch
33. *Hydraulic Oil Temperature Warning Light Switch
34. *Transmission Oil Filter Warning Light Switch
35. *Hydraulic Oil Filter Warning Light Switch
36. *Ground Drive Steering Alarm and Warning Light Switch
37. Transmission Disconnect Solenoid Valve
38. Transmission Disconnect Switch
39. Service Brake System Control Warning Light Switch
40. Stop Light Switch
41. *Back-up Alarm Switch
42. Parking Brake Warning Light Switch
43. Horn Button
44. Warning Lights Diodes
45. Alarm Buzzer
47. *Turn Signal Light Switch
48. *Turn Signal Light Contact Breaker
49. Circuit Breakers
50. *Cluster Warning Lights
51. Hourmeter
52. Cluster Gauge
53. *Ether Start Switch
55. *Tachometer or Speedometer
56. *Engine Oil Pressure Gauge
57. Starting Switch
58. Front Work Lamps Switch
59. Rear Work Lamps Switch
60. *Front Left Turn Signal Lamp
62. Front Work Lamps
63. Horn
64. *Auxiliary Lamps
66. *Front Right Turn Signal Lamp
68. *Boom Kick-out Electromagnet
69. *Bucket Leveler Electromagnet
70. *Boom Kick-out Proximity Switch
71. *Bucket Leveler Proximity Switch
72. Tripolar Connector
73. Instrument Panel Illumination Light

Wire color code:

R - red	O - orange
T - brown	P - pink
W - white	V - violet
Y - yellow	DB - dark blue
B - black	LB - light blue
BR - dark gray	DG - dark green
G - gray	LG - light green

CLUSTER WARNING LIGHTS (item 50 above):

A. Transmission Filter Warning Light
B. Hydraulic Filter Warning Light
C. Air Cleaner Warning Light
D. Low Engine Coolant Warning Light
E. Hydraulic Oil Temperature Warning Light

CLUSTER GAUGE (item 52 above):

A. Engine Oil Pressure Warning Light
B. Ground Driven Steering Warning Light
C. Parking Brake Warning Light
D. Coolant Temperature Warning Light
E. Service Brake System Warning Light
F. Torque Converter Oil Temperature Warning Light
H. Coolant Temperature Gauge
J. Torque Converter Oil Temperature Gauge
K. Fuel Level Gauge
L. Cluster Gauge Lights
M. Voltmeter

*Optional attachment equipped on order.

NOTE: *The wiring diagram represents the system inactive, i.e. while the machine is parked and the master switch is off.*

https://truckmanualshub.com/

WIRING DIAGRAMS

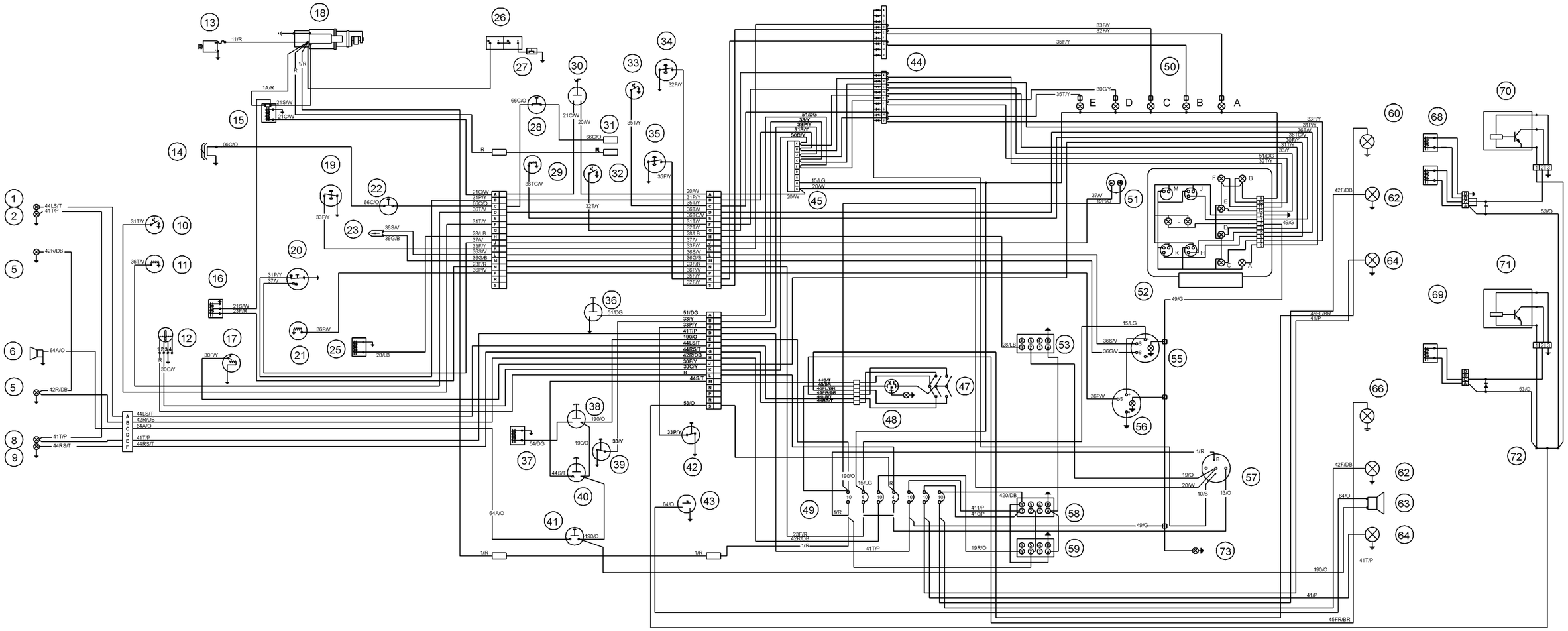

Fig. 6.6. Wiring Diagram (Standard 515C and 520C Loaders)

https://truckmanualshub.com/

SPECIFICATIONS

WIRING DIAGRAMS

https://truckmanualshub.com/

WIRING DIAGRAMS

https://truckmanualshub.com/

SPECIFICATIONS

WIRING DIAGRAMS

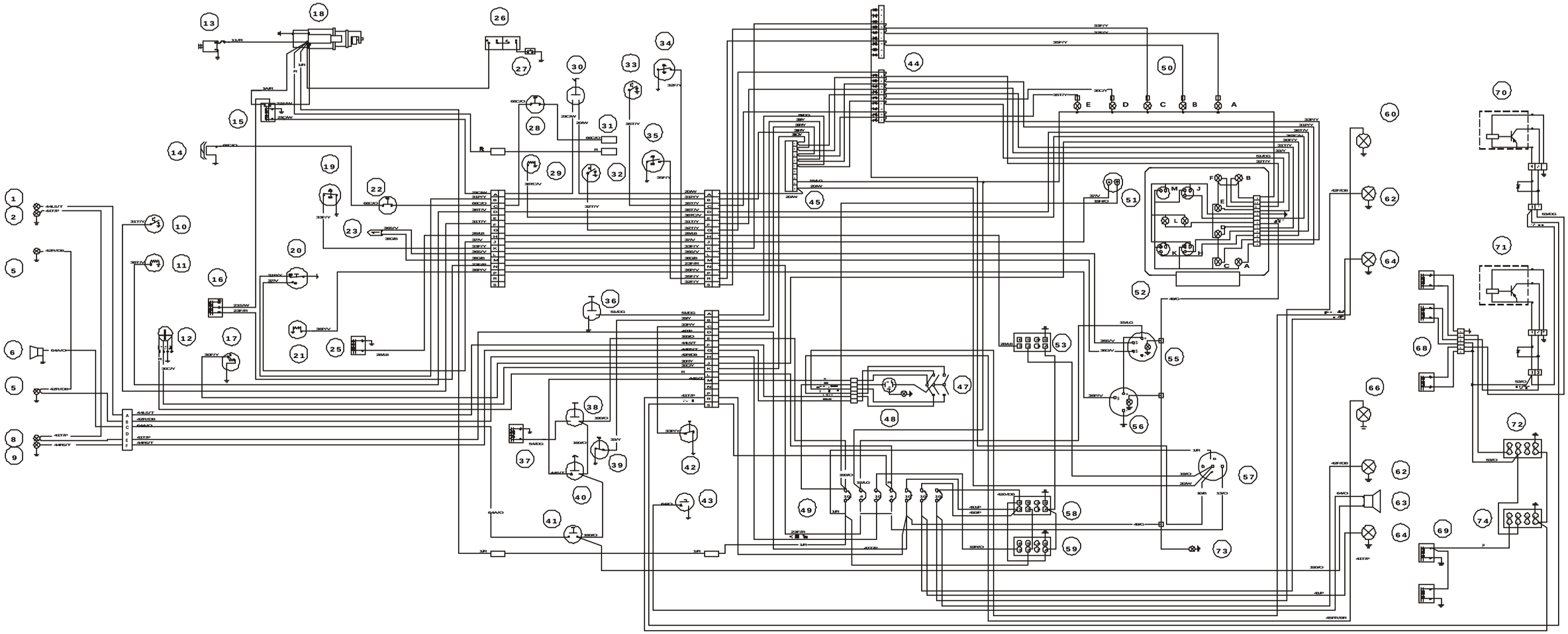

Fig. 6.7. Wiring Diagram (515C and 520C Upgraded Loader)

https://truckmanualshub.com/

WIRING DIAGRAMS

The description of the wiring diagram in Fig. 6.7:

1. Left Stop Lamp
2. Rear Left Parking Lamp
5. Rear Left Working Lamp
6. *Back-up Alarm
8. Rear Right Parking Lamp
9. Right Stop Lamp
10. Coolant Temperature Warning Light Switch
11. Coolant Temperature Sensor
12. *Coolant Low Level Warning Light Switch
13. Alternator
14. *A/C Clutch
15. Magnetic Switch
16. Engine Fuel Shut-off Solenoid Valve
17. Fuel Level Sensor
18. Cranking Motor
19. *Air Cleaner Service Warning Light Switch
20. Engine Oil Pressure Switch
21. *Engine Oil Pressure Sensor
22. *A/C High Pressure Switch
23. *Tachometer or Speedometer Sender
25. *Ether Start Solenoid Valve
26. Battery
27. Electric System Master Switch
28. *A/C Low Pressure Switch
29. Torque Converter Temperature Sensor
30. Direction Lever Neutral Safety Switch
31. Cab Connectors
32. T/C Temperature Warning Light Switch
33. *Hydraulic Oil Temperature Warning Light Switch
34. *Transmission Oil Filter Warning Light Switch
35. *Hydraulic Oil Filter Warning Light Switch
36. *Ground Driven Steering Alarm and Warning Light Switch
37. Transmission Disconnect Solenoid Valve
38. Transmission Disconnect Switch
39. Service Brake System Control Warning Light Switch
40. Stop Light Switch
41. *Back-up Alarm Switch
42. Parking Brake Warning Light Switch
43. Horn Button
44. Warning Lights Diodes
45. Alarm Buzzer
47. *Turn Signal Light Switch
48. *Turn Signal Light Contact Breaker
49. Circuit Breakers
50. *Cluster Warning Lights
51. Hourmeter
52. Cluster Gauge
53. *Ether Start Switch
55. *Tachometer or Speedometer
56. *Engine Oil Pressure Gauge
57. Starting Switch
58. Front Work Lamps Switch
59. Rear Work Lamps Switch
60. *Front Left Turn Signal Lamp
62. Front Works Lamps
63. Horn
64. *Auxiliary Lamps
66. *Front Right Turn Signal Lamp
68. Pilot Valve Electromagnets
69. Boom Float Electromagnets
70. Boom Kick-out Proximity Switch
71. Bucket Leveler Proximity Switch
72. Pilot Lock Solenoid Valve Switch
73. Instrument Panel Illumination Light
74. Boom Float Release Switch

Wire color code:

R - red	O - orange
T - brown	P - pink
W - white	V - violet
Y - yellow	DB - dark blue
B - black	LB - light blue
BR - dark gray	DG - dark green
G - gray	LG - light green

CLUSTER WARNING LIGHTS (item 50 above):

A. Transmission Filter Warning Light
B. Hydraulic Filter Warning Light
C. Air Cleaner Warning Light
D. Low Engine Coolant Warning Light
E. Hydraulic Oil Temperature Warning Light

CLUSTER GAUGE (item 52 above):

A. Engine Oil Pressure Warning Light
B. Ground Driven Steering Warning Light
C. Parking Brake Warning Light
D. Coolant Temperature Warning Light
E. Service Brake System Warning Light
F. Torque Converter Oil Temperature Warning Light
H. Coolant Temperature Gauge
J. Torque Converter Oil Temperature Gauge
K. Fuel Level Gauge
L. Cluster Gauge Lights
M. Voltmeter

*Optional attachment equipped on order.

NOTE: *The wiring diagram represents the system inactive, i.e. while the machine is parked and the master switch is off.*

https://truckmanualshub.com/

WIRING DIAGRAMS

The description of the wiring diagram, 515C and 520C Loaders, CE version - Fig. 6.7A:

1. Rear Left Turn Signal Lamp
2. Rear Left Parking Lamp
3. Left Stop Lamp
4. Back-up Lamp
5. Rear Work Lamp
6. Back-up Alarm
7. Right Stop Lamp
8. Rear Right Parking Lamp
9. Rear Right Turn Signal Lamp
10. Coolant Temperature Switch
11. Coolant Temperature Sensor
12. Coolant Low Level Warning Light Switch
13. Alternator
14. Air Conditioner Clutch
15. Magnetic Switch
16. Engine Fuel Shut-off Solenoid Valve
17. Fuel Level Sensor
18. Cranking Motor
19. Air Cleaner Service Warning Light Switch
20. Engine Oil Pressure Switch
21. Engine Oil Pressure Sensor
22. Air Conditioner High Pressure Switch
23. Speedometer Sensor
24. Tachometer Sender
25. Ether Start Solenoid Valve
26. Battery
27. Electric System Master Switch
28. Air Conditioner Low Pressure Switch
29. Torque Converter Temperature Sensor
30. Transmission Neutral Lock Switch
31. Cab Connectors
32. Torque Converter Temperature Warning Light Switch
33. Hydraulic Oil Temperature Warning Light Switch
34. Transmission Oil Filter Warning Light Switch
35. Hydraulic Oil Filter Warning Light Switch
36. Ground Driven Steering Alarm and Warning Light Switch
37. Transmission Disconnect Solenoid Valve
38. Transmission Disconnect Switch
39. Service Brake Warning Light Switch
40. Stop Light Switch
41. Back-up Alarm Switch
42. Parking Brake Switch
43. Horn Button
44. Warning Lights Diodes
45. Alarm Buzzer
46. Emergency Lights Switch
47. Turn Signal Switch
48. Turn Signal Contact Breaker
49. Circuit Breakers
50. Cluster Warning Lights
51. Hourmeter
52. Cluster Gauge
53. Ether Start Push Button
54. Portable Light Receptacle
55. Speedometer
56. Engine Oil Pressure Gauge
57. Starting Switch
58. Low Beam and parking Lights Switch
59. Work Lights Switch
60. Front LH Turn Signal Lamps
61. Front LH Parking Lamp
62. Low Beam Lamps
63. Horn
64. Long Beam Lamps (optional)
65. Front Work Lamps
66. Front RH Turn Signal Lamps
67. Front RH Parking Lamp
68. Boom Kick-out and Bucket Leveler Electromagnets
69. Bucket Leveler Electromagnets
70. Boom Kick-out Proximity Switch
71. Bucket Leveler Proximity Switch
72. Pilot Lock Solenoid Valve Switch
73. Bucket Float Release Switch
74. Heated Windows
75. Tachometer
76. Warning Light
77. Warning Light Switch
78. Heated Window Switch
79. Turn Signal Warning Light

Wire color code:

R - red	O - orange
T- brown	P - pink
W - white	V - violet
Y - yellow	DB - dark blue
B - black	LB - light blue
BR - dark gray	DG - dark green
G - gray	LG - light green

CLUSTER WARNING LIGHTS: (item 50 above):

A. Transmission Filter Warning Light
B. Hydraulic Filter Warning Light
C. Air Cleaner Warning Light
D. Low Engine Coolant Warning Light
E. Hydraulic Oil Temperature Warning Light

CLUSTER GAUGE: (item 52 above):

A. Engine Oil Low Pressure Warning Light
B. Ground Driven Steering Warning Light
C. Parking Brake Warning Light
D. Coolant Temperature Warning Light
E. Service Brake System Warning Light
F. Torque Converter Oil High Temperature Warning Light
H. Coolant Temperature Gauge
J. Torque Converter Oil Temperature Gauge
K. Fuel Level Gauge
L. Gauge Illuminating Lights
M. Voltmeter

*Optional attachment equipped on order.

NOTE: *The wiring diagram represents the system inactive, i.e. while the machine is parked and the master switch is off.*

https://truckmanualshub.com/

WIRING DIAGRAMS

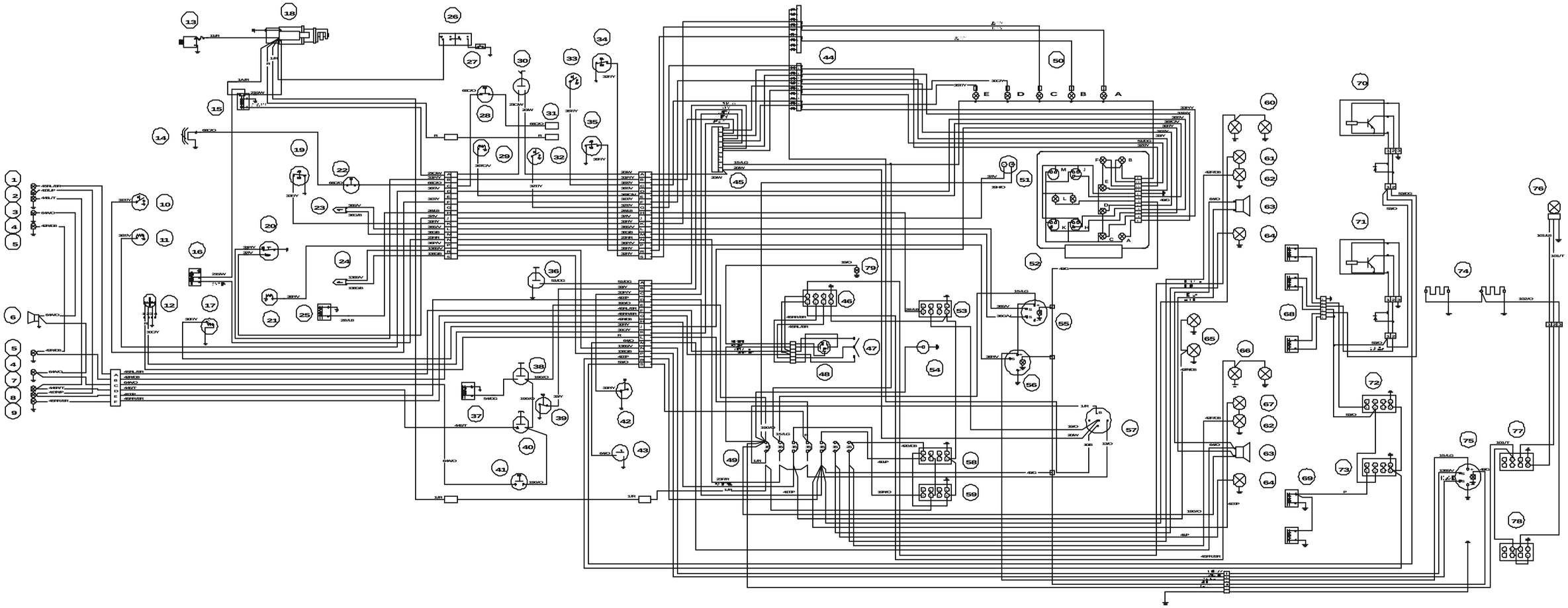

Fig. 6.7A. Wiring Diagram (520C CE Loader)

https://truckmanualshub.com/

SPECIFICATIONS

WIRING DIAGRAMS

https://truckmanualshub.com/

WIRING DIAGRAMS

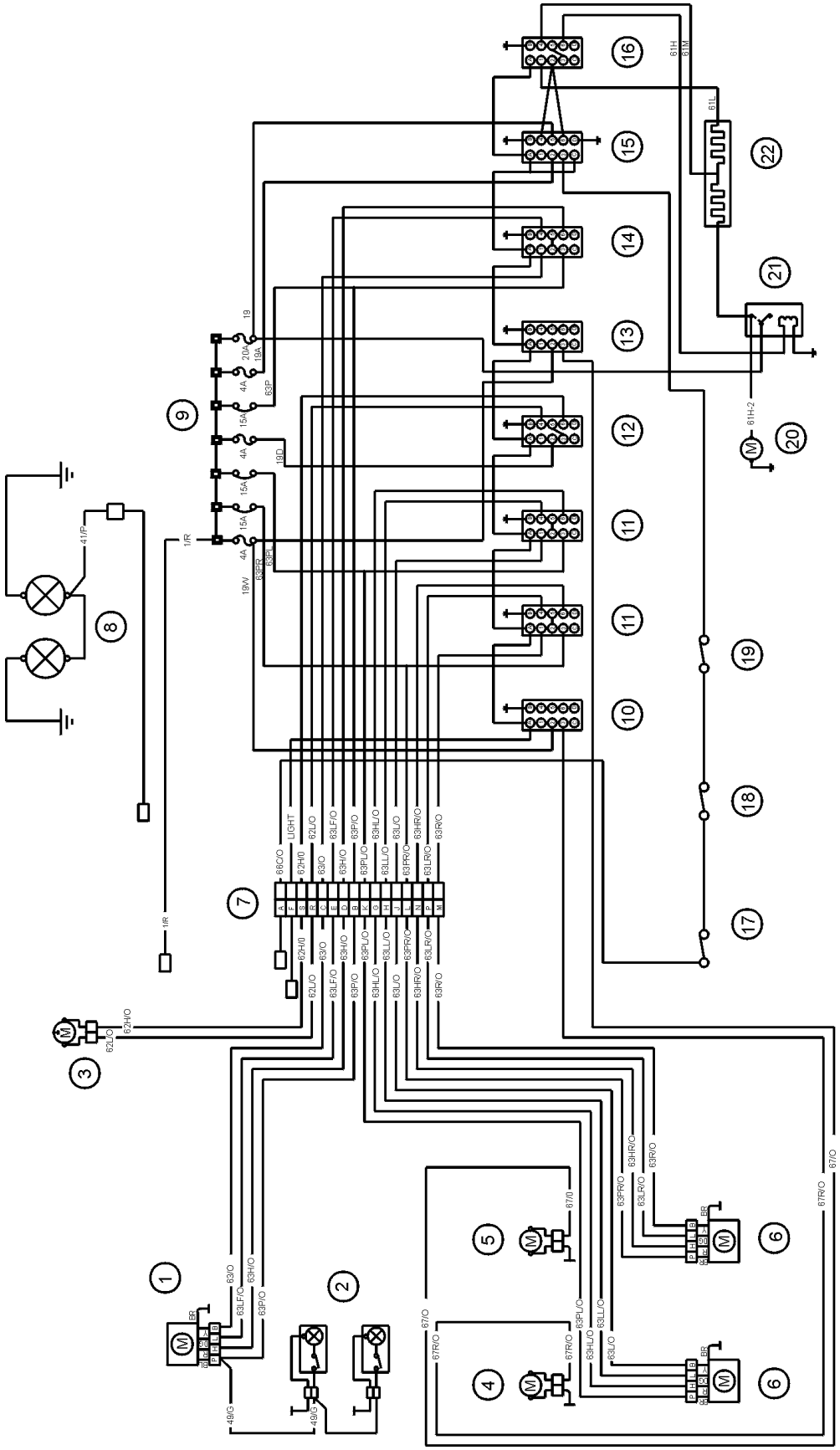

Fig. 6.8. Cab Wiring Diagram (515C and 520 C Loaders)

https://truckmanualshub.com/

SPECIFICATIONS

WIRING DIAGRAMS

The description of the wiring diagram in Fig. 6.8:

1. Front Wiper Motor
2. Cab Lights
3. Windshield Defroster Fan
4. Rear Window Washer Pump
5. Front Window Washer Pump
6. Rear Wiper Motor
7. Air Conditioner and Heater Supply Connector
8. Top Work Lamps
9. Circuit Breakers
10. Rear Window Washer Pump Switch
11. Rear Wipers Motor Switch
12. Windshield Defroster Fan Motor Switch
13. Windshield Washer Pump Switch
14. Front Wiper Motor Switch
15. Heater/Air Conditioner Switch
16. Heater Fan Motor
17. Thermostat
18. Air Conditioner High Pressure Switch
19. Air Conditioner Low Pressure Switch
20. Heater Fan Motor Switch
21. Relay
22. Resistor

https://truckmanualshub.com/

6.7. BRAKE HYDRAULIC SYSTEM SCHEMATIC

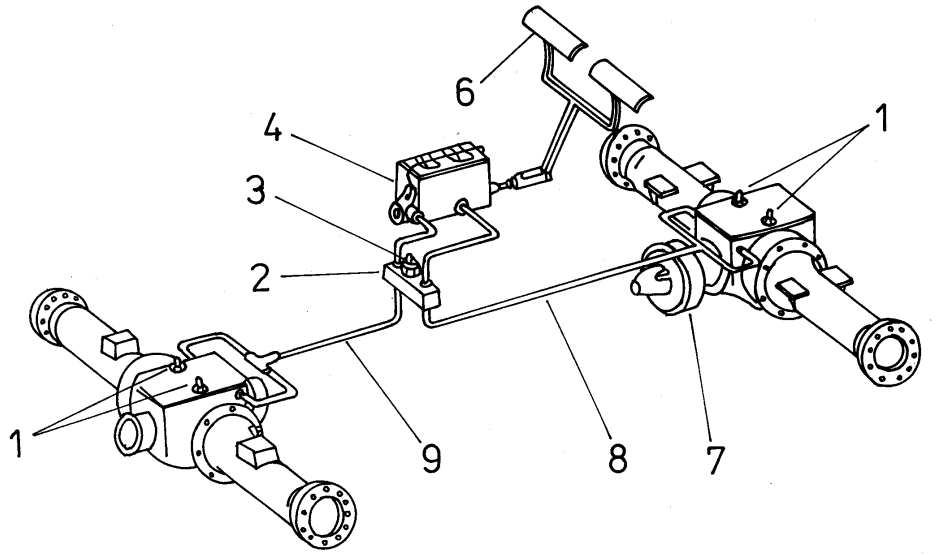

Fig. 6.9. 515C Loader Brake Hydraulic System Schematic

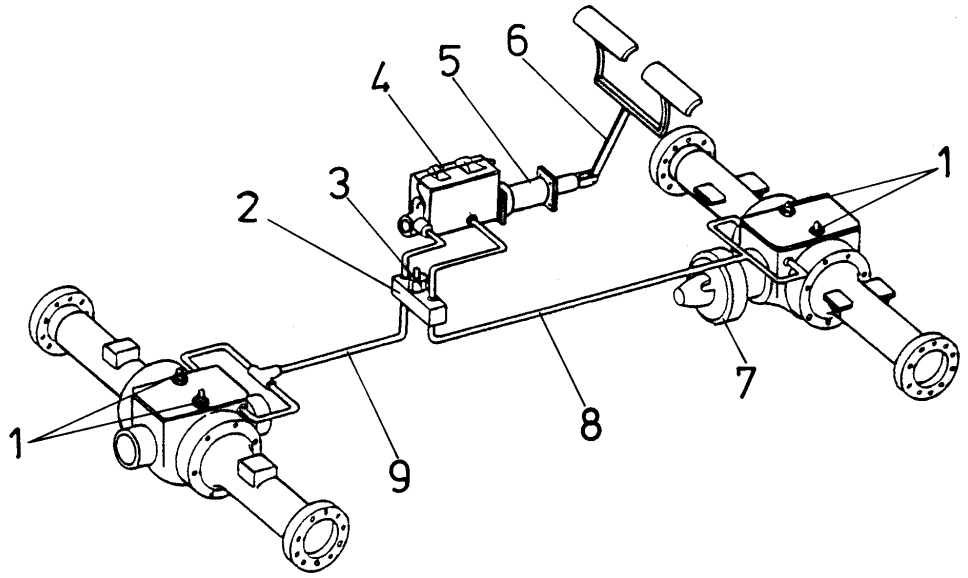

Fig. 6.9A. 520C Loader Brake Hydraulic System Schematic

The description of the assemblies shown in schematic, Fig. 6.9 and 6.9A:

1. Bleeder Screws
2. Differential Valve
3. Service Brake System Warning Light Switch
4. Brake Pump
5. Booster Valve (Refer to Fig. 6.2A for connections)
6. Brake Pedals
7. Parking Brake
8. Front Brake Line
9. Rear Brake Line

https://truckmanualshub.com/

6.8. SPECIFICATIONS

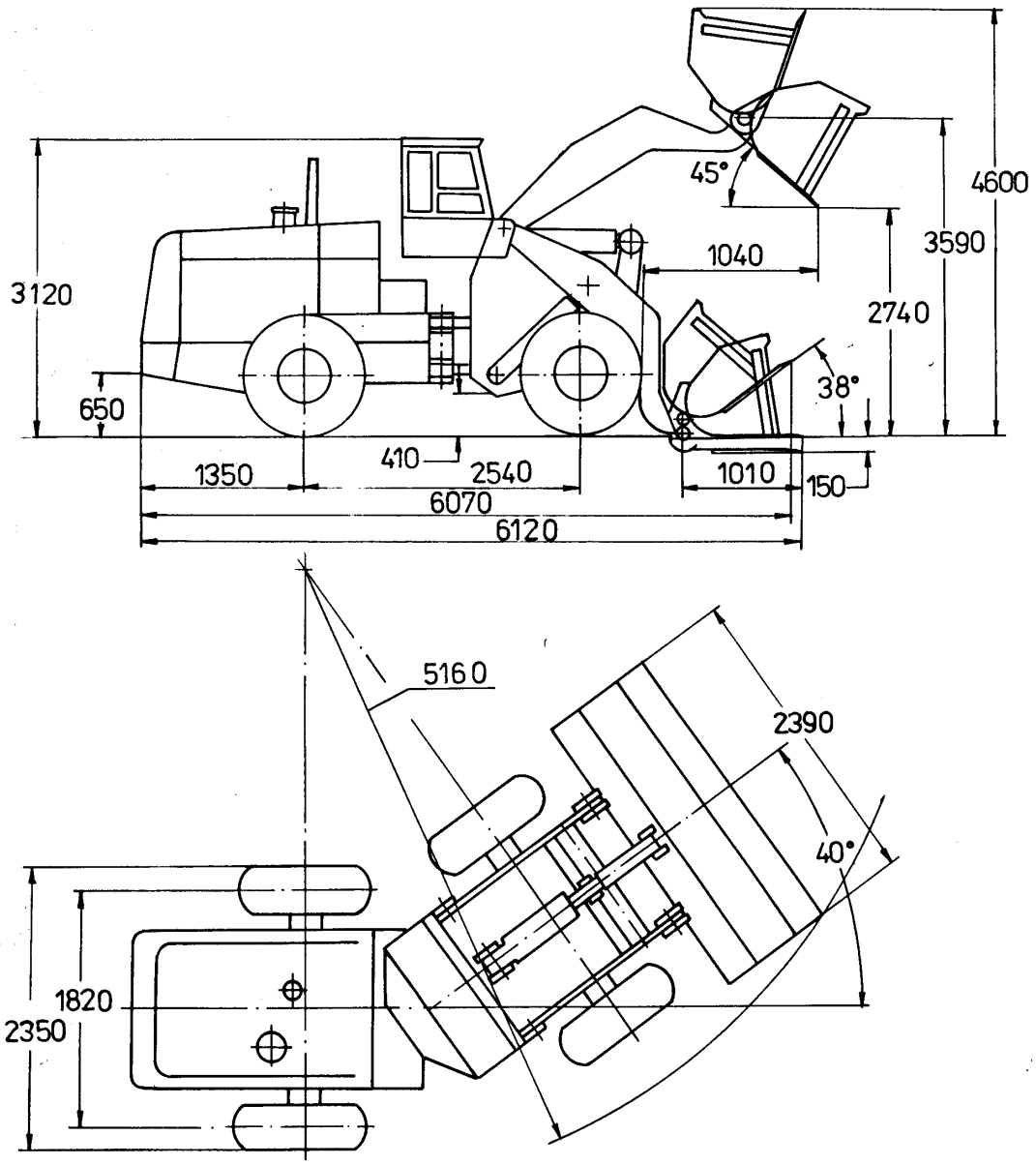

Fig. 6.10. Overall Dimensions – Wheel Loader 515C

https://truckmanualshub.com/

SPECIFICATIONS

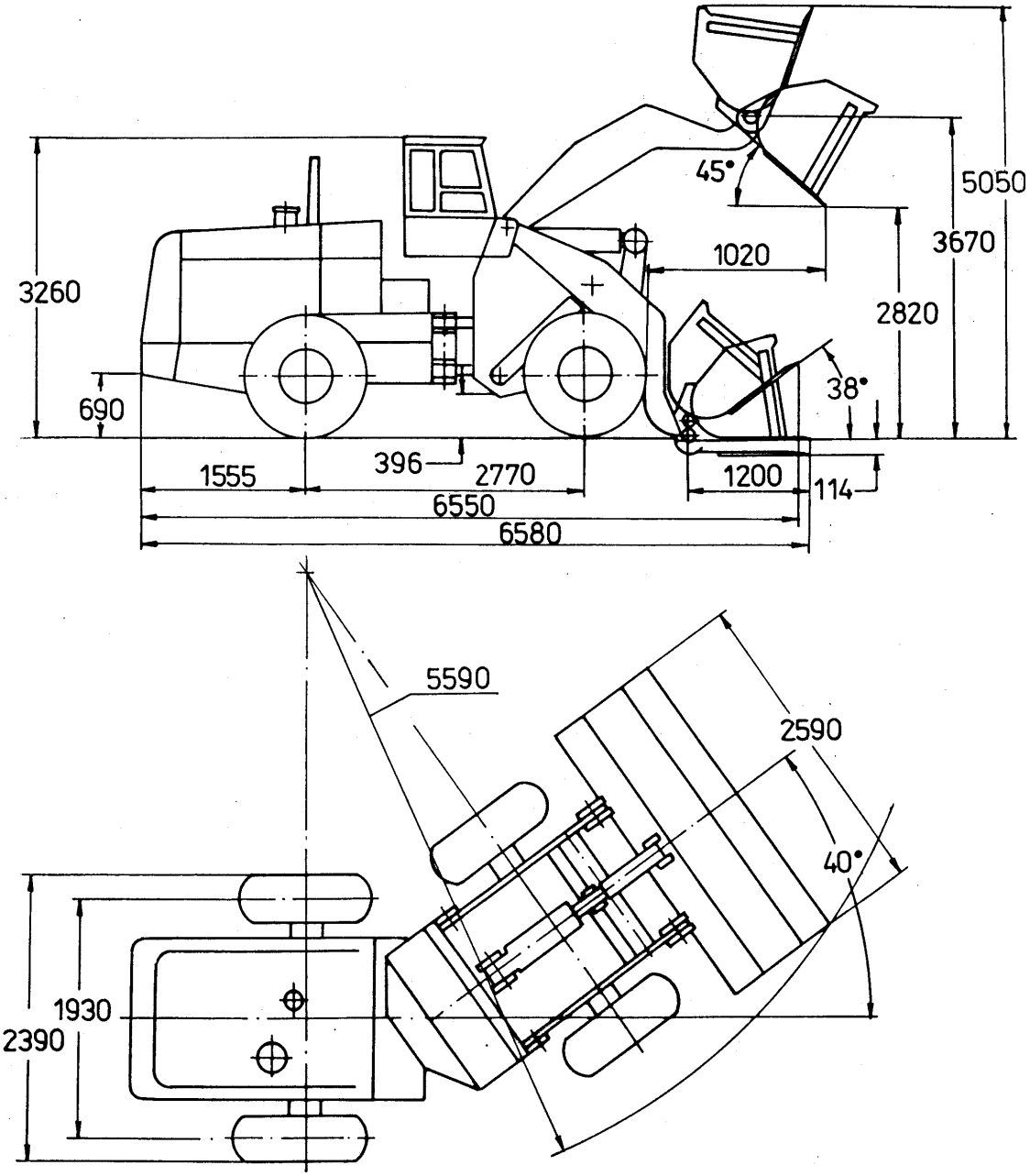

Fig. 6.10A. Overall Dimensions – Wheel Loader 520C

https://truckmanualshub.com/

SPECIFICATIONS

6.8.1. GENERAL SPECIFICATIONS OF 515C AND 520C LOADERS

The following specifications are for the standard configuration of 515C, 520C wheel loaders equipped with ROPS-FOPS cab, standard bucket and standard tires.

Specification	515C		520C	
Rated bucket capacity with spillboard[1)]	1.53	[m^3]	1.91	[m^3]
Bucket width	2390	[mm]	2590	[mm]
Dump clearance[2)]	2740	[mm]	2820	[mm]
Reach[2)]	1040	[mm]	1020	[mm]
Breakout force	96.30	[kN]	120.2	[kN]
Static tipping load[3)]				
• straight	65.70	[kN]	82.8	[kN]
• full turn	58.60	[kN]	73.1	[kN]
Operating weight	9060	[kg]	10100	[kg]
Load capacity [kN] ± 10%	29.30	[kN]	36,5	[kN]
Overall length with bucket @ carry	6070	[mm]	6550	[mm]
Overall length with bucket on the ground	6120	[mm]	6580	[mm]
Maximum Overall Height	4600	[mm]	5050	[mm]
Turning radius, outside corner of bucket @ carry	5160	[mm]	5590	[mm]
Articulation	40	[°]	40	[°]
Axle oscillation	12	[°]	13	[°]

1) a machine can be equipped with a bucket of bigger capacity or with optional attachment (Refer to Par. 6.4)
2) the value increases or decreases according to the tire size.
3) machine stability, weight and performance are specified for a machine standing on hard level ground and can be affected by the machine configuration and optional equipment

NOTE: *Performance specified per SAE J732.*

6.8.2. CAPACITIES

Specification	515C			520C		
	Refill [l]	Service	[l]	Refill [l]	Service	[l]
Fuel tank	132.5			172		
Cooling system	30			33		
Front axle	15			16.5		
Rear axle	15			16.5		
Hydraulic system (loader and steering)	65			85		
Hydraulic tank		42			50	
Transmission system	27			30		
Transmission		18			22	
Engine and filter	16.4			16.4		
Service brake system	3.8			3.8		
Steering gear	0.33			0.33		
Air conditioner	1.22		[kg]	1.22		[kg]

https://truckmanualshub.com/

SPECIFICATIONS

6.8.3. ENGINE

Specification	515C		520C	
Manufacturer	Cummins		Cummins	
Make and model	S6D 102E-1		S6D 102E-1	
Type	turbocharged		turbocharged	
Bore and stroke	102 x 120	[mm]	102 x 120	[mm]
Number of cylinders	6		6	
Cylinder set-up	In-line		In-line	
Displacement	5.88	[l]	5.88	[l]
Net power @ 2500 [RPM] (per to SAE J1349)	90	[kW]	106	[kW]
Max. torque	499	[Nm]	561	[Nm]
at [RPM]	1600	[RPM]	1600	[RPM]
Engine speeds:				
• Low idle	800-1000	[RPM]	800-1000	[RPM]
• High idle	2580-2760	[RPM]	2600-2750	[RPM]
• stall	1900-2200	[RPM]	1970-2200	[RPM]
Ignition:	electrical		electrical	
Voltage	24	[V]	24	[V]

Air Cleaner:
type: . . . . . 2-stage, dry

6.8.4. ELECTRICAL SYSTEM

Voltage . . . . . 24 [V]
Batteries . . . . . low maintenance, 2 x 12 [V]
Alternator . . . . . 50 [A]

6.8.5. TRANSMISSION

	515C	520C
Model	S710	S720
Type	powershift	Powershift

Maximum travel speeds forward/reverse[km/h]

	515C	520C
1st gear	6.6	7.1
2nd gear	13.2	14.2
3rd gear	36.8	39.3

6.8.6. TORQUE CONVERTER

	515C	520C
Type	single stage, single phase	single stage, single phase
Rotor Diameter	285 [mm]	285 [mm]
Stall ratio	2.7	2.66

https://truckmanualshub.com/

SPECIFICATIONS

6.8.7. DRIVE AXLES

Standard

Type . . . . . differential with spiral bevel gear set, inboard mounted full – floating planetaries

Differential . . . . . standard

6.8.8. TIRES

Type of Tires	515C	520C
Standard-tubeless	18.4x24 10 PR (G15)	17.5x25 12 PR (L3)
Optional-tubeless (for sandy soil)	17.5x25 12 PR (L2)	17.5x25 12 PR (L2)
Optional-tubeless (for sandy soil)	15.5x25 12 PR (L2)	20.5x25 12 PR (L2)
Optional-tubeless (for rocky ground)	17.5x25 12 PR (L3)	20.5x25 12 PR (L3)
Optional-tubeless (for rocky ground)	15.5x25 12 PR (L3)	20.5x25 16 PR (L3)

INFLATION PRESSURE [MPa] (standard and optional tires, both loaders)

Front wheels . . . . . 0.24 – 0.28

Rear wheels. . . . . 0.24 – 0.28

6.8.9. RIMS

Size of Rims	515C	520C
Standard	W1GLx24	14x25
Optional	12x25	14.5x25
Optional	14x25	17x25

6.8.10. BRAKES

Service brakes

Type: . . . . . multi-disc wet inboard

Control . . . . . hydraulic

Parking brake

Type. . . . . disc type on front axle

Control . . . . . spring applied, manual

6.8.11. LOADER HYDRAULIC SYSTEM

Specification	515C	520C
Double Gear Pump (Upgraded Version)		
Output rating:		
• hydraulic and steering system pump:	125 [dm^3/min]	157.5 [dm^3/min]
• pilot valve supplying pump	10.3 [dm^3/min]	10.3 [dm^3/min]
@ pump speed	2500 [RPM]	2500 [RPM]
Main pressure	21 [MPa]	21 [MPa]
Pilot pressure	3 [MPa]	3 [MPa]
Single Gear Pump (standard configuration)		
Output rating:	121.5 [dm^3/min]	166 [dm^3/min]
@ pump speed	2500 [RPM]	2500 [RPM]

https://truckmanualshub.com/

SPECIFICATIONS

Main control valve

Standard 2-spool
Optional 3-spool

Pilot control valve

Standard 2-spool
Optional 3-spool

6.8.12. STEERING SYSTEM

(Upgraded version)

Hydraulic and steering system pump	**515C**	**520C**
Output rating:	125 [dm^3/min]	157.5 [dm^3/min]
@ pump speed	2500 [RPM]	2500 [RPM]
Main pressure	21 [MPa]	21 [MPa]

(standard version)

Hydraulic and steering system pump	**515C**	**520C**
Output rating:	121.5 [dm^3/min]	166 [dm^3/min]
@ pump speed	2500 [RPM]	2500 [RPM]

6.8.13. DRIVE TRAIN

Gear pump mounted on the transmission	**515C**	**520C**
Output rating:	75.7 [dm^3/min]	94.5 [dm^3/min]
@ pump speed	2500 [RPM]	2500 [RPM]
Main pressure	1.97 – 2.15 [MPa]	1.97 – 2.15 [MPa]

6.8.14. CYCLE TIMES

Cycle	**515C**	**520C**
Boom raise	5.5	5.9 s
Boom lower	3.5	3.7 s
Bucket dump	1.5	1.5 s
Bucket roll back	1.4	1.4 s

6.8.15. FUEL CONSUMPTION

During tests consisting in typical loading operation (loading loose soil of 1.6 [t/m^3] density on trucks with maximum loading and manoeuvering capacity) and during tests consisting in transporting operation (loading loose soil, transporting along a hard dirt road at a distance of 50 [m] dumping the bucket and going back) the average fuel consumption was as follows:

	515C	**520C**
for the typical work operation:	14 [l/h]	15.2 [l/h]
for the transporting operation:	14 [l/h]	13.5 [l/h]

AVERAGE FUEL CONSUMPTION IN OPERATION

Specified above fuel consumption is for short intensive operation of a machine. Practically, considering longer periods of operation, fuel consumption is much lower and for medium intensive operation is app. 12 [l/h].

https://truckmanualshub.com/

6.9. 515C AND 520C LOADERS EQUIPMENT

The following equipment can be mounted on a loader instead of the standard bucket:

6.9.1. QUICKCOUPLING

The loader can be equipped with a quickcoupling designed for quick installation and removal of optional equipment (bucket, forklift, dozer blade). The quickcoupling (Fig. 6.11) consists of a welded tool carrier fitted with two cylinders operating two pins locking the equipment on the tool carrier. The tool carrier is fastened on the boom with mounting pins. The quickcoupling cylinders are controlled from the operator's compartment (refer to QUICKCOUPLING, Section 4.20). Before operating any mounted equipment make sure it has been fastened securely and that the locking pins have slid into the matching holes.

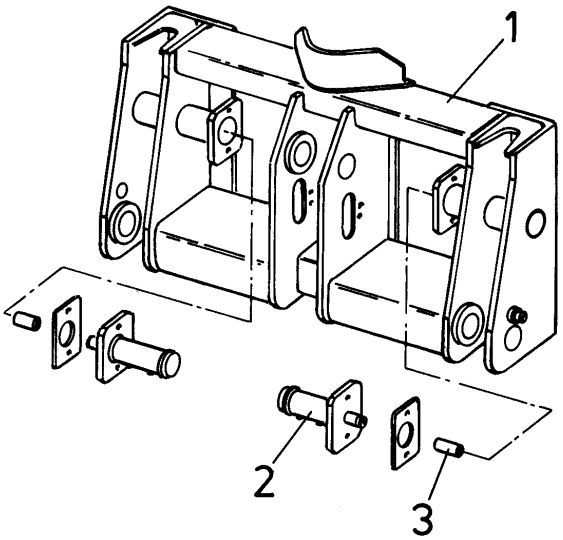

Fig. 6.11. Quickcoupling

1. Tool Carrier 2. Hydraulic Cylinder 3. Locking Pin

6.9.2. BUCKETS FOR QUICKCOUPLING

The following are the buckets designed for installation on the tool carrier, their capacities and application:

515C		520C	
Bucket capacity [m^3]	Soil density [kg/m^3]	Bucket capacity [m^3]	Soil density [kg/m^3]
1.05	2000 and less	1.72	1800 and less
1.24	1800 and less	1.91	1600 and less
1.44	1600 and less	2.10	1400 and less
1.53	1500 and less		
1.62	1400 and less		

https://truckmanualshub.com/

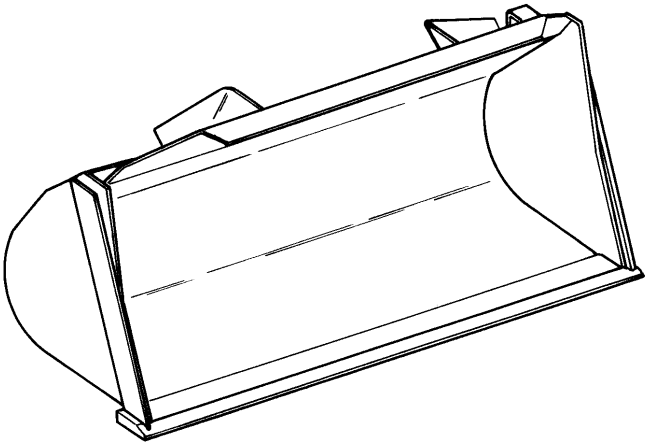

Fig. 6.12. Bucket for Quickcoupling

6.9.3. FORKLIFT FOR QUICKCOUPLING 520C

The forklift is an assembly consisting of a welded frame with a quickcoupling mounting hook and tine support. The tines are forged in high quality steel. The forklift can be applied for lifting, transporting and loading materials stored in containers or on pallets as well as rocks of regular contour.

Specifications:

Lifting capacity	25300	[N]
Tine length	1220	[mm]
Tine spacing	840 - 1710	[mm]
Weight	700	[kG]

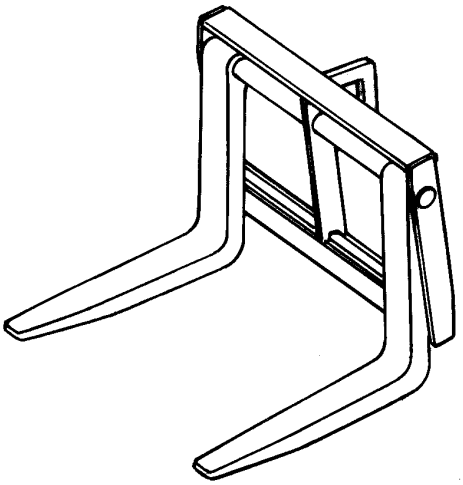

Fig. 6.13. Forklift for Quickcoupling

https://truckmanualshub.com/

SPECIFICATIONS

515C AND 520C LOADERS EQUIPMENT

6.9.4. MULTIPURPOSE BUCKET

Bucket capacity:

515C	520C
1.15 [m^3],	1.53 [m^3],
1.34 [m^3],	

Application: universal - loading, dozing (refer to LOADER TECHNIQUES, Section 4.18).

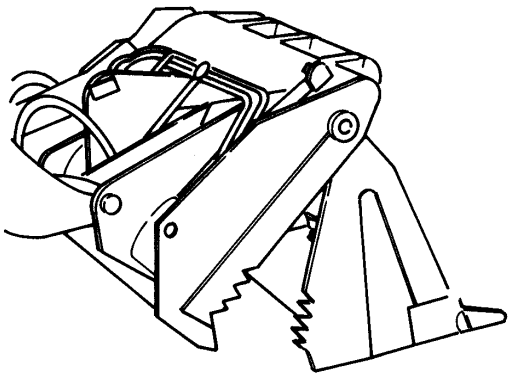

Fig. 6.14. Multi-purpose Bucket

6.9.5 515C LOADER HIGH-DUMP BUCKET

Bucket capacity with spillboard: 1.77 [m^3].

Application: loading materials of the density up to 1300 [kg/m^3].
Performance: increased in comparison with the standard bucket:

SPECIFICATION	VALUE OF INCREASE in [mm]
1. Bucket pin axis height under load	610
2. Dump height	950
3. Reach	250

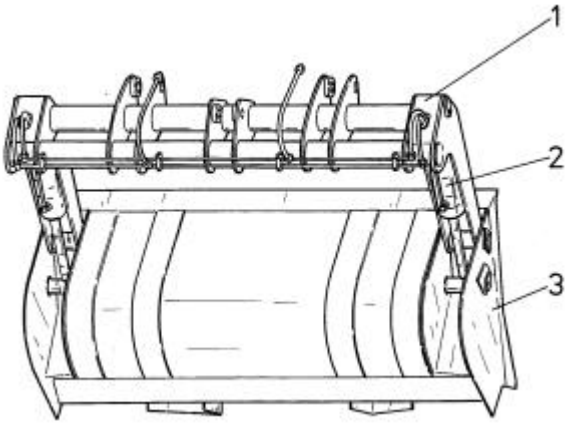

Fig. 6.15. High-dump Bucket

1. Bucket Frame 2. Bucket Cylinder 3. Bucket Assy

https://truckmanualshub.com/

6.10. TORQUE VALUES FOR STANDARD METRIC FASTENERS

Chart 1 provides tightening torque for general purpose applications using original equipment standard hardware. Original equipment standard hardware is defined as coarse thread metric class 10.9 bolts and class 10 nuts and thru hardened flat washers (Rockwell "C" 38-45), all phosphate coated and assembled without supplemental lubrication (as received) condition. The torques shown below apply to phosphate coated bolts designed for 60% yield strength.
The torques shown below also apply to phosphate coated bolts used with phosphate coated prevailing torque nuts, phosphate coated bolts used with copper plated weld nuts and are applied to the steel and grey iron threaded parts.

STANDARD METRIC FASTENERS

Chart 1

Nominal Thread Diameter [mm]	Standard Torque ±10% [Nm]
6	10
7	16
8	23
10	46
12	80
14	125
16	200
18	275
20	385
22	530
24	670
27	980
30	1330
33	1790
36	2325

6.11. TORQUE VALUES FOR STANDARD ENGLISH FASTENERS

Chart 2 provides tightening torque for general purpose applications using original equipment standard hardware as listed in the Parts Catalog for the machine involved. DO NOT SUBSTITUTE. Original equipment standard hardware is defined as Type 8, coarse thread bolts and nuts and thru hardened flat washers (Rockwell "C" 38-45), all phosphate coated and assembled without supplemental lubrication (as received) condition. Phosphate coated bolts used in tapped holes in steel or gray iron, phosphate coated bolts used with phosphate coated prevailing torque nuts (nuts with distorted threads or plastic inserts). Phosphate coated bolts used with copper plated weld nuts.
Markings on bolt heads or nuts indicate material grade ONLY and are NOT to be used to determine required torque.

https://truckmanualshub.com/

SPECIFICATIONS

TORQUE VALUES FOR STANDARD ENGLISH FASTENERS

Chart 2

Nominal Thread Diameter [inch]	Standard Torque ±10% [Nm]
1/4	10
5/16	21
3/8	38
7/16	60
1/2	92
9/16	130
5/8	180
3/4	325
7/8	520
1	780
1 - 1/8	1110
1 - 1/4	1565
1 - 3/8	2050
1 - 1/2	2720
1 - 3/4	3380
2	5080

6.12. TORQUE VALUES FOR SPLIT FLANGE CONNECTIONS

The following chart 3 provides the tightening torques for split flange connections used in hydraulic systems. Split flanges and fitting shoulders should fit squarely. Install all bolts, finger tighten and then torque evenly. Overtorquing bolts will damage the flanges and/or bolts, which may cause leakage.

Chart 3

Bolt size in inches	Flange size in inches*	Torque Value [Nm]
1/2	5/16	20 – 24
3/4	3/8	30 – 37
1	3/8	37 – 47
1 – 1/4	7/16	47 – 61
1 – 1/2	1/ 2	62 – 79
2	1/ 2	75 – 88
2 – 1/2	1/ 2	107 – 123
3	5/8	187 – 203
3 – 1/2	5/8	159 – 180

*) Inside diameter of hydraulic tube or hose fitting.

https://truckmanualshub.com/

6.13. TORQUE VALUES FOR HYDRAULIC TUBES AND FITTINGS

Chart 4

Size	Tubing O.D. in inches	Thread size in inches	Torque values for 37 [°] flared fittings [Nm]	Torque values for O-ring boss plugs, locknuts and 37 [°] flared fittings [Nm]
4	1/4	7/16 – 20	12 – 16	8 – 14
5	5/16	1/ 2 – 20	16 – 20	14 – 20
6	3/8	9/16 – 18	29 – 33	20 – 27
8	1/2	3/ 4 – 16	47 – 54	34 – 41
10	5/8	7/8 – 14	72 – 79	47 – 54
12	3/4	1 – 1/16 – 12	104 – 111	81 – 95
14	7/8	1 – 3/16 – 12	122 – 138	95 – 109
16	1	1 – 5/16 – 12	149 – 163	108 – 122
20	1 – 1/4	1 – 5/8 – 12	190 – 204	129 – 156
24	1 – 1/2	2 – 7/8 – 12	217 – 237	163 – 190
32	2	2 – 1/2 – 12	305 – 325	339 – 407

Above torque figures are recommended for plain, cadmium or zinc plated fittings, dry or wet installations.
These torques are not recommended for tube with wall thickness of 0.89 [mm] or less

6.14. TORQUE VALUES FOR HOSE CLAMPS

The following chart 5 provides the tightening torques for hose clamps used in all rubber applications: radiator, air cleaner, operating lever boots, hydraulic system, etc.).

Chart 5

CLAMP TYPE AND SIZE	TORQUE ± 0.6 [Nm]	
	Radiator, Air Cleaner, Boots, etc [Nm]	Hydraulic System, [Nm]
"T" Bolt (any diameter)	6.2 – 7.3	----------
Worm Drive - 1-3/4 in. Open Diameter & Under	2.2 – 3.3	4.5 – 5.6
Worm Drive - Over 1-3/4 in. Open Diameter	4.5 – 5.6	----------
Worm Drive - Al1 "Ultra-tite"	10.7 – 11.8	4.5 – 5.6

https://truckmanualshub.com/

6.15. TORQUE VALUES FOR AIR CONDITIONING TUBES AND FITTINGS

SWAGED 45 [°] CONNECTIONS

Chart 6

Size	Thread size in inches	Torque values for materials [Nm]			
		Steel-steel	Bronze -steel	Copper-steel	Aluminum-steel
1/4	7/16 – 20	16 – 23	15 – 20	15 – 20	12 – 18
3/8	5/8 – 18	27 – 33	23 – 38	23 – 38	20 – 25
1/2	3/4 – 16	47 – 54	38 – 46	38 – 46	28 – 36
5/8	7/8 – 14	61 – 68	45 – 53	45 – 53	34 – 32
3/4	1 – 1/6 – 12	72 – 80	49 – 57	49 – 57	45 – 53
	1 – 1/6 – 14	72 – 80	49 – 57	49 – 57	45 – 53

6.16. TORQUE VALUES FOR AIR CONDITIONING O-RING CONNECTIONS

Chart 7

Size	Thread size in inches	Torque values for materials [Nm]
		Steel-steel
1/4	7/16 – 20	15 – 25
3/8	5/8 – 18	27 – 33
1/2	3/4 – 16	40 – 48
5/8	7/8 – 14	47 – 54
3/4	1 – 1/16 – 12	54 – 61
	1 – 1/6 – 14	54 – 61

https://truckmanualshub.com/

6.17. SPECIAL TORQUES

Chart 8

Description	Thread Size	Torque Nm
Front Drive Axle to Frame Mounting Bolts	1 ["] M24x3	920 870
Rear Drive Axle to Frame Mounting Bolts	3/4 ["]	380
Wheel lug nuts	1 ["] M24x3	920 870
Counterweight fastening bolts	3/4 ["]	380
ROPS Cab to Frame Mounting Bolts	3/4 ["]	320
Ladder and Platform Fastening Bolts	1/2 ["]	108
Transmission Support to Frame Fastening Bolts	3/4 ["]	270
Transmission Support to Transmission Fastening Bolts	5/8 ["]	156
Engine mounting bolts	5/8 ["]	156
Steering wheel nut	1/2 ["]	48
Radiator Grill Fastening Bolts	1/2 ["]	108

Tightening torque tolerance ± 10 %

https://truckmanualshub.com/

6.18. LIST OF SERVICE TOOLS

Item	Tool-wrench size	Service (removal and installation)
1	3/8 ["]	Alternator Cables Circuit Breakers Mounting Strips
2	7/16 ["]	Service Brake System Breathers Service Brake System Failure Warning Light Switch
3	1/2 ["]	Ether Container Saddle Fastening Bolts
4	9/16 ["]	Battery Terminals Ether Injector Nozzle Fuel Tank Breather Steering Gear Cover Bolt Transmission Suction Strainer Housing Bolts Axle Oil Level Plug
5	5/8 ["]	Hydraulic Reservoir Drain Valve Plug Transmission System Pressure Filter
6	7/8 ["]	Engine Oil Drain Plug
7	1-1/8 ["]	ROPS Cab and ROPS Canopy Mounting Bolts
8	1-1/4 ["]	Axle Filler and Check Plug Axle Drain Plug Transmission Drain Plug
9	1-½["]	Wheel to Axle Fastening Bolts.
10	12	Axle Breathers Brake Lines
11	13	Low Pressure Fuel Line Vent Screw (on engine)
12	14	Engine Valve Cover
13	15	Engine Valve Adjustment
14	19 18 Socket Wrench	High Pressure Fuel Line Nut Transmission Breather
15	ST-1293 Belt Tension Gauge	Drive Belt Tension
16	Flat Screwdriver 1x6.5	Engine Valve Adjustment Air Precleaner Clamp
17	Cross screwdriver 2 [mm]	Gauge Cluster on Instrument Panel
18	Cross screwdriver 3 [mm]	Instrument Panel Screws
19	Filter wrench 100 [mm]	Fuel Filters Engine Oil Filter
20	30	Return Filter (CE Version)